Dist	COUNTY	ROUTE	POST MILES TOTAL PROJECT	SHEET No.	TOTAL SHEETS
10	Sta	99	R0.0/R24.7	4	64

Patricia L. Teczon 4/18/11
REGISTERED CIVIL ENGINEER DATE

5/23/11
PLANS APPROVAL DATE

REGISTERED PROFESSIONAL ENGINEER Patricia Teczon No. 37294 Exp. 6/30/12 CIVIL STATE OF CALIFORNIA

THE STATE OF CALIFORNIA OR ITS OFFICERS OR AGENTS SHALL NOT BE RESPONSIBLE FOR THE ACCURACY OR COMPLETENESS OF SCANNED COPIES OF THIS PLAN SHEET.

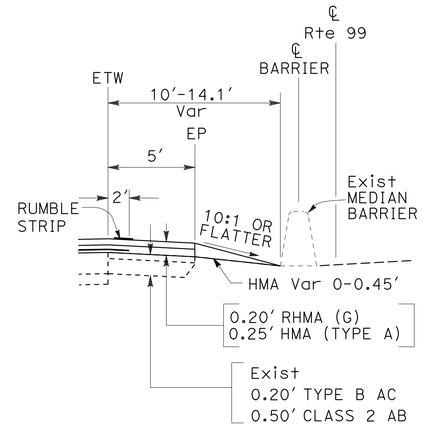

MEDIAN PAVING

LOCATION PM TO PM	DIRECTION	SHOULDER WIDTH
R0.0/R1.1	SB	5'
R3.5/R6.8	SB	5'
M18.5/R22.4	SB	5'
R24.53/R24.62	SB	5'

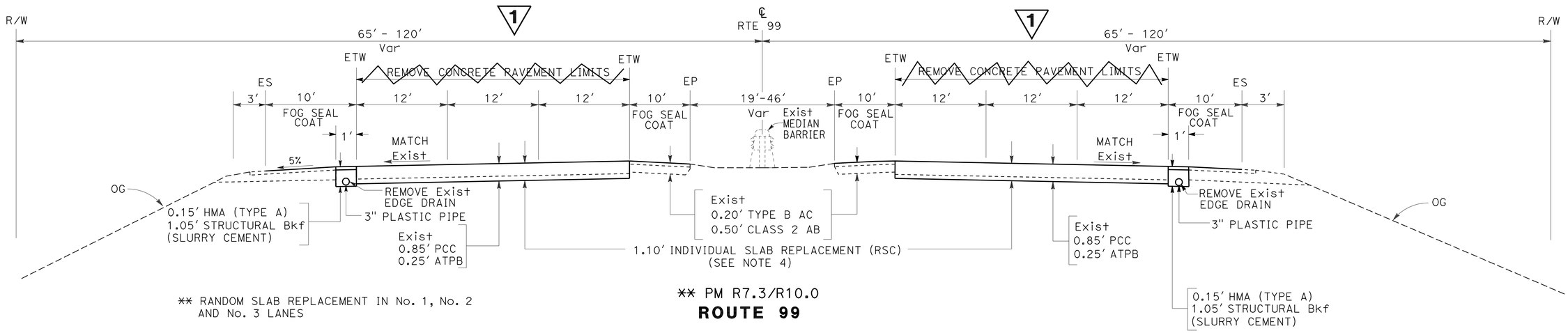

** RANDOM SLAB REPLACEMENT IN No. 1, No. 2 AND No. 3 LANES

** PM R7.3/R10.0
ROUTE 99

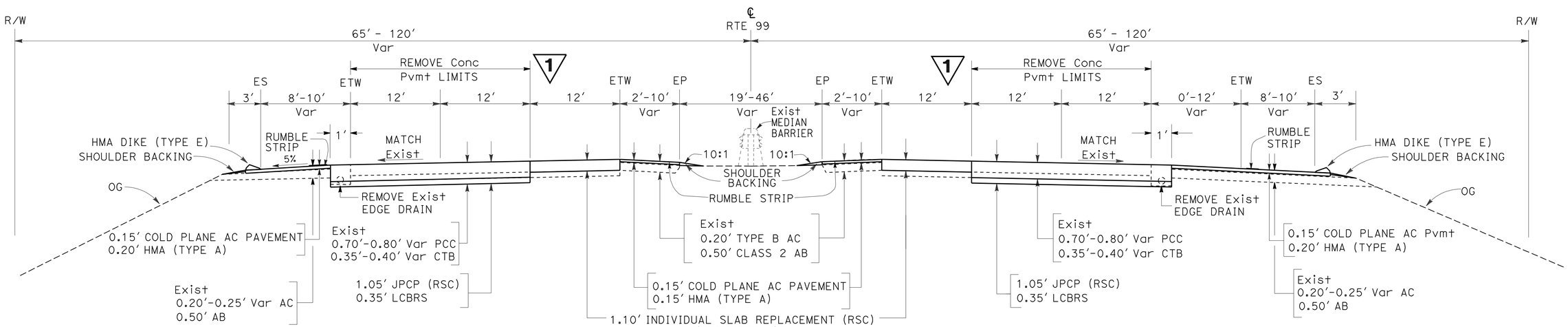

* PM R3.1/R3.2
* PM R6.8/R7.3
* PM R10.0/M18.4

* FULL LANE REPLACEMENT IN No. 2 AND No. 3 LANES, RANDOM SLAB REPLACEMENT IN No. 1 LANE

* SB PM R24.621/R24.712 * NB PM R24.532/R24.707

1 **REVISED PER ADDENDUM No. 1 DATED OCTOBER 26, 2011 ROUTE 99**

TYPICAL CROSS SECTIONS

NO SCALE

X-2

STATE OF CALIFORNIA - DEPARTMENT OF TRANSPORTATION
Caltrans® DESIGN

FUNCTIONAL SUPERVISOR: CAROLINE REYES
CALCULATED-DESIGNED BY: STEVE LAWRENCE
CHECKED BY: PATRICIA TECZON
REVISED BY: SL
DATE REVISED: 05/23/11

LAST REVISION 00-00-00
DATE PLOTTED => 25-OCT-2011
TIME PLOTTED => 14:36

Dist	COUNTY	ROUTE	POST MILES TOTAL PROJECT	SHEET No.	TOTAL SHEETS
10	Sta	99	R0.0/R24.7	5	64

Patricia L. Teczon 4/18/11
REGISTERED CIVIL ENGINEER DATE

5/23/11
PLANS APPROVAL DATE

REGISTERED PROFESSIONAL ENGINEER Patricia Teczon No. 37294 Exp. 6/30/12 CIVIL STATE OF CALIFORNIA

THE STATE OF CALIFORNIA OR ITS OFFICERS OR AGENTS SHALL NOT BE RESPONSIBLE FOR THE ACCURACY OR COMPLETENESS OF SCANNED COPIES OF THIS PLAN SHEET.

NOTES:

1. LANE NUMBERS INCREASE FROM LEFT TO RIGHT IN DIRECTION OF TRAVEL.
2. L, REPLACEMENT SLAB LENGTH IN FEET.
3. MATCH EXISTING PCC SLAB THICKNESS.
4. THE OUTLINE OF THE CONCRETE SLAB TO BE REMOVED SHALL BE SAWCUT FULL DEPTH ALIGN WITH Exist SAWCUT PATTERN.
5. CONCRETE PAVEMENT SHALL BE REMOVED BY NON-IMPACT METHODS.
6. A TYPICAL DIMENSION OF 15′ x 12′ x 1.3′ WAS USED TO GENERATE RAPID STRENGTH CONCRETE QUANTITIES.
7. EXACT SLAB LOCATION TO BE DETERMINED BY THE ENGINEER.
8. CROWN SLOPE VARIES, MATCH EXISTING.
9. DAMAGED SUBGRADE MATERIAL TO BE REMOVED AND REPLACED WITH RAPID STRENGTH CONCRETE, AS DIRECTED BY THE ENGINEER.

LEGEND:

- DIRECTION OF TRAFFIC
- INDIVIDUAL SLAB REPLACEMENT ~~REPLACE CONCRETE PAVEMENT~~ (RAPID STRENGTH CONCRETE) 1
- EXISTING SUBGRADE MATERIAL
- JPCP (RSC) 1.05′ ~~REPLACE CONCRETE PAVEMENT (RSC)~~
- COLD PLANE AC PAVEMENT RHMA-G
- Var 0.50′ - 1.00′ HMA (TYPE A)
- REMOVE CONCRETE PAVEMENT 1
- ROADWAY EXCAVATION

ABBREVIATIONS:

RSC - RAPID STRENGTH CONCRETE
RHMA-G - RUBBERIZED HOT MIX ASPHALT (GAP GRADED)
GPI - GEOSYNTHETIC PAVEMENT INTERLAYER
LCBRS - LEAN CONCRETE BASE (RAPID SETTING)

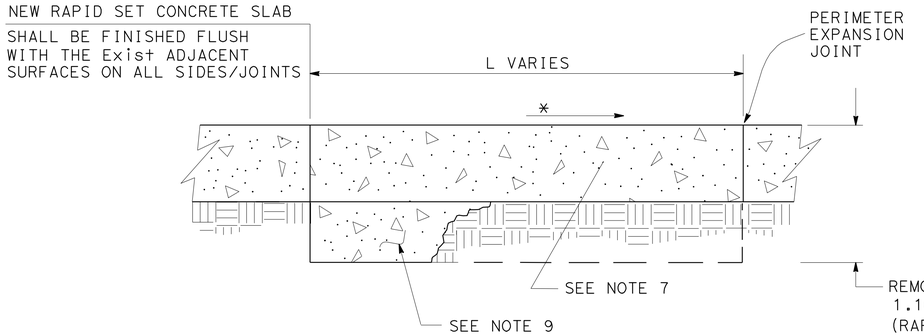

ROUTE 99
NB PM R7.0/R7.5
NB PM R8.5/R9.0
SB PM R7.5/R8.0
SB PM R8.5/R10.0

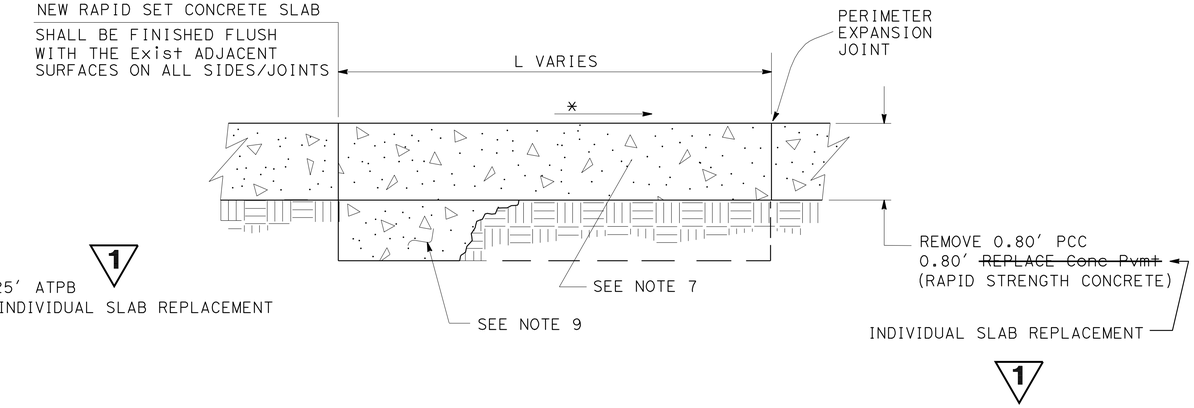

ROUTE 99
NB PM R14.0/R15.0
SB PM R11.5/R12.0
SB PM R13.0/R13.5

TYPICAL PCC SLAB REPLACEMENT DETAIL

1 **REVISED PER ADDENDUM No. 1 DATED OCTOBER 26, 2011**

CONSTRUCTION DETAILS
NO SCALE
C-1

STATE OF CALIFORNIA - DEPARTMENT OF TRANSPORTATION
Caltrans® **DESIGN**
FUNCTIONAL SUPERVISOR: CAROLINE REYES
CALCULATED-DESIGNED BY: STEVE LAWRENCE
CHECKED BY: PATRICIA TECZON
REVISED BY: SL
DATE REVISED: 05/20/10

LAST REVISION 00-00-00 | DATE PLOTTED => 25-OCT-2011 | TIME PLOTTED => 14:36

Dist	COUNTY	ROUTE	POST MILES TOTAL PROJECT	SHEET No.	TOTAL SHEETS
10	Sta	99	R0.0/R24.7	6	64

Patricia L. Teczon 4/18/11
REGISTERED CIVIL ENGINEER DATE

5/23/11
PLANS APPROVAL DATE

REGISTERED PROFESSIONAL ENGINEER Patricia Teczon No. 37294 Exp. 6/30/12 CIVIL STATE OF CALIFORNIA

THE STATE OF CALIFORNIA OR ITS OFFICERS OR AGENTS SHALL NOT BE RESPONSIBLE FOR THE ACCURACY OR COMPLETENESS OF SCANNED COPIES OF THIS PLAN SHEET.

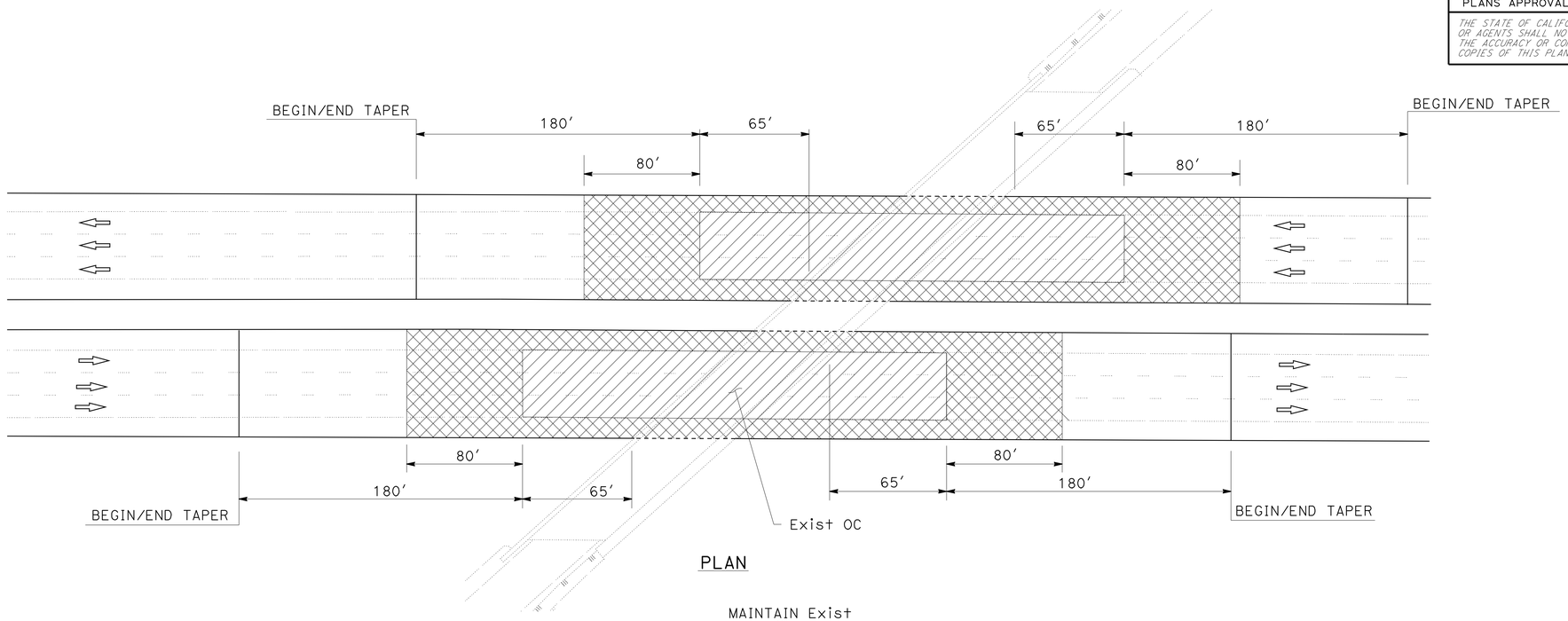

PLAN

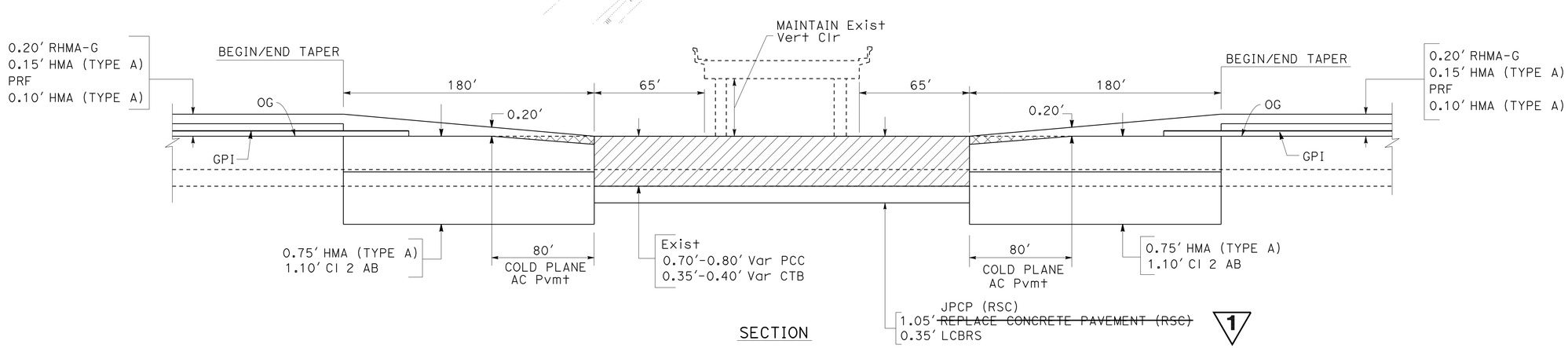

SECTION

OVERCROSSING OVERLAY PAVEMENT TRANSITION TAPER

PELANDALE Ave OC	PM R21.74
ROUTE 219/99 Sep	PM R22.56
HAMMETT Rd OC	PM R24.27

1 REVISED PER ADDENDUM No. 1 DATED OCTOBER 26, 2011

CONSTRUCTION DETAILS

NO SCALE

C-2

STATE OF CALIFORNIA - DEPARTMENT OF TRANSPORTATION
Caltrans DESIGN

FUNCTIONAL SUPERVISOR: CAROLINE REYES

CALCULATED-DESIGNED BY: STEVE LAWRENCE
CHECKED BY: PATRICIA TECZON

REVISED BY: SL
DATE REVISED: 05/20/11

LAST REVISION 00-00-00
DATE PLOTTED => 25-OCT-2011
TIME PLOTTED => 14:37

Dist	COUNTY	ROUTE	POST MILES TOTAL PROJECT	SHEET No.	TOTAL SHEETS
10	Sta	99	R0.0/R24.7	8	64

Patricia L. Teczon 4/18/11
REGISTERED CIVIL ENGINEER DATE

5/23/11
PLANS APPROVAL DATE

REGISTERED PROFESSIONAL ENGINEER Patricia Teczon No. 37294 Exp. 6/30/12 CIVIL STATE OF CALIFORNIA

THE STATE OF CALIFORNIA OR ITS OFFICERS OR AGENTS SHALL NOT BE RESPONSIBLE FOR THE ACCURACY OR COMPLETENESS OF SCANNED COPIES OF THIS PLAN SHEET.

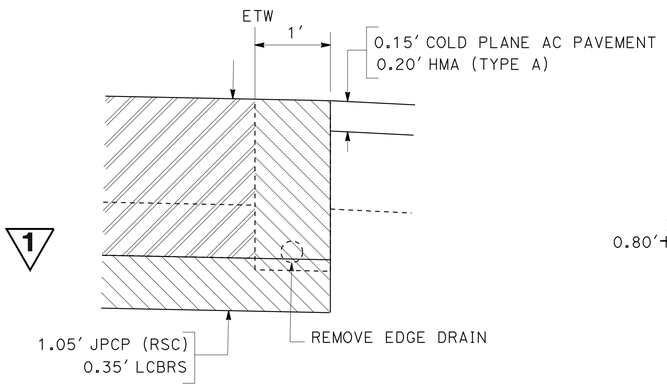

EDGE DRAIN REMOVAL DETAIL

(REMOVE CONCRETE PAVEMENT/ROADWAY EXCAVATION)

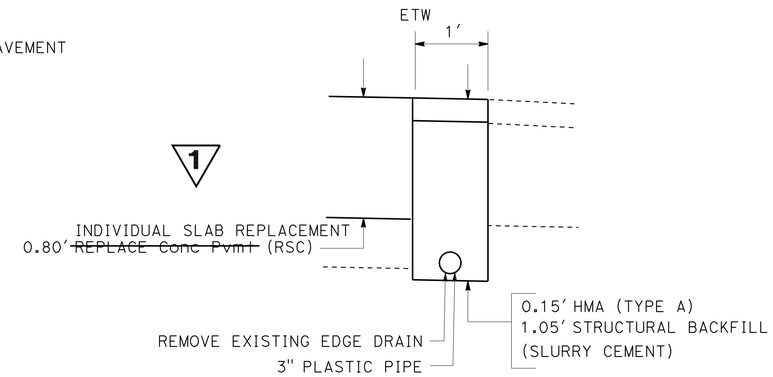

Rte 99 SB PM R7.3/R10.0
Rte 99 NB PM R7.3/R10.0

REPLACE EDGE DRAIN DETAIL

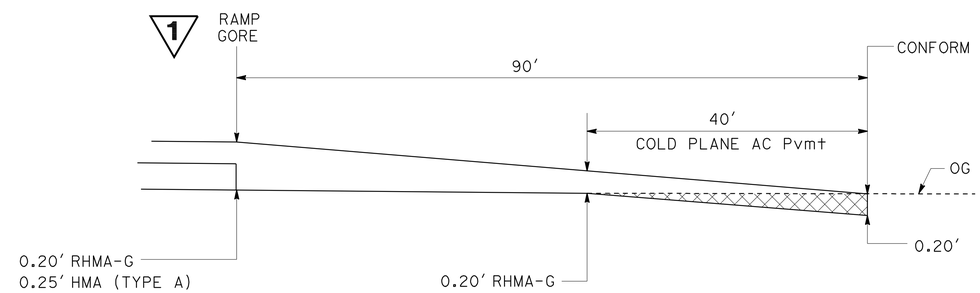

RAMP LONGITUDINAL HMA CONFORM TAPER

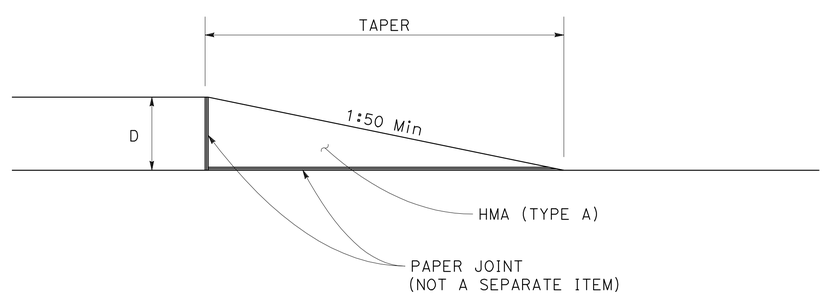

TEMPORARY HMA OVERLAY TAPER

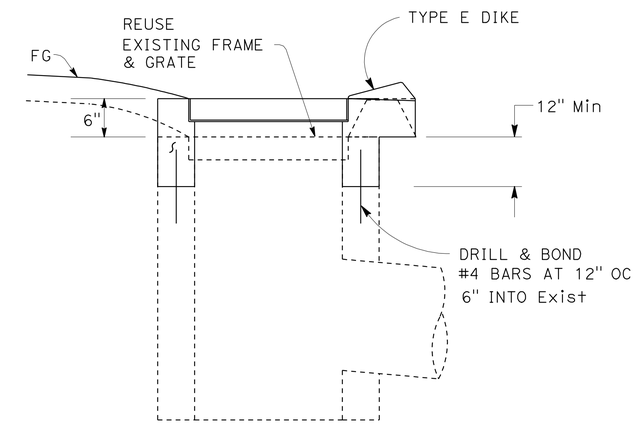

ADJUST TYPE GI DRAINAGE INLET

(FOR LOCATIONS, SEE SUMMARY OF QUANTITIES)

1 REVISED PER ADDENDUM No. 1 DATED OCTOBER 26, 2011

CONSTRUCTION DETAILS

NO SCALE

C-4

STATE OF CALIFORNIA - DEPARTMENT OF TRANSPORTATION
DESIGN
FUNCTIONAL SUPERVISOR: CAROLINE REYES
CALCULATED-DESIGNED BY: STEVE LAWRENCE
CHECKED BY: PATRICIA TECZON
REVISED BY: SL
DATE REVISED: 05/20/11

LAST REVISION 00-00-00
DATE PLOTTED => 25-OCT-2011
TIME PLOTTED => 14:37

Dist	COUNTY	ROUTE	POST MILES TOTAL PROJECT	SHEET No.	TOTAL SHEETS
10	Sta	99	R0.0/R24.7	16	64

REGISTERED CIVIL ENGINEER 4/18/11 DATE

5/23/11
PLANS APPROVAL DATE

REGISTERED PROFESSIONAL ENGINEER HUE NGUYEN No. 74484 Exp. 12/31/11 CIVIL STATE OF CALIFORNIA

THE STATE OF CALIFORNIA OR ITS OFFICERS OR AGENTS SHALL NOT BE RESPONSIBLE FOR THE ACCURACY OR COMPLETENESS OF SCANNED COPIES OF THIS PLAN SHEET.

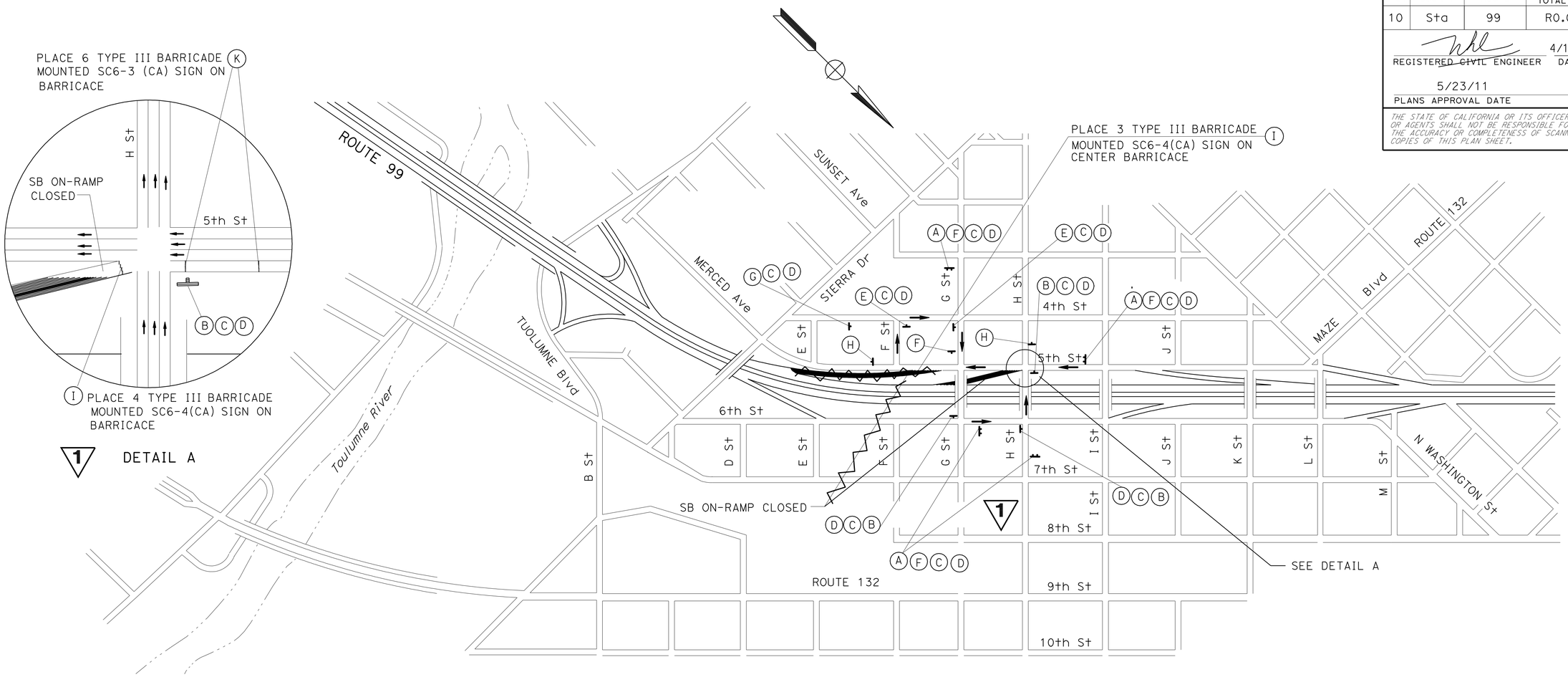

CONSTRUCTION AREA SIGNS (PORTABLE)

SIGN	SIGN CODE	PANEL SIZE	No. OF SIGNS	TYPE III BARRICADE	SIGN MESSAGE
(A)	SC7 (CA) (SPECIAL)	84" x 48"	4		5TH/G STREET SOUTHBOUND ON-RAMP CLOSED USE H STREET
(B)	M4-10 (Lt)	48" x 18"	3		DETOUR ARROW
(C)	G28-1 (CA) (99)	25" x 25"	~~10~~ 11		STATE ROUTE MARKER (99)
(D)	M3-3	24" x 18"	~~10~~ 11		SOUTH
(E)	M4-10 (Rt)	48" x 18"	~~2~~ 3		DETOUR ARROW
(F)	SC3 (CA)	48" x 18"	5		DETOUR WITH ARROW
(G)	W20-2	36" x 36"	1		DETOUR AHEAD
(H)	M4-8a	24" x 18"	2		END DETOUR
(I)	SC6-4 (CA)	48" x 60"	1	~~3~~ 4	RAMP CLOSED
(K)	SC6-3 (CA)	36" x 36"	2	6	RAMP CLOSED

1 NOTES: 1. EXACT SIGN LOCATIONS TO BE DETERMINED BY THE ENGINEER.
2. FOR ADDITIONAL CONSTRUCTION AREA SIGNS SEE CAS SHEET.
3. WHEN DETOUR NOT IN USE, COVER ALL CONFLICTING ROADSIDE SIGNS EXCEPT SC6-4(CA).

H
SC7 (CA) (SPECIAL)

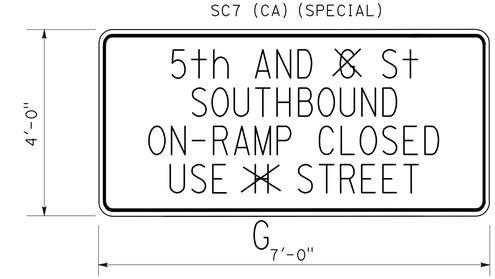

1

NOTES:
1. BLACK ON ORANGE
2. USE CALTRANS ALPHABET, SERIES C FOR LETTERING
3. RAMP CLOSURE SHALL BE HANDLED BY STANDARD PLAN T14

1 **REVISED PER ADDENDUM No. 1 DATED OCTOBER 26, 2011**

THIS PLAN ACCURATE FOR TRAFFIC HANDLING WORK ONLY.

1 **TRAFFIC HANDLING PLAN (5TH/~~G~~ H STREET SB ON-RAMP CLOSURE)**

NO SCALE **TH-1**

STATE OF CALIFORNIA - DEPARTMENT OF TRANSPORTATION
Caltrans® TRAFFIC DESIGN

FUNCTIONAL SUPERVISOR: MOHAMMED QATAMI
CALCULATED-DESIGNED BY: FERNANDO LOPEZ
CHECKED BY: HUE NGUYEN
REVISED BY: HN
DATE REVISED: 05/18/11

LAST REVISION 00-00-00
DATE PLOTTED => 25-OCT-2011
TIME PLOTTED => 14:37

Dist	COUNTY	ROUTE	POST MILES TOTAL PROJECT	SHEET No.	TOTAL SHEETS
10	Sta	99	R0.0/R24.7	22	64

Patricia L. Teczon 4/18/11
REGISTERED CIVIL ENGINEER DATE

5/23/11
PLANS APPROVAL DATE

REGISTERED PROFESSIONAL ENGINEER Patricia Teczon No. 37294 Exp. 6/30/12 CIVIL STATE OF CALIFORNIA

THE STATE OF CALIFORNIA OR ITS OFFICERS OR AGENTS SHALL NOT BE RESPONSIBLE FOR THE ACCURACY OR COMPLETENESS OF SCANNED COPIES OF THIS PLAN SHEET.

NOTES:

1. (N) - NOT A SEPARATE PAY ITEM, FOR INFORMATION ONLY.
2. * - TOTALS INCLUDED IN ROADWAY ITEMS TABLE.

ABBREVIATIONS

JPCP (RSC) - JOINTED PLAIN CONCRETE PAVEMENT (RAPID STRENGTH CONCRETE)
LCBRS - LEAN CONCRETE BASE (RAPID SETTING)
BAGR - BRIDGE APPROACH GUARD RAILING
PG&E - PACIFIC GAS AND ELECTRIC
GPI - GEOSYNTHETIC PAVEMENT INTERLAYER

1 REVISED PER ADDENDUM No. 1 DATED OCTOBER 26, 2011

ROADWAY ITEMS

DIRECTION	PM/PM	DESCRIPTION	ROADWAY Exc	CLASS 2 AB	HMA	GEOSYNTHETIC PAVEMENT INTERLAYER	PAVING ASPHALT (BINDER-GPI)	RHMA (GAP GRADED)	RHMA (OPEN GRADED)	TACK COAT	COLD PLANE AC PAVEMENT	REMOVE Conc PAVEMENT	REMOVE EDGE DRAIN (N)	JPCP (RSC)	LCBRS	CRACK Exist CONC PAVEMENT	ASPHALTIC EMULSION (FOG SEAL CAOT)	RUMBLE STRIP		IMPORTED MATERIAL (SHOULDER BACKING)	
																		INSIDE Shld	OUTSIDE Shld	INSIDE	OUTSIDE
			CY	CY	TON	SQYD	SQYD	TON	TON	TON	SQYD	CY	LF	CY	CY	SQYD	TON	Sta	Sta	TON	TON
NORTHBOUND	R0.00/R1.63	LANDER Ave UC BB			8,243	38,249	39.8	5,852		40.6						34,426		86	86	452	301
	R1.66/R3.08	LANDER Ave UC EB TO WALNUT Ave UC BB			7,181	33,323	34.7	5,098		35.4						29,990		75	75	394	262
	R3.10/R3.18	WALNUT Ave UC EB TO W TURLOCK OH BB	153		86					0.6	704	394	422	411	137			4	4	10	12
	R3.20/R3.45	W TURLOCK OH EB TO W MAIN St UC BB			1,265	5,867	6.1	898		6.2						5,280		13	13	69	46
	R3.48/R4.54	W MAIN St UC EB TO FULKERTH Rd UC BB			5,360	24,875	25.9	3,806		26.4						22,387		56	56	294	196
	R4.56/R5.64	FULKERTH Rd UC EB TO MONTE VISTA Ave UC BB			5,462	25,344	26.4	3,878		26.9						22,810		57	57	299	200
	R5.67/R6.40	MONTE VISTA Ave UC EB TO N TURLOCK OH BB			3,721	17,600	18.3	2,621		18.2						15,418		39	40	202	135
	R6.45/R6.75	N TURLOCK OH EB TO TAYLOR Rd UC BB			1,518	6,805	7.1	1,077		7.5						6,336		16	15	85	57
	R6.78/R7.30	TAYLOR Rd UC EB	958		690	469	0.5			4.8	4,400	2,464	2,640	2,567	856			28	28	64	74
	R7.30/R10.03	CERES MAIN CANAL BB															13.3				
	R10.04/R10.16	CERES MAIN CANAL EB TO RAMP A UC BB	230		146					1.1	1,267	591	634	616	205			6	6	15	17
	R10.19/R11.55	RAMP A UC EB TO SECOND St UC BB	2,606		1,062					7.1	8,481	6,702	7,181	6,981	2,327			72	72	168	196
	R11.57/R11.62	SECOND St UC EB TO NORTH St UC BB	96		37					0.2	293	246	264	257	68			3	3	6	7
	R11.65/R13.90	NORTH St UC EB TO S MODESTO UC BB	4,312		1,911					13.0	15,585	11,088	11,880	11,550	3,850			119	119	277	323
	R13.95/R14.03	S MODESTO UC EB TO S MODESTO OH BB	153		59					0.4	469	394	422	411	137			4	4	10	12
	R14.094/R14.93	S MODESTO OH EB TO TUOLUMNE Br BB	1,602		622					4.1	4,905	4,120	4,418	4,292	1,431			44	44	103	120
	R15.06/R15.10	TUOLUMNE Br EB TO TUOLUMNE Blvd UC BB	77		30					0.2	235	197	211	205	68			2	2	5	6
	R15.13/R17.93	TUOLUMNE Blvd UC EB TO W MODESTO OH BB	5,366		2,813					19.8	23,739	13,798	14,784	14,373	4,791			148	148	345	403
	R18.01/R24.71	W MODESTO OH EB TO STANISLAUS RIVER Br BB	1,092		31,959	145,986	152.1	21,995	898	157.5	4,450	2,809	3,010	2,464	821	141,504		354	354	1,209	1,816
SOUTHBOUND	R0.00/R1.63	TO LANDER Ave UC BB			8,243	38,249	39.8	5,852		40.6						34,426		86	86	452	301
	R1.66/R3.08	LANDER Ave UC EB TO WALNUT Ave UC BB			7,181	33,323	34.7	5,098		35.4						29,990		75	75	394	262
	R3.10/R3.18	WALNUT Ave UC EB TO W TURLOCK OH BB	153		86					0.6	704	394	422	411	137			4	4	10	12
	R3.20/R3.45	W TURLOCK OH EB TO W MAIN St UC BB			1,265	5,867	6.1	898		6.2						5,280		13	13	69	46
	R3.48/R4.54	W MAIN St UC EB TO FULKERTH Rd UC BB			5,360	24,875	25.9	3,806		26.4						22,387		56	56	299	196
	R4.56/R5.64	FULKERTH Rd UC EB TO MONTE VISTA Ave UC BB			5,462	25,344	26.4	3,877		26.9						22,810		57	57	300	200
	R5.67/R6.42	MONTE VISTA Ave UC EB TO N TURLOCK OH BB			3,793	17,600	18.3	2,693		18.7						15,840		40	40	208	139
	R6.47/R6.76	N TURLOCK OH EB TO TAYLOR Rd UC BB			1,467	6,805	7.1	1,041		7.2						6,125		15	15	80	54
	R6.78/R7.30	TAYLOR Rd UC EB	958		559	469	0.5	72		3.8	4,400	2,464	2,640	2,567	856			28	28	64	75
	R7.30/R10.03	CERES MAIN CANAL BB															13.3				
	R10.04/R10.16	CERES MAIN CANAL EB TO RAMP A UC BB	230		146					1.1	1,267	591	634	616	205			6	6	15	17
	R10.19/R11.55	RAMP A UC EB TO SECOND St UC BB	2,606		1,062					7.1	8,481	6,702	7,181	6,982	2,327			72	72	168	196
	R11.57/R11.62	SECOND St UC EB TO NORTH St UC BB	96		37					0.2	293	247	264	257	86			3	3	6	7
	R11.65/R13.90	NORTH St UC EB TO S MODESTO UC BB	4,312		1,911					13.0	15,585	11,088	11,880	11,550	3,850			119	119	277	323
	R13.95/R14.03	S MODESTO UC EB TO S MODESTO OH BB	153		59					0.2	469	394	422	411	137			4	4	10	12
	R14.094/R14.93	S MODESTO OH EB TO TUOLUMNE Br BB	1,602		621					4.1	4,905	4,120	4,418	4,292	1,431			44	44	103	120
	R15.06/R15.10	TUOLUMNE BR EB TO TUOLUMNE BLVD UC BB	77		30					0.2	235	197	211	205	68			2	2	6	5
	R15.13/R17.93	TUOLUMNE Blvd UC EB TO W MODESTO OH BB	5,366		2,813					19.8	23,739	13,798	14,784	14,373	4,791			148	148	345	403
	R18.01/R24.71	W MODESTO OH EB TO STANISLAUS RIVER Br BB	920		32,154	145,986	152.1	22,315	539	158.3	4,450	2,809	2,534	2,464	821	141,504		354	354	1,854	1,231
MEDIAN PAVING					6,717																
GORE RECONSTRUCTION/RAMP			228		454			6,520													
GORE LANE TAPERS					~~14,314~~	15,166		~~5,380~~		59.4	51,640										
HMA DIKE			26,745	15,004	2,153	8,900		1,484				8,152									
PAVEMENT TRANSITION TAPERS			~~28,391~~	~~5,280~~	~~10,359~~	~~36~~		~~5,678~~	44	44.2	25,689	~~8,188~~		1,646	550						
SUBTOTAL					22,047			5,786										2,252	2,252	8,667	7,782
TOTAL			~~61,737~~	~~5,280~~	~~178,411~~	~~597,072~~	621.8	~~103,419~~	1,481	843.4	206,385	~~93,795~~		89,901	29,950	556,513	26.6	4,504		16,449	
1			60,091	15,004	202,639	605,936		104,667				94,047									

SUMMARY OF QUANTITIES Q-1

STATE OF CALIFORNIA - DEPARTMENT OF TRANSPORTATION
Caltrans DESIGN

REVISED BY SL | DATE REVISED 05/20/11
STEVE LAWRENCE | PATRICIA TECZON
CALCULATED-DESIGNED BY | CHECKED BY
FUNCTIONAL SUPERVISOR CAROLINE REYES

LAST REVISION 00-00-00 | DATE PLOTTED => 25-OCT-2011 | TIME PLOTTED => 14:37

Dist	COUNTY	ROUTE	POST MILES TOTAL PROJECT	SHEET No.	TOTAL SHEETS
10	Sta	99	R0.0/R24.7	23	64

Patricia L. Teczon 4/18/11
REGISTERED CIVIL ENGINEER DATE

5/23/11
PLANS APPROVAL DATE

REGISTERED PROFESSIONAL ENGINEER Patricia Teczon No. 37294 Exp. 6/30/12 CIVIL STATE OF CALIFORNIA

THE STATE OF CALIFORNIA OR ITS OFFICERS OR AGENTS SHALL NOT BE RESPONSIBLE FOR THE ACCURACY OR COMPLETENESS OF SCANNED COPIES OF THIS PLAN SHEET.

PAVEMENT TRANSITION TAPERS

HMA TON	DIRECTION	PM	LOCATION	HMA TON	RHMA (GAP GRADED) TON	RHMA (OPEN GRADED) TON	TACK COAT TON	PAVING ASPHALT (BINDER-GPI) TON	GEOSYNTHETIC PAVEMENT INTERLAYER SQYD	CLASS 2 AB CY	COLD PLANE AC PAVEMENT SQYD	ROADWAY EXC CY	JPCP (RSC) CY	LCBRS CY	TRANSITION TAPER TYPE	REMOVE CONCRETE PAVEMENT CY
359	NORTHBOUND	R0.0		381	122		0.9	0.7	178	264	453	614			TRANSVERSE PAVEMENT TRANSITION TAPER	252
994		R1.63	LANDER Ave UC	56	245		1.8	1.3	356	748	910	1,228			BRIDGE APPROACH PAVEMENT TRANSITION TAPER	252
497		R3.08	WALNUT Ave UC	62	122		0.9	0.7	178	374	453	614			BRIDGE APPROACH PAVEMENT TRANSITION TAPER	252
497		R3.18	WEST TURLOCK OH	62	122		0.9	0.9	178	374	453	615			BRIDGE APPROACH PAVEMENT TRANSITION TAPER	252
994		R3.45	WEST MAIN St UC	79	225		1.8	1.3	356	748	907	1,228			BRIDGE APPROACH PAVEMENT TRANSITION TAPER	252
994		R4.54	FULKERTH Rd UC	79	245		1.8	1.3	356	748	907	1,228			BRIDGE APPROACH PAVEMENT TRANSITION TAPER	252
994		R5.64	MONTE VISTA Ave UC	79	245		1.8	1.3	356	748	907	1,228			BRIDGE APPROACH PAVEMENT TRANSITION TAPER	252
994		R6.41	NORTH TURLOCK OH	79	245		1.8	1.3	356	748	907	1,228			BRIDGE APPROACH PAVEMENT TRANSITION TAPER	252
497		R6.75	TAYLOR Rd UC	56	122		0.9	0.7	178	374	453	614			BRIDGE APPROACH PAVEMENT TRANSITION TAPER	252
359		R6.8		381	122		0.9	0.7	178	264	453	614			TRANSVERSE PAVEMENT TRANSITION TAPER	252
359		M18.4		381	122		0.9	0.7	178	264	453	614			TRANSVERSE PAVEMENT TRANSITION TAPER	252
1,091		R21.74	PELANDALE Ave OC	1,136	278		2.3	2.4	356	528	1,934	~~1,211~~	259	86	OVERCROSSING OVERLAY PAVEMENT TRANSITION TAPER	172
		R22.5			27	11	0.2		178			953			TRANSVERSE OVERLAY TRANSITION TAPER	252
1,017		R22.56	ROUTE 219/99 Sep OC	1,062	245		2.0	2.1	356	528	1,660	~~1,289~~	316	106	OVERCROSSING OVERLAY PAVEMENT TRANSITION TAPER	211
		R23.0			27	11	0.2		178			972			TRANSVERSE OVERLAY TRANSITION TAPER	252
1,017		R24.27	HAMMETT Rd OC	1,062	245		2.1	2.0	356	528	1,497	~~1,197~~	248	83	OVERCROSSING OVERLAY PAVEMENT TRANSITION TAPER	165
359		R24.5		381	122		0.9	0.7	178	264	453	614 949			TRANSVERSE PAVEMENT TRANSITION TAPER	252
359	SOUTHBOUND	R0.0		381	122		0.9	0.7	178	264	453	614			TRANSVERSE PAVEMENT TRANSITION TAPER	252
994		R1.63	LANDER Ave UC	56	245		1.8	1.3	356	748	910	1,228			BRIDGE APPROACH PAVEMENT TRANSITION TAPER	252
497		R3.08	WALNUT Ave UC	62	122		0.9	0.8	178	374	453	614			BRIDGE APPROACH PAVEMENT TRANSITION TAPER	252
500		R3.18	WEST TURLOCK OH	65	146		0.9	0.7	178	374	542	734			BRIDGE APPROACH PAVEMENT TRANSITION TAPER	252
994		R4.54	WEST MAIN St UC	79	225		1.8	1.3	356	748	907	1,228			BRIDGE APPROACH PAVEMENT TRANSITION TAPER	252
994		R4.54	FULKERTH Rd UC	79	245		1.8	1.3	356	748	907	1,228			BRIDGE APPROACH PAVEMENT TRANSITION TAPER	252
994		R5.64	MONTE VISTA Ave UC	79	245		1.8	1.3	356	748	907	1,228			BRIDGE APPROACH PAVEMENT TRANSITION TAPER	252
994		R6.41	NORTH TURLOCK OH	79	245		1.8	1.3	356	748	907	1,228			BRIDGE APPROACH PAVEMENT TRANSITION TAPER	252
497		R6.75	TAYLOR Rd UC	56	122		0.9	0.7	178	374	453	614			BRIDGE APPROACH PAVEMENT TRANSITION TAPER	252
359		R6.8		381	122		0.9	0.7	178	264	453	614			TRANSVERSE PAVEMENT TRANSITION TAPER	252
359		M18.4		65	122		0.9	0.7	178	264	453	614 953			TRANSVERSE PAVEMENT TRANSITION TAPER	252
1,091		R21.74	PELANDALE Ave OC	1,136	278		2.3	2.6	356	528	1,934	~~1,214~~	259	86	OVERCROSSING OVERLAY PAVEMENT TRANSITION TAPER	172
1,017		R22.56	ROUTE 219/99 Sep OC	1,062	245		2.0	2.1	356	528	1,660	~~1,289~~	316	106	OVERCROSSING OVERLAY PAVEMENT TRANSITION TAPER	211
		R24.1			27	11	0.2		178			972			TRANSVERSE OVERLAY TRANSITION TAPER	252
1,017		R24.27	HAMMETT Rd OC	1,039	245		2.1	2.0	356	528	1,497	~~1,197~~	248	83	OVERCROSSING OVERLAY PAVEMENT TRANSITION TAPER	165
		R24.4			27	11	0.2		178			949			TRANSVERSE OVERLAY TRANSITION TAPER	252
359		R24.6		404	122		0.9	0.7	178	264	453	614			TRANSVERSE PAVEMENT TRANSITION TAPER	252
22,047			* TOTAL	10,359	~~5,678~~	44	44.2	36.3	~~8,188~~	~~5,280~~	25,689	~~28,391~~	1,646	550		7,900
					5,786				8,900	15,004		26,745				8,152

* - TOTALS INCLUDED IN ROADWAY ITEMS TABLE

1 REVISED PER ADDENDUM No. 1 DATED OCTOBER 26, 2011

SUMMARY OF QUANTITIES
Q-2

STATE OF CALIFORNIA - DEPARTMENT OF TRANSPORTATION
Caltrans®
DESIGN
FUNCTIONAL SUPERVISOR: CAROLINE REYES
CALCULATED-DESIGNED BY: STEVE LAWRENCE
CHECKED BY: PATRICIA TECZON
REVISED BY: SL
DATE REVISED: 05/23/11

LAST REVISION 00-00-00
DATE PLOTTED => 25-OCT-2011
TIME PLOTTED => 14:37

Dist	COUNTY	ROUTE	POST MILES TOTAL PROJECT	SHEET No.	TOTAL SHEETS
10	Sta	99	R0.0/R24.7	24	64

Patricia L. Teczon 4/18/11
REGISTERED CIVIL ENGINEER DATE

5/23/11
PLANS APPROVAL DATE

REGISTERED PROFESSIONAL ENGINEER Patricia Teczon No. 37294 Exp. 6/30/12 CIVIL STATE OF CALIFORNIA

THE STATE OF CALIFORNIA OR ITS OFFICERS OR AGENTS SHALL NOT BE RESPONSIBLE FOR THE ACCURACY OR COMPLETENESS OF SCANNED COPIES OF THIS PLAN SHEET.

GROOVE EXISTING CONCRETE PAVEMENT

LOCATION	PM/PM	GROOVE EXISTING CONCRETE PAVEMENT
		SQYD
Rte 99 SB	R14.4/R15.1	14,784
Rte 99 NB	R13.8/R15.1	27,456
	TOTAL	42,240

GRIND EXISTING CONCRETE PAVEMENT

Dir	PM/PM	LANE No.	(N) WIDTH	GRIND EXISTING CONCRETE PAVEMENT
				SQYD
NORTHBOUND	R3.1/R3.2	1	12′	704
	R6.8/R7.3	1	12′	3,520
	R7.3/R10.0	1,2,3	36′	57,024
	R10.0/M18.4	1	12′	59,136
	R24.532/R24.707	1	12′	1,232
SOUTHBOUND	R3.1/R3.2	1	12′	704
	R6.8/R7.3	1	12′	3,520
	R7.3/R10.0	1,2,3	36′	57,024
	R10.0/M18.4	1	12′	59,136
	R24.621/R24.712	1	12′	641
			TOTAL	242,641

ADJUST INLET TO GRADE

Dir	LOCATION (ROUTE 99)	PM	TYPE	ADJUST INLET
				EA
NORTHBOUND	OFF-RAMP TO LANDER Ave	R1.4	G1	1
	ON-RAMP FROM MAIN St	R3.5	G1	1
	ON-RAMP FROM FULKERTH Rd	R4.2	G1	1
	OFF-RAMP TO CARPENTER/BRIGGSMORE	M18.4	G1	1
	ON-RAMP FROM BECKWITH Rd	R20.4	G1	1
	ON-RAMP FROM BROADWAY/Rte 219	R22.6	G1	1
SOUTHBOUND	LANDER Ave SB OFF-RAMP	R1.7	G1	1
	OFF-RAMP TO FULKERTH Rd	R4.4	G1	1
	ON-RAMP TO MONTE VISTA Ave	R5.2	G1	1
	OFF-RAMP TO MONTE VISTA Ave	R5.4	G1	1
	Rte 99	R5.6	G1	1
	OFF-RAMP TO TAYLOR Rd	R6.4	G1	1
	ON-RAMP FROM BROADWAY	R22.3	G1	1
	OFF-RAMP TO BROADWAY	R22.6	G1	1
	BROADWAY/Rte 219 SB OFF-RAMP	R22.8	G1	1
			TOTAL	15

CONCRETE SLAB REPLACEMENT ITEMS

1

Dir	PM/PM	No. OF SLABS (N) LANE No. 1	LANE No. 2	LANE No. 3	LENGTH (N)	WIDTH (N)	DEPTH (N)	INDIVIDUAL SLAB REPLACEMENT (RSC)	DOWEL BAR (DRILL & BOND)	3" PLASTIC PIPE	(N) STRUTURAL BACKFILL (SLURRY CEMENT)	SEAL JOINT Exist Conc PAVEMENT	
								CY	LF	LF	CY	LF	
NORTHBOUND	R7.0/R7.5			2	30′	12′	1.10′	14.7	48	30	1.0	~~82~~	78
	R8.5/R9.0			12	180′		1.10′	88.0	288	180	6.0	~~492~~	460
	R14.0/R14.5	1			15′		0.80′	5.3	24			39	
	R14.5/R15.0	2			30′		0.80′	10.7	48			78	
SOUTHBOUND	R7.5/R8.0		1	1	30′	12′	1.10′	14.7	24	15	0.5	~~110~~	63
	R8.5/R9.0			1	15′		1.10′	7.3	24	15	0.5	~~41~~	39
	R9.0/R9.5			2	30′		1.10′	14.7	48	30	1.0	~~82~~	78
	R9.5/R10.0		2	4	90′		1.10′	44.0	144	60	2.0	~~272~~	186
	R11.5/R12.0	2			30′		0.80′	10.7	48			78	
	R13.0/R13.5	2			30′		0.80′	10.7	48			78	
							TOTAL	220.8	744	330		~~1,352~~	1,177

NOTE: SLAB LOCATIONS SHOWN ARE APPROXIMATE, EXACT LOCATION TO BE DETERMINED BY THE ENGINEER.

MEDIAN PAVING

Dir	PM/PM	HMA (TYPE A)
		TON
SOUTHBOUND	R0.0/R1.1	881
	R3.5/R6.8	2,643
	M18.5/R22.6	3,123
	R24.53/R24.62	70
	TOTAL	6,717 *

GORE RECONSTRUCTION

1

Dir	LOCATION	PM	REMOVE CONCRETE CURB		HMA (TYPE A)	ROADWAY EXCAVATION
			LF		TON	CY
NORTHBOUND	ON-RAMP FROM TURLOCK REST STOP	R0.4	~~100~~	250	38	19
	ON-RAMP FROM CARPENTER/BRIGGSMORE	M18.6	~~100~~	250	38	19
	ON-RAMP FROM BECKWITH Rd	R20.5	~~100~~	250	38	19
	ON-RAMP FROM PELANDALE Ave	R21.9	~~100~~	250	38	19
	ON-RAMP FROM BROADWAY/Rte 219	R22.7	~~100~~	250	38	19
	ON-RAMP FROM HAMMETT Rd	R24.4	~~100~~	250	38	19
SOUTHBOUND	ON-RAMP FROM TURLOCK REST STOP	R0.2	~~100~~	250	38	19
	ON-RAMP FROM CARPENTER/BRIGGSMORE	M18.4	~~100~~	250	38	19
	ON-RAMP FROM BECKWITH Rd	R20.0	~~100~~	250	38	19
	ON-RAMP FROM PELANDALE Ave	R21.6	~~100~~	250	38	19
	ON-RAMP FROM BROADWAY/Rte 219	R22.4	~~100~~	250	38	19
	ON-RAMP FROM HAMMETT Rd	R24.1	~~100~~	250	38	19
		TOTAL	~~1200~~ 3,000		456 *	228 *

1

PAVEMENT JOINTS

Dir	PM/PM	SEAL ISOLATION JOINT	SEAL PAVEMENT JOINT LONGITUDINAL	TRANSVERSE	
		LF	LF		
NORTHBOUND	R3.1/R3.2	528	528	~~245~~	978
	R6.8/R7.3	2,640	2,640	~~1,223~~	4,889
	R10.0/M18.4	44,352	44,352	~~20,534~~	82,134
	R24.532/R24.707	924	924	~~428~~	1,711
SOUTHBOUND	R3.1/R3.2	528	528	~~245~~	978
	R6.8/R7.3	2,640	2,640	~~1,223~~	4,889
	R10.0/M18.4	44,352	44,352	~~20,534~~	82,134
	R24.6/R24.712	592	592	~~274~~	1,100
	SUBTOTAL	~~96,556~~	~~96,556~~	~~44,706~~	179,988
	TOTAL	~~96,556~~ 97,190	~~141,262~~ 97,824	277,812	

NB/SB R21.7 (PELANDALE Ave OC)	247	494	450
NB/SB R22.6 (Rte 219/Rte 99)	217	434	400
NB/SB R24.3 (HAMMETT Rd OC)	170	340	325

1 REVISED PER ADDENDUM No. 1 DATED OCTOBER 26, 2011

SUMMARY OF QUANTITIES

Q-3

STATE OF CALIFORNIA - DEPARTMENT OF TRANSPORTATION
Caltrans DESIGN

FUNCTIONAL SUPERVISOR: CAROLINE REYES
CALCULATED-DESIGNED BY: STEVE LAWRENCE
CHECKED BY: PATRICIA TECZON
REVISED BY: SL
DATE REVISED: 05/20/11

LAST REVISION 00-00-00
DATE PLOTTED => 25-OCT-2011
TIME PLOTTED => 14:37