Dist	COUNTY	ROUTE	POST MILES TOTAL PROJECT	SHEET No.	TOTAL SHEETS
10	SJ,Sta	99	R24.3/R24.8, 0.0/1.7	1	63

HSNHG-P099(523)E

STATE OF CALIFORNIA
DEPARTMENT OF TRANSPORTATION

PROJECT PLANS FOR CONSTRUCTION ON
STATE HIGHWAY
IN STANISLAUS AND SAN JOAQUIN COUNTIES
IN AND NEAR RIPON
FROM HAMMETT ROAD OVERCROSSING
TO MILGEO AVENUE OVERCROSSING

TO BE SUPPLEMENTED BY STANDARD PLANS DATED MAY 2006

INDEX OF PLANS

SHEET No.	DESCRIPTION
1	TITLE AND LOCATION MAP
2-4	LOCATIONS OF CONSTRUCTION
5-13	LAYOUTS
14	CONSTRUCTION DETAILS
15-24	DRAINAGE PROFILES, DETAILS AND QUANTITIES
25	CONSTRUCTION AREA SIGNS
26-28	TRAFFIC HANDLING PLANS, DETAILS AND QUANTITIES
29-35	PAVEMENT DELINEATION, QUANTITIES AND SIGN PLAN, DETAILS AND QUANTITIES
36	SUMMARY OF QUANTITIES
37-39	HIGHWAY PLANTING, IRRIGATION PLAN AND LANDSCAPE DETAILS
40-45	ELECTRICAL PLANS
46-61	REVISED AND NEW STANDARD PLANS
STRUCTURE PLANS	
62-63	STRUCTURE GENERAL PLANS AND BARRIER DETAILS

THE STANDARD PLANS LIST APPLICABLE TO THIS CONTRACT IS INCLUDED IN THE NOTICE TO BIDDERS AND SPECIAL PROVISIONS BOOK.

LOCATION MAP

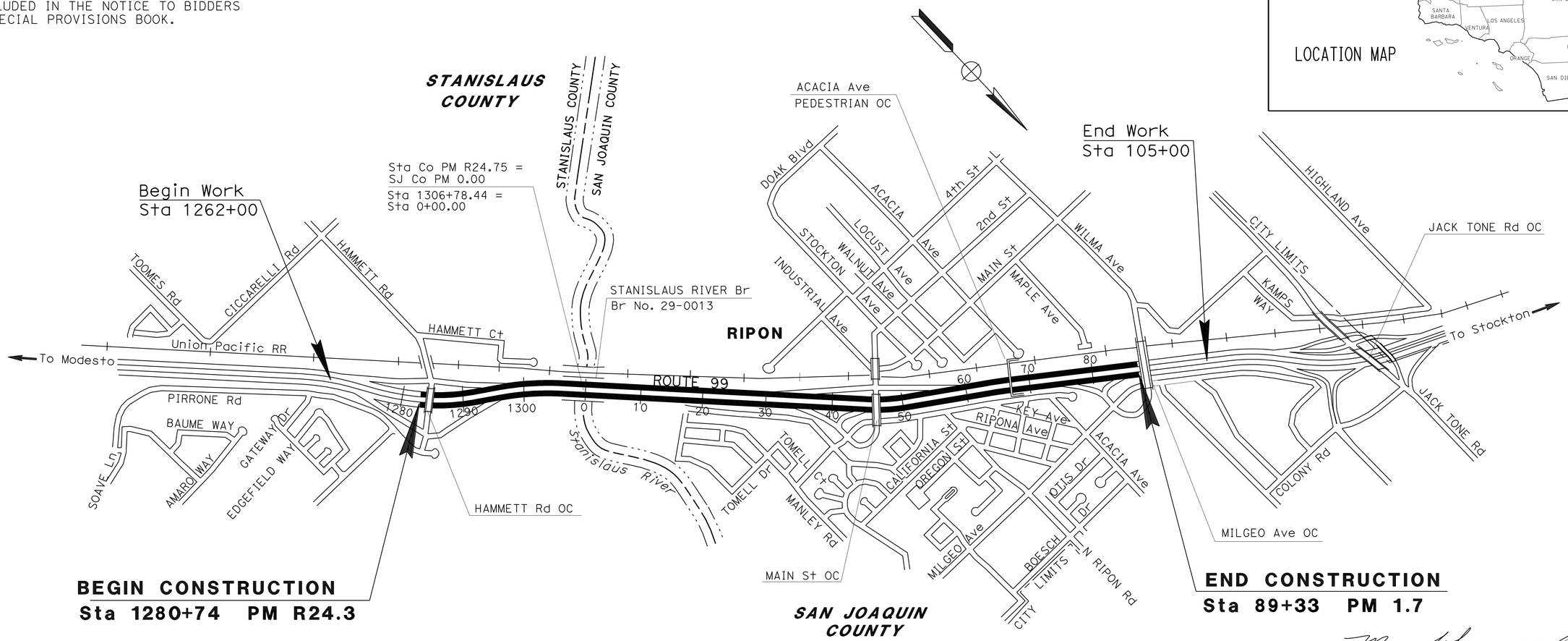

PROJECT MANAGER SCOTT GUIDI

DESIGN ENGINEER CAROLINE REYES

3/18/09
PROJECT ENGINEER REGISTERED CIVIL ENGINEER — DATE

June 29, 2009
PLANS APPROVAL DATE

REGISTERED PROFESSIONAL ENGINEER — MASON L. LEUNG — No. 71709 — Exp. 12-31-09 — CIVIL — STATE OF CALIFORNIA

THE STATE OF CALIFORNIA OR ITS OFFICERS OR AGENTS SHALL NOT BE RESPONSIBLE FOR THE ACCURACY OR COMPLETENESS OF SCANNED COPIES OF THIS PLAN SHEET.

THE CONTRACTOR SHALL POSSESS THE CLASS (OR CLASSES) OF LICENSE AS SPECIFIED IN THE "NOTICE TO BIDDERS."

NO SCALE

CONTRACT No. 10-0L6304

LAST REVISION 00-00-00 | DATE PLOTTED => 09-SEP-2009 | TIME PLOTTED => 07:02

Dist	COUNTY	ROUTE	POST MILES TOTAL PROJECT	SHEET No.	TOTAL SHEETS
10	SJ,Sta	99	R24.3/R24.8, 0.0/1.7	2	63

REGISTERED CIVIL ENGINEER 3/18/09 DATE

6-29-09
PLANS APPROVAL DATE

REGISTERED PROFESSIONAL ENGINEER MASON L. LEUNG No. 71709 Exp. 12/31/09 CIVIL STATE OF CALIFORNIA

THE STATE OF CALIFORNIA OR ITS OFFICERS OR AGENTS SHALL NOT BE RESPONSIBLE FOR THE ACCURACY OR COMPLETENESS OF SCANNED COPIES OF THIS PLAN SHEET.

NOTES:

1. DIMENSIONS OF THE PAVEMENT STRUCTURES (STRUCTURAL SECTIONS) ARE SUBJECT TO TOLERANCES SPECIFIED IN THE STANDARD SPECIFICATIONS.
2. SUPERELEVATION AS SHOWN OR AS DIRECTED BY THE ENGINEER.
3. FOR LOCATIONS OF CONCRETE BARRIER SEE LAYOUT SHEETS.

ABBREVIATION

RHMA-G - RUBBERIZED HOT MIX ASPHALT (GAP GRADED)

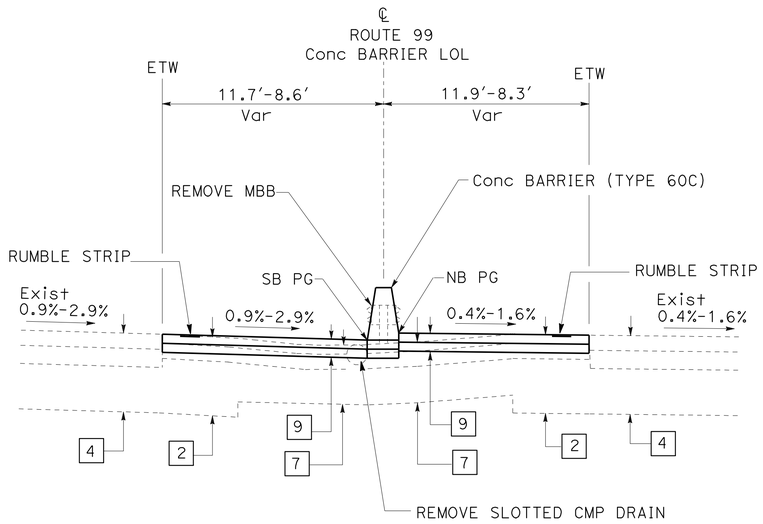

Sta 1297+39.43 TO 1304+50.04

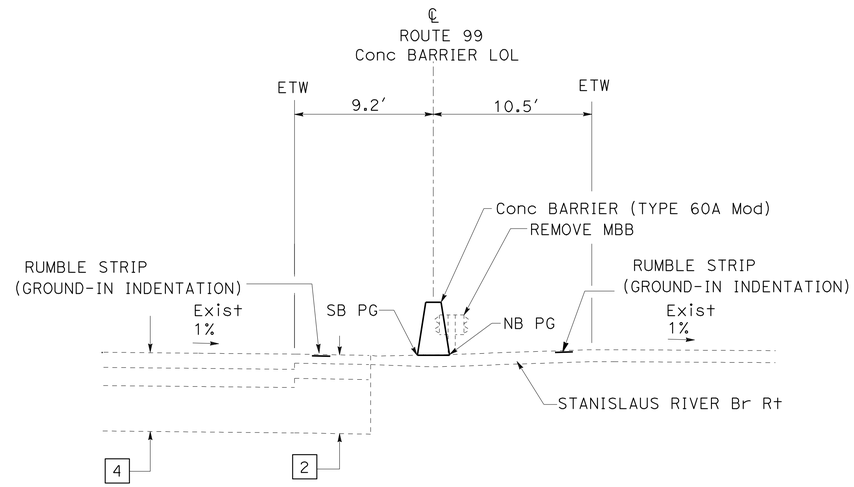

Sta 1304+50.04 TO 1304+80.19

STRUCTURAL SECTION NOTES:

1 — Exist
0.20' AC
0.50' AB
Var AS

2 — Exist
0.36' AC
0.50' AB
1.80' AS

3 — Exist
0.66' PCC
0.46 CTB
0.59' AS

4 — Exist
0.50' AC
0.66' CTB
1.50' AS

5 — Exist
0.39' AC
0.79' CTB
0.79' AS

6 — Exist
0.52' AC
0.85' CTB
1.05' AS
(Sta 51+49.60 TO 65+10.80)
0.20' AC
0.75' PCC

7 — Exist
0.36' AC
0.50' AB
1.25' AS

8 — Exist
Var 0.13'-0.20' AC

9 — 0.34' HMA (TYPE B)
0.34' CI 2 AB

10 — 0.20' HMA (TYPE B)

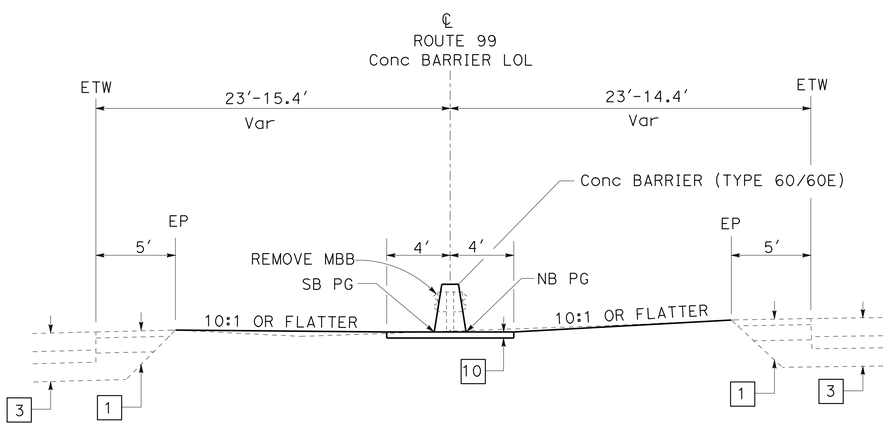

Sta 1280+73.65 TO 1295+25.88

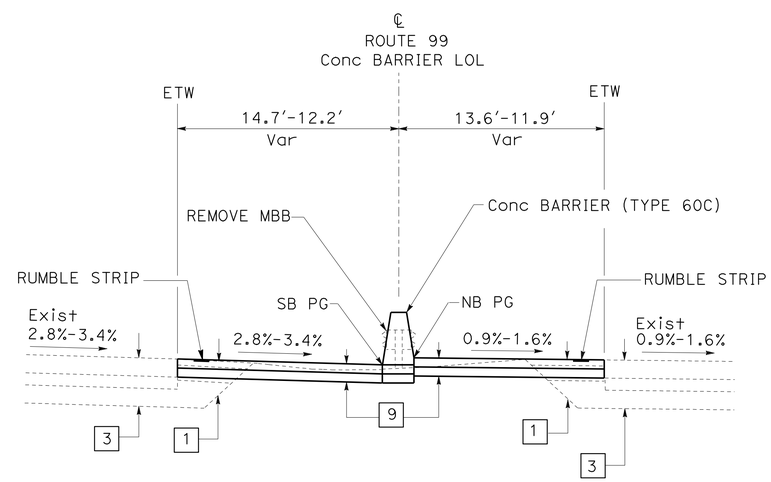

Sta 1295+25.88 TO 1297+39.43

TYPICAL CROSS SECTIONS

NO SCALE

X-1

ROUTE 99

STATE OF CALIFORNIA - DEPARTMENT OF TRANSPORTATION
Caltrans
DESIGN

FUNCTIONAL SUPERVISOR: CAROLINE REYES
CALCULATED-DESIGNED BY: MANNY PALATINO
CHECKED BY: MASON LEUNG
REVISED BY: MP
DATE REVISED: 2-19-09

LAST REVISION 00-00-00
DATE PLOTTED => 06-JUL-2009
TIME PLOTTED => 06:45

Dist	COUNTY	ROUTE	POST MILES TOTAL PROJECT	SHEET No.	TOTAL SHEETS
10	SJ,Sta	99	R24.3/R24.8, 0.0/1.7	3	63

REGISTERED CIVIL ENGINEER 3/18/09 DATE

6-29-09
PLANS APPROVAL DATE

REGISTERED PROFESSIONAL ENGINEER MASON L. LEUNG No. 71709 Exp. 12/31/09 CIVIL STATE OF CALIFORNIA

THE STATE OF CALIFORNIA OR ITS OFFICERS OR AGENTS SHALL NOT BE RESPONSIBLE FOR THE ACCURACY OR COMPLETENESS OF SCANNED COPIES OF THIS PLAN SHEET.

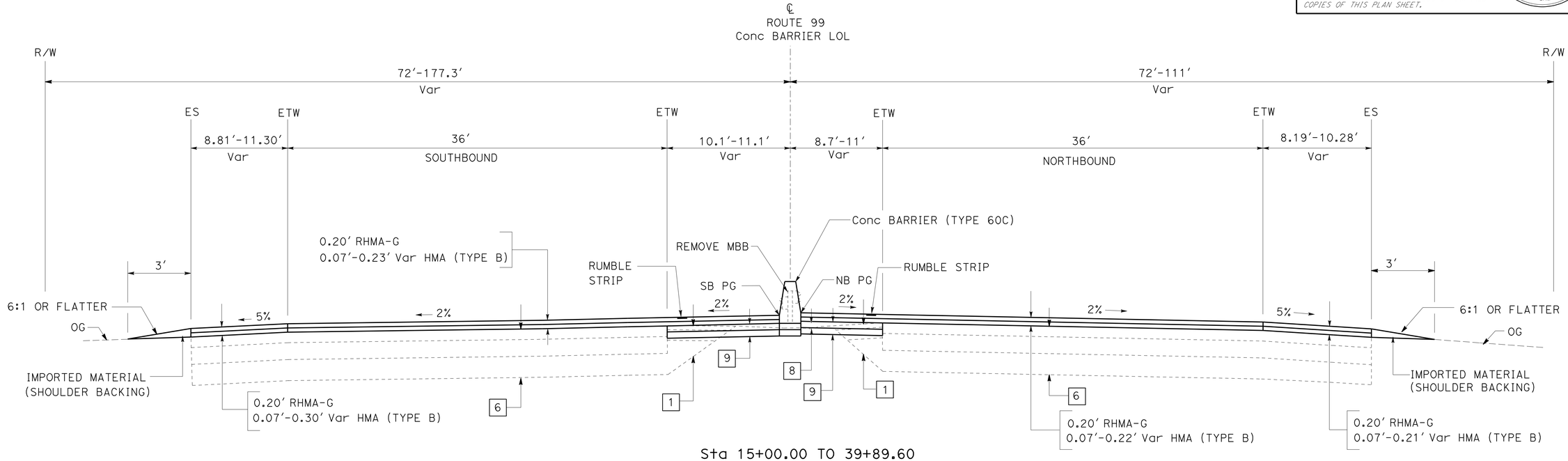

Sta 15+00.00 TO 39+89.60

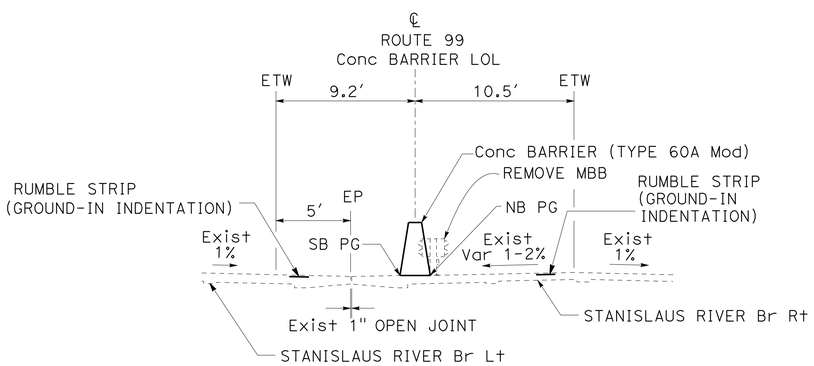

Sta 1304+80.19 TO 10+19.34

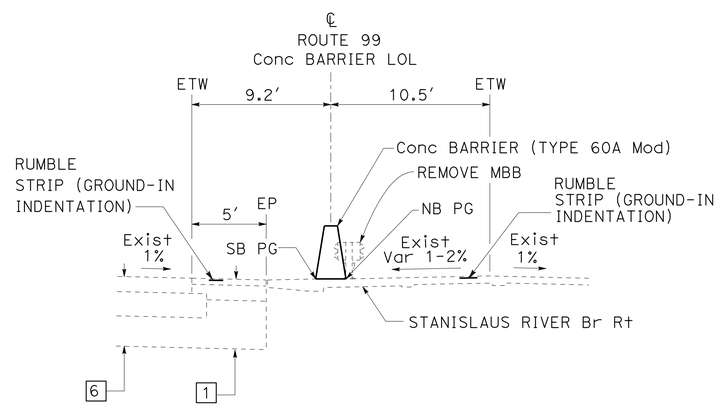

Sta 10+19.34 TO 10+64.41

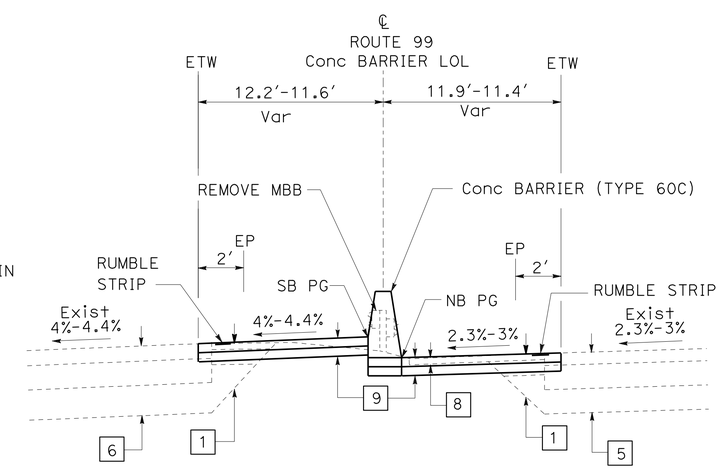

Sta 41+89.60 TO 52+34.69

ROUTE 99

TYPICAL CROSS SECTIONS

NO SCALE

X-2

REVISED BY	MP
DATE REVISED	2-19-09
CALCULATED-DESIGNED BY	MANNY PALATINO
CHECKED BY	MASON LEUNG
FUNCTIONAL SUPERVISOR	CAROLINE REYES

STATE OF CALIFORNIA - DEPARTMENT OF TRANSPORTATION
Caltrans®
DESIGN

LAST REVISION 00-00-00
DATE PLOTTED => 06-JUL-2009
TIME PLOTTED => 06:45

Dist	COUNTY	ROUTE	POST MILES TOTAL PROJECT	SHEET No.	TOTAL SHEETS
10	SJ,Sta	99	R24.3/R24.8, 0.0/1.7	4	63

REGISTERED CIVIL ENGINEER 3/18/09 DATE

6-29-09
PLANS APPROVAL DATE

REGISTERED PROFESSIONAL ENGINEER MASON L. LEUNG No. 71709 Exp. 12/31/09 CIVIL STATE OF CALIFORNIA

THE STATE OF CALIFORNIA OR ITS OFFICERS OR AGENTS SHALL NOT BE RESPONSIBLE FOR THE ACCURACY OR COMPLETENESS OF SCANNED COPIES OF THIS PLAN SHEET.

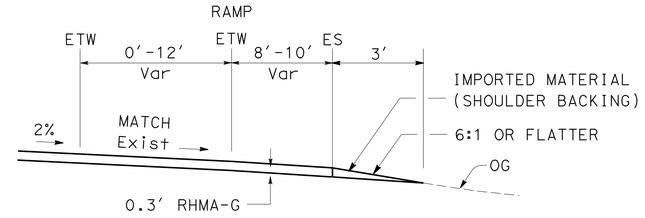

TYPICAL RAMP SECTION

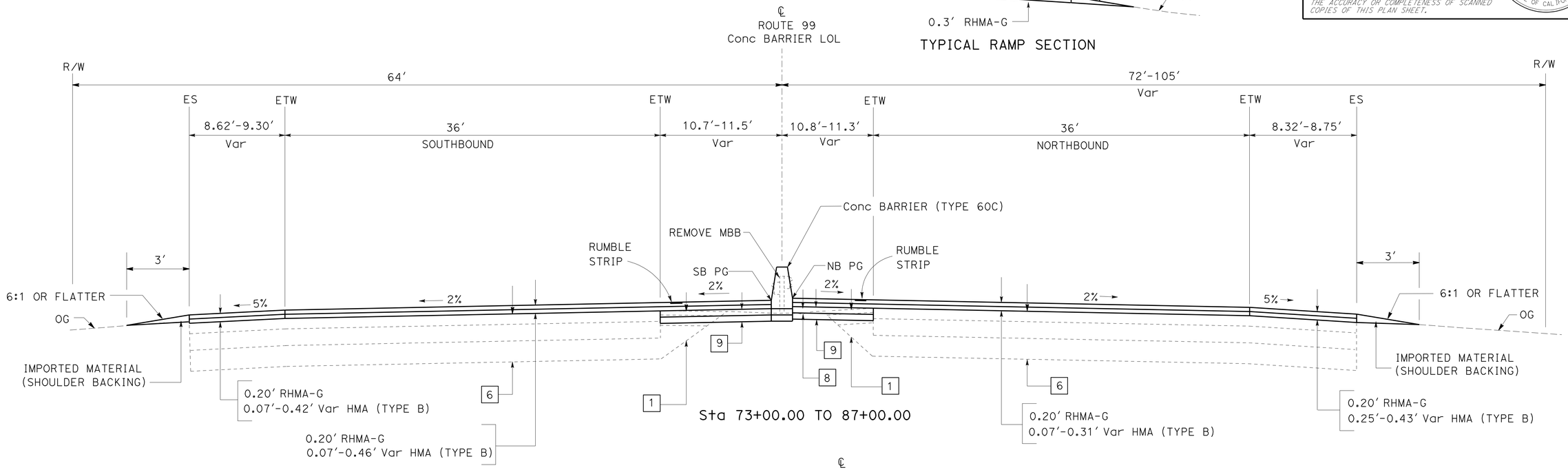

Sta 73+00.00 TO 87+00.00

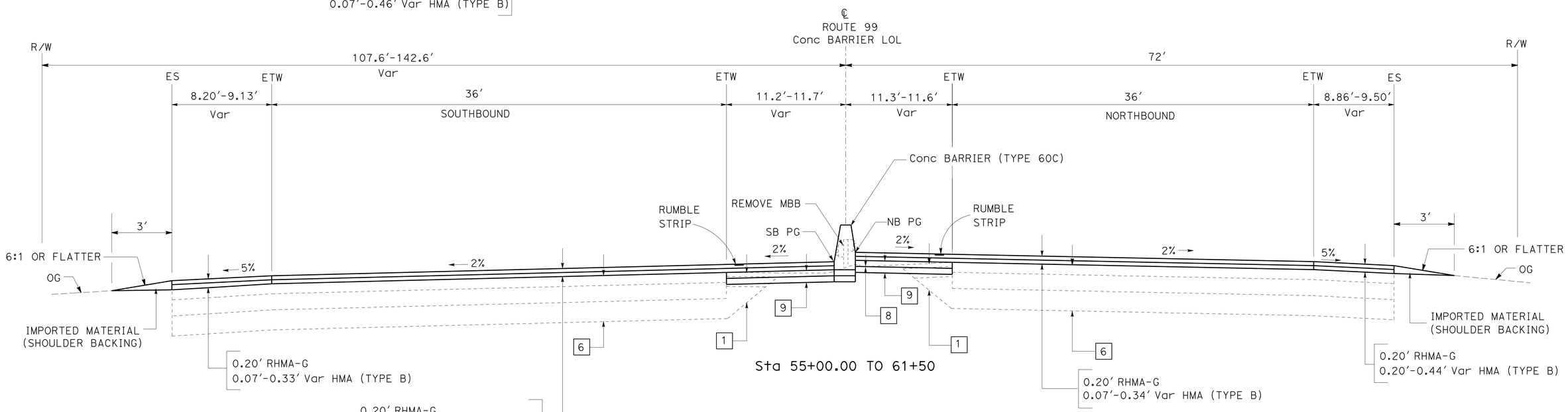

Sta 55+00.00 TO 61+50

ROUTE 99

TYPICAL CROSS SECTIONS

NO SCALE

X-3

STATE OF CALIFORNIA - DEPARTMENT OF TRANSPORTATION
Caltrans® DESIGN

FUNCTIONAL SUPERVISOR: CAROLINE REYES
CALCULATED-DESIGNED BY: MANNY PALATINO
CHECKED BY: MASON LEUNG
REVISED BY: MP
DATE REVISED: 2-19-09

LAST REVISION 00-00-00 | DATE PLOTTED => 06-JUL-2009 | TIME PLOTTED => 06:45

Dist	COUNTY	ROUTE	POST MILES TOTAL PROJECT	SHEET No.	TOTAL SHEETS
10	SJ,Sta	99	R24.3/R24.8, 0.0/1.7	5	63

REGISTERED CIVIL ENGINEER 3/18/09 DATE

6-29-09
PLANS APPROVAL DATE

REGISTERED PROFESSIONAL ENGINEER MASON L. LEUNG No. 71709 Exp. 12/31/09 CIVIL STATE OF CALIFORNIA

THE STATE OF CALIFORNIA OR ITS OFFICERS OR AGENTS SHALL NOT BE RESPONSIBLE FOR THE ACCURACY OR COMPLETENESS OF SCANNED COPIES OF THIS PLAN SHEET.

NOTES:

1. FOR COMPLETE RIGHT OF WAY AND ACCURATE ACCESS DATA, SEE RIGHT OF WAY RECORD MAPS AT DISTRICT OFFICE.
2. LOCATIONS OF EXISTING UTILITY FACILITIES SHOWN ON THE PLAN ARE APPROXIMATE AND HAVE NOT BEEN POSITIVELY IDENTIFIED. THE CONTRACTOR SHALL VERIFY UTILITY LOCATIONS PRIOR TO CONSTRUCTION.
3. FOR COMMUNICATION CONDUIT PLACED UNDER CONCRETE BARRIER, SEE ELECTRICAL SHEETS.

UTILITY OWNERSHIP

- sd — UNDERGROUND STORM DRAIN (CALTRANS)
- g — UNDERGROUND GAS LINE (PG&E)
- s — UNDERGROUND SEWER (CITY OF RIPON)
- o — UNDERGROUND OIL (KINDER MORGAN PETROLEUM)
- t — UNDERGROUND TELEPHONE (VERIZON)
- t (oh) — OVERHEAD TELEPHONE (AT&T)
- e (oh) — OVERHEAD ELECTRICAL (PG&E)
- tv (oh) — OVERHEAD TELEVISION (COASTSIDE CABLE TV)

LEGEND

- RHMA-G OVERLAY
- Pvmt CONFORM TAPER
- RAMP RHMA-G OVERLAY
- X — DRAINAGE SYSTEM No.
- DRAINAGE UNIT No.
- DIRECTION OF TRAVEL

ABBREVIATIONS

RHMA-G - RUBBERIZED HOT MIX ASPHALT (GAP GRADED)
PG&E - PACIFIC GAS AND ELECTRIC
AT&T - AMERICAN TELEPHONE AND TELEGRAPH

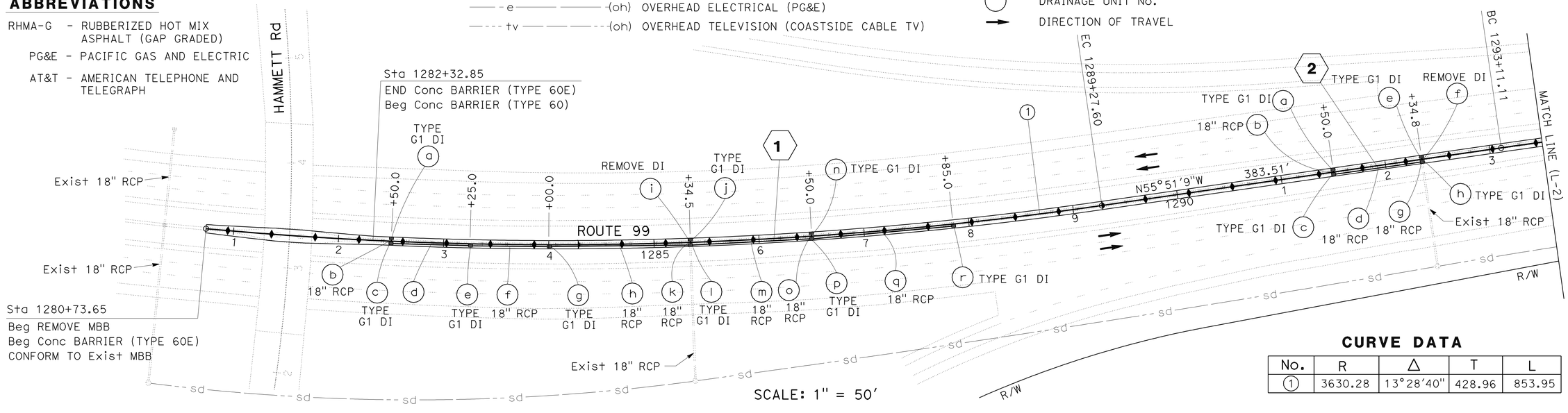

SCALE: 1" = 50'

CURVE DATA

No.	R	Δ	T	L
1	3630.28	13°28'40"	428.96	853.95

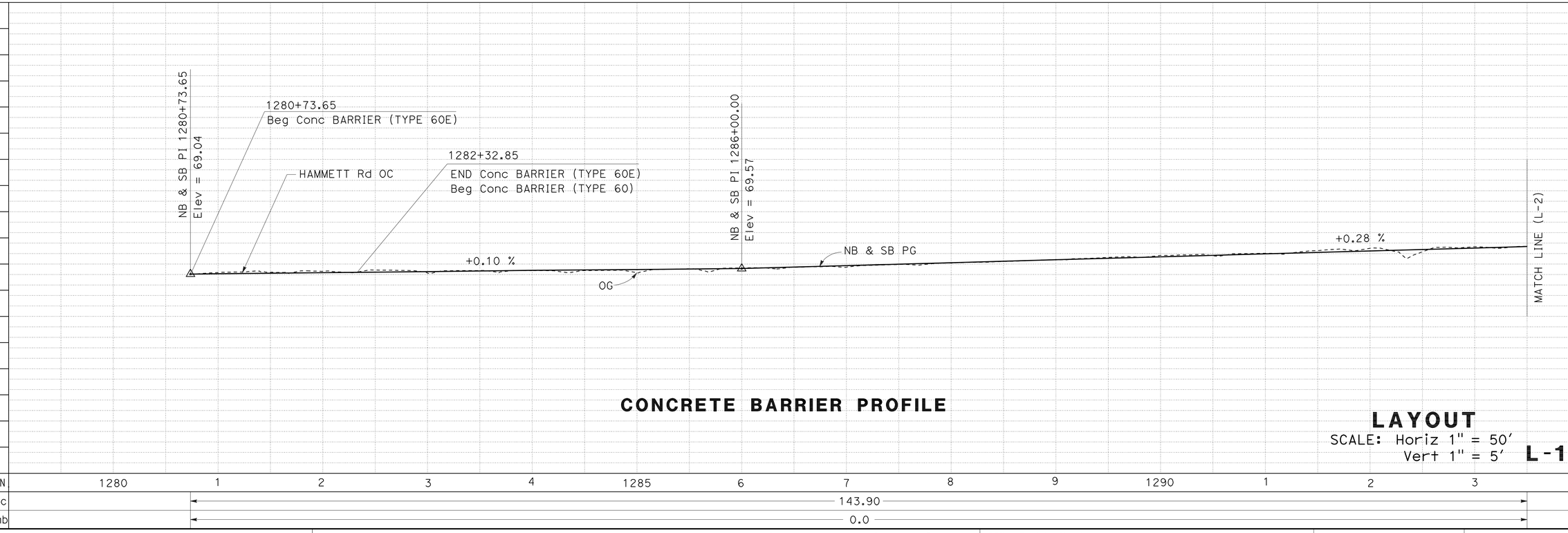

CONCRETE BARRIER PROFILE

LAYOUT

SCALE: Horiz 1" = 50'
Vert 1" = 5'

L-1

REVISED BY	DATE REVISED
MP	2-19-09

CALCULATED-DESIGNED BY: MANNY PALATINO
CHECKED BY: MASON LEUNG
FUNCTIONAL SUPERVISOR: CAROLINE REYES

STATE OF CALIFORNIA - DEPARTMENT OF TRANSPORTATION
Caltrans
DESIGN

LAST REVISION 00-00-00
DATE PLOTTED => 06-JUL-2009
TIME PLOTTED => 06:46

Dist	COUNTY	ROUTE	POST MILES TOTAL PROJECT	SHEET No.	TOTAL SHEETS
10	SJ,Sta	99	R24.3/R24.8, 0.0/1.7	6	63

REGISTERED CIVIL ENGINEER 3/18/09 DATE

6-29-09
PLANS APPROVAL DATE

REGISTERED PROFESSIONAL ENGINEER MASON L. LEUNG No. 71709 EXP. 12/31/09 CIVIL STATE OF CALIFORNIA

THE STATE OF CALIFORNIA OR ITS OFFICERS OR AGENTS SHALL NOT BE RESPONSIBLE FOR THE ACCURACY OR COMPLETENESS OF SCANNED COPIES OF THIS PLAN SHEET.

NOTES:

1. FOR COMPLETE RIGHT OF WAY AND ACCURATE ACCESS DATA, SEE RIGHT OF WAY RECORD MAPS AT DISTRICT OFFICE.
2. LOCATIONS OF EXISTING UTILITY FACILITIES SHOWN ON THE PLAN ARE APPROXIMATE AND HAVE NOT BEEN POSITIVELY IDENTIFIED. THE CONTRACTOR SHALL VERIFY UTILITY LOCATIONS PRIOR TO CONSTRUCTION.

CURVE DATA

No.	R	Δ	T	L
2	4524.49	12°47'8"	506.93	1009.64

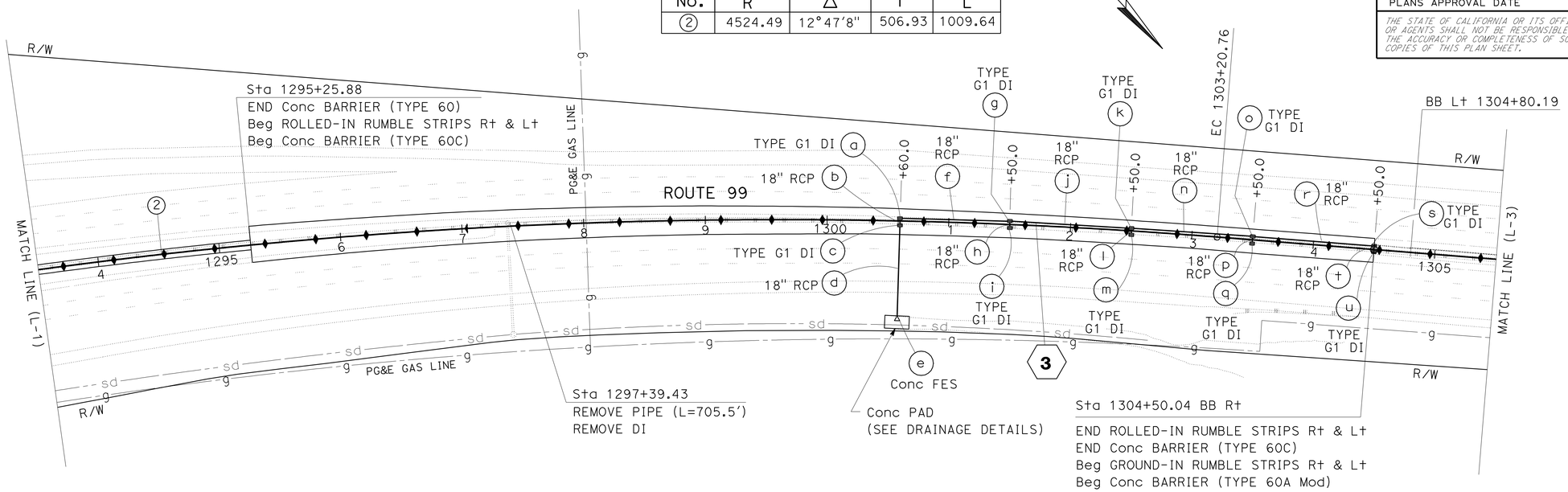

SCALE: 1" = 50'

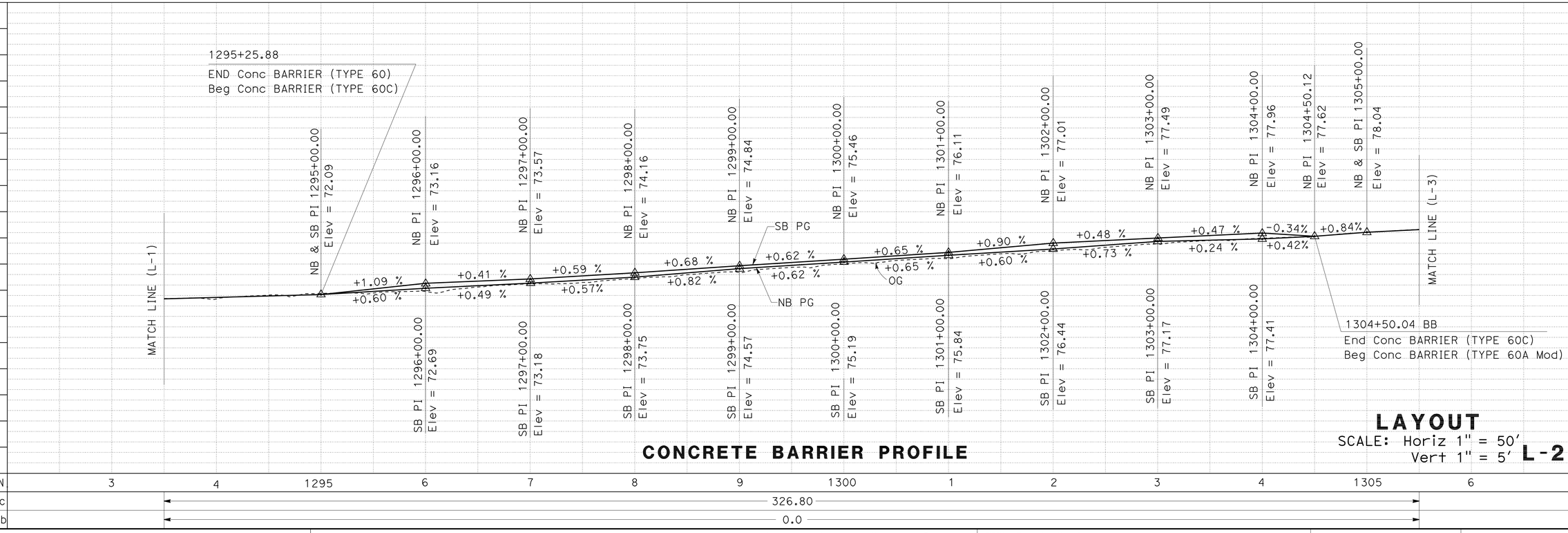

CONCRETE BARRIER PROFILE

LAYOUT

SCALE: Horiz 1" = 50'
Vert 1" = 5'

L-2

REVISED BY	MP
DATE REVISED	2-19-09
CALCULATED-DESIGNED BY	MANNY PALATINO
CHECKED BY	MASON LEUNG
FUNCTIONAL SUPERVISOR	CAROLINE REYES

STATE OF CALIFORNIA - DEPARTMENT OF TRANSPORTATION
Caltrans
DESIGN

LAST REVISION 00-00-00
DATE PLOTTED => 06-JUL-2009
TIME PLOTTED => 06:46

Dist	COUNTY	ROUTE	POST MILES TOTAL PROJECT	SHEET No.	TOTAL SHEETS
10	SJ,Sta	99	R24.3/R24.8, 0.0/1.7	7	63

REGISTERED CIVIL ENGINEER 3/18/09 DATE

6-29-09
PLANS APPROVAL DATE

REGISTERED PROFESSIONAL ENGINEER MASON L. LEUNG No. 71709 Exp. 12/31/09 CIVIL STATE OF CALIFORNIA

THE STATE OF CALIFORNIA OR ITS OFFICERS OR AGENTS SHALL NOT BE RESPONSIBLE FOR THE ACCURACY OR COMPLETENESS OF SCANNED COPIES OF THIS PLAN SHEET.

NOTES:
1. FOR COMPLETE RIGHT OF WAY AND ACCURATE ACCESS DATA, SEE RIGHT OF WAY RECORD MAPS AT DISTRICT OFFICE.
2. LOCATIONS OF EXISTING UTILITY FACILITIES SHOWN ON THE PLAN ARE APPROXIMATE AND HAVE NOT BEEN POSITIVELY IDENTIFIED. THE CONTRACTOR SHALL VERIFY UTILITY LOCATIONS PRIOR TO CONSTRUCTION.

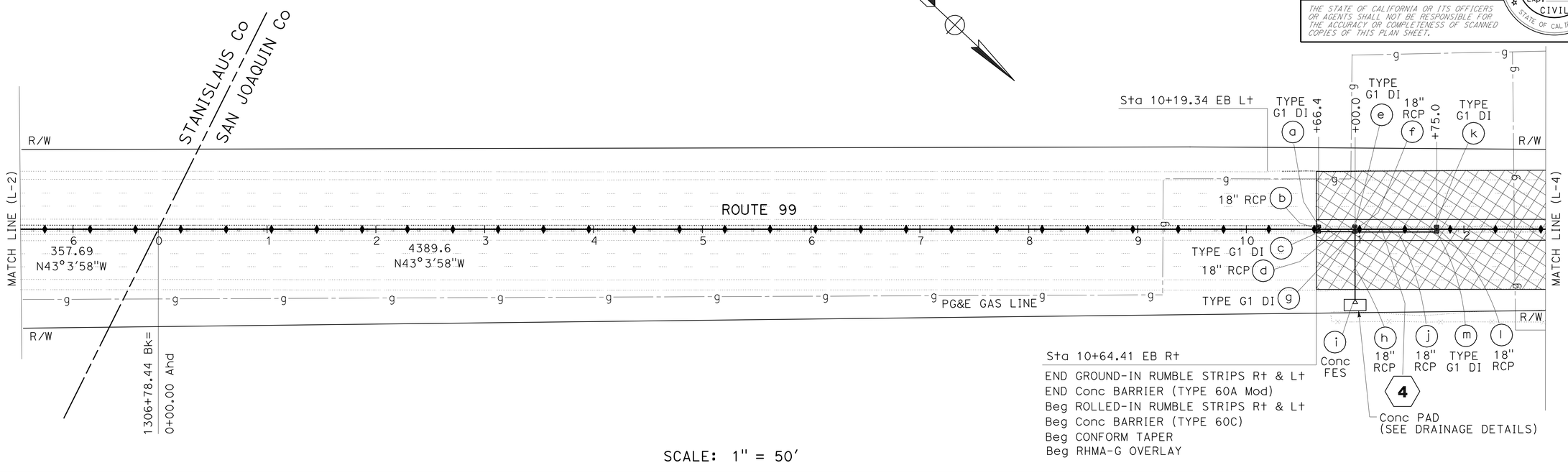

SCALE: 1" = 50'

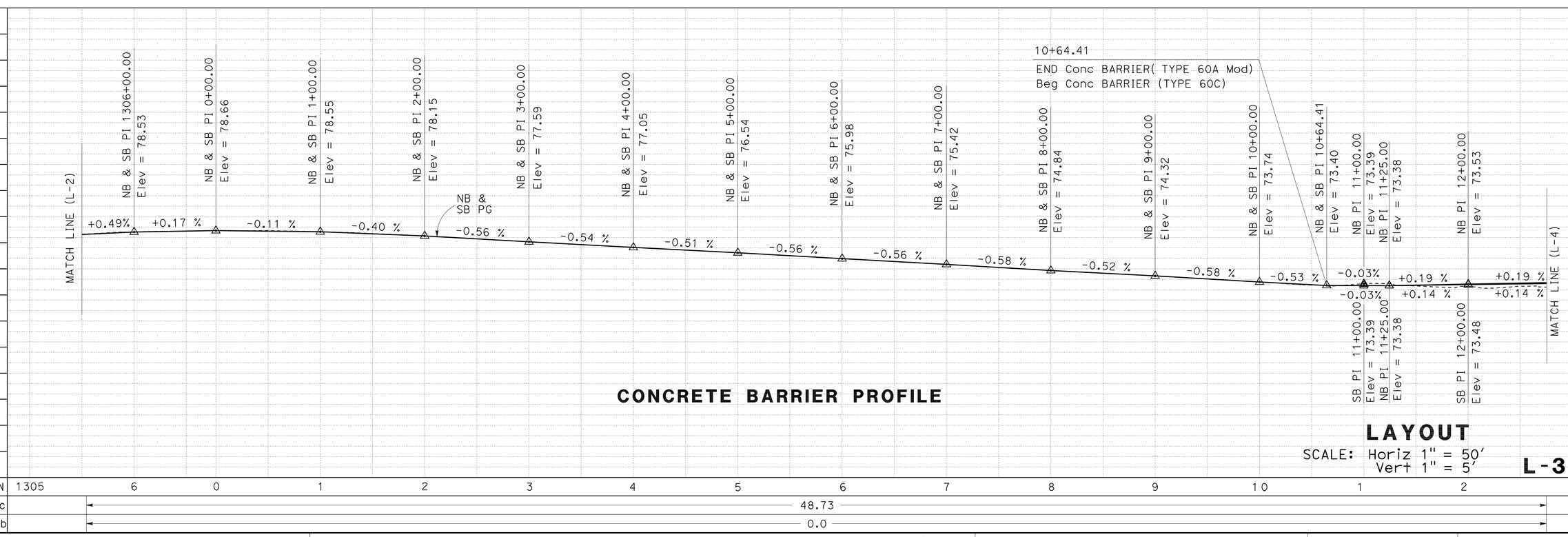

CONCRETE BARRIER PROFILE

LAYOUT

SCALE: Horiz 1" = 50'
Vert 1" = 5'

L-3

STATION	1305	6	0	1	2	3	4	5	6	7	8	9	10	1	2	TOTAL
CY Exc	48.73															
CY Emb	0.0															

REVISED BY	DATE REVISED
MP	2-19-09

CALCULATED-DESIGNED BY: MANNY PALATINO
CHECKED BY: MASON LEUNG
FUNCTIONAL SUPERVISOR: CAROLINE REYES

STATE OF CALIFORNIA - DEPARTMENT OF TRANSPORTATION
Caltrans
DESIGN

LAST REVISION 00-00-00
DATE PLOTTED => 06-JUL-2009
TIME PLOTTED => 06:46

NOTES:
1. FOR COMPLETE RIGHT OF WAY AND ACCURATE ACCESS DATA, SEE RIGHT OF WAY RECORD MAPS AT DISTRICT OFFICE.
2. LOCATIONS OF EXISTING UTILITY FACILITIES SHOWN ON THE PLAN ARE APPROXIMATE AND HAVE NOT BEEN POSITIVELY IDENTIFIED. THE CONTRACTOR SHALL VERIFY UTILITY LOCATIONS PRIOR TO CONSTRUCTION

Dist	COUNTY	ROUTE	POST MILES TOTAL PROJECT	SHEET No.	TOTAL SHEETS
10	SJ,Sta	99	R24.3/R24.8, 0.0/1.7	8	63

REGISTERED CIVIL ENGINEER 3/18/09 DATE

6-29-09
PLANS APPROVAL DATE

REGISTERED PROFESSIONAL ENGINEER MASON L. LEUNG No. 71709 Exp. 12/31/09 CIVIL STATE OF CALIFORNIA

THE STATE OF CALIFORNIA OR ITS OFFICERS OR AGENTS SHALL NOT BE RESPONSIBLE FOR THE ACCURACY OR COMPLETENESS OF SCANNED COPIES OF THIS PLAN SHEET.

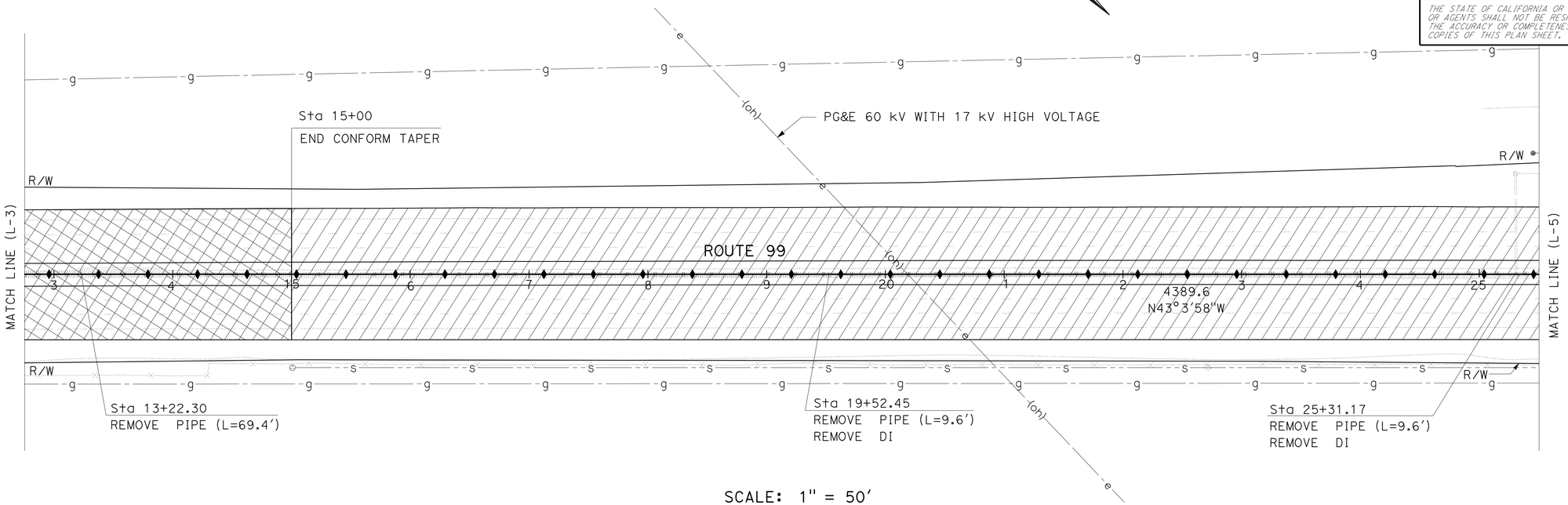

SCALE: 1" = 50'

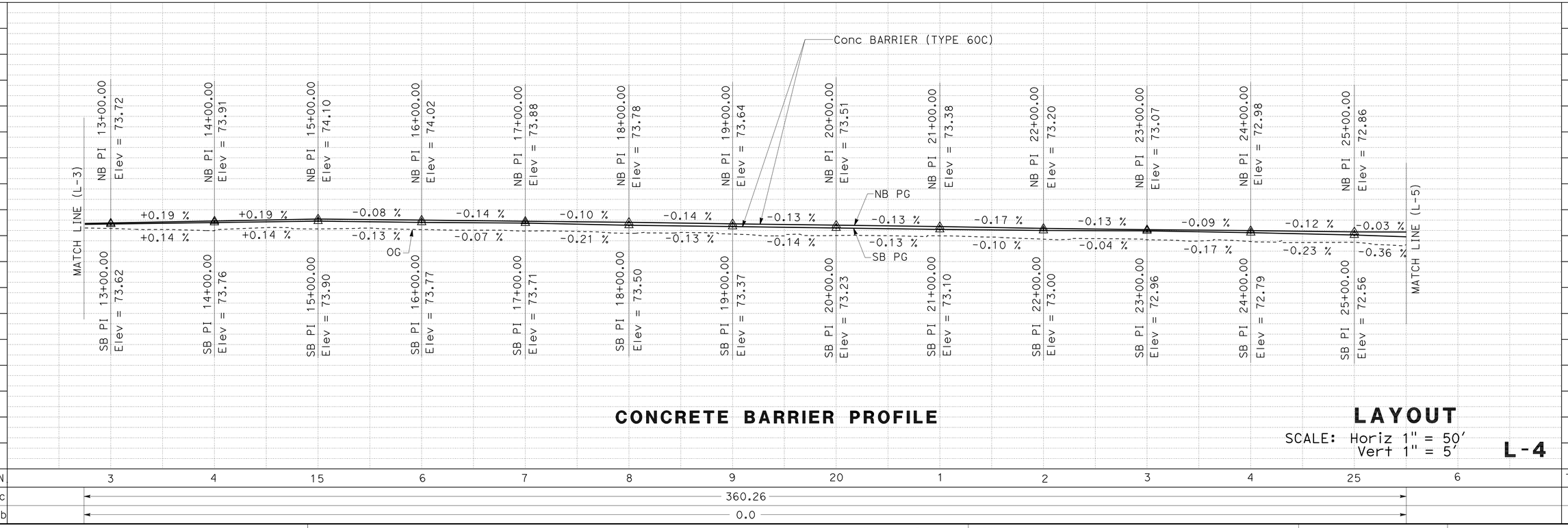

CONCRETE BARRIER PROFILE

LAYOUT

SCALE: Horiz 1" = 50'
Vert 1" = 5'

L-4

REVISED BY	DATE REVISED
MP	2-19-09

MANNY PALATINO — CALCULATED-DESIGNED BY
MASON LEUNG — CHECKED BY
CAROLINE REYES — FUNCTIONAL SUPERVISOR

STATE OF CALIFORNIA - DEPARTMENT OF TRANSPORTATION
Caltrans
DESIGN

LAST REVISION 00-00-00 DATE PLOTTED => 06-JUL-2009 TIME PLOTTED => 06:46

Dist	COUNTY	ROUTE	POST MILES TOTAL PROJECT	SHEET No.	TOTAL SHEETS
10	SJ,Sta	99	R24.3/R24.8, 0.0/1.7	9	63

REGISTERED CIVIL ENGINEER 3/18/09 DATE

6-29-09
PLANS APPROVAL DATE

REGISTERED PROFESSIONAL ENGINEER MASON L. LEUNG No. 71709 EXP. 12/31/09 CIVIL STATE OF CALIFORNIA

THE STATE OF CALIFORNIA OR ITS OFFICERS OR AGENTS SHALL NOT BE RESPONSIBLE FOR THE ACCURACY OR COMPLETENESS OF SCANNED COPIES OF THIS PLAN SHEET.

NOTES:
1. FOR COMPLETE RIGHT OF WAY AND ACCURATE ACCESS DATA, SEE RIGHT OF WAY RECORD MAPS AT DISTRICT OFFICE.
2. LOCATIONS OF EXISTING UTILITY FACILITIES SHOWN ON THE PLAN ARE APPROXIMATE AND HAVE NOT BEEN POSITIVELY IDENTIFIED. THE CONTRACTOR SHALL VERIFY UTILITY LOCATIONS PRIOR TO CONSTRUCTION.

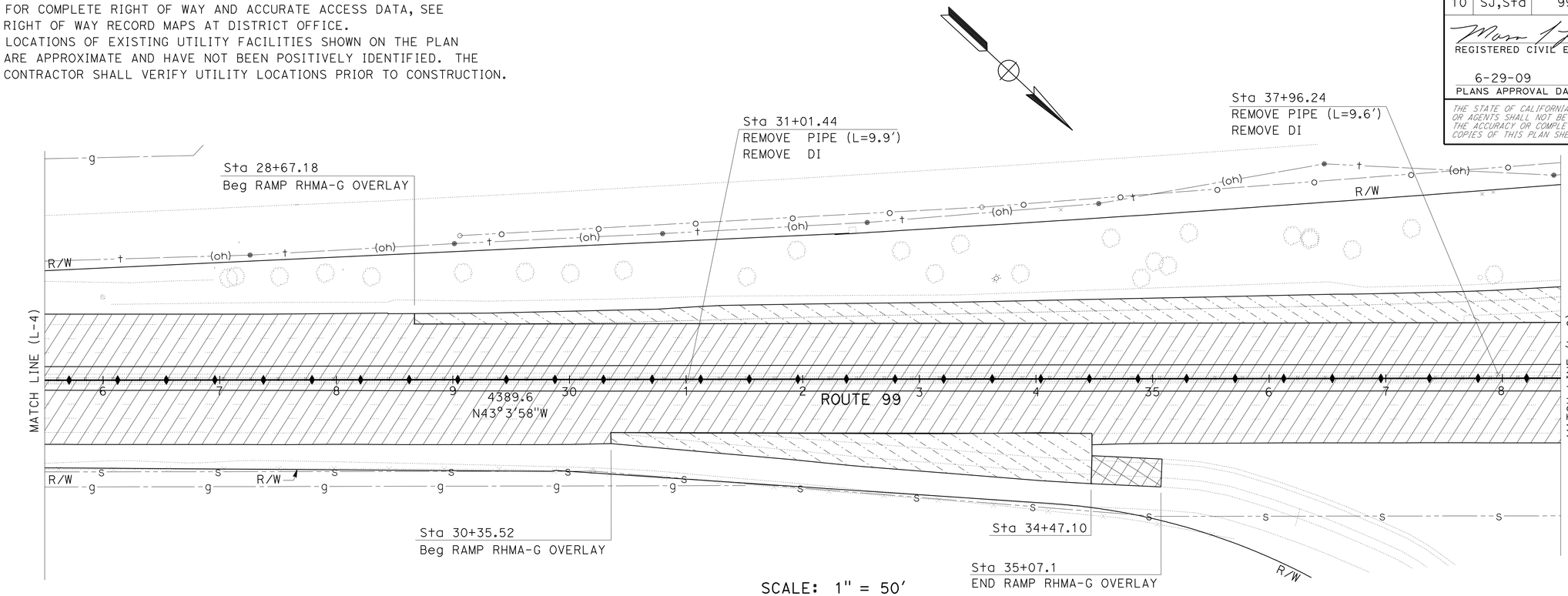

SCALE: 1" = 50'

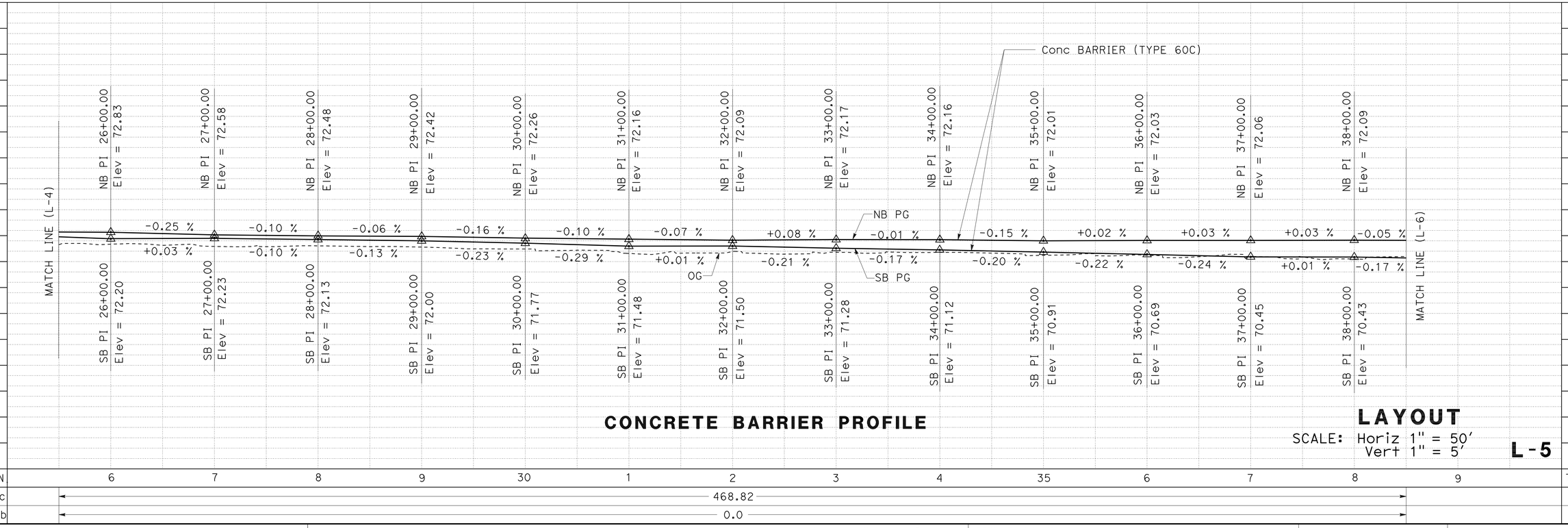

CONCRETE BARRIER PROFILE

LAYOUT

SCALE: Horiz 1" = 50'
Vert 1" = 5'

L-5

MP	2-19-09
REVISED BY	DATE REVISED
MANNY PALATINO	MASON LEUNG
CALCULATED-DESIGNED BY	CHECKED BY
FUNCTIONAL SUPERVISOR	CAROLINE REYES

STATE OF CALIFORNIA - DEPARTMENT OF TRANSPORTATION
Caltrans
DESIGN

LAST REVISION 00-00-00 DATE PLOTTED => 06-JUL-2009 TIME PLOTTED => 06:46

NOTES:
1. FOR COMPLETE RIGHT OF WAY AND ACCURATE ACCESS DATA, SEE RIGHT OF WAY RECORD MAPS AT DISTRICT OFFICE.
2. LOCATIONS OF EXISTING UTILITY FACILITIES SHOWN ON THE PLAN ARE APPROXIMATE AND HAVE NOT BEEN POSITIVELY IDENTIFIED. THE CONTRACTOR SHALL VERIFY UTILITY LOCATIONS PRIOR TO CONSTRUCTION.

Dist	COUNTY	ROUTE	POST MILES TOTAL PROJECT	SHEET No.	TOTAL SHEETS
10	SJ,Sta	99	R24.3/R24.8, 0.0/1.7	10	63

REGISTERED CIVIL ENGINEER 3/18/09 DATE

6-29-09
PLANS APPROVAL DATE

REGISTERED PROFESSIONAL ENGINEER MASON L. LEUNG No. 71709 Exp. 12/31/09 CIVIL STATE OF CALIFORNIA

THE STATE OF CALIFORNIA OR ITS OFFICERS OR AGENTS SHALL NOT BE RESPONSIBLE FOR THE ACCURACY OR COMPLETENESS OF SCANNED COPIES OF THIS PLAN SHEET.

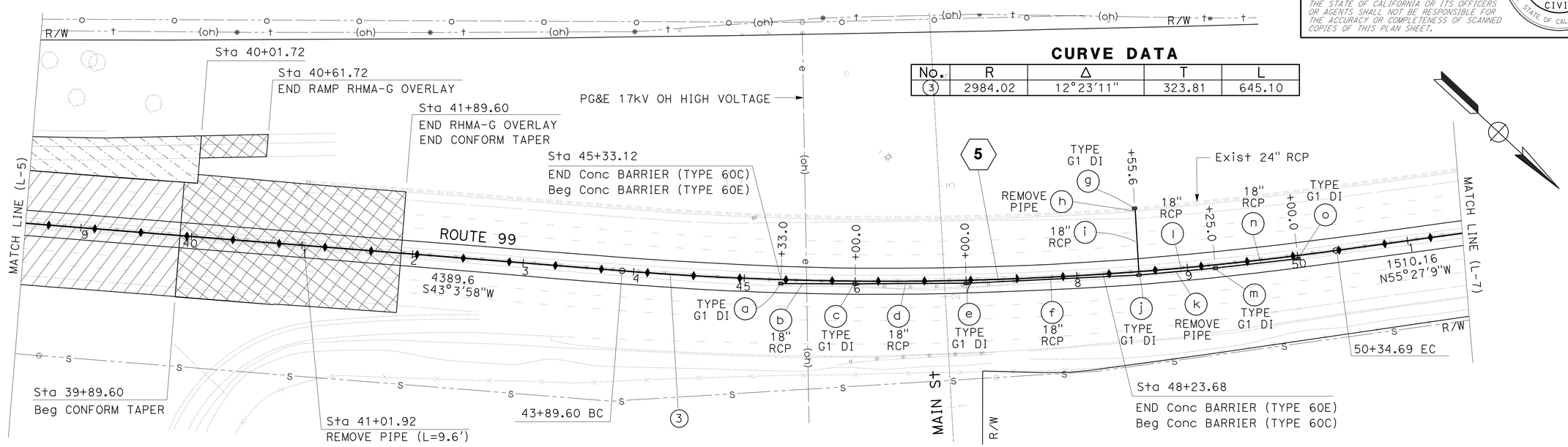

CURVE DATA

No.	R	Δ	T	L
3	2984.02	12°23'11"	323.81	645.10

SCALE: 1" = 50'

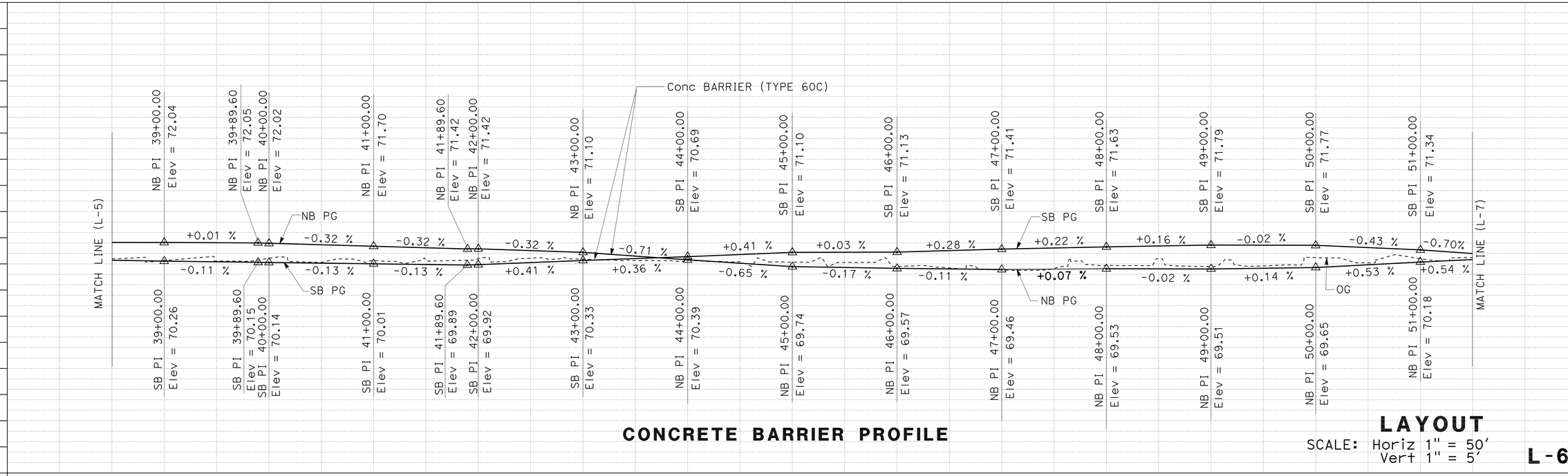

CONCRETE BARRIER PROFILE

LAYOUT

SCALE: Horiz 1" = 50'
Vert 1" = 5'

L-6

MP	2-19-09
REVISED BY	DATE REVISED
MANNY PALATINO	MASON LEUNG
CALCULATED-DESIGNED BY	CHECKED BY
FUNCTIONAL SUPERVISOR	CAROLINE REYES

STATE OF CALIFORNIA - DEPARTMENT OF TRANSPORTATION
Caltrans
DESIGN

LAST REVISION 00-00-00 DATE PLOTTED => 06-JUL-2009 TIME PLOTTED => 06:47

Dist	COUNTY	ROUTE	POST MILES TOTAL PROJECT	SHEET No.	TOTAL SHEETS
10	SJ,Sta	99	R24.3/R24.8, 0.0/1.7	11	63

REGISTERED CIVIL ENGINEER 3/18/09 DATE

6-29-09
PLANS APPROVAL DATE

REGISTERED PROFESSIONAL ENGINEER MASON L. LEUNG No. 71709 Exp. 12/31/09 CIVIL STATE OF CALIFORNIA

THE STATE OF CALIFORNIA OR ITS OFFICERS OR AGENTS SHALL NOT BE RESPONSIBLE FOR THE ACCURACY OR COMPLETENESS OF SCANNED COPIES OF THIS PLAN SHEET.

NOTES:
1. FOR COMPLETE RIGHT OF WAY AND ACCURATE ACCESS DATA, SEE RIGHT OF WAY RECORD MAPS AT DISTRICT OFFICE.
2. LOCATIONS OF EXISTING UTILITY FACILITIES SHOWN ON THE PLAN ARE APPROXIMATE AND HAVE NOT BEEN POSITIVELY IDENTIFIED. THE CONTRACTOR SHALL VERIFY UTILITY LOCATIONS PRIOR TO CONSTRUCTION.

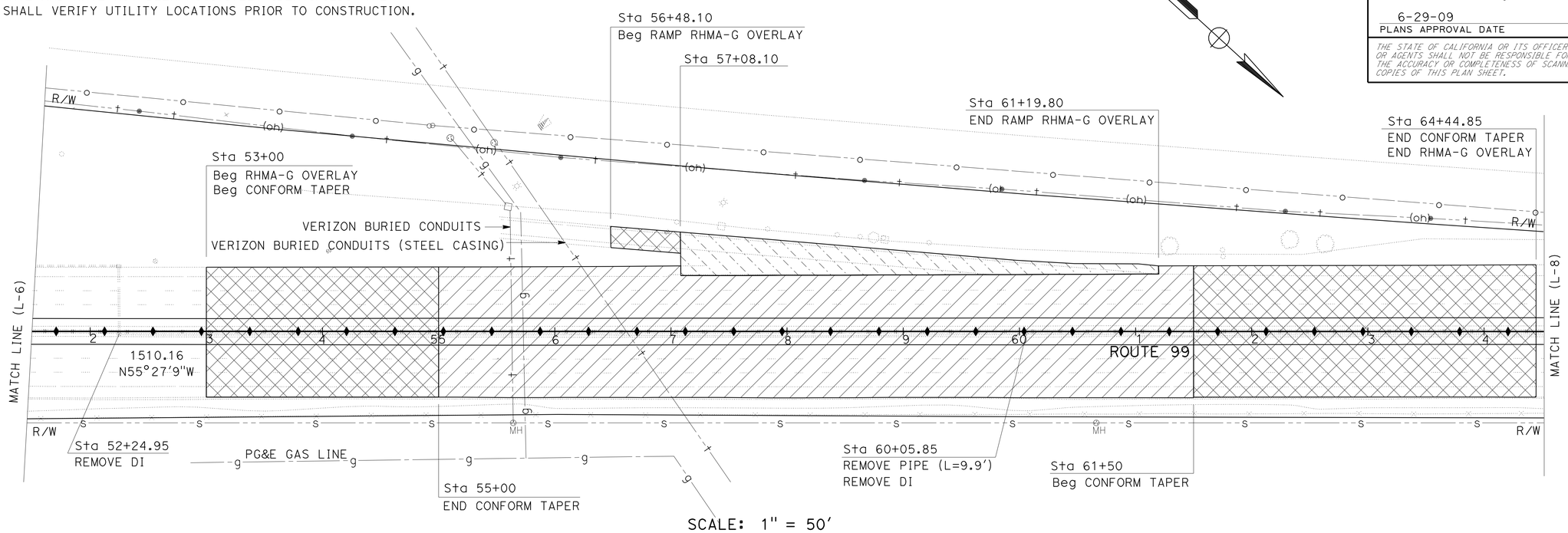

SCALE: 1" = 50'

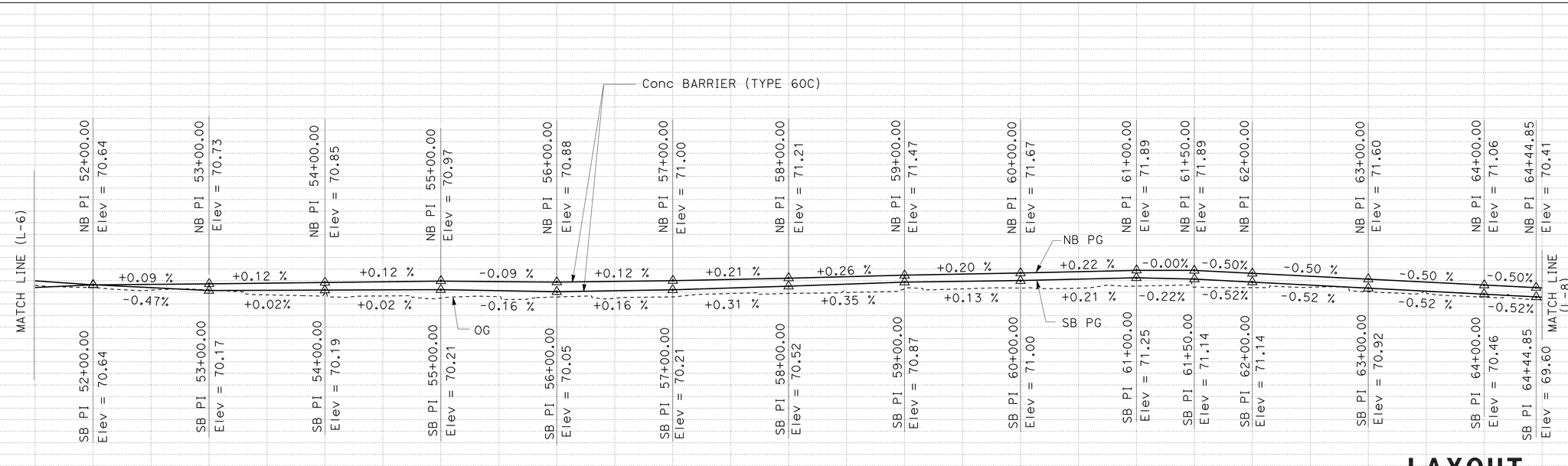

CONCRETE BARRIER PROFILE

LAYOUT
SCALE: Horiz 1" = 50'
Vert 1" = 5'

L-7

STATION	1	2	3	4	55	6	7	8	9	60	1	2	3	4	65	TOTAL
CY Exc		504.48														
CY Emb		0.0														

STATE OF CALIFORNIA - DEPARTMENT OF TRANSPORTATION
Caltrans® DESIGN

FUNCTIONAL SUPERVISOR: CAROLINE REYES

CALCULATED-DESIGNED BY: MANNY PALATINO
CHECKED BY: MASON LEUNG

REVISED BY: MP
DATE REVISED: 2-19-09

LAST REVISION: 00-00-00
DATE PLOTTED => 06-JUL-2009
TIME PLOTTED => 06:47

Dist	COUNTY	ROUTE	POST MILES TOTAL PROJECT	SHEET No.	TOTAL SHEETS
10	SJ,Sta	99	R24.3/R24.8, 0.0/1.7	12	63

REGISTERED CIVIL ENGINEER 3/18/09 DATE

6-29-09
PLANS APPROVAL DATE

REGISTERED PROFESSIONAL ENGINEER MASON L. LEUNG No. 71709 Exp. 12/31/09 CIVIL STATE OF CALIFORNIA

THE STATE OF CALIFORNIA OR ITS OFFICERS OR AGENTS SHALL NOT BE RESPONSIBLE FOR THE ACCURACY OR COMPLETENESS OF SCANNED COPIES OF THIS PLAN SHEET.

NOTES:
1. FOR COMPLETE RIGHT OF WAY AND ACCURATE ACCESS DATA, SEE RIGHT OF WAY RECORD MAPS AT DISTRICT OFFICE.
2. LOCATIONS OF EXISTING UTILITY FACILITIES SHOWN ON THE PLAN ARE APPROXIMATE AND HAVE NOT BEEN POSITIVELY IDENTIFIED. THE CONTRACTOR SHALL VERIFY UTILITY LOCATIONS PRIOR TO CONSTRUCTION.

CURVE DATA

No.	R	Δ	T	L
4	10222.24	2°23'53"	213.94	427.82

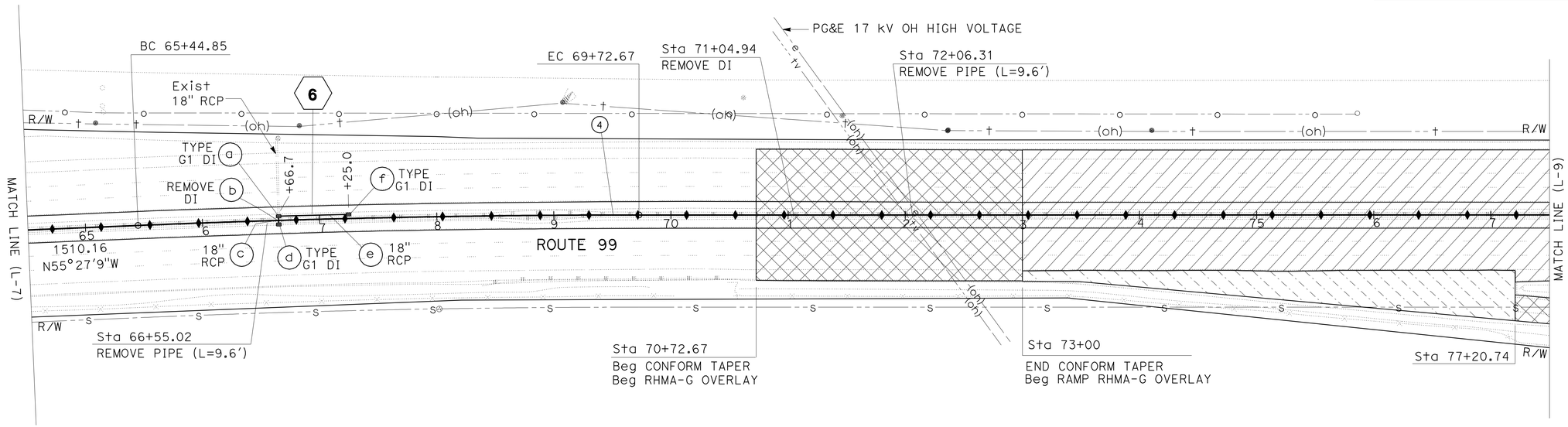

SCALE: 1" = 50'

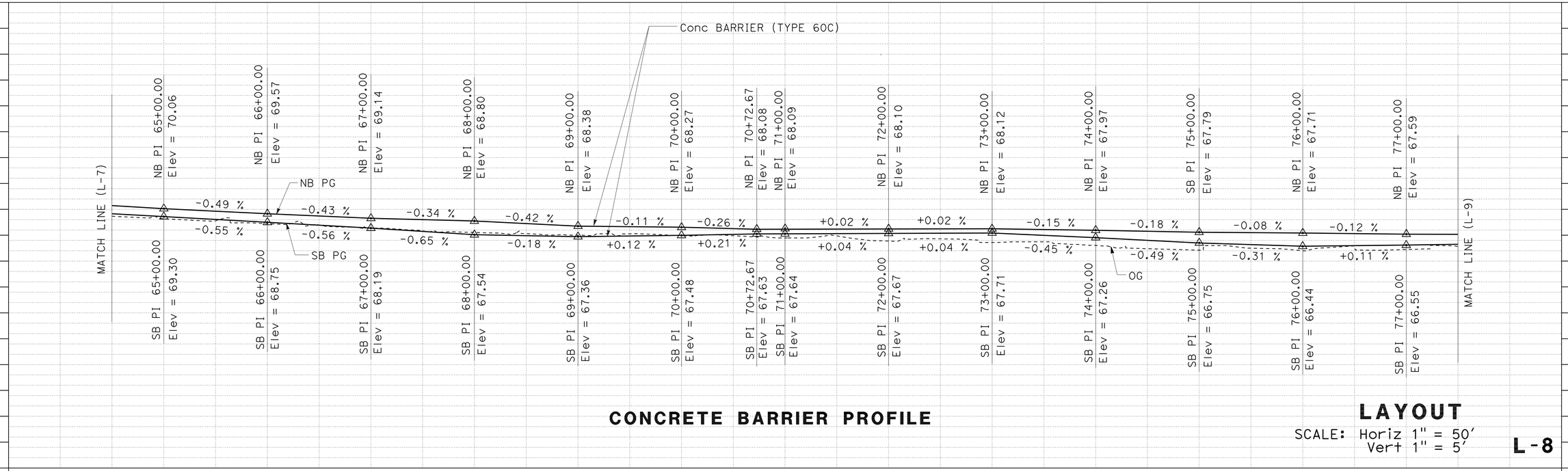

CONCRETE BARRIER PROFILE

LAYOUT

SCALE: Horiz 1" = 50'
Vert 1" = 5'

L-8

REVISED BY	DATE REVISED
MP	2-19-09

MANNY PALATINO — MASON LEUNG — CALCULATED-DESIGNED BY — CHECKED BY

FUNCTIONAL SUPERVISOR: CAROLINE REYES

STATE OF CALIFORNIA - DEPARTMENT OF TRANSPORTATION
Caltrans
DESIGN

LAST REVISION 00-00-00 DATE PLOTTED => 06-JUL-2009 TIME PLOTTED => 06:47

BORDER LAST REVISED 4/11/2008 | RELATIVE BORDER SCALE IS IN INCHES 0 1 2 3 | USERNAME => trmikesl DGN FILE => a01630ea008.dgn | CU 06241 | EA 0L6301

Dist	COUNTY	ROUTE	POST MILES TOTAL PROJECT	SHEET No.	TOTAL SHEETS
10	SJ,Sta	99	R24.3/R24.8, 0.0/1.7	13	63

REGISTERED CIVIL ENGINEER 3/18/09 DATE

6-29-09
PLANS APPROVAL DATE

REGISTERED PROFESSIONAL ENGINEER MASON L. LEUNG No. 71709 Exp. 12/31/09 CIVIL STATE OF CALIFORNIA

THE STATE OF CALIFORNIA OR ITS OFFICERS OR AGENTS SHALL NOT BE RESPONSIBLE FOR THE ACCURACY OR COMPLETENESS OF SCANNED COPIES OF THIS PLAN SHEET.

NOTES:
1. FOR COMPLETE RIGHT OF WAY AND ACCURATE ACCESS DATA, SEE RIGHT OF WAY RECORD MAPS AT DISTRICT OFFICE.
2. LOCATIONS OF EXISTING UTILITY FACILITIES SHOWN ON THE PLAN ARE APPROXIMATE AND HAVE NOT BEEN POSITIVELY IDENTIFIED. THE CONTRACTOR SHALL VERIFY UTILITY LOCATIONS PRIOR TO CONSTRUCTION.

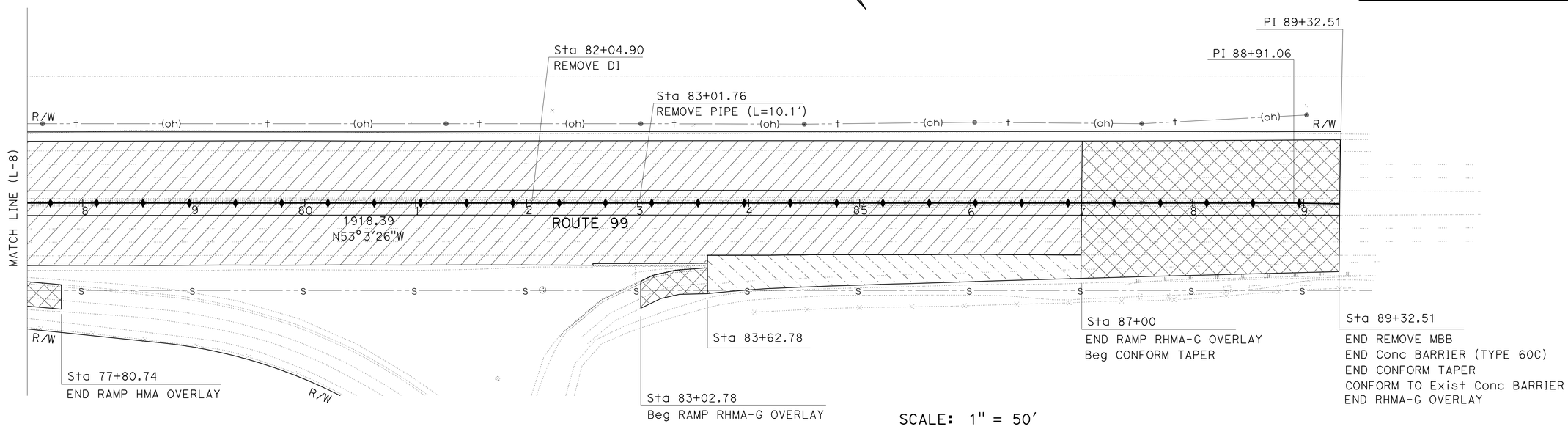

SCALE: 1" = 50'

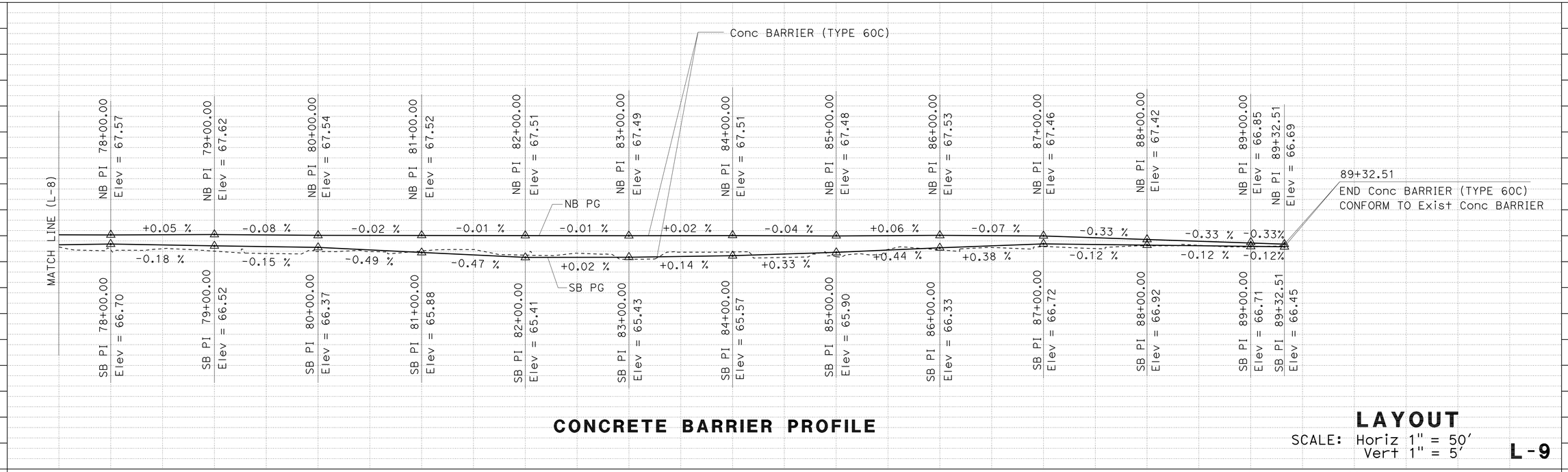

CONCRETE BARRIER PROFILE

LAYOUT
SCALE: Horiz 1" = 50'
Vert 1" = 5'

L-9

STATION	8	9	80	1	2	3	4	85	6	7	8	9	90	1	TOTAL
CY Exc	427.36														
CY Emb	0.0														

REVISED BY	DATE REVISED	MANNY PALATINO	MASON LEUNG	CALCULATED-DESIGNED BY	CHECKED BY	FUNCTIONAL SUPERVISOR	CAROLINE REYES
MP	2-19-09						

STATE OF CALIFORNIA - DEPARTMENT OF TRANSPORTATION
Caltrans
DESIGN

LAST REVISION 00-00-00 DATE PLOTTED => 06-JUL-2009 TIME PLOTTED => 06:47

Dist	COUNTY	ROUTE	POST MILES TOTAL PROJECT	SHEET No.	TOTAL SHEETS
10	SJ,Sta	99	R24.3/R24.8, 0.0/1.7	14	63

REGISTERED CIVIL ENGINEER 3/18/09 DATE

6-29-09
PLANS APPROVAL DATE

REGISTERED PROFESSIONAL ENGINEER MASON L. LEUNG No. 71709 Exp. 12/31/09 CIVIL STATE OF CALIFORNIA

THE STATE OF CALIFORNIA OR ITS OFFICERS OR AGENTS SHALL NOT BE RESPONSIBLE FOR THE ACCURACY OR COMPLETENESS OF ELECTRONIC COPIES OF THIS PLAN SHEET.

LEGEND

- RHMA-G OVER HMA (TYPE B)
- COLD PLANE ASPHALT
- Pvmt CONFORM TAPER
- RAMP RHMA-G OVERLAY

ABBREVIATION

RHMA-G - RUBBERIZED HOT MIX ASPHALT (GAP GRADED)

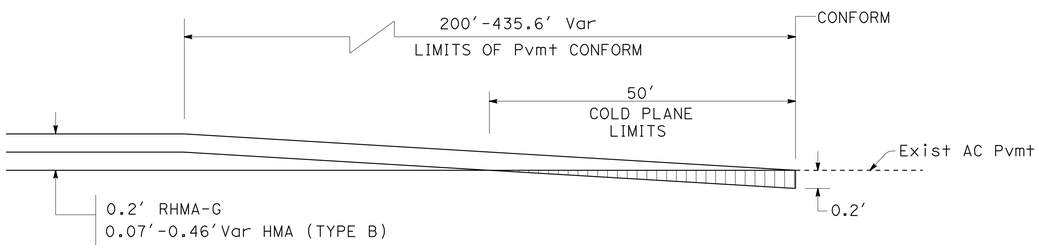

MAINLINE PAVEMENT CONFORM TAPER DETAIL

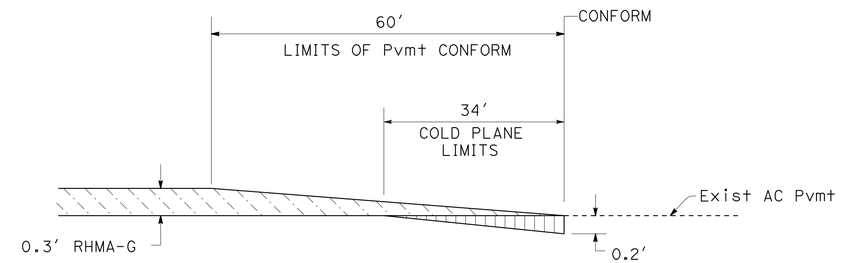

RAMP PAVEMENT CONFORM TAPER DETAIL

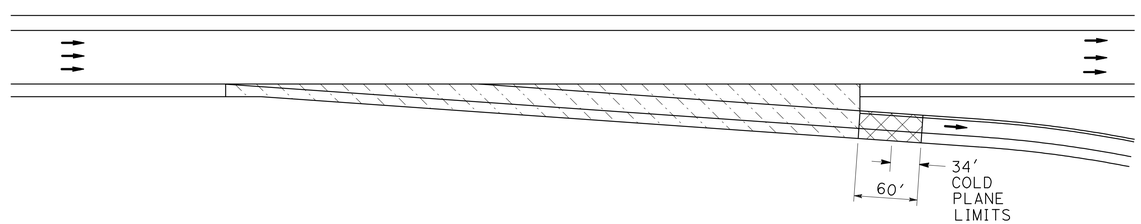

TYPICAL OFF-RAMP PAVING DETAIL

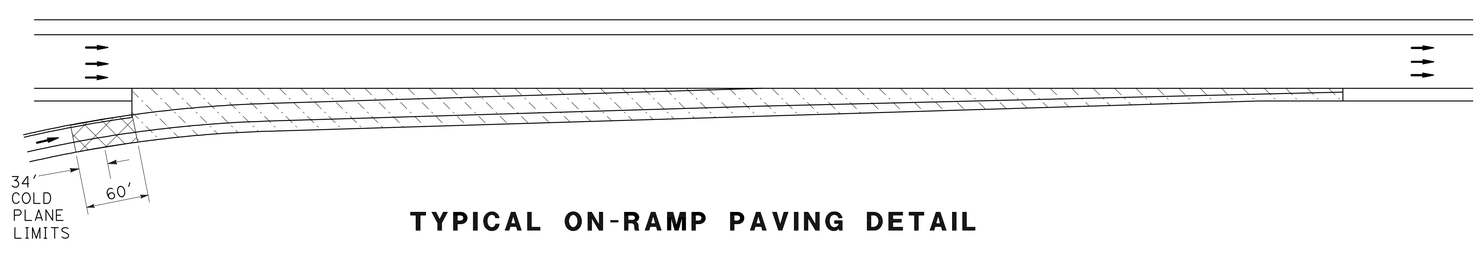

TYPICAL ON-RAMP PAVING DETAIL

CONSTRUCTION DETAILS

NO SCALE

C-1

XN	3-24-09
REVISED BY	DATE REVISED
XUAN NGUYEN	MASON LEUNG
CALCULATED-DESIGNED BY	CHECKED BY
FUNCTIONAL SUPERVISOR	CAROLINE REYES

STATE OF CALIFORNIA - DEPARTMENT OF TRANSPORTATION
Caltrans
DESIGN

LAST REVISION 00-00-00 | DATE PLOTTED => 06-JUL-2009 | TIME PLOTTED => 06:47

Dist	COUNTY	ROUTE	POST MILES TOTAL PROJECT	SHEET No.	TOTAL SHEETS
10	SJ,Sta	99	R24.3/R24.8, 0.0/1.7	15	63

REGISTERED CIVIL ENGINEER 3/18/09 DATE

6-29-09
PLANS APPROVAL DATE

REGISTERED PROFESSIONAL ENGINEER MASON L. LEUNG No. 71709 Exp. 12/31/09 CIVIL STATE OF CALIFORNIA

THE STATE OF CALIFORNIA OR ITS OFFICERS OR AGENTS SHALL NOT BE RESPONSIBLE FOR THE ACCURACY OR COMPLETENESS OF SCANNED COPIES OF THIS PLAN SHEET.

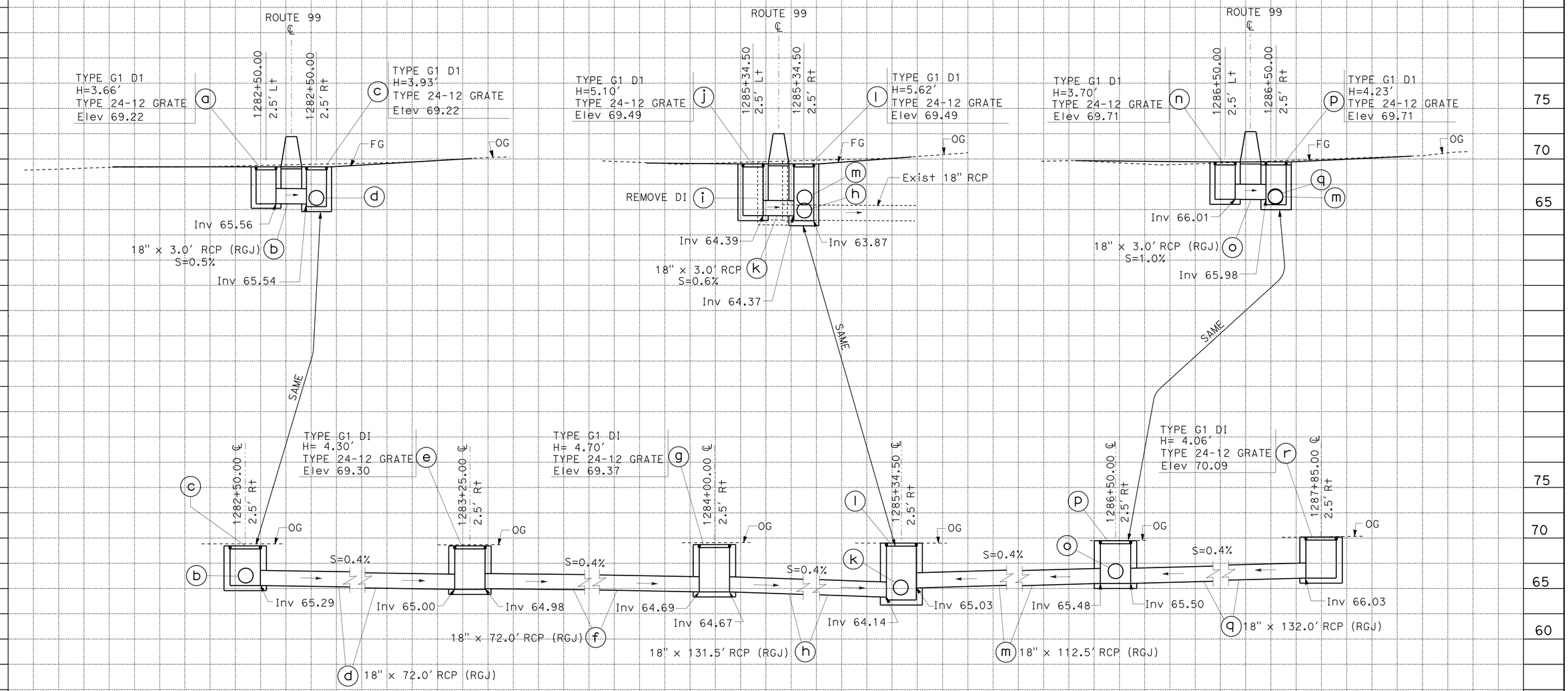

DRAINAGE SYSTEM No. 1

Sta 1282+50.00 TO Sta 1287+85.00

DRAINAGE PROFILES

SCALE: Horiz 1"=5'
Vert 1"=5'

DP-1

MP	3-21-09	REVISED BY	DATE REVISED
MANNY PALATINO	MASON LEUNG	CALCULATED-DESIGNED BY	CHECKED BY
FUNCTIONAL SUPERVISOR	CAROLINE REYES		

STATE OF CALIFORNIA - DEPARTMENT OF TRANSPORTATION
Caltrans
DESIGN

LAST REVISION 00-00-00 DATE PLOTTED => 06-JUL-2009 TIME PLOTTED => 06:47

Dist	COUNTY	ROUTE	POST MILES TOTAL PROJECT	SHEET No.	TOTAL SHEETS
10	SJ,Sta	99	R24.3/R24.8, 0.0/1.7	16	63

REGISTERED CIVIL ENGINEER 3/18/09 DATE

6-29-09
PLANS APPROVAL DATE

REGISTERED PROFESSIONAL ENGINEER MASON L. LEUNG No. 71709 Exp. 12/31/09 CIVIL STATE OF CALIFORNIA

THE STATE OF CALIFORNIA OR ITS OFFICERS OR AGENTS SHALL NOT BE RESPONSIBLE FOR THE ACCURACY OR COMPLETENESS OF SCANNED COPIES OF THIS PLAN SHEET.

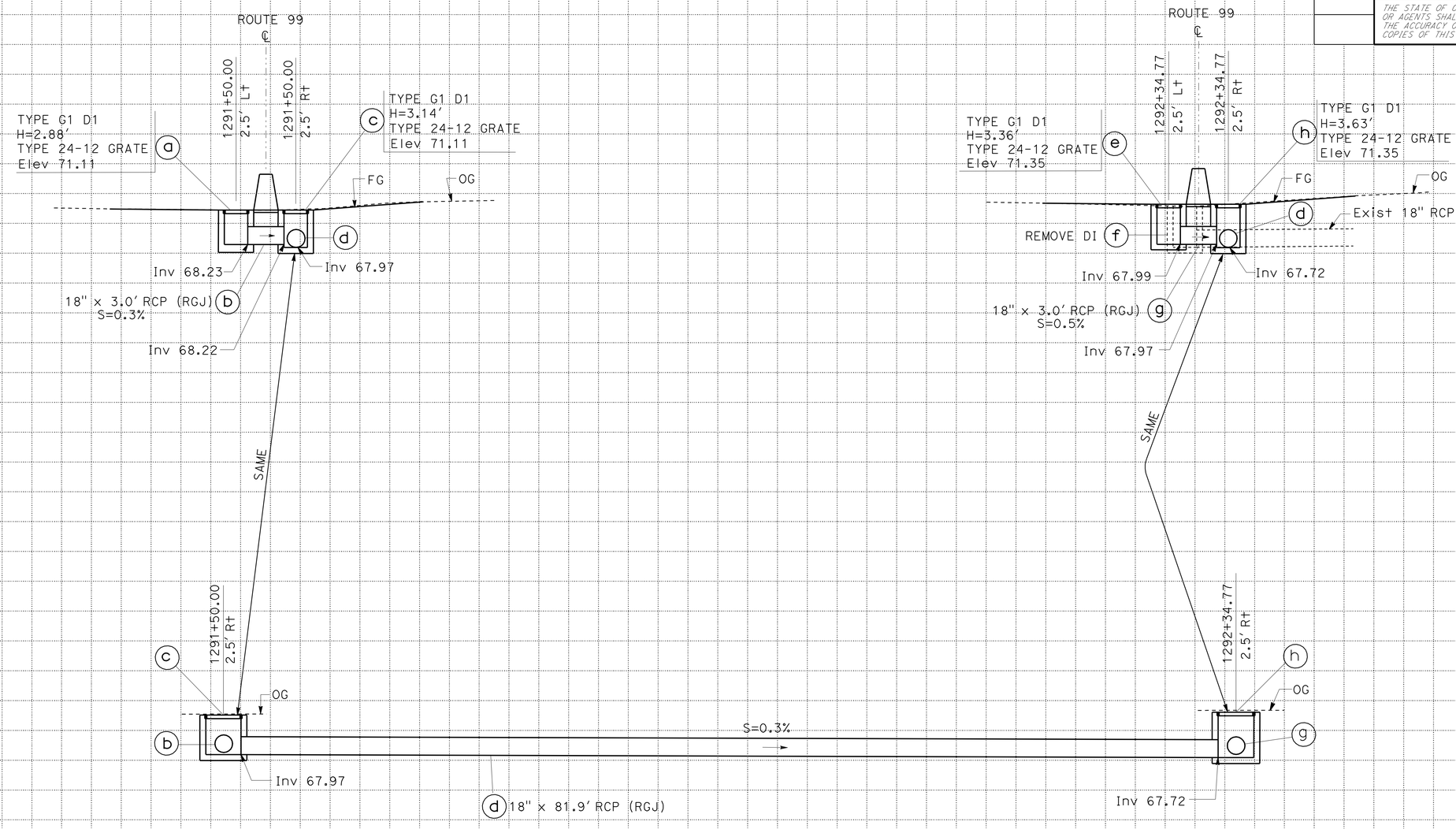

DRAINAGE SYSTEM No. 2

Sta 1291+50.00 - Sta 1292+34.77

DRAINAGE PROFILES

SCALE: Horiz 1"=5'
Vert 1"=5'

DP-2

STATE OF CALIFORNIA - DEPARTMENT OF TRANSPORTATION
Caltrans
DESIGN

FUNCTIONAL SUPERVISOR: CAROLINE REYES
CALCULATED-DESIGNED BY: MANNY PALATINO
CHECKED BY: MASON LEUNG
REVISED BY: MP
DATE REVISED: 1-22-09

LAST REVISION 00-00-00
DATE PLOTTED => 06-JUL-2009
TIME PLOTTED => 06:48

Dist	COUNTY	ROUTE	POST MILES TOTAL PROJECT	SHEET No.	TOTAL SHEETS
10	SJ,Sta	99	R24.3/R24.8, 0.0/1.7	17	63

REGISTERED CIVIL ENGINEER 3/18/09 DATE

6-29-09
PLANS APPROVAL DATE

REGISTERED PROFESSIONAL ENGINEER MASON L. LEUNG No. 71709 Exp. 12/31/09 CIVIL STATE OF CALIFORNIA

THE STATE OF CALIFORNIA OR ITS OFFICERS OR AGENTS SHALL NOT BE RESPONSIBLE FOR THE ACCURACY OR COMPLETENESS OF SCANNED COPIES OF THIS PLAN SHEET.

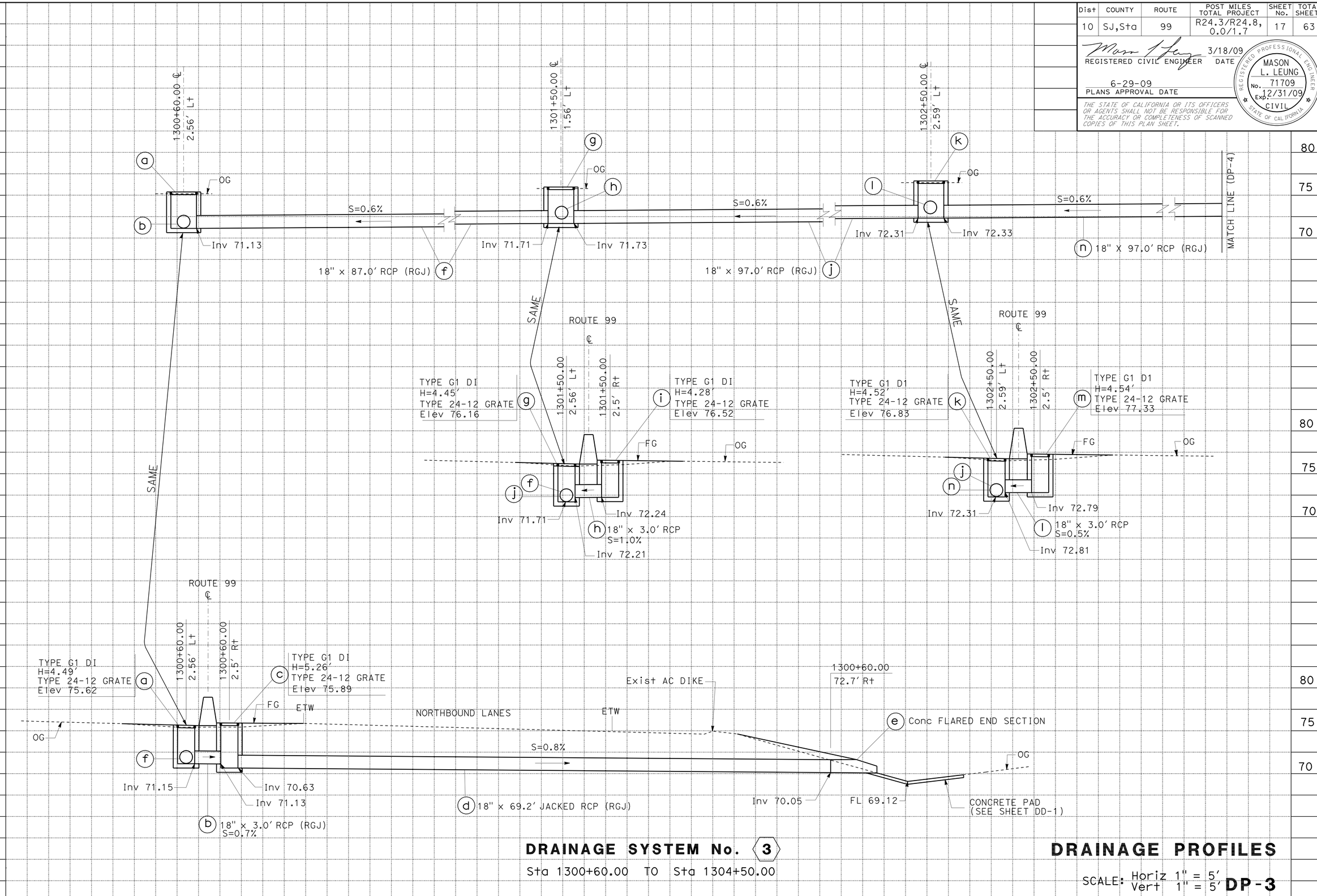

DRAINAGE SYSTEM No. 3

Sta 1300+60.00 TO Sta 1304+50.00

DRAINAGE PROFILES

SCALE: Horiz 1" = 5'
Vert 1" = 5'

DP-3

REVISED BY	DATE REVISED
MP	3-21-09

MANNY PALATINO — MASON LEUNG — CALCULATED-DESIGNED BY — CHECKED BY

FUNCTIONAL SUPERVISOR: CAROLINE REYES

STATE OF CALIFORNIA - DEPARTMENT OF TRANSPORTATION — DESIGN — Caltrans

LAST REVISION 00-00-00 — DATE PLOTTED => 06-JUL-2009 — TIME PLOTTED => 06:48

Dist	COUNTY	ROUTE	POST MILES TOTAL PROJECT	SHEET No.	TOTAL SHEETS
10	SJ,Sta	99	R24.3/R24.8, 0.0/1.7	18	63

REGISTERED CIVIL ENGINEER 3/18/09 DATE

6-29-09
PLANS APPROVAL DATE

REGISTERED PROFESSIONAL ENGINEER MASON L. LEUNG No. 71709 Exp. 12/31/09 CIVIL STATE OF CALIFORNIA

THE STATE OF CALIFORNIA OR ITS OFFICERS OR AGENTS SHALL NOT BE RESPONSIBLE FOR THE ACCURACY OR COMPLETENESS OF SCANNED COPIES OF THIS PLAN SHEET.

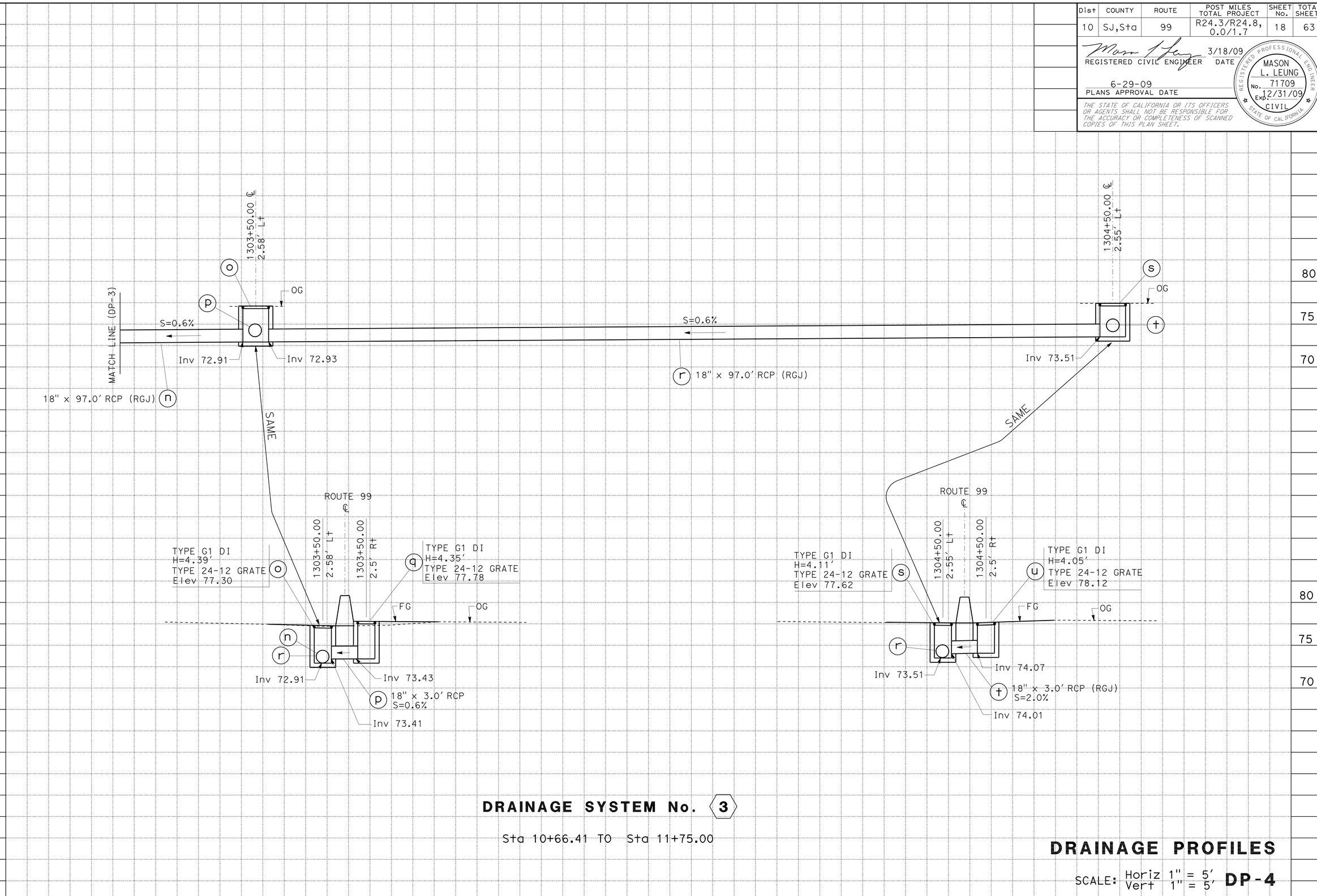

DRAINAGE SYSTEM No. 3

Sta 10+66.41 TO Sta 11+75.00

DRAINAGE PROFILES

SCALE: Horiz 1" = 5', Vert 1" = 5' **DP-4**

REVISED BY	DATE REVISED
MP	3-21-09

CALCULATED-DESIGNED BY: MANNY PALATINO
CHECKED BY: MASON LEUNG
FUNCTIONAL SUPERVISOR: CAROLINE REYES

STATE OF CALIFORNIA - DEPARTMENT OF TRANSPORTATION
Caltrans
DESIGN

LAST REVISION 00-00-00 | DATE PLOTTED => 06-JUL-2009 | TIME PLOTTED => 06:48

Dist	COUNTY	ROUTE	POST MILES TOTAL PROJECT	SHEET No.	TOTAL SHEETS
10	SJ,Sta	99	R24.3/R24.8, 0.0/1.7	19	63

REGISTERED CIVIL ENGINEER 3/18/09 DATE

6-29-09
PLANS APPROVAL DATE

REGISTERED PROFESSIONAL ENGINEER MASON L. LEUNG No. 71709 Exp. 12/31/09 CIVIL STATE OF CALIFORNIA

THE STATE OF CALIFORNIA OR ITS OFFICERS OR AGENTS SHALL NOT BE RESPONSIBLE FOR THE ACCURACY OR COMPLETENESS OF SCANNED COPIES OF THIS PLAN SHEET.

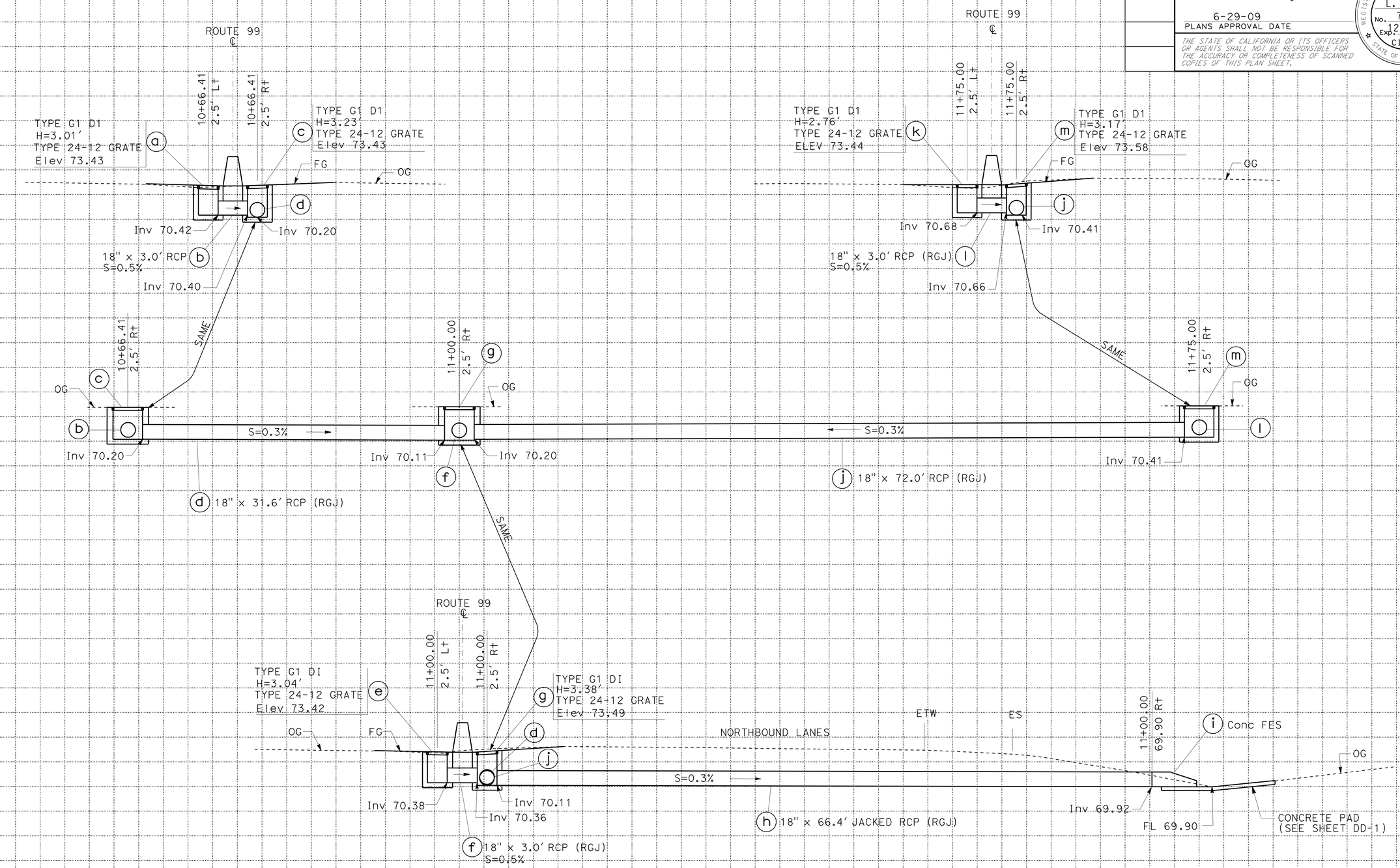

DRAINAGE SYSTEM No. 4

Sta 10+66.41 TO Sta 11+75.00

DRAINAGE PROFILES

SCALE: Horiz 1" = 5' Vert 1" = 5'

DP-5

REVISED BY	DATE REVISED
MP	3-23-09

MANNY PALATINO — MASON LEUNG — CALCULATED-DESIGNED BY — CHECKED BY

FUNCTIONAL SUPERVISOR: CAROLINE REYES

STATE OF CALIFORNIA - DEPARTMENT OF TRANSPORTATION — DESIGN — Caltrans

LAST REVISION 00-00-00 — DATE PLOTTED => 06-JUL-2009 — TIME PLOTTED => 06:48

Dist	COUNTY	ROUTE	POST MILES TOTAL PROJECT	SHEET No.	TOTAL SHEETS
10	SJ,Sta	99	R24.3/R24.8, 0.0/1.7	20	63

REGISTERED CIVIL ENGINEER 3/18/09 DATE

6-29-09
PLANS APPROVAL DATE

REGISTERED PROFESSIONAL ENGINEER MASON L. LEUNG No. 71709 Exp. 12/31/09 CIVIL STATE OF CALIFORNIA

THE STATE OF CALIFORNIA OR ITS OFFICERS OR AGENTS SHALL NOT BE RESPONSIBLE FOR THE ACCURACY OR COMPLETENESS OF SCANNED COPIES OF THIS PLAN SHEET.

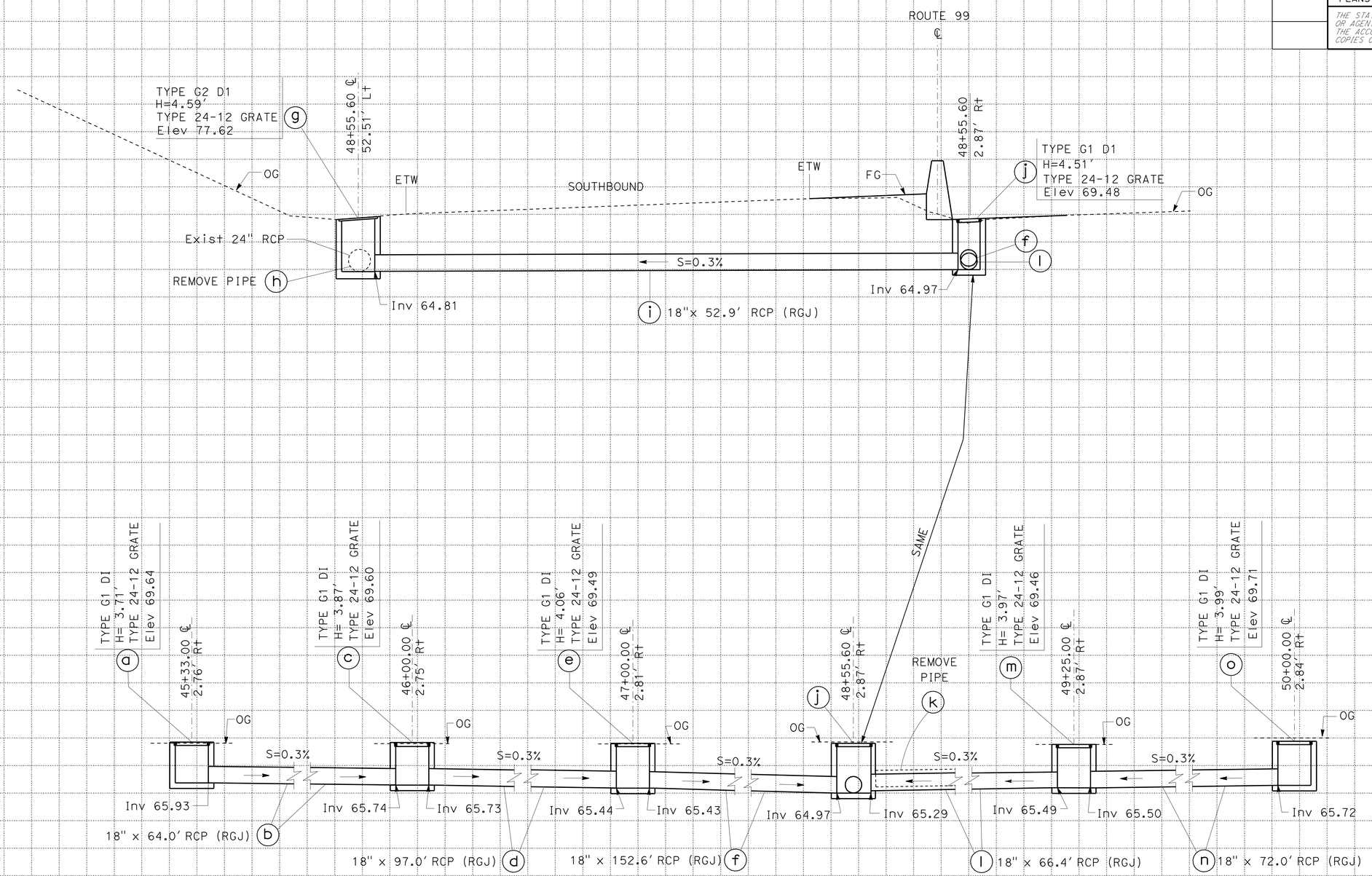

DRAINAGE SYSTEM No. 5

Sta 45+33.00 TO Sta 50+00.00

DRAINAGE PROFILES

SCALE: Horiz 1"=5'
Vert 1"=5'

DP-6

REVISED BY	DATE REVISED
MP	3-23-09

MANNY PALATINO — MASON LEUNG — CALCULATED-DESIGNED BY — CHECKED BY

FUNCTIONAL SUPERVISOR: CAROLINE REYES

STATE OF CALIFORNIA - DEPARTMENT OF TRANSPORTATION — DESIGN

Caltrans

LAST REVISION 00-00-00 — DATE PLOTTED => 06-JUL-2009 — TIME PLOTTED => 06:48

Dist	COUNTY	ROUTE	POST MILES TOTAL PROJECT	SHEET No.	TOTAL SHEETS
10	SJ,Sta	99	R24.3/R24.8, 0.0/1.7	21	63

REGISTERED CIVIL ENGINEER 3/18/09 DATE

6-29-09
PLANS APPROVAL DATE

REGISTERED PROFESSIONAL ENGINEER MASON L. LEUNG No. 71709 Exp. 12/31/09 CIVIL STATE OF CALIFORNIA

THE STATE OF CALIFORNIA OR ITS OFFICERS OR AGENTS SHALL NOT BE RESPONSIBLE FOR THE ACCURACY OR COMPLETENESS OF SCANNED COPIES OF THIS PLAN SHEET.

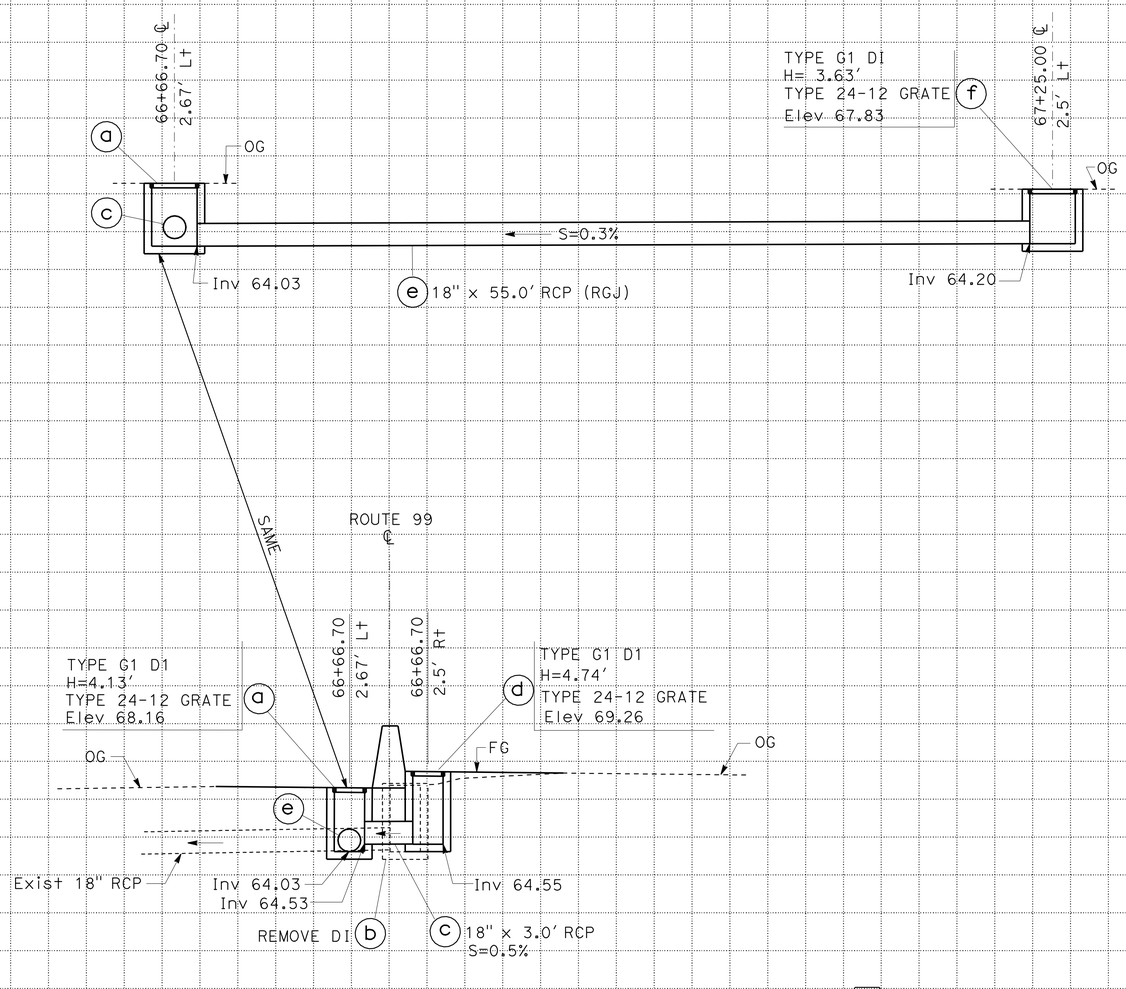

DRAINAGE SYSTEM No. 6

Sta 66+66.70 TO Sta 67+25.00

DRAINAGE PROFILES

SCALE: Horiz 1"=5'
Vert 1"=5'

DP-7

STATE OF CALIFORNIA - DEPARTMENT OF TRANSPORTATION
Caltrans
DESIGN

FUNCTIONAL SUPERVISOR: CAROLINE REYES
CALCULATED-DESIGNED BY: MASON LEUNG
CHECKED BY: MANNY PALATINO
REVISED BY: MP
DATE REVISED: 3-23-09

LAST REVISION 00-00-00
DATE PLOTTED => 06-JUL-2009
TIME PLOTTED => 06:48

Dist	COUNTY	ROUTE	POST MILES TOTAL PROJECT	SHEET No.	TOTAL SHEETS
10	SJ,Sta	99	R24.3/R24.8, 0.0/1.7	22	63

REGISTERED CIVIL ENGINEER 3/18/09 DATE

6-29-09
PLANS APPROVAL DATE

REGISTERED PROFESSIONAL ENGINEER MASON L. LEUNG No. 71709 Exp. 12/31/09 CIVIL STATE OF CALIFORNIA

THE STATE OF CALIFORNIA OR ITS OFFICERS OR AGENTS SHALL NOT BE RESPONSIBLE FOR THE ACCURACY OR COMPLETENESS OF SCANNED COPIES OF THIS PLAN SHEET.

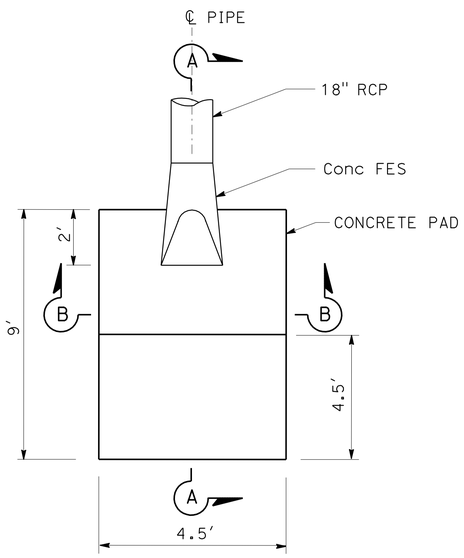

PLAN

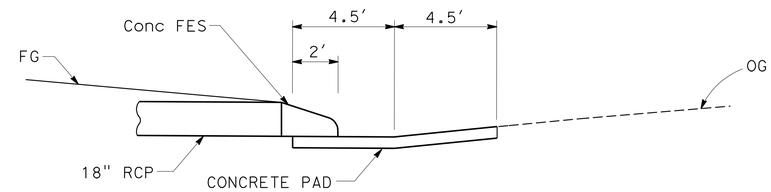

SECTION A-A

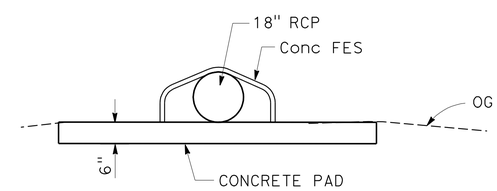

SECTION B-B

CONCRETE PAD AT DRAINAGE OUTLET

DRAINAGE DETAILS

NO SCALE

DD-1

MANNY PALATINO	MP
MASON LEUNG	3-23-09
CAROLINE REYES	

REVISED BY / DATE REVISED
CALCULATED-DESIGNED BY / CHECKED BY
FUNCTIONAL SUPERVISOR

STATE OF CALIFORNIA - DEPARTMENT OF TRANSPORTATION
Caltrans
DESIGN

LAST REVISION 00-00-00
DATE PLOTTED => 06-JUL-2009
TIME PLOTTED => 06:48

Dist	COUNTY	ROUTE	POST MILES TOTAL PROJECT	SHEET No.	TOTAL SHEETS
10	SJ,Sta	99	R24.3/R24.8, 0.0/1.7	23	63

REGISTERED CIVIL ENGINEER 3/18/09 DATE

6-29-09
PLANS APPROVAL DATE

REGISTERED PROFESSIONAL ENGINEER MASON L. LEUNG No. 71709 EXP. 12/31/09 CIVIL STATE OF CALIFORNIA

THE STATE OF CALIFORNIA OR ITS OFFICERS OR AGENTS SHALL NOT BE RESPONSIBLE FOR THE ACCURACY OR COMPLETENESS OF SCANNED COPIES OF THIS PLAN SHEET.

DRAINAGE ITEMS

DRAINAGE SYSTEM No.	DRAINAGE UNIT	REMOVE INLET EA	MINOR CONCRETE (MINOR STRUCTURE) CY	Misc IRON AND STEEL LB	REMOVE PIPE LF	18" RCP (RGJ) LF	JACKED 18" RCP (CLASS III) LF	CONCRETE FLARED END SECTION EA	(N) HEIGHT OF INLET (H) Ft	(N) PIPE CULVERT JOINT CLASSIFICATION	(N) MAXIMUM COVER Ft	DESCRIPTION	STATION	PLAN SHEET No.	DRAINAGE SYSTEM No.	DRAINAGE UNIT
1	a		1.10	326					3.66			TYPE GI DI TYPE 24-12 GRATE	1282+50.00, 2.50' Lt, Rte 99 ℄	L-1	1	a
	b					3.0				S	2.16	18" RCP (RGJ)				b
	c		1.15	326					3.93			TYPE GI DI TYPE 24-12 GRATE	1282+50.00, 2.50' Rt, Rte 99 ℄			c
	d					72.0				S	2.79	18" RCP (RGJ)				d
	e		1.24	326					4.30			TYPE GI DI TYPE 24-12 GRATE	1283+25.00, 2.50' Rt, Rte 99 ℄			e
	f					72.0				S	3.18	18" RCP (RGJ)				f
	g		1.32	326					4.70			TYPE GI DI TYPE 24-12 GRATE	1284+00.00, 2.50' Rt, Rte 99 ℄			g
	h					131.5				S	3.75	18" RCP (RGJ)				h
	i	1										REMOVE DI	1285+34.50 IN MEDIAN			i
	j		1.41	326					5.10			TYPE GI DI TYPE 24-12 GRATE	1285+34.50, 2.50' Lt, Rte 99 ℄			j
	k					3.0				S	3.64	18" RCP (RGJ)				k
	l		1.53	326					5.62			TYPE GI DI TYPE 24-12 GRATE	1285+34.50, 2.50' Rt, Rte 99 ℄			l
	m					112.5				S	2.93	18" RCP (RGJ)				m
	n		1.10	326					3.70			TYPE GI DI TYPE 24-12 GRATE	1286+50.00, 2.50' Lt, Rte 99 ℄			n
	o					3.0				S	2.23	18" RCP (RGJ)				o
	p		1.22	326					4.23			TYPE GI DI TYPE 24-12 GRATE	1286+50.00, 2.50' Rt, Rte 99 ℄			p
	q					132.0				S	2.78	18" RCP (RGJ)				q
	r		1.18	326					4.06			TYPE GI DI TYPE 24-12 GRATE	1287+85.00, 2.50' Rt, Rte 99 ℄			r
2	a		0.95	326					2.88			TYPE GI DI TYPE 24-12 GRATE	1291+50.00, 2.50' Lt, Rte 99 ℄	L-1	2	a
	b					3.0				S	1.39	18" RCP (RGJ)				b
	c		0.98	326					3.14			TYPE GI DI TYPE 24-12 GRATE	1291+50.00, 2.50' Rt, Rte 99 ℄			c
	d					81.9				S	2.29	18" RCP (RGJ)				d
	e		1.03	326					3.36			TYPE GI DI TYPE 24-12 GRATE	1292+34.77, 2.50' Lt, Rte 99 ℄			e
	f	1										REMOVE DI	1292+34.77, 2.50' Rt, Rte 99 ℄			f
	g					3.0				S	1.86	18" RCP (RGJ)				g
	h		1.09	326					3.63			TYPE GI DI TYPE 24-12 GRATE	1292+34.77, 2.50' Rt, Rte 99 ℄			h
		1			705.5							Exist DI AND PIPE	1297+39.43 IN MEDIAN	L-2		
3	a		1.28	326					4.49			TYPE GI DI TYPE 24-12 GRATE	1300+60.00, 2.56' Lt, Rte 99 ℄	L-2	3	a
	b					3.0				S	3.28	18" RCP (RGJ)				b
	c		1.45	326					5.26			TYPE GI DI TYPE 24-12 GRATE	1300+60.00, 2.50' Rt, Rte 99 ℄			c
	d						69.2			S	3.76	18" RCP (RGJ)				d
	e		0.75					1				Conc FES / PAD	1300+60.00, 72.7' Rt, Rte 99 ℄			e
	f					87.0				S	2.76	18" RCP (RGJ)				f
	g		1.27	326					4.45			TYPE GI DI TYPE 24-12 GRATE	1301+50.00, 2.56' Lt, Rte 99 ℄			g
	h					3.0				S	2.42	18" RCP (RGJ)				h
	i		1.23	326					4.28			TYPE GI DI TYPE 24-12 GRATE	1301+50.00, 2.50' Rt, Rte 99 ℄			i
	j					97.0				S	2.85	18" RCP (RGJ)				j
	k		1.28	326					4.52			TYPE GI DI TYPE 24-12 GRATE	1302+50.00, 2.59' Lt, Rte 99 ℄			k
	l					3.0				S	2.46	18" RCP (RGJ)				l
	m		1.29	326					4.54			TYPE GI DI TYPE 24-12 GRATE	1302+50.00, 2.50' Rt, Rte 99 ℄			m
	n					97.0				S	2.81	18" RCP (RGJ)				n
	o		1.26	326					4.39			TYPE GI DI TYPE 24-12 GRATE	1303+50.00, 2.58' Lt, Rte 99 ℄			o
	p					3.0				S	2.39	18" RCP (RGJ)				p
	q		1.25	326					4.35			TYPE GI DI TYPE 24-12 GRATE	1303+50.00, 2.50' Rt, Rte 99 ℄			q
	r					97.0				S	2.67	18" RCP (RGJ)				r
	s		1.19	326					4.11			TYPE GI DI TYPE 24-12 GRATE	1304+50.00, 2.55' Lt, Rte 99 ℄			s
	t					3.0				S	2.10	18" RCP (RGJ)				t
	u		1.18	326					4.05			TYPE GI DI TYPE 24-12 GRATE	1304+50.00, 2.50' Rt, Rte 99 ℄			u
SUBTOTAL DQ-1		3	28.73	7498	705.5	1009.9	69.2	1								

ABBREVIATIONS

S - STANDARD

RGJ - RUBBER GASKETED JOINT

(N) - NOT A SEPARATE PAY ITEM, FOR INFORMATION ONLY.

DRAINAGE QUANTITIES
DQ-1

STATE OF CALIFORNIA - DEPARTMENT OF TRANSPORTATION
Caltrans® DESIGN

FUNCTIONAL SUPERVISOR: CAROLINE REYES
CALCULATED-DESIGNED BY: MANNY PALATINO
CHECKED BY: MASON LEUNG
REVISED BY: MP
DATE REVISED: 3-24-09

LAST REVISION 00-00-00 DATE PLOTTED => 06-JUL-2009 TIME PLOTTED => 06:49

DRAINAGE ITEMS

Dist	COUNTY	ROUTE	POST MILES TOTAL PROJECT	SHEET No.	TOTAL SHEETS
10	SJ,Sta	99	R24.3/R24.8, 0.0/1.7	24	63

REGISTERED CIVIL ENGINEER 3/18/09 DATE

6-29-09
PLANS APPROVAL DATE

REGISTERED PROFESSIONAL ENGINEER MASON L. LEUNG No. 71709 Exp. 12/31/09 CIVIL STATE OF CALIFORNIA

THE STATE OF CALIFORNIA OR ITS OFFICERS OR AGENTS SHALL NOT BE RESPONSIBLE FOR THE ACCURACY OR COMPLETENESS OF SCANNED COPIES OF THIS PLAN SHEET.

DRAINAGE SYSTEM No.	DRAINAGE UNIT	REMOVE INLET	MINOR CONCRETE (MINOR STRUCTURE)	Misc IRON AND STEEL	REMOVE PIPE	18" RCP (RGJ)	JACKED 18" RCP (CLASS III)	CONCRETE FLARED END SECTION	(N) HEIGHT OF INLET (H)	(N) PIPE CULVERT JOINT CLASSIFICATION	(N) MAXIMUM COVER	DESCRIPTION	STATION	PLAN SHEET No.	DRAINAGE SYSTEM No.	DRAINAGE UNIT
		EA	CY	LB	LF	LF	LF	EA	Ft		FT					
4	a		0.95	326					3.01			TYPE GI DI TYPE 24-12 GRATE	10+66.41, 2.50′ Lt, Rte 99 ℄	L-3	4	a
	b					3.0				S	1.54	18" RCP (RGJ)				b
	c		0.95	326					3.23			TYPE GI DI TYPE 24-12 GRATE	10+66.41, 2.50′ Rt, Rte 99 ℄			c
	d					31.6				S	1.88	18" RCP (RGJ)				d
	e		0.95	326					3.04			TYPE GI DI TYPE 24-12 GRATE	11+00.00, 2.50′ Lt, Rte 99 ℄			e
	f					3.0				S	1.59	18" RCP (RGJ)				f
	g		0.95	326					3.38			TYPE GI DI TYPE 24-12 GRATE	11+00.00, 2.50′ Rt, Rte 99 ℄			g
	h						66.4			S	2.45	18" RCP (RGJ)				h
	i							1				Conc FES	11+00.00, 69.90′ Rt, Rte 99 ℄			i
	j					72.0				S	1.67	18" RCP (RGJ)				j
	k		0.95	326					2.76			TYPE GI DI TYPE 24-12 GRATE	11+75.00, 2.50′ Lt, Rte 99 ℄			k
	l					3.0				S	1.31	18" RCP (RGJ)				l
	m		0.95	326					3.17			TYPE GI DI TYPE 24-12 GRATE	11+75.00, 2.50′ Rt, Rte 99 ℄			m
					69.4							Exist PIPE	13+22.30 IN MEDIAN	L-4		
		1			9.6							Exist DI AND PIPE	19+52.45 IN MEDIAN	L-4		
		1			9.6							Exist DI AND PIPE	25+31.17 IN MEDIAN	L-4		
		1			9.9							Exist DI AND PIPE	31+01.44 IN MEDIAN	L-5		
		1			9.6							Exist DI AND PIPE	37+96.24 IN MEDIAN	L-5		
		1			9.6							Exist DI AND PIPE	41+01.92 IN MEDIAN	L-6		
5	a		1.11	326					3.71			TYPE GI DI TYPE 24-12 GRATE	45+33.00, 2.76′ Rt, Rte 99 ℄	L-6	5	a
	b					64.0				S	2.36	18" RCP (RGJ)				b
	c		1.14	326					3.87			TYPE GI DI TYPE 24-12 GRATE	46+00.00, 2.75′ Rt, Rte 99 ℄			c
	d					97.0				S	2.53	18" RCP (RGJ)				d
	e		1.18	326					4.06			TYPE GI DI TYPE 24-12 GRATE	47+00.00, 2.81′ Rt, Rte 99 ℄			e
	f					152.6				S	3.07	18" RCP (RGJ)				f
	g		1.30	326					4.59			TYPE G2 DI TYPE 24-12 GRATE	48+55.60, 52.51′ Lt, Rte 99 ℄			g
	h				4.0							REMOVE PIPE	48+55.60			h
	i						52.9			S	5.39	18" RCP (RGJ)				i
	j		1.28	326					4.51			TYPE GI DI TYPE 24-12 GRATE	48+55.60, 2.87′ Rt, Rte 99 ℄			j
	k				20.6							REMOVE PIPE	48+79.23 IN MEDIAN			k
	l					66.4				S	2.79	18" RCP (RGJ)				l
	m		1.16	326					3.97			TYPE GI DI TYPE 24-12 GRATE	49+25.00, 2.87′ Rt, Rte 99 ℄			m
	n					72.0				S	2.49	18" RCP (RGJ)				n
	o		1.17	326					3.99			TYPE GI DI TYPE 24-12 GRATE	50+00.00, 2.84′ Rt, Rte 99 ℄			o
		1										Exist DI	52+24.95 IN MEDIAN	L-7		
		1			9.9							Exist DI AND PIPE	60+05.85 IN MEDIAN	L-7		
					9.9							Exist PIPE	66+55.02 IN MEDIAN	L-8		
		1										Exist DI	71+04.94 IN MEDIAN	L-8		
					9.6							Exist PIPE	72+06.31 IN MEDIAN	L-8		
		1										REMOVE DI	82+04.90 IN MEDIAN	L-9		
					10.1							Exist PIPE	83+01.76 IN MEDIAN	L-9		
6	a		1.20	326					4.13			TYPE GI DI TYPE 24-12 GRATE	66+66.70, 2.67′ Lt, Rte 99 ℄	L-8	6	a
	b	1										Exist DI	66+66.70 IN MEDIAN			b
	c					3.0				S	1.97	18" RCP (RGJ)				c
	d		1.33	326					4.74			TYPE GI DI TYPE 24-12 GRATE	66+66.70, 2.50′ Rt, Rte 99 ℄			d
	e					55.0				S	2.46	18" RCP (RGJ)				e
	f		1.09	326					3.63			TYPE GI DI TYPE 24-12 GRATE	67+25.00, 2.69′ Lt, Rte 99 ℄			f
SUBTOTAL DQ-2		10	18.41	5216	181.8	622.6	119.3	1								
SUBTOTAL DQ-1		3	28.73	7498	705.5	1009.9	69.2	1								
TOTAL		13	47.14	12714	887.3	1632.5	188.5	2								

DRAINAGE QUANTITIES
DQ-2

STATE OF CALIFORNIA - DEPARTMENT OF TRANSPORTATION
Caltrans
DESIGN

FUNCTIONAL SUPERVISOR: CAROLINE REYES
CALCULATED-DESIGNED BY: MANNY PALATINO
CHECKED BY: MASON LEUNG
REVISED BY: MCP
DATE REVISED: 1-22-09

LAST REVISION 00-00-00
DATE PLOTTED => 06-JUL-2009
TIME PLOTTED => 06:49

Dist	COUNTY	ROUTE	POST MILES TOTAL PROJECT	SHEET No.	TOTAL SHEETS
10	SJ,Sta	99	R24.3/R24.8, 0.0/1.7	25	63

REGISTERED CIVIL ENGINEER — DATE 3/20/09

6-29-09
PLANS APPROVAL DATE

REGISTERED PROFESSIONAL ENGINEER Hassan Marei No. 35068 Exp. 9/30/09 CIVIL STATE OF CALIFORNIA

THE STATE OF CALIFORNIA OR ITS OFFICERS OR AGENTS SHALL NOT BE RESPONSIBLE FOR THE ACCURACY OR COMPLETENESS OF SCANNED COPIES OF THIS PLAN SHEET.

STATIONARY MOUNTED CONSTRUCTION AREA SIGNS

SIGN No.	SIGN CODE	PANEL SIZE	SIGN MESSAGE	No. OF POST AND SIZE	No. OF SIGNS
A	W20-1	48" x 48"	ROAD WORK AHEAD	1- 6" x 4"	8
B	G20-2	36" x 18"	END ROAD WORK	1- 4" x 4"	2
C	CPFIS	132" x 84"	FUNDING SIGN	2- 6" x 6"	2

NOTES:
1. LOCATIONS OF CONSTRUCTION AREA SIGNS SHOWN ARE APPROXIMATE. EXACT LOCATIONS WILL BE DETERMINED BY THE ENGINEER.
2. CPFIS DENOTES CONSTRUCTION PROJECT FUNDING IDENTIFICATION SIGN (TYPE 2).
3. FOR ADDITIONAL CONSTRUCTION AREA SIGNS SEE TRAFFIC HANDLING SHEETS.

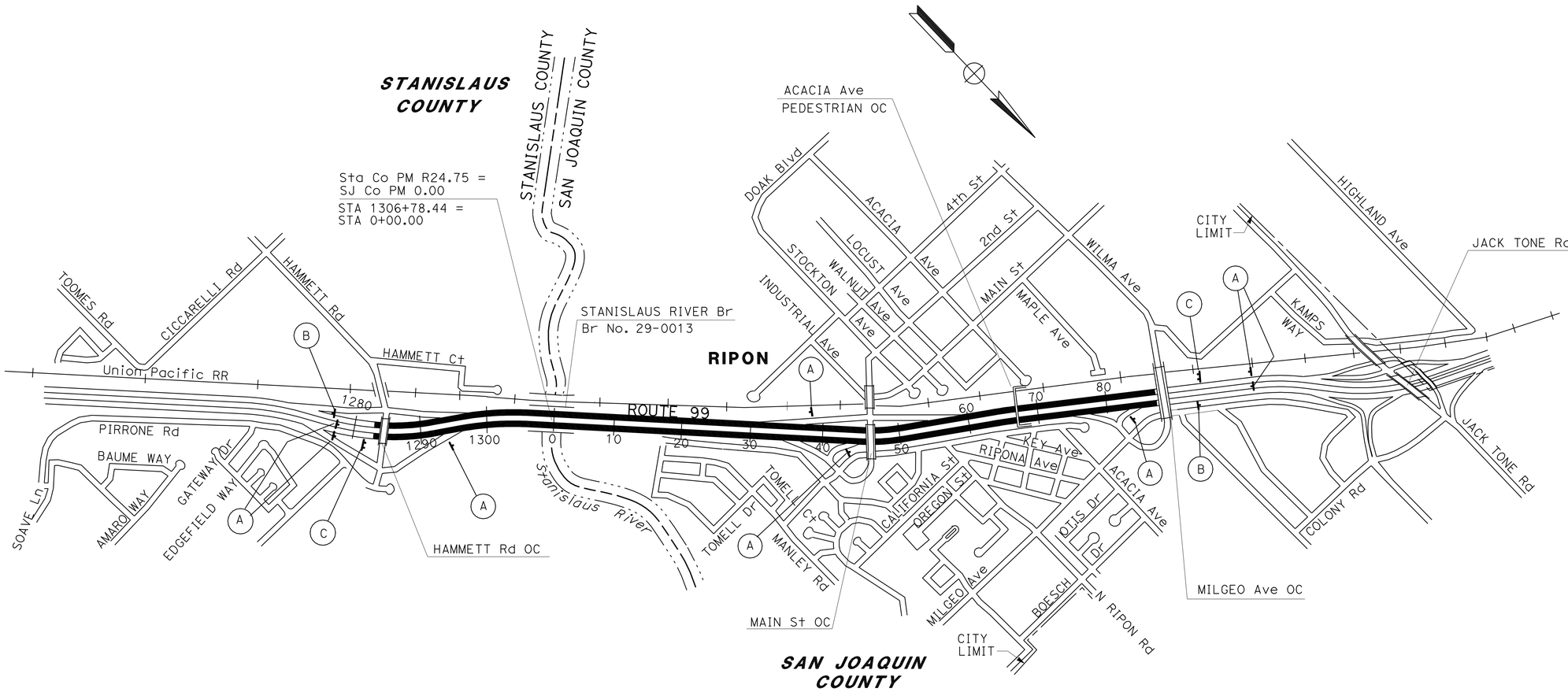

THIS PLAN ACCURATE FOR CONSTRUCTION AREA SIGN WORK ONLY.

CONSTRUCTION AREA SIGNS

NO SCALE

CS-1

HUE NGUYEN	HN	3-24-09	
ALI JUMA			
CALCULATED-DESIGNED BY	REVISED BY	DATE REVISED	
CHECKED BY			
FUNCTIONAL SUPERVISOR			
HASSAN MAREI			

STATE OF CALIFORNIA - DEPARTMENT OF TRANSPORTATION
Caltrans
TRAFFIC DESIGN

LAST REVISION 00-00-00 | DATE PLOTTED => 06-JUL-2009 | TIME PLOTTED => 06:49

Dist	COUNTY	ROUTE	POST MILES TOTAL PROJECT	SHEET No.	TOTAL SHEETS
10	SJ,Sta	99	R24.3/R24.8, 0.0/1.7	26	63

REGISTERED CIVIL ENGINEER 3/20/09 DATE

6-29-09
PLANS APPROVAL DATE

REGISTERED PROFESSIONAL ENGINEER Hassan Marei No. 35068 Exp. 9/30/09 CIVIL STATE OF CALIFORNIA

THE STATE OF CALIFORNIA OR ITS OFFICERS OR AGENTS SHALL NOT BE RESPONSIBLE FOR THE ACCURACY OR COMPLETENESS OF SCANNED COPIES OF THIS PLAN SHEET.

LEGEND

- TEMPORARY RAILING (TYPE K) WITH Temp TRAFFIC SCREEN
- REMOVE EXISTING TRAFFIC STRIPE
- TEMPORARY TRAFFIC STRIPE (PAINT) DETAIL No.
- ROADSIDE SIGN (WITH NUMBER)
- CONSTRUCTION AREA SIGN
- CHANNELIZER (SURFACE-MOUNTED)
- DIRECTION OF TRAFFIC
- Temp CRASH CUSHION MODULES

NOTE:

FOR COMPLETE RIGHT OF WAY AND ACCURATE ACCESS DATA, SEE RIGHT OF WAY RECORD MAPS AT DISTRICT OFFICE.

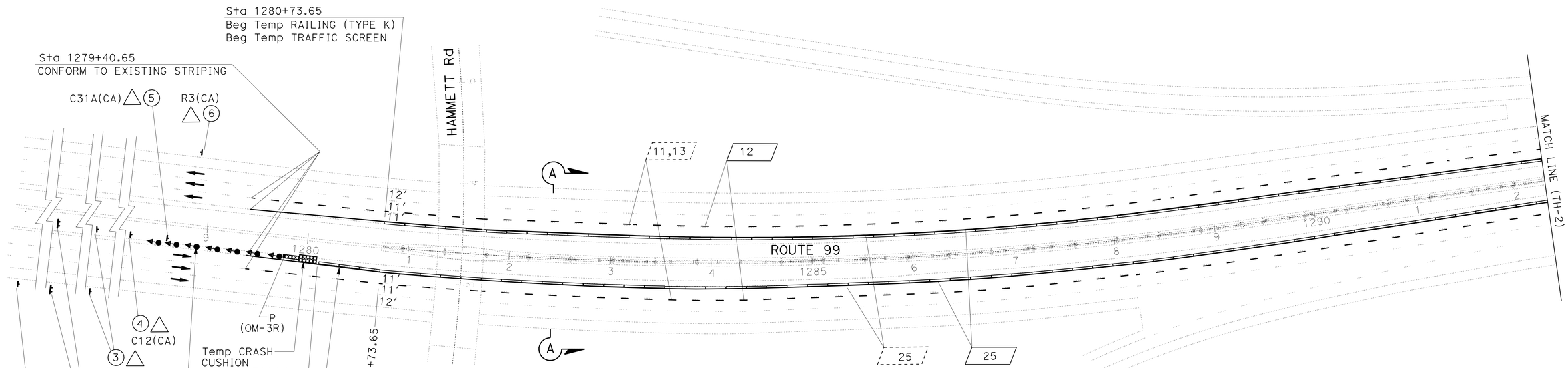

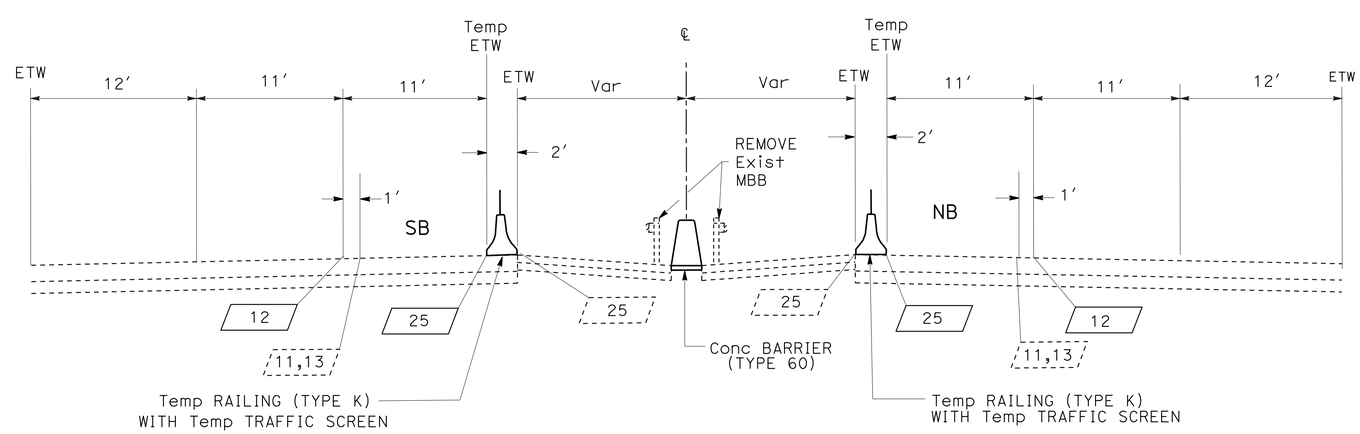

SECTION A-A

FROM Sta 1279+40.65 TO Sta 1306+78.44
FROM Sta 00+00 TO Sta 90+80

NO SCALE

THIS PLAN ACCURATE FOR TRAFFIC HANDLING WORK ONLY.

TRAFFIC HANDLING PLAN

SCALE: 1"=50′

TH-1

REVISED BY	DATE REVISED
HN	3-24-09

CALCULATED-DESIGNED BY: HUE NGUYEN
CHECKED BY: ALI JUMA
FUNCTIONAL SUPERVISOR: HASSAN MAREI

STATE OF CALIFORNIA - DEPARTMENT OF TRANSPORTATION
Caltrans
TRAFFIC DESIGN

LAST REVISION 00-00-00
DATE PLOTTED => 06-JUL-2009
TIME PLOTTED => 06:49

Dist	COUNTY	ROUTE	POST MILES TOTAL PROJECT	SHEET No.	TOTAL SHEETS
10	SJ,Sta	99	R24.3/R24.8, 0.0/1.7	27	63

REGISTERED CIVIL ENGINEER 3/20/09 DATE

6-29-09
PLANS APPROVAL DATE

REGISTERED PROFESSIONAL ENGINEER Hassan Marei No. 35068 Exp. 9/30/09 CIVIL STATE OF CALIFORNIA

THE STATE OF CALIFORNIA OR ITS OFFICERS OR AGENTS SHALL NOT BE RESPONSIBLE FOR THE ACCURACY OR COMPLETENESS OF SCANNED COPIES OF THIS PLAN SHEET.

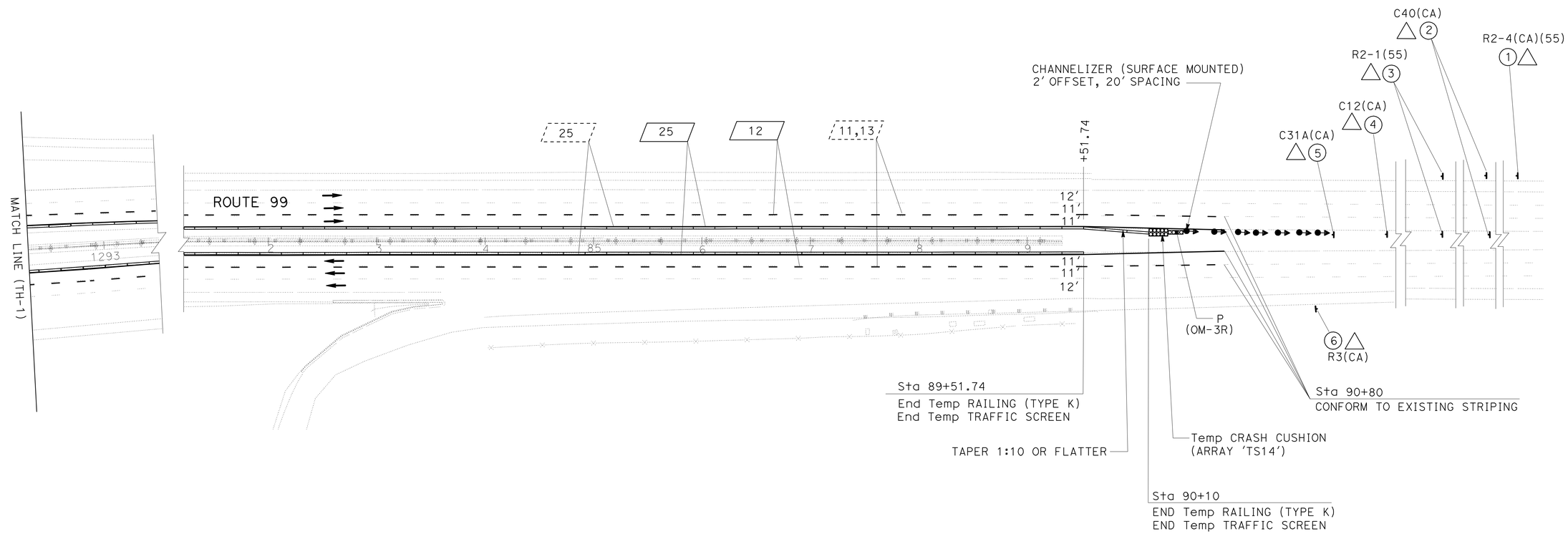

THIS PLAN ACCURATE FOR TRAFFIC HANDLING WORK ONLY.

TRAFFIC HANDLING PLAN

SCALE: 1"=50′

TH-2

REVISED BY	DATE REVISED
HN	3-24-09

CALCULATED-DESIGNED BY: HUE NGUYEN
CHECKED BY: ALI JUMA

FUNCTIONAL SUPERVISOR: HASSAN MAREI

STATE OF CALIFORNIA - DEPARTMENT OF TRANSPORTATION
Caltrans
TRAFFIC DESIGN

LAST REVISION 00-00-00 | DATE PLOTTED => 06-JUL-2009 | TIME PLOTTED => 06:49

Dist	COUNTY	ROUTE	POST MILES TOTAL PROJECT	SHEET No.	TOTAL SHEETS
10	SJ,Sta	99	R24.3/R24.8, 0.0/1.7	28	63

REGISTERED CIVIL ENGINEER 3/20/09 DATE

6-29-09
PLANS APPROVAL DATE

REGISTERED PROFESSIONAL ENGINEER Hassan Marei No. 35068 Exp. 9/30/09 CIVIL STATE OF CALIFORNIA

THE STATE OF CALIFORNIA OR ITS OFFICERS OR AGENTS SHALL NOT BE RESPONSIBLE FOR THE ACCURACY OR COMPLETENESS OF SCANNED COPIES OF THIS PLAN SHEET.

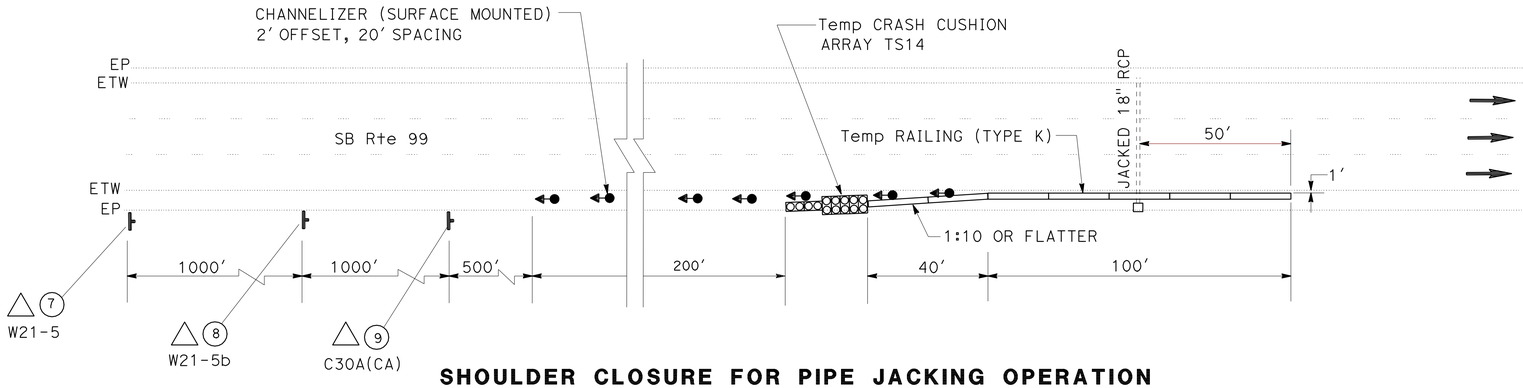

SHOULDER CLOSURE FOR PIPE JACKING OPERATION
(AT VARIOUS LOCATIONS)

NOTES:
1. EXACT SIGN LOCATIONS TO BE DETERMINED BY THE ENGINEER.
2. FOR ADDITIONAL CONSTRUCTION AREA SIGN QUANTITIES SEE SHEET CS-1.
3. REFERS TO SHOULDER CLOSURE FOR PIPE JACKING OPERATION LOCATIONS.
4. (N) - NOT A SEPARATE PAY ITEM, FOR INFORMATION ONLY.

STATIONARY MOUNTED CONSTRUCTION AREA SIGNS

SIGN No.	SIGN CODE	SIGN MESSAGE	PANEL SIZE	No. OF POSTS AND SIZE	No. OF SIGNS
1	R2-4(CA)(55)	55 ZONE AHEAD	48" x 48"	2 - 6" x 6"	2
2	C40(CA)	TRAFFIC FINES DOUBLED IN CONSTRUCTION ZONES	144" x 60"	2 - 6" x 6"	4
3	R2-1(55)	SPEED LIMIT 55	36" x 48"	1 - 4" x 6"	4
4	C12(CA)	NARROW LANES	48" x 48"	1 - 6" x 6"	2
5	C31A(CA)	NO SHOULDER	48" x 48"	1 - 6" x 6"	2
6	R3(CA)	END SPEED LIMIT	36" x 44"	1 - 4" x 6"	2
7 *	W21-5	SHOULDER WORK	48" x 48"	1 - 6" x 6"	3
8 *	W21-5b	RIGHT SHOULDER CLOSED 1000 FT	48" x 48"	1 - 6" x 6"	3
9 *	C30A(CA)	SHOULDER CLOSED	48" x 48"	1 - 6" x 6"	

* - SEE NOTE 3

TEMPORARY TRAFFIC HANDLING ITEMS

SHEET No.	COUNTY	Sta LOCATION	TEMPORARY RAILING (TYPE K)	TEMPORARY TRAFFIC SCREEN	CHANNELIZER (SURFACE MOUNTED)	TEMPORARY CRASH CUSHION MODULE
			LF	LF	EA	EA
TH-1/TH-2	Sta	Sta 1280+11.55 TO Sta 1306+78.44	5272	5272	7	14
	SJ	Sta 00+00 TO Sta 90+10	17,962	17,962	7	14
THD-1	Sta	Sta 1300+60 NB *	140		7	14
	SJ	Sta 11+20 NB *	140		7	14
	SJ	Sta 48+55.6 SB *	140		7	14
TOTAL			23,654	23,234	35	70

* - SEE NOTE 3

TEMPORARY PAVEMENT DELINEATION

SHEET No.	COUNTY	LOCATION	REMOVE PAINTED TRAFFIC STRIPE	REMOVE YELLOW PAINTED TRAFFIC STRIPE	REMOVE THERMOPLASTIC TRAFFIC STRIPE	REMOVE YELLOW THERMOPLASTIC TRAFFIC STRIPE	TEMPORARY TRAFFIC STRIPE (PAINT) DETAIL 12 4" BROKEN WHITE	TEMPORARY TRAFFIC STRIPE (PAINT) DETAIL 25 4" SOLID YELLOW	REMOVE PAVEMENT MARKER	TEMPORARY PAVEMENT MARKER RETROREFLECTIVE ONE-WAY CLEAR TYPE G	TEMPORARY PAVEMENT MARKER RETROREFLECTIVE ONE-WAY YELLOW TYPE H	(N) OBJECT MARKER TYPE P (TYPE OM-3L/R)
			LF				LF		EA	EA		EA
TH-1/TH-2	Sta	Sta 1279+40.65 TO Sta 1306+78.44	1370	5476	1370	5476	5476	5476	1880	376	376	2
	SJ	Sta 00+00 TO Sta 90+80	4540	18,160	4540	18160	18,160	18,160	6210	1242	1242	
SUBTOTAL			5910	23,636	5910	23 636	23,636	23,636	8090	1618	1618	
TOTAL			5910	23,636	5910	23 636	47,272		8090	3236		

TRAFFIC HANDLING DETAILS AND QUANTITIES
NO SCALE

THD-1

STATE OF CALIFORNIA - DEPARTMENT OF TRANSPORTATION
Caltrans
TRAFFIC DESIGN

FUNCTIONAL SUPERVISOR: HASSAN MAREI
CALCULATED-DESIGNED BY: HUE NGUYEN
CHECKED BY: ALI JUMA
REVISED BY: HN
DATE REVISED: 3-25-09

LAST REVISION 00-00-00
DATE PLOTTED => 06-JUL-2009
TIME PLOTTED => 06:49

Dist	COUNTY	ROUTE	POST MILES TOTAL PROJECT	SHEET No.	TOTAL SHEETS
10	SJ,Sta	99	R24.3/R24.8, 0.0/1.7	29	63

REGISTERED CIVIL ENGINEER 3/20/09 DATE

6-29-09
PLANS APPROVAL DATE

REGISTERED PROFESSIONAL ENGINEER Hassan Marei No. 35068 Exp. 9/30/09 CIVIL STATE OF CALIFORNIA

THE STATE OF CALIFORNIA OR ITS OFFICERS OR AGENTS SHALL NOT BE RESPONSIBLE FOR THE ACCURACY OR COMPLETENESS OF SCANNED COPIES OF THIS PLAN SHEET.

LEGEND

- THERMOPLASTIC TRAFFIC STRIPE DETAIL No.
- THERMOPLASTIC TRAFFIC STRIPE (SPRAYABLE) DETAIL No.
- REMOVE THERMOPLASTIC PAVEMENT MARKING
- THERMOPLASTIC PAVEMENT MARKING
- OBJECT MARKER (TYPE L-1)
- ROADSIDE SIGN No.
- METAL (BARRIER-MOUNTED SIGN)
- REMOVE ROADSIDE SIGN
- CHANGE OF PAVEMENT DELINEATION DETAIL No.
- DIRECTION OF TRAFFIC FLOW

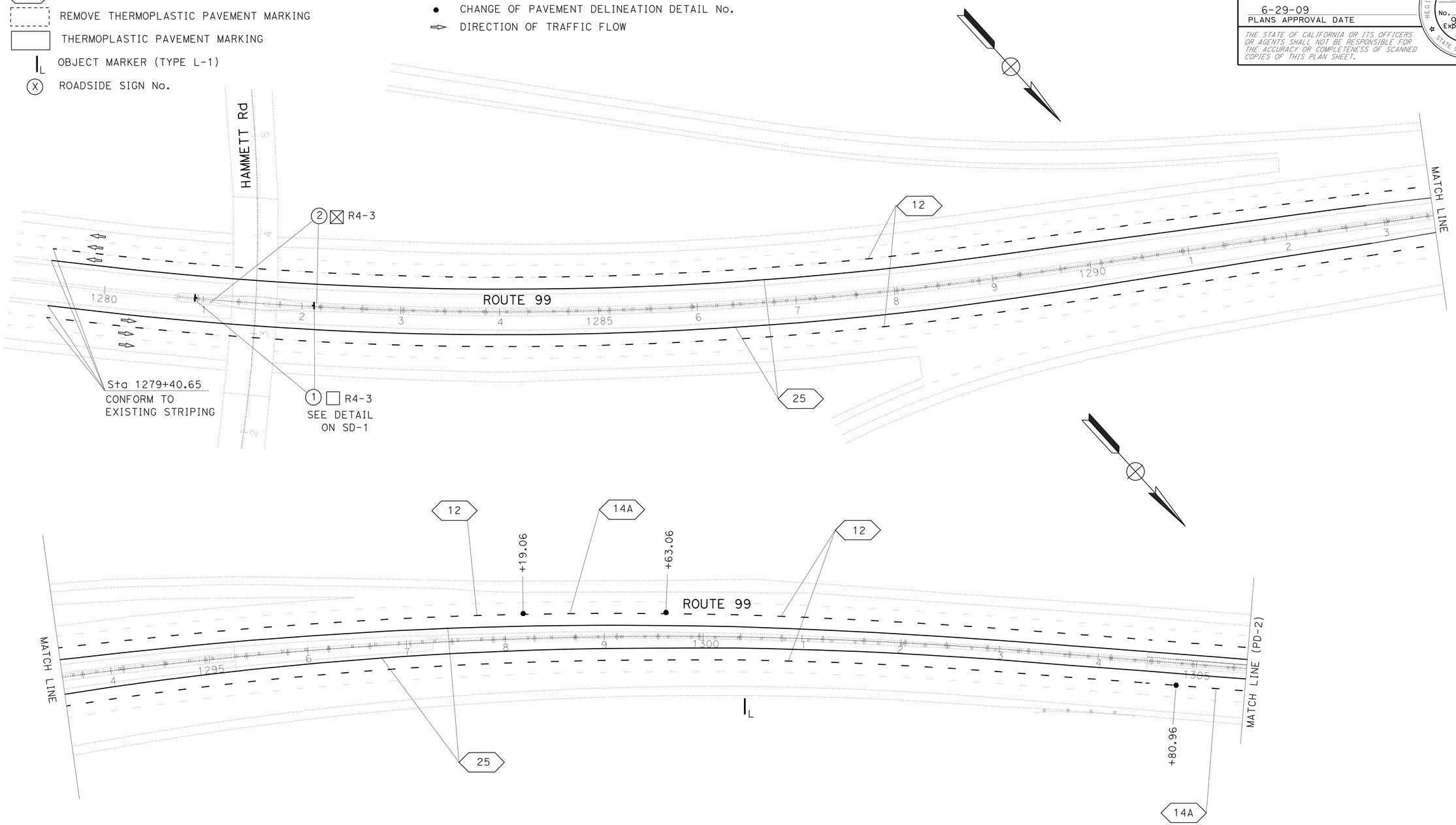

PAVEMENT DELINEATION AND SIGN PLAN

SCALE: 1"=50'

PD-1

THIS PLAN ACCURATE FOR PAVEMENT DELINEATION AND SIGN WORK ONLY.

REVISED BY	HN
DATE REVISED	3-26-09
CALCULATED-DESIGNED BY	HUE NGUYEN
CHECKED BY	ALI JUMA
FUNCTIONAL SUPERVISOR	HASSAN MAREI

STATE OF CALIFORNIA - DEPARTMENT OF TRANSPORTATION
Caltrans
TRAFFIC DESIGN

LAST REVISION 00-00-00 | DATE PLOTTED => 06-JUL-2009 | TIME PLOTTED => 06:50

Dist	COUNTY	ROUTE	POST MILES TOTAL PROJECT	SHEET No.	TOTAL SHEETS
10	SJ,Sta	99	R24.3/R24.8, 0.0/1.7	30	63

REGISTERED CIVIL ENGINEER 3/20/09 DATE

6-29-09
PLANS APPROVAL DATE

REGISTERED PROFESSIONAL ENGINEER Hassan Marei No. 35068 Exp. 9/30/09 CIVIL STATE OF CALIFORNIA

THE STATE OF CALIFORNIA OR ITS OFFICERS OR AGENTS SHALL NOT BE RESPONSIBLE FOR THE ACCURACY OR COMPLETENESS OF SCANNED COPIES OF THIS PLAN SHEET.

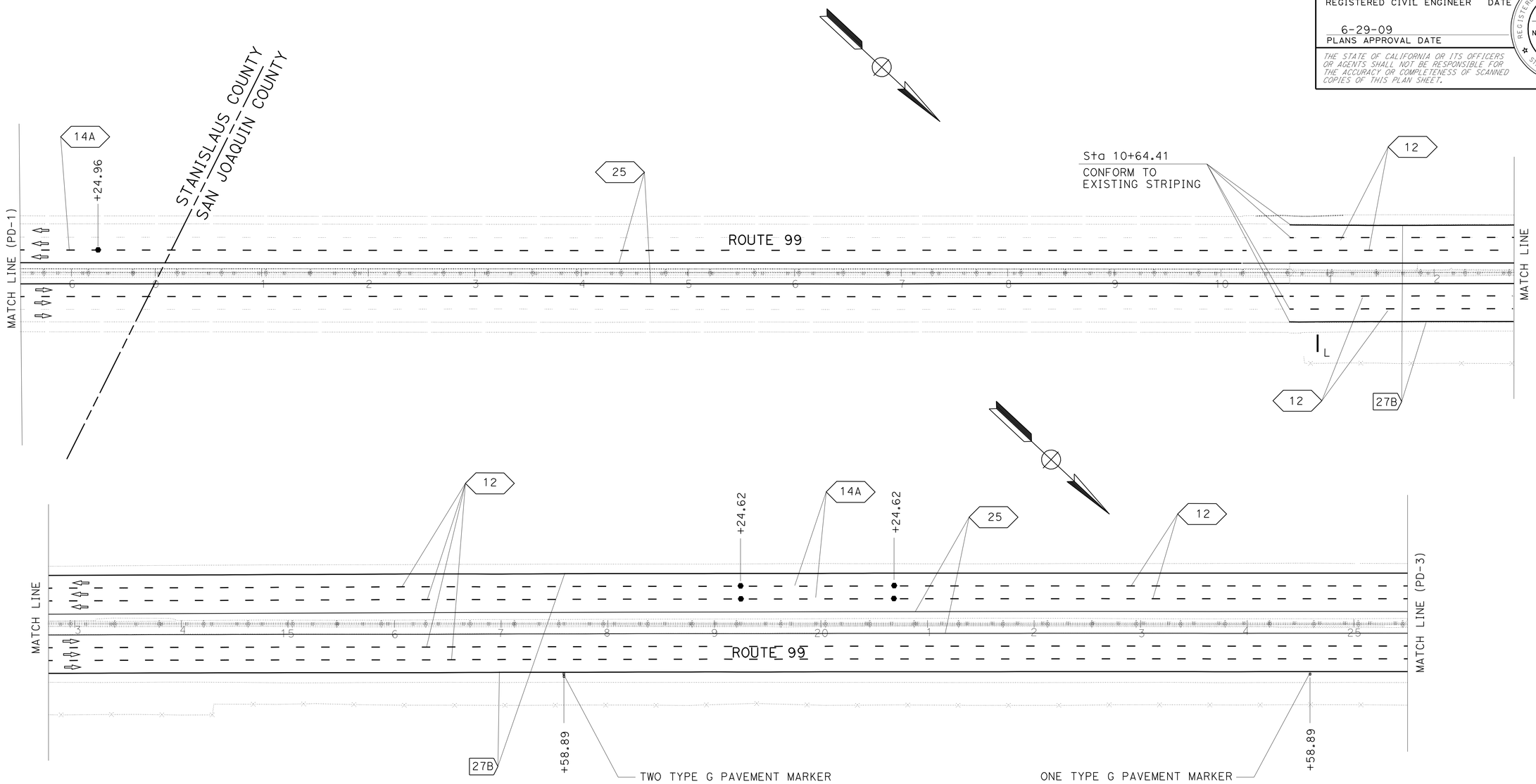

PAVEMENT DELINEATION AND SIGN PLAN

SCALE: 1"=50'

PD-2

THIS PLAN ACCURATE FOR PAVEMENT DELINEATION AND SIGN WORK ONLY.

REVISED BY	HN
DATE REVISED	3-26-09
CALCULATED-DESIGNED BY	HUE NGUYEN
CHECKED BY	ALI JUMA
FUNCTIONAL SUPERVISOR	HASSAN MAREI

STATE OF CALIFORNIA - DEPARTMENT OF TRANSPORTATION

Caltrans® **TRAFFIC DESIGN**

LAST REVISION 00-00-00 | DATE PLOTTED => 06-JUL-2009 | TIME PLOTTED => 06:50

Dist	COUNTY	ROUTE	POST MILES TOTAL PROJECT	SHEET No.	TOTAL SHEETS
10	SJ,Sta	99	R24.3/R24.8, 0.0/1.7	31	63

REGISTERED CIVIL ENGINEER 3/20/09 DATE

6-29-09
PLANS APPROVAL DATE

REGISTERED PROFESSIONAL ENGINEER Hassan Marei No. 35068 Exp. 9/30/09 CIVIL STATE OF CALIFORNIA

THE STATE OF CALIFORNIA OR ITS OFFICERS OR AGENTS SHALL NOT BE RESPONSIBLE FOR THE ACCURACY OR COMPLETENESS OF SCANNED COPIES OF THIS PLAN SHEET.

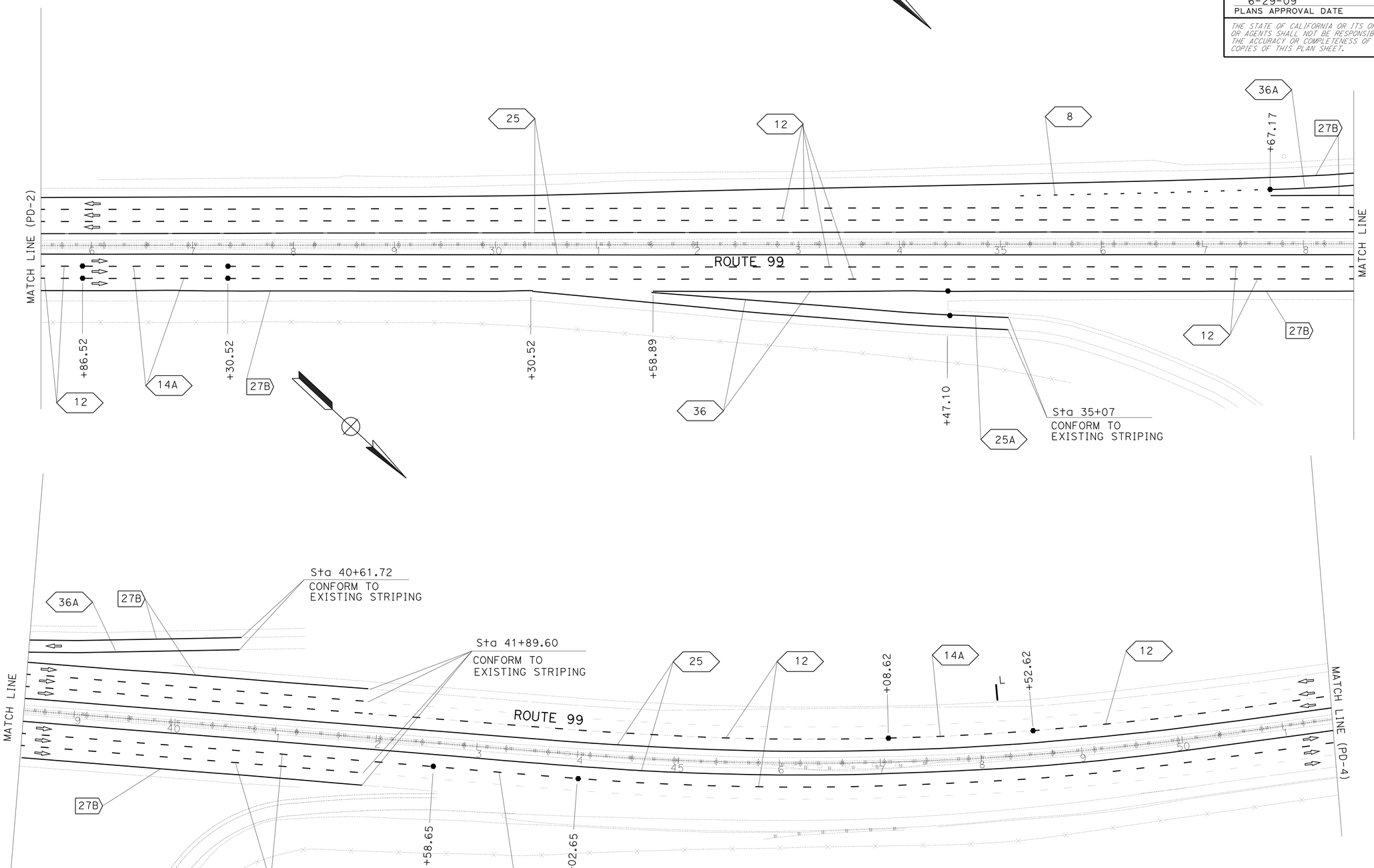

THIS PLAN ACCURATE FOR PAVEMENT DELINEATION AND SIGN WORK ONLY.

PAVEMENT DELINEATION AND SIGN PLAN

SCALE: 1"=50'

PD-3

STATE OF CALIFORNIA - DEPARTMENT OF TRANSPORTATION
Caltrans
TRAFFIC DESIGN

FUNCTIONAL SUPERVISOR: HASSAN MAREI
CALCULATED-DESIGNED BY: HUE NGUYEN
CHECKED BY: ALI JUMA
REVISED BY: HN
DATE REVISED: 3-26-09

LAST REVISION 00-00-00
DATE PLOTTED => 06-JUL-2009
TIME PLOTTED => 06:50

Dist	COUNTY	ROUTE	POST MILES TOTAL PROJECT	SHEET No.	TOTAL SHEETS
10	SJ,Sta	99	R24.3/R24.8, 0.0/1.7	32	63

REGISTERED CIVIL ENGINEER — DATE 3/20/09

6-29-09
PLANS APPROVAL DATE

REGISTERED PROFESSIONAL ENGINEER — Hassan Marei — No. 35068 — Exp. 9/30/09 — CIVIL — STATE OF CALIFORNIA

THE STATE OF CALIFORNIA OR ITS OFFICERS OR AGENTS SHALL NOT BE RESPONSIBLE FOR THE ACCURACY OR COMPLETENESS OF SCANNED COPIES OF THIS PLAN SHEET.

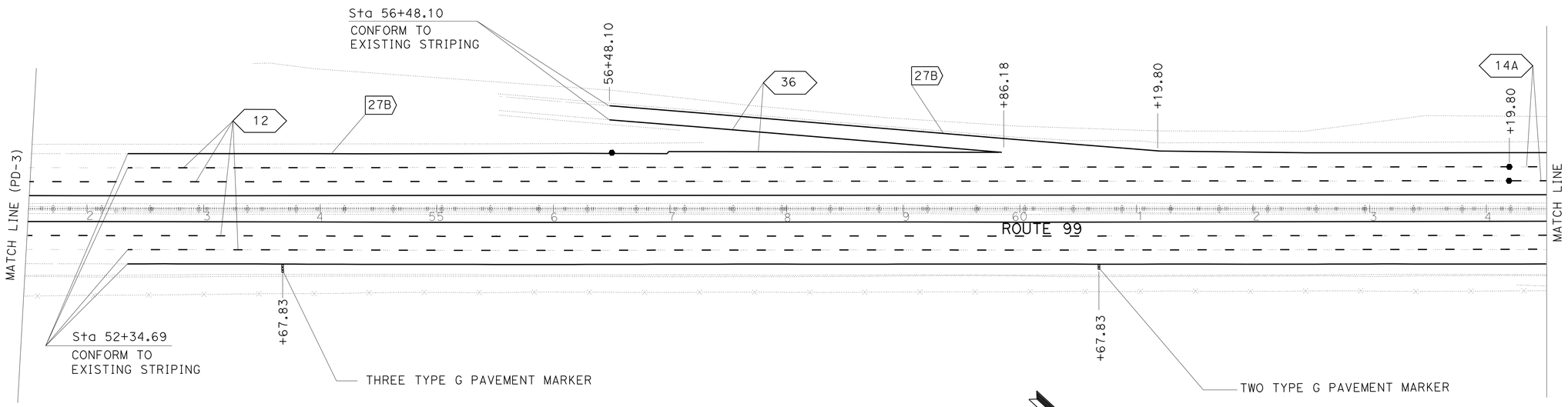

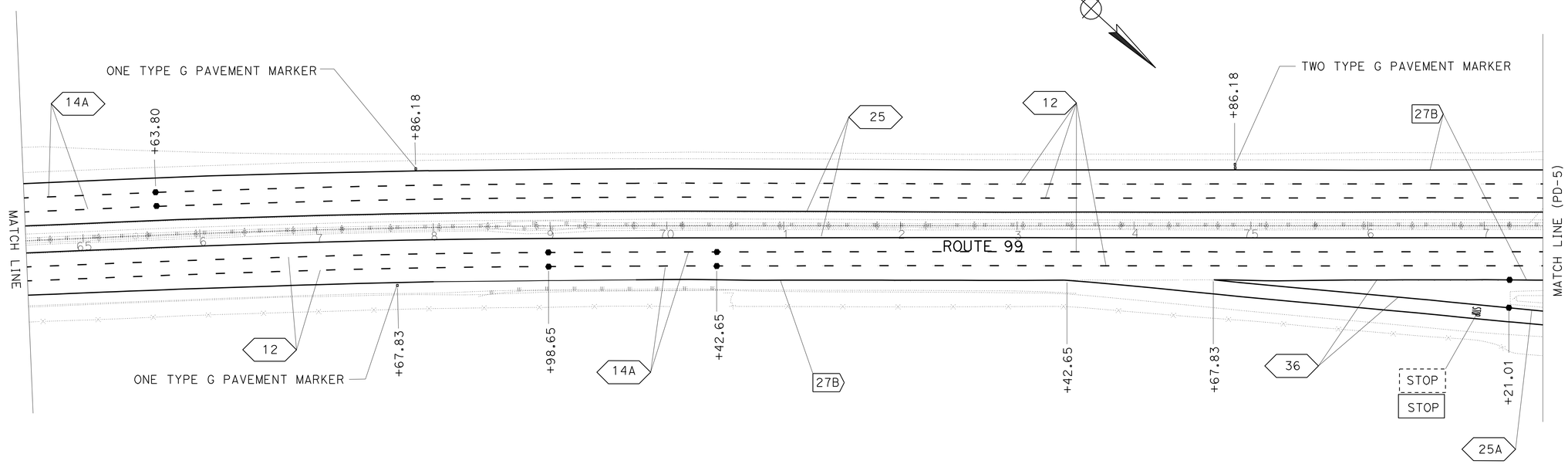

THIS PLAN ACCURATE FOR PAVEMENT DELINEATION AND SIGN WORK ONLY.

PAVEMENT DELINEATION AND SIGN PLAN

SCALE: 1"=50'

PD-4

REVISED BY	HN
DATE REVISED	3-26-09
CALCULATED-DESIGNED BY	HUE NGUYEN
CHECKED BY	ALI JUMA
FUNCTIONAL SUPERVISOR	HASSAN MAREI

STATE OF CALIFORNIA - DEPARTMENT OF TRANSPORTATION
Caltrans®
TRAFFIC DESIGN

LAST REVISION 00-00-00 | DATE PLOTTED => 06-JUL-2009 | TIME PLOTTED => 06:50

Dist	COUNTY	ROUTE	POST MILES TOTAL PROJECT	SHEET No.	TOTAL SHEETS
10	SJ,Sta	99	R24.3/R24.8, 0.0/1.7	33	63

REGISTERED CIVIL ENGINEER 3/20/09 DATE

6-29-09
PLANS APPROVAL DATE

REGISTERED PROFESSIONAL ENGINEER Hassan Marei No. 35068 Exp. 9/30/09 CIVIL STATE OF CALIFORNIA

THE STATE OF CALIFORNIA OR ITS OFFICERS OR AGENTS SHALL NOT BE RESPONSIBLE FOR THE ACCURACY OR COMPLETENESS OF SCANNED COPIES OF THIS PLAN SHEET.

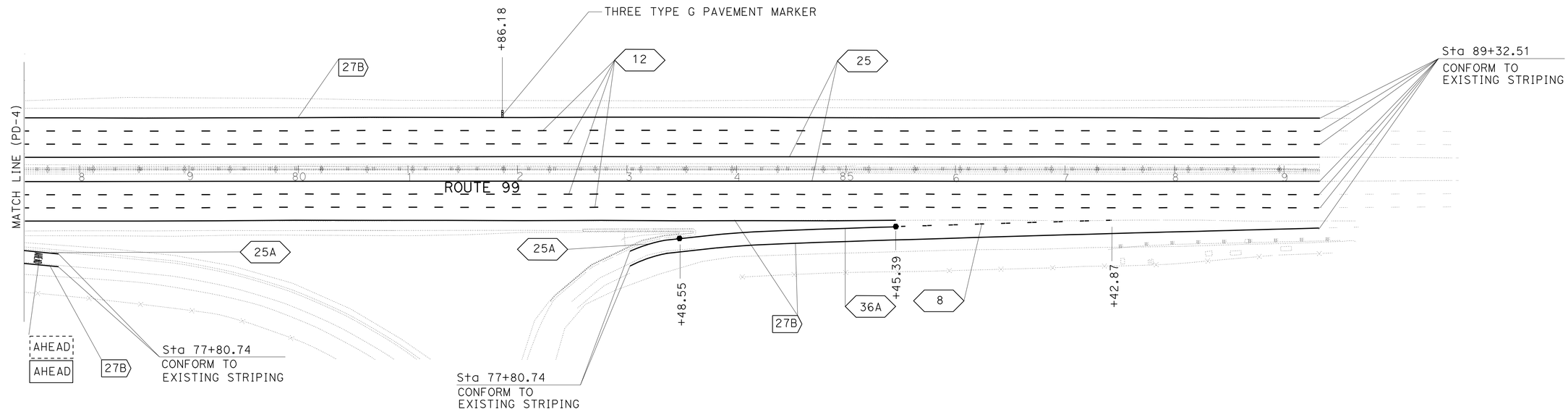

THIS PLAN ACCURATE FOR PAVEMENT DELINEATION AND SIGN WORK ONLY.

PAVEMENT DELINEATION AND SIGN PLAN

SCALE: 1"=50'

PD-5

REVISED BY	DATE REVISED
HN	3-24-09

CALCULATED-DESIGNED BY: HUE NGUYEN
CHECKED BY: ALI JUMA
FUNCTIONAL SUPERVISOR: HASSAN MAREI

STATE OF CALIFORNIA - DEPARTMENT OF TRANSPORTATION
Caltrans
TRAFFIC DESIGN

LAST REVISION 00-00-00
DATE PLOTTED => 06-JUL-2009
TIME PLOTTED => 06:50

Dist	COUNTY	ROUTE	POST MILES TOTAL PROJECT	SHEET No.	TOTAL SHEETS
10	SJ,Sta	99	R24.3/R24.8, 0.0/1.7	34	63

REGISTERED CIVIL ENGINEER 3/20/09 DATE

6-29-09
PLANS APPROVAL DATE

REGISTERED PROFESSIONAL ENGINEER Hassan Marei No. 35068 Exp. 9/30/09 CIVIL STATE OF CALIFORNIA

THE STATE OF CALIFORNIA OR ITS OFFICERS OR AGENTS SHALL NOT BE RESPONSIBLE FOR THE ACCURACY OR COMPLETENESS OF SCANNED COPIES OF THIS PLAN SHEET.

ROADSIDE SIGNS QUANTITIES

SHEET No.	SIGN No.	SIGN CODE	SIGN MESSAGE	PANEL SIZE	METAL (RAIL MOUNTED SIGN)	REMOVE ROADSIDE SIGN	SIGN MATERIALS						
							FURNISH SINGLE SHEET ALUMINUM SIGN (0.063"-UNFRAMED)	SINGLE FACED	BACKGROUND		LEGEND		GRAFFITI FLOW
									SHEETING COLOR	RETROREFLECTIVITY ASTM TYPE	SHEETING COLOR	RETROREFLECTIVITY ASTM TYPE	STANDARD
					LB	EA	SQFT						
PD-1	1	R4-3	SLOWER TRAFFIC KEEP RIGHT	24" x 30"	208		5	×	WHITE	III	BLACK	IV	×
	2	R4-3				2							
PD-2													
				TOTAL	208	2	5						

PAVEMENT DELINEATION ITEMS

SHEET No.	LOCATION	4" THERMOPLASTIC TRAFFIC STRIPE	THERMOPLASTIC TRAFFIC STRIPE (SPRAYABLE)							REMOVE THERMOPLASTIC PAVEMENT MARKING	THERMOPLASTIC PAVEMENT MARKING		PAVEMENT MARKER RETROREFLECTIVE			OBJECT MARKER (TYPE L)
			4" WHITE			4" YELLOW		8" WHITE			AHEAD	STOP	ONE-WAY CLEAR	ONE-WAY YELLOW	RED-CLEAR	
		DETAIL 27B	DETAIL 8	DETAIL 12	DETAIL 14A	DETAIL 25	DETAIL 25A	DETAIL 36	DETAIL 36A				TYPE G	TYPE H	TYPE C	
		LF	LF							SQFT	SQFT		EA			EA
PD-1	Sta 1279+40.65 TO 1305+50.69			5006	214	5220							106	110	6	1
PD-2	Sta 1305+50.69 TO 1306+78.44			182	74	256							5	6	2	1
	Sta 0+00 TO 25+50.44	2972		7775		5101							171	108	8	
PD-3	Sta 25+50.44 TO 51+53.94	3921		7909	576	5207	60	576	294				189	112	16	1
PD-4	Sta 51+53.94 TO 77+50.11	4807		9647	576	5192	29	1182		22		22	214	112	16	
PD-5	Sta 77+50.11 TO 89+32.51	3159	197	4730		2364			197	31	31		113	50		
SUBTOTAL		14,859	197	35,249	1440	23,340	89	1758	491	53	31	22	798	498	48	3
TOTAL		14,859	62,564							53	53		1344			3

PAVEMENT DELINEATION QUANTITIES

PDQ-1

STATE OF CALIFORNIA - DEPARTMENT OF TRANSPORTATION
Caltrans TRAFFIC DESIGN

FUNCTIONAL SUPERVISOR: HASSAN MAREI
CALCULATED-DESIGNED BY: HUE NGUYEN
CHECKED BY: ALI JUMA
REVISED BY: HN
DATE REVISED: 3-26-09

LAST REVISION 00-00-00
DATE PLOTTED => 06-JUL-2009
TIME PLOTTED => 06:50

Dist	COUNTY	ROUTE	POST MILES TOTAL PROJECT	SHEET No.	TOTAL SHEETS
10	SJ,Sta	99	R24.3/R24.8, 0.0/1.7	35	63

REGISTERED CIVIL ENGINEER 3/20/09 DATE

6-29-09
PLANS APPROVAL DATE

REGISTERED PROFESSIONAL ENGINEER Hassan Marei No. 35068 Exp. 9/30/09 CIVIL STATE OF CALIFORNIA

THE STATE OF CALIFORNIA OR ITS OFFICERS OR AGENTS SHALL NOT BE RESPONSIBLE FOR THE ACCURACY OR COMPLETENESS OF SCANNED COPIES OF THIS PLAN SHEET.

NOTES:

1. FOR DETAILS NOT SHOWN SEE STANDARD PLANS.
2. WASHER SHALL BE INSTALLED UNDER ALL BOLTS.
   BOLT THROUGH POST SHALL BE ½" Dia.
   BOLT THROUGH SIGN PANEL SHALL BE ⅜" Dia.

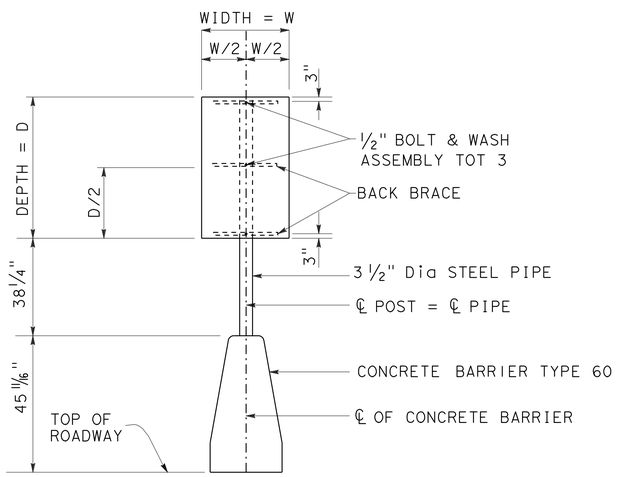

ELEVATION

SINGLE POST ON CONCRETE BARRIER

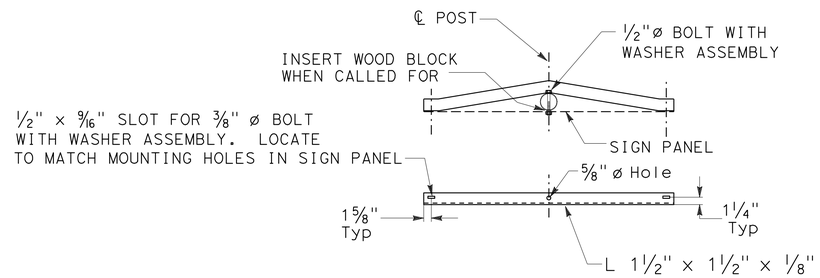

BACK BRACE DETAILS

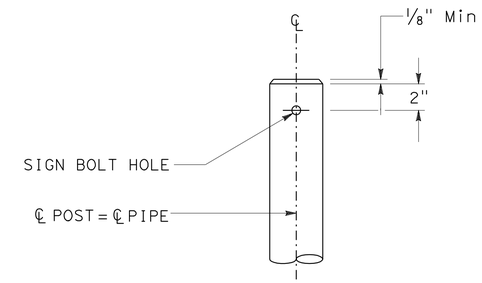

TOP OF POST DETAIL

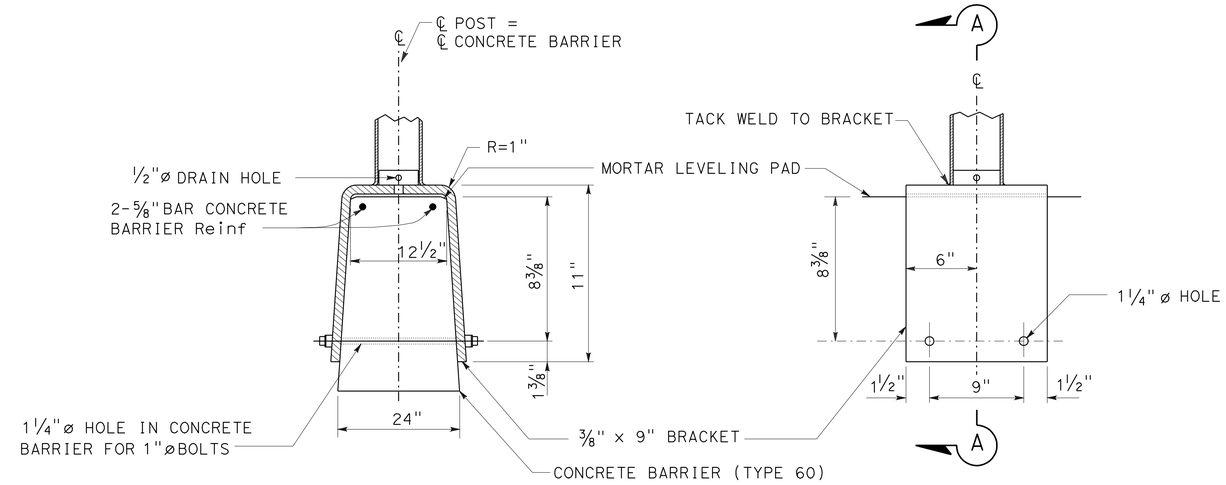

SECTION A-A

ELEVATION
MOUNTING BRAKET

BARRIER-MOUNTED SIGN DETAILS

REVISED BY	DATE REVISED
HN	3-24-09

CALCULATED-DESIGNED BY: HUE NGUYEN
CHECKED BY: ALI JUMA
FUNCTIONAL SUPERVISOR: HASSAN MAREI

STATE OF CALIFORNIA - DEPARTMENT OF TRANSPORTATION
Caltrans® TRAFFIC DESIGN

SIGN DETAILS

NO SCALE

SD-1

LAST REVISION 00-00-00 | DATE PLOTTED => 06-JUL-2009 | TIME PLOTTED => 06:51

Dist	COUNTY	ROUTE	POST MILES TOTAL PROJECT	SHEET No.	TOTAL SHEETS
10	SJ,Sta	99	R24.3/R24.8, 0.0/1.7	36	63

REGISTERED CIVIL ENGINEER 3/18/09 DATE

6-29-09
PLANS APPROVAL DATE

REGISTERED PROFESSIONAL ENGINEER MASON L. LEUNG No. 71709 Exp. 12/31/09 CIVIL STATE OF CALIFORNIA

THE STATE OF CALIFORNIA OR ITS OFFICERS OR AGENTS SHALL NOT BE RESPONSIBLE FOR THE ACCURACY OR COMPLETENESS OF SCANNED COPIES OF THIS PLAN SHEET.

EARTHWORK AND ROADWAY ITEMS

COUNTY	STATION	COLD PLANE ASHPALT CONCRETE PAVEMENT	CLASS 2 AGGREGATE BASE	RUBBERIZED HOT MIX ASPHALT (GAP GRADED)	HOT MIX ASPHALT (TYPE B)	TACK COAT	PLACE ASPHALT CONCRETE (MISCELLANEOUS AREA)	ROADWAY EXCAVATION	IMPORTED MATERIAL (SHOULDER BACKING)
		SQYD	CY	TON	TON	TON	SQYD	CY	CY
Sta	1280+73.65 TO 1295+25.88				658	0.5	1291		
Sta	1295+25.88 TO 1304+50.04		246		462	0.5			
SJ	10+64.41 TO 89+32.51	2867	2183	11,293	12,786	46			551
TOTAL		2867	2429	11,293	13,906	47	1291	3353	551

REMOVE METAL BEAM BARRIER

COUNTY	STATION	LF
Sta	1280+73.65 TO 1306+78.44	2604.79
SJ	0+00 TO 89+32.51	8932.51
TOTAL		11,537.30

WATER POLLUTION CONTROL ITEMS

COUNTY	STATION	TEMPORARY DRAINAGE INLET PROTECTION	TEMPORARY CONSTRUCTION ENTRANCE	FIBER ROLLS	REMARKS
		EA	EA	LF	
Sta	1280+73.65 TO 1293+50	2	1		
	1293+50 TO 1305+50	1		80	FIBER ROLLS, Sta 1300+60 N/B Rte 99
SJ	0+00 TO 12+75			80	FIBER ROLLS, Sta 11+00 N/B Rte 99
	12+75 TO 25+50	2	1		
	25+50 TO 38+50	2			
	38+50 TO 51+50	1		80	FIBER ROLLS, Sta 48+55.60 S/B Rte 99
	51+50 TO 64+50	2	1		
	64+50 TO 77+50	2			
	77+50 TO 89+32.51	1	1		
TOTAL		13	4	240	

EROSION CONTROL ITEMS

COUNTY	LOCATION	EROSION CONTROL (TYPE D)	STRAW (N)	FIBER (N)	PURE LIVE SEED (N)	COMMERCIAL FERTILIZER (N)	STABILIZING EMULSION (N)
		SQYD	TON	LB	LB	LB	LB
Sta	395+94 Lt	38.7	.016	8.64	0.24	1.44	1.08
	395+94 Rt	48.6	.02	10.8	0.3	1.8	1.35
SJ	3+40 Rt	33.9	.014	7.56	0.21	1.26	.95
TOTAL		121.2					

(N) NOT A SEPARATE PAY ITEM, FOR INFORMATION ONLY.

RUMBLE STRIP ITEMS

COUNTY	STATION	SHOULDER RUMBER STRIP (AC, ROLLED-IN INDENTATIONS)	SHOULDER RUMBER STRIP (AC, GROUND-IN INDENTATIONS)
		STA	STA
Sta	1295+25.88 TO 1304+50.04 (NB & SB)	18.48	
	1304+50.04 TO 1306+78.44 (NB & SB)		4.56
SJ	0+00 TO 10+64.41 (NB & SB)		21.28
	10+64.41 TO 89+32.51 (NB & SB)	157.36	
TOTAL		175.84	25.84

CONCRETE BARRIER ITEMS

COUNTY	STATION	CONCRETE BARRIER (TYPE 60)	CONCRETE BARRIER (TYPE 60C)	CONCRETE BARRIER (TYPE 60E)
		LF	LF	LF
Sta	1280+73.65 TO 1282+32.85			159.20
	1282+32.85 TO 1295+25.88	1293.03		
	1295+25.88 TO 1304+50.04		924.16	
SJ	10+64.41 TO 45+33.12		3468.71	
	45+33.12 TO 48+23.68			290.56
	48+23.68 TO 89+32.51		4108.83	
TOTAL		1293.03	8501.70	449.76

SUMMARY OF QUANTITIES
Q-1

REVISED BY	MP	MANNY PALATINO	CALCULATED-DESIGNED BY
DATE REVISED	3/26/09	MASON LEUNG	CHECKED BY
FUNCTIONAL SUPERVISOR	CAROLINE REYES		

STATE OF CALIFORNIA - DEPARTMENT OF TRANSPORTATION
Caltrans
DESIGN

LAST REVISION DATE PLOTTED => 06-JUL-2009
00-00-00 TIME PLOTTED => 06:51

Dist	COUNTY	ROUTE	POST MILES TOTAL PROJECT	SHEET No.	TOTAL SHEETS
10	SJ,Sta	99	R24.3/R24.8, 0.0/1.7	37	63

LICENSED LANDSCAPE ARCHITECT

6-29-09
PLANS APPROVAL DATE

LICENSED LANDSCAPE ARCHITECT — William Duttera No. 3425 — SIGNATURE — 9/30/10 RENEWAL DATE — 3/19/09 DATE — STATE OF CALIFORNIA

THE STATE OF CALIFORNIA OR ITS OFFICERS OR AGENTS SHALL NOT BE RESPONSIBLE FOR THE ACCURACY OR COMPLETENESS OF SCANNED COPIES OF THIS PLAN SHEET.

ABBREVIATIONS

AMEND — AMENDMENT
B & B — BALLED AND BURLAPPED
Dia — DIAMETER
EA — EACH
LB — POUND
Oz — OUNCE
Ft — FOOT/FEET
SQFT — SQUARE FEET
SQYD — SQUARE YARD
CF — CUBIC FEET
Max — MAXIMUM
Min — MINIMUM
NCN — NO COMMON NAME
No. — NUMBER
Pkt — PACKET
PLT ESTB — PLANT ESTABLISHMENT
Pvmt — PAVEMENT
R/W — RIGHT OF WAY
SF — STATE-FURNISHED
TRVD — TRAVELED

LEGEND

EXISTING PLANT MATERIAL
EXISTING GROUND COVER
PLANT ESTABLISHMENT AREA

PLANT LIST AND PLANTING SPECIFICATIONS

PLANT GROUP	PLANT No.	SYMBOL	BOTANICAL NAME	COMMON NAME	SIZE	QUANTITY EACH	HOLE SIZE (INCH) Dia	HOLE SIZE (INCH) DEPTH	BASIN TYPE	IRON SULFATE ①	SOIL AMEND ①	COMMERCIAL FERTILIZER ① PLANTING	COMMERCIAL FERTILIZER ① PLT ESTB	BASIN MULCH	STAKING	PLANTING LIMITS MINIMUM DISTANCE (Ft) FROM TRVD WAY	PVMT	FENCE	WALL	PAVED DITCH	EARTH DITCH	ON CENTER (Ft)	REMARKS
H	1		CARPOBROTUS EDULIS	HOTTENTOT FIG	CUTTING	175	—	—	—	—	—	1 LB/ 100 Ft²	—	—	—	—	2	2	2	2	2.5	0.5	GROUND COVER

APPLICABLE WHEN CIRCLED:

1 - QUANTITIES SHOWN ARE "PER PLANT" UNLESS SHOWN AS SQFT OR SQYD APPLICATION RATES.
2 - SUFFICIENT TO RECEIVE ROOT BALL.
3 - DOES NOT APPLY TO MULCH AREAS.
4 - AS SHOWN ON PLANS.
5 - UNLESS OTHERWISE SHOWN ON PLANS.
6 - SEE DETAIL.
7 - SEE SPECIAL PROVISIONS.

NOTE:

UNDERLINED PORTIONS OF BOTANICAL NAME INDICATE ABBREVIATIONS USED ON PLANTING PLANS.

PLANT LIST
PL-1

REVISED BY	DATE REVISED
GE	3/19/09

GUS ESCUTIA — WILLIAM DUTTERA
CALCULATED-DESIGNED BY — CHECKED BY
SENIOR LANDSCAPE ARCHITECT — BRAD COLE

STATE OF CALIFORNIA - DEPARTMENT OF TRANSPORTATION
Caltrans® LANDSCAPE ARCHITECTURE

LAST REVISION 00-00-00 | DATE PLOTTED => 06-JUL-2009 | TIME PLOTTED => 06:51

Dist	COUNTY	ROUTE	POST MILES TOTAL PROJECT	SHEET No.	TOTAL SHEETS
10	SJ,Sta	99	R24.3/R24.8, 0.0/1.7	38	63

LICENSED LANDSCAPE ARCHITECT

6-29-09
PLANS APPROVAL DATE

LICENSED LANDSCAPE ARCHITECT
William Duttera No. 4242
Expiration 9/30/10
Renewal Date 3/19/09
Date
STATE OF CALIFORNIA

THE STATE OF CALIFORNIA OR ITS OFFICERS OR AGENTS SHALL NOT BE RESPONSIBLE FOR THE ACCURACY OR COMPLETENESS OF SCANNED COPIES OF THIS PLAN SHEET.

NOTE:

NEW IRRIGATION EQUIPMENT SHALL MATCH EXISTING IRRIGATION EQUIPMENT UNLESS OTHERWISE SHOWN ON THE PLANS OR DESIGNATED IN THE PROJECT SPECIAL PROVISIONS.

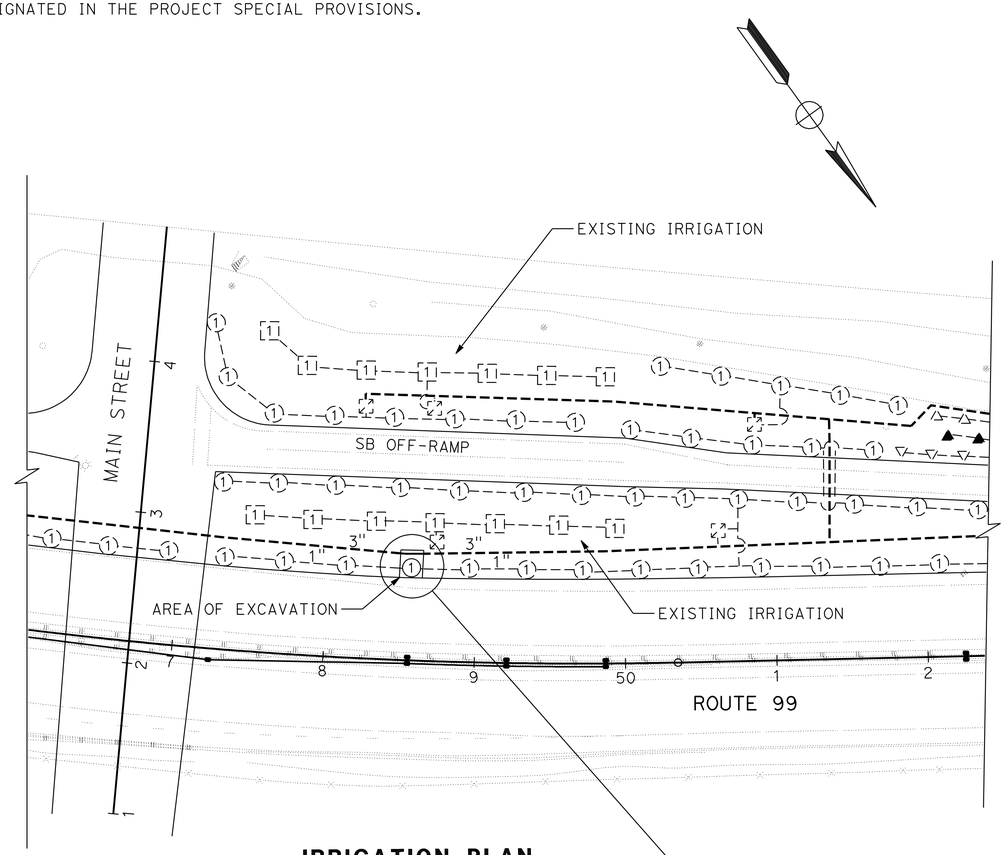

IRRIGATION PLAN

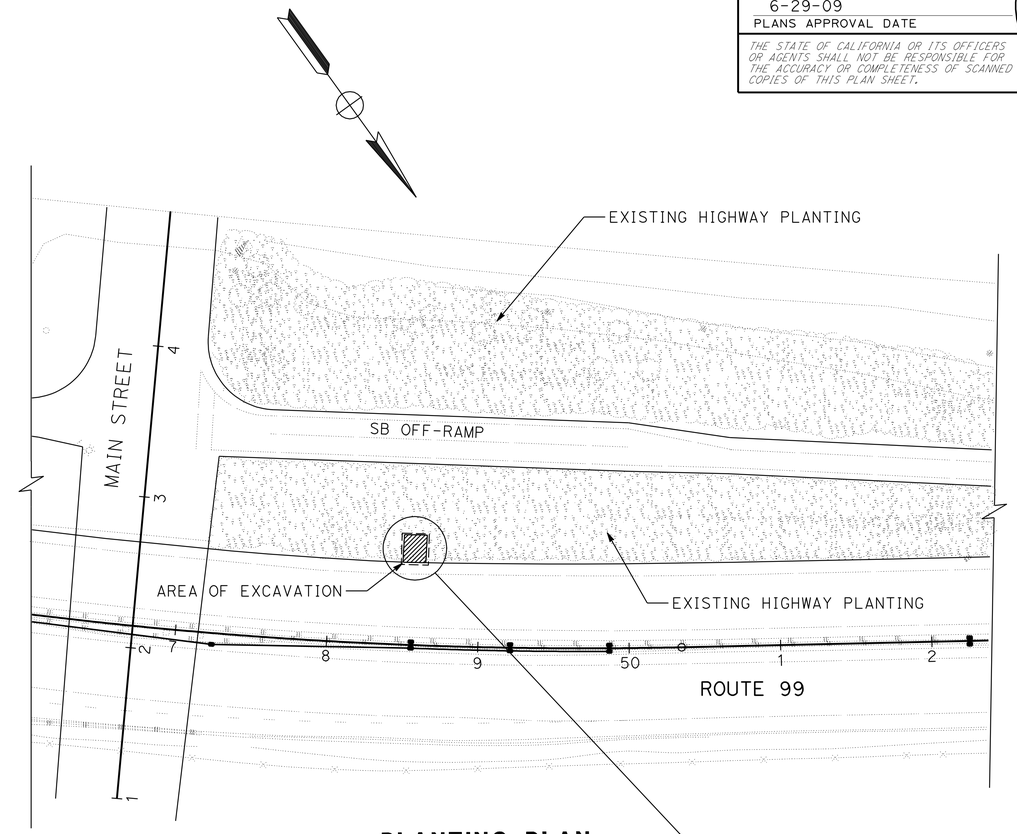

PLANTING PLAN

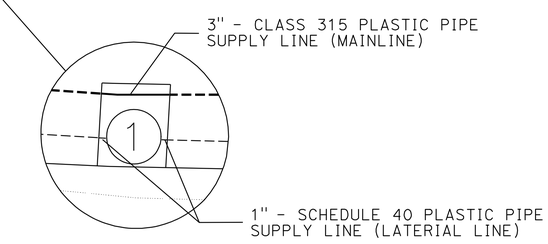

ENLARGEMENT

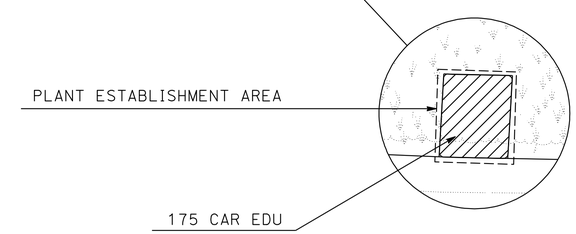

ENLARGEMENT

PLANTING AND IRRIGATION PLAN

NO SCALE

PP-1

THIS PLAN ACCURATE FOR PLANTING AND IRRIGATION WORK ONLY.

REVISED BY	DATE REVISED
GE	3/19/09

CALCULATED-DESIGNED BY: GUS ESCUTIA
CHECKED BY: WILLIAM DUTTERA
SENIOR LANDSCAPE ARCHITECT: BRAD COLE

STATE OF CALIFORNIA - DEPARTMENT OF TRANSPORTATION
Caltrans® LANDSCAPE ARCHITECTURE

LAST REVISION 10-08-08 | DATE PLOTTED => 06-JUL-2009 | TIME PLOTTED => 06:51

Dist	COUNTY	ROUTE	POST MILES TOTAL PROJECT	SHEET No.	TOTAL SHEETS
10	SJ,Sta	99	R24.3/R24.8, 0.0/1.7	39	63

LICENSED LANDSCAPE ARCHITECT

6-29-09
PLANS APPROVAL DATE

LICENSED LANDSCAPE ARCHITECT
William Duttera No. 3425
Expiration
9/30/10
Renewal Date
3/13/09
Date
STATE OF CALIFORNIA

THE STATE OF CALIFORNIA OR ITS OFFICERS OR AGENTS SHALL NOT BE RESPONSIBLE FOR THE ACCURACY OR COMPLETENESS OF SCANNED COPIES OF THIS PLAN SHEET.

SPRINKLER SCHEDULE

SYMBOL	TYPE	DESCRIPTION	SPRAY PATTERN	OPERATING PRESSURE (PSI)	PRESSURE COMPENSATING	PLUS/MINUS 5% ② DISCHARGE GALLONS PER MINUTE (GPM)	DISCHARGE GALLONS PER HOUR (GPH)	RADIUS (F+)	WIDTH x LENGTH (F+)	MATERIAL	INLET CONNECTION (NPT INCH)	POSITIVE-LOCKING ADJ ARC STOP	BACKSPLASH PREVENTER	DIFFUSER PIN	DISTANCE CONTROL FLAP	ADJ DISCHARGE	RISER TYPE	RISER MATERIAL PLASTIC	RISER MATERIAL GALVANIZED	RISER SIZE (IPS INCH)	RISER HEIGHT (INCH)	RISER FLOW SHUTOFF DEVICE	⑤ SWING JOINT (TYPE)	RISER SUPPORT	SPRINKLER PROTECTOR (TYPE)	REMARKS
①	A-1	SIDE IMPACT	P	30	–	3.9	–	42′	–	B/B	¾"	X	X	X	X	–	IV	–	X	¾"	18"	–	–	–	–	

X IN BOX DENOTES REQUIREMENT

APPLICABLE WHEN CIRCLED BELOW:

1 - SEE SPECIAL PROVISIONS.
2 - IF A PRESSURE COMPENSATING DEVICE IS SPECIFIED, THE DISCHARGE AND RADII SHOWN REFLECT ITS USE.
3 - ARC STOP SHALL BE FITTED WITH A NUT AND BOLT.
4 - VINYL-COATED CAST IRON HOUSING.
5 - SWING JOINTS REQUIRED ADJACENT TO SHOULDERS, CURBS, SIDEWALKS, AND DIKES.
6 - UNLESS OTHERWISE SHOWN ON PLANS.

ABBREVIATIONS

F	FULL CIRCLE	F†	FEET/FOOT
P	PART CIRCLE	GPM	GALLONS PER MINUTE
F/P	FULL/PART CIRCLE	GPH	GALLONS PER HOUR
Q	QUARTER CIRCLE	Adj	ADJUSTABLE
T	THIRD CIRCLE	PL	PLASTIC
H	HALF CIRCLE	B/B	BRASS/BRONZE
TT	TWO THIRD CIRCLE	B/PL	BRASS/PLASTIC
TQ	THREE QUARTER CIRCLE	B/B/PL	BRASS/BRONZE/PLASTIC
CST	CENTER STRIP	NPT	NATIONAL PIPE THREAD
SST	SIDE STRIP	IPS	IRON PIPE SIZE
EST	END STRIP	PSI	POUNDS PER SQUARE INCH

LANDSCAPE DETAILS
LD-1

REVISED BY	GE
DATE REVISED	3/19/09
GUS ESCUTIA	
WILLIAM DUTTERA	
CALCULATED-DESIGNED BY	
CHECKED BY	
SENIOR LANDSCAPE ARCHITECT	
BRAD COLE	

STATE OF CALIFORNIA - DEPARTMENT OF TRANSPORTATION
Caltrans® LANDSCAPE ARCHITECTURE

LAST REVISION 00-00-00
DATE PLOTTED => 06-JUL-2009
TIME PLOTTED => 06:51

Dist	COUNTY	ROUTE	POST MILES TOTAL PROJECT	SHEET No.	TOTAL SHEETS
10	SJ,Sta	99	R24.3/R24.8, 0.0/1.7	40	63

REGISTERED ELECTRICAL ENGINEER 3/27/09 DATE

6-29-09
PLANS APPROVAL DATE

REGISTERED PROFESSIONAL ENGINEER RAJPREET SINGH No. 17496 Exp. 6/30/09 ELECTRICAL STATE OF CALIFORNIA

THE STATE OF CALIFORNIA OR ITS OFFICERS OR AGENTS SHALL NOT BE RESPONSIBLE FOR THE ACCURACY OR COMPLETENESS OF SCANNED COPIES OF THIS PLAN SHEET.

NOTES: (FOR SHEETS E-1 THROUGH E-6)

1. COMMUNICATION CONDUIT UNDERNEATH THE CONCRETE BARRIER SHALL BE 4"C, MT, HDPE. SEE DETAILS B, C AND F ON SHEET E-6 FOR COMMUNICATION CONDUIT PLACEMENT DETAILS.
2. No. 6(E)(T) PULL BOX AS SHOWN ON SHEET E-6, DETAIL C.
3. No. 6(E) PULL BOX AS SHOWN ON SHEET E-6, DETAIL E.
4. COMMUNICATION CONDUIT THROUGH THE BARRIER SHALL BE 4"C, TYPE 1, AS SHOWN ON SHEET E-6, DETAILS D AND E.
5. 4"C, HDPE, MT.
6. SEE DETAIL A ON SHEET E-6 FOR COMMUNICATION CONDUIT PLACEMENT DETAILS FOR COMMUNICATION CONDUIT CROSSING CULVERTS AND UTILITIES WHERE THE CLEARANCE IS LESS THAN 12". SEE LAYOUT PLANS FOR CULVERT LOCATIONS. THE CONTRACTOR SHALL VERIFY UTILITY LOCATIONS PRIOR TO CONSTRUCTION.
7. FOR COMPLETE RIGHT OF WAY AND ACCURATE ACCESS DATA, SEE RIGHT OF WAY RECORD MAPS AT DISTRICT OFFICE.

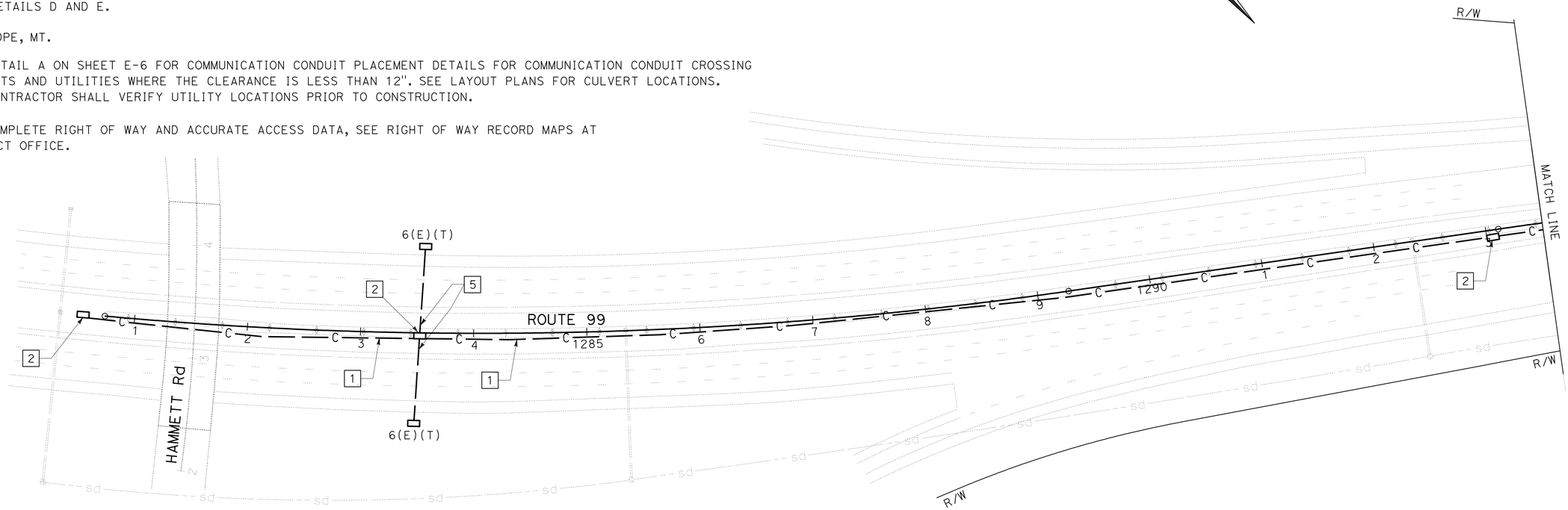

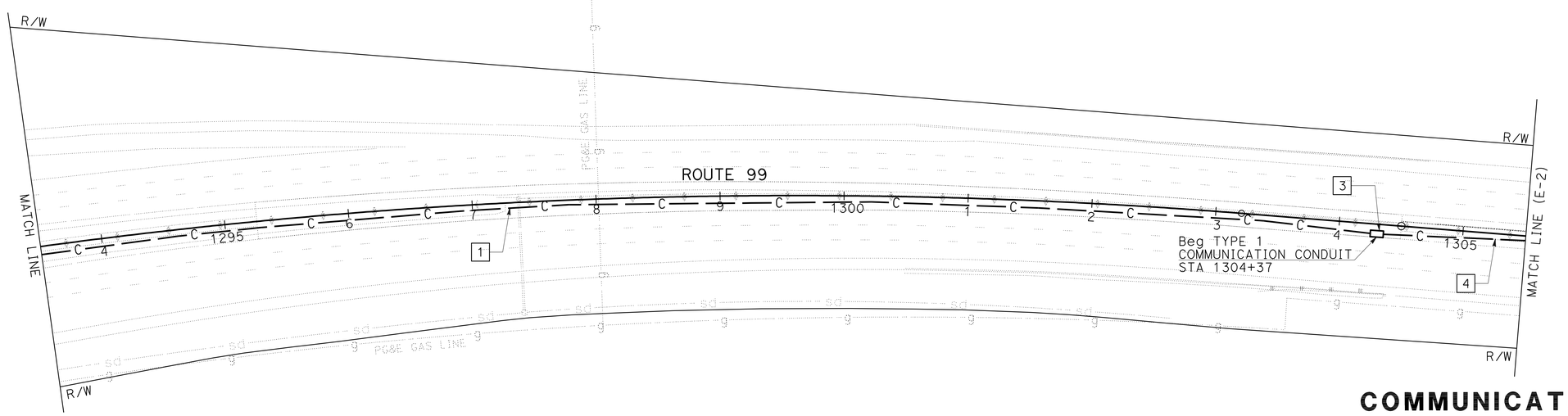

COMMUNICATION CONDUIT

SCALE: 1"=50'

E-1

THIS PLAN IS ACCURATE FOR ELECTRICAL WORK ONLY.

REVISED BY	GB
DATE REVISED	3/19/09
CALCULATED-DESIGNED BY	GURVINDERJIT BAINS
CHECKED BY	RAJPREET SINGH
FUNCTIONAL SUPERVISOR	ALI BAKHDOUD

STATE OF CALIFORNIA - DEPARTMENT OF TRANSPORTATION
Caltrans® ELECTRICAL DESIGN

LAST REVISION 03-20-09 | DATE PLOTTED => 06-JUL-2009 | TIME PLOTTED => 06:52

Dist	COUNTY	ROUTE	POST MILES TOTAL PROJECT	SHEET No.	TOTAL SHEETS
10	SJ,Sta	99	R24.3/R24.8, 0.0/1.7	41	63

Rajpreet Singh 3/27/09
REGISTERED ELECTRICAL ENGINEER DATE

6-29-09
PLANS APPROVAL DATE

REGISTERED PROFESSIONAL ENGINEER
RAJPREET SINGH
No. 17496
Exp. 6/30/09
ELECTRICAL
STATE OF CALIFORNIA

THE STATE OF CALIFORNIA OR ITS OFFICERS OR AGENTS SHALL NOT BE RESPONSIBLE FOR THE ACCURACY OR COMPLETENESS OF SCANNED COPIES OF THIS PLAN SHEET.

NOTES:

1. FOR COMPLETE RIGHT OF WAY AND ACCURATE ACCESS DATA, SEE RIGHT OF WAY RECORD MAPS AT DISTRICT OFFICE.
2. THE CONTRACTOR SHALL VERIFY UTILITY LOCATIONS PRIOR TO CONSTRUCTION.

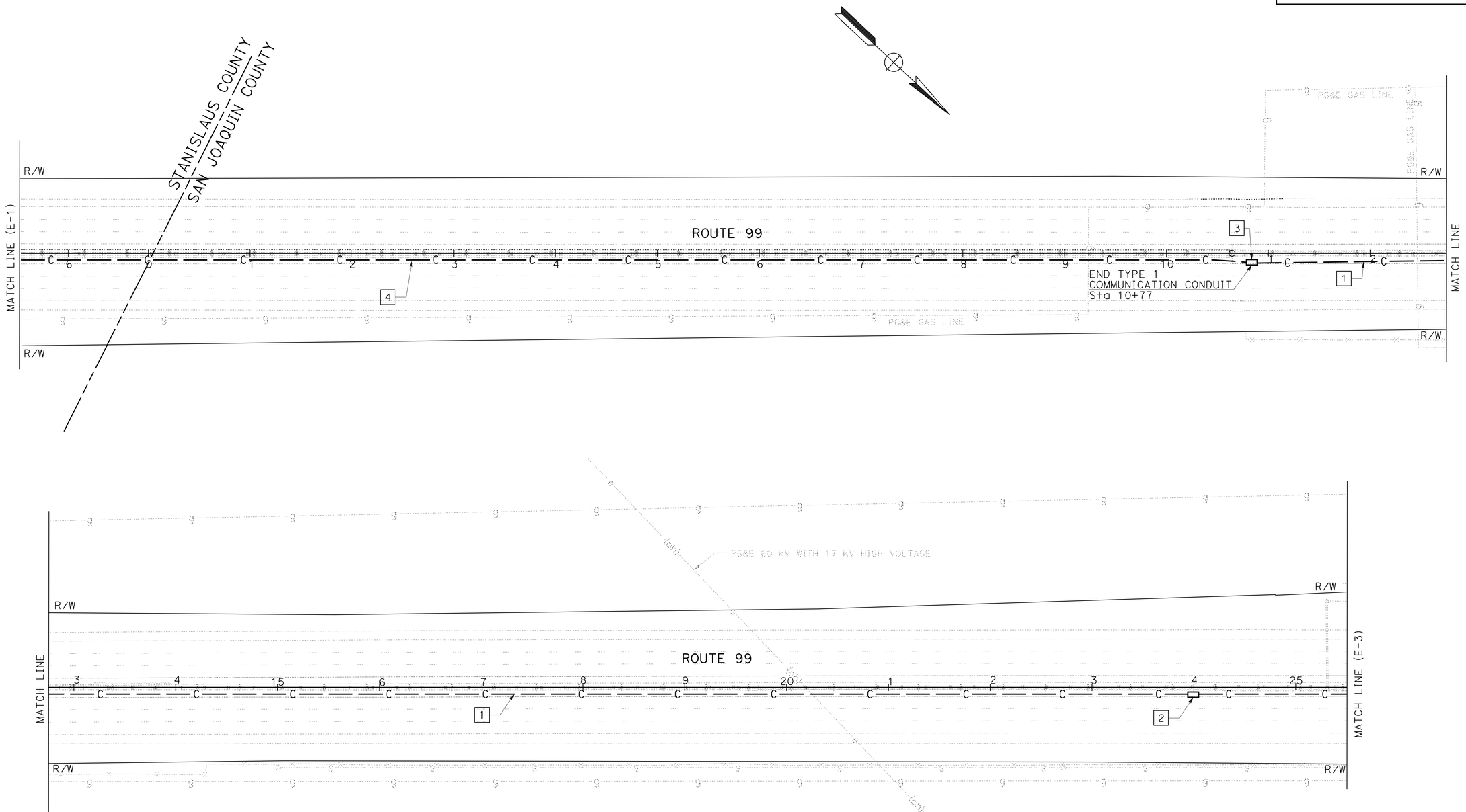

THIS PLAN IS ACCURATE FOR ELECTRICAL WORK ONLY.

COMMUNICATION CONDUIT

SCALE: 1"=50'

E-2

STATE OF CALIFORNIA - DEPARTMENT OF TRANSPORTATION
Caltrans® ELECTRICAL DESIGN

FUNCTIONAL SUPERVISOR: ALI BAKHDOUD
CALCULATED-DESIGNED BY: GURVINDERJIT BAINS
CHECKED BY: RAJPREET SINGH
REVISED BY: GB
DATE REVISED: 3/20/09

LAST REVISION 03-20-09 | DATE PLOTTED => 06-JUL-2009 | TIME PLOTTED => 06:52

Dist	COUNTY	ROUTE	POST MILES TOTAL PROJECT	SHEET No.	TOTAL SHEETS
10	SJ,Sta	99	R24.3/R24.8, 0.0/1.7	42	63

Rajpreet Singh 3/27/09
REGISTERED ELECTRICAL ENGINEER DATE

6-29-09
PLANS APPROVAL DATE

REGISTERED PROFESSIONAL ENGINEER RAJPREET SINGH No. 17496 Exp. 6/30/09 ELECTRICAL STATE OF CALIFORNIA

THE STATE OF CALIFORNIA OR ITS OFFICERS OR AGENTS SHALL NOT BE RESPONSIBLE FOR THE ACCURACY OR COMPLETENESS OF SCANNED COPIES OF THIS PLAN SHEET.

NOTES:

1. FOR COMPLETE RIGHT OF WAY AND ACCURATE ACCESS DATA, SEE RIGHT OF WAY RECORD MAPS AT DISTRICT OFFICE.
2. THE CONTRACTOR SHALL VERIFY UTILITY LOCATIONS PRIOR TO CONSTRUCTION.

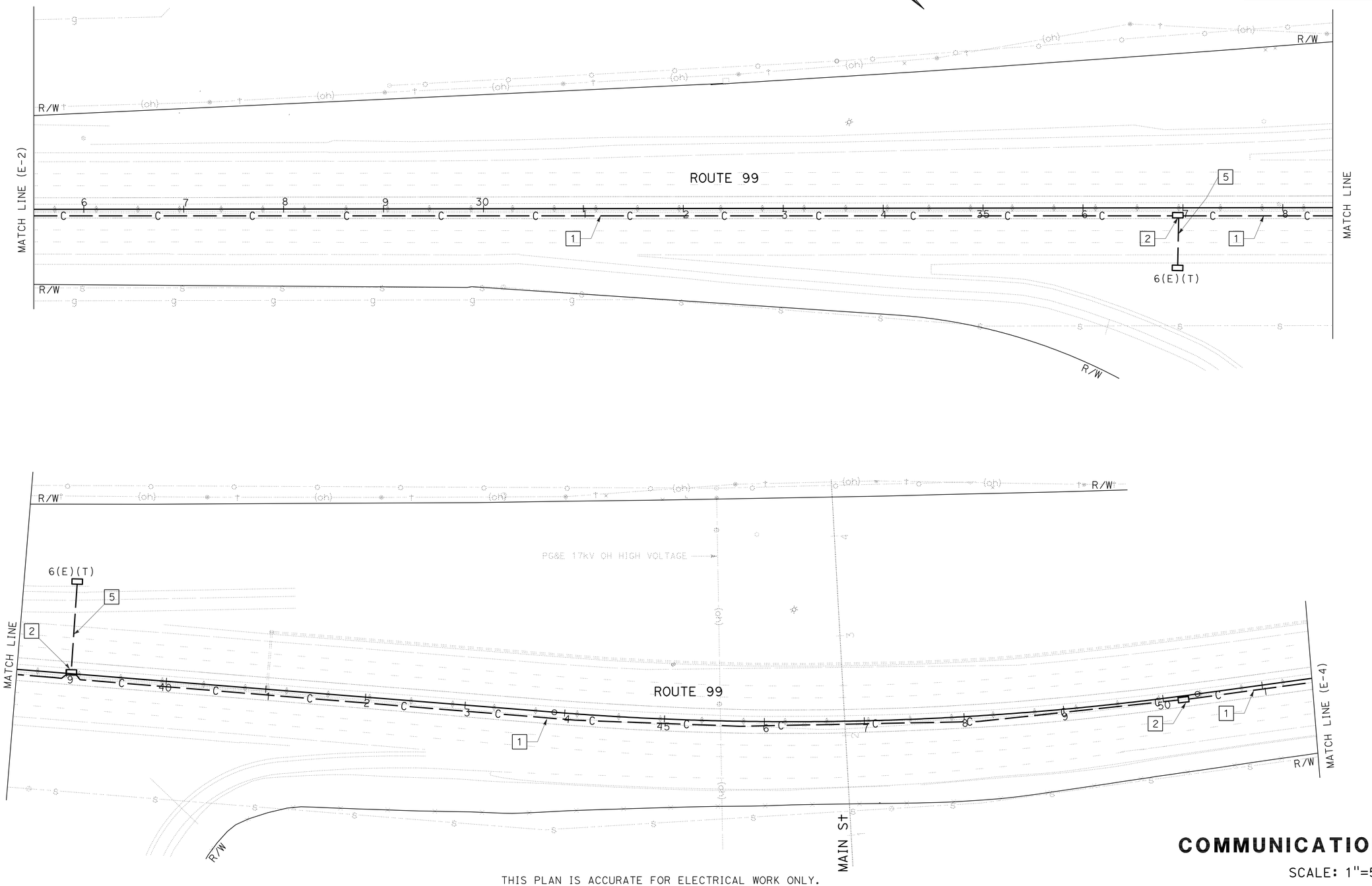

THIS PLAN IS ACCURATE FOR ELECTRICAL WORK ONLY.

COMMUNICATION CONDUIT

SCALE: 1"=50'

E-3

REVISED BY	DATE REVISED
GB	3/20/09

CALCULATED-DESIGNED BY: GURVINDERJIT BAINS
CHECKED BY: RAJPREET SINGH
FUNCTIONAL SUPERVISOR: ALI BAKHDOUD

STATE OF CALIFORNIA - DEPARTMENT OF TRANSPORTATION
Caltrans® ELECTRICAL DESIGN

LAST REVISION 03-20-09
DATE PLOTTED => 06-JUL-2009
TIME PLOTTED => 06:52

Dist	COUNTY	ROUTE	POST MILES TOTAL PROJECT	SHEET No.	TOTAL SHEETS
10	SJ,Sta	99	R24.3/R24.8, 0.0/1.7	43	63

Rajpreet Singh 3/27/09
REGISTERED ELECTRICAL ENGINEER DATE

6-29-09
PLANS APPROVAL DATE

REGISTERED PROFESSIONAL ENGINEER
RAJPREET SINGH
No. 17496
Exp. 6/30/09
ELECTRICAL
STATE OF CALIFORNIA

THE STATE OF CALIFORNIA OR ITS OFFICERS OR AGENTS SHALL NOT BE RESPONSIBLE FOR THE ACCURACY OR COMPLETENESS OF SCANNED COPIES OF THIS PLAN SHEET.

NOTES:

1. FOR COMPLETE RIGHT OF WAY AND ACCURATE ACCESS DATA, SEE RIGHT OF WAY RECORD MAPS AT DISTRICT OFFICE.
2. THE CONTRACTOR SHALL VERIFY UTILITY LOCATIONS PRIOR TO CONSTRUCTION.

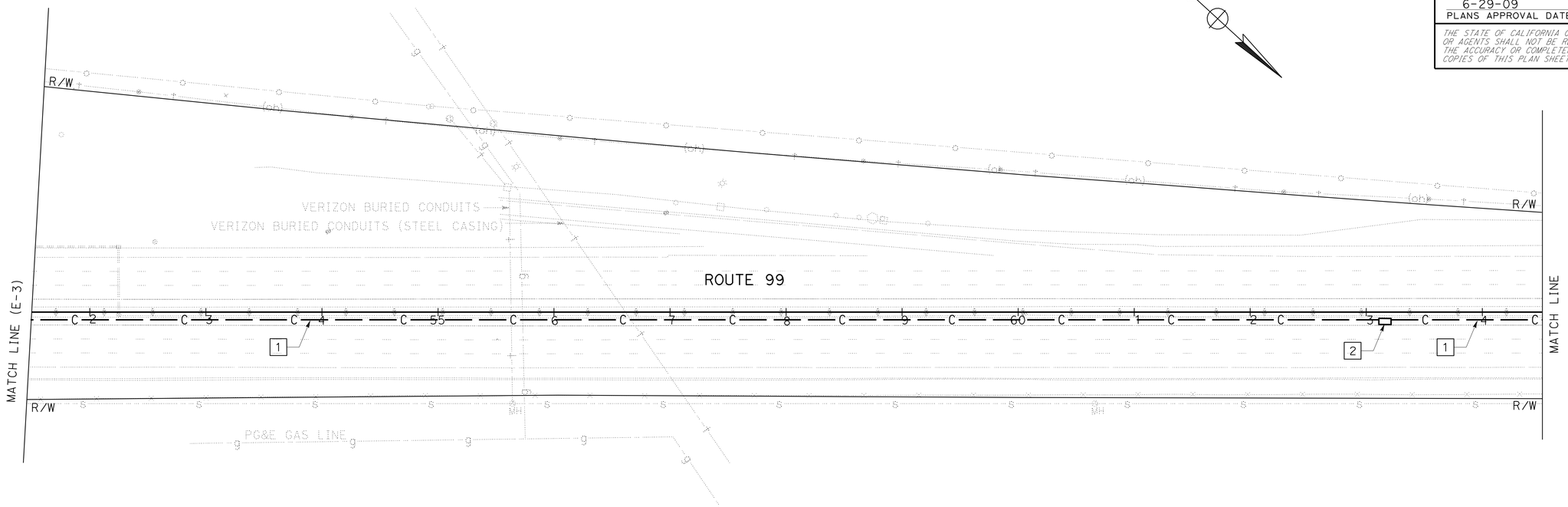

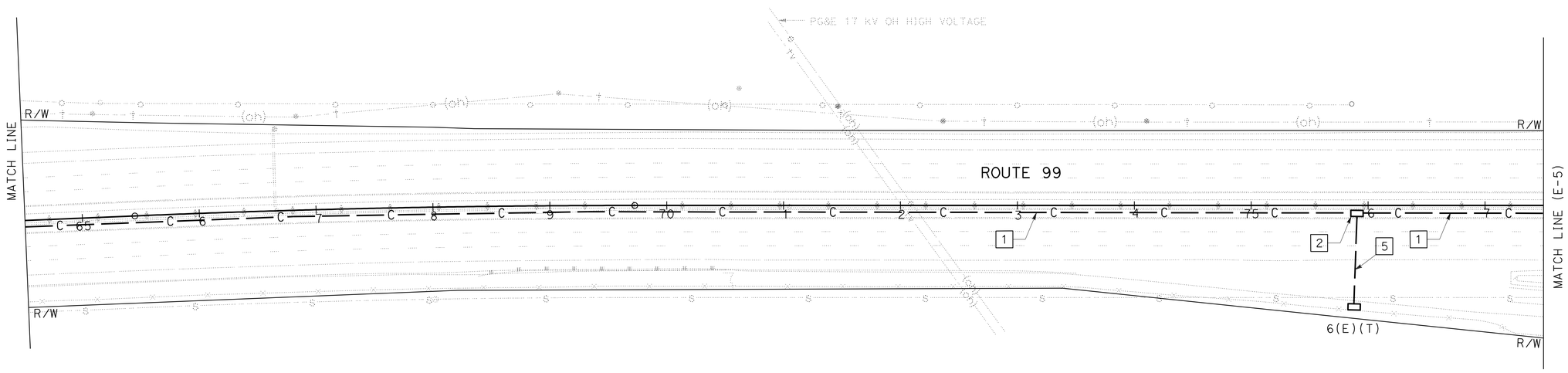

COMMUNICATION CONDUIT

SCALE: 1"=50'

E-4

THIS PLAN IS ACCURATE FOR ELECTRICAL WORK ONLY.

STATE OF CALIFORNIA - DEPARTMENT OF TRANSPORTATION
Caltrans® ELECTRICAL DESIGN

FUNCTIONAL SUPERVISOR: ALI BAKHDOUD
CALCULATED-DESIGNED BY: GURVINDERJIT BAINS
CHECKED BY: RAJPREET SINGH
REVISED BY: GB
DATE REVISED: 3/20/09

LAST REVISION 03-20-09
DATE PLOTTED => 06-JUL-2009
TIME PLOTTED => 06:52

Dist	COUNTY	ROUTE	POST MILES TOTAL PROJECT	SHEET No.	TOTAL SHEETS
10	SJ,Sta	99	R24.3/R24.8, 0.0/1.7	44	63

Rajpreet Singh 3/27/09
REGISTERED ELECTRICAL ENGINEER DATE

6-29-09
PLANS APPROVAL DATE

REGISTERED PROFESSIONAL ENGINEER
RAJPREET SINGH
No. 17496
Exp. 6/30/09
ELECTRICAL
STATE OF CALIFORNIA

THE STATE OF CALIFORNIA OR ITS OFFICERS OR AGENTS SHALL NOT BE RESPONSIBLE FOR THE ACCURACY OR COMPLETENESS OF SCANNED COPIES OF THIS PLAN SHEET.

NOTES:

1. FOR COMPLETE RIGHT OF WAY AND ACCURATE ACCESS DATA, SEE RIGHT OF WAY RECORD MAPS AT DISTRICT OFFICE.
2. THE CONTRACTOR SHALL VERIFY UTILITY LOCATIONS PRIOR TO CONSTRUCTION.

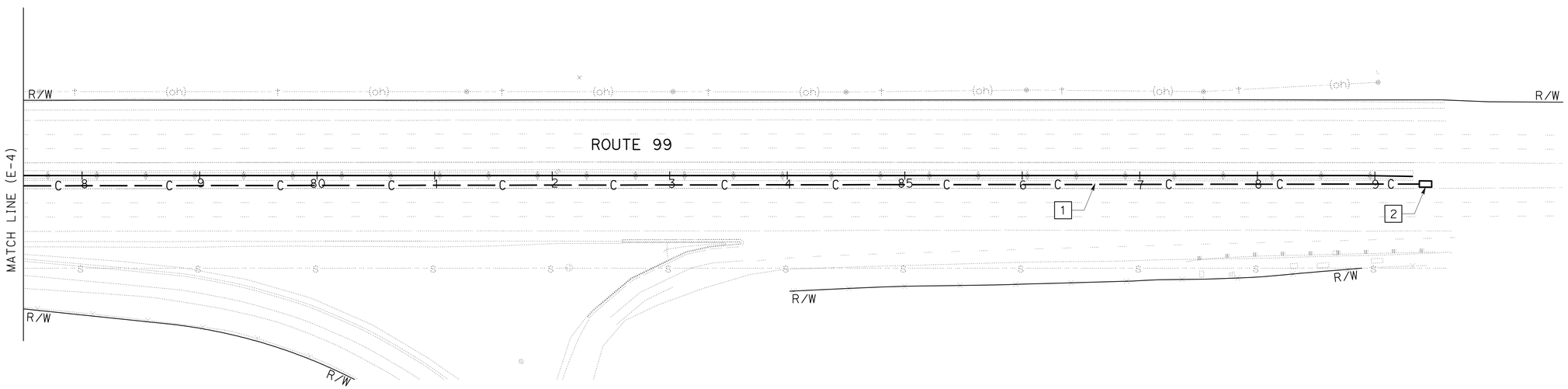

THIS PLAN IS ACCURATE FOR ELECTRICAL WORK ONLY.

COMMUNICATION CONDUIT

SCALE: 1"=50'

E-5

GURVINDERJIT BAINS	GB
RAJPREET SINGH	3/20/09
CALCULATED-DESIGNED BY	REVISED BY
CHECKED BY	DATE REVISED
FUNCTIONAL SUPERVISOR	
ALI BAKHDOUD	

STATE OF CALIFORNIA - DEPARTMENT OF TRANSPORTATION
Caltrans® ELECTRICAL DESIGN

LAST REVISION 03-20-09 | DATE PLOTTED => 06-JUL-2009 | TIME PLOTTED => 06:52

Dist	COUNTY	ROUTE	POST MILES TOTAL PROJECT	SHEET No.	TOTAL SHEETS
10	SJ,Sta	99	R24.3/R24.8, 0.0/1.7	45	63

REGISTERED ELECTRICAL ENGINEER 3/27/09 DATE

6-29-09
PLANS APPROVAL DATE

REGISTERED PROFESSIONAL ENGINEER RAJPREET SINGH No. 17496 Exp. 6/30/09 ELECTRICAL STATE OF CALIFORNIA

THE STATE OF CALIFORNIA OR ITS OFFICERS OR AGENTS SHALL NOT BE RESPONSIBLE FOR THE ACCURACY OR COMPLETENESS OF SCANNED COPIES OF THIS PLAN SHEET.

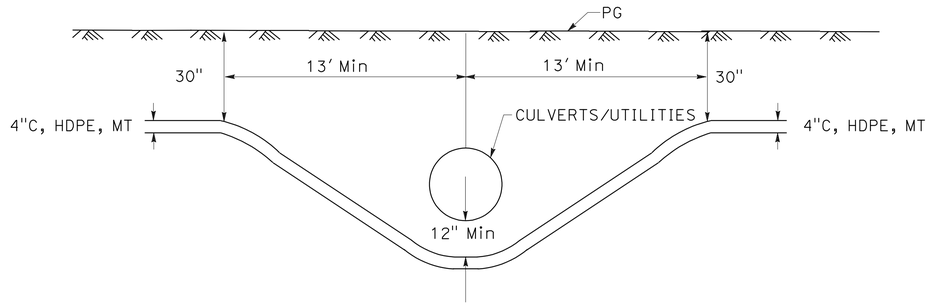

DETAIL A

COMMUNICATION CONDUIT
PLACEMENT UNDER CULVERTS/UTILITIES

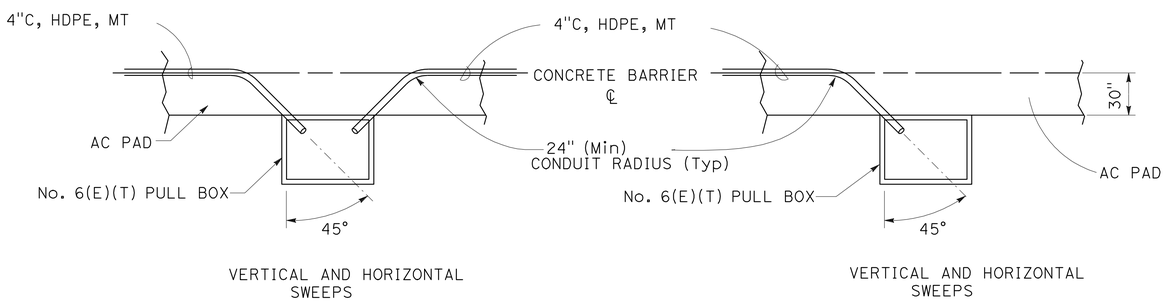

DETAIL C

COMMUNICATION CONDUIT
SWEEPS DETAIL

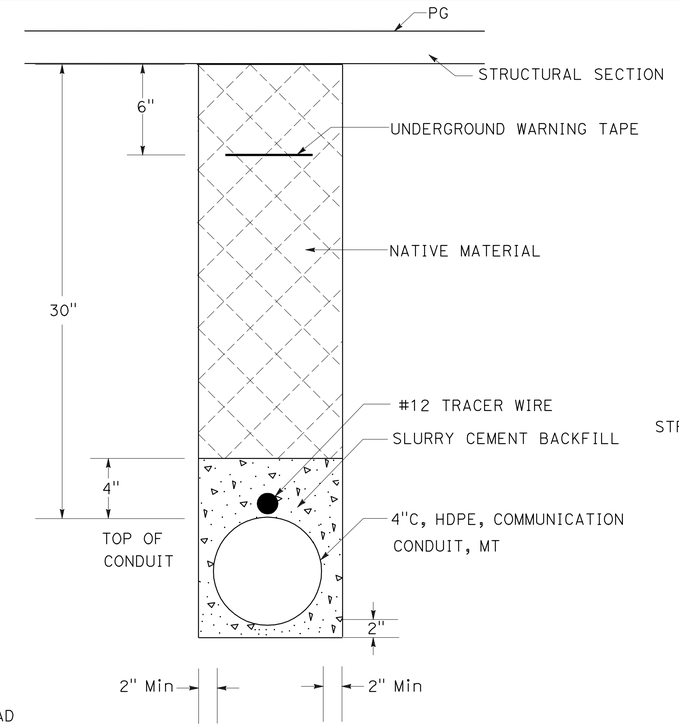

DETAIL F

COMMUNICATION CONDUIT
TRENCH IN DIRT DETAIL

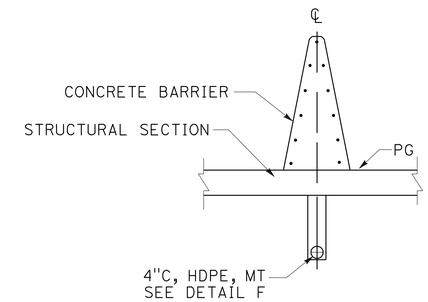

DETAIL B

COMMUNICATION CONDUIT
PLACEMENT UNDER CONCRETE BARRIER

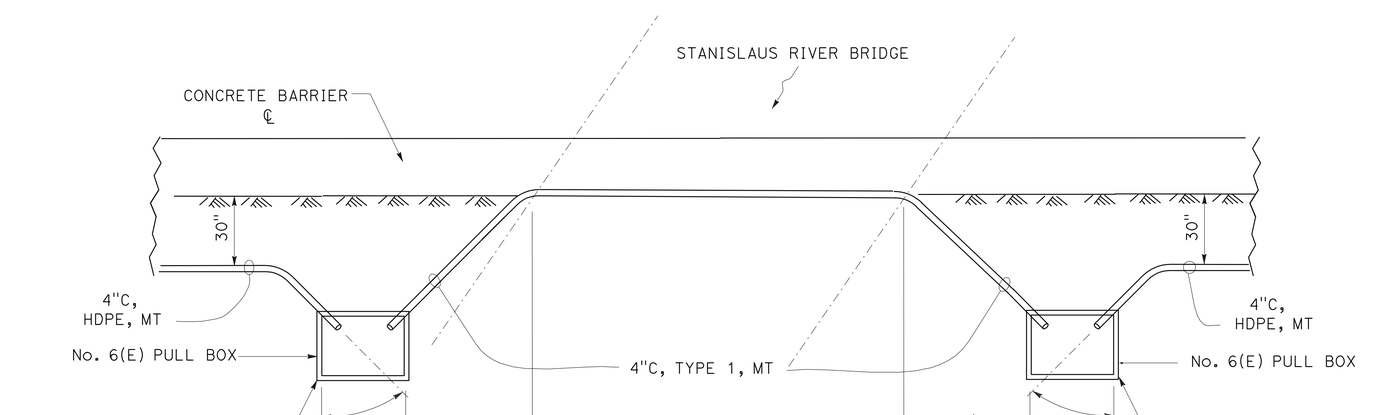

DETAIL E

COMMUNICATION CONDUIT
SWEEPS DETAIL IN CONCRETE BARRIER
ON THE BRIDGE

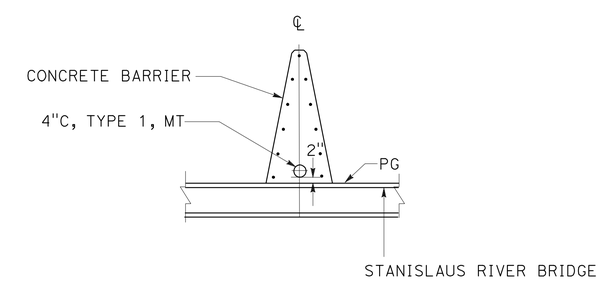

DETAIL D

COMMUNICATION CONDUIT
PLACEMENT IN CONCRETE BARRIER ON THE BRIDGE

COMMUNICATION CONDUIT

NO SCALE

E-6

REVISED BY	DATE REVISED
GB	3/20/09

CALCULATED-DESIGNED BY: GURVINDERJIT BAINS
CHECKED BY: RAJPREET SINGH
FUNCTIONAL SUPERVISOR: ALI BAKHDOUD

STATE OF CALIFORNIA - DEPARTMENT OF TRANSPORTATION
Caltrans® ELECTRICAL DESIGN

LAST REVISION 03-20-09 | DATE PLOTTED => 06-JUL-2009 | TIME PLOTTED => 06:52

DIST	COUNTY	ROUTE	POST MILES TOTAL PROJECT	SHEET NO.	TOTAL SHEETS
10	SJ,Sta	99	R24.3/R24.8, 0.0/1.7	46	63

REGISTERED CIVIL ENGINEER

November 17, 2006
PLANS APPROVAL DATE

REGISTERED PROFESSIONAL ENGINEER Dallas Forester No. C37765 Exp. 12-31-06 CIVIL STATE OF CALIFORNIA

The State of California or its officers or agents shall not be responsible for the accuracy or completeness of electronic copies of this plan sheet.

To accompany plans dated 6-29-09

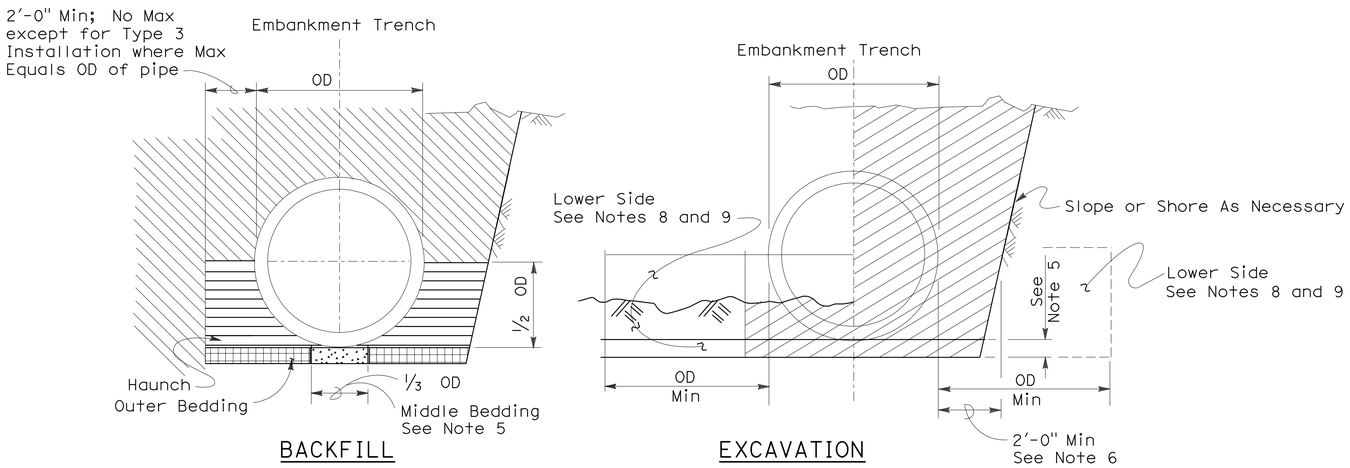

Roadway Embankment

Structure Backfill (Culvert) See Note 6

Structure Backfill (Culvert) See Note 6

Loose Backfill

Excavation Structure (Culvert)

TYPE 1 INSTALLATION:

The haunch and outer bedding shall be compacted to a minimum 90 percent relative compaction. In addition, the minimum sand equivalent in these areas shall be 30 and the maximum percentage passing the 75 μm sieve size shall be 12.

TYPE 2 INSTALLATION:

The haunch and outer bedding shall be compacted to a minimum 90 percent relative compaction. In addition, the minimum sand equivalent in these areas shall be 25.

TYPE 3 INSTALLATION:

The haunch and outer bedding shall be compacted to a minimum 85 percent relative compaction. 90 percent relative compaction will be required where the fill over the pipe is less than 4'-0" or 1/2 OD.

INSTALLATION TYPE 1

MINIMUM CLASS AND D-LOAD	COVER	
	108" Dia AND SMALLER	OVER 108" Dia
Class II 1000D	14.9'	12.9'
Class III 1350D	15.0' - 20.9'	13.0' - 18.9'
Class III Special 1700D	21.0' - 26.9'	19.0' - 24.9'
Class IV 2000D	27.0' - 31.9'	25.0' - 29.9'
Class IV Special 2500D	32.0' - 40.9'	30.0' - 38.9'
Class V 3000D	41.0' - 49.9'	39.0' - 46.9'
Class V Special 3600D	50.0' - 59.0'	47.0' - 58.0'

INSTALLATION TYPE 2

MINIMUM CLASS AND D-LOAD	COVER
Class II 1000D	9.9'
Class III 1350D	10.0'- 14.9'
Class III Special 1700D	15.0' - 19.9'
Class IV 2000D	20.0' - 24.9'
Class IV Special 2500D	25.0' - 31.9'
Class V 3000D	32.0' - 38.9'
Class V Special 3600D	39.0' - 47.0'

INSTALLATION TYPE 3

MINIMUM CLASS AND D-LOAD	COVER	
	48" Dia AND SMALLER	OVER 48" Dia
Class II 1000D	7.9'	5.9'
Class III 1350D	8.0' - 10.9'	6.0' - 8.9'
Class III Special 1700D	11.0' - 14.9'	9.0' - 12.9'
Class IV 2000D	15.0' - 17.9'	13.0' - 15.9'
Class IV Special 2500D	18.0' - 21.9'	16.0' - 19.9'
Class V 3000D	22.0' - 26.9'	20.0' - 24.9'
Class V Special 3600D	30.0' - 33.0'	25.0' - 31.0'

NOTES:

1. Unless otherwise shown on the plans or specified in the special provision, the Contractor shall have the option of selecting the class of RCP and the type of installation to be used, provided the height of cover does not exceed the value shown for the RCP selected.
   Example: 24" RCP culvert with maximum cover of 19'-0" the options are:
   a) Class III or stronger with Installation Type 1.
   b) Class III Special or stronger with Installation Type 2.
   c) Class IV Special or stronger with Installation Type 3.
   Cover is defined as the maximum vertical distance from top of the pipe to finished grade within the length of any given culvert.
2. The class of RCP and Installation Type selected shall be the same throughout the length of any given culvert.
3. The "length of any culvert" is defined as the culvert between:
   a) Successive drainage structure (inlets, junction boxes, headwalls, etc.).
   b) A drainage structure and the inlet or outlet end of the culvert.
   c) The inlet and outlet end of the culvert when there are no intervening drainage structures.
4. Oval and arch shaped RCP shall not be used.
5. 1/25 OD Min, not less than 3".
6. Slurry cement backfill may be substituted for backfill in the outer bedding and haunch areas. If slurry is used the outer and middle beddings shall be omitted. Prior to installation the soil under the middle 1/3 of the outside diameter of the pipe shall be softened by scarifying or other means to a minimum depth of 1/25 OD, but not less than 3". Where slurry cement backfill is used clear distance to trench wall may be reduced as set forth in Section 19-3.062 of the Standard Specifications.
7. Backfill shall be placed full width of excavation except where dimensions are shown for backfill width or thickness. Dimensions shown are minimums.
8. Lower side shall be suitable material as determined by the Engineer. Otherwise it shall be considered unsuitable as set forth in Section 19-2.02 of the Standard Specifications. See Note 9.
9. Where the pipe is placed in a trench, if the trench walls are sloped at 5 vertical to 1 horizontal or steeper for at least 90 percent of the trench height or up to not less than 12" from the grading plane, the firmness of the soil in the lower side need not be considered.
10. Non-reinforced precast concrete pipe sizes 3'-0" or smaller may be placed under installation Types 1, 2 or 3.

STATE OF CALIFORNIA
DEPARTMENT OF TRANSPORTATION

EXCAVATION AND BACKFILL CONCRETE PIPE CULVERTS

NO SCALE

RSP A62DA DATED NOVEMBER 17, 2006 SUPERSEDES STANDARD PLAN A62DA DATED MAY 1, 2006 - PAGE 20 OF THE STANDARD PLANS BOOK DATED MAY 2006.

REVISED STANDARD PLAN RSP A62DA

2006 REVISED STANDARD PLAN RSP A62DA

10-26-06

DIST	COUNTY	ROUTE	POST MILES TOTAL PROJECT	SHEET NO.	TOTAL SHEETS
10	SJ,Sta	99	R24.3/R24.8, 0.0/1.7	47	63

Randell D. Hiatt
REGISTERED CIVIL ENGINEER

June 6, 2008
PLANS APPROVAL DATE

REGISTERED PROFESSIONAL ENGINEER Randell D. Hiatt No. C50200 Exp. 6-30-09 CIVIL STATE OF CALIFORNIA

The State of California or its officers or agents shall not be responsible for the accuracy or completeness of electronic copies of this plan sheet.

To accompany plans dated 6-29-09

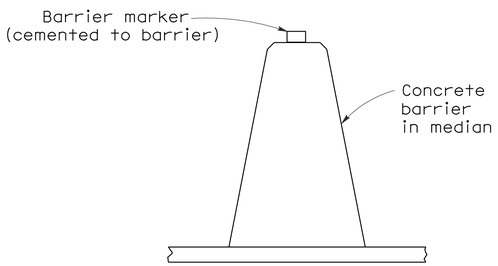

CONCRETE BARRIER TYPE 60 DELINEATION

See Notes 7 and 8

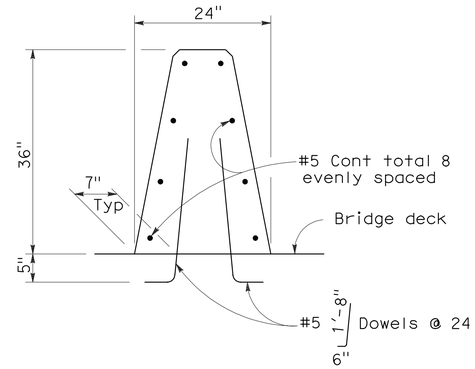

CONCRETE BARRIER TYPE 60A

Details similar to Type 60 except as noted.

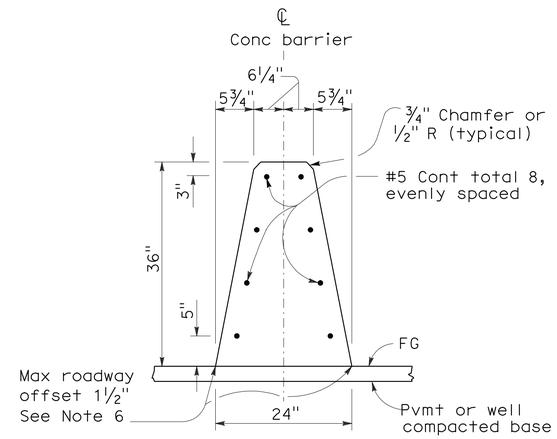

CONCRETE BARRIER TYPE 60

NOTES:

1. See Standard Plan A76B for details of Concrete Barrier Type 60 end anchors, connection to structures and transitions to Concrete Barrier Type 50 and Concrete Barrier Type 60S.
2. See Standard Plan A76C for Concrete Barrier Type 60 transitions at bridge column and sign pedestals.
3. Where glare screen is required on Concrete Barrier Type 60, use Concrete Barrier Type 60G.
4. Where the concrete barrier is added to the face of existing concrete structure, match existing weep holes.
5. Expansion joints in concrete barrier shall be located at all deck, pavement and principal wall joints. Expansion joint filler material shall be the same size as joint or ½" minimum.
6. Where roadway offset is greater than 1½", see Concrete Barrier Type 60C.
7. Barrier delineation to be used when required by the Special Provisions.
8. Spacing of barrier markers to match spacing of raised pavement markers on the adjacent median edgeline pavement delineation.
9. Reinforcing stirrup not required for roadway offsets less than 1'-0".
10. For roadway surfaces offset greater than 1½" to 3", no rebars required. For roadway surfaces offset greater than 3" to 8" use two #4 rebars at 3" above the lower roadway surface. For roadway surfaces offset greater than 8" to 12", use two #4 rebars at 3" above the lower roadway surface and two #4 rebars at 8" above the lower roadway surface. For roadway surfaces offset greater than 12" to 36", use two #4 rebars at 3" above the lower roadway surface and two #4 rebars at every 8" increment vertical spacing above the first two #4 rebars.

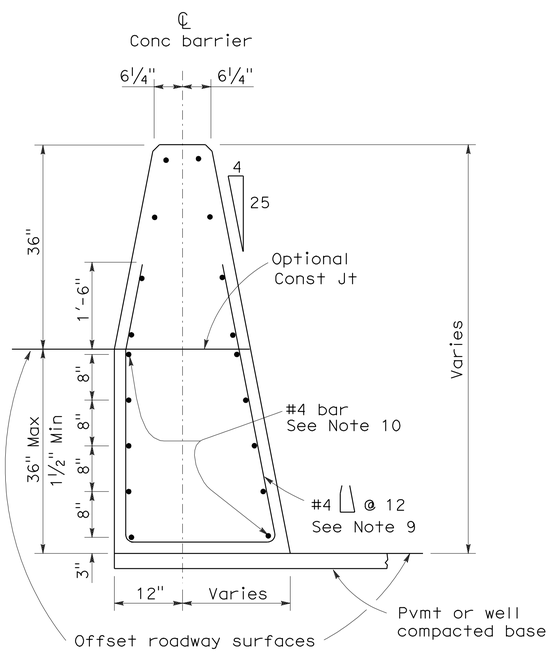

CONCRETE BARRIER TYPE 60C

Details similar to Type 60 except as noted.
Concrete barrier end anchor when necessary.
36" roadway surfaces offset shown.

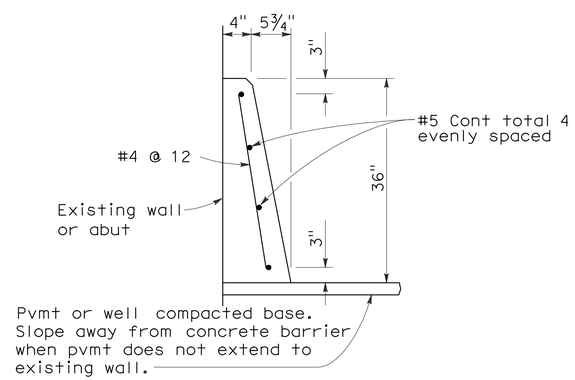

CONCRETE BARRIER TYPE 60D

STATE OF CALIFORNIA
DEPARTMENT OF TRANSPORTATION

CONCRETE BARRIER TYPE 60

NO SCALE

RSP A76A DATED JUNE 6, 2008 SUPERSEDES STANDARD PLAN A76A
DATED MAY 1, 2006 - PAGE 29 OF THE STANDARD PLANS BOOK DATED MAY 2006.

REVISED STANDARD PLAN RSP A76A

2006 REVISED STANDARD PLAN RSP A76A

5-21-08

DIST	COUNTY	ROUTE	POST MILES TOTAL PROJECT	SHEET NO.	TOTAL SHEETS
10	SJ,Sta	99	R24.3/R24.8, 0.0/1.7	48	63

Raymond Don Tsztoo
REGISTERED CIVIL ENGINEER

January 18, 2008
PLANS APPROVAL DATE

REGISTERED PROFESSIONAL ENGINEER Raymond Don Tsztoo No. C37332 Exp. 6-30-08 CIVIL STATE OF CALIFORNIA

The State of California or its officers or agents shall not be responsible for the accuracy or completeness of electronic copies of this plan sheet.

To accompany plans dated 6-29-09

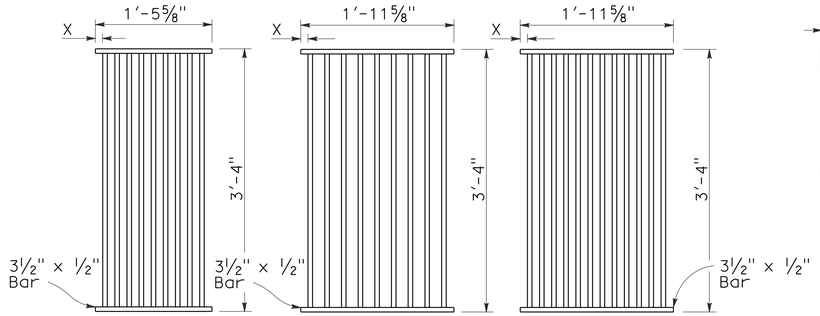

TYPE 18-9

1⅜" Clear spacing. Use within the roadbed on highways where bicycles and pedestrians are excluded.

TYPE 24-9

2" Clear spacing. Use in locations off the roadbed on all types of highways.

TYPE 24-12

1⅜" Clear spacing. Use within the roadbed on highways where bicycles and pedestrians are excluded.

RECTANGULAR GRATE DETAILS

(See table below)

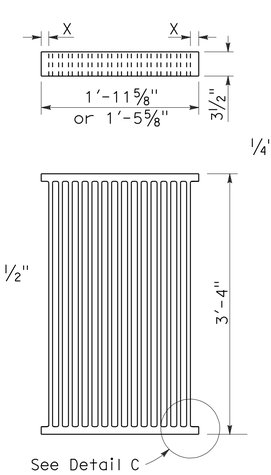

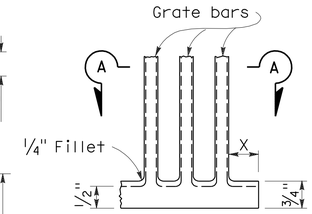

DETAIL C

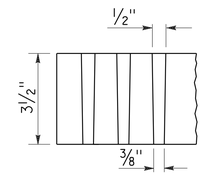

SECTION A-A

ALTERNATIVE CAST NODULAR IRON GRATE OR CAST STEEL GRATE

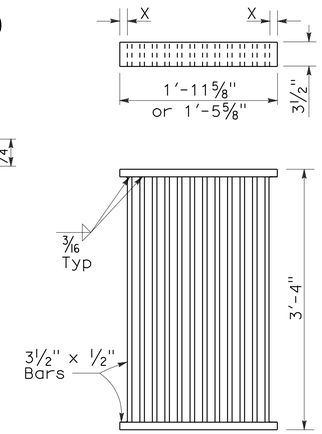

ALTERNATIVE WELDED GRATE

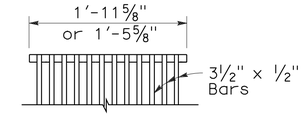

CAST END BLOCK

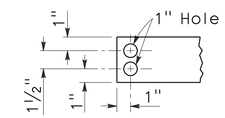

END OF BAR

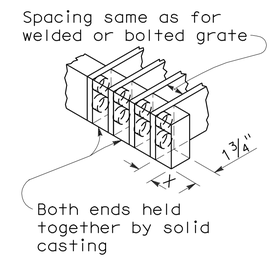

ALTERNATIVE CAST NODULAR IRON OR CAST STEEL END BLOCK GRATE

NOTES:

1. Grate type numbers refer to approximate width of grate in inches and number of bars, respectively.
2. Contractor has the option of using cast nodular iron, cast steel, welded, bolted, or cast end block grate.
3. See Special Provisions for requirements pertaining to galvanizing or asphalt dipping of grates and frames.
4. Rounded top of bars optional on all grates.
5. Pipe inlets with a grate shall be placed so that bars parallel direction of principle surface flow.
6. Full penetration butt welds may be substituted for the fillet welds on all anchors.
7. Standard square, hexagon, round or equivalent headed anchors may be substituted for the right angle hooks on the anchors shown on this plan.
8. Grate and frame weights are based on welded grates (weights of face angles, steps, protection bars, etc. are not included).

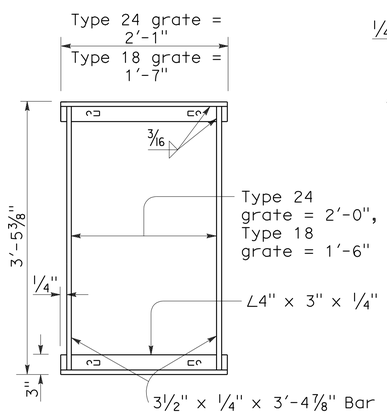

TYPICAL FRAME

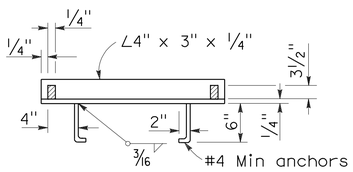

CROSS SECTION

(Thru frame)

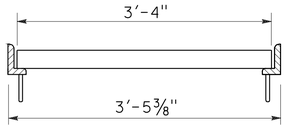

LONGITUDINAL SECTION

(Thru frame and grate)

RECTANGULAR FRAME DETAILS

(For all rectangular grates)

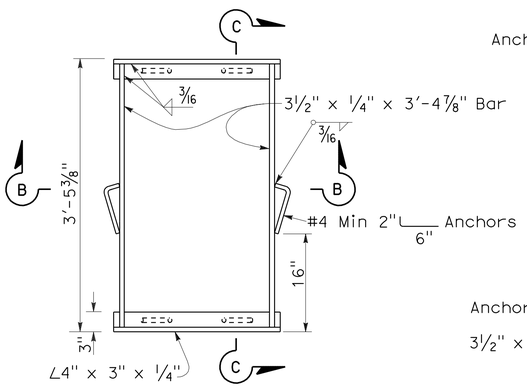

TYPICAL FRAME

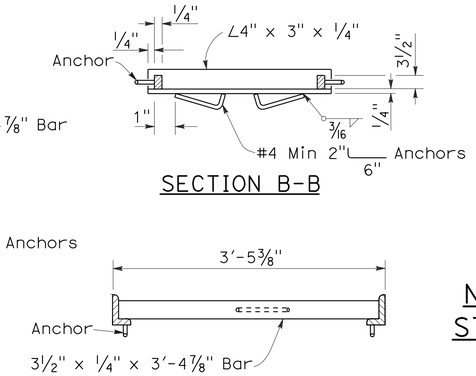

SECTION B-B

SECTION C-C

ALTERNATIVE ANCHOR FOR RECTANGULAR FRAME

(For details not shown, See Rectangular Frame Details)

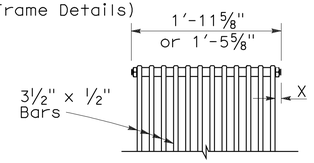

BOLTED END BLOCK

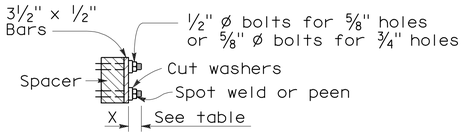

BOLTING DETAIL

ALTERNATIVE BOLTED GRATE

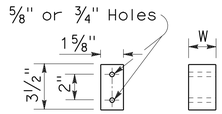

BAR SPACER

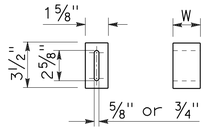

ALTERNATIVE SPACER

W = 1⅜" or 2"

GRATE BAR SPACING TABLE

TYPE	No. OF BARS	CLEAR BAR SPACING	X
18-9	9	1⅜"	1 1/16"
24-9	9	2"	1 9/16"
24-12	12	1⅜"	1¼"

INLET TYPE	COVER TYPE	WEIGHT LB
OS	PLATE	174
OL-7	PLATE	170
OL-10	PLATE	170
OL-14	PLATE	170
OL-21	PLATE	170
OCP	PLATE	112
OCPI	PLATE	112
OCPI	REDWOOD	42
OMP	PLATE	177
OMPI	PLATE	177

INLET TYPE	GRATE TYPE	No. OF GRATES	WEIGHT LB
GDO	24-12	2	634
GOL-7	24-12	1	326
GOL-10	24-12	1	326
GO,G1,G2,G3,G4 (TYPE 24)	24-9	1	263
	24-12	1	326
G4 (TYPE 18),G5,G6	18-9	1	249
GT1	18-9	2	498
GT2	18-9	2	498
GT3	24-12	2	652
GT4	24-12	2	652
TRASH RACK			22

BASIS FOR MISC IRON & STEEL FINAL PAY WEIGHTS FOR DRAINAGE INLETS

(See General Notes, No 8)

STATE OF CALIFORNIA
DEPARTMENT OF TRANSPORTATION

GRATE DETAILS

NO SCALE

RSP D77A DATED JANUARY 18, 2008 SUPERSEDES STANDARD PLAN D77A DATED MAY 1, 2006 - PAGE 155 OF THE STANDARD PLANS BOOK DATED MAY 2006.

REVISED STANDARD PLAN RSP D77A

2006 REVISED STANDARD PLAN RSP D77A

12-14-07

DIST	COUNTY	ROUTE	POST MILES TOTAL PROJECT	SHEET NO.	TOTAL SHEETS
10	SJ,Sta	99	R24.3/R24.8, 0.0/1.7	49	63

Gregory A. Balzer
LICENSED LANDSCAPE ARCHITECT

June 5, 2009
PLANS APPROVAL DATE

LICENSED LANDSCAPE ARCHITECT Gregory A. Balzer 2576 STATE OF CALIFORNIA
10-28-10 (renewal date)
2-28-11 (renewal date)
5-14-09 date

The State of California or its officers or agents shall not be responsible for the accuracy or completeness of electronic copies of this plan sheet.

To accompany plans dated 6-29-09

EXISTING	PROPOSED	ITEM DESCRIPTION
		WATER METER (WM)
		BACKFLOW PREVENTER ASSEMBLY (BPA)
		BACKFLOW PREVENTER ASSEMBLY IN ENCLOSURE (BPAE)
		BACKFLOW PREVENTER ENCLOSURE (BPE)
		BOOSTER PUMP (BP)
		TRUCK LOADING STANDPIPE (TLS)
FS	FS	FLOW SENSOR (FS)
X	X	MASTER IRRIGATION CONTROLLER (MIC)
		AUXILIARY IRRIGATION CONTROLLER (AIC)
		IRRIGATION CONTROLLER (IC)/ IRRIGATION CONTROLLER (IC) (BATTERY) IRRIGATION CONTROLLER (IC) (SOLAR)
		IRRIGATION CONTROLLER(S) IN CONTROLLER ENCLOSURE CABINET (ICC)
		CONTROL AND NEUTRAL CONDUCTORS (CNC)
SCC	SCC	SPRINKLER CONTROL CONDUIT (SCC)
		IRRIGATION CROSSOVER
		EXTEND IRRIGATION CROSSOVER
		IRRIGATION SLEEVE
dip	DIP	DUCTILE IRON PIPE (SUPPLY LINE) (MAIN) (DIP)
		GALVANIZED STEEL PIPE (SUPPLY LINE) (MAIN) (GSP)
		GALVANIZED STEEL PIPE (SUPPLY LINE) (LATERAL) (GSP)
		PLASTIC PIPE (PR 200) (SUPPLY LINE) (MAIN)
		PLASTIC PIPE (PR 200) (SUPPLY LINE) (LATERAL)
		PLASTIC PIPE (IRRIGATION LINE)
		REMOTE CONTROL VALVE (RCV) REMOTE CONTROL VALVE (MASTER) (RCVM) REMOTE CONTROL VALVE (MASTER) W/FLOW METER (RCVMF)
		MANUAL CONTROL VALVE (MCV)
		VALVE ASSEMBLY UNIT (VAU)
		WYE STRAINER (WS)
		FILTER ASSEMBLY UNIT (FAU)
		GATE VALVE (GV)
		BALL VALVE (BV)

EXISTING	PROPOSED	ITEM DESCRIPTION
		QUICK COUPLING VALVE (QCV)
		CAM COUPLER ASSEMBLY (CCA)
		PRESSURE REDUCING VALVE (PRV)
		PRESSURE RELIEF VALVE (PRLV)
		FLOW CONTROL VALVE (FCV)
		COMBINATION AIR RELEASE VALVE (CARV)
		CHECK VALVE (CV)
		FLUSH VALVE (FV)
		NOZZLE LINE W/TURNING UNION
		IRRIGATION SYSTEM
		IRRIGATION SYSTEM TO BE REMOVED
		CHAIN LINK GATE
		QUICK COUPLING VALVE W/SPRINKLER PROTECTOR
3	3	SPRINKLER W/SPRINKLER PROTECTOR
	C	CONNECT TO EXISTING SYSTEM
		CAP
		CAP EXISTING

VALVE CODE

RCV SIZE
IRRIGATION CONTROLLER
CONTROLLER STATION
VALVE IN PARALLEL (IF APPLICABLE)
GPM
QUANTITY OF SPRINKLERS (WHEN SHOWN)

* 2½"-A-2b-40 -60

MCV SIZE
VALVE NUMBER
GPM
QUANTITY OF TYPE SPRINKLERS (WHEN SHOWN)

* 2"-3-30 -50

* VALVE CODES FOR EXISTING VALVES ARE SHOWN IN A DASHED ENCLOSURE.

STATE OF CALIFORNIA
DEPARTMENT OF TRANSPORTATION

PLANTING AND IRRIGATION SYMBOLS

NO SCALE

RSP H2 DATED JUNE 5, 2009 SUPERSEDES RSP H2 DATED MARCH 7, 2008 AND STANDARD PLAN H2 DATED MAY 1, 2006 - PAGE 202 OF THE STANDARD PLANS BOOK DATED MAY 2006.

REVISED STANDARD PLAN RSP H2

2006 REVISED STANDARD PLAN RSP H2

5-11-09

DIST	COUNTY	ROUTE	POST MILES TOTAL PROJECT	SHEET NO.	TOTAL SHEETS
10	SJ,Sta	99	R24.3/R24.8, 0.0/1.7	50	63

Randell D. Hiatt
REGISTERED CIVIL ENGINEER

June 6, 2008
PLANS APPROVAL DATE

REGISTERED PROFESSIONAL ENGINEER
Randell D. Hiatt
No. C50200
Exp. 6-30-09
CIVIL
STATE OF CALIFORNIA

The State of California or its officers or agents shall not be responsible for the accuracy or completeness of electronic copies of this plan sheet.

To accompany plans dated 6-29-09

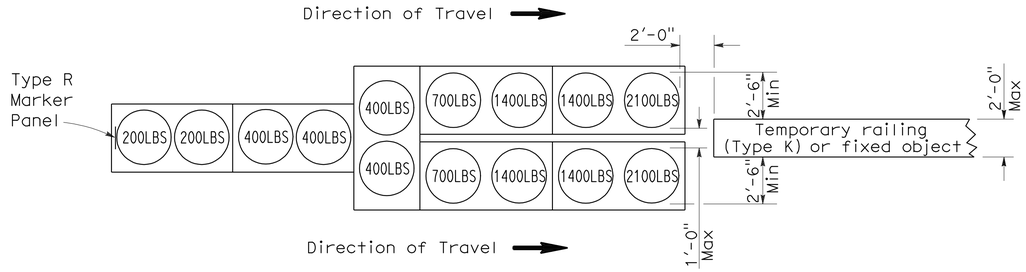

ARRAY 'TU14'

Approach speed 45 mph or more

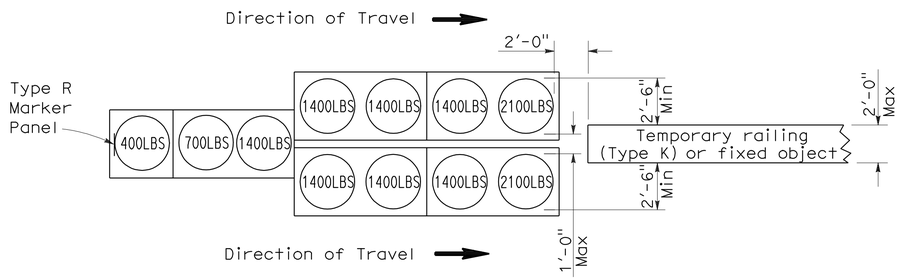

ARRAY 'TU11'

Approach speed less than 45 mph

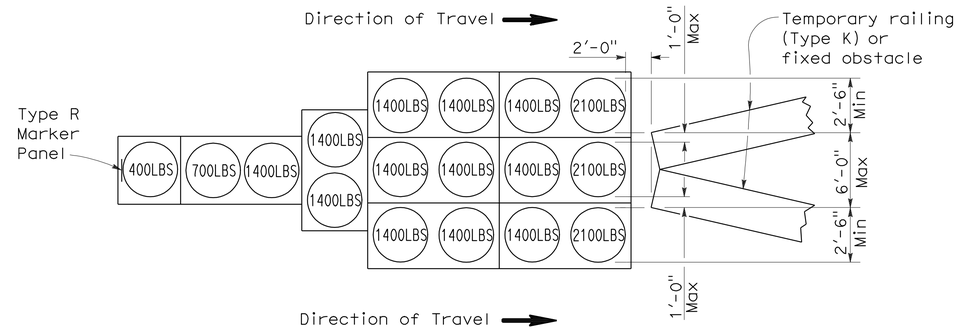

ARRAY 'TU17'

Approach speed less than 45 mph

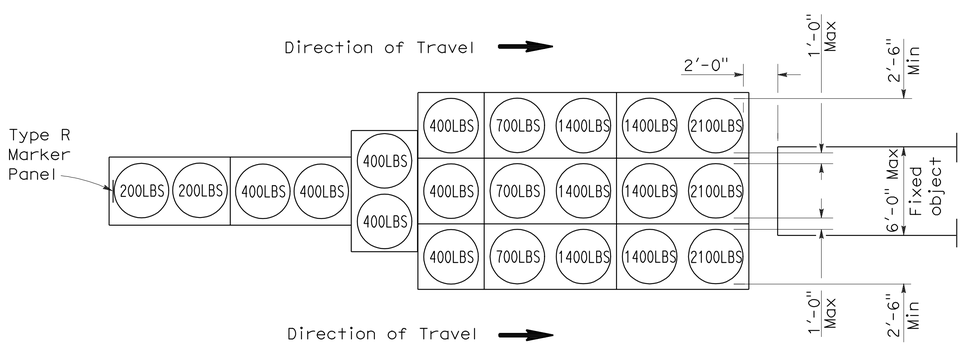

ARRAY 'TU21'

Approach speed 45 mph or more

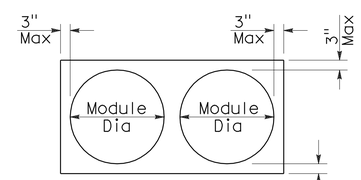

PLAN

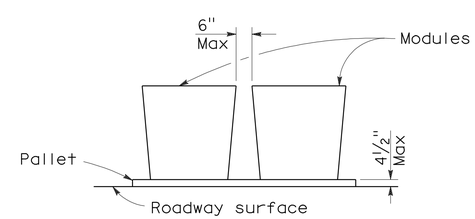

ELEVATION

CRASH CUSHION PALLET DETAIL

See Note 7

NOTES:

1. (XXX) Indicates sand filled module location and weight of sand in pounds for each module. Module spacing is based on the greater diameter of the module.
2. All sand weights are nominal.
3. Temporary crash cushion arrays shall not encroach on the traveled way.
4. Place the top of Type R marker panel 1" below the module lid.
5. Refer to Standard Plan A73B for marker details.
6. Approach speeds indicated conform to NCHRP 350 Report criteria.
7. Use of pallets is optional.

STATE OF CALIFORNIA
DEPARTMENT OF TRANSPORTATION

TEMPORARY CRASH CUSHION, SAND FILLED (UNIDIRECTIONAL)

NO SCALE

RSP T1A DATED JUNE 6, 2008 SUPERSEDES STANDARD PLAN T1A
DATED MAY 1, 2006 - PAGE 211 OF THE STANDARD PLANS BOOK DATED MAY 2006.

REVISED STANDARD PLAN RSP T1A

2006 REVISED STANDARD PLAN RSP T1A

DIST	COUNTY	ROUTE	POST MILES TOTAL PROJECT	SHEET NO.	TOTAL SHEETS
10	SJ,Sta	99	R24.3/R24.8, 0.0/1.7	51	63

Randell D. Hiatt
REGISTERED CIVIL ENGINEER

June 6, 2008
PLANS APPROVAL DATE

REGISTERED PROFESSIONAL ENGINEER
Randell D. Hiatt
No. C50200
Exp. 6-30-09
CIVIL
STATE OF CALIFORNIA

The State of California or its officers or agents shall not be responsible for the accuracy or completeness of electronic copies of this plan sheet.

To accompany plans dated 6-29-09

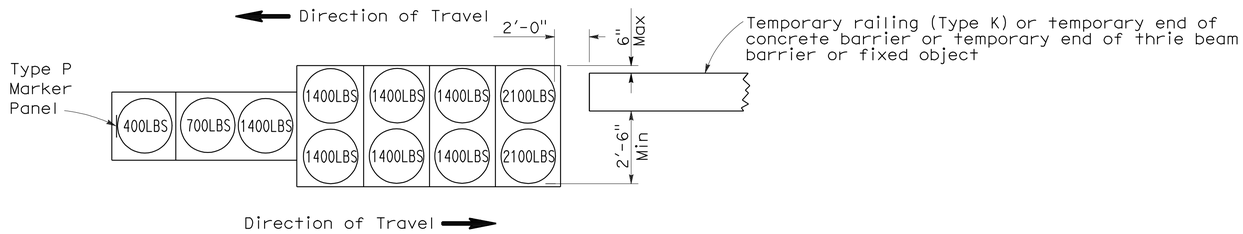

ARRAY 'TB11'

Approach speed less than 45 mph

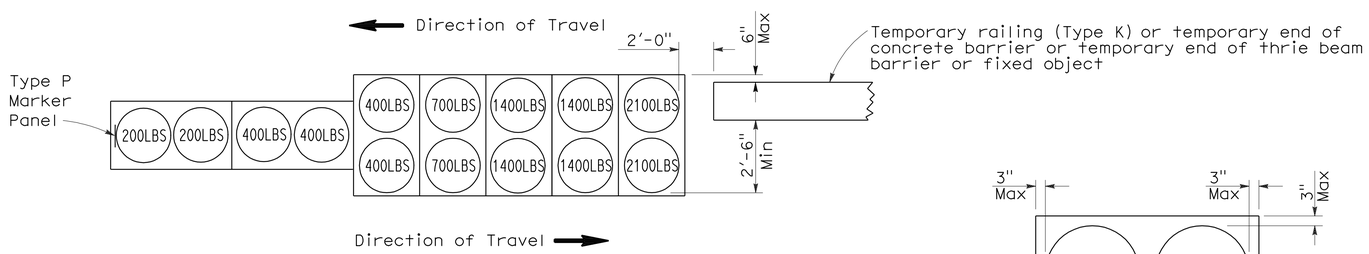

ARRAY 'TB14'

Approach speed 45 mph or more

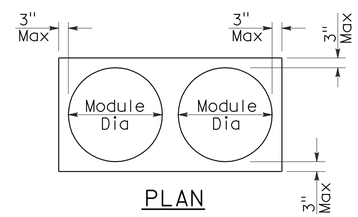

PLAN

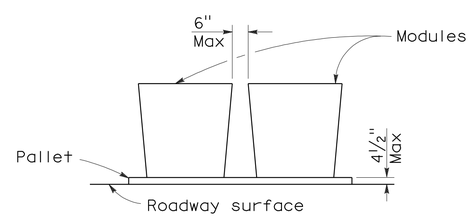

ELEVATION

CRASH CUSHION PALLET DETAIL

See Note 7

NOTES:

1. (XXX) Indicates sand filled module location and weight of sand in pounds for each module. Module spacing is based on the greater diameter of the module.
2. All sand weights are nominal.
3. Temporary crash cushion arrays shall not encroach on the traveled way.
4. Place the Type P marker panel so that the bottom of the panel rests upon the pallet.
5. Refer to Standard Plan A73B for marker details.
6. Approach speeds indicated conform to NCHRP 350 Report criteria.
7. Use of pallets is optional.

STATE OF CALIFORNIA
DEPARTMENT OF TRANSPORTATION

TEMPORARY CRASH CUSHION, SAND FILLED (BIDIRECTIONAL)

NO SCALE

RSP T1B DATED JUNE 6, 2008 SUPERSEDES STANDARD PLAN T1B
DATED MAY 1, 2006 - PAGE 212 OF THE STANDARD PLANS BOOK DATED MAY 2006.

REVISED STANDARD PLAN RSP T1B

2006 REVISED STANDARD PLAN RSP T1B

5-15-08

DIST	COUNTY	ROUTE	POST MILES TOTAL PROJECT	SHEET NO.	TOTAL SHEETS
10	SJ,Sta	99	R24.3/R24.8, 0.0/1.7	52	63

Randell D. Hiatt
REGISTERED CIVIL ENGINEER

June 6, 2008
PLANS APPROVAL DATE

REGISTERED PROFESSIONAL ENGINEER
Randell D. Hiatt
No. C50200
Exp. 6-30-09
CIVIL
STATE OF CALIFORNIA

The State of California or its officers or agents shall not be responsible for the accuracy or completeness of electronic copies of this plan sheet.

To accompany plans dated 6-29-09

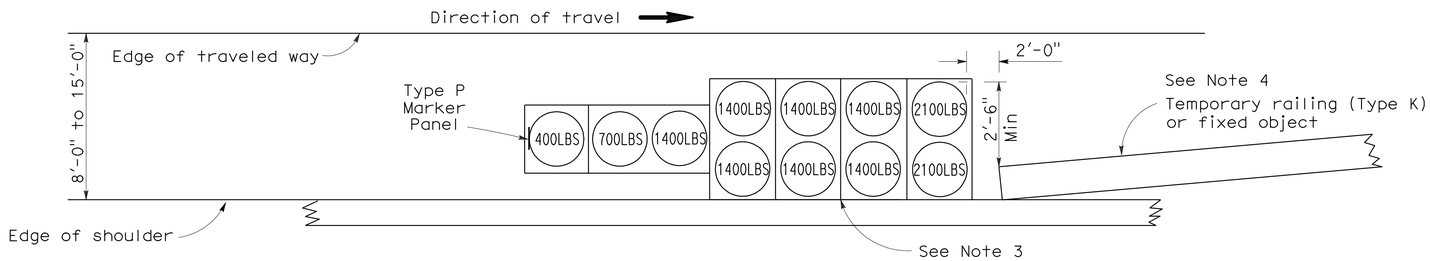

ARRAY 'TS11'

Approach speed less than 45 mph
See Note 9

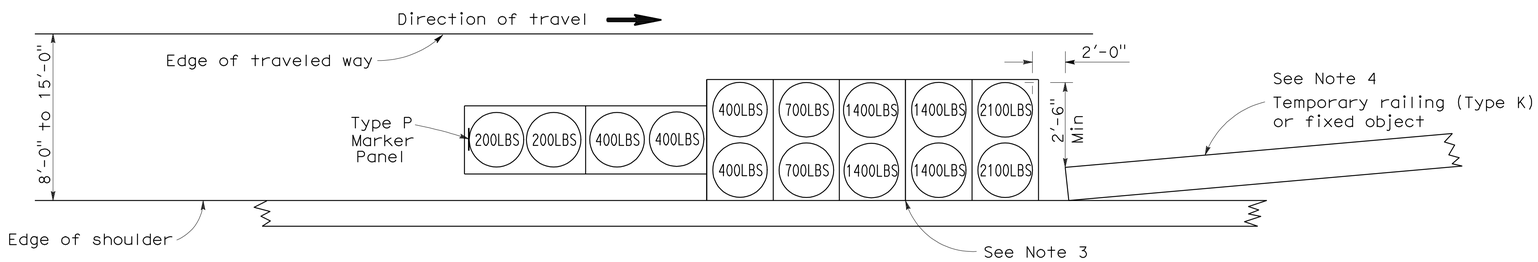

ARRAY 'TS14'

Approach speed 45 mph or more
See Note 9

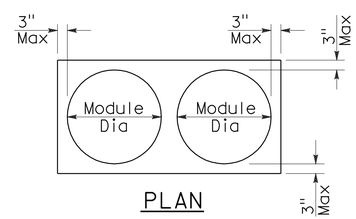

PLAN

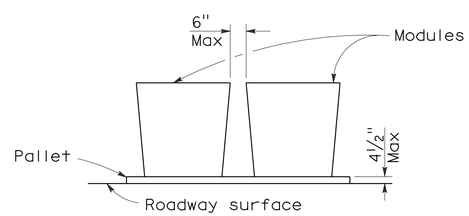

ELEVATION

CRASH CUSHION PALLET DETAIL

See Note 11

NOTES:

1. (XXX) Indicates sand filled module location and weight of sand in pounds for each module. Module spacing is based on the greater diameter of the module.
2. All sand weights are nominal.
3. The temporary crash cushion arrays shown on this plan shall be used only in locations where there will be traffic on one side of the temporary crash cushion array.
4. If the fixed object or approach end of the temporary railing is less than 15'-0" from the edge of traveled way, a temporary crash cushion is required in a construction or work zone.
5. Temporary crash cushion arrays shall not encroach on the traveled way.
6. Arrays for median shoulders shall conform to details shown on this plan for outside shoulders.
7. Place the Type P marker panel so that the bottom of the panel rests upon the pallet and faces traffic.
8. Refer to Standard Plan A73B for marker details.
9. For shoulder widths less than 8'-0", appropriate approved crash cushion protection, other than sand filled modules, shall be provided at fixed objects and at approach ends of temporary railing. The specific type of crash cushion shall be as shown on the project plans or as specified in the Special Provisions, or if not shown on the project plans or specified in the Special Provisions, shall be as approved by the Engineer.
10. Approach speeds indicated conform to NCHRP 350 Report criteria.
11. Use of pallets is optional.

STATE OF CALIFORNIA
DEPARTMENT OF TRANSPORTATION

TEMPORARY CRASH CUSHION, SAND FILLED (SHOULDER INSTALLATIONS)

NO SCALE

RSP T2 DATED JUNE 6, 2008 SUPERSEDES STANDARD PLAN T2
DATED MAY 1, 2006 - PAGE 213 OF THE STANDARD PLANS BOOK DATED MAY 2006.

REVISED STANDARD PLAN RSP T2

2006 REVISED STANDARD PLAN RSP T2

5-15-08

DIST	COUNTY	ROUTE	POST MILES TOTAL PROJECT	SHEET NO.	TOTAL SHEETS
10	SJ,Sta	99	R24.3/R24.8, 0.0/1.7	53	63

REGISTERED CIVIL ENGINEER

November 17, 2006
PLANS APPROVAL DATE

REGISTERED PROFESSIONAL ENGINEER
Greg W. Edwards
No. C36386
Exp. 6-30-08
CIVIL
STATE OF CALIFORNIA

The State of California or its officers or agents shall not be responsible for the accuracy or completeness of electronic copies of this plan sheet.

To accompany plans dated 6-29-09

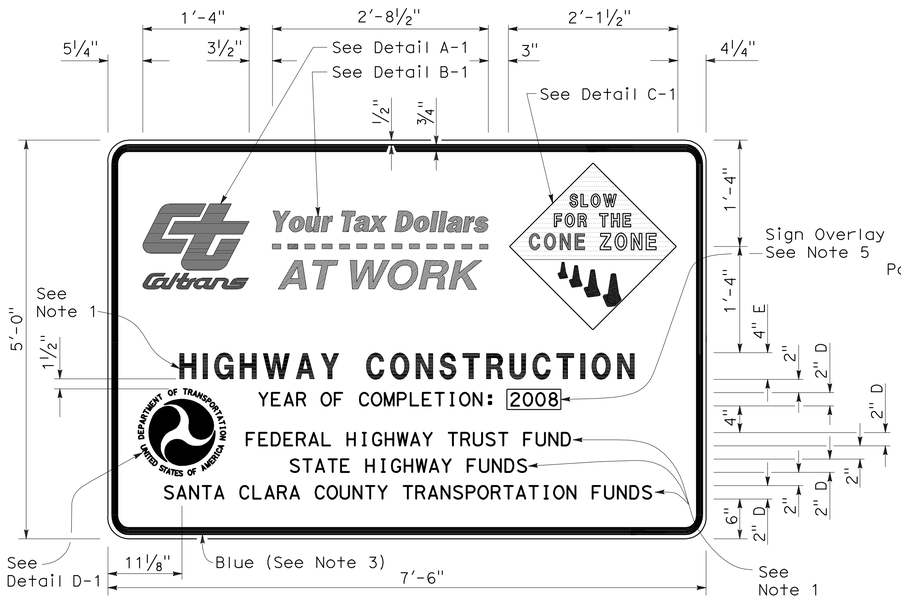

TYPE 1

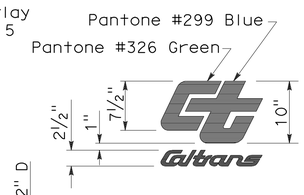

DETAIL A-1

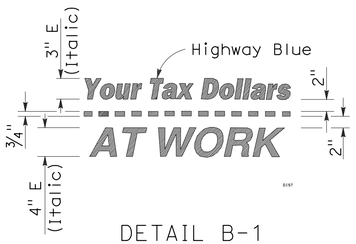

DETAIL B-1
(See Note 3)

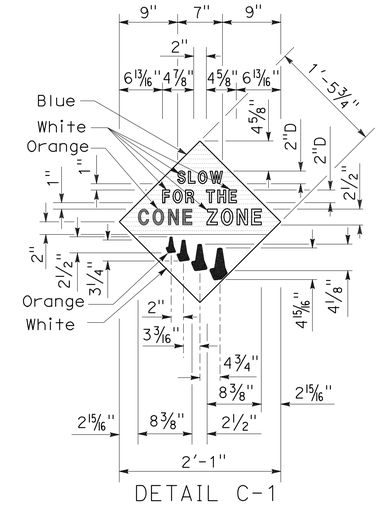

DETAIL C-1
(See Note 4)

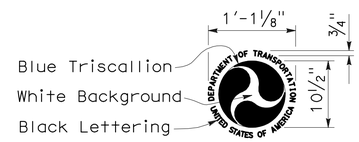

DETAIL D-1
(See Note 6)

NOTES:

1. The sign messages shown for type of project and fund types are examples only. See the Special Provisions for the applicable type of project and fund type messages to be used.
2. Except as otherwise shown, the legend of sign shall be black on a white background (non-reflective).
3. The border of the signs and details "B-1" and "B-2" shall be blue (non-reflective).
4. The diamond in details "C-1" and "C-2" shall be blue for the background of message, " SLOW FOR THE CONE ZONE", and white background for the orange cones. The color and type of font for the "SLOW FOR THE CONE ZONE" message shall be: "SLOW" white D; "FOR THE" white D; "CONE" orange Arial font; "ZONE" white Arial font.
5. Year of completion of project construction shown on the overlay is an example only. See the Special Provisions.
6. Use when the Project involves Federal Highway Trust Fund.

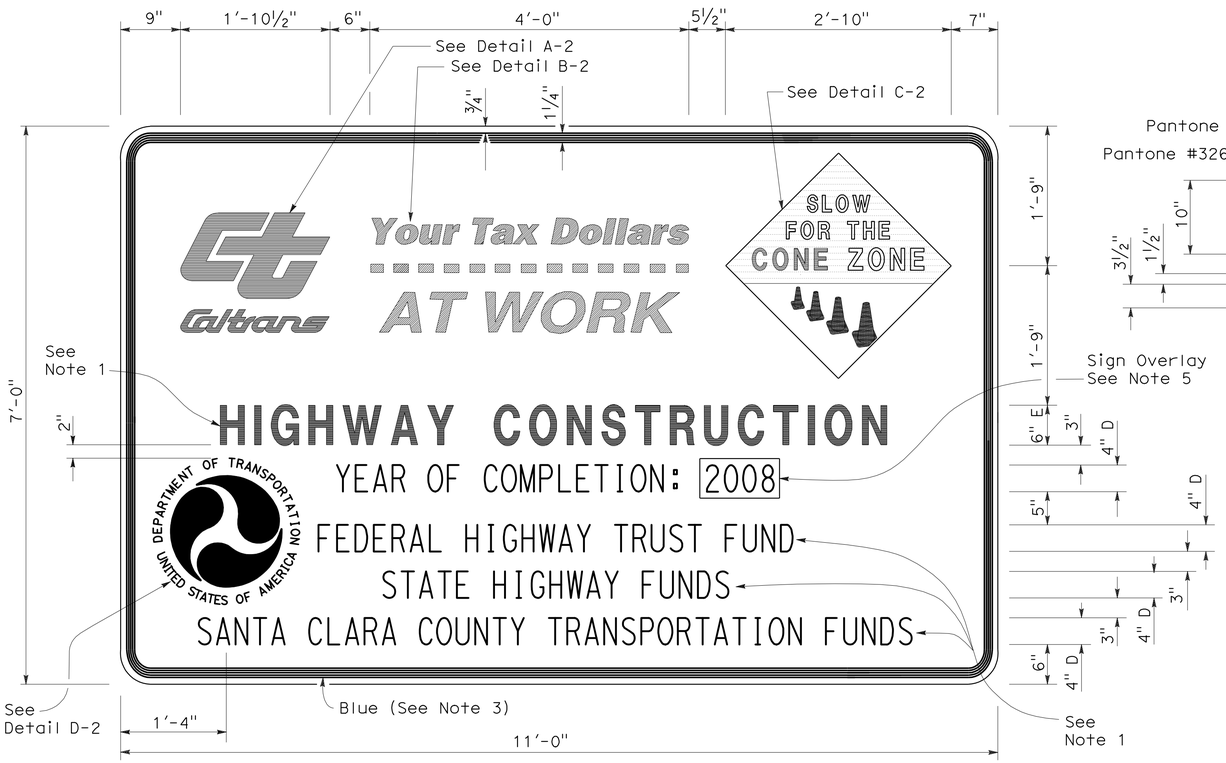

TYPE 2

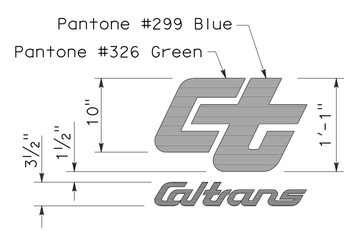

DETAIL A-2

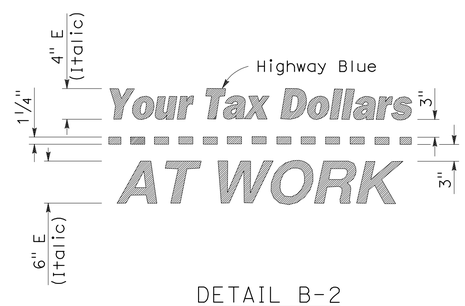

DETAIL B-2
(See Note 3)

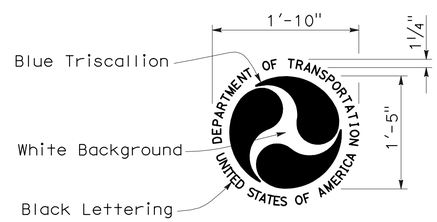

DETAIL D-2
(See Note 6)

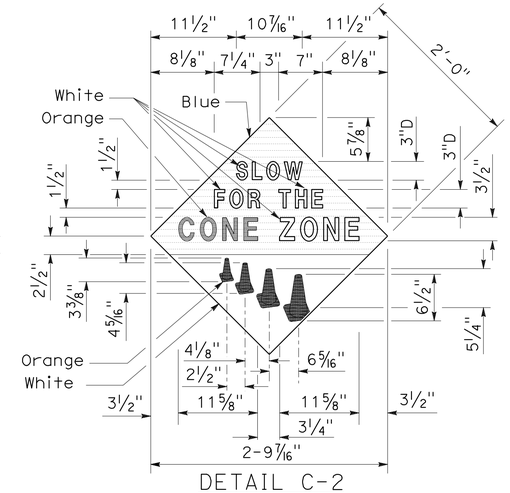

DETAIL C-2
(See Note 4)

STATE OF CALIFORNIA
DEPARTMENT OF TRANSPORTATION

CONSTRUCTION PROJECT FUNDING IDENTIFICATION SIGNS

NO SCALE

RSP T7 DATED NOVEMBER 17, 2006 SUPERSEDES STANDARD PLAN T7
DATED MAY 1, 2006 - PAGE 217 OF THE STANDARD PLANS BOOK DATED MAY 2006.

REVISED STANDARD PLAN RSP T7

2006 REVISED STANDARD PLAN RSP T7

9-7-06

DIST	COUNTY	ROUTE	POST MILES TOTAL PROJECT	SHEET NO.	TOTAL SHEETS
10	SJ,Sta	99	R24.3/R24.8, 0.0/1.7	54	63

Robert B Schott
LICENSED LANDSCAPE ARCHITECT

April 3, 2009
PLANS APPROVAL DATE

LICENSED LANDSCAPE ARCHITECT Robert B. Schott 3625 Robert B Schott Registered Date 11-30-10 Renewal Date 2-25-09 Date STATE OF CALIFORNIA

The State of California or its officers or agents shall not be responsible for the accuracy or completeness of electronic copies of this plan sheet.

To accompany plans dated 6-29-09

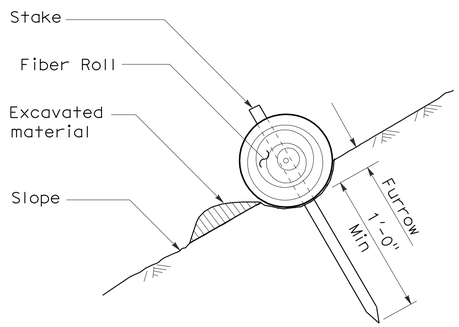

SECTION

TEMPORARY FIBER ROLL (TYPE 1)

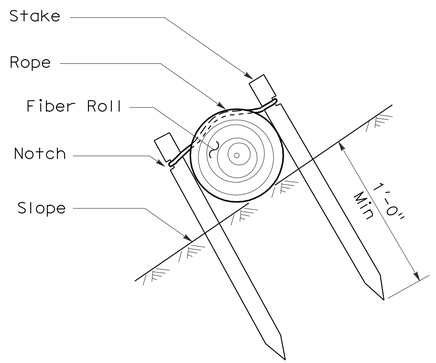

SECTION

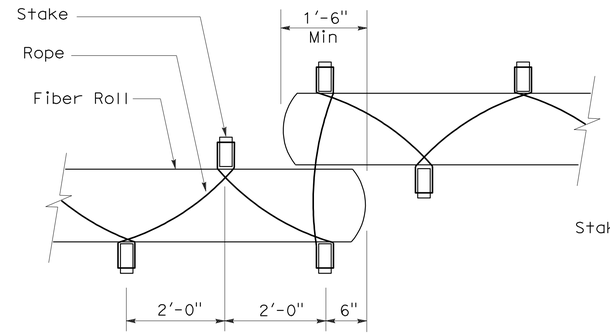

PLAN

TEMPORARY FIBER ROLL (TYPE 2)

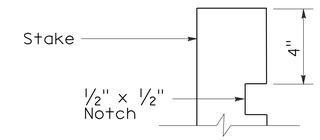

ELEVATION

STAKE NOTCH DETAIL

NOTES:

1. Temporary fiber roll spacing varies depending upon slope inclination.
2. Installations shown in the perspectives are for slope inclination of 10:1 and steeper.

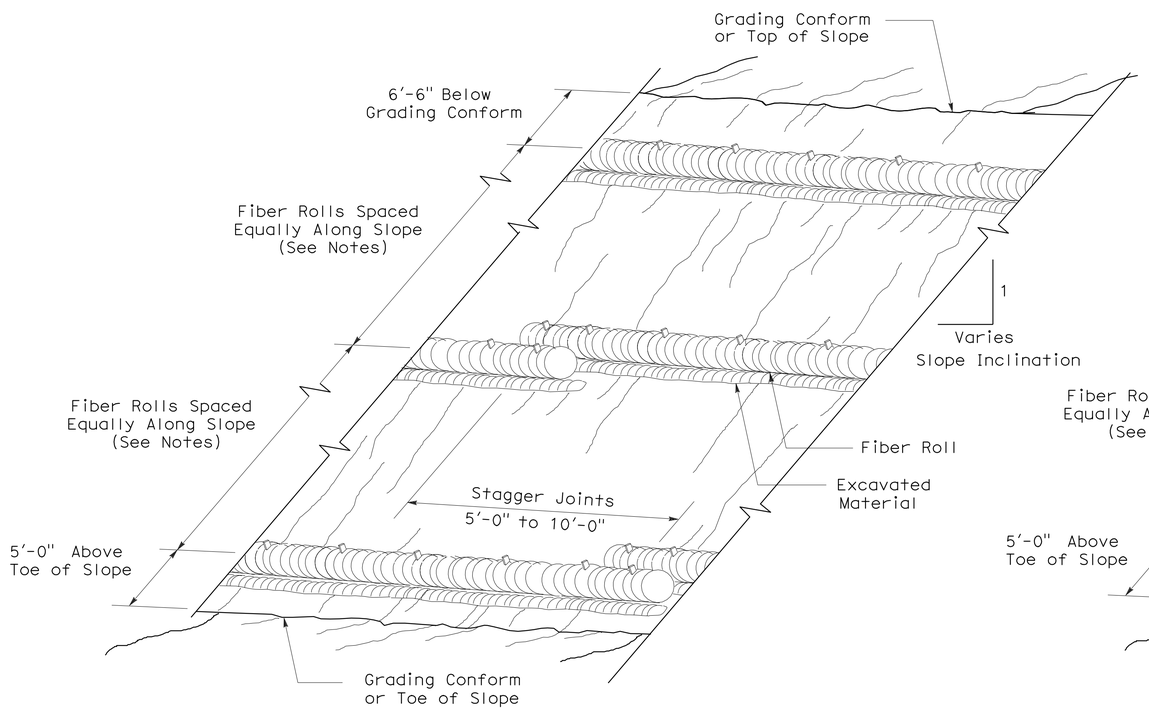

PERSPECTIVE

TEMPORARY FIBER ROLL (TYPE 1)

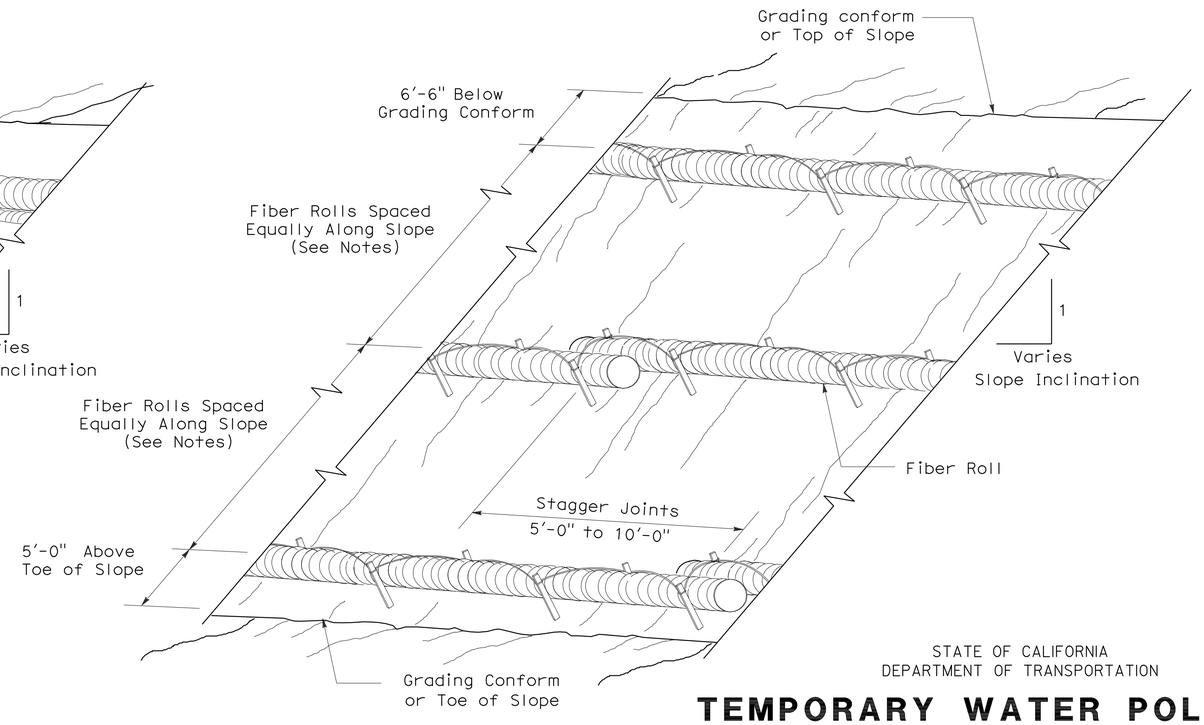

PERSPECTIVE

TEMPORARY FIBER ROLL (TYPE 2)

STATE OF CALIFORNIA
DEPARTMENT OF TRANSPORTATION

TEMPORARY WATER POLLUTION CONTROL DETAILS (TEMPORARY FIBER ROLL)

NO SCALE

RSP T56 DATED APRIL 3, 2009 SUPERSEDES STANDARD PLAN T56
DATED MAY 1, 2006 - PAGE 232 OF THE STANDARD PLANS BOOK DATED MAY 2006.

REVISED STANDARD PLAN RSP T56

2006 REVISED STANDARD PLAN RSP T56

DIST	COUNTY	ROUTE	POST MILES TOTAL PROJECT	SHEET NO.	TOTAL SHEETS
10	SJ,Sta	99	R24.3/R24.8, 0.0/1.7	55	63

LICENSED LANDSCAPE ARCHITECT

August 15, 2008
PLANS Approval DATE

LICENSED LANDSCAPE ARCHITECT Robert B. Schott 3625 Signature 11-04-08 Renewal Date 08-11-08 Date STATE OF CALIFORNIA

The State of California or its officers or agents shall not be responsible for the accuracy or completeness of electronic copies of this plan sheet.

To accompany plans dated 6-29-09

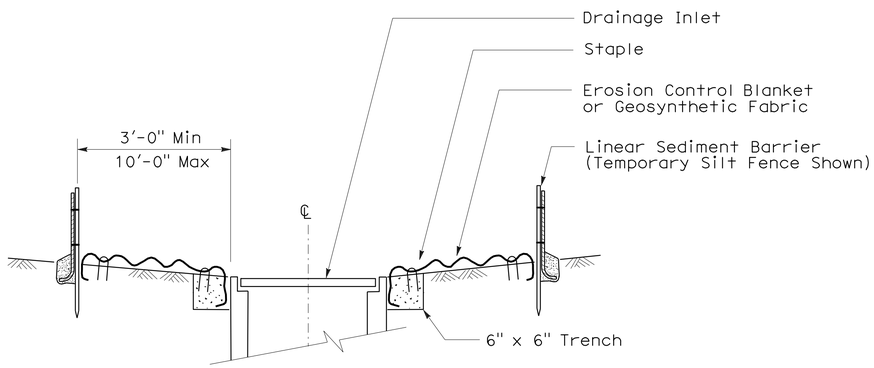

SECTION A-A

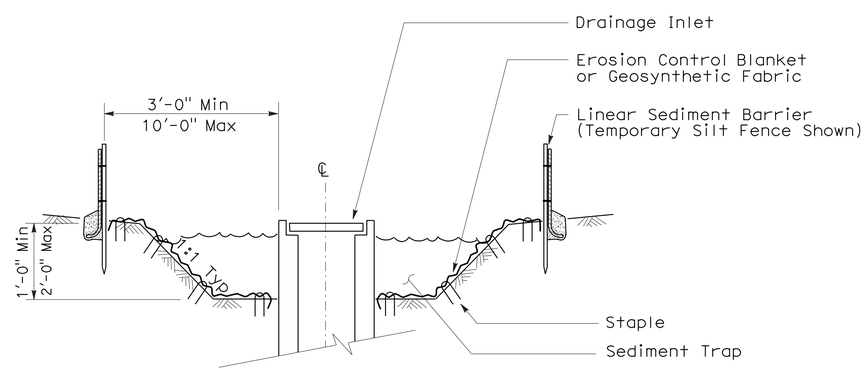

SECTION B-B

NOTES:

1. See Standard Plan T51 for Temporary Silt Fence.
2. Dimensions may vary to fit field conditions.

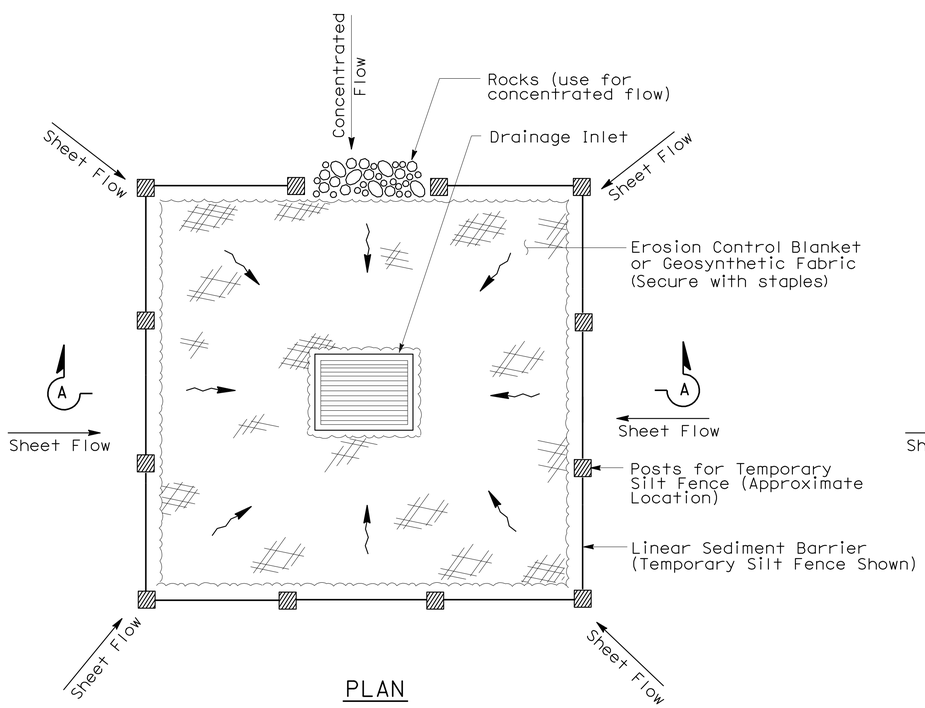

PLAN

TEMPORARY DRAINAGE INLET PROTECTION (TYPE 1)

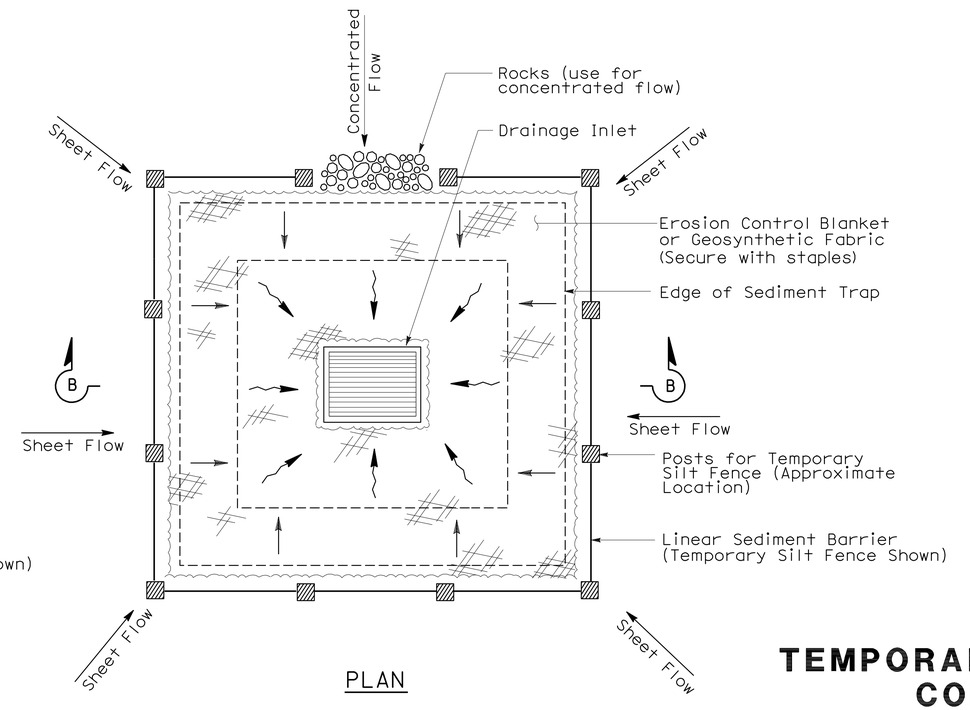

PLAN

TEMPORARY DRAINAGE INLET PROTECTION (TYPE 2) (EXCAVATED SEDIMENT TRAP)

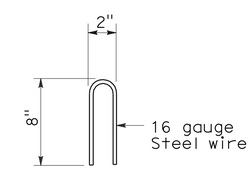

STAPLE DETAIL

STATE OF CALIFORNIA
DEPARTMENT OF TRANSPORTATION

TEMPORARY WATER POLLUTION CONTROL DETAILS (TEMPORARY DRAINAGE INLET PROTECTION)

NO SCALE

NSP T61 DATED AUGUST 15, 2008 SUPPLEMENTS THE STANDARD PLANS BOOK DATED MAY 2006.

NEW STANDARD PLAN NSP T61

2006 NEW STANDARD PLAN NSP T61

7-11-08

DIST	COUNTY	ROUTE	POST MILES TOTAL PROJECT	SHEET NO.	TOTAL SHEETS
10	SJ,Sta	99	R24.3/R24.8, 0.0/1.7	56	63

LICENSED LANDSCAPE ARCHITECT

August 15, 2008
PLANS APPROVAL DATE

LICENSED LANDSCAPE ARCHITECT Robert B. Schott 3625 Signature 11-04-08 Renewal Date 08-11-08 Date STATE OF CALIFORNIA

The State of California or its officers or agents shall not be responsible for the accuracy or completeness of electronic copies of this plan sheet.

To accompany plans dated 6-29-09

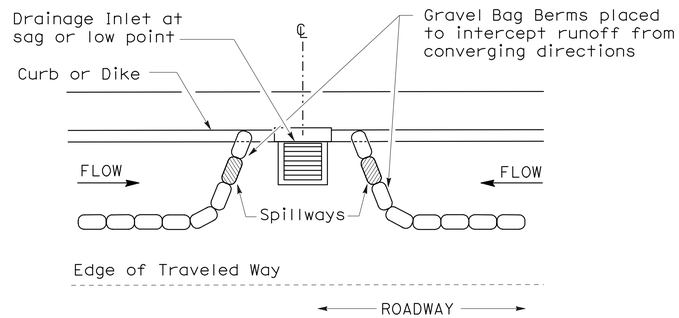

PLAN

CONFIGURATION FOR SAG POINT INLET (GRAVEL BAG BERM)

GRAVEL BAG BERM (TYPE 3A) SPACING TABLE

SLOPE OF ROADWAY (PERCENT)	1 to 3.9	4 to 5.9	6 to 7.9	8 to 10	10+
INTERVAL BETWEEN BERM	100′	75′	50′	25′	12′

For slope of less than 1%, install barriers only if erosion/sediment is prevalent

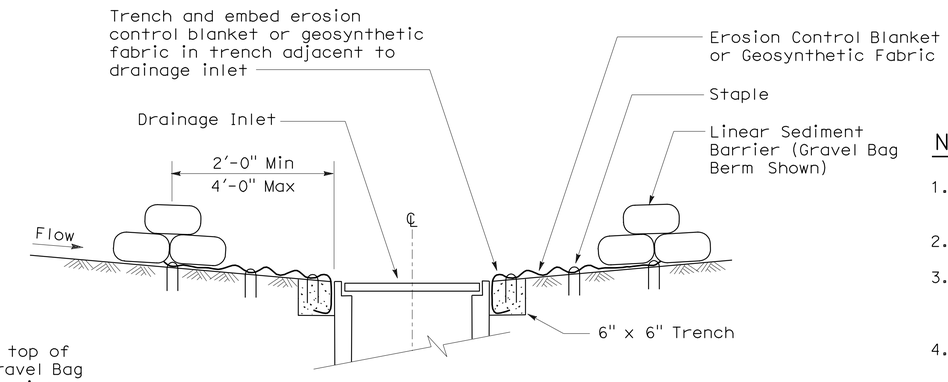

SECTION A-A

NOTES:

1. Place safety cones adjacent to drainage inlet protection.
2. Dimensions may vary to fit field conditions.
3. Install a minimum of 3 gravel bag berms upstream of each drainage inlet to be protected.
4. Position erosion control blanket or geosynthetic fabric at edge of concrete apron and secure in trench.
5. Erosion control blanket or geosynthetic fabric is not required if the area adjacent to the drainage inlet is vegetated or paved.

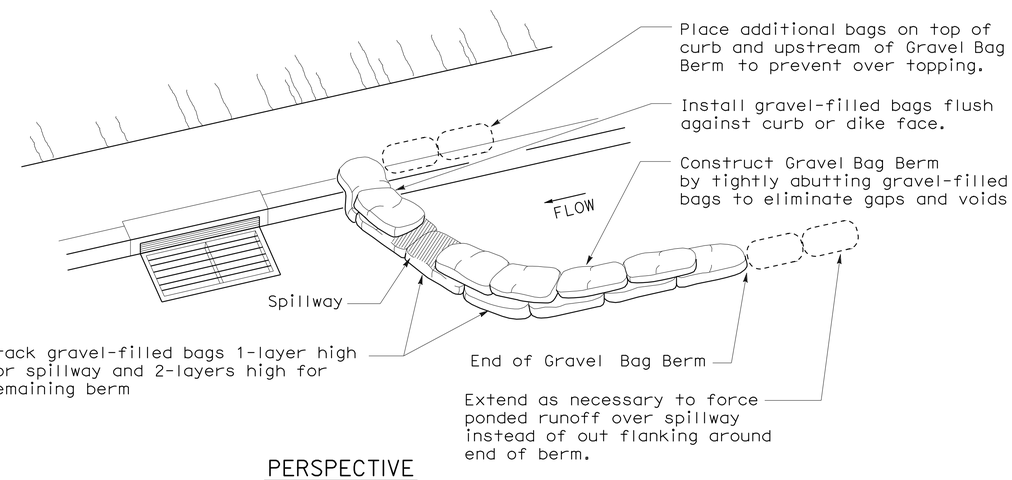

PERSPECTIVE

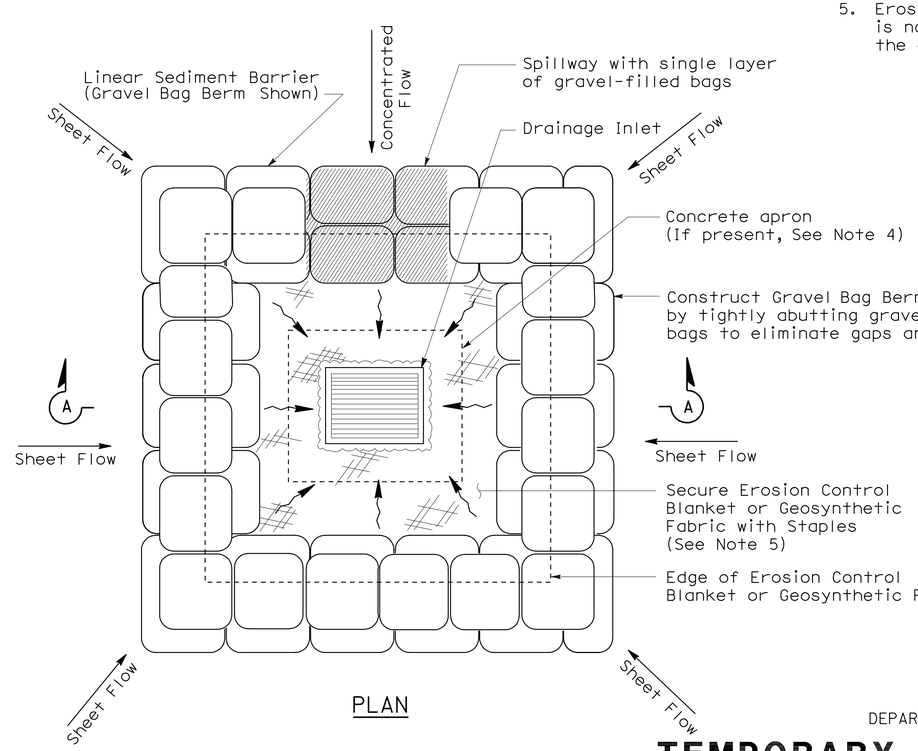

PLAN

TEMPORARY DRAINAGE INLET PROTECTION (TYPE 3B)

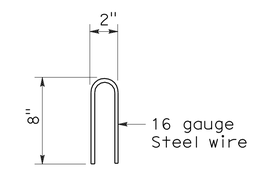

STAPLE DETAIL

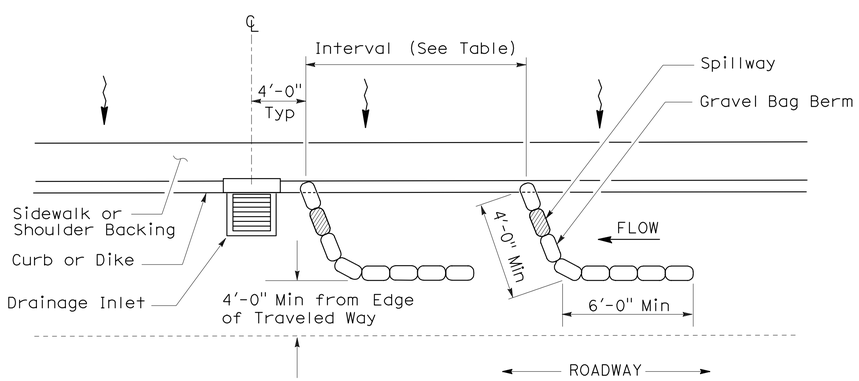

PLAN

TEMPORARY DRAINAGE INLET PROTECTION (TYPE 3A) (GRAVEL BAG BERM)

STATE OF CALIFORNIA
DEPARTMENT OF TRANSPORTATION

TEMPORARY WATER POLLUTION CONTROL DETAILS (TEMPORARY DRAINAGE INLET PROTECTION)

NO SCALE

NSP T62 DATED AUGUST 15, 2008 SUPPLEMENTS THE STANDARD PLANS BOOK DATED MAY 2006.

NEW STANDARD PLAN NSP T62

2006 NEW STANDARD PLAN NSP T62

7-11-08

DIST	COUNTY	ROUTE	POST MILES TOTAL PROJECT	SHEET NO.	TOTAL SHEETS
10	SJ,Sta	99	R24.3/R24.8, 0.0/1.7	57	63

LICENSED LANDSCAPE ARCHITECT

August 15, 2008
PLANS APPROVAL DATE

The State of California or its officers or agents shall not be responsible for the accuracy or completeness of electronic copies of this plan sheet.

LICENSED LANDSCAPE ARCHITECT — Robert B. Schott — Signature — 11-04-08 Renewal Date — 08-11-08 Date — STATE OF CALIFORNIA

To accompany plans dated 6-29-09

FLEXIBLE SEDIMENT BARRIER SPACING TABLE

SLOPE OF ROADWAY (PERCENT)	0 to 0.9	1 to 1.9	2 to 2.9	3 to 4	5+
INTERVAL BETWEEN BARRIERS	50′	35′	30′	25′	20′
ANGLE FROM FACE OF CURB	70°	70°	70°	45°	45°
SUGGESTED BARRIER LENGTH	6′	6′	6′	6′	6′

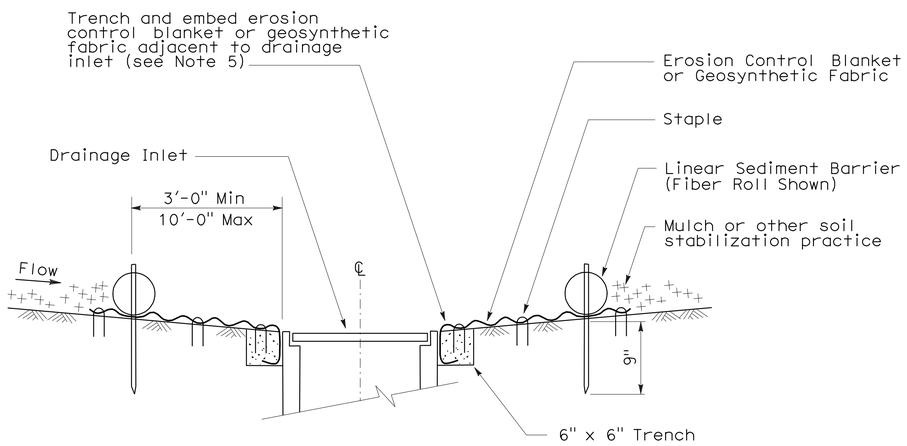

SECTION A-A

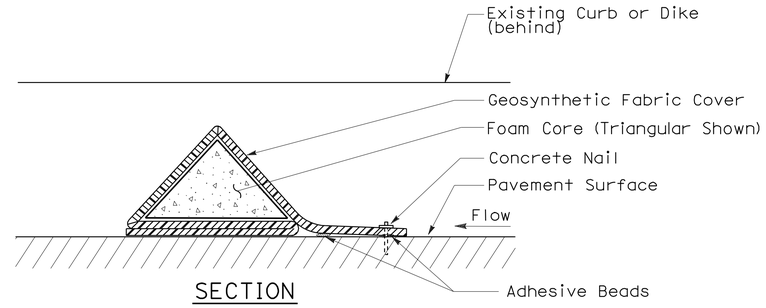

SECTION

FLEXIBLE SEDIMENT BARRIER DETAIL (FOAM BARRIER SHOWN)

NOTES:

1. See Standard Plan T51 for Temporary Silt Fence.
2. Dimensions may vary to fit field conditions.
3. Install a minimum of 3 flexible sediment barriers upstream of each drainage inlet to be protected.
4. Position erosion control blanket or geosynthetic fabric at edge of concrete apron and secure in trench.
5. Erosion control blanket or geosynthetic fabric is not required if the area adjacent to the drainage inlet is vegetated.

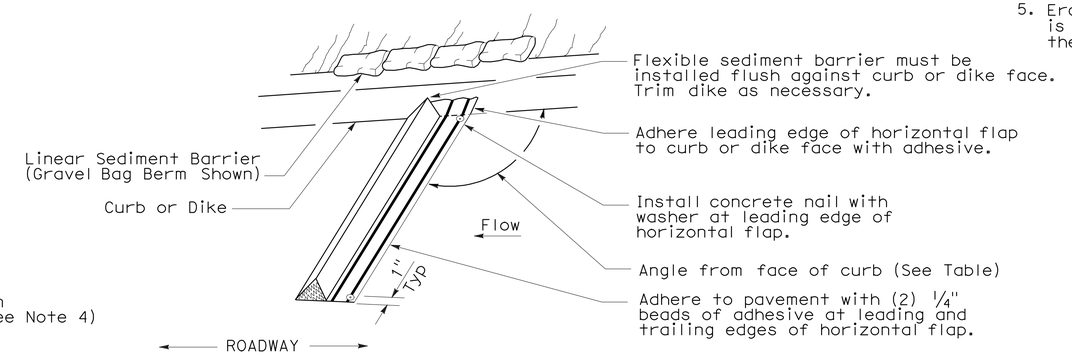

PERSPECTIVE

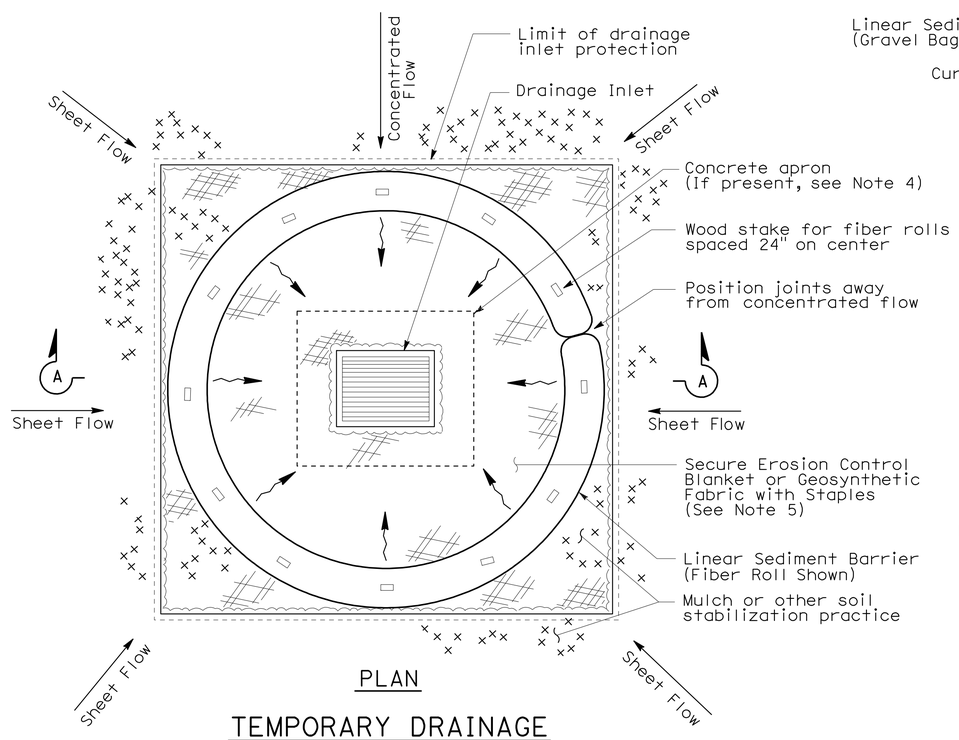

PLAN

TEMPORARY DRAINAGE INLET PROTECTION (TYPE 4A)

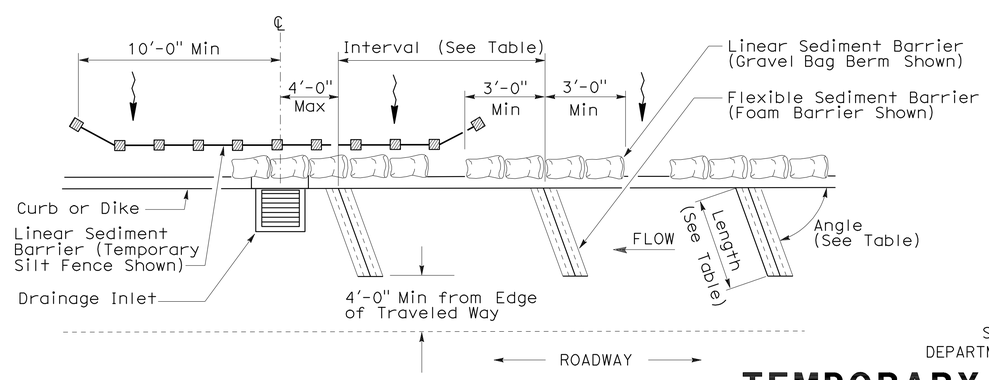

PLAN

TEMPORARY DRAINAGE INLET PROTECTION (TYPE 4B) FLEXIBLE SEDIMENT BARRIER

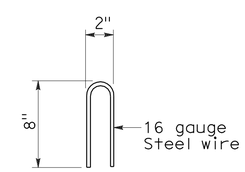

STAPLE DETAIL

STATE OF CALIFORNIA
DEPARTMENT OF TRANSPORTATION

TEMPORARY WATER POLLUTION CONTROL DETAILS (TEMPORARY DRAINAGE INLET PROTECTION)

NO SCALE

NSP T63 DATED AUGUST 15, 2008 SUPPLEMENTS THE STANDARD PLANS BOOK DATED MAY 2006.

NEW STANDARD PLAN NSP T63

2006 NEW STANDARD PLAN NSP T63

7-11-08

DIST	COUNTY	ROUTE	POST MILES TOTAL PROJECT	SHEET NO.	TOTAL SHEETS
10	SJ,Sta	99	R24.3/R24.8, 0.0/1.7	58	63

LICENSED LANDSCAPE ARCHITECT

August 15, 2008
PLANS APPROVAL DATE

LICENSED LANDSCAPE ARCHITECT
Robert B. Schott 3625
Signature
11-04-08
Renewal Date
08-11-08
Date
STATE OF CALIFORNIA

The State of California or its officers or agents shall not be responsible for the accuracy or completeness of electronic copies of this plan sheet.

To accompany plans dated 6-29-09

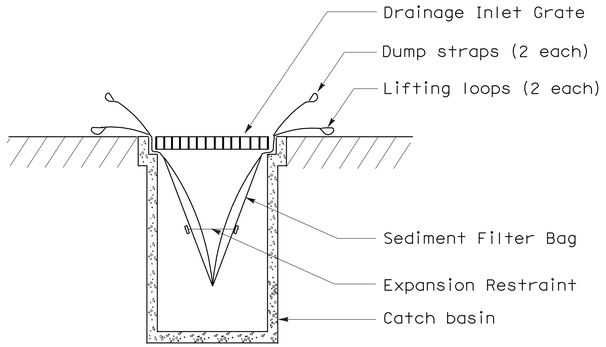

SECTION B-B

SEDIMENT FILTER BAG DETAIL

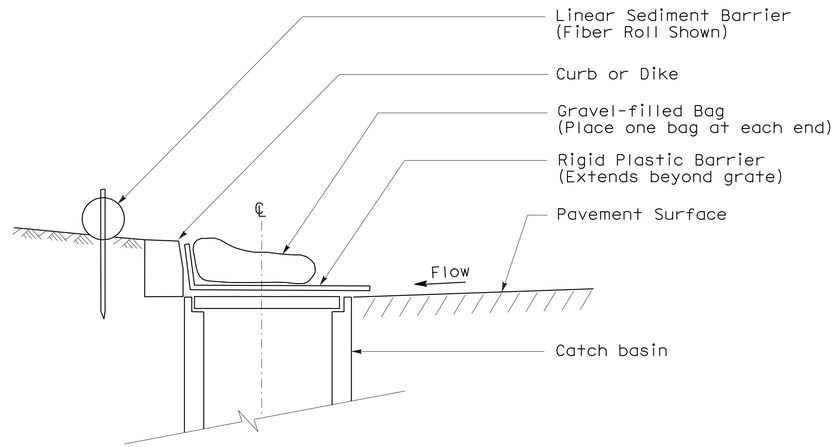

SECTION

TEMPORARY DRAINAGE INLET PROTECTION (TYPE 6A) (CATCH BASIN WITH GRATE)

NOTES:

1. See Standard Plan T51 for Temporary Silt Fence.
2. Dimensions may vary to fit field conditions.

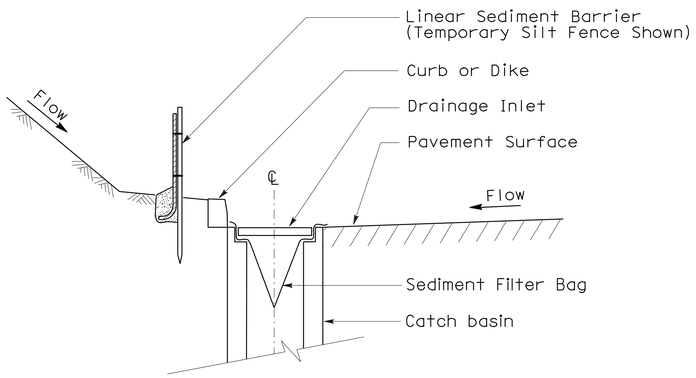

SECTION A-A

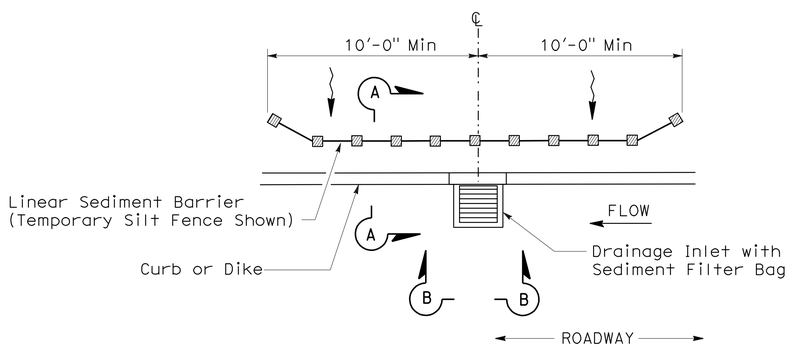

PLAN

TEMPORARY DRAINAGE INLET PROTECTION (TYPE 5) (SEDIMENT FILTER BAG)

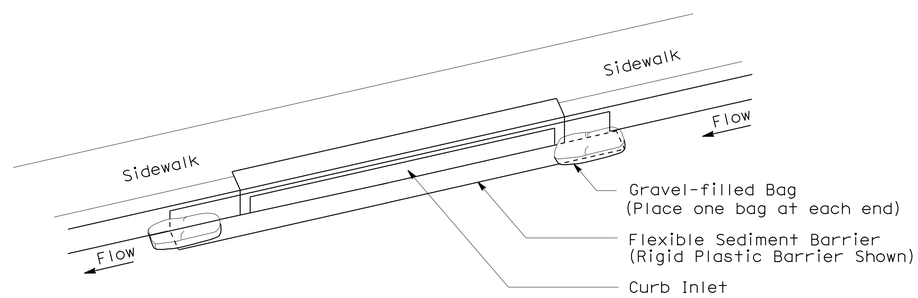

PERSPECTIVE

TEMPORARY DRAINAGE INLET PROTECTION (TYPE 6B) (CURB INLET WITHOUT GRATE)

STATE OF CALIFORNIA
DEPARTMENT OF TRANSPORTATION

TEMPORARY WATER POLLUTION CONTROL DETAILS (TEMPORARY DRAINAGE INLET PROTECTION)

NO SCALE

NSP T64 DATED AUGUST 15, 2008 SUPPLEMENTS
THE STANDARD PLANS BOOK DATED MAY 2006.

NEW STANDARD PLAN NSP T64

2006 NEW STANDARD PLAN NSP T64

7-11-08

DIST	COUNTY	ROUTE	POST MILES TOTAL PROJECT	SHEET NO.	TOTAL SHEETS
10	SJ,Sta	99	R24.3/R24.8, 0.0/1.7	59	63

REGISTERED ELECTRICAL ENGINEER

October 5, 2007
PLANS APPROVAL DATE

REGISTERED PROFESSIONAL ENGINEER Jeffery G. McRae No. E14512 Exp. 6-30-08 ELECTRICAL STATE OF CALIFORNIA

The State of California or its officers or agents shall not be responsible for the accuracy or completeness of electronic copies of this plan sheet.

To accompany plans dated 6-29-09

2006 REVISED STANDARD PLAN RSP ES-1A

ELECTROLIERS

STANDARD TYPES
15, 15D
15 STRUCTURE
21, 21D STRUCTURE
30
31
32
35
36-20A

High mast light pole

Double Arm lighting standard

Existing electrolier

Electrolier foundation (Future installation)

NOTES:

1. Luminaires shall be 310 W HPS when installed on Type 21, 21D, 30, 31, 32, 35 and 36-20A Standards, unless otherwise specified. Luminaires shall be 200 W HPS when installed on other type standards or poles, unless otherwise specified.
2. Luminaires shall be the cutoff type, ANSI Type III medium cutoff lighting distribution, unless otherwise specified.
3. Variations noted adjacent to symbol on project plans.

Electrolier (see project notes or project plans)

Luminaire on wood pole

STANDARD NOTES:

- AB — Abandon. If applied to conduit, remove conductors.
- BC — Install pull box in existing conduit run.
- BP — Pedestrian barricade, type as indicated on plan.
- CB — Install conduit into existing pull box.
- CC — Connect new and existing conduit. Remove existing conductors and install conductors as indicated.
- CF — Conduit to remain for future use. Remove conductors. Install pull wire or rope.
- DH — Detector handhole.
- FA — Foundation to be abandoned.
- IS — Install sign on signal mast arm.
- NS — No slip base on standard.
- PEC — Photoelectric control.
- PEU — Photoelectric unit.
- RC — Equipment or material to be removed and become the property of the Contractor.
- RE — Remove electrolier, fuses and ballast. Tape ends of conductors.
- RL — Relocate equipment.
- RR — Remove and reuse equipment.
- RS — Remove and salvage equipment.
- SC — Splice new to existing conductors.
- SD — Service disconnect.
- SF — Standard to remain for future use. Remove luminaire, pole conductors, fuses and ballast.
- TSP — Telephone service point.

ABBREVIATIONS AND EQUIPMENT DESIGNATIONS

PROPOSED	EXISTING	
BBS	bbs	Battery backup system
BC	bc	Bolt circle
C	C	Conduit
CCTV	cctv	Closed circuit television
CKT	ckt	Circuit
CMS	cms	Changeable message sign
DLC	dlc	Loop detector lead-in cable
EMS	ems	Extinguishable message sign
EVC	evc	Emergency vehicle cable
EVD	evd	Emergency vehicle detector
FB	fb	Flashing beacon
FBCA	fbca	Flashing beacon control assembly
FBS	fbs	Flashing beacon with slip base
FO	fo	Fiber optic
G	G	Ground (Equipment Grounding Conductor)
GFCI	GFCI	Ground fault circuit interrupt
HAR	har	Highway advisory radio
HEX	hex	Hexagonal
HPS	hps	High pressure sodium
IISNS	iisns	Internally illuminated street name sign
ISL	isl	Induction sign lighting
LED	led	Light emitting diode
LMA	lma	Luminaire mast arm
LPS	lps	Low pressure sodium
LTG	ltg	Lighting
LUM	lum	Luminaire
MAT	mat	Mast arm mounting vehicle signal faces, top attachment
MAS	mas	Mast arm mounting vehicle signal faces, side attachment
MAS-4A	mas-4A	Mast arm mounting vehicle signal faces, side attachment - 4 signal section
MAS-4B	mas-4B	
MAS-4C	mas-4C	
MAS-5A	mas-5A	Mast arm mounting vehicle signal faces, side attachment - 5 signal section
MAS-5B	mas-5B	
MC	mc	Mercury contactor
M/M	m/m	Multiple to multiple transformer
MT	mt	Conduit with pull wire or rope only
MTG	mtg	Mounting
	mv	Mercury vapor lighting fixture
N	N	Neutral (Grounded Conductor)
NC	NC	Normally closed
NO	NO	Normally open
PB	pb	Pull box
PEC	pec	Photoelectric control (Type I, II, III, IV or V as shown)
PED	ped	Pedestrian
PEU	peu	Photoelectric unit
PPB	ppb	Pedestrian push button
RL		Relocated equipment
RM	rm	Ramp metering
SB	sb	Slip base
SIC	sic	Signal interconnect cable
SIG	sig	Signal
SMA	sma	Signal mast arm
SNS	sns	Street name sign
SP	sp	Service point
TDC	tdc	Telephone demarcation cabinet
TMS	tms	Traffic monitoring station
TOS	tos	Traffic Operations System
VEH	veh	Vehicle
XFMR	xfmr	Transformer
COMM	comm	Communication
RWIS	rwis	Roadway weather information system

SOFFIT AND WALL MOUNTED LUMINAIRES

Pendant, 70 W HPS unless otherwise specified.

Flush, 70 W HPS unless otherwise specified.

Wall surface, 70 W HPS unless otherwise specified.

Existing soffit or wall luminaire to remain unmodified.

Existing soffit or wall luminaire to be modified as specified.

NOTE:

Arrow indicates "street side" of luminaire.

STATE OF CALIFORNIA
DEPARTMENT OF TRANSPORTATION

ELECTRICAL SYSTEMS (SYMBOLS AND ABBREVIATIONS)

NO SCALE

RSP ES-1A DATED OCTOBER 5, 2007 SUPERSEDES STANDARD PLAN ES-1A DATED MAY 1, 2006 - PAGE 400 OF THE STANDARD PLANS BOOK DATED MAY 2006.

REVISED STANDARD PLAN RSP ES-1A

DIST	COUNTY	ROUTE	POST MILES TOTAL PROJECT	SHEET NO.	TOTAL SHEETS
10	SJ,Sta	99	R24.3/R24.8, 0.0/1.7	60	63

REGISTERED ELECTRICAL ENGINEER

October 5, 2007
PLANS APPROVAL DATE

REGISTERED PROFESSIONAL ENGINEER Jeffery G. McRae No. E14512 Exp. 6-30-08 ELECTRICAL STATE OF CALIFORNIA

The State of California or its officers or agents shall not be responsible for the accuracy or completeness of electronic copies of this plan sheet.

To accompany plans dated 6-29-09

CONDUIT

PROPOSED	EXISTING	
		Lighting Conduit, unless otherwise indicated or noted
		Traffic signal conduit
C	c	Communication conduit
T	t	Telephone conduit
F	f	Fire alarm conduit
FO	fo	Fiber optic conduit
		Conduit termination (RSP ES-9A C)
R	r	Conduit riser in/on structure or service pole

SERVICE EQUIPMENT

PROPOSED	EXISTING	
OH	oh	Overhead lines
U	U	Wood pole "U" indicates utility owned
		Pole guy with anchor
		Utility transformer - ground mounted
III		Service equipment enclosure type
		Service equipment enclosure door indicates front of enclosure
T	t	Telephone demarcation cabinet

POLE-MOUNTED SERVICE DESIGNATION

Type of installation

TYPE H SERVICE - 28'-10" ← Pole height above grade

ILLUMINATED OVERHEAD SIGN

PROPOSED	EXISTING	
		Overhead sign - Single post
		Overhead sign - Two post
		Overhead sign - Mounted on structure
		Overhead sign with electrolier

SIGNAL EQUIPMENT

PROPOSED	EXISTING	
		Pedestrian signal face
		Pedestrian push button post
		Pedestrian barricade
		Vehicle signal face (with backplate, 3-Section: red, yellow and green)
		Vehicle signal face with angle visors
PV	PV	Modifications of basic symbols: "L" indicates all non-arrow sections louvered "LG" indicates louvered green section only "PV" indicates 12" programmed visibility sections "8" indicates all 8" sections (only when specified)
		Type 15TS and Vehicle signal face
		Vehicle signal face with red, yellow and green left arrow sections
		Vehicle signal face with red and yellow sections and up green arrow
		Vehicle signal face (5 Section) with red, yellow and green sections and yellow and green right arrows
		Type 1 Standard and attached vehicle signal faces
		Standard with signal mast arm only and attached vehicle signal faces and internally illuminated street name sign
		Type 33 Standard, Left-turn vehicle signal face and sign
		Standard with luminaire and signal mast arms and attached vehicle signal faces
		Cantilever flashing beacon Type 9 Frame, with a sign unless otherwise specified or indicated
		Type 15-FBS Standard with two vehicle signal face sections with lens, backplate and visor with a sign
R	Y	Flashing beacon. One vehicle signal face section with lens, backplate and visor. "R" indicates red indication, "Y" indicates yellow indication
		Controller assembly. Door indicates front of cabinet

SIGNAL EQUIPMENT Cont

PROPOSED	EXISTING	
		Guard post
		Type 1 Standard with "Meter On" sign
		Emergency Vehicle detector

NOTES:

1. All signal sections shall be 12" unless shown otherwise.
2. Signal heads shall be provided with backplates unless shown otherwise.
3. Signal indication shall be LED.

STATE OF CALIFORNIA
DEPARTMENT OF TRANSPORTATION

ELECTRICAL SYSTEMS (SYMBOLS AND ABBREVIATIONS)

NO SCALE

RSP ES-1B DATED OCTOBER 5, 2007 SUPERCEDES STANDARD PLAN ES-1B DATED MAY 1, 2006 - PAGE 401 OF THE STANDARD PLANS BOOK DATED MAY 2006.

REVISED STANDARD PLAN RSP ES-1B

2006 REVISED STANDARD PLAN RSP ES-1B

7-10-07

DIST	COUNTY	ROUTE	POST MILES TOTAL PROJECT	SHEET NO.	TOTAL SHEETS
10	SJ,Sta	99	R24.3/R24.8, 0.0/1.7	61	63

REGISTERED ELECTRICAL ENGINEER

October 5, 2007
PLANS APPROVAL DATE

REGISTERED PROFESSIONAL ENGINEER Jeffery G. McRae No. E14512 Exp. 6-30-08 ELECTRICAL STATE OF CALIFORNIA

The State of California or its officers or agents shall not be responsible for the accuracy or completeness of electronic copies of this plan sheet.

To accompany plans dated 6-29-09

2006 REVISED STANDARD PLAN RSP ES-1C

EQUIPMENT IDENTIFICATION

ILLUMINATED SIGN IDENTIFICATION NUMBER:

Sign No. 12345

10 ISL SCI 1.0

- Sign number - Place on post or structure
- Transformer rating (kVA)
- Lighting control type
- Number and type of fixtures

Do NOT place on standard or structure

ELECTROLIER OR EQUIPMENT IDENTIFICATION NUMBER:

12345 - 15'-0"

- Mast arm length, if shown. Do not place on standard or structure.
- Equipment number - Place on standard or structure. Existing equipment numbers are shown in parenthesis

CONDUIT AND CONDUCTOR IDENTIFICATION:

1½"C, 2#10, 15#14, 2 DLC

- Number and size of conductors and cables
- Size of conduit in inches

Ø1, Ø2, Ø2P, etc.	Traffic phase identification for signal faces, detectors and phase diagrams
1 2 3	Project note numbers
A B C	Equipment description, installation or item numbers
1 2 3	Conduit run numbers

SIGNAL AND LIGHTING STANDARD (TYPICAL DESIGNATION):

19A - 3 - 100

- Wind velocity = 100 mph
- Case 3 arm loading
- Standard type
- Standard Plan sheet number
- Detail number or letter

MISCELLANEOUS EQUIPMENT

PROPOSED	EXISTING	
CMS	cms	Changeable message sign
		Closed circuit television camera
		Highway advisory radio pole and antenna
EMS	ems	Extinguishable message sign
M V	m v	Detection device M = Microwave sensor V = Video image sensor

WIRING DIAGRAM LEGEND

P	Pole
CB	Circuit breaker
A	Ampere
V	Volt
M	Metered
UM	Unmetered
NB	Neutral bus
GB	Ground bus
G	Equipment grounding conductor
N	Grounded conductor (Neutral)

- External conductor
- Conductor or bus
- Tie point
- Contactor coil
- Contactor, Contact NO
- Terminal blocks
- Contactor, Contact NC
- Enclosure bond
- Grounding electrode
- Circuit breaker
- Receptacle

PULL BOXES

PROPOSED EXISTING

Pull box-No. 5 unless otherwise indicated or noted.

3 9A(21)

Pull box-Additional designations or descriptions

3	= No. 3½ pull box
5	= No. 5 pull box
6	= No. 6 pull box
7	= No. 7 (Ceiling pull box)
8	= No. 8 (Pendant soffit pull box)
9	= No. 9 pull box
9A	= No. 9A pull box

(C) = Communications pull box
(E) = Pull box with extension
(S) = Sprinkler control pull box
(21) = Anchor bolts and conduit for future installation of Type 21 Standard
(T) = Traffic pull box

VEHICLE DETECTORS

5 J 9 U

- Vehicle detector designation
- U = Upper
- L = Lower
- Slot number in input file
- Input file (I or J)
- Phase

PROPOSED EXISTING

	Type A detector loop. Outline of sawcut shown.
	Type B detector loop. Outline of sawcut shown.
	Type C detector loop. Outline of sawcut shown.
	Type D detector loop. Outline of sawcut shown.
	Type E detector loop. Outline of sawcut shown.
	Type Q detector loop. Outline of sawcut shown.
	Magnetic detector
DH dh	Detector handhole
	Microwave or video detection zone

STATE OF CALIFORNIA
DEPARTMENT OF TRANSPORTATION

ELECTRICAL SYSTEMS (SYMBOLS AND ABBREVIATIONS)

NO SCALE

RSP ES-1C DATED OCTOBER 5, 2007 SUPERCEDES STANDARD PLAN ES-1C DATED MAY 1, 2006 - PAGE 402 OF THE STANDARD PLANS BOOK DATED MAY 2006.

REVISED STANDARD PLAN RSP ES-1C

DIST	COUNTY	ROUTE	POST MILES TOTAL PROJECT	SHEET No	TOTAL SHEETS
10	SJ,Sta	99	R24.3/R24.8, 0.0/1.7	62	63

REGISTERED CIVIL ENGINEER 2/19/09 DATE

6-29-09
PLANS APPROVAL DATE

The State of California or its officers or agents shall not be responsible for the accuracy or completeness of electronic copies of this plan sheet.

REGISTERED PROFESSIONAL ENGINEER — Don L. Nguyen-Tan No. C 57510 Exp. 12-31-09 CIVIL — STATE OF CALIFORNIA

Legend:

1. Remove Barrier Railing (DMBB)
2. Concrete Barrier (Type 60A modified)
3. Temporary Railing (Type K), see "Road Plans"
4. Shoulder rumble strips, see "Highway Plans"
5. Refinish Bridge Deck

—·—·— Indicates exist structure
——— Indicates new structure

INDEX TO PLANS

SHEET NO.	SHEET TITLE
1	GENERAL PLAN
2	BARRIER DETAILS

QUANTITIES

BRIDGE REMOVAL (PORTION)	LUMP	SUM
REFINISH BRIDGE DECK	634	SQFT
CONCRETE BARRIER (TYPE 60A MODIFIED)	1,293	LF

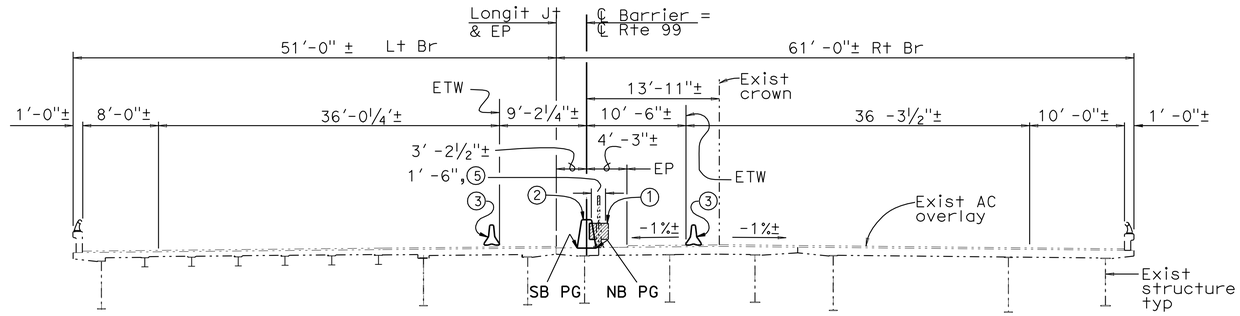

TYPICAL SECTION

⅛" = 1'-0"

STANDARD PLANS DATED MAY 2006

A10A	ACRONYMS AND ABBREVIATIONS (A-L)
A10B	ACRONYMS AND ABBREVIATIONS (M-Z)
A76A	CONCRETE BARRIER TYPE 60
A76B	CONCRETE BARRIER TYPE 60

STANDARD PLAN SHEET NO.
DETAIL NO.

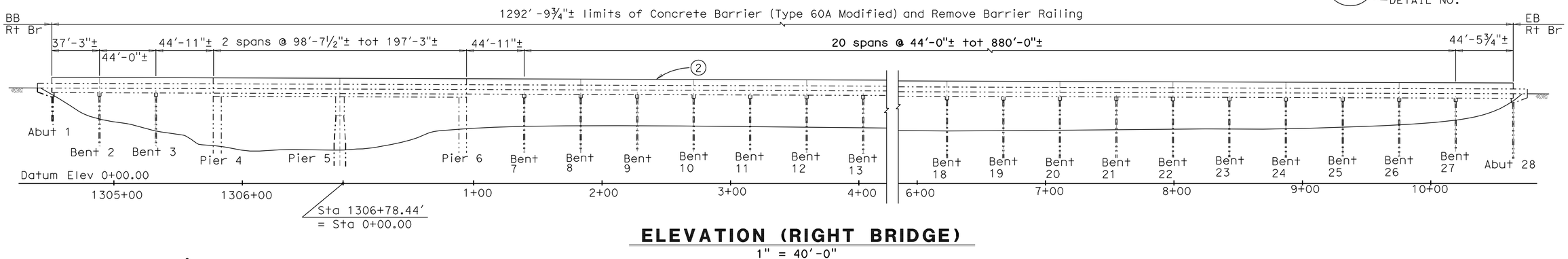

ELEVATION (RIGHT BRIDGE)

1" = 40'-0"

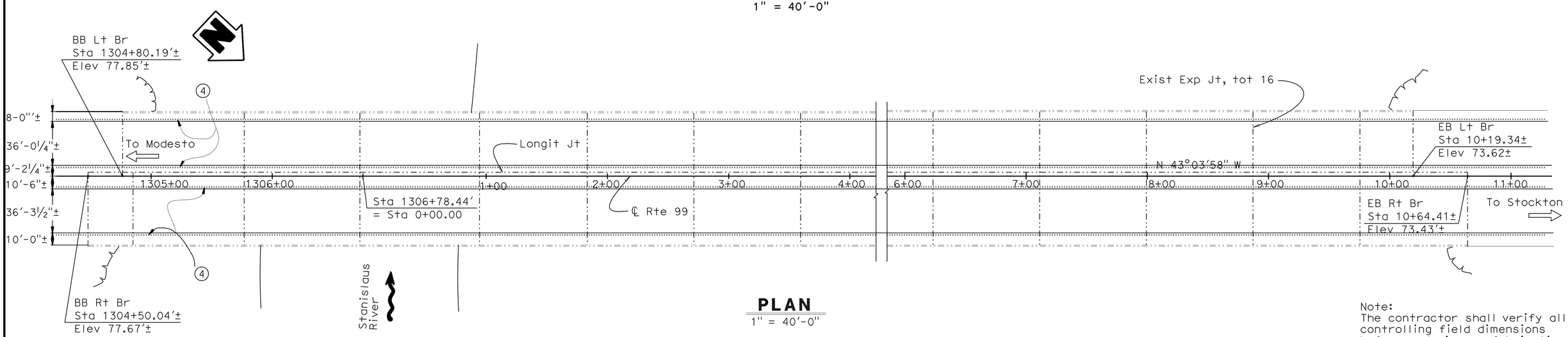

PLAN

1" = 40'-0"

Note:
The contractor shall verify all controlling field dimensions before ordering or fabricating any material

DESIGN	BY D. Nguyen-Tan	CHECKED T. Bui	LOAD & RESISTANCE FACTOR DESIGN	LIVE LOADING: HL93 W/"LOW-BOY"; PERMIT DESIGN VEHICLE	
DETAILS	BY L. Wang/ C. Schellenger	CHECKED T. Bui	LAYOUT	BY D. Nguyen-Tan	CHECKED T. Bui
QUANTITIES	BY D. Nguyen-Tan	CHECKED T. Bui	SPECIFICATIONS	BY J. Strootman	PLANS AND SPECS COMPARED D. Nguyen-Tan

Kevin Keady
DESIGN ENGINEER

STATE OF CALIFORNIA
DEPARTMENT OF TRANSPORTATION

DIVISION OF ENGINEERING SERVICES
STRUCTURE DESIGN
DESIGN BRANCH 17

CU 10
EA 0L6301

BRIDGE NO. 29-0013L/R
POST MILE R39.1/2.7

STANISLAUS RIVER BRIDGE
GENERAL PLAN

ORIGINAL SCALE IN INCHES FOR REDUCED PLANS 0 1 2 3

DISREGARD PRINTS BEARING EARLIER REVISION DATES 09-17-08 10-17-08 11-10-08

REVISION DATES

SHEET 1 OF 2

STRUCTURES DESIGN GENERAL PLAN SHEET (ENGLISH) (REV.07-24-06)

FILE => 29-0013lr-a-gpe.dgn

USERNAME => trmikest DATE PLOTTED => 06-JUL-2009 TIME PLOTTED => 06:56

DIST	COUNTY	ROUTE	POST MILES TOTAL PROJECT	SHEET No	TOTAL SHEETS
10	SJ,Sta	99	R24.3/R24.8, 0.0/1.7	63	63

REGISTERED CIVIL ENGINEER — DATE 2/19/09

6-29-09
PLANS APPROVAL DATE

The State of California or its officers or agents shall not be responsible for the accuracy or completeness of electronic copies of this plan sheet.

REGISTERED PROFESSIONAL ENGINEER — Don L. Nguyen-Tan — No. C 57510 — Exp. 12-31-09 — CIVIL — STATE OF CALIFORNIA

GENERAL NOTES
LOAD AND RESISTANCE FACTOR DESIGN

DESIGN:
AASHTO LRFD Bridge Design Specifications, Third Edition with the California Amendments v3.06.01; except bridge details taken from Standard Plans and Standard Bridge Detail XS Sheets are designed using Caltrans Bridge Design Specifications, April 2000, LFD Version.

REINFORCED CONCRETE:
Transverse Deck Slabs (Working Stress):

fS = 20,000 PSI
fC = 1,200 PSI
n = 10

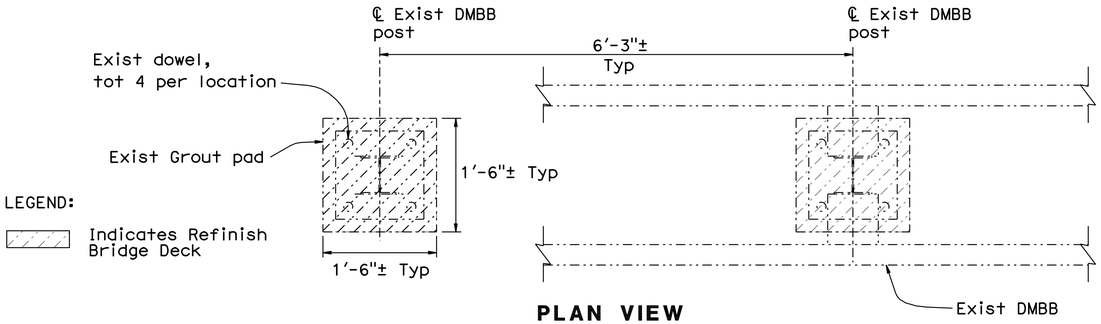

LEGEND:

Indicates Refinish Bridge Deck

PLAN VIEW
LIMITS OF REFINISH BRIDGE DECK
1" = 1'-0"

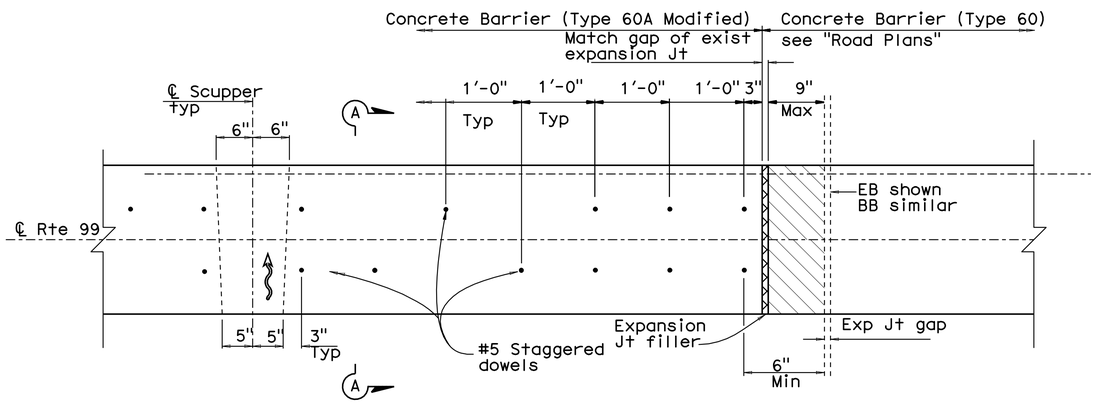

CONCRETE BARRIER
PLAN VIEW AT BB AND EB
1" = 1'-0"

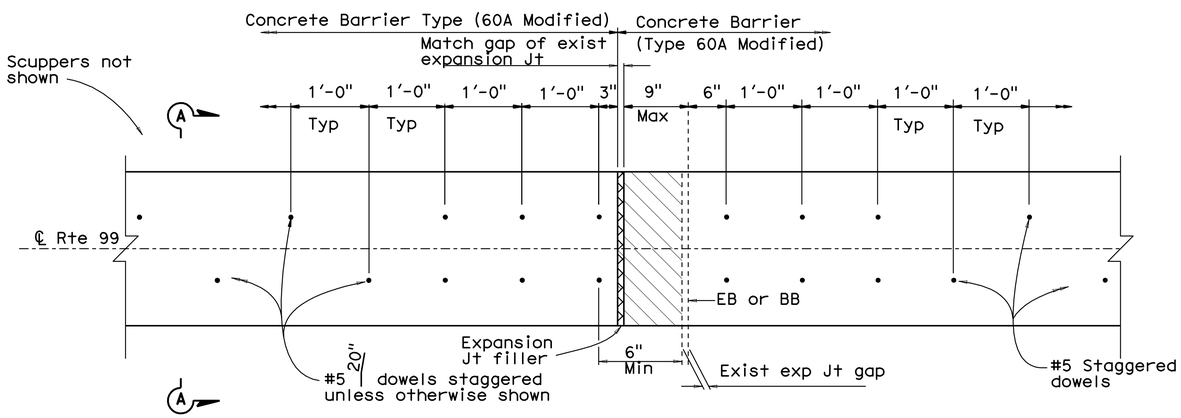

CONCRETE BARRIER
PLAN VIEW AT EXPANSION JOINTS
1" = 1'-0"

Note:

The contractor shall verify all controlling field dimensions before ordering or fabricating any material

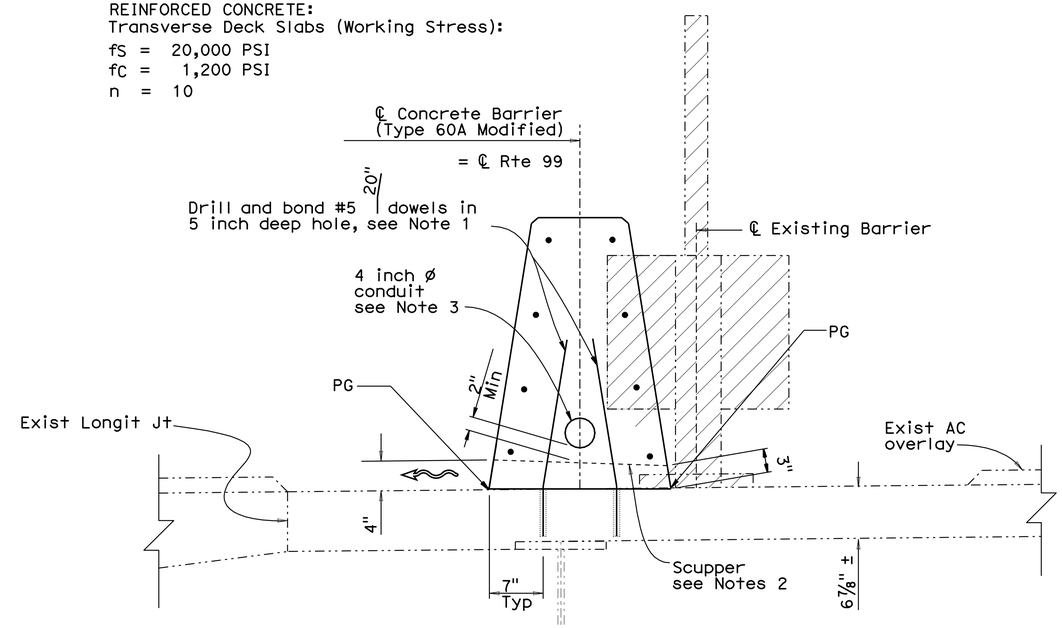

Notes:

1. Adjustments may be made in dowel spacing to clear existing reinforcement. Approval by the Engineer is required.
2. Scuppers shall be spaced 50 feet on center.
3. Expansion fittings/couplings shall be installed at each expansion joint.

LEGEND:

- Indicates new construction
- Indicates existing structure
- Expansion Jt filler
- Indicates removal of existing Barrier Railing
- Indicates .12" hardboard placed between exist deck and concrete barrier
- Denotes direction of deck drain flow

SECTION A-A
1" = 1'-0"

A76A A76B

DESIGN	BY D. Nguyen-Tan	CHECKED T. Bui	
DETAILS	BY L. Wang/ C. Schellenger	CHECKED T. Bui	
QUANTITIES	BY D. Nguyen-Tan	CHECKED T. Bui	

STATE OF CALIFORNIA
DEPARTMENT OF TRANSPORTATION

DIVISION OF ENGINEERING SERVICES
STRUCTURE DESIGN
DESIGN BRANCH 17

BRIDGE NO. 29-0013L/R
POST MILE R39.1/2.7

STANISLAUS RIVER BRIDGE
BARRIER DETAILS

STRUCTURES DESIGN DETAIL SHEET (ENGLISH) (REV. 10/25/05)

ORIGINAL SCALE IN INCHES FOR REDUCED PLANS 0 1 2 3

CU 10
EA 0L6301

DISREGARD PRINTS BEARING EARLIER REVISION DATES

REVISION DATES: 9-25-08 10-17-08 11-10-08

SHEET 2 OF 2

FILE => 29-0013lr-q-brgdte.dgn

USERNAME => trmikest DATE PLOTTED => 06-JUL-2009 TIME PLOTTED => 06:56