INFORMATION HANDOUT

For Contract No. 10-0K3404
At 10-5,99-Var

Identified by
Project ID 1014000166

MATERIALS INFORMATION

Manufacturer's Drawings for Alternative Flared Terminal System

Manufacturer's Drawings for Alternative In-Line Terminal System

Water Source Information

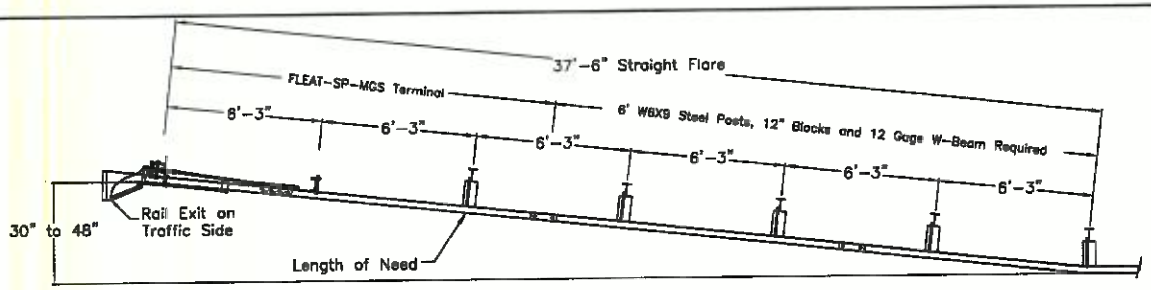

PLAN

TRAFFIC

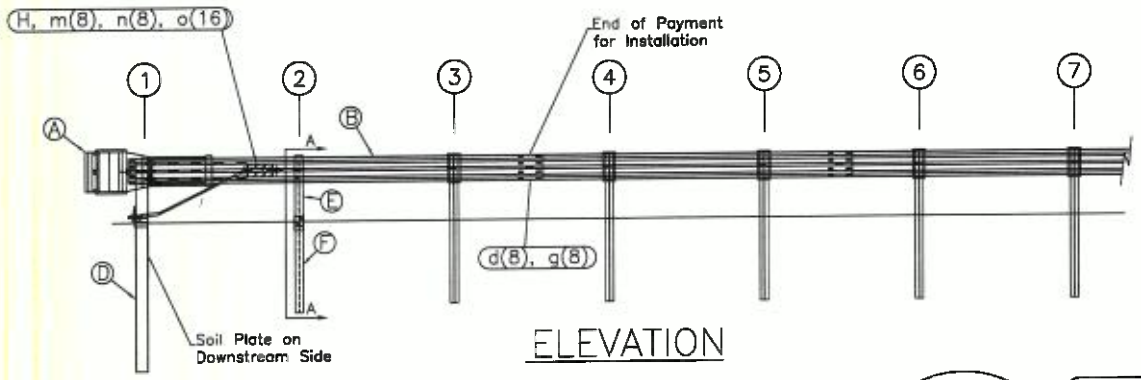

ELEVATION

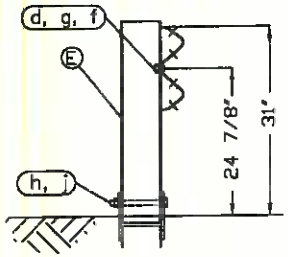

SECTION A-A
Post #2

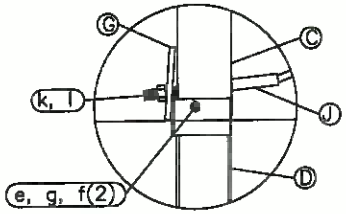

Post #1 Connection Detail

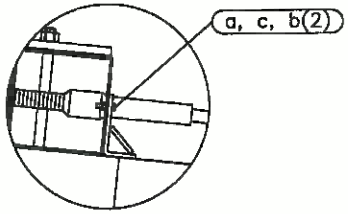

Impact Head Connection Detail

ITEM	QTY	BILL OF MATERIALS	ITEM NO.
A	1	IMPACT HEAD	F3000
B	1	W-BEAM GUARDRAIL END SECTION, 12 Ga.	MGS-SF1303
C	1	FIRST POST TOP (6X6X¼" Tube)	TPHP1A
D	1	FIRST POST BOTTOM (6" W6X15)	TPHP1B
E	1	SECOND POST ASSEMBLY TOP	UHP2A
F	1	SECOND POST ASSEMBLY BOTTOM	HP3B
G	1	BEARING PLATE	E750
H	1	CABLE ANCHOR BOX	S760
J	1	BCT CABLE ANCHOR ASSEMBLY	E770
		HARDWARE (ALL DIMENSIONS IN INCHES)	
a	2	5/16 x 1 HEX BOLT GRD 5	B51601 04A
b	4	5/16 WASHER	W0516
c	2	5/16 HEX NUT	N0516
d	9	5/8 Dia. x 1 1/4 SPLICE BOLT (POST #2)	B580122
e	1	5/8 Dia. x 9 HEX BOLT GRD 5	B580904A
f	3	5/8 WASHER	W050
g	10	5/8 Dia. H.G.R NUT	N050
h	1	3/4 Dia. x 8 1/2 HEX BOLT GRD A449	B340854A
j	1	3/4 Dia. HEX NUT	N030
k	2	1 ANCHOR CABLE HEX NUT	N100
l	2	1 ANCHOR CABLE WASHER	W100
m	8	CABLE ANCHOR BOX SHOULDER BOLT	SB58A
n	8	1/2 A325 STRUCTURAL NUT	N055A
o	16	1 1/16 OD x 9/16 ID A325 STR. WASHER	W050A

GENERAL NOTES:

1. All bolts, nuts, cable assemblies, cable anchors and bearing plates shall be galvanized.
2. The lower sections of the Posts 1&2 shall not protrude more than 4 in above the ground (measured along a 5' cord). Site grading may be necessary to meet this requirement.
3. The lower sections of the hinged posts should not be driven with the upper post attached. If the post is placed in a drilled hole, the backfill material must be satisfactorily compacted to prevent settlement.
4. When competent rock is encountered, a 12" Ø post hole, 20 in. deep cored into the rock surface may be used if approved by the engineer for post 1. Granular material will be placed in the bottom of the hole, approximately 2.5" deep to provide drainage. The first post can be field cut to length, placed in the hole and backfilled with suitable backfill. The soil plate may be trimmed if required.
5. The breakaway cable assembly must be taut. A locking device (vice grips or channel lock pliers) should be used to prevent the cable from twisting when tightening nuts.

R-SI
Road Systems, Inc.
Big Spring, TX
Phone: 432-263-2435
or Phone: 330-346-0721

FLEAT-SP-MGS Terminal
Midwest Guardrail System
31" Top of Rail

Sheet:	Date:	By:
1	02/24/10	JRR

Drawing Name:	Scale:	Rev:
FLT-SP-S-MGS	None	0

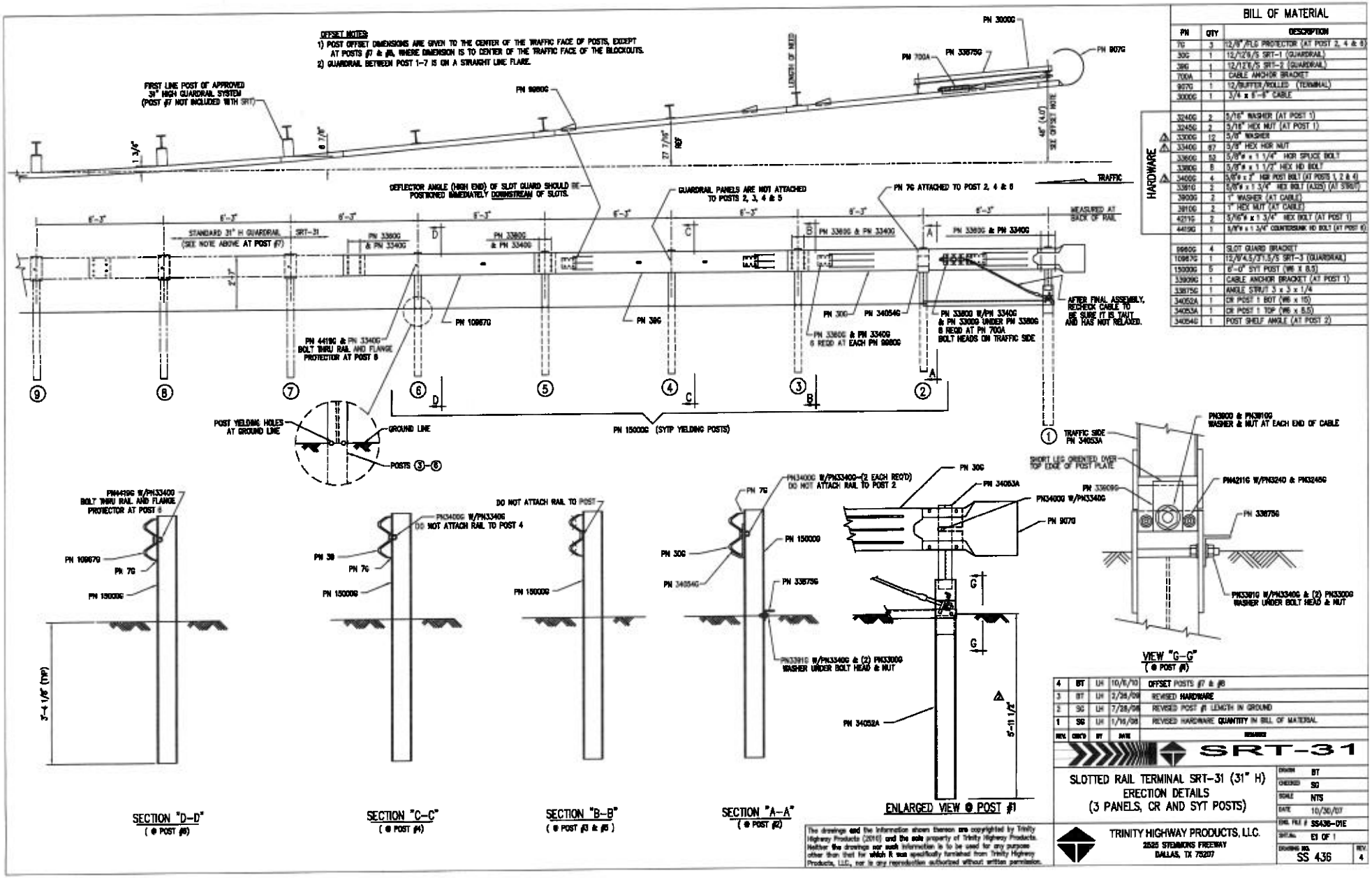

BILL OF MATERIAL

	PN	QTY	DESCRIPTION
	7G	3	12/8"/FLG PROTECTOR (AT POST 2, 4 & 6)
	30G	1	12/12'6/5 SRT-1 (GUARDRAIL)
	3BG	1	12/12'6/5 SRT-2 (GUARDRAIL)
	700A	1	CABLE ANCHOR BRACKET
	907G	1	12/BUFFER/ROLLED (TERMINAL)
	3000G	1	3/4 x 6'-6" CABLE
HARDWARE	3240G	2	5/16" WASHER (AT POST 1)
	3245G	2	5/16" HEX NUT (AT POST 1)
	3300G	12	5/8" WASHER
	3340G	67	5/8" HEX HDR NUT
	3360G	52	5/8"ø x 1 1/4" HDR SPUCE BOLT
	3380G	8	5/8"ø x 1 1/2" HEX HD BOLT
	3400G	4	5/8"ø x 2" HDR POST BOLT (AT POSTS 1, 2 & 4)
	33910	2	5/8"ø x 1 3/4" HEX BOLT (A325) (AT SYBOT)
	3800G	2	1" WASHER (AT CABLE)
	3810G	2	1" HEX NUT (AT CABLE)
	4211G	2	5/16"ø x 1 3/4" HEX BOLT (AT POST 1)
	4419G	1	5/8"ø x 1 3/4" COUNTERSUNK HD BOLT (AT POST 6)
	9060G	4	SLOT GUARD BRACKET
	109670	1	12/9'4.5/31.3/5 SRT-3 (GUARDRAIL)
	150000G	5	6'-0" SYT POST (W6 X 8.5)
	33800G	1	CABLE ANCHOR BRACKET (AT POST 1)
	33875G	1	ANGLE STRUT 3 x 3 x 1/4
	34052A	1	CR POST 1 BOT (W6 x 15)
	34053A	1	CR POST 1 TOP (W6 x 8.5)
	34054G	1	POST SHELF ANGLE (AT POST 2)

REV.	CHK'D	BY	DATE	REMARKS
4	BT	LH	10/8/10	OFFSET POSTS #7 & #8
3	BT	LH	2/26/09	REVISED HARDWARE
2	SG	LH	7/28/08	REVISED POST #1 LENGTH IN GROUND
1	SG	LH	1/16/08	REVISED HARDWARE QUANTITY IN BILL OF MATERIAL

SRT-31

SLOTTED RAIL TERMINAL SRT-31 (31" H) ERECTION DETAILS (3 PANELS, CR AND SYT POSTS)

The drawings and the information shown thereon are copyrighted by Trinity Highway Products (2010) and the sole property of Trinity Highway Products. Neither the drawings nor such information is to be used for any purpose other than that for which it was specifically furnished from Trinity Highway Products, LLC, nor is any reproduction authorized without written permission.

TRINITY HIGHWAY PRODUCTS, LLC.
2525 STEMMONS FREEWAY
DALLAS, TX 75207

DRAWN	BT
CHECKED	SG
SCALE	NTS
DATE	10/30/07
ENG. FILE #	SS436-01E
SHEET	01 OF 1
DRAWING NO.	SS 436
REV.	4

ITEM NO.	PART NUMBER	DESCRIPTION	QTY	UOM
1	BSI-1301252-KT	X-Tension Terminal Comp, 31 in	1	EACH
2	K070202	X-Tension Hardware Kit, GT,	1	EACH
3	K070206	X-Tension System Hardware Kit,	1	EACH
4	K070210	X-Tension GT Guardrail	1	EACH
5	B061100	BSI, I-Beam Post, Middle, X350	1	EACH
6	MANXT1	X-TENSION Installation Manual	1	EACH

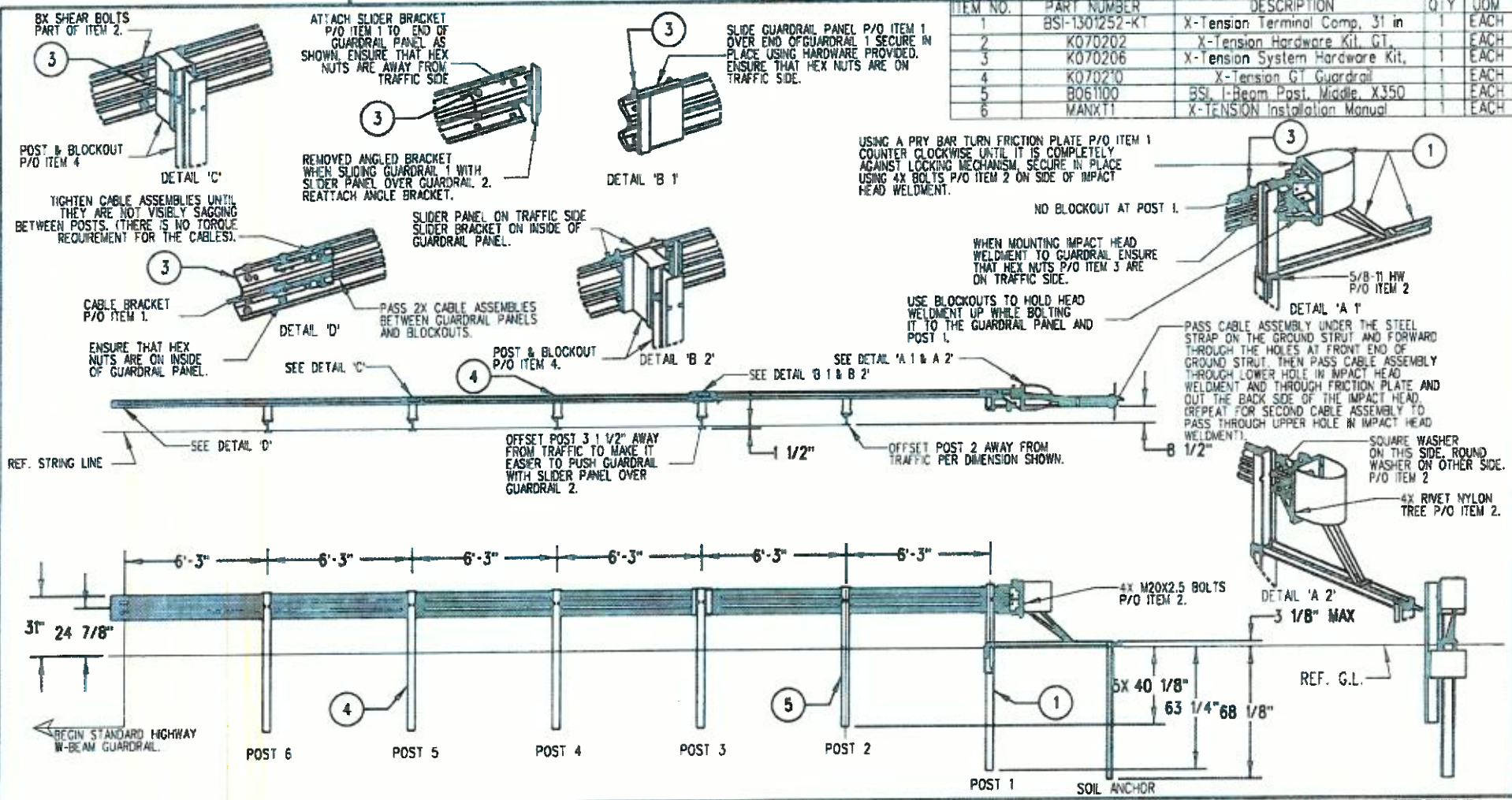

NOTES: UNLESS OTHERWISE SPECIFIED.

1. SYSTEM TO BE INSTALLED PER MANUFACTURER SPECIFICATIONS.
2. ONLY TIGHTEN THE CABLE ASSEMBLIES USING THE NUTS AT THE CABLE BRACKET (SEE DETAIL 'D'). DO NOT TIGHTEN THE CABLES AT THE FRONT OF THE GROUND ANCHOR.
3. WHEN DRIVING STEEL POST, ENSURE THAT A DRIVING CAP WITH TIMBER OR PLASTIC INSERT IS USED TO PREVENT DAMAGE TO THE GALVANIZING TO THE TOP OF THE POST.

©2012 BARRIER SYSTEMS INC. THE INFORMATION CONTAINED IN THIS DRAWING IS THE SOLE PROPERTY OF BARRIER SYSTEMS INC. ANY REPRODUCTION IN PART OR WHOLE WITHOUT THE WRITTEN PERMISSION OF BARRIER SYSTEMS INC. IS PROHIBITED.

APPROVALS

DRAWN BY:	NMV
DRAWN DATE:	2/08/13
APPRD BY:	JMT
APPRD DATE:	2/08/13

UNLESS OTHERWISE SPECIFIED DIMENSIONS ARE IN INCHES. TOLERANCES ARE:
FRACTIONS ±1/8 DECIMAL .XX ±.03 .XXX ±.010 ANGLES ±1/2°
INTERPRET DIMENSIONS AND TOLERANCES PER ASME Y14.5-1994
THIRD ANGLE PROJECTION
DO NOT SCALE DRAWING

REV	ECN#	DATE
B	2087	03/07/13
A	2082	2/08/13

LINDSAY TRANSPORTATION SOLUTIONS

BARRIER SYSTEMS INC.
3333 Vaca Valley Parkway, Ste 800
Vacaville, CA 95688
Tel: 888-800-3697
www.barriersystemsinc.com

TITLE: X-TENSION GUARDRAIL TERMINAL SYSTEM STEEL POST WITH COMPOSITE BLOCKOUT 31" RAIL HEIGHT

SIZE: B | DWG NO.: XTGTSS5 | REV.: B

SCALE: 1:50 | SHEET: 1 OF 1

Doc. B100108

NOTES: UNLESS OTHERWISE SPECIFIED.
1. X-TENSION SYSTEM TO BE INSTALLED PER MANUFACTURER'S INSTRUCTIONS.
2. SYSTEM SHOWN USING STEEL WIDE FLANGE POST WITH COMPOSITE OR PLASTIC BLOCKOUTS. POST 2 MUST BE A BREAKAWAY STYLE POST CRIMPED (AS SHOWN).
3. SYSTEM MAY ALSO USE TIMBER CRT POSTS WITH TIMBER BLOCKOUTS OR STEEL POSTS WITH TIMBER BLOCKOUTS.

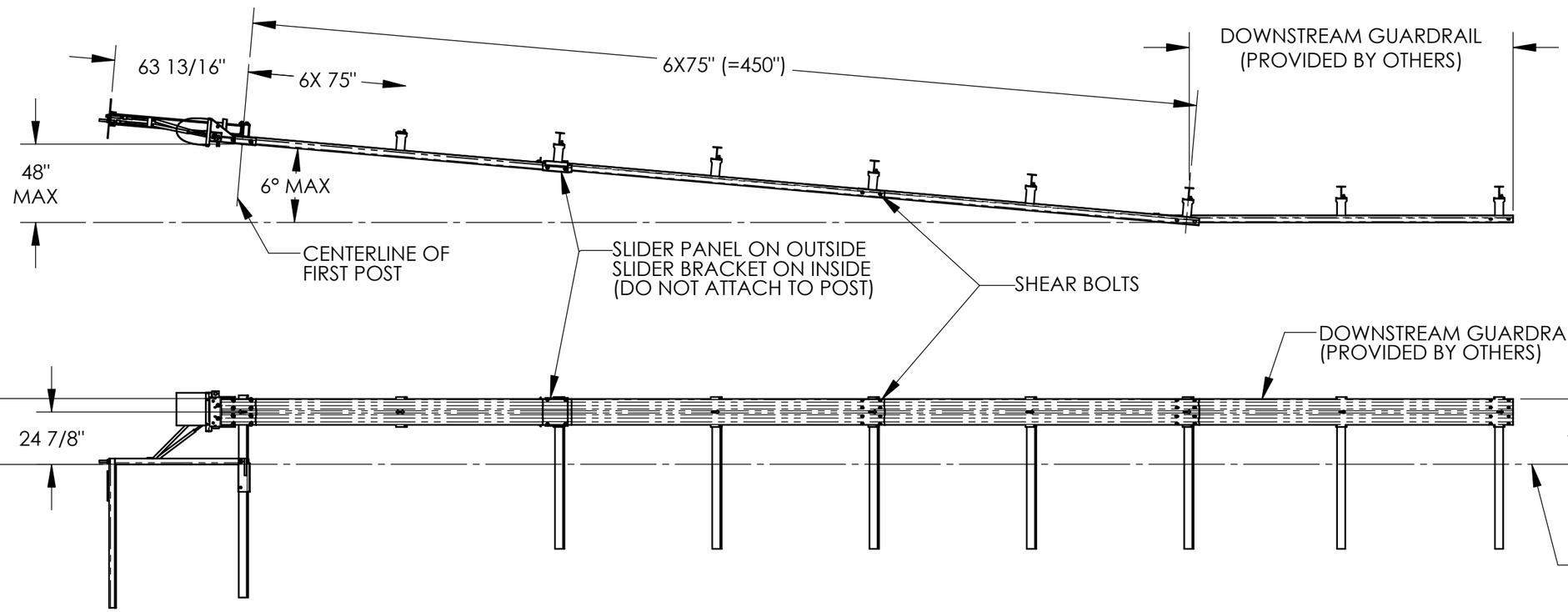

© 2012 BARRIER SYSTEMS INC.
THE INFORMATION CONTAINED IN THIS DRAWING IS THE SOLE PROPERTY OF BARRIER SYSTEMS INC. ANY REPRODUCTION IN PART OR WHOLE WITHOUT THE WRITTEN PERMISSION OF BARRIER SYSTEMS INC. IS PROHIBITED.

APPROVALS

DRAWN BY: NMB
DRAWN DATE: 5/28/14
APPR'D BY:
APPR'D DATE:

UNLESS OTHERWISE SPECIFIED DIMENSIONS ARE IN INCHES. TOLERANCES ARE:
FRACTIONS ±1/16 DECIMAL .XX = ±.03 .XXX = ±.010 ANGLES ±1/2°
INTERPRET DIMENSIONS AND TOLERANCES PER ASME Y14.5-1994

THIRD ANGLE PROJECTION

DO NOT SCALE DRAWING

REV	ECN#	DATE
0	AP 01059	5/28/14

LINDSAY™ TRANSPORTATION SOLUTIONS

BARRIER SYSTEMS INC.
3333 Vaca Valley Parkway Ste 800
Vacaville, CA 95688
Tel: 888-800-3691
www.barriersystemsinc.com

TITLE
31" X-TENSION GUARDRAIL SYSTEM FLARED CALTRANS

SIZE B | DWG NO. BSI-1405049-AP | REV. 0
SCALE 1:60 | SHEET 1 OF 1

Doc. B100108

Last Saved by: nvoelte; Thursday, May 29, 2014 8:42:09 AM

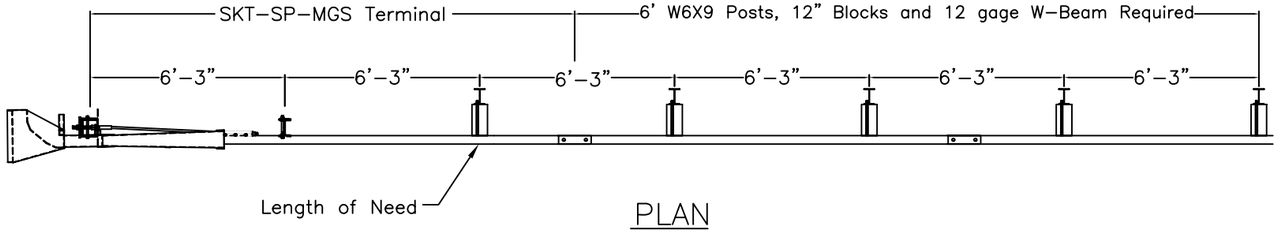

PLAN

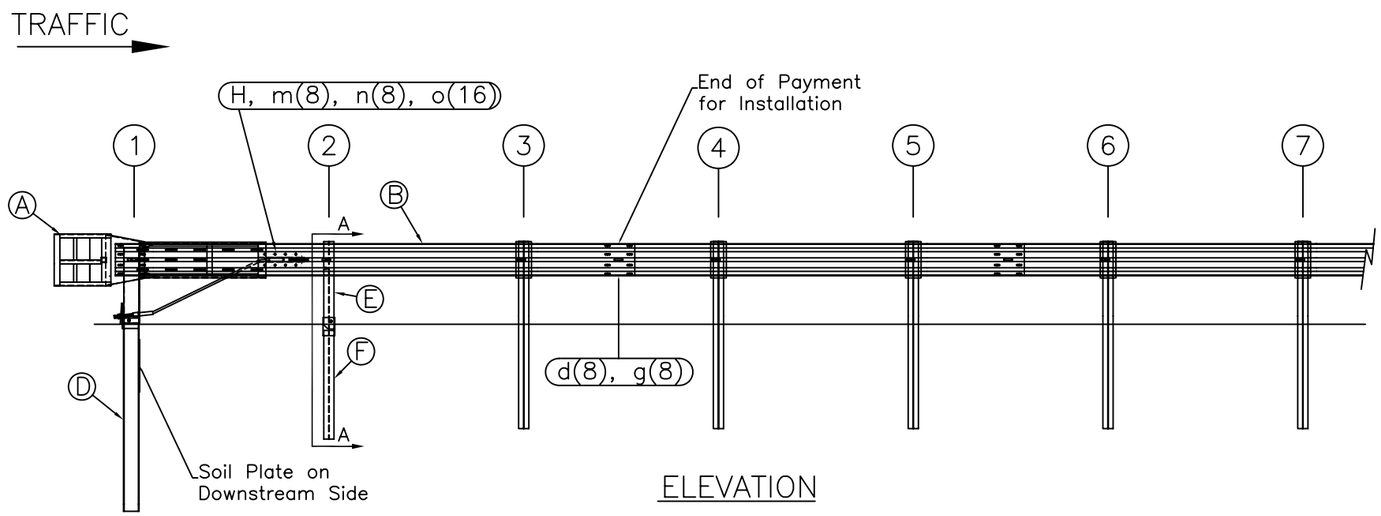

ELEVATION

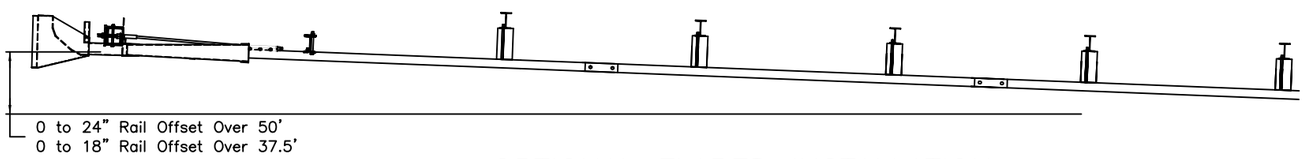

OPTIONAL FLARED INSTALLATION

25:1 maximum flare rate

ITEM	QTY	BILL OF MATERIALS	ITEM NO.
A	1	IMPACT HEAD	S3000
B	1	W-BEAM GUARDRAIL END SECTION, 12 Ga.	MGS-SF1303
C	1	FIRST POST TOP (6X6X$\frac{1}{8}$" Tube)	TPHP1A
D	1	FIRST POST BOTTOM (6' W6X15)	TPHP1B
E	1	SECOND POST ASSEMBLY TOP	UHP2A
F	1	SECOND POST ASSEMBLY BOTTOM	HP3B
G	1	BEARING PLATE	E750
H	1	CABLE ANCHOR BOX	S760
J	1	BCT CABLE ANCHOR ASSEMBLY	E770
		HARDWARE (ALL DIMENSIONS IN INCHES)	
a	2	5/16 x 1 HEX BOLT GRD 5	B5160104A
b	4	5/16 WASHER	W0516
c	2	5/16 HEX NUT	N0516
d	9	5/8 Dia. x 1 1/4 SPLICE BOLT (POST #2)	B580122
e	1	5/8 Dia. x 9 HEX BOLT GRD 5	B580904A
f	3	5/8 WASHER	W050
g	10	5/8 Dia. H.G.R NUT	N050
h	1	3/4 Dia. x 8 1/2 HEX BOLT GRD A449	B340854A
j	1	3/4 Dia. HEX NUT	N030
k	2	1 ANCHOR CABLE HEX NUT	N100
l	2	1 ANCHOR CABLE WASHER	W100
m	8	CABLE ANCHOR BOX SHOULDER BOLT	SB58A
n	8	1/2 A325 STRUCTURAL NUT	N055A
o	16	1 1/16 OD x 9/16 ID A325 STR. WASHER	W050A

GENERAL NOTES:

1. All bolts, nuts, cable assemblies, cable anchors and bearing plates shall be galvanized.
2. The lower sections of the Posts 1&2 shall not protrude more than 4 in above the ground (measured along a 5' cord). Site grading may be necessary to meet this requirement.
3. The lower sections of the hinged posts should not be driven with the upper post attached. If the post is placed in a drilled hole, the backfill material must be satisfactorily compacted to prevent settlement.
4. When competent rock is encountered, a 12" Ø post hole, 20 in. deep cored into the rock surface may be used if approved by the engineer for post 1. Granular material will be placed in the bottom of the hole, approximately 2.5" deep to provide drainage. The first post can be field cut to length, placed in the hole and backfilled with suitable backfill. The soil plate may be trimmed if required.
5. A site evaluation should be considered if there is less than 25' between the outlet side of the terminal and any adjacent driving lane.
6. The breakaway cable assembly must be taut. A locking device (vice grips or channel lock pliers) should be used to prevent the cable from twisting when tightening nuts.

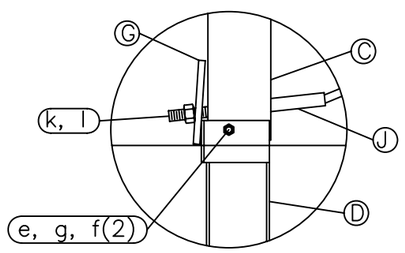

Post #1 Connection Detail

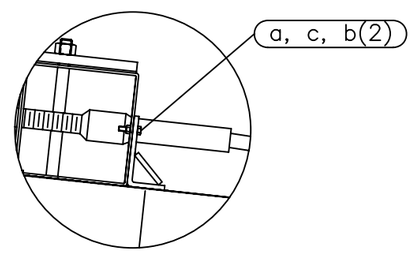

Impact Head Connection Detail

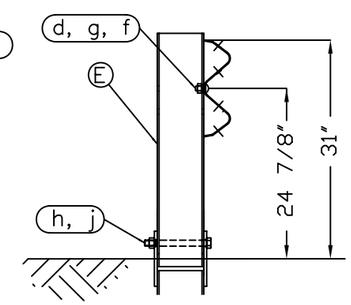

SECTION A-A

Post #2

RSI
Road Systems, Inc.
Big Spring, TX
Phone: 432-263-2435
or Phone: 330-346-0721

SKT-SP-MGS Terminal
Midwest Guardrail System
31" Top of Rail

Sheet: 1
Date: 02/24/10
By: JRR
Drawing Name: SKT-SP-S-MGS
Scale: None
Rev: 0

Appendix A - System Configuration, 37' 6" MGS

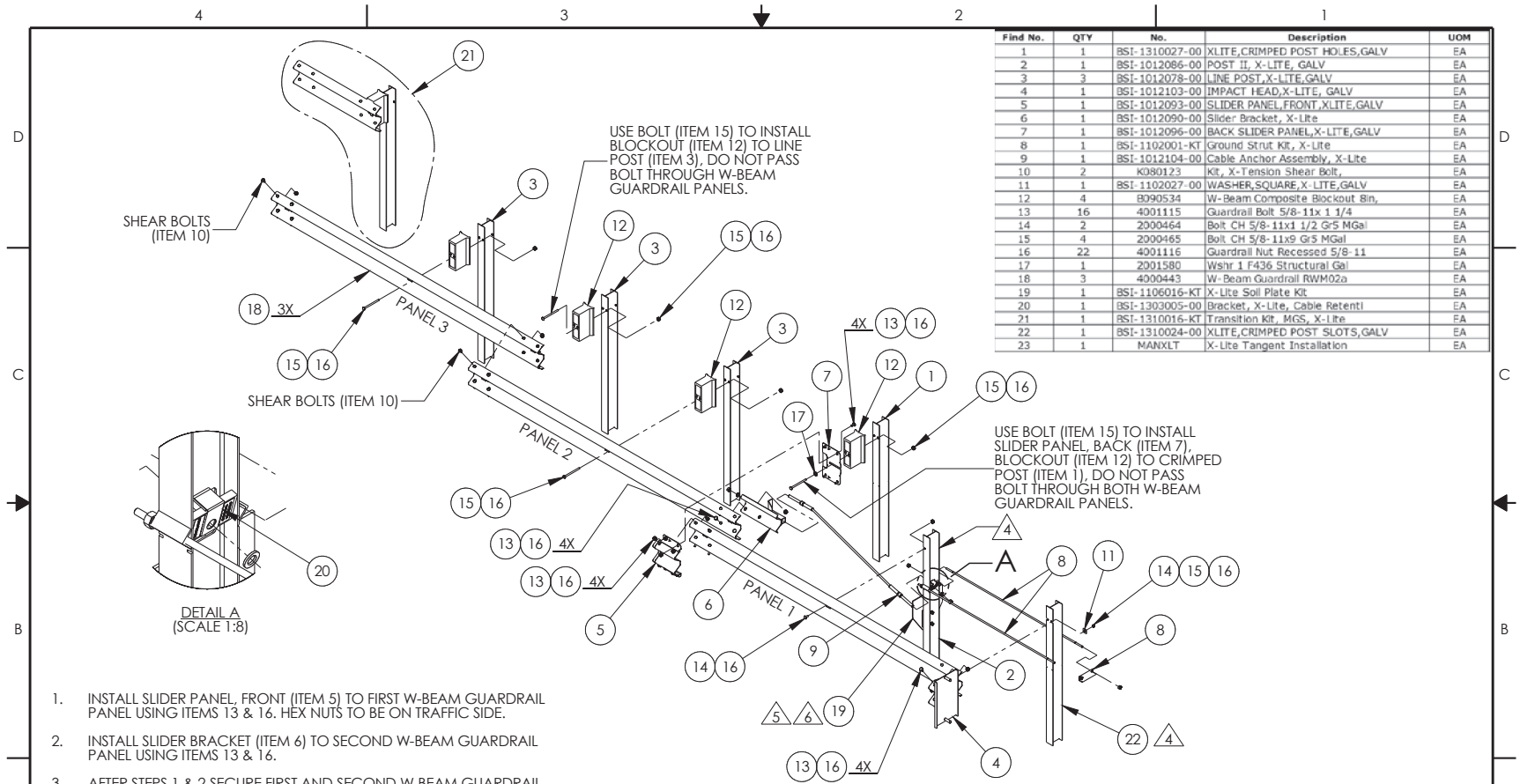

Find No.	QTY	No.	Description	UOM
1	1	BSI-1310027-00	XLITE,CRIMPED POST HOLES,GALV	EA
2	1	BSI-1012086-00	POST II, X-LITE, GALV	EA
3	3	BSI-1012078-00	LINE POST,X-LITE,GALV	EA
4	1	BSI-1012103-00	IMPACT HEAD,X-LITE, GALV	EA
5	1	BSI-1012093-00	SLIDER PANEL,FRONT,XLITE,GALV	EA
6	1	BSI-1012090-00	Slider Bracket, X-Lite	EA
7	1	BSI-1012096-00	BACK SLIDER PANEL,X-LITE,GALV	EA
8	1	BSI-1102001-KT	Ground Strut Kit, X-Lite	EA
9	1	BSI-1012104-00	Cable Anchor Assembly, X-Lite	EA
10	2	K080123	Kit, X-Tension Shear Bolt,	EA
11	1	BSI-1102027-00	WASHER,SQUARE,X-LITE,GALV	EA
12	4	B090534	W-Beam Composite Blockout 8in,	EA
13	16	4001115	Guardrail Bolt 5/8-11x 1 1/4	EA
14	2	2000464	Bolt CH 5/8-11x1 1/2 Gr5 MGal	EA
15	4	2000465	Bolt CH 5/8-11x9 Gr5 MGal	EA
16	22	4001116	Guardrail Nut Recessed 5/8-11	EA
17	1	2001580	Wshr 1 F436 Structural Gal	EA
18	3	4000443	W-Beam Guardrail RWM02a	EA
19	1	BSI-1106016-KT	X-Lite Soil Plate Kit	EA
20	1	BSI-1303005-00	Bracket, X-Lite, Cable Retentl	EA
21	1	BSI-1310016-KT	Transition Kit, MGS, X-Lite	EA
22	1	BSI-1310024-00	XLITE,CRIMPED POST SLOTS,GALV	EA
23	1	MANXLT	X-Lite Tangent Installation	EA

1. INSTALL SLIDER PANEL, FRONT (ITEM 5) TO FIRST W-BEAM GUARDRAIL PANEL USING ITEMS 13 & 16. HEX NUTS TO BE ON TRAFFIC SIDE.
2. INSTALL SLIDER BRACKET (ITEM 6) TO SECOND W-BEAM GUARDRAIL PANEL USING ITEMS 13 & 16.
3. AFTER STEPS 1 & 2 SECURE FIRST AND SECOND W-BEAM GUARDRAIL PANEL USING ITEMS 7, 13 & 16. HEX NUTS TO BE ON TRAFFIC SIDE.
4. SLOT ON POSTS 1 AND 2 TO FACE GUARDRAIL PANEL.
5. IF ROCK OR STIFF SOIL IS ENCOUNTERED, THE POST AND SOIL PLATE MAY BE INSTALLED BY AUGERING AND BACKFILLING THE HOLE. EXTRA CARE MUST BE TAKEN TO PREVENT SETTLEMENT OR LATERAL DISPLACEMENT OF THE POST. BACKFILL MATERIAL SHALL BE COMPACTED TO OPTIMUM COMPACTION.
6. IF ROCK IS ENCOUNTERED, THE SOIL PLATE MAY BE MODIFIED IF APPROVED BY THE PROJECT ENGINEER.

© 2010 BARRIER SYSTEMS INC. THE INFORMATION CONTAINED IN THIS DRAWING IS THE SOLE PROPERTY OF BARRIER SYSTEMS INC. ANY REPRODUCTION IN PART OR WHOLE WITHOUT THE WRITTEN PERMISSION OF BARRIER SYSTEMS INC. IS PROHIBITED.

APPROVALS

DRAWN BY:	JMT
DRAWN DATE:	10/09/2013
APPR'D BY:	GAD
APPR'D DATE:	10/09/13

UNLESS OTHERWISE SPECIFIED DIMENSIONS ARE IN INCHES. TOLERANCES ARE:
FRACTIONS ±1/16 DECIMAL .XX = ±.03 .XXX = ±.010 ANGLES ±1/2°
INTERPRET DIMENSIONS AND TOLERANCES PER ASME Y14.5-1994

THIRD ANGLE PROJECTION

DO NOT SCALE DRAWING

REV	ECN#	DATE
B	2220	01/23/14
A	2165	11/13/13
0	2151	10/09/13

BARRIER SYSTEMS
A LINDSAY TRANSPORTATION SOLUTIONS COMPANY
3333 Vaca Valley Parkway Ste 800
Vacaville, CA 95688
Tel: 888-800-3691
www.barriersystemsinc.com

TITLE
X-LITE SYSTEM ASSEMBLY, TANGENT, TRANSITION TO MGS

SIZE B | DWG NO. XLTSUS-MGS | REV. B
SCALE 1:40 | SHEET 1 OF 2

Doc. B100108

ITEM NO.	PART NUMBER	DESCRIPTION	QTY	UOM
1	BSI-1301252-KT	X-Tension Terminal Comp, 31 in	1	EACH
2	K070202	X-Tension Hardware Kit, GT,	1	EACH
3	K070206	X-Tension System Hardware Kit,	1	EACH
4	K070210	X-Tension GT Guardrail	1	EACH
5	B061100	BSI, I-Beam Post, Middle, X350	1	EACH
6	MANXT1	X-TENSION Installation Manual	1	EACH

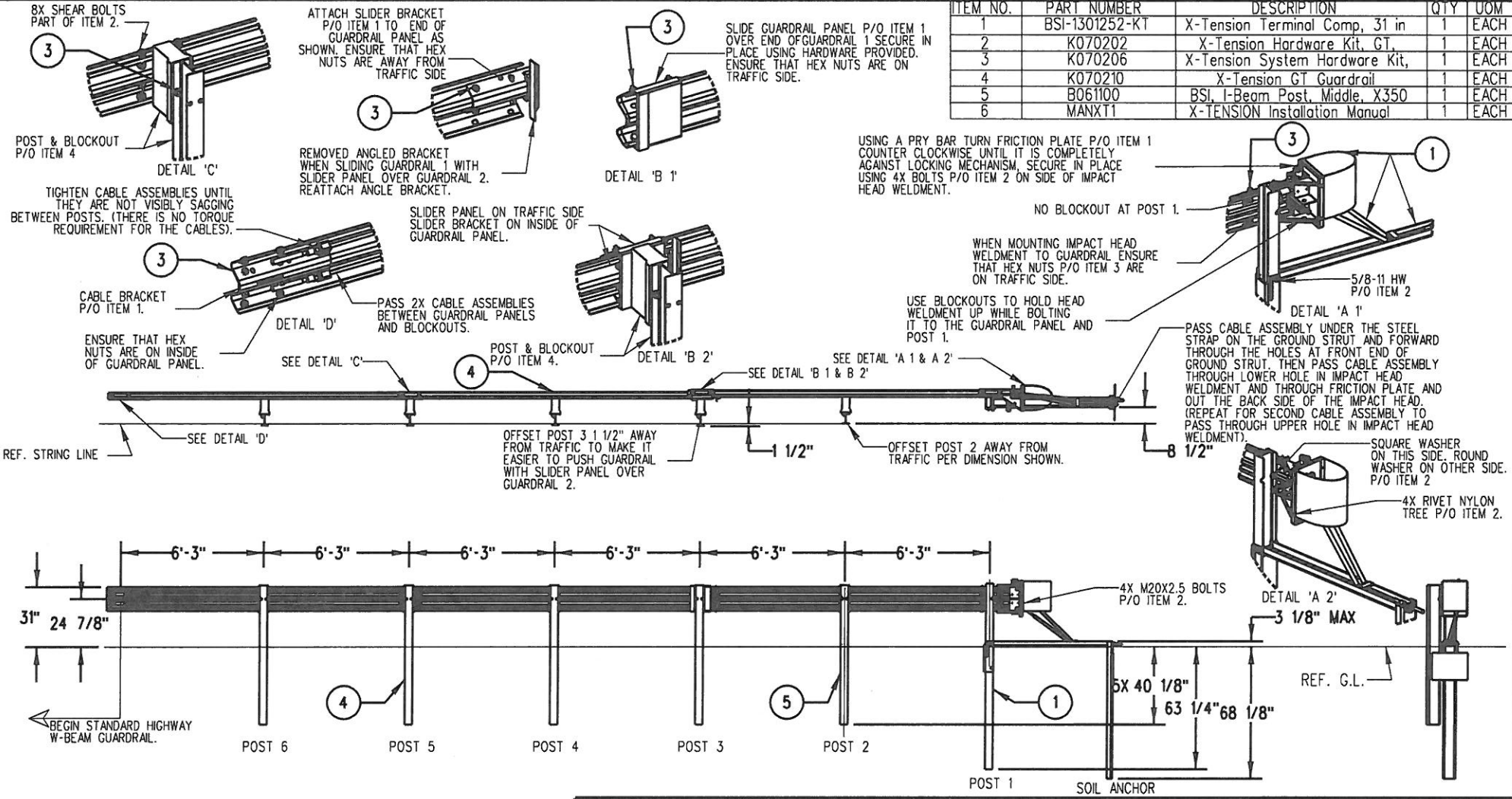

NOTES: UNLESS OTHERWISE SPECIFIED.

1. SYSTEM TO BE INSTALLED PER MANUFACTURER SPECIFICATIONS.
2. ONLY TIGHTEN THE CABLE ASSEMBLIES USING THE NUTS AT THE CABLE BRACKET (SEE DETAIL 'D'). DO NOT TIGHTEN THE CABLES AT THE FRONT OF THE GROUND ANCHOR.
3. WHEN DRIVING STEEL POST, ENSURE THAT A DRIVING CAP WITH TIMBER OR PLASTIC INSERT IS USED TO PREVENT DAMAGE TO THE GALVANIZING TO THE TOP OF THE POST.

© 2012 BARRIER SYSTEMS INC. THE INFORMATION CONTAINED IN THIS DRAWING IS THE SOLE PROPERTY OF BARRIER SYSTEMS INC. ANY REPRODUCTION IN PART OR WHOLE WITHOUT THE WRITTEN PERMISSION OF BARRIER SYSTEMS INC. IS PROHIBITED.

APPROVALS

DRAWN BY:	NMV
DRAWN DATE:	2/08/13
APPR'D BY:	JMT
APPR'D DATE:	2/08/13

UNLESS OTHERWISE SPECIFIED DIMENSIONS ARE IN INCHES. TOLERANCES ARE:
FRACTIONS ±1/16 DECIMAL .XX - ±.03 .XXX - ±.010 ANGLES ±1/2°
INTERPRET DIMENSIONS AND TOLERANCES PER ASME Y14.5-1994
THIRD ANGLE PROJECTION
DO NOT SCALE DRAWING

REV	ECN#	DATE
B	2067	03/02/15
A	2022	2/08/13

LINDSAY TRANSPORTATION SOLUTIONS™

BARRIER SYSTEMS INC.
3333 Vaca Valley Parkway Ste 800
Vacaville, CA 95688
Tel: 888-800-3691
www.barriersystemsinc.com

TITLE
X-TENSION GUARDRAIL TERMINAL SYSTEM STEEL POST WITH COMPOSITE BLOCKOUT 31" RAIL HEIGHT

SIZE	DWG NO.	REV.
B	XTGTSS5	B

SCALE 1:50 SHEET 1 OF 1

Dhillon, Pawanjit K@DOT

From: Marisa Verduzco <mverduzco@modestogov.com>
Sent: Tuesday, May 12, 2015 8:03 AM
To: Dhillon, Pawanjit K@DOT
Cc: Baker, Abdul H@DOT; Gill, Gurjot@DOT; Avalos, Jodie R@DOT
Subject: RE: hydrant meter

Good morning!

The application and deposit must be paid in the office. Once we have processed the application the customer will contact the Water Department to have the meter setup. It's usually recommended to call them 1 to 2 business days ahead of time.

Marisa

From: Dhillon, Pawanjit K@DOT [mailto:pawanjit.dhillon@dot.ca.gov]
Sent: Monday, May 11, 2015 3:16 PM
To: Marisa Verduzco
Cc: Baker, Abdul H@DOT; Gill, Gurjot@DOT; Avalos, Jodie R@DOT
Subject: RE: hydrant meter

Hi Marisa,

How long does it take to process the application and get the water meter installed and available for use?

Thanks.

Pawanjit Dhillon
(559) 243-3853
*_*_*_*_*_*_*_*_*_*_*_*_*_*_*_*
|^^^^^^^^^^^^^^^^|||L__
| Cal-Trans _|||L _ _ _
|_.._.._.._.._.===|=|_ _|_ _]+]
(@) '(@) ; ; "" (@)""[redacted]**(@)

From: Marisa Verduzco [mailto:mverduzco@modestogov.com]
Sent: Monday, May 11, 2015 2:14 PM
To: Dhillon, Pawanjit K@DOT
Subject: hydrant meter

Per our conversation, I have attached the hydrant meter application and the link for the our water rates.

http://www.modestogov.com/pwd/utilities/water/rates.asp

Marisa Verduzco
Senior Customer Services Account Clerk
Utilities Division

UTILITIES

Capital Improvement Services

Reports & Studies

Service Request Form

Wastewater

Water Services Division

Contact Us

Cross-Connection Control Program

Drinking Water Treatment/Delivery System Overview

Water Conservation

Water Meters

Water Rates

PUBLIC WORKS

Water Rates

Metered Water Rates as of 7/1/2013	
Volume-based Rate per CCF -$ 1.40	
5/8" - 3/4" meter	$15.03
1" meter	$21.33
1" - 1/2" meter	$36.90
2" meter	$55.68
3" meter	$105.80
4" meter	$162.13
6" meter	$318.47
8" meter	$506.20
10" meter	$725.56
12" meter	$1,350.92

ccf = hundred cubic feet
748 gallons = 100 cubic foot

SFR Flat Water Rates (by lot size)* as of 7/1/2013				
Code	Lot Size	Monthly Rate	Tax	Total
PR01	0 - 5,000 sq ft lot	$40.81	$2.45	$43.26
PR02	5,001 - 7,000 sq ft lot	$46.38	$2.78	$49.16
PR03	7,001 - 11,000 sq ft lot	$55.04	$3.30	$58.34
PR04	11,001 - 17,000 sq ft lot	$58.43	$3.51	$61.94
PR05	Over 17,000 sq ft lot	$68.69	$4.12	$72.81

*If a SFR property has a water meter that is read, then the appropriate Metered Water rate will be used.

1010 10th Street, Modesto, CA 95354 • P.O. Box 642, Modesto, CA 95353 • (209) 577-5200

© 2015 The City of Modesto. All Rights Reserved. Web site errors may be addressed to: webmaster@modestogov.com

MODESTO
CALIFORNIA

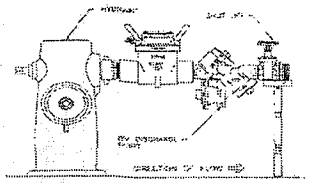

TYPICAL INSTALLATION

FIRE HYDRANT METER PERMIT
CITY OF MODESTO

Customer Name _____ Phone # _____
Must provide at least two forms of identification (picture ID will be scanned)

*Drivers License _____ *TaxID _____

*Business Lic. Acct # _____ *Contractor License _____

Business Address _____

City _____ State _____ Zip Code _____

Mailing Address _____

City _____ State _____ Zip Code _____

Worksite Location _____

Water Division Information

Meter Serial # _____ Account # _____

Date Meter Issued _____ Date Meter Returned _____

Beginning Meter Read _____ Ending Meter Read _____

$1250.00 DEPOSIT REQUIRED IN OFFICE – METER WILL NOT BE ISSUED WITHOUT DEPOSIT. Once application has been completed, the Water Division will be notified. The meter will be delivered to the job site and installed by the Water Division along with a backflow device. **THE CUSTOMER MAY NEVER REMOVE OR CHANGE THE LOCATION OF THE HYDRANT METER. TO DO SO WILL RESULT IN A $500.00 FINE. Please contact the Water Division if you need to move your Hydrant Meter.**

The bill for water usage must be paid in full prior to return of the deposit.

Print Name _____

Signed _____ Signed _____
Customer / Contractor City of Modesto –Water Division

Original: Finance Department *Copy: Water Department, Construction Administration Office*