| Dist | COUNTY | ROUTE | POST MILES TOTAL PROJECT | SHEET No. | TOTAL SHEETS |
|---|---|---|---|---|---|
| 10 | Tuo | 49 | 18.0/18.3 | 1 | 25 |

INDEX OF PLANS


| SHEET No. | DESCRIPTION |
|---|---|
| 1 | TITLE AND LOCATION MAP |
| 2 | TYPICAL CROSS SECTIONS |
| 3 | LAYOUT |
| 4 | CONSTRUCTION DETAILS |
| 5-11 | DRAINAGE PLAN, DETAILS AND QUANTITIES |
| 12 | UTILITY PLAN |
| 13 | CONSTRUCTION AREA SIGNS |
| 14-17 | PAVEMENT DELINEATION AND SIGN PLAN, DETAILS AND QUANTITIES |
| 18 | SUMMARY OF QUANTITIES |
| 19-20 | ELECTRICAL PLANS |
| 21 | TRAFFIC CONTROL SYSTEM PLAN |
| 22-25 | REVISED STANDARD PLANS |


THIS STANDARD PLANS LIST APPLICABLE TO THIS CONTRACT IS INCLUDED IN THE NOTICE TO BIDDERS AND SPECIAL PROVISIONS BOOK

STATE OF CALIFORNIA

# DEPARTMENT OF TRANSPORTATION

# PROJECT PLANS FOR CONSTRUCTION ON

# STATE HIGHWAY

## IN TUOLUMNE COUNTY
## IN SONORA
## FROM SOUTH WASHINGTON STREET
## TO SNELL ROAD/ELKIN STREET

TO BE SUPPLEMENTED BY STANDARD PLANS DATED 2010

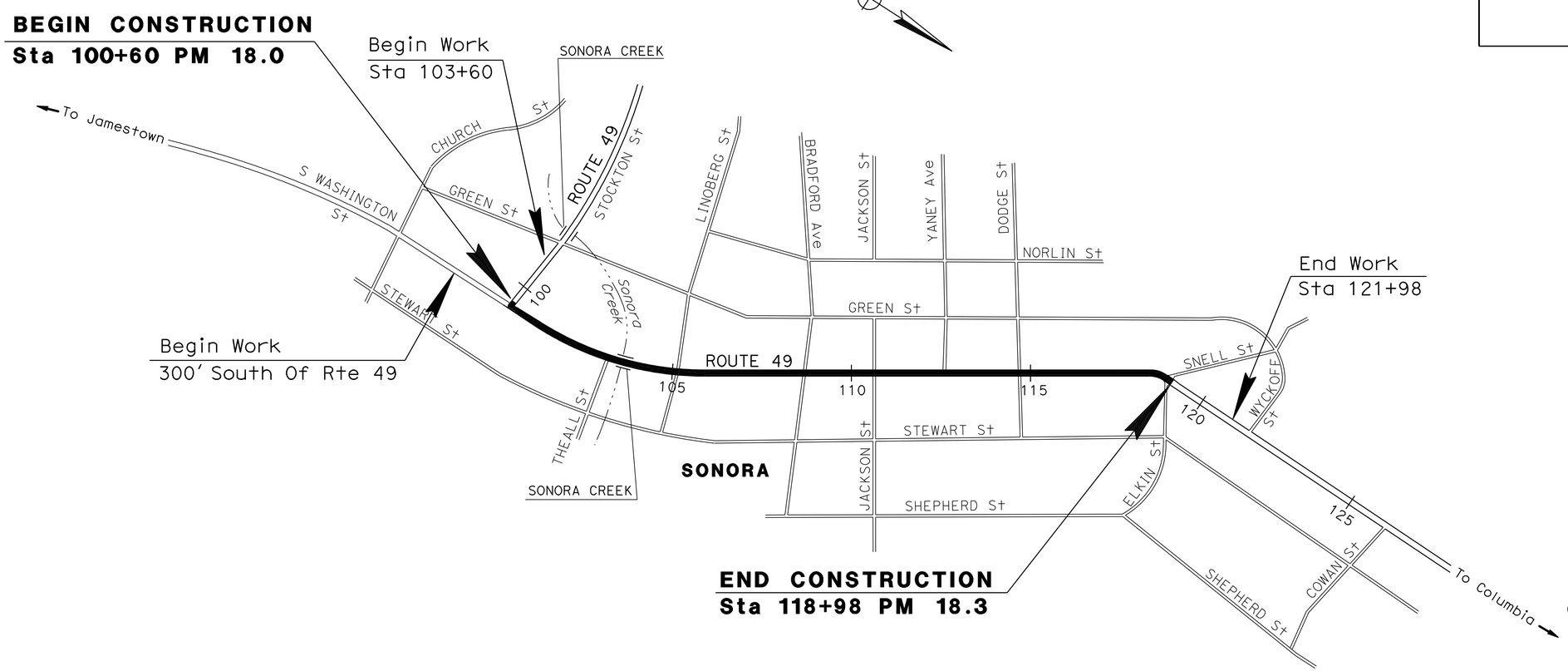


NO SCALE

Evergleen P. Cara 1/18/13
PROJECT ENGINEER DATE
REGISTERED CIVIL ENGINEER

January 28, 2013
PLANS APPROVAL DATE

REGISTERED PROFESSIONAL ENGINEER
EVERGLEEN CARA
No. 72057
Exp. 6/30/14
CIVIL
STATE OF CALIFORNIA

*THE STATE OF CALIFORNIA OR ITS OFFICERS OR AGENTS SHALL NOT BE RESPONSIBLE FOR THE ACCURACY OR COMPLETENESS OF SCANNED COPIES OF THIS PLAN SHEET.*

THE CONTRACTOR SHALL POSSESS THE CLASS (OR CLASSES) OF LICENSE AS SPECIFIED IN THE "NOTICE TO BIDDERS."

PROJECT MANAGER: ARVINDER BAJWA
DESIGN ENGINEER: CAROLINE REYES

| CONTRACT No. | 10-0K1504 |
|---|---|
| PROJECT ID | 1012000178 |

LAST REVISION 00-00-00
DATE PLOTTED => 21-FEB-2013
TIME PLOTTED => 11:39

| Dist | COUNTY | ROUTE | POST MILES TOTAL PROJECT | SHEET No. | TOTAL SHEETS |
|---|---|---|---|---|---|
| 10 | Tuo | 49 | 18.0/18.3 | 2 | 25 |

REGISTERED CIVIL ENGINEER 1/18/13 DATE

1/28/13
PLANS APPROVAL DATE

REGISTERED PROFESSIONAL ENGINEER Evergleen Cara No. 72057 Exp. 6/30/14 CIVIL STATE OF CALIFORNIA

*THE STATE OF CALIFORNIA OR ITS OFFICERS OR AGENTS SHALL NOT BE RESPONSIBLE FOR THE ACCURACY OR COMPLETENESS OF SCANNED COPIES OF THIS PLAN SHEET.*

## NOTES:

1. DIMENSIONS OF THE PAVEMENT STRUCTURES (STRUCTURAL SECTIONS) ARE SUBJECT TO TOLERANCES SPECIFIED IN THE STANDARD SPECIFICATIONS.
2. FOR COLD PLANE AC PAVEMENT DIMENSIONS AND LOCATIONS, SEE SUMMARY OF QUANTITIES SHEET.

## ABBREVIATIONS:

RHMA-G - RUBBERIZED HOT MIX ASPHALT (TYPE G)

SAMI-R - STRESS ABSORBING MEMBRANE INTERLAYER - RUBBERIZED

## DESIGN DESIGNATION (ROUTE 49)

2013 ADT = 19,600 D = 80%
2033 ADT = 26,200 T = 6%
DHV = 2,600 V = 25 MPH
TI = 11

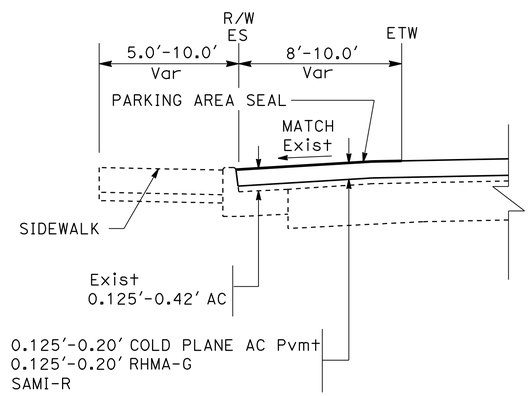


**GUTTER DETAIL (SB)**
(WHERE Exist AC OVERLAPS GUTTER)
Sta 101+74.4 TO 117+93.2

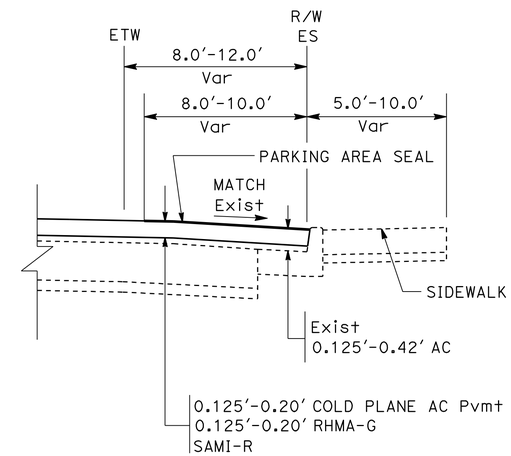


**GUTTER DETAIL (NB)**
(WHERE Exist AC OVERLAPS GUTTER)
Sta 101+73.8 TO 116+57.7

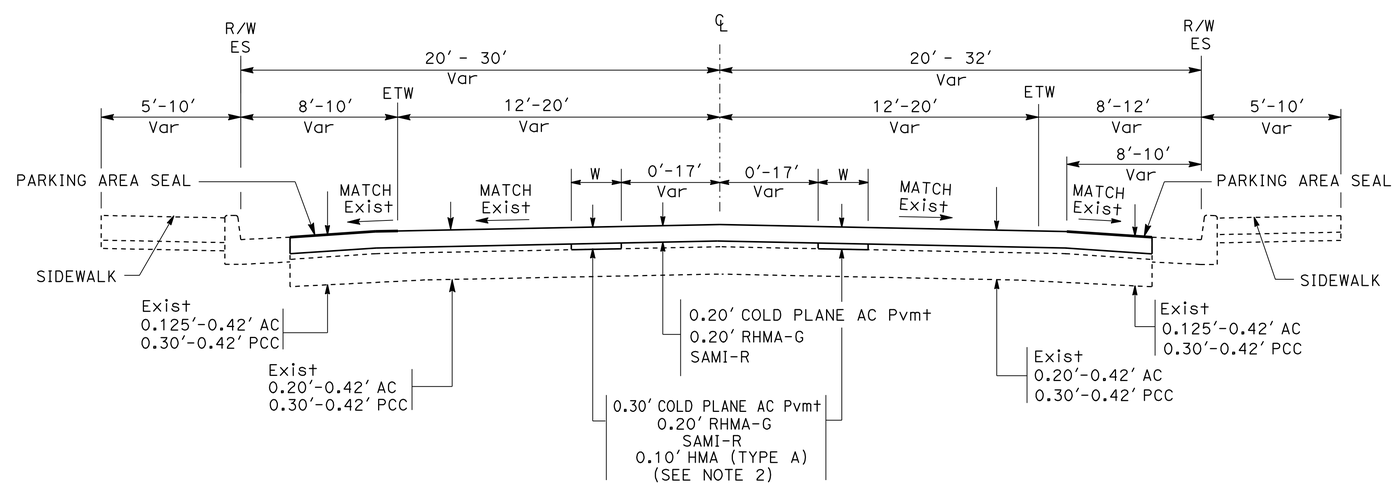


Sta 101+25.9 TO 118+97.6

**ROUTE 49**

# TYPICAL CROSS SECTIONS

NO SCALE

**X-1**

STATE OF CALIFORNIA - DEPARTMENT OF TRANSPORTATION
Caltrans® DESIGN

FUNCTIONAL SUPERVISOR: CAROLINE REYES
CALCULATED-DESIGNED BY: OSAMA ABDEL-MAGIED
CHECKED BY: EVERGLEEN CARA
REVISED BY: EC
DATE REVISED: 01/28/13

LAST REVISION 00-00-00
DATE PLOTTED => 21-FEB-2013
TIME PLOTTED => 11:39

| Dist | COUNTY | ROUTE | POST MILES TOTAL PROJECT | SHEET No. | TOTAL SHEETS |
|---|---|---|---|---|---|
| 10 | Tuo | 49 | 18.0/18.3 | 3 | 25 |

REGISTERED CIVIL ENGINEER 1/18/13 DATE

1/28/13
PLANS APPROVAL DATE

REGISTERED PROFESSIONAL ENGINEER Evergleen Cara No. 72057 Exp 6/30/14 CIVIL STATE OF CALIFORNIA

*THE STATE OF CALIFORNIA OR ITS OFFICERS OR AGENTS SHALL NOT BE RESPONSIBLE FOR THE ACCURACY OR COMPLETENESS OF SCANNED COPIES OF THIS PLAN SHEET.*

NOTE:

FOR ACCURATE RIGHT OF WAY DATA, CONTACT RIGHT OF WAY ENGINEERING AT THE DISTRICT OFFICE.

LEGEND

- COLD PLANE SAMI-R RHMA (TYPE G)
- COLD PLANE AC Pvmt SAMI-R RHMA (TYPE G) PARKING AREA SEAL
- COLD PLANE AC Pvmt RHMA (TYPE G)

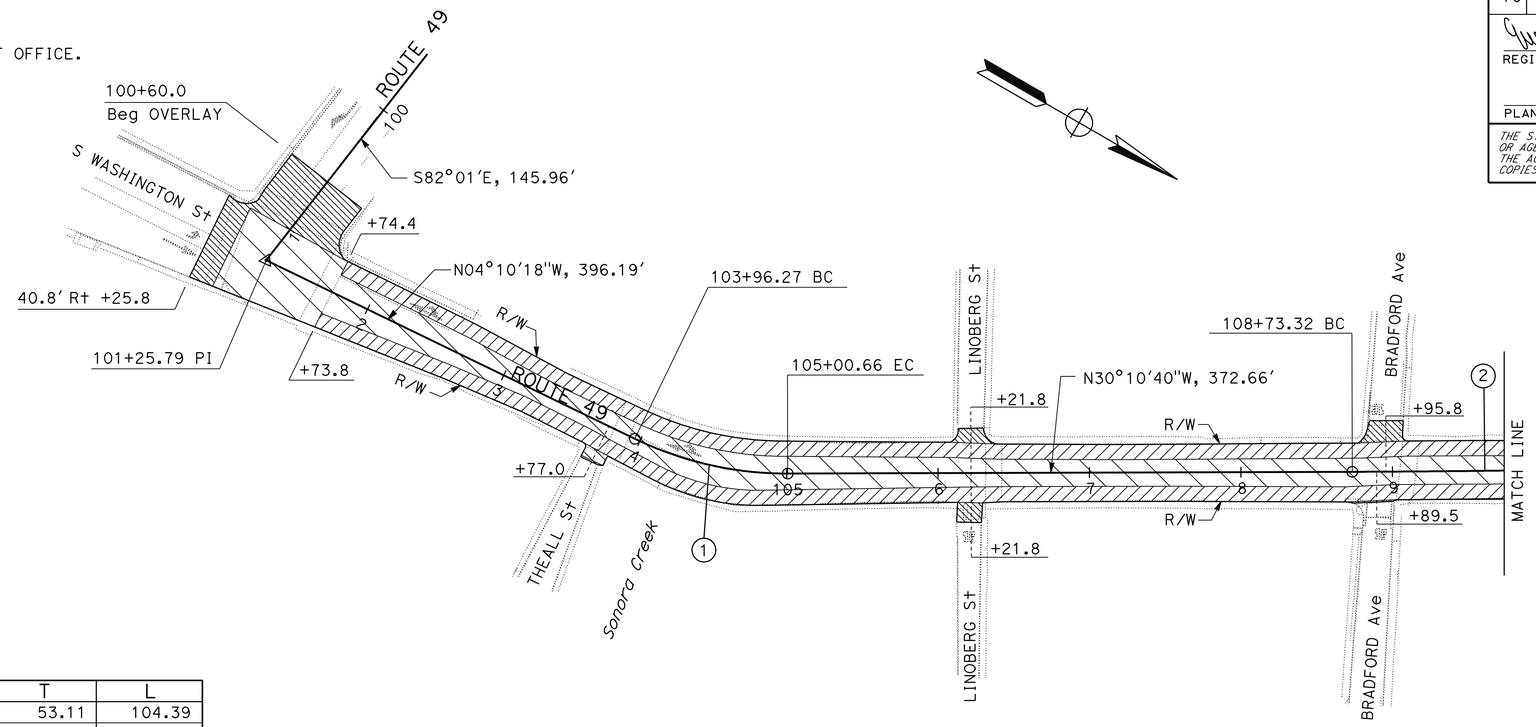


CURVE DATA

| No. ⊕ | R | Δ | T | L |
|---|---|---|---|---|
| 1 | 230 | 26°0'22" | 53.11 | 104.39 |
| 2 | 9843 | 0°43'38" | 62.47 | 124.95 |
| 3 | 164 | 29°41'22" | 43.47 | 84.98 |

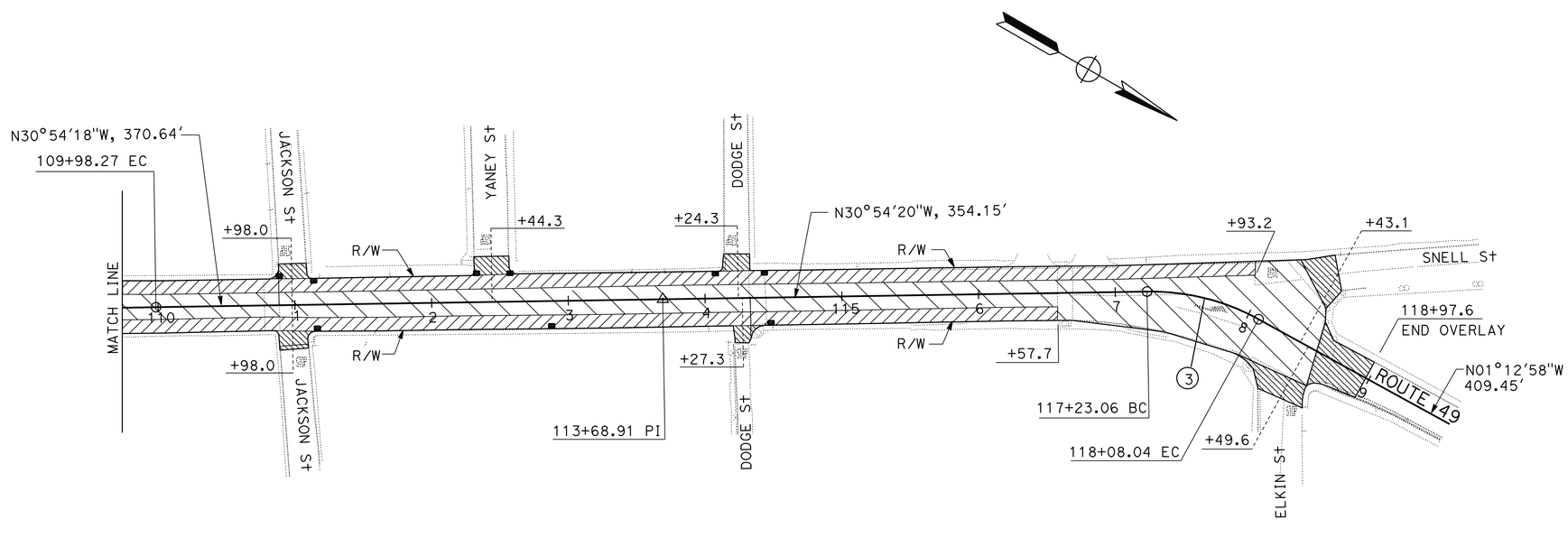


# LAYOUT

SCALE: 1" = 50'

L-1

STATE OF CALIFORNIA - DEPARTMENT OF TRANSPORTATION

Caltrans DESIGN

FUNCTIONAL SUPERVISOR: CAROLINE REYES

CALCULATED-DESIGNED BY: OSAMA ABDEL-MAGIED

CHECKED BY: EVERGLEEN CARA

REVISED BY: EC

DATE REVISED: 01/16/13

LAST REVISION 00-00-00

DATE PLOTTED => 21-FEB-2013
TIME PLOTTED => 11:39

| Dist | COUNTY | ROUTE | POST MILES TOTAL PROJECT | SHEET No. | TOTAL SHEETS |
|---|---|---|---|---|---|
| 10 | Tuo | 49 | 18.0/18.3 | 4 | 25 |

REGISTERED CIVIL ENGINEER 1/18/13 DATE

1/28/13
PLANS APPROVAL DATE

REGISTERED PROFESSIONAL ENGINEER Evergleen Cara No. 72057 Exp 6/30/14 CIVIL STATE OF CALIFORNIA

*THE STATE OF CALIFORNIA OR ITS OFFICERS OR AGENTS SHALL NOT BE RESPONSIBLE FOR THE ACCURACY OR COMPLETENESS OF SCANNED COPIES OF THIS PLAN SHEET.*

LEGEND

- COLD PLANE AC PAVEMENT RHMA-G

ABBREVIATION

RHMA-G - RUBBERIZED HOT MIX ASPHALT (GAP GRADED)

## CONFORM LOCATIONS

| LOCATION | SIDE | Sta | W | L |
|---|---|---|---|---|
| Rte 49 (Beg) | Lt/Rt | 100+60.0 | 58.8′ | 40.0′ |
| S WASHINGTON St | Rt | 101+25.8 | 60.0′ | 18.0′ |
| THEALL St | Rt | 103+77.0 | 15.8′ | 9.0′ |
| LINOBERG St | Lt | 106+21.8 | 16.7′ | 10.0′ |
| LINOBERG St | Rt | 106+21.8 | 16.3′ | 13.0′ |
| BRADFORD Ave | Rt | 108+89.5 | 18.1′ | 1.0′ |
| BRADFORD Ave | Lt | 108+95.8 | 23.2′ | 14.0′ |
| JACKSON St | Lt | 110+98.0 | 20.3′ | 11.0′ |
| JACKSON St | Rt | 110+98.0 | 21.0′ | 13.2′ |
| YANEY Ave | Lt | 112+44.3 | 25.6′ | 13.5′ |
| DODGE St | Lt | 114+24.3 | 19.4′ | 12.5′ |
| DODGE St | Rt | 114+27.3 | 11.6′ | 12.5′ |
| SNELL St | Lt | 118+43.1 | 28.8′ | 25.0′ |
| ELKIN St | Rt | 118+49.6 | 35.7′ | 16.0′ |
| Rte 49 END | Lt/Rt | 118+97.6 | 32.8′ | 40.0′ |

ACTUAL WIDTHS MAY VARY IN THE FIELD AND WILL BE DETERMINED BY THE ENGINEER.

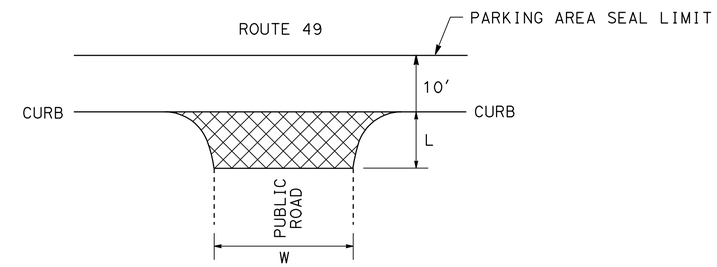


## PAVING LIMITS AT PUBLIC ROAD INTERSECTIONS

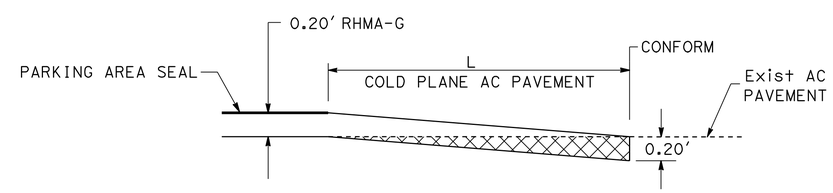


## CONFORM TAPER AT EXISTING AC PAVEMENT

ROUTE 49 AND LOCAL STREETS

# CONSTRUCTION DETAILS

NO SCALE

C-1

STATE OF CALIFORNIA - DEPARTMENT OF TRANSPORTATION
Caltrans® DESIGN

FUNCTIONAL SUPERVISOR: CAROLINE REYES

CALCULATED-DESIGNED BY: OSAMA ABDEL-MAGIED
CHECKED BY: EVERGLEEN CARA

REVISED BY: EC
DATE REVISED: 01/25/13

LAST REVISION 00-00-00
DATE PLOTTED => 21-FEB-2013
TIME PLOTTED => 11:39

| Dist | COUNTY | ROUTE | POST MILES TOTAL PROJECT | SHEET No. | TOTAL SHEETS |
|---|---|---|---|---|---|
| 10 | Tuo | 49 | 18.0/18.3 | 5 | 25 |

REGISTERED CIVIL ENGINEER 1/18/13 DATE

1/28/13
PLANS APPROVAL DATE

REGISTERED PROFESSIONAL ENGINEER Evergleen Cara No. 72057 Exp. 6/30/14 CIVIL STATE OF CALIFORNIA

*THE STATE OF CALIFORNIA OR ITS OFFICERS OR AGENTS SHALL NOT BE RESPONSIBLE FOR THE ACCURACY OR COMPLETENESS OF SCANNED COPIES OF THIS PLAN SHEET.*

NOTE:

FOR ACCURATE RIGHT OF WAY DATA, CONTACT RIGHT OF WAY ENGINEERING AT THE DISTRICT OFFICE.

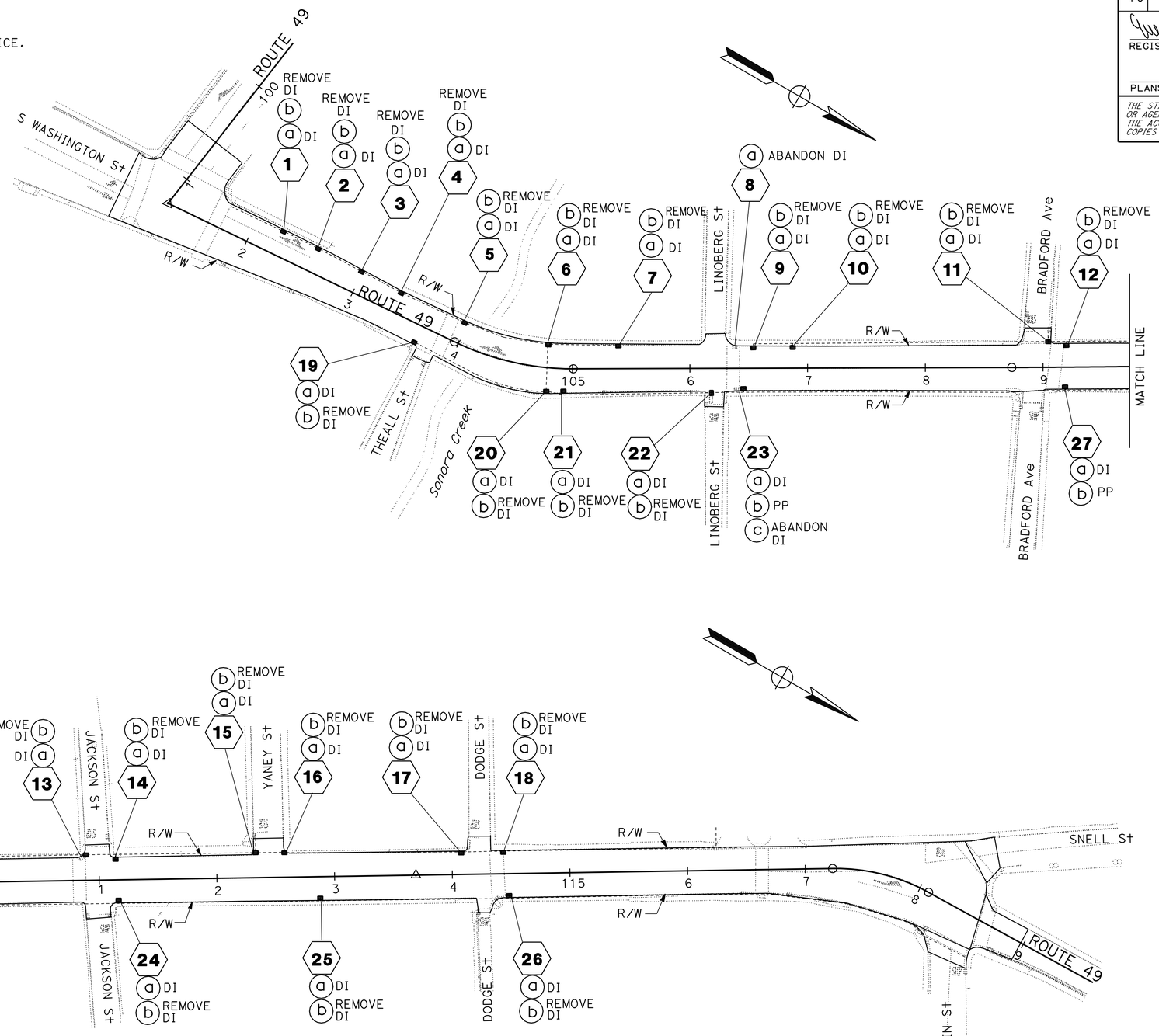





*APPROVED FOR DRAINAGE WORK ONLY*

# DRAINAGE PLAN

SCALE: 1" = 50'

**D-1**

STATE OF CALIFORNIA - DEPARTMENT OF TRANSPORTATION

Caltrans

DESIGN

FUNCTIONAL SUPERVISOR: CAROLINE REYES

CALCULATED-DESIGNED BY: OSAMA ABDEL-MAGIED

CHECKED BY: EVERGLEEN CARA

REVISED BY: EC

DATE REVISED: 10/30/12

LAST REVISION: 00-00-00

DATE PLOTTED => 21-FEB-2013

TIME PLOTTED => 11:39

| Dist | COUNTY | ROUTE | POST MILES TOTAL PROJECT | SHEET No. | TOTAL SHEETS |
|---|---|---|---|---|---|
| 10 | Tuo | 49 | 18.0/18.3 | 6 | 25 |

REGISTERED CIVIL ENGINEER 1/18/13 DATE

1/28/13
PLANS APPROVAL DATE

REGISTERED PROFESSIONAL ENGINEER Evergleen Cara No. 72057 Exp 6/30/14 CIVIL STATE OF CALIFORNIA

*THE STATE OF CALIFORNIA OR ITS OFFICERS OR AGENTS SHALL NOT BE RESPONSIBLE FOR THE ACCURACY OR COMPLETENESS OF SCANNED COPIES OF THIS PLAN SHEET.*

NOTE:

CURB FACE SIDES DEPEND ON DI'S LOCATIONS.

LEGEND

CONCRETE BACKFILL

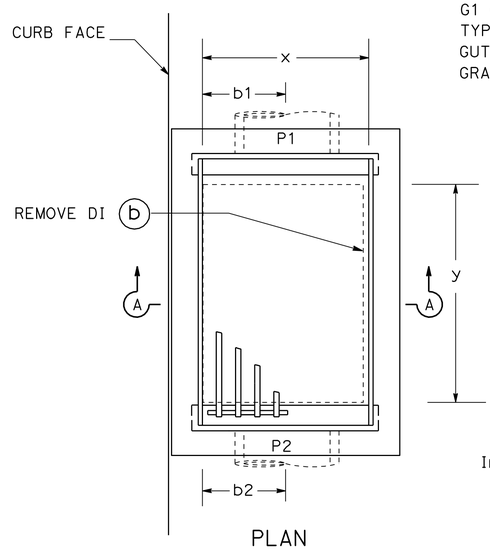


PLAN

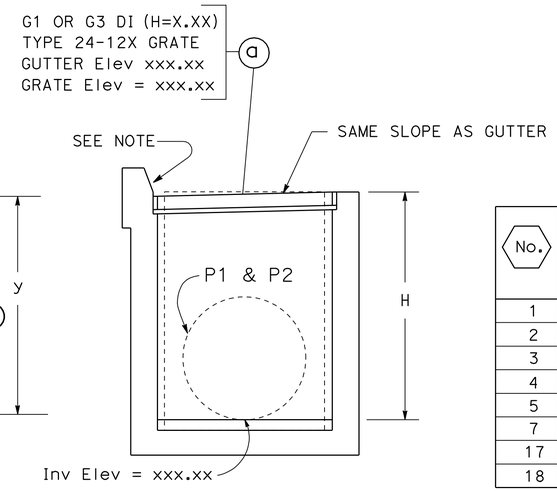


SECTION A-A

| No. | LOCATION | | PIPE SIZE | | DI TYPE | Exist GRATE DIMENSIONS | | DISTANCE | | INLET HEIGHT | GUTTER Elev | GRATE Elev | Inv Elev |
|---|---|---|---|---|---|---|---|---|---|---|---|---|---|
| | STATION | OFFSET | P1 | P2 | | X | Y | b1 | b2 | H | | | P1, P2 |
| 1 | 102+24.75 | 21.5' Lt | 6" | 6" | G3 | 21" | 21" | 11" | 11" | 1.4' | 1795.79 | 1795.69 | 1794.39 |
| 2 | 102+57.43 | 21.4' Lt | 6" | 6" | G3 | 21" | 21" | 8" | 8" | 1.1' | 1795.51 | 1795.41 | 1794.41 |
| 3 | 102+99.00 | 19.3' Lt | 6" | 6" | G3 | 17" | 20" | 8" | 8" | 2.0' | 1795.28 | 1795.18 | 1793.28 |
| 4 | 103+37.54 | 18.2' Lt | 6" | 6" | G3 | 26" | 15" | 13" | 13" | 2.6' | 1794.95 | 1794.85 | 1792.35 |
| 5 | 103+97.86 | 19.2' Lt | 12" | 12" | G3 | 17" | 20" | 9" | 9" | 3.9' | 1794.66 | 1794.56 | 1790.76 |
| 7 | 105+39.25 | 19.9 Lt | — | 6" | G3 | 18" | 20" | — | 9" | 0.9' | 1793.52 | 1793.42 | 1792.62 |
| 17 | 114+07.53 | 19.1' Lt | 12" | 12" | G3 | 16" | 24" | 6" | 6" | 2.0' | 1831.80 | 1831.70 | 1829.80 |
| 18 | 114+43.67 | 18.9' Lt | 12" | 12" | G3 | 20" | 27" | 7" | 7" | 1.94' | 1833.39 | 1833.29 | 1831.45 |

**DRAINAGE SYSTEM No.** 1 2 3 4 5 7 17 18

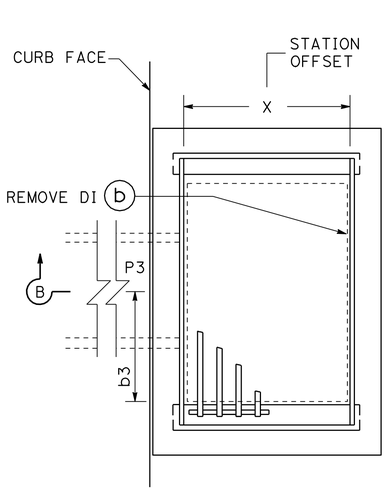


PLAN

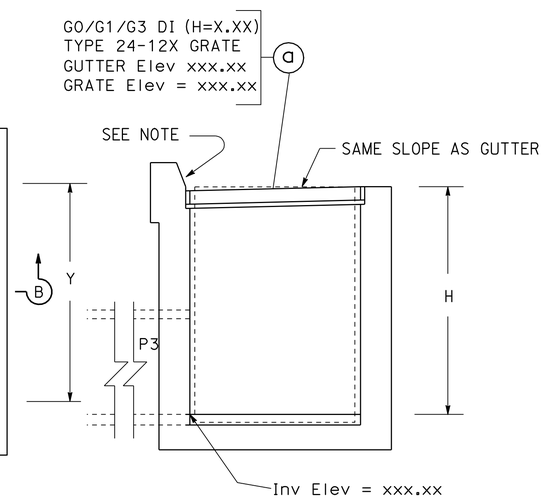


SECTION B-B

| No. | LOCATION | | PIPE SIZE | DI TYPE | Exist GRATE DIMENSIONS | | DISTANCE | INLET HEIGHT | GUTTER Elev | GRATE Elev | Inv Elev |
|---|---|---|---|---|---|---|---|---|---|---|---|
| | STATION | OFFSET | P3 | | X | Y | b3 | H | | | |
| 9 | 106+53.98 | 18.3' Lt | 17" x 24" | G3 | 18" | 41" | 0.39" | 1.6' | 1795.12 | 1795.02 | 1793.52 |
| 10 | 106+87.28 | 18.3' Lt | 12" x 12" | G3 | 14" | 20" | 0.25" | 1.1' | 1796.28 | 1796.18 | 1795.18 |
| 12 | 109+20.01 | 19.3' Lt | 10" x 14" | G3 | 21" | 34" | 0.44" | 1.1' | 1805.03 | 1804.93 | 1803.93 |
| 14 | 111+14.65 | 18.6' Lt | 12" x 12" | G3 | 17" | 20" | 0.24" | 1.1' | 1814.72 | 1814.62 | 1813.62 |
| 19 | 103+65.72 | 16.2' Rt | 11" | G3 | 12" | 18" | 0.14" | 0.9' | 1804.99 | 1804.89 | 1804.09 |
| 21 | 104+93.03 | 20.0' Rt | 15" x 15" | G3 | 17" | 40" | | 1.4' | 1792.94 | 1792.84 | 1791.54 |
| 24 | 111+16.43 | 19.2' Rt | 12" x 22" | G3 | 12" | 17" | | 0.7' | 1815.35 | 1815.25 | 1814.65 |
| 25 | 112+87.73 | 19.9' Rt | 12" x 22" | G3 | 12" | 25" | | 1.0' | 1825.82 | 1825.72 | 1824.82 |
| 26 | 114+48.01 | 19.4' Rt | 12" x 36" | GO | 14" | 43" | | 1.94' | 1834.27 | 1834.17 | 1832.33 |

**DRAINAGE SYSTEM No.** 9 10 12 14 19 21 24 25 26

# DRAINAGE DETAILS

NO SCALE

**DD-1**

STATE OF CALIFORNIA - DEPARTMENT OF TRANSPORTATION

Caltrans® DESIGN

| CALCULATED-DESIGNED BY | OSAMA ABDEL-MAGIED | REVISED BY | EC |
|---|---|---|---|
| CHECKED BY | EVERGLEEN CARA | DATE REVISED | 01/16/13 |

FUNCTIONAL SUPERVISOR: CAROLINE REYES

LAST REVISION 00-00-00 | DATE PLOTTED => 21-FEB-2013 | TIME PLOTTED => 11:39

| Dist | COUNTY | ROUTE | POST MILES TOTAL PROJECT | SHEET No. | TOTAL SHEETS |
|---|---|---|---|---|---|
| 10 | Tuo | 49 | 18.0/18.3 | 7 | 25 |

REGISTERED CIVIL ENGINEER 1/18/13 DATE

1/28/13
PLANS APPROVAL DATE

REGISTERED PROFESSIONAL ENGINEER Evergleen Cara No. 72057 Exp. 6/30/14 CIVIL STATE OF CALIFORNIA

*THE STATE OF CALIFORNIA OR ITS OFFICERS OR AGENTS SHALL NOT BE RESPONSIBLE FOR THE ACCURACY OR COMPLETENESS OF SCANNED COPIES OF THIS PLAN SHEET.*

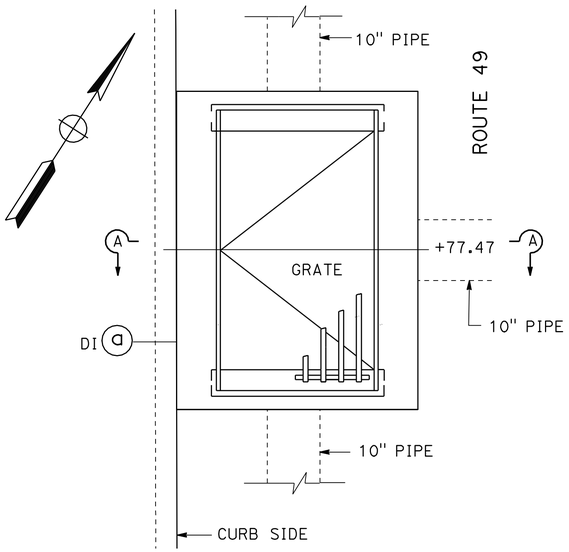


PLAN

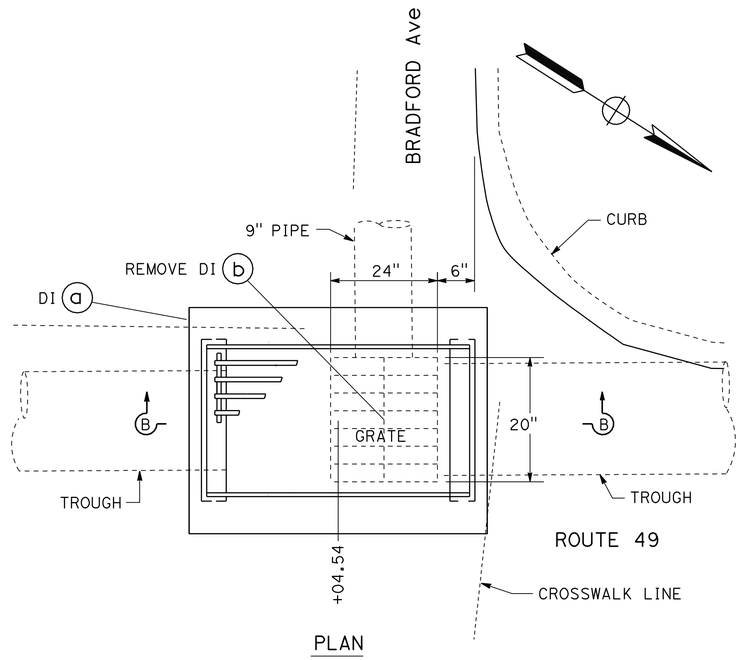


PLAN

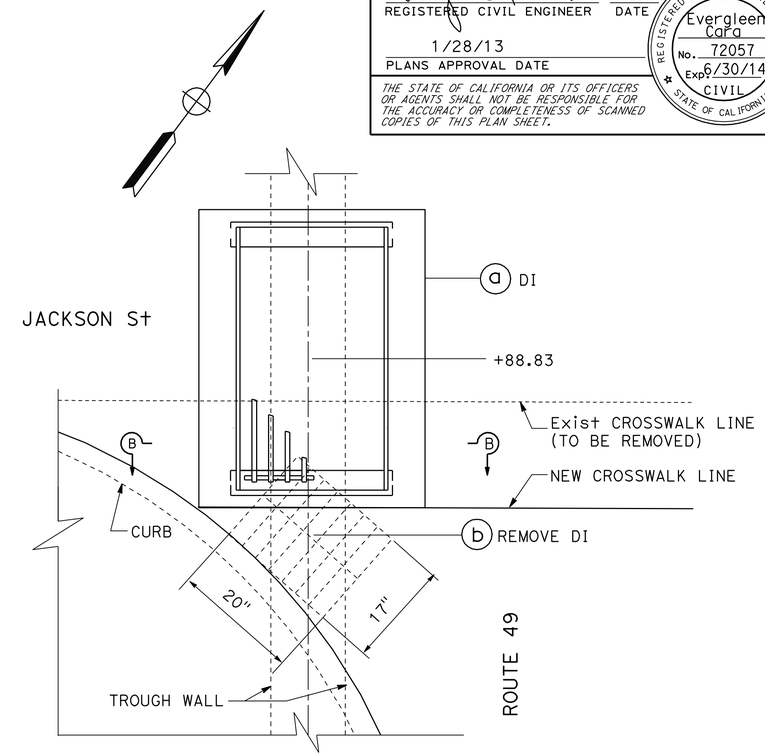


PLAN

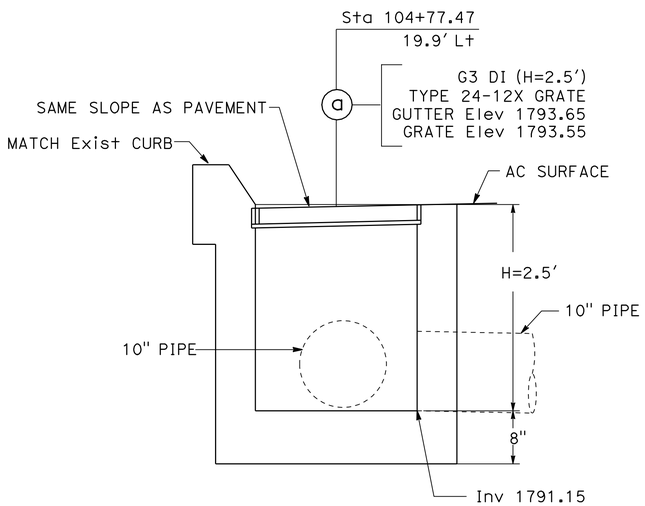


SECTION A-A

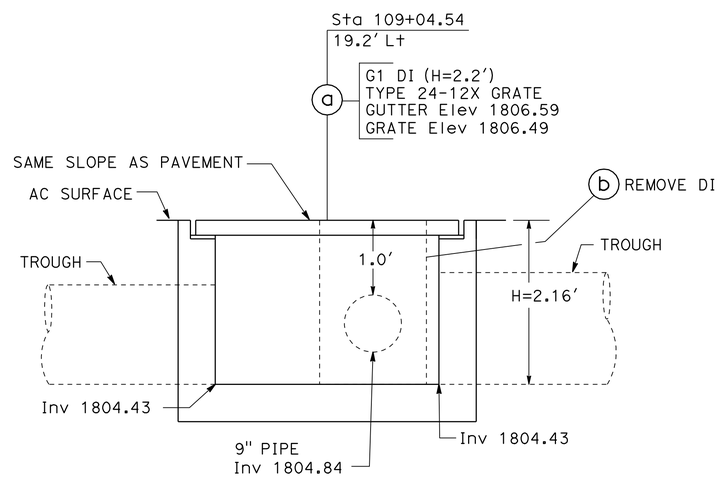


SECTION B-B

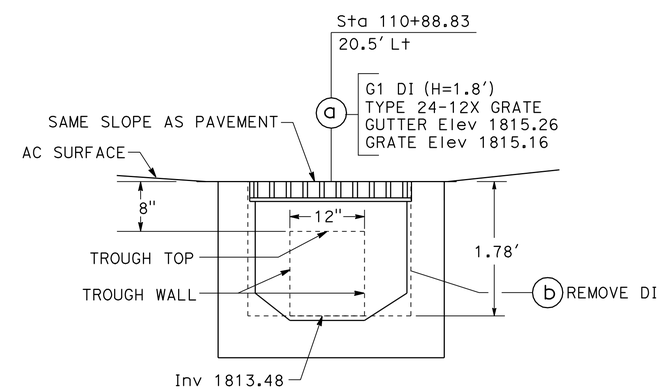


SECTION B-B

**DRAINAGE SYSTEM No. 6**

**DRAINAGE SYSTEM No. 11**

**DRAINAGE SYSTEM No. 13**

# DRAINAGE DETAILS

NO SCALE

**DD-2**

STATE OF CALIFORNIA - DEPARTMENT OF TRANSPORTATION
Caltrans® DESIGN

FUNCTIONAL SUPERVISOR: CAROLINE REYES
CALCULATED-DESIGNED BY: OSAMA ABDEL-MAGIED
CHECKED BY: EVERGLEEN CARA
REVISED BY: EC
DATE REVISED: 10/30/12

LAST REVISION 00-00-00
DATE PLOTTED => 21-FEB-2013
TIME PLOTTED => 11:39

| Dist | COUNTY | ROUTE | POST MILES TOTAL PROJECT | SHEET No. | TOTAL SHEETS |
|---|---|---|---|---|---|
| 10 | Tuo | 49 | 18.0/18.3 | 8 | 25 |

REGISTERED CIVIL ENGINEER 1/18/13 DATE

1/28/13
PLANS APPROVAL DATE

REGISTERED PROFESSIONAL ENGINEER Evergleen Cara No. 72057 Exp 6/30/14 CIVIL STATE OF CALIFORNIA

*THE STATE OF CALIFORNIA OR ITS OFFICERS OR AGENTS SHALL NOT BE RESPONSIBLE FOR THE ACCURACY OR COMPLETENESS OF SCANNED COPIES OF THIS PLAN SHEET.*

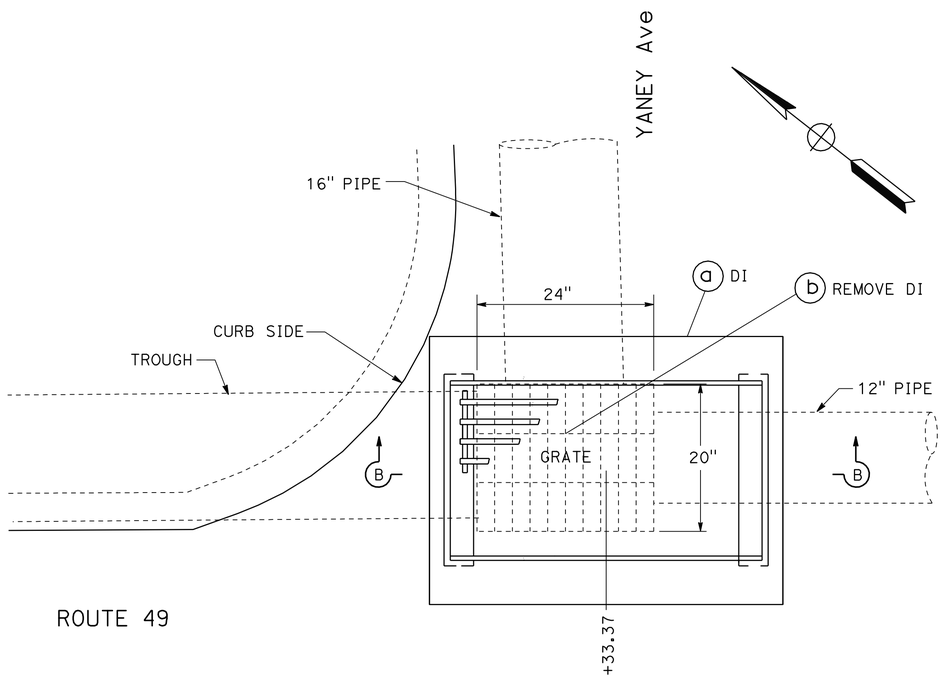


PLAN

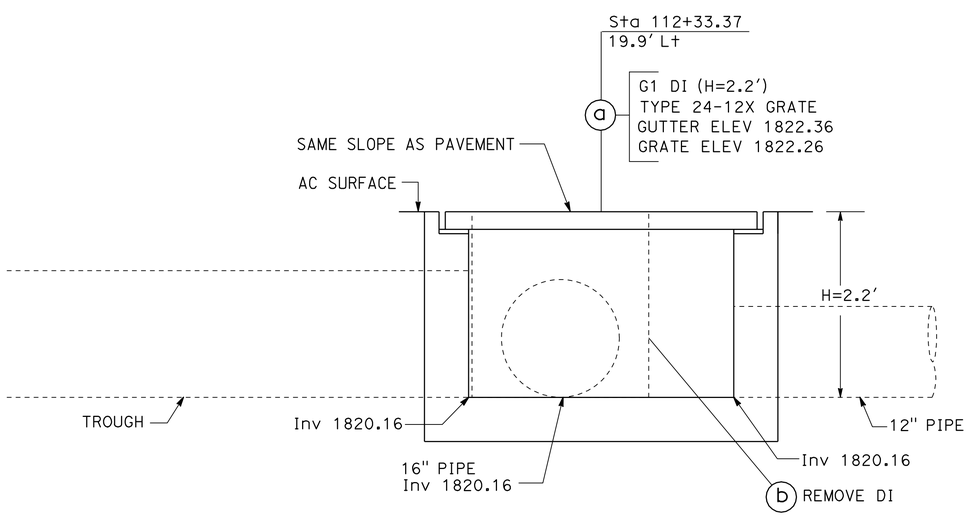


SECTION B-B

**DRAINAGE SYSTEM No. 15**

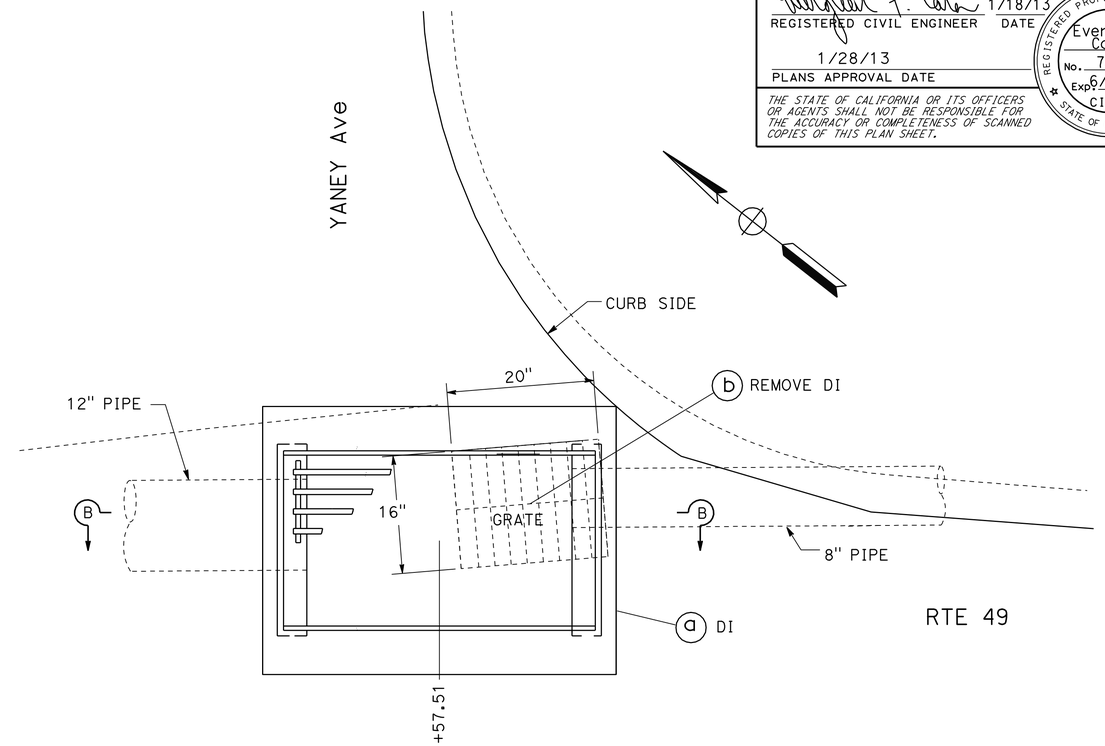


PLAN

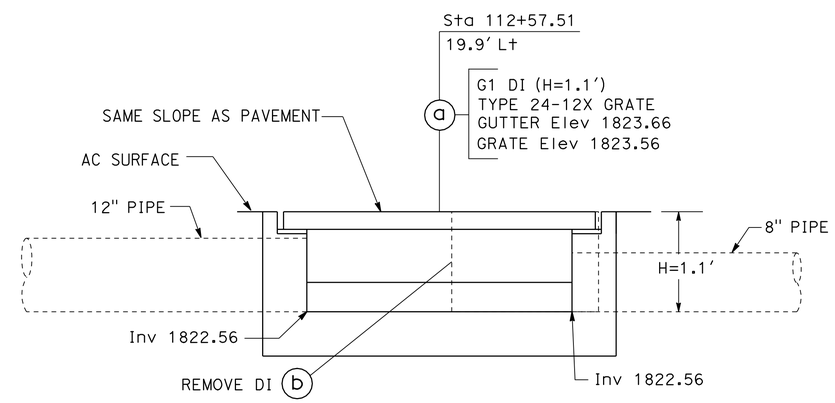


SECTION B-B

**DRAINAGE SYSTEM No. 16**

# DRAINAGE DETAILS

NO SCALE

**DD-3**

| | |
|---|---|
| REVISED BY | EC |
| DATE REVISED | 01/16/13 |
| OSAMA ABDEL-MAGIED | |
| EVERGLEEN CARA | |
| CALCULATED-DESIGNED BY | |
| CHECKED BY | |
| FUNCTIONAL SUPERVISOR | |
| CAROLINE REYES | |

STATE OF CALIFORNIA - DEPARTMENT OF TRANSPORTATION

Caltrans® DESIGN

LAST REVISION 00-00-00 | DATE PLOTTED => 21-FEB-2013 | TIME PLOTTED => 11:39

| Dist | COUNTY | ROUTE | POST MILES TOTAL PROJECT | SHEET No. | TOTAL SHEETS |
|---|---|---|---|---|---|
| 10 | Tuo | 49 | 18.0/18.3 | 9 | 25 |

REGISTERED CIVIL ENGINEER — DATE 1/18/13

PLANS APPROVAL DATE 1/28/13

REGISTERED PROFESSIONAL ENGINEER Evergleen Cara No. 72057 Exp. 6/30/14 CIVIL STATE OF CALIFORNIA

*THE STATE OF CALIFORNIA OR ITS OFFICERS OR AGENTS SHALL NOT BE RESPONSIBLE FOR THE ACCURACY OR COMPLETENESS OF SCANNED COPIES OF THIS PLAN SHEET.*

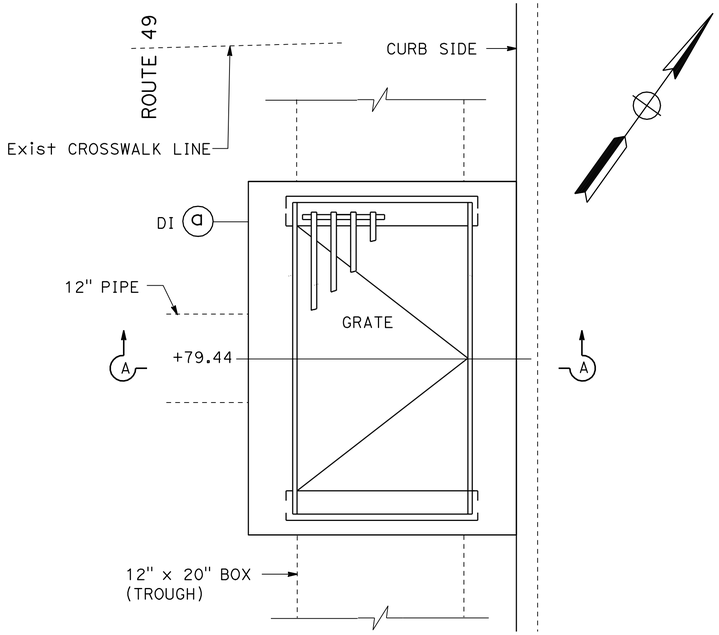


PLAN

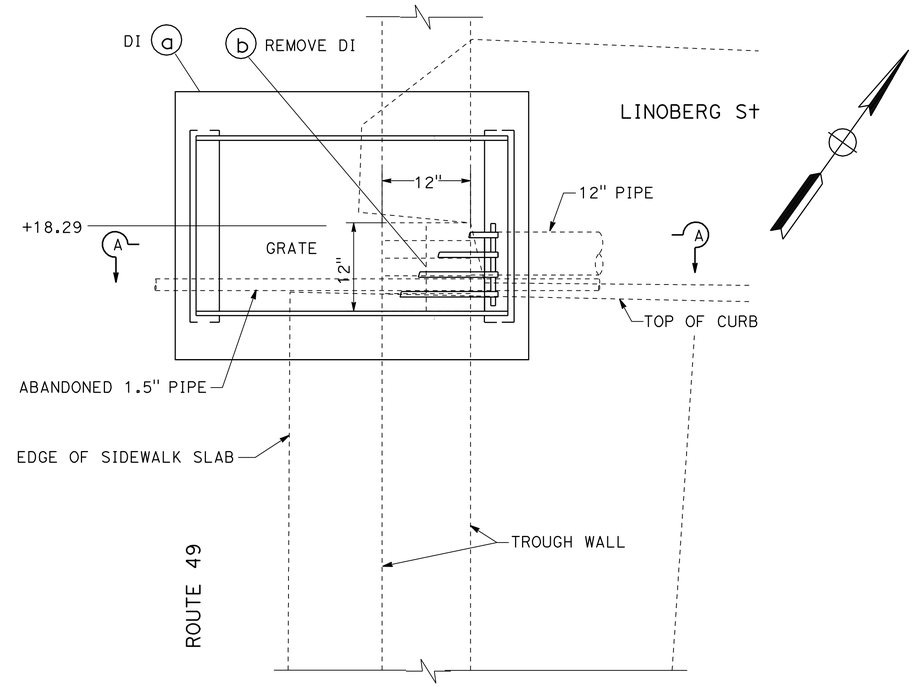


PLAN

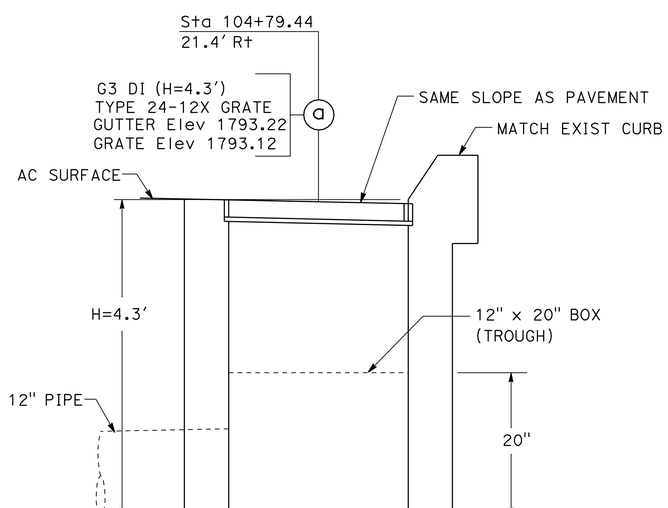


SECTION A-A

**DRAINAGE SYSTEM No. 20**

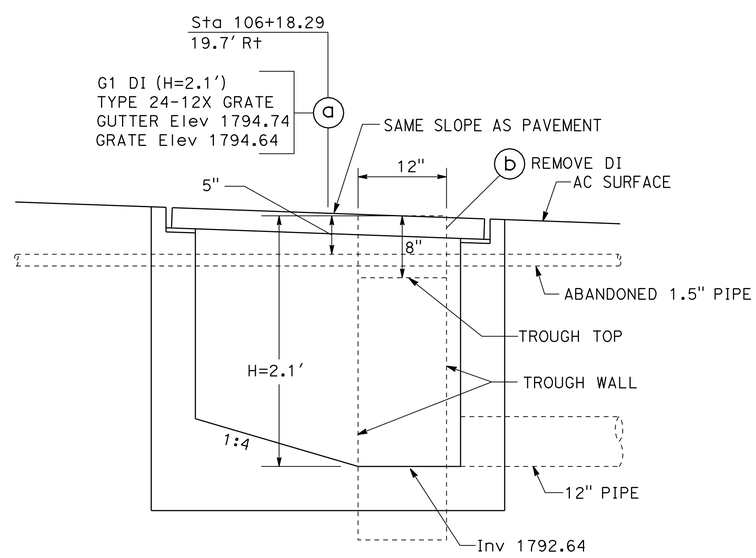


SECTION A-A

**DRAINAGE SYSTEM No. 22**

# DRAINAGE DETAILS

NO SCALE

**DD-4**

STATE OF CALIFORNIA - DEPARTMENT OF TRANSPORTATION

Caltrans® DESIGN

FUNCTIONAL SUPERVISOR: CAROLINE REYES

CALCULATED-DESIGNED BY: OSAMA ABDEL-MAGIED

CHECKED BY: EVERGLEEN CARA

REVISED BY: EC

DATE REVISED: 01/16/13

LAST REVISION: 00-00-00

DATE PLOTTED => 21-FEB-2013

TIME PLOTTED => 11:39

| Dist | COUNTY | ROUTE | POST MILES TOTAL PROJECT | SHEET No. | TOTAL SHEETS |
|---|---|---|---|---|---|
| 10 | Tuo | 49 | 18.0/18.3 | 10 | 25 |

REGISTERED CIVIL ENGINEER 1/18/13 DATE

1/28/13
PLANS APPROVAL DATE

REGISTERED PROFESSIONAL ENGINEER Evergleen Cara No. 72057 Exp 6/30/14 CIVIL STATE OF CALIFORNIA

*THE STATE OF CALIFORNIA OR ITS OFFICERS OR AGENTS SHALL NOT BE RESPONSIBLE FOR THE ACCURACY OR COMPLETENESS OF SCANNED COPIES OF THIS PLAN SHEET.*

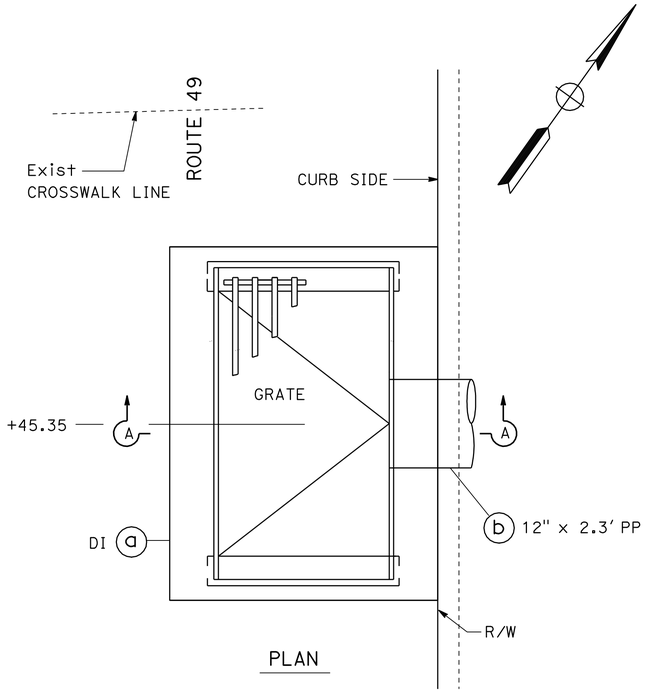


PLAN

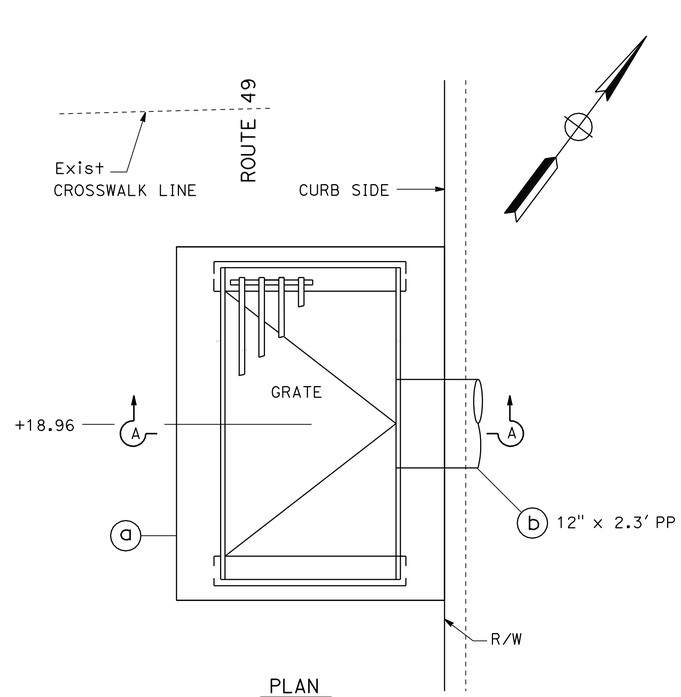


PLAN

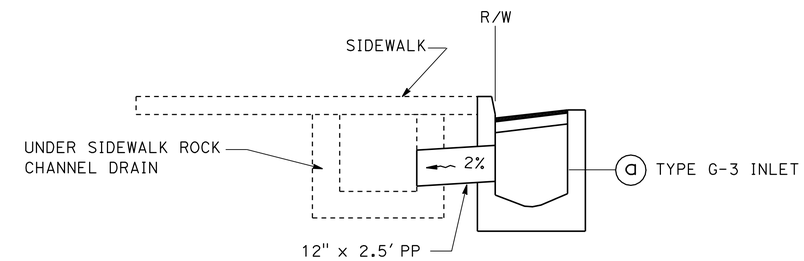


## ROCK CHANNEL TO DRAINAGE INLET CONNECTION DETAIL

**DRAINAGE SYSTEM No. 23 a & 27 a**

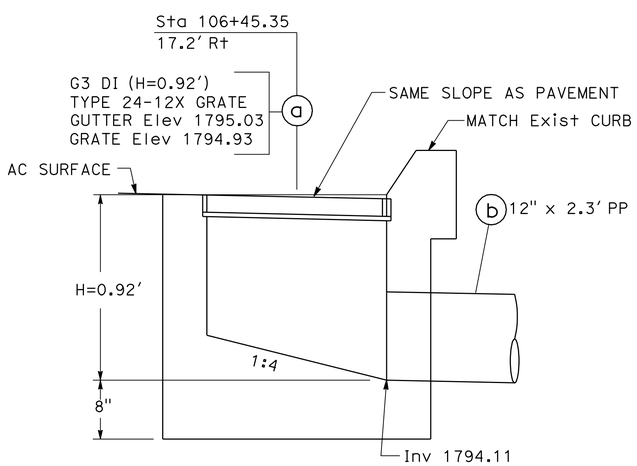


SECTION A-A

**DRAINAGE SYSTEM No. 23**

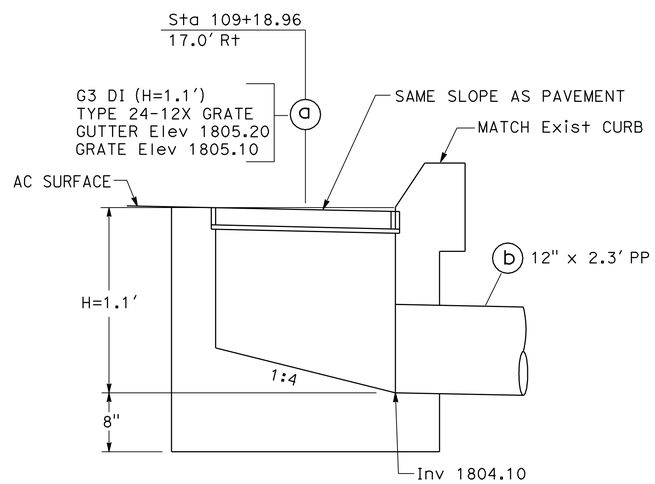


SECTION A-A

**DRAINAGE SYSTEM No. 27**

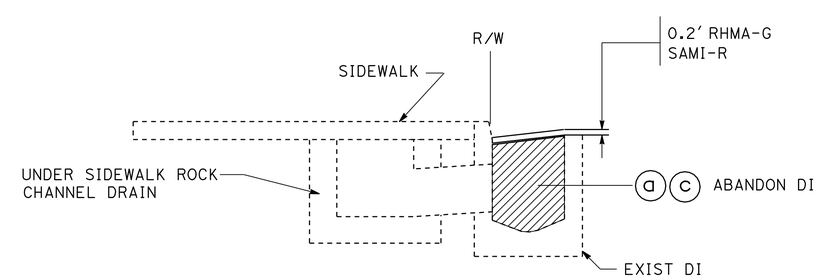


## CONCRETE BACKFILL DETAIL

**DRAINAGE SYSTEM No. 8 a & 23 c**

# DRAINAGE DETAILS

NO SCALE

**DD-5**

| REVISED BY | DATE REVISED |
|---|---|
| EC | 01/16/13 |

OSAMA ABDEL-MAGIED — EVERGLEEN CARA — CALCULATED-DESIGNED BY — CHECKED BY

FUNCTIONAL SUPERVISOR: CAROLINE REYES

STATE OF CALIFORNIA - DEPARTMENT OF TRANSPORTATION — Caltrans — DESIGN

LAST REVISION 00-00-00 — DATE PLOTTED => 21-FEB-2013 — TIME PLOTTED => 11:39

| Dist | COUNTY | ROUTE | POST MILES TOTAL PROJECT | SHEET No. | TOTAL SHEETS |
|---|---|---|---|---|---|
| 10 | Tuo | 49 | 18.0/18.3 | 11 | 25 |

REGISTERED CIVIL ENGINEER 1/18/13 DATE

1/28/13
PLANS APPROVAL DATE

REGISTERED PROFESSIONAL ENGINEER Evergleen Cara No. 72057 Exp. 6/30/14 CIVIL STATE OF CALIFORNIA

*THE STATE OF CALIFORNIA OR ITS OFFICERS OR AGENTS SHALL NOT BE RESPONSIBLE FOR THE ACCURACY OR COMPLETENESS OF SCANNED COPIES OF THIS PLAN SHEET.*

NOTE:

(N) - FOR INFORMATION ONLY, NOT A SEPARATE PAY ITEM.

| DRAINAGE SYSTEM NO. | DRAINAGE UNIT | REMOVE INLET EA | ABANDON INLET EA | 12" PLASTIC PIPE LF | MINOR CONCRETE (MINOR STRUCTURE) CY | MISCELLANEOUS IRON & STEEL LB | (N) INLET HEIGHT "H" F† | DESCRIPTION | STATION | DRAINAGE SYSTEM NO. | DRAINAGE UNIT |
|---|---|---|---|---|---|---|---|---|---|---|---|
| 1 | a | | | | 0.66 | 238 | 1.4 | G3 DI TYPE 24-12X GRATE | 102+24.75 21.5′ L† ROUTE 49 | 1 | a |
| | b | 1 | | | | | | REMOVE Exist DI | | | b |
| 2 | a | | | | 0.60 | 238 | 1.1 | G3 DI TYPE 24-12X GRATE | 102+57.43 21.4′ L† ROUTE 49 | 2 | a |
| | b | 1 | | | | | | REMOVE Exist DI | | | b |
| 3 | a | | | | 0.79 | 238 | 2.0 | G3 DI TYPE 24-12X GRATE | 102+99.00 19.3′ L† ROUTE 49 | 3 | a |
| | b | 1 | | | | | | REMOVE Exist DI | | | b |
| 4 | a | | | | 0.92 | 238 | 2.6 | G3 DI TYPE 24-12X GRATE | 103+37.54 18.2′ L† ROUTE 49 | 4 | a |
| | b | 1 | | | | | | REMOVE Exist DI | | | b |
| 5 | a | | | | 1.21 | 238 | 3.9 | G3 DI TYPE 24-12X GRATE | 103+97.86 19.2′ L† ROUTE 49 | 5 | a |
| | b | 1 | | | | | | REMOVE Exist DI | | | b |
| 6 | a | | | | 0.92 | 238 | 2.5 | G3 DI TYPE 24-12X GRATE | 104+77.47 19.9′ L† ROUTE 49 | 6 | a |
| | b | 1 | | | | | | REMOVE Exist DI | | | b |
| 7 | a | | | | 0.55 | 238 | 0.9 | G3 DI TYPE 24-12X GRATE | 105+39.25 19.9 L† ROUTE 49 | 7 | a |
| | b | 1 | | | | | | REMOVE Exist DI | | | b |
| 8 | a | | 1 | | | | | ABANDON DI | 106+37.90 18.3′ L† ROUTE 49 | 8 | a |
| | | | | | | | | | | | |
| 9 | a | | | | 0.70 | 238 | 1.6 | G3 DI TYPE 24-12X GRATE | 106+53.98 18.3′ L† ROUTE 49 | 9 | a |
| | b | 1 | | | | | | REMOVE Exist DI | | | b |
| 10 | a | | | | 0.60 | 238 | 1.1 | G3 DI TYPE 24-12X GRATE | 106+87.28 18.3′ L† ROUTE 49 | 10 | a |
| | b | 1 | | | | | | REMOVE Exist DI | | | b |
| 11 | a | | | | 0.77 | 238 | 2.2 | G1 DI TYPE 24-12X GRATE | 109+04.54 19.2′ L† ROUTE 49 | 11 | a |
| | b | 1 | | | | | | REMOVE Exist DI | | | b |
| 12 | a | | | | 0.60 | 238 | 1.1 | G3 DI TYPE 24-12X GRATE | 109+20.01 19.3′ L† ROUTE 49 | 12 | a |
| | b | 1 | | | | | | REMOVE Exist DI | | | b |
| 13 | a | | | | 0.69 | 238 | 1.8 | G1 DI TYPE 24-12X GRATE | 110+88.83 20.5′ L† ROUTE 49 | 13 | a |
| | b | 1 | | | | | | REMOVE Exist DI | | | b |
| 14 | a | | | | 0.60 | 238 | 1.1 | G3 DI TYPE 24-12X GRATE | 111+14.65 18.6′ L† ROUTE 49 | 14 | a |
| | b | 1 | | | | | | REMOVE Exist DI | | | b |
| 15 | a | | | | 0.75 | 238 | 2.2 | G1 DI TYPE 24-12X GRATE | 112+33.37 19.9′ L† ROUTE 49 | 15 | a |
| | b | 1 | | | | | | REMOVE Exist DI | | | b |
| | | 14 | 1 | | 10.36 | 3332 | | SUBTOTAL 1 | | | |

| DRAINAGE SYSTEM NO. | DRAINAGE UNIT | REMOVE INLET EA | ABANDON INLET EA | 12" PLASTIC PIPE LF | MINOR CONCRETE (MINOR STRUCTURE) CY | MISCELLANEOUS IRON & STEEL LB | (N) INLET HEIGHT "H" F† | DESCRIPTION | STATION | DRAINAGE SYSTEM NO. | DRAINAGE UNIT |
|---|---|---|---|---|---|---|---|---|---|---|---|
| 16 | a | | | | 0.53 | 238 | 1.1 | G1 DI TYPE 24-12X GRATE | 112+57.51 19.9′ L† ROUTE 49 | 16 | a |
| | b | 1 | | | | | | REMOVE Exist DI | | | b |
| 17 | a | | | | 0.79 | 238 | 2.0 | G3 DI TYPE 24-12X GRATE | 114+07.53 19.1′ L† ROUTE 49 | 17 | a |
| | b | 1 | | | | | | REMOVE Exist DI | | | b |
| 18 | a | | | | 0.77 | 238 | 1.94 | G3 DI TYPE 24-12X GRATE | 114+43.67 18.9′ L† ROUTE 49 | 18 | a |
| | b | 1 | | | | | | REMOVE Exist DI | 114+38.72 18.9′ L† ROUTE 49 | | b |
| 19 | a | | | | 0.55 | 238 | 0.9 | G3 DI TYPE 24-12X GRATE | 103+65.72 16.2′ R† ROUTE 49 | 19 | a |
| | b | 1 | | | | | | REMOVE Exist DI | | | b |
| 20 | a | | | | 1.36 | 238 | 4.3 | G3 DI TYPE 24-12X GRATE | 104+79.44 21.4′ R† ROUTE 49 | 20 | a |
| | b | 1 | | | | | | REMOVE Exist DI | | | b |
| 21 | a | | | | 0.66 | 238 | 1.4 | G3 DI TYPE 24-12X GRATE | 104+93.03 20.0′ R† ROUTE 49 | 21 | a |
| | b | 1 | | | | | | REMOVE Exist DI | | | b |
| 22 | a | | | | 0.75 | 238 | 2.1 | G1 DI TYPE 24-12X GRATE | 106+18.29 19.7′ R† ROUTE 49 | 22 | a |
| | b | 1 | | | | | | REMOVE Exist DI | | | b |
| 23 | a | | | | 0.55 | 238 | 0.9 | G3 DI TYPE 24-12X GRATE | 106+45.35 17.2′ R† ROUTE 49 | 23 | a |
| | b | | | 2.3 | | | | 12" PP | | | b |
| | c | | 1 | | | | | ABANDON DI | 106+39.41 18.3′ R† ROUTE 49 | | c |
| 24 | a | | | | 0.50 | 238 | 0.7 | G3 DI TYPE 24-12X GRATE | 111+16.43 19.2′ R† ROUTE 49 | 24 | a |
| | b | 1 | | | | | | REMOVE Exist DI | | | b |
| 25 | a | | | | 0.57 | 238 | 1.0 | G3 DI TYPE 24-12X GRATE | 112+87.73 19.9′ R† ROUTE 49 | 25 | a |
| | b | 1 | | | | | | REMOVE Exist DI | | | b |
| 26 | a | | | | 0.54 | 238 | 1.94 | GO DI TYPE 24-12X GRATE | 114+48.01 19.4′ R† ROUTE 49 | 26 | a |
| | b | 1 | | | | | | REMOVE Exist DI | | | b |
| 27 | a | | | | 0.60 | 238 | 1.1 | G3 DI TYPE 24-12X GRATE | 109+19.00 14.7′ R† ROUTE 49 | 27 | a |
| | b | | | 2.3 | | | | 12" PP | | | b |
| | | 10 | 1 | 4.6 | 8.17 | 2856 | | SUBTOTAL 2 | | | |
| | | 14 | 1 | | 10.36 | 3332 | | SUBTOTAL 1 | | | |
| | | 24 | 2 | 4.6 | 18.53 | 6188 | | TOTAL | | | |

# DRAINAGE QUANTITIES

# DQ-1

| REVISED BY | DATE REVISED |
|---|---|
| EC | 01/16/13 |

OSAMA ABDEL-MAGIED — EVERGLEEN CARA

CALCULATED-DESIGNED BY — CHECKED BY

FUNCTIONAL SUPERVISOR — CAROLINE REYES

STATE OF CALIFORNIA - DEPARTMENT OF TRANSPORTATION — DESIGN

LAST REVISION 00-00-00 | DATE PLOTTED => 21-FEB-2013 | TIME PLOTTED => 11:39

| Dist | COUNTY | ROUTE | POST MILES TOTAL PROJECT | SHEET No. | TOTAL SHEETS |
|---|---|---|---|---|---|
| 10 | Tuo | 49 | 18.0/18.3 | 12 | 25 |

REGISTERED CIVIL ENGINEER — DATE 1/18/13

1/28/13
PLANS APPROVAL DATE

REGISTERED PROFESSIONAL ENGINEER — Evergleen Cara — No. 72057 — Exp 6/30/14 — CIVIL — STATE OF CALIFORNIA

*THE STATE OF CALIFORNIA OR ITS OFFICERS OR AGENTS SHALL NOT BE RESPONSIBLE FOR THE ACCURACY OR COMPLETENESS OF SCANNED COPIES OF THIS PLAN SHEET.*

## NOTES:

1. FOR ACCURATE RIGHT OF WAY DATA, CONTACT RIGHT OF WAY ENGINEERING AT THE DISTRICT OFFICE.
2. SEE DRAINAGE PLAN AND DRAINAGE DETAILS FOR STORM DRAIN RELOCATION.

## LEGEND

- SSMH — MANHOLE (SEWER)
- TLMH — TELEPHONE MANHOLE
- SEWER CLEANOUTS
- STREET LIGHT
- UTILITY POLE & STREET LIGHT
- PG&E GAS VENT
- UNIDENTIFIED METER
- WATER METER

## UTILITY OWNERSHIP

ELECTRICAL - PACIFIC GAS & ELECTRIC Co
WATER - TUOLUMNE UTILITIES DISTRICT (T.U.D.)
SEWER - TUOLUMNE UTILITIES DISTRICT (T.U.D.)
GAS - PACIFIC GAS & ELECTRIC Co
TELEPHONE - AMERICAN TELEPHONE & TELEGRAPH COMPANY

## ABBREVIATION

UB - UTILITY BOX

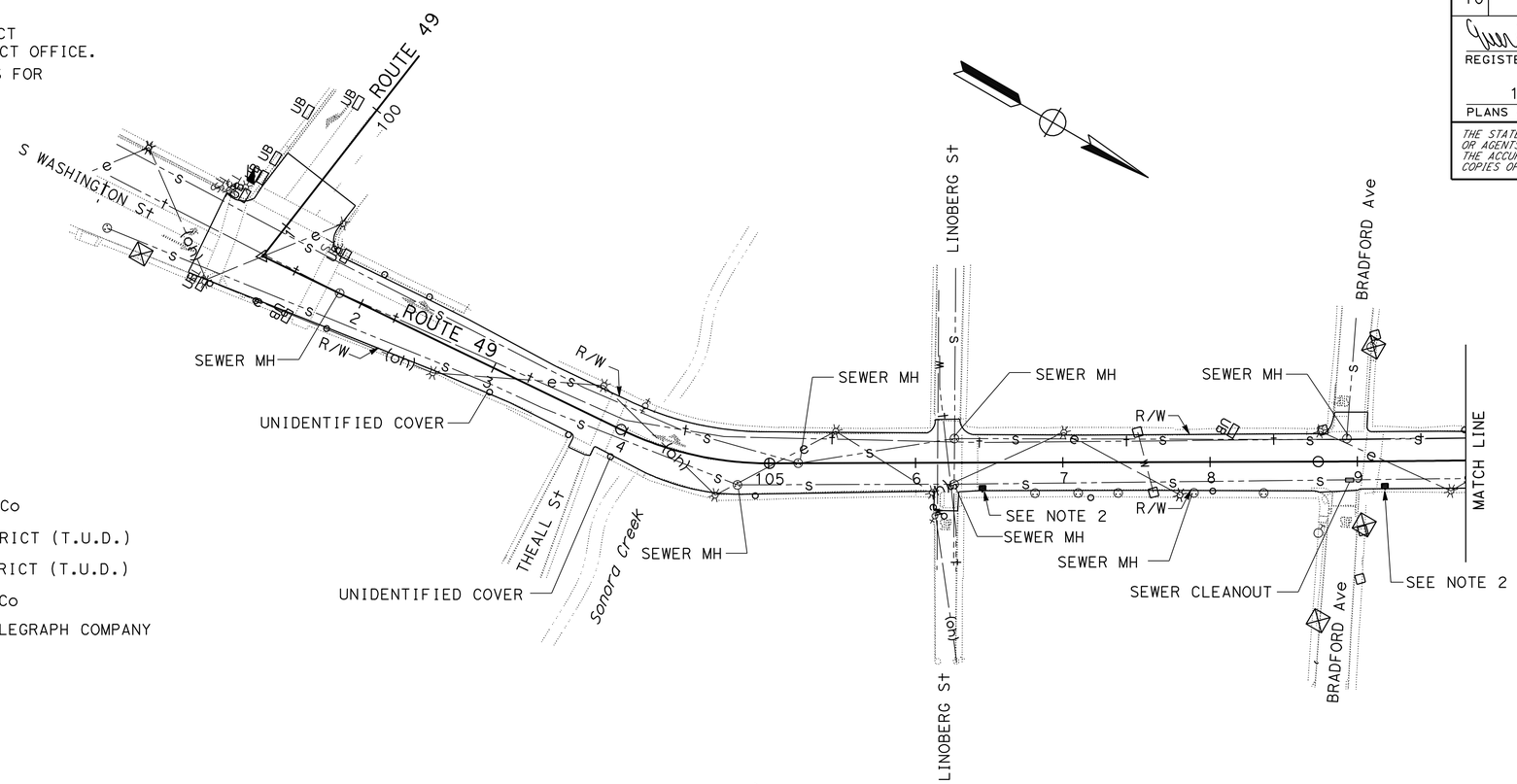


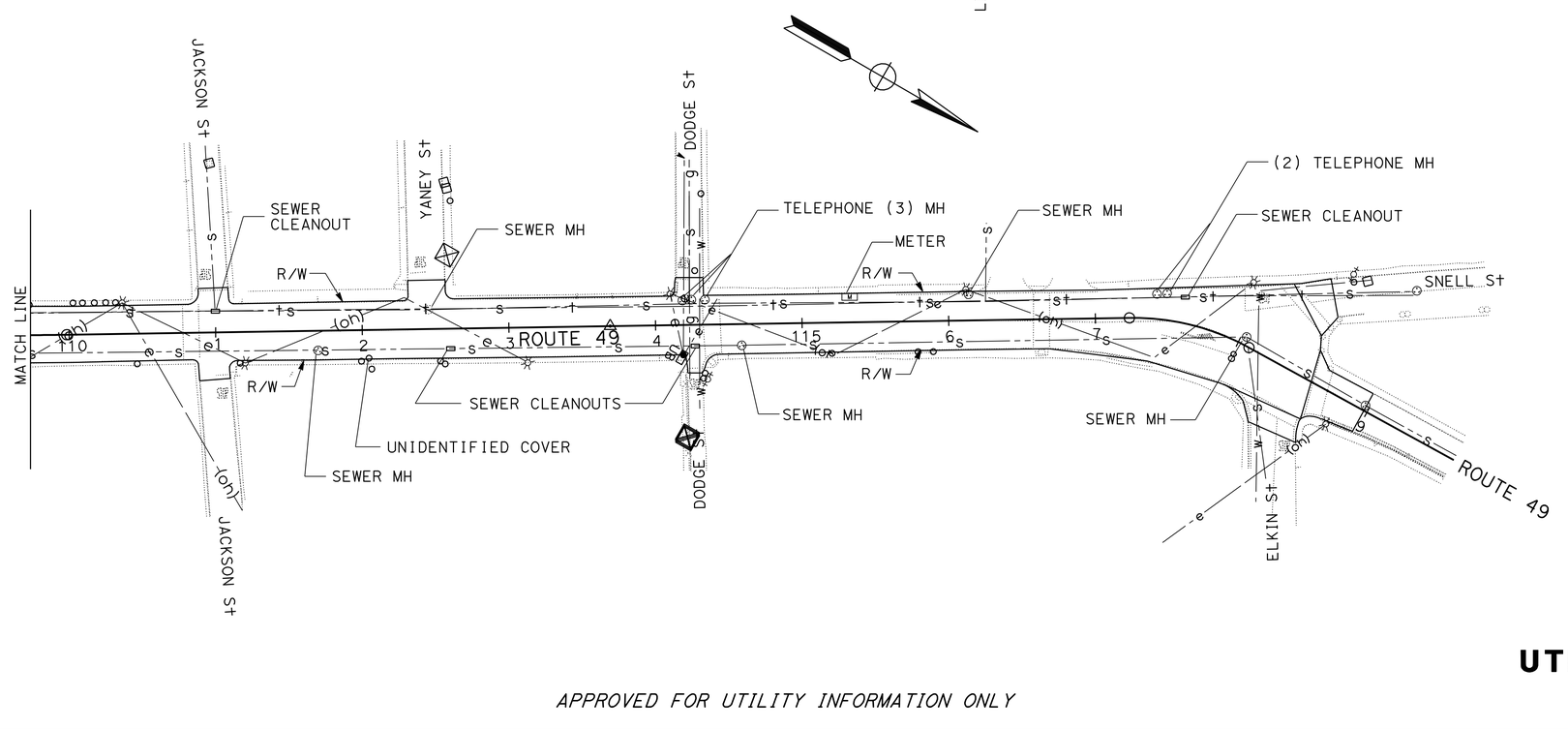


*APPROVED FOR UTILITY INFORMATION ONLY*

# UTILITY PLAN

SCALE: 1" = 50'

**U-1**

STATE OF CALIFORNIA - DEPARTMENT OF TRANSPORTATION — Caltrans — DESIGN

FUNCTIONAL SUPERVISOR: CAROLINE REYES

CALCULATED-DESIGNED BY: OSAMA ABDEL-MAGIED — CHECKED BY: EVERGLEEN CARA

REVISED BY: EC — DATE REVISED: 10/31/12

LAST REVISION: 00-00-00 — DATE PLOTTED => 21-FEB-2013 — TIME PLOTTED => 11:39

BORDER LAST REVISED 7/2/2010 — USERNAME => s123936 — DGN FILE => a0k150ka001.dgn — RELATIVE BORDER SCALE IS IN INCHES 0 1 2 3 — UNIT 1453 — PROJECT NUMBER & PHASE 1012000178

| Dist | COUNTY | ROUTE | POST MILES TOTAL PROJECT | SHEET No. | TOTAL SHEETS |
|---|---|---|---|---|---|
| 10 | Tuo | 49 | 18.0/18.3 | 13 | 25 |

REGISTERED CIVIL ENGINEER 1/18/13 DATE

1/28/13
PLANS APPROVAL DATE

REGISTERED PROFESSIONAL ENGINEER HUE NGUYEN No. 74484 Exp. 12/31/13 CIVIL STATE OF CALIFORNIA

*THE STATE OF CALIFORNIA OR ITS OFFICERS OR AGENTS SHALL NOT BE RESPONSIBLE FOR THE ACCURACY OR COMPLETENESS OF SCANNED COPIES OF THIS PLAN SHEET.*

# STATIONARY MOUNTED CONSTRUCTION AREA SIGNS

| SIGN LETTER | SIGN CODE | | PANEL SIZE | SIGN MESSAGE | No. OF POST AND SIZE | No. OF SIGNS |
|---|---|---|---|---|---|---|
| | FEDERAL | CALIFORNIA | | | | |
| A | W20-1 | | 48" x 48" | ROAD WORK AHEAD | 1 - 6" x 6" | 3 |
| B | G20-2 | | 36" x 18" | END ROAD WORK | 1 - 4" x 4" | 3 |
| C | W20-1 | | 36" x 36" | ROAD WORK AHEAD | 1 - 4" x 6" | 11 |

NOTE:

LOCATION OF CONSTRUCTION AREA SIGNS SHOWN ARE APPROXIMATE.
EXACT SIGN LOCATIONS TO BE DETERMINED BY THE ENGINEER.

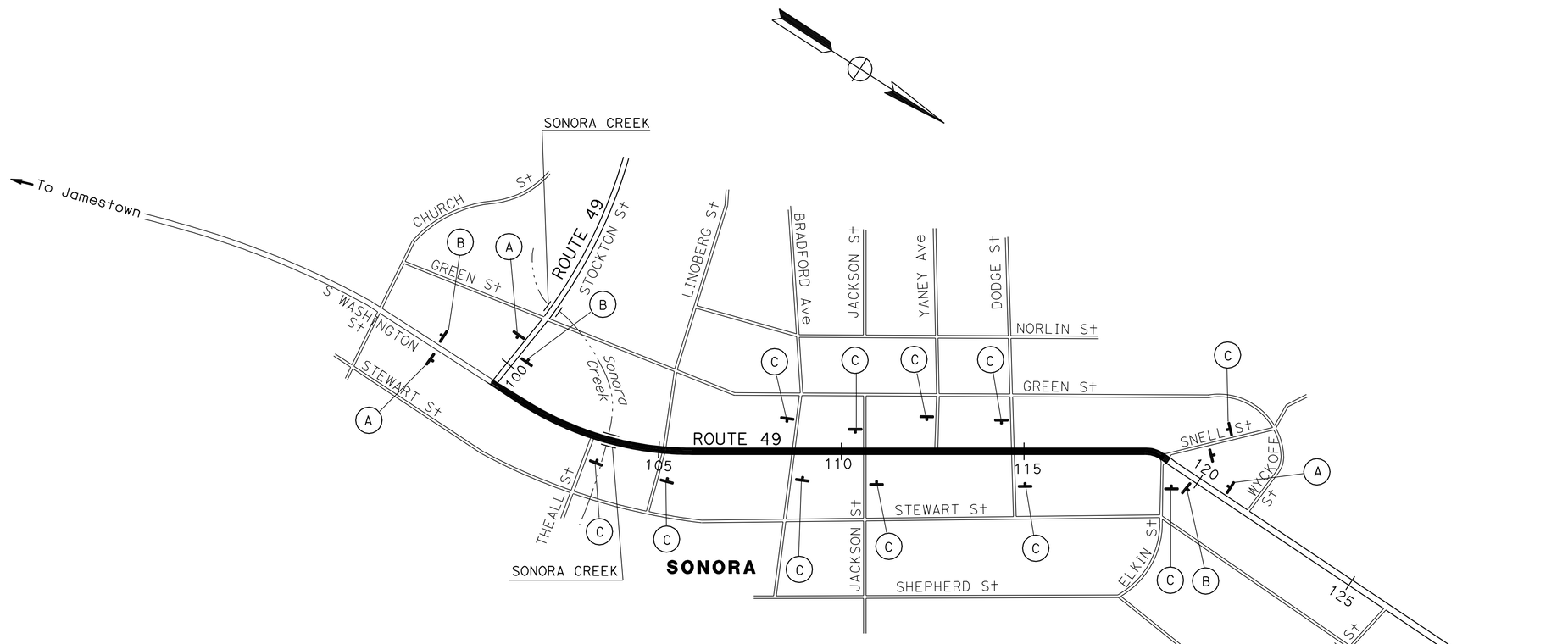


*APPROVED FOR CONSTRUCTION AREA SIGN WORK ONLY*

## CONSTRUCTION AREA SIGNS

NO SCALE

**CS-1**

STATE OF CALIFORNIA - DEPARTMENT OF TRANSPORTATION
Caltrans® TRAFFIC DESIGN

FUNCTIONAL SUPERVISOR: MOHAMMED QATAMI
CALCULATED-DESIGNED BY: RAJINI TEKALKOTE
CHECKED BY: HUE NGUYEN
REVISED BY: RT
DATE REVISED: 10/31/12

LAST REVISION 07-19-12
DATE PLOTTED => 21-FEB-2013
TIME PLOTTED => 11:40

| Dist | COUNTY | ROUTE | POST MILES TOTAL PROJECT | SHEET No. | TOTAL SHEETS |
|---|---|---|---|---|---|
| 10 | Tuo | 49 | 18.0/18.3 | 14 | 25 |

REGISTERED CIVIL ENGINEER 1/18/13 DATE

1/28/13
PLANS APPROVAL DATE

REGISTERED PROFESSIONAL ENGINEER HUE NGUYEN No. 74484 Exp. 12/31/13 CIVIL STATE OF CALIFORNIA

*THE STATE OF CALIFORNIA OR ITS OFFICERS OR AGENTS SHALL NOT BE RESPONSIBLE FOR THE ACCURACY OR COMPLETENESS OF SCANNED COPIES OF THIS PLAN SHEET.*

## LEGEND:

- THERMOPLASTIC TRAFFIC STRIPE (SPRAYABLE) DETAIL No.
- THERMOPLASTIC PAVEMENT MARKING
- PARKING SPACE PAVEMENT MARKING
- TYPE III ARROW PAVEMENT MARKING
- ROADSIDE SIGN - ONE POST (METAL POST)
- (XX) - ROADSIDE SIGN LETTER

## NOTES:

1. FOR ACCURATE RIGHT OF WAY DATA, CONTACT RIGHT OF WAY ENGINEERING AT THE DISTRICT OFFICE.
2. FOR THERMOPLASTIC PARKING SPACE PAVEMENT MARKING DETAILS, SEE SHEET PDD-1.

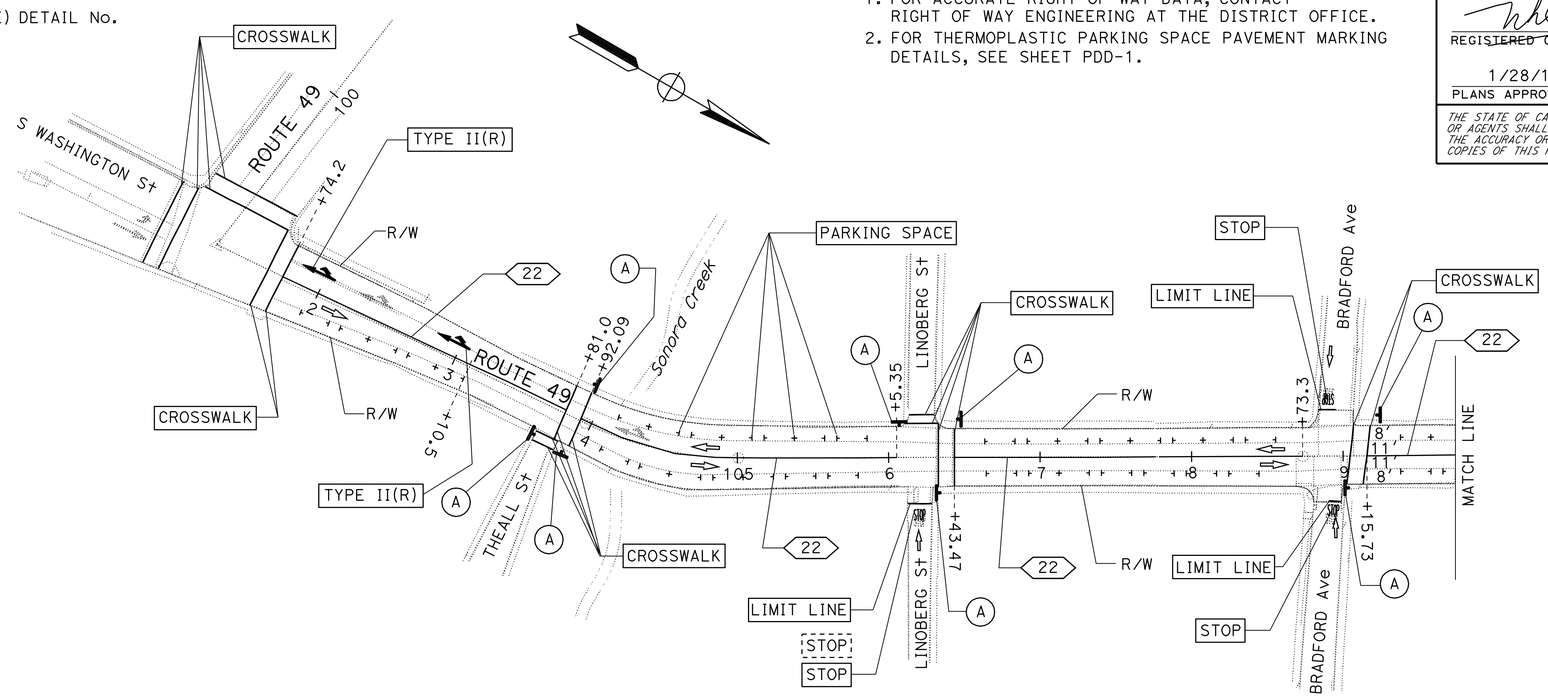


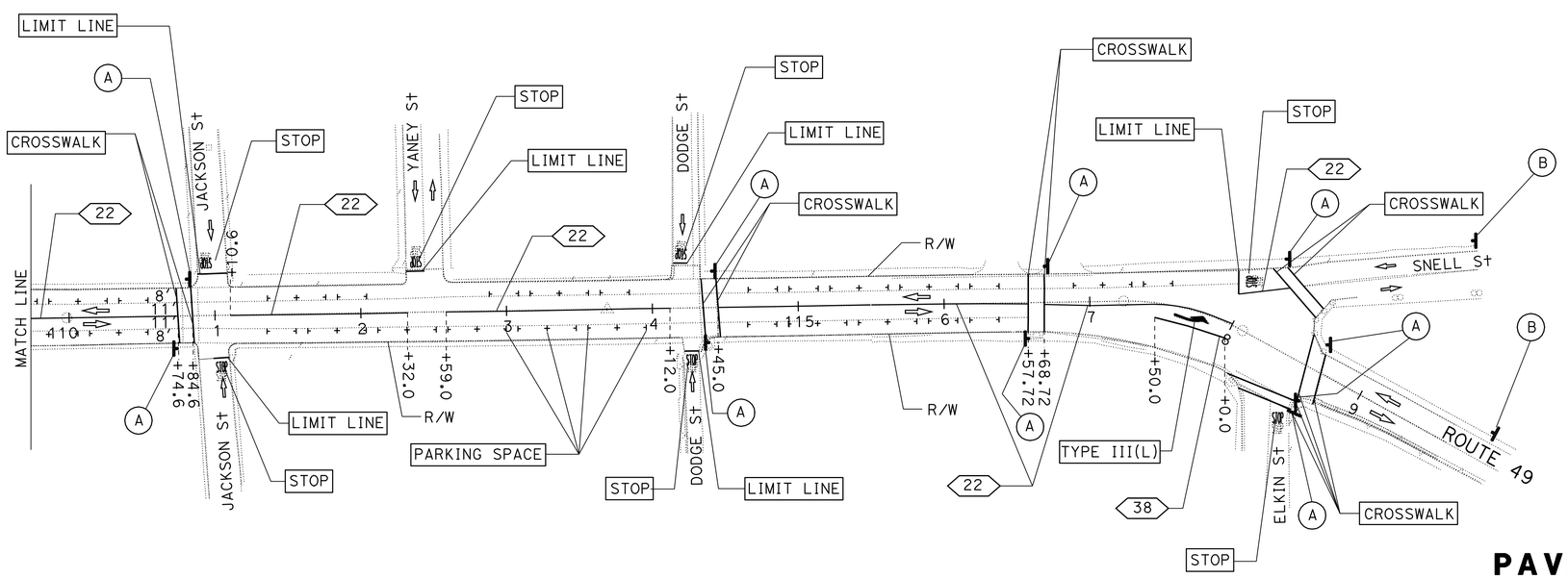


# PAVEMENT DELINEATION AND SIGN PLAN

SCALE: 1"= 50'

**PD-1**

*APPROVED FOR PAVEMENT DELINEATION AND SIGN WORK ONLY*

| | | | |
|---|---|---|---|
| RT | 10/31/12 | | |
| RT | 09/19/12 | | |
| REVISED BY | DATE REVISED | | |
| RAJINI TEKALKOTE | HUE NGUYEN | | |
| CALCULATED-DESIGNED BY | CHECKED BY | | |
| FUNCTIONAL SUPERVISOR | MOHAMMED QATAMI | | |

STATE OF CALIFORNIA - DEPARTMENT OF TRANSPORTATION
Caltrans
TRAFFIC DESIGN

LAST REVISION 10-04-12
DATE PLOTTED => 21-FEB-2013
TIME PLOTTED => 11:40

| Dist | COUNTY | ROUTE | POST MILES TOTAL PROJECT | SHEET No. | TOTAL SHEETS |
|---|---|---|---|---|---|
| 10 | Tuo | 49 | 18.0/18.3 | 15 | 25 |

REGISTERED CIVIL ENGINEER 1/18/13 DATE

1/28/13
PLANS APPROVAL DATE

REGISTERED PROFESSIONAL ENGINEER HUE NGUYEN No. 74484 Exp. 12/31/13 CIVIL STATE OF CALIFORNIA

*THE STATE OF CALIFORNIA OR ITS OFFICERS OR AGENTS SHALL NOT BE RESPONSIBLE FOR THE ACCURACY OR COMPLETENESS OF SCANNED COPIES OF THIS PLAN SHEET.*

LEGEND:

⊢ + - PARKING SPACE PAVEMENT MARKING

(X) - DETAIL No.

PARKING SPACE MARKING (TYPICAL)

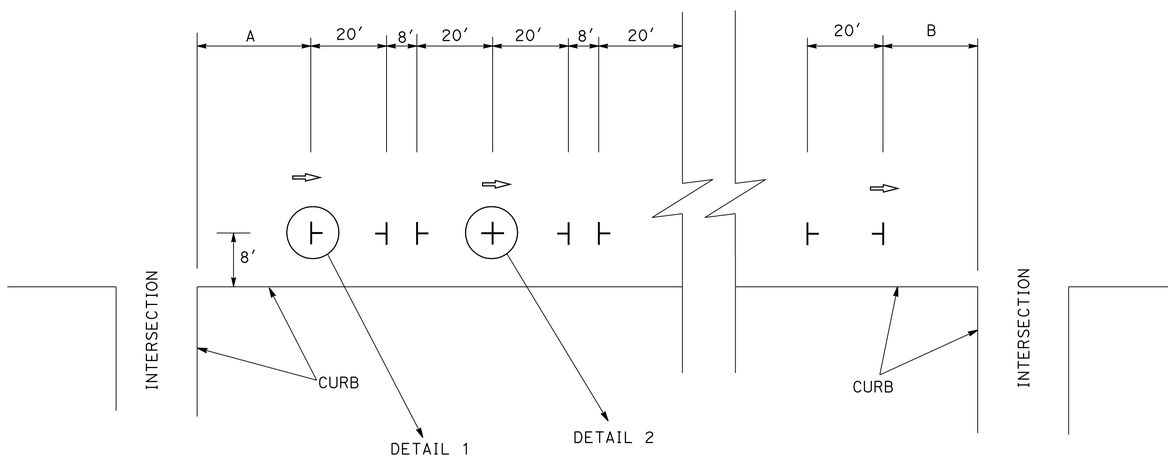


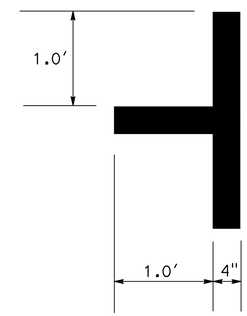


DETAIL 1

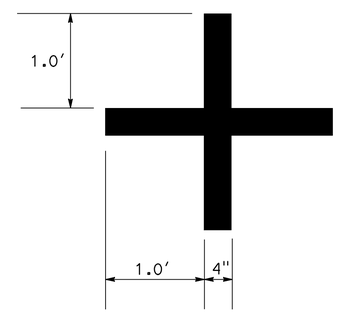


DETAIL 2

**GUIDELINES FOR MINIMUM VALUE OF "A" & "B"**

| TYPE OF INTERSECTION | A | B |
|---|---|---|
| | LF | |
| SIGNALIZED | 20 | 30 |
| UNSIGNALIZED | 20 | 20 |

# PAVEMENT DELINEATION DETAILS

NO SCALE

**PDD-1**

| | | |
|---|---|---|
| RAJINI TEKALKOTE | REVISED BY | RT |
| HUE NGUYEN | DATE REVISED | 10/31/12 |
| CALCULATED-DESIGNED BY | | |
| CHECKED BY | | |
| FUNCTIONAL SUPERVISOR | | |
| MOHAMMED QATAMI | | |

STATE OF CALIFORNIA - DEPARTMENT OF TRANSPORTATION

Caltrans® **TRAFFIC DESIGN**

LAST REVISION 10-04-12 | DATE PLOTTED => 21-FEB-2013 | TIME PLOTTED => 11:40

| Dist | COUNTY | ROUTE | POST MILES TOTAL PROJECT | SHEET No. | TOTAL SHEETS |
|---|---|---|---|---|---|
| 10 | Tuo | 49 | 18.0/18.3 | 16 | 25 |

REGISTERED CIVIL ENGINEER 1/18/13 DATE

1/28/13
PLANS APPROVAL DATE

REGISTERED PROFESSIONAL ENGINEER HUE NGUYEN No. 74484 Exp. 12/31/13 CIVIL STATE OF CALIFORNIA

*THE STATE OF CALIFORNIA OR ITS OFFICERS OR AGENTS SHALL NOT BE RESPONSIBLE FOR THE ACCURACY OR COMPLETENESS OF SCANNED COPIES OF THIS PLAN SHEET.*

# PAVEMENT DELINEATION ITEMS

| LOCATION/STATION LIMITS | THERMOPLASTIC TRAFFIC STRIPE (SPRAYABLE) | | THERMOPLASTIC PAVEMENT MARKING | | | | | | PAVEMENT MARKER (RETROREFLECTIVE) | |
|---|---|---|---|---|---|---|---|---|---|---|
| | DETAIL 22 4" YELLOW | DETAIL 38 8" WHITE | CROSSWALK | LIMIT LINE | STOP | TYPE II ARROW | TYPE III ARROW | PARKING SPACE | TYPE D | TYPE G |
| | LF | | SQFT | | | | | | EA | |
| Rte 49: Sta 100+00.0 TO Sta 101+74.2 | | | 346.2 | | | | | | | |
| Rte 49: Sta 101+74.2 TO Sta 103+92.09 | 206.8 | | 76.4 | | | 45 | | 9.44 | 18 | |
| Rte 49 @ THEALL STREET | | | 31 | | | | | | | |
| Rte 49: Sta 103+92.09 TO Sta 106+05.35 | 213.3 | | | | | 45 | | 26.9 | 18 | |
| Rte 49 @ LINOBERG STREET | | | 38.7 | 15.8 | 22 | | | | | |
| Rte 49: Sta 106+05.35 TO Sta 108+73.3 | 229.8 | | 79.5 | | | | | 29.9 | 20 | |
| Rte 49 @ BRADFORD STREET | | | | 19.8 | 44 | | | | | |
| Rte 49: Sta 108+73.3 TO Sta 110+84.6 | 158.9 | | 156.2 | | | | | 18.9 | 14 | |
| Rte 49 @ JACKSON STREET | | | | 30.9 | 44 | | | | | |
| Rte 49: Sta 110+84.6 TO Sta 114+12.0 | 274.4 | | | | | | | 34.1 | 24 | |
| Rte 49 @ YANEY STREET | | | | 12.7 | 22 | | | | | |
| Rte 49 @ DODGE STREET | | | | 20 | 44 | | | | | |
| Rte 49: Sta 114+12.0 TO Sta 119+00.0 | 344 | 50 | 243.4 | | | | 42 | 33.5 | 30 | 2 |
| Rte 49 @ SNELL STREET | 35.4 | | 82.1 | 16.08 | 22 | | | | 4 | |
| Rte 49 @ ELKIN STREET | | | 90.2 | | 22 | | | | | |
| SUBTOTAL | 1462.6 | 50 | 1143.7 | 115.28 | 220 | 90 | 42 | 152.74 | 128 | 2 |
| TOTAL | 1512.6 | | 1763.72 | | | | | | 130 | |

# ROADSIDE SIGN QUANTITIES

| SHEET No. | SIGN (XX) | SIGN CODE | SIGN MESSAGE | No. OF POST AND SIZE | PANEL SIZE | SINGLE FACED | DOUBLE FACED | BACKGROUND SHEETING COLOR | BACKGROUND RETROREFLECTIVITY ASTM TYPE | LEGEND SHEETING COLOR | LEGEND RETROREFLECTIVITY ASTM TYPE | GRAFFITI FLOW STANDARD | GRAFFITI FLOW PREMIUM | FURNISH SINGLE SHEET ALUMINUM SIGN 0.063"-UNFRAMED | METAL (ROADSIDE SIGN) |
|---|---|---|---|---|---|---|---|---|---|---|---|---|---|---|---|
| | | | | | | | | | | | | | | SQFT | LB |
| PD-1 | A | W11-2 | PEDESTRIAN | 1 - 4" x 6" | 36" x 36" | X | | YELLOW | III | BLACK | | | X | 162 | 810 |
| | | W16-7p | DIAGONAL DOWNWARD POINTING ARROW | | 24" x 12" | X | | YELLOW | III | BLACK | | | X | 36 | |
| | B | W11-2 | PEDESTRIAN | 1 - 4" x 6" | 36" x 36" | X | | YELLOW | III | BLACK | | | X | 18 | 90 |
| | | W16-9p | AHEAD | | 24" x 12" | X | | YELLOW | III | BLACK | | | X | 4 | |
| | | | | | | | | | | | | | TOTAL | 220 | 900 |

## PAVEMENT DELINEATION AND SIGN QUANTITIES
## PDQ-1

| REVISED BY | DATE REVISED |
|---|---|
| RT | 02/14/13 |
| RT | 10/04/12 |
| RT | 09/19/12 |

CALCULATED-DESIGNED BY: RAJINI TEKALKOTE
CHECKED BY: HUE NGUYEN
FUNCTIONAL SUPERVISOR: MOHAMMED QATAMI

STATE OF CALIFORNIA - DEPARTMENT OF TRANSPORTATION
Caltrans® TRAFFIC DESIGN

LAST REVISION 00-00-00 | DATE PLOTTED => 21-FEB-2013 | TIME PLOTTED => 11:40

| Dist | COUNTY | ROUTE | POST MILES TOTAL PROJECT | SHEET No. | TOTAL SHEETS |
|---|---|---|---|---|---|
| 10 | Tuo | 49 | 18.0/18.3 | 17 | 25 |

REGISTERED CIVIL ENGINEER 1/18/13 DATE

1/28/13
PLANS APPROVAL DATE

REGISTERED PROFESSIONAL ENGINEER HUE NGUYEN No. 74484 Exp. 12/31/13 CIVIL STATE OF CALIFORNIA

*THE STATE OF CALIFORNIA OR ITS OFFICERS OR AGENTS SHALL NOT BE RESPONSIBLE FOR THE ACCURACY OR COMPLETENESS OF SCANNED COPIES OF THIS PLAN SHEET.*

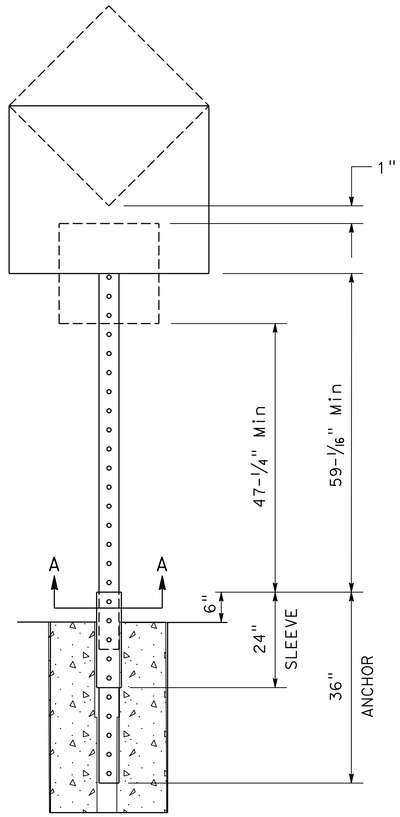


SECTION

**TYPICAL INSTALLATION**

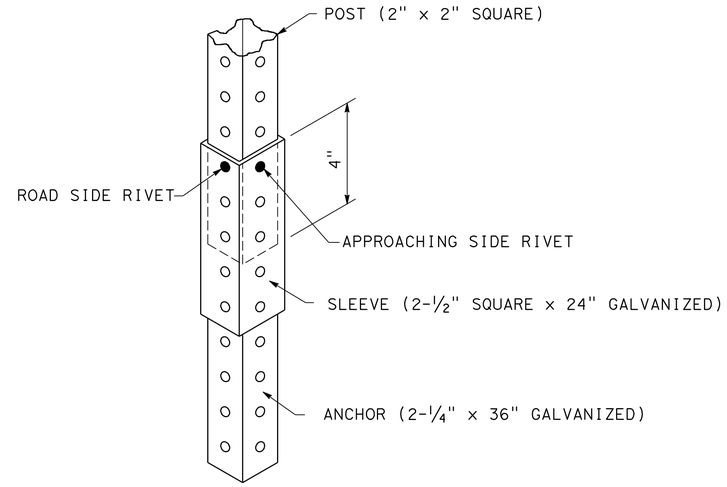


ISOMETRIC

**SIGN POST ANCHORING**

## NOTES:

1. POST SHALL BE 2" x 2" SQUARE, 10 GAGE, HOT-DIPPED GALVANIZED STEEL TUBING. POST MAY BE UNISTRUT TELESPAR 20F12 OR EQUIVALENT.
2. ANCHOR SHALL BE 2-1/4" SQUARE x 36", HOT-DIPPED GALVANIZED STEEL TUBING. ANCHOR MAY BE UNISTRUT TELESPAR 22F12 OR EQUIVALENT.
3. SLEEVE SHALL BE 2-1/2" SQUARE x 24", HOT-DIPPED GALVANIZED STEEL TUBING. ANCHOR MAY BE UNISTRUT TELESPAR 22F12 OR EQUIVALENT.
4. POST SHALL BE MOUNTED TO FOUNDATION WITH 2-3/8" x 7/16" DRIVE RIVETS. RIVETS SHALL BE STAGGERED AS SHOWN ON DETAIL.
5. ANCHOR AND SLEEVE SHALL BE DRIVEN INTO THE GROUND. NO CONCRETE SHALL BE PLACED AROUND ANCHOR OR SLEEVE.

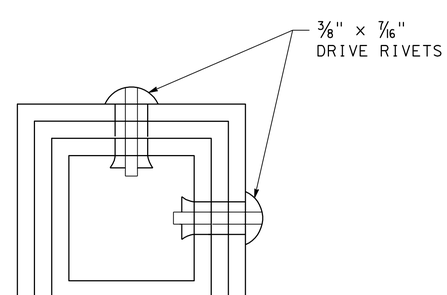


SECTION A-A

**METAL (ROADSIDE SIGN)**

# SIGN DETAILS

NO SCALE

**SD-1**

STATE OF CALIFORNIA - DEPARTMENT OF TRANSPORTATION
Caltrans® TRAFFIC DESIGN

FUNCTIONAL SUPERVISOR: MOHAMMED QATAMI
CALCULATED-DESIGNED BY: RAJINI TEKALKOTE
CHECKED BY: HUE NGUYEN
REVISED BY: RT
DATE REVISED: 1/28/13
RT 02/14/13

LAST REVISION 01-28-13
DATE PLOTTED => 18-MAR-2013
TIME PLOTTED => 14:04

| Dist | COUNTY | ROUTE | POST MILES TOTAL PROJECT | SHEET No. | TOTAL SHEETS |
|---|---|---|---|---|---|
| 10 | Tuo | 49 | 18.0/18.3 | 18 | 25 |

REGISTERED CIVIL ENGINEER 1/18/13 DATE

1/28/13
PLANS APPROVAL DATE

REGISTERED PROFESSIONAL ENGINEER Evergleen Cara No. 72057 Exp 6/30/14 CIVIL STATE OF CALIFORNIA

*THE STATE OF CALIFORNIA OR ITS OFFICERS OR AGENTS SHALL NOT BE RESPONSIBLE FOR THE ACCURACY OR COMPLETENESS OF SCANNED COPIES OF THIS PLAN SHEET.*

NOTES:

1. TOTAL INCLUDED IN ROADWAY ITEMS TABLE.
2. TRAFFIC MANAGEMENT SYSTEM ELEMENT LOCATIONS ARE APPROXIMATE.

## TEMPORARY WATER POLLUTION CONTROL

| LOCATION | TEMPORARY DI PROTECTION | DRAINAGE INLET MARKER |
|---|---|---|
| | (EA) | (EA) |
| 101+90.96 25.7' R+ ROUTE 49 | 1 | |
| 102+52.86 21.9' R+ ROUTE 49 | 1 | |
| 102+24.75 21.5' L+ ROUTE 49 | 1 | |
| 102+57.43 21.4' L+ ROUTE 49 | 1 | |
| 102+99.00 19.3' L+ ROUTE 49 | 1 | |
| 103+37.54 18.2' L+ ROUTE 49 | 1 | |
| 103+65.72 16.2' R+ ROUTE 49 | 1 | |
| 103+97.86 19.2' L+ ROUTE 49 | 1 | |
| 104+77.47 19.9' L+ ROUTE 49 | 1 | |
| 104+79.44 21.4' R+ ROUTE 49 | 1 | |
| 104+93.03 20.0' R+ ROUTE 49 | 1 | |
| 105+27.49 20.0' R+ ROUTE 49 | 1 | |
| 105+39.25 19.9 L+ ROUTE 49 | 1 | |
| 106+18.29 19.7' R+ ROUTE 49 | 1 | |
| 106+37.90 18.3' L+ ROUTE 49 | 1 | |
| 106+39.41 18.3' R+ ROUTE 49 | 1 | |
| 106+53.98 18.3' L+ ROUTE 49 | 1 | |
| 106+87.28 18.3' L+ ROUTE 49 | 1 | |
| 109+04.54 19.2' L+ ROUTE 49 | 1 | |
| 109+19.00 14.7' R+ ROUTE 49 | 1 | |
| 109+20.01 19.3' L+ ROUTE 49 | 1 | |
| 110+88.83 20.5' L+ ROUTE 49 | 1 | |
| 111+14.65 18.6' L+ ROUTE 49 | 1 | |
| 111+16.43 19.2' R+ ROUTE 49 | 1 | |
| 112+33.37 19.9' L+ ROUTE 49 | 1 | 1 |
| 112+57.51 19.9' L+ ROUTE 49 | 1 | |
| 112+87.73 19.9' R+ ROUTE 49 | 1 | |
| 114+07.53 19.1' L+ ROUTE 49 | 1 | |
| 114+37.38 21.0' R+ ROUTE 49 | 1 | |
| 114+43.67 18.9' L+ ROUTE 49 | 1 | |
| 114+48.01 19.4' R+ ROUTE 49 | 1 | |
| 116+22.39 18.9' L+ ROUTE 49 | 1 | |
| 116+47.21 19.8' R+ ROUTE 49 | 1 | 1 |
| 116+85.26 21.3' R+ ROUTE 49 | 1 | |
| 118+22.00 28.3' R+ ROUTE 49 | 1 | |
| TOTAL | 35 | 2 |

## ASPHALT-RUBBERIZED SEAL COAT (SAMI)

| LOCATION | ASPHALT-RUBBER BINDER | SCREENINGS (HOT APPLIED) |
|---|---|---|
| | TON | TON |
| 100+60.0 TO 118+97.6 | 30 | 185 |

## ROADWAY ITEMS

| LOCATION | RUBBERIZED ASPHALT CONCRETE (TYPE G) | TACK COAT | COLD PLANE AC PAVEMENT | PARKING AREA SEAL | HMA (TYPE A) |
|---|---|---|---|---|---|
| | TON | TON | SQYD | TON | |
| 100+60.0 TO 118+97.6 | 1240 | 2.2 | 9158 | 3.9 | |
| DIGOUTS | | | 21.7 | | 4.4 |
| TOTAL | 1240 | 2.2 | 9179.7 | 3.9 | 4.4 |

## DIGOUTS

| DIRECTION | PM | L | W | COLD PLANE AC Pvm+ | HMA (TYPE A) |
|---|---|---|---|---|---|
| | | | | SQYD | TON |
| NB | 18.196 | 7' | 3' | 2.3 | 0.5 |
| SB | 18.217 | 10' | 3' | 3.3 | 0.7 |
| NB | 18.268 | 13.5' | 6' | 9.0 | 1.8 |
| NB | 18.298 | 8' | 8' | 7.1 | 1.4 |
| TOTAL | | | | 21.7 * | 4.4 * |

ACTUAL LOCATIONS AND DIMENSIONS OF DIGOUTS MAY VERY IN THE FIELD AND WILL BE DETERMINED BY THE ENGINEER.

## TRAFFIC MANAGEMENT SYSTEM ELEMENTS (EXISTING)

| PM | LOCATION | DESCRIPTION |
|---|---|---|
| 18.0 | ROUTE 49/S WASHINGTON St | SIGNAL |

# SUMMARY OF QUANTITIES

Q-1

| REVISED BY | DATE REVISED |
|---|---|
| EC | 01/25/13 |

| CALCULATED-DESIGNED BY | CHECKED BY |
|---|---|
| OSAMA ABDEL-MAGIED | EVERGLEEN CARA |

FUNCTIONAL SUPERVISOR: CAROLINE REYES

STATE OF CALIFORNIA - DEPARTMENT OF TRANSPORTATION

Caltrans DESIGN

LAST REVISION 00-00-00 | DATE PLOTTED => 21-FEB-2013 | TIME PLOTTED => 11:40

| Dist | COUNTY | ROUTE | POST MILES TOTAL PROJECT | SHEET No. | TOTAL SHEETS |
|---|---|---|---|---|---|
| 10 | Tuo | 49 | 18.0/18.3 | 19 | 25 |

REGISTERED ELECTRICAL ENGINEER 1/22/13 DATE

1/28/13
PLANS APPROVAL DATE

REGISTERED PROFESSIONAL ENGINEER JASPAL SINGH No. 16657 Exp. 6/30/14 ELECTRICAL STATE OF CALIFORNIA

*THE STATE OF CALIFORNIA OR ITS OFFICERS OR AGENTS SHALL NOT BE RESPONSIBLE FOR THE ACCURACY OR COMPLETENESS OF SCANNED COPIES OF THIS PLAN SHEET.*

## LEGEND:

1. Exist 120/240 V, 1Ø, 3-WIRE, TYPE A SERVICE.
2. Exist SIGNAL AND LIGHTING DETAILS NOT SHOWN.
3. LOOP DETECTORS MUST BE SPLICED IN PB AS SHOWN IN DETAIL A ON THIS SHEET. TYPE D LOOP MUST HAVE FIVE TURNS.

## NOTES:

1. AB Exist LOOP DETECTORS AND INSTALL LOOP DETECTORS AS SHOWN.
2. FOR ACCURATE RIGHT OF WAY DATA, CONTACT RIGHT OF WAY ENGINEERING AT THE DISTRICT OFFICE.

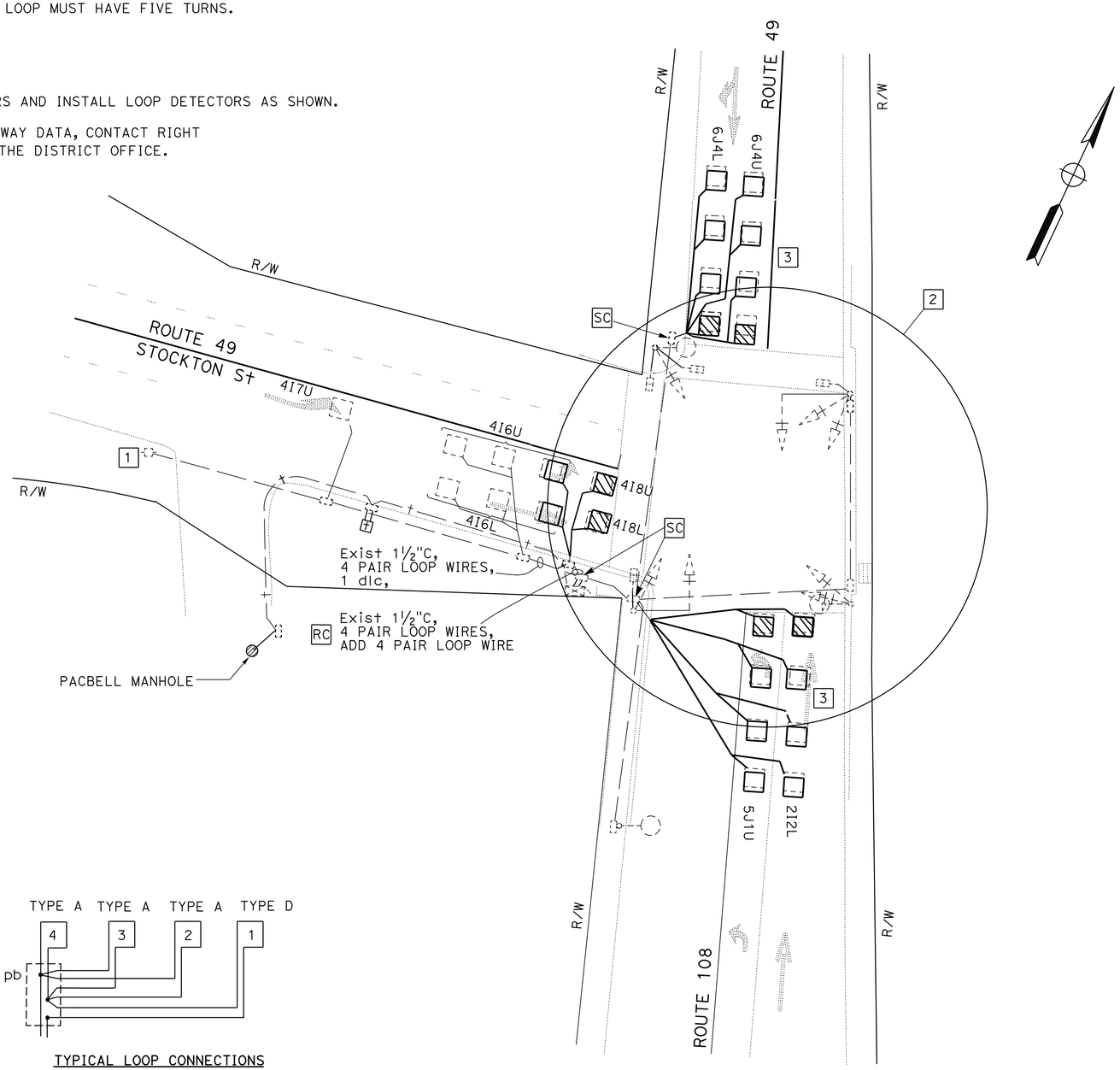


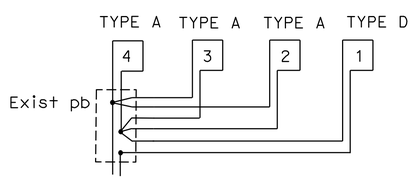


TYPICAL LOOP CONNECTIONS

**DETAIL A**

*APPROVED FOR ELECTRICAL WORK ONLY*

# MODIFY SIGNAL

NO SCALE

**E-1**

| LAST REVISION | DATE PLOTTED => 21-FEB-2013 |
|---|---|
| 02-04-13 | TIME PLOTTED => 11:40 |

| | |
|---|---|
| REVISED BY | JS |
| DATE REVISED | 2/04/13 |
| CALCULATED-DESIGNED BY | ALVARO ARAICA |
| CHECKED BY | JASPAL SINGH |
| FUNCTIONAL SUPERVISOR | ALI BAKHDOUD |

STATE OF CALIFORNIA - DEPARTMENT OF TRANSPORTATION

Caltrans® **ELECTRICAL DESIGN**

| Dist | COUNTY | ROUTE | POST MILES TOTAL PROJECT | SHEET No. | TOTAL SHEETS |
|---|---|---|---|---|---|
| 10 | Tuo | 49 | 18.0/18.3 | 20 | 25 |

REGISTERED ELECTRICAL ENGINEER 1/22/13 DATE

1/28/13
PLANS APPROVAL DATE

REGISTERED PROFESSIONAL ENGINEER JASPAL SINGH No. 16657 Exp. 6/30/14 ELECTRICAL STATE OF CALIFORNIA

*THE STATE OF CALIFORNIA OR ITS OFFICERS OR AGENTS SHALL NOT BE RESPONSIBLE FOR THE ACCURACY OR COMPLETENESS OF SCANNED COPIES OF THIS PLAN SHEET.*

NOTE:

THE QUANTITIES ON THIS SHEET ARE FOR INFORMATION ONLY AND ARE NOT SEPARATE PAY ITEMS.

## MODIFY SIGNAL

| SHEET No. | TYPE A INDUCTIVE LOOP DETECTOR | TYPE D INDUCTIVE LOOP DETECTOR |
|---|---|---|
| | EA | EA |
| E-1 | 14 | 6 |

# ELECTRICAL QUANTITIES
# E-2

STATE OF CALIFORNIA - DEPARTMENT OF TRANSPORTATION
Caltrans® ELECTRICAL DESIGN

FUNCTIONAL SUPERVISOR: ALI BAKHDOUD
CALCULATED-DESIGNED BY: ALVARO ARAICA
CHECKED BY: JASPAL SINGH
REVISED BY: JS
DATE REVISED: 01/22/13

LAST REVISION 02-04-13
DATE PLOTTED => 21-FEB-2013
TIME PLOTTED => 11:40

| Dist | COUNTY | ROUTE | POST MILES TOTAL PROJECT | SHEET No. | TOTAL SHEETS |
|---|---|---|---|---|---|
| 10 | Tuo | 49 | 18.0/18.3 | 21 | 25 |

REGISTERED CIVIL ENGINEER 12-7-12 DATE

1/28/13
PLANS APPROVAL DATE

REGISTERED PROFESSIONAL ENGINEER Gurinderpal Bhullar No. C48815 Exp. 9-30-14 CIVIL STATE OF CALIFORNIA

THE STATE OF CALIFORNIA OR ITS OFFICERS OR AGENTS SHALL NOT BE RESPONSIBLE FOR THE ACCURACY OR COMPLETENESS OF SCANNED COPIES OF THIS PLAN SHEET.

## NOTES:

Unless otherwise specified in the special provisions, all temporary warning signs shall have black legend on orange background.

California code are designated by (CA). Otherwise, Federal (MUTCD) codes are shown.

# TYPICAL LANE CLOSURE WITH REVERSIBLE CONTROL

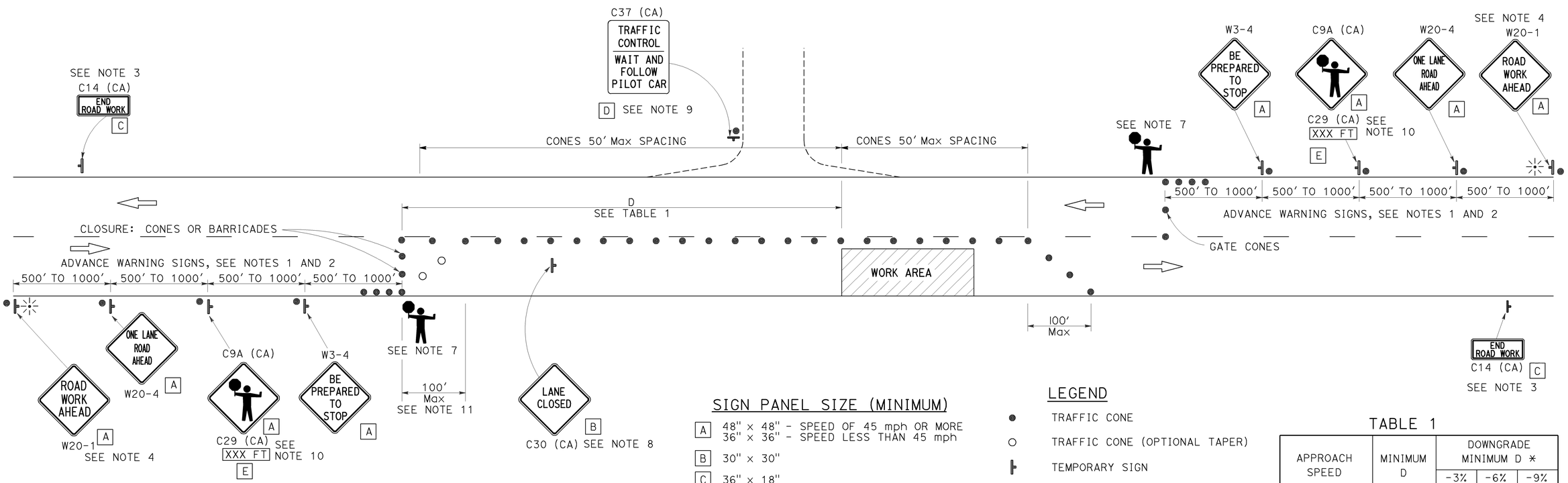


## SIGN PANEL SIZE (MINIMUM)

- A: 48" x 48" - SPEED OF 45 mph OR MORE; 36" x 36" - SPEED LESS THAN 45 mph
- B: 30" x 30"
- C: 36" x 18"
- D: 36" x 42"
- E: 36" x 9"

## LEGEND

- TRAFFIC CONE
- TRAFFIC CONE (OPTIONAL TAPER)
- TEMPORARY SIGN
- PORTABLE FLASHING BEACON
- FLAGGER

## TABLE 1

| APPROACH SPEED | MINIMUM D | DOWNGRADE MINIMUM D * | | |
|---|---|---|---|---|
| | | -3% | -6% | -9% |
| mph | ft | ft | ft | ft |
| 25 AND BELOW | 155 | 158 | 165 | 173 |
| 30 | 200 | 205 | 215 | 227 |
| 35 | 250 | 257 | 271 | 287 |
| 40 | 305 | 315 | 333 | 354 |
| 45 | 360 | 378 | 400 | 427 |
| 50 | 425 | 446 | 474 | 507 |
| 55 | 495 | 520 | 553 | 593 |
| 60 | 570 | 598 | 638 | 686 |
| 65 | 645 | 682 | 728 | 785 |

* USE ON SUSTAINED DOWNGRADE STEEPER THAN -3 PERCENT AND LONGER THAN 1 MILE.

## NOTES:

1. Where approach speeds are low, advance warning signs may be placed at 300' spacing, and closer in urban areas.
2. Each advance warning sign in each direction of travel shall be equipped with at least two flags for daytime closure. Each flag shall be at least 16" x 16" in size and shall be orange or fluorescent red-orange in color. Flashing beacons shall be placed at the locations indicated for lane closure during hours of darkness.
3. A C14 (CA) "END ROAD WORK" sign, as appropriate, shall be placed at the end of the lane control unless the end of work area is obvious, or ends within a larger project's limits.
4. If the W20-1 sign would follow within 2000' of a stationary W20-1 or C11 (CA) "ROAD WORK NEXT _____MILES", use a W20-4 sign for the first advance warning sign.
5. All cones used for lane closures during the hours of darkness shall be fitted with retroreflective bands (or sleeves) as specified in the specifications.
6. Portable delineators, placed at one-half the spacing indicated for traffic cones, may be used instead of cones for daytime closures only.
7. Additional advance flaggers may be required. Flagger should stand in a conspicuous place, be visible to approaching traffic as well as approaching vehicles after the first vehicle has stopped. During the hours of darkness, the flagging-station and flagger shall be illuminated and clearly visible to approaching traffic. The illumination footprint of the lighting on the ground shall be at least 20' in diameter. Place a minimum of four cones at 50' intervals in advance of flagger station as shown.
8. Place C30 (CA) "LANE CLOSED" sign at 500' to 1000' intervals throughout extended work areas. They are optional if the work area is visible from the flagger station.
9. When a pilot car is used, place a C37 (CA) "TRAFFIC CONTROL-WAIT AND FOLLOW PILOT CAR" sign at all intersections within traffic control area. Signs shall be clean and visible at all times.
10. An optional C29 (CA) sign may be placed below the C9A (CA) sign.
11. Traffic cones or barricades may be placed on the optional taper as shown, barricades shall be Type I, II, or III.

STATE OF CALIFORNIA
DEPARTMENT OF TRANSPORTATION

# TRAFFIC CONTROL SYSTEM FOR LANE CLOSURE ON TWO LANE CONVENTIONAL HIGHWAYS

NO SCALE

**TCS-1**

STATE OF CALIFORNIA - DEPARTMENT OF TRANSPORTATION
Caltrans

FUNCTIONAL SUPERVISOR | CALCULATED-DESIGNED BY | CHECKED BY | REVISED BY | DATE REVISED

LAST REVISION 00-00-00 | DATE PLOTTED => 10-DEC-2012 | TIME PLOTTED => 09:45

| Dist | COUNTY | ROUTE | POST MILES TOTAL PROJECT | SHEET No. | TOTAL SHEETS |
|---|---|---|---|---|---|
| 10 | Tuo | 49 | 18.0/18.3 | 22 | 25 |

REGISTERED CIVIL ENGINEER

July 20, 2012
PLANS APPROVAL DATE

REGISTERED PROFESSIONAL ENGINEER
Roberta L. McLaughlin
No. C40375
Exp. 3-31-13
CIVIL
STATE OF CALIFORNIA

*THE STATE OF CALIFORNIA OR ITS OFFICERS OR AGENTS SHALL NOT BE RESPONSIBLE FOR THE ACCURACY OR COMPLETENESS OF SCANNED COPIES OF THIS PLAN SHEET.*

TO ACCOMPANY PLANS DATED 1/28/13

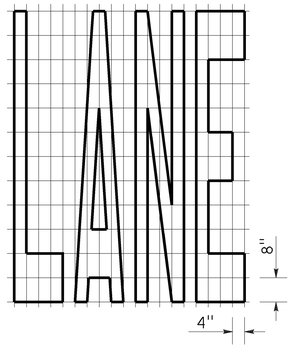


A=24 ft²

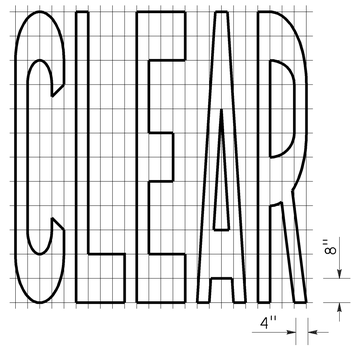


A=27 ft²

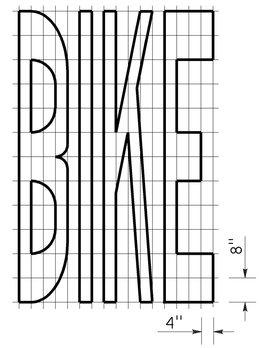


A=21 ft²

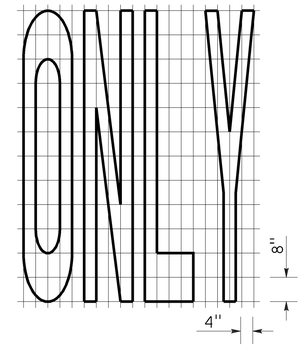


A=22 ft²

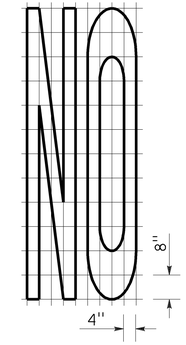


A=14 ft²

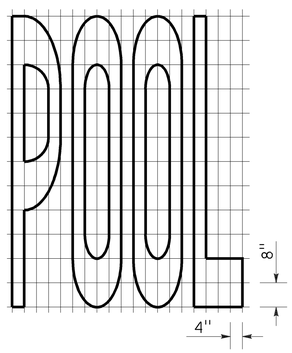


A=23 ft²

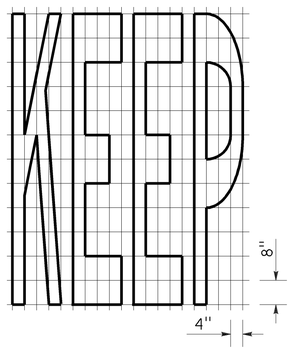


A=24 ft²

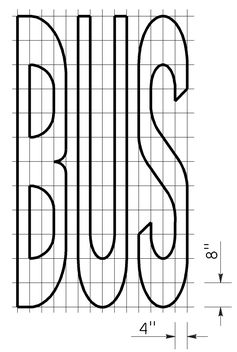


A=20 ft²

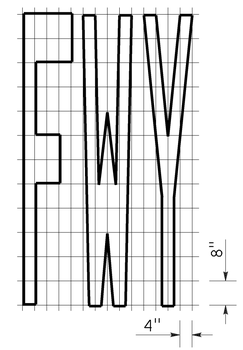


A=16 ft²

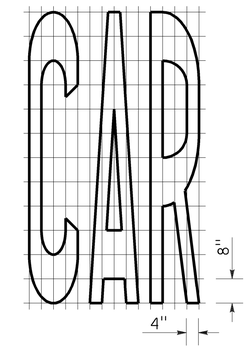


A=17 ft²

| WORD MARKINGS | | | |
|---|---|---|---|
| ITEM | ft² | ITEM | ft² |
| LANE | 24 | NO | 14 |
| POOL | 23 | BIKE | 21 |
| CAR | 17 | BUS | 20 |
| CLEAR | 27 | ONLY | 22 |
| KEEP | 24 | FWY | 16 |

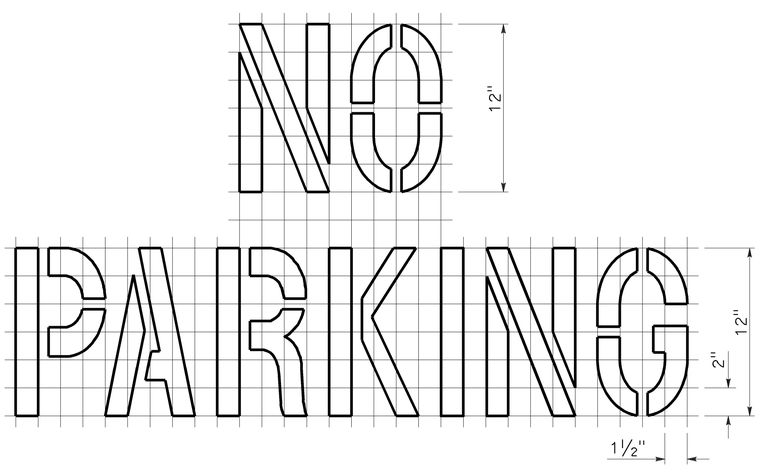


A=2 ft²
See Notes 6 and 7

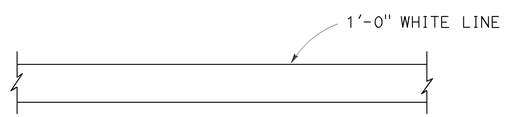


LIMIT LINE (STOP LINE)

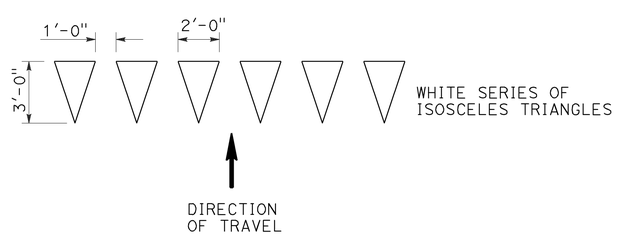


YIELD LINE

NOTES:

1. If a message consists of more than one word, it should read "UP", i.e., the first word should be nearest the driver.
2. The space between words should be at least four times the height of the characters for low speed roads, but not more than ten times the height of the characters. The space may be reduced appropriately where there is limited space because of local conditions.
3. Minor variations in dimensions may be accepted by the Engineer.
4. Portions of a letter, number or symbol may be separated by connecting segments not to exceed 2" in width.
5. The words "NO PARKING" pavement marking is to be used for parking facilities. For typical locations of markings, see Standard Plans A90A and A90B.
6. The words "NO PARKING", shall be painted in white letters no less than 1'-0" high on a contrasting background and located so that it is visible to traffic enforcement officials.

STATE OF CALIFORNIA
DEPARTMENT OF TRANSPORTATION

# PAVEMENT MARKINGS WORDS, LIMIT AND YIELD LINES

NO SCALE

RSP A24E DATED JULY 20, 2012 SUPERSEDES STANDARD PLAN A24E
DATED MAY 20, 2011 - PAGE 17 OF THE STANDARD PLANS BOOK DATED 2010.

**REVISED STANDARD PLAN RSP A24E**

**2010 REVISED STANDARD PLAN RSP A24E**

6-12-12

| Dist | COUNTY | ROUTE | POST MILES TOTAL PROJECT | SHEET No. | TOTAL SHEETS |
|---|---|---|---|---|---|
| 10 | Tuo | 49 | 18.8/18.3 | 23 | 25 |

REGISTERED CIVIL ENGINEER

July 20, 2012
PLANS APPROVAL DATE

REGISTERED PROFESSIONAL ENGINEER
Roberta L. McLaughlin
No. C40375
Exp. 3-31-13
CIVIL
STATE OF CALIFORNIA

*THE STATE OF CALIFORNIA OR ITS OFFICERS OR AGENTS SHALL NOT BE RESPONSIBLE FOR THE ACCURACY OR COMPLETENESS OF SCANNED COPIES OF THIS PLAN SHEET.*

TO ACCOMPANY PLANS DATED 1/28/13

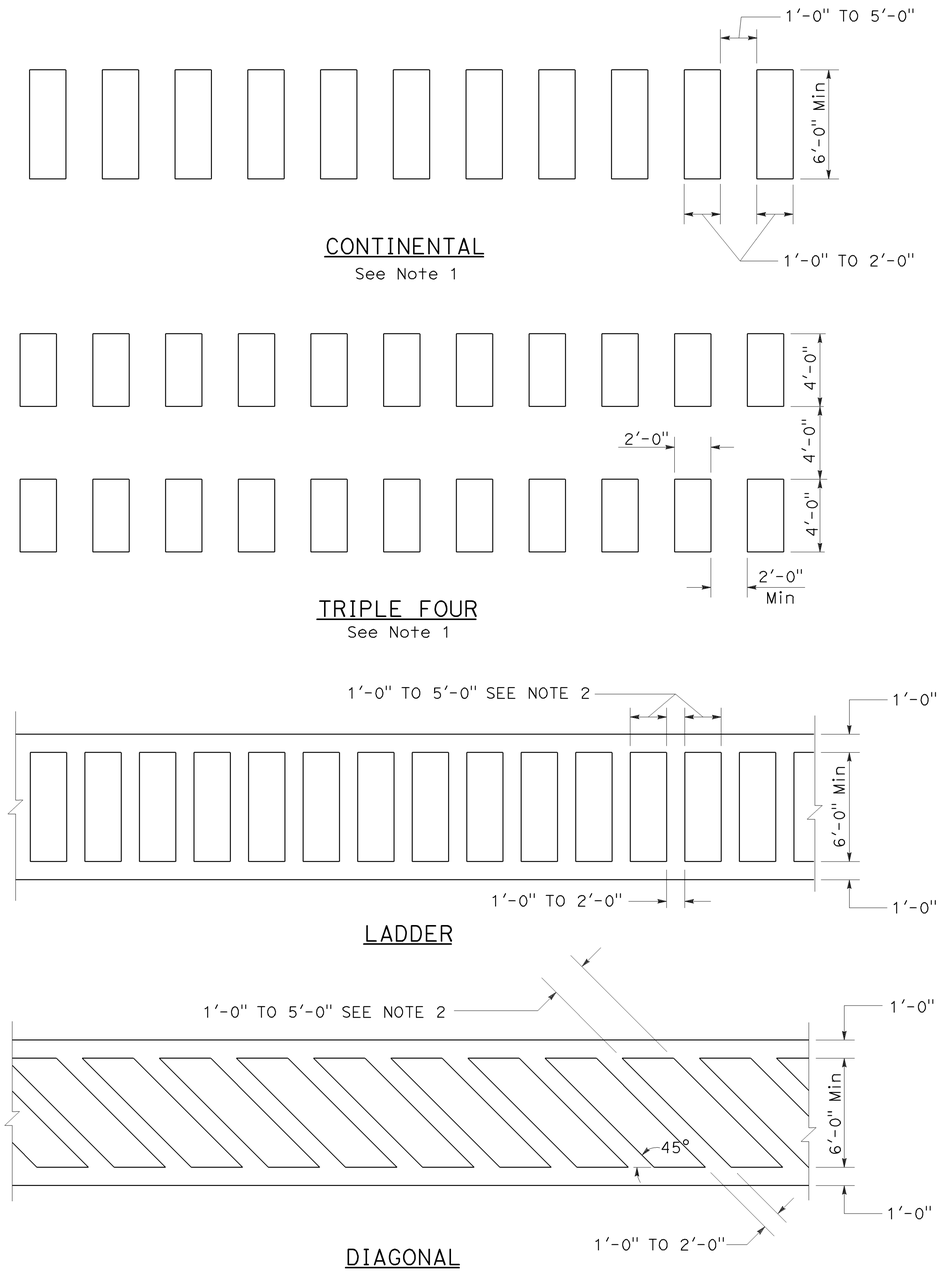


HIGHER VISIBILITY CROSSWALKS

## NOTES:

1. Spaces between markings should be placed in wheel tracks of each lane.
2. Spacings not to exceed 2.5 times width of longitudinal line.
3. All crosswalk markings must be white except for those near schools must be yellow.

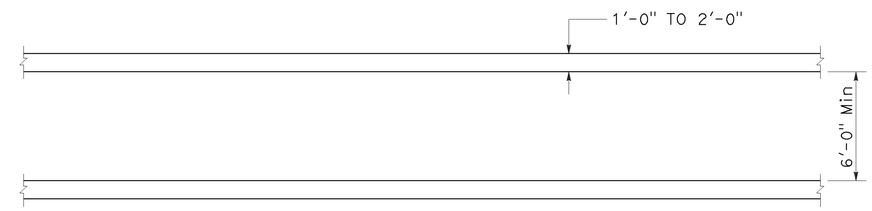


BASIC

STATE OF CALIFORNIA
DEPARTMENT OF TRANSPORTATION

# PAVEMENT MARKINGS CROSSWALKS

NO SCALE

RSP A24F DATED JULY 20, 2012 SUPPLEMENTS THE STANDARD PLANS BOOK DATED 2010.

**REVISED STANDARD PLAN RSP A24F**

**2010 REVISED STANDARD PLAN RSP A24F**

6-28-12

TO ACCOMPANY PLANS DATED 1/28/13

| Dist | COUNTY | ROUTE | POST MILES TOTAL PROJECT | SHEET No. | TOTAL SHEETS |
|---|---|---|---|---|---|
| 10 | Tuo | 49 | 18.0/18.3 | 24 | 25 |

REGISTERED CIVIL ENGINEER

October 19, 2012
PLANS APPROVAL DATE

REGISTERED PROFESSIONAL ENGINEER Glenn DeCou No. C34547 Exp. 9-30-13 CIVIL STATE OF CALIFORNIA

*THE STATE OF CALIFORNIA OR ITS OFFICERS OR AGENTS SHALL NOT BE RESPONSIBLE FOR THE ACCURACY OR COMPLETENESS OF SCANNED COPIES OF THIS PLAN SHEET.*

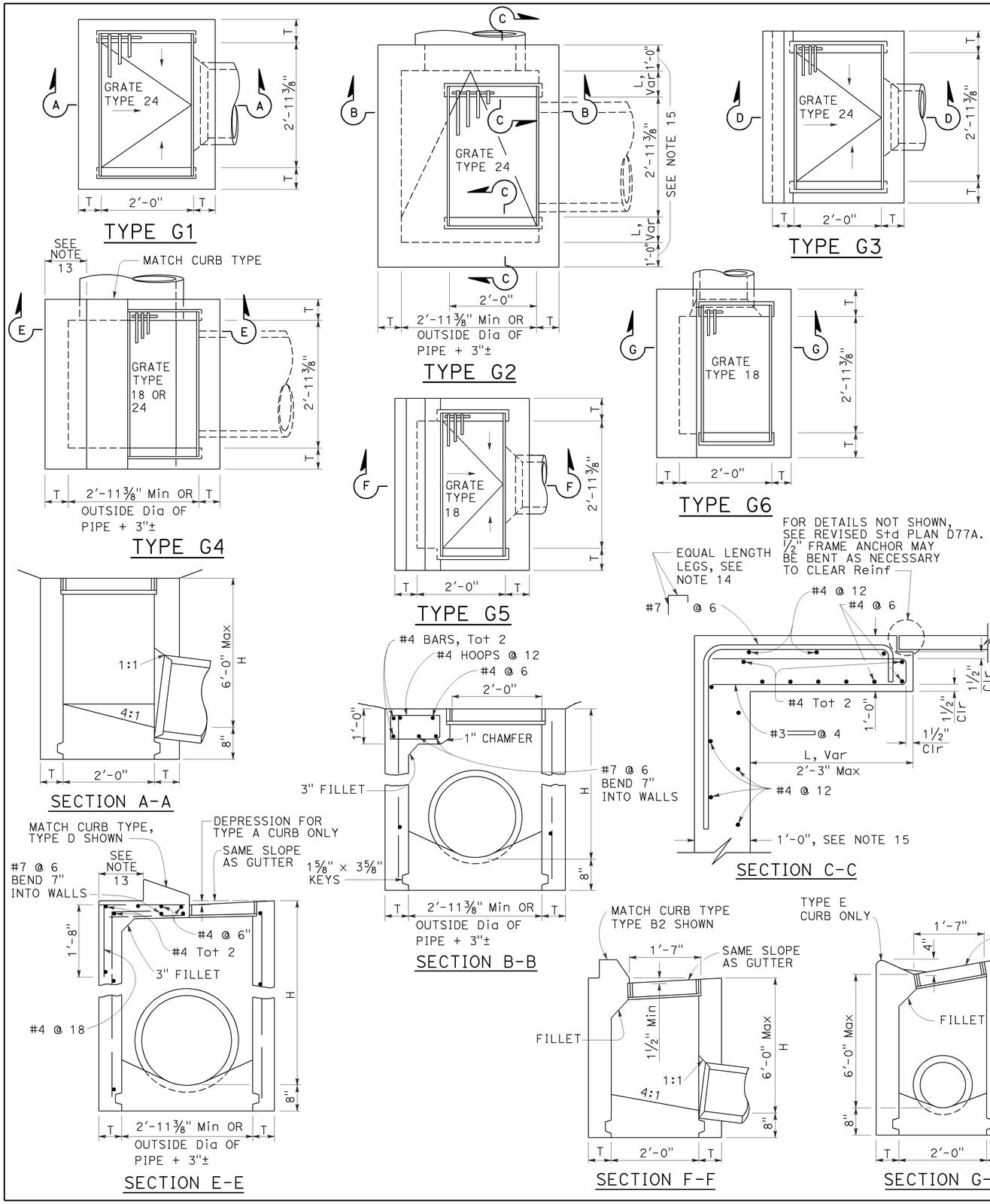


## NOTES:

1. "H" is the difference in elevation between the outlet pipe flow line and the normal gutter grade line undepressed.
2. For "T" wall thickness, see Table A below.
3. Wall reinforcing not required when "H" is 8'-0" or less and the unsupported width or length is 7'-0" or less. Walls exceeding these limits shall be reinforced with #4 bars @ 1'-6" ± centers placed 1½" clear to inside of box unless otherwise shown.
4. Inlet bottom reinforcing not required. See Standard Plan D74C for alternative reinforced bottom and alternative half round bottom.
5. Steps-None required where "H" is less than 2'-6". Where "H" is 2'-6" or more, install steps with lowest rung 1'-0" above the floor and highest rung not more than 6" below top of inlet. The distance between steps shall not exceed 1'-0" and shall be uniform throughout the length of the wall. Place steps in the wall without an opening. Steps inserts may be substituted for the bar steps. Step inserts shall comply with State Industrial Safety requirements. See Standard Plan D74C for step details.
6. Details shown apply to both metal and concrete pipe.
7. Pipe(s) can be placed in any wall.
8. Curb section shall match adjacent curb.
9. Basin floors shall have wood trowel finish and a minimum slope of 12:3 from all directions toward outlet pipe.
10. Set inlet so that grate bars are parallel to direction of principal surface flow.
11. See Revised Standard Plans D77A and D77B for grate and frame details and weights of miscellaneous iron and steel.
12. See Standard Plan D78A for gutter depression details.
13. This dimenison will vary with different grates, curbs types, box width and wall thickness.
14. Bar may be rotated as necessary to clear opening. Where "L" is 6" or less, bar may be omitted.
15. Where "L" is 6" or less, wall thickness shall be as shown in Table A.
16. Cast-in-place inlets to be formed around all pipes/stubs intersecting the inlet, and concrete poured in one continuous operation. Precast inlets shall have mortared connections conforming to details for Type GCP Inlet shown on Standard Plan D75B. See Standard Specifications for mortar composition.

TABLE A

| CONCRETE QUANTITIES | | | | |
|---|---|---|---|---|
| TYPE | H=3'-0" TO 8'-0" (T=6") | | H=8'-1" TO 20'-0" (T=8") | |
| | H=3'-0" (CY) | ADDITIONAL PCC PER FOOT (CY) | H=8'-1" (CY) | ADDITIONAL PCC PER FOOT (CY) |
| G-1 | 0.95 | 0.220 | See Note A | SEE NOTE A |
| G-2* | 1.31 | 0.255 | 3.50 | 0.357 |
| G-3 | 1.03 | 0.220 | See Note A | SEE NOTE A |
| G-4* (TYPE 24) | 1.27 | 0.255 | 3.48 | 0.357 |
| G-4* (TYPE 18) | 1.30 | 0.255 | 3.50 | 0.357 |
| G-5 | 1.02 | 0.220 | SEE NOTE A | SEE NOTE A |
| G-6 | 1.04 | 0.220 | SEE NOTE A | SEE NOTE A |

TABLE BASED ON 8" FLOOR SLAB. NO DEDUCTIONS ARE TO BE MADE TO THESE QUANTITIES BECAUSE OF PIPE OPENINGS, DIFFERENT FLOOR ALTERNATIVES OR DIFFERENT CURB TYPES. * QUANTITIES FOR TYPE G-2 AND G-4 INLETS BASED ON THE MINIMUM INTERIOR DIMENSIONS.

NOTE A:

Maximum allowable height 6'-0".

STATE OF CALIFORNIA
DEPARTMENT OF TRANSPORTATION

# DRAINAGE INLETS

NO SCALE

RSP D73 DATED OCTOBER 19, 2012 SUPERSEDES STANDARD PLAN D73 DATED MAY 20, 2011 - PAGE 156 OF THE STANDARD PLANS BOOK DATED 2010.

**REVISED STANDARD PLAN RSP D73**

**2010 REVISED STANDARD PLAN RSP D73**

7-19-12

| Dist | COUNTY | ROUTE | POST MILES TOTAL PROJECT | SHEET No. | TOTAL SHEETS |
|---|---|---|---|---|---|
| 10 | Tuo | 49 | 18.0/18.3 | 25 | 25 |

Raymond Don Tsztoo
REGISTERED CIVIL ENGINEER

July 20, 2012
PLANS APPROVAL DATE

Raymond Don Tsztoo No. C37332 Exp. 6-30-14 CIVIL — REGISTERED PROFESSIONAL ENGINEER — STATE OF CALIFORNIA

*THE STATE OF CALIFORNIA OR ITS OFFICERS OR AGENTS SHALL NOT BE RESPONSIBLE FOR THE ACCURACY OR COMPLETENESS OF SCANNED COPIES OF THIS PLAN SHEET.*

TO ACCOMPANY PLANS DATED 1/28/13

**2010 REVISED STANDARD PLAN RSP D77B**

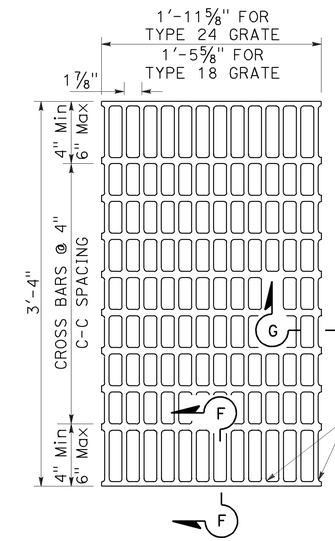


NOTES:

Bearing bars to be 3½" × ¼" bars on 1⅞" centers.

⅜"± ø Cross bars may be fillet welded, resistance welded or electroforged to bearing bars.

Weight of Type 24 grate = 141 LBS.

Weight of Type 18 grate = 107 LBS. (Type 24 grate shown).

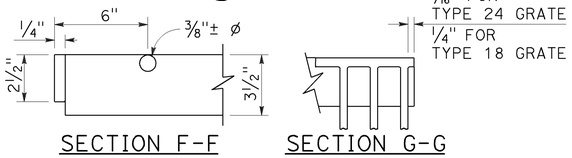


SECTION F-F SECTION G-G

## TYPE 18-10 AND 24-13 GRATE

(Welded Steel)

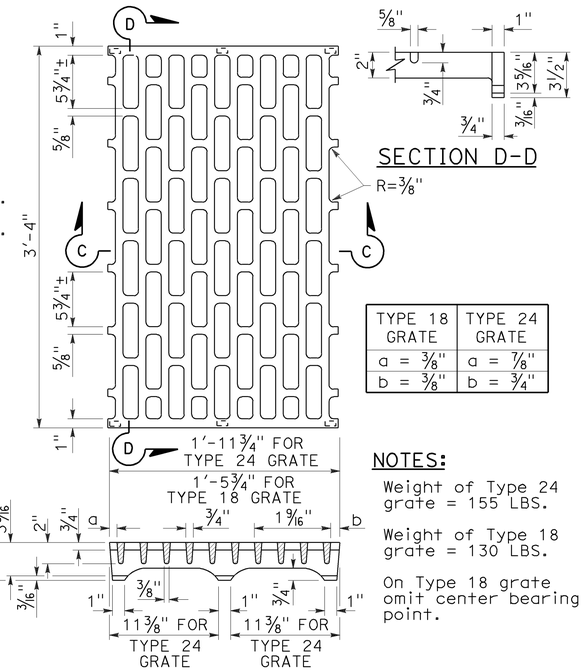





SECTION D-D

| TYPE 18 GRATE | TYPE 24 GRATE |
|---|---|
| a = ⅜" | a = ⅞" |
| b = ⅜" | b = ¾" |

NOTES:

Weight of Type 24 grate = 155 LBS.

Weight of Type 18 grate = 130 LBS.

On Type 18 grate omit center bearing point.

SECTION C-C

## TYPE 18-8C AND 24-10C GRATE

(Cast ductile iron)

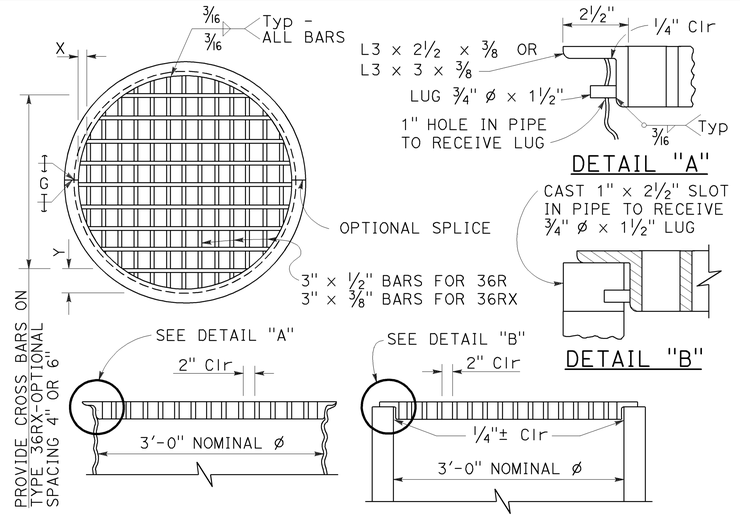


## TYPE 36R AND 36RX GRATE DETAILS

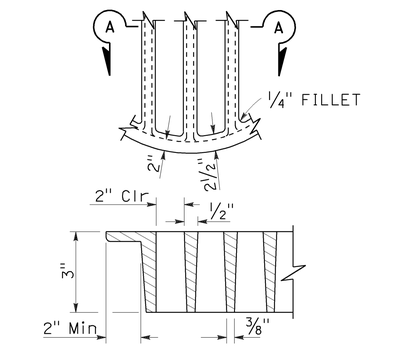


SECTION A-A

## ALTERNATIVE CAST DUCTILE IRON GRATE OR CAST CARBON STEEL GRATE TYPE 36R AND 36RX

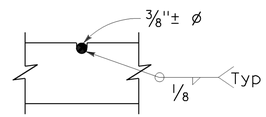


⅜"± ø Cross bars may be fillet welded, resistance welded or electroforged to bearing bars.

## CROSS BAR DETAIL TYPE 36RX GRATE (WELDED STEEL)

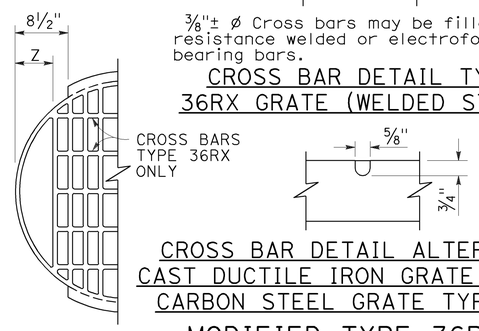


## CROSS BAR DETAIL ALTERNATIVE CAST DUCTILE IRON GRATE OR CAST CARBON STEEL GRATE TYPE 36RX

## MODIFIED TYPE 36R AND 36RX GRATE FOR ODI INLET

NOTES:

1. When alternative grates are allowed - Final pay based on alternative with the lesser weight.
2. Use frame shown on Standard Plan D74A, D74B or RSP D77A as appropriate.
3. When Type 24-10S, 24-12X or 24-13 grates are used with GDO Inlets, a ¼" × 3½" × 3'-4⅞" steel bar shall be welded across the center of inlet frame to separate the individual grates.
4. See Revised Standard Plan RSP D77A for connecting chain to welded grate and frame. When chain is required, do not use cast ductile iron grate.

BASIS FOR Misc IRON AND STEEL FINAL PAY WEIGHTS FOR DRAINAGE INLETS

| INLET TYPE | GRATE TYPE | No. OF GRATES | WEIGHT LB |
|---|---|---|---|
| GDO (SEE NOTE 4) | 24-10C | 2 | 391 |
| | 24-10S | 2 | 456 |
| | 24-12X | 2 | 473 |
| | 24-13 | 2 | 374 |
| GO,GOL,G1,G2, G3,G4 (TYPE 24) | 24-10C | 1 | 202 |
| | 24-10S | 1 | 229 |
| | 24-12X | 1 | 239 |
| | 24-13 | 1 | 188 |
| G4 (TYPE 18) G5,G6 | 18-8S | 1 | 187 |
| | 18-9X | 1 | 187 |
| | 18-10 | 1 | 149 |
| GT1,GT2 | 18-8S | 2 | 374 |
| | 18-9X | 2 | 374 |
| | 18-10 | 2 | 298 |
| GT3,GT4 | 24-10C | 2 | 404 |
| | 24-10S | 2 | 458 |
| | 24-12X | 2 | 478 |
| | 24-13 | 2 | 376 |
| ODI | 36RX (Mod) | 1 | 196 |
| GMP,GCP,GCPI | 36RX | 1 | 215 |
| ODI | 36R (Mod) | 1 | 220 |
| GMP,GCP,GCPI | 36R | 1 | 236 |
| TRASH RACK | | | 22 |
| GRATE CHAIN | | | 3 |

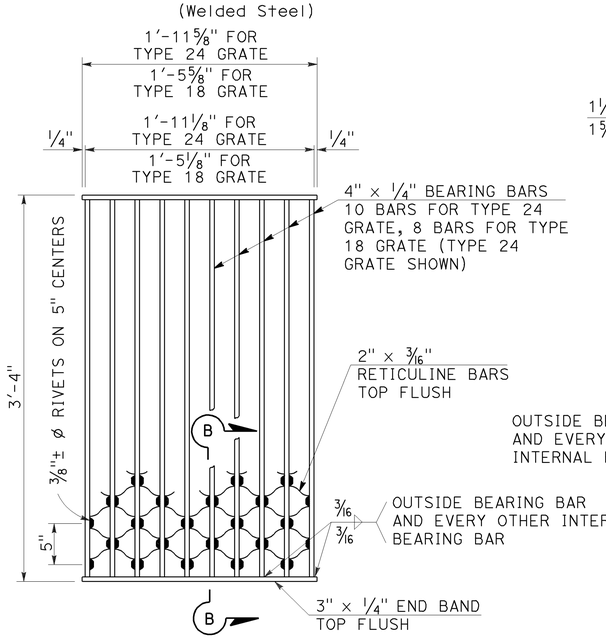


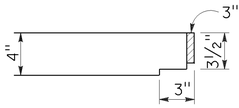


SECTION B-B

NOTES:

Weight of Type 24 grate = 182 LBS.
Weight of Type 18 grate = 145 LBS.

## TYPE 18-8S AND 24-10S GRATE

(Welded Steel) Reticuline type

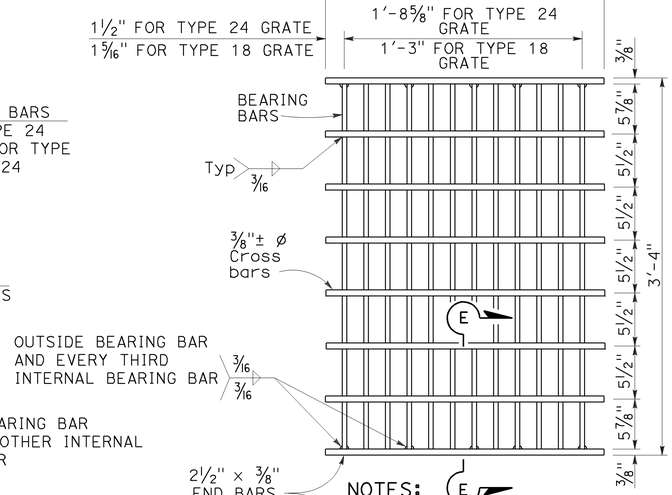


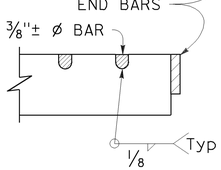


SECTION E-E

NOTES:

Bearing bars to be 3½" × ⅜" bars on 1⅞" centers.

12 Bars for Type 24 grate - 9 bars for Type 18 grates. (Type 24 grate shown).

Weight of Type 24 grate = 192 LBS.

Weight of Type 18 grate = 145 LBS.

⅜"± ø Cross bars may be fillet welded, resistance welded or electroforged to bearing bars.

## TYPE 18-9X AND 24-12X GRATE

(Welded Steel)

GRATE BAR SPACING TABLE

| TYPE | No. OF BARS | CLEAR BAR SPACING | X | Y 4" SPACING | Y 6" SPACING | Z |
|---|---|---|---|---|---|---|
| 36R | 13 | 2" | 2⅛" | - | - | - |
| 36RX (STEEL) | 15 | 2" | 9/16" | 3¾" | 5¾" | - |
| 36RX (CAST) | 13 | 2" | 2⅛" | 3¾" | 5¾" | - |
| 36R Mod | 12 | 2" | 2⅛" | - | - | 5" |
| 36RX Mod (STEEL) | 13 | 2" | 9/16" | 3¾" | 5¾" | 5 11/16" |
| 36RX Mod (CAST) | 12 | 2" | 2⅛" | 3¾" | 5¾" | 5" |

STATE OF CALIFORNIA
DEPARTMENT OF TRANSPORTATION

# BICYCLE TRAVERSABLE GRATE DETAILS

NO SCALE

RSP D77B DATED JULY 20, 2012 SUPERSEDES STANDARD PLAN D77B DATED MAY 20, 2011 - PAGE 165 OF THE STANDARD PLANS BOOK DATED 2010.

**REVISED STANDARD PLAN RSP D77B**

4-17-12