Dist	COUNTY	ROUTE	POST MILES TOTAL PROJECT	SHEET No.	TOTAL SHEETS
10	SJ	12	0.0	1	37

INDEX OF PLANS

SHEET No.	DESCRIPTION
1	TITLE AND LOCATION MAP
2	CONSTRUCTION AREA SIGNS
3-5	REVISED STANDARD PLANS
BUILDING PLANS	
6	GENERAL PLAN
7-12	ARCHITECTURAL PLANS
13-33	ELECTRICAL PLANS
34-37	MECHANICAL PLANS

THE STANDARD PLANS LIST APPLICABLE TO THIS CONTRACT IS INCLUDED IN THE NOTICE TO BIDDERS AND SPECIAL PROVISIONS BOOK.

STATE OF CALIFORNIA

DEPARTMENT OF TRANSPORTATION

PROJECT PLANS FOR BUILDING CONSTRUCTION ON

STATE HIGHWAY

IN SAN JOAQUIN COUNTY
NEAR TERMINOUS
AT MOKELUMNE RIVER BRIDGE

TO BE SUPPLEMENTED BY STANDARD PLANS DATED MAY 2006

LOCATION MAP

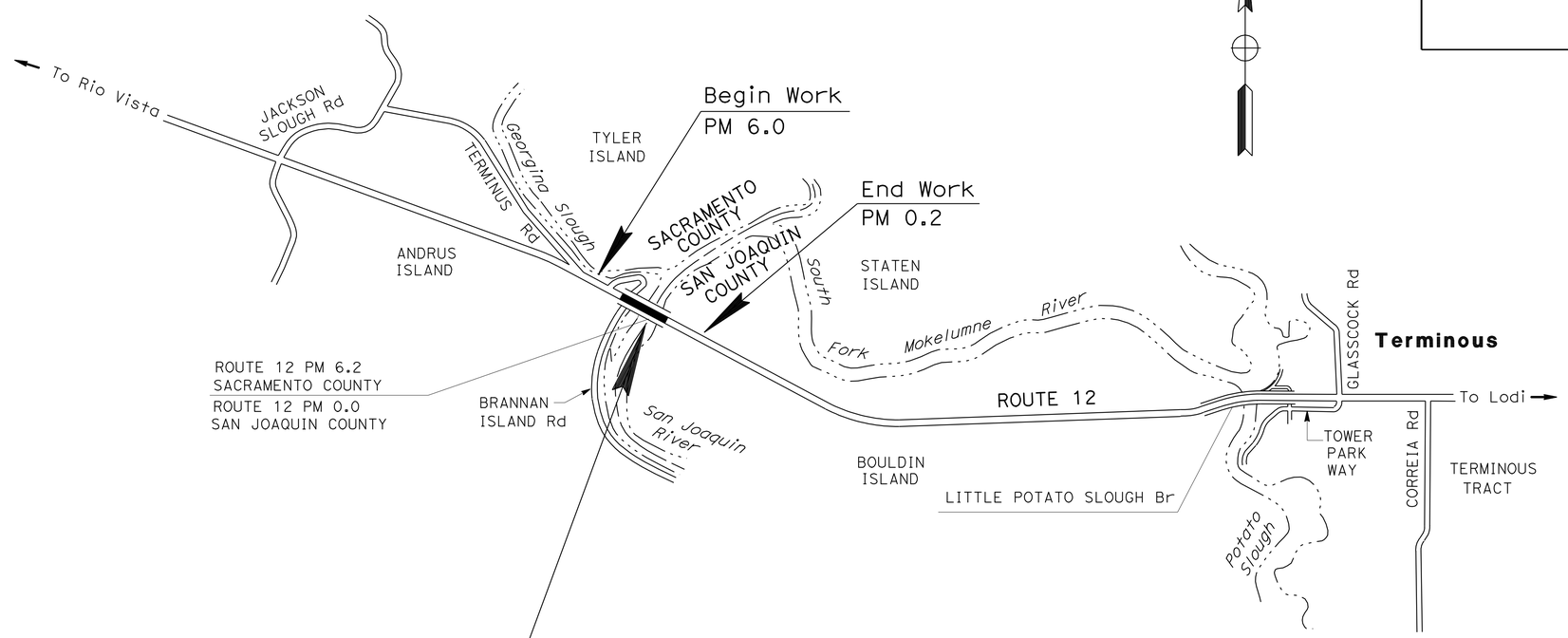

LOCATION OF CONSTRUCTION

MOKELUMNE RIVER BRIDGE
Br No. 29-0043 PM 0.0

NO SCALE

PROJECT MANAGER: SUBHASH JOHAR

DESIGN ENGINEER: JOSE HUERTA

PROJECT ENGINEER / REGISTERED CIVIL ENGINEER — DATE 8/25/09

REGISTERED PROFESSIONAL ENGINEER — HONGLOAN LUONG — No. 63864 — Exp. 09/30/10 — CIVIL — STATE OF CALIFORNIA

December 7, 2009
PLANS APPROVAL DATE

THE STATE OF CALIFORNIA OR ITS OFFICERS OR AGENTS SHALL NOT BE RESPONSIBLE FOR THE ACCURACY OR COMPLETENESS OF SCANNED COPIES OF THIS PLAN SHEET.

THE CONTRACTOR SHALL POSSESS THE CLASS (OR CLASSES) OF LICENSE AS SPECIFIED IN THE "NOTICE TO BIDDERS."

CONTRACT No. **10-0K0704**

LAST REVISION 00-00-00 — DATE PLOTTED => 12-DEC-2009 — TIME PLOTTED => 05:31

Dist	COUNTY	ROUTE	POST MILES TOTAL PROJECT	SHEET No.	TOTAL SHEETS
10	SJ	12	0.0	2	37

REGISTERED CIVIL ENGINEER 8/25/09 DATE

12-7-09
PLANS APPROVAL DATE

REGISTERED PROFESSIONAL ENGINEER HONGLOAN LUONG No. 63864 Exp 09/30/10 CIVIL STATE OF CALIFORNIA

THE STATE OF CALIFORNIA OR ITS OFFICERS OR AGENTS SHALL NOT BE RESPONSIBLE FOR THE ACCURACY OR COMPLETENESS OF SCANNED COPIES OF THIS PLAN SHEET.

STATIONARY MOUNTED CONSTRUCTION AREA SIGNS

SIGN No.	SIGN CODE	PANEL SIZE	No. OF POST & SIZE	SIGN MESSAGE	No. OF SIGNS
A	W20-1	48" x 48"	1 - 6" x 6"	ROAD WORK AHEAD	2
B	G20-2	36" x 18"	1 - 4" x 4"	END ROAD WORK	2

NOTE: EXACT SIGN LOCATION TO BE DETERMINED BY THE ENGINEER.

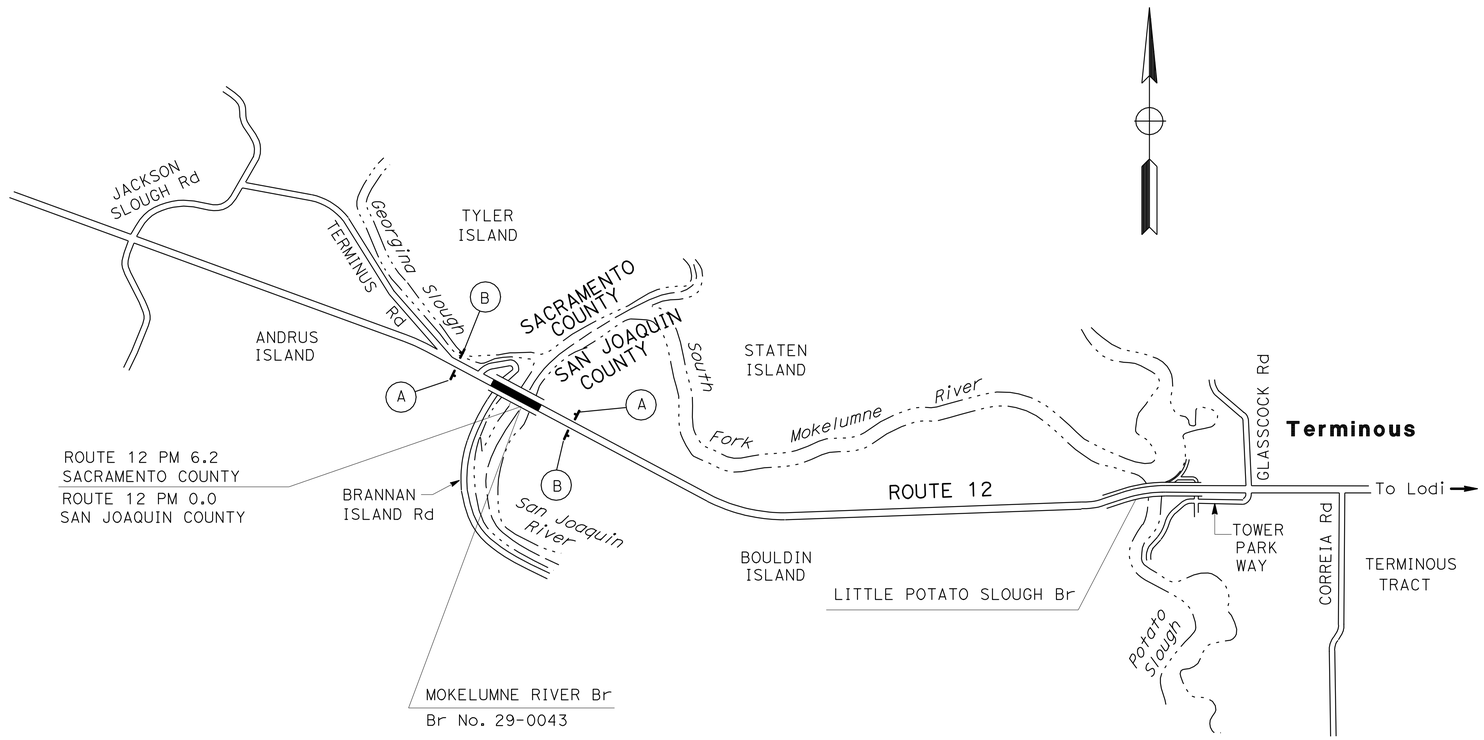

THIS PLAN ACCURATE FOR CONSTRUCTION AREA SIGN WORK ONLY.

CONSTRUCTION AREA SIGNS

NO SCALE

CS-1

PB	6/12/09
REVISED BY	DATE REVISED
PERLITA BALBIN	
HONGLOAN LUONG	
CALCULATED-DESIGNED BY	
CHECKED BY	
FUNCTIONAL SUPERVISOR	
JOSE A. HUERTA	

STATE OF CALIFORNIA - DEPARTMENT OF TRANSPORTATION

Caltrans®

DESIGN

LAST REVISION 00-00-00 | DATE PLOTTED => 12-DEC-2009 | TIME PLOTTED => 05:31

DIST	COUNTY	ROUTE	POST MILES TOTAL PROJECT	SHEET NO.	TOTAL SHEETS
10	SJ	12	0.0	3	37

Randell D. Hiatt
REGISTERED CIVIL ENGINEER

June 6, 2008
PLANS APPROVAL DATE

REGISTERED PROFESSIONAL ENGINEER
Randell D. Hiatt
No. C50200
Exp. 6-30-09
CIVIL
STATE OF CALIFORNIA

The State of California or its officers or agents shall not be responsible for the accuracy or completeness of electronic copies of this plan sheet.

To accompany plans dated 12-7-09

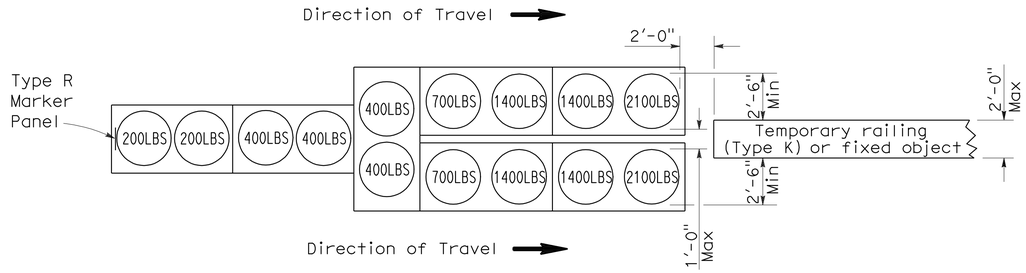

ARRAY 'TU14'

Approach speed 45 mph or more

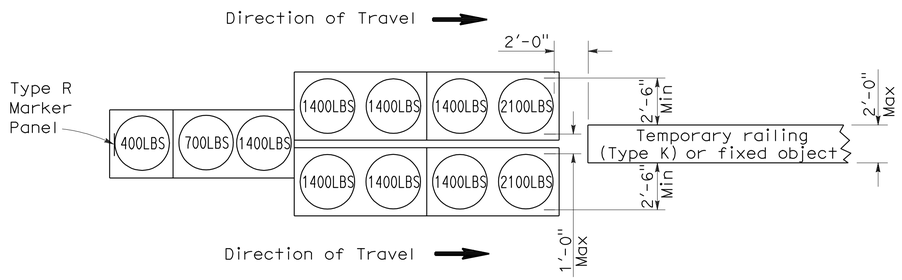

ARRAY 'TU11'

Approach speed less than 45 mph

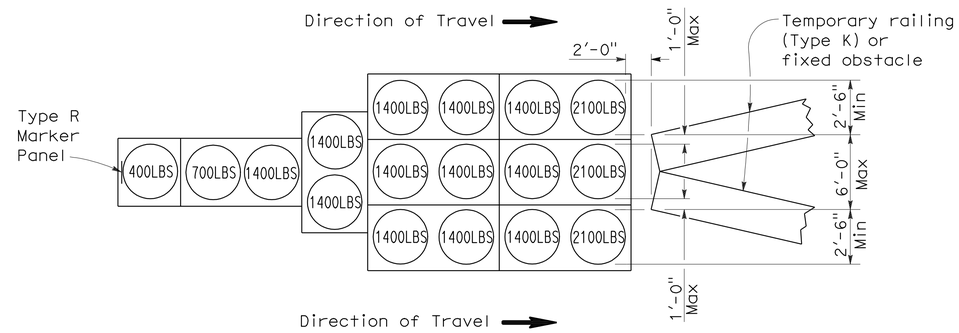

ARRAY 'TU17'

Approach speed less than 45 mph

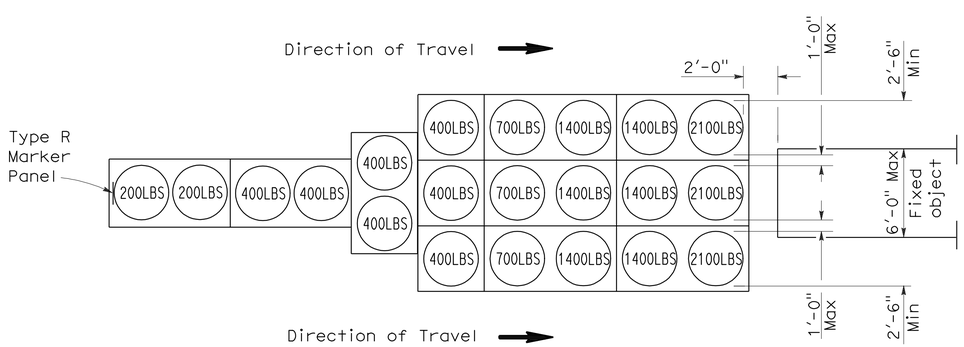

ARRAY 'TU21'

Approach speed 45 mph or more

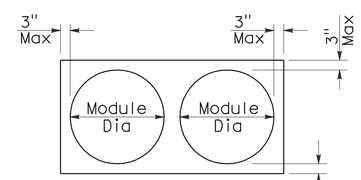

PLAN

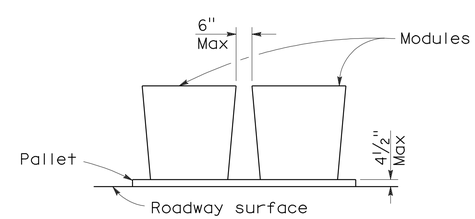

ELEVATION

CRASH CUSHION PALLET DETAIL

See Note 7

NOTES:

1. (XXX) Indicates sand filled module location and weight of sand in pounds for each module. Module spacing is based on the greater diameter of the module.
2. All sand weights are nominal.
3. Temporary crash cushion arrays shall not encroach on the traveled way.
4. Place the top of Type R marker panel 1" below the module lid.
5. Refer to Standard Plan A73B for marker details.
6. Approach speeds indicated conform to NCHRP 350 Report criteria.
7. Use of pallets is optional.

STATE OF CALIFORNIA
DEPARTMENT OF TRANSPORTATION

TEMPORARY CRASH CUSHION, SAND FILLED (UNIDIRECTIONAL)

NO SCALE

RSP T1A DATED JUNE 6, 2008 SUPERSEDES STANDARD PLAN T1A
DATED MAY 1, 2006 - PAGE 211 OF THE STANDARD PLANS BOOK DATED MAY 2006.

REVISED STANDARD PLAN RSP T1A

2006 REVISED STANDARD PLAN RSP T1A

DIST	COUNTY	ROUTE	POST MILES TOTAL PROJECT	SHEET NO.	TOTAL SHEETS
10	SJ	12	0.0	4	37

Randell D. Hiatt
REGISTERED CIVIL ENGINEER

June 6, 2008
PLANS APPROVAL DATE

REGISTERED PROFESSIONAL ENGINEER
Randell D. Hiatt
No. C50200
Exp. 6-30-09
CIVIL
STATE OF CALIFORNIA

The State of California or its officers or agents shall not be responsible for the accuracy or completeness of electronic copies of this plan sheet.

To accompany plans dated 12-7-09

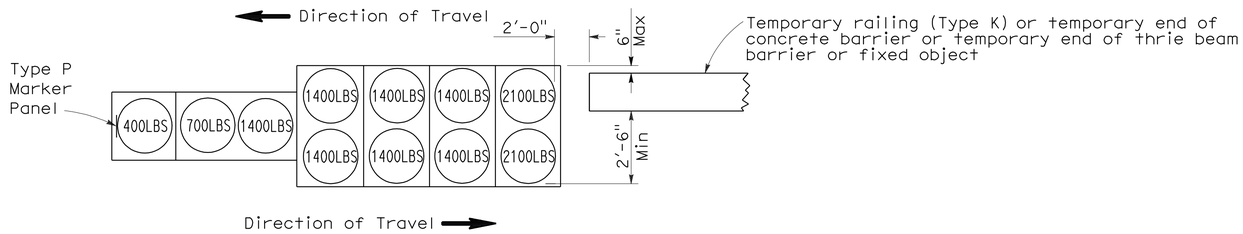

ARRAY 'TB11'

Approach speed less than 45 mph

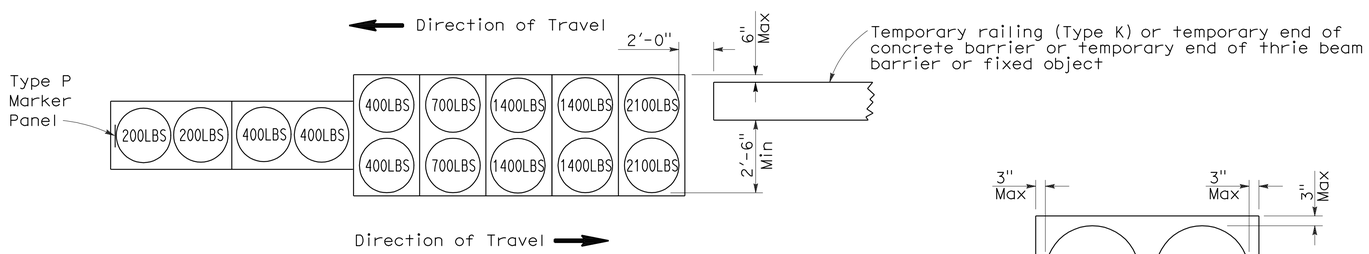

ARRAY 'TB14'

Approach speed 45 mph or more

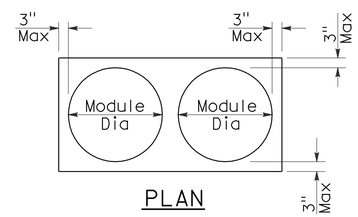

PLAN

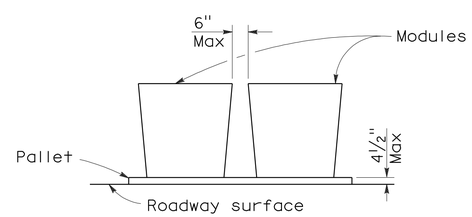

ELEVATION

CRASH CUSHION PALLET DETAIL

See Note 7

NOTES:

1. (XXX) Indicates sand filled module location and weight of sand in pounds for each module. Module spacing is based on the greater diameter of the module.
2. All sand weights are nominal.
3. Temporary crash cushion arrays shall not encroach on the traveled way.
4. Place the Type P marker panel so that the bottom of the panel rests upon the pallet.
5. Refer to Standard Plan A73B for marker details.
6. Approach speeds indicated conform to NCHRP 350 Report criteria.
7. Use of pallets is optional.

STATE OF CALIFORNIA
DEPARTMENT OF TRANSPORTATION

TEMPORARY CRASH CUSHION, SAND FILLED (BIDIRECTIONAL)

NO SCALE

RSP T1B DATED JUNE 6, 2008 SUPERSEDES STANDARD PLAN T1B
DATED MAY 1, 2006 - PAGE 212 OF THE STANDARD PLANS BOOK DATED MAY 2006.

REVISED STANDARD PLAN RSP T1B

2006 REVISED STANDARD PLAN RSP T1B

5-15-08

DIST	COUNTY	ROUTE	POST MILES TOTAL PROJECT	SHEET NO.	TOTAL SHEETS
10	SJ	12	0.0	5	37

Randell D. Hiatt
REGISTERED CIVIL ENGINEER

June 6, 2008
PLANS APPROVAL DATE

REGISTERED PROFESSIONAL ENGINEER
Randell D. Hiatt
No. C50200
Exp. 6-30-09
CIVIL
STATE OF CALIFORNIA

The State of California or its officers or agents shall not be responsible for the accuracy or completeness of electronic copies of this plan sheet.

To accompany plans dated 12-7-09

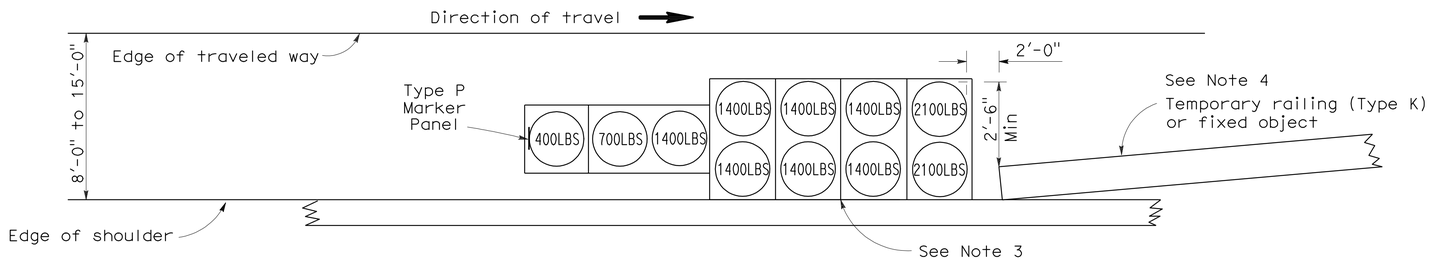

ARRAY 'TS11'

Approach speed less than 45 mph
See Note 9

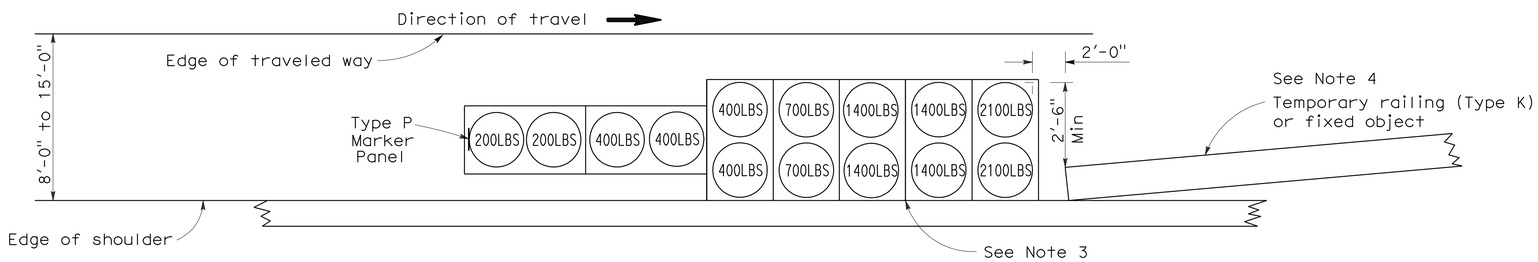

ARRAY 'TS14'

Approach speed 45 mph or more
See Note 9

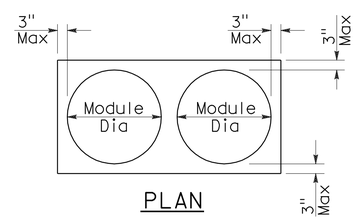

PLAN

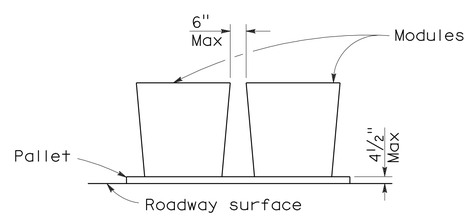

ELEVATION

CRASH CUSHION PALLET DETAIL

See Note 11

NOTES:

1. (XXX) Indicates sand filled module location and weight of sand in pounds for each module. Module spacing is based on the greater diameter of the module.
2. All sand weights are nominal.
3. The temporary crash cushion arrays shown on this plan shall be used only in locations where there will be traffic on one side of the temporary crash cushion array.
4. If the fixed object or approach end of the temporary railing is less than 15'-0" from the edge of traveled way, a temporary crash cushion is required in a construction or work zone.
5. Temporary crash cushion arrays shall not encroach on the traveled way.
6. Arrays for median shoulders shall conform to details shown on this plan for outside shoulders.
7. Place the Type P marker panel so that the bottom of the panel rests upon the pallet and faces traffic.
8. Refer to Standard Plan A73B for marker details.
9. For shoulder widths less than 8'-0", appropriate approved crash cushion protection, other than sand filled modules, shall be provided at fixed objects and at approach ends of temporary railing. The specific type of crash cushion shall be as shown on the project plans or as specified in the Special Provisions, or if not shown on the project plans or specified in the Special Provisions, shall be as approved by the Engineer.
10. Approach speeds indicated conform to NCHRP 350 Report criteria.
11. Use of pallets is optional.

STATE OF CALIFORNIA
DEPARTMENT OF TRANSPORTATION

TEMPORARY CRASH CUSHION, SAND FILLED (SHOULDER INSTALLATIONS)

NO SCALE

RSP T2 DATED JUNE 6, 2008 SUPERSEDES STANDARD PLAN T2
DATED MAY 1, 2006 - PAGE 213 OF THE STANDARD PLANS BOOK DATED MAY 2006.

REVISED STANDARD PLAN RSP T2

2006 REVISED STANDARD PLAN RSP T2

5-15-08

DIST.	COUNTY	ROUTE	POST MILES TOTAL PROJECT	SHEET NO.	TOTAL SHEETS
10	SJ	12	0.0	6	37

LICENSED ARCHITECT

LICENSED ARCHITECT
QUINCY J. WONG
No. C-18849
Exp. 5-31-11
STATE OF CALIFORNIA

12-7-09
PLANS APPROVAL DATE

The State of California or its officers or agents shall not be responsible for the accuracy or completeness of electronic copies of this plan sheet.

CALIFORNIA STATE FIRE MARSHAL APPROVED
Approval of this plan does not authorize or approve any omission or deviation from applicable regulations. Final approval is subject to field inspection. One set of approved plans shall be available on the project site at all times.
Reviewed by: STEPHEN GUARINO
Approval date: 05-29-09

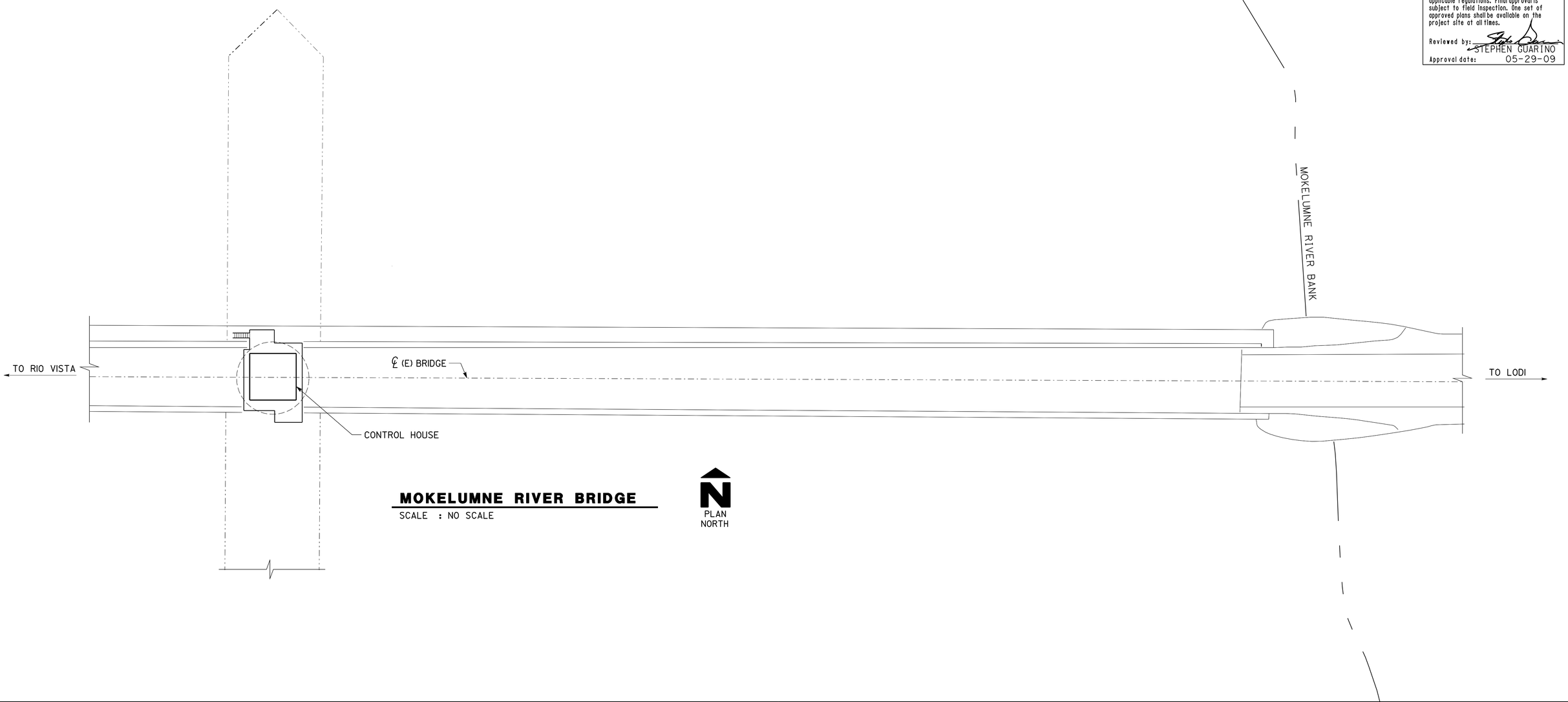

MOKELUMNE RIVER BRIDGE
SCALE : NO SCALE

DESIGN SUPERVISOR R E Travis DESIGN ARCHITECT	DESIGNER Q. WONG DRAWN BY S. YEH	CHECKED BY: C. FAUST STRUCTURAL REVIEW W. ROCHA	SHEET LEGEND A-I ARCHITECTURAL ST-I STRUCTURAL M-I MECHANICAL EE-I ELECTRICAL W-I WATER SUPPLY SS-I SANITARY	STATE OF CALIFORNIA DEPARTMENT OF TRANSPORTATION	DIVISION OF ENGINEERING SERVICES ARCHITECTURAL AND STRUCTURAL DESIGN	BRIDGE NO. 29-0043 POST MILE 0.01	MOKELUMNE RIVER BRIDGE CONTROL HOUSE UPGRADE GENERAL PLAN / GENERAL PLAN	SHEET GP

O_gp.dgn
DS OSD Imperial Rev. 11/98 12-DEC-2009 05:32

ORIGINAL SCALE IN INCHES FOR REDUCED PLANS 0 1 2 3

CU 06 243
EA 0K0701

DISREGARD PRINTS BEARING EARLIER REVISION DATES →

REVISION DATES (PRELIMINARY STAGE ONLY): 06-13-08 | 06-26-08 | 12-8-08 | 2-4-09

SHEET X OF X

12-DEC-2009 05:32
O_gp.dgn

DIST.	COUNTY	ROUTE	POST MILES TOTAL PROJECT	SHEET NO.	TOTAL SHEETS
10	SJ	12	0.0	7	37

LICENSED ARCHITECT

LICENSED ARCHITECT QUINCY J. WONG No. C-18849 Exp. 5-31-11 STATE OF CALIFORNIA

12-7-09
PLANS APPROVAL DATE

The State of California or its officers or agents shall not be responsible for the accuracy or completeness of electronic copies of this plan sheet.

CALIFORNIA STATE FIRE MARSHAL APPROVED
Approval of this plan does not authorize or approve any omission or deviation from applicable regulations. Final approval is subject to field inspection. One set of approved plans shall be available on the project site at all times.
Reviewed by: STEPHEN GUARINO
Approval date: 05-29-09

INDEX OF DRAWINGS

ARCHITECTURAL

GP GENERAL PLAN
A0-1 INDEX OF DRAWINGS & CODE ANALYSIS
A0-2 ARCHITECTURAL ABBREVIATIONS & SYMBOLS

A-1 FLOOR PLANS & SECTION
A-2 ROOM FINISH SCHEDULE, DOOR SCHEDULE, COLOR KEY & DOOR TYPE
A-3 WASTE RETENTION TANK ATTACHMENT PLAN
A-4 WASTE RETENTION TANK ATTACHMENT DETAILS

MECHANICAL

M 0-1 ABBREVIATIONS AND LEGENDS

M 1-1 EXISTING FLOOR PLAN
M 1-2 MECHANICAL PLAN
M 1-3 MECHANICAL DETAILS

ELECTRICAL

EE-0 LEGEND

EE-1 EXISTING SITE PLAN
EE-2 EXISTING NAVIGATIONAL LIGHTS
EE-3 MODIFIED NAVIGATIONAL LIGHTS
EE-4 NAVIGATIONAL AND TARGET LIGHT DETAILS
EE-5 CONTROL ROOM UPGRADE
EE-6 EXISTING SWITCHBOARD AND CONTROL DESK
EE-7 MODIFIED SWITCHBOARD AND CONTROL DESK
EE-8 EXISTING TRAFFIC GATES
EE-9 MODIFIED TRAFFIC GATES
EE-10 ONGOING TRAFFIC GATES CONTROL SCHEMATIC
EE-11 OFFGOING TRAFFIC GATES CONTROL SCHEMATIC
EE-12 EXISTING SCHEMATIC DIAGRAM -1
EE-13 EXISTING SCHEMATIC DIAGRAM -2
EE-14 MODIFIED SCHEMATIC DIAGRAM -1
EE-15 MODIFIED SCHEMATIC DIAGRAM -2
EE-16 EXISTING WIRING DIAGRAM - 1
EE-17 EXISTING WIRING DIAGRAM - 2
EE-18 MODIFIED WIRING DIAGRAM - 1
EE-19 MODIFIED WIRING DIAGRAM - 2
EE-20 EQUIPMENT SCHEDULE

CODE ANALYSIS

APPLICABLE CODES INCLUDE:

2007 CALIFORNIA BUILDING CODE
2007 CALIFORNIA MECHANICAL CODE
2007 CALIFORNIA PLUMBING CODE
2007 CALIFORNIA ELECTRICAL CODE
2007 CALIFORNIA FIRE CODE
2007 CALIFORNIA ENERGY CODE
2007 CALIFORNIA HISTORICAL BUILDING CODE

SCOPE OF WORK

UPGRADE ELECTRICAL DISTRIBUTION SYSTEM
REPLACE NAVIGATION LIGHTS
REPLACE BRIDGE DISC BRAKES
REPLACE TRAFFIC GATES
MODIFY STORAGE ROOM INTO RESTROOM
INSTALL WASTE RETENTION TANK

BUILDING ANALYSIS:

MOKELUMNE RIVER BRIDGE CONTROL HOUSE

BUILDING OCCUPANCY CLASSIFICATION: B

CONSTRUCTION TYPE: TYPE VB

1 STORY: BLDG HT 13'-4"
BUILDING FLOOR AREA: 390 SF
ROOFED AREA: 480 SF

AREA OF PROJECT: 15 SF

ALLOWABLE AREA CALCULATIONS:
9,000 SF ALLOWED FOR B OCCUPANCY

FIRE SUPPRESSION SYSTEM: EXISTING FIRE EXTINGUISHER

FIRE ALARM: NONE

SMOKE CONTROL SYSTEM: NONE

FIRE FLOW PER CFC APPENDIX B

OCCUPANCY LOAD CALCULATIONS:
B OCCUPANCY INCLUDES:
390 SF @ 100 SF PER PERSON = 4 OCC

NUMBER OF EXITS REQUIRED : 1 EXIT

	BY	CHECKED
DESIGN	Q. WONG	
DETAILS	S. YEH	
QUANTITIES		

STATE OF CALIFORNIA DEPARTMENT OF TRANSPORTATION

DIVISION OF ENGINEERING SERVICES ARCHITECTURAL AND STRUCTURAL DESIGN

BRIDGE NO. 29-0043
POST MILE 0.01

MOKELUMNE RIVER BRIDGE CONTROL HOUSE UPGRADE
INDEX OF DRAWINGS & CODE ANALYSIS

SHEET **A0-1**

a0_1.dgn
DS OSD Imperial Rev. 11/98 12-DEC-2009 05:32

ORIGINAL SCALE IN INCHES FOR REDUCED PLANS 0 1 2 3

CU 06 243
EA 0K0701

DISREGARD PRINTS BEARING EARLIER REVISION DATES →
REVISION DATES (PRELIMINARY STAGE ONLY) 06-13-08 08-22-08 12-8-08 2-4-09

SHEET X OF X

12-DEC-2009 05:32
a0_1.dgn

ARCHITECTURAL ABBREVIATIONS

&	AND
∟	ANGLE
℄	CENTER LINE
Ø	DIAMETER OR ROUND
□	SQUARE
d	PENNY
°	DEGREE
A/C	AIR CONDITIONING
AC	ASPHALT CONCRETE
AB	ANCHOR BOLT
ABV	ABOVE
ACOUS	ACOUSTICAL
ADJ	ADJUSTABLE
ALT	ALTERNATE
ALUM	ALUMINUM
APA	AMERICAN PLYWOOD ASSOCIATION
ARCH	ARCHITECTURAL, ARCHITECT
ASPH	ASPHALT
BD	BOARD
BIT	BITUMINOUS
BLDG	BUILDING
BLK	BLOCK
BLKG	BLOCKING
BM	BEAM
BN	BOUNDARY NAILING
BOT	BOTTOM
BR	BRIDGE
BTM	BOTTOM
BTWN	BETWEEN
BUR	BUILT-UP-ROOFING
CJ	CONTROL JOINT
CL	CHAIN LINK
CAB	CABINET
CB	CATCH BASIN
CEM	CEMENT
CER	CERAMIC
CH	CLOTHES HOOK
CIDH	CAST IN DRILLED HOLE
CIP	CAST IN PLACE
CKBD	CHALKBOARD
CLG	CEILING
CMU	CONCRETE MASONRY UNIT
CLO	CLOSET
CLR	CLEAR
COL	COLUMN
CONC	CONCRETE
CONN	CONNECTION
CONST	CONSTRUCTION
CONT	CONTINUOUS
CORR	CORRIDOR
CPT	CARPET
CT	CERAMIC TILE
CTR	CENTER
CTSK	COUNTERSUNK
CY	CUBIC YARD
DBL	DOUBLE
DEPT	DEPARTMENT
DET	DETAIL
DF	DOUGLAS FIR
DIA	DIAMETER
DIM	DIMENSION
DN	DOWN
DP	DEEP
DR	DOOR
DS	DOWNSPOUT
DWG	DRAWING
DWR	DRAWER
(E)	EXISTING
E	EAST
EA	EACH
EF	EXHAUST FAN
EHD	ELECTRIC HAND DRYER
EJ	EXPANSION JOINT
EL	ELEVATION (HEIGHT)
ELEC	ELECTRICAL
ELEV	ELEVATION (VIEW)
ELVR	ELEVATOR
EMER	EMERGENCY
ENCL	ENCLOSURE
EP	EDGE OF PAVEMENT
EQ	EQUAL
EPB	ELECTRICAL PANELBOARD
EQUIP	EQUIPMENT
ESCL	ESCALATOR
ETW	EDGE OF TRAVEL WAY
EWC	ELECTRIC WATER COOLER
EXP	EXPANSION
EXPO	EXPOSED, EXPOSURE
EXT	EXTERIOR
FD	FLOOR DRAIN
FDN	FOUNDATION
FE	FIRE EXTINGUISHER
FEC	FIRE EXTINGUISHER CABINET
FF	FINISH FLOOR
FG	FINISH GRADE
FH	FIRE HYDRANT
FHC	FIRE HOSE CABINET
FHMS	FLATHEAD METAL SCREW
FHWS	FLATHEAD WOOD SCREW
FIN	FINISH
FJ	FLOOR JOIST
FLASH	FLASHING
FLR	FLOOR
FLUOR	FLUORESCENT
FOC	FACE OF CONCRETE
FOF	FACE OF FINISH
FOM	FACE OF MASONRY
FOS	FACE OF STUD
FRMG	FRAMING
FRPP	FIBERGLASS REINFORCED PLASTIC PANEL
FT	FEET, FOOT
FTG	FOOTING
FURR	FURRING
FWY	FREEWAY
GA	GAUGE
GAL	GALLON
GALV	GALVANIZED
GB	GRAB BAR
GI	GALVANIZED IRON
GL	GLASS
GLM	GLUE LAMINATED MEMBER
GLZ	GLAZING
GR	GRADE
GSM	GALVANIZED SHEET METAL
GYP	GYPSUM
GYP SHTG	GYPSUM SHEATHING
HB	HOSE BIB
HC	HOLLOW CORE
HD	HEAD, HOLD DOWN
HDR	HEADER
HDWD	HARDWOOD
HDWR	HARDWARE
HEX	HEXAGONAL
HF	HEMLOCK-FIR
HGR	HANGER
HM	HOLLOW METAL
HORIZ	HORIZONTAL
HP	HIGH POINT
HR	HOUR
HSB	HIGH STRENGTH BOLT
HT	HEIGHT
HVAC	HEATING, VENTILATING, AIR CONDITIONING
HWY	HIGHWAY
ID	INSIDE DIAMETER
IN	INCH
INFO	INFORMATION
INSUL	INSULATION
INT	INTERIOR
JAN	JANITOR
JB	JUNCTION BOX
JH	JOIST HANGER
JST	JOIST
JT	JOINT
KIT	KITCHEN
LAB	LABORATORY
LAV	LAVATORY
LBS	POUNDS
LF	LINEAR FEET
LKR	LOCKER
LLV	LONG LEG VERTICAL
LOL	LAYOUT LINE
LPG	LIQUIFIED PETROLEUM GAS
LS	LAG SCREW
M	METER
MAT	MATERIAL
MAX	MAXIMUM
MB	MACHINE BOLT
MBR	MEMBER
MECH	MECHANICAL
MEMB	MEMBRANE
MET	METAL
MFR	MANUFACTURER
MH	MAN HOLE
MIN	MINIMUM
MIR	MIRROR
MISC	MISCELLANEOUS
MIW	MALLEABLE IRON WASHER
mm	MILLIMETER
MO	MASONRY OPENING
MTD	MOUNTED
MUL	MULLION
N	NORTH
ND	NAPKIN DISPOSAL
NIC	NOT IN CONTRACT
NO	NUMBER
NOM	NOMINAL
NTS	NOT TO SCALE
OBSC	OBSCURE
OC	ON CENTER
OD	OUTSIDE DIAMETER
OFF	OFFICE
OFD	OVERFLOW DRAIN
OG	ORIGINAL GROUND
OH	OPPOSITE HAND
OHD	OVERHEAD
OHWS	OVALHEAD WOOD SCREW
OP	OPERATIONS
OPNG	OPENING
OPP	OPPOSITE
OPT	OPTION, OPTIONAL
P	PITCH
PB	POST BASE
PC	POST CAP
PCC	PORTLAND CEMENT CONCRETE
PDF	POWDER DRIVEN FASTENERS
PH	PHILLIPS HEAD
PL	PLATE
PLAM	PLASTIC LAMINATE
PLAS	PLASTER
PLYWD	PLYWOOD
PMF	PRESSED METAL FRAME
PR	PAIR
PRTN	PARTITION
PT	POINT
PTD	PAPER TOWEL DISPENSER
PTD/R	PAPER TOWEL DISPENSER /RECEPTACLE
PVC	POLYVINYL CHLORIDE
PWB	PREFABRICATED WOOD I BEAM
QT	QUARRY TILE
(R)	RELOCATED
R	RADIUS, RISER
R/W	RIGHT OF WAY
RD	ROOF DRAIN
RDWD	REDWOOD
REF	REFERENCE
REFG	REFRIGERATOR
REINF	REINFORCED(ING)
REQ	REQUIRED
RFG	ROOFING
RFSWN	ROUGHSAWN
RH	ROUND HEAD
RHWS	ROUND HEAD WOOD SCREWS
RJ	ROOF JOIST
RM	ROOM
RO	ROUGH OPENING
RSWN	RESAWN
RTE	ROUTE
RW	RETAINING WALL
RWL	RAINWATER LEADER
S	SOUTH
SC	SOLID CORE
SCHED	SCHEDULE
SD	SOAP DISPENSER
SDST	SELF DRILLING SELF TAPPING
SF	SQUARE FEET
SH	SHELF
SHWR	SHOWER
SHT	SHEET
SHTG	SHEATHING
SIM	SIMILAR
SL	SCORE LINE
SMS	SHEET METAL SCREW
SOHD	SECTIONAL OVERHEAD DOOR
SPEC	SPECIFICATION
SPS	STRUCTURAL PLYWOOD SHEATHING
SQ	SQUARE
SRRA	SAFETY ROADSIDE REST AREA
SS	SERVICE SINK
SST	STAINLESS STEEL
STA	STATION
STAG	STAGGER
STD	STANDARD
STL	STEEL
STOR	STORAGE
STRUC	STRUCTURAL
SUSP	SUSPENDED
T	TREAD
T&G	TONGUE & GROOVE
TB	TOLL BOOTH
TEL	TELEPHONE
TEMP	TEMPERED
TER	TERRAZZO
THK	THICK
THLD	THRESHOLD
TJ	TOOLED JOINT
TKBD	TACKBOARD
TN	TOE NAIL
TNVM	TAMPON/NAPKIN VENDING MACHINE
TOC	TOP OF CURB OR CONCRETE
TOP	TOP OF PAVEMENT
TOS	TOE OF SLOPE
TOT	TOTAL
TOW	TOP OF WALL
TS	TUBE STEEL
TSCD	TOILET SEAT COVER DISPENSER
TTD	TOILET TISSUE DISPENSER
TTY	TELETYPEWRITER
TYP	TYPICAL
UNF	UNFINISHED
UON	UNLESS OTHERWISE NOTED
UR	URINAL
VAR	VARIES
VCT	VINYL COMPOSITION TILE
VERT	VERTICAL
VEST	VESTIBULE
VR	VENT RISER
VTR	VENT THRU ROOF
W	WEST
W/	WITH
W/O	WITHOUT
WC	WATER CLOSET
WD	WOOD
WDW	WINDOW
WH	WATER HEATER
WP	WORKING POINT
WR	WATER RESISTANT
WSCT	WAINSCOT
WT	WEIGHT
WTPR	WATERPROOFING
WWF	WELDED WIRE FABRIC
YD	YARD

DIST.	COUNTY	ROUTE	POST MILES TOTAL PROJECT	SHEET NO.	TOTAL SHEETS
10	SJ	12	0.0	8	37

LICENSED ARCHITECT

LICENSED ARCHITECT QUINCY J. WONG No. C-18849 Exp. 5-31-11 STATE OF CALIFORNIA

12-7-09
PLANS APPROVAL DATE

The State of California or its officers or agents shall not be responsible for the accuracy or completeness of electronic copies of this plan sheet.

GENERAL NOTES

1. THE CONTRACTOR SHALL VERIFY ALL CONTROLLING DIMENSIONS AND FIELD CONDITIONS BEFORE ORDERING OR FABRICATING ANY MATERIALS OR ASSEMBLIES.
2. THE CONTRACTOR SHALL NOTIFY THE ENGINEER IN WRITING OF ANY DISCREPENCIES BETWEEN THESE PLANS AND ACTUAL MEASUREMENTS OR FIELD CONDITIONS.

CALIFORNIA STATE FIRE MARSHAL APPROVED
Approval of this plan does not authorize or approve any omission or deviation from applicable regulations. Final approval is subject to field inspection. One set of approved plans shall be available on the project site at all times.
Reviewed by: STEPHEN GUARINO
Approval date: 05-29-09

SYMBOLS

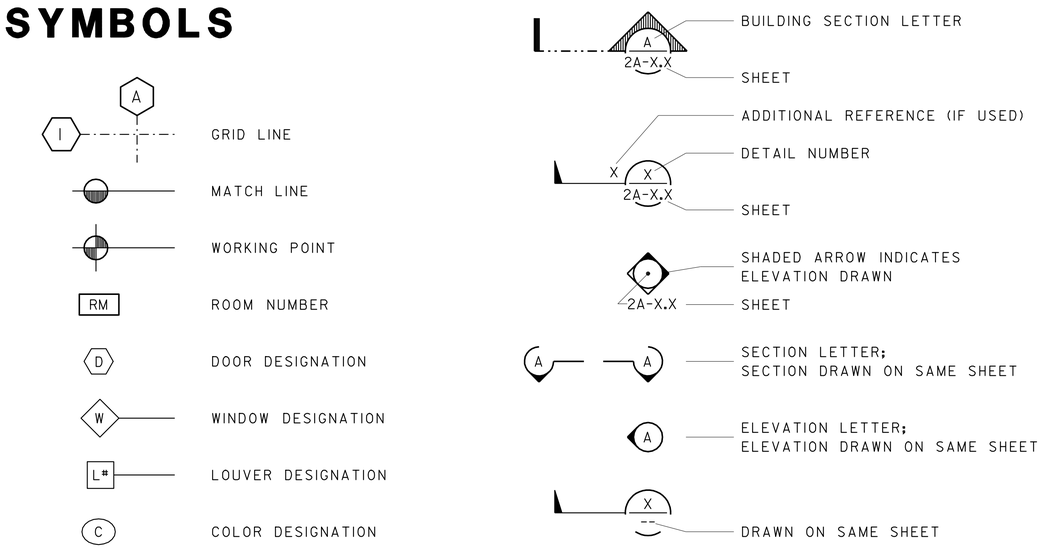

DESIGN SUPERVISOR	DESIGNER	CHECKED BY: BILL BARNETT	SHEET LEGEND: A-1 ARCHITECTURAL, M-1 MECHANICAL, W-1 WATER SUPPLY, ST-1 STRUCTURAL, EE-1 ELECTRICAL, SS-1 SANITARY
DESIGN ARCHITECT	DRAWN BY CHRIS HANSEN	STRUCTURAL REVIEW	

STATE OF CALIFORNIA DEPARTMENT OF TRANSPORTATION

DIVISION OF ENGINEERING SERVICES ARCHITECTURAL AND STRUCTURAL DESIGN

BRIDGE NO. 29-0043
POST MILE 0.01

MOKELUMNE RIVER BRIDGE CONTROL HOUSE UPGRADE
ARCHITECTURAL ABBREVIATIONS & SYMBOLS

SHEET **A0-2**

a0_2.dgn
DS OSD Imperial Rev. 11/98 12-DEC-2009 05:32

ORIGINAL SCALE IN INCHES FOR REDUCED PLANS 0 1 2 3

CU 06 243
EA 0K0701

DISREGARD PRINTS BEARING EARLIER REVISION DATES → REVISION DATES (PRELIMINARY STAGE ONLY) 06-13-08 06-22-08 12-8-08 2-4-09

SHEET X OF X

12-DEC-2009 05:32
a0_2.dgn

DIST.	COUNTY	ROUTE	POST MILES TOTAL PROJECT	SHEET NO.	TOTAL SHEETS
10	SJ	12	0.0	9	37

LICENSED ARCHITECT

LICENSED ARCHITECT QUINCY J. WONG No. C-18849 Exp. 5-31-11 STATE OF CALIFORNIA

12-7-09
PLANS APPROVAL DATE

The State of California or its officers or agents shall not be responsible for the accuracy or completeness of electronic copies of this plan sheet.

CALIFORNIA STATE FIRE MARSHAL APPROVED
Approval of this plan does not authorize or approve any omission or deviation from applicable regulations. Final approval is subject to field inspection. One set of approved plans shall be available on the project site at all times.
Reviewed by: STEPHEN GUARINO
Approval date: 05-29-09

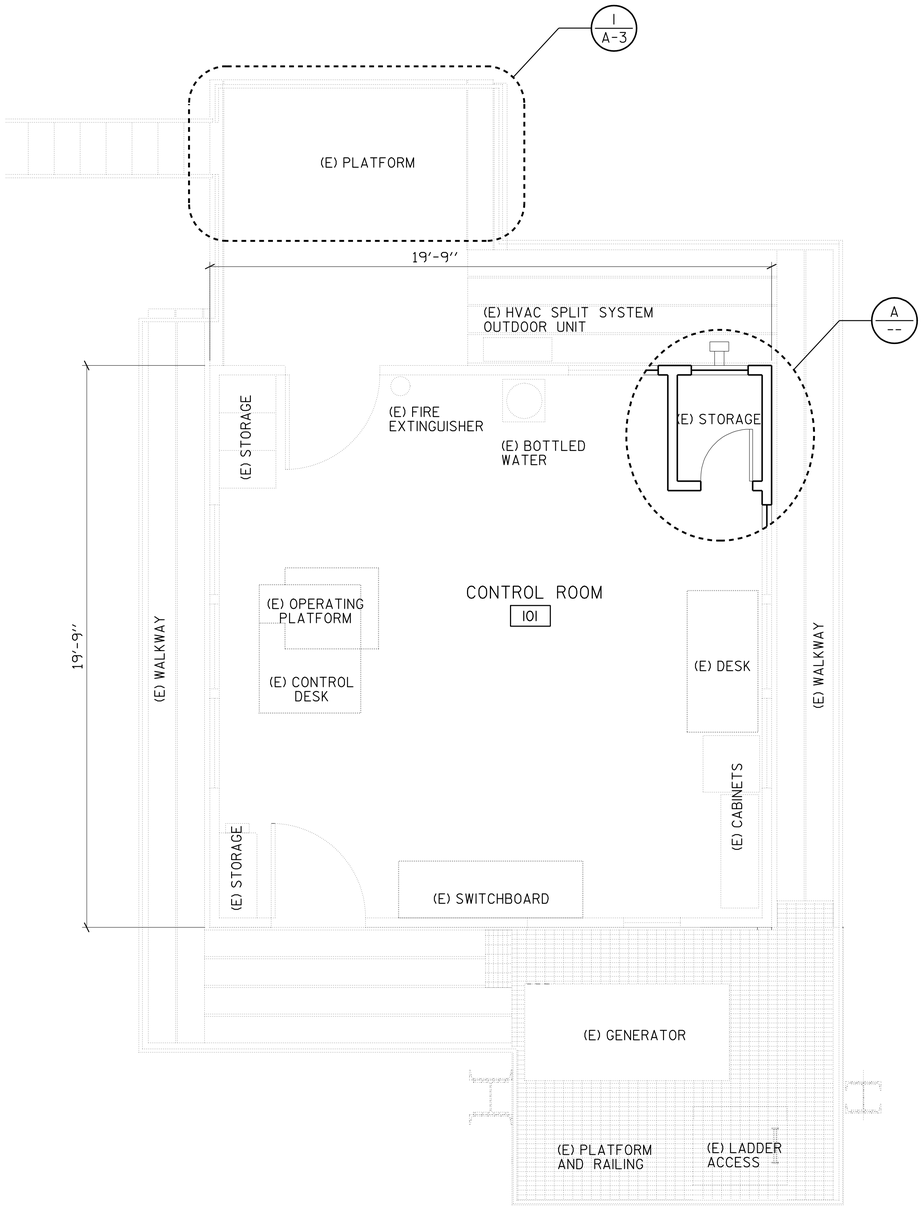

1 EXISTING FLOOR PLAN

SCALE 3/8" = 1'-0"

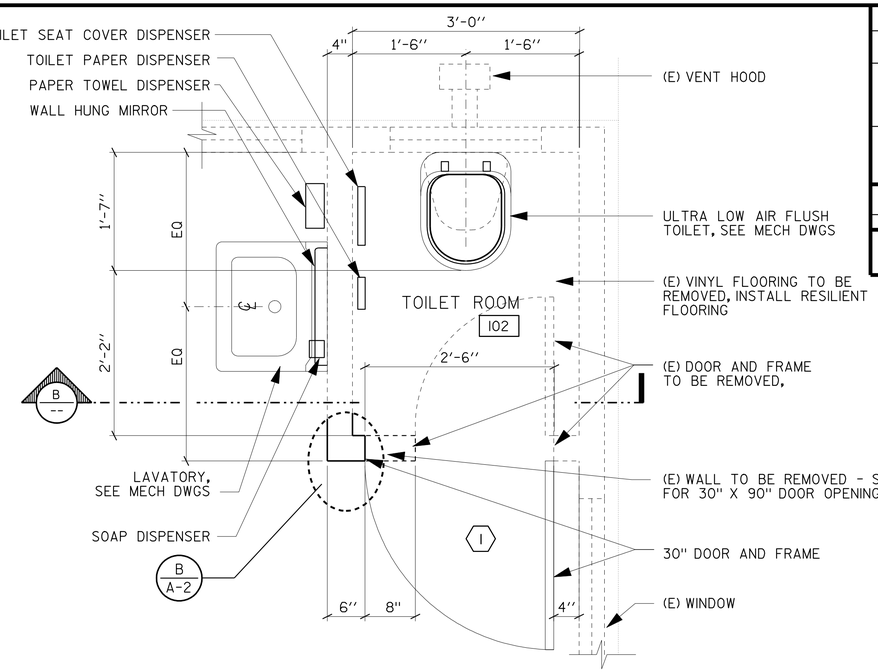

A ENLARGED TOILET ROOM UPGRADE FLOOR PLAN

SCALE 1" = 1'-0"

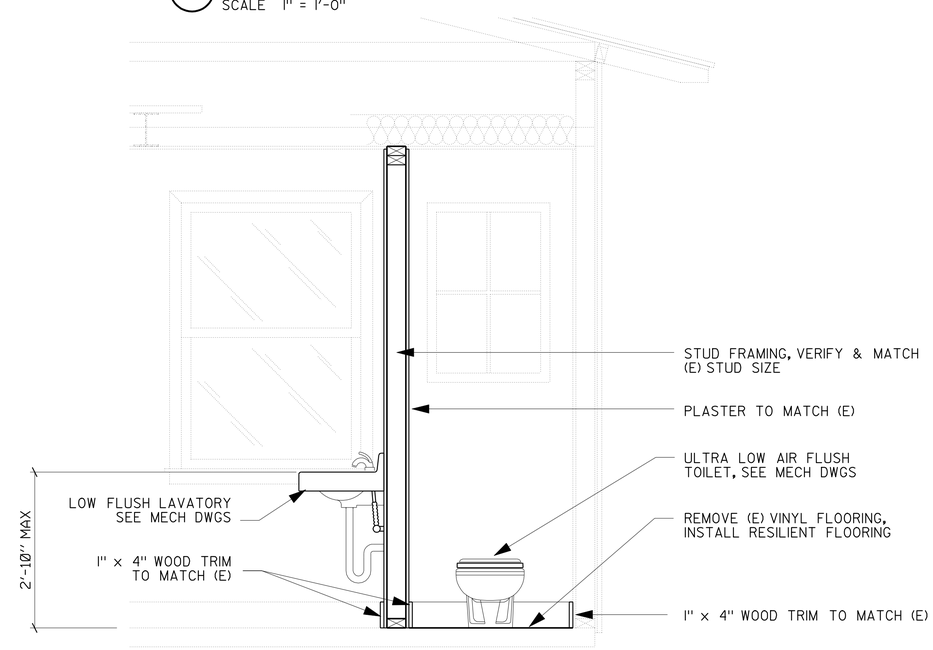

B TOILET ROOM UPGRADE SECTION

SCALE 3/4" = 1'-0"

NOTES:

1. DO NOT ALTER (E) WIDE FLANGE BEAMS WHEN INSTALLING THE TOILET.
2. AVOID CUTTING THROUGH REBAR IN (E) CONC FLR SLAB WHEN INSTALLING TOILET, IF UNAVOIDABLE, SUBMIT SHOP DRAWINGS FOR ENGINEER'S APPROVAL.
3. SURFACE MOUNTED TOILET TISSUE DISPENSER TO BE INSTALLED AT 1'-7" MIN TO THE CENTER OF PAPER ROLL.
4. PAPER TOWEL DISPENSER TO BE INSTALLED AT 3'-4" MAX TO THE BOTTOM OF DISPENSER
5. SOAP DISPENSER TO BE INSTALL ABOVE LAVATORY AT 3'-4" MAX TO THE SPOUT

	BY	CHECKED
DESIGN	Q. WONG	
DETAILS	S. YEH	
QUANTITIES		

STATE OF CALIFORNIA
DEPARTMENT OF TRANSPORTATION

DIVISION OF ENGINEERING SERVICES
ARCHITECTURAL AND STRUCTURAL DESIGN

BRIDGE NO. 29-0043
POST MILE 0.01

MOKELUMNE RIVER BRIDGE CONTROL HOUSE UPGRADE

FLOOR PLANS & SECTION

SHEET **A-1**

a_1.dgn
DS OSD Imperial Rev. 11/98 14-DEC-2009 10:28

ORIGINAL SCALE IN INCHES FOR REDUCED PLANS 0 1 2 3

CU 06 243
EA 0K0701

DISREGARD PRINTS BEARING EARLIER REVISION DATES

REVISION DATES (PRELIMINARY STAGE ONLY): 06-13-08, 08-22-08, 12-8-08, 2-4-09

SHEET X OF X

14-DEC-2009 10:28
a_1.dgn

DIST.	COUNTY	ROUTE	POST MILES TOTAL PROJECT	SHEET NO.	TOTAL SHEETS
10	SJ	12	0.0	10	37

LICENSED ARCHITECT

LICENSED ARCHITECT QUINCY J. WONG No. C-18849 Exp. 5-31-11 STATE OF CALIFORNIA

12-7-09
PLANS APPROVAL DATE

The State of California or its officers or agents shall not be responsible for the accuracy or completeness of electronic copies of this plan sheet.

DOOR TYPE

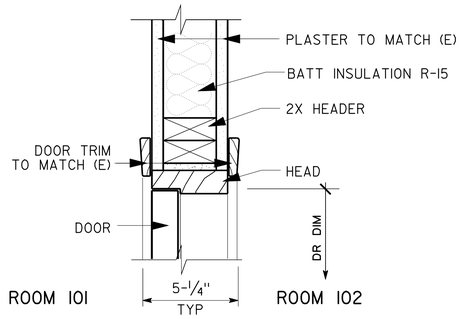

A DOOR HEAD
NOT TO SCALE

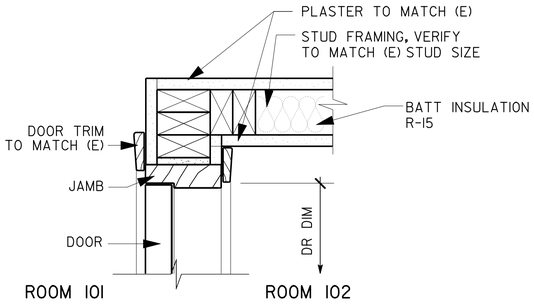

B DOOR JAMB
NOT TO SCALE

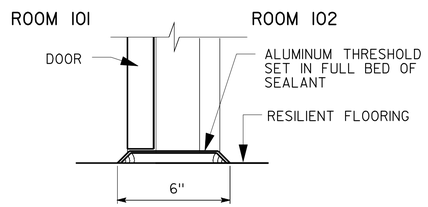

C DOOR THRESHOLD
NOT TO SCALE

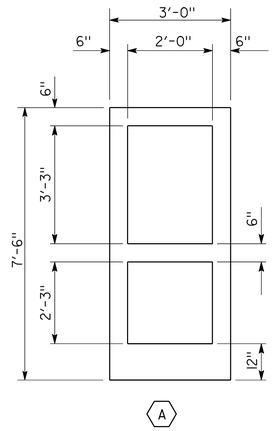

SIGN

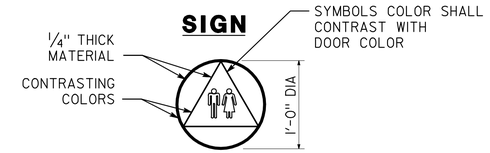

NOTES: 1. REFER TO SPECIFICATIONS FOR SIGN MATERIAL AND COLOR SELECTION. COLORS MAY VARY FROM DETAILS.

2. FASTENING PER MFR SPECIFICATION

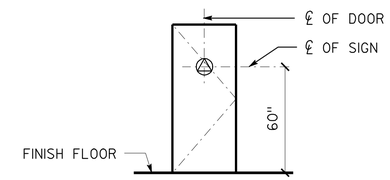

SIGN LOCATION
NO SCALE

CALIFORNIA STATE FIRE MARSHAL APPROVED
Approval of this plan does not authorize or approve any omission or deviation from applicable regulations. Final approval is subject to field inspection. One set of approved plans shall be available on the project site at all times.
Reviewed by: STEPHEN GUARINO
Approval date: 05-29-09

ROOM FINISH SCHEDULE

NO.	ROOM NAME	FLOOR MAT.	FLOOR FIN.	BASE MAT.	BASE FIN.	WALLS NORTH MAT.	WALLS NORTH FIN.	WALLS EAST MAT.	WALLS EAST FIN.	WALLS SOUTH MAT.	WALLS SOUTH FIN.	WALLS WEST MAT.	WALLS WEST FIN.	CEILING MAT.	CEILING FIN.	CEILING HT.
101	CONTROL ROOM	F-1	K –	B-1	AB 8	W-1	AA 2	W-1	AA 2	W-1	AA 2	W-1	AA 2	C-1	AA 4	8'-0"
102	TOILET ROOM	F-2	L –	B-1	AB 8	W-1	AA 2	W-1	AA 2	W-1	AA 2	W-1	AA 2	C-1	AA 4	8'-0"

FINISH TYPES

FLOOR	
F - 1	CONCRETE - CLEAN
F - 2	RESILIENT FLOORING
CEILING	
C - 1	EXISTING CEILING
BASE	
B - 1	1" x 4" WOOD TO MATCH (E)
WALLS	
W - 1	EXISTING WALL

FINISH KEY

COLOR DESIGNATION REFER TO COLOR KEY BELOW — B 4

PAINT COATING SYSTEM REFER TO SPECIFICATIONS

COLOR KEY

MANUFACTURER'S DESIGNATIONS ARE LISTED TO INDICATE COLOR ONLY & ARE NOT INTENDED TO INDICATE A PREFERENCE FOR A PARTICULAR BRAND

	PAINT
AA	"ICI" SUMMER STRAW #643 - SATIN
AB	MATCH ORIGINAL COLOR - SEMI GLOSS
K	CONCRETE GREASE/OIL SEALER
L	BURKEMERCER - LUXURY VINYL TILE - CONCRETE, RED GIANT

DOOR SCHEDULE

DOOR NO.	DOOR TYPE	NOMINAL DOOR OPENING SIZE WIDTH	HEIGHT	THICK	DOOR MAT	DOOR FIN	FRAME MAT	FRAME FIN	GLAZING	LOUVER	LABELED ASSEMBLY	BLINDS	SIGN DET	FINISH HDWR GROUP	DETAILS HEAD	JAMB	THLD	COMMENTS
1	A	30"	90"	1-3/4"	WOOD	PAINT	WOOD	PAINT	-	-	-	-	W.C.	1	A/A-2	B/A-2 & SIM	C/A-2	

COLOR / FINISH SCHEDULE AND NOTES

MANUFACTURER'S DESIGNATIONS ARE LISTED TO INDICATE COLOR ONLY & ARE NOT INTENDED TO INDICATE A PREFERENCE FOR A PARTICULAR BRAND

FINISH CODING:
1. PAINT SYSTEM

ITEM	FIN	COLOR		NOTE
CEILING	4	ICI - SUMMER STRAW #643 (30YY 61/300)	- SATIN	
INTERIOR PLASTER WALL	2	ICI - SUMMER STRAW #643 (30YY 61/300)	- SATIN	
INTERIOR DOOR FACE, INTERIOR DR TRIM, FRAME	8	ICI - HAZELWOOD #652 (30YY 65/258)	- SATIN	HISTORIC COLOR, SEE SPECIAL PROVISION FOR GUIDELINE
RESILIENT FLOORING	-	BURKEMERCER - RED GIANT CONCRETE		MFR FINISH

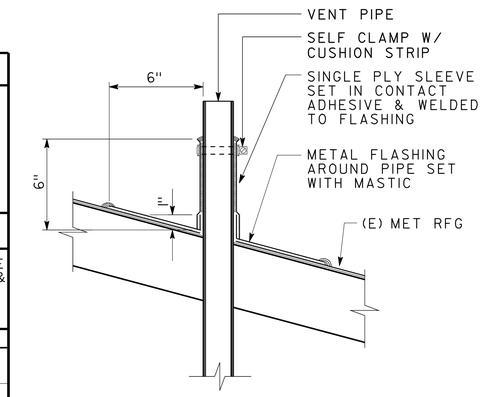

D PLUMBING VENT
NOT TO SCALE

NOTES: 1. ROOF PENETRATIONS & ACCESSORIES COLOR TO BE STANDARD MFR COLOR PALETTE - SILVER

2. COLOR SHOULD FOLLOW HISTORIC COLOR GUIDELINE IN SPECIAL PROVISION

	BY	CHECKED
DESIGN	Q. WONG	
DETAILS	S. YEH	
QUANTITIES		

STATE OF CALIFORNIA DEPARTMENT OF TRANSPORTATION

DIVISION OF ENGINEERING SERVICES ARCHITECTURAL AND STRUCTURAL DESIGN

BRIDGE NO. 29-0043
POST MILE 0.01

MOKELUMNE RIVER BRIDGE CONTROL HOUSE UPGRADE
ROOM FINISH SCHEDULE, DOOR SCHEDULE, COLOR KEY & DOOR TYPE

SHEET A-2

CU 06 243
EA 0K0701

DISREGARD PRINTS BEARING EARLIER REVISION DATES → 06-13-08 06-22-08 12-8-08 2-4-09

REVISION DATES (PRELIMINARY STAGE ONLY) SHEET X OF X

ORIGINAL SCALE IN INCHES FOR REDUCED PLANS 0 1 2 3

a_2.dgn
DS OSD Imperial Rev. 11/98 12-DEC-2009 05:32

12-DEC-2009 05:32
a_2.dgn

DIST.	COUNTY	ROUTE	POST MILES TOTAL PROJECT	SHEET NO.	TOTAL SHEETS
10	SJ	12	0.0	11	37

William Rocha Jr
REGISTERED CIVIL ENGINEER

REGISTERED PROFESSIONAL ENGINEER
William Rocha, Jr.
No. 59791
Exp. 12-31-09
CIVIL
STATE OF CALIFORNIA

12-7-09
PLANS APPROVAL DATE

The State of California or its officers or agents shall not be responsible for the accuracy or completeness of electronic copies of this plan sheet.

CALIFORNIA STATE FIRE MARSHAL APPROVED
Approval of this plan does not authorize or approve any omission or deviation from applicable regulations. Final approval is subject to field inspection. One set of approved plans shall be available on the project site at all times.
Reviewed by: STEPHEN GUARINO
Approval date: 05-29-09

NOTES:

1. CONTRACTOR SHALL VERIFY ALL CONTROLLING FIELD DIMENSIONS BEFORE ORDERING OR FABRICATING ANY MATERIAL.
2. ALL BOLTS TO CONFORM TO ASTM: A325.
3. ALL MISCELLANEOUS METAL HOT-DIP GALVANIZED AFTER FABRICATION.

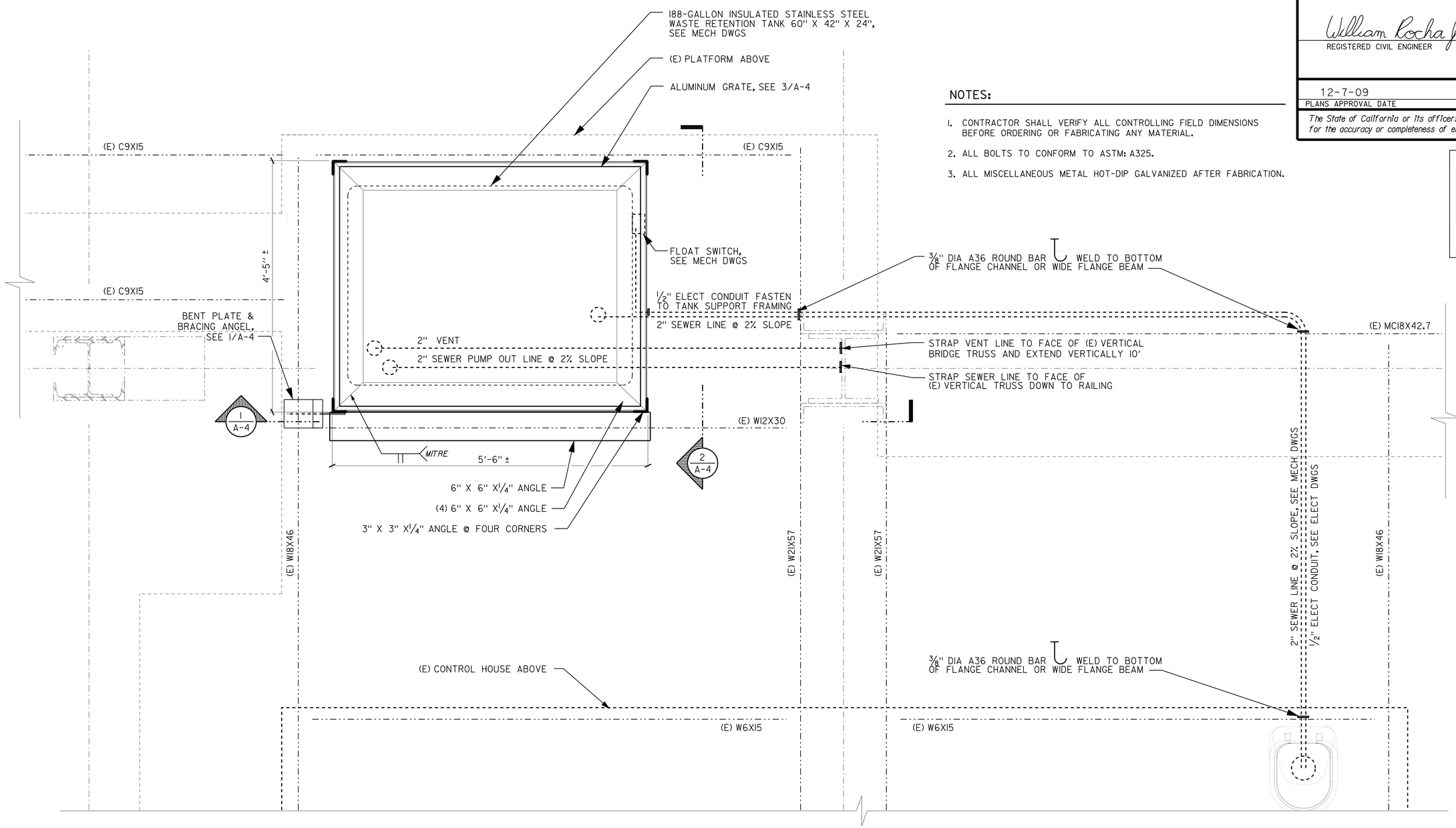

1 WASTE TANK SUPPORT FRAMING PLAN @ PLATFORM

SCALE 1" = 1'-0"

PLAN NORTH

DESIGN	BY Q. WONG	CHECKED	
DETAILS	BY S. YEH	CHECKED	
QUANTITIES	BY	CHECKED	

STATE OF CALIFORNIA
DEPARTMENT OF TRANSPORTATION

DIVISION OF ENGINEERING SERVICES
ARCHITECTURAL AND STRUCTURAL DESIGN

BRIDGE NO. 29-0043
POST MILE 0.01

MOKELUMNE RIVER BRIDGE CONTROL HOUSE UPGRADE
WASTE RETENTION TANK ATTACHMENT PLAN

SHEET **A-3**

a_3.dgn
DS OSD Imperial Rev. 11/98 12-DEC-2009 05:33

ORIGINAL SCALE IN INCHES FOR REDUCED PLANS 0 1 2 3

CU 06 243
EA 0K0701

DISREGARD PRINTS BEARING EARLIER REVISION DATES → 06-13-08 06-22-08 12-8-08 2-4-09

REVISION DATES (PRELIMINARY STAGE ONLY) SHEET OF

12-DEC-2009 05:33
a_3.dgn

DIST.	COUNTY	ROUTE	POST MILES TOTAL PROJECT	SHEET NO.	TOTAL SHEETS
10	SJ	12	0.0	12	37

William Rocha Jr
REGISTERED CIVIL ENGINEER

REGISTERED PROFESSIONAL ENGINEER
William Rocha, Jr.
No. 59791
Exp. 12-31-09
CIVIL
STATE OF CALIFORNIA

12-7-09
PLANS APPROVAL DATE

The State of California or its officers or agents shall not be responsible for the accuracy or completeness of electronic copies of this plan sheet.

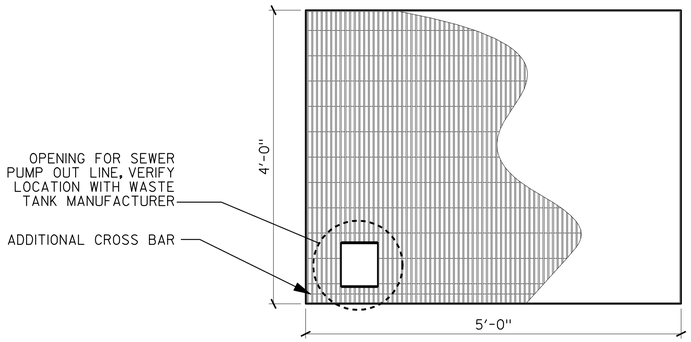

NON-TRAFFIC RATED WELDED ALUMINUM GRATE:

BEARING BARS $\frac{3}{4}$" X $\frac{3}{16}$" @ $\frac{11}{16}$" C-C
CROSS BARS @ 4" C-C
TRIM BARS $\frac{3}{4}$" X $\frac{3}{16}$" FILLET WELDED TO ENDS OF BEARING BARS.

GRATES SHALL BE ANCHORED TO SUPPORTS WITH $\frac{1}{4}$" DIA THREADED STUD AND "SADDLE CLIP" TYPE FASTENER AS RECOMMENDED BY THE MANUFACTURER.

FASTENERS SHALL BE INSTALLED AT 24" C-C MAXIMUM 6" FROM ENDS WITH 3 MINIMUM PER FIXED GRATE.

3 ALUMINUM GRATE

SCALE 1" = 1'-0"

NOTES:

1. CONTRACTOR SHALL VERIFY ALL CONTROLLING FIELD DIMENSIONS BEFORE ORDERING OR FABRICATING ANY MATERIAL.
2. ALL BOLTS TO CONFORM TO ASTM: A325.
3. ALL MISCELLANEOUS METAL HOT-DIP GALVANIZED AFTER FABRICATION.

CALIFORNIA STATE FIRE MARSHAL APPROVED
Approval of this plan does not authorize or approve any omission or deviation from applicable regulations. Final approval is subject to field inspection. One set of approved plans shall be available on the project site at all times.
Reviewed by: STEPHEN GUARINO
Approval date: 05-29-09

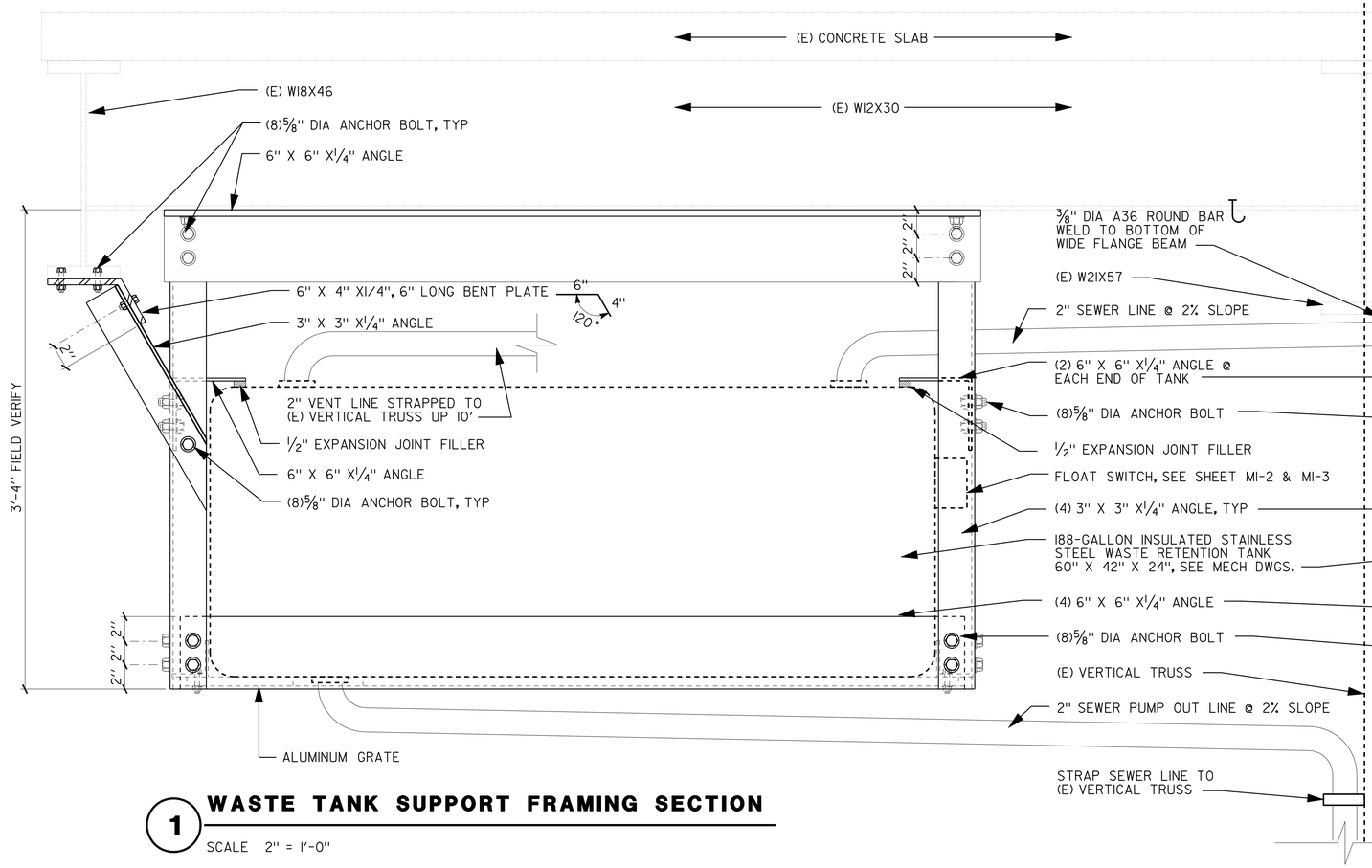

1 WASTE TANK SUPPORT FRAMING SECTION

SCALE 2" = 1'-0"

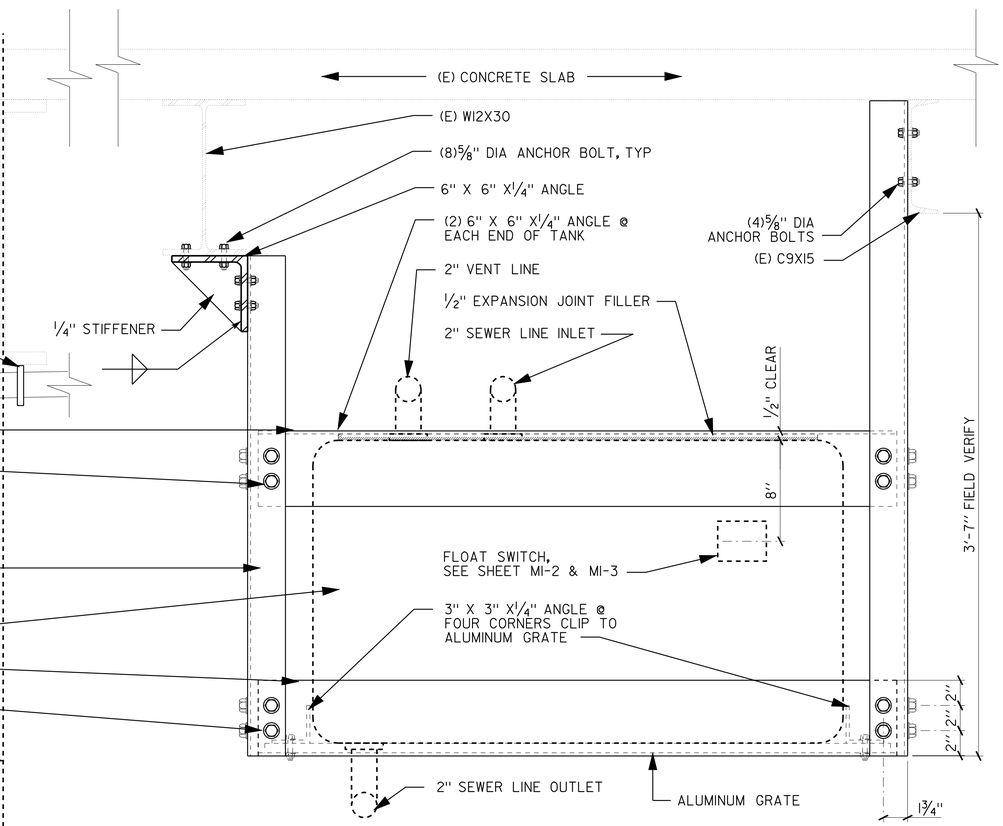

2 WASTE TANK SUPPORT FRAMING SECTION

SCALE 2" = 1'-0"

DESIGN	BY Q. WONG	CHECKED	
DETAILS	BY S. YEH	CHECKED	
QUANTITIES	BY	CHECKED	

STATE OF CALIFORNIA
DEPARTMENT OF TRANSPORTATION

DIVISION OF ENGINEERING SERVICES
ARCHITECTURAL AND STRUCTURAL DESIGN

BRIDGE NO. 29-0043
POST MILE 0.01

MOKELUMNE RIVER BRIDGE CONTROL HOUSE UPGRADE
WASTE RETENTION TANK ATTACHMENT DETAILS

SHEET A-4

a_4.dgn
DS OSD Imperial Rev. 11/98 12-DEC-2009 05:33

ORIGINAL SCALE IN INCHES FOR REDUCED PLANS 0 1 2 3

CU 06 243
EA 0K0701

DISREGARD PRINTS BEARING EARLIER REVISION DATES
REVISION DATES (PRELIMINARY STAGE ONLY): 06-13-08 06-22-08 12-8-08 2-4-09

SHEET OF

12-DEC-2009 05:33
a_4.dgn

DIST.	COUNTY	ROUTE	POST MILES TOTAL PROJECT	SHEET NO.	TOTAL SHEETS
10	SJ	12	0.0	13	37

REGISTERED ELECTRICAL ENGINEER — 04-28-09 DATE

REGISTERED PROFESSIONAL ENGINEER — JASWINDER GILL — No. 18551 — Exp. 12-31-10 — ELEC — STATE OF CALIFORNIA

12-7-09
PLANS APPROVAL DATE

The State of California or its officers or agents shall not be responsible for the accuracy or completeness of electronic copies of this plan sheet.

GRAPHIC SYMBOLS FOR ELECTRICAL WIRING AND LAYOUT DIAGRAMS

SYMBOL	DESCRIPTION
	POLE-TOP ELECTROLIER
	POLE-ARM ELECTROLIER
CEILING WALL	
(S) (S)	SURFACE FLUORESCENT, METAL HALIDE OR SODIUM VAPOR FIXTURE
(R) (R)	RECESSED FLUORESCENT, METAL HALIDE, OR SODIUM VAPOR FIXTURE
(X) (X)	EXIT LIGHT
	SURFACE OR PENDANT INDIVIDUAL FLUORESCENT FIXTURE
(R)	RECESSED INDIVIDUAL FLUORESCENT FIXTURE
	SURFACE OR PENDANT CONTINUOUS ROW FLUORESCENT FIXTURES
NOTE:	A LOWER CASE LETTER NEAR GRAPHIC LIGHTING FIXTURE SYMBOL DENOTES THAT FIXTURE IS CONTROLLED BY A SIMILARLY MARKED SWITCH, AN ALPHA-NUMERIC SYMBOL NEAR GRAPHIC LIGHTING FIXTURE SYMBOL DENOTES FIXTURE TYPE, (I=INCANDESCENT, F=FLUORESCENT, MH=METAL HALIDE, H=HIGH PRESSURE SODIUM VAPOR), DESIGN TYPE, NUMBER OF LAMPS AND WATTAGE.
	EXAMPLE : (4) F 2 - 2 x 32 — 32 WATT LAMPS; 2 LAMPS; DESIGN TYPE; FLUORESCENT; NUMBER OF FIXTURES
(B) (B)	BLANK OUTLET
(J) (J)	JUNCTION BOX
(D)	DROP CORD
	SINGLE RECEPTACLE OUTLET
	DUPLEX RECEPTACLE OUTLET
(GFCI)	DUPLEX RECEPTACLE OUTLET (WITH GFCI)
(GFCI) WP	DUPLEX RECEPTACLE OUTLET, WEATHERPROOF (WITH GFCI)
	SINGLE, SPECIAL PURPOSE RECEPTACLE OUTLET
	DUPLEX, SPECIAL PURPOSE RECEPTACLE OUTLET
R	RANGE OUTLET
(C)	CLOCK HANGER RECEPTACLE
(F)	FAN HANGER RECEPTACLE
	FLOOR SINGLE RECEPTACLE OUTLET
	FLOOR DUPLEX RECEPTACLE OUTLET
	FLOOR SPECIAL PURPOSE OUTLET
	FLOOR RADIO OUTLET
	FLOOR TELEPHONE OUTLET
	MULTI-FLOOR OUTLET, 2 OR MORE GANG
	MULTI-OUTLET ASSEMBLY
S	SINGLE POLE SWITCH
S_2	DOUBLE POLE SWITCH
S_3	THREE WAY SWITCH
S_4	FOUR WAY SWITCH
S_D	AUTOMATIC DOOR
S_K	KEY OPERATED SWITCH
S_P	SWITCH AND PILOT LIGHT
S_{MC}	MOMENTARY CONTACT SWITCH
S_{RC}	REMOTE CONTROL SWITCH
S_{WP}	WEATHERPROOF SWITCH
S_F	FAN SWITCH
S_L	LIGHT SWITCH
S_H	HEATER SWITCH
S_{VS}	VARIABLE SPEED MOTOR CONTROL SWITCH
S_{CHLF}	TWO SWITCHES, ONE SWITCH FOR LIGHT AND FAN AND TIMER SWITCH FOR HEAT LAMP

SYMBOL	DESCRIPTION
S_M	MOTION SENSOR SWITCH
S_T	MANUAL MOTOR STARTING SWITCH, THERMAL OVERLOAD TYPE
S_{HP}	MANUAL MOTOR STARTING SWITCH, WITHOUT OVERLOAD ELEMENT
Ts	TIMER SWITCH
S	SWITCH AND SINGLE RECEPTACLE
S	SWITCH AND DUPLEX RECEPTACLE
	HAND DRYER NOZZLE
H	HAND DRYER
	RADIO OUTLET
	TELEPHONE OUTLET
	SOUND SYSTEM LOUD SPEAKER OUTLET
	PUSHBUTTON
L	PUSHBUTTON STATION, NC, WITH LOCKING DEVICE FOR OPEN
	PUSHBUTTON STATION MOTOR CONTROL
	BUZZER
	BELL
	COMBINATION BELL-BUZZER
(T)	THERMOSTAT
PS	PRESSURE SWITCH
R	CONTROL RELAY
FS	FLOW SWITCH
PEC	PHOTOELECTRIC CELL
R	RADIO OUTLET
TV	TELEVISION OUTLET
M	MICROPHONE OUTLET
	FLUSH-MOUNTED PANELBOARD AND CABINET
	SURFACE-MOUNTED PANELBOARD AND CABINET
	LIGHTING PANEL
	POWER PANEL
	COMBINATION LIGHTING AND POWER
MC	MOTOR CONTROLLER
	DISCONNECT SWITCH
	CONDUIT CONCEALED IN CEILING OR WALL
	CONDUIT CONCEALED IN FLOOR
	CONDUIT EXPOSED
	CROSS-LINES INDICATE NUMBER OF #12 AWG CONDUCTORS. LONGER CROSS-LINE INDICATES 1#12 AWG (G) FOR EQUIPMENT GROUNDING CONDUCTOR. NO CROSS-LINE INDICATES 2#12 WITH 1#12(G) UNLESS OTHERWISE NOTED. ALL CONDUITS SHALL BE 1/2" UNLESS OTHERWISE NOTED.
A1, A2	HOMERUN TO PANELBOARD, ARROWS INDICATE NUMBER OF CIRCUITS, LETTER DENOTES PANEL-BOARD, NUMERAL DENOTES CIRCUIT.
SM	SURFACE METAL RACEWAY
(2) 1/2"C, PVC, 2#12	CONDUCTOR INFO (PER CONDUIT); CONDUIT TYPE; CONDUIT SIZE; NUMBER OF CONDUITS (NO NUMBER INDICATES ONE CONDUIT)
MC	CONDUIT, RIGID STEEL, UNDERGROUND
PVC	CONDUIT, POLYVINYL CHLORIDE, UNDERGROUND
	CONDUIT, FLEXIBLE
	CONDUIT, TURN UP
	CONDUIT, TURN DOWN
	CONDUIT SEAL, EXPLOSION-PROOF
	CONDUIT, EXPANSION JOINT
	ADAPTER, ONE TYPE CONDUIT TO ANOTHER
	POLE

SYMBOL	DESCRIPTION
H	HEAT DETECTOR
S	SMOKE DETECTOR
P	MANUAL PULL STATION
AV	AUDIO/VISUAL ALARM DEVICE
G	GLASS BREAK DISCRIMINATOR
C	MAGNETIC CONTACT SWITCH-PEDESTRIAN DOOR
C	MAGNETIC CONTACT SWITCH-VEHICLE DOOR
K	KEYPAD FOR ALARM SYSTEM
W	COMBINATION DETECTOR (MICROWAVE/PASSIVE INFRARED)
	PULL BOX-LETTER INDICATES TYPE OF PULL BOX (E-ELECTRICAL, T-TELEPHONE, R-RADIO)
(T)	PULL BOX (TRAFFIC RATED)-LETTER INDICATES TYPE OF PULL BOX (E-ELECTRICAL, T-TELEPHONE, R-RADIO)
CHLF	COMBINATION HEAT, LIGHT AND FAN UNIT
A / EE-2	SECTION/ELEVATION LETTER; SHEET NUMBER
I / EE-2	DETAIL NUMBER; SHEET NUMBER

REMODEL WORK

SYMBOL	DESCRIPTION
	EXISTING FLUORESCENT FIXTURE-TO REMAIN
	EXISTING FLUORESCENT FIXTURE-REMOVE
	EXISTING INCANDESCENT FIXTURE-TO REMAIN
	EXISTING INCANDESCENT FIXTURE-REMOVE
	EXISTING OUTLET-TO REMAIN
	EXISTING RECEPTACLE OUTLET-TO REMAIN
	EXISTING RECEPTACLE OUTLET-REMOVE
—E—E—	EXISTING CONDUIT AND CONDUCTORS-TO REMAIN UNLESS OTHERWISE NOTED
—✱✱—	EXISTING CONDUIT AND CONDUCTORS-REMOVE
S	EXISTING SWITCH-TO REMAIN
	EXISTING SWITCH-REMOVE
(J)	EXISTING JUNCTION BOX-TO REMAIN
	EXISTING JUNCTION BOX-REMOVE

STANDARD NOTES

AB	ABANDON, IF APPLIED TO CONDUIT, REMOVE CONDUCTORS.
BC	INSTALL PULL BOX IN EXISTING CONDUIT RUN.
CB	INSTALL CONDUIT INTO EXISTING PULL BOX.
CC	CONNECT NEW AND EXISTING CONDUIT. REMOVE EXISTING CONDUCTORS AND INSTALL CONDUCTORS AS INDICATED.
CF	CONDUIT TO REMAIN FOR FUTURE USE. REMOVE CONDUCTORS, INSTALL PULL ROPE AND PLUG.
FA	REMOVE FOUNDATION ABOVE GRADE AND ABANDON FOUNDATION BELOW GRADE.
RL	RELOCATE EQUIPMENT.
RLD	RELOCATED EQUIPMENT.
SC	SPLICE NEW TO EXISTING CONDUCTORS.

GRAPHIC SYMBOLS FOR ELECTRICAL DIAGRAMS

SYMBOL	DESCRIPTION
	CIRCUIT BREAKER, SINGLE POLE
	CIRCUIT BREAKER, DOUBLE POLE
	CIRCUIT BREAKER, THREE POLE
GFCI	CIRCUIT BREAKER, WITH GROUND FAULT CIRCUIT INTERRUPTER
	CONTACT, NORMALLY OPEN
	CONTACT, NORMALLY CLOSED
	CONTACT, NORMALLY CLOSED, TIME DELAY CLOSING ON DE-ENERGIZING
	CONTACT, NORMALLY OPEN, TIME DELAY OPENING ON DE-ENERGIZING
	CONTACT, NORMALLY OPEN, TIME DELAY CLOSING ON ENERGIZING
	CONTACT, NORMALLY CLOSED, TIME DELAY OPENING ON ENERGIZING
	CONTACT, SINGLE POLE DOUBLE-THROW
	OPERATING COIL
	LIQUID LEVEL ACTUATED SWITCH, NORMALLY CLOSED
	LIQUID LEVEL ACTUATED SWITCH, NORMALLY OPEN
	PRESSURE ACTUATED SWITCH, NORMALLY CLOSED
	PRESSURE ACTUATED SWITCH, NORMALLY OPEN
	FLOW ACTUATED SWITCH, NORMALLY CLOSED
	FLOW ACTUATED SWITCH, NORMALLY OPEN
	TEMPERATURE ACTUATED SWITCH, NORMALLY CLOSED
	TEMPERATURE ACTUATED SWITCH, NORMALLY OPEN
	LIMIT SWITCH, NORMALLY CLOSED
	LIMIT SWITCH, NORMALLY OPEN
	PUSHBUTTON SWITCH, NORMALLY CLOSED
	PUSHBUTTON SWITCH, NORMALLY OPEN
	SWITCH, SINGLE-POLE
	SWITCH, SINGLE-POLE, DOUBLE-THROW
	SWITCH, DOUBLE-POLE
	SWITCH, DOUBLE-POLE, DOUBLE-THROW
	SWITCH, SINGLE-POLE, 3-POSITION
	THERMAL OVERLOAD
	FUSE
	RESISTOR
	VARIABLE RESISTOR
	TRANSFORMER WINDING
	GROUNDING ELECTRODE
	ENCLOSURE BOND
A	PILOT LIGHT (A=AMBER, G=GREEN, R=RED)
G	GENERATOR
M	MOTOR
F	FAN MOTOR

CALIFORNIA STATE FIRE MARSHAL
APPROVED
Approval of this plan does not authorize or approve any omission or deviation from applicable regulations. Final approval is subject to field inspection. One set of approved plans shall be available on the project site at all times.
Reviewed by: STEPHEN GUARINO
Approval date: 05-29-09

PROJECT NOTES

A. SEPARATE GROUNDED (NEUTRAL) CONDUCTOR SHALL BE USED FOR EACH 120-VOLT CIRCUIT.

B. HOMERUNS TO PANELBOARDS SHALL BE INSTALLED AS SHOWN ON THE PLANS. HOMERUNS SHALL NOT BE COMBINED.

C. A SINGLE INSULATED EQUIPMENT GROUNDING CONDUCTOR (SIZED AS REQUIRED) SHALL BE INSTALLED IN EACH CONDUIT RUN.

ABBREVIATIONS

A	AMPERES
A/C	AIR CONDITIONING UNIT
ACS	AIR COMPRESSOR STARTER
ADV	ADVANCE
AL	ALARM LIGHT
AO	ANALOG OUTPUT
AVC	AIR VOLUME CONTROLLER
BD	BUILDING DISCONNECT
C	CLOSE
C	CONDUIT
CB	CIRCUIT BREAKER
CCW	COUNTER CLOCKWISE
CR	CONTROL RELAY
CCTV	CLOSED CIRCUIT TELEVISION
CW	CLOCKWISE
D	DRAW
DC	DIRECT CURRENT
DP	DUPLEX PLUG RECEPTACLE
(E)	EXISTING
EXC	EXCITER
EG	EAST GATE
EGD	EAST GATE DOWN
EGU	EAST GATE UP
EMS	EMERGENCY MESSAGING SYSTEM
FLEX	FLEXIBLE CONDUIT
FR	FAILURE RESET
FS	FLOAT SWITCH
G	GROUND
GE	GENERAL ELECTRIC
HZ	HERTZ
ILLUM	ILLUMINATION
JB	JUNCTION BOX
L	LOWER
LC	LIGHTING CONTACTOR
LCP	LIGHTING CONTROL PANEL
LD	LIGHT DISCONNECT
LL	LIQUID LEVEL RELAY
LLC	LIQUID LEVEL CONTROLLER
LP	LIGHT PANEL
LS	LIMIT SWITCH
MAX	MAXIMUM
MB	MAIN BREAKER
MC	METALLIC CONDUIT
MCP	MOTOR CIRCUIT PROTECTOR
MD	MOTOR DOWN
MU	MOTOR UP
MT	EMPTY CONDUIT
(N)	NEW
NC	NORMALLY CLOSED
NEMA	NATIONAL ELECTRICAL MANUFACTURERS ASSOCIATION
NO	NORMALLY OPEN
O	OPEN
OL	OVERLOAD
P	PULL
PB	PULL BOX
PED	PEDESTRIAN
PFR	PHASE FAILURE RELAY
PFRD	PHASE FAILURE RELAY DISCONNECT
PEC	PHOTOELECTRIC CELL
PL	PILOT LIGHT
PS	PRESSURE SWITCH
PTS	POWER TRANSFER SWITCH
PVC	POLYVINYL CHLORIDE
R	RAISE
REC	RECTIFIER
S	SIGN
SD	SERVICE DISCONNECT
SFR	SEAL FAILURE RELAY
SL	SUMP LIGHT
SOL	SOLENOID
SS	SELECTOR SWITCH
ST	STARTER
SW	SWITCH
T	TRANSFORMER
TB	TERMINAL BLOCK
TDR	TIME DELAY RELAY
TG	TRAFFIC GATE
TM	TIME METER
TW	TELEPHONE WIREWAY
TYP	TYPICAL
VAC	VOLTAGE ALTERNATING CURRENT
WG	WEST GATE
WGD	WEST GATE DOWN
WGU	WEST GATE UP
WLS	WATER LEVEL SWITCH
WP	WEATHERPROOF

THIS DRAWING ACCURATE FOR ELECTRICAL WORK ONLY

	BY	CHECKED
DESIGN	Jaswinder Gill	Javid Amirazodi
DETAILS	Jaswinder Gill	Javid Amirazodi
QUANTITIES	Jaswinder Gill	Javid Amirazodi

STATE OF CALIFORNIA
DEPARTMENT OF TRANSPORTATION

DIVISION OF ENGINEERING SERVICES
ELECTRICAL-MECHANICAL-WATER AND WASTEWATER DESIGN

BRIDGE NO. 29-0043
POST MILE 0.01

MOKELUMNE RIVER BRIDGE CONTROL HOUSE UPGRADE

LEGEND

SHEET EE-0

DOES SD Imperial Rev. 1/07

ORIGINAL SCALE IN INCHES FOR REDUCED PLANS 0 1 2 3

CU 06243
EA 0K0701

DISREGARD PRINTS BEARING EARLIER REVISION DATES → 10/05/08 11/14/08 12/12/08 04/28/09

REVISION DATES (PRELIMINARY STAGE ONLY) SHEET OF

12-DEC-2009 05:33

ee_00.dgn

DIST.	COUNTY	ROUTE	POST MILES TOTAL PROJECT	SHEET NO.	TOTAL SHEETS
10	SJ	12	0.0	14	37

Jaswinder S. Gill 04-28-09
REGISTERED ELECTRICAL ENGINEER DATE

REGISTERED PROFESSIONAL ENGINEER JASWINDER GILL No. 18551 Exp. 12-31-10 ELEC STATE OF CALIFORNIA

12-7-09
PLANS APPROVAL DATE

The State of California or its officers or agents shall not be responsible for the accuracy or completeness of electronic copies of this plan sheet.

CALIFORNIA STATE FIRE MARSHAL
APPROVED
Approval of this plan does not authorize or approve any omission or deviation from applicable regulations. Final approval is subject to field inspection. One set of approved plans shall be available on the project site at all times.
Reviewed by: STEPHEN GUARINO
Approval date: 05-29-09

General Notes:

A. All bridge control electrical equipment are identified with an underlined numeral which is referenced as Item Number. For equipment schedule, see sheet EE-20.

B. Location of existing bridge control electrical equipment and conduit systems as shown here are approximate only. The Contractor shall verify the location of all equipments and conduit systems in the field.

C. Not all electrical/mechanical equipment and conduit systems are shown.

Note:

(1) For electrical work inside the Control Room see sheets EE-5, EE-6 and EE-7.

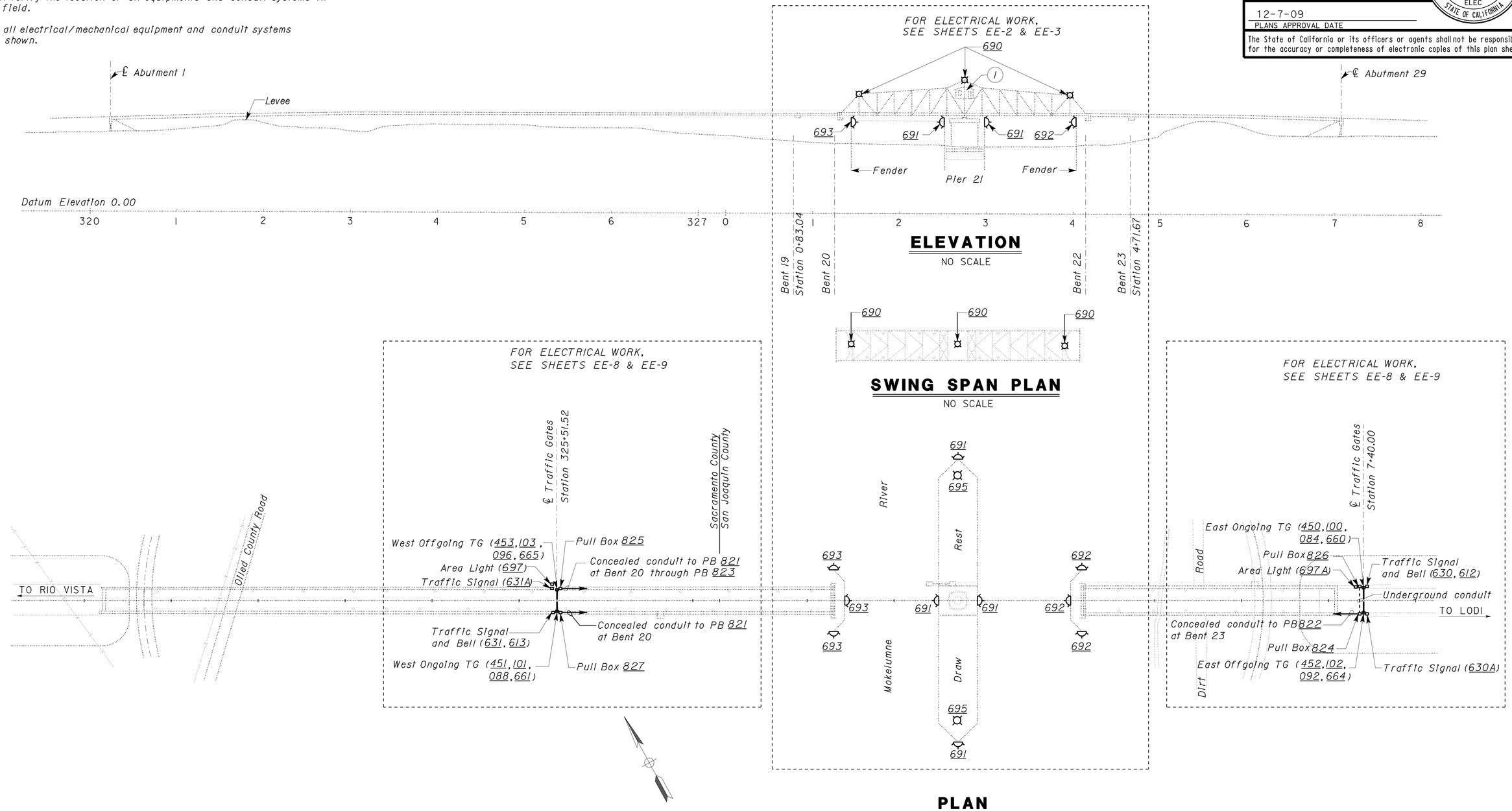

PLAN

SWING SPAN NOT SHOWN (NO SCALE)

THIS DRAWING ACCURATE FOR ELECTRICAL WORK ONLY

DESIGN SUPERVISOR	DESIGN	BY Jaswinder Gill	CHECKED Javid Amirazodi
DESIGN ENGINEER	DETAILS	BY J.Gill/Ed D.Tapalla	CHECKED Javid Amirazodi
	QUANTITIES	BY Jaswinder Gill	CHECKED Javid Amirazodi

STATE OF CALIFORNIA
DEPARTMENT OF TRANSPORTATION

DIVISION OF ENGINEERING SERVICES
ELECTRICAL-MECHANICAL-WATER AND WASTEWATER DESIGN

BRIDGE NO. 29-0043
POST MILE 0.01

MOKELUMNE RIVER BRIDGE
CONTROL HOUSE UPGRADE
EXISTING SITE PLAN

SHEET EE-1

DOES SD Imperial Rev.1/07

ORIGINAL SCALE IN INCHES FOR REDUCED PLANS 0 1 2 3

CU 06243
EA 0K0701

DISREGARD PRINTS BEARING EARLIER REVISION DATES → 10/03/08 11/14/08 12/12/08 02/05/09 04/28/09

SHEET OF

12-DEC-2009 05:33
ee_01.dgn

DIST.	COUNTY	ROUTE	POST MILES TOTAL PROJECT	SHEET NO.	TOTAL SHEETS
10	SJ	12	0.0	15	37

CALIFORNIA STATE FIRE MARSHAL
APPROVED
Approval of this plan does not authorize or approve any omission or deviation from applicable regulations. Final approval is subject to field inspection. One set of approved plans shall be available on the project site at all times.
Reviewed by: STEPHEN GUARINO
Approval date: 05-29-09

Jaswinder S. Gill 04-28-09
REGISTERED ELECTRICAL ENGINEER DATE

REGISTERED PROFESSIONAL ENGINEER
JASWINDER GILL
No. 18551
Exp. 12-31-10
ELEC
STATE OF CALIFORNIA

12-7-09
PLANS APPROVAL DATE

The State of California or its officers or agents shall not be responsible for the accuracy or completeness of electronic copies of this plan sheet.

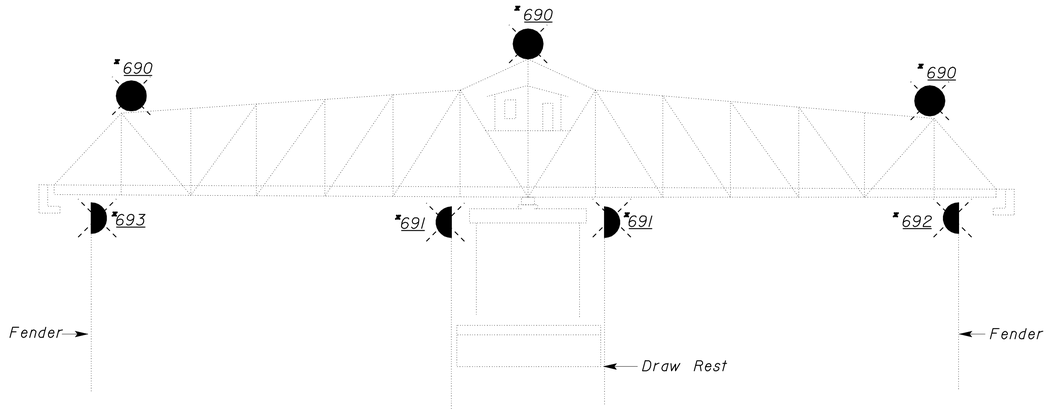

ELEVATION

NO SCALE

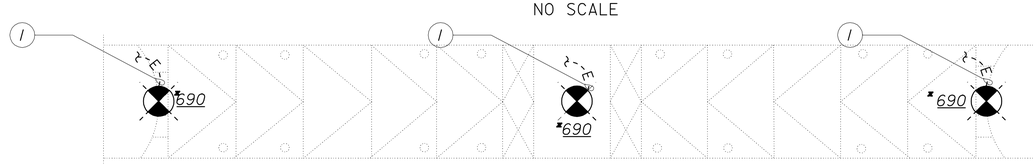

SWING SPAN PLAN

NO SCALE

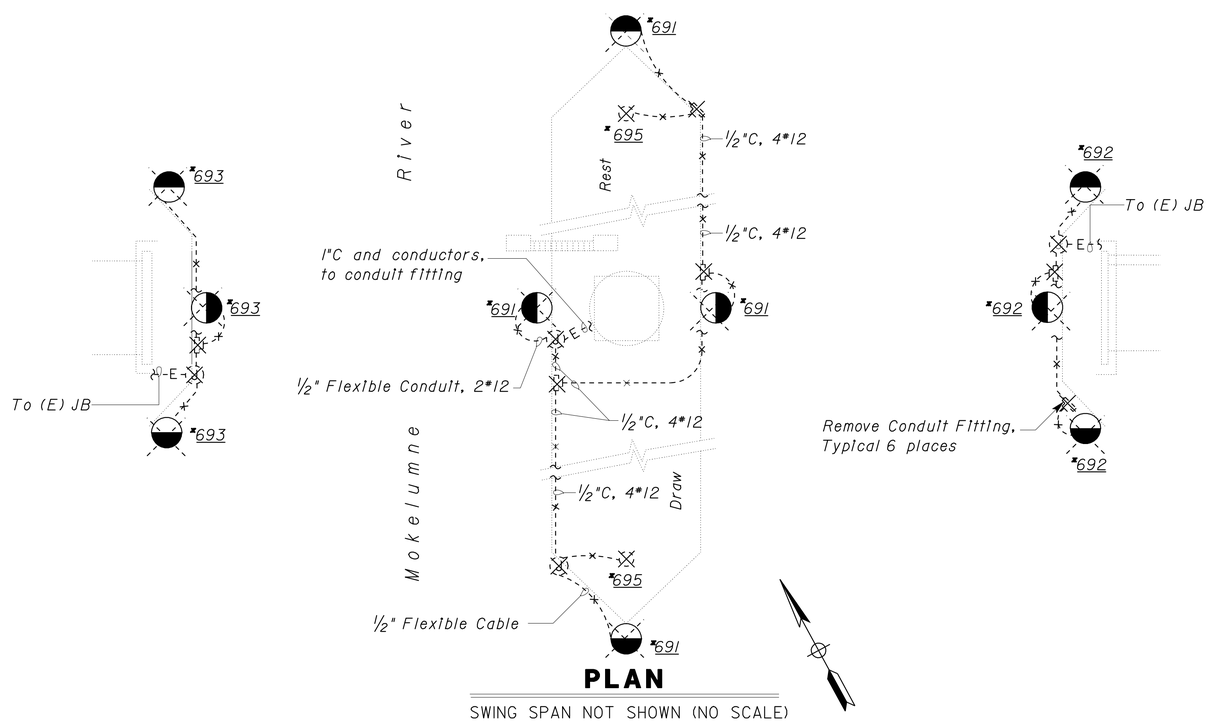

PLAN

SWING SPAN NOT SHOWN (NO SCALE)

* Remove equipment

Note:

(1) 1/2"C, 2#12 to navigational light.

General Notes:

A. All bridge control electrical equipment are identified with an underlined numeral which is referenced as Item Number. For equipment schedule, see sheet EE-20.

B. Location of existing bridge control electrical equipment and conduit systems as shown here are approximate only. The Contractor shall verify the location of all equipments and conduit systems in the field.

C. Not all electrical/mechanical equipments and conduit systems are shown.

THIS DRAWING ACCURATE FOR ELECTRICAL WORK ONLY

	BY	CHECKED
DESIGN	Jaswinder Gill	Javid Amirazodi
DETAILS	Jaswinder Gill	Javid Amirazodi
QUANTITIES	Jaswinder Gill	Javid Amirazodi

STATE OF CALIFORNIA
DEPARTMENT OF TRANSPORTATION

DIVISION OF ENGINEERING SERVICES
ELECTRICAL-MECHANICAL-WATER AND WASTEWATER DESIGN

BRIDGE NO. 29-0043
POST MILE 0.01

MOKELUMNE RIVER BRIDGE
CONTROL HOUSE UPGRADE
EXISTING NAVIGATIONAL LIGHTS

SHEET EE-2

DOES SD Imperial Rev. 1/07

ORIGINAL SCALE IN INCHES FOR REDUCED PLANS 0 1 2 3

CU 06243
EA 0K0701

DISREGARD PRINTS BEARING EARLIER REVISION DATES
REVISION DATES (PRELIMINARY STAGE ONLY) 10/03/08 11/14/08 12/27/08 02/05/09 04/28/09
SHEET OF

12-DEC-2009 05:34
ee_02.dgn

DIST.	COUNTY	ROUTE	POST MILES TOTAL PROJECT	SHEET NO.	TOTAL SHEETS
10	SJ	12	0.0	16	37

REGISTERED ELECTRICAL ENGINEER — 04-28-09 DATE

REGISTERED PROFESSIONAL ENGINEER — JASWINDER GILL — No. 18551 — Exp. 12-31-10 — ELEC — STATE OF CALIFORNIA

12-7-09
PLANS APPROVAL DATE

The State of California or its officers or agents shall not be responsible for the accuracy or completeness of electronic copies of this plan sheet.

General Notes:

A. All bridge control electrical equipment are identified with an underlined numeral which is referenced as Item Number. For equipment schedule, see sheet EE-20.

B. For mounting details of navigational lights and target lights, see sheet EE-4.

C. For different lens pattern and arcs of visibility for each navigational light see Lens Pattern Details 1 and 2 and Navigational Lights Schedule table this sheet.

Notes:

1. Modify (E) 1/2"C and 2*12 as required and terminate at the new navigational light.
2. Splice new to existing conductors. Connect 1*12G to the body of the weatherproof JB.
3. Connect (E) conduit to new weatherproof JB.

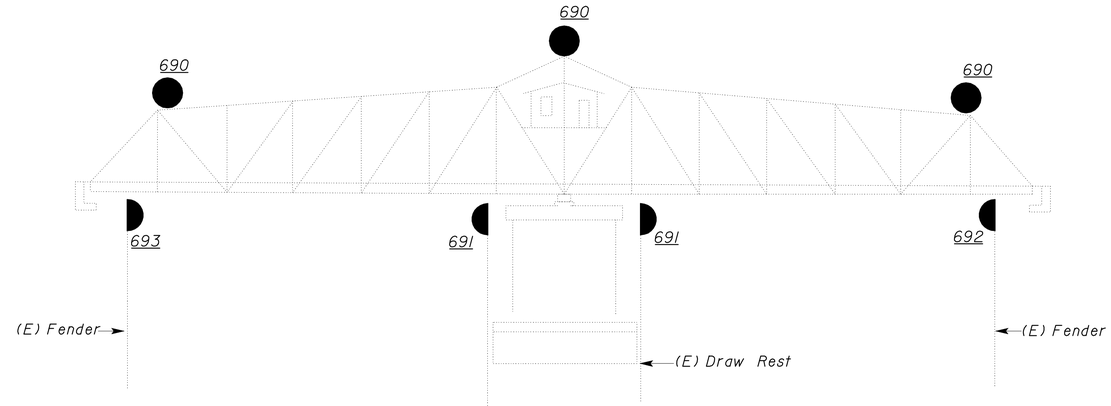

A ELEVATION
NO SCALE

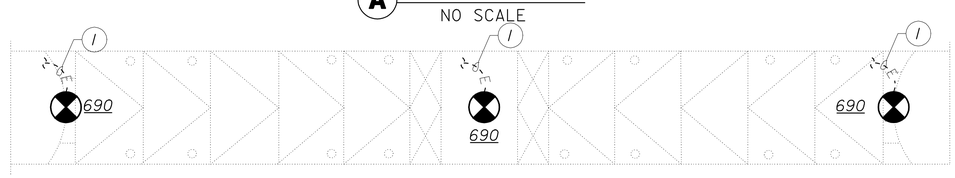

SWING SPAN PLAN
NO SCALE

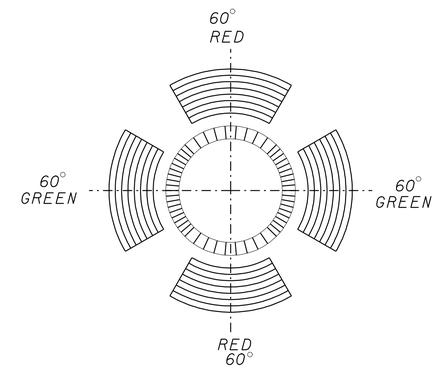

SPAN NAVIGATIONAL LIGHT (690) LENS PATTERN
1

ARCS OF VISIBILITY	ITEM NUMBER	DESCRIPTION
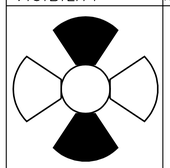	690	Span navigational light- Alternate Red (2) and Green (2)
	691	Pier navigational light
	692 693	Fender navigational lights

NAVIGATIONAL LIGHTS SCHEDULE

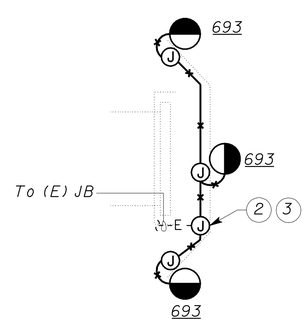

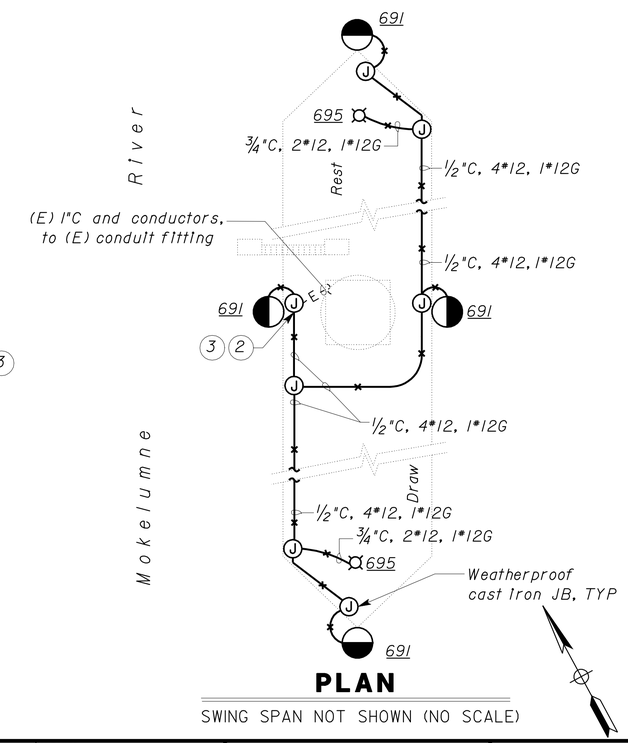

PLAN
SWING SPAN NOT SHOWN (NO SCALE)

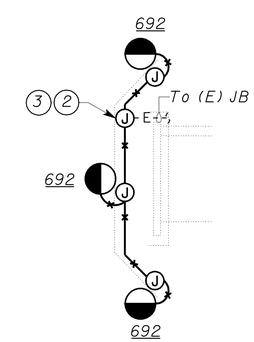

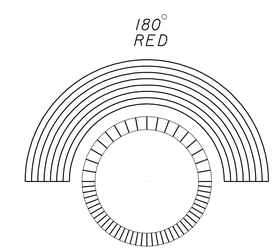

FENDER & PIER NAVIGATION LIGHTS (691/692/693) LENS PATTERN
2

CALIFORNIA STATE FIRE MARSHAL
APPROVED
Approval of this plan does not authorize or approve any omission or deviation from applicable regulations. Final approval is subject to field inspection. One set of approved plans shall be available on the project site at all times.
Reviewed by: STEPHEN GUARINO
Approval date: 05-29-09

THIS DRAWING ACCURATE FOR ELECTRICAL WORK ONLY

	BY	CHECKED
DESIGN	Jaswinder Gill	Javid Amirazodi
DETAILS	Jaswinder Gill	Javid Amirazodi
QUANTITIES	Jaswinder Gill	Javid Amirazodi

STATE OF CALIFORNIA
DEPARTMENT OF TRANSPORTATION

DIVISION OF ENGINEERING SERVICES
ELECTRICAL-MECHANICAL-WATER AND WASTEWATER DESIGN

BRIDGE NO. 29-0043
POST MILE 0.01

MOKELUMNE RIVER BRIDGE
CONTROL HOUSE UPGRADE
MODIFIED NAVIGATIONAL LIGHTS

SHEET EE-3

DOES SD Imperial Rev. 1/07

ORIGINAL SCALE IN INCHES FOR REDUCED PLANS 0 1 2 3

CU 06243
EA 0K0701

DISREGARD PRINTS BEARING EARLIER REVISION DATES
REVISION DATES (PRELIMINARY STAGE ONLY) 10/03/08 11/14/08 12/12/08 02/05/09 04/28/09
SHEET OF

12-DEC-2009 05:34
ee_03.dgn

DIST.	COUNTY	ROUTE	POST MILES TOTAL PROJECT	SHEET NO.	TOTAL SHEETS
10	SJ	12	0.0	17	37

CALIFORNIA STATE FIRE MARSHAL APPROVED
Approval of this plan does not authorize or approve any omission or deviation from applicable regulations. Final approval is subject to field inspection. One set of approved plans shall be available on the project site at all times.
Reviewed by: STEPHEN GUARINO
Approval date: 05-29-09

Jaswinder S. Gill 04-28-09
REGISTERED ELECTRICAL ENGINEER DATE

REGISTERED PROFESSIONAL ENGINEER JASWINDER GILL No. 18551 Exp. 12-31-10 ELEC STATE OF CALIFORNIA

12-7-09
PLANS APPROVAL DATE

The State of California or its officers or agents shall not be responsible for the accuracy or completeness of electronic copies of this plan sheet.

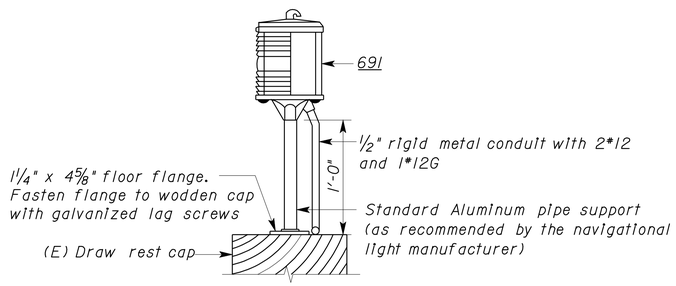

DRAW REST

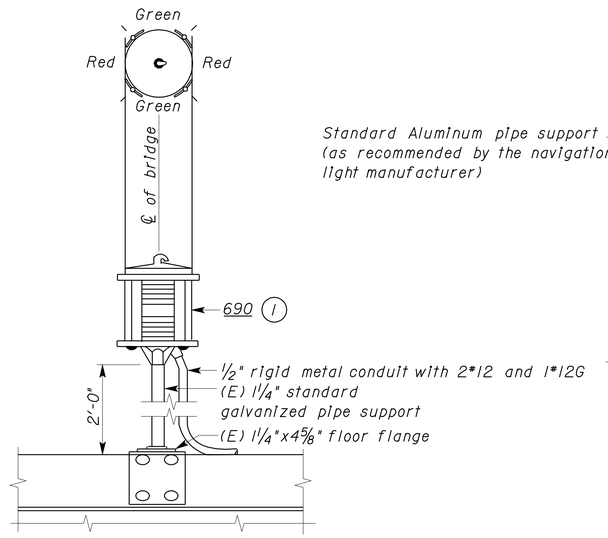

SPAN PORTAL

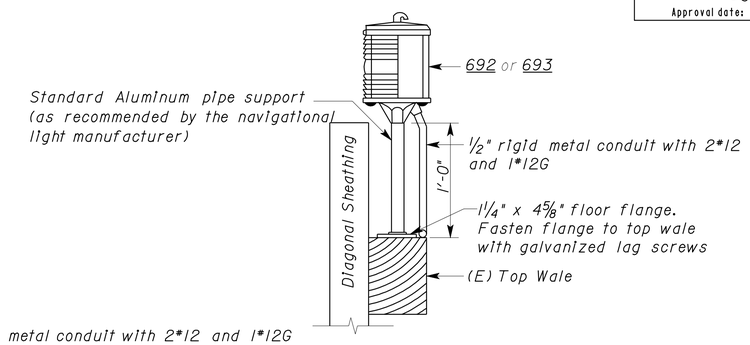

FENDER

General Note:

A. All bridge control electrical equipment are identified with an underlined numeral which is referenced as Item Number. For equipment schedule, see sheet EE-20.

Notes:

(1) Install new navigational light on top of existing support. Install new navigational light in a manner so that green lens segments are visible to the navigable traffic when bridge is in the open position.

(2) Support conduit to the existing sign support structure. Install minimum of two supports.

NAVIGATION LIGHTING MOUNTING DETAIL

NO SCALE

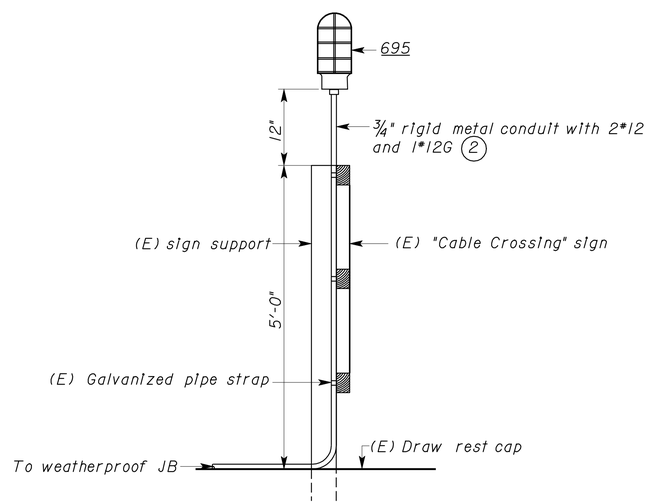

TARGET LIGHTING MOUNTING DETAIL

NO SCALE

THIS DRAWING ACCURATE FOR ELECTRICAL WORK ONLY

	BY	CHECKED
DESIGN	Jaswinder Gill	Javid Amirazodi
DETAILS	J.Gill/Dali Zhou	Javid Amirazodi
QUANTITIES	Jaswinder Gill	Javid Amirazodi

STATE OF CALIFORNIA DEPARTMENT OF TRANSPORTATION

DIVISION OF ENGINEERING SERVICES ELECTRICAL-MECHANICAL-WATER AND WASTEWATER DESIGN

BRIDGE NO. 29-0043
POST MILE 0.01

MOKELUMNE RIVER BRIDGE CONTROL HOUSE UPGRADE

NAVIGATIONAL AND TARGET LIGHT DETAILS

SHEET **EE-4**

DOES SD Imperial Rev. 1/07

ORIGINAL SCALE IN INCHES FOR REDUCED PLANS 0 1 2 3

CU 06243
EA 0K0701

DISREGARD PRINTS BEARING EARLIER REVISION DATES → REVISION DATES (PRELIMINARY STAGE ONLY) 10/05/08 11/14/08 12/12/08 02/05/09 04/28/09 SHEET OF

12-DEC-2009 05:34
ee_04.dgn

DIST.	COUNTY	ROUTE	POST MILES TOTAL PROJECT	SHEET NO.	TOTAL SHEETS
10	SJ	12	0.0	18	37

REGISTERED ELECTRICAL ENGINEER — 04-28-09 DATE

REGISTERED PROFESSIONAL ENGINEER — JASWINDER GILL — No. 18551 — Exp. 12-31-10 — ELEC — STATE OF CALIFORNIA

12-7-09
PLANS APPROVAL DATE

The State of California or its officers or agents shall not be responsible for the accuracy or completeness of electronic copies of this plan sheet.

CALIFORNIA STATE FIRE MARSHAL
APPROVED
Approval of this plan does not authorize or approve any omission or deviation from applicable regulations. Final approval is subject to field inspection. One set of approved plans shall be available on the project site at all times.
Reviewed by: STEPHEN GUARINO
Approval date: 05-29-09

General Notes:

A. *All bridge control electrical equipment are identified with an underlined numeral which is referenced as Item Number. For equipment schedule, see sheet EE-20.*

B. *Location of existing bridge control electrical equipments and conduit systems as shown here are approximate only. The Contractor shall verify the location of all equipment and conduit systems in the field.*

C. *Not all electrical/mechanical equipments and conduit systems are shown.*

D. *For exact location of Freshwater Pump and Waste Retention tank, see Mechanical Plans.*

Notes:

1. *For work inside the main switchboard and control desk, see sheets EE-6 and EE-7.*
2. *Outlet box and fixture to remain.*
3. *(E) Bryant Load center, 062 is 120/240-volt, Catalog Number 2-4-50SL, Bryant Load Center, with four 20 A, single-pole circuit breakers. See (1/EE-6).*
4. *Not used.*
5. *(E) Metered panelboards 060 and 061 are integral part of the (E) Switchboard. Use one 15 A, single pole spare circuit breaker to feed the Freshwater pump (In Attic) and Water Closet. See sheet EE-6 for details.*
6. *Connect conduit to the (E) metered panelboard (061) and terminate conductors on existing spare circuit breaker. For details see sheet EE-15.*
7. *(E) Load Center A. For details see sheet EE-6.*
8. *Not used.*
9. *For schematic diagram, see sheet EE-15.*

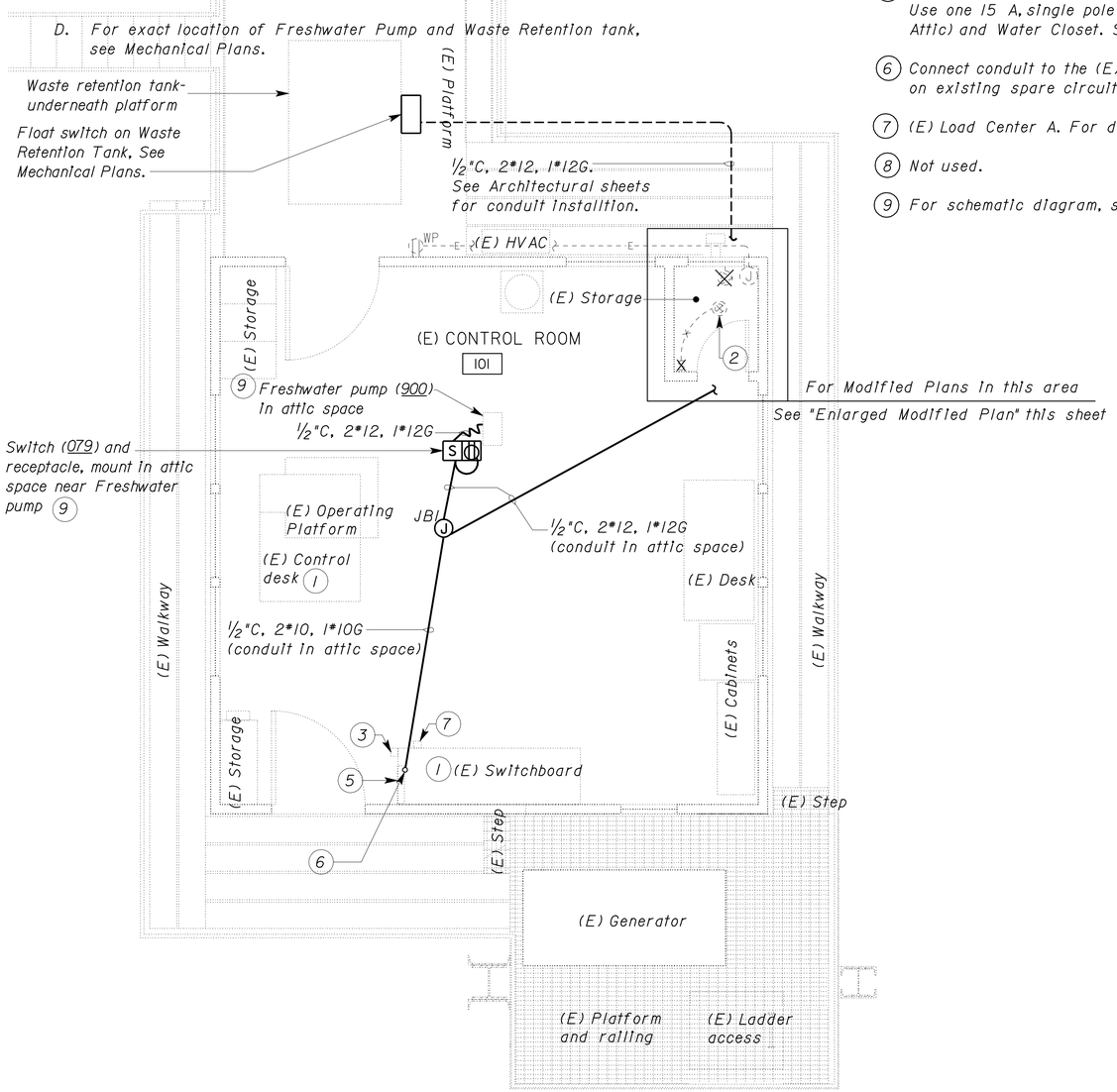

PLAN

SCALE 3/8" = 1'-0"

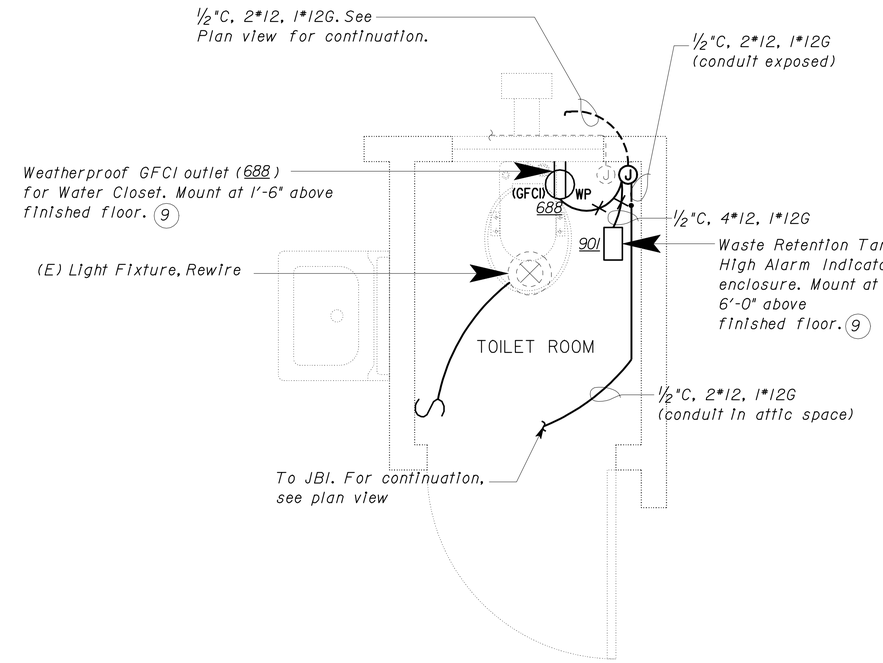

ENLARGED MODIFIED PLAN

SCALE 1" = 1'-0"

THIS DRAWING ACCURATE FOR ELECTRICAL WORK ONLY

	BY	CHECKED
DESIGN	Jaswinder Gill	Javid Amirazodi
DETAILS	Jaswinder Gill	Javid Amirazodi
QUANTITIES	Jaswinder Gill	Javid Amirazodi

STATE OF CALIFORNIA
DEPARTMENT OF TRANSPORTATION

DIVISION OF ENGINEERING SERVICES
ELECTRICAL-MECHANICAL-WATER AND WASTEWATER DESIGN

BRIDGE NO. 29-0043
POST MILE 0.01

MOKELUMNE RIVER BRIDGE CONTROL HOUSE UPGRADE

CONTROL ROOM UPGRADE

SHEET **EE-5**

DOES SD Imperial Rev. 1/07

ORIGINAL SCALE IN INCHES FOR REDUCED PLANS 0 1 2 3

CU 06243
EA 0K0701

DISREGARD PRINTS BEARING EARLIER REVISION DATES

REVISION DATES (PRELIMINARY STAGE ONLY): 10/03/08 11/14/08 12/12/08 02/05/09 04/28/09

SHEET OF

12-DEC-2009 05:34

ee_05.dgn

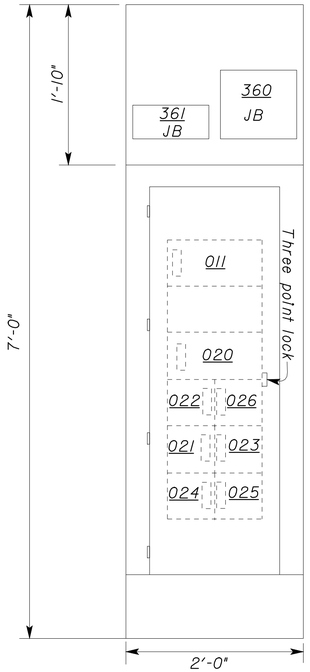

LEFT SIDE

NO SCALE

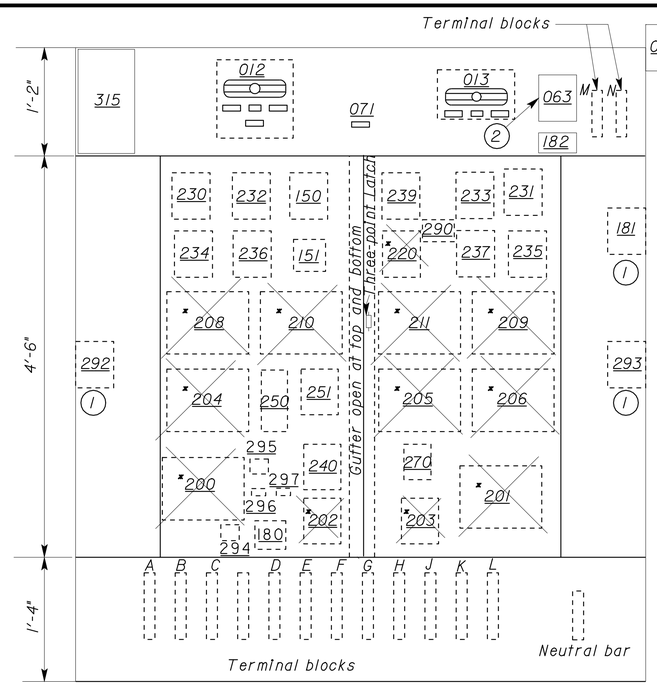

SWITCHBOARD (FRONT ELEVATION)

NO SCALE

Note: Exterior door not shown.

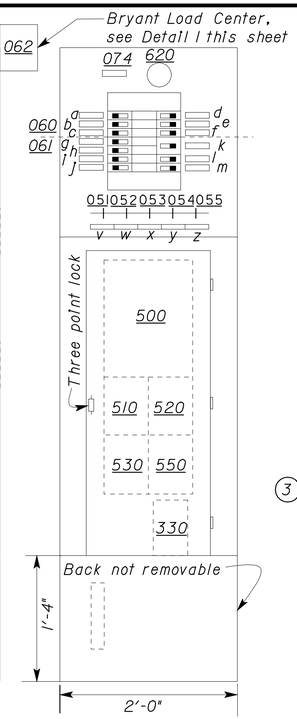

RIGHT SIDE

NO SCALE

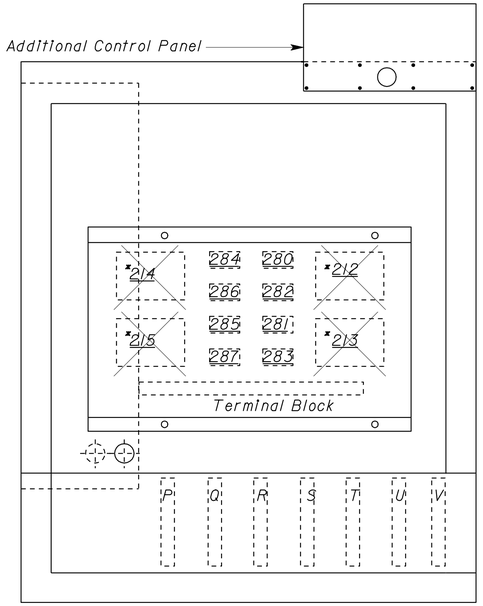

CONTROL DESK (REAR ELEVATION)

NO SCALE (Note: Exterior door not shown.)

General Notes:

A. All bridge control electrical equipment are identified with an underlined numeral which is referenced as Item Number. For equipment schedule, see sheet EE-20.

B. Record wiring of all existing electrical equipment prior to their removal.

C. Salvage existing nameplates for equipment being removed.

D. For existing schematic diagrams, see sheets EE-12 and EE-13.

Notes:

1. Bridge control electrical equipment are mounted on the side panel of the main Switchboard enclosure. Shown here for clarity.
2. (E) Load center A is 120/240-volt, Catalog Number "Q02L30S", Square D with one 30 A, 2-pole circuit breaker.
3. Use the spare 15 A, single pole breaker to feed the new Water Closet and Freshwater pump in attic space.

x Remove equipment

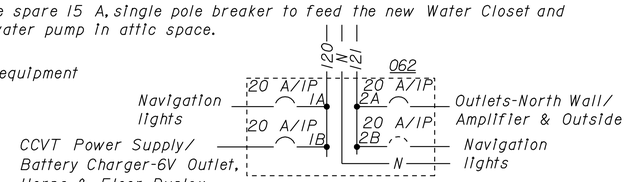

1 Bryant Load Center

NO SCALE

NAMEPLATE SCHEDULE 060 / 061

NAME PLATE	CB SIZE	INSCRIPTION
a	15 A/1P	SPARE
b	15 A/1P	PIER NAVIGATIONAL LIGHTS
c	15 A/1P	SPAN NAVIGATIONAL LIGHTS
d	15 A/1P	SPARE
e	15 A/1P	WEST FENDER NAVIGATIONAL LIGHTS
f	15 A/1P	EAST FENDER NAVIGATIONAL LIGHTS
g	15 A/1P	HOUSE AND STAIR LIGHTS
h	15 A/1P	CABINET/MACHINERY AND TARGET LIGHTS
i	15 A/1P	PLUG OUTLETS
j	15 A/1P	RADIO OUTLETS
k	15 A/2P	TRAFFIC LIGHTS
l	15 A/1P	GENERATOR BATTERY CHARGER OUTLET-12V (SOUTH WALL) & BLOCK HEATER
m	15 A/1P	WATER CLOSET & FRESHWATER PUMP (IN ATTIC)

3

EQUIPMENT REMOVAL SCHEDULE

ITEM NUMBER	DESCRIPTION	EQUIPMENT CATALOG NUMBERS AND RATING
x200	EAST SWING MOTOR STARTERS	GE-CR309D0, NEMA SIZE 2, 600VAC, MAX AMPERES 45 COIL -15D22G003, 230V, 60HZ; HEATER-CR123C30.3B
x201	WEST SWING MOTOR STARTERS	GE-CR209D0, NEMA SIZE 2, 600VAC, MAX AMPERES 45 COIL -15D22G3, 230V, 60HZ, HEATER-CR123C30.3B
x202	EAST SWING BRAKE STARTERS	Field verify existing device rating.
x203	WEST SWING BRAKE STARTERS	Field Verify existing device rating.
x204	EAST END LIFT STARTERS	GE-CR209B1, NEMA SIZE 0, 600VAC, MAX AMPERES 18 COIL -15D21G3, 230V, 60HZ, HEATER-CR123C10.4B
x205	CENTER WEDGE STARTER	GE-CR209B1, NEMA SIZE 0, 600VAC, MAX AMPERES 18 COIL -15D21G3, 230V, 60HZ, HEATER-CR123C3.01A
x206	WEST END LIFT STARTER	GE-CR209B1, NEMA SIZE 0, 600VAC, MAX AMPERES 18 COIL -15D21G3, 230V, 60HZ, HEATER-CR123C210.4B
x208	EAST BARRIER STARTER	GE-CR209B0, NEMA SIZE 0, 600VAC, MAX AMPERES 18 COIL -15D21G3, 230V, 60HZ, HEATER-CR123C3.01A
x209	WEST BARRIER STARTER	GE-CR209B0, NEMA SIZE 0, 600VAC, MAX AMPERES 18 COIL -15D21G3, 230V, 60HZ, HEATER-CR123C3.01A
x210	EAST ONGOING TRAFFIC GATE STARTER	GE-CR209A0, NEMA SIZE 00, 600VAC, MAX AMPERES 9 COIL -55-153472G3, 230V, 60HZ, HEATER-CR123C0.87A
x211	WEST ONGOING TRAFFIC GATE STARTER	GE-CR209A0, NEMA SIZE 00, 600VAC, MAX AMPERES 9 COIL -55-153472G3, 230V, 60HZ, HEATER-CR123C0.97A
x212	EAST OFFGOING TRAFFIC GATE STARTER	GE-CR209A0, NEMA SIZE 00, 600VAC, MAX AMPERES 9 COIL -55-153472G3, 230V, 60HZ, HEATER-CR123C0.87A
x213	WEST OFFGOING TRAFFIC GATE STARTER	GE-CR209A0, NEMA SIZE 00, 600VAC, MAX AMPERES 9 COIL -55-153472G3, 230V, 60HZ, HEATER-CR123C0.87A
x214	EAST PEDESTRIAN GATE STARTER	GE-CR209A0, NEMA SIZE 00, 600VAC, MAX AMPERES 9 COIL - 55-153472G2, 115V, 60HZ, HEATER-CR123C0.66A
x215	WEST PEDESTRIAN GATE STARTER	GE-CR209A0, NEMA SIZE 00 600VAC, MAX AMPERES 9 COIL - 55-153472G2, 115V, 60HZ, HEATER-CR123C0.66A
x220	WHISTLE COMPRESSOR STARTER	GE-CR1062R13A, NEMA SIZE M-0, 2-POLE, 600VAC, COIL-230V, 60HZ, HEATER-CR123C9.55A

DIST.	COUNTY	ROUTE	POST MILES TOTAL PROJECT	SHEET NO.	TOTAL SHEETS
10	SJ	12	0.0	19	37

Jaswinder S. Gill 04-28-09
REGISTERED ELECTRICAL ENGINEER DATE

REGISTERED PROFESSIONAL ENGINEER JASWINDER GILL No. 18551 Exp. 12-31-10 ELEC STATE OF CALIFORNIA

12-7-09
PLANS APPROVAL DATE

The State of California or its officers or agents shall not be responsible for the accuracy or completeness of electronic copies of this plan sheet.

CALIFORNIA STATE FIRE MARSHAL APPROVED

Approval of this plan does not authorize or approve any omission or deviation from applicable regulations. Final approval is subject to field inspection. One set of approved plans shall be available on the project site at all times.

Reviewed by: STEPHEN GUARINO
Approval date: 05-29-09

THIS DRAWING ACCURATE FOR ELECTRICAL WORK ONLY

	BY	CHECKED
DESIGN	Jaswinder Gill	Javid Amirazodl
DETAILS	J.Gill/Ed D.Tapalla	Javid Amirazodl
QUANTITIES	Jaswinder Gill	Javid Amirazodl

STATE OF CALIFORNIA DEPARTMENT OF TRANSPORTATION

DIVISION OF ENGINEERING SERVICES
ELECTRICAL-MECHANICAL-WATER AND WASTEWATER DESIGN

BRIDGE NO. 29-0043
POST MILE 0.01

MOKELUMNE RIVER BRIDGE CONTROL HOUSE UPGRADE

EXISTING SWITCHBOARD AND CONTROL DESK

SHEET **EE-6**

DOES SD Imperial Rev. 1/07

ORIGINAL SCALE IN INCHES FOR REDUCED PLANS 0 1 2 3

CU 06243
EA 0K0701

DISREGARD PRINTS BEARING EARLIER REVISION DATES → 10/23/08 11/14/08 12/19/08 02/05/09 04/28/09

REVISION DATES (PRELIMINARY STAGE ONLY) SHEET OF

14-DEC-2009 10:12

ee_06.dgn

DIST.	COUNTY	ROUTE	POST MILES TOTAL PROJECT	SHEET NO.	TOTAL SHEETS
10	SJ	12	0.0	20	37

Jaswinder S. Gill
REGISTERED ELECTRICAL ENGINEER — 04-28-09 DATE

REGISTERED PROFESSIONAL ENGINEER — JASWINDER GILL — No. 18551 — Exp. 12-31-10 — ELEC — STATE OF CALIFORNIA

12-7-09
PLANS APPROVAL DATE

The State of California or its officers or agents shall not be responsible for the accuracy or completeness of electronic copies of this plan sheet.

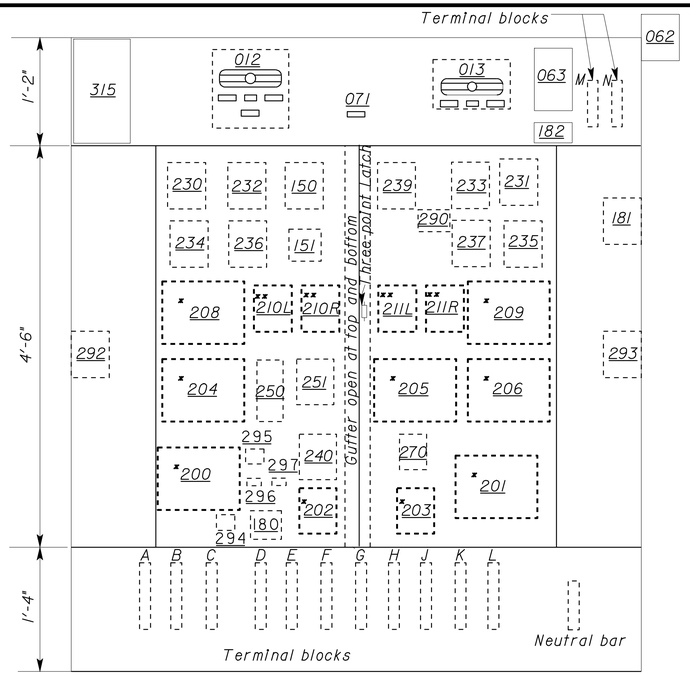

SWITCHBOARD (FRONT ELEVATION)

NO SCALE
Note: Exterior door not shown.

REPLACEMENT EQUIPMENT SCHEDULE			
ITEM NUMBER	DESCRIPTION	REPLACEMENT EQUIPMENT RATING	AUXILIARY CONTACTS
*200	EAST SWING MOTOR STARTERS	GE-CR309 SERIES, OPEN TYPE, NEMA SIZE 2, 600VAC MAX, MAX AMPERES 45, 230V COIL, 60HZ, HEATER-CR123C303B	2 NORMALLY OPEN 2 NORMALLY CLOSE
*201	WEST SWING MOTOR STARTERS	GE-CR309 SERIES, OPEN TYPE, NEMA SIZE 2, 600VAC MAX, MAX AMPERES 45, 230V COIL, 60HZ, HEATER-CR123C303B	2 NORMALLY OPEN 2 NORMALLY CLOSE
*202	EAST SWING BRAKE STARTERS	GE-CR306 SERIES, OPEN TYPE, NEMA SIZE 00, 600VAC MAX, MAX AMPERES 9, 230V COIL, 60HZ, NO HEATER	2 NORMALLY OPEN 2 NORMALLY CLOSE
*203	WEST SWING BRAKE STARTERS	GE-CR306 SERIES, OPEN TYPE, NEMA SIZE 00, 600VAC MAX, MAX AMPERES 9, 230V COIL, 60HZ, NO HEATER	2 NORMALLY OPEN 2 NORMALLY CLOSE
*204	EAST END LIFT STARTERS	GE-CR309 SERIES, OPEN TYPE, NEMA SIZE 0, 600VAC MAX, MAX AMPERES 18, 230V COIL, 60HZ, HEATER-CR123C104B	2 NORMALLY OPEN 2 NORMALLY CLOSE
*205	CENTER WEDGE STARTER	GE-CR309 SERIES, OPEN TYPE, NEMA SIZE 0, 600VAC MAX, MAX AMPERES 18, 230V COIL, 60HZ, HEATER-CR123C301A	2 NORMALLY OPEN 2 NORMALLY CLOSE
*206	WEST END LIFT STARTER	GE-CR309 SERIES, OPEN TYPE, NEMA SIZE 0, 600VAC MAX, MAX AMPERES 18, 230V COIL, 60HZ, HEATER-CR123C104B	2 NORMALLY OPEN 2 NORMALLY CLOSE
*208	EAST BARRIER STARTER	GE-CR309 SERIES, OPEN TYPE, NEMA SIZE 0, 600VAC MAX, MAX AMPERES 18, 230V COIL, 60HZ, HEATER-CR123C301A	2 NORMALLY OPEN 2 NORMALLY CLOSE
*209	WEST BARRIER STARTER	GE-CR309 SERIES, OPEN TYPE, NEMA SIZE 0, 600VAC MAX, MAX AMPERES 18, 230V COIL, 60HZ, HEATER-CR123C301A	2 NORMALLY OPEN 2 NORMALLY CLOSE
*214	EAST PEDESTRIAN GATE STARTER	GE-CR309 SERIES, OPEN TYPE, NEMA SIZE 00, 600VAC MAX, MAX AMPERES 9, 115V COIL, 60HZ, HEATER-CR123C066A	2 NORMALLY OPEN 2 NORMALLY CLOSE
*215	WEST PEDESTRIAN GATE STARTER	GE-CR309 SERIES, OPEN TYPE, NEMA SIZE 00, 600VAC MAX, MAX AMPERES 9, 115V COIL, 60HZ, HEATER-CR123C066A	2 NORMALLY OPEN 2 NORMALLY CLOSE

* New equipment replaces existing equipment with same Item Number and same description. Reattach and secure the salvaged nameplates on the new equipment as required.

** New equipment with new Item Number and description. Attach and secure new nameplates on the new equipment as required.

General Notes:

A. All bridge control electrical equipment are identified with an underlined numeral which is referenced as Item Number. For equipment schedule, see sheet EE-20.

B. For modified schematic diagrams, see sheets EE-14 and EE-15.

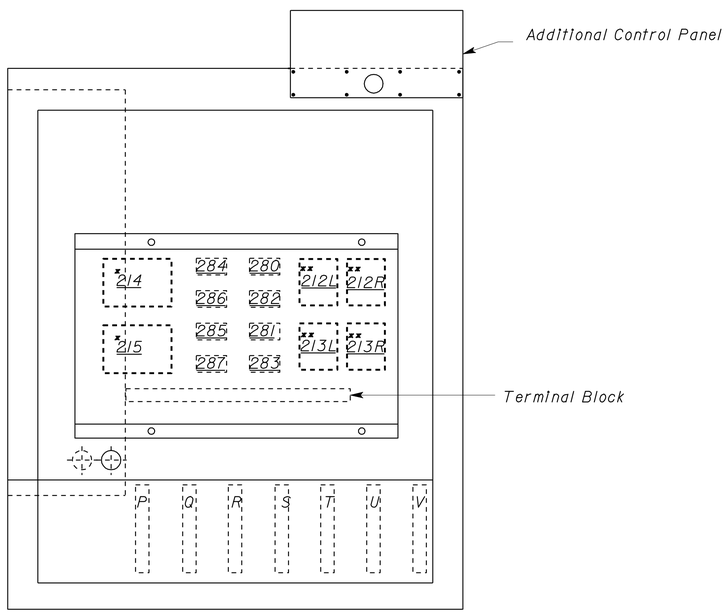

CONTROL DESK (REAR ELEVATION)

NO SCALE
Note: Exterior door not shown.

NEW EQUIPMENT SCHEDULE		
NEW ITEM NUMBER	DESCRIPTION	NEW EQUIPMENT CATALOG NUMBER AND RATING
**210L	EAST ONGOING TRAFFIC GATE (LOWER) RELAY	SquareD NEMA Type Industrial Control Relay, Catalog Number: 8501-XM060-V02 (120V-60Hz Coil) with 6 NO 20A Convertible Contacts
**210R	EAST ONGOING TRAFFIC GATE (RAISE) RELAY	SquareD NEMA Type Industrial Control Relay, Catalog Number: 8501-XM060-V02 (120V-60Hz Coil) with 6 NO 20A Convertible Contacts
**211L	WEST ONGOING TRAFFIC GATE (LOWER) RELAY	SquareD NEMA Type Industrial Control Relay, Catalog Number: 8501-XM060-V02 (120V-60Hz Coil) with 6 NO 20A Convertible Contacts
**211R	WEST ONGOING TRAFFIC GATE (RAISE) RELAY	SquareD NEMA Type Industrial Control Relay, Catalog Number: 8501-XM060-V02 (120V-60Hz Coil) with 6 NO 20A Convertible Contacts
**212L	EAST OFFGOING TRAFFIC GATE (LOWER) RELAY	SquareD NEMA Type Industrial Control Relay, Catalog Number: 8501-XM060-V02 (120V-60Hz Coil) with 6 NO 20A Convertible Contacts
**212R	EAST OFFGOING TRAFFIC GATE (RAISE) RELAY	SquareD NEMA Type Industrial Control Relay, Catalog Number: 8501-XM060-V02 (120V-60Hz Coil) with 6 NO 20A Convertible Contacts
**213L	WEST OFFGOING TRAFFIC GATE (LOWER) RELAY	SquareD NEMA Type Industrial Control Relay, Catalog Number: 8501-XM060-V02 (120V-60Hz Coil) with 6 NO 20A Convertible Contacts
**213R	WEST OFFGOING TRAFFIC GATE (RAISE) RELAY	SquareD NEMA Type Industrial Control Relay, Catalog Number: 8501-XM060-V02 (120V-60Hz Coil) with 6 NO 20A Convertible Contacts

CALIFORNIA STATE FIRE MARSHAL
APPROVED
Approval of this plan does not authorize or approve any omission or deviation from applicable regulations. Final approval is subject to field inspection. One set of approved plans shall be available on the project site at all times.
Reviewed by: STEPHEN GUARINO
Approval date: 05-29-09

THIS DRAWING ACCURATE FOR ELECTRICAL WORK ONLY

	BY	CHECKED
DESIGN	Jaswinder Gill	Javid Amirazodi
DETAILS	Jaswinder Gill	Javid Amirazodi
QUANTITIES	Jaswinder Gill	Javid Amirazodi

STATE OF CALIFORNIA
DEPARTMENT OF TRANSPORTATION

DIVISION OF ENGINEERING SERVICES
ELECTRICAL-MECHANICAL-WATER AND WASTEWATER DESIGN

BRIDGE NO. 29-0043
POST MILE 0.01

MOKELUMNE RIVER BRIDGE CONTROL HOUSE UPGRADE
MODIFIED SWITCHBOARD AND CONTROL DESK

SHEET **EE-7**

DOES SD Imperial Rev. 1/07

ORIGINAL SCALE IN INCHES FOR REDUCED PLANS 0 1 2 3

CU 06243
EA 0K0701

DISREGARD PRINTS BEARING EARLIER REVISION DATES → 10/23/08 11/14/08 12/12/08 02/05/09 04/28/09

REVISION DATES (PRELIMINARY STAGE ONLY) SHEET OF

12-DEC-2009 05:35

ee_07.dgn

DIST.	COUNTY	ROUTE	POST MILES TOTAL PROJECT	SHEET NO.	TOTAL SHEETS
10	SJ	12	0.0	21	37

Jaswinder S. Gill — REGISTERED ELECTRICAL ENGINEER — 04-28-09 DATE

REGISTERED PROFESSIONAL ENGINEER — JASWINDER GILL — No. 18551 — Exp. 12-31-10 — ELEC — STATE OF CALIFORNIA

12-7-09
PLANS APPROVAL DATE

The State of California or its officers or agents shall not be responsible for the accuracy or completeness of electronic copies of this plan sheet.

CALIFORNIA STATE FIRE MARSHAL
APPROVED
Approval of this plan does not authorize or approve any omission or deviation from applicable regulations. Final approvals subject to field inspection. One set of approved plans shall be available on the project site at all times.
Reviewed by: STEPHEN GUARINO
Approval date: 05-29-09

General Notes:

A. All bridge control electrical equipment are identified with an underlined numeral which is referenced as Item Number. For equipment schedule, see sheet EE-20.

B. Location of existing bridge control electrical equipment and conduit systems as shown here are approximate only. The Contractor shall verify the location of all equipment and conduit systems in the field.

C. Not all electrical/mechanical equipment and conduit systems are shown.

D. For existing schematic diagram, see sheet EE-13.

E. For existing wiring diagram, see sheet EE-17.

* Remove equipment

Notes:

1. Remove conductors 149 for Traffic Alarm Bell 613 mounted on the Traffic Signal upto the PB 827.
2. Remove conductors 149 and 261 between Disconnect 088 and Disconnect 096.
3. Remove all conductors.
4. Remove conductors 148 for Traffic Alarm Bell 612 mounted on the Traffic Signal upto the PB 826.
5. Remove conductors 147 and N2.
6. Remove conductor numbers 147, 261, 148 and N2.
7. Remove conductor numbers 147, 261, 149 and N2.

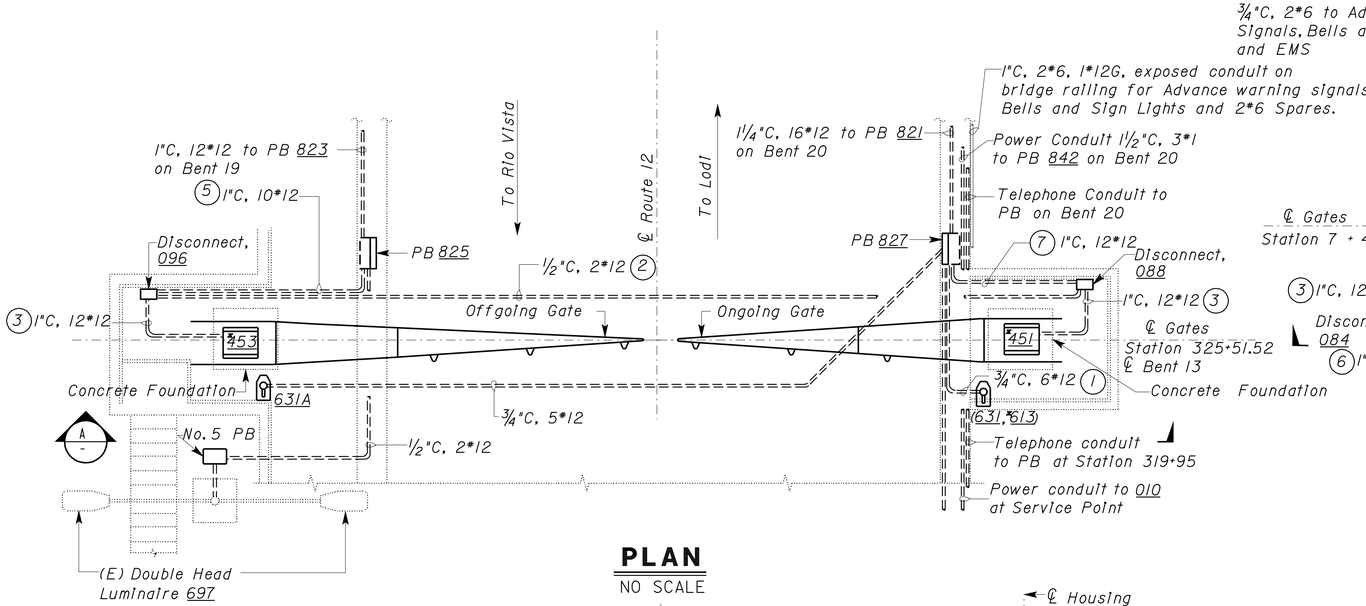

PLAN
NO SCALE

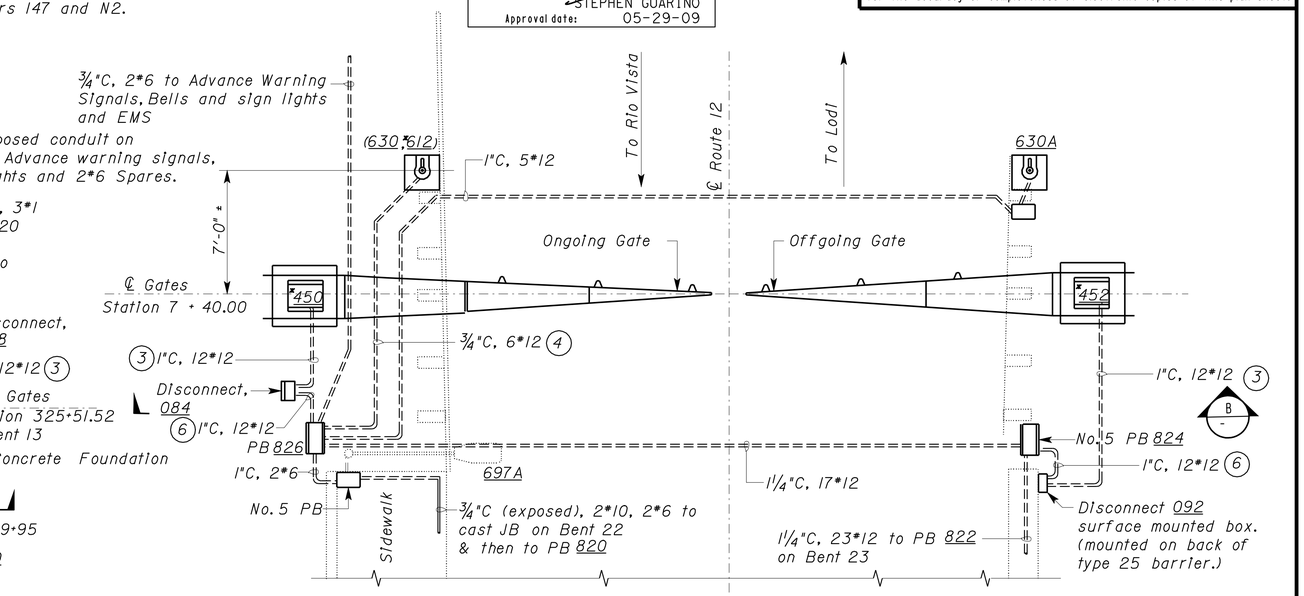

PLAN
NO SCALE

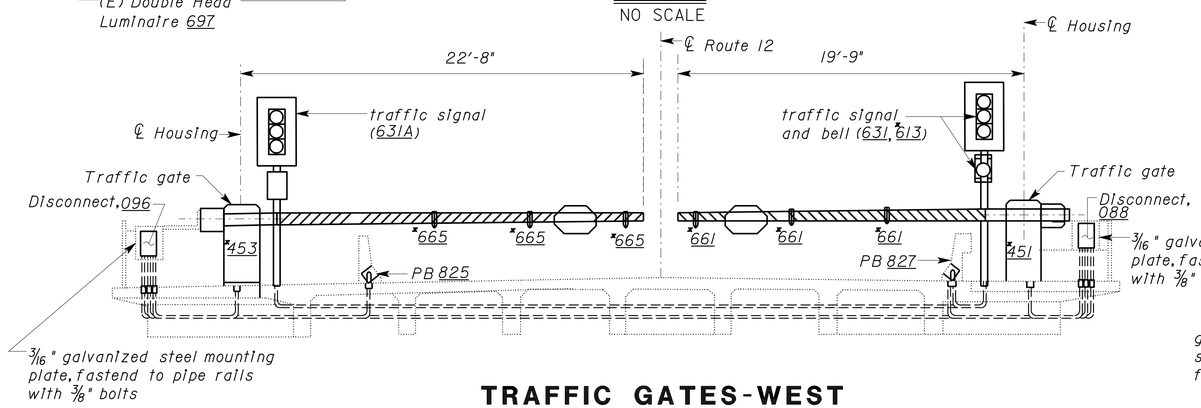

TRAFFIC GATES-WEST ELEVATION
A
NO SCALE

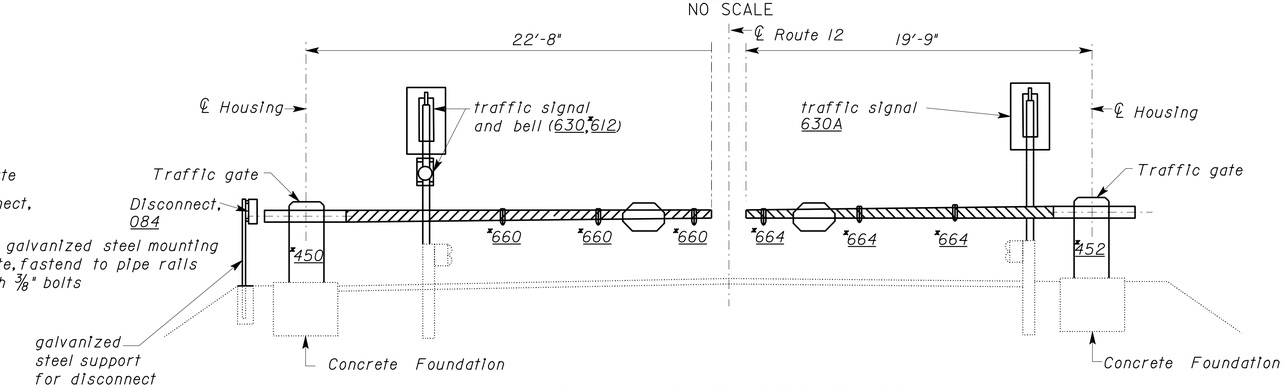

TRAFFIC GATES-EAST ELEVATION
B
NO SCALE

THIS DRAWING ACCURATE FOR ELECTRICAL WORK ONLY

	BY	CHECKED
DESIGN	Jaswinder Gill	Javid Amirazodi
DETAILS	J.Gill/Dali Zhou	Javid Amirazodi
QUANTITIES	Jaswinder Gill	Javid Amirazodi

STATE OF CALIFORNIA DEPARTMENT OF TRANSPORTATION

DIVISION OF ENGINEERING SERVICES
ELECTRICAL-MECHANICAL-WATER AND WASTEWATER DESIGN

BRIDGE NO. 29-0043
POST MILE 0.01

MOKELUMNE RIVER BRIDGE CONTROL HOUSE UPGRADE
EXISTING TRAFFIC GATES

SHEET EE-8

DOES SD Imperial Rev. 1/07

ORIGINAL SCALE IN INCHES FOR REDUCED PLANS 0 1 2 3

CU 06243
EA 0K0701

DISREGARD PRINTS BEARING EARLIER REVISION DATES → 10/22/08 11/14/2008 12/17/2008 02/05/09 04/28/09

REVISION DATES (PRELIMINARY STAGE ONLY) SHEET OF

12-DEC-2009 05:35

ee_08.dgn

DIST.	COUNTY	ROUTE	POST MILES TOTAL PROJECT	SHEET NO.	TOTAL SHEETS
10	SJ	12	0.0	22	37

Jaswinder S. Gill
REGISTERED ELECTRICAL ENGINEER — 04-28-09 DATE

REGISTERED PROFESSIONAL ENGINEER — JASWINDER GILL — No. 18551 — Exp. 12-31-10 — ELEC — STATE OF CALIFORNIA

12-7-09
PLANS APPROVAL DATE

The State of California or its officers or agents shall not be responsible for the accuracy or completeness of electronic copies of this plan sheet.

General Notes:

A. All bridge control electrical equipment are identified with an underlined numeral which is referenced as Item Number. For equipment schedule, see sheet EE-20.

B. Location of existing bridge control electrical equipment and conduit systems as shown here are approximate only. The Contractor shall verify the location of all equipment and conduit systems in the field.

C. Not all electrical/mechanical equipment and conduit systems are shown.

D. For modified schematic diagram, see sheet EE-15.

E. For modified wiring diagram, see sheet EE-19.

Notes:

1. ¾"C, 4*12, 1*12G.
2. Existing 1"C, Install 8*12, 1*12G.
3. Mount transformer on a galvanized steel support structure adjacent to the existing disconnect.
4. Mount traffic gate over existing foundation as recommended by the manufacturer and as directed by the engineer. Provide all mounting hardware as required.
5. For Offgoing traffic gate control schematic, see sheet EE-11.
6. For Ongoing traffic gate control schematic, see sheet EE-10.

* New equipment replaces existing equipment with same Item Number and same description. Reattach and secure the salvaged nameplates on the new equipment as required.

** New equipment with new item number and description. Attach and secure new nameplates on the new equipment as required.

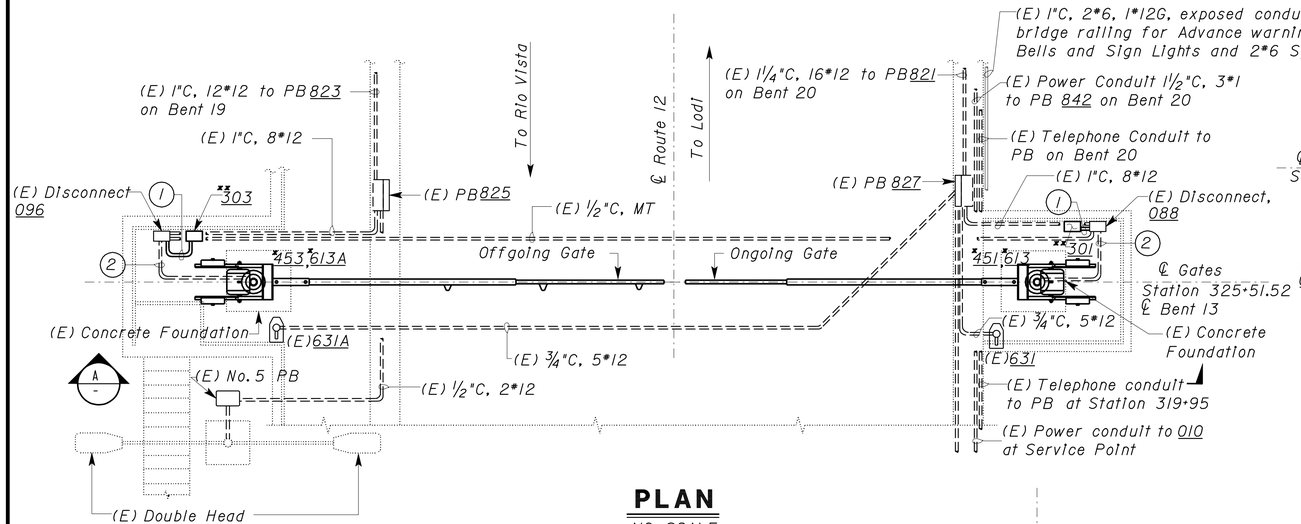

PLAN
NO SCALE

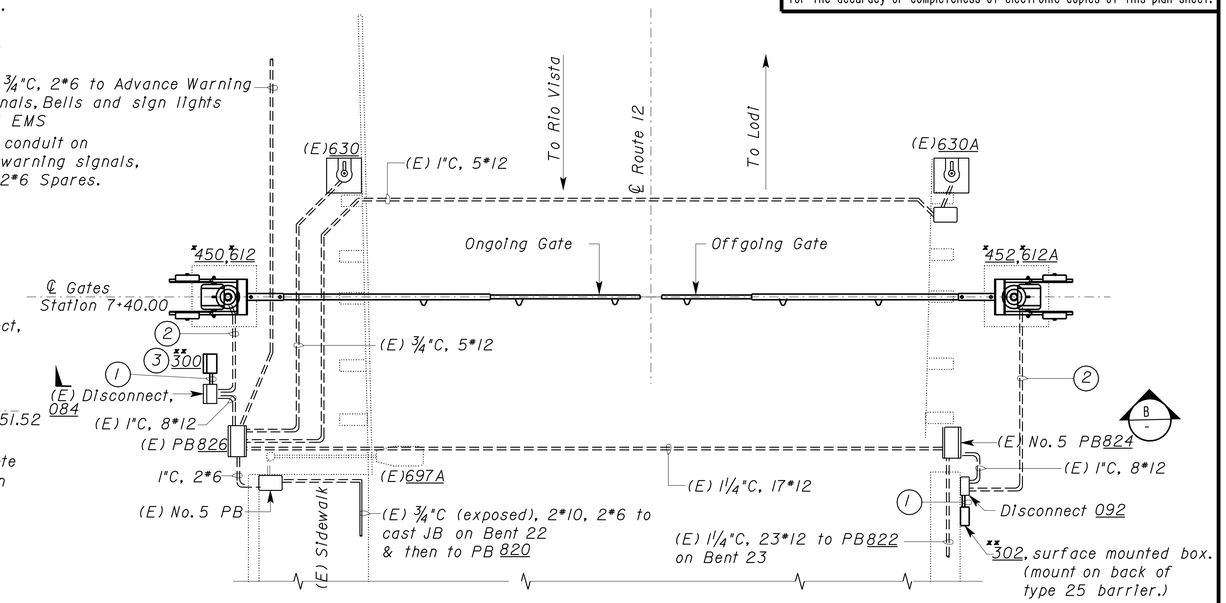

PLAN
NO SCALE

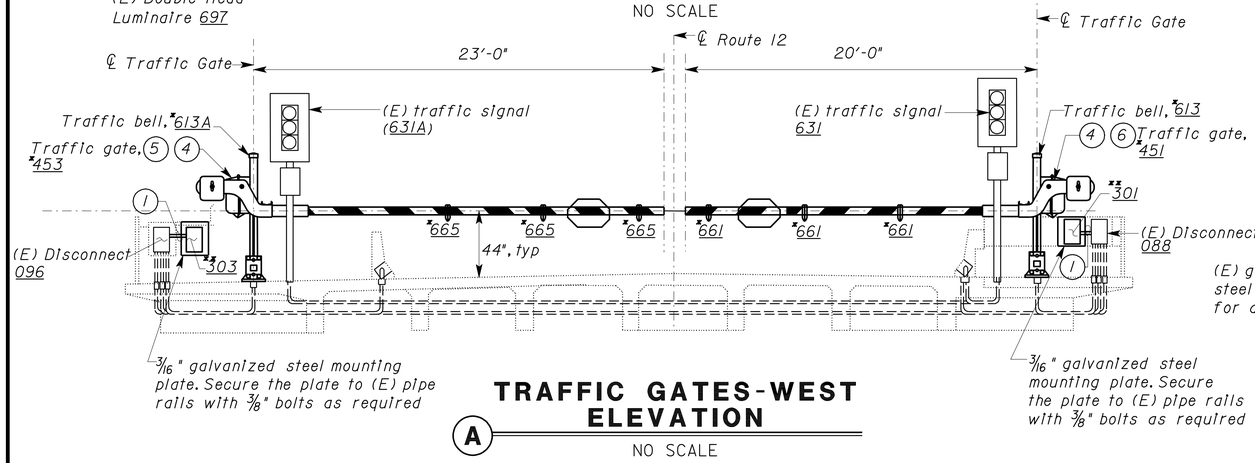

TRAFFIC GATES-WEST ELEVATION
(A) NO SCALE

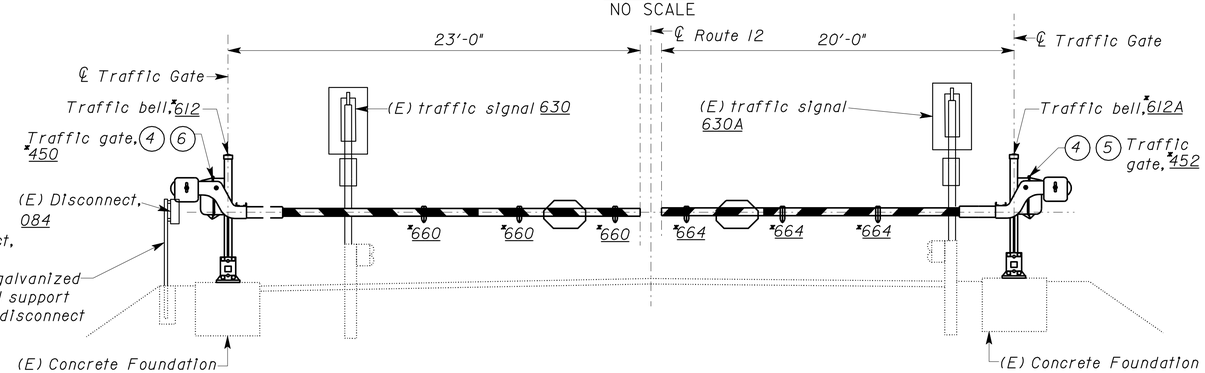

TRAFFIC GATES-EAST ELEVATION
(B) NO SCALE

CALIFORNIA STATE FIRE MARSHAL
APPROVED
Approval of this plan does not authorize or approve any omission or deviation from applicable regulations. Final approval is subject to field inspection. One set of approved plans shall be available on the project site at all times.
Reviewed by: STEPHEN GUARINO
Approval date: 05-29-09

THIS DRAWING ACCURATE FOR ELECTRICAL WORK ONLY

	BY	CHECKED
DESIGN	Jaswinder Gill	Javid Amirazodi
DETAILS	J.Gill/Ed D.Tapalla	Javid Amirazodi
QUANTITIES	Jaswinder Gill	Javid Amirazodi

STATE OF CALIFORNIA
DEPARTMENT OF TRANSPORTATION

DIVISION OF ENGINEERING SERVICES
ELECTRICAL-MECHANICAL-WATER AND WASTEWATER DESIGN

BRIDGE NO. 29-0043
POST MILE 0.01

MOKELUMNE RIVER BRIDGE CONTROL HOUSE UPGRADE
MODIFIED TRAFFIC GATES

SHEET **EE-9**

DOES SD Imperial Rev. 1/07

ORIGINAL SCALE IN INCHES FOR REDUCED PLANS 0 1 2 3

CU 06243
EA 0K0701

DISREGARD PRINTS BEARING EARLIER REVISION DATES → 10/22/08 11/14/2008 12/17/2008 02/05/09 04/28/09

REVISION DATES (PRELIMINARY STAGE ONLY) SHEET OF

12-DEC-2009 08:35
ee_09.dgn

DIST.	COUNTY	ROUTE	POST MILES TOTAL PROJECT	SHEET NO.	TOTAL SHEETS
10	SJ	12	0.0	23	37

REGISTERED ELECTRICAL ENGINEER — 04-28-09 DATE

REGISTERED PROFESSIONAL ENGINEER JASWINDER GILL No. 18551 Exp. 12-31-10 ELEC STATE OF CALIFORNIA

12-7-09
PLANS APPROVAL DATE

The State of California or its officers or agents shall not be responsible for the accuracy or completeness of electronic copies of this plan sheet.

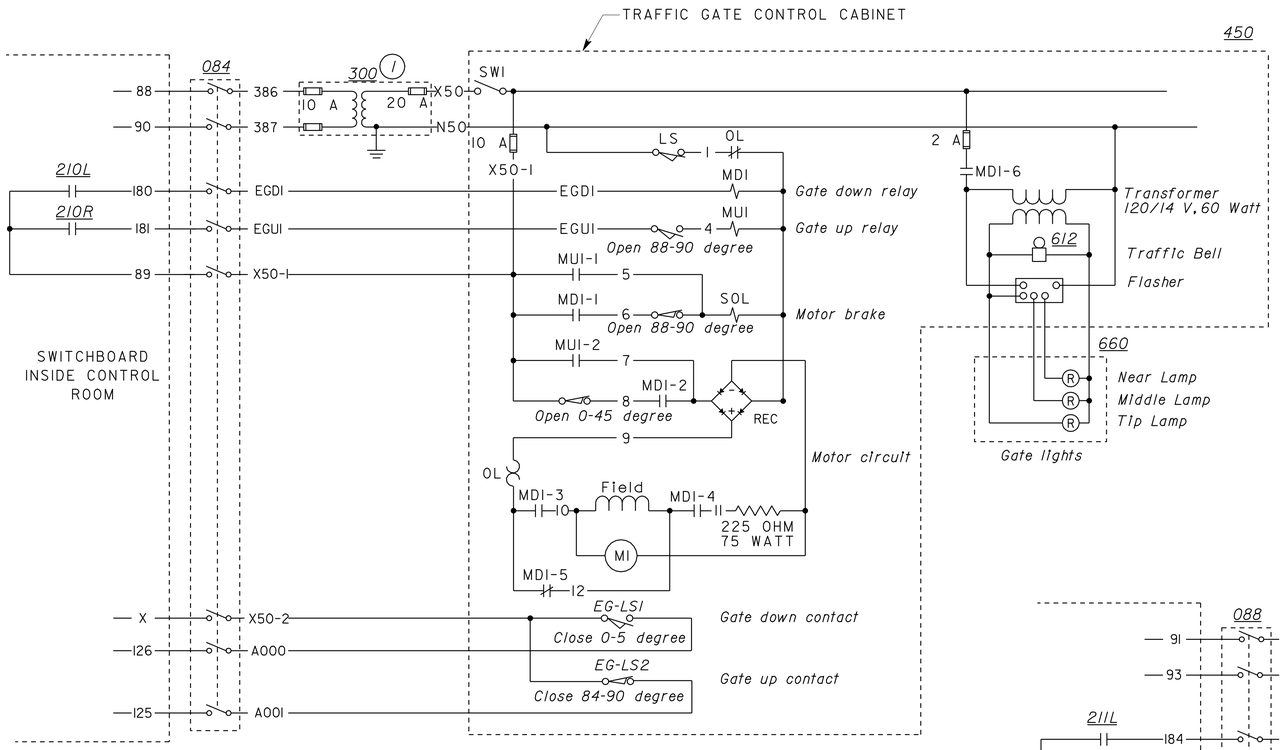

EAST ONGOING GATE CONTROL SCHEMATIC

Note: Circuit shown with gate in vertical position. 210L and 210R are inside the switchboard.

General Notes:

A. All bridge control electrical equipment are identified with an underlined numeral which is referenced as Item Number. For equipment schedule, see sheet EE-20.

B. For existing and modified wiring diagrams, see sheets EE-17 and EE-19.

NOTE:

(1) Mount transformer inside a NEMA 3R enclosure at a location as shown on sheet EE-9. Provide support as required.

CALIFORNIA STATE FIRE MARSHAL APPROVED
Approval of this plan does not authorize or approve any omission or deviation from applicable regulations. Final approval is subject to field inspection. One set of approved plans shall be available on the project site at all times.
Reviewed by: STEPHEN GUARINO
Approval date: 05-29-09

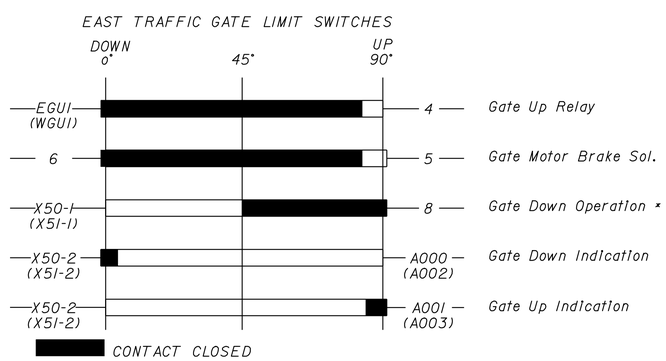

EAST ONGOING TRAFFIC GATE LIMIT SWITCHES

Note: The wire numbers for West Traffic Gate Limit Switches are similar except for wires with wire numbers in the parenthesis.

* Indicates duration of travel during which gate motor energizes and/or gate travels downward by gravity only.

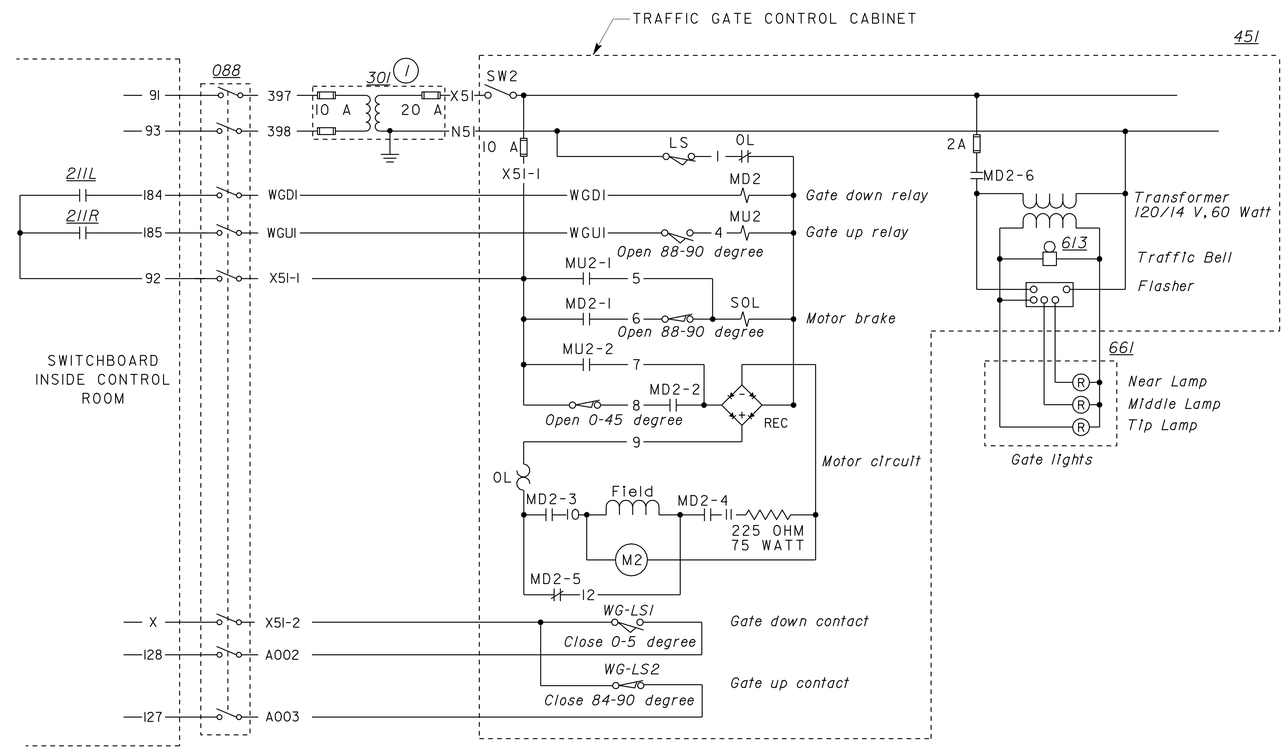

WEST ONGOING GATE CONTROL SCHEMATIC

Note: Circuit shown with gate in vertical position. 211L and 211R are inside the switchboard

THIS DRAWING ACCURATE FOR ELECTRICAL WORK ONLY

	BY	CHECKED
DESIGN	Jaswinder Gill	Javid Amirazodi
DETAILS	Jaswinder Gill	Javid Amirazodi
QUANTITIES	Jaswinder Gill	Javid Amirazodi

STATE OF CALIFORNIA DEPARTMENT OF TRANSPORTATION

DIVISION OF ENGINEERING SERVICES
ELECTRICAL-MECHANICAL-WATER AND WASTEWATER DESIGN

BRIDGE NO. 29-0043
POST MILE 0.01

MOKELUMNE RIVER BRIDGE
CONTROL HOUSE UPGRADE
ONGOING TRAFFIC GATES CONTROL SCHEMATIC

SHEET EE-10

DOES SD Imperial Rev. 1/07

ORIGINAL SCALE IN INCHES FOR REDUCED PLANS 0 1 2 3

CU 06243
EA 0K0701

DISREGARD PRINTS BEARING EARLIER REVISION DATES → 10/03/08 11/14/08 12/17/08 02/05/09 04/28/09

REVISION DATES (PRELIMINARY STAGE ONLY) SHEET OF

12-DEC-2009 05:35

ee_10.dgn

DIST.	COUNTY	ROUTE	POST MILES TOTAL PROJECT	SHEET NO.	TOTAL SHEETS
10	SJ	12	0.0	24	37

REGISTERED ELECTRICAL ENGINEER — 04-28-09 DATE

REGISTERED PROFESSIONAL ENGINEER — JASWINDER GILL — No. 18551 — Exp. 12-31-10 — ELEC — STATE OF CALIFORNIA

12-7-09
PLANS APPROVAL DATE

The State of California or its officers or agents shall not be responsible for the accuracy or completeness of electronic copies of this plan sheet.

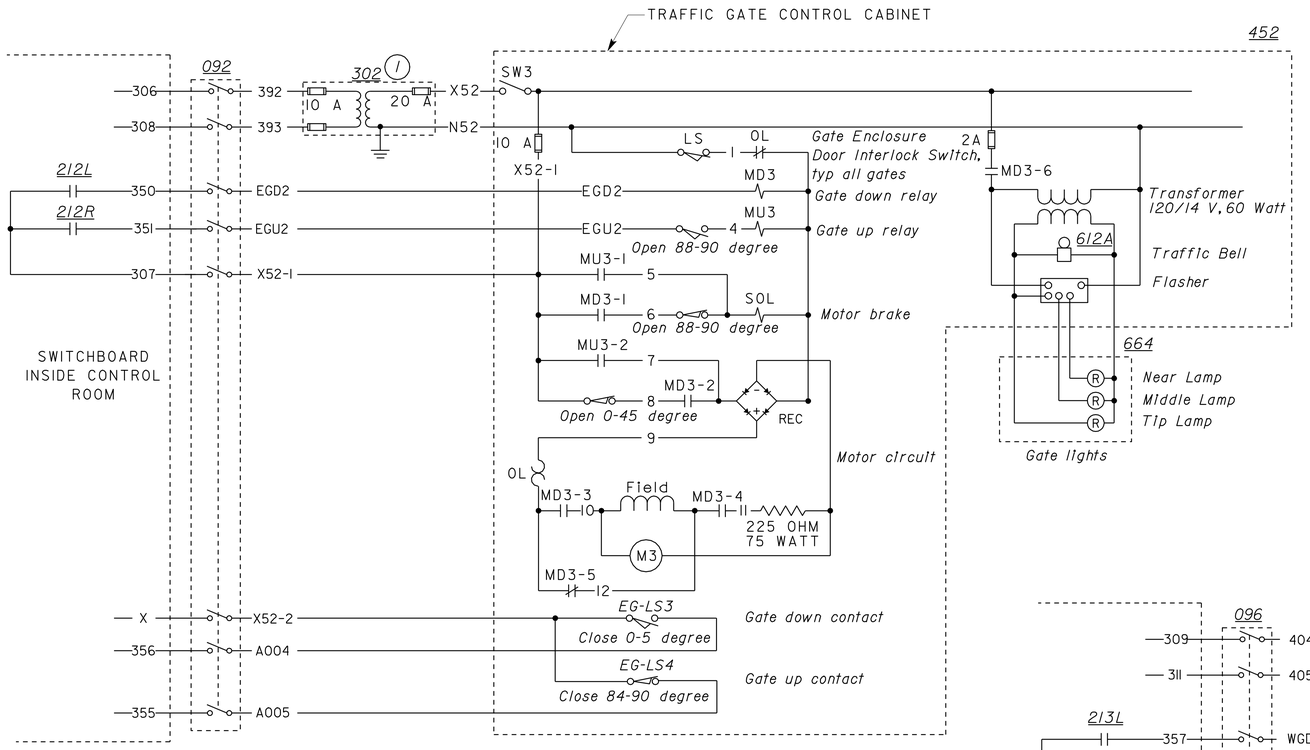

EAST OFFGOING GATE CONTROL SCHEMATIC

Note: Circuit shown with gate in vertical position. 212L and 212R are inside the switchboard.

General Notes:

A. All bridge control electrical equipment are identified with an underlined numeral which is referenced as Item Number. For equipment schedule, see sheet EE-20.

B. For existing and modified wiring diagrams, see sheets EE-17 and EE-19.

NOTE:

(1) Mount transformer inside a NEMA 3R enclosure at a location as shown on sheet EE-9. Provide support as required.

CALIFORNIA STATE FIRE MARSHAL APPROVED

Approval of this plan does not authorize or approve any omission or deviation from applicable regulations. Final approval is subject to field inspection. One set of approved plans shall be available on the project site at all times.

Reviewed by: STEPHEN GUARINO
Approval date: 05-29-09

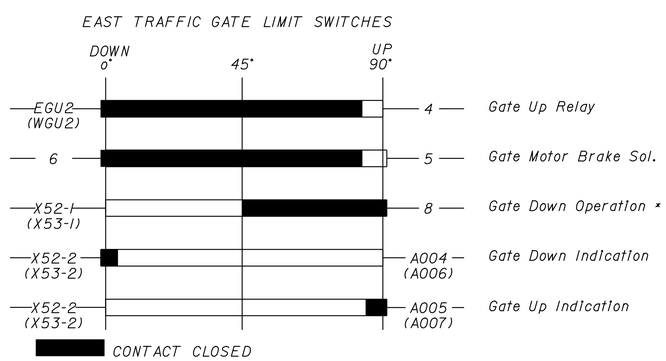

EAST OFFGOING TRAFFIC GATE LIMIT SWITCHES

Note: The wire numbers for West Traffic Gate Limit Switches are similar except for wires with wire numbers in the parenthesis.

* Indicates duration of travel during which gate motor energizes and/or gate travels downward by gravity only.

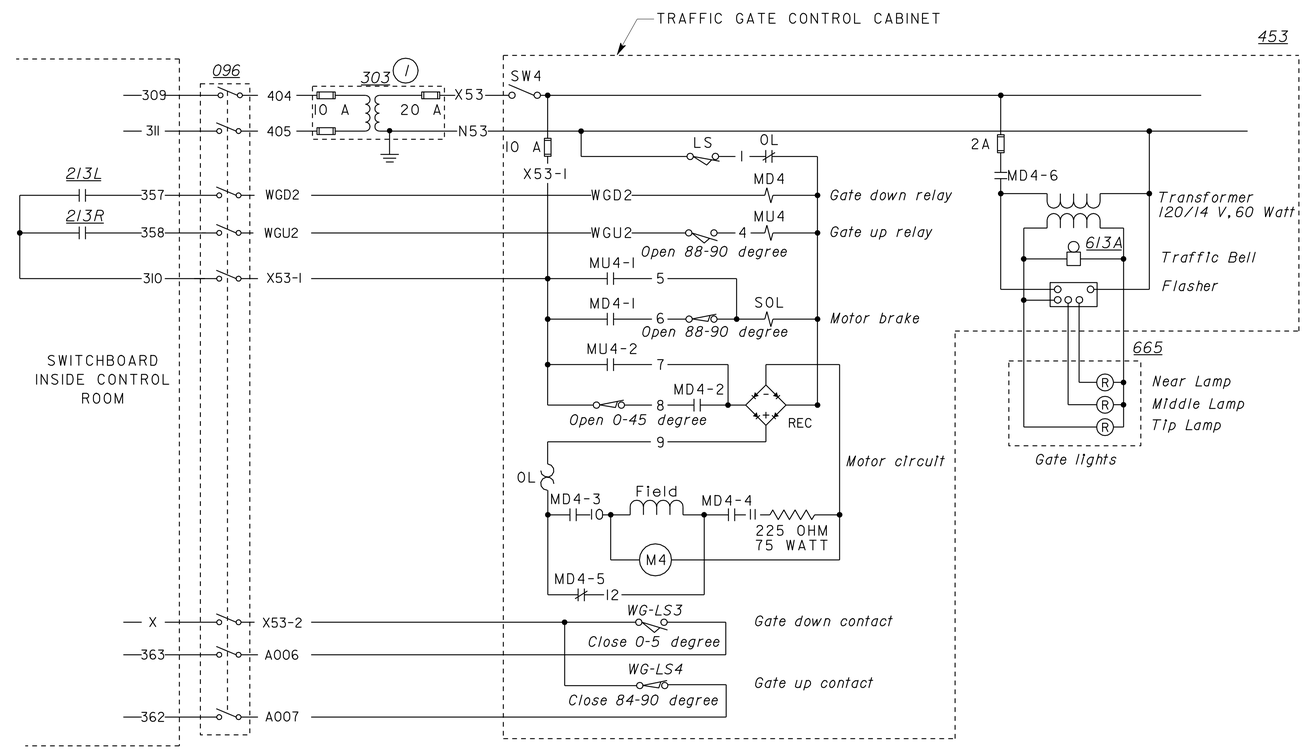

WEST OFFGOING GATE CONTROL SCHEMATIC

Note: Circuit shown with gate in vertical position. 213L and 213R are inside the switchboard

THIS DRAWING ACCURATE FOR ELECTRICAL WORK ONLY

	BY	CHECKED
DESIGN	Jaswinder Gill	Javid Amirazodi
DETAILS	Jaswinder Gill	Javid Amirazodi
QUANTITIES	Jaswinder Gill	Javid Amirazodi

STATE OF CALIFORNIA DEPARTMENT OF TRANSPORTATION

DIVISION OF ENGINEERING SERVICES
ELECTRICAL-MECHANICAL-WATER AND WASTEWATER DESIGN

BRIDGE NO. 29-0043
POST MILE 0.01

MOKELUMNE RIVER BRIDGE
CONTROL HOUSE UPGRADE
OFFGOING TRAFFIC GATES CONTROL SCHEMATIC

SHEET EE-11

DOES SD Imperial Rev. 1/07

ORIGINAL SCALE IN INCHES FOR REDUCED PLANS 0 1 2 3

CU 06243
EA 0K0701

DISREGARD PRINTS BEARING EARLIER REVISION DATES → 10/03/08 11/14/08 12/17/08 02/05/09 04/28/09

SHEET OF

12-DEC-2009 05:36
ee_11.dgn

DIST.	COUNTY	ROUTE	POST MILES TOTAL PROJECT	SHEET NO.	TOTAL SHEETS
10	SJ	12	0.0	25	37

REGISTERED ELECTRICAL ENGINEER — 04-28-09 DATE

REGISTERED PROFESSIONAL ENGINEER — JASWINDER GILL — No. 18551 — Exp. 12-31-10 — ELEC — STATE OF CALIFORNIA

12-7-09
PLANS APPROVAL DATE

The State of California or its officers or agents shall not be responsible for the accuracy or completeness of electronic copies of this plan sheet.

CALIFORNIA STATE FIRE MARSHAL
APPROVED
Approval of this plan does not authorize or approve any omission or deviation from applicable regulations. Final approval is subject to field inspection. One set of approved plans shall be available on the project site at all times.
Reviewed by: STEPHEN GUARINO
Approval date: 05-29-09

General Notes:

A. All bridge control electrical equipment are identified with an underlined numeral which is referenced as item Number. For equipment schedule, see sheet EE-20.

B. Remove bridge control electrical equipment shown in bold. See modified schematic diagram on sheet EE-14.

C. See sheet EE-6 for location of equipment.

D. Field verify all wire numbers before working on a circuit.

* Remove equipment

** Equipment shown here, is also repeated on sheet EE-13.

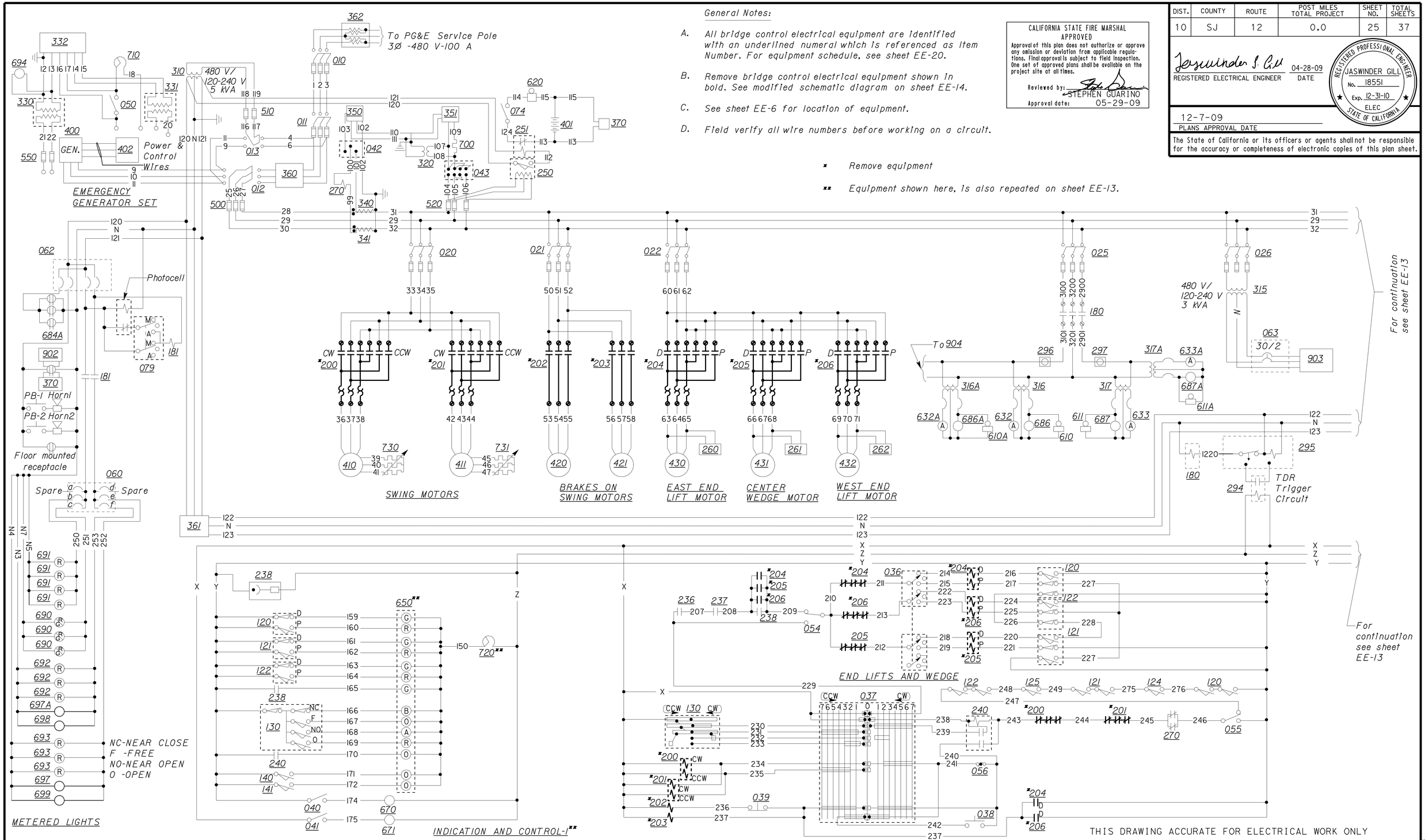

DESIGN	BY Jaswinder Gill	CHECKED Javid Amirazodi	
DETAILS	BY Jaswinder Gill	CHECKED Javid Amirazodi	
QUANTITIES	BY Jaswinder Gill	CHECKED Javid Amirazodi	

STATE OF CALIFORNIA
DEPARTMENT OF TRANSPORTATION

DIVISION OF ENGINEERING SERVICES
ELECTRICAL-MECHANICAL-WATER AND WASTEWATER DESIGN

BRIDGE NO. 29-0043
POST MILE 0.01

MOKELUMNE RIVER BRIDGE CONTROL HOUSE UPGRADE

EXISTING SCHEMATIC DIAGRAM-I

SHEET EE-12

DOES SD Imperial Rev. 1/07

ORIGINAL SCALE IN INCHES FOR REDUCED PLANS 0 1 2 3

CU 06243
EA 0K0701

DISREGARD PRINTS BEARING EARLIER REVISION DATES → 10/03/08 11/14/08 12/12/08 02/05/09 04/28/09

REVISION DATES (PRELIMINARY STAGE ONLY) SHEET OF

12-DEC-2009 05:36

ee_12.dgn

DIST.	COUNTY	ROUTE	POST MILES TOTAL PROJECT	SHEET NO.	TOTAL SHEETS
10	SJ	12	0.0	26	37

REGISTERED ELECTRICAL ENGINEER — 04-28-09 DATE

REGISTERED PROFESSIONAL ENGINEER — JASWINDER GILL — No. 18551 — Exp. 12-31-10 — ELEC — STATE OF CALIFORNIA

12-7-09
PLANS APPROVAL DATE

The State of California or its officers or agents shall not be responsible for the accuracy or completeness of electronic copies of this plan sheet.

CALIFORNIA STATE FIRE MARSHAL
APPROVED
Approval of this plan does not authorize or approve any omission or deviation from applicable regulations. Final approval is subject to field inspection. One set of approved plans shall be available on the project site at all times.
Reviewed by: STEPHEN GUARINO
Approval date: 05-29-09

General Notes:

A. All bridge control electrical equipment are identified with an underlined numeral which is referenced as Item Number. For equipment schedule, see sheet EE-20.

B. Remove bridge control electrical equipment shown in bold. See modified schematic diagram on sheet EE-15. For more details, see wiring diagrams also.

C. See sheet EE-6 for location of equipment.

D. Field verify all wire numbers before working on a circuit.

* Remove equipment

** Equipment shown here, is also repeated on sheet EE-12.

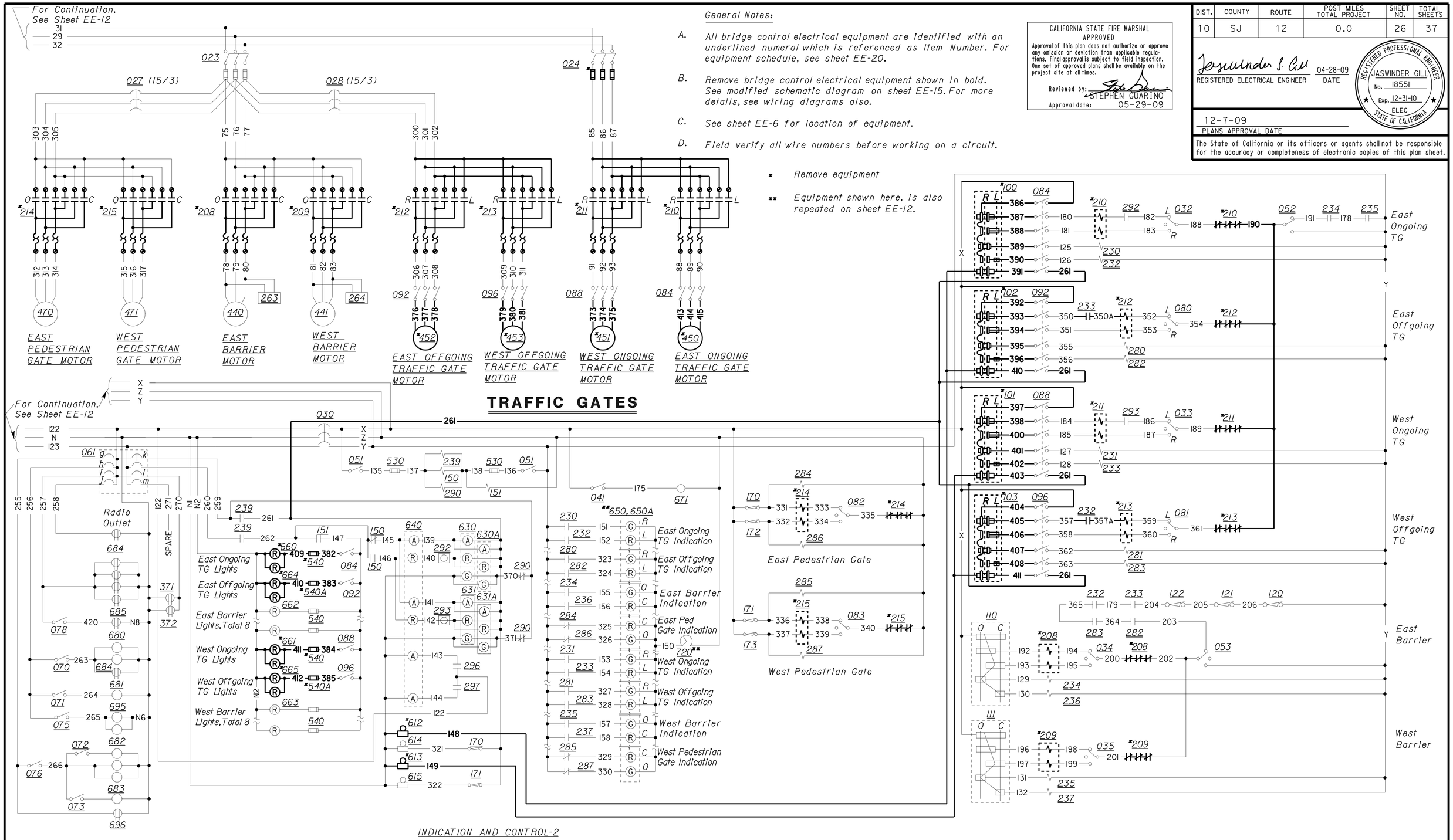

THIS DRAWING ACCURATE FOR ELECTRICAL WORK ONLY

	BY	CHECKED
DESIGN	Jaswinder Gill	Javid Amirazodi
DETAILS	J. Gill/Ed Tapalla 11/08	Javid Amirazodi
QUANTITIES	Jaswinder Gill	Javid Amirazodi

STATE OF CALIFORNIA
DEPARTMENT OF TRANSPORTATION

DIVISION OF ENGINEERING SERVICES
ELECTRICAL-MECHANICAL-WATER AND WASTEWATER DESIGN

CU 06243
EA 0K0701

BRIDGE NO. 29-0043
POST MILE 0.01

MOKELUMNE RIVER BRIDGE CONTROL HOUSE UPGRADE

EXISTING SCHEMATIC DIAGRAM-2

SHEET **EE-13**

DOES SD Imperial Rev. 1/07

ORIGINAL SCALE IN INCHES FOR REDUCED PLANS 0 1 2 3

DISREGARD PRINTS BEARING EARLIER REVISION DATES → REVISION DATES (PRELIMINARY STAGE ONLY) 10/03/08 11/14/08 12/17/08 02/05/09 04/28/09 SHEET OF

12-DEC-2009 05:36

ee_13.dgn

DIST.	COUNTY	ROUTE	POST MILES TOTAL PROJECT	SHEET NO.	TOTAL SHEETS
10	SJ	12	0.0	27	37

General Notes:

A. All bridge control electrical equipment are identified with an underlined numeral which is referenced as item Number. For equipment schedule, see sheet EE-20.

B. Install and reconnect new bridge control electrical equipment shown in bold.

C. See sheet EE-7 for location of equipment.

D. Field verify all wire numbers before working on a circuit.

* New equipment replaces existing equipment with same item number and same description.

** Equipment shown here, is also repeated on sheet EE-15.

CALIFORNIA STATE FIRE MARSHAL APPROVED
Approval of this plan does not authorize or approve any omission or deviation from applicable regulations. Final approval is subject to field inspection. One set of approved plans shall be available on the project site at all times.
Reviewed by: STEPHEN GUARINO
Approval date: 05-29-09

Jaswinder S. Gill 04-28-09
REGISTERED ELECTRICAL ENGINEER DATE

REGISTERED PROFESSIONAL ENGINEER JASWINDER GILL No. 18551 Exp. 12-31-10 ELEC STATE OF CALIFORNIA

12-7-09
PLANS APPROVAL DATE

The State of California or its officers or agents shall not be responsible for the accuracy or completeness of electronic copies of this plan sheet.

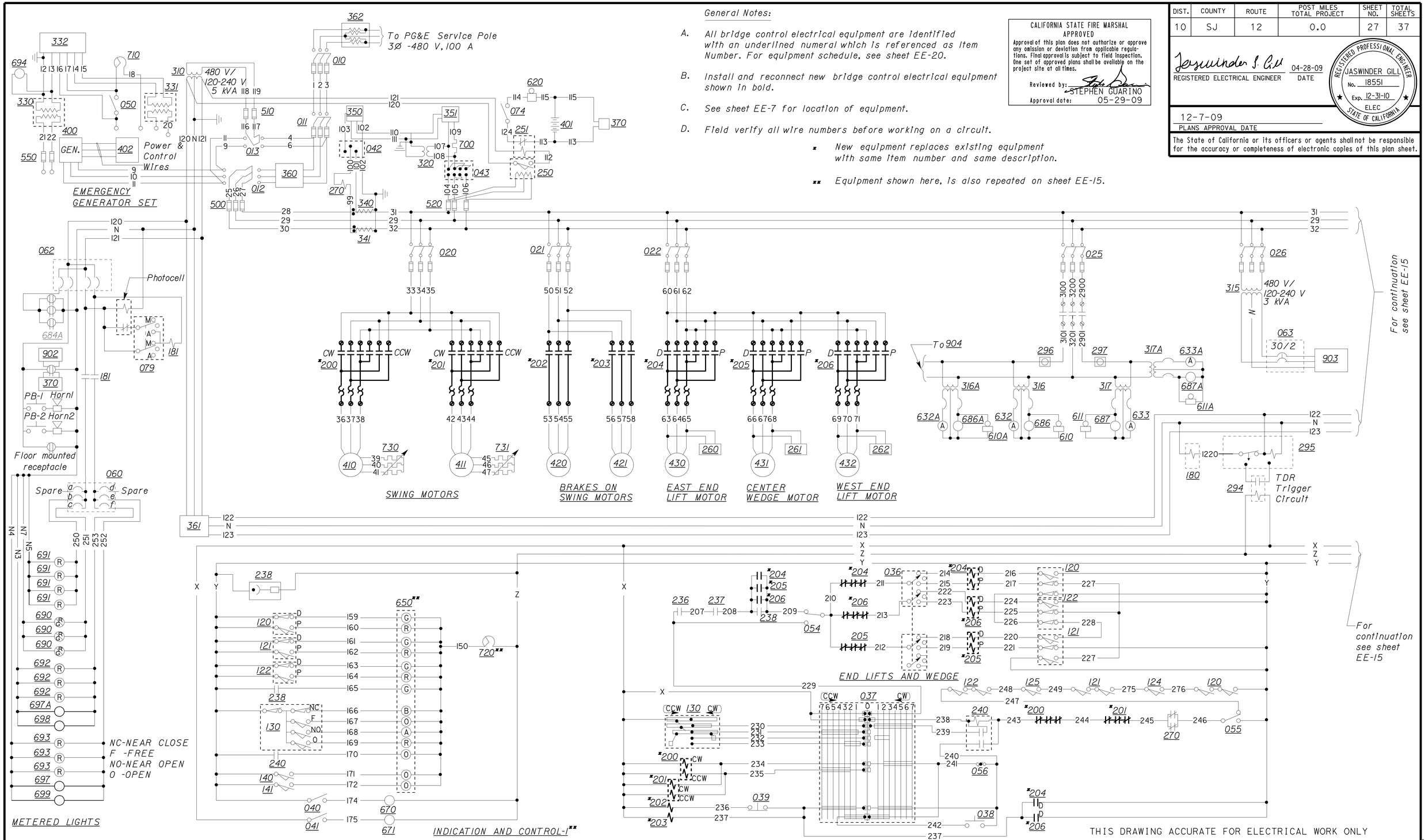

THIS DRAWING ACCURATE FOR ELECTRICAL WORK ONLY

	BY	CHECKED
DESIGN	Jaswinder Gill	Javid Amirazodi
DETAILS	Jaswinder Gill	Javid Amirazodi
QUANTITIES	Jaswinder Gill	Javid Amirazodi

STATE OF CALIFORNIA
DEPARTMENT OF TRANSPORTATION

DIVISION OF ENGINEERING SERVICES
ELECTRICAL-MECHANICAL-WATER AND WASTEWATER DESIGN

BRIDGE NO. 29-0043
POST MILE 0.01

MOKELUMNE RIVER BRIDGE CONTROL HOUSE UPGRADE

MODIFIED SCHEMATIC DIAGRAM-1

SHEET EE-14

DOES SD Imperial Rev. 1/07

ORIGINAL SCALE IN INCHES FOR REDUCED PLANS 0 1 2 3

CU 06243
EA 0K0701

DISREGARD PRINTS BEARING EARLIER REVISION DATES → 10/03/08 11/14/08 12/12/08 02/05/09 04/28/09

REVISION DATES (PRELIMINARY STAGE ONLY) SHEET OF

12-DEC-2009 05:37
ee_14.dgn

DIST.	COUNTY	ROUTE	POST MILES TOTAL PROJECT	SHEET NO.	TOTAL SHEETS
10	SJ	12	0.0	28	37

REGISTERED ELECTRICAL ENGINEER — Jaswinder S. Gill — 04-28-09 DATE

REGISTERED PROFESSIONAL ENGINEER — JASWINDER GILL — No. 18551 — Exp. 12-31-10 — ELEC — STATE OF CALIFORNIA

12-7-09
PLANS APPROVAL DATE

The State of California or its officers or agents shall not be responsible for the accuracy or completeness of electronic copies of this plan sheet.

CALIFORNIA STATE FIRE MARSHAL APPROVED
Approval of this plan does not authorize or approve any omission or deviation from applicable regulations. Final approval is subject to field inspection. One set of approved plans shall be available on the project site at all times.
Reviewed by: STEPHEN GUARINO
Approval date: 05-29-09

General Notes:

A. All bridge control electrical equipment are identified with an underlined numeral which is referenced as Item Number. For equipment schedule, see sheet EE-20.

B. Install and reconnect new bridge control electrical equipment shown in bold.

C. Field verify all wire numbers before working on a circuit.

* New equipment replaces existing equipment with same item number and same description.

** New equipment with new item number and description.

*** Equipment shown here, is also repeated on sheet EE-14.

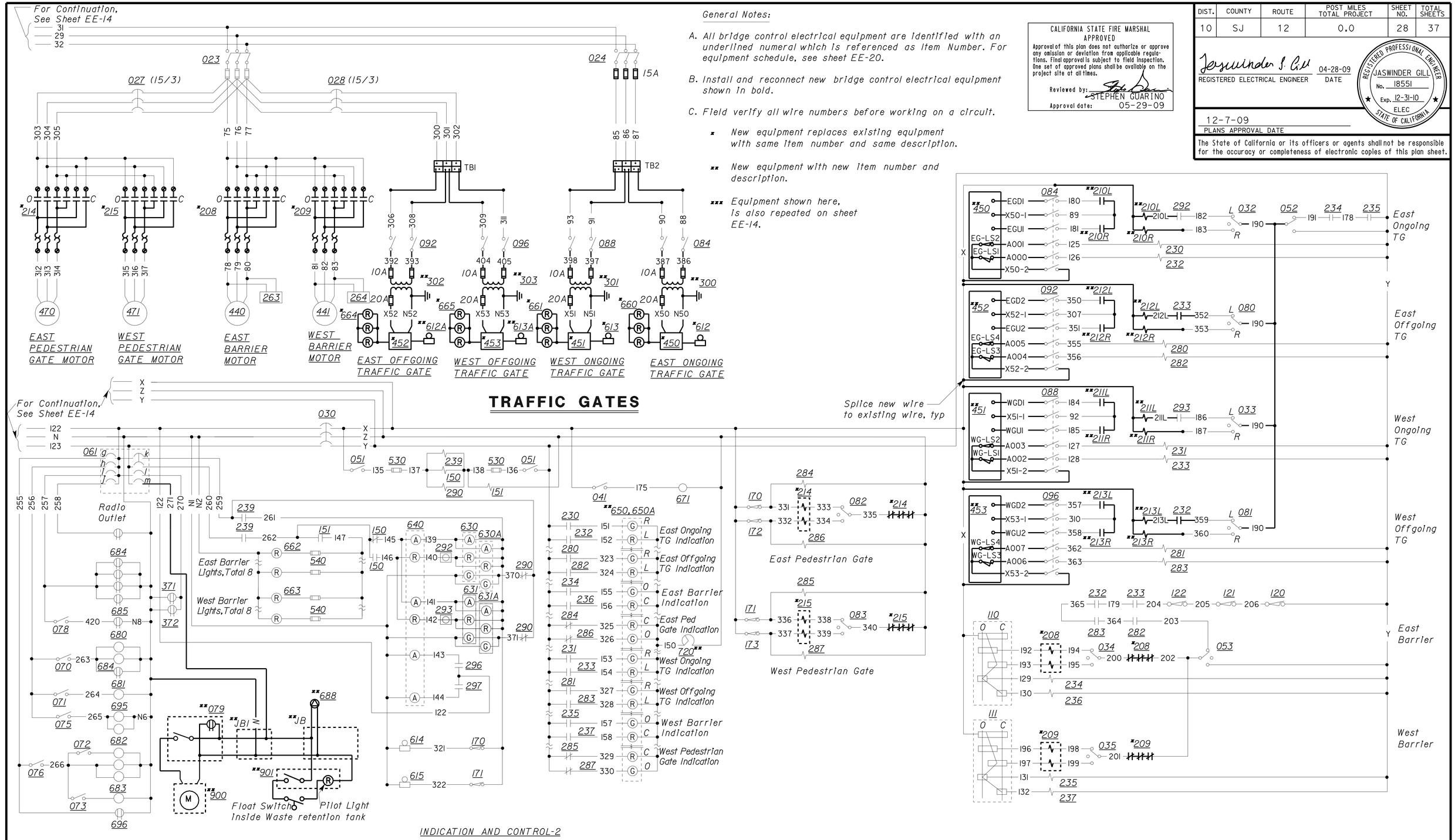

THIS DRAWING ACCURATE FOR ELECTRICAL WORK ONLY

DESIGN	BY Jaswinder Gill	CHECKED Javid Amirazodi	
DETAILS	BY J.Gill/Ed Tapalla 11/08	CHECKED Javid Amirazodi	
QUANTITIES	BY Jaswinder Gill	CHECKED Javid Amirazodi	

STATE OF CALIFORNIA
DEPARTMENT OF TRANSPORTATION

DIVISION OF ENGINEERING SERVICES
ELECTRICAL-MECHANICAL-WATER AND WASTEWATER DESIGN

BRIDGE NO. 29-0043
POST MILE 0.01

MOKELUMNE RIVER BRIDGE
CONTROL HOUSE UPGRADE
MODIFIED SCHEMATIC DIAGRAM-2

SHEET EE-15

DOES SD Imperial Rev. 1/07

ORIGINAL SCALE IN INCHES FOR REDUCED PLANS 0 1 2 3

CU 06243
EA 0K0701

DISREGARD PRINTS BEARING EARLIER REVISION DATES → REVISION DATES (PRELIMINARY STAGE ONLY) 10/03/08 11/14/08 12/17/08 02/05/09 04/28/09 SHEET OF

12-DEC-2009 05:37

ee_15.dgn

DIST.	COUNTY	ROUTE	POST MILES TOTAL PROJECT	SHEET NO.	TOTAL SHEETS
10	SJ	12	0.0	29	37

Jaswinder S. Gill
REGISTERED ELECTRICAL ENGINEER — 04-28-09 DATE

REGISTERED PROFESSIONAL ENGINEER — JASWINDER GILL — No. 18551 — Exp. 12-31-10 — ELEC — STATE OF CALIFORNIA

12-7-09
PLANS APPROVAL DATE

The State of California or its officers or agents shall not be responsible for the accuracy or completeness of electronic copies of this plan sheet.

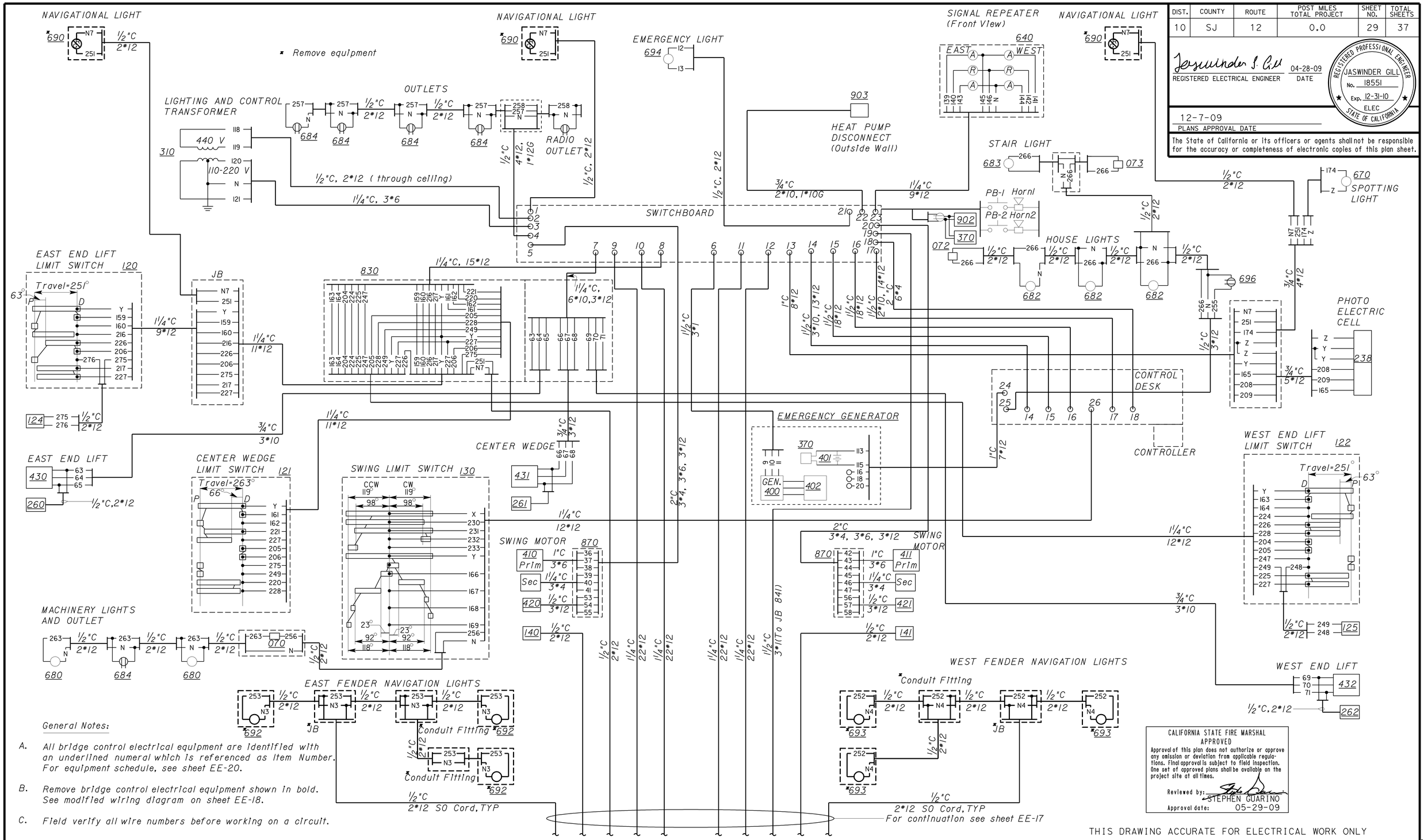

General Notes:

A. All bridge control electrical equipment are identified with an underlined numeral which is referenced as Item Number. For equipment schedule, see sheet EE-20.

B. Remove bridge control electrical equipment shown in bold. See modified wiring diagram on sheet EE-18.

C. Field verify all wire numbers before working on a circuit.

CALIFORNIA STATE FIRE MARSHAL
APPROVED
Approval of this plan does not authorize or approve any omission or deviation from applicable regulations. Final approval is subject to field inspection. One set of approved plans shall be available on the project site at all times.
Reviewed by: STEPHEN GUARINO
Approval date: 05-29-09

THIS DRAWING ACCURATE FOR ELECTRICAL WORK ONLY

	BY	CHECKED
DESIGN	Jaswinder Gill	Javid Amirazodi
DETAILS	Jaswinder Gill	Javid Amirazodi
QUANTITIES	Jaswinder Gill	Javid Amirazodi

STATE OF CALIFORNIA
DEPARTMENT OF TRANSPORTATION

DIVISION OF ENGINEERING SERVICES
ELECTRICAL-MECHANICAL-WATER AND WASTEWATER DESIGN

BRIDGE NO. 29-0043
POST MILE 0.01

MOKELUMNE RIVER BRIDGE
CONTROL HOUSE UPGRADE
EXISTING WIRING DIAGRAM-I

SHEET **EE-16**

DOES SD Imperial Rev. 1/07

ORIGINAL SCALE IN INCHES FOR REDUCED PLANS 0 1 2 3

CU 06243
EA 0K0701

DISREGARD PRINTS BEARING EARLIER REVISION DATES → 10/26/06 11/14/2006 12/17/2008 02/05/09 04/28/09

REVISION DATES (PRELIMINARY STAGE ONLY) SHEET OF

12-DEC-2009 05:37

ee_16.dgn

DIST.	COUNTY	ROUTE	POST MILES TOTAL PROJECT	SHEET NO.	TOTAL SHEETS
10	SJ	12	0.0	30	37

REGISTERED ELECTRICAL ENGINEER — 04-28-09 DATE

REGISTERED PROFESSIONAL ENGINEER JASWINDER GILL No. 18551 Exp. 12-31-10 ELEC STATE OF CALIFORNIA

12-7-09
PLANS APPROVAL DATE

The State of California or its officers or agents shall not be responsible for the accuracy or completeness of electronic copies of this plan sheet.

* Remove equipment

Notes:

(1) For continuation, see sheet EE-16.

General Notes:

A. For equipment schedule, see sheet EE-20.

B. Remove bridge control electrical equipment shown in bold. See modified wiring diagram on sheet EE-19.

C. Field verify all wire numbers before working on a circuit.

CALIFORNIA STATE FIRE MARSHAL APPROVED
Approval of this plan does not authorize or approve any omission or deviation from applicable regulations. Final approval is subject to field inspection. One set of approved plans shall be available on the project site at all times.
Reviewed by: STEPHEN GUARINO
Approval date: 05-29-09

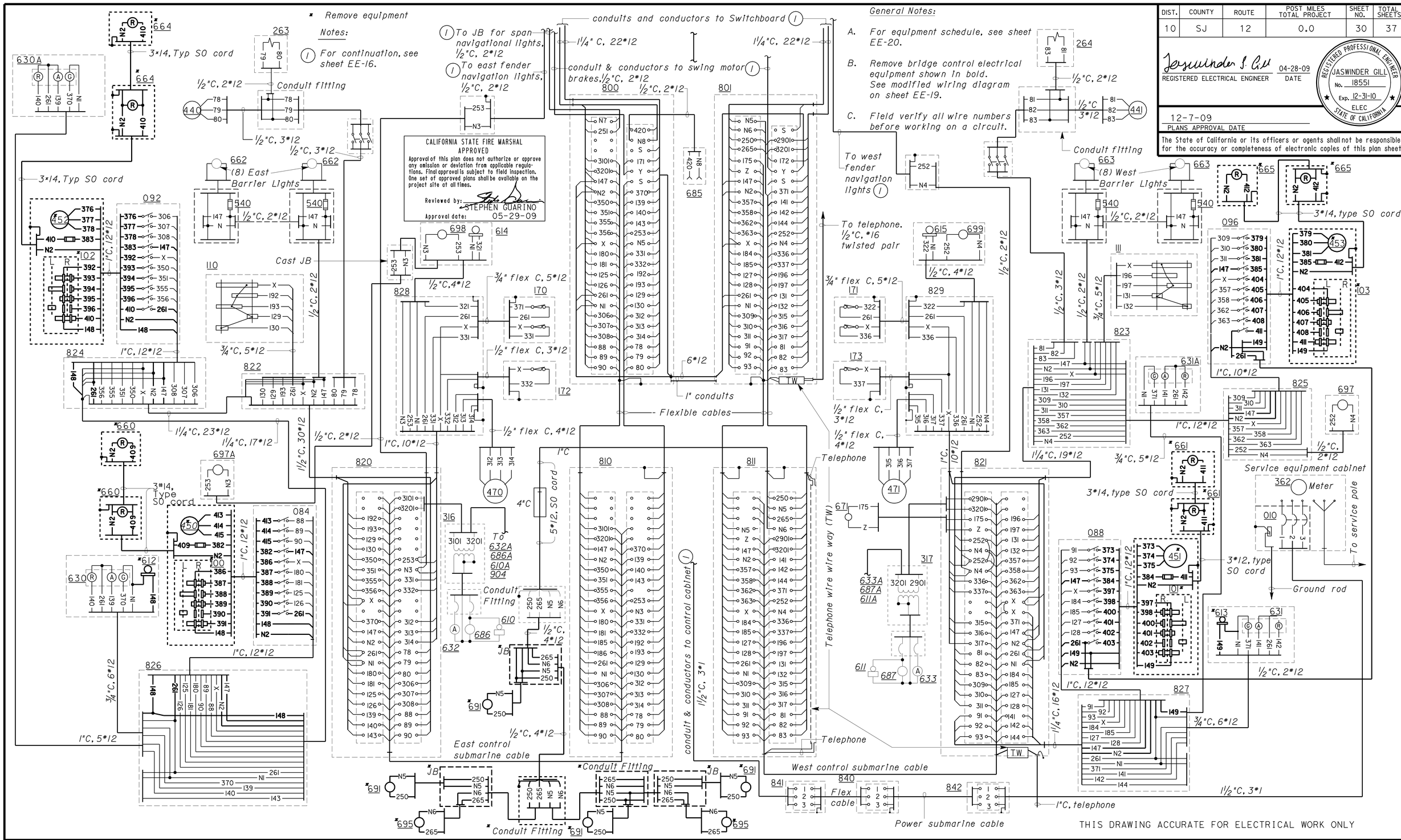

DESIGN	BY Jaswinder Gill	CHECKED Javid Amirazodi	
DETAILS	BY J.Gill/Dali Zhou	CHECKED Javid Amirazodi	
QUANTITIES	BY Jaswinder Gill	CHECKED Javid Amirazodi	

STATE OF CALIFORNIA
DEPARTMENT OF TRANSPORTATION

DIVISION OF ENGINEERING SERVICES
ELECTRICAL-MECHANICAL-WATER AND WASTEWATER DESIGN

BRIDGE NO. 29-0043
POST MILE 0.01

MOKELUMNE RIVER BRIDGE CONTROL HOUSE UPGRADE

EXISTING WIRING DIAGRAM-2

SHEET EE-17

DOES SD Imperial Rev. 1/07

ORIGINAL SCALE IN INCHES FOR REDUCED PLANS 0 1 2 3

CU 06243
EA 0K0701

DISREGARD PRINTS BEARING EARLIER REVISION DATES → 10/22/08 11/14/2008 12/17/2008 02/05/09 04/28/09

REVISION DATES (PRELIMINARY STAGE ONLY) SHEET OF

12-DEC-2009 05:38

ee_17.dgn

DIST.	COUNTY	ROUTE	POST MILES TOTAL PROJECT	SHEET NO.	TOTAL SHEETS
10	SJ	12	0.0	31	37

REGISTERED ELECTRICAL ENGINEER — 04-28-09 DATE

JASWINDER GILL No. 18551 Exp. 12-31-10 ELEC — REGISTERED PROFESSIONAL ENGINEER — STATE OF CALIFORNIA

12-7-09
PLANS APPROVAL DATE

The State of California or its officers or agents shall not be responsible for the accuracy or completeness of electronic copies of this plan sheet.

* New equipment replaces existing equipment with same item number and same description. See modified schematic diagrams for details.

** New equipment with new item number and description. See modified schematic diagrams for details.

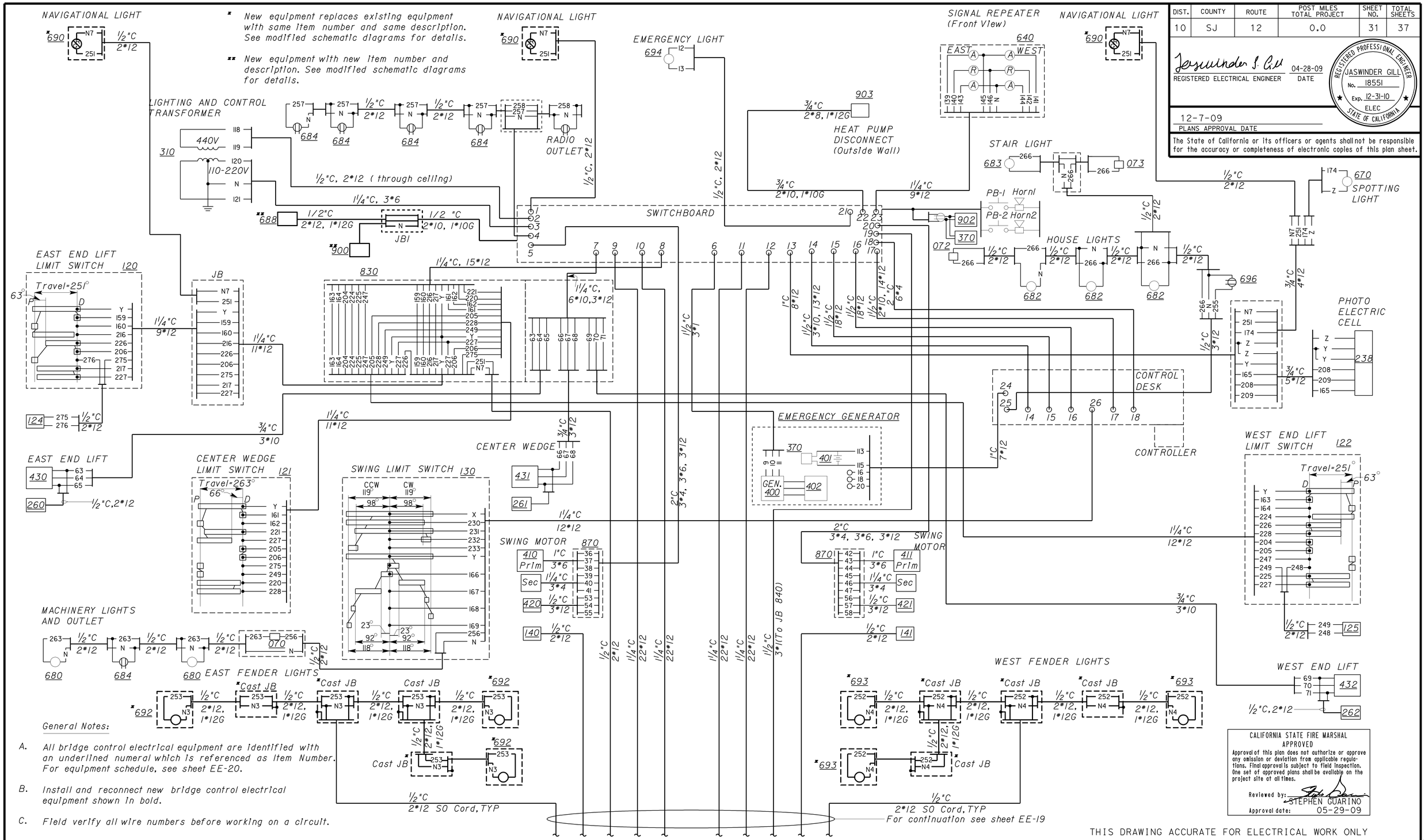

General Notes:

A. All bridge control electrical equipment are identified with an underlined numeral which is referenced as Item Number. For equipment schedule, see sheet EE-20.

B. Install and reconnect new bridge control electrical equipment shown in bold.

C. Field verify all wire numbers before working on a circuit.

CALIFORNIA STATE FIRE MARSHAL APPROVED

Approval of this plan does not authorize or approve any omission or deviation from applicable regulations. Final approval is subject to field inspection. One set of approved plans shall be available on the project site at all times.

Reviewed by: STEPHEN GUARINO
Approval date: 05-29-09

THIS DRAWING ACCURATE FOR ELECTRICAL WORK ONLY

	BY	CHECKED
DESIGN	Jaswinder Gill	Javid Amirazodi
DETAILS	Jaswinder Gill	Javid Amirazodi
QUANTITIES	Jaswinder Gill	Javid Amirazodi

STATE OF CALIFORNIA
DEPARTMENT OF TRANSPORTATION

DIVISION OF ENGINEERING SERVICES
ELECTRICAL-MECHANICAL-WATER AND WASTEWATER DESIGN

CU 06243
EA 0K0701

BRIDGE NO. 29-0043
POST MILE 0.01

MOKELUMNE RIVER BRIDGE
CONTROL HOUSE UPGRADE
MODIFIED WIRING DIAGRAM-I

SHEET **EE-18**

DOES SD Imperial Rev. 1/07

ORIGINAL SCALE IN INCHES FOR REDUCED PLANS 0 1 2 3

DISREGARD PRINTS BEARING EARLIER REVISION DATES → 10/28/08 11/14/2008 12/17/2008 02/05/09 04/28/09

SHEET OF

12-DEC-2009 05:38

ee_18.dgn

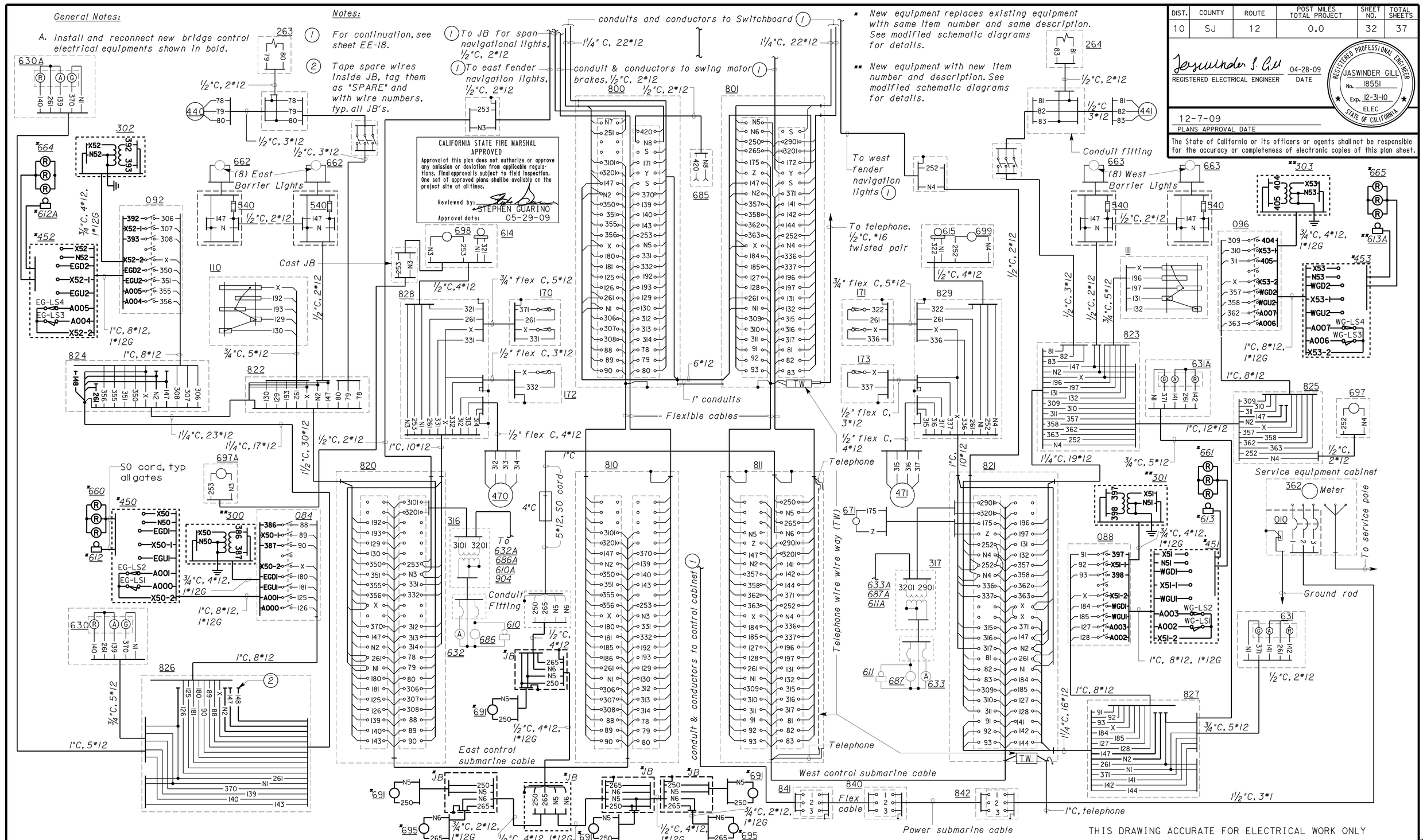

DIST.	COUNTY	ROUTE	POST MILES TOTAL PROJECT	SHEET NO.	TOTAL SHEETS
10	SJ	12	0.0	32	37

REGISTERED ELECTRICAL ENGINEER — 04-28-09 DATE

REGISTERED PROFESSIONAL ENGINEER JASWINDER GILL No. 18551 Exp. 12-31-10 ELEC STATE OF CALIFORNIA

12-7-09
PLANS APPROVAL DATE

The State of California or its officers or agents shall not be responsible for the accuracy or completeness of electronic copies of this plan sheet.

	BY	CHECKED
DESIGN	Jaswinder Gill	Javid Amirazodi
DETAILS	J.Gill/Dali Zhou	Javid Amirazodi
QUANTITIES	Jaswinder Gill	Javid Amirazodi

STATE OF CALIFORNIA
DEPARTMENT OF TRANSPORTATION

DIVISION OF ENGINEERING SERVICES
ELECTRICAL-MECHANICAL-WATER AND WASTEWATER DESIGN

BRIDGE NO. 29-0043
POST MILE 0.01

MOKELUMNE RIVER BRIDGE CONTROL HOUSE UPGRADE

MODIFIED WIRING DIAGRAM-2

SHEET EE-19

DOES SD Imperial Rev. 1/07

ORIGINAL SCALE IN INCHES FOR REDUCED PLANS 0 1 2 3

CU 06243
EA 0K0701

DISREGARD PRINTS BEARING EARLIER REVISION DATES → REVISION DATES (PRELIMINARY STAGE ONLY) 10/22/08 11/14/2008 12/17/2008 02/05/09 04/28/09 SHEET OF

12-DEC-2009 05:38

ee_19.dgn

DIST.	COUNTY	ROUTE	POST MILES TOTAL PROJECT	SHEET NO.	TOTAL SHEETS
10	SJ	12	0.0	33	37

REGISTERED ELECTRICAL ENGINEER — 04-28-09 DATE

REGISTERED PROFESSIONAL ENGINEER — JASWINDER GILL — No. 18551 — Exp. 12-31-10 — ELEC — STATE OF CALIFORNIA

12-7-09
PLANS APPROVAL DATE

The State of California or its officers or agents shall not be responsible for the accuracy or completeness of electronic copies of this plan sheet.

CALIFORNIA STATE FIRE MARSHAL APPROVED

Approval of this plan does not authorize or approve any omission or deviation from applicable regulations. Final approval is subject to field inspection. One set of approved plans shall be available on the project site at all times.

Reviewed by: STEPHEN GUARINO

Approval date: 05-29-09

EQUIPMENT SCHEDULE

ITEM No.	DESCRIPTION
010	Service Switch on Pole
011	Service Switch on Switchboard
012	Power Transfer Switch
013	Transformer Transfer Switch
020	Swing Motors Disconnect Switch
021	Brake Motors Disconnect Switch
022	End Lift and Wedge Motors Disconnect Switch
023	Barrier, Ped.& Offgoing TG Motors Disconnect
024	Ongoing Traffic Gates Disconnect Switch
025	Adv. Flashing Becons & EMS Sign Disconnect
026	Electric Toilet Receptacle Disconnect
027	Ped. Gates Circuit Breaker (At Control Desk)
028	Offgoing TG Circuit Breaker (At Control Desk)
030	Master Control Switch
032-033	Gates Control Switch
034-035	Barriers Control Switch
036	End Lifts and Wedge Control Switch
037	Swing Controller
038	Swing Motors Jog Push button
039	Brake Foot Switch
040	Spotting Light Switch
041	Light Relay Source Switch
042	Ammeter Switch
043	Voltmeter Switch
050	Voltage Regulator By-Pass
051	Traffic Signals Switch
052	Gates By-Pass
053	Barriers By-Pass
054	End Lifts and Wedge By-Pass
055	Swing By-Pass
056	Swing Motors Jog Tumbler
060	Metered Lights panel
061	Metered Lights Panel
062	Bryant Load Center
063	Load Center A
070-073	Light Tumbler
074	Alarm Bell Tumbler
075	Target Lights Tumbler
076	House Lights Tumbler
078	Water Pump Tumbler
(3) 079	Freshwater Pump Tumbler (In Attic Space)
080-081	Traffic Gate Control Switch
082-083	Pedestrian Gate Control Switch
084,088	Ongoing Traffic Gates Disconnect Switch
092,096	Offgoing Traffic Gates Disconnect Switch
100-101	Ongoing Traffic Gate Limit Switch
102-103	Offgoing Traffic Gate Limit Switch
110-111	Barrier Limit Switch
120-122	End Lift Limit Switch
121	Wedge Limit Switch
124-125	Lock Bar Switch
130	Swing Limit Switch
140-141	Swing Brake Indicator Switch

EQUIPMENT SCHEDULE

ITEM No.	DESCRIPTION
150	Traffic Signal Timer
151	Gate Barrier Flasher
(2) 160-161	Whistle Control Switch
170-173	Pedestrian Gates Limit Switch
180	Adv Warning Beacons and EMS Sign Contactor
181	Navigational and Area Lights Contactor
182	Navigational Lights Test Switch
(1) 200-201	Swing Motor Starters
202-203	Swing Brake Starters
204-206	End Lift Starters
205	Wedge Starter
208-209	Barrier Starters
(2) 210-211	Ongoing Traffic Gates Starters
(3) 210L	East Ongoing Traffic Gate Lower Relay
210R	East Ongoing Traffic Gate Raise Relay
211L	West Ongoing Traffic Gate Lower Relay
211R	West Ongoing Traffic Gate Raise Relay
(2) 212-213	Offgoing Traffic Gates Starters
(3) 212L	East Offgoing Traffic Gate Lower Relay
212R	East Offgoing Traffic Gate Raise Relay
213L	West Offgoing Traffic Gate Lower Relay
213R	West Offgoing Traffic Gate Raise Relay
(1) 214-215	Pedestrian Gates Starters
(2) 220	Whistle Compressor Starter
230-231	Gate Up Relay
232-233	Gate Down Relay
234-235	Barrier Open Relay
236-237	Barrier Closed Relay
238	Alignment Light Relay
239	Warning Lights Magnetic Switch
240	Controller Reset Relay
250	Phase Failure Relay
251	Phase Failure Alarm Relay
260-262	End Lift Motor Magnetic Brake
261	Wedge Motor Magnetic Brake
263-264	Barrier Motor Magnetic Brake
270	Overcurrent Relay
280-281	Traffic Gate raised Relay
282-283	Traffic Gate Lowered Relay
284-285	Pedestrian Gate Closed Relay
286-287	Pedestrian Gate Open Relay
290	Green Traffic Signal Light Relay
292	East Traffic Gate Current Sensor Switch
293	West Traffic Gate Current Sensor Switch
294	Control Relay for Adv. Beacons and EMS Sign
295	Time Delay Relay for Adv. Beacons and EMS
296-297	Current Sensors for Adv. Beacons and EMS
(3) 300-301	Ongoing Traffic Gates 480/120V Transformers
302-303	Offgoing Traffic Gates 480/120V Transformers
310	Lighting and Control Transformer
315	480/120V Transformer (for Load Center A)
316-316A	480/120V Transformer (for E. Adv. Beacons)
317-317A	480/120V Transformer (for W. Adv. Beacons)

EQUIPMENT SCHEDULE

ITEM No.	DESCRIPTION
320	Instrument Lights Transformer
330	Voltage Regulator Potential Transformer
331	Voltage Regulator Stabilizer
332	Voltage regulator
340-341	Current Transformer
350	Indicating Ammeter
351	Indicating Voltmeter
360	480V Power JB
361	240V Control JB
362	Utility Meter at Service Cabinet
370	Battery Charger-6V (Plug In)
371	12V Generator Battery Charger Outlet (South Wall)
372	Block Heater Outlet (Inside Generator)
400	Emergency Generator
401	Portable Battery-6V (Near Control Desk)
402	Generator Control Panel (South Wall)
410-411	Swing Motor
420-421	Swing Brake Motor
430-432	End Lift Motor
431	Wedge Motor
440-441	Barrier Motor
(3) 450-451	Ongoing Trafic Gates
452-453	Offgoing Traffic Gates
(2) 460	Whistle Compressor
470-471	Pedestrian Gates
500	Bus Fuses
510	Transformer Fuses
520	Instrument Fuses
530	Traffic Signal Fuses
540	Warning Light Fuses
(2) 540A	Warning Light Fuses
550	Regulator Transformer Fuses
610-610A	East Adv Warning Traffic Alarm bells
611-611A	West Adv Warning Traffic Alarm bells
612	North-East Traffic Gate Alarm Bell
(1) (3) 612A	South-East Traffic Gate Alarm Bell
613	South-West Traffic Gate Alarm Bell
(3) 613A	North-West Traffic Gate Alarm Bell
614-615	Pedestrian Gate Alarm Bell
620	Phase Failure Alarm Bell
630	North-East Traffic Signal - 3 Colors
630A	South-East Traffic Signal - 3 Colors
631	South-West Traffic Signal - 3 Colors
631A	North-West Traffic Signal - 3 Colors
632-632A	East Adv Beacon Traffic Signals - 1 Color
633-633A	West Adv Beacon Traffic Signals-1 Color
640	Traffic Signal Repeater
650	Indicating Light Unit
650A	Indicating Lights
660-661	Ongoing Traffic Gate Lights
(1) 662-663	Barrier Lights
664-665	Offgoing Traffic Gate Lights
670	Spotting Light

Notes:

(1) New equipment replaces existing equipment with same item number and same description. For additional information, see plan sheets and project specifications.

(2) Remove equipment.

(3) New equipment with new item number and description. For additional information, see plan sheets and project specifications.

General Note:

A. All item number starting with numeral "8" are referred to as junction boxes and/or pull boxes.

EQUIPMENT SCHEDULE

ITEM No.	DESCRIPTION
671	Light relay Source
680	Machinery Lights
681	Switchboard Cabinet Light
682	House Lights
683	Stair Lights
684	Plug Outlets- East Wall
684A	Plug Outlets- North Wall & Amplifier
685	Water Pump Outlet
686-686A	East Advance Warning Sign Illum. Light
687-687A	West Advance Warning Sign Illum. Light
(3) 688	Water Closet Receptacle GFCI, WP
690	Span Navigation Lights
(1) 691	Pier Navigation Lights
692-693	Fender navigation Lights
694	Emergency Circuit Lights
(1) 695	Target lights
696	Clock Plug Outlet
697	West Offgoing Traffic Gate Area Light
697A	East Ongoing Traffic Gate Area Light
698-699	Pedestrian Gate Light
700	Voltmeter Resistance
710	Exciter Rheostat
720	Indicating Lights Rheostat
730-731	Swing Motor Resistor
900	Freshwater Pump In Attic (Mechanical Unit)
901	Waste Retention Tank High Alarm Indication
(3) 902	DC Power Supply For CCVT (Plug-In)
903	Heat Pump Disconnect
904	EMS Sign (East)

THIS DRAWING ACCURATE FOR ELECTRICAL WORK ONLY

	BY	CHECKED
DESIGN	Jaswinder Gill	Javid Amirazodi
DETAILS	Jaswinder Gill	Javid Amirazodi
QUANTITIES	Jaswinder Gill	Javid Amirazodi

STATE OF CALIFORNIA
DEPARTMENT OF TRANSPORTATION

DIVISION OF ENGINEERING SERVICES
ELECTRICAL-MECHANICAL-WATER AND WASTEWATER DESIGN

BRIDGE NO. 29-0043
POST MILE 0.01

MOKELUMNE RIVER BRIDGE CONTROL HOUSE UPGRADE
EQUIPMENT SCHEDULE

SHEET **EE-20**

DOES SD Imperial Rev. 1/07

ORIGINAL SCALE IN INCHES FOR REDUCED PLANS 0 1 2 3

CU 06243
EA 0K0701

DISREGARD PRINTS BEARING EARLIER REVISION DATES → REVISION DATES (PRELIMINARY STAGE ONLY) 10/31/08 11/14/08 12/17/08 02/05/09 04/28/09 SHEET OF

12-DEC-2009 05:39

ee_20.dgn

12-DEC-2009 TIME PLOTTED => 09:39

DIST.	COUNTY	ROUTE	POST MILES TOTAL PROJECT	SHEET NO.	TOTAL SHEETS
10	SJ	12	0.0	34	37

CALIFORNIA STATE FIRE MARSHAL
APPROVED
Approval of this plan does not authorize or approve any omission or deviation from applicable regulations. Final approval is subject to field inspection. One set of approved plans shall be available on the project site at all times.
Reviewed by: STEPHEN GUARINO
Approval date: 05-29-09

Claude Bylinski 04-28-09
REGISTERED MECHANICAL ENGINEER DATE

REGISTERED PROFESSIONAL ENGINEER
C. BYLINSKI
No. M20878
Exp. 06-30-09
MECH
STATE OF CALIFORNIA

12-7-09
PLANS APPROVAL DATE

The State of California or its officers or agents shall not be responsible for the accuracy or completeness of electronic copies of this plan sheet.

PLUMBING

- Cold Water
- A — Compressed Air
- G — Gas
- D — Equipment Drain
- F — Fire Water
- Hot Water
- Hot Water Return
- LPG — Liquified Petroleum Gas
- R — Relief Valve Discharge Pipe
- SS — Sanitary Sewer
- Sanitary Sewer (above grade)
- Sanitary Sewer (below grade)
- Sanitary Sewer Vent

PIPE FITTINGS AND VALVES

- Cap, Threaded
- Elbow, Turned Down
- Elbow, Turned Up
- Reducer, Concentric
- Pressure Gauge (with Valve and Snubber)
- Strainer
- Union
- Union, Insulating
- Valve, Ball
- Valve, Check
- Valve, Gas
- Valve, Gate
- Valve, Safety Relief
- Valve, Pressure Reducing
- Valve, Pressure/Temperature Relief
- Water Hammer Arrestor

HEATING, VENTILATING AND AIR CONDITIONING

- Balance Damper
- Flexible Duct
- EA — Exhaust Air
- RA — Return Air
- SA — Supply Air
- ER or CFM/ER CFM — Exhaust Register
- or SIZE CFM — Return
- or SIZE CFM — Supply Diffuser
- T — Thermostat
- TS — Time Switch
- Anode Test Station
- Three Wire Test Station
- F — Exhaust Fan
- FE — Fire Extinguisher

MISCELLANEOUS

- L — Angle
- ℄ — Centerline
- Ø — Diameter
- Section / Elevation Letter
- Sheet Number
- Detail Number
- Sheet Number

MECHANICAL ABBREVIATIONS:

A/C	Air Conditioning
ABS	Acrylonitrile Butadiene Styrene
AC	Asphalt Concrete
AD	Air Drop
AP	Alternative Pipe
ATF	Automatic Transmission Fluid
AWG	American Wire Gauge
BFP	Backflow Preventer
BLDG	Building
BTU	British Thermal Unit
BTUH	British Thermal Unit Per Hour
BV	Balancing Valve
C	Conduit
CD	Ceiling Diffuser
CFM	Cubic Feet Per Minute
CI	Cast-Iron
CO	Cleanout
COTF	Cleanout Through Floor
COTG	Cleanout Through Grade
COTW	Cleanout To Wall
CV	Check Valve
CW	Cold Water
D	Depth
DB	Dry Bulb
DF	Drinking Fountain
DH	Duct Heater
DIA	Diameter
(E)	Existing
EA	Exhaust Air
EEW	Emergency Eyewash And Shower
EF	Exhaust Fan
EL	Elevation
EWC	Electric Water Cooler
EWH	Electric Water Heater
FC	Flexible Connection
FD	Floor Drain
FDC	Fire Department Connection
FE	Fire Extinguisher
FG	Finish Grade
FH	Fire Hydrant
FL	Flow Line
FS	Flow Switch
GA	Gauge
GALV	Galvanized
GLV	Globe Valve
GPM	Gallons Per Minute
GSP	Galvanized Steel Pipe
GV	Gate Valve
GWH	Gas Water Heater
GYP	Gypsum
H	Height
HB	Hydrant Box
H/C	Hot Water, High Pressure Cleaner
HF	Hose Faucet
HVAC	Heating, Ventilating And Air Conditioning
HW	Hot Water
HZ	Hertz
ID	Inside Diameter
IE	Invert Elevation
IN	Inch
IPS	International Pipe Standard
KS	Kitchen Sink
LAV	Lavatory
LPG	Liquified Petroleum Gas
MAX	Maximum
MAN	Manhole
MIN	Minimum
NIC	Not In Contract
NO	Number
NPT	National Pipe Thread
NST	National Standard Thread
OA	Outside Air
OC	On Center
OD	Outside Diameter
OG	Original Ground
PCC	Portland Cement Concrete
PH	Phase
PRV	Pressure Reducing Valve
PSI	Pounds Per Square Inch
PVC	Polyvinyl Chloride
R	Radius
REG	Register
RA	Return Air
RCP	Reinforced Concrete Pipe
REF	Refrigerator
REQ	Required
RH	Radiant Heater
RV	Relief Valve
S/S	Service Sink
SA	Supply Air
SCH	Schedule
SDS	Sanitary Dump Station
SF	Supply Fan
SHR	Shower
SP	Static Pressure
SS	Sanitary Sewer
STA	Station
STD	Standard
TCV	Temperature Control Valve
TP	Trap Primer
TOT	Total
TS	Time Switch
TYP	Typical
UH	Unit Heater
URI	Urinal
V	Vent
VAC	Voltage, Alternating Current
VR	Vent Riser
VTR	Vent Thru Roof
W	Width
W/	With
W/O	Without
WB	Wet Bulb
WC	Water Closet
W.C.	Water Column
WH	Wall Heater
WHA	Water Hammer Arrestor
WLS	Water Level Switch
WP	Weatherproof
WS	Wash Sink
WSP	Welded Steel Pipe

	BY	CHECKED
DESIGN	Claude Bylinski	Seve Gutierrez
DETAILS	Kerry Geoffroy	Claude Bylinski
QUANTITIES	Claude Bylinski	Seve Gutierrez

STATE OF CALIFORNIA
DEPARTMENT OF TRANSPORTATION

DIVISION OF ENGINEERING SERVICES
ELECTRICAL-MECHANICAL-WATER AND WASTEWATER DESIGN

BRIDGE NO. 29-0043
POST MILE 0.01

MOKELUMNE RIVER BRIDGE CONTROL HOUSE UPGRADE

ABBREVIATIONS AND LEGENDS

SHEET MO-1

DOES SD Imperial Rev. 1/07

ORIGINAL SCALE IN INCHES FOR REDUCED PLANS 0 1 2 3

CU 10604
EA 0K0701

DISREGARD PRINTS BEARING EARLIER REVISION DATES → 08/24/08 11/14/08 04/28/09

REVISION DATES (PRELIMINARY STAGE ONLY) SHEET OF

12-DEC-2009 05:39

m0_1.dgn

DIST.	COUNTY	ROUTE	POST MILES TOTAL PROJECT	SHEET NO.	TOTAL SHEETS
10	SJ	12	0.0	35	37

CALIFORNIA STATE FIRE MARSHAL
APPROVED
Approval of this plan does not authorize or approve any omission or deviation from applicable regulations. Final approval is subject to field inspection. One set of approved plans shall be available on the project site at all times.
Reviewed by: STEPHEN GUARINO
Approval date: 05-29-09

Claude Bylinski 04-28-09
REGISTERED MECHANICAL ENGINEER DATE

REGISTERED PROFESSIONAL ENGINEER
C. BYLINSKI
No. M20878
Exp. 06-30-09
MECH
STATE OF CALIFORNIA

12-7-09
PLANS APPROVAL DATE

The State of California or its officers or agents shall not be responsible for the accuracy or completeness of electronic copies of this plan sheet.

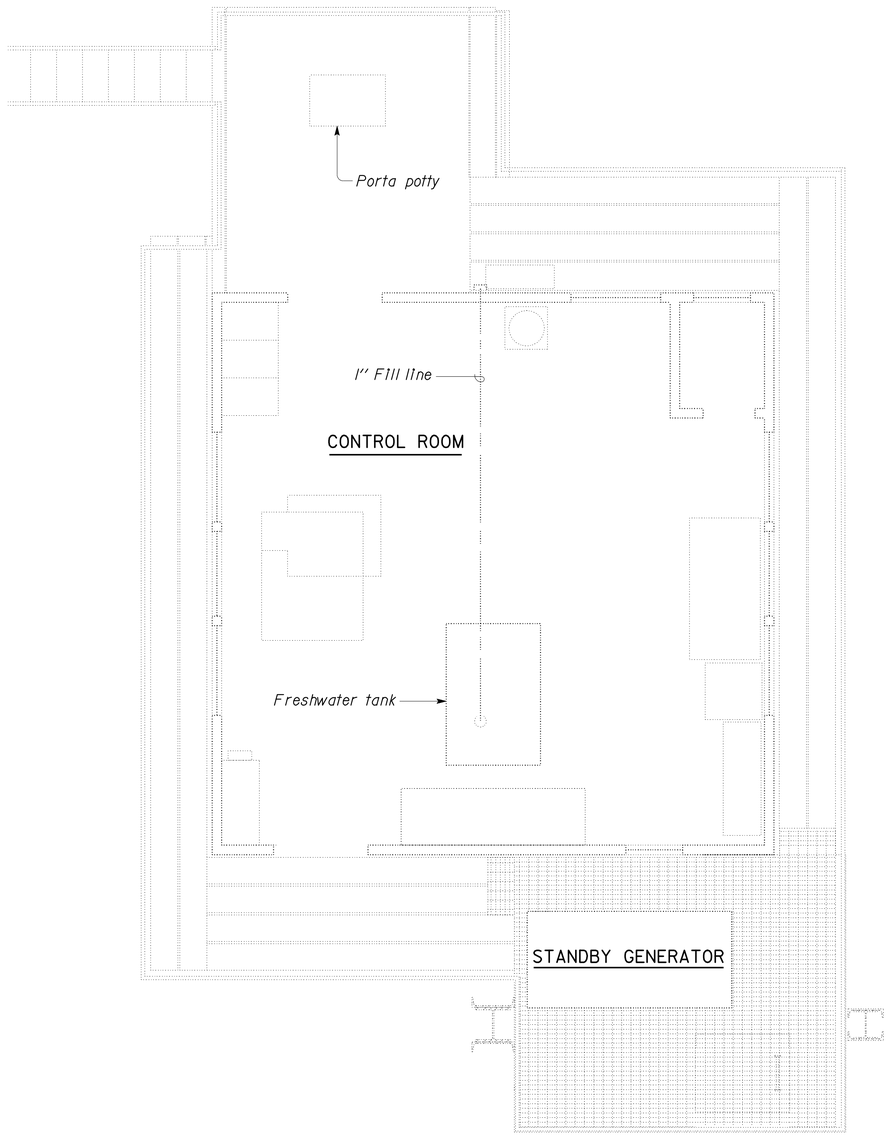

PLAN
3/8" = 1'-0"

DESIGN SUPERVISOR	DESIGN	BY Claude Bylinski	CHECKED Seve Gutierrez
DESIGN ENGINEER	DETAILS	BY Kerry Geoffroy	CHECKED Claude Bylinski
	QUANTITIES	BY Claude Bylinski	CHECKED Seve Gutierrez

STATE OF CALIFORNIA
DEPARTMENT OF TRANSPORTATION

DIVISION OF ENGINEERING SERVICES
ELECTRICAL-MECHANICAL-WATER AND WASTEWATER DESIGN

BRIDGE NO. 29-0043
POST MILE 0.01

MOKELUMNE RIVER BRIDGE CONTROL HOUSE UPGRADE
EXISTING FLOOR PLAN

SHEET **M1-1**

DOES SD Imperial Rev. 1/07

ORIGINAL SCALE IN INCHES FOR REDUCED PLANS 0 1 2 3

CU 10604
EA 0K0701

DISREGARD PRINTS BEARING EARLIER REVISION DATES → REVISION DATES (PRELIMINARY STAGE ONLY) 08/19/08 10/02/08 11/14/08 12/12/08 12/15/08 04/28/09 SHEET OF

12-DEC-2009 05:39
m1_1.dgn

DIST.	COUNTY	ROUTE	POST MILES TOTAL PROJECT	SHEET NO.	TOTAL SHEETS
10	SJ	12	0.0	36	37

CALIFORNIA STATE FIRE MARSHAL
APPROVED
Approval of this plan does not authorize or approve any omission or deviation from applicable regulations. Final approval is subject to field inspection. One set of approved plans shall be available on the project site at all times.
Reviewed by: STEPHEN GUARINO
Approval date: 05-29-09

Claude Bylinski 04-28-09
REGISTERED MECHANICAL ENGINEER DATE

REGISTERED PROFESSIONAL ENGINEER
C. BYLINSKI
No. M20878
Exp. 06-30-09
MECH
STATE OF CALIFORNIA

12-7-09
PLANS APPROVAL DATE

The State of California or its officers or agents shall not be responsible for the accuracy or completeness of electronic copies of this plan sheet.

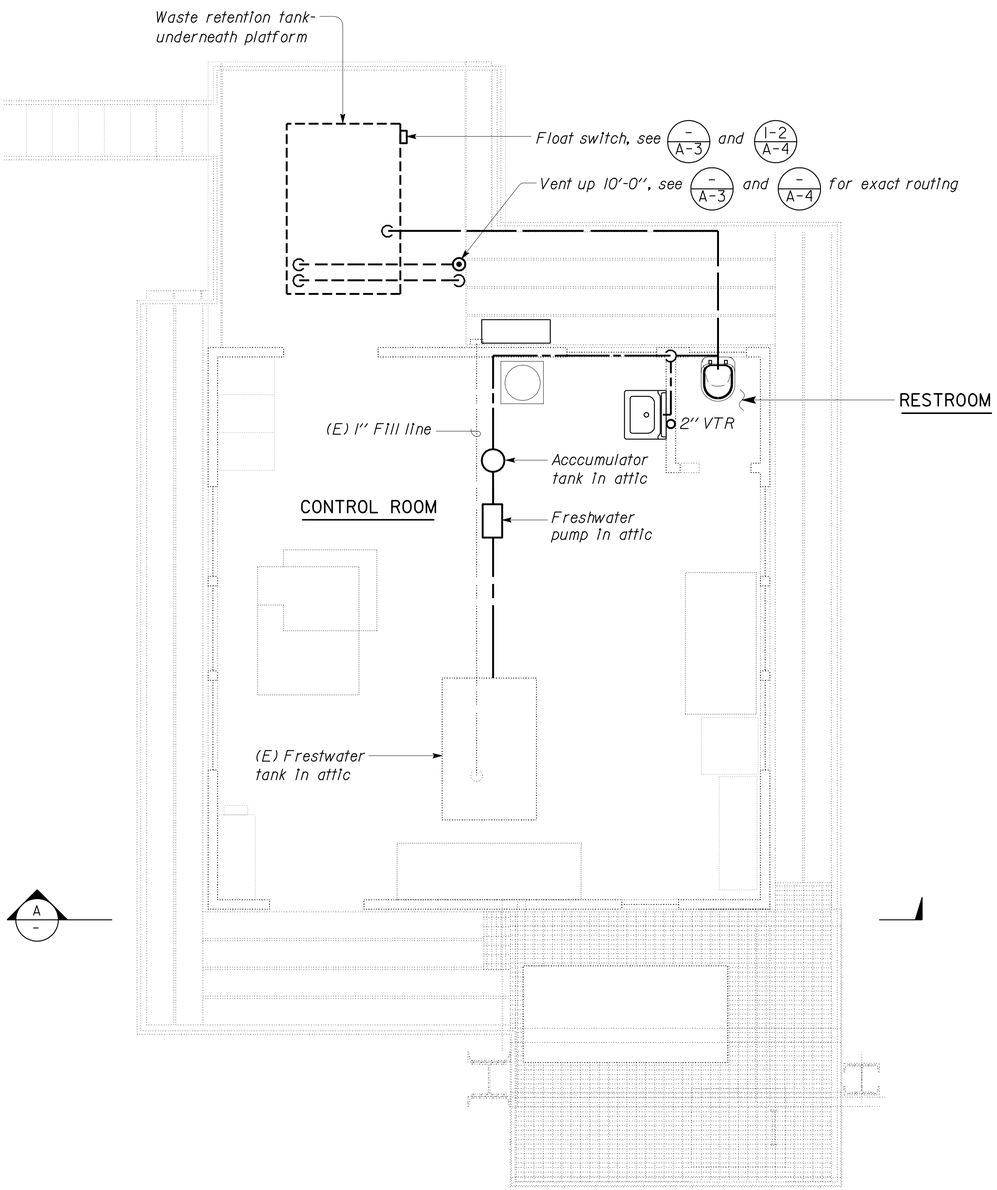

PLAN
3/8" = 1'-0"

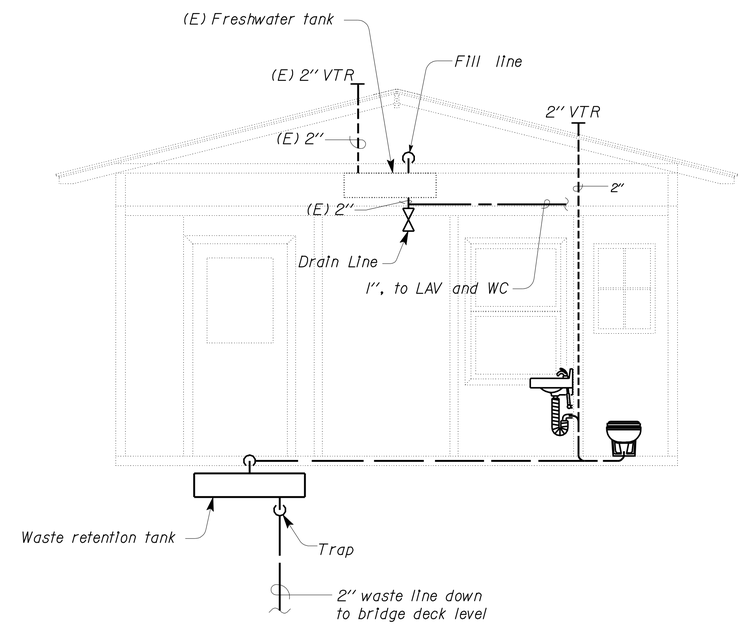

A SECTION
3/8" = 1'-0"

DESIGN	BY Claude Bylinski	CHECKED Seve Gutierrez	
DETAILS	BY Kerry Geoffroy	CHECKED Claude Bylinski	
QUANTITIES	BY Claude Bylinski	CHECKED Seve Gutierrez	

STATE OF CALIFORNIA
DEPARTMENT OF TRANSPORTATION

DIVISION OF ENGINEERING SERVICES
ELECTRICAL-MECHANICAL-WATER AND WASTEWATER DESIGN

BRIDGE NO. 29-0043
POST MILE 0.01

MOKELUMNE RIVER BRIDGE CONTROL HOUSE UPGRADE
MECHANICAL PLAN

SHEET **M1-2**

DOES SD Imperial Rev. 1/07

ORIGINAL SCALE IN INCHES FOR REDUCED PLANS 0 1 2 3

CU 10604
EA 0K0701

DISREGARD PRINTS BEARING EARLIER REVISION DATES → 08/21/08 10/02/08 11/14/08 12/12/08 12/15/08 02/04/09 04/28/09

REVISION DATES (PRELIMINARY STAGE ONLY) SHEET OF

12-DEC-2009 05:39
m1_2.dgn

DIST.	COUNTY	ROUTE	POST MILES TOTAL PROJECT	SHEET NO.	TOTAL SHEETS
10	SJ	12	0.0	37	37

CALIFORNIA STATE FIRE MARSHAL
APPROVED
Approval of this plan does not authorize or approve any omission or deviation from applicable regulations. Final approval is subject to field inspection. One set of approved plans shall be available on the project site at all times.
Reviewed by: STEPHEN GUARINO
Approval date: 05-29-09

Claude Bylinski 04-28-09
REGISTERED MECHANICAL ENGINEER DATE

REGISTERED PROFESSIONAL ENGINEER
C. BYLINSKI
No. M20878
Exp. 06-30-09
MECH
STATE OF CALIFORNIA

12-7-09
PLANS APPROVAL DATE

The State of California or its officers or agents shall not be responsible for the accuracy or completeness of electronic copies of this plan sheet.

EQUIPMENT LIST

NAME	QUANTITY	DESCRIPTION
LOW FLUSH TOILET	1	1/8 Gallon per flush toilet, round seat.
FAUCET	1	Slow-closing for restricted water usage, chrome-plated, deck mounted, gravity water.
WASTE RETENTION TANK	1	188 gallon, Stainless Steel, 60'' x 42'' x 24'', insulated to 14°F, with 2'' insulation. double-walled.
FRESHWATER PUMP	1	Automatic water supply pump, @ 20 gpm @ 30 psi, built-in pressure switch set @ 40 psi for shutoff, 20 psi for "On." Santoprene diaphragm, polypropylene, 115 V(ac), Thermally protected.
ACCUMULATOR TANK	1	2 Gallon, Stainless Steel, 1/2'' female NPT. Max Pressure 120 psi.
FLOAT SWITCH	1	Flange-mounted, explosion-proof, horizontally mounted, SPDT, normally open, neoprene gasket.

Note:

1. *Run vents to minimum 10' above grating.*

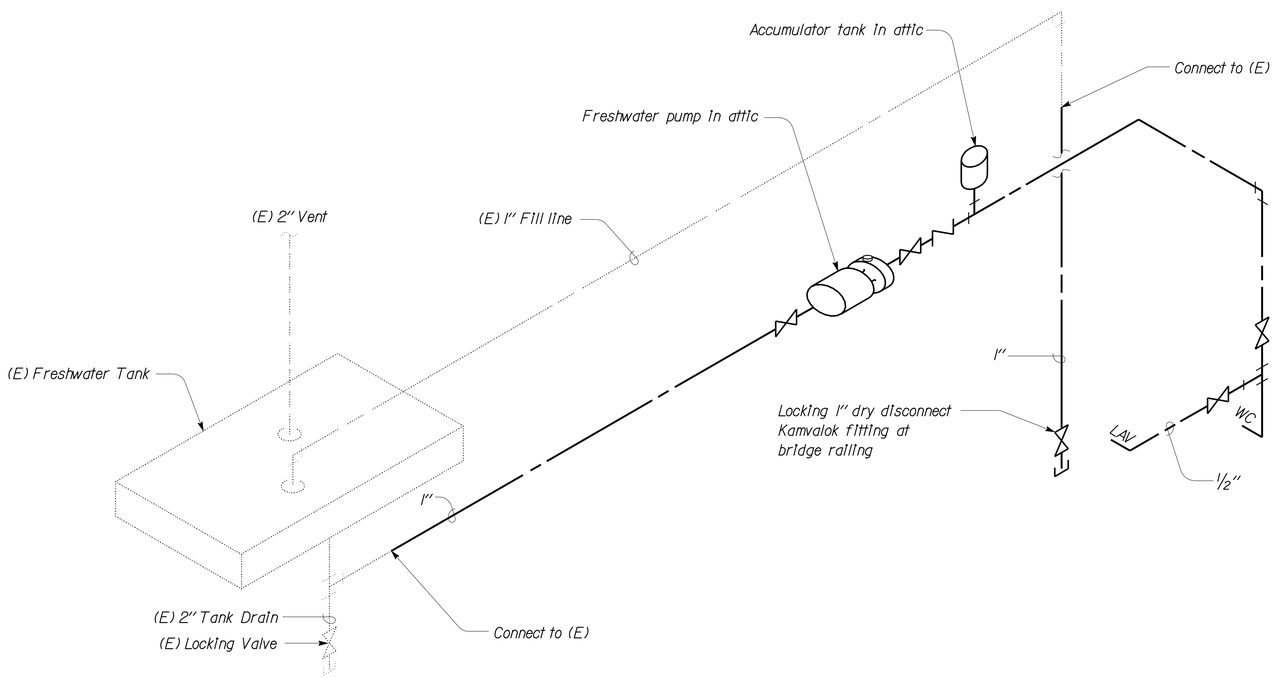

POTABLE WATER DIAGRAM

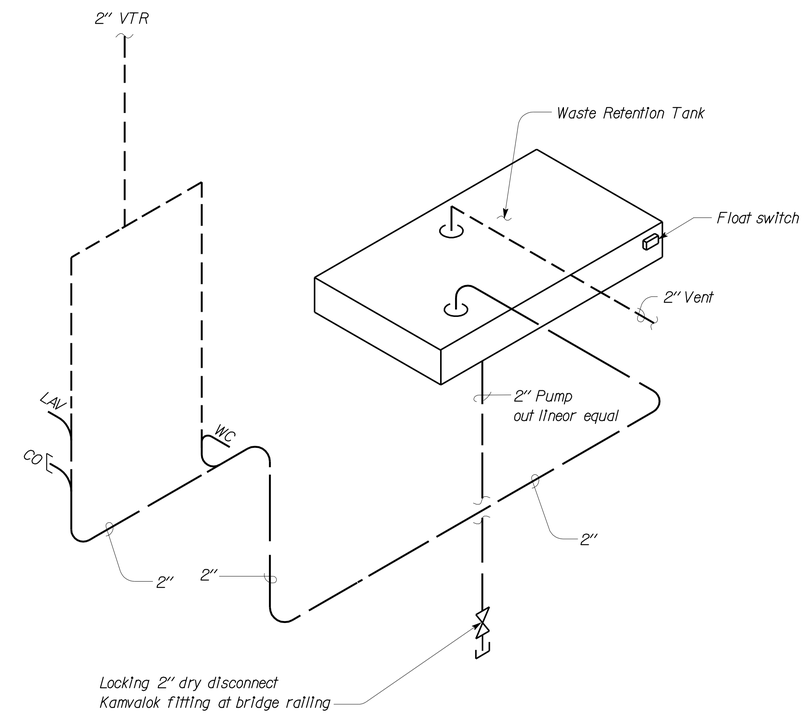

SANITARY SEWER

NO SCALE

DESIGN	BY Claude Bylinski	CHECKED Seve Gutierrez	
DETAILS	BY Kerry Geoffroy	CHECKED Claude Bylinski	
QUANTITIES	BY Claude Bylinski	CHECKED Seve Gutierrez	

STATE OF CALIFORNIA
DEPARTMENT OF TRANSPORTATION

DIVISION OF ENGINEERING SERVICES
ELECTRICAL-MECHANICAL-WATER AND WASTEWATER DESIGN

BRIDGE NO. 29-0043
POST MILE 0.01

MOKELUMNE RIVER BRIDGE CONTROL HOUSE UPGRADE
MECHANICAL DETAILS

SHEET **M1-3**

DOES SD Imperial Rev. 1/07

ORIGINAL SCALE IN INCHES FOR REDUCED PLANS 0 1 2 3

CU 10604
EA 0K0701

DISREGARD PRINTS BEARING EARLIER REVISION DATES → 10-02-08 11-14-08 12-15-08 02-04-09 03-25-09 04-28-09

REVISION DATES (PRELIMINARY STAGE ONLY) SHEET OF

12-DEC-2009 05:40
m1_3.dgn