Dist	COUNTY	ROUTE	KILOMETER POST TOTAL PROJECT	SHEET No.	TOTAL SHEETS
10	SJ	4	8.7/R11.1	2	171

Caroline Reyes 3/3/09
REGISTERED CIVIL ENGINEER DATE

5-18-09
PLANS APPROVAL DATE

REGISTERED PROFESSIONAL ENGINEER CAROLINE REYES No. 66004 Exp. 06-30-10 CIVIL STATE OF CALIFORNIA

THE STATE OF CALIFORNIA OR ITS OFFICERS OR AGENTS SHALL NOT BE RESPONSIBLE FOR THE ACCURACY OR COMPLETENESS OF ELECTRONIC COPIES OF THIS PLAN SHEET.

Caltrans Metric

2

NOTES:

1. DIMENSIONS OF THE PAVEMENT STRUCTURES (STRUCTURAL SECTIONS) ARE SUBJECT TO TOLERANCES SPECIFIED IN THE STANDARD SPECIFICATIONS.
2. SUPERELEVATION AS SHOWN OR AS DIRECTED BY ENGINEER.
3. FOR LOCATION OF SHOULDER BACKING AND COLD PLANE, SEE SUMMARY OF QUANTITIES.
4. FOR LOCATION OF HMA DIKE, SEE LAYOUT SHEETS AND SUMMARY OF QUANTITIES.
5. FOR LOCATION AND TYPE OF RUMBLE STRIPS, SEE CONSTRUCTION DETAIL AND SUMMARY OF QUANTITIES.
6. FILL AND COMPACT EXISTING ROADSIDE DITCH PRIOR TO PLACING WICKDRAINS.

ABBREVIATIONS

RHMA-G - RUBBERIZED HOT MIX ASPHALT (GAP GRADED)
HMA - HOT MIX ASPHALT

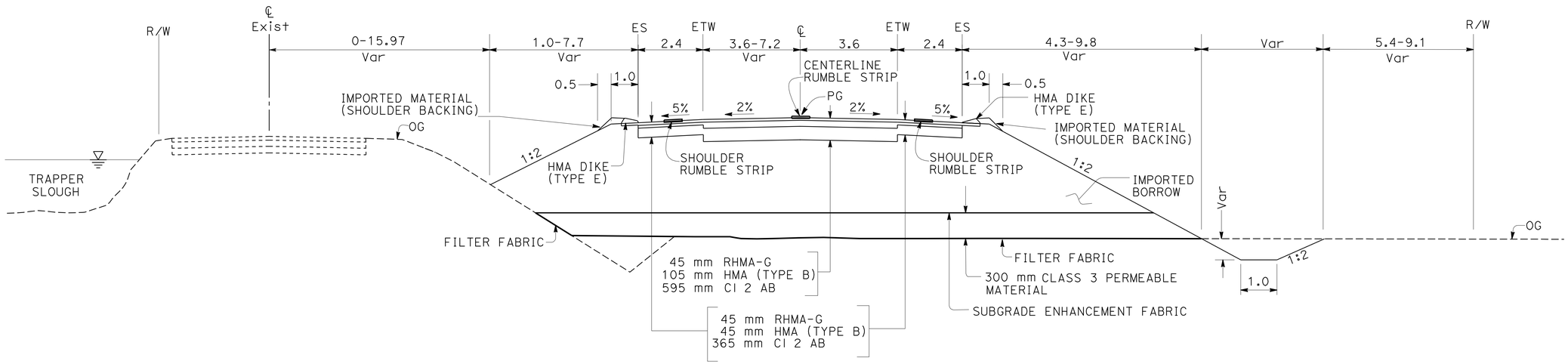

STA 11+00 TO STA 13+60
STA 21+40 TO STA 25+60

ROUTE 4

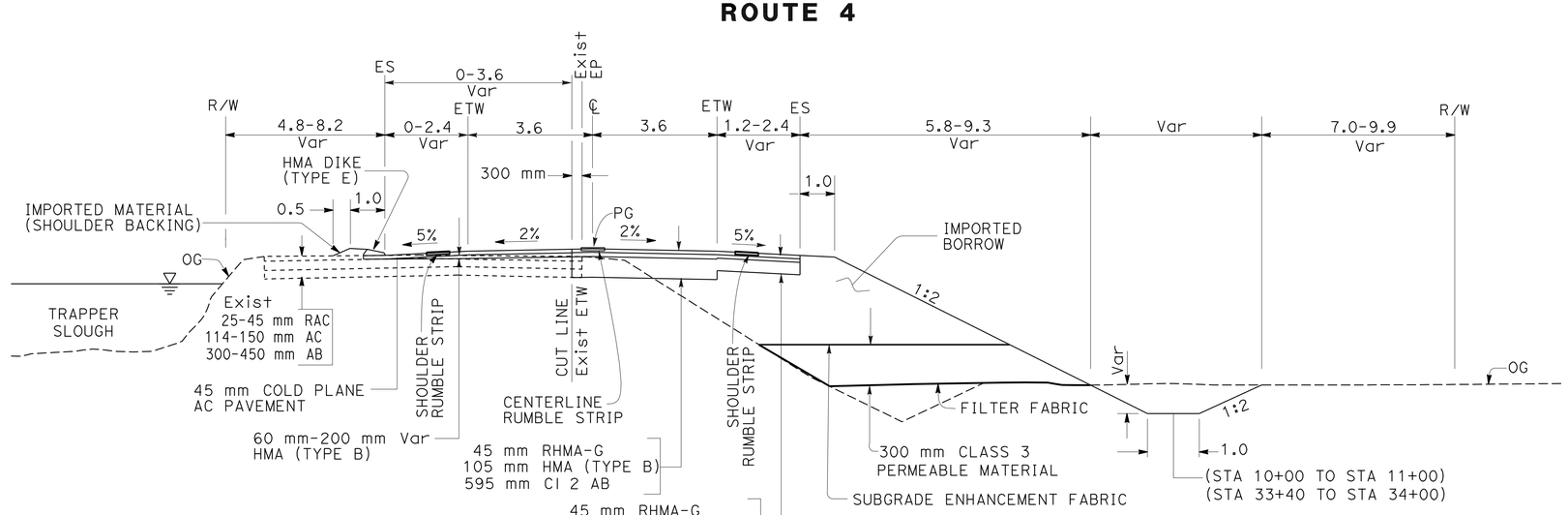

STA 10+00 TO STA 11+00
STA 31+40 TO STA 34+40

ROUTE 4

ALL DIMENSIONS ARE IN METERS
UNLESS OTHERWISE SHOWN

TYPICAL CROSS SECTIONS

NO SCALE

X-1

2 **REVISED PER ADDENDUM No. 2 DATED AUGUST 20, 2009**

REVISED BY	DATE REVISED
SJ	3/3/09

CALCULATED-DESIGNED BY	CHECKED BY
SAURABH JAYANT	CAROLINE REYES

FUNCTIONAL SUPERVISOR: PAUL ELLIOTT

STATE OF CALIFORNIA - DEPARTMENT OF TRANSPORTATION
Caltrans DESIGN

LAST REVISION 00-00-00
DATE PLOTTED => 17-AUG-2009
TIME PLOTTED => 10:58

Dist	COUNTY	ROUTE	KILOMETER POST TOTAL PROJECT	SHEET No.	TOTAL SHEETS
10	SJ	4	8.7/R11.1	3	171

Caroline Reyes 3/3/09
REGISTERED CIVIL ENGINEER DATE

5-18-09
PLANS APPROVAL DATE

REGISTERED PROFESSIONAL ENGINEER CAROLINE REYES No. 66004 Exp. 06-30-10 CIVIL STATE OF CALIFORNIA

THE STATE OF CALIFORNIA OR ITS OFFICERS OR AGENTS SHALL NOT BE RESPONSIBLE FOR THE ACCURACY OR COMPLETENESS OF ELECTRONIC COPIES OF THIS PLAN SHEET.

Caltrans Metric

2

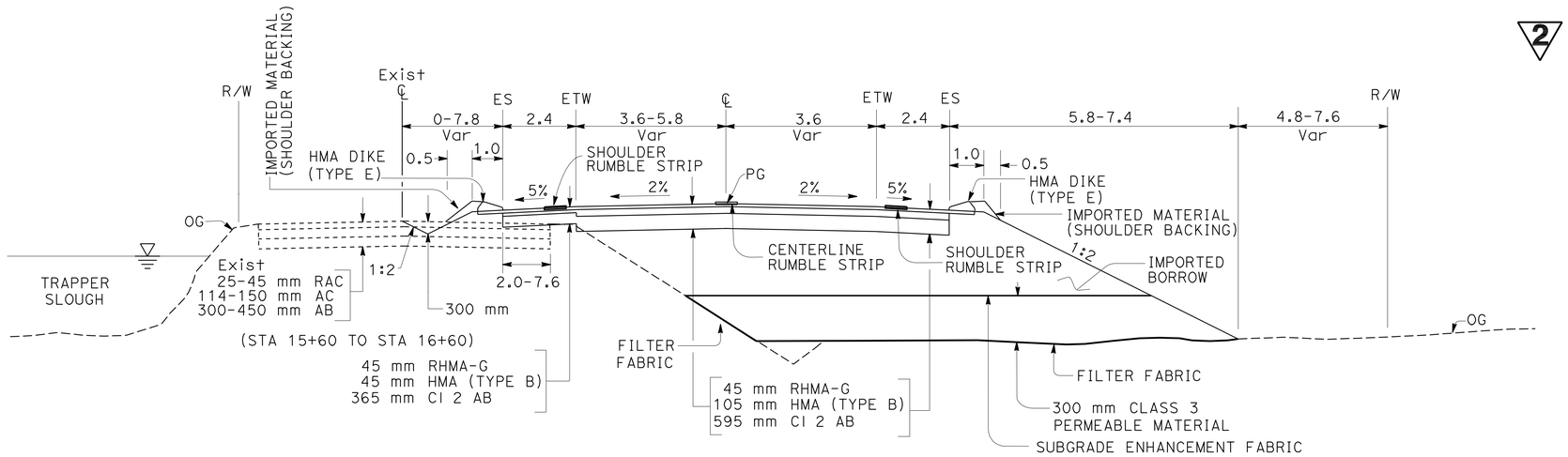

STA 15+40 TO STA 18+40

ROUTE 4

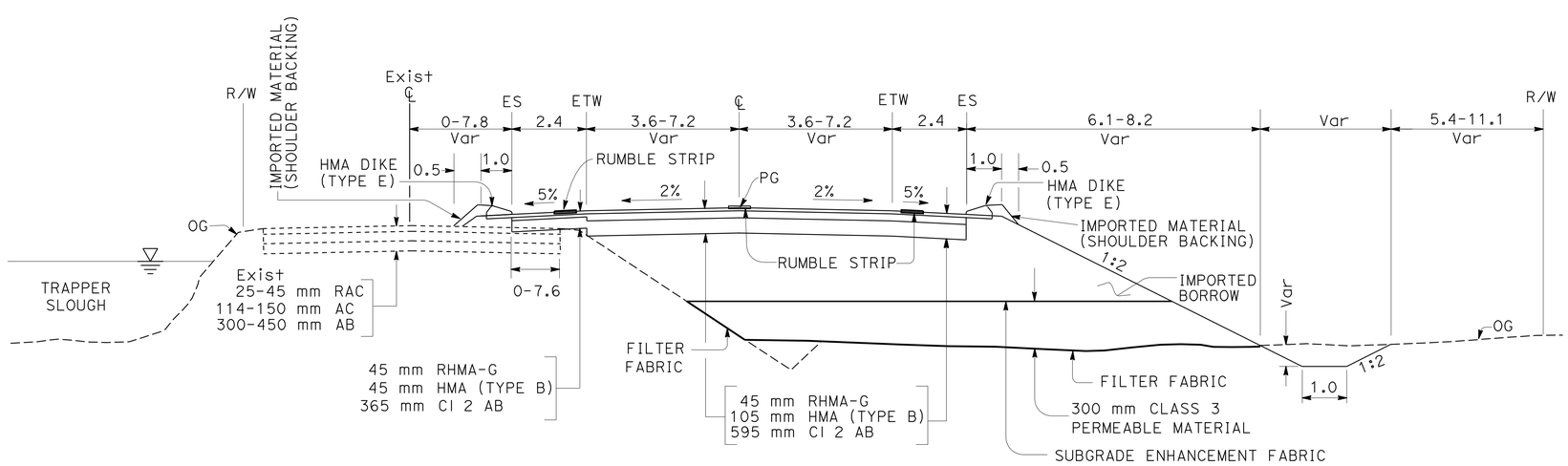

STA 13+60 TO STA 15+40
STA 18+40 TO STA 19+80
STA 25+60 TO STA 27+40

ROUTE 4

ALL DIMENSIONS ARE IN METERS UNLESS OTHERWISE SHOWN

TYPICAL CROSS SECTIONS

NO SCALE

X-2

2 **REVISED PER ADDENDUM No. 2 DATED AUGUST 20, 2009**

STATE OF CALIFORNIA - DEPARTMENT OF TRANSPORTATION
Caltrans DESIGN

FUNCTIONAL SUPERVISOR: PAUL ELLIOTT
CALCULATED-DESIGNED BY: SAURABH JAYANT
CHECKED BY: CAROLINE REYES
REVISED BY: SJ
DATE REVISED: 3/3/09

LAST REVISION 00-00-00
DATE PLOTTED => 17-AUG-2009
TIME PLOTTED => 10:59

Dist	COUNTY	ROUTE	KILOMETER POST TOTAL PROJECT	SHEET No.	TOTAL SHEETS
10	SJ	4	8.7/R11.1	4	171

Caroline Reyes 3/3/09
REGISTERED CIVIL ENGINEER DATE

5-18-09
PLANS APPROVAL DATE

REGISTERED PROFESSIONAL ENGINEER CAROLINE REYES No. 66004 Exp. 06-30-10 CIVIL STATE OF CALIFORNIA

THE STATE OF CALIFORNIA OR ITS OFFICERS OR AGENTS SHALL NOT BE RESPONSIBLE FOR THE ACCURACY OR COMPLETENESS OF ELECTRONIC COPIES OF THIS PLAN SHEET.

Caltrans Metric

2

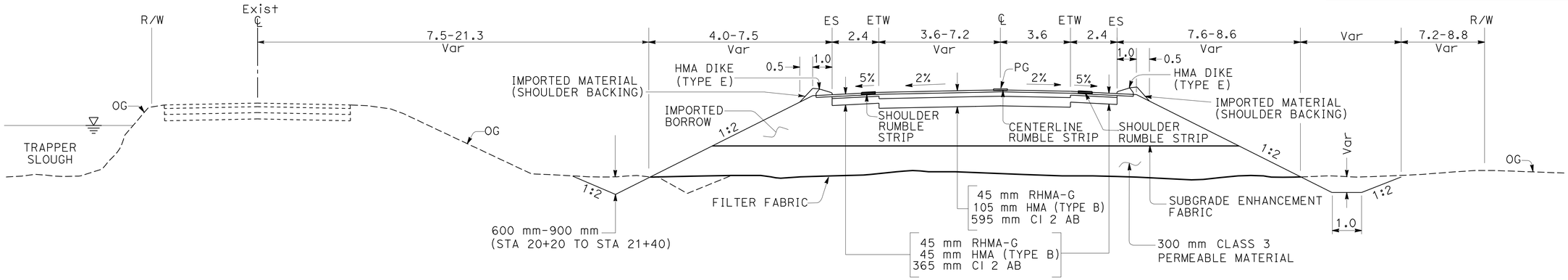

STA 19+80 TO STA 21+40

ROUTE 4

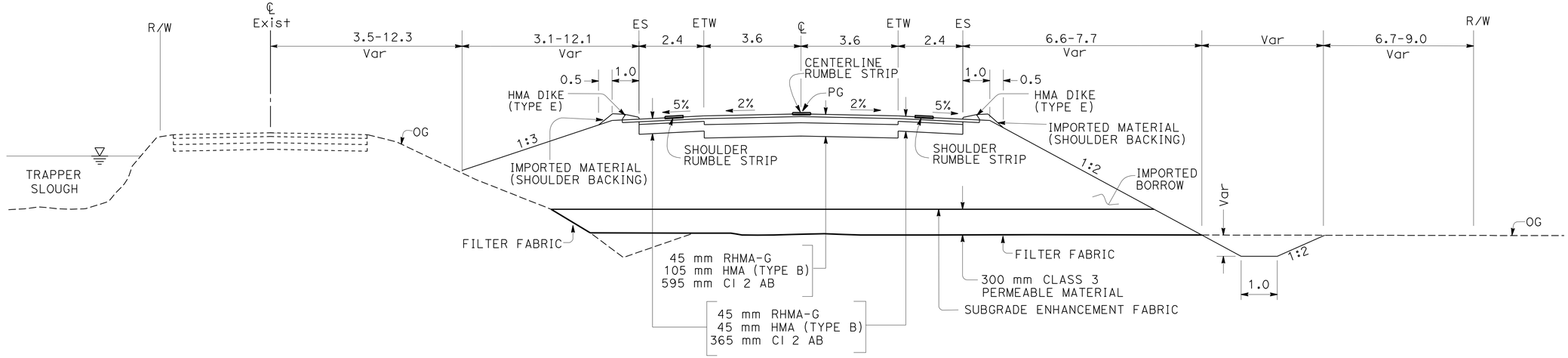

STA 27+40 TO STA 31+40

ROUTE 4

ALL DIMENSIONS ARE IN METERS
UNLESS OTHERWISE SHOWN

TYPICAL CROSS SECTIONS

NO SCALE

X-3

2 **REVISED PER ADDENDUM No. 2 DATED AUGUST 20, 2009**

STATE OF CALIFORNIA - DEPARTMENT OF TRANSPORTATION
Caltrans DESIGN

FUNCTIONAL SUPERVISOR: PAUL ELLIOTT
CALCULATED-DESIGNED BY: SAURBH JAYANT
CHECKED BY: CAROLINE REYES
REVISED BY: SJ
DATE REVISED: 3/3/09

LAST REVISION 00-00-00
DATE PLOTTED => 17-AUG-2009
TIME PLOTTED => 10:59

Dist	COUNTY	ROUTE	KILOMETER POST TOTAL PROJECT	SHEET No.	TOTAL SHEETS
10	SJ	4	8.7/R11.1	5	171

Caroline Reyes 3/3/09
REGISTERED CIVIL ENGINEER DATE

5-18-09
PLANS APPROVAL DATE

REGISTERED PROFESSIONAL ENGINEER
CAROLINE REYES
No. 66004
Exp. 06-30-10
CIVIL
STATE OF CALIFORNIA

THE STATE OF CALIFORNIA OR ITS OFFICERS OR AGENTS SHALL NOT BE RESPONSIBLE FOR THE ACCURACY OR COMPLETENESS OF ELECTRONIC COPIES OF THIS PLAN SHEET.

Caltrans Metric

2

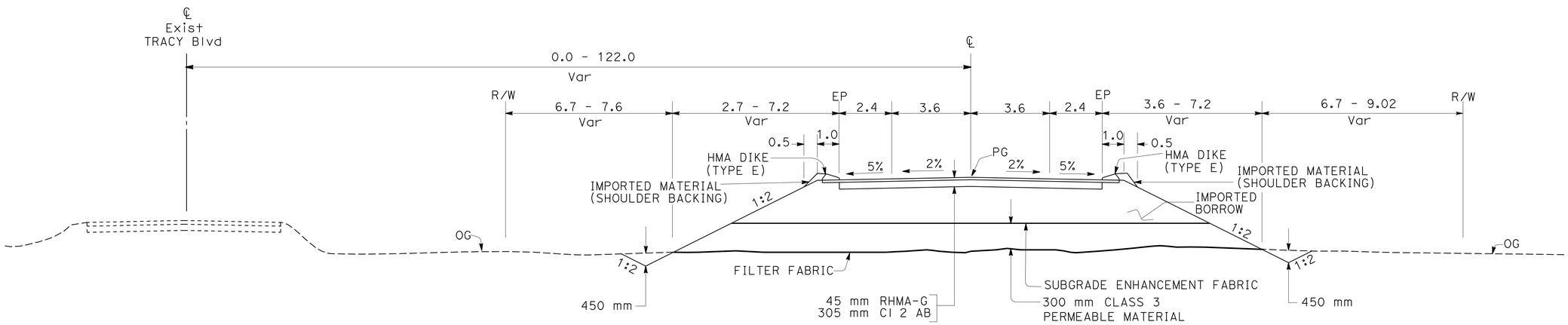

STA 40+00 TO STA 44+96.640

TRACY BOULEVARD

ALL DIMENSIONS ARE IN METERS UNLESS OTHERWISE SHOWN

TYPICAL CROSS SECTIONS

NO SCALE

X-4

2 **REVISED PER ADDENDUM No. 2 DATED AUGUST 20, 2009**

STATE OF CALIFORNIA - DEPARTMENT OF TRANSPORTATION
Caltrans DESIGN

FUNCTIONAL SUPERVISOR: PAUL ELLIOTT
CALCULATED-DESIGNED BY: SAURABH JAYANT
CHECKED BY: CAROLINE REYES
REVISED BY: SJ
DATE REVISED: 3/3/09

LAST REVISION 00-00-00
DATE PLOTTED => 17-AUG-2009
TIME PLOTTED => 10:59

Dist	COUNTY	ROUTE	KILOMETER POST TOTAL PROJECT	SHEET No.	TOTAL SHEETS
10	SJ	4	8.7/R11.1	26	171

Caroline Reyes 3/3/09
REGISTERED CIVIL ENGINEER DATE

5-18-09
PLANS APPROVAL DATE

REGISTERED PROFESSIONAL ENGINEER
CAROLINE REYES
No. 66004
Exp. 06-30-10
CIVIL
STATE OF CALIFORNIA

THE STATE OF CALIFORNIA OR ITS OFFICERS OR AGENTS SHALL NOT BE RESPONSIBLE FOR THE ACCURACY OR COMPLETENESS OF ELECTRONIC COPIES OF THIS PLAN SHEET.

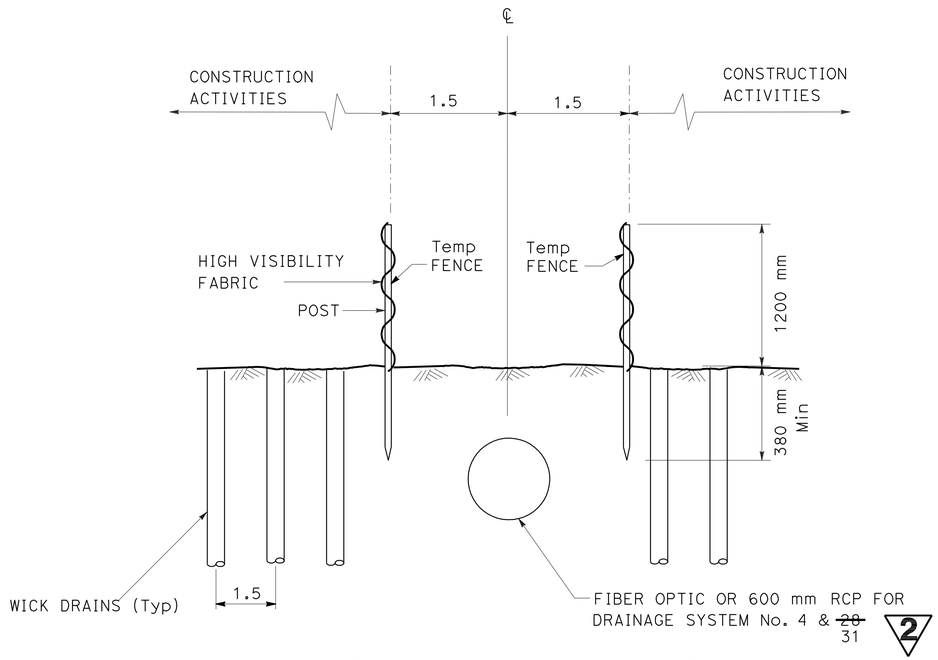

WICK DRAIN RESTRICTIONS

FIBER OPTIC LINE TO BE POSITIVELY LOCATED AND STAKED DURING CONSTRUCTION, SEE LAYOUT SHEETS.

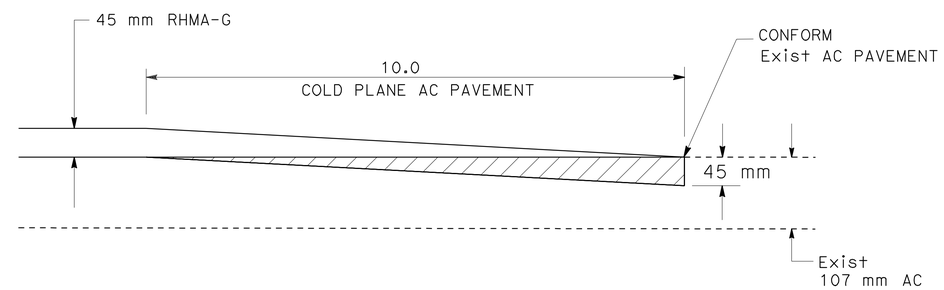

LONGITUDINAL CONFORM TAPER

ROUTE 4 Sta 10+00 TO 10+10
ROUTE 4 Sta 34+30 TO 34+40
Tracy Blvd Sta 40+00 TO 40+10

ALL DIMENSIONS ARE IN METERS
UNLESS OTHERWISE SHOWN

2 **REVISED PER ADDENDUM No. 2 DATED AUGUST 20, 2009**

CONSTRUCTION DETAILS

NO SCALE **C-2**

CALCULATED-DESIGNED BY	SAURABH JAYANT	REVISED BY	SJ
CHECKED BY	CAROLINE REYES	DATE REVISED	3/3/09

FUNCTIONAL SUPERVISOR: PAUL ELLIOTT

STATE OF CALIFORNIA - DEPARTMENT OF TRANSPORTATION
Caltrans DESIGN

LAST REVISION 00-00-00 | DATE PLOTTED => 17-AUG-2009 | TIME PLOTTED => 10:59

NOTE: FOR COMPLETE R/W DATA, SEE R/W RECORD MAPS AT DISTRICT OFFICE.

Dist	COUNTY	ROUTE	KILOMETER POST TOTAL PROJECT	SHEET No.	TOTAL SHEETS
10	SJ	4	8.7/R11.1	27	171

Caroline Reyes 3/3/09
REGISTERED CIVIL ENGINEER DATE

5-18-09
PLANS APPROVAL DATE

REGISTERED PROFESSIONAL ENGINEER CAROLINE REYES No. 66004 Exp. 06-30-10 CIVIL STATE OF CALIFORNIA

THE STATE OF CALIFORNIA OR ITS OFFICERS OR AGENTS SHALL NOT BE RESPONSIBLE FOR THE ACCURACY OR COMPLETENESS OF ELECTRONIC COPIES OF THIS PLAN SHEET.

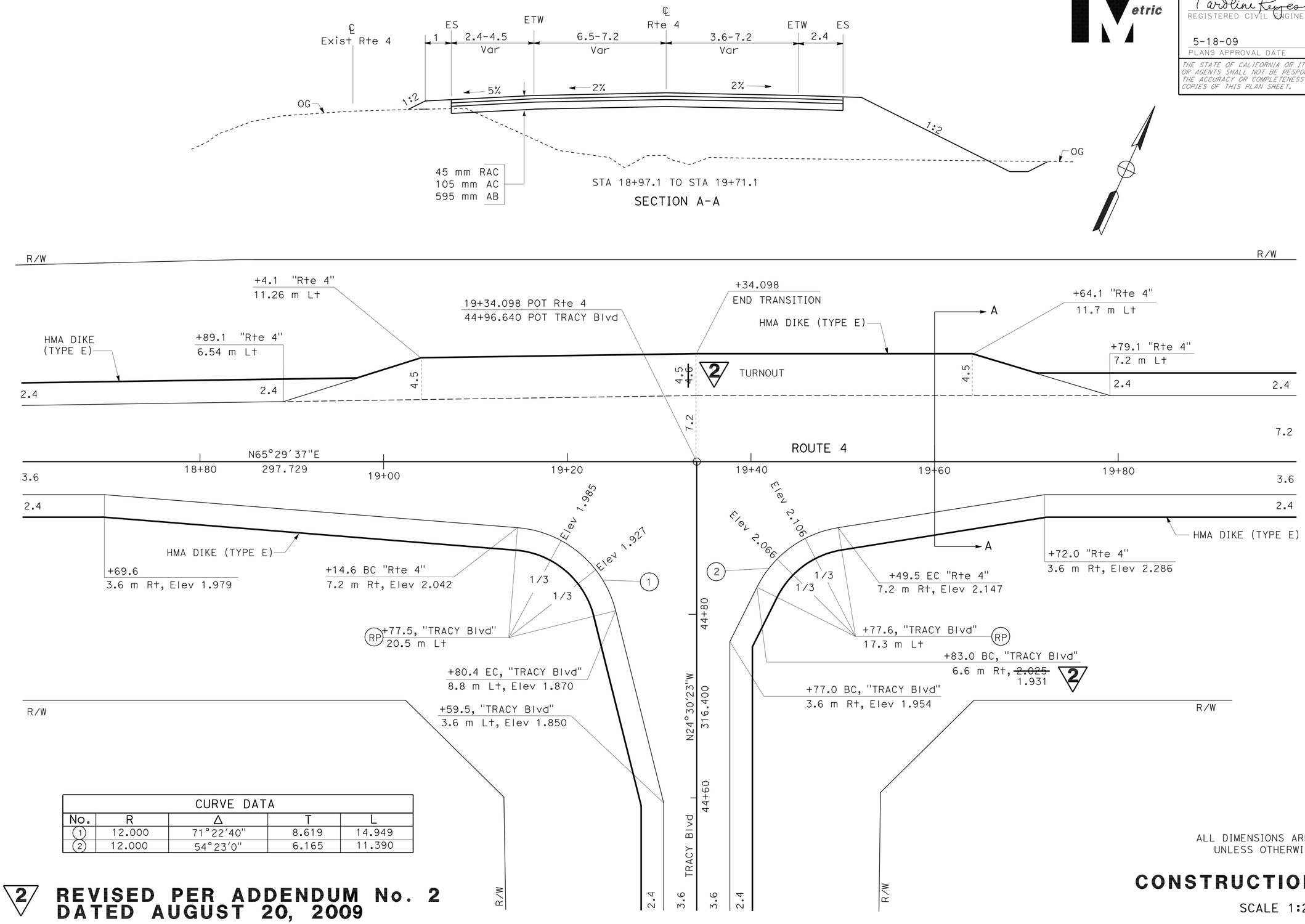

CURVE DATA				
No.	R	Δ	T	L
1	12.000	71°22'40"	8.619	14.949
2	12.000	54°23'0"	6.165	11.390

ALL DIMENSIONS ARE IN METERS UNLESS OTHERWISE SHOWN

CONSTRUCTION DETAILS

SCALE 1:200 **C-3**

2 **REVISED PER ADDENDUM No. 2 DATED AUGUST 20, 2009**

STATE OF CALIFORNIA - DEPARTMENT OF TRANSPORTATION
Caltrans DESIGN

FUNCTIONAL SUPERVISOR: PAUL ELLIOTT
CALCULATED-DESIGNED BY: SAURAB JAYANT
CHECKED BY: CAROLINE REYES
REVISED BY: SJ
DATE REVISED: 3/3/09

LAST REVISION 00-00-00
DATE PLOTTED => 17-AUG-2009
TIME PLOTTED => 10:59

Dist	COUNTY	ROUTE	KILOMETER POST TOTAL PROJECT	SHEET No.	TOTAL SHEETS
10	SJ	4	8.7/R11.1	28	171

Caroline Reyes 3/3/09
REGISTERED CIVIL ENGINEER DATE

5-18-09
PLANS APPROVAL DATE

REGISTERED PROFESSIONAL ENGINEER CAROLINE REYES No. 66004 Exp. 06-30-10 CIVIL STATE OF CALIFORNIA

THE STATE OF CALIFORNIA OR ITS OFFICERS OR AGENTS SHALL NOT BE RESPONSIBLE FOR THE ACCURACY OR COMPLETENESS OF ELECTRONIC COPIES OF THIS PLAN SHEET.

NOTE: FOR COMPLETE R/W DATA, SEE R/W RECORD MAPS AT DISTRICT OFFICE.

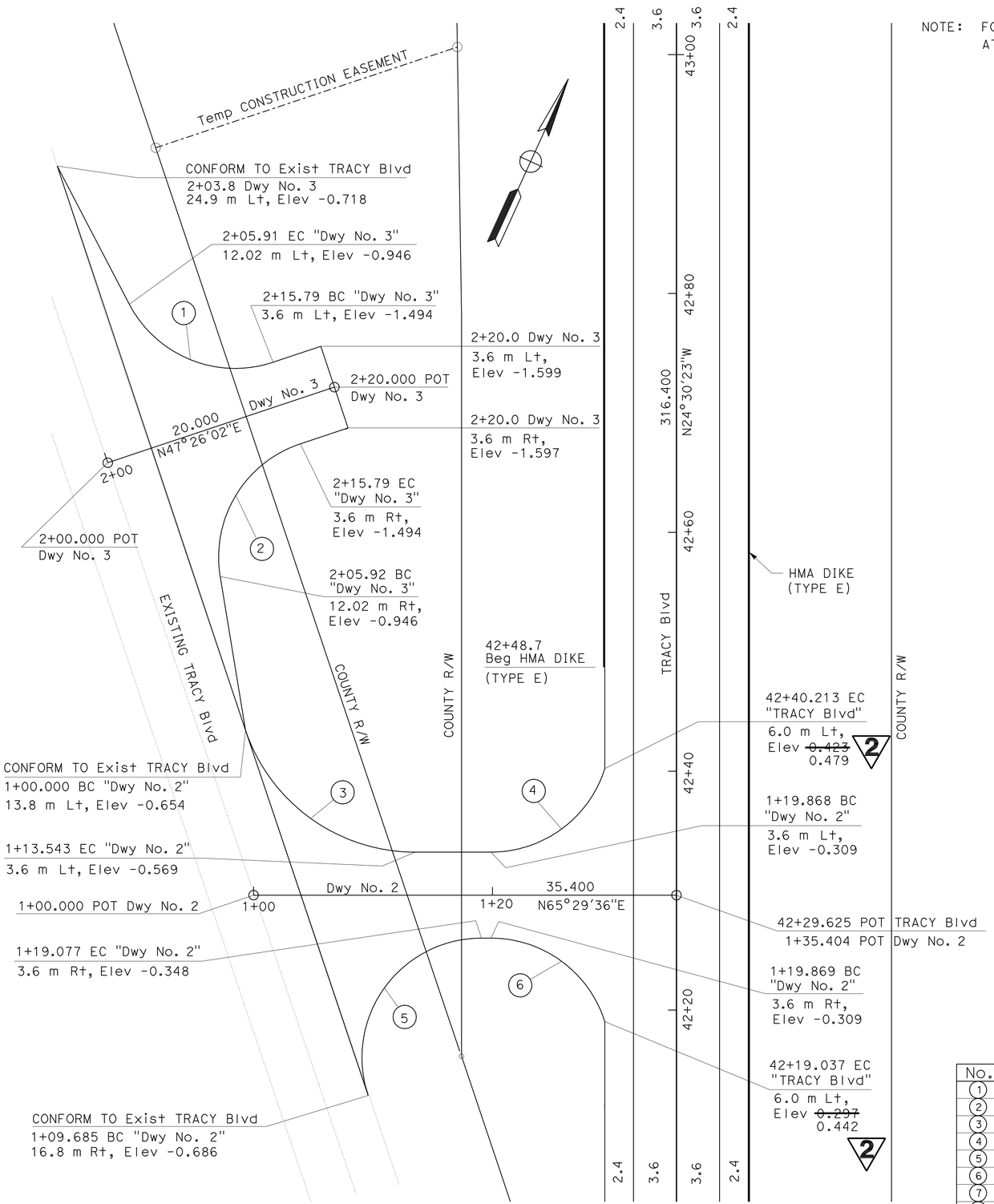

DRIVEWAY No. 2 AND 3

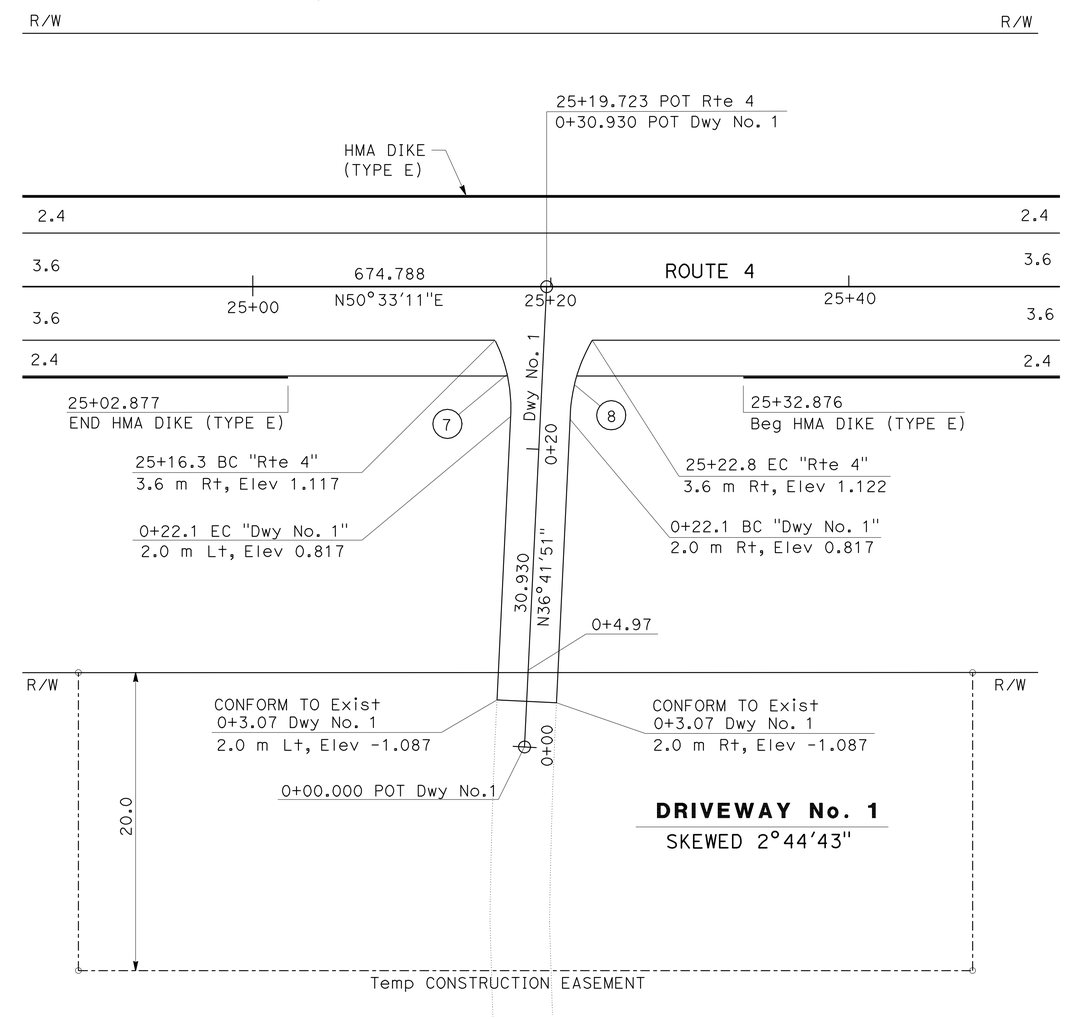

DRIVEWAY No. 1
SKEWED 2°44'43"

CURVE DATA

No.	R	Δ	T	L
1	10.000	80°54'35"	8.527	14.121
2	10.000	80°54'35"	8.527	14.121
3	15.000	71°20'8"	10.766	18.676
4	10.000	72°28'14"	7.328	12.649
5	10.000	108°32'30"	13.902	18.944
6	10.000	72°28'14"	7.328	12.649
7	10.194	29°29'55"	2.684	5.248
8	10.749	29°43'12"	2.852	5.576

ALL DIMENSIONS ARE IN METERS
UNLESS OTHERWISE SHOWN

2 REVISED PER ADDENDUM No. 2 DATED AUGUST 20, 2009

CONSTRUCTION DETAILS

SCALE 1:200

C-4

REVISED BY	DATE REVISED
SJ	3/3/09

SAURABH JAYANT
CAROLINE REYES
CALCULATED-DESIGNED BY
CHECKED BY
FUNCTIONAL SUPERVISOR
PAUL ELLIOTT

STATE OF CALIFORNIA - DEPARTMENT OF TRANSPORTATION
Caltrans
DESIGN

LAST REVISION 00-00-00
DATE PLOTTED => 17-AUG-2009
TIME PLOTTED => 0:59

Dist	COUNTY	ROUTE	KILOMETER POST TOTAL PROJECT	SHEET No.	TOTAL SHEETS
10	SJ	4	8.7/R11.1	29	171

Caroline Reyes 3/3/09
REGISTERED CIVIL ENGINEER DATE

5-18-09
PLANS APPROVAL DATE

REGISTERED PROFESSIONAL ENGINEER
CAROLINE REYES
No. 66004
Exp. 06-30-10
CIVIL
STATE OF CALIFORNIA

THE STATE OF CALIFORNIA OR ITS OFFICERS OR AGENTS SHALL NOT BE RESPONSIBLE FOR THE ACCURACY OR COMPLETENESS OF ELECTRONIC COPIES OF THIS PLAN SHEET.

Caltrans Metric

2

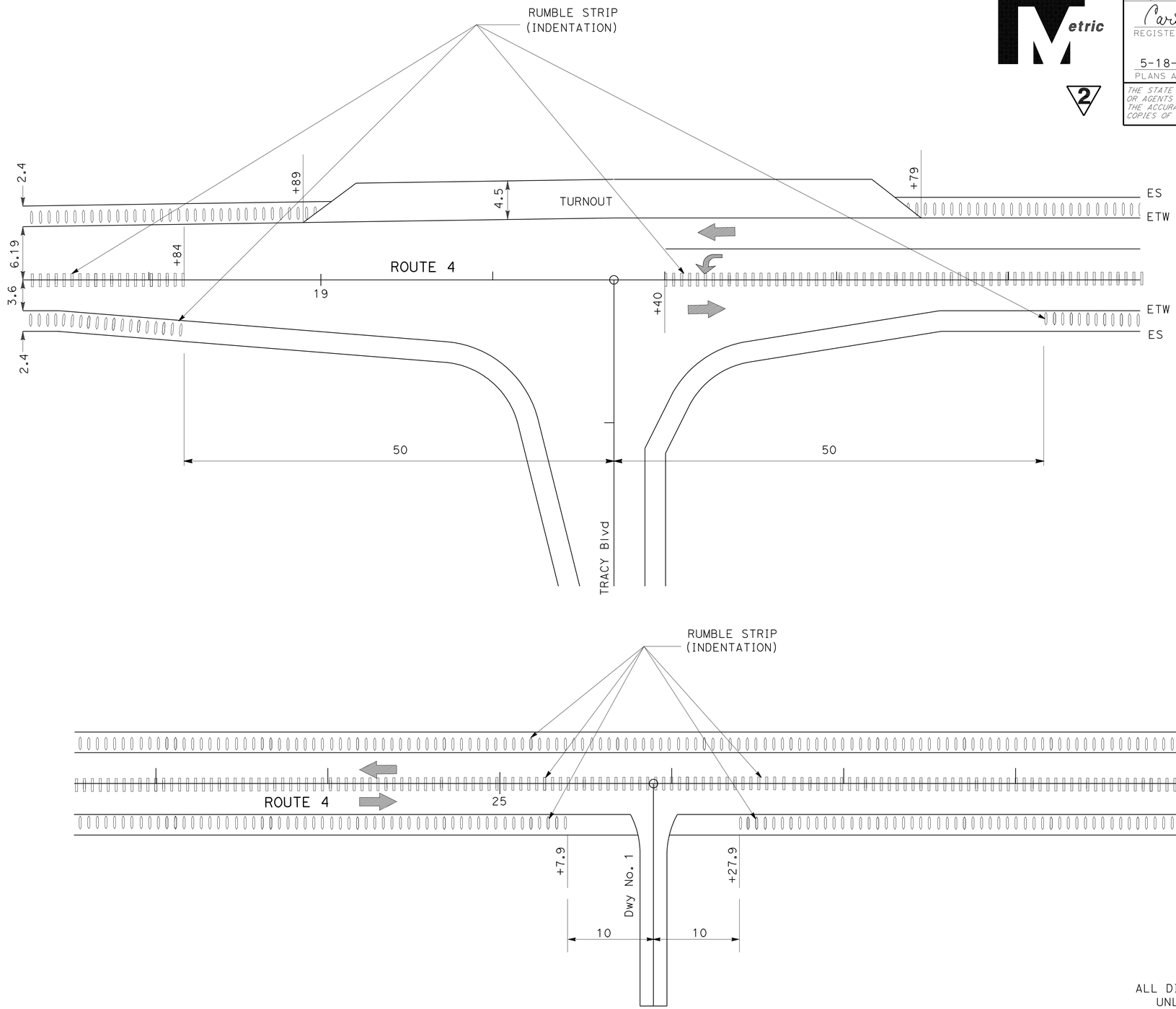

ALL DIMENSIONS ARE IN METERS
UNLESS OTHERWISE SHOWN

RUMBLE STRIP LIMITS

CONSTRUCTION DETAILS

NO SCALE

C-5

2 **REVISED PER ADDENDUM No. 2 DATED AUGUST 20, 2009**

STATE OF CALIFORNIA - DEPARTMENT OF TRANSPORTATION
Caltrans DESIGN

FUNCTIONAL SUPERVISOR: PAUL ELLIOTT
CALCULATED-DESIGNED BY: SAURAB JAYANT
CHECKED BY: CAROLINE REYES
REVISED BY: SJ
DATE REVISED: 3/3/09

LAST REVISION 00-00-00
DATE PLOTTED => 17-AUG-2009
TIME PLOTTED => 11:00

Dist	COUNTY	ROUTE	KILOMETER POST TOTAL PROJECT	SHEET No.	TOTAL SHEETS
10	SJ	4	8.7/R11.1	32	171

Caroline Reyes 3/3/09
REGISTERED CIVIL ENGINEER DATE

5-18-09
PLANS APPROVAL DATE

REGISTERED PROFESSIONAL ENGINEER CAROLINE REYES No. 66004 Exp. 06-30-10 CIVIL STATE OF CALIFORNIA

THE STATE OF CALIFORNIA OR ITS OFFICERS OR AGENTS SHALL NOT BE RESPONSIBLE FOR THE ACCURACY OR COMPLETENESS OF ELECTRONIC COPIES OF THIS PLAN SHEET.

Caltrans Metric

2

NOTE

TEMPORARY FIBER ROLLS AND TEMPORARY FENCE (TYPE ESA) TO BE PLACED ADJACENT TO TRAPPER SLOUGH ALONG EXISTING SHOULDER THROUGHOUT PROJECT LIMITS.

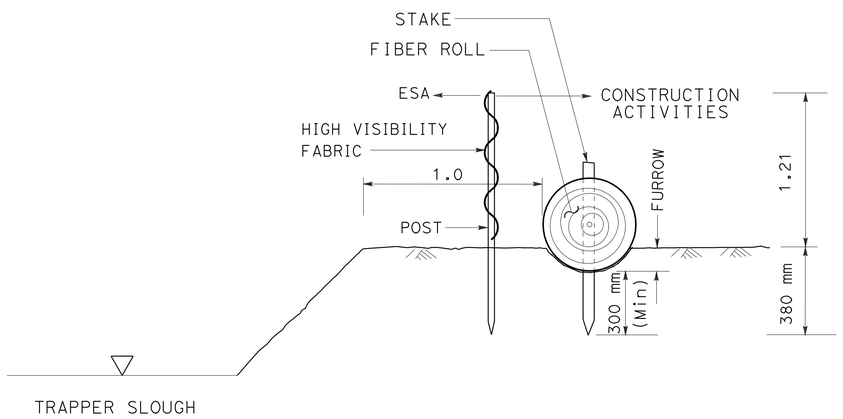

SECTION

TEMPORARY FIBER ROLL (TYPE 1)

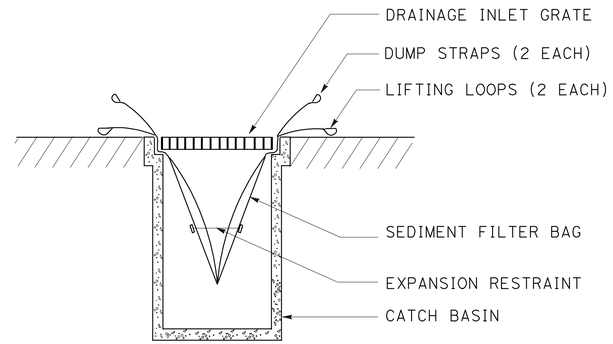

SECTION A-A

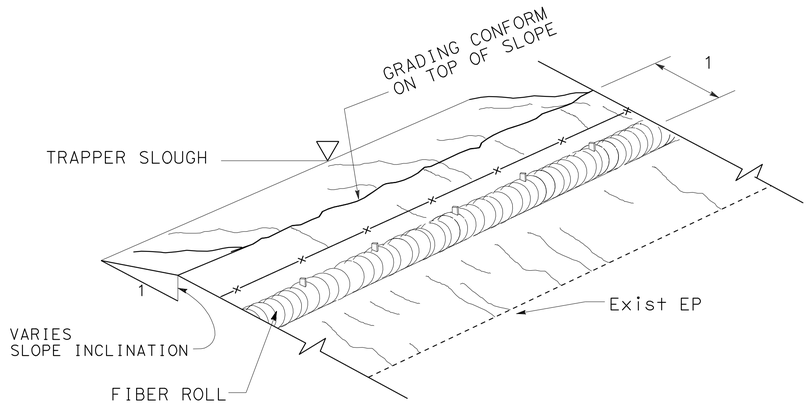

PERSPECTIVE

TEMPORARY FIBER ROLL (TYPE 1)

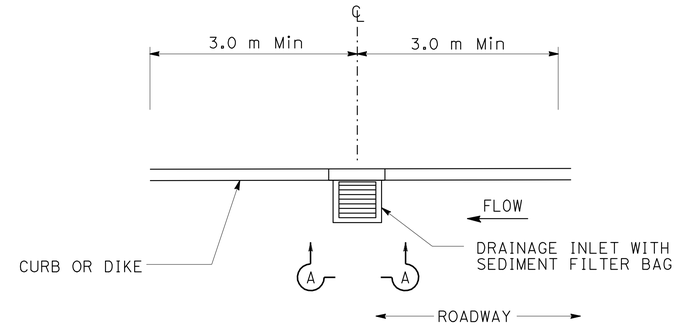

PLAN

TEMPORARY DRAINAGE INLET PROTECTION (TYPE 5) (SEDIMENT FILTER BAG)

ALL DIMENSIONS ARE IN METERS UNLESS OTHERWISE SHOWN

TEMPORARY WATER POLLUTION CONTROL DETAILS

2 **REVISED PER ADDENDUM No. 2 DATED AUGUST 20, 2009**

NO SCALE

WPCD-1

STATE OF CALIFORNIA - DEPARTMENT OF TRANSPORTATION
Caltrans DESIGN

FUNCTIONAL SUPERVISOR: PAUL ELLIOTT
CALCULATED-DESIGNED BY: SAURABH JAYANT
CHECKED BY: CAROLINE REYES
REVISED BY: SJ
DATE REVISED: 12/29/08

LAST REVISION 00-00-00 | DATE PLOTTED => 17-AUG-2009 | TIME PLOTTED => 11:00

Dist	COUNTY	ROUTE	KILOMETER POST TOTAL PROJECT	SHEET No.	TOTAL SHEETS
10	SJ	4	8.7/R11.1	48	171

Caroline Reyes 3/3/09
REGISTERED CIVIL ENGINEER DATE

5-18-09
PLANS APPROVAL DATE

REGISTERED PROFESSIONAL ENGINEER CAROLINE REYES No. 66004 Exp. 06-30-10 CIVIL STATE OF CALIFORNIA

THE STATE OF CALIFORNIA OR ITS OFFICERS OR AGENTS SHALL NOT BE RESPONSIBLE FOR THE ACCURACY OR COMPLETENESS OF ELECTRONIC COPIES OF THIS PLAN SHEET.

Caltrans Metric

2

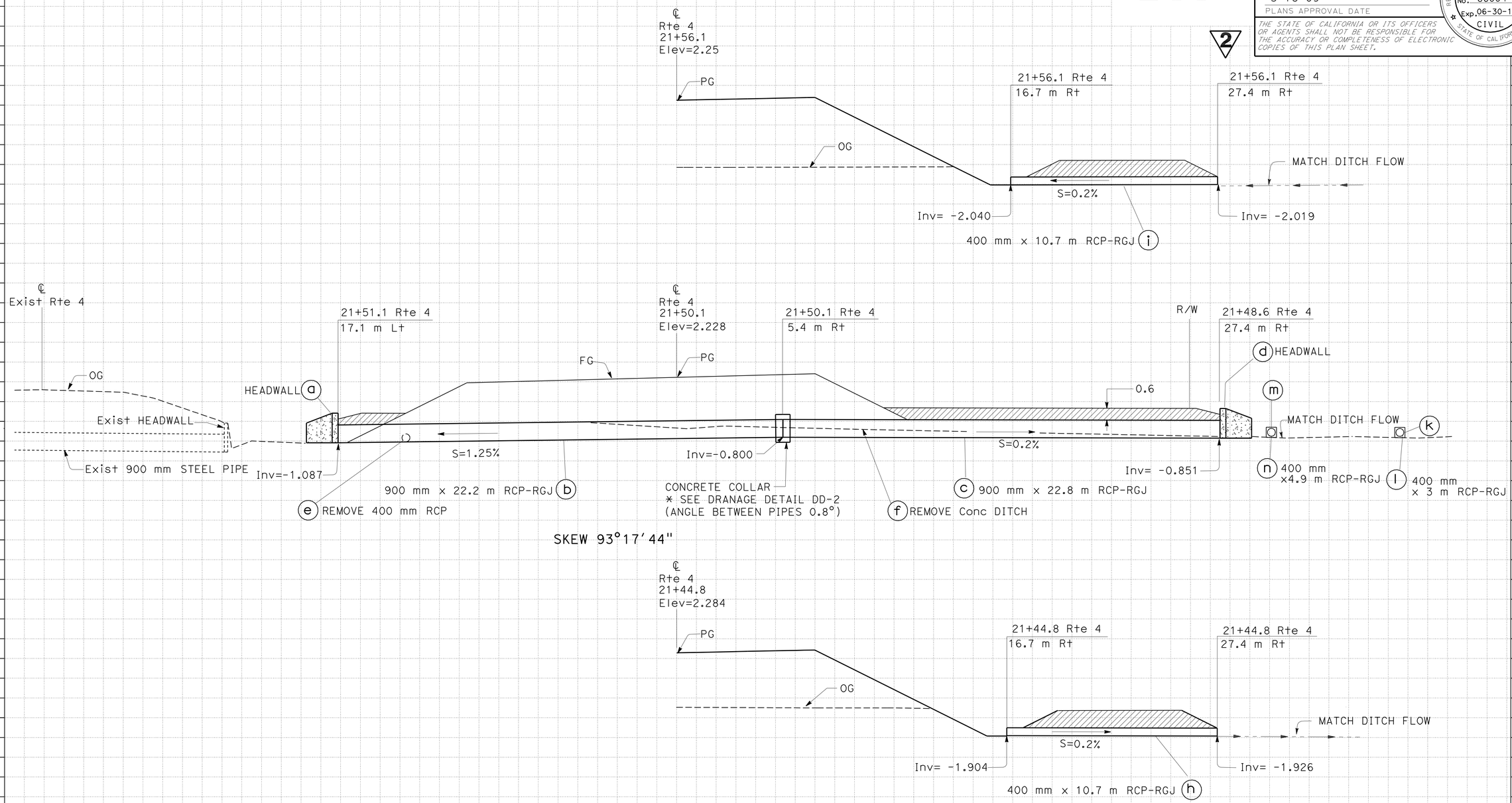

DRAINAGE SYSTEM No. 15

SEE DRAINAGE DETAILS FOR MORE DRAINAGE INFORMATION

ALL DIMENSIONS ARE IN METERS
UNLESS OTHERWISE SHOWN

2 **REVISED PER ADDENDUM No. 2 DATED AUGUST 20, 2009**

DRAINAGE PROFILES

SCALE: Horiz 1:100
Vert 1:100

DP-8

REVISED BY	DATE REVISED
YH	3/5/09

YOON HAHN
CAROLINE REYES
CALCULATED-DESIGNED BY
CHECKED BY
FUNCTIONAL SUPERVISOR
PAUL ELLIOTT

STATE OF CALIFORNIA - DEPARTMENT OF TRANSPORTATION
Caltrans
DESIGN

Station	
m^3 Exc	
m^3 Emb	

LAST REVISION 00-00-00
DATE PLOTTED => 17-AUG-2009
TIME PLOTTED => 11:00

Dist	COUNTY	ROUTE	KILOMETER POST TOTAL PROJECT	SHEET No.	TOTAL SHEETS
10	SJ	4	8.7/R11.1	63	171

Caroline Reyes 3/3/09
REGISTERED CIVIL ENGINEER DATE

5-18-09
PLANS APPROVAL DATE

REGISTERED PROFESSIONAL ENGINEER CAROLINE REYES No. 66004 Exp. 06-30-10 CIVIL STATE OF CALIFORNIA

THE STATE OF CALIFORNIA OR ITS OFFICERS OR AGENTS SHALL NOT BE RESPONSIBLE FOR THE ACCURACY OR COMPLETENESS OF ELECTRONIC COPIES OF THIS PLAN SHEET.

Caltrans Metric

2

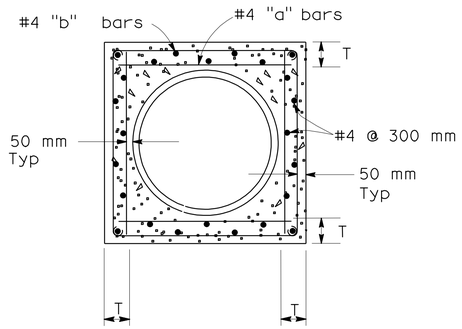

SECTION C-C

NOTES:

1. WHERE PIPE OF DIFFERENT DIAMENTERS ARE JOINED WITH A CONCRETE COLLAR. "L" SHALL BE THOSE OF THE LARGER PIPE. D=D1 OR D2 WHICHEVER IS GREATER.
2. JOIN PIPES AT INVERTS WHERE THE SLOPE OF THE DOWNSTREAM PIPE IS GREATER THAN THE SLOPE OF THE UPSTREAM PIPE. JOIN PIPES AT SOFFIT WHERE THE SLOPE OF THE UPSTREAM PIPE IS GREATER THAN THE SLOPE OF THE DOWNSTREAM PIPE.
3. "B" BARS TO BE LOCKED AROUND LONGITUDUNAL REINFORCEMENT. ROTATE BARS AS NECESSARY.

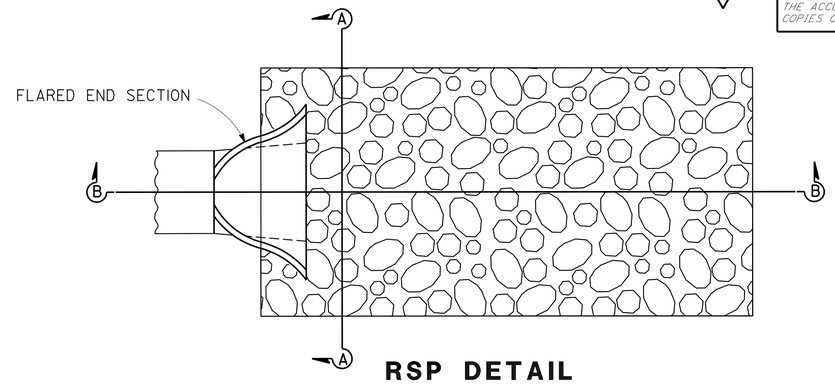

RSP DETAIL

D	L	T	"a"	"b"
mm	m	mm	mm	mm
450	0.30	127	@300	
600	0.30	152	@300	
900	0.36	254	@300	

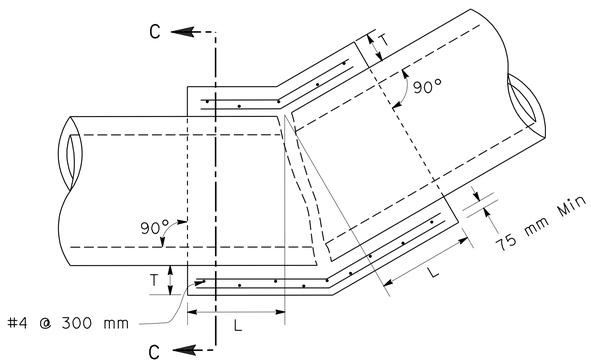

TYPICAL CONCRETE COLLAR

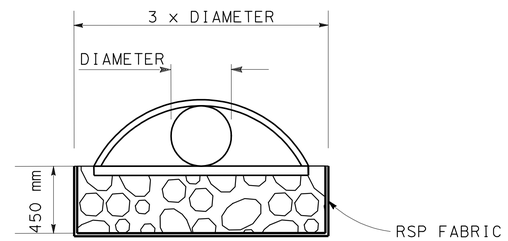

SECTION A-A

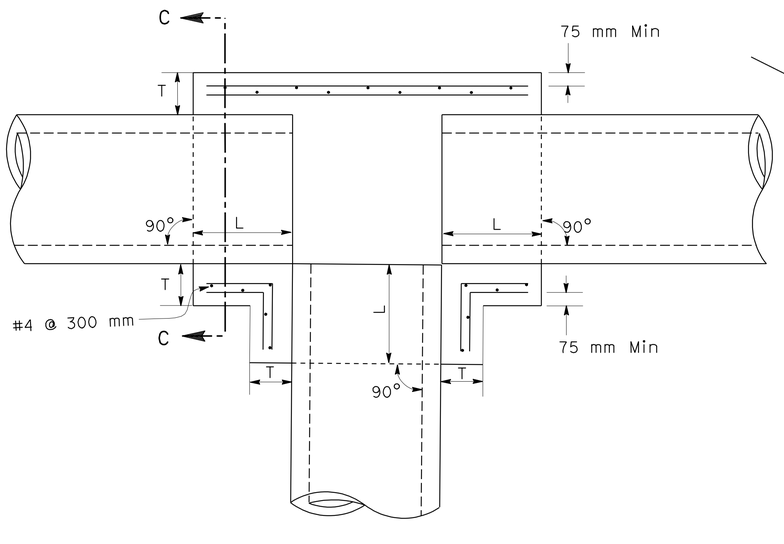

T BEND CONCRETE COLLAR

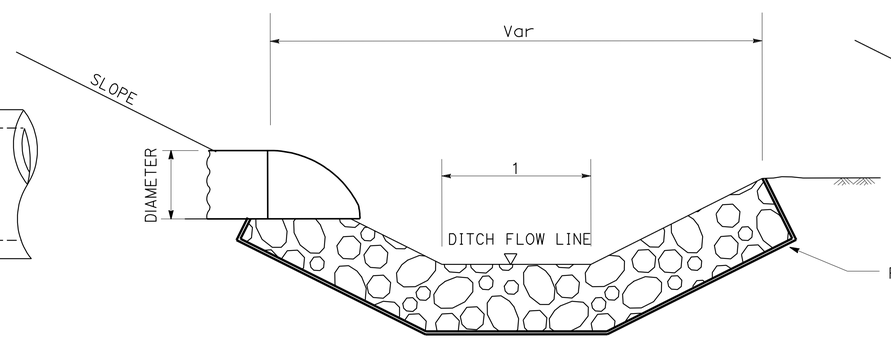

SECTION B-B
TRAPEZOID DITCH

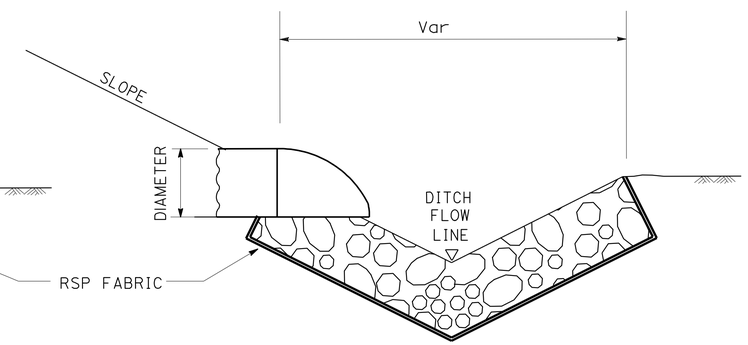

SECTION B-B
V DITCH

ALL DIMENSIONS ARE IN METERS UNLESS OTHERWISE SHOWN

REVISED PER ADDENDUM No. 2 DATED AUGUST 20, 2009

DRAINAGE DETAILS

NO SCALE

DD-2

REVISED BY	DATE REVISED
YH	3/5/09

YOON HAHN — CALCULATED-DESIGNED BY
CAROLINE REYES — CHECKED BY
FUNCTIONAL SUPERVISOR: PAUL ELLIOTT

STATE OF CALIFORNIA - DEPARTMENT OF TRANSPORTATION
Caltrans DESIGN

LAST REVISION 00-00-00 | DATE PLOTTED => 17-AUG-2009 | TIME PLOTTED => 11:00

Dist	COUNTY	ROUTE	KILOMETER POST TOTAL PROJECT	SHEET No.	TOTAL SHEETS
10	SJ	4	8.7/R11.1	67	171

Caroline Reyes 3/3/09
REGISTERED CIVIL ENGINEER DATE

PLANS APPROVAL DATE

REGISTERED PROFESSIONAL ENGINEER CAROLINE REYES No. 66004 Exp. 06-30-10 CIVIL STATE OF CALIFORNIA

THE STATE OF CALIFORNIA OR ITS OFFICERS OR AGENTS SHALL NOT BE RESPONSIBLE FOR THE ACCURACY OR COMPLETENESS OF ELECTRONIC COPIES OF THIS PLAN SHEET.

Caltrans Metric

2

NOTE: FOR COMPLETE R/W DATA, SEE R/W RECORD MAPS AT DISTRICT OFFICE.

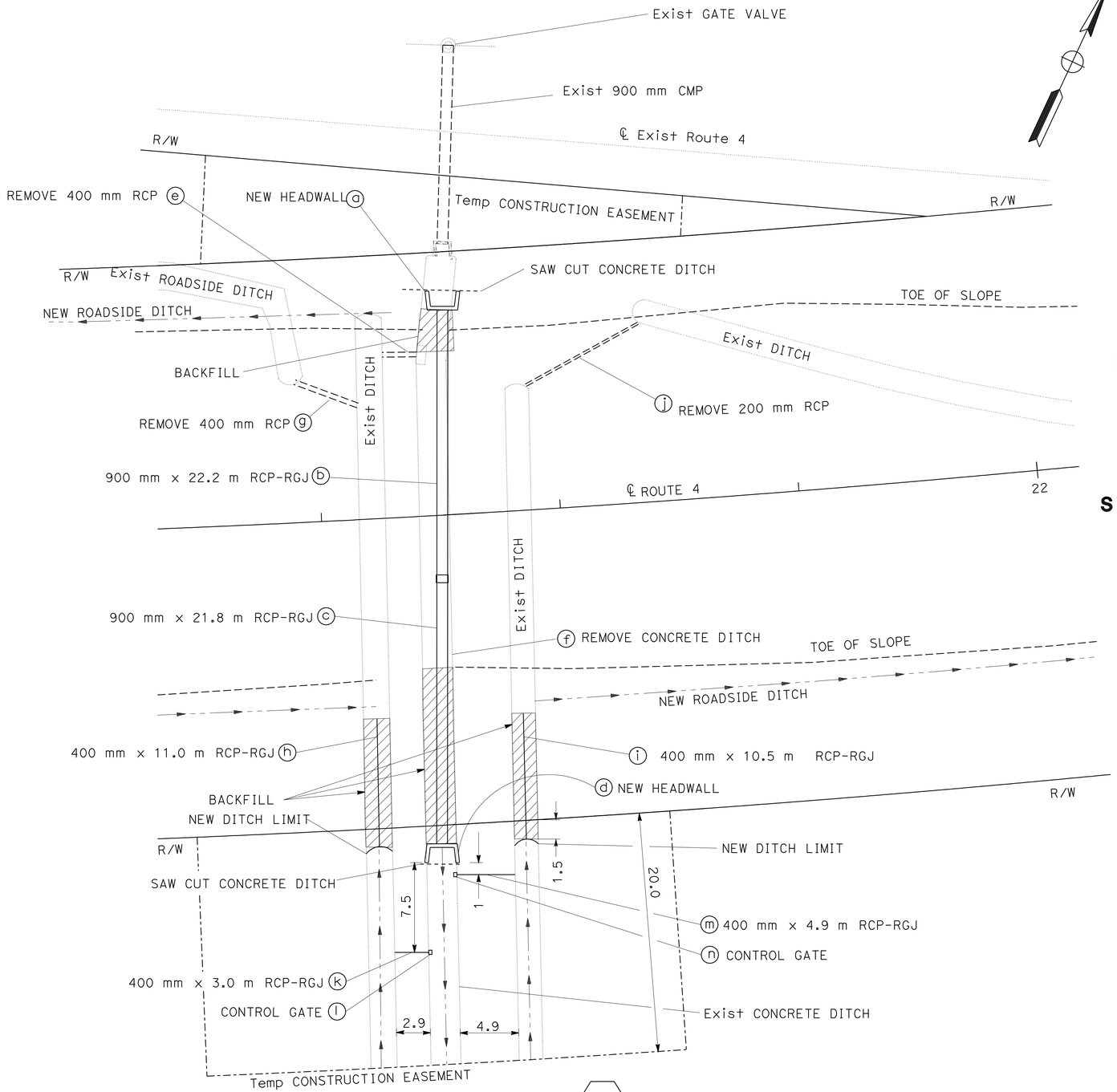

DRAINAGE SYSTEM No. 15

FOR MORE INFORMATION, SEE DRAINAGE PROFILE SHEET DP-8

SCALE 1:200

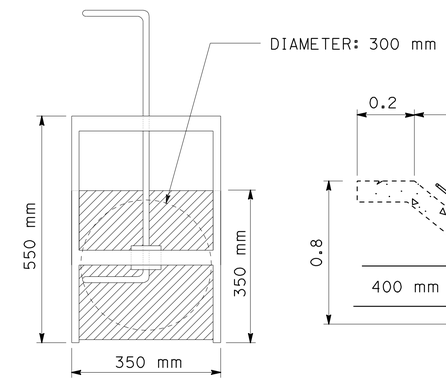

STEEL CONTROL GATE

NO SCALE

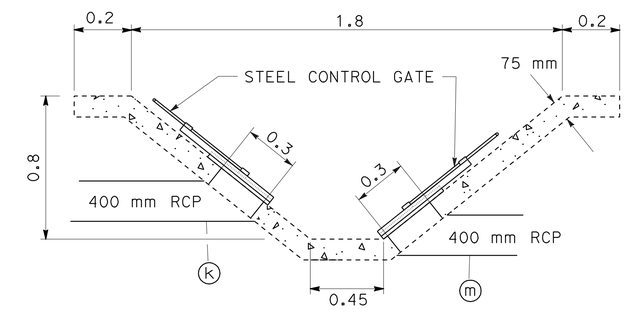

Exist CONCRETE DITCH X-SECTION

NO SCALE

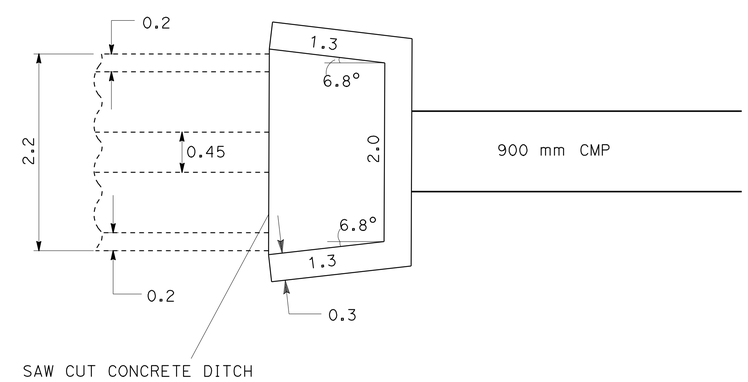

HEADWALL CONNECTION

NO SCALE

ALL DIMENSIONS ARE IN METERS UNLESS OTHERWISE SHOWN

DRAINAGE DETAILS

SCALE AS SHOWN

REVISED PER ADDENDUM No. 2 DATED AUGUST 20, 2009

DD-6

REVISED BY	DATE REVISED
YH	3/5/09

CALCULATED-DESIGNED BY: YOON HAHN
CHECKED BY: CAROLINE REYES
FUNCTIONAL SUPERVISOR: PAUL ELLIOTT

STATE OF CALIFORNIA - DEPARTMENT OF TRANSPORTATION
Caltrans DESIGN

LAST REVISION 00-00-00
DATE PLOTTED => 17-AUG-2009
TIME PLOTTED => 11:01

Dist	COUNTY	ROUTE	KILOMETER POST TOTAL PROJECT	SHEET No.	TOTAL SHEETS
10	SJ	4	8.7/R11.1	70	171

Caroline Reyes 3/3/09
REGISTERED CIVIL ENGINEER DATE

5-18-09
PLANS APPROVAL DATE

REGISTERED PROFESSIONAL ENGINEER CAROLINE REYES No. 66004 Exp. 06-30-10 CIVIL STATE OF CALIFORNIA

THE STATE OF CALIFORNIA OR ITS OFFICERS OR AGENTS SHALL NOT BE RESPONSIBLE FOR THE ACCURACY OR COMPLETENESS OF ELECTRONIC COPIES OF THIS PLAN SHEET.

Caltrans Metric

ALLOWABLE PIPE MATERIAL FOR APDD AND AFES

DESIGNATION	RCP	CSP								PLASTIC	
	SIZE	SIZE	THICKNESS (Min)	SIZE	THICKNESS (Min)	CORRUGATIONS	BITUMINOUS COATING	BITUMINOUS COATING AND PAVED INVERT	ALUMINIZED	SIZE	SMOOTH INTERIOR
	mm	mm	mm	mm	mm	mm				mm	
450 mm APDD	450	450	3.4	450	2.7 *	68 x 13	YES	YES	YES	450	**

NOTES:
1. AFES SHALL NOT BE PLASTIC.
2. * - EITHER HELICAL OR ANNULAR CORRUGATIONS ARE ALLOWABLE
3. ** - PLASTIC PIPE MAY BE CORRUGATED UNLESS OTHERWISE NOTED IN THE PLANS.
4. (N) - NOT A SEPARATE PAY ITEM, FOR INFORMATION ONLY.
5. *** - PART OF IMPORTED BORROW, NOT A SEPARATE PAY ITEM.

ABBREVIATION

CFES - CONCRETE FLARED END SECTION
RGJ - RUBBER GASKET JOINT
APDD - ALTERNATIVE PIPE DOWN DRAIN

DRAINAGE ITEMS

DRAINAGE SYSTEM No. ⬡	DRAINAGE UNIT No. ○	DRAINAGE INLET (N) TYPE	DRAINAGE INLET DESIGN H (N) m	MINOR CONCRETE (MINOR STRUCTURE) m^3	FRAME & GRATE (TYPE 600-12X) (N) EA	Misc IRON AND STEEL kg	REMOVE IRRIGATION FACILITY EA	REMOVE CONCRETE (Misc) m^3	REMOVE CULVERT m	RSP (LIGHT, METHOD B) m^3	RSP FABRIC m^2	BACKFILL *** m^3	400 mm RCP-RGJ m	450 mm RCP-RGJ m	450 mm APDD m	450 mm CFES EA	450 mm AFES EA	600 mm RCP-RGJ m	600 mm CFES EA	900 mm RCP-RGJ m	CONTROL GATE EA	IRRIGATION SYSTEM EA	MAXIMUM COVER (N) m	DESCRIPTION	STATION	PLAN SHEET No.	DRAINAGE SYSTEM No. ⬡	DRAINAGE UNIT No. ○
1	a	G1	0.94	0.72	1	108																		DI, TYPE G1	11+36.4 Rte 4, 5.85 m Lt	D-1	1	a
	b													29.1									0.5	450 mm RCP-RGJ				b
	c	G1	1.18	0.84	1	108																		DI, TYPE G1	11+66.4 Rte 4, 5.53 m Lt			c
	d														5.0									450 mm APDD				d
	e																1							450 mm AFES	11+66.4 Rte 4, 10.4 m Lt			e
	f									1.2	7.2													ROCK SLOPE PROTECTION				f
	g													29.1									0.5	450 mm RCP-RGJ				g
	h	G1	0.94	0.71	1	108																		DI, TYPE G1	11+96.4 Rte 4, 5.55 m Lt			h
2	a									2.4	10.3													ROCK SLOPE PROTECTION		D-1	2	a
	b																		1					600 mm CFES	12+20 Rte 4, 12.23 m Lt			b
	c																	28.5					3.7	600 mm RCP-RGJ				c
	d																		1					600 mm CFES	12+20 Rte 4, 15.70 m Lt			d
	e									4.6	18.7													ROCK SLOPE PROTECTION				e
3	a								12.0															REMOVE EXISTING 400 mm RCP	11+60 Rte 4	D-1	3	a
	b											38.1	10.0										0.8	400 mm RCP-RGJ				b
4	a								3.0															REMOVE EXISTING 600 mm STEEL PIPE	13+71.1 Rte 4	D-2	4	a
	b						1											10.4						REMOVE IRRIGATION SYSTEM				b
	c																2	~~20.0~~					3.0	600 mm RCP-RGJ				c
	d																	~~15.5~~					1.3	600 mm RCP-RGJ				d
	e																	24.7				1		IRRIGATION SYSTEM	13+69.8 Rte 4, 36.2 m Rt			e
5	a	G1	1.50	1.02	1	108																		DI, TYPE G1	14+45.0 Rte 4, 5.55 m Lt	D-2	5	a
	b													29.1									1.1	450 mm RCP-RGJ				b
	c	G1	1.64	1.10	1	108																		DI, TYPE G1	14+75.5 Rte 4, 5.55 m Lt			c
	d													29.1									1.1	450 mm RCP-RGJ				d
	e	G1	1.50	1.02	1	108																		DI, TYPE G1	15+05.0 Rte 4, 5.55 m Lt			e
	f																	10.5					1.2	600 mm RCP-RGJ				f
	g	G1	1.66	1.11	1	108																		DI, TYPE G1	14+45.0 Rte 4, 5.55 m Rt			g
	h													29.1									1.2	450 mm RCP-RGJ				h
	i	G1	1.80	1.19	1	108																		DI, TYPE G1	14+75.5, Rte 4, 5.55 m Rt			i
	j													29.1									1.2	450 mm RCP-RGJ				j
	k	G1	1.66	1.11	1	108																		DI, TYPE G1	15+05.0 Rte 4, 5.55 m Rt			k
	l														7.0								1.3	450 mm APDD				l
	m																1							450 mm AFES	14+75.5 Rte 4, 12.4 m Rt			m
	n									3.0	13.4													ROCK SLOPE PROTECTION				n
																		2										
				8.82	9	972	1		15.0	11.2	49.6		10.0	174.6	12.0		2	~~74.5~~ 74.1	2			1		TOTAL				

2 REVISED PER ADDENDUM No. 2 DATED AUGUST 20, 2009

DRAINAGE QUANTITIES
DQ-1

REVISED BY	DATE REVISED
YH	3/7/09

YOON HAHN — CALCULATED-DESIGNED BY
CAROLINE REYES — CHECKED BY
PAUL ELLIOTT — FUNCTIONAL SUPERVISOR

STATE OF CALIFORNIA - DEPARTMENT OF TRANSPORTATION
Caltrans DESIGN

DATE PLOTTED => 17-AUG-2009
TIME PLOTTED => 11:01
LAST REVISION 00-00-00

Dist	COUNTY	ROUTE	KILOMETER POST TOTAL PROJECT	SHEET No.	TOTAL SHEETS
10	SJ	4	8.7/R11.1	77	171

Caroline Reyes 3/3/09
REGISTERED CIVIL ENGINEER DATE

5-18-09
PLANS APPROVAL DATE

REGISTERED PROFESSIONAL ENGINEER CAROLINE REYES No. 66004 Exp. 06-30-10 CIVIL STATE OF CALIFORNIA

THE STATE OF CALIFORNIA OR ITS OFFICERS OR AGENTS SHALL NOT BE RESPONSIBLE FOR THE ACCURACY OR COMPLETENESS OF ELECTRONIC COPIES OF THIS PLAN SHEET.

Caltrans Metric

2

NOTE: FOR COMPLETE R/W DATA, SEE R/W RECORD MAPS AT DISTRICT OFFICE.

UTILITY OWNERSHIP

—— fo —— —— —— EXISTING UNDERGROUND FIBER OPTIC (SPRINT)
——--t—— —— EXISTING UNDERGROUND TELEPHONE (AT&T)
——--T—— —— UNDERGROUND TELEPHONE (AT&T)
——--T—— ——--(OH) OVERHEAD TELEPHONE (AT&T)
——-e—— ——-(oh) EXISTING OVERHEAD ELECTRICAL (PG&E)
——-g——-—— EXISTING UNDERGROUND ABANDONED GAS LINE (PG&E)

ABBREVIATIONS

PG&E - PACIFIC GAS AND ELECTRIC
KV - KILO VOLT
AT&T - AMERICAN TELEPHONE AND TELEGRAPH

LEGEND

-·-·-·-·-·-·-·-·-·-·-·- Temp CONSTRUCTION EASEMENT

NOTES:

1. LOCATIONS OF UTILITY FACILITIES SHOWN ON THIS PLAN ARE APPROXIMATE AND SHALL BE VERIFIED BY THE CONTRACTOR PRIOR TO CONSTRUCTION.
2. ALL UTILITY FACILITIES SHOWN ARE EXISTING UNLESS OTHERWISE NOTED.
3. SBC FIBER OPTIC LINE TO REMAIN, & BE PROTECTED IN PLACE. SEE DRAINAGE PLANS, PROFILES, & DETAILS FOR CONSTRUCTION ACTIVITIES AT FIBER OPTIC LOCATIONS.

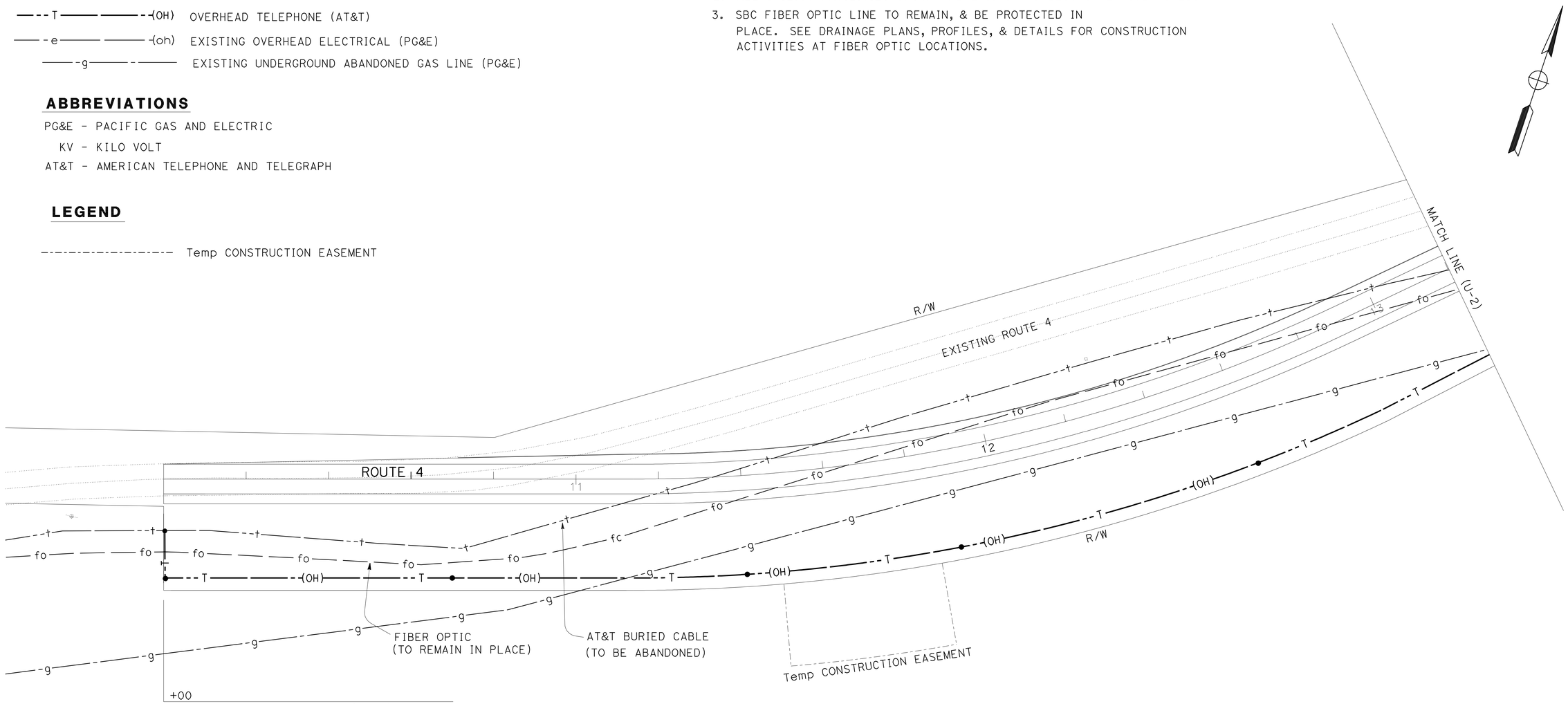

ALL DIMENSIONS ARE IN METERS UNLESS OTHERWISE SHOWN

2 **REVISED PER ADDENDUM No. 2 DATED AUGUST 20, 2009**

THIS PLAN ACCURATE FOR UTILITY WORK ONLY.

UTILITY PLAN

SCALE 1:500

U-1

STATE OF CALIFORNIA - DEPARTMENT OF TRANSPORTATION
Caltrans DESIGN

FUNCTIONAL SUPERVISOR: PAUL ELLIOTT
CALCULATED-DESIGNED BY: SAURABH JAYANT
CHECKED BY: CAROLINE REYES
REVISED BY: SJ
DATE REVISED: 3/3/09

LAST REVISION 00-00-00
DATE PLOTTED => 17-AUG-2009
TIME PLOTTED => 11:01

Dist	COUNTY	ROUTE	KILOMETER POST TOTAL PROJECT	SHEET No.	TOTAL SHEETS
10	SJ	4	8.7/R11.1	78	171

Caroline Reyes 3/3/09
REGISTERED CIVIL ENGINEER DATE

5-18-09
PLANS APPROVAL DATE

REGISTERED PROFESSIONAL ENGINEER
CAROLINE REYES
No. 66004
Exp. 06-30-10
CIVIL
STATE OF CALIFORNIA

THE STATE OF CALIFORNIA OR ITS OFFICERS OR AGENTS SHALL NOT BE RESPONSIBLE FOR THE ACCURACY OR COMPLETENESS OF ELECTRONIC COPIES OF THIS PLAN SHEET.

Caltrans Metric

2

NOTE: FOR COMPLETE R/W DATA, SEE R/W RECORD MAPS AT DISTRICT OFFICE.

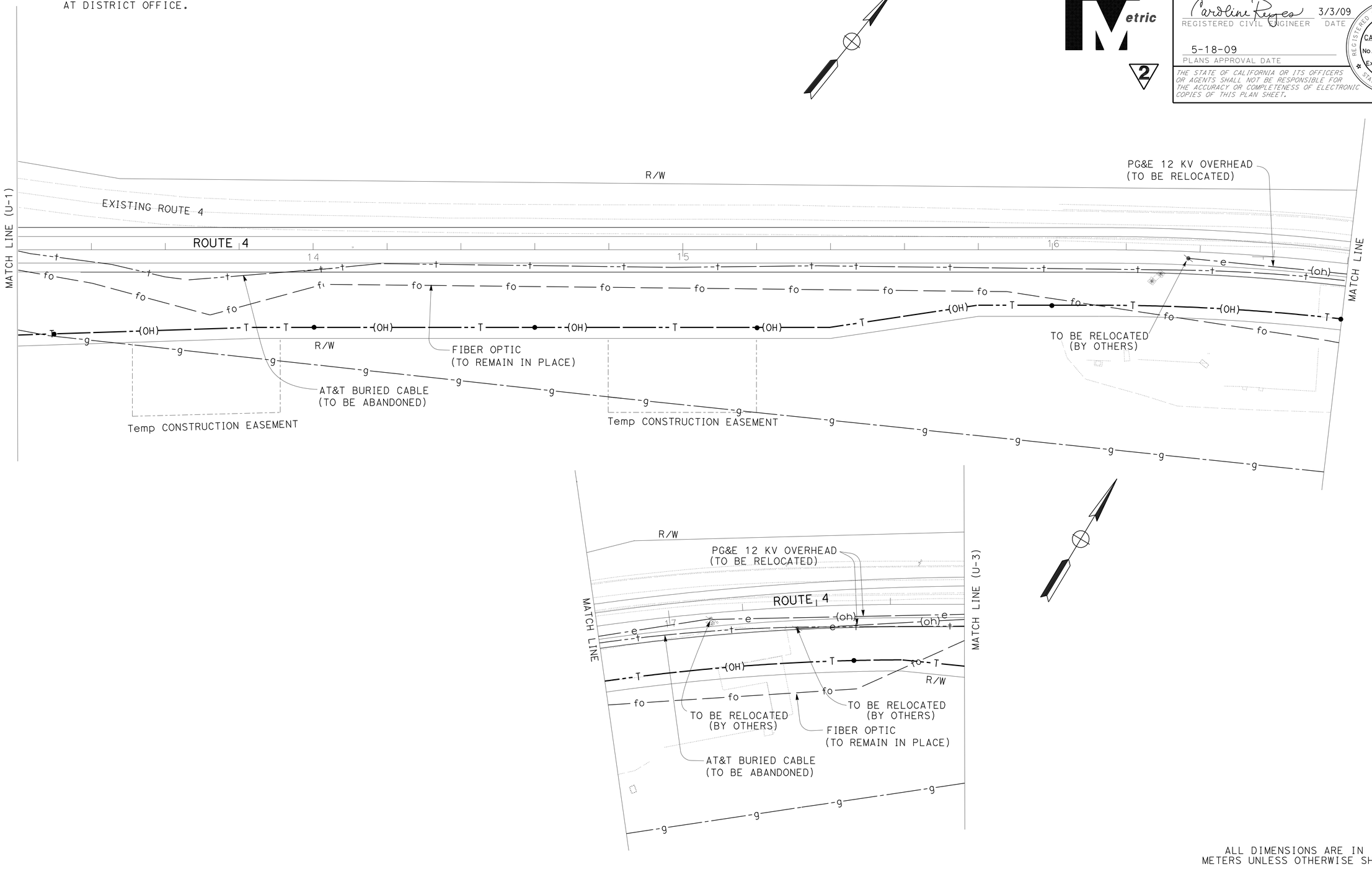

ALL DIMENSIONS ARE IN METERS UNLESS OTHERWISE SHOWN

2 **REVISED PER ADDENDUM No. 2 DATED AUGUST 20, 2009**

THIS PLAN ACCURATE FOR UTILITY WORK ONLY.

UTILITY PLAN

SCALE 1:500 **U-2**

STATE OF CALIFORNIA - DEPARTMENT OF TRANSPORTATION
Caltrans DESIGN

FUNCTIONAL SUPERVISOR: PAUL ELLIOTT
CALCULATED-DESIGNED BY: SAURABH JAYANT
CHECKED BY: CAROLINE REYES
REVISED BY: SJ
DATE REVISED: 3/3/09

LAST REVISION 00-00-00 DATE PLOTTED => 17-AUG-2009 TIME PLOTTED => 11:01

Dist	COUNTY	ROUTE	KILOMETER POST TOTAL PROJECT	SHEET No.	TOTAL SHEETS
10	SJ	4	8.7/R11.1	79	171

Caroline Reyes 3/3/09
REGISTERED CIVIL ENGINEER DATE

5-18-09
PLANS APPROVAL DATE

REGISTERED PROFESSIONAL ENGINEER
CAROLINE REYES
No. 66004
Exp. 06-30-10
CIVIL
STATE OF CALIFORNIA

THE STATE OF CALIFORNIA OR ITS OFFICERS OR AGENTS SHALL NOT BE RESPONSIBLE FOR THE ACCURACY OR COMPLETENESS OF ELECTRONIC COPIES OF THIS PLAN SHEET.

NOTE: FOR COMPLETE R/W DATA, SEE R/W RECORD MAPS AT DISTRICT OFFICE.

Caltrans Metric

2

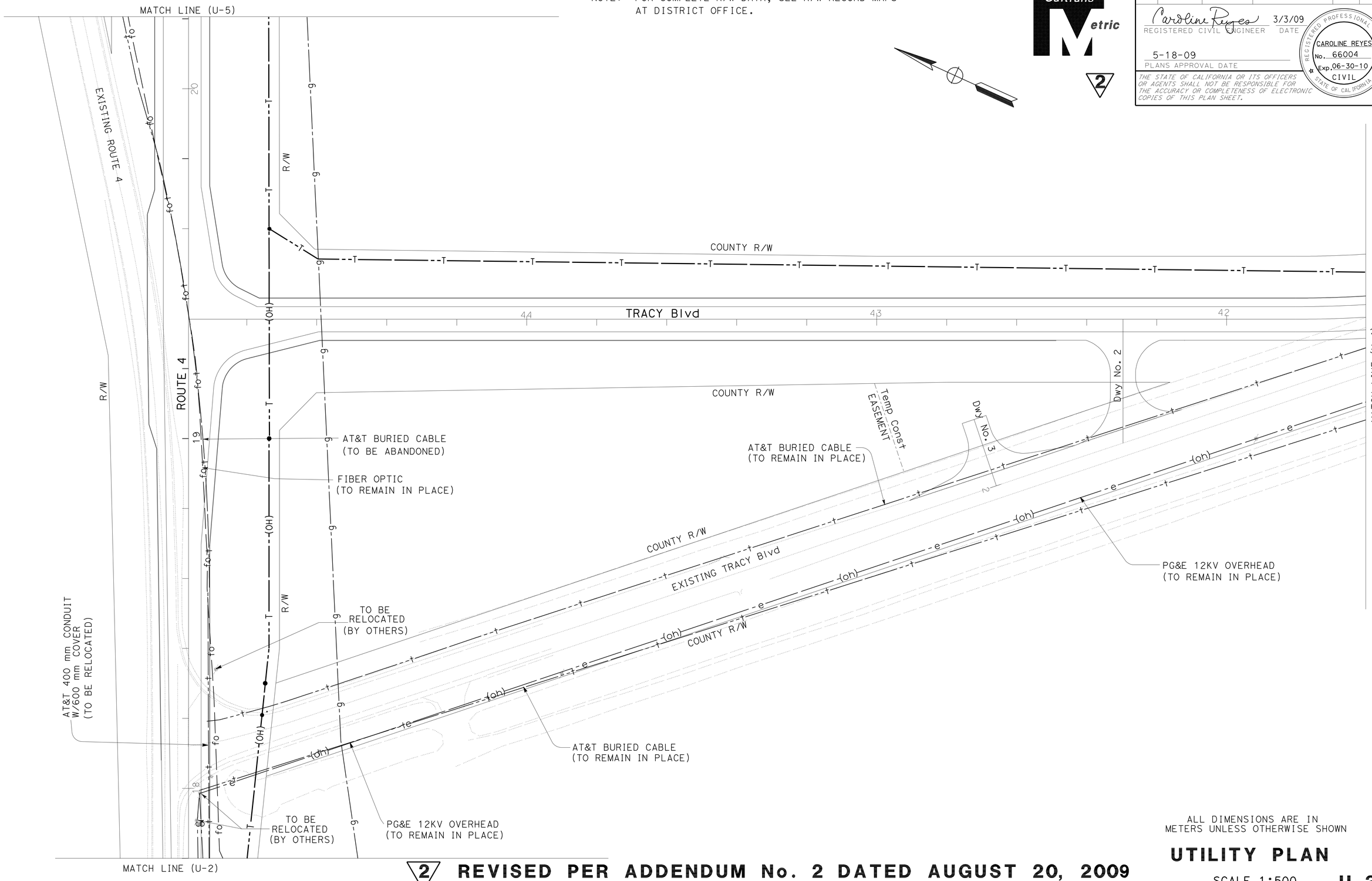

ALL DIMENSIONS ARE IN METERS UNLESS OTHERWISE SHOWN

UTILITY PLAN

SCALE 1:500

U-3

2 **REVISED PER ADDENDUM No. 2 DATED AUGUST 20, 2009**

THIS PLAN ACCURATE FOR UTILITY WORK ONLY.

STATE OF CALIFORNIA - DEPARTMENT OF TRANSPORTATION
Caltrans DESIGN

FUNCTIONAL SUPERVISOR: PAUL ELLIOTT
CALCULATED-DESIGNED BY: SAURABH JAYANT
CHECKED BY: CAROLINE REYES
REVISED BY: SJ
DATE REVISED: 3/3/09

LAST REVISION 00-00-00
DATE PLOTTED => 17-AUG-2009
TIME PLOTTED => 11:01

BORDER LAST REVISED 3/1/2007
RELATIVE BORDER SCALE IS IN MILLIMETERS 0 20 40 60 80
USERNAME => trstrk
DGN FILE => a0h04uka003.add
CU 06240
EA 0H04U1

Dist	COUNTY	ROUTE	KILOMETER POST TOTAL PROJECT	SHEET No.	TOTAL SHEETS
10	SJ	4	8.7/R11.1	80	171

Caroline Reyes 3/3/09
REGISTERED CIVIL ENGINEER DATE

5-18-09
PLANS APPROVAL DATE

REGISTERED PROFESSIONAL ENGINEER
CAROLINE REYES
No. 66004
Exp. 06-30-10
CIVIL
STATE OF CALIFORNIA

THE STATE OF CALIFORNIA OR ITS OFFICERS OR AGENTS SHALL NOT BE RESPONSIBLE FOR THE ACCURACY OR COMPLETENESS OF ELECTRONIC COPIES OF THIS PLAN SHEET.

Caltrans Metric

2

NOTE: FOR COMPLETE R/W DATA, SEE R/W RECORD MAPS AT DISTRICT OFFICE.

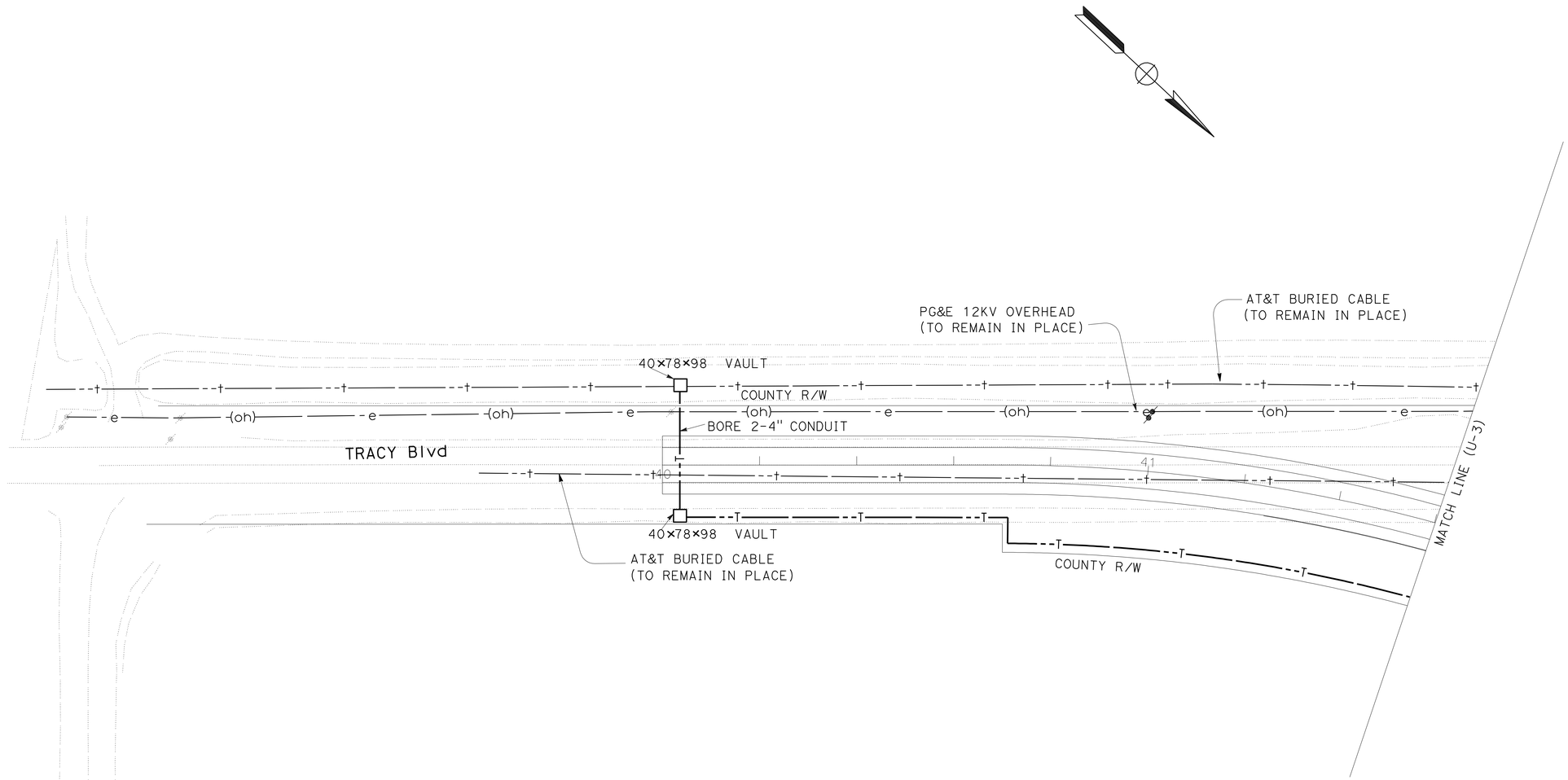

ALL DIMENSIONS ARE IN METERS UNLESS OTHERWISE SHOWN

2 **REVISED PER ADDENDUM No. 2 DATED AUGUST 20, 2009**

THIS PLAN ACCURATE FOR UTILITY WORK ONLY.

UTILITY PLAN

SCALE 1:500 **U-4**

REVISED BY	SJ
DATE REVISED	3/3/09
CALCULATED-DESIGNED BY	SAURABH JAYANT
CHECKED BY	CAROLINE REYES
FUNCTIONAL SUPERVISOR	PAUL ELLIOTT

STATE OF CALIFORNIA - DEPARTMENT OF TRANSPORTATION
Caltrans **DESIGN**

LAST REVISION 00-00-00 | DATE PLOTTED => 17-AUG-2009 | TIME PLOTTED => 11:01

Dist	COUNTY	ROUTE	KILOMETER POST TOTAL PROJECT	SHEET No.	TOTAL SHEETS
10	SJ	4	8.7/R11.1	81	171

Caroline Reyes 3/3/09
REGISTERED CIVIL ENGINEER DATE

5-18-09
PLANS APPROVAL DATE

REGISTERED PROFESSIONAL ENGINEER
CAROLINE REYES
No. 66004
Exp. 06-30-10
CIVIL
STATE OF CALIFORNIA

THE STATE OF CALIFORNIA OR ITS OFFICERS OR AGENTS SHALL NOT BE RESPONSIBLE FOR THE ACCURACY OR COMPLETENESS OF ELECTRONIC COPIES OF THIS PLAN SHEET.

Caltrans Metric

2

NOTE: FOR COMPLETE R/W DATA, SEE R/W RECORD MAPS AT DISTRICT OFFICE.

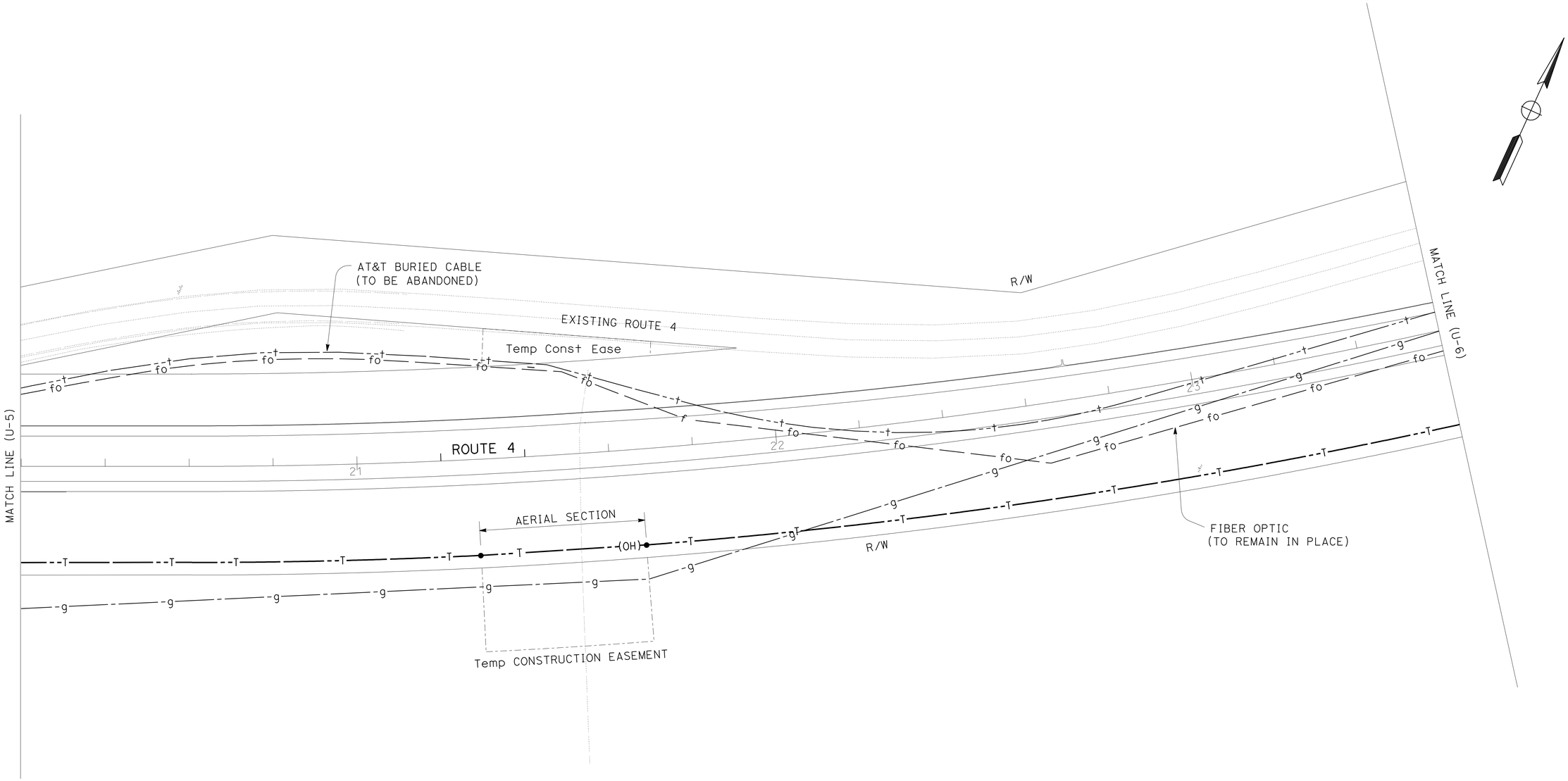

ALL DIMENSIONS ARE IN METERS UNLESS OTHERWISE SHOWN

2 **REVISED PER ADDENDUM No. 2 DATED AUGUST 20, 2009**

THIS PLAN ACCURATE FOR UTILITY WORK ONLY.

UTILITY PLAN

SCALE 1:500 **U-5**

REVISED BY	DATE REVISED
SJ	1/20/09

SAURABH JAYANT — CALCULATED-DESIGNED BY
CAROLINE REYES — CHECKED BY
PAUL ELLIOTT — FUNCTIONAL SUPERVISOR

STATE OF CALIFORNIA - DEPARTMENT OF TRANSPORTATION
Caltrans **DESIGN**

LAST REVISION 00-00-00 | DATE PLOTTED => 17-AUG-2009 | TIME PLOTTED => 11:02

Dist	COUNTY	ROUTE	KILOMETER POST TOTAL PROJECT	SHEET No.	TOTAL SHEETS
10	SJ	4	8.7/R11.1	82	171

Caroline Reyes 3/3/09
REGISTERED CIVIL ENGINEER DATE

5-18-09
PLANS APPROVAL DATE

REGISTERED PROFESSIONAL ENGINEER
CAROLINE REYES
No. 66004
Exp. 06-30-10
CIVIL
STATE OF CALIFORNIA

THE STATE OF CALIFORNIA OR ITS OFFICERS OR AGENTS SHALL NOT BE RESPONSIBLE FOR THE ACCURACY OR COMPLETENESS OF ELECTRONIC COPIES OF THIS PLAN SHEET.

Caltrans Metric

2

NOTE: FOR COMPLETE R/W DATA, SEE R/W RECORD MAPS AT DISTRICT OFFICE.

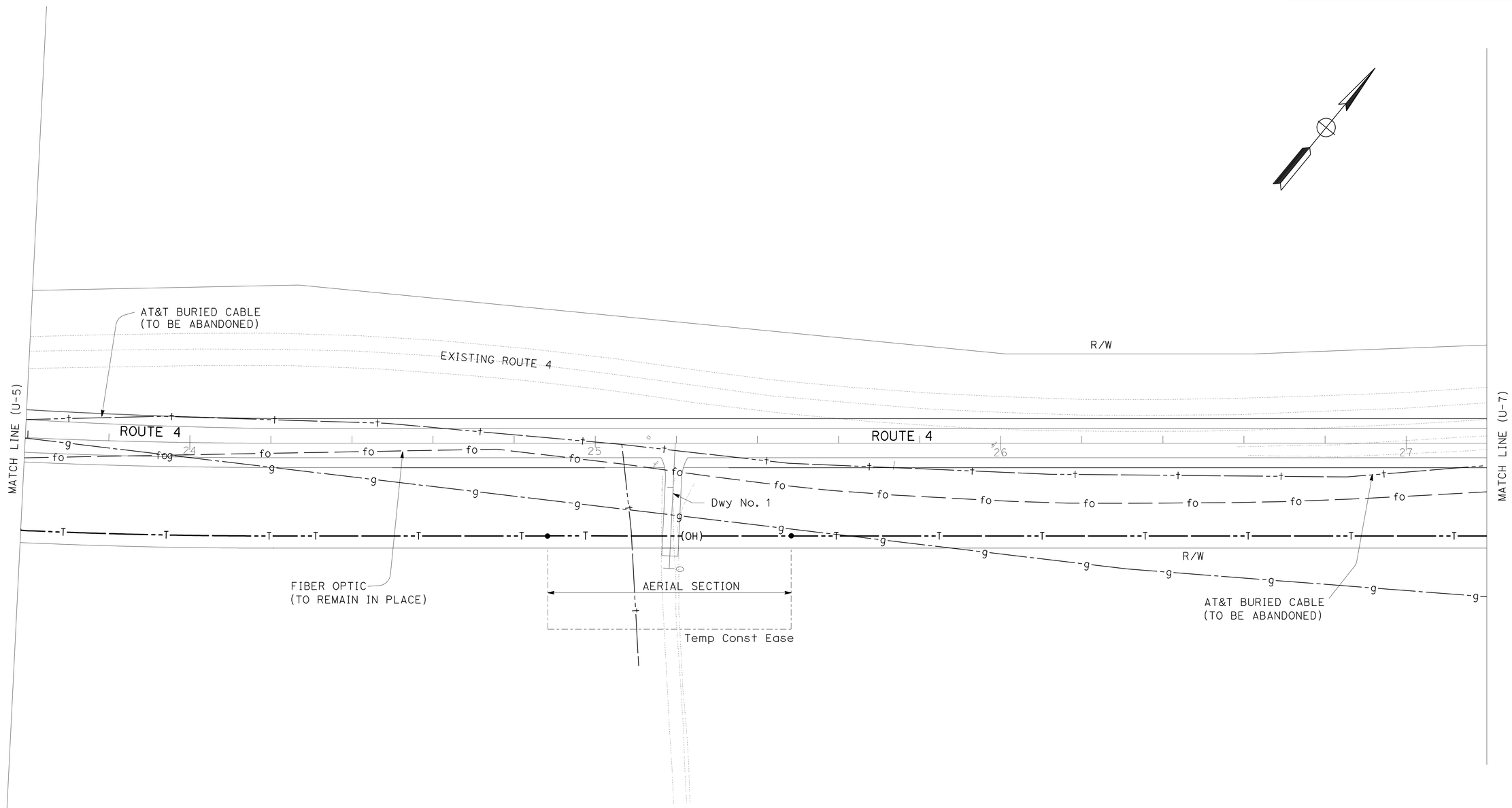

ALL DIMENSIONS ARE IN METERS UNLESS OTHERWISE SHOWN

2 **REVISED PER ADDENDUM No. 2 DATED AUGUST 20, 2009**

THIS PLAN ACCURATE FOR UTILITY IWORK ONLY.

UTILITY PLAN

SCALE 1:500

U-6

	REVISED BY	DATE REVISED
	SJ	3/3/09

CALCULATED-DESIGNED BY: SAURABH JAYANT
CHECKED BY: CAROLINE REYES

FUNCTIONAL SUPERVISOR: PAUL ELLIOTT

STATE OF CALIFORNIA - DEPARTMENT OF TRANSPORTATION
Caltrans
DESIGN

LAST REVISION 00-00-00 | DATE PLOTTED => 17-AUG-2009 | TIME PLOTTED => 11:02

Dist	COUNTY	ROUTE	KILOMETER POST TOTAL PROJECT	SHEET No.	TOTAL SHEETS
10	SJ	4	8.7/R11.1	83	171

Caroline Reyes 3/3/09
REGISTERED CIVIL ENGINEER DATE

5-18-09
PLANS APPROVAL DATE

REGISTERED PROFESSIONAL ENGINEER
CAROLINE REYES
No. 66004
Exp. 06-30-10
CIVIL
STATE OF CALIFORNIA

THE STATE OF CALIFORNIA OR ITS OFFICERS OR AGENTS SHALL NOT BE RESPONSIBLE FOR THE ACCURACY OR COMPLETENESS OF ELECTRONIC COPIES OF THIS PLAN SHEET.

Caltrans Metric

2

NOTE: FOR COMPLETE R/W DATA, SEE R/W RECORD MAPS AT DISTRICT OFFICE.

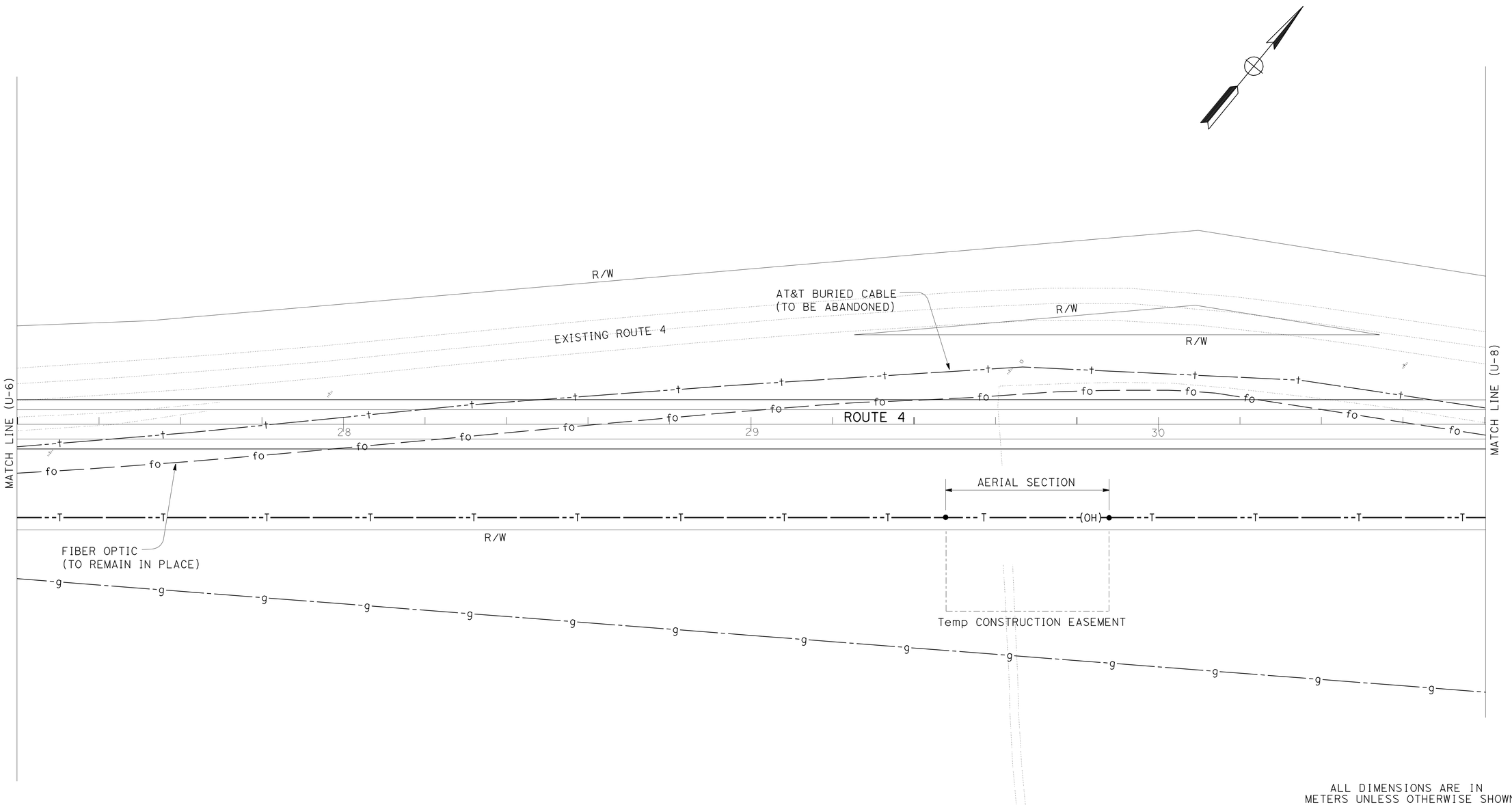

ALL DIMENSIONS ARE IN METERS UNLESS OTHERWISE SHOWN

2 **REVISED PER ADDENDUM No. 2 DATED AUGUST 20, 2009**

THIS PLAN ACCURATE FOR UTILITY WORK ONLY.

UTILITY PLAN

SCALE 1:500

U-7

STATE OF CALIFORNIA - DEPARTMENT OF TRANSPORTATION

Caltrans **DESIGN**

FUNCTIONAL SUPERVISOR: PAUL ELLIOTT

CALCULATED-DESIGNED BY: SAURABH JAYANT

CHECKED BY: CAROLINE REYES

REVISED BY: SJ

DATE REVISED: 3/3/09

LAST REVISION 00-00-00 DATE PLOTTED => 17-AUG-2009 TIME PLOTTED => 11:02

Dist	COUNTY	ROUTE	KILOMETER POST TOTAL PROJECT	SHEET No.	TOTAL SHEETS
10	SJ	4	8.7/R11.1	84	171

Caroline Reyes 3/3/09
REGISTERED CIVIL ENGINEER DATE

5-18-09
PLANS APPROVAL DATE

REGISTERED PROFESSIONAL ENGINEER
CAROLINE REYES
No. 66004
Exp. 06-30-10
CIVIL
STATE OF CALIFORNIA

THE STATE OF CALIFORNIA OR ITS OFFICERS OR AGENTS SHALL NOT BE RESPONSIBLE FOR THE ACCURACY OR COMPLETENESS OF ELECTRONIC COPIES OF THIS PLAN SHEET.

Caltrans Metric

2

NOTE: FOR COMPLETE R/W DATA, SEE R/W RECORD MAPS AT DISTRICT OFFICE.

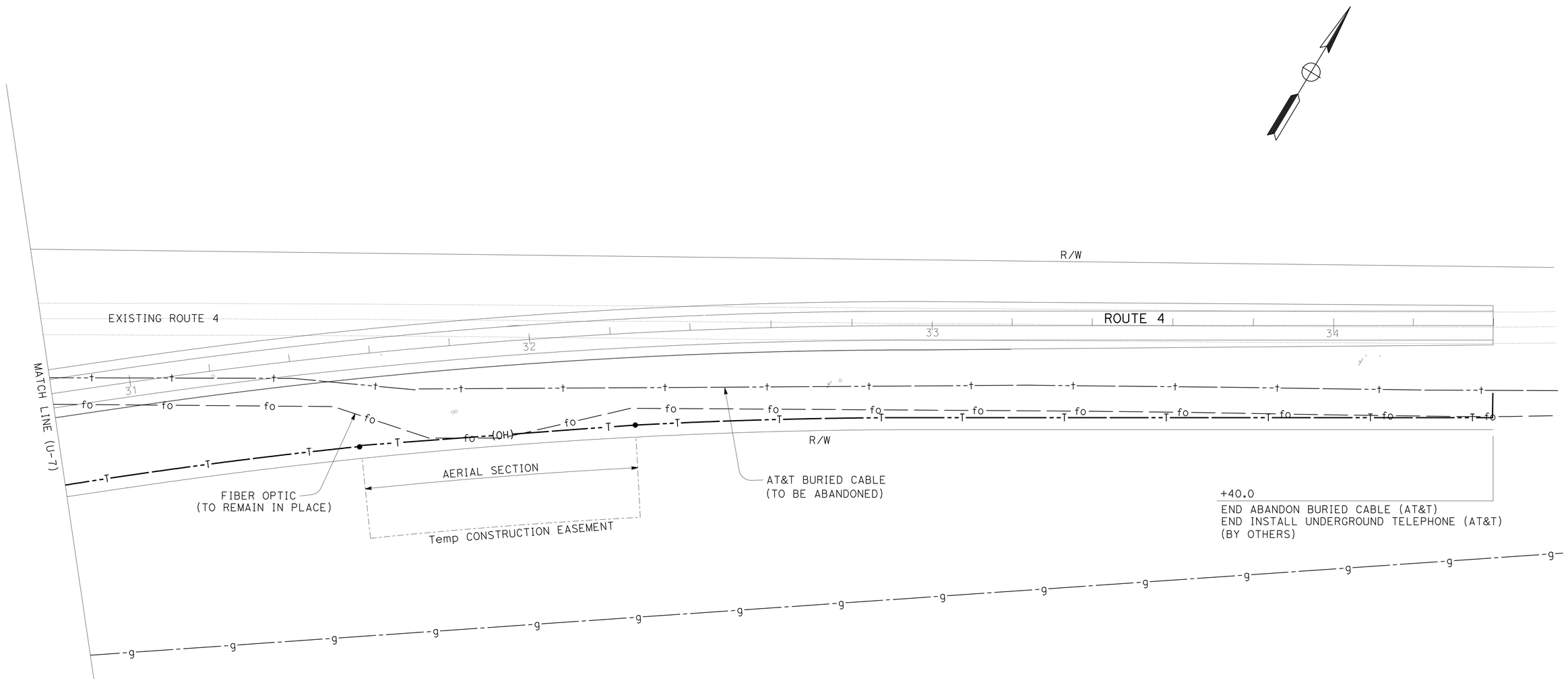

ALL DIMENSIONS ARE IN METERS UNLESS OTHERWISE SHOWN

2 **REVISED PER ADDENDUM No. 2 DATED AUGUST 20, 2009**

THIS PLAN ACCURATE FOR UTILITY WORK ONLY.

UTILITY PLAN

SCALE 1:500 **U-8**

STATE OF CALIFORNIA - DEPARTMENT OF TRANSPORTATION
Caltrans **DESIGN**

FUNCTIONAL SUPERVISOR: PAUL ELLIOTT
CALCULATED-DESIGNED BY: SAURABH JAYANT
CHECKED BY: CAROLINE REYES
REVISED BY: SJ
DATE REVISED: 3/3/09

LAST REVISION 00-00-00
DATE PLOTTED => 17-AUG-2009
TIME PLOTTED => 11:02

Dist	COUNTY	ROUTE	KILOMETER POST TOTAL PROJECT	SHEET No.	TOTAL SHEETS
10	SJ	4	8.7/R11.1	86	171

Caroline Reyes 3/3/09
REGISTERED CIVIL ENGINEER DATE

5-18-09
PLANS APPROVAL DATE

REGISTERED PROFESSIONAL ENGINEER CAROLINE REYES No. 66004 Exp. 06-30-10 CIVIL STATE OF CALIFORNIA

THE STATE OF CALIFORNIA OR ITS OFFICERS OR AGENTS SHALL NOT BE RESPONSIBLE FOR THE ACCURACY OR COMPLETENESS OF ELECTRONIC COPIES OF THIS PLAN SHEET.

Caltrans Metric

2

LEGEND

- PLACE 45 mm RHMA-G OVERLAY
- CONSTRUCT UNDER ONE WAY TRAFFIC CONTROL
- REMOVE BASE AND SURFACING
- CONSTRUCTION COMPLETED IN PREVIOUS STAGES
- ROADWAY EMBANKMENT
- TEMPORARY HMA (TRANSITION)
- TRAFFIC DIRECTION
- BUILD EMBANKMENT TO MATCH
- CONSTRUCT TO TOP OF LAYER INDICATED
  ROUTE 4 - 105 mm HMA (TYPE B)
  TRACY Blvd - 45 mm RHMA-G (FG)
- Temp RAILING (TYPE K)
- Temp CRASH CUSHION MODULE (ADIEM)
- 1.5 m SURCHARGE

ABBREVIATIONS

RHMA-G - RUBBERIZED HOT MIX ASPHALT (GAP GRADED)
HMA - HOT MIX ASPHALT

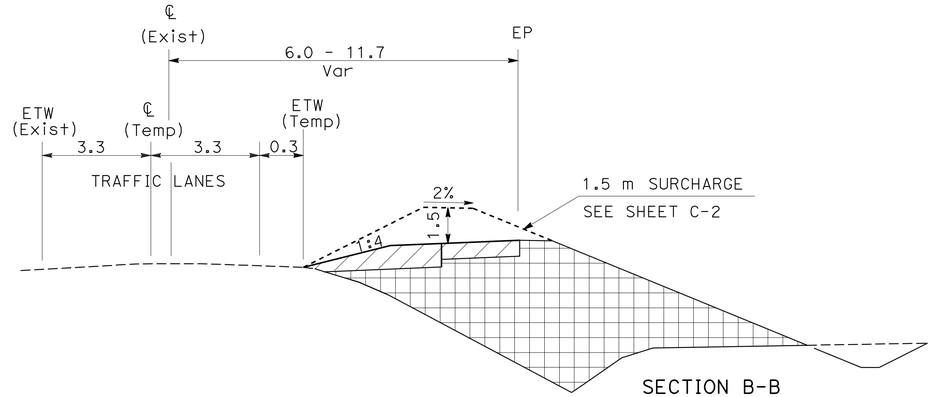

SECTION B-B
NO SCALE

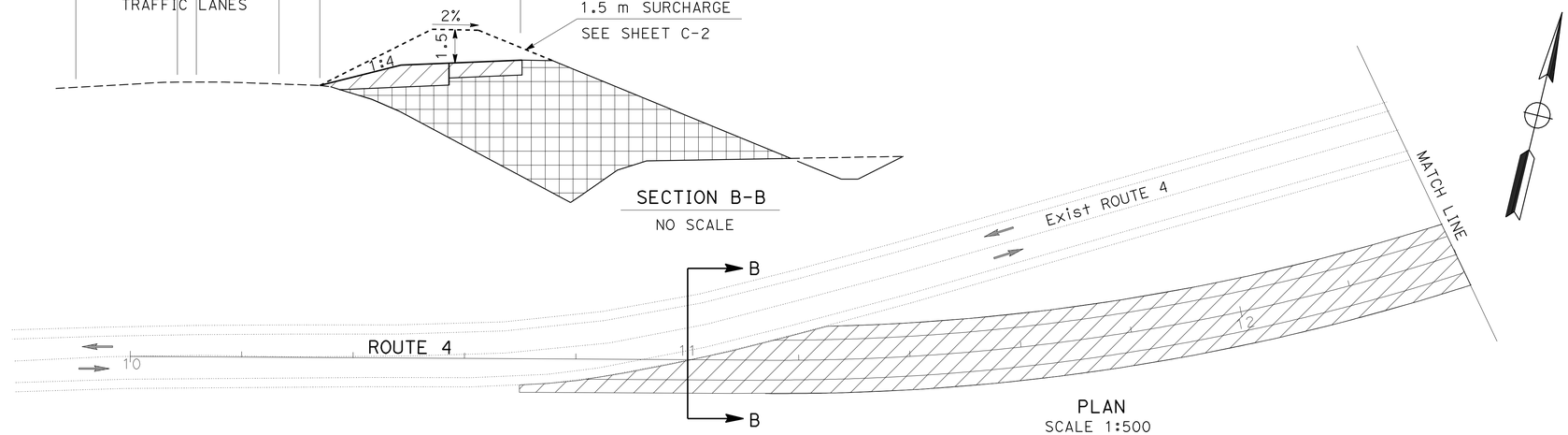

PLAN
SCALE 1:500

CONSTRUCTION SEQUENCE

1. CLEAR AND GRUB PROJECT LIMITS.
2. EXISTING FIBER OPTIC LINE TO BE POSITIVELY LOCATED BY CONTRACTOR. SEE UTILITY PLANS AND CONSTRUCTION DETAIL
3. BUILD NEW IRRIGATION SYSTEM, DRAINAGE SYSTEM NO. 4 & 31, SEE DRAINAGE DETAIL DD-3 AND DD-4.
4. BUILD CROSS CULVERT SYSTEMS, DRAINAGE SYSTEMS 2, 3, 6, 9, 11, 13, 15, 18, 22, 25, 26, 29, 32, 36
5. INSTALL WICK DRAIN SYSTEM, SEE CONSTRUCTION DETAIL C-1 AND C-2.
6. INSTALL TEMPORARY DRAINAGE SYSTEM.
7. PLACE Temp K RAIL FROM STA 13+20 TO 19+80 & FROM STA 25+60 TO 27+20.
8. PLACE Temp DELINEATION ON EXISTING ROUTE 4.
9. BUILD EMBANKMENT.
10. PLACE TEMPORARY HYDRAULIC MULCH.
11. SETTLEMENT PERIOD.
12. CONSTRUCT ROADWAY TO LAYER INDICATED.

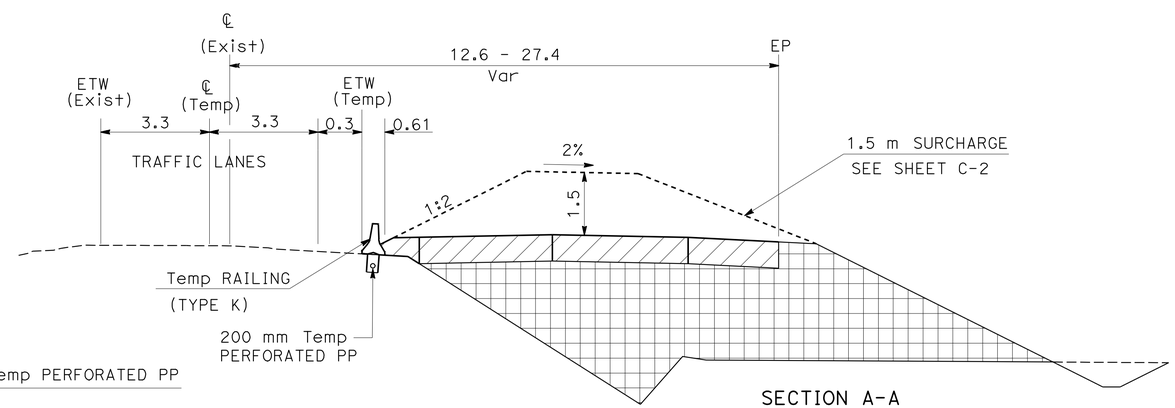

SECTION A-A
NO SCALE

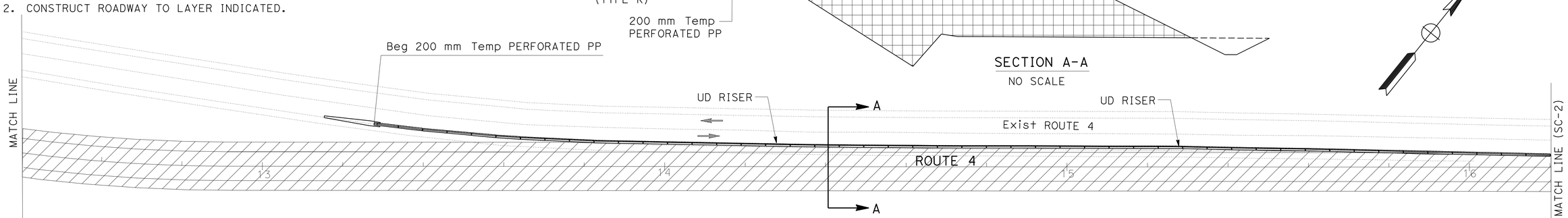

PLAN
SCALE 1:500

ALL DIMENSIONS ARE IN METERS UNLESS OTHERWISE SHOWN

STAGE 1

STAGE CONSTRUCTION

SCALE AS SHOWN **SC-1**

2 **REVISED PER ADDENDUM No. 2 DATED AUGUST 20, 2009**

THIS PLAN ACCURATE FOR STAGE CONSTRUCTION WORK ONLY.

REVISED BY	DATE REVISED
SJ	1/23/09

SAURABH JAYANT — CALCULATED-DESIGNED BY
CAROLINE REYES — CHECKED BY
PAUL ELLIOTT — FUNCTIONAL SUPERVISOR

STATE OF CALIFORNIA - DEPARTMENT OF TRANSPORTATION
Caltrans DESIGN

LAST REVISION 00-00-00 | DATE PLOTTED => 17-AUG-2009 | TIME PLOTTED => 11:02

Dist	COUNTY	ROUTE	KILOMETER POST TOTAL PROJECT	SHEET No.	TOTAL SHEETS
10	SJ	4	8.7/R11.1	148	171

Rajpreet Singh 3/9/09
REGISTERED ELECTRICAL ENGINEER

5-18-09
PLANS APPROVAL DATE

REGISTERED PROFESSIONAL ENGINEER RAJPREET SINGH No. 17496 Exp. 06/30/09 ELECTRICAL STATE OF CALIFORNIA

THE STATE OF CALIFORNIA OR ITS OFFICERS OR AGENTS SHALL NOT BE RESPONSIBLE FOR THE ACCURACY OR COMPLETENESS OF ELECTRONIC COPIES OF THIS PLAN SHEET.

Caltrans Metric

2

FOR COMPLETE RIGHT OF WAY DATA, SEE RIGHT OF WAY RECORD MAPS AT DISTRICT OFFICE.

NOTES:

1. PB PER SERVING UTILITY.
2. 120/240 V, 1Ø , 3-WIRE, TYPE III-CF SERVICE EQUIPMENT ENCLOSURE WITH THE FOLLOWING CIRCUIT BREAKERS:

CTID No. 1029004R010600L

AMPERES	VOLTS	POLES	LOAD	METER	PEC TYPE
100	240	2	MAIN	YES	-
30	240	2	HIGHWAY LIGHTING	YES	V
15	120	1	LIGHTING CONTROL	YES	-
30	120	1	SPARE	YES	-
-	-	3	SPACE	-	-

CTID No. 1029004R010600T

AMPERES	VOLTS	POLES	LOAD	METER	PEC TYPE
100	240	2	MAIN	YES	-
30	120	1	TMS	YES	-
20	120	1	SPARE	YES	-
-	-	3	SPACE	-	-

3. MODEL 334 CABINET WITH WIRELESS MODEM AND STATE-FURNISHED MODEL 170 CONTROLLER UNIT.
4. OVERHEAD CONDUCTORS AND WOOD POLES WILL BE INSTALLED BY OTHERS.

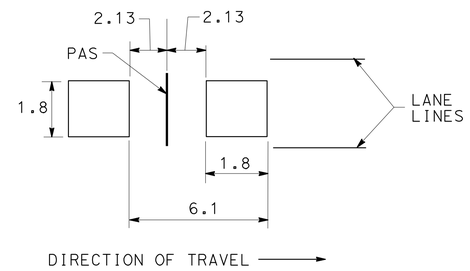

TYPICAL LANE LAYOUT FOR PAS AND LOOP DETECTOR

NO SCALE

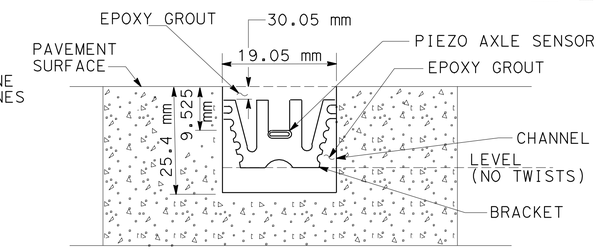

SECTION A-A

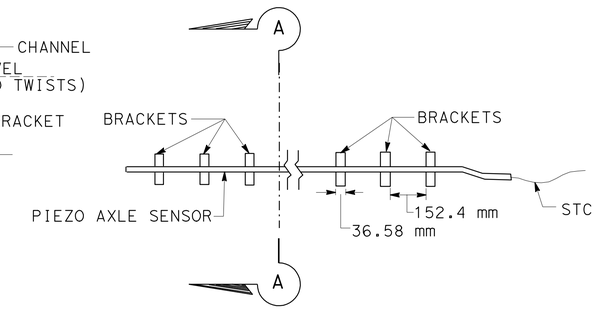

PIEZO AXLE SENSOR INSTALLATION

NO SCALE

LOOP DETECTOR DESIGNATION

W 1 T
- L = LEADING
- T = TRAILING
- GROUP NUMBER
- E = EASTBOUND
- W = WESTBOUND

PAS DESIGNATION

P E 1 L
- L = LEADING
- T = TRAILING
- GROUP NUMBER
- E = EASTBOUND
- W = WESTBOUND
- PAS

ABBREVIATIONS:

CTID - CALTRANS IDENTIFICATION
PG&E - PACIFIC GAS AND ELECTRIC COMPANY
PAS - PIEZO AXLE SENSOR
STC - SCREENED TRANSMISSION CABLE

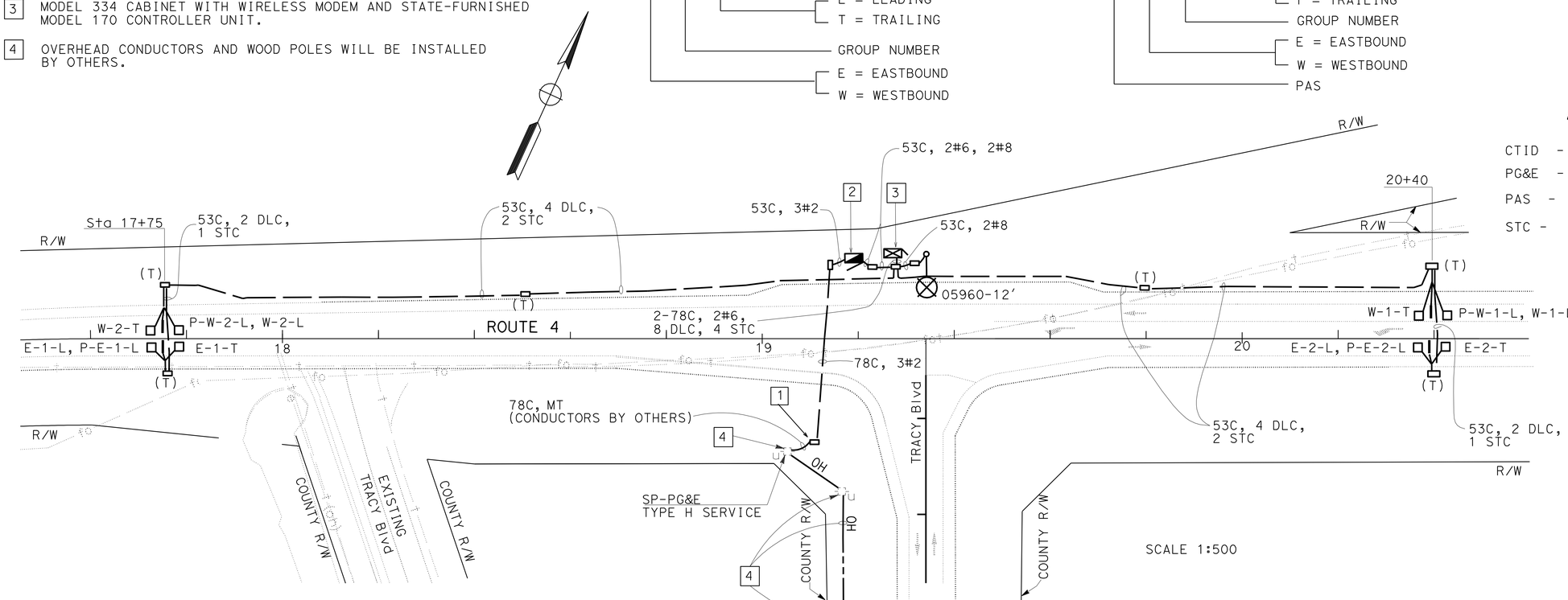

SCALE 1:500

ALL DIMENSIONS ARE IN METERS UNLESS OTHERWISE SHOWN

HIGHWAY LIGHTING TRAFFIC MONITORING STATION

SCALE AS SHOWN

E-1

2 **REVISED PER ADDENDUM No. 2 DATED AUGUST 20, 2009**

THIS PLAN IS ACCURATE FOR ELECTRICAL WORK ONLY.

REVISED BY	DATE REVISED
AA	2/26/09

FRED IYASERE — RAJPREET SINGH — CALCULATED-DESIGNED BY — CHECKED BY — FUNCTIONAL SUPERVISOR — ALI BAKHDOUD

STATE OF CALIFORNIA - DEPARTMENT OF TRANSPORTATION
Caltrans ELECTRICAL DESIGN

LAST REVISION 08-06-09 — DATE PLOTTED => 17-AUG-2009 — TIME PLOTTED => 11:02