Dist	COUNTY	ROUTE	POST MILES TOTAL PROJECT	SHEET No.	TOTAL SHEETS
10	SJ	12	0.1/R4.4	1	130

ACNH-P012(112)E

STATE OF CALIFORNIA
DEPARTMENT OF TRANSPORTATION

PROJECT PLANS FOR CONSTRUCTION ON
STATE HIGHWAY

IN SAN JOAQUIN COUNTY
NEAR TERMINOUS
FROM MOKELUMNE RIVER BRIDGE
TO LITTLE POTATO SLOUGH BRIDGE

TO BE SUPPLEMENTED BY STANDARD PLANS DATED MAY 2006

INDEX OF PLANS

SHEET No.	DESCRIPTION
1	TITLE AND LOCATION MAP
2-3	TYPICAL CROSS SECTIONS
4-12	LAYOUTS
13-16	PROFILES
17-18	SUPERELEVATION DIAGRAM
19-27	CONSTRUCTION DETAILS
28-33	TEMPORARY WATER POLLUTION CONTROL AND EROSION CONTROL QUANTITIES
34-38	EROSION CONTROL
39-53	DRAINAGE PLANS, PROFILES, DETAILS AND QUANTITIES
54	UTILITY PLANS
55	CONSTRUCTION AREA SIGNS
56-60	MOTORIST INFORMATION PLANS
61-64	STAGE CONSTRUCTION PLANS AND DETAILS
65-67	TRAFFIC HANDLING PLANS AND QUANTITIES
68-77	PAVEMENT DELINEATION PLANS AND QUANTITIES
78-80	SIGN DETAILS AND QUANTITIES
81-82	SUMMARY OF QUANTITIES
83-84	RETAINING WALL PLANS
85-88	ELECTRICAL PLANS
89-114	REVISED AND NEW STANDARD PLANS

STRUCTURE PLANS

115	RETAINING WALL No. 1, Br No. 29-0336
116	RETAINING WALL No. 2, Br No. 29-0336
117-130	BOULDIN ISLAND UNDERCROSSING, Br No. 29-0336

THE STANDARD PLANS LIST APPLICABLE TO THIS CONTRACT IS INCLUDED IN THE NOTICE TO BIDDERS AND SPECIAL PROVISIONS BOOK.

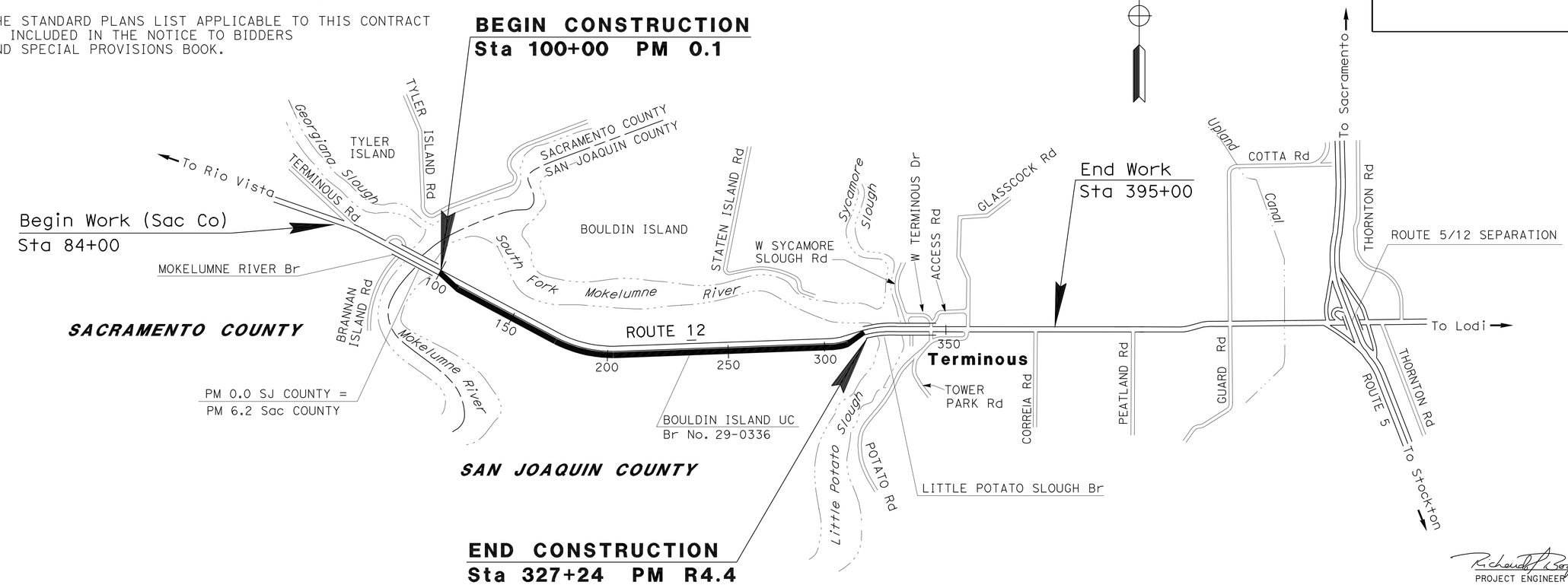

NO SCALE

THE CONTRACTOR SHALL POSSESS THE CLASS (OR CLASSES) OF LICENSE AS SPECIFIED IN THE "NOTICE TO BIDDERS."

PROJECT MANAGER: IORZUA AKUVA

DESIGN ENGINEER: RICHARD BOYER

Richard Boyer 4/16/12
PROJECT ENGINEER DATE
REGISTERED CIVIL ENGINEER

REGISTERED PROFESSIONAL ENGINEER — RICHARD BOYER — No. 75844 — Exp. 6/30/14 — CIVIL — STATE OF CALIFORNIA

December 24, 2012
PLANS APPROVAL DATE

THE STATE OF CALIFORNIA OR ITS OFFICERS OR AGENTS SHALL NOT BE RESPONSIBLE FOR THE ACCURACY OR COMPLETENESS OF SCANNED COPIES OF THIS PLAN SHEET.

CONTRACT No.	10-0G8004
PROJECT ID	1000000052

LAST REVISION 00-00-00 — DATE PLOTTED => 09-APR-2013 TIME PLOTTED => 14:26

Dist	COUNTY	ROUTE	POST MILES TOTAL PROJECT	SHEET No.	TOTAL SHEETS
10	SJ	12	0.1/R4.4	2	130

REGISTERED CIVIL ENGINEER 4/16/12 DATE

12-24-12
PLANS APPROVAL DATE

REGISTERED PROFESSIONAL ENGINEER RICHARD BOYER No. 75844 Exp. 6/30/14 CIVIL STATE OF CALIFORNIA

THE STATE OF CALIFORNIA OR ITS OFFICERS OR AGENTS SHALL NOT BE RESPONSIBLE FOR THE ACCURACY OR COMPLETENESS OF SCANNED COPIES OF THIS PLAN SHEET.

NOTES:

1. DIMENSIONS OF THE PAVEMENT STRUCTURES (STRUCTURAL SECTIONS) ARE SUBJECT TO TOLERANCES SPECIFIED IN THE STANDARD SPECIFICATIONS.
2. SUPERELEVATIONS ARE SHOWN ON THE SUPERELEVATION DIAGRAM.
3. FOR LOCATIONS OF CONCRETE BARRIER AND TYPES, SEE SUMMARY OF QUANTITIES.

ABBREVIATION:

RHMA - RUBBERIZED HOT MIX ASPHALT

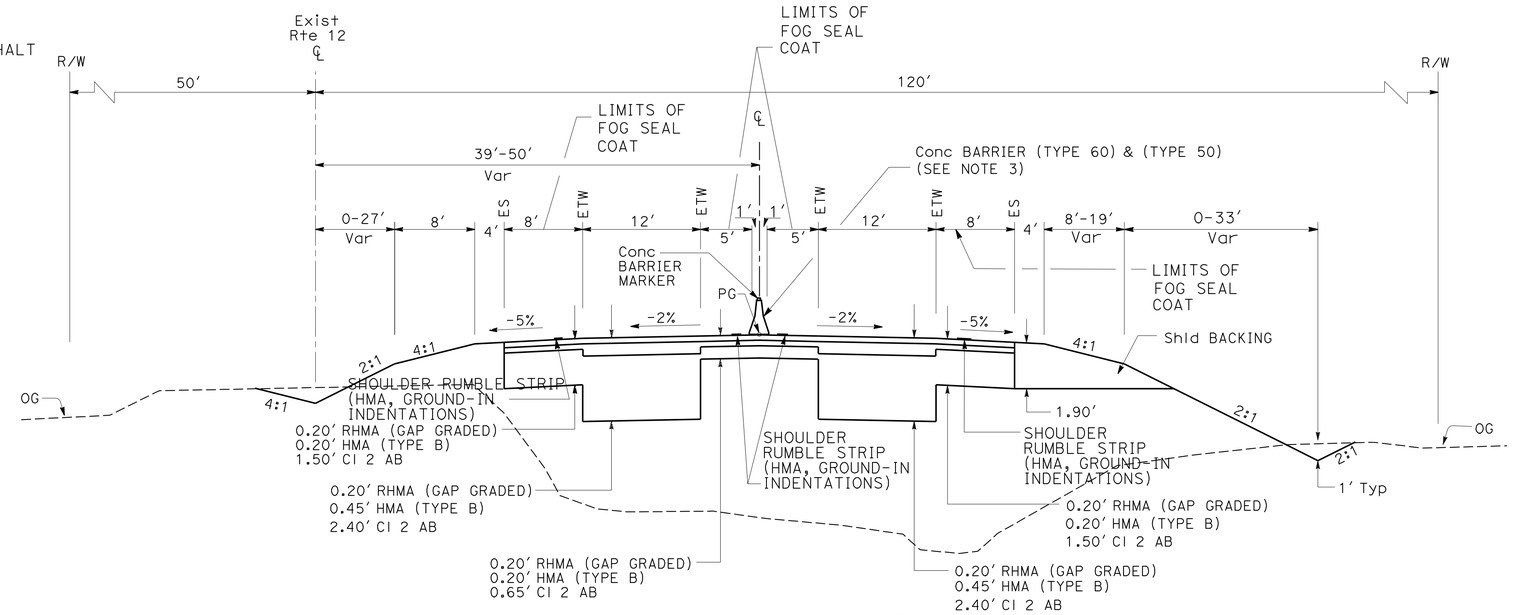

Sta 104+25.00 TO Sta 323+25.00

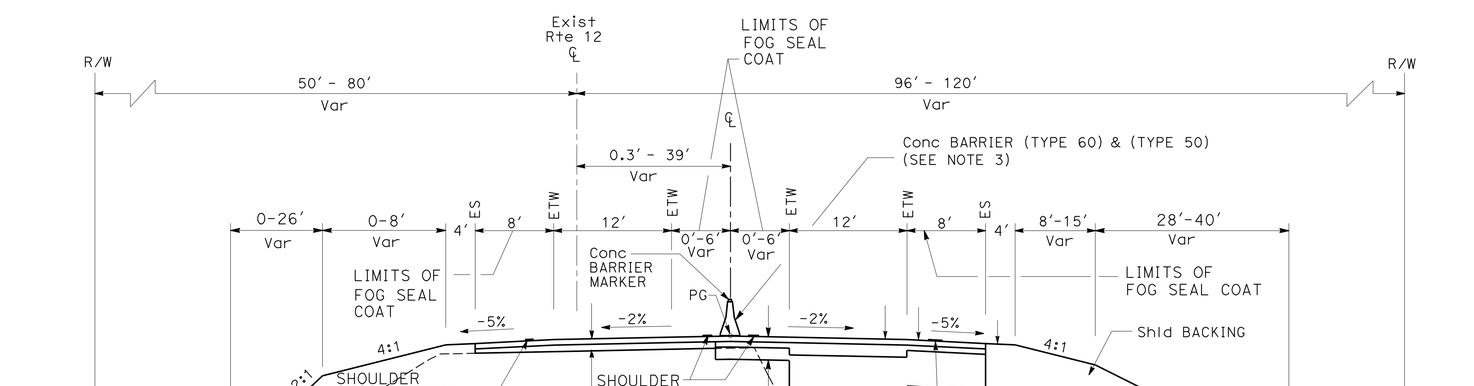

Sta 102+10.27 TO Sta 104+25.00
Sta 323+25.00 TO Sta 326+43.64

ROUTE 12

TYPICAL CROSS SECTIONS

NO SCALE

X-1

STATE OF CALIFORNIA - DEPARTMENT OF TRANSPORTATION
Caltrans®
DESIGN

FUNCTIONAL SUPERVISOR: NOMER GUITERREZ
CALCULATED-DESIGNED BY: OSAMA ABDEL-MAGIED
CHECKED BY: RICHARD BOYER
REVISED BY: OA
DATE REVISED: 04/30/12

LAST REVISION 00-00-00
DATE PLOTTED => 27-DEC-2012
TIME PLOTTED => 14:53

Dist	COUNTY	ROUTE	POST MILES TOTAL PROJECT	SHEET No.	TOTAL SHEETS
10	SJ	12	0.1/R4.4	3	130

REGISTERED CIVIL ENGINEER 4/16/12 DATE

12-24-12
PLANS APPROVAL DATE

REGISTERED PROFESSIONAL ENGINEER RICHARD BOYER No. 75844 Exp. 6/30/14 CIVIL STATE OF CALIFORNIA

THE STATE OF CALIFORNIA OR ITS OFFICERS OR AGENTS SHALL NOT BE RESPONSIBLE FOR THE ACCURACY OR COMPLETENESS OF SCANNED COPIES OF THIS PLAN SHEET.

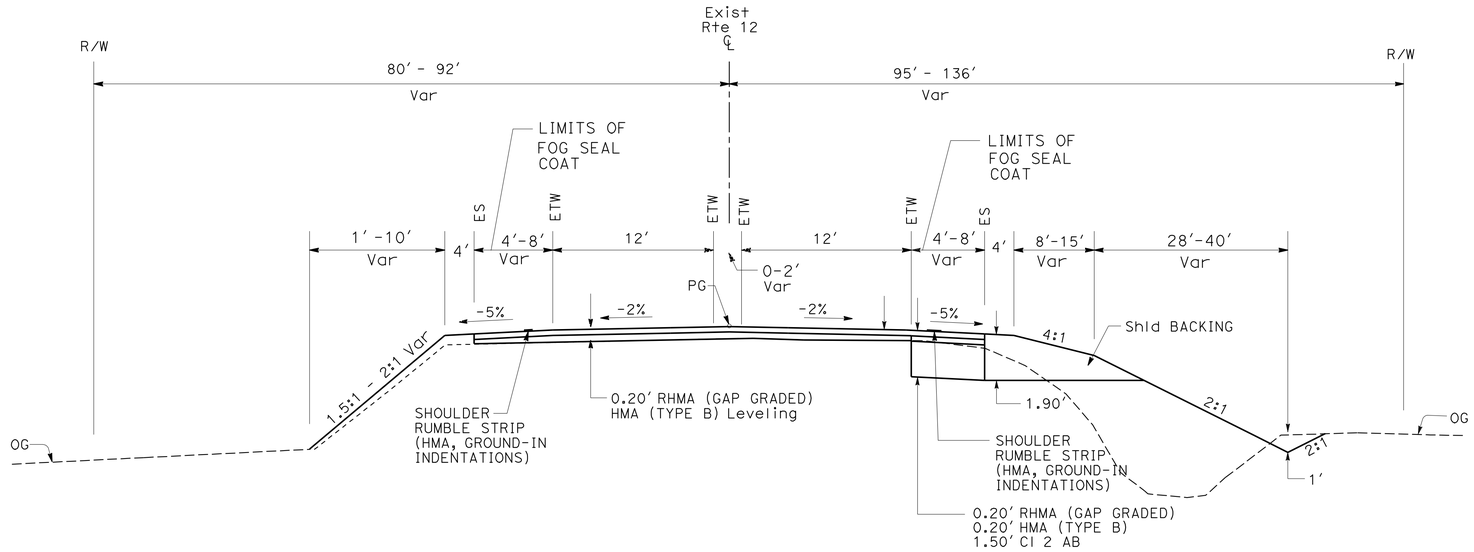

Sta 100+00 TO Sta 102+10.27
Sta 326+43.64 TO Sta 327+24.4

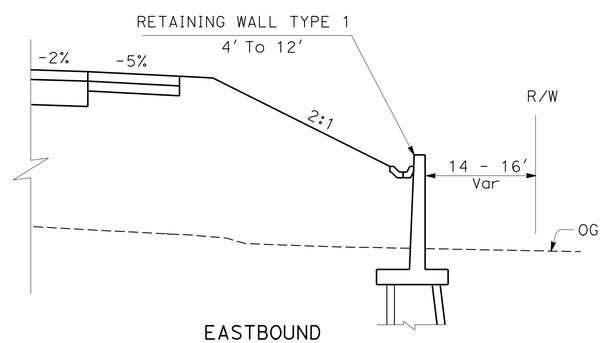

EASTBOUND
Sta 229+00 TO Sta 234+05
Sta 234+83 TO Sta 240+00

ROUTE 12

TYPICAL CROSS SECTIONS

NO SCALE

X-2

STATE OF CALIFORNIA - DEPARTMENT OF TRANSPORTATION
Caltrans
DESIGN

FUNCTIONAL SUPERVISOR: NOMER GUITERREZ

CALCULATED-DESIGNED BY: OSAMA ABDEL-MAGIED
CHECKED BY: RICHARD BOYER

REVISED BY: OA
DATE REVISED: 04/30/12

LAST REVISION 00-00-00
DATE PLOTTED => 27-DEC-2012
TIME PLOTTED => 14:53

Dist	COUNTY	ROUTE	POST MILES TOTAL PROJECT	SHEET No.	TOTAL SHEETS
10	SJ	12	0.1/R4.4	4	130

REGISTERED CIVIL ENGINEER 4/16/12 DATE

12-24-12
PLANS APPROVAL DATE

REGISTERED PROFESSIONAL ENGINEER RICHARD BOYER No. 75844 Exp 6/30/14 CIVIL STATE OF CALIFORNIA

THE STATE OF CALIFORNIA OR ITS OFFICERS OR AGENTS SHALL NOT BE RESPONSIBLE FOR THE ACCURACY OR COMPLETENESS OF SCANNED COPIES OF THIS PLAN SHEET.

NOTES:

1. FOR ACCURATE RIGHT OF WAY DATA, CONTACT RIGHT OF WAY ENGINEERING AT THE DISTRICT OFFICE.
2. FOR ADDITIONAL INFORMATION ON CONCRETE BARRIERS, AND DRIVEWAYS, SEE CONSTRUCTION DETAILS.

LEGEND

1. TRANSITION RAILING (TYPE WB)
2. REMOVE MBGR
   REMOVE TERMINAL SECTION
   REMOVE CAA
3. MBGR
4. ALTERNATIVE FLARED TERMINAL SYSTEM
5. ALTERNATIVE IN-LINE TERMINAL SYSTEM
6. END CAP (TYPE A)

ABBREVIATION

TCE - TEMPORARY CONSTRUCTION EASEMENT
ESA - ENVIRONMENTALLY SENSITIVE AREA

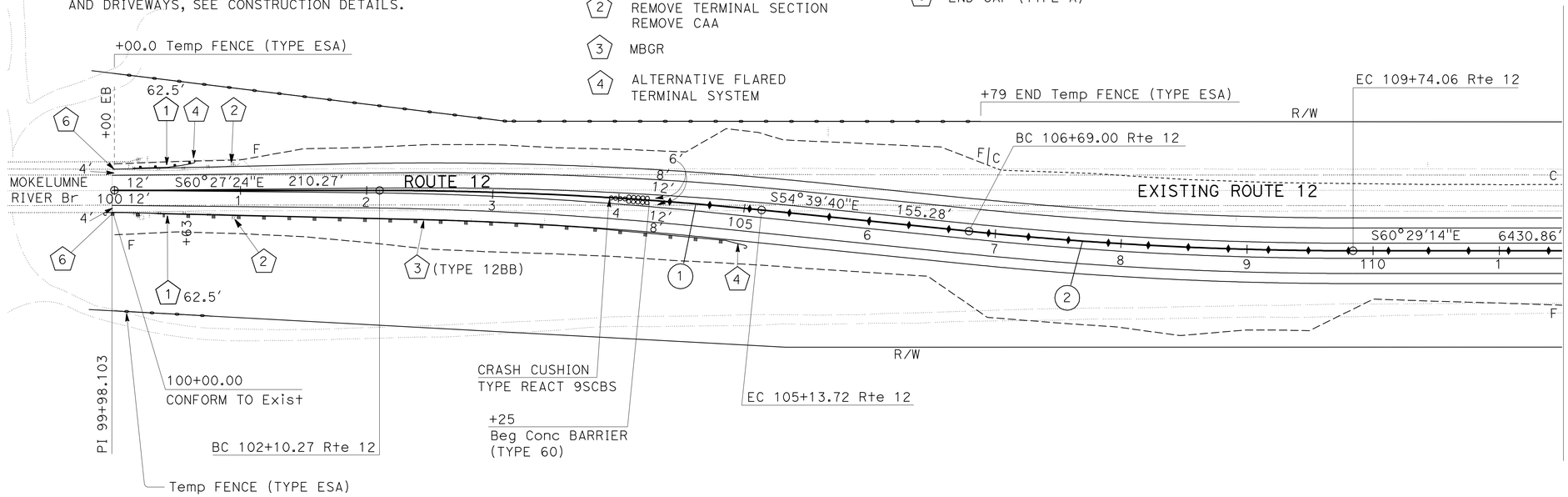

CURVE DATA

No. ⊕	R	△	T	L
1	3000'	5°47'44"	151.86'	303.45'
2	3000'	5°49'35"	152.66'	305.06'

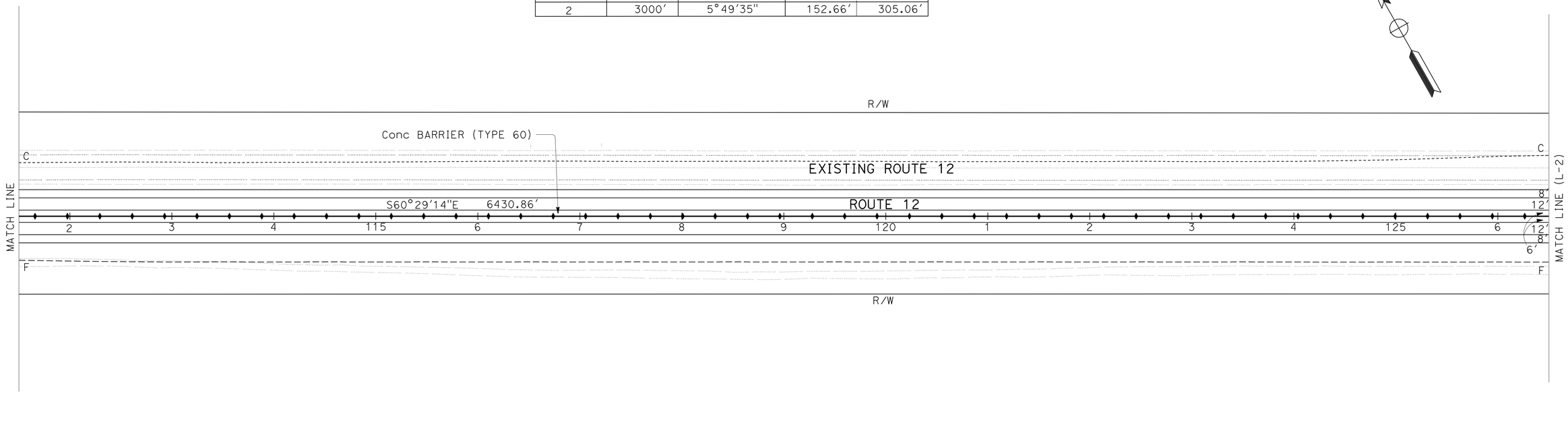

LAYOUT

SCALE: 1" = 50' **L-1**

OA	04/26/12		
REVISED BY	DATE REVISED		
OSAMA ABDEL-MAGIED	RICHARD BOYER		
CALCULATED-DESIGNED BY	CHECKED BY		
FUNCTIONAL SUPERVISOR	NOMER GUITERREZ		

STATE OF CALIFORNIA - DEPARTMENT OF TRANSPORTATION
Caltrans
DESIGN

LAST REVISION 00-00-00 | DATE PLOTTED => 27-DEC-2012 | TIME PLOTTED => 14:53

Dist	COUNTY	ROUTE	POST MILES TOTAL PROJECT	SHEET No.	TOTAL SHEETS
10	SJ	12	0.1/R4.4	5	130

Richard Boyer 4/16/12
REGISTERED CIVIL ENGINEER DATE

12-24-12
PLANS APPROVAL DATE

REGISTERED PROFESSIONAL ENGINEER
RICHARD BOYER
No. 75844
Exp. 6/30/14
CIVIL
STATE OF CALIFORNIA

THE STATE OF CALIFORNIA OR ITS OFFICERS OR AGENTS SHALL NOT BE RESPONSIBLE FOR THE ACCURACY OR COMPLETENESS OF SCANNED COPIES OF THIS PLAN SHEET.

NOTE:

FOR ACCURATE RIGHT OF WAY DATA, CONTACT
RIGHT OF WAY ENGINEERING AT THE DISTRICT OFFICE.

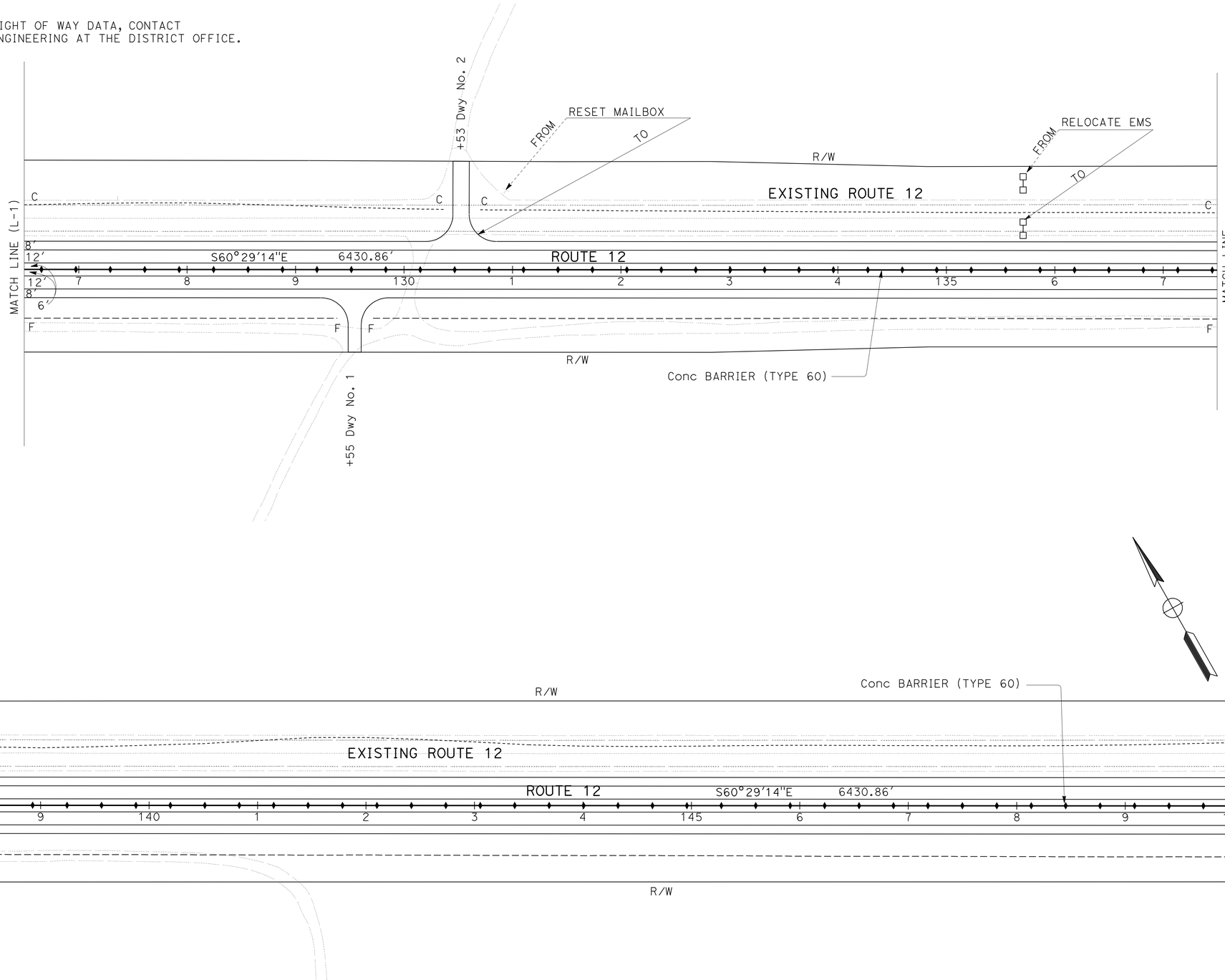

LAYOUT

SCALE: 1" = 50'

L-2

OA	04/26/12
REVISED BY	DATE REVISED
OSAMA ABDEL-MAGIED	
RICHARD BOYER	
CALCULATED-DESIGNED BY	
CHECKED BY	
FUNCTIONAL SUPERVISOR	
NOMER GUITERREZ	

STATE OF CALIFORNIA - DEPARTMENT OF TRANSPORTATION
Caltrans
DESIGN

LAST REVISION 00-00-00
DATE PLOTTED => 27-DEC-2012
TIME PLOTTED => 14:53

Dist	COUNTY	ROUTE	POST MILES TOTAL PROJECT	SHEET No.	TOTAL SHEETS
10	SJ	12	0.1/R4.4	6	130

REGISTERED CIVIL ENGINEER 4/16/12 DATE

12-24-12
PLANS APPROVAL DATE

REGISTERED PROFESSIONAL ENGINEER RICHARD BOYER No. 75844 Exp. 6/30/14 CIVIL STATE OF CALIFORNIA

THE STATE OF CALIFORNIA OR ITS OFFICERS OR AGENTS SHALL NOT BE RESPONSIBLE FOR THE ACCURACY OR COMPLETENESS OF SCANNED COPIES OF THIS PLAN SHEET.

NOTE:

FOR ACCURATE RIGHT OF WAY DATA, CONTACT RIGHT OF WAY ENGINEERING AT THE DISTRICT OFFICE.

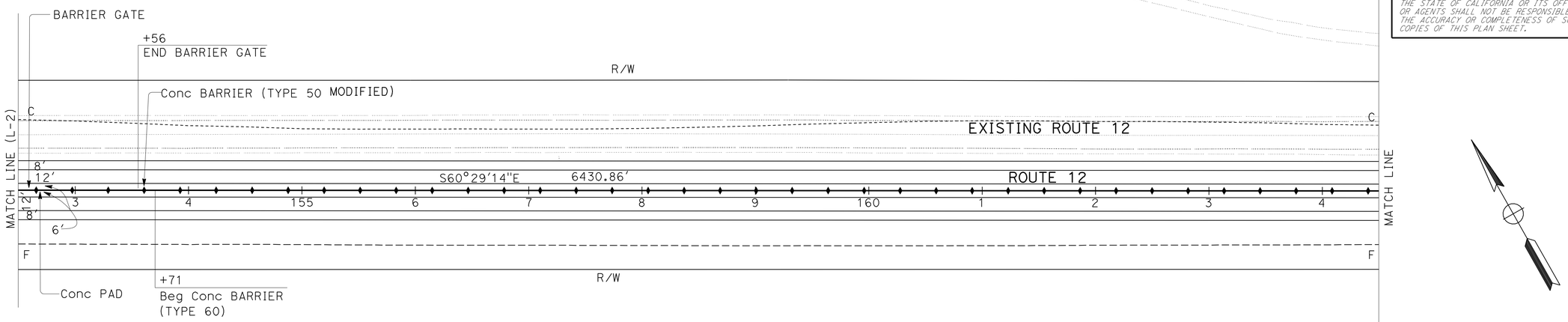

CURVE DATA

No. ⑪	R	Δ	T	L
3	6000'	30°12'35"	1619.46'	3163.54'

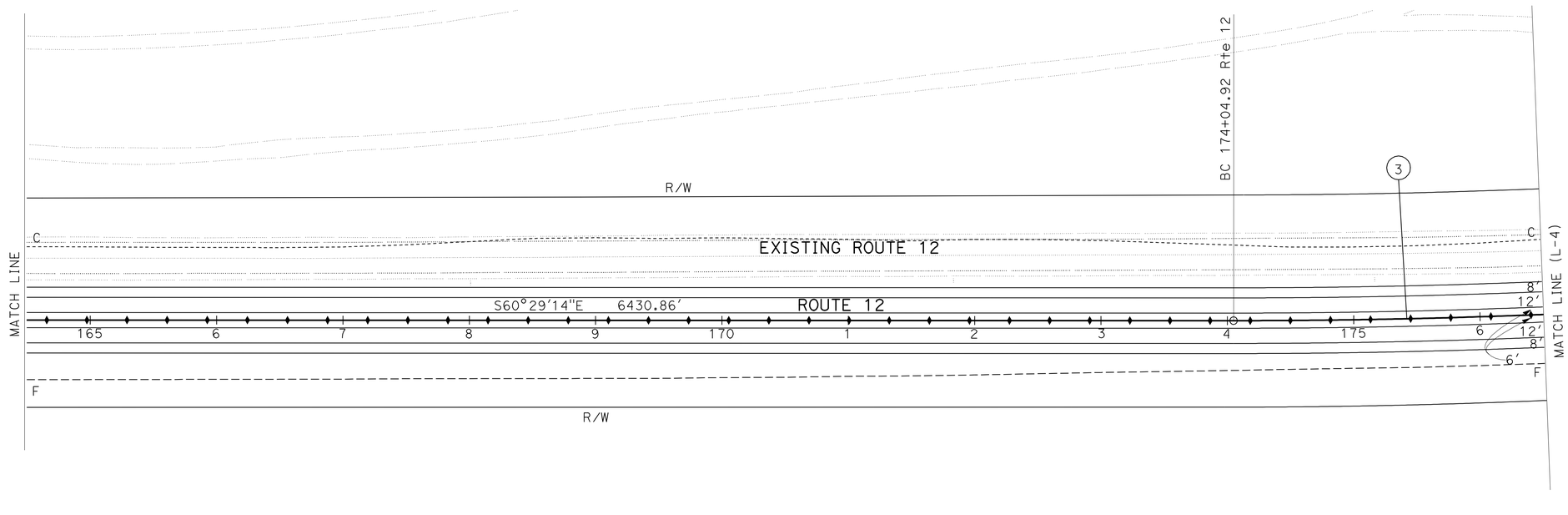

LAYOUT

SCALE: 1" = 50'

L-3

STATE OF CALIFORNIA - DEPARTMENT OF TRANSPORTATION

Caltrans®

DESIGN

FUNCTIONAL SUPERVISOR: NOMER GUITERREZ

CALCULATED-DESIGNED BY: OSAMA ABDEL-MAGIED

CHECKED BY: RICHARD BOYER

REVISED BY: OA

DATE REVISED: 04/26/12

LAST REVISION: 00-00-00

DATE PLOTTED => 27-DEC-2012

TIME PLOTTED => 14:53

Dist	COUNTY	ROUTE	POST MILES TOTAL PROJECT	SHEET No.	TOTAL SHEETS
10	SJ	12	0.1/R4.4	7	130

REGISTERED CIVIL ENGINEER 4/16/12 DATE

12-24-12
PLANS APPROVAL DATE

REGISTERED PROFESSIONAL ENGINEER RICHARD BOYER No. 75844 Exp. 6/30/14 CIVIL STATE OF CALIFORNIA

THE STATE OF CALIFORNIA OR ITS OFFICERS OR AGENTS SHALL NOT BE RESPONSIBLE FOR THE ACCURACY OR COMPLETENESS OF SCANNED COPIES OF THIS PLAN SHEET.

NOTE:

FOR ACCURATE RIGHT OF WAY DATA, CONTACT RIGHT OF WAY ENGINEERING AT THE DISTRICT OFFICE.

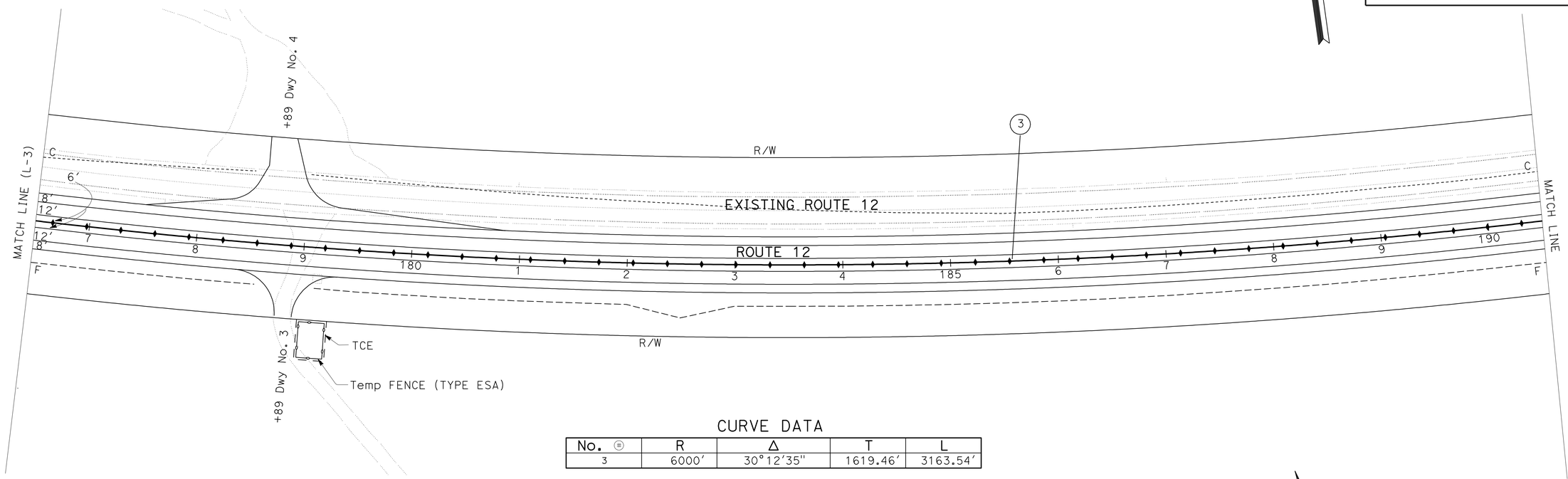

CURVE DATA

No. Ⓗ	R	Δ	T	L
3	6000′	30°12′35″	1619.46′	3163.54′

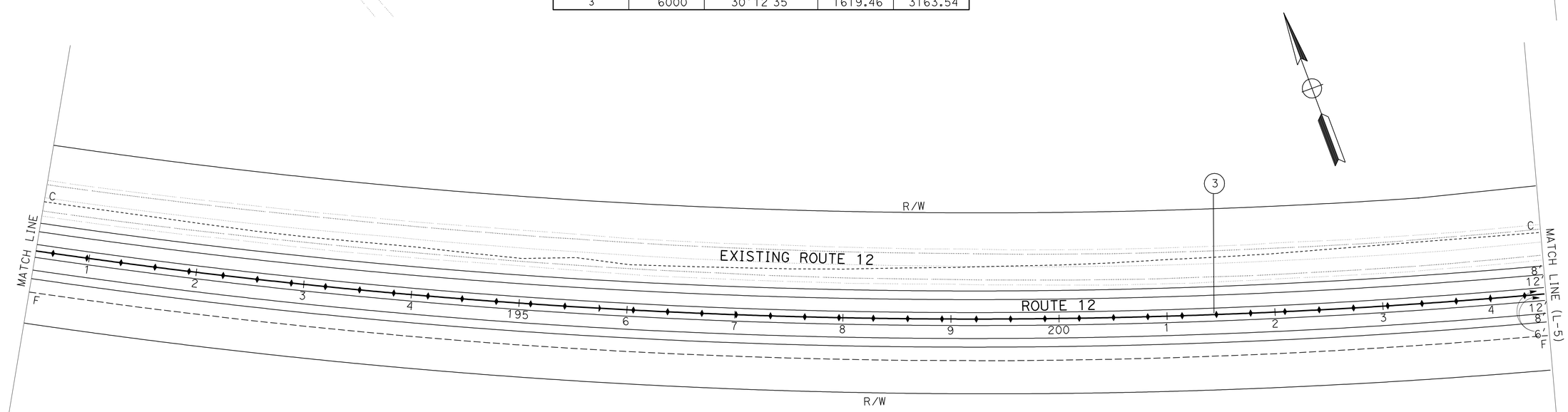

LAYOUT

SCALE: 1" = 50′

L-4

STATE OF CALIFORNIA - DEPARTMENT OF TRANSPORTATION	Caltrans® DESIGN
FUNCTIONAL SUPERVISOR	NOMER GUTIERREZ
CALCULATED-DESIGNED BY	OSAMA ABDEL-MAGIED
CHECKED BY	RICHARD BOYER
REVISED BY	OA
DATE REVISED	04/18/12

LAST REVISION 00-00-00 | DATE PLOTTED => 27-DEC-2012 | TIME PLOTTED => 14:53

Dist	COUNTY	ROUTE	POST MILES TOTAL PROJECT	SHEET No.	TOTAL SHEETS
10	SJ	12	0.1/R4.4	8	130

REGISTERED CIVIL ENGINEER 4/16/12 DATE

12-24-12
PLANS APPROVAL DATE

REGISTERED PROFESSIONAL ENGINEER RICHARD BOYER No. 75844 Exp. 6/30/14 CIVIL STATE OF CALIFORNIA

THE STATE OF CALIFORNIA OR ITS OFFICERS OR AGENTS SHALL NOT BE RESPONSIBLE FOR THE ACCURACY OR COMPLETENESS OF SCANNED COPIES OF THIS PLAN SHEET.

NOTE:

FOR ACCURATE RIGHT OF WAY DATA, CONTACT RIGHT OF WAY ENGINEERING AT THE DISTRICT OFFICE.

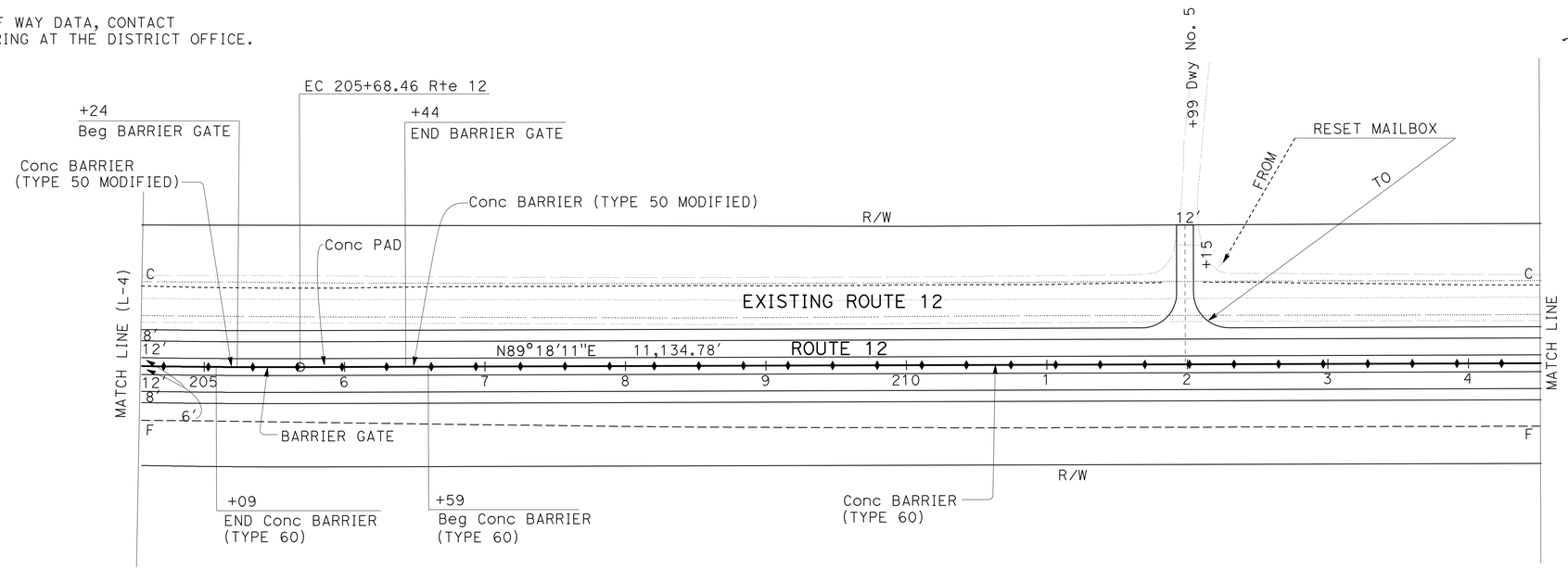

CURVE DATA

No. ⊕	R	Δ	T	L
4	50'	89°59'35"	49.99'	78.53'

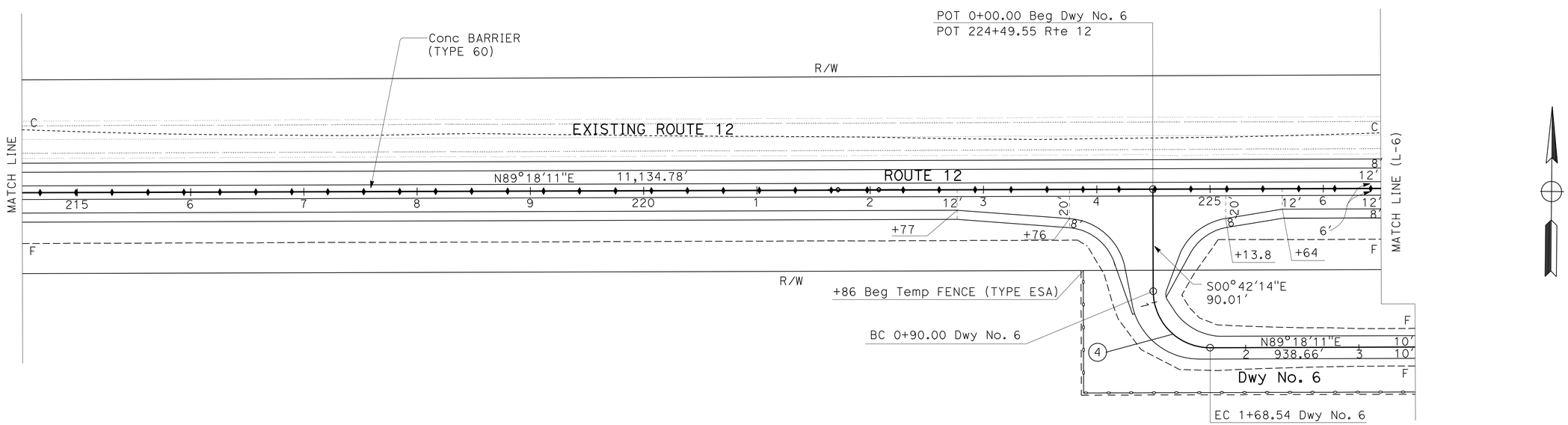

LAYOUT

SCALE: 1" = 50'

L-5

STATE OF CALIFORNIA - DEPARTMENT OF TRANSPORTATION

Caltrans

DESIGN

FUNCTIONAL SUPERVISOR: NOMER GUITERREZ

CALCULATED-DESIGNED BY: OSAMA ABDEL-MAGIED

CHECKED BY: RICHARD BOYER

REVISED BY: OA

DATE REVISED: 04/18/12

LAST REVISION 00-00-00

DATE PLOTTED => 27-DEC-2012

TIME PLOTTED => 14:54

Dist	COUNTY	ROUTE	POST MILES TOTAL PROJECT	SHEET No.	TOTAL SHEETS
10	SJ	12	0.1/R4.4	9	130

REGISTERED CIVIL ENGINEER 4/16/12 DATE

12-24-12
PLANS APPROVAL DATE

REGISTERED PROFESSIONAL ENGINEER RICHARD BOYER No. 75844 Exp. 6/30/14 CIVIL STATE OF CALIFORNIA

THE STATE OF CALIFORNIA OR ITS OFFICERS OR AGENTS SHALL NOT BE RESPONSIBLE FOR THE ACCURACY OR COMPLETENESS OF SCANNED COPIES OF THIS PLAN SHEET.

NOTE:

FOR ACCURATE RIGHT OF WAY DATA, CONTACT RIGHT OF WAY ENGINEERING AT THE DISTRICT OFFICE.

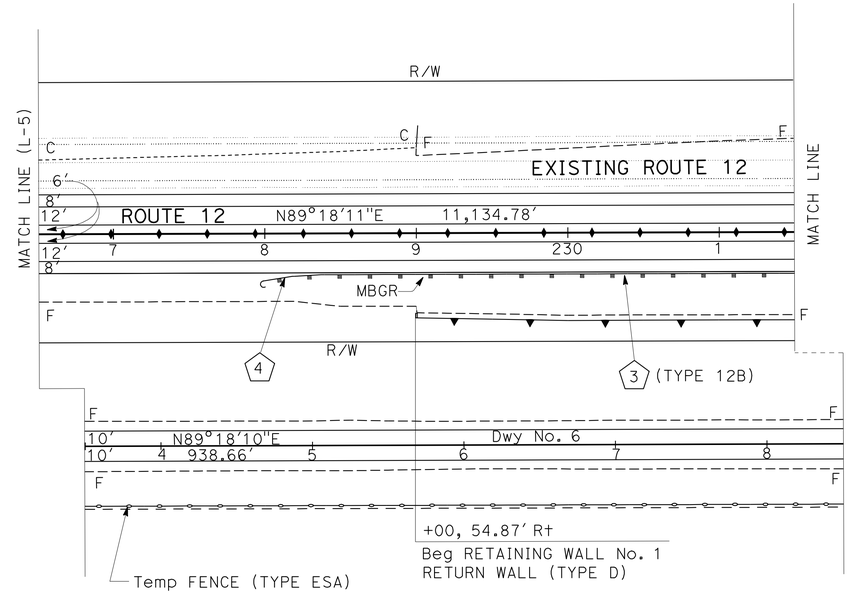

CURVE DATA

No.	R	Δ	T	L
5	1000'	2°25'15"	21.13'	42.25'
6	50'	89°59'35"	49.99'	78.53'

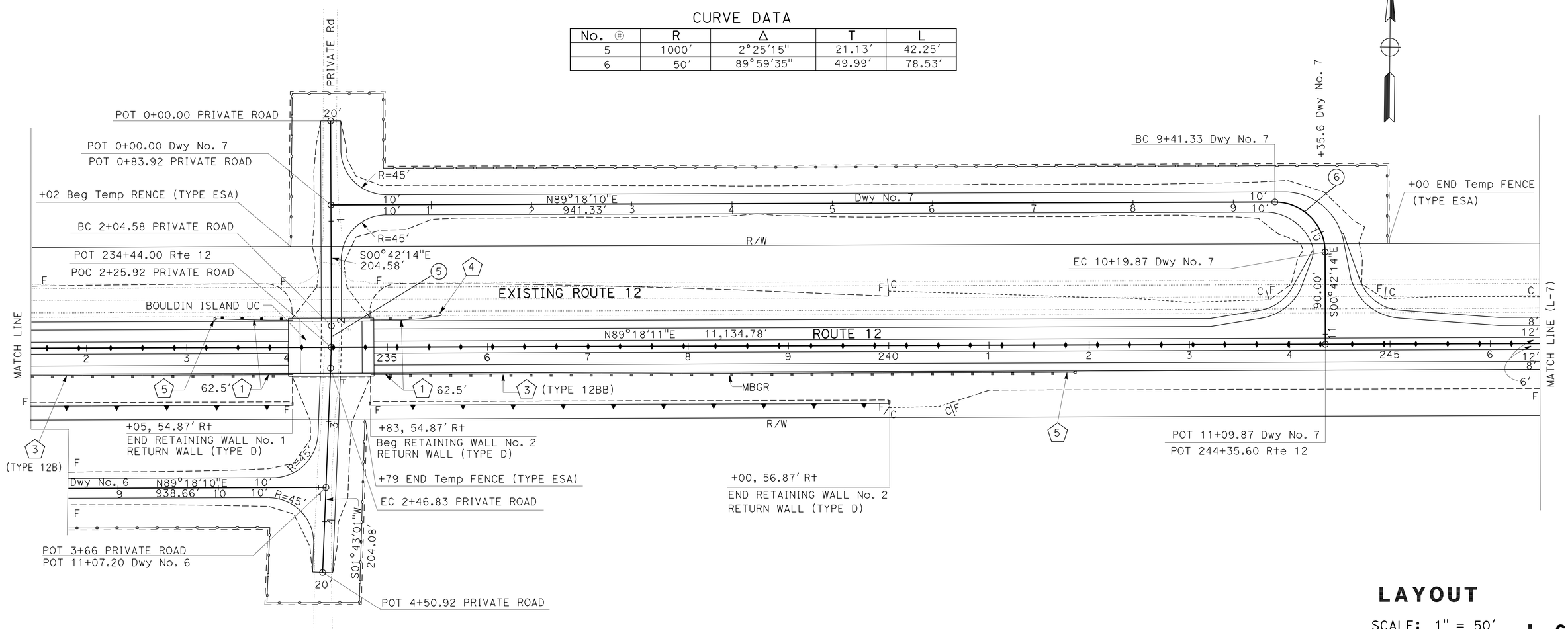

LAYOUT

SCALE: 1" = 50'

L-6

REVISED BY	OA	CALCULATED-DESIGNED BY	OSAMA ABDEL-MAGIED
DATE REVISED	04/20/12	CHECKED BY	RICHARD BOYER

FUNCTIONAL SUPERVISOR: NOMER GUITERREZ

STATE OF CALIFORNIA - DEPARTMENT OF TRANSPORTATION

Caltrans® DESIGN

LAST REVISION 00-00-00 DATE PLOTTED => 27-DEC-2012 TIME PLOTTED => 14:54

Dist	COUNTY	ROUTE	POST MILES TOTAL PROJECT	SHEET No.	TOTAL SHEETS
10	SJ	12	0.1/R4.4	10	130

REGISTERED CIVIL ENGINEER 4/16/12 DATE

12-24-12
PLANS APPROVAL DATE

REGISTERED PROFESSIONAL ENGINEER RICHARD BOYER No. 75844 Exp. 6/30/14 CIVIL STATE OF CALIFORNIA

THE STATE OF CALIFORNIA OR ITS OFFICERS OR AGENTS SHALL NOT BE RESPONSIBLE FOR THE ACCURACY OR COMPLETENESS OF SCANNED COPIES OF THIS PLAN SHEET.

NOTE:

FOR ACCURATE RIGHT OF WAY DATA, CONTACT RIGHT OF WAY ENGINEERING AT THE DISTRICT OFFICE.

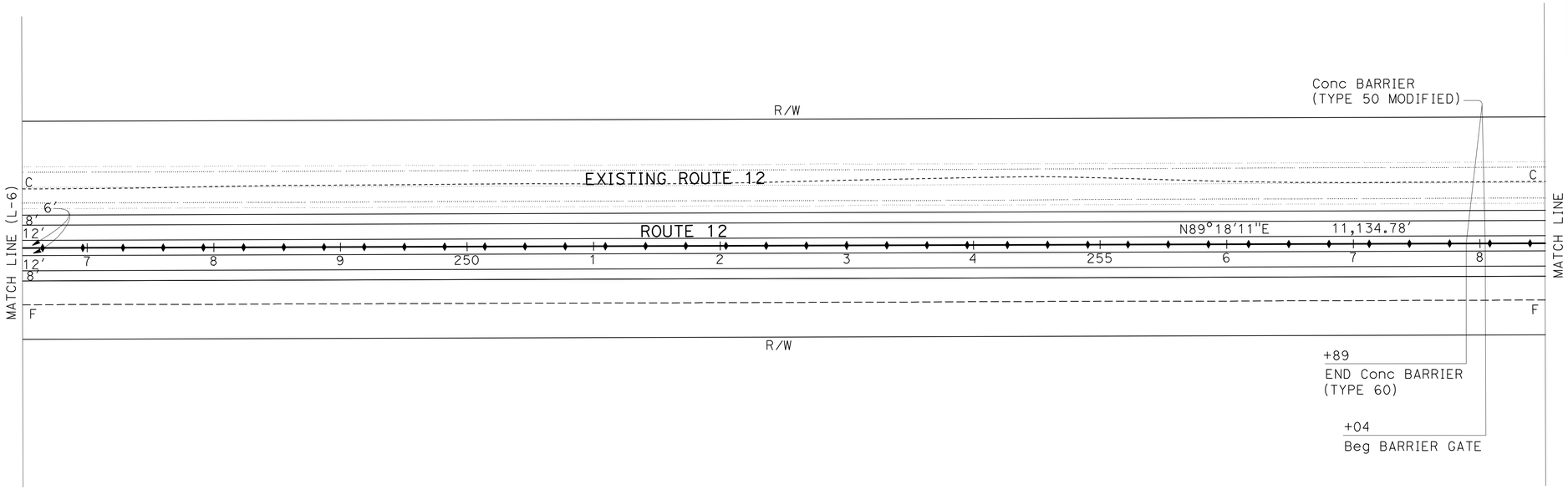

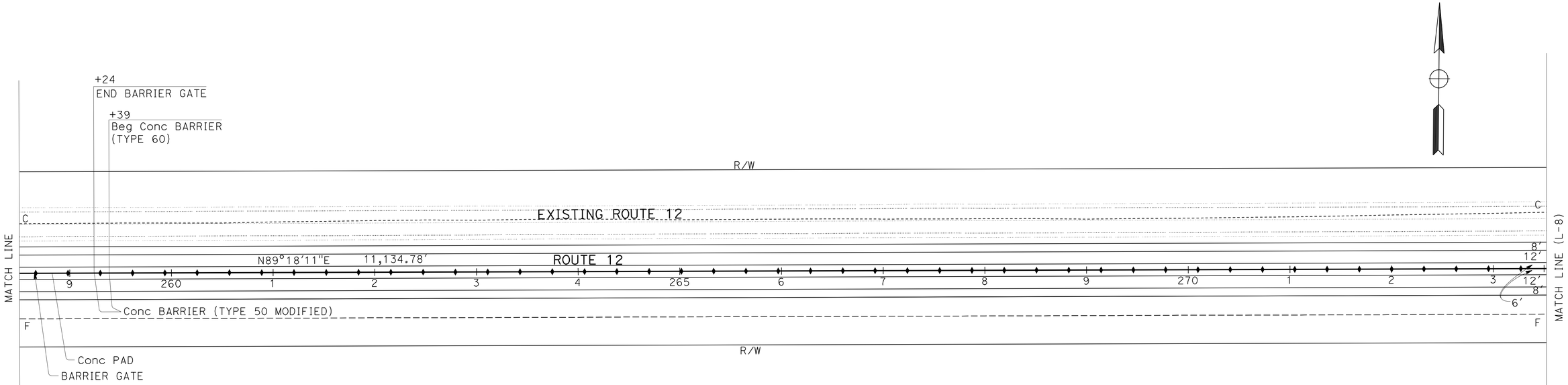

LAYOUT

SCALE: 1" = 50'

L-7

REVISED BY	DATE REVISED
OA	04/19/12

CALCULATED-DESIGNED BY: OSAMA ABDEL-MAGIED
CHECKED BY: RICHARD BOYER

FUNCTIONAL SUPERVISOR: NOMER GUITERREZ

STATE OF CALIFORNIA - DEPARTMENT OF TRANSPORTATION
Caltrans®
DESIGN

LAST REVISION 00-00-00 | DATE PLOTTED => 27-DEC-2012 | TIME PLOTTED => 14:54

Dist	COUNTY	ROUTE	POST MILES TOTAL PROJECT	SHEET No.	TOTAL SHEETS
10	SJ	12	0.1/R4.4	11	130

REGISTERED CIVIL ENGINEER 4/16/12 DATE

12-24-12
PLANS APPROVAL DATE

REGISTERED PROFESSIONAL ENGINEER RICHARD BOYER No. 75844 Exp. 6/30/14 CIVIL STATE OF CALIFORNIA

THE STATE OF CALIFORNIA OR ITS OFFICERS OR AGENTS SHALL NOT BE RESPONSIBLE FOR THE ACCURACY OR COMPLETENESS OF SCANNED COPIES OF THIS PLAN SHEET.

NOTE:

FOR ACCURATE RIGHT OF WAY DATA, CONTACT RIGHT OF WAY ENGINEERING AT THE DISTRICT OFFICE.

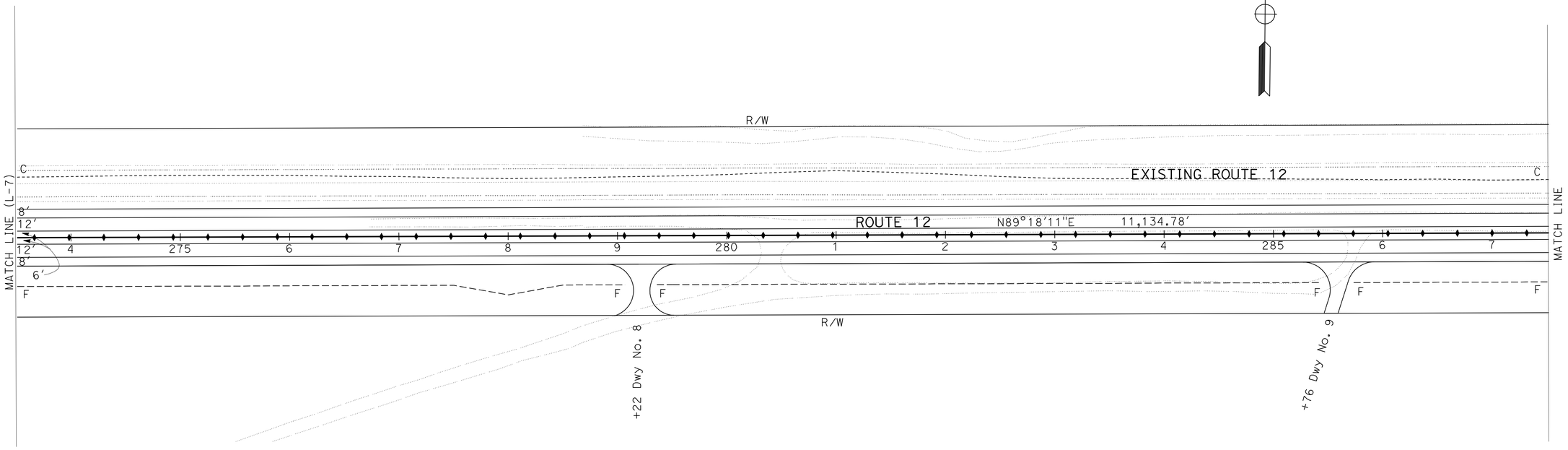

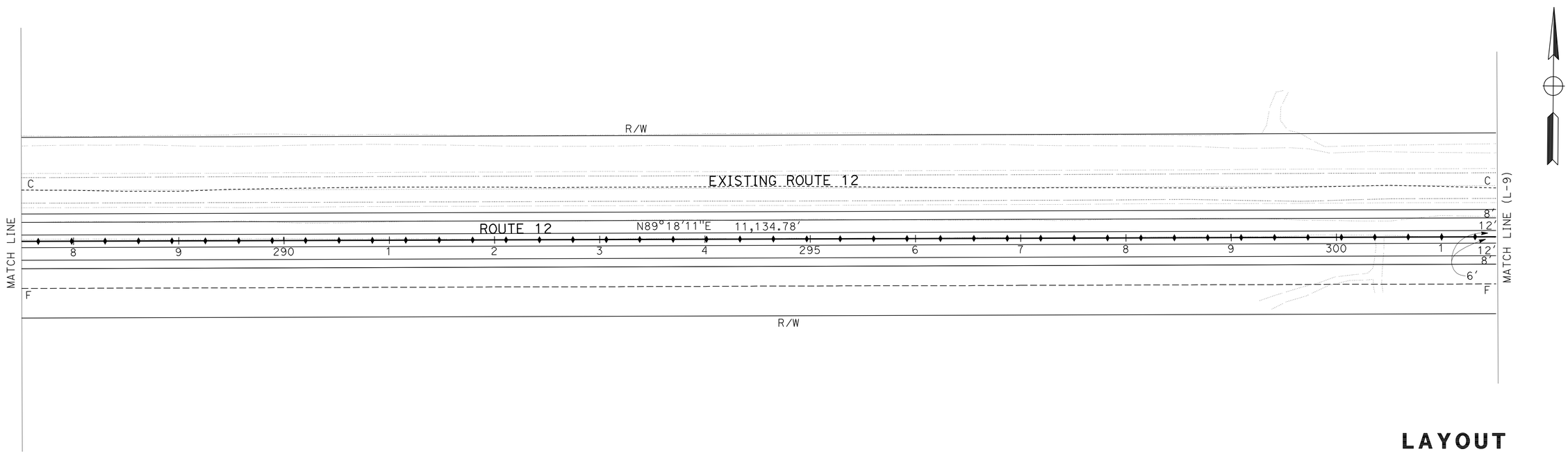

LAYOUT

SCALE: 1" = 50'

L-8

STATE OF CALIFORNIA - DEPARTMENT OF TRANSPORTATION

Caltrans

DESIGN

FUNCTIONAL SUPERVISOR: NOMER GUITERREZ

CALCULATED-DESIGNED BY: OSAMA ABDEL-MAGIED

CHECKED BY: RICHARD BOYER

REVISED BY: OA

DATE REVISED: 04/19/12

LAST REVISION 00-00-00

DATE PLOTTED => 27-DEC-2012

TIME PLOTTED => 14:54

Dist	COUNTY	ROUTE	POST MILES TOTAL PROJECT	SHEET No.	TOTAL SHEETS
10	SJ	12	0.1/R4.4	12	130

REGISTERED CIVIL ENGINEER 4/16/12 DATE

12-24-12
PLANS APPROVAL DATE

REGISTERED PROFESSIONAL ENGINEER RICHARD BOYER No. 75844 Exp. 6/30/14 CIVIL STATE OF CALIFORNIA

THE STATE OF CALIFORNIA OR ITS OFFICERS OR AGENTS SHALL NOT BE RESPONSIBLE FOR THE ACCURACY OR COMPLETENESS OF SCANNED COPIES OF THIS PLAN SHEET.

NOTE:

FOR ACCURATE RIGHT OF WAY DATA, CONTACT RIGHT OF WAY ENGINEERING AT THE DISTRICT OFFICE.

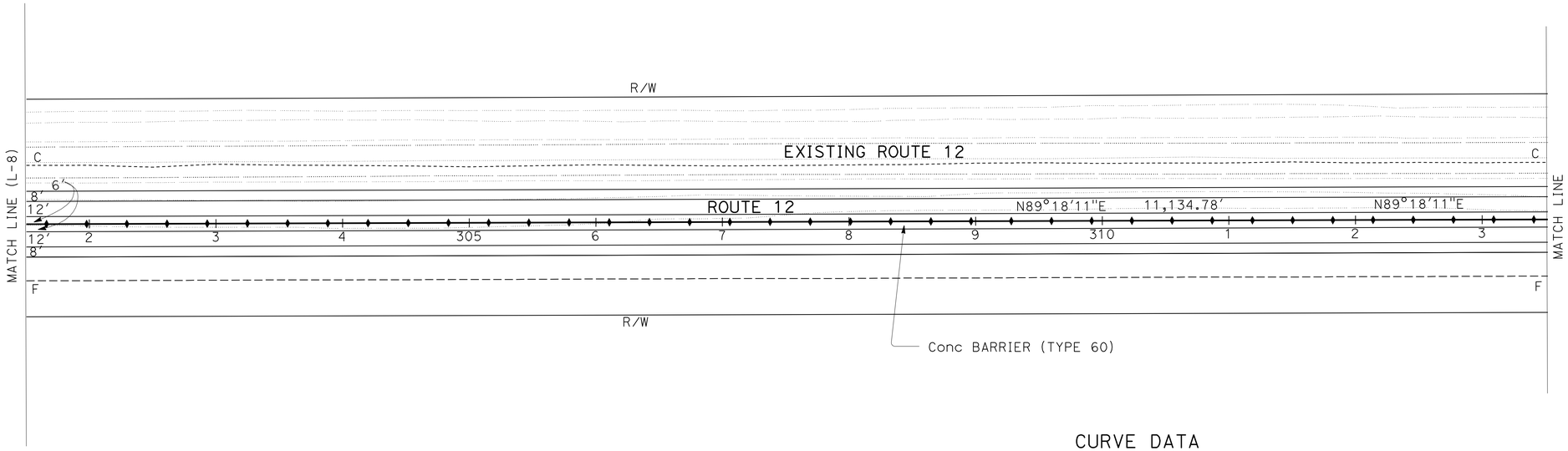

CURVE DATA

No. ⊕	R	Δ	T	L
7	2000'	13°36'48"	238.72'	475.19'
8	4500'	3°21'06"	131.65'	263.23'

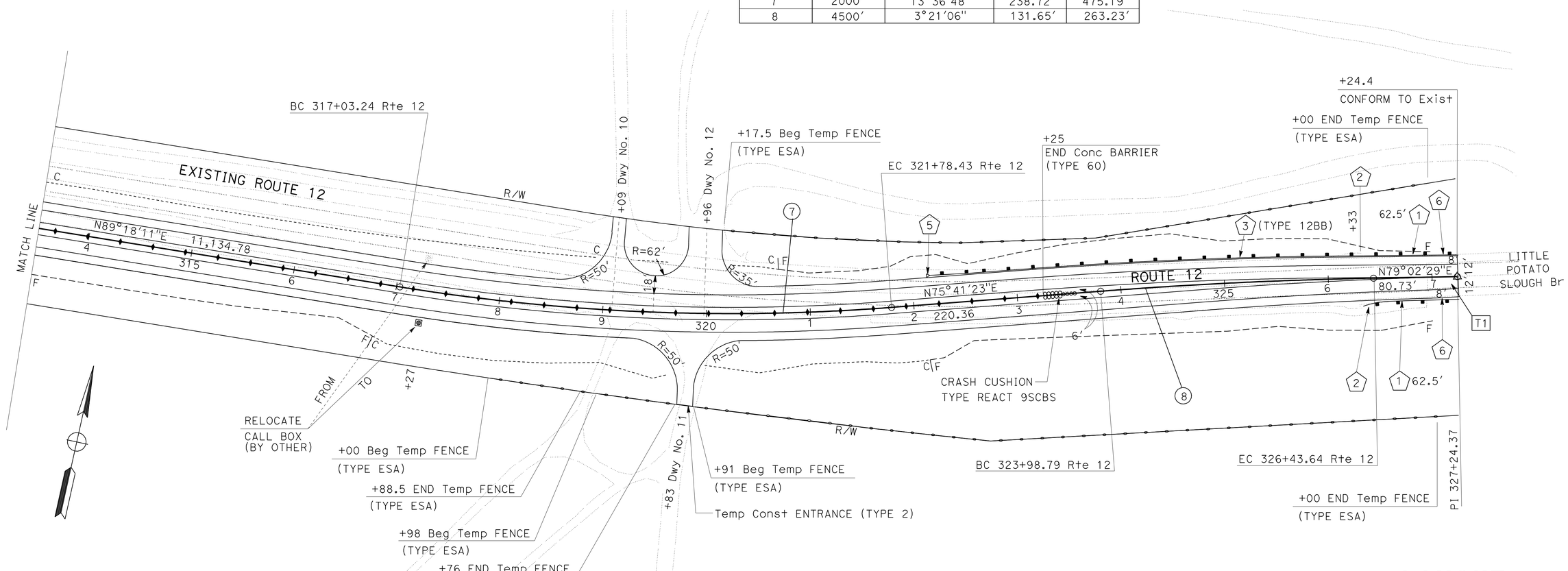

LAYOUT

SCALE: 1" = 50'

L-9

STATE OF CALIFORNIA - DEPARTMENT OF TRANSPORTATION

Caltrans® **DESIGN**

FUNCTIONAL SUPERVISOR: NOMER GUITERREZ

CALCULATED-DESIGNED BY: OSAMA ABDEL-MAGIED

CHECKED BY: RICHARD BOYER

REVISED BY: OA

DATE REVISED: 04/20/12

LAST REVISION: 00-00-00

DATE PLOTTED => 27-DEC-2012

TIME PLOTTED => 14:54

Dist	COUNTY	ROUTE	POST MILES TOTAL PROJECT	SHEET No.	TOTAL SHEETS
10	SJ	12	0.1/R4.4	13	130

REGISTERED CIVIL ENGINEER 4/16/12 DATE

12-24-12
PLANS APPROVAL DATE

REGISTERED PROFESSIONAL ENGINEER RICHARD BOYER No. 75844 Exp. 6/30/14 CIVIL STATE OF CALIFORNIA

THE STATE OF CALIFORNIA OR ITS OFFICERS OR AGENTS SHALL NOT BE RESPONSIBLE FOR THE ACCURACY OR COMPLETENESS OF SCANNED COPIES OF THIS PLAN SHEET.

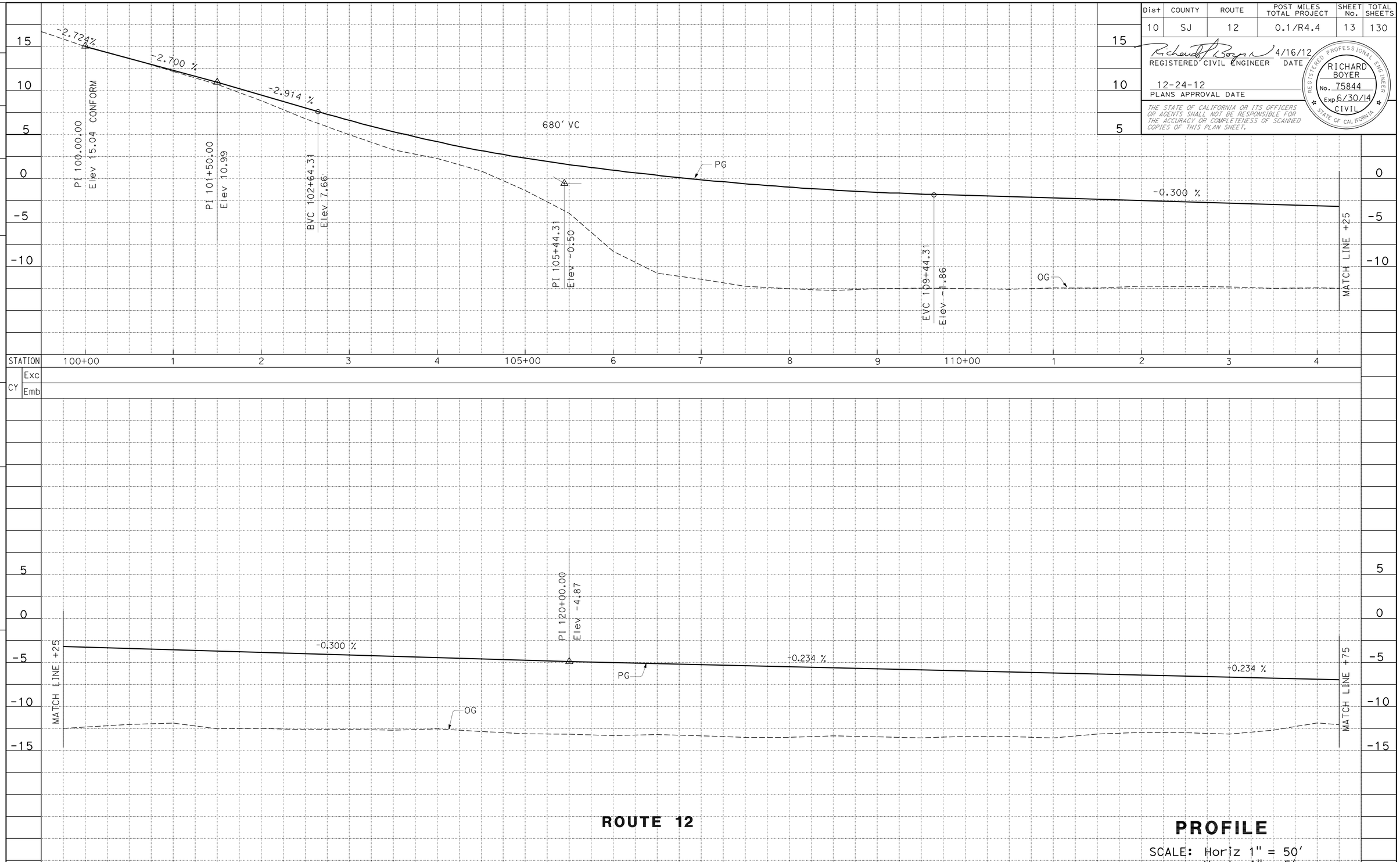

OA	04/30/12	REVISED BY / DATE REVISED
OSAMA ABDEL-MAGIED	RICHARD BOYER	CALCULATED-DESIGNED BY / CHECKED BY
NOMER GUITERREZ		FUNCTIONAL SUPERVISOR

STATE OF CALIFORNIA - DEPARTMENT OF TRANSPORTATION
Caltrans
DESIGN

LAST REVISION 00-00-00 | DATE PLOTTED => 27-DEC-2012 | TIME PLOTTED => 14:54

Dist	COUNTY	ROUTE	POST MILES TOTAL PROJECT	SHEET No.	TOTAL SHEETS
10	SJ	12	0.1/R4.4	14	130

Richard Boyer 4/16/12
REGISTERED CIVIL ENGINEER DATE

12-24-12
PLANS APPROVAL DATE

REGISTERED PROFESSIONAL ENGINEER
RICHARD BOYER
No. 75844
Exp. 6/30/14
CIVIL
STATE OF CALIFORNIA

THE STATE OF CALIFORNIA OR ITS OFFICERS OR AGENTS SHALL NOT BE RESPONSIBLE FOR THE ACCURACY OR COMPLETENESS OF SCANNED COPIES OF THIS PLAN SHEET.

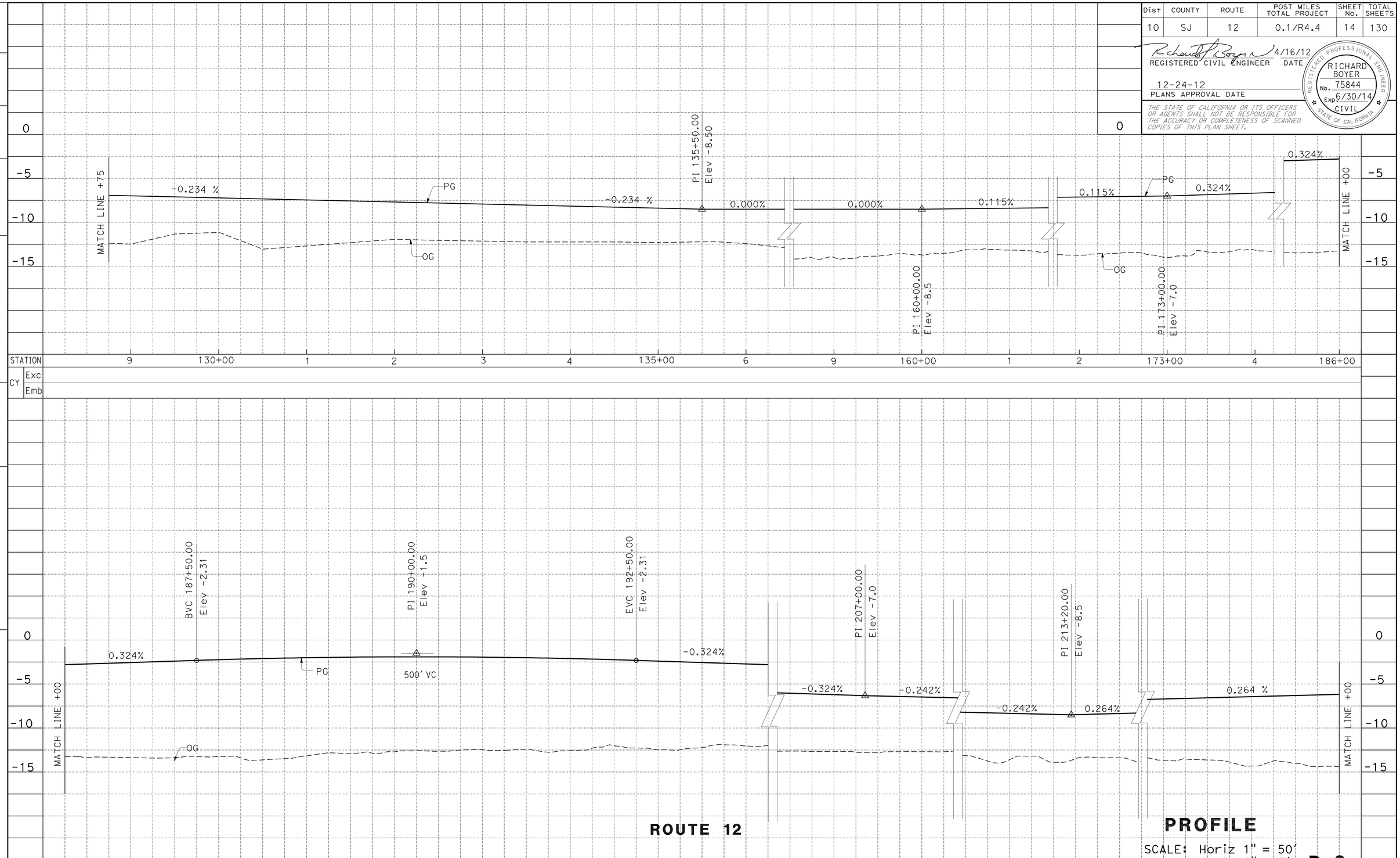

ROUTE 12

PROFILE

SCALE: Horiz 1" = 50'
Vert 1" = 5'

P-2

OA 04/30/12 — REVISED BY / DATE REVISED

OSAMA ABDEL-MAGIED — CALCULATED-DESIGNED BY

RICHARD BOYER — CHECKED BY

NOMER GUITERREZ — FUNCTIONAL SUPERVISOR

STATE OF CALIFORNIA - DEPARTMENT OF TRANSPORTATION

Caltrans® DESIGN

LAST REVISION 00-00-00

DATE PLOTTED => 27-DEC-2012
TIME PLOTTED => 14:15

Dist	COUNTY	ROUTE	POST MILES TOTAL PROJECT	SHEET No.	TOTAL SHEETS
10	SJ	12	0.1/R4.4	15	130

REGISTERED CIVIL ENGINEER 4/16/12 DATE

12-24-12
PLANS APPROVAL DATE

RICHARD BOYER No. 75844 Exp. 6/30/14 CIVIL — REGISTERED PROFESSIONAL ENGINEER — STATE OF CALIFORNIA

THE STATE OF CALIFORNIA OR ITS OFFICERS OR AGENTS SHALL NOT BE RESPONSIBLE FOR THE ACCURACY OR COMPLETENESS OF SCANNED COPIES OF THIS PLAN SHEET.

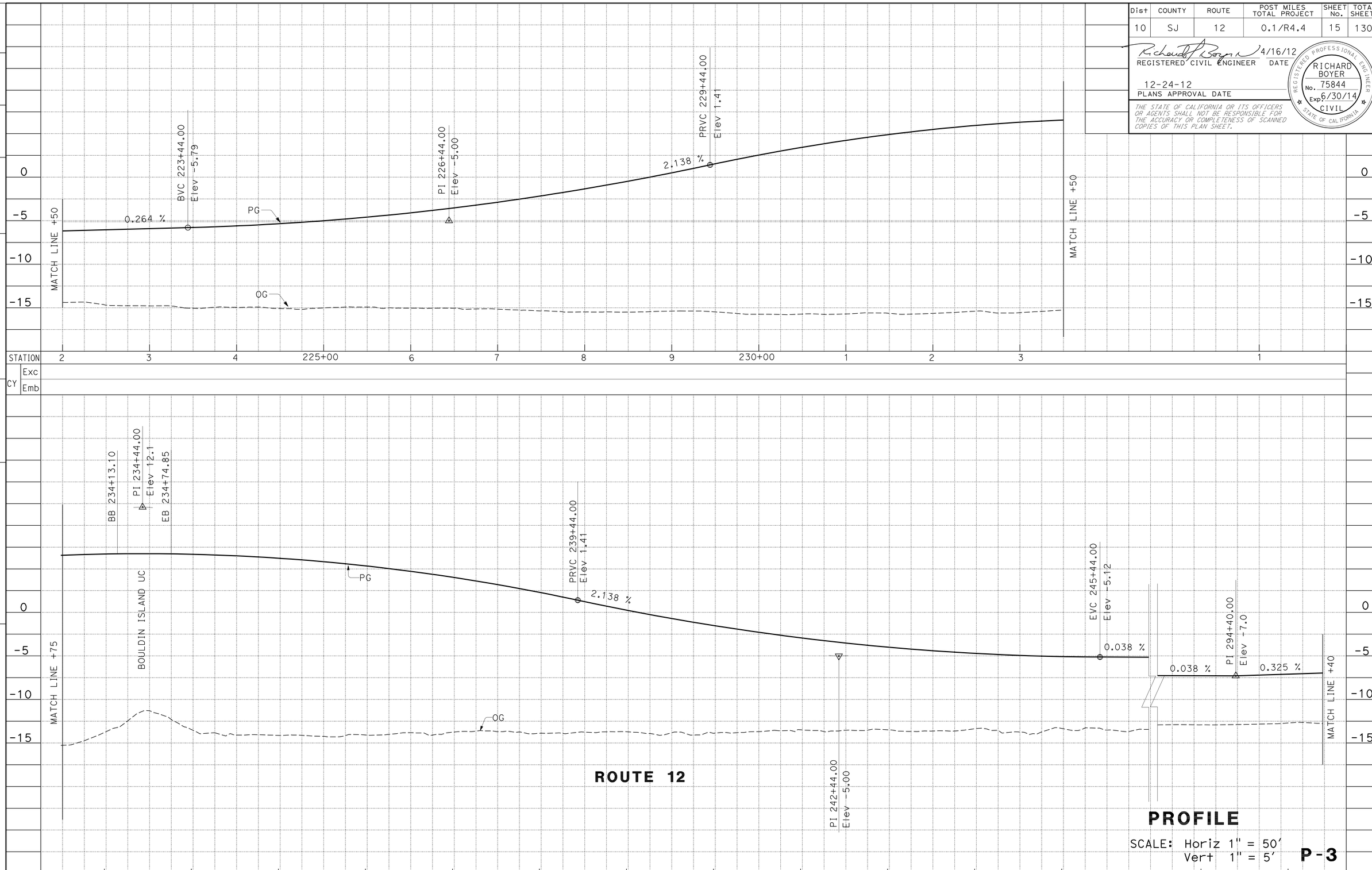

PROFILE

SCALE: Horiz 1" = 50'
Vert 1" = 5'

P-3

STATE OF CALIFORNIA - DEPARTMENT OF TRANSPORTATION
Caltrans
DESIGN

FUNCTIONAL SUPERVISOR: NOMER GUITERREZ
CALCULATED-DESIGNED BY: OSAMA ABDEL-MAGIED
CHECKED BY: RICHARD BOYER
REVISED BY: OA
DATE REVISED: 04/30/12

LAST REVISION 00-00-00
DATE PLOTTED => 28-DEC-2012
TIME PLOTTED => 11:34

Dist	COUNTY	ROUTE	POST MILES TOTAL PROJECT	SHEET No.	TOTAL SHEETS
10	SJ	12	0.1/R4.4	16	130

REGISTERED CIVIL ENGINEER 4/16/12 DATE

12-24-12
PLANS APPROVAL DATE

REGISTERED PROFESSIONAL ENGINEER RICHARD BOYER No. 75844 Exp 6/30/14 CIVIL STATE OF CALIFORNIA

THE STATE OF CALIFORNIA OR ITS OFFICERS OR AGENTS SHALL NOT BE RESPONSIBLE FOR THE ACCURACY OR COMPLETENESS OF SCANNED COPIES OF THIS PLAN SHEET.

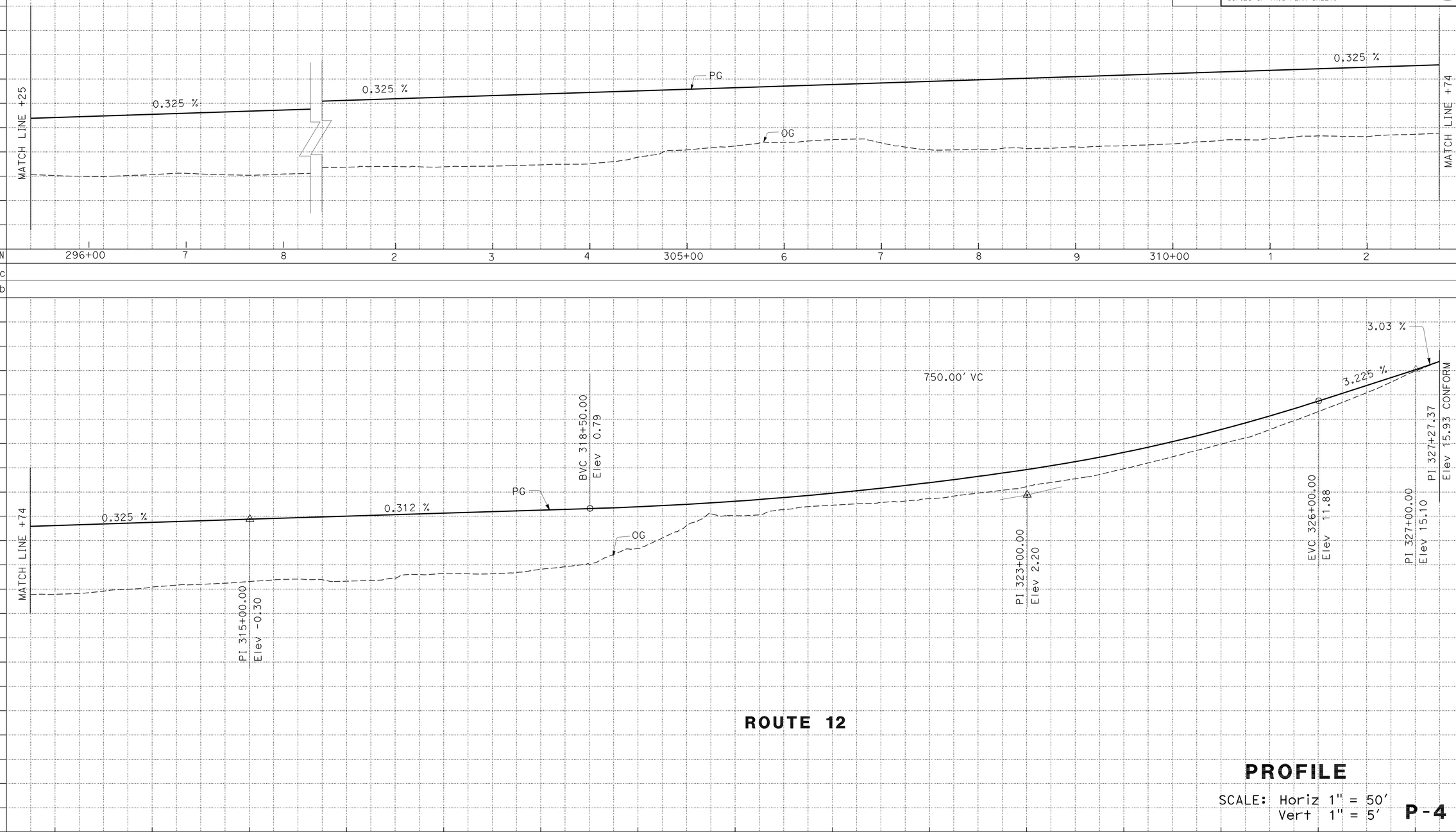

ROUTE 12

PROFILE

SCALE: Horiz 1" = 50'
Vert 1" = 5'

P-4

REVISED BY	RS
DATE REVISED	04/30/12
CALCULATED-DESIGNED BY	OSAMA ABDEL-MAGIED
CHECKED BY	RICHARD BOYER
FUNCTIONAL SUPERVISOR	NOMER GUITERREZ

STATE OF CALIFORNIA - DEPARTMENT OF TRANSPORTATION

Caltrans® **DESIGN**

LAST REVISION 00-00-00

DATE PLOTTED => 27-DEC-2012
TIME PLOTTED => 14:15

Dist	COUNTY	ROUTE	POST MILES TOTAL PROJECT	SHEET No.	TOTAL SHEETS
10	SJ	12	0.1/R4.4	17	130

REGISTERED CIVIL ENGINEER 4/16/12 DATE

12-24-12
PLANS APPROVAL DATE

REGISTERED PROFESSIONAL ENGINEER RICHARD BOYER No. 75844 Exp 6/30/14 CIVIL STATE OF CALIFORNIA

THE STATE OF CALIFORNIA OR ITS OFFICERS OR AGENTS SHALL NOT BE RESPONSIBLE FOR THE ACCURACY OR COMPLETENESS OF SCANNED COPIES OF THIS PLAN SHEET.

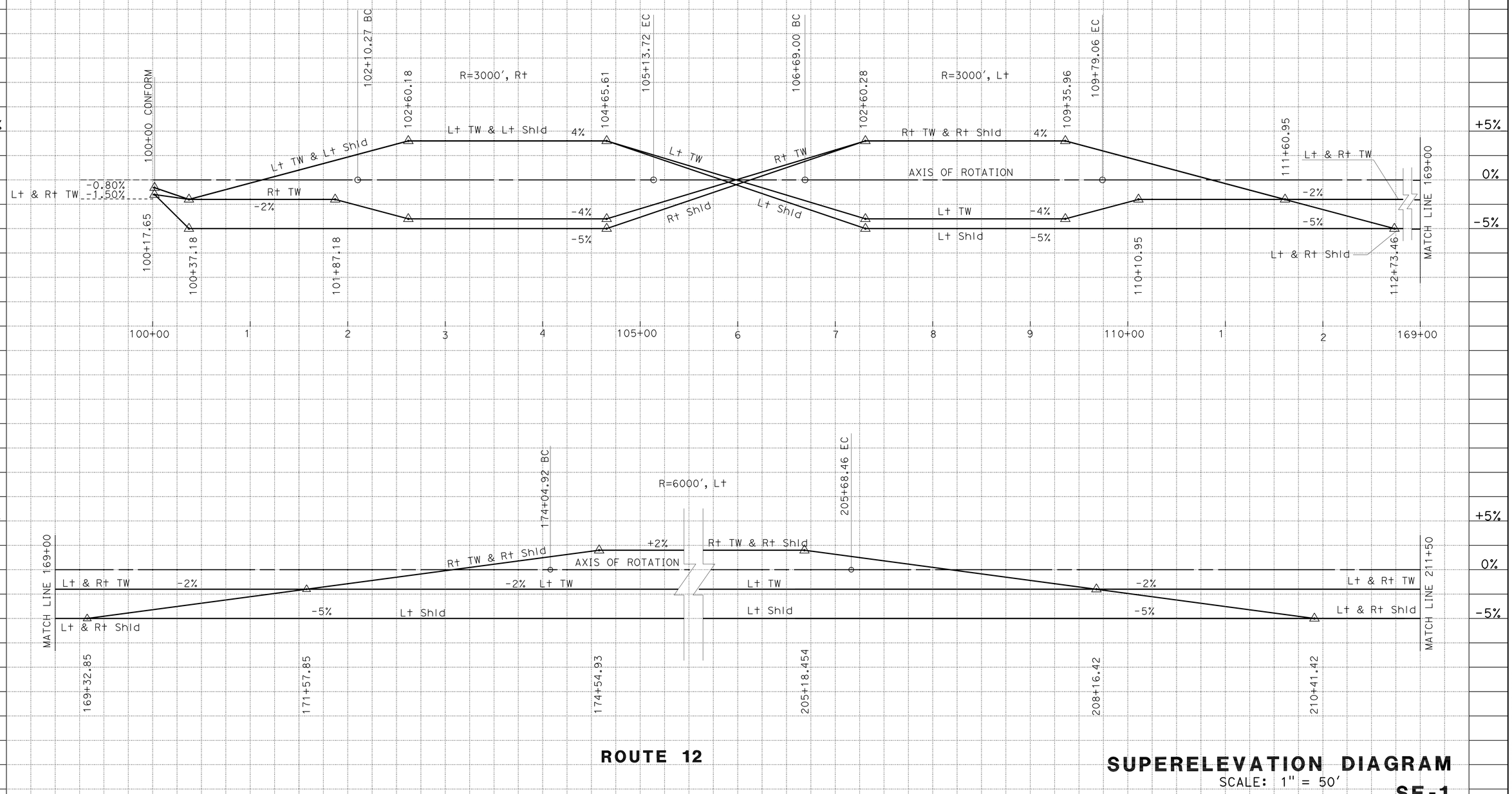

ROUTE 12

SUPERELEVATION DIAGRAM

SCALE: 1" = 50'

SE-1

STATE OF CALIFORNIA - DEPARTMENT OF TRANSPORTATION

DESIGN

FUNCTIONAL SUPERVISOR: NOMER GUITERREZ

CALCULATED-DESIGNED BY: OSAMA ABDEL-MAGIED

CHECKED BY: RICHARD BOYER

REVISED BY: OA

DATE REVISED: 04/17/12

LAST REVISION 00-00-00

DATE PLOTTED => 27-DEC-2012
TIME PLOTTED => 14:15

Dist	COUNTY	ROUTE	POST MILES TOTAL PROJECT	SHEET No.	TOTAL SHEETS
10	SJ	12	0.1/R4.4	18	130

REGISTERED CIVIL ENGINEER 4/16/12 DATE

12-24-12
PLANS APPROVAL DATE

REGISTERED PROFESSIONAL ENGINEER RICHARD BOYER No. 75844 Exp. 6/30/14 CIVIL STATE OF CALIFORNIA

THE STATE OF CALIFORNIA OR ITS OFFICERS OR AGENTS SHALL NOT BE RESPONSIBLE FOR THE ACCURACY OR COMPLETENESS OF SCANNED COPIES OF THIS PLAN SHEET.

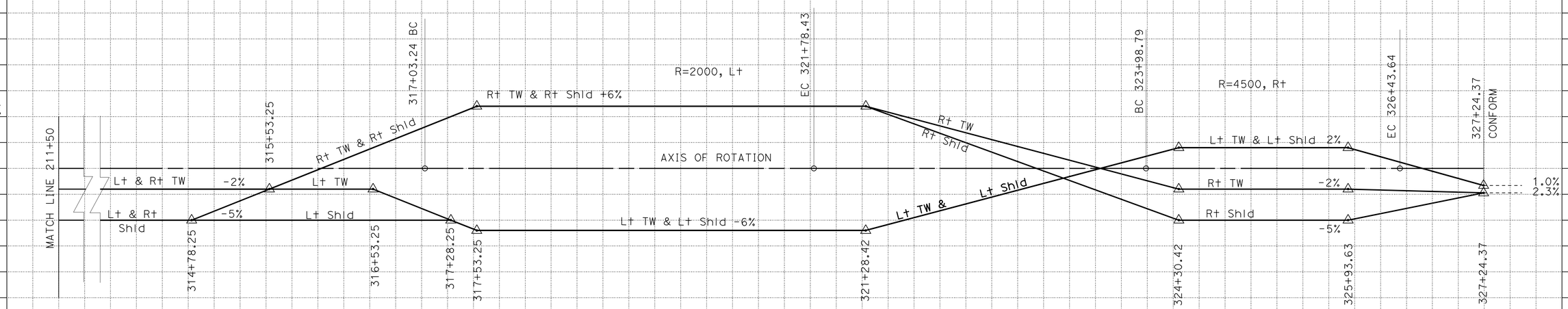

ROUTE 12

SUPERELEVATION DIAGRAM

SCALE: 1" = 50'

SE-2

STATION	4	315+00	6	7	8	9	320+00	1	2	3	4	325+00	6	7	TOTAL
CY Exc															
CY Emb															

REVISED BY	DATE REVISED
OA	04/17/12

OSAMA ABDEL-MAGIED
RICHARD BOYER

CALCULATED-DESIGNED BY
CHECKED BY

FUNCTIONAL SUPERVISOR
NOMER GUITERREZ

STATE OF CALIFORNIA - DEPARTMENT OF TRANSPORTATION
Caltrans
DESIGN

LAST REVISION 00-00-00
DATE PLOTTED => 27-DEC-2012
TIME PLOTTED => 14:15

Dist	COUNTY	ROUTE	POST MILES TOTAL PROJECT	SHEET No.	TOTAL SHEETS
10	SJ	12	0.1/R4.4	19	130

REGISTERED CIVIL ENGINEER 4/16/12 DATE

12-24-12
PLANS APPROVAL DATE

REGISTERED PROFESSIONAL ENGINEER RICHARD BOYER No. 75844 Exp. 6/30/14 CIVIL STATE OF CALIFORNIA

THE STATE OF CALIFORNIA OR ITS OFFICERS OR AGENTS SHALL NOT BE RESPONSIBLE FOR THE ACCURACY OR COMPLETENESS OF SCANNED COPIES OF THIS PLAN SHEET.

NOTES:

1. THE CONTRACTOR SHALL VERIFY ALL CONTROLLING FIELD DIMENSIONS BEFORE ORDERING OR FABRICATING ANY MATERIALS.
2. DRAINAGE WICKS SHALL BE INSTALLED AT A TRIANGULAR SPACING OF 5′ AND TO A DEPTH OF 60′.
3. HORIZONTAL STRIP DRAINS SHALL BE PLACED AS SHOWN ON PLANS OR AS DIRECTED BY THE ENGINEER.

ABBREVIATIONS:

TCE - TEMPORARY CONSTRUCTION EASEMENT
GRE - GEOSYNTHETIC REINFORCED EMBANKMENT
RHMA - RUBBERIZED HOT MIX ASPHALT

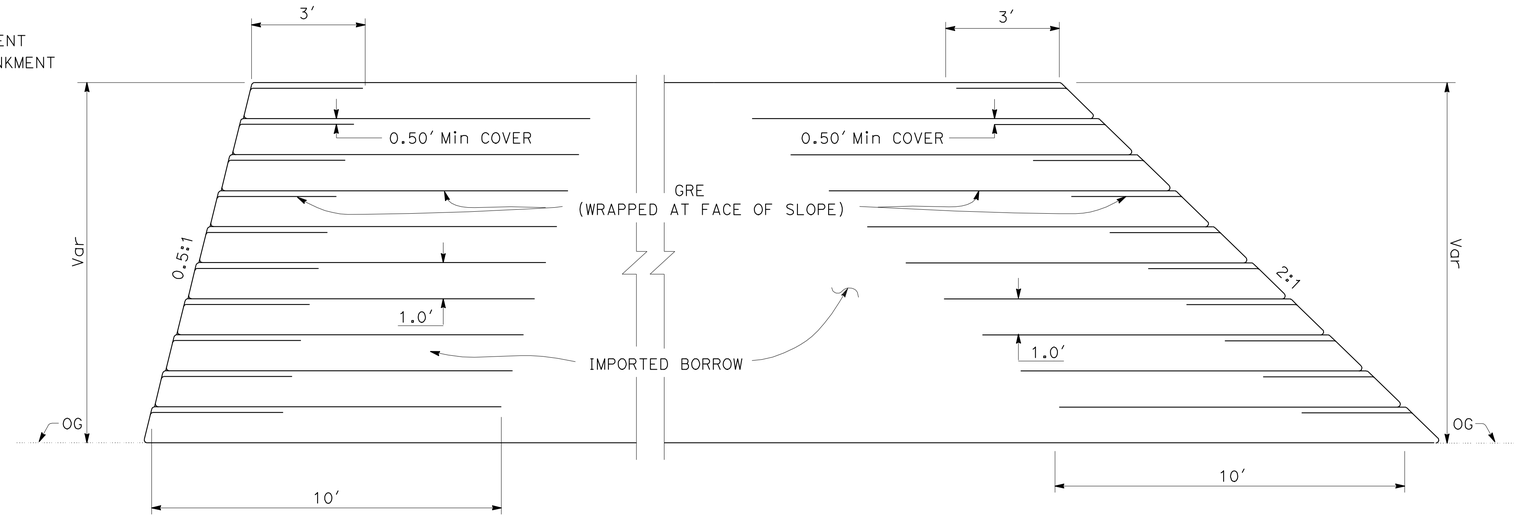

GEOSYNTHETIC REINFORCED FABRIC INSTALLATION FOR EMBANKMENT

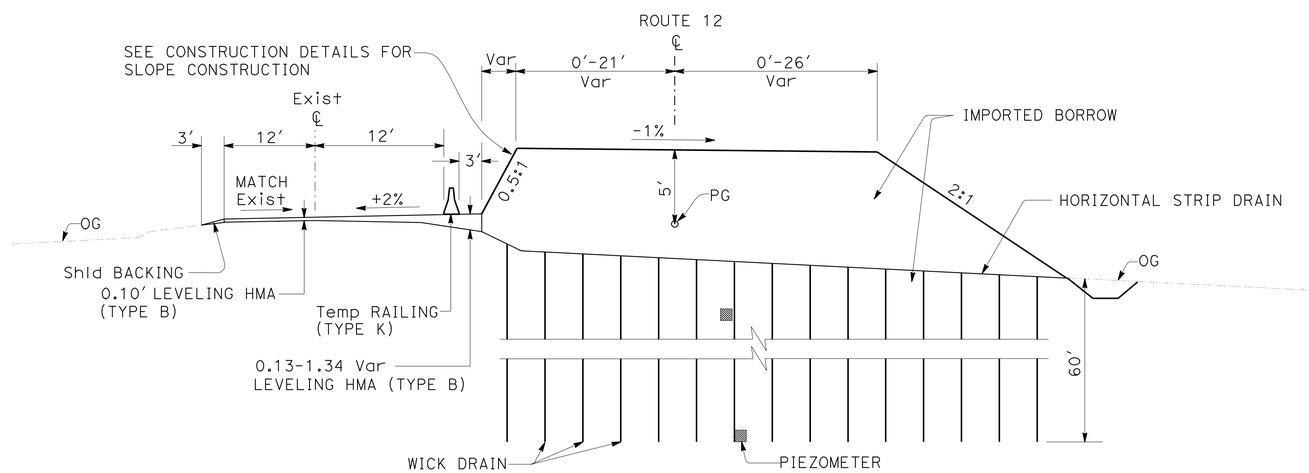

ROUTE 12 CONSOLIDATION
STAGE 1

Sta 105+00 TO Sta 129+59
Sta 131+51 TO Sta 179+49
Sta 180+54 TO Sta 233+86
Sta 234+93 TO Sta 319+37

CONSTRUCTION DETAILS

NO SCALE

C-1

REVISED BY	OA
DATE REVISED	04/30/12
CALCULATED-DESIGNED BY	OSAMA ABDEL-MAGIED
CHECKED BY	RICHARD BOYER
FUNCTIONAL SUPERVISOR	NOMER GUITERREZ

STATE OF CALIFORNIA - DEPARTMENT OF TRANSPORTATION
Caltrans
DESIGN

LAST REVISION 00-00-00
DATE PLOTTED => 27-DEC-2012
TIME PLOTTED => 14:15

Dist	COUNTY	ROUTE	POST MILES TOTAL PROJECT	SHEET No.	TOTAL SHEETS
10	SJ	12	0.1/R4.4	20	130

REGISTERED CIVIL ENGINEER 4/16/12 DATE

12-24-12
PLANS APPROVAL DATE

REGISTERED PROFESSIONAL ENGINEER RICHARD BOYER No. 75844 Exp. 6/30/14 CIVIL STATE OF CALIFORNIA

THE STATE OF CALIFORNIA OR ITS OFFICERS OR AGENTS SHALL NOT BE RESPONSIBLE FOR THE ACCURACY OR COMPLETENESS OF SCANNED COPIES OF THIS PLAN SHEET.

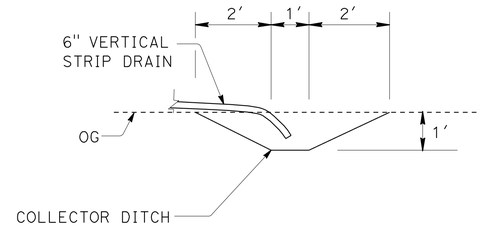

SECTION A-A

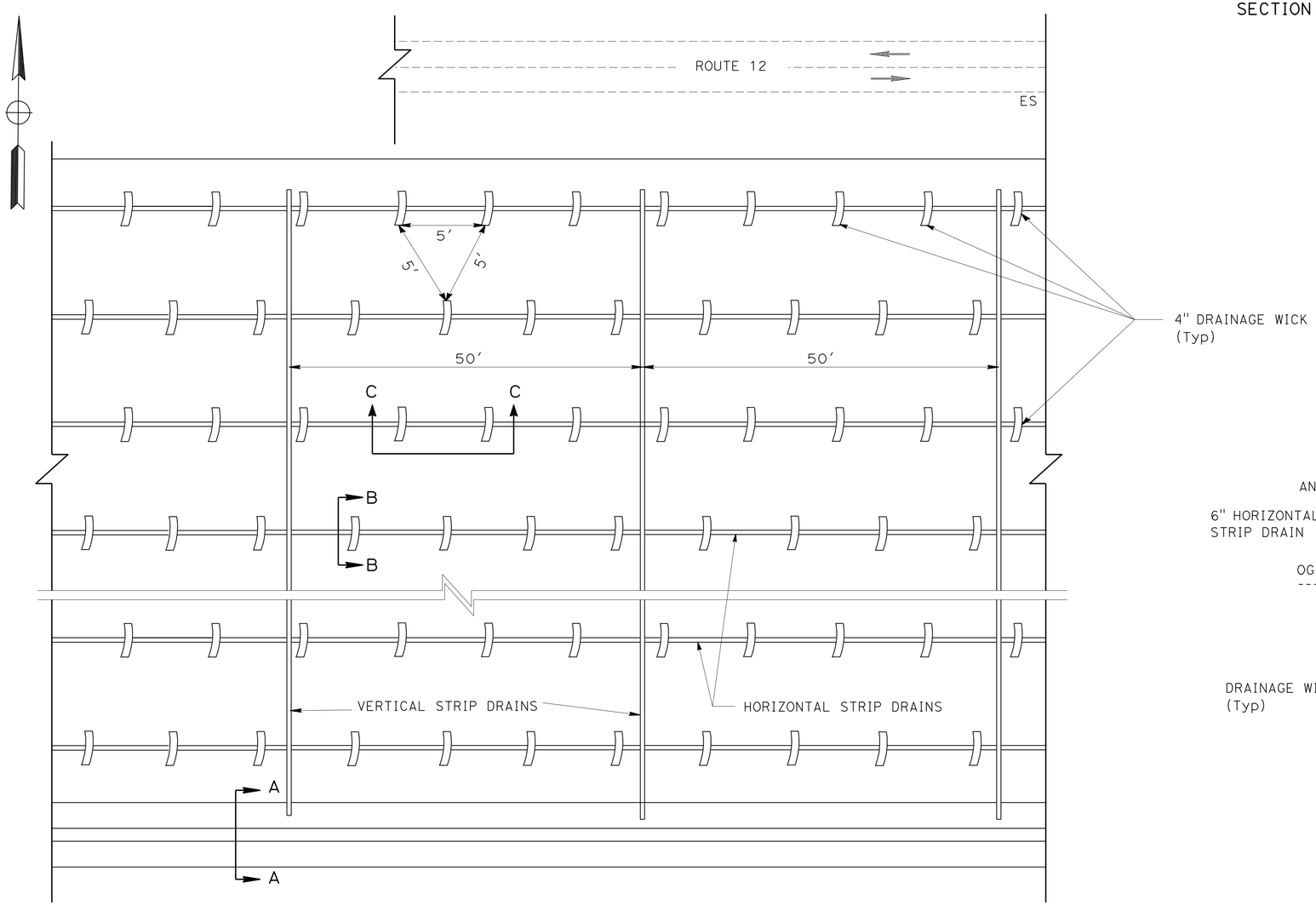

PLAN

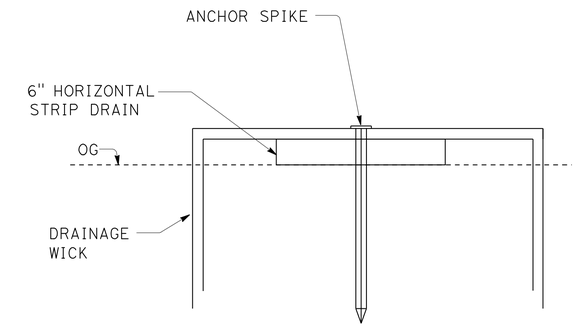

SECTION B-B

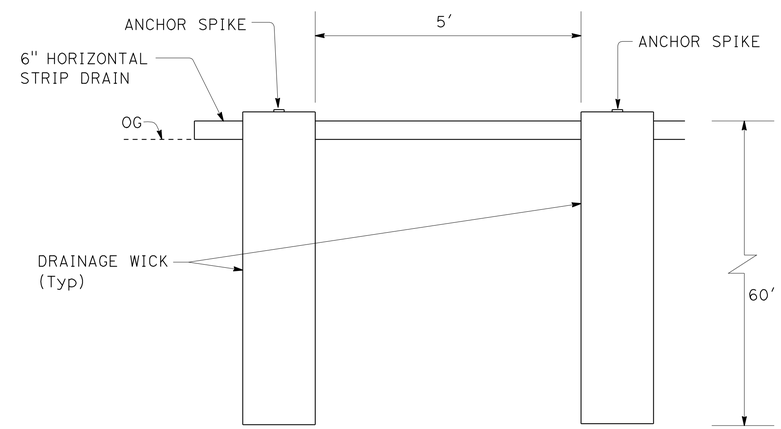

SECTION C-C

DRAINAGE WICK / STRIP DRAIN

CONSTRUCTION DETAILS

NO SCALE

C-2

STATE OF CALIFORNIA - DEPARTMENT OF TRANSPORTATION
Caltrans
DESIGN

FUNCTIONAL SUPERVISOR: NOMER GUITERREZ
CALCULATED-DESIGNED BY: OSAMA ABDEL-MAGIED
CHECKED BY: RICHARD BOYER
REVISED BY: OA
DATE REVISED: 04/20/12

LAST REVISION 00-00-00
DATE PLOTTED => 27-DEC-2012
TIME PLOTTED => 14:16

Dist	COUNTY	ROUTE	POST MILES TOTAL PROJECT	SHEET No.	TOTAL SHEETS
10	SJ	12	0.1/R4.4	21	130

Richard Boyer 4/16/12
REGISTERED CIVIL ENGINEER DATE

12-24-12
PLANS APPROVAL DATE

REGISTERED PROFESSIONAL ENGINEER RICHARD BOYER No. 75844 Exp. 6/30/14 CIVIL STATE OF CALIFORNIA

THE STATE OF CALIFORNIA OR ITS OFFICERS OR AGENTS SHALL NOT BE RESPONSIBLE FOR THE ACCURACY OR COMPLETENESS OF SCANNED COPIES OF THIS PLAN SHEET.

CURVE DATA

No.	R	Δ	T	L
1	46′	70°17′35″	32.39′	56.43′
2	54′	71°43′26″	39.04′	67.60′
3	54′	54°42′18″	27.93′	51.56′
4	46′	51°46′33″	22.32′	41.57′
5	10′	53°8′13″	5.00′	9.27′
6	60′	79°1′14″	49.48′	82.75′
7	50′	89°59′35″	49.99′	78.53′
8	51′	57°13′20″	27.82′	50.93′

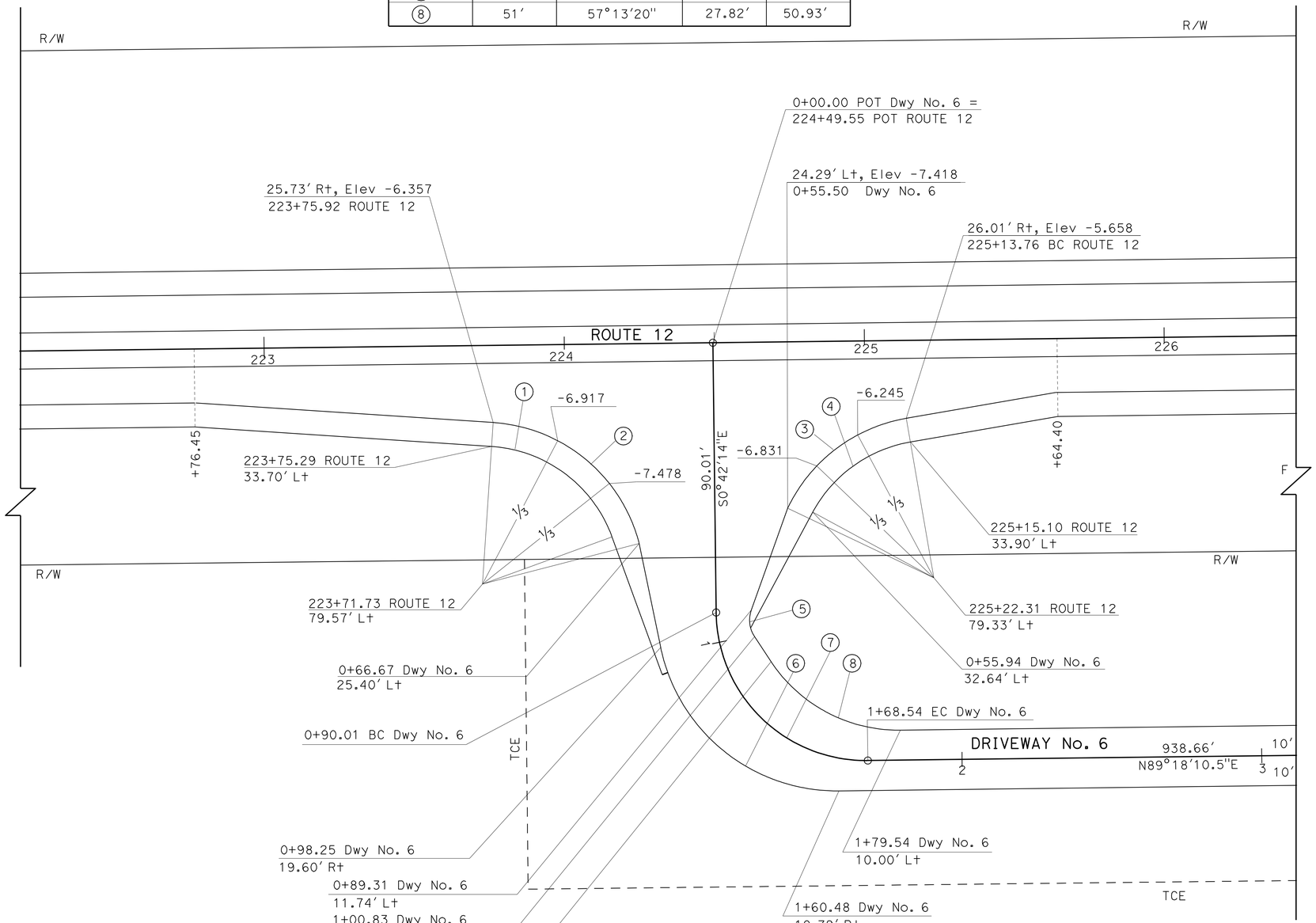

DRIVEWAY No. 6

CONSTRUCTION DETAILS

SCALE: 1" = 200′

C-3

STATE OF CALIFORNIA - DEPARTMENT OF TRANSPORTATION
Caltrans DESIGN

FUNCTIONAL SUPERVISOR: NOMER GUITERREZ
CALCULATED-DESIGNED BY: OSAMA ABDEL-MAGIED
CHECKED BY: RICHARD BOYER
REVISED BY: OA
DATE REVISED: 04/20/12

LAST REVISION 00-00-00 | DATE PLOTTED => 27-DEC-2012 | TIME PLOTTED => 14:16

Dist	COUNTY	ROUTE	POST MILES TOTAL PROJECT	SHEET No.	TOTAL SHEETS
10	SJ	12	0.1/R4.4	22	130

REGISTERED CIVIL ENGINEER 4/16/12 DATE

12-24-12
PLANS APPROVAL DATE

REGISTERED PROFESSIONAL ENGINEER RICHARD BOYER No. 75844 Exp. 6/30/14 CIVIL STATE OF CALIFORNIA

THE STATE OF CALIFORNIA OR ITS OFFICERS OR AGENTS SHALL NOT BE RESPONSIBLE FOR THE ACCURACY OR COMPLETENESS OF SCANNED COPIES OF THIS PLAN SHEET.

CURVE DATA

No.	R	Δ	T	L
1	115′	70°17′35"	80.96′	141.09′
2	135′	71°43′26"	97.59′	169.00′
3	135′	54°42′18"	69.84′	128.90′
4	115′	51°46′33"	55.81′	103.92′
5	50′	40°49′24"	18.61′	35.63′
6	150′	79°1′14"	123.70′	206.88′
7	50′	89°59′35"	49.99′	78.54′
8	125′	69°32′08"	86.77′	151.70′

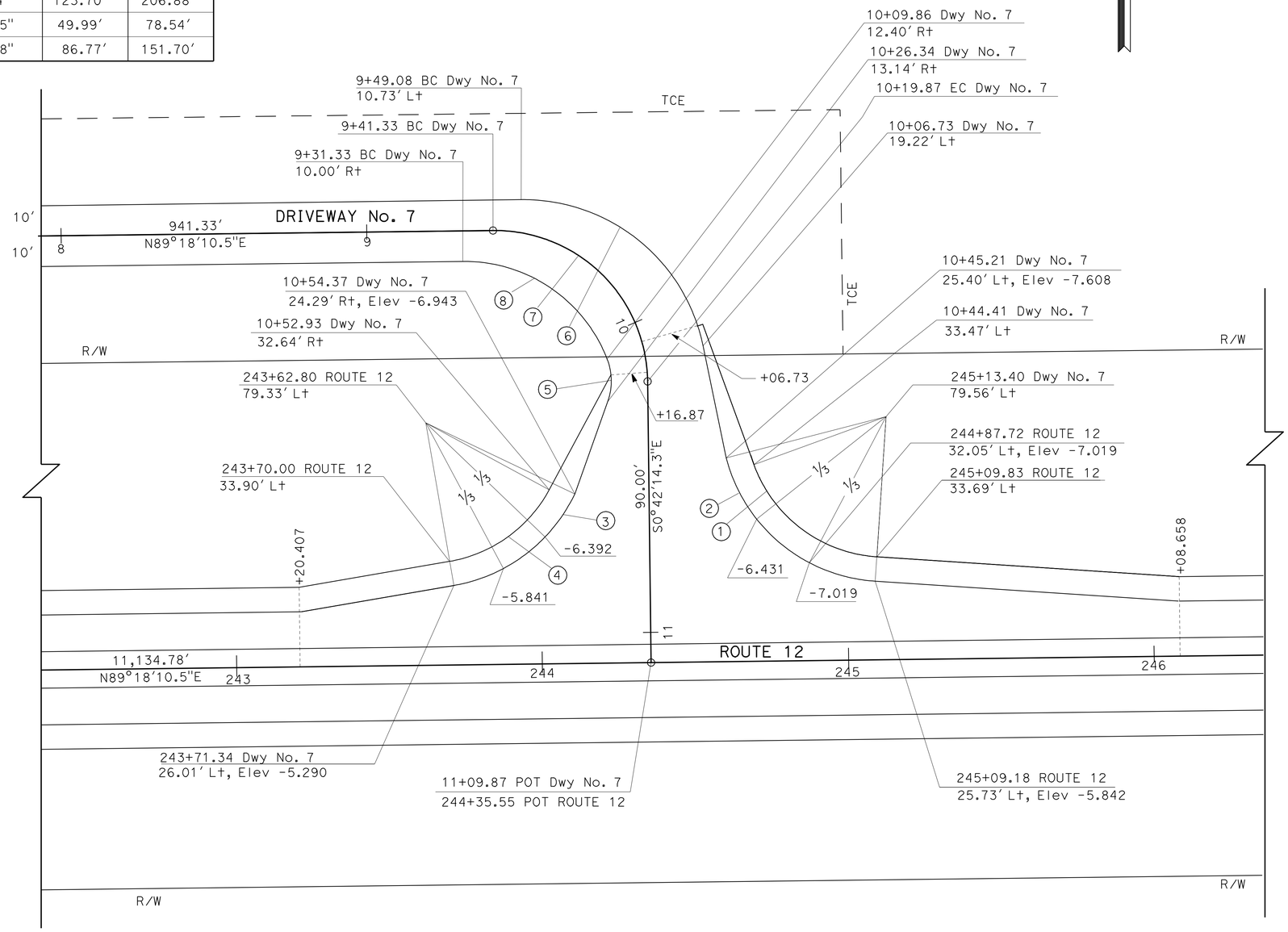

DRIVEWAY No. 7

CONSTRUCTION DETAILS

SCALE: 1" = 200′ **C-4**

STATE OF CALIFORNIA - DEPARTMENT OF TRANSPORTATION
Caltrans® **DESIGN**

FUNCTIONAL SUPERVISOR: NOMER GUITERREZ
CALCULATED-DESIGNED BY: OSAMA ABDEL-MAGIED
CHECKED BY: RICHARD BOYER
REVISED BY: OA
DATE REVISED: 04/26/12

LAST REVISION 00-00-00 | DATE PLOTTED => 27-DEC-2012 | TIME PLOTTED => 14:16

Dist	COUNTY	ROUTE	POST MILES TOTAL PROJECT	SHEET No.	TOTAL SHEETS
10	SJ	12	0.1/R4.4	23	130

REGISTERED CIVIL ENGINEER 4/16/12 DATE

12-24-12
PLANS APPROVAL DATE

REGISTERED PROFESSIONAL ENGINEER RICHARD BOYER No. 75844 Exp. 6/30/14 CIVIL STATE OF CALIFORNIA

THE STATE OF CALIFORNIA OR ITS OFFICERS OR AGENTS SHALL NOT BE RESPONSIBLE FOR THE ACCURACY OR COMPLETENESS OF SCANNED COPIES OF THIS PLAN SHEET.

CURVE DATA

No.	R	Δ	T	L
1	45′	89°59′35"	49.99′	78.53′
2	45′	90°0′25"	45.01′	70.69′
3	45′	87°35′09"	43.14′	68.79′
4	45′	92°24′51"	46.94′	72.58′
5	1000′	2°25′15"	21.13′	42.25′

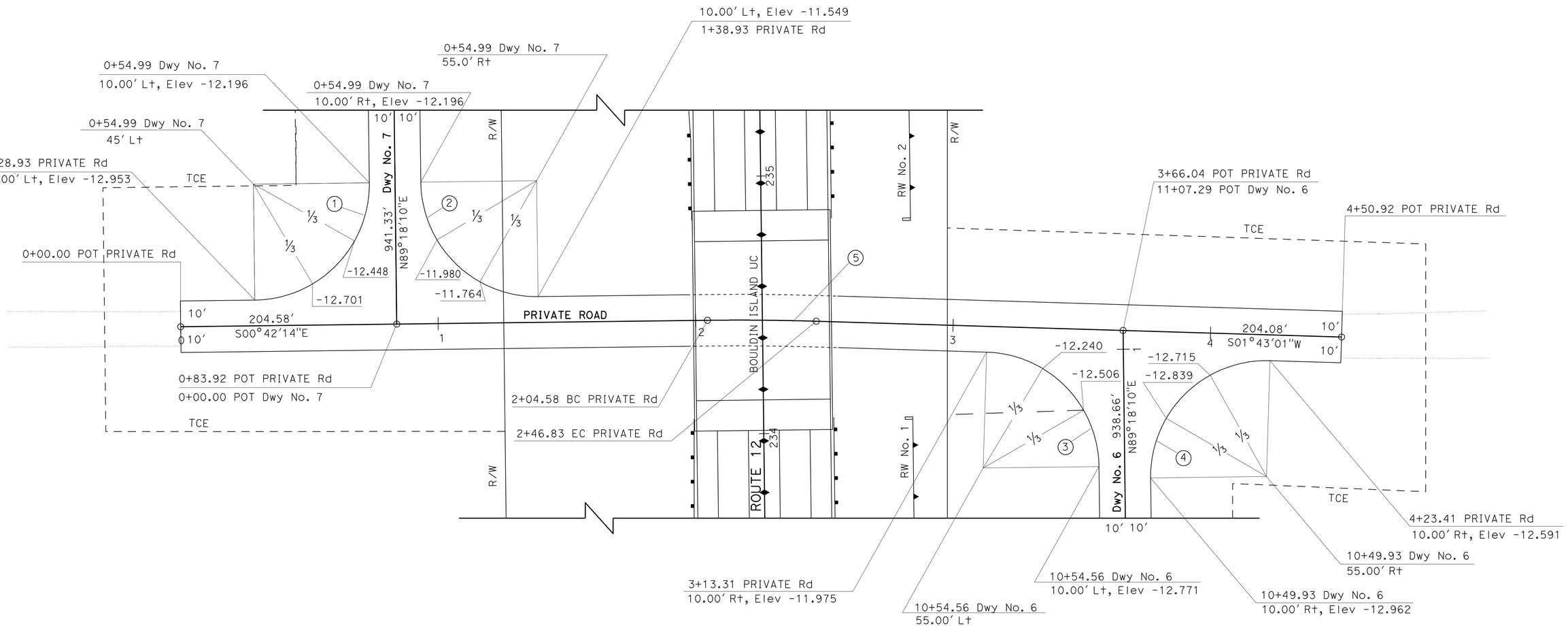

DRIVEWAY No. 6 AND 7
PRIVATE ROAD

CONSTRUCTION DETAILS

SCALE: 1" = 200′

C-5

OA	04/17/12
REVISED BY	DATE REVISED
OSAMA ABDEL-MAGIED	RICHARD BOYER
CALCULATED-DESIGNED BY	CHECKED BY
FUNCTIONAL SUPERVISOR	NOMER GUITERREZ

STATE OF CALIFORNIA - DEPARTMENT OF TRANSPORTATION
Caltrans
DESIGN

LAST REVISION 00-00-00 | DATE PLOTTED => 27-DEC-2012 | TIME PLOTTED => 14:16

Dist	COUNTY	ROUTE	POST MILES TOTAL PROJECT	SHEET No.	TOTAL SHEETS
10	SJ	12	0.1/R4.4	24	130

REGISTERED CIVIL ENGINEER 4/16/12 DATE

12-24-12
PLANS APPROVAL DATE

REGISTERED PROFESSIONAL ENGINEER RICHARD BOYER No. 75844 Exp. 6/30/14 CIVIL STATE OF CALIFORNIA

THE STATE OF CALIFORNIA OR ITS OFFICERS OR AGENTS SHALL NOT BE RESPONSIBLE FOR THE ACCURACY OR COMPLETENESS OF SCANNED COPIES OF THIS PLAN SHEET.

TABLE OF DRIVEWAYS

No.	Sta	SIDE	WIDTH	LENGTH	SURFACE
1	129+55	Rt	12′	53′	AB
2	130+53	Lt	15′	71′	AB
3	178+89	Rt	15′	46′	AB
4	178+89	Lt	16′	86′	AB
5	211+99	Lt	12′	70′	AB
6	224+49.6	Rt	20′	1108′	AB
PRIVATE Rd	234+44	N/A	20′	451′	AB
7	244+35.6	Lt	20′	1110′	AB
8	279+22	Rt	15′	75′	AB
9	285+76	Rt	12′	75′	AB
10	319+09	Lt	12′	64′	HMA
11	319+83	Rt	16′	62′	HMA
12	319+96	Lt	30′	57′	HMA

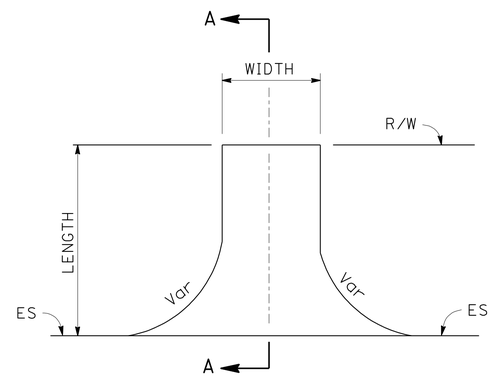

PLAN

* SEE LAYOUTS
319+09, Lt
319+83, Rt
319+96, Lt

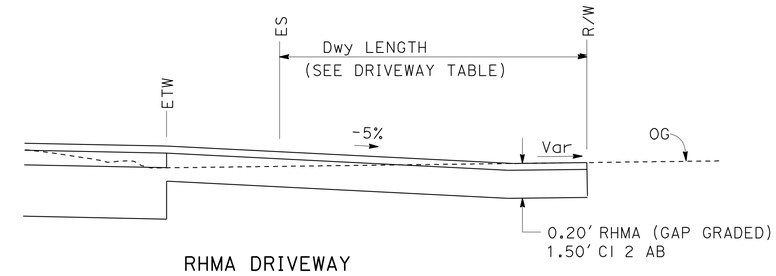

RHMA DRIVEWAY

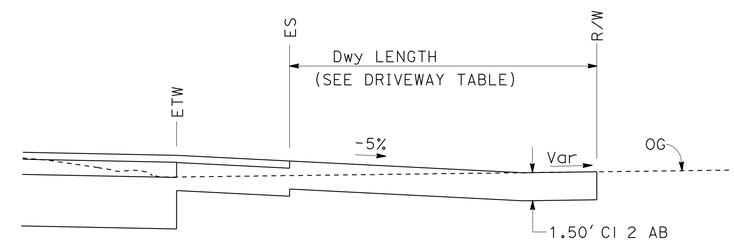

AB DRIVEWAY

SECTION A-A

DRIVEWAYS

CONSTRUCTION DETAILS

NO SCALE

C-6

STATE OF CALIFORNIA - DEPARTMENT OF TRANSPORTATION
Caltrans DESIGN

FUNCTIONAL SUPERVISOR: NOMER GUITERREZ
CALCULATED-DESIGNED BY: OSAMA ABDEL-MAGIED
CHECKED BY: RICHARD BOYER
REVISED BY: OA
DATE REVISED: 04/20/12

LAST REVISION 00-00-00 | DATE PLOTTED => 27-DEC-2012 | TIME PLOTTED => 14:16

Dist	COUNTY	ROUTE	POST MILES TOTAL PROJECT	SHEET No.	TOTAL SHEETS
10	SJ	12	0.1/R4.4	25	130

REGISTERED CIVIL ENGINEER 4/16/12 DATE

12-24-12
PLANS APPROVAL DATE

REGISTERED PROFESSIONAL ENGINEER RICHARD BOYER No. 75844 Exp. 6/30/14 CIVIL STATE OF CALIFORNIA

THE STATE OF CALIFORNIA OR ITS OFFICERS OR AGENTS SHALL NOT BE RESPONSIBLE FOR THE ACCURACY OR COMPLETENESS OF SCANNED COPIES OF THIS PLAN SHEET.

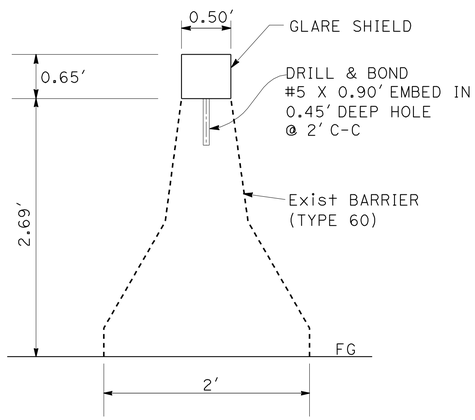

MODIFIED EXISTING SECTION

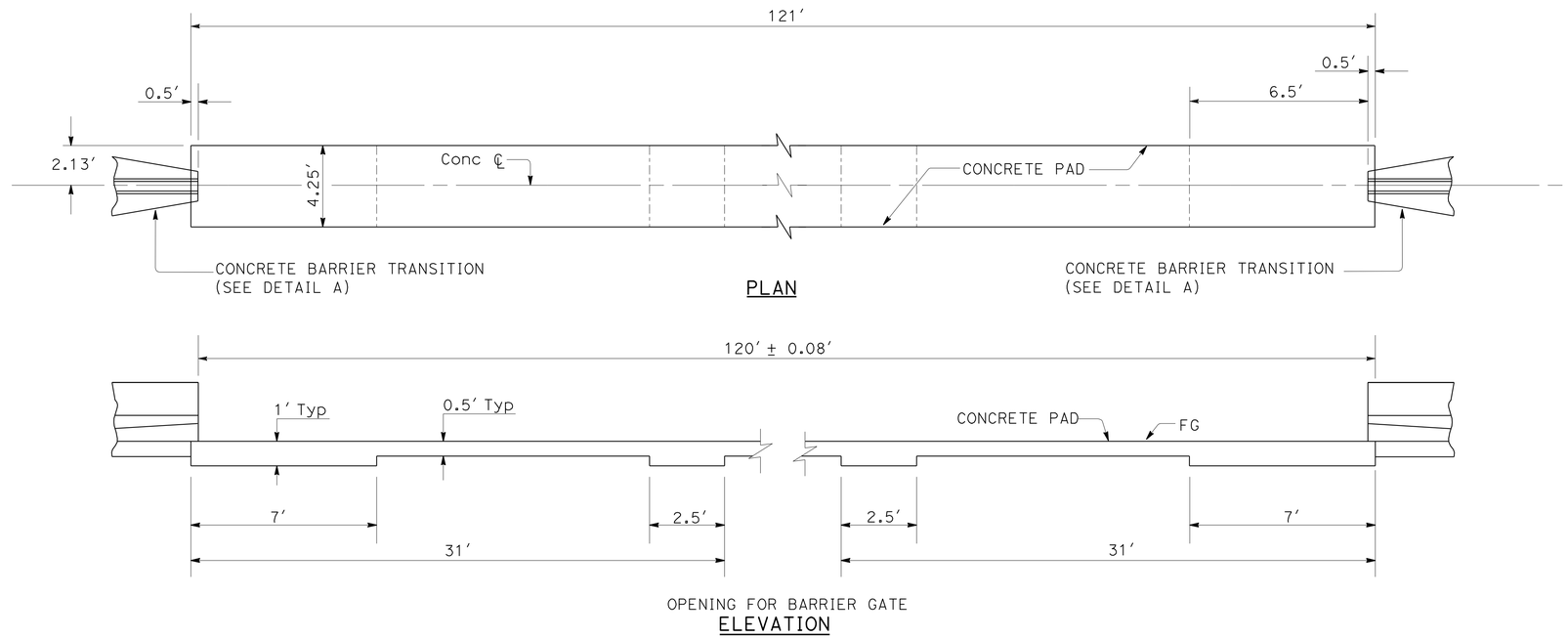

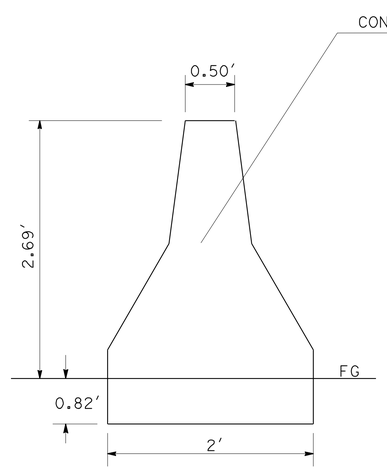

SECTION B-B

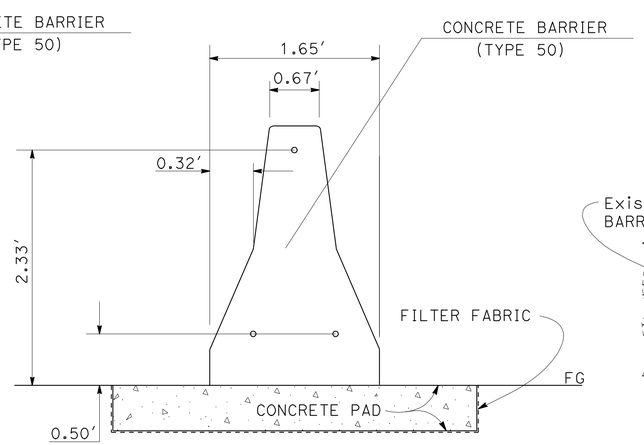

SECTION A-A

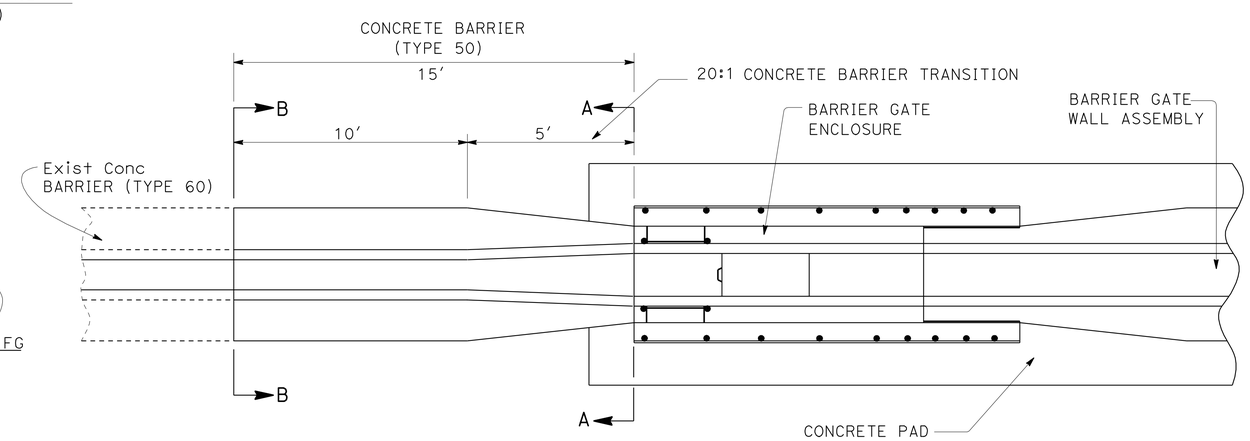

DETAIL A

BARRIER GATE PAD LAYOUT

CONSTRUCTION DETAILS

NO SCALE

C-7

STATE OF CALIFORNIA - DEPARTMENT OF TRANSPORTATION
DESIGN
FUNCTIONAL SUPERVISOR: NOMER GUITERREZ
CALCULATED-DESIGNED BY: OSAMA ABDEL-MAGIED
CHECKED BY: RICHARD BOYER
REVISED BY: OA
DATE REVISED: 04/20/12

LAST REVISION 00-00-00
DATE PLOTTED => 27-DEC-2012
TIME PLOTTED => 14:16

Dist	COUNTY	ROUTE	POST MILES TOTAL PROJECT	SHEET No.	TOTAL SHEETS
10	SJ	12	0.1/R4.4	26	130

REGISTERED CIVIL ENGINEER 4/16/12 DATE

12-24-12
PLANS APPROVAL DATE

REGISTERED PROFESSIONAL ENGINEER RICHARD BOYER No. 75844 Exp. 6/30/14 CIVIL STATE OF CALIFORNIA

THE STATE OF CALIFORNIA OR ITS OFFICERS OR AGENTS SHALL NOT BE RESPONSIBLE FOR THE ACCURACY OR COMPLETENESS OF SCANNED COPIES OF THIS PLAN SHEET.

NOTE: (THIS PAGE)
INSTALL BARRIER GATE AS PER MANUFACTURER'S SPECIFICATIONS AND PLANS

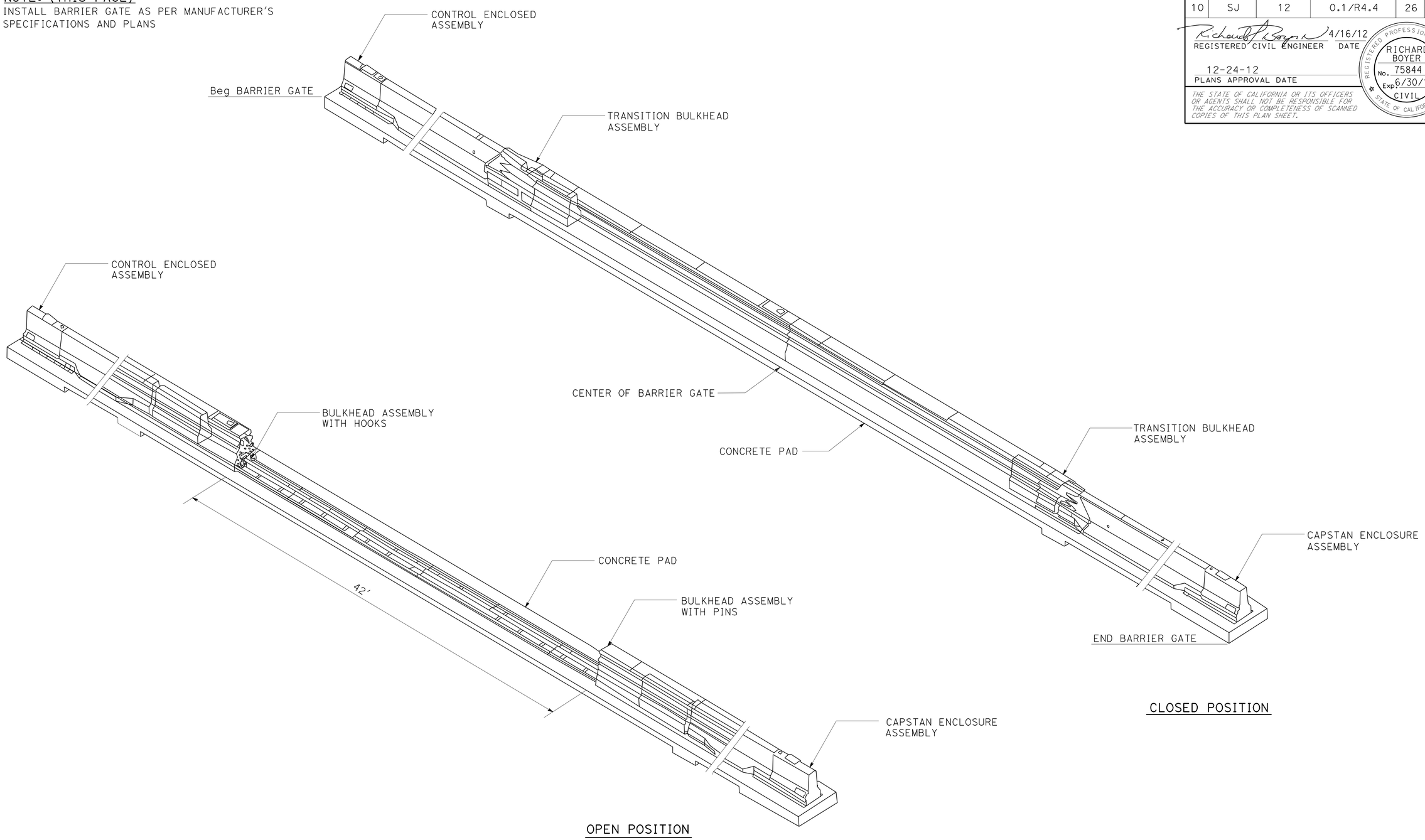

BARRIER GATE DETAILS

CONSTRUCTION DETAILS

NO SCALE

C-8

STATE OF CALIFORNIA - DEPARTMENT OF TRANSPORTATION
Caltrans DESIGN

FUNCTIONAL SUPERVISOR: NOMER GUITERREZ
CALCULATED-DESIGNED BY: OSAMA ABDEL-MAGIED
CHECKED BY: RICHARD BOYER
REVISED BY: OA
DATE REVISED: 04/26/12

LAST REVISION 00-00-00
DATE PLOTTED => 27-DEC-2012
TIME PLOTTED => 14:16

Dist	COUNTY	ROUTE	POST MILES TOTAL PROJECT	SHEET No.	TOTAL SHEETS
10	SJ	12	0.1/R4.4	27	130

Richard Boyer 4/16/12
REGISTERED CIVIL ENGINEER DATE

12-24-12
PLANS APPROVAL DATE

REGISTERED PROFESSIONAL ENGINEER
RICHARD BOYER
No. 75844
Exp. 06/30/14
CIVIL
STATE OF CALIFORNIA

THE STATE OF CALIFORNIA OR ITS OFFICERS OR AGENTS SHALL NOT BE RESPONSIBLE FOR THE ACCURACY OR COMPLETENESS OF SCANNED COPIES OF THIS PLAN SHEET.

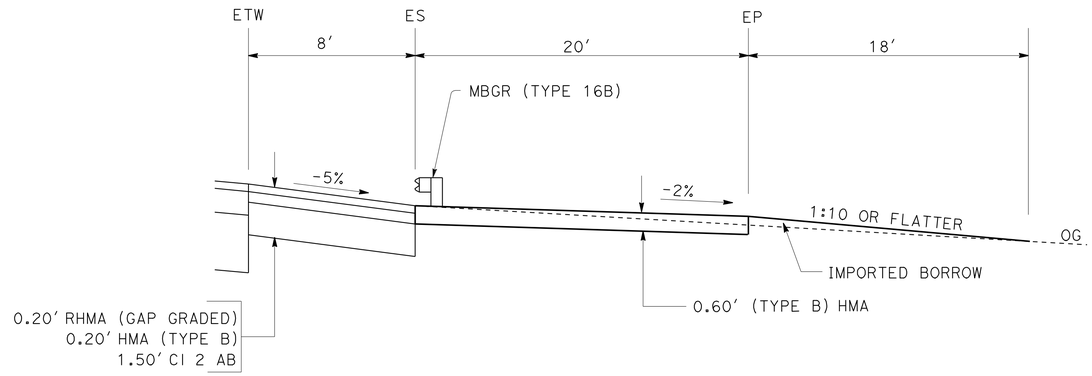

SECTION A-A

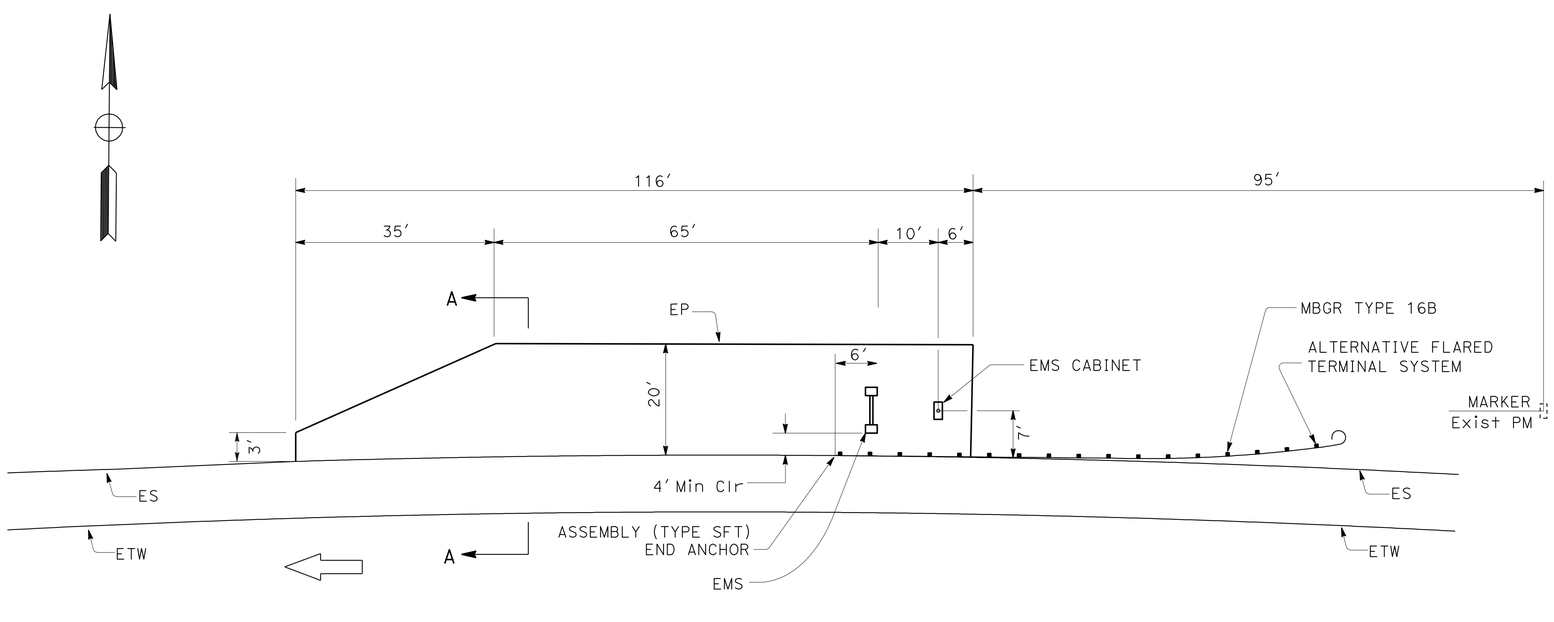

Sta 136+80
MAINTENANCE VEHICLE PULLOUT (MVP)

CONSTRUCTION DETAILS

NO SCALE

C-9

STATE OF CALIFORNIA - DEPARTMENT OF TRANSPORTATION
Caltrans®
DESIGN

FUNCTIONAL SUPERVISOR: PAUL ELLIOTT
CALCULATED-DESIGNED BY: RICHARD BOYER
CHECKED BY: SHEIKH ALAM
REVISED BY: OA
DATE REVISED: 04/30/12

LAST REVISION 00-00-00
DATE PLOTTED => 27-DEC-2012
TIME PLOTTED => 14:16

Dist	COUNTY	ROUTE	POST MILES TOTAL PROJECT	SHEET No.	TOTAL SHEETS
10	SJ	12	0.1/R4.4	28	130

LICENSED LANDSCAPE ARCHITECT

12-24-12
PLANS APPROVAL DATE

LICENSED LANDSCAPE ARCHITECT
WILLIAM L. DUTTERA No. 4002
Expiration
9/30/12
Renewal Date
4/30/12
Date
STATE OF CALIFORNIA

THE STATE OF CALIFORNIA OR ITS OFFICERS OR AGENTS SHALL NOT BE RESPONSIBLE FOR THE ACCURACY OR COMPLETENESS OF SCANNED COPIES OF THIS PLAN SHEET.

NOTE:

FOR ACCURATE RIGHT OF WAY DATA, CONTACT RIGHT OF WAY ENGINEERING AT THE DISTRICT OFFICE.

LEGEND:

- TEMPORARY MULCH
- TEMPORARY FIBER ROLL

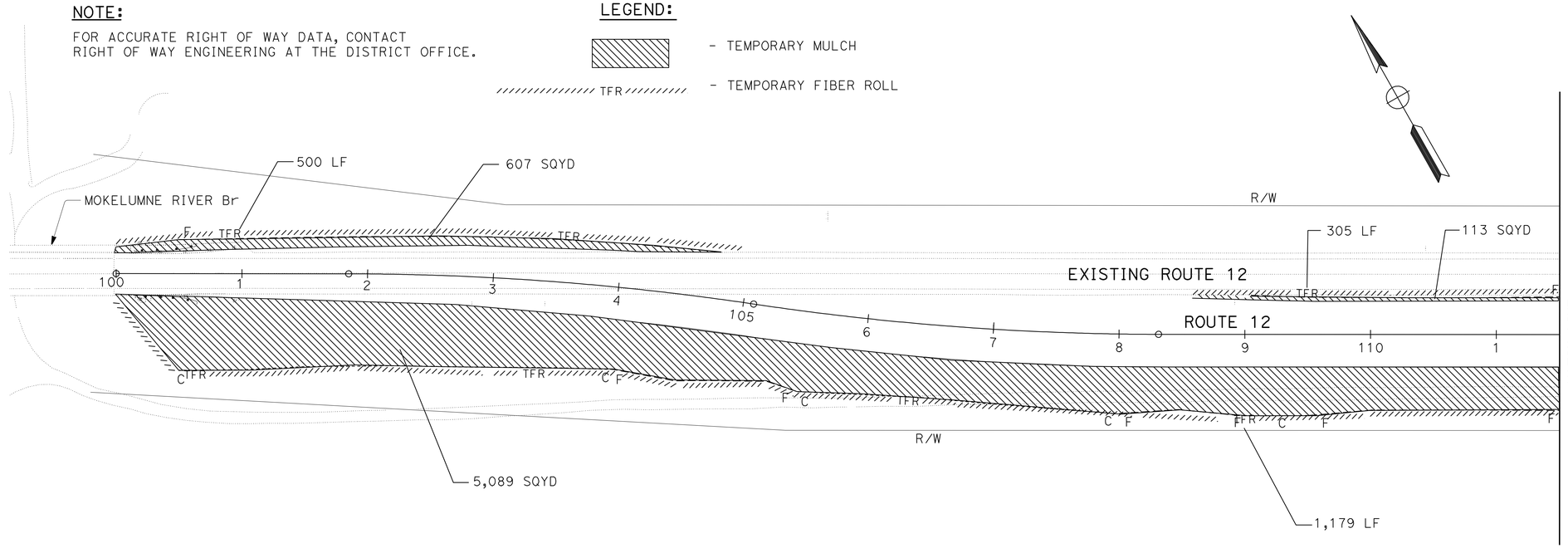

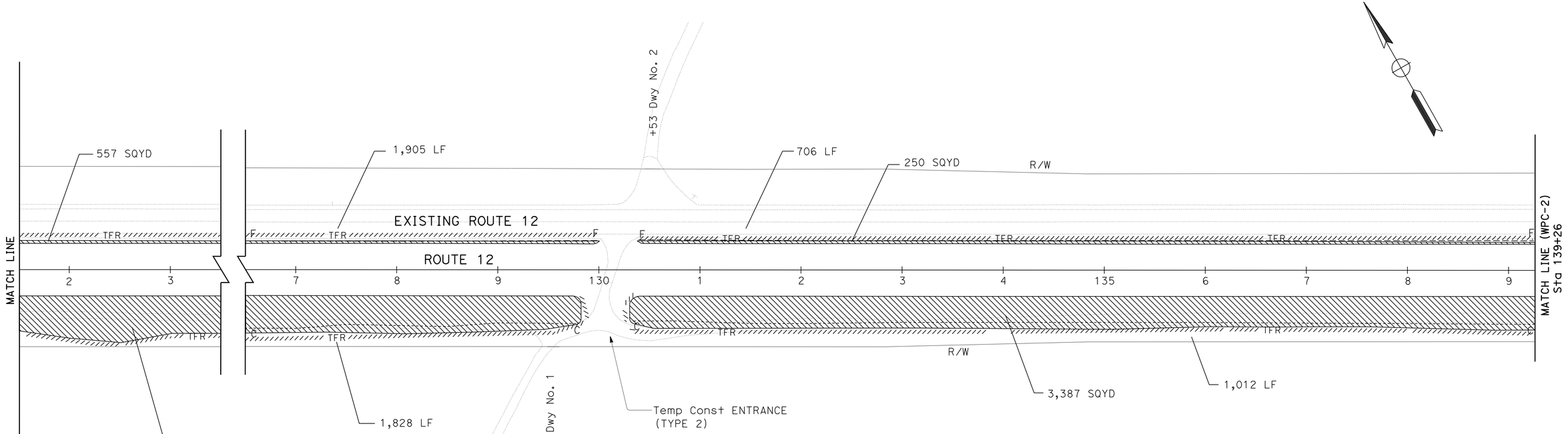

TEMPORARY WATER POLLUTION CONTROL PLAN

(STAGE 1)

SCALE: 1" = 50'

WPC-1

APPROVED FOR TEMPORARY WATER POLLUTION CONTROL WORK ONLY

REVISED BY	DATE REVISED
RF	04/30/12

CALCULATED-DESIGNED BY: ROBYN FONG
CHECKED BY: WILLIAM DUTTERA
SENIOR LANDSCAPE ARCHITECT: BRAD COLE

STATE OF CALIFORNIA - DEPARTMENT OF TRANSPORTATION
Caltrans® LANDSCAPE ARCHITECTURE

LAST REVISION 00-00-00
DATE PLOTTED => 27-DEC-2012
TIME PLOTTED => 14:16

Dist	COUNTY	ROUTE	POST MILES TOTAL PROJECT	SHEET No.	TOTAL SHEETS
10	SJ	12	0.1/R4.4	29	130

LICENSED LANDSCAPE ARCHITECT

12-24-12
PLANS APPROVAL DATE

THE STATE OF CALIFORNIA OR ITS OFFICERS OR AGENTS SHALL NOT BE RESPONSIBLE FOR THE ACCURACY OR COMPLETENESS OF SCANNED COPIES OF THIS PLAN SHEET.

LICENSED LANDSCAPE ARCHITECT
WILLIAM L. DUTTERA No. 4002
Expiration 9/30/12
Renewal Date 4/30/12
Date
STATE OF CALIFORNIA

NOTE:

FOR ACCURATE RIGHT OF WAY DATA, CONTACT RIGHT OF WAY ENGINEERING AT THE DISTRICT OFFICE.

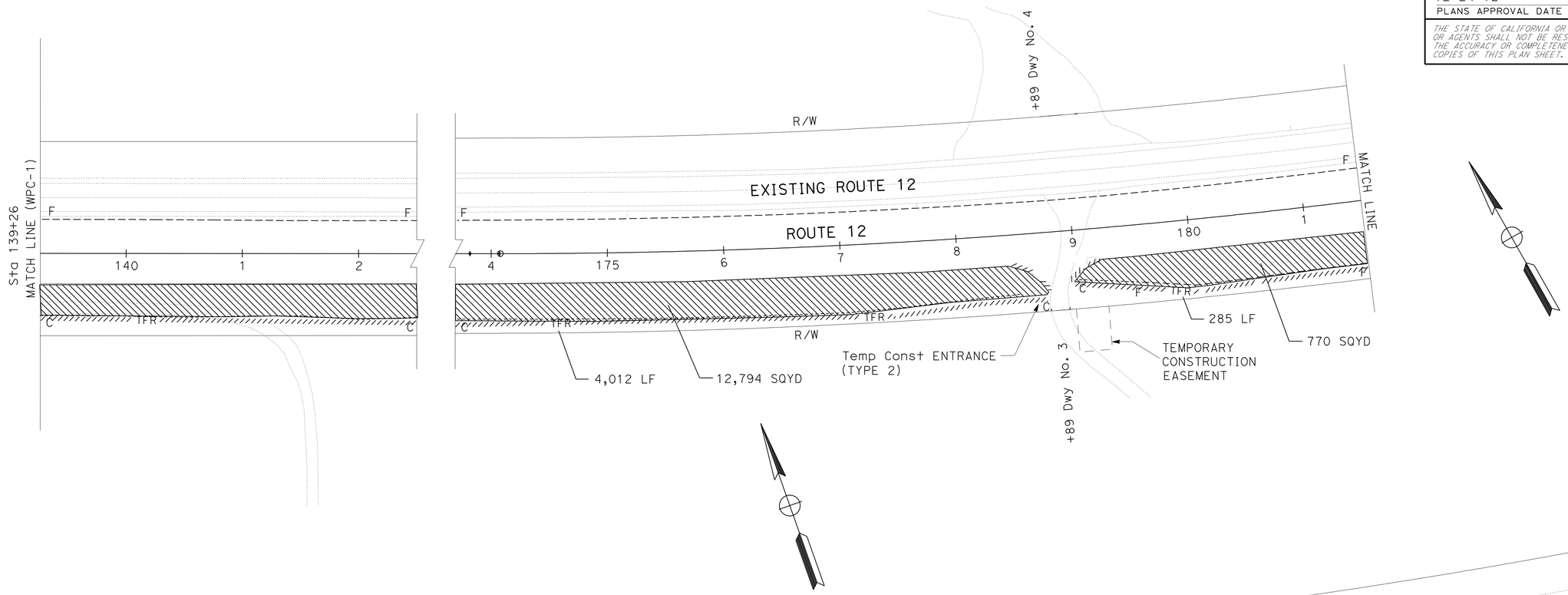

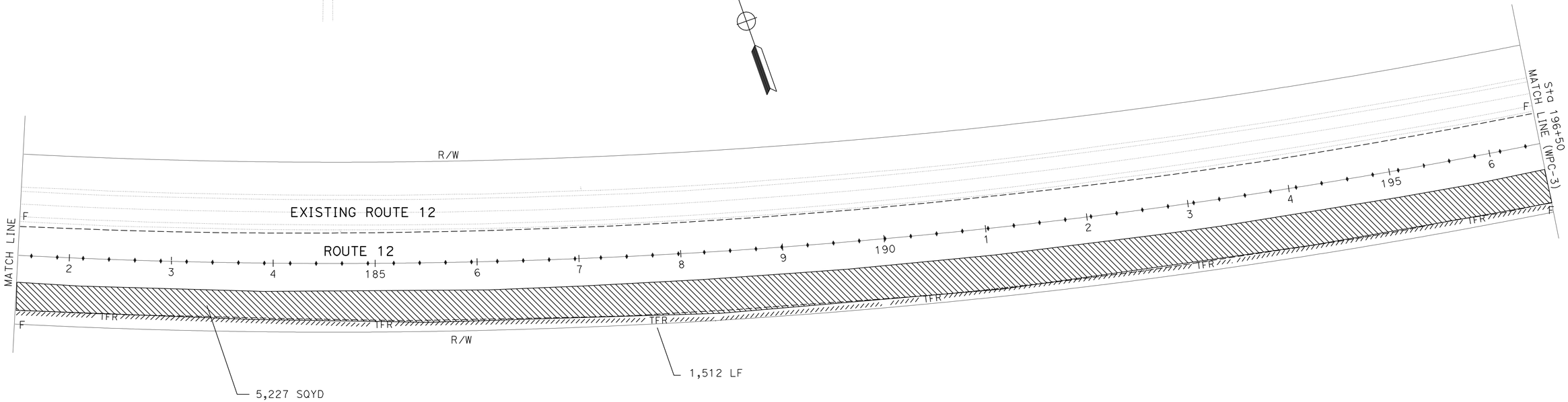

TEMPORARY WATER POLLUTION CONTROL PLAN

(STAGE 1)

SCALE: 1" = 50'

WPC-2

APPROVED FOR TEMPORARY WATER POLLUTION CONTROL WORK ONLY

STATE OF CALIFORNIA - DEPARTMENT OF TRANSPORTATION
Caltrans®
LANDSCAPE ARCHITECTURE

SENIOR LANDSCAPE ARCHITECT: BRAD COLE

CALCULATED-DESIGNED BY: ROBYN FONG
CHECKED BY: WILLIAM DUTTERA

REVISED BY: RF
DATE REVISED: 04/30/12

LAST REVISION: 00-00-00
DATE PLOTTED => 27-DEC-2012
TIME PLOTTED => 14:16

Dist	COUNTY	ROUTE	POST MILES TOTAL PROJECT	SHEET No.	TOTAL SHEETS
10	SJ	12	0.1/R4.4	30	130

LICENSED LANDSCAPE ARCHITECT

12-24-12
PLANS APPROVAL DATE

LICENSED LANDSCAPE ARCHITECT
WILLIAM L. DUTTERA No. 4002
Signature
9/30/12
Renewal Date
4/30/12
Date
STATE OF CALIFORNIA

THE STATE OF CALIFORNIA OR ITS OFFICERS OR AGENTS SHALL NOT BE RESPONSIBLE FOR THE ACCURACY OR COMPLETENESS OF SCANNED COPIES OF THIS PLAN SHEET.

NOTE:

FOR ACCURATE RIGHT OF WAY DATA, CONTACT RIGHT OF WAY ENGINEERING AT THE DISTRICT OFFICE.

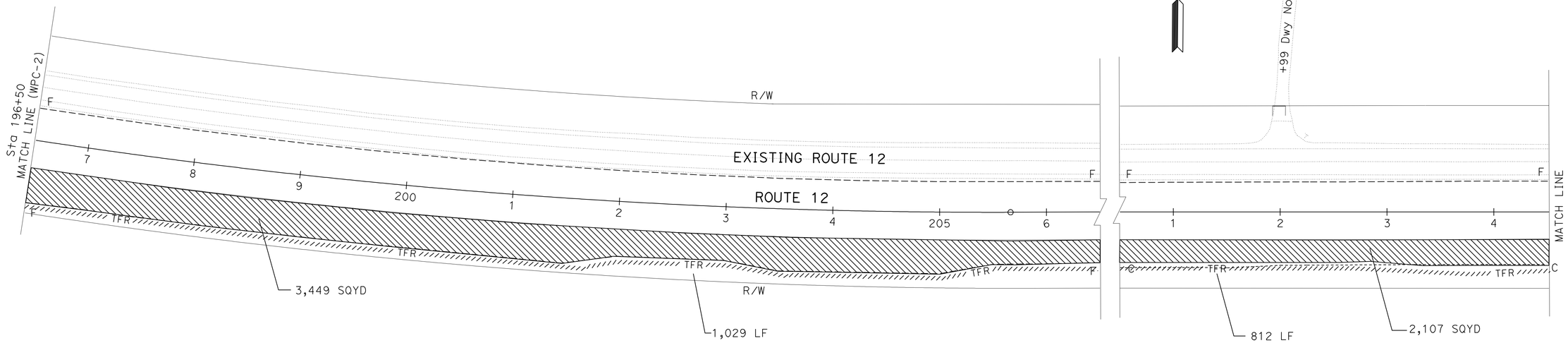

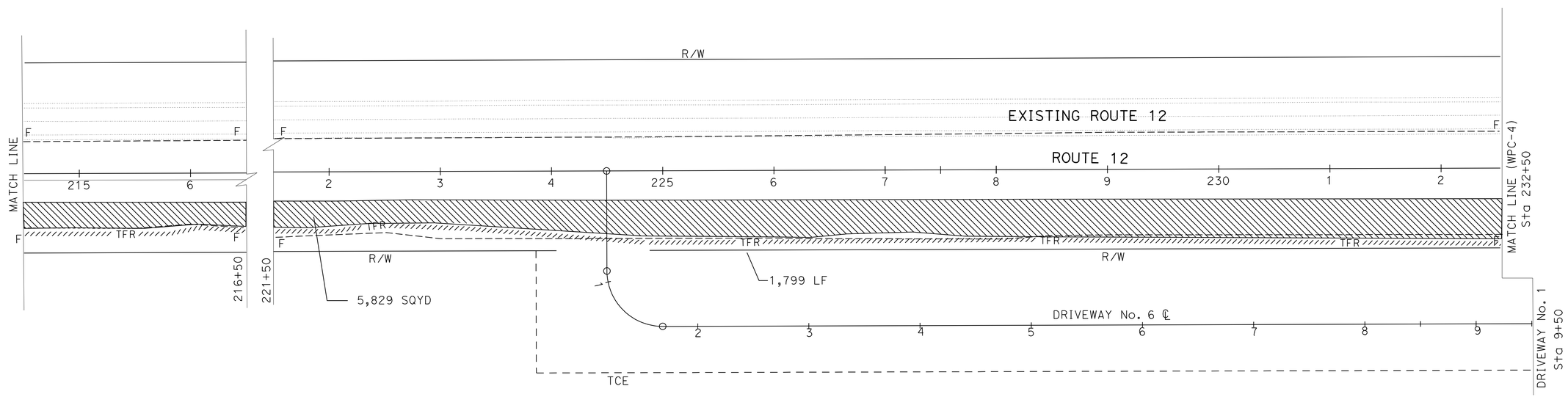

TEMPORARY WATER POLLUTION CONTROL PLAN
(STAGE 1)

SCALE: 1" = 50'

WPC-3

APPROVED FOR TEMPORARY WATER POLLUTION CONTROL WORK ONLY

STATE OF CALIFORNIA - DEPARTMENT OF TRANSPORTATION
Caltrans® LANDSCAPE ARCHITECTURE

SENIOR LANDSCAPE ARCHITECT: BRAD COLE
CALCULATED-DESIGNED BY: ROBYN FONG
CHECKED BY: WILLIAM DUTTERA
REVISED BY: RF
DATE REVISED: 04/30/12

LAST REVISION 00-00-00
DATE PLOTTED => 27-DEC-2012
TIME PLOTTED => 14:16

Dist	COUNTY	ROUTE	POST MILES TOTAL PROJECT	SHEET No.	TOTAL SHEETS
10	SJ	12	0.1/R4.4	31	130

LICENSED LANDSCAPE ARCHITECT

12-24-12
PLANS APPROVAL DATE

LICENSED LANDSCAPE ARCHITECT
WILLIAM L. DUTTERA No. 4002
Signature
9/30/12
Renewal Date
4/30/12
Date
STATE OF CALIFORNIA

THE STATE OF CALIFORNIA OR ITS OFFICERS OR AGENTS SHALL NOT BE RESPONSIBLE FOR THE ACCURACY OR COMPLETENESS OF SCANNED COPIES OF THIS PLAN SHEET.

NOTE:

FOR ACCURATE RIGHT OF WAY DATA, CONTACT
RIGHT OF WAY ENGINEERING AT THE DISTRICT OFFICE.

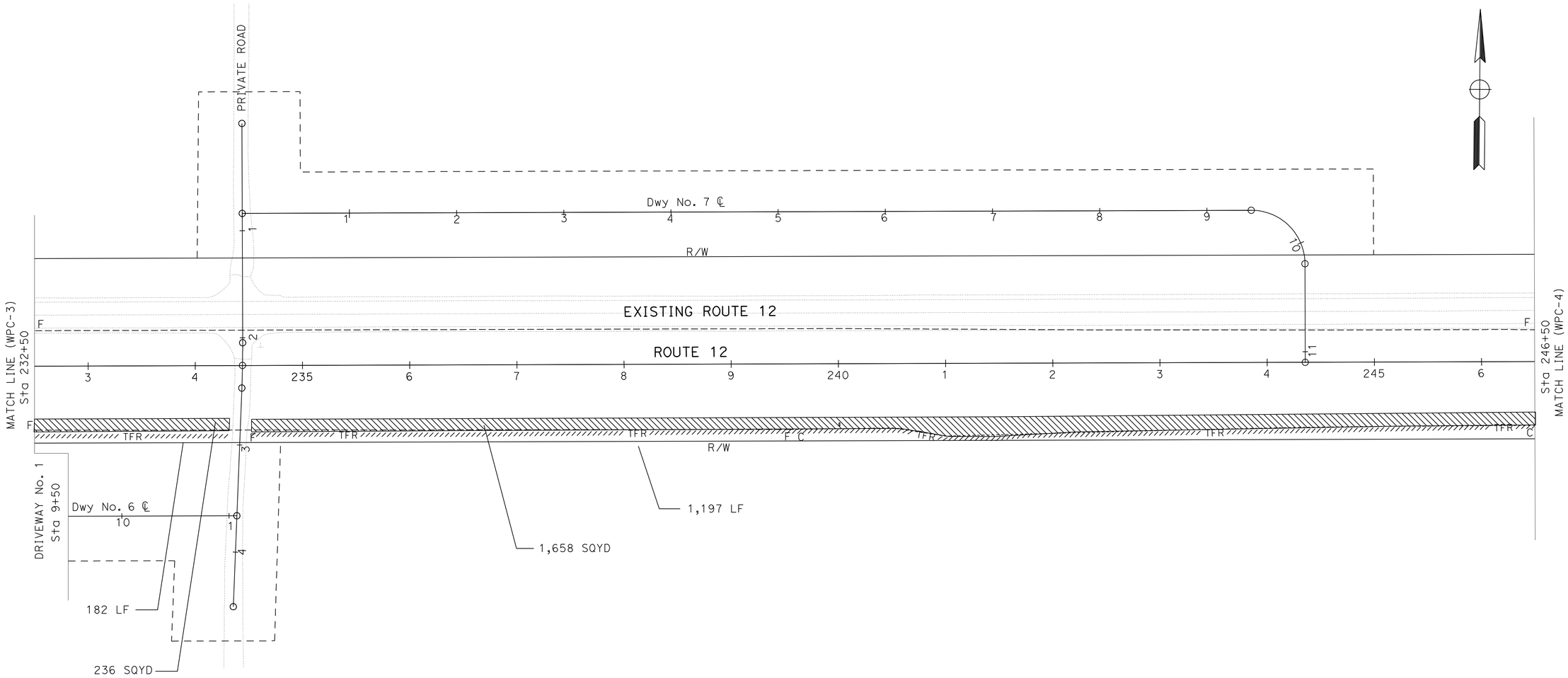

TEMPORARY WATER POLLUTION CONTROL PLAN
(STAGE 1)

SCALE: 1" = 50'

WPC-4

APPROVED FOR TEMPORARY WATER POLLUTION CONTROL WORK ONLY

STATE OF CALIFORNIA - DEPARTMENT OF TRANSPORTATION
Caltrans® LANDSCAPE ARCHITECTURE

SENIOR LANDSCAPE ARCHITECT: BRAD COLE
CALCULATED-DESIGNED BY: ROBYN FONG
CHECKED BY: WILLIAM DUTTERA
REVISED BY: RF
DATE REVISED: 04/30/12

LAST REVISION 00-00-00
DATE PLOTTED => 27-DEC-2012
TIME PLOTTED => 14:16

Dist	COUNTY	ROUTE	POST MILES TOTAL PROJECT	SHEET No.	TOTAL SHEETS
10	SJ	12	0.1/R4.4	32	130

LICENSED LANDSCAPE ARCHITECT

12-24-12
PLANS APPROVAL DATE

LICENSED LANDSCAPE ARCHITECT
WILLIAM L. DUTTERA No. 4002
Expiration 9/30/12
Renewal Date 4/30/12
Date
STATE OF CALIFORNIA

THE STATE OF CALIFORNIA OR ITS OFFICERS OR AGENTS SHALL NOT BE RESPONSIBLE FOR THE ACCURACY OR COMPLETENESS OF SCANNED COPIES OF THIS PLAN SHEET.

NOTE:

FOR ACCURATE RIGHT OF WAY DATA, CONTACT
RIGHT OF WAY ENGINEERING AT THE DISTRICT OFFICE.

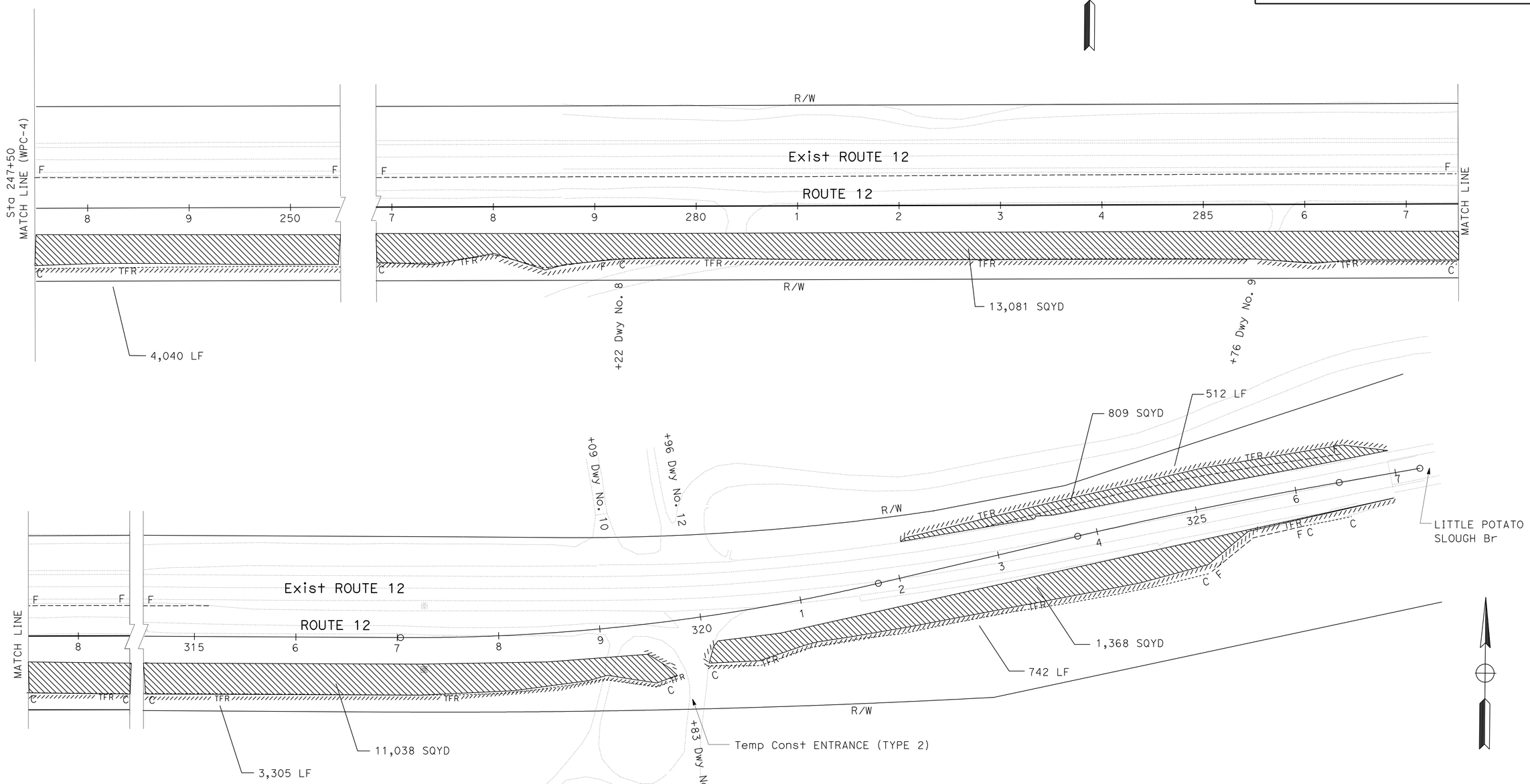

TEMPORARY WATER POLLUTION CONTROL PLAN

(STAGE 1)

SCALE: 1" = 50'

WPC-5

APPROVED FOR TEMPORARY WATER POLLUTION CONTROL WORK ONLY

STATE OF CALIFORNIA - DEPARTMENT OF TRANSPORTATION
Caltrans
LANDSCAPE ARCHITECTURE

SENIOR LANDSCAPE ARCHITECT: BRAD COLE

CALCULATED-DESIGNED BY: ROBYN FONG
CHECKED BY: WILLIAM DUTTERA

REVISED BY: RFSV=PLOT
DATE REVISED: 04/30/12

LAST REVISION: 00-00-00
DATE PLOTTED => 27-DEC-2012
TIME PLOTTED => 14:16

Dist	COUNTY	ROUTE	POST MILES TOTAL PROJECT	SHEET No.	TOTAL SHEETS
10	SJ	12	0.1/R4.4	33	130

LICENSED LANDSCAPE ARCHITECT

12-24-12
PLANS APPROVAL DATE

LICENSED LANDSCAPE ARCHITECT
WILLIAM L. DUTTERA No. 4002
Signature
9/30/12
Renewal Date
4/30/12
Date
STATE OF CALIFORNIA

THE STATE OF CALIFORNIA OR ITS OFFICERS OR AGENTS SHALL NOT BE RESPONSIBLE FOR THE ACCURACY OR COMPLETENESS OF SCANNED COPIES OF THIS PLAN SHEET.

STATION	TEMPORARY FIBER ROLL	TEMPORARY MULCH
	LF	SQYD
STA 100+00 TO STA 139+26	7,435	16,633
STA 139+26 TO STA 196+50	5,809	18,791
STA 196+50 TO STA 232+50	3,640	11,385
STA 232+50 TO STA 246+50	1,379	1,894
STA 247+50 TO STA 327+00	8,559	26,296
TOTAL	26,822	74,999

EROSION CONTROL ITEMS

SHEET NUMBER	COMPOST INCORPORATED *	EROSION CONTROL (HYDROSEED)		FIBER ROLLS
	SQYD	SQFT (N) *	SQFT	LF
EC-1	12,263	12,263	181,836	8,008
EC-2	17,639	17,639	262,491	11,675
EC-3	9,072	9,072	160,281	8,972
EC-4	1,153	1,153	62,839	5,559
EC-5	25,903	25,903	332,413	16,078
TOTAL	66,030		999,860	50,292

(N) - NOT A SEPARATE PAY ITEM, FOR INFORMATION ONLY.

* - BIOFILTRATION STRIP AREAS

TEMPORARY WATER POLLUTION CONTROL ITEMS

TEMPORARY HYDRAULIC MULCH	TEMPORARY DRAINAGE INLET PROTECTION
SQYD	EA
174,000	12

TEMPORARY CONSTRUCTION ENTRANCE (TYPE 2)

STATION	EA
130+00	1
179+00	1
234+50	1
319+37	1
TOTAL	4

TEMPORARY WATER POLLUTION AND EROSION CONTROL QUANTITIES

WPCQ-1

REVISED BY	RF
DATE REVISED	04/30/12
ROBYN FONG	
WILLIAM DUTTERA	
CALCULATED-DESIGNED BY	
CHECKED BY	
SENIOR LANDSCAPE ARCHITECT	
BRAD COLE	

STATE OF CALIFORNIA - DEPARTMENT OF TRANSPORTATION
Caltrans® LANDSCAPE ARCHITECTURE

LAST REVISION 00-00-00
DATE PLOTTED => 27-DEC-2012
TIME PLOTTED => 14:04

Dist	COUNTY	ROUTE	POST MILES TOTAL PROJECT	SHEET No.	TOTAL SHEETS
10	SJ	12	0.1/R4.4	34	130

LICENSED LANDSCAPE ARCHITECT

12-24-12
PLANS APPROVAL DATE

LICENSED LANDSCAPE ARCHITECT
WILLIAM L. DUTTERA No. 4002
Expiration 9/30/12
Renewal Date 4/30/12
Date
STATE OF CALIFORNIA

THE STATE OF CALIFORNIA OR ITS OFFICERS OR AGENTS SHALL NOT BE RESPONSIBLE FOR THE ACCURACY OR COMPLETENESS OF SCANNED COPIES OF THIS PLAN SHEET.

NOTE:

FOR ACCURATE RIGHT OF WAY DATA, CONTACT RIGHT OF WAY ENGINEERING AT THE DISTRICT OFFICE.

LEGEND

- EROSION CONTROL (HYDROSEED)
- FIBER ROLL
- LIMITS OF COMPOST INCORPORATED
- STAGE 2
- STAGE 3

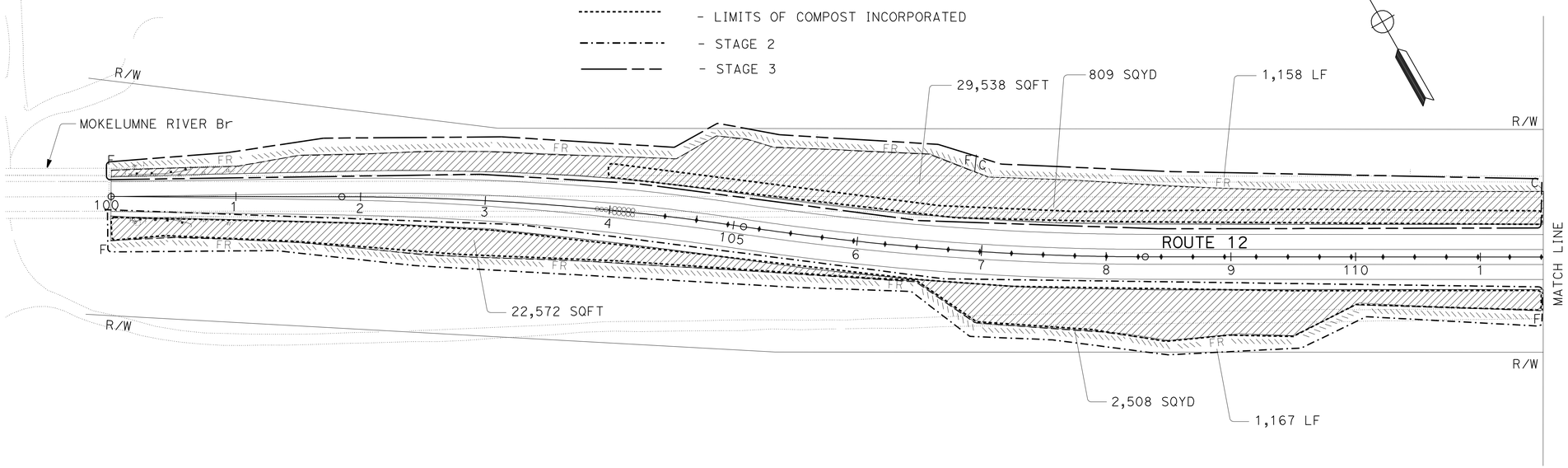

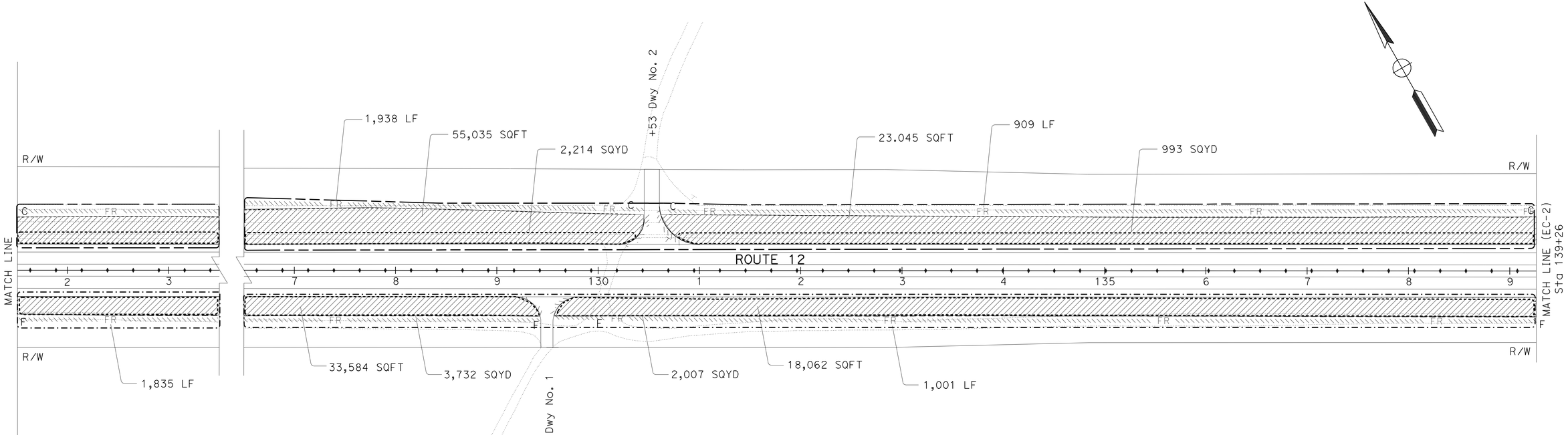

EROSION CONTROL PLAN

(STAGE 2 & 3)

SCALE: 1" = 50'

EC-1

APPROVED FOR EROSION CONTROL WORK ONLY

REVISED BY	DATE REVISED
RF	04/30/12

CALCULATED-DESIGNED BY: ROBYN FONG
CHECKED BY: WILLIAM DUTTERA
SENIOR LANDSCAPE ARCHITECT: BRAD COLE

STATE OF CALIFORNIA - DEPARTMENT OF TRANSPORTATION
Caltrans® LANDSCAPE ARCHITECTURE

LAST REVISION 00-00-00 | DATE PLOTTED => 27-DEC-2012 | TIME PLOTTED => 14:04

Dist	COUNTY	ROUTE	POST MILES TOTAL PROJECT	SHEET No.	TOTAL SHEETS
10	SJ	12	0.1/R4.4	35	130

LICENSED LANDSCAPE ARCHITECT

12-24-12
PLANS APPROVAL DATE

LICENSED LANDSCAPE ARCHITECT
WILLIAM L. DUTTERA No. 4002
Expiration 9/30/12
Renewal Date 4/30/12
Date
STATE OF CALIFORNIA

THE STATE OF CALIFORNIA OR ITS OFFICERS OR AGENTS SHALL NOT BE RESPONSIBLE FOR THE ACCURACY OR COMPLETENESS OF SCANNED COPIES OF THIS PLAN SHEET.

NOTE:

FOR ACCURATE RIGHT OF WAY DATA, CONTACT RIGHT OF WAY ENGINEERING AT THE DISTRICT OFFICE.

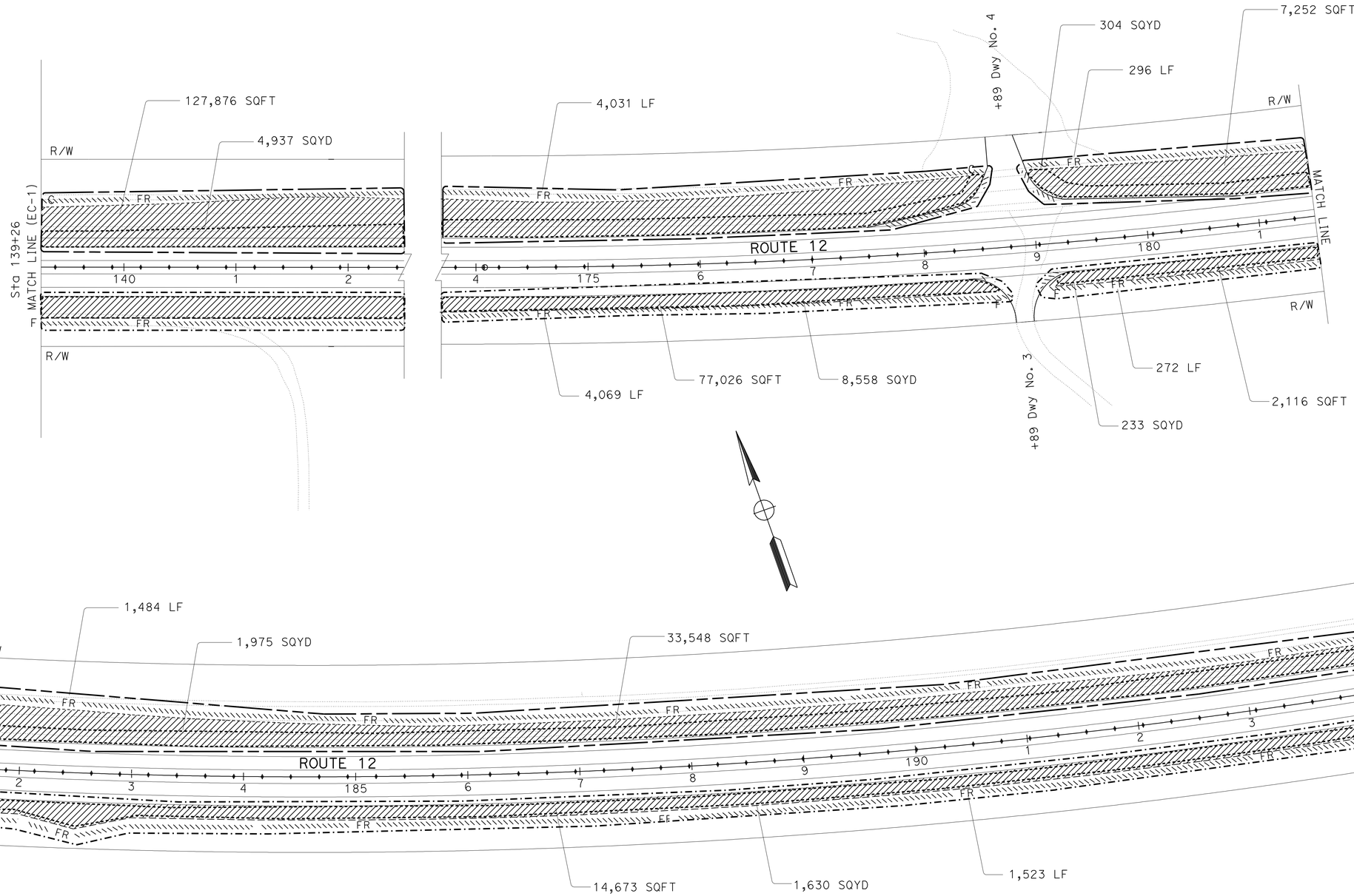

APPROVED FOR EROSION CONTROL AND WORK ONLY

EROSION CONTROL PLAN
(STAGE 2 & 3)

SCALE: 1" = 50'

EC-2

REVISED BY	DATE REVISED
RF	04/30/12

ROBYN FONG
WILLIAM DUTTERA
CALCULATED-DESIGNED BY
CHECKED BY
SENIOR LANDSCAPE ARCHITECT
BRAD COLE

STATE OF CALIFORNIA - DEPARTMENT OF TRANSPORTATION
Caltrans®
LANDSCAPE ARCHITECTURE

LAST REVISION 00-00-00
DATE PLOTTED => 27-DEC-2012
TIME PLOTTED => 14:04

Dist	COUNTY	ROUTE	POST MILES TOTAL PROJECT	SHEET No.	TOTAL SHEETS
10	SJ	12	0.1/R4.4	36	130

LICENSED LANDSCAPE ARCHITECT

12-24-12
PLANS APPROVAL DATE

LICENSED LANDSCAPE ARCHITECT
WILLIAM L. DUTTERA No. 4802
Expiration 9/30/12
Renewal Date 4/30/12
Date
STATE OF CALIFORNIA

THE STATE OF CALIFORNIA OR ITS OFFICERS OR AGENTS SHALL NOT BE RESPONSIBLE FOR THE ACCURACY OR COMPLETENESS OF SCANNED COPIES OF THIS PLAN SHEET.

NOTE:

FOR ACCURATE RIGHT OF WAY DATA, CONTACT RIGHT OF WAY ENGINEERING AT THE DISTRICT OFFICE.

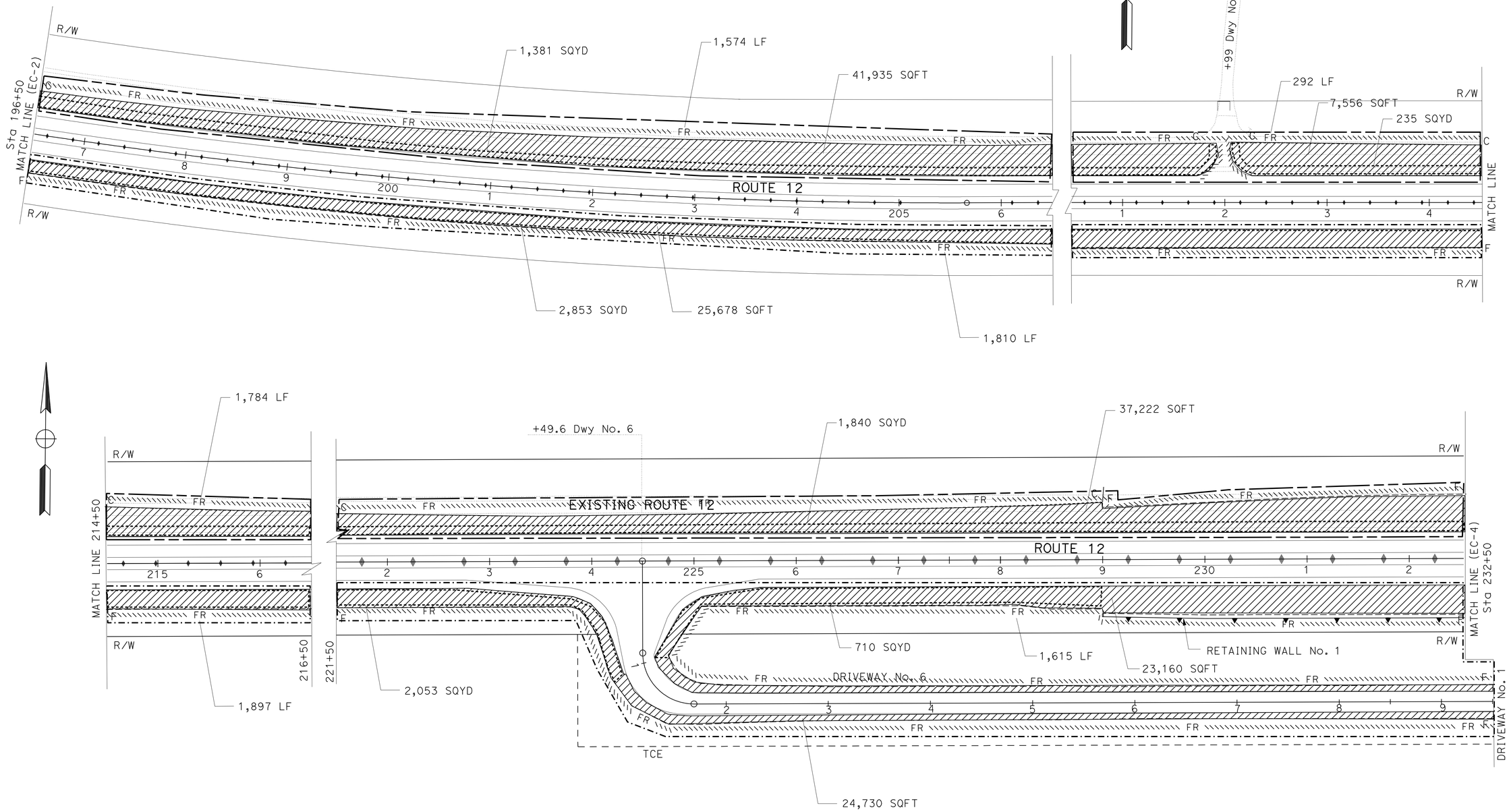

EROSION CONTROL PLAN
(STAGE 2 & 3)

SCALE: 1" = 50'

EC-3

APPROVED FOR EROSION CONTROL WORK ONLY

STATE OF CALIFORNIA - DEPARTMENT OF TRANSPORTATION
Caltrans® LANDSCAPE ARCHITECTURE

SENIOR LANDSCAPE ARCHITECT: BRAD COLE
CALCULATED-DESIGNED BY: ROBYN FONG
CHECKED BY: WILLIAM DUTTERA
REVISED BY: RF
DATE REVISED: 04/30/12

LAST REVISION 00-00-00
DATE PLOTTED => 27-DEC-2012
TIME PLOTTED => 14:04

Dist	COUNTY	ROUTE	POST MILES TOTAL PROJECT	SHEET No.	TOTAL SHEETS
10	SJ	12	0.1/R4.4	37	130

LICENSED LANDSCAPE ARCHITECT

12-24-12
PLANS APPROVAL DATE

LICENSED LANDSCAPE ARCHITECT
WILLIAM L. DUTTERA No. 4002
Signature
9/30/12
Renewal Date
4/30/12
Date
STATE OF CALIFORNIA

THE STATE OF CALIFORNIA OR ITS OFFICERS OR AGENTS SHALL NOT BE RESPONSIBLE FOR THE ACCURACY OR COMPLETENESS OF SCANNED COPIES OF THIS PLAN SHEET.

NOTE:

FOR ACCURATE RIGHT OF WAY DATA, CONTACT
RIGHT OF WAY ENGINEERING AT THE DISTRICT OFFICE.

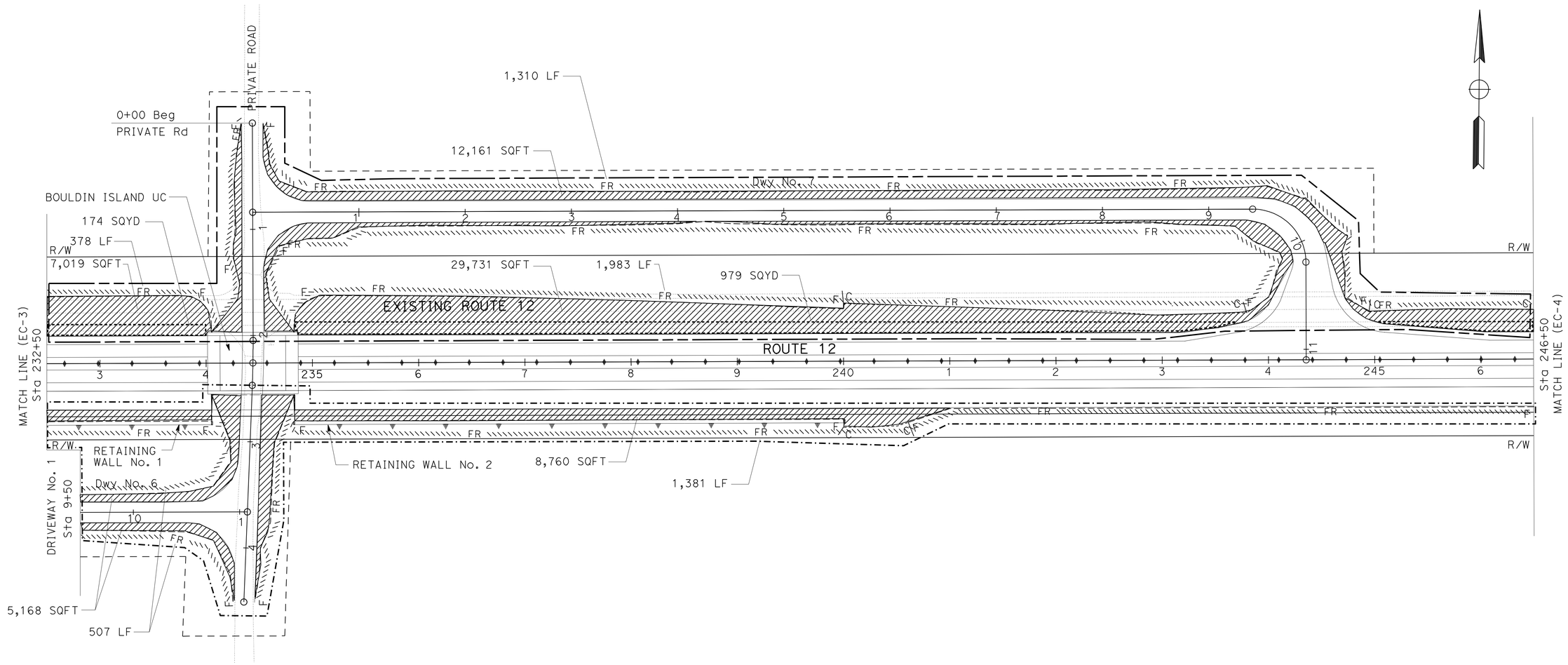

APPROVED FOR EROSION CONTROL WORK ONLY

EROSION CONTROL PLAN
(STAGE 2 & 3)

SCALE: 1" = 50'

EC-4

STATE OF CALIFORNIA - DEPARTMENT OF TRANSPORTATION
Caltrans® LANDSCAPE ARCHITECTURE

SENIOR LANDSCAPE ARCHITECT: BRAD COLE
CALCULATED-DESIGNED BY: ROBYN FONG
CHECKED BY: WILLIAM DUTTERA
REVISED BY: RF
DATE REVISED: 04/29/12

LAST REVISION 00-00-00
DATE PLOTTED => 27-DEC-2012
TIME PLOTTED => 14:04

Dist	COUNTY	ROUTE	POST MILES TOTAL PROJECT	SHEET No.	TOTAL SHEETS
10	SJ	12	0.1/R4.4	38	130

LICENSED LANDSCAPE ARCHITECT

12-24-12
PLANS APPROVAL DATE

LICENSED LANDSCAPE ARCHITECT
WILLIAM L. DUTTERA No. 4802
Signature
9/30/12
Renewal Date
4/30/12
Date
STATE OF CALIFORNIA

THE STATE OF CALIFORNIA OR ITS OFFICERS OR AGENTS SHALL NOT BE RESPONSIBLE FOR THE ACCURACY OR COMPLETENESS OF SCANNED COPIES OF THIS PLAN SHEET.

NOTE:

FOR ACCURATE RIGHT OF WAY DATA, CONTACT
RIGHT OF WAY ENGINEERING AT THE DISTRICT OFFICE.

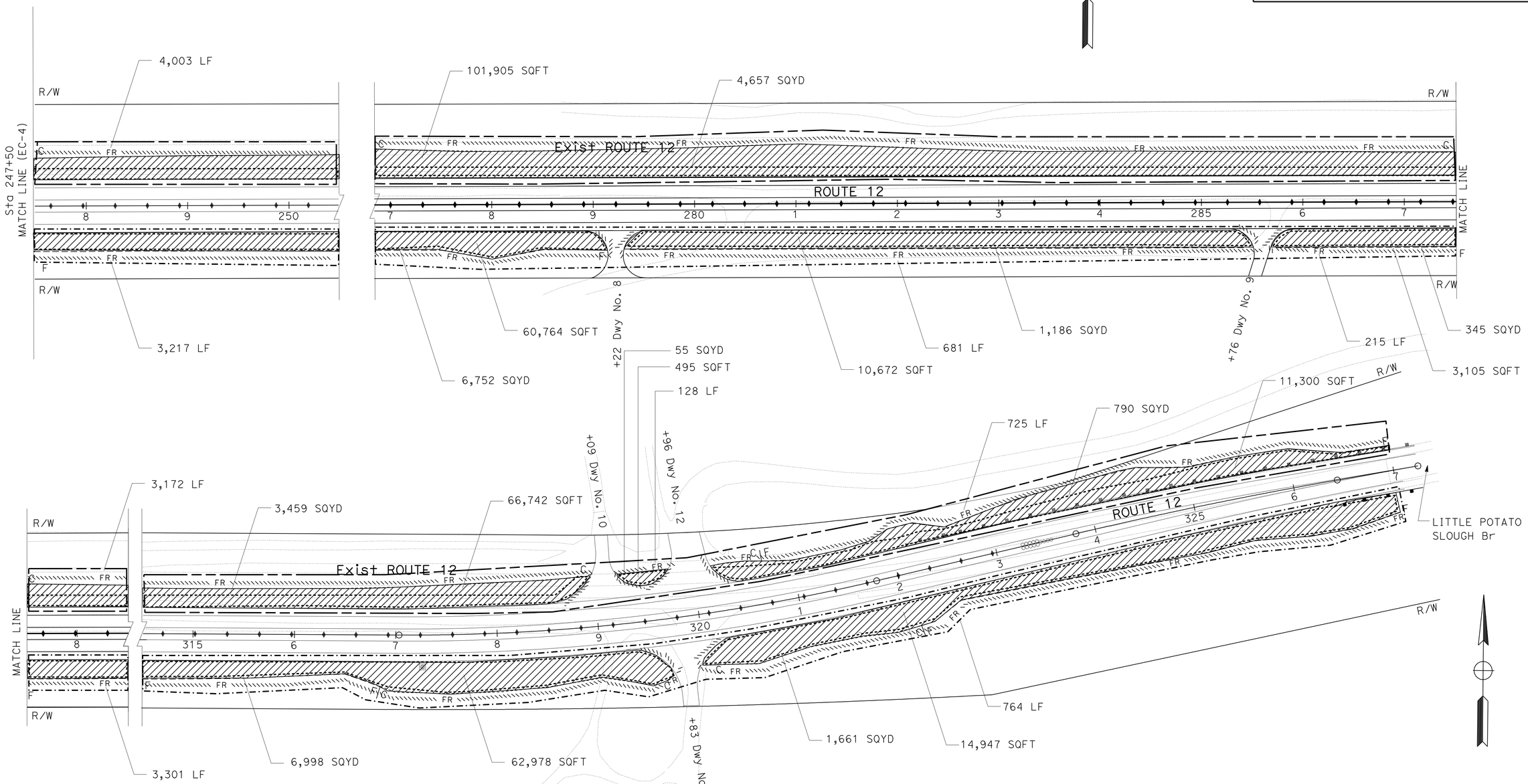

EROSION CONTROL PLAN
(STAGE 2 & 3)

SCALE: 1" = 50'

EC-5

APPROVED FOR EROSION CONTROL WORK ONLY

REVISED BY	DATE REVISED
RF	04/30/12

CALCULATED-DESIGNED BY: ROBYN FONG
CHECKED BY: WILLIAM DUTTERA
SENIOR LANDSCAPE ARCHITECT: BRAD COLE

STATE OF CALIFORNIA - DEPARTMENT OF TRANSPORTATION
Caltrans®
LANDSCAPE ARCHITECTURE

LAST REVISION 00-00-00
DATE PLOTTED => 27-DEC-2012
TIME PLOTTED => 14:04

Dist	COUNTY	ROUTE	POST MILES TOTAL PROJECT	SHEET No.	TOTAL SHEETS
10	SJ	12	0.1/R4.4	39	130

REGISTERED CIVIL ENGINEER 4/16/12 DATE

12-24-12
PLANS APPROVAL DATE

REGISTERED PROFESSIONAL ENGINEER RICHARD BOYER No. 75844 Exp. 6/30/14 CIVIL STATE OF CALIFORNIA

THE STATE OF CALIFORNIA OR ITS OFFICERS OR AGENTS SHALL NOT BE RESPONSIBLE FOR THE ACCURACY OR COMPLETENESS OF SCANNED COPIES OF THIS PLAN SHEET.

LEGEND

⬡ - DRAINAGE SYSTEM

○ - DRAINAGE UNIT

NOTE:

FOR ACCURATE RIGHT OF WAY DATA, CONTACT RIGHT OF WAY ENGINEERING AT THE DISTRICT OFFICE.

ABBREVIATIONS:

WTJ - WATER TIGHT JOINTS
ESA - ENVIRONMENTALLY SENSITIVE AREA
CFES - CONCRETE FLARED END SECTION

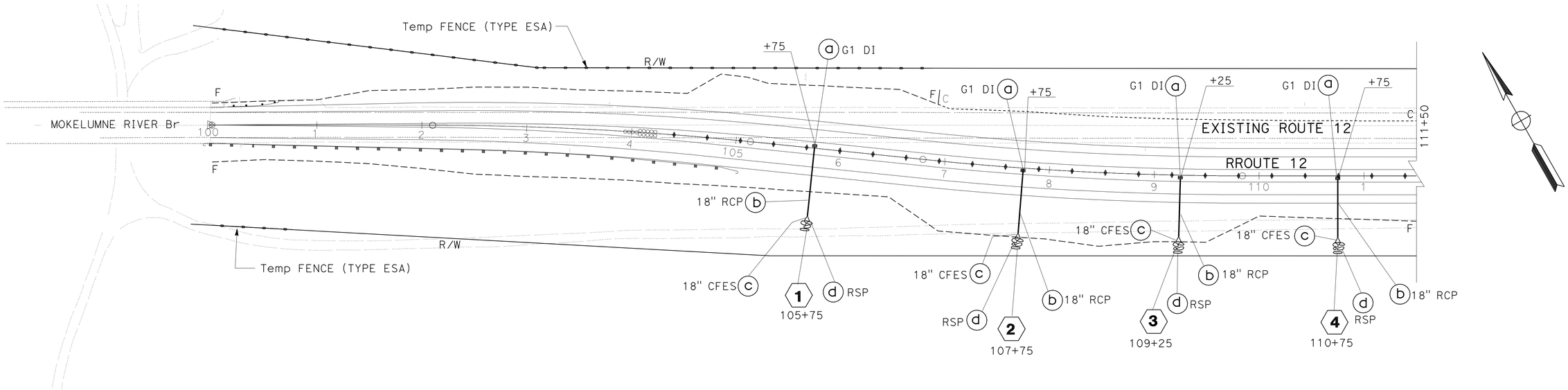

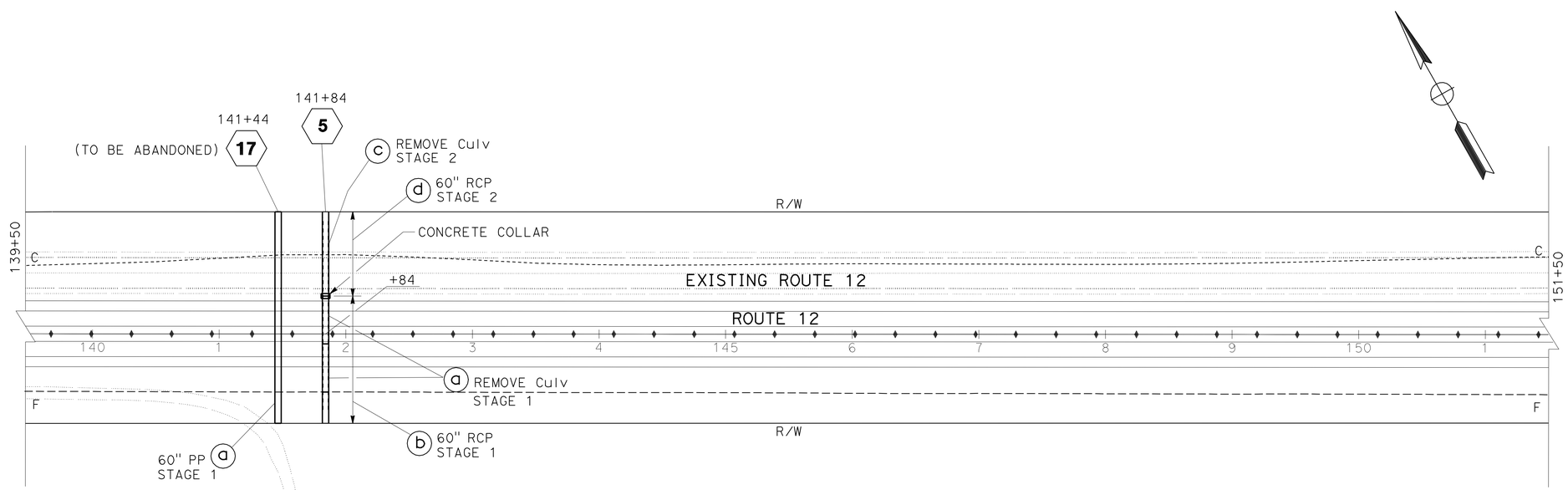

DRAINAGE PLAN

SCALE: 1" = 50'

D-1

APPROVED FOR DRAINAGE WORK ONLY

OA	04/25/12
REVISED BY	DATE REVISED
OSAMA ABDEL-MAGIED	RICHARD BOYER
CALCULATED-DESIGNED BY	CHECKED BY
FUNCTIONAL SUPERVISOR	NOMER GUITERREZ

STATE OF CALIFORNIA - DEPARTMENT OF TRANSPORTATION

Caltrans® DESIGN

LAST REVISION 00-00-00 | DATE PLOTTED => 27-DEC-2012 TIME PLOTTED => 14:05

Dist	COUNTY	ROUTE	POST MILES TOTAL PROJECT	SHEET No.	TOTAL SHEETS
10	SJ	12	0.1/R4.4	40	130

REGISTERED CIVIL ENGINEER 4/16/12 DATE

12-24-12
PLANS APPROVAL DATE

REGISTERED PROFESSIONAL ENGINEER RICHARD BOYER No. 75844 Exp. 6/30/14 CIVIL STATE OF CALIFORNIA

THE STATE OF CALIFORNIA OR ITS OFFICERS OR AGENTS SHALL NOT BE RESPONSIBLE FOR THE ACCURACY OR COMPLETENESS OF SCANNED COPIES OF THIS PLAN SHEET.

NOTE:

FOR ACCURATE RIGHT OF WAY DATA, CONTACT RIGHT OF WAY ENGINEERING AT THE DISTRICT OFFICE.

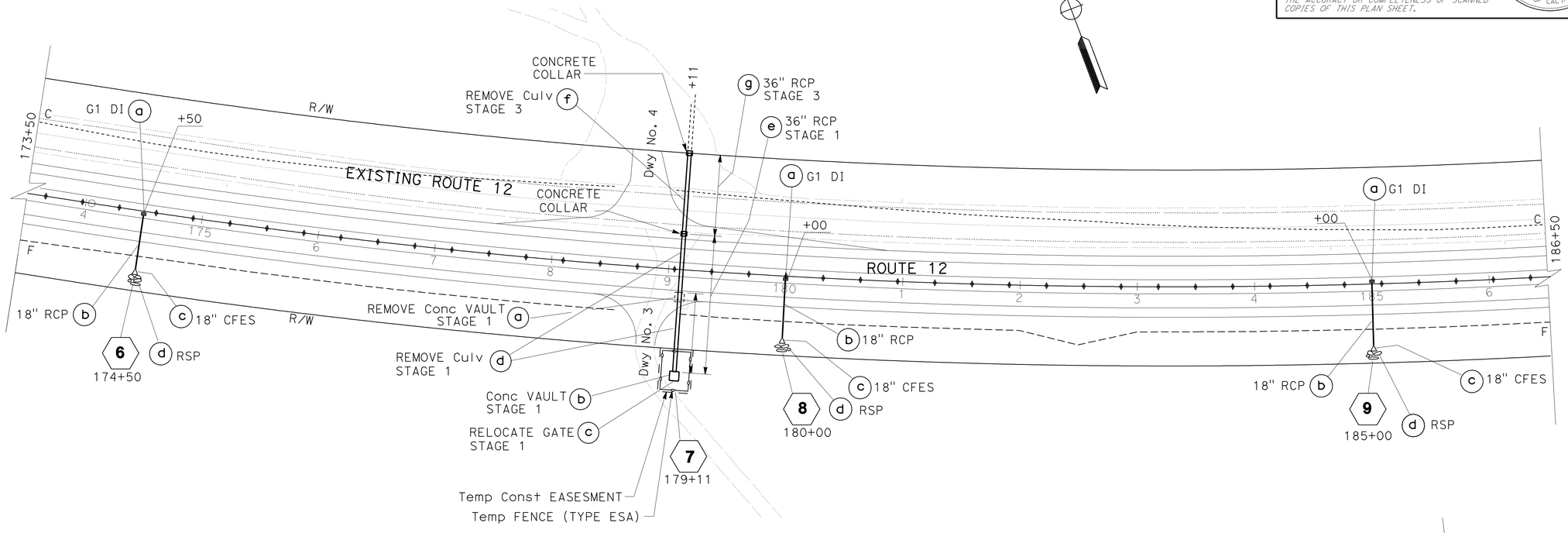

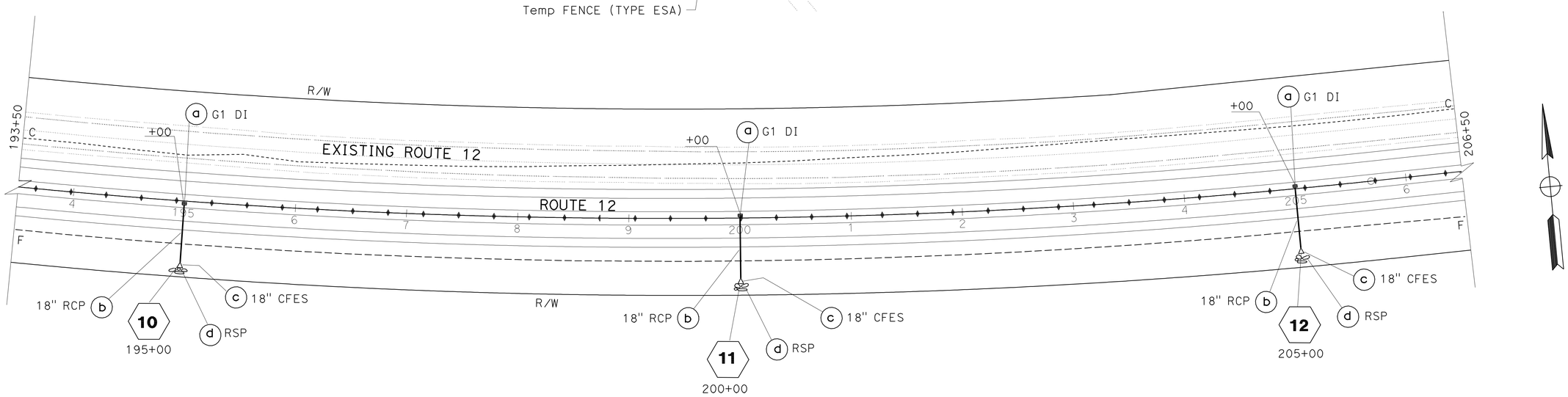

DRAINAGE PLAN

SCALE: 1" = 50'

D-2

APPROVED FOR DRAINAGE WORK ONLY

STATE OF CALIFORNIA - DEPARTMENT OF TRANSPORTATION
Caltrans
DESIGN

FUNCTIONAL SUPERVISOR: NOMER GUITERREZ
CALCULATED-DESIGNED BY: OSAMA ABDEL-MAGIED
CHECKED BY: RICHARD BOYER
REVISED BY: OA
DATE REVISED: 04/24/12

LAST REVISION 00-00-00
DATE PLOTTED => 27-DEC-2012
TIME PLOTTED => 14:05

Dist	COUNTY	ROUTE	POST MILES TOTAL PROJECT	SHEET No.	TOTAL SHEETS
10	SJ	12	0.1/R4.4	41	130

REGISTERED CIVIL ENGINEER 4/16/12 DATE

12-24-12
PLANS APPROVAL DATE

REGISTERED PROFESSIONAL ENGINEER RICHARD BOYER No. 75844 Exp. 6/30/14 CIVIL STATE OF CALIFORNIA

THE STATE OF CALIFORNIA OR ITS OFFICERS OR AGENTS SHALL NOT BE RESPONSIBLE FOR THE ACCURACY OR COMPLETENESS OF SCANNED COPIES OF THIS PLAN SHEET.

NOTE:

FOR ACCURATE RIGHT OF WAY DATA, CONTACT
RIGHT OF WAY ENGINEERING AT THE DISTRICT OFFICE.

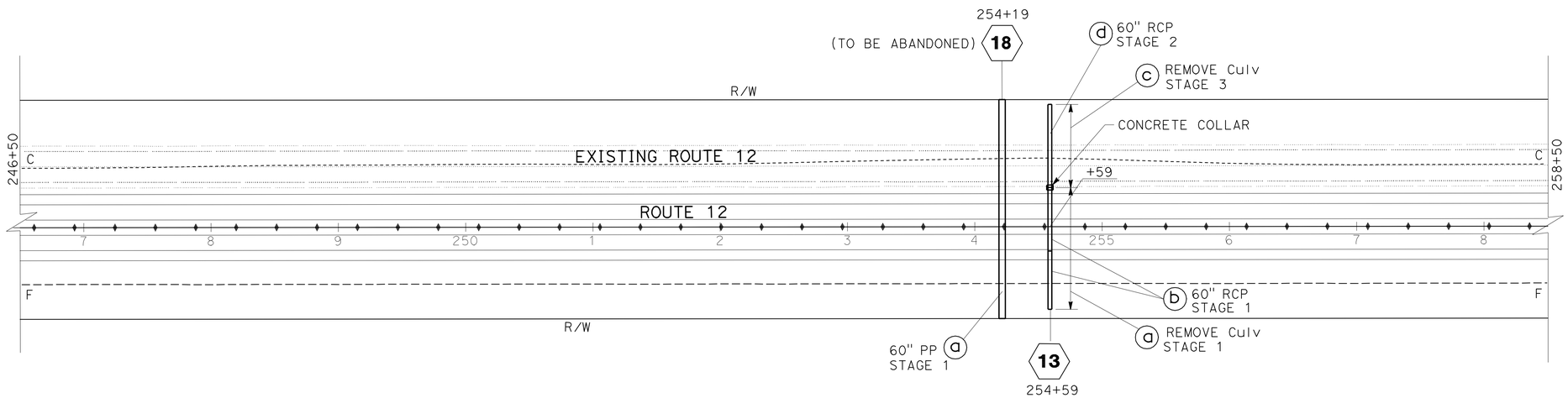

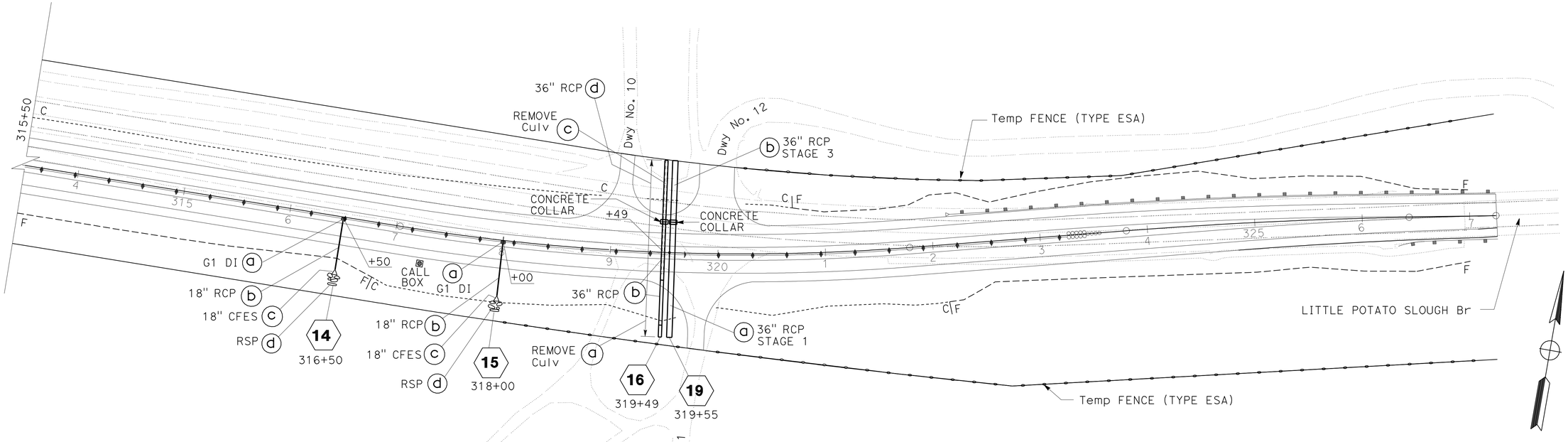

APPROVED FOR DRAINAGE WORK ONLY

DRAINAGE PLAN

SCALE: 1" = 50'

D-3

REVISED BY	DATE REVISED
OA	04/25/12

CALCULATED-DESIGNED BY: OSAMA ABDEL-MAGIED
CHECKED BY: RICHARD BOYER
FUNCTIONAL SUPERVISOR: NOMER GUITERREZ

STATE OF CALIFORNIA - DEPARTMENT OF TRANSPORTATION
Caltrans
DESIGN

LAST REVISION 00-00-00 | DATE PLOTTED => 27-DEC-2012 | TIME PLOTTED => 14:05

Dist	COUNTY	ROUTE	POST MILES TOTAL PROJECT	SHEET No.	TOTAL SHEETS
10	SJ	12	0.1/R4.4	42	130

REGISTERED CIVIL ENGINEER 4/16/12 DATE

12-24-12
PLANS APPROVAL DATE

REGISTERED PROFESSIONAL ENGINEER RICHARD BOYER No. 75844 Exp. 6/30/14 CIVIL STATE OF CALIFORNIA

THE STATE OF CALIFORNIA OR ITS OFFICERS OR AGENTS SHALL NOT BE RESPONSIBLE FOR THE ACCURACY OR COMPLETENESS OF SCANNED COPIES OF THIS PLAN SHEET.

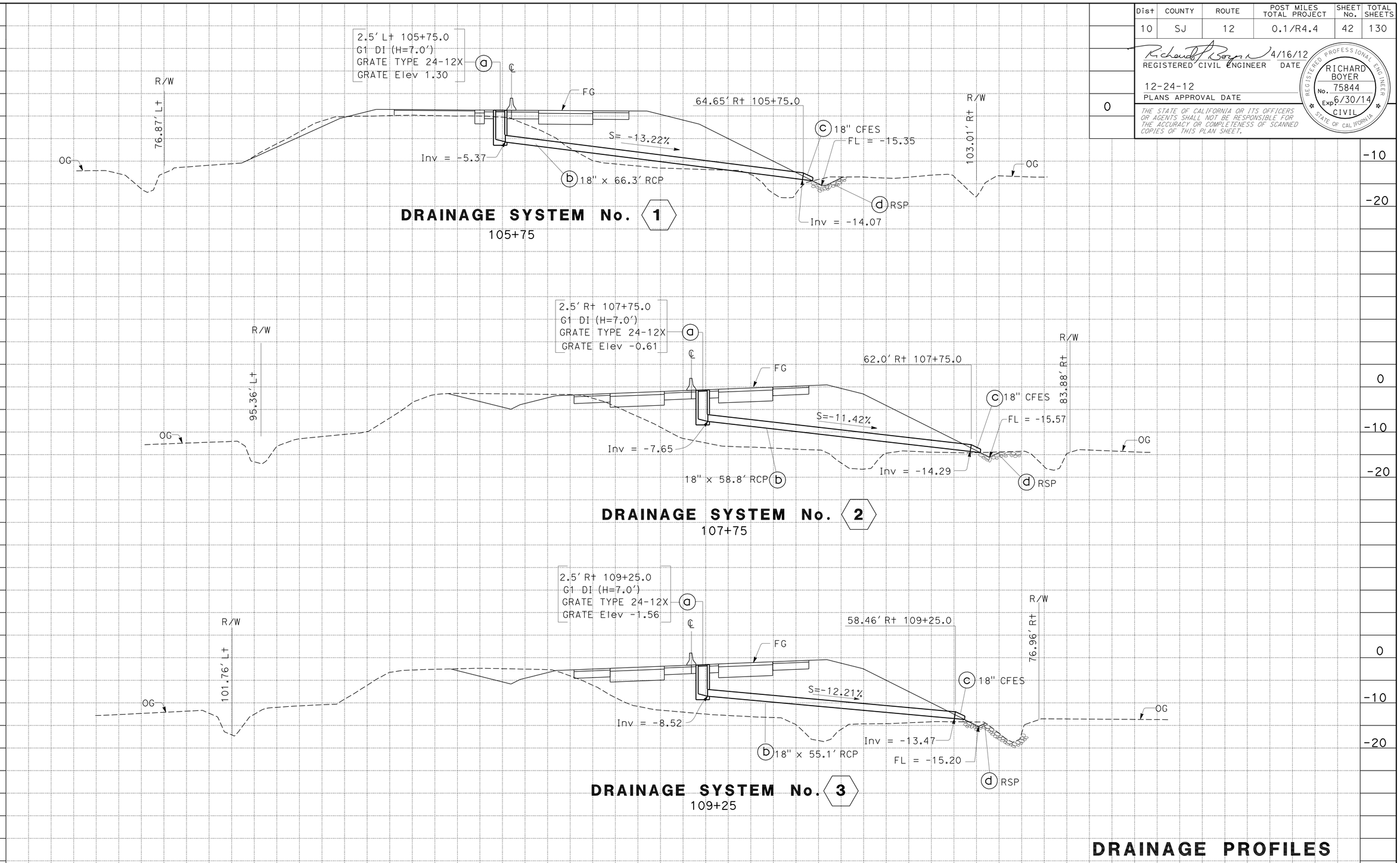

DRAINAGE PROFILES

SCALE: Horiz 1" = 10'
Vert 1" = 10'

DP-1

STATION		TOTAL
CY	Exc	
	Emb	

STATE OF CALIFORNIA - DEPARTMENT OF TRANSPORTATION
Caltrans
DESIGN

FUNCTIONAL SUPERVISOR: NOMER GUITERREZ
CALCULATED-DESIGNED BY: OSAMA ABDEL-MAGIED
CHECKED BY: RICHARD BOYER
REVISED BY: OA
DATE REVISED: 04/26/12

LAST REVISION 00-00-00
DATE PLOTTED => 27-DEC-2012
TIME PLOTTED => 14:05

Dist	COUNTY	ROUTE	POST MILES TOTAL PROJECT	SHEET No.	TOTAL SHEETS
10	SJ	12	0.1/R4.4	43	130

Richard Boyer 4/16/12
REGISTERED CIVIL ENGINEER DATE

12-24-12
PLANS APPROVAL DATE

REGISTERED PROFESSIONAL ENGINEER RICHARD BOYER No. 75844 Exp. 6/30/14 CIVIL STATE OF CALIFORNIA

THE STATE OF CALIFORNIA OR ITS OFFICERS OR AGENTS SHALL NOT BE RESPONSIBLE FOR THE ACCURACY OR COMPLETENESS OF SCANNED COPIES OF THIS PLAN SHEET.

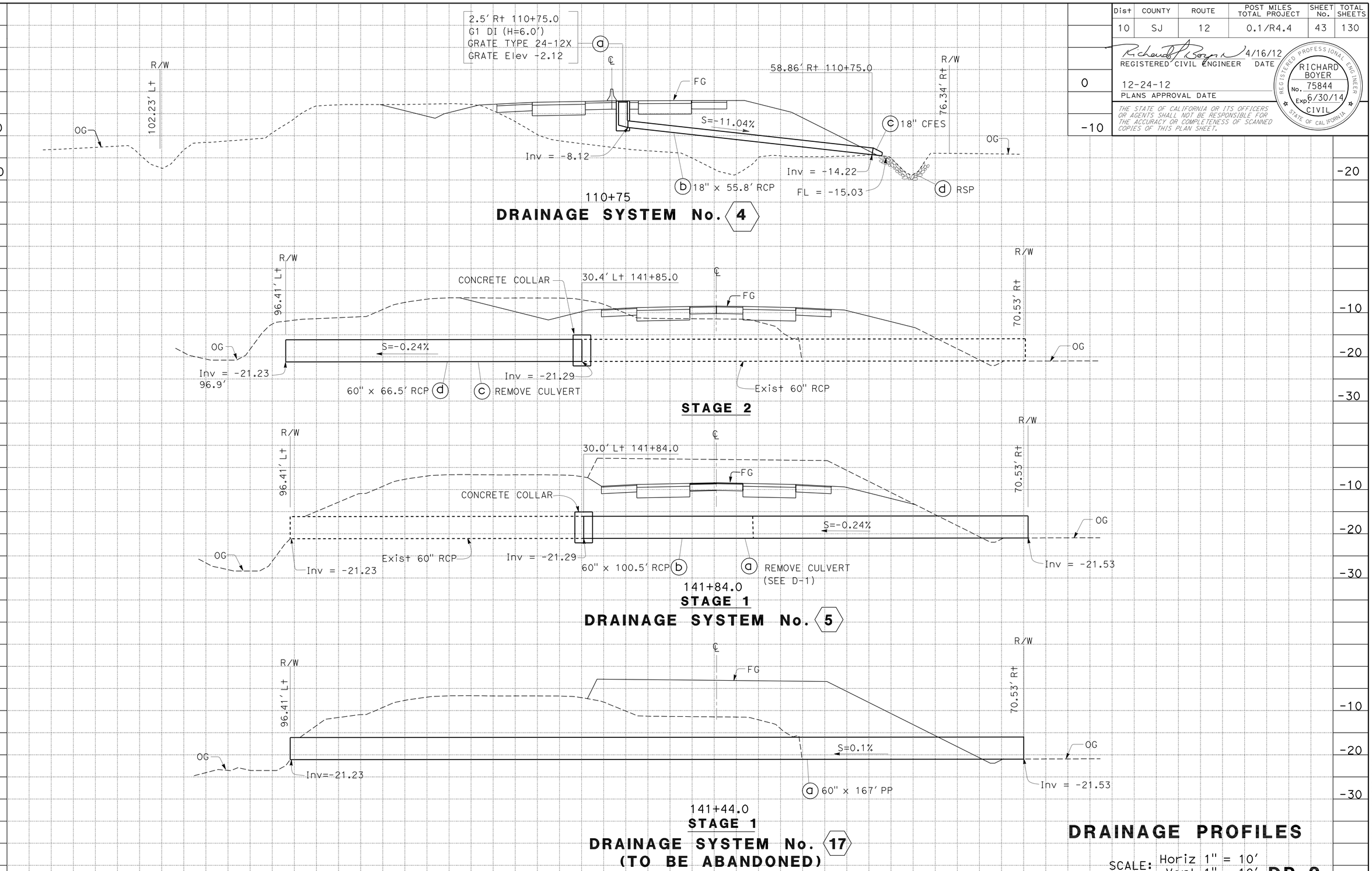

STATION		TOTAL
CY	Exc	
	Emb	

OA	04/26/12	REVISED BY / DATE REVISED
OSAMA ABDEL-MAGIED	RICHARD BOYER	CALCULATED-DESIGNED BY / CHECKED BY
NOMER GUITERREZ		FUNCTIONAL SUPERVISOR

STATE OF CALIFORNIA - DEPARTMENT OF TRANSPORTATION
DESIGN
Caltrans

DATE PLOTTED => 27-DEC-2012
TIME PLOTTED => 16:10
LAST REVISION 00-00-00

Dist	COUNTY	ROUTE	POST MILES TOTAL PROJECT	SHEET No.	TOTAL SHEETS
10	SJ	12	0.1/R4.4	44	130

REGISTERED CIVIL ENGINEER 4/16/12 DATE

12-24-12
PLANS APPROVAL DATE

REGISTERED PROFESSIONAL ENGINEER RICHARD BOYER No. 75844 Exp. 6/30/14 CIVIL STATE OF CALIFORNIA

THE STATE OF CALIFORNIA OR ITS OFFICERS OR AGENTS SHALL NOT BE RESPONSIBLE FOR THE ACCURACY OR COMPLETENESS OF SCANNED COPIES OF THIS PLAN SHEET.

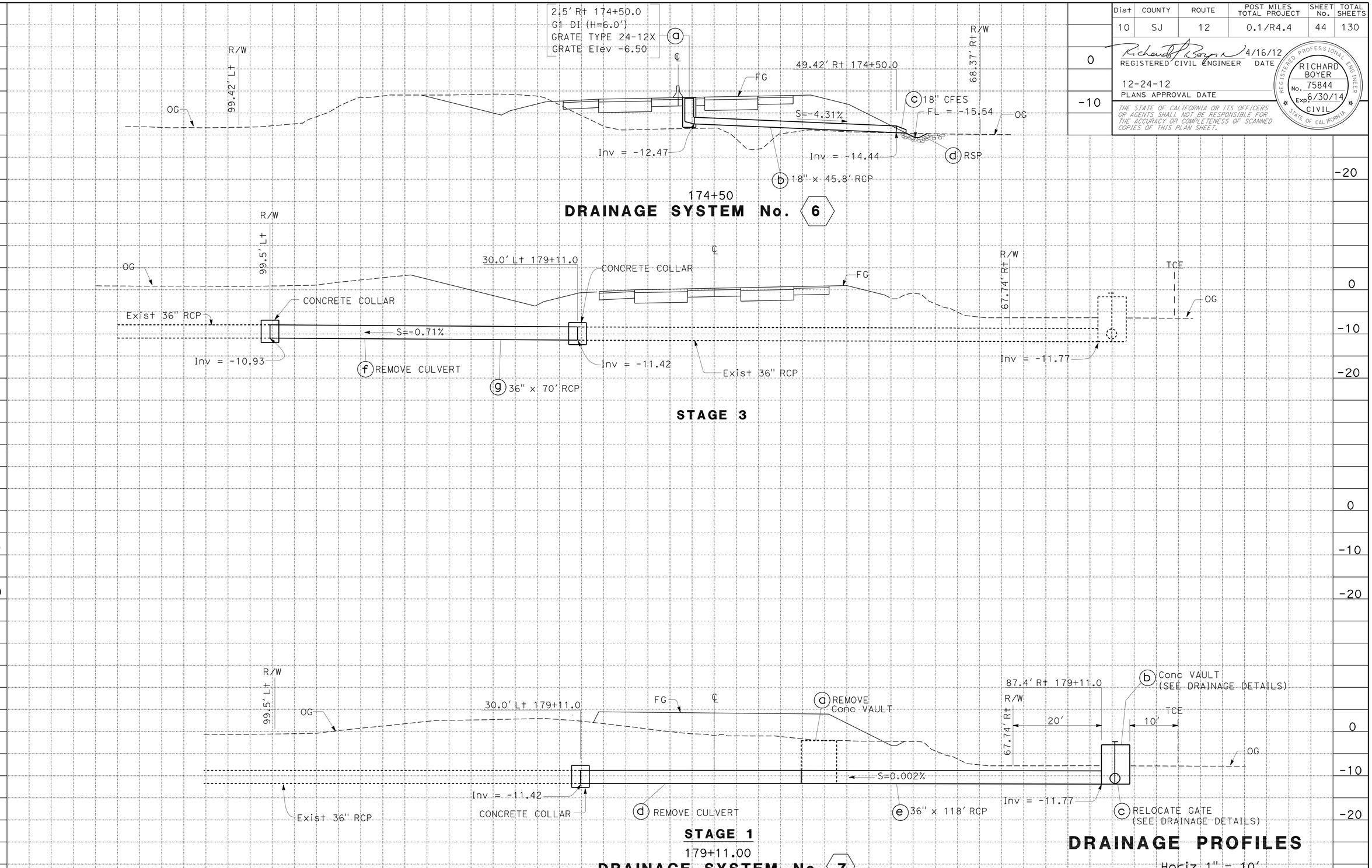

DRAINAGE PROFILES

SCALE: Horiz 1" = 10'
Vert 1" = 10'

DP-3

STATION		TOTAL
CY	Exc	
	Emb	

STATE OF CALIFORNIA - DEPARTMENT OF TRANSPORTATION
Caltrans
DESIGN

FUNCTIONAL SUPERVISOR: NOMER GUITERREZ
CALCULATED-DESIGNED BY: OSAMA ABDEL-MAGIED
CHECKED BY: RICHARD BOYER
REVISED BY: OA
DATE REVISED: 04/26/12

LAST REVISION 00-00-00
DATE PLOTTED => 27-DEC-2012
TIME PLOTTED => 16:10

Dist	COUNTY	ROUTE	POST MILES TOTAL PROJECT	SHEET No.	TOTAL SHEETS
10	SJ	12	0.1/R4.4	45	130

REGISTERED CIVIL ENGINEER 4/16/12 DATE

12-24-12
PLANS APPROVAL DATE

REGISTERED PROFESSIONAL ENGINEER RICHARD BOYER No. 75844 Exp. 6/30/14 CIVIL STATE OF CALIFORNIA

THE STATE OF CALIFORNIA OR ITS OFFICERS OR AGENTS SHALL NOT BE RESPONSIBLE FOR THE ACCURACY OR COMPLETENESS OF SCANNED COPIES OF THIS PLAN SHEET.

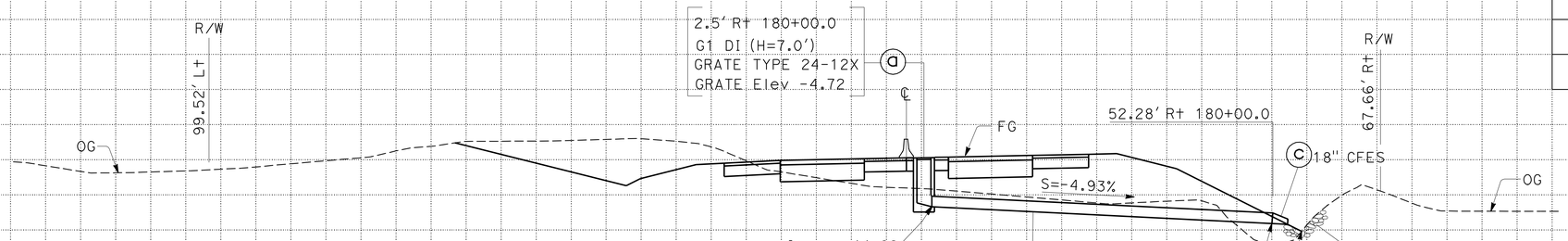

180+00

DRAINAGE SYSTEM No. 8

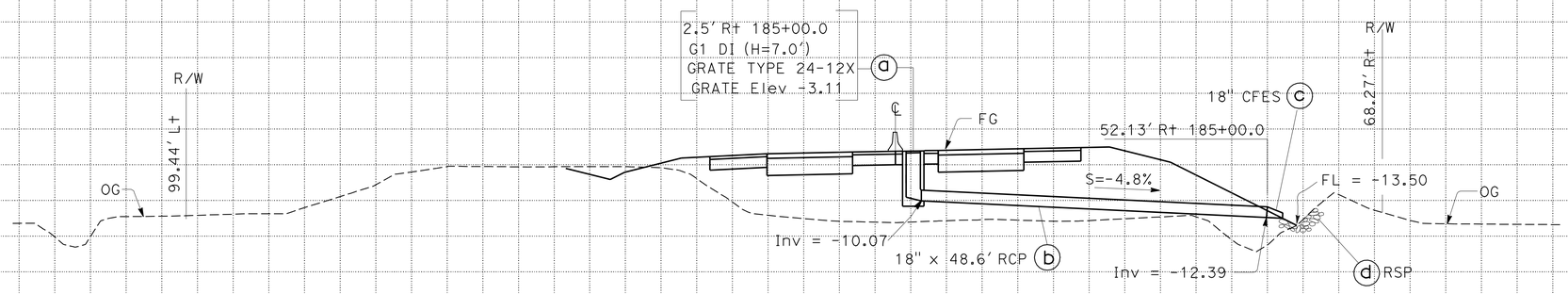

185+00

DRAINAGE SYSTEM No. 9

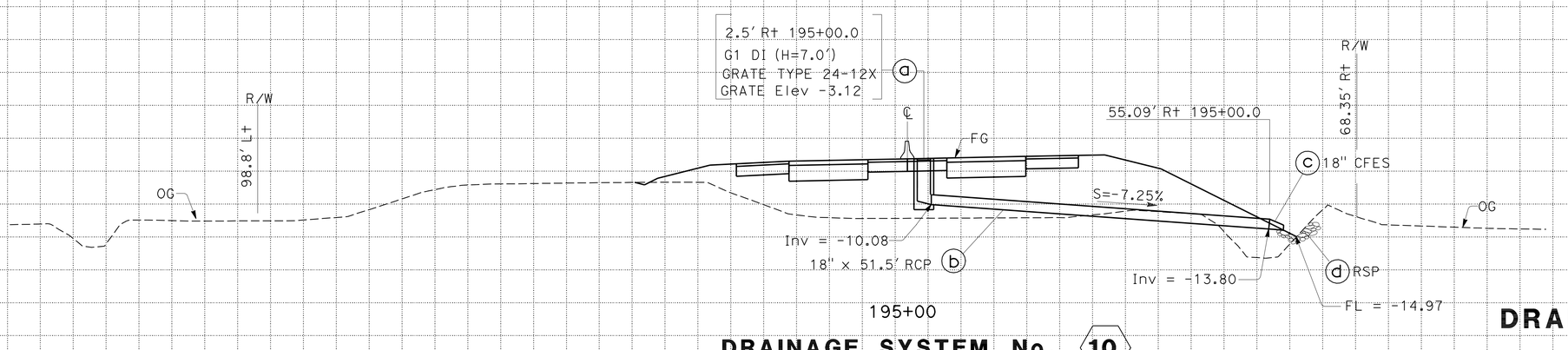

195+00

DRAINAGE SYSTEM No. 10

DRAINAGE PROFILES

SCALE: Horiz 1" = 10'
Vert 1" = 10'

DP-4

STATION		TOTAL
CY	Exc	
	Emb	

REVISED BY	DATE REVISED
OA	04/26/12

OSAMA ABDEL-MAGIED — RICHARD BOYER — CALCULATED-DESIGNED BY — CHECKED BY

FUNCTIONAL SUPERVISOR: NOMER GUITERREZ

STATE OF CALIFORNIA - DEPARTMENT OF TRANSPORTATION — DESIGN — Caltrans

LAST REVISION 00-00-00 — DATE PLOTTED => 27-DEC-2012 — TIME PLOTTED => 16:10

Dist	COUNTY	ROUTE	POST MILES TOTAL PROJECT	SHEET No.	TOTAL SHEETS
10	SJ	12	0.1/R4.4	46	130

REGISTERED CIVIL ENGINEER 4/16/12 DATE

12-24-12
PLANS APPROVAL DATE

REGISTERED PROFESSIONAL ENGINEER RICHARD BOYER No. 75844 Exp. 6/30/14 CIVIL STATE OF CALIFORNIA

THE STATE OF CALIFORNIA OR ITS OFFICERS OR AGENTS SHALL NOT BE RESPONSIBLE FOR THE ACCURACY OR COMPLETENESS OF SCANNED COPIES OF THIS PLAN SHEET.

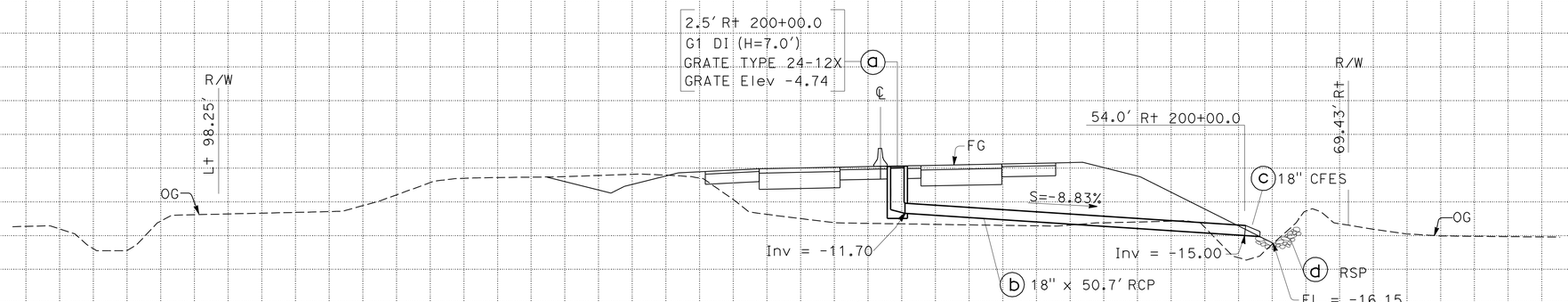

200+00

DRAINAGE SYSTEM No. 11

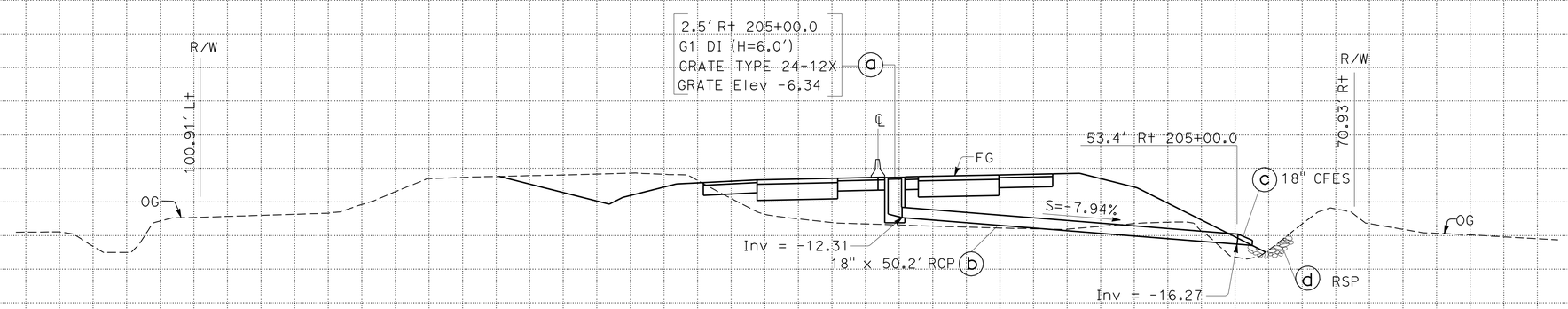

205+00

DRAINAGE SYSTEM No. 12

DRAINAGE PROFILES

SCALE: Horiz 1" = 10'
Vert 1" = 10'

DP-5

STATION		TOTAL
CY	Exc	
	Emb	

STATE OF CALIFORNIA - DEPARTMENT OF TRANSPORTATION
Caltrans
DESIGN

FUNCTIONAL SUPERVISOR: NOMER GUITERREZ
CALCULATED-DESIGNED BY: OSAMA ABDEL-MAGIED
CHECKED BY: RICHARD BOYER
REVISED BY: OA
DATE REVISED: 04/26/12

LAST REVISION 00-00-00
DATE PLOTTED => 27-DEC-2012
TIME PLOTTED => 16:10

Dist	COUNTY	ROUTE	POST MILES TOTAL PROJECT	SHEET No.	TOTAL SHEETS
10	SJ	12	0.1/R4.4	47	130

REGISTERED CIVIL ENGINEER 4/16/12 DATE

12-24-12
PLANS APPROVAL DATE

REGISTERED PROFESSIONAL ENGINEER RICHARD BOYER No. 75844 Exp. 6/30/14 CIVIL STATE OF CALIFORNIA

THE STATE OF CALIFORNIA OR ITS OFFICERS OR AGENTS SHALL NOT BE RESPONSIBLE FOR THE ACCURACY OR COMPLETENESS OF SCANNED COPIES OF THIS PLAN SHEET.

0

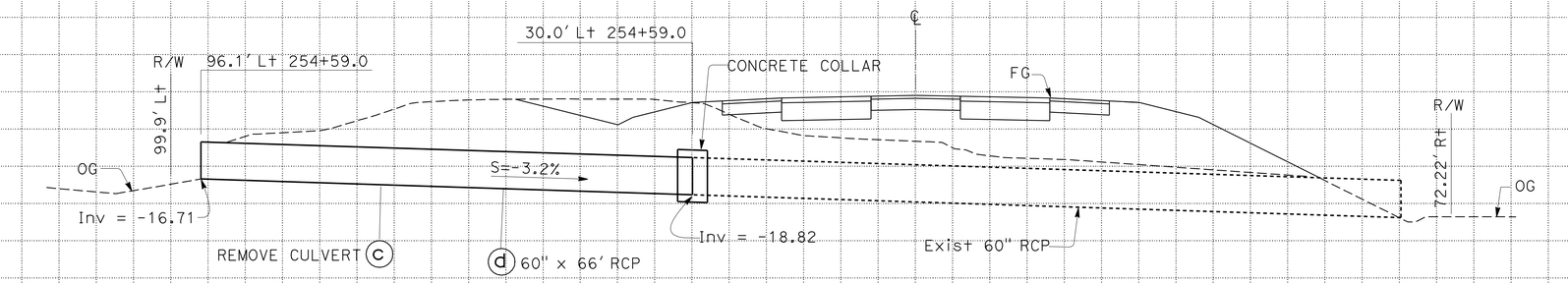

STAGE 2

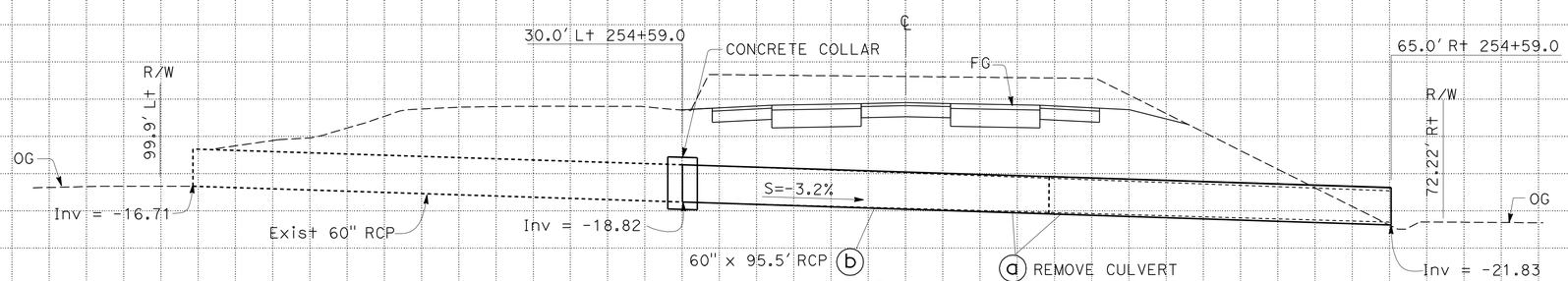

STAGE 1

DRAINAGE SYSTEM No. 13

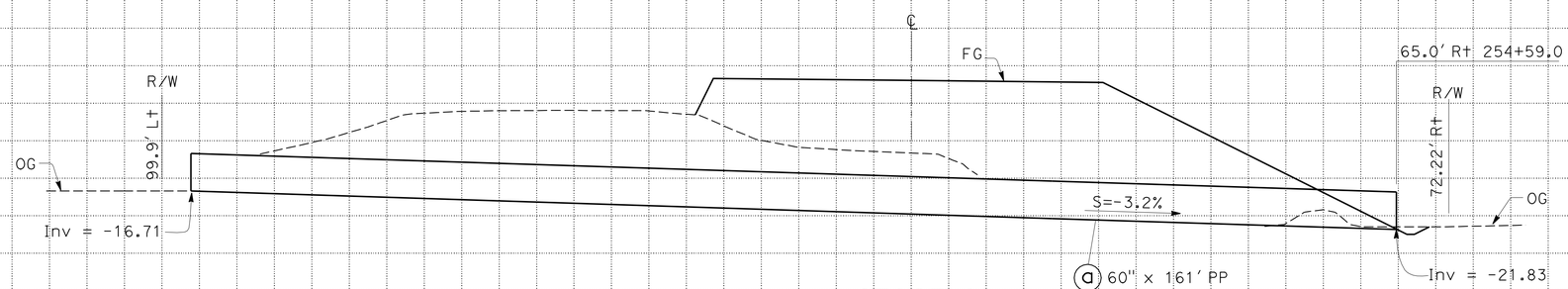

STAGE 1

254+59.0

DRAINAGE SYSTEM No. 18
(TO BE ABANDONED)

DRAINAGE PROFILES

SCALE: Horiz 1" = 10'
Vert 1" = 10'

DP-6

STATION		TOTAL
CY	Exc	
	Emb	

STATE OF CALIFORNIA - DEPARTMENT OF TRANSPORTATION
Caltrans
DESIGN

FUNCTIONAL SUPERVISOR: NOMER GUTIERREZ
CALCULATED-DESIGNED BY: OSAMA ABDEL-MAGIED
CHECKED BY: RICHARD BOYER
REVISED BY: OA
DATE REVISED: 04/26/12

LAST REVISION 00-00-00
DATE PLOTTED => 27-DEC-2012
TIME PLOTTED => 16:10

Dist	COUNTY	ROUTE	POST MILES TOTAL PROJECT	SHEET No.	TOTAL SHEETS
10	SJ	12	0.1/R4.4	48	130

REGISTERED CIVIL ENGINEER 4/16/12 DATE

12-24-12
PLANS APPROVAL DATE

REGISTERED PROFESSIONAL ENGINEER RICHARD BOYER No. 75844 Exp. 6/30/14 CIVIL STATE OF CALIFORNIA

THE STATE OF CALIFORNIA OR ITS OFFICERS OR AGENTS SHALL NOT BE RESPONSIBLE FOR THE ACCURACY OR COMPLETENESS OF SCANNED COPIES OF THIS PLAN SHEET.

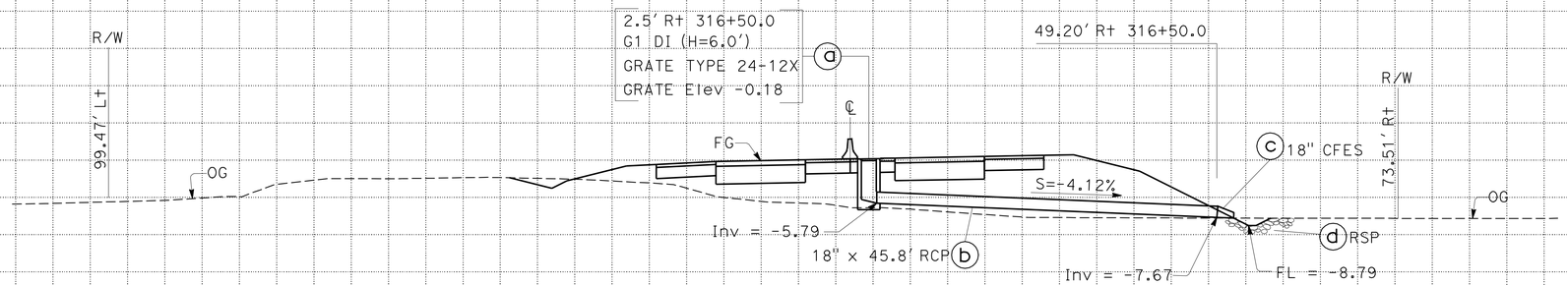

316+50.0

DRAINAGE SYSTEM No. 14

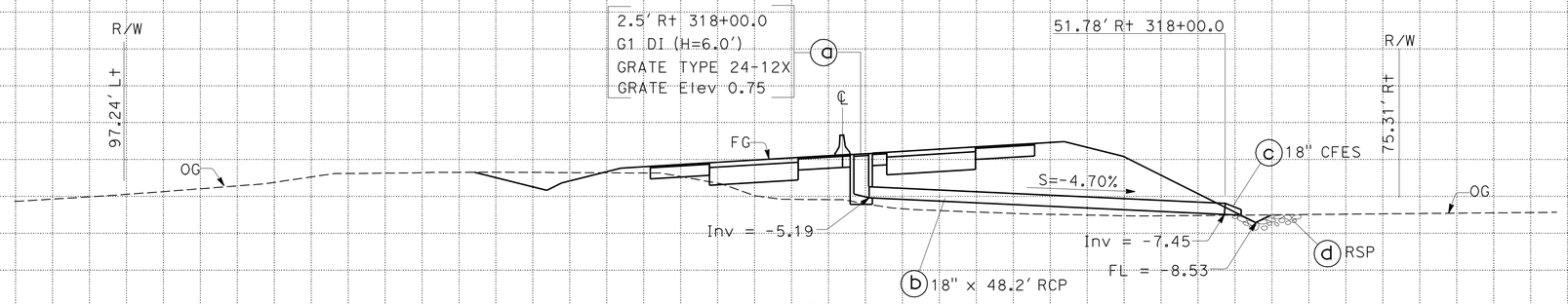

318+00

DRAINAGE SYSTEM No. 15

DRAINAGE PROFILES

SCALE: Horiz 1" = 10'
Vert 1" = 10'

DP-7

STATION		TOTAL
CY	Exc	
	Emb	

STATE OF CALIFORNIA - DEPARTMENT OF TRANSPORTATION
Caltrans
DESIGN

FUNCTIONAL SUPERVISOR: NOMER GUITERREZ
CALCULATED-DESIGNED BY: OSAMA ABDEL-MAGIED
CHECKED BY: RICHARD BOYER
REVISED BY: OA
DATE REVISED: 04/25/12

LAST REVISION 00-00-00
DATE PLOTTED => 27-DEC-2012
TIME PLOTTED => 16:10

Dist	COUNTY	ROUTE	POST MILES TOTAL PROJECT	SHEET No.	TOTAL SHEETS
10	SJ	12	0.1/R4.4	49	130

REGISTERED CIVIL ENGINEER 4/16/12 DATE

12-24-12
PLANS APPROVAL DATE

REGISTERED PROFESSIONAL ENGINEER RICHARD BOYER No. 75844 Exp. 6/30/14 CIVIL STATE OF CALIFORNIA

THE STATE OF CALIFORNIA OR ITS OFFICERS OR AGENTS SHALL NOT BE RESPONSIBLE FOR THE ACCURACY OR COMPLETENESS OF SCANNED COPIES OF THIS PLAN SHEET.

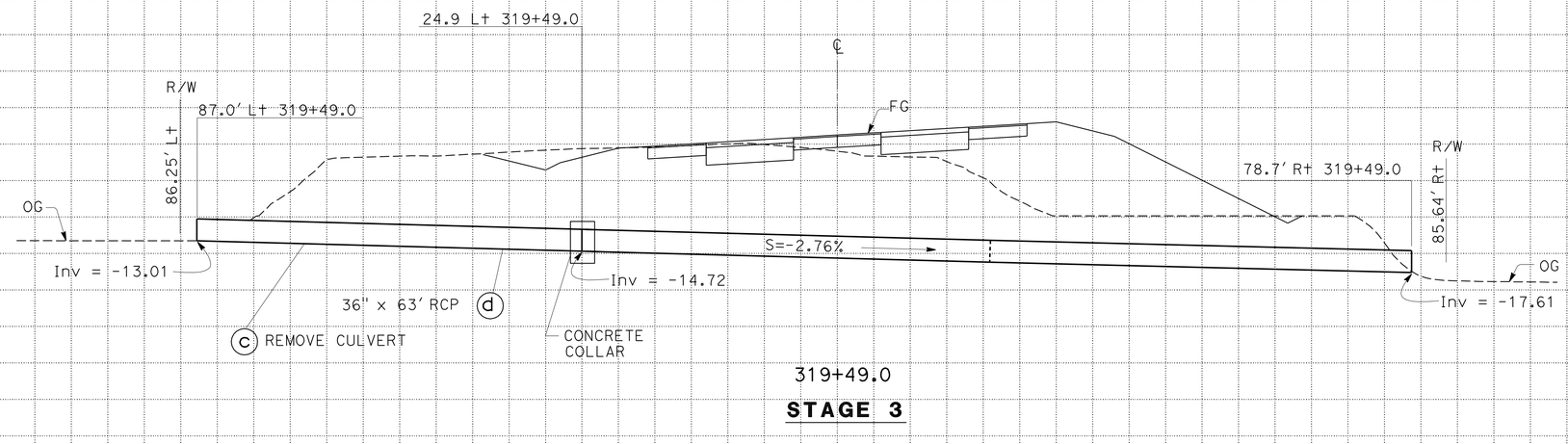

STAGE 3

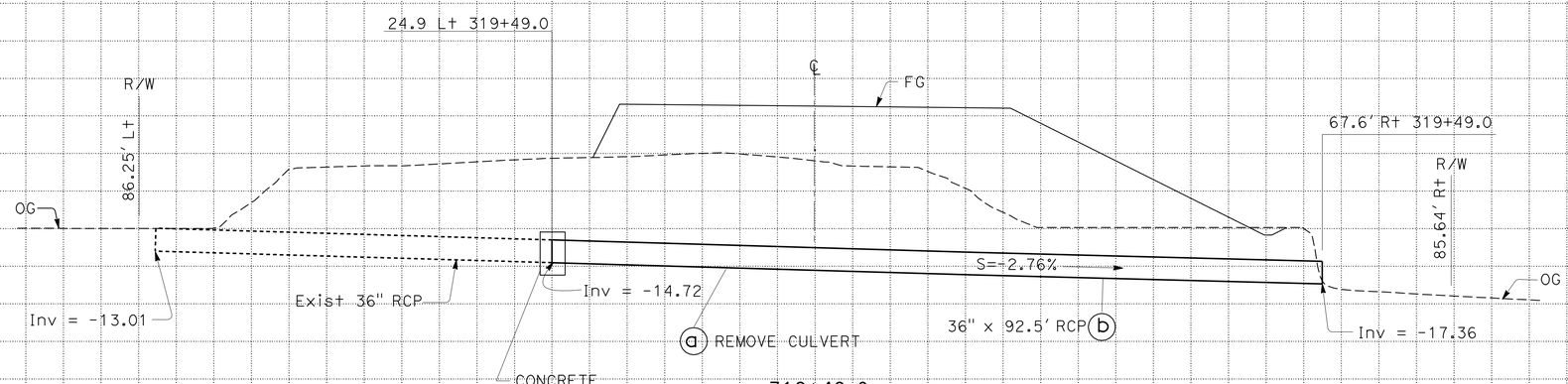

STAGE 1

DRAINAGE SYSTEM No. 16

DRAINAGE PROFILES

SCALE: Horiz 1" = 10'
Vert 1" = 10'

DP-8

STATION		TOTAL
CY	Exc	
	Emb	

STATE OF CALIFORNIA - DEPARTMENT OF TRANSPORTATION
Caltrans
DESIGN

FUNCTIONAL SUPERVISOR: NOMER GUITERREZ
CALCULATED-DESIGNED BY: OSAMA ABDEL-MAGIED
CHECKED BY: RICHARD BOYER
REVISED BY: OA
DATE REVISED: 04/25/12

LAST REVISION 00-00-00
DATE PLOTTED => 27-DEC-2012
TIME PLOTTED => 16:10

Dist	COUNTY	ROUTE	POST MILES TOTAL PROJECT	SHEET No.	TOTAL SHEETS
10	SJ	12	0.1/R4.4	50	130

REGISTERED CIVIL ENGINEER 4/16/12 DATE

12-24-12
PLANS APPROVAL DATE

REGISTERED PROFESSIONAL ENGINEER RICHARD BOYER No. 75844 Exp. 6/30/14 CIVIL STATE OF CALIFORNIA

THE STATE OF CALIFORNIA OR ITS OFFICERS OR AGENTS SHALL NOT BE RESPONSIBLE FOR THE ACCURACY OR COMPLETENESS OF SCANNED COPIES OF THIS PLAN SHEET.

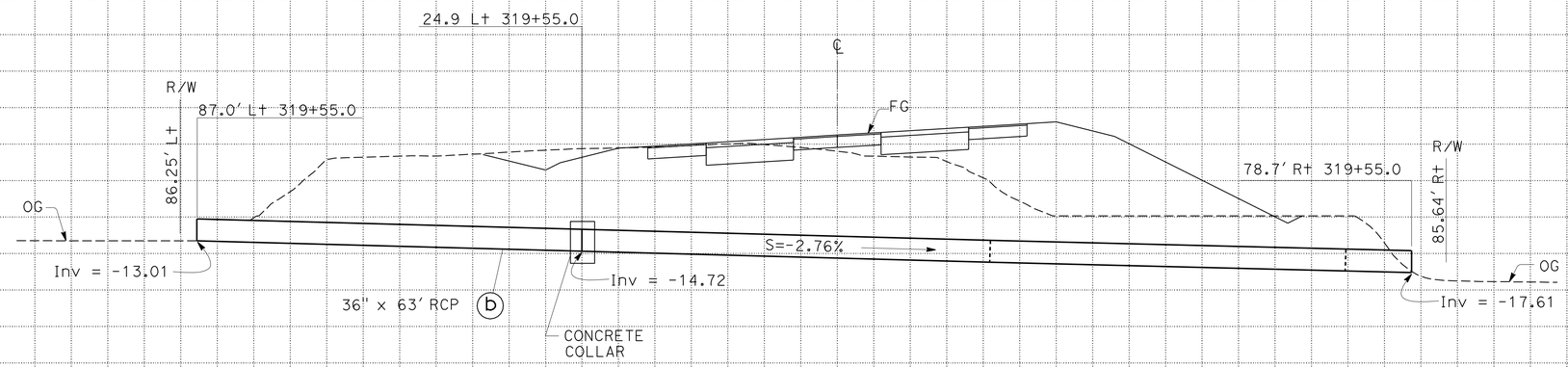

319+55.0

STAGE 3

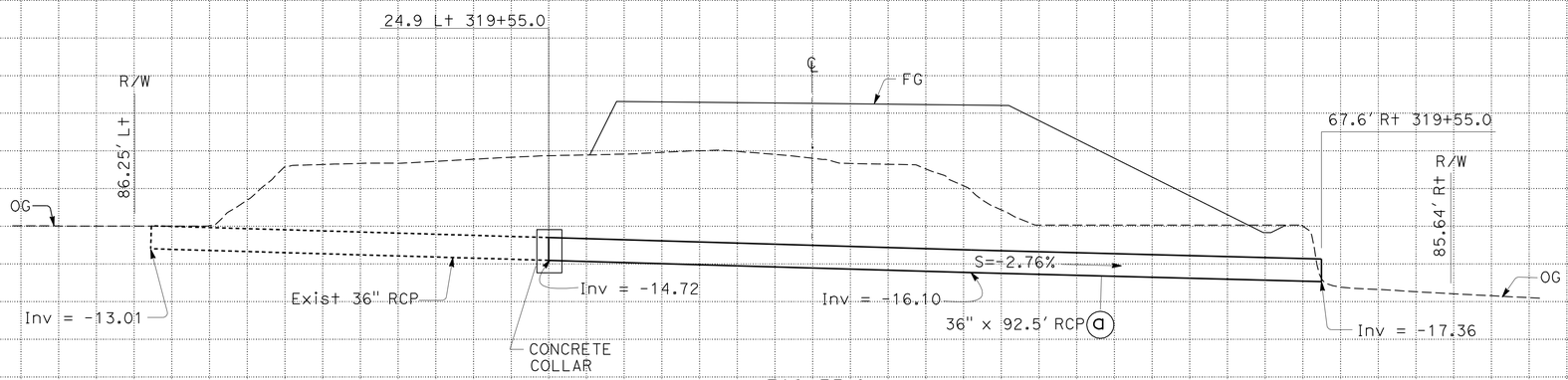

319+55.0

STAGE 1

DRAINAGE SYSTEM No. 19

DRAINAGE PROFILES

SCALE: Horiz 1" = 10'
Vert 1" = 10'

DP-9

STATION		TOTAL
CY	Exc	
	Emb	

OA 04/25/12 — REVISED BY / DATE REVISED

OSAMA ABDEL-MAGIED — CALCULATED-DESIGNED BY
RICHARD BOYER — CHECKED BY

FUNCTIONAL SUPERVISOR: NOMER GUITERREZ

STATE OF CALIFORNIA - DEPARTMENT OF TRANSPORTATION
Caltrans
DESIGN

LAST REVISION 00-00-00
DATE PLOTTED => 27-DEC-2012
TIME PLOTTED => 16:10

Dist	COUNTY	ROUTE	POST MILES TOTAL PROJECT	SHEET No.	TOTAL SHEETS
10	SJ	12	0.1/R4.4	51	130

REGISTERED CIVIL ENGINEER 4/16/12 DATE

12-24-12
PLANS APPROVAL DATE

REGISTERED PROFESSIONAL ENGINEER RICHARD BOYER No. 75844 Exp. 6/30/14 CIVIL STATE OF CALIFORNIA

THE STATE OF CALIFORNIA OR ITS OFFICERS OR AGENTS SHALL NOT BE RESPONSIBLE FOR THE ACCURACY OR COMPLETENESS OF SCANNED COPIES OF THIS PLAN SHEET.

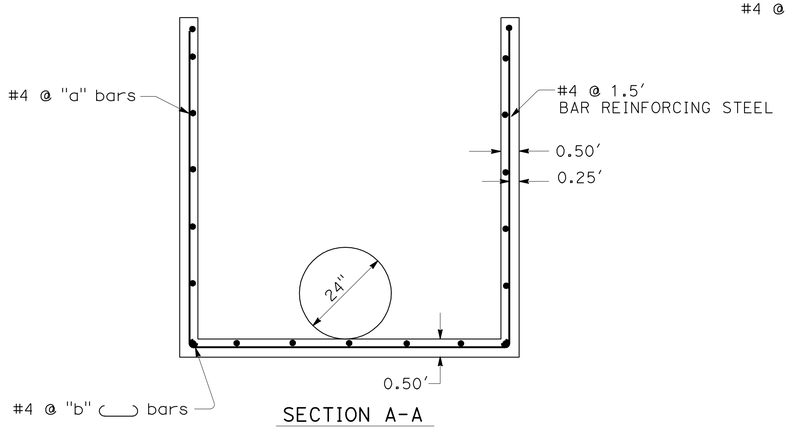

SECTION A-A

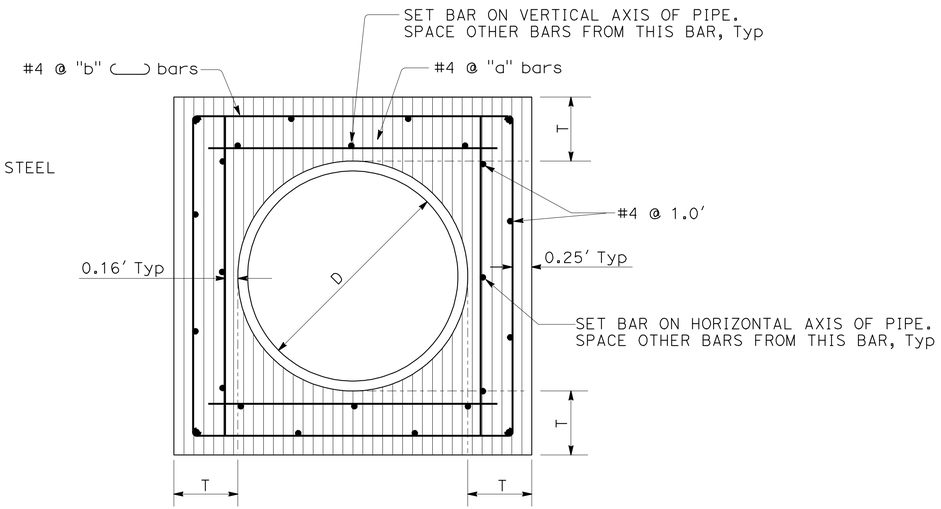

SECTION A-A

D	L	T	"a"	"b"
12"	12"	4"	@ 12"	@ 12"
18"	12"	5"	@ 12"	@ 12"
24"	12"	6"	@ 12"	@ 12"
36"	18"	10"	@ 12"	@ 12"
42"	18"	10"	@ 12"	@ 12"
48"	18"	10"	@ 12"	@ 12
60"	21"	11"	@ 12"	@ 12"
72"	24"	12"	@ 6"	@ 6"

NOTES:

1. WHERE PIPE OF DIFFERENT DIAMETERS ARE JOINED WITH A CONCRETE COLLAR, "L" SHALL BE THAT OF THE LARGER PIPE. D=D1 OR D2 WHICHEVER IS GREATER.
2. JOIN PIPES AT INVERTS WHERE THE SLOPE OF THE DOWNSTREAM PIPE IS GREATER THAN THE SLOPE OF THE UPSTREAM PIPE. JOIN PIPES AT SOFFIT WHERE THE SLOPE OF THE UPSTREAM PIPE IS GREATER THAN THE SLOPE OF THE DOWNSTREAM PIPE.
3. "b" BARS TO BE LOCKED AROUND LONGITUDUNAL REINFORCEMENT. ROTATE BARS AS NECESSARY.
4. CONCRETE COLLAR SHOWN IS ADEQUATE FOR UP TO 40 FEET OF FILL AND PIPE DIAMETERS LESS THAN 72 INCHES.
5. FOR PIPE SIZE NOT LISTED USE NEXT LARGER.

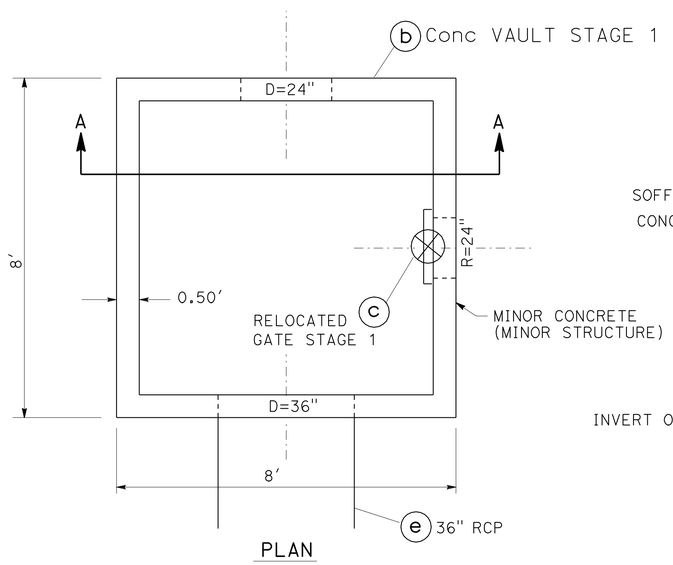

PLAN

CONCRETE VAULT
(DRAINAGE SYSTEM No. 7)

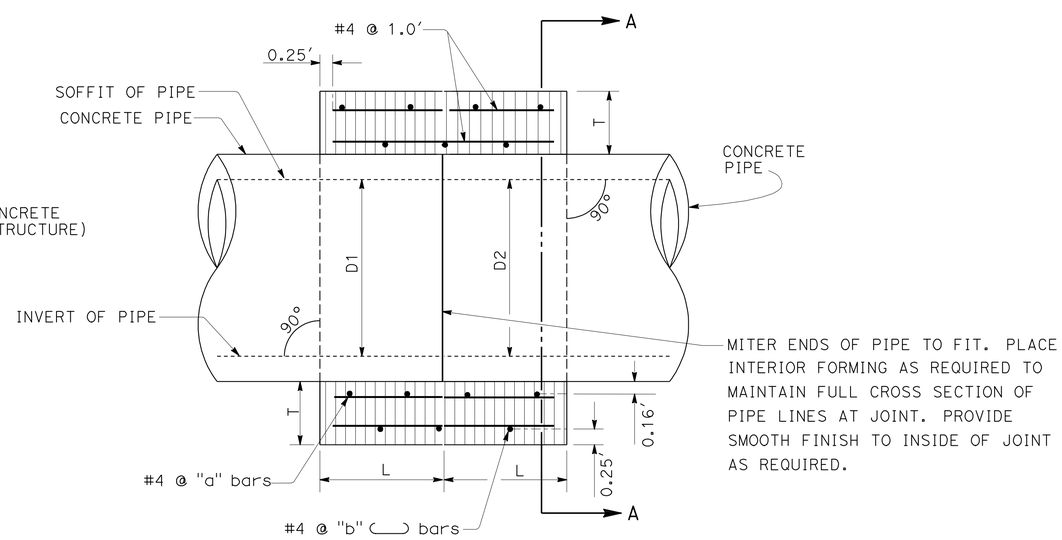

PLAN

CONCRETE COLLAR
(DRAINAGE SYSTEM No. 5, 7 & 13)

DRAINAGE DETAILS

NO SCALE

DD-1

CALCULATED-DESIGNED BY	OSAMA ABDEL-MAGIED
CHECKED BY	RICHARD BOYER
REVISED BY	OA
DATE REVISED	04/25/12
FUNCTIONAL SUPERVISOR	NOMER GUITERREZ

STATE OF CALIFORNIA - DEPARTMENT OF TRANSPORTATION
Caltrans
DESIGN

LAST REVISION 00-00-00 | DATE PLOTTED => 27-DEC-2012 | TIME PLOTTED => 16:10

Dist	COUNTY	ROUTE	POST MILES TOTAL PROJECT	SHEET No.	TOTAL SHEETS
10	SJ	12	0.1/R4.4	52	130

Richard Boyer 4/16/12
REGISTERED CIVIL ENGINEER DATE

12-24-12
PLANS APPROVAL DATE

REGISTERED PROFESSIONAL ENGINEER RICHARD BOYER No. 75844 Exp. 6/30/14 CIVIL STATE OF CALIFORNIA

THE STATE OF CALIFORNIA OR ITS OFFICERS OR AGENTS SHALL NOT BE RESPONSIBLE FOR THE ACCURACY OR COMPLETENESS OF SCANNED COPIES OF THIS PLAN SHEET.

DRAINAGE ITEMS

DRAINAGE SYSTEM No.	DRAINAGE UNIT	REMOVE CULVERT LF	REMOVE CONCRETE CY	ABANDON CULVERT LF	RELOCATE GATE EA	MINOR CONCRETE (MINOR STRUCTURE) CY	MISCELLANEOUS IRON AND STEEL LB	18" REINFORCED CONCRETE PIPE LF	36" REINFORCED CONCRETE PIPE LF	60" REINFORCED CONCRETE PIPE LF	BAR REINFORCING STEEL LB	60" PLASTIC PIPE LF	18" CONCRETE FLARED END SECTION EA	CONCRETE ROCK SLOPE PROTECTION (1/4 TON, METHOD B) CY	ROCK SLOPE PROTECTION FABRIC (CLASS 8) SQYD	HEIGHT OF INLET H (N)	MAXIMUM COVER (N)	PIPE JOINT CLASSIFICATION (N)	DESCRIPTION	STATION	DRAINAGE SYSTEM No.	DRAINAGE PROFILE SHEET No.	DRAINAGE UNIT
1	a					2.33	326									7.0			G2 DI, GRATE TYPE 24-12X	2.5′ L+ 105+75.0	1	1	a
	b							66.3									9.5′	WTJ	18" x 66.3′ RCP				b
	c												1						18" CFES	64.65′ R+ 105+75.0			c
	d													5	7				RSP				d
2	a					2.33	326									7.0			G2 DI, GRATE TYPE 24-12X	2.5′ R+ 107+75.0	2	1	a
	b							58.8									9.5′	WTJ	18" x 58.8′ RCP				b
	c												1						18" CFES	62.0′ R+ 107+75.0			c
	d													5	7				RSP				d
3	a					2.33	326									7.0			G2 DI, GRATE TYPE 24-12X	2.5′ R+ 109+25.0	3	1	a
	b							55.1									9.7′	WTJ	18" x 55.1′ RCP				b
	c												1						18" CFES	58.46′ R+ 109+25.0			c
	d													5	7				RSP				d
4	a					1.61	326									6.0			G1 DI, GRATE TYPE 24-12X	2.5′ R+ 110+75.0	4	2	a
	b							55.8									7.6′	WTJ	18" x 55.8′ RCP				b
	c												1						18" CFES	58.86′ R+ 110+75.0			c
	d													5	7				RSP				d
5	a	100.5																WTJ	REMOVE CULVERT		5	2	a
	b									100.5							6.7′	WTJ	60" x 100.5′ RCP (STAGE 1)	30.0′ L+ TO 70.5′ R+ 141+84.0			b
	c	66.5															9.5′	WTJ	REMOVE CULVERT	96.41′ L+ TO 30.4′ L+ 141+84.0			c
	d									66.5									60" x 66.5′ RCP (STAGE 2)				d
	e																						
6	a					1.61	326									6.0			G1 DI, GRATE TYPE 24-12X	2.5′ R+ 174+50	6	3	a
	b							45.8									6.2′		18" x 45.8′ RCP				b
	c												1						18" CFES	49.42′ R+ 174.50			c
	d													5	7				RSP				d
7	a		5.7																REMOVE CONCRETE VAULT	19.4′ R+ TO 87.4′ R+ 179+11.0	7	3	a
	b					5.7					388								CONCRETE VAULT				b
	c			1															RELOCATE GATE				c
	d	118.0																	REMOVE CULVERT				d
	e								118.0								10.0′	WTJ	36" x 118′ RCP (STAGE 1)	30.0′ L+ TO 87.4′ R+ 179+11.0			e
	f	70.0																	REMOVE CULVERT				f
	g								70.0								12.6′	WTJ	36" x 70′ RCP (STAGE 3)	99.5′ L+ TO 30.0′ L+ 179+11.0			g
8	a					2.33	326									7.0			G2 DI, GRATE TYPE 24-12X	2.5′ R+ 180+00.0	8	4	a
	b							48.6									7.4′	WTJ	18" x 48.6′ RCP				b
	c												1						18" CFES	52.28′ R+ 180+00.0			c
	d													5	7				RSP				d
9	a					2.33	326									7.0			G2 DI, GRATE TYPE 24-12X	2.5′ R+ 185+00.0	9	4	a
	b							48.6									7.5′	WTJ	18" x 48.6′ RCP				b
	c												1						18" CFES	52.13′ R+ 185+00.0			c
	d													5	7				RSP				d
		355.0	5.7	1		20.57	2282	379.0	188.0	167.0	388		7	35	49				TOTAL 1				

(N) - NOT A SEPARATE ITEM, FOR INFORMATION ONLY.

ABBREVIATION:

WTJ - WATER TIGHT JOINT

DRAINAGE QUANTITIES
DQ-1

STATE OF CALIFORNIA - DEPARTMENT OF TRANSPORTATION
DESIGN

FUNCTIONAL SUPERVISOR: NOMER GUITERREZ
CALCULATED-DESIGNED BY: OSAMA ABDEL-MAGIED
CHECKED BY: RICHARD BOYER
REVISED BY: OA
DATE REVISED: 04/25/12

LAST REVISION 00-00-00
DATE PLOTTED => 27-DEC-2012
TIME PLOTTED => 16:10

Dist	COUNTY	ROUTE	POST MILES TOTAL PROJECT	SHEET No.	TOTAL SHEETS
10	SJ	12	0.1/R4.4	53	130

REGISTERED CIVIL ENGINEER 4/16/12 DATE

12-24-12
PLANS APPROVAL DATE

REGISTERED PROFESSIONAL ENGINEER RICHARD BOYER No. 75844 Exp. 6/30/14 CIVIL STATE OF CALIFORNIA

THE STATE OF CALIFORNIA OR ITS OFFICERS OR AGENTS SHALL NOT BE RESPONSIBLE FOR THE ACCURACY OR COMPLETENESS OF SCANNED COPIES OF THIS PLAN SHEET.

DRAINAGE ITEMS

DRAINAGE SYSTEM No.	DRAINAGE UNIT	REMOVE CULVERT LF	REMOVE CONCRETE CY	ABANDON CULVERT LF	RELOCATE GATE EA	MINOR CONCRETE (MINOR STRUCTURE) CY	MISCELLANEOUS IRON AND STEEL LB	18" REINFORCED CONCRETE PIPE LF	36" REINFORCED CONCRETE PIPE LF	60" REINFORCED CONCRETE PIPE LF	BAR REINFORCING STEEL LB	60" PLASTIC PIPE LF	18" CONCRETE FLARED END SECTION EA	CONCRETE ROCK SLOPE PROTECTION (1/4 TON, METHOD B) CY	ROCK SLOPE PROTECTION FABRIC (CLASS 8) SQYD	HEIGHT OF INLET H (N)	MAXIMUM COVER (N)	PIPE JOINT CLASSIFICATION (N)	DESCRIPTION	STATION	DRAINAGE SYSTEM No.	DRAINAGE PROFILE SHEET No.	DRAINAGE UNIT
10	a					2.33	326									7.0			G2 DI, GRATE TYPE 24-12X	2.5′ R+ 195+00	10	4	a
	b							51.5									8.0′	WTJ	18" x 51.5′ RCP				b
	c												1						18" CFES	55.09′ R+ 195+00			c
	d													5	7				RSP				d
11	a					2.33	326									7.0			G2 DI, GRATE TYPE 24-12X	2.5′ R+ 200+00.0	11	5	a
	b							50.7									7.8′	WTJ	18" x 50.7′ RCP				b
	c												1						18" CFES	54.0′ R+ 200+00.0			c
	d													5	7				RSP				d
12	a					1.61	326									6.0			G1 DI, GRATE TYPE 24-12X	2.5′ R+ 205+00.0	12	5	a
	b							50.2									7.2′	WTJ	18" x 50.2′ RCP				b
	c												1						18" CFES	53.4′ R+ 205+00.0			c
	d													5	7				RSP				d
13	a	95.5																	REMOVE CULVERT	18.8′ R+ TO 65.0′ R+ 254+59.0	13	6	a
	b									95.5							8.5′	WTJ	60" x 95.5′ RCP (STAGE 1)	30.0′ L+ TO 65.0′ R+ 254+59.0			b
	c	66.0															8.5′	WTJ	REMOVE CULVERT	96.1′ L+ TO 30.0′ L+ 254+59.0			c
	d									66.0									60" x 66′ RCP (STAGE 2)				d
	e																						e
14	a					1.61	326									6.0			G1 DI, GRATE TYPE 24-12X	2.5′ R+ 316+50.0	14	7	a
	b							45.8									6.1′	WTJ	18" x 45.8′ RCP				b
	c												1						18" CFES	49.2′ R+ 316+50.0			c
	d													5	7				RSP				d
15	a					1.61	326									6.0			G1 DI, GRATE TYPE 24-12X	2.5′ R+ 318+00.0	15	7	a
	b							48.2									7.4′	WTJ	18" x 48.2′ RCP				b
	c												1						18" CFES	51.8′ R+ 318+00.0			c
	d													5	7				RSP				d
16	a	92.5																	REMOVE CULVERT		16	8	a
	b								92.5								10.8′	WTJ	36" x 92.5′ RCP (STAGE 1)	24.9′ L+ TO 67.6′ R+ 319+49.0			b
	c	63.0																	REMOVE CULVERT				c
	d								63.0									WTJ	36" x 63′ RCP (STAGE 3)	82.0′ L+ TO 24.9′ L+ 319+49.0			d
17	a			167.0								167.0							60" x 167.0′ PP	96.4′ L+ TO 70.5′ R+ 141+44	17	2	a
18	a			161.5								161.5							60" x 161.5′ PP	96.1′ L+ TO 65.0′ R+ 254+19.0	18	6	a
19	a								92.5										36" x 92.5′ RCP (STAGE 1)	24.9′ L+ TO 67.6′ R+ 319+55	19	9	a
	b								63.0										36" x 63′ RCP (STAGE 2)				b
		317.0	-			9.49	1630	246.4	311	161.5		328.5	5	25	35				TOTAL 2				
		355.0	5.7	328.5	1	20.57	2282	379.0	188	167.0	388		7	35	49				TOTAL 1				
		672.0	5.7	328.5	1	30.06	3912	625.4	499	328.5	388	328.5	12	60	84				GRAND TOTAL				

DRAINAGE QUANTITIES
DQ-2

STATE OF CALIFORNIA - DEPARTMENT OF TRANSPORTATION
DESIGN
Caltrans

FUNCTIONAL SUPERVISOR: NOMER GUITERREZ
CALCULATED-DESIGNED BY: OSAMA ABDEL-MAGIED
CHECKED BY: RICHARD BOYER
REVISED BY: OA
DATE REVISED: 04/25/12

LAST REVISION 00-00-00
DATE PLOTTED => 28-DEC-2012
TIME PLOTTED => 11:34

Dist	COUNTY	ROUTE	POST MILES TOTAL PROJECT	SHEET No.	TOTAL SHEETS
10	SJ	12	0.1/R4.4	54	130

REGISTERED CIVIL ENGINEER 4/16/12 DATE

12-24-12
PLANS APPROVAL DATE

REGISTERED PROFESSIONAL ENGINEER RICHARD BOYER No. 75844 Exp. 6/30/14 CIVIL STATE OF CALIFORNIA

THE STATE OF CALIFORNIA OR ITS OFFICERS OR AGENTS SHALL NOT BE RESPONSIBLE FOR THE ACCURACY OR COMPLETENESS OF SCANNED COPIES OF THIS PLAN SHEET.

NOTES:

1. FOR COMPLETE RIGHT OF WAY AND ACCURATE ACCESS DATA, CONTACT R/W ENGINEERING AT THE DISTRICT OFFICE.
2. LOCATIONS OF UTILITY FACILITIES SHOWN ARE APPROXIMATE AND SHALL BE VERIFIED BY THE CONTRACTOR PRIOR TO CONSTRUCTION.

UTILITY OWNERSHIP

——-e———(oh)—— OVERHEAD ELECTRICAL (PG&E)

ABBREVIATION:

PG&E - PACIFIC GAS AND ELECTRIC COMPANY

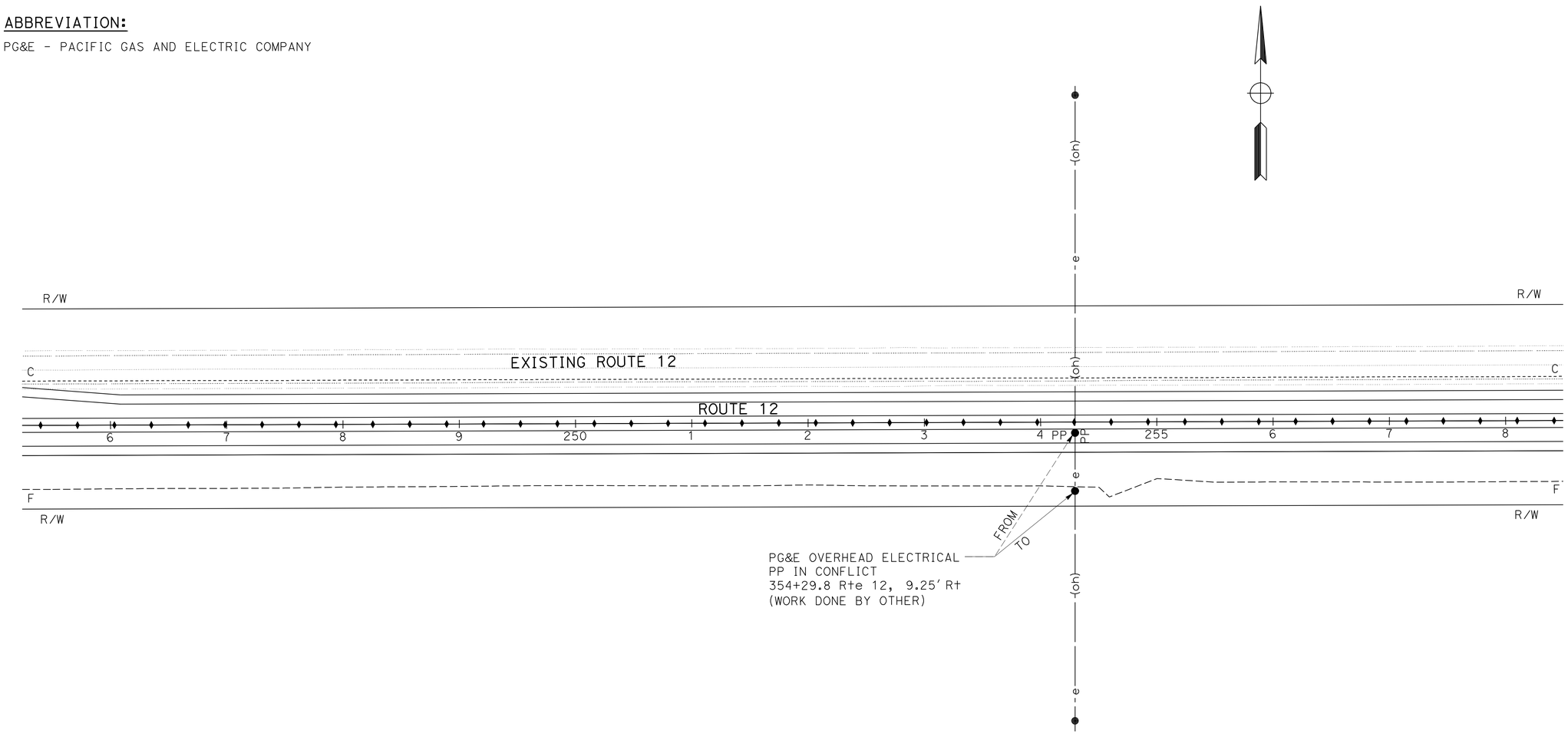

APPROVED FOR UTILITY WORK ONLY

UTILITY PLAN

SCALE: 1" = 50'

U-1

REVISED BY	DATE REVISED
OA	04/19/12

CALCULATED-DESIGNED BY: OSAMA ABDEL-MAGIED
CHECKED BY: RICHARD BOYER
FUNCTIONAL SUPERVISOR: NOMER GUITERREZ

STATE OF CALIFORNIA - DEPARTMENT OF TRANSPORTATION
Caltrans
DESIGN

LAST REVISION 00-00-00
DATE PLOTTED => 27-DEC-2012
TIME PLOTTED => 16:11

Dist	COUNTY	ROUTE	POST MILES TOTAL PROJECT	SHEET No.	TOTAL SHEETS
10	SJ	12	0.1/R4.4	55	130

REGISTERED CIVIL ENGINEER 4/16/12 DATE

12-24-12
PLANS APPROVAL DATE

REGISTERED PROFESSIONAL ENGINEER RICHARD BOYER No. 75844 Exp. 6/30/14 CIVIL STATE OF CALIFORNIA

THE STATE OF CALIFORNIA OR ITS OFFICERS OR AGENTS SHALL NOT BE RESPONSIBLE FOR THE ACCURACY OR COMPLETENESS OF SCANNED COPIES OF THIS PLAN SHEET.

STATIONARY MOUNTED CONSTRUCTION AREA SIGNS

SIGN	SIGN CODE FEDERAL	SIGN CODE CALIFORNIA	PANEL SIZE	No. OF POST AND SIZE	No. OF SIGNS	SIGN MESSAGE
A	G20-1		48" x 48"	1- 6" x 6"	2	ROAD WORK NEXT 5 MILES
B	W20-1		36" x 36"	1- 4" x 6"	4	ROAD WORK AHEAD
C	G20-2		36" x 18"	1- 4" x 4"	2	END ROAD WORK
D	CPFIS		84" x 18"	2- 6" x 6"	2	PROJECT FUNDING SOURCE PLAQUE
			84" x 60"			PROJECT FUNDING SOURCE SIGN

NOTE:
EXACT SIGN LOCATIONS WILL BE DETERMINED BY THE ENGINEER.

ABBREVIATION:
CPFIS - CONSTRUCTION PROJECT FUNDING IDENTIFICATION SIGN
PCMS - PORTABLE CHANGEABLE MESSAGE SIGN

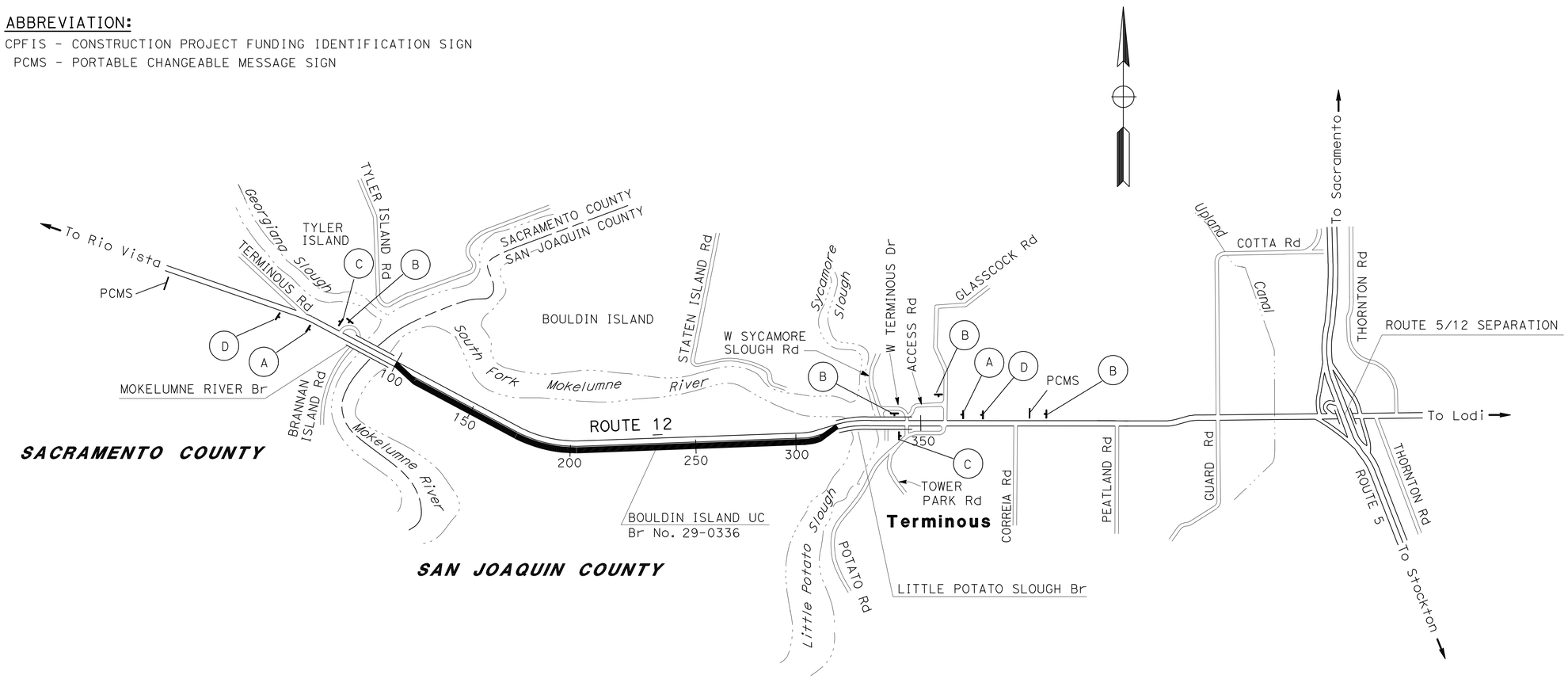

APPROVED FOR CONSTRUCTION AREA SIGN WORK ONLY

CONSTRUCTION AREA SIGNS

NO SCALE

CS-1

STATE OF CALIFORNIA - DEPARTMENT OF TRANSPORTATION
DESIGN
Caltrans

FUNCTIONAL SUPERVISOR: NOMER GUITERREZ
CALCULATED-DESIGNED BY: OSAMA ABDEL-MAGIED
CHECKED BY: RICHARD BOYER
REVISED BY: OA
DATE REVISED: 04/30/12

LAST REVISION 00-00-00 | DATE PLOTTED => 27-DEC-2012 | TIME PLOTTED => 16:11

Dist	COUNTY	ROUTE	POST MILES TOTAL PROJECT	SHEET No.	TOTAL SHEETS
10	SJ	12	0.1/R4.4	56	130

REGISTERED CIVIL ENGINEER 4/16/12 DATE

12-24-12
PLANS APPROVAL DATE

REGISTERED PROFESSIONAL ENGINEER RICHARD BOYER No. 75844 Exp. 6/30/14 CIVIL STATE OF CALIFORNIA

THE STATE OF CALIFORNIA OR ITS OFFICERS OR AGENTS SHALL NOT BE RESPONSIBLE FOR THE ACCURACY OR COMPLETENESS OF SCANNED COPIES OF THIS PLAN SHEET.

NOTES:

1. GUIDE SIGNS ARE TO BE PLACED ON EXISTING SIGN POSTS WHERE POSSIBLE AND AS DETERMINED BY THE ENGINEER.
2. EXACT LOCATION OF ALL SIGNS TO BE DETERMINED BY THE ENGINEER
3. THE CONTRACTOR MUST SECURE THE ENCROACHMENT PERMITS FROM SAN JOAQUIN AND SACRAMENTO COUNTIES RESPECTIVELY.

LEGEND:

- ROADSIDE SIGN
- H TYPE III BARRICADE
- I PORTABLE CHANGEABLE MESSAGE SIGN (PCMS)
- DETOUR ROUTE TRAFFIC FLOW

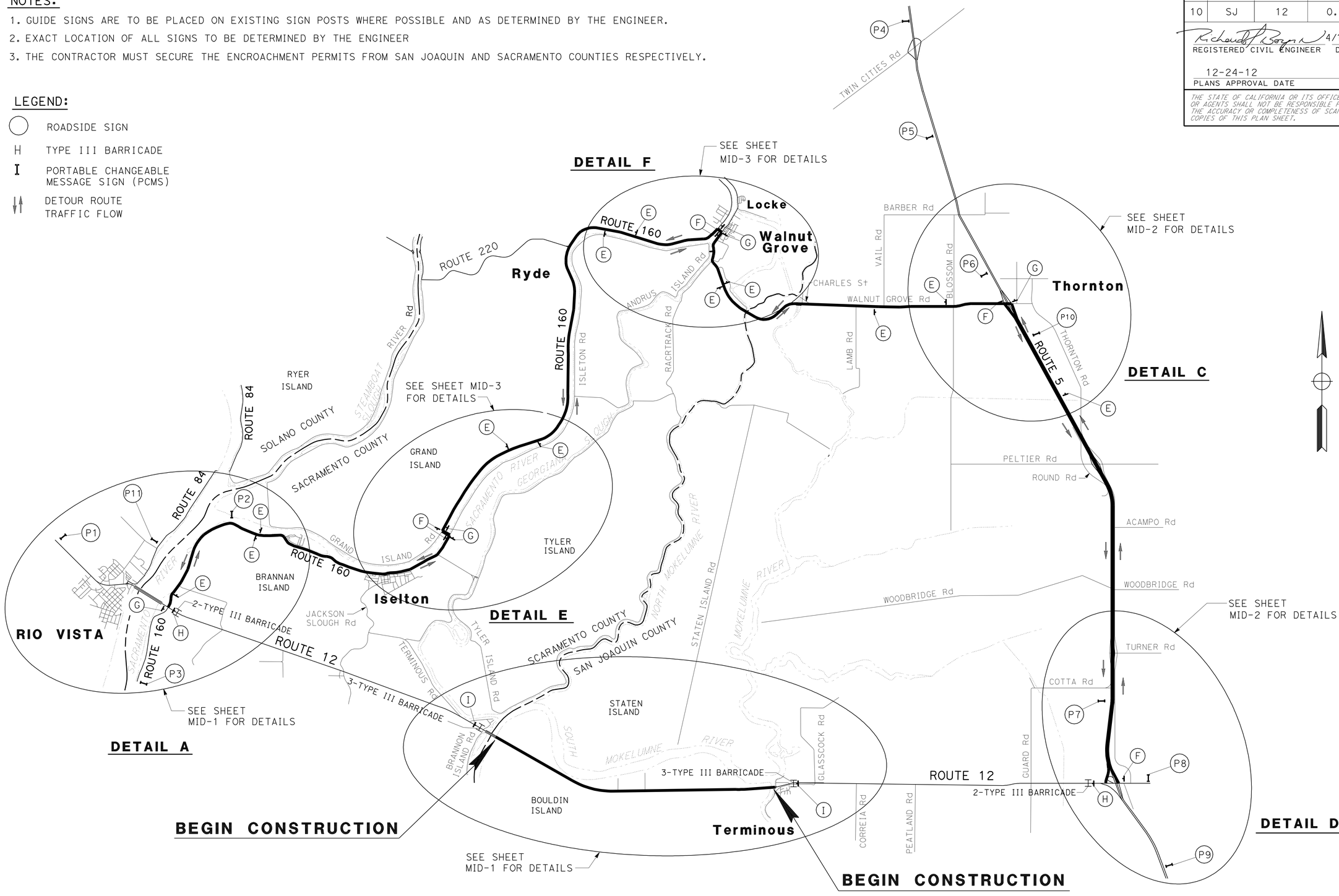

APPROVED FOR MOTORIST INFORMATION WORK ONLY

MOTORIST INFORMATION PLAN

NO SCALE

MI-1

REVISED BY	DATE REVISED
OA	04/26/12

OSAMA ABDEL-MAGIED — CALCULATED-DESIGNED BY
RICHARD BOYER — CHECKED BY
NOMER GUITERREZ — FUNCTIONAL SUPERVISOR

STATE OF CALIFORNIA - DEPARTMENT OF TRANSPORTATION
Caltrans
DESIGN

LAST REVISION 00-00-00
DATE PLOTTED => 27-DEC-2012
TIME PLOTTED => 16:11

Dist	COUNTY	ROUTE	POST MILES TOTAL PROJECT	SHEET No.	TOTAL SHEETS
10	SJ	12	0.1/R4.4	57	130

REGISTERED CIVIL ENGINEER 4/16/12 DATE

12-24-12
PLANS APPROVAL DATE

REGISTERED PROFESSIONAL ENGINEER RICHARD BOYER No. 75844 Exp. 6/30/14 CIVIL STATE OF CALIFORNIA

THE STATE OF CALIFORNIA OR ITS OFFICERS OR AGENTS SHALL NOT BE RESPONSIBLE FOR THE ACCURACY OR COMPLETENESS OF SCANNED COPIES OF THIS PLAN SHEET.

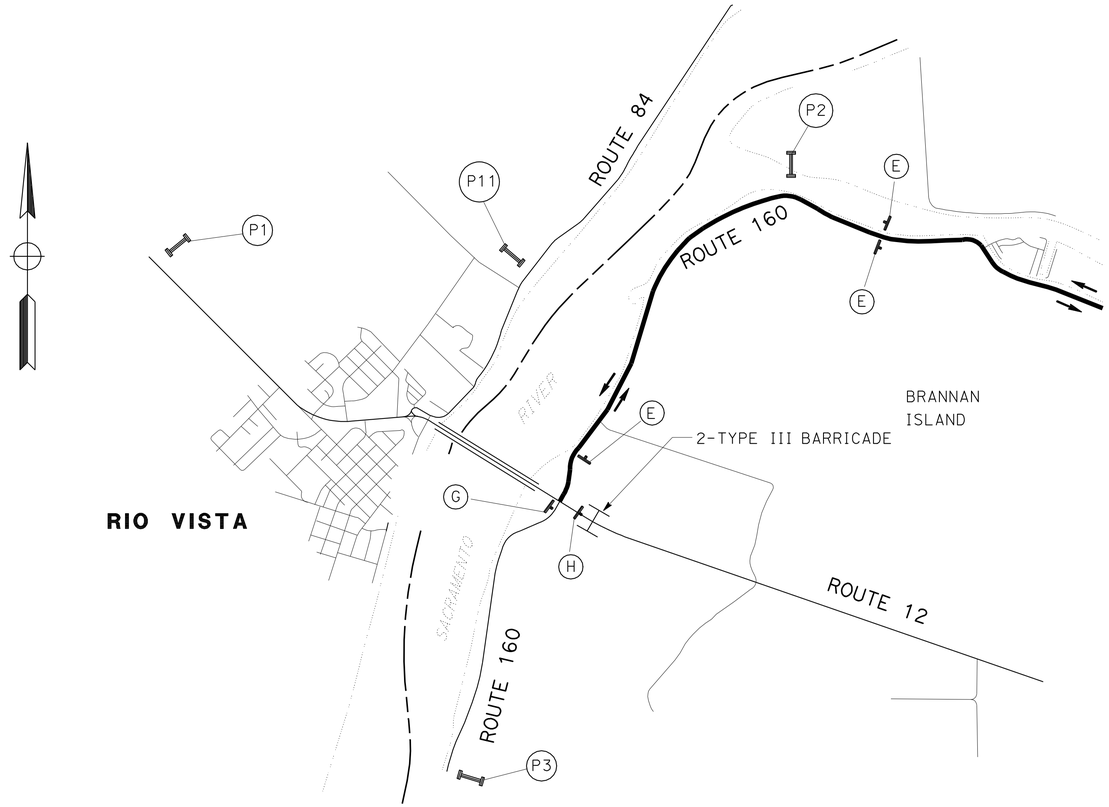

DETAIL A

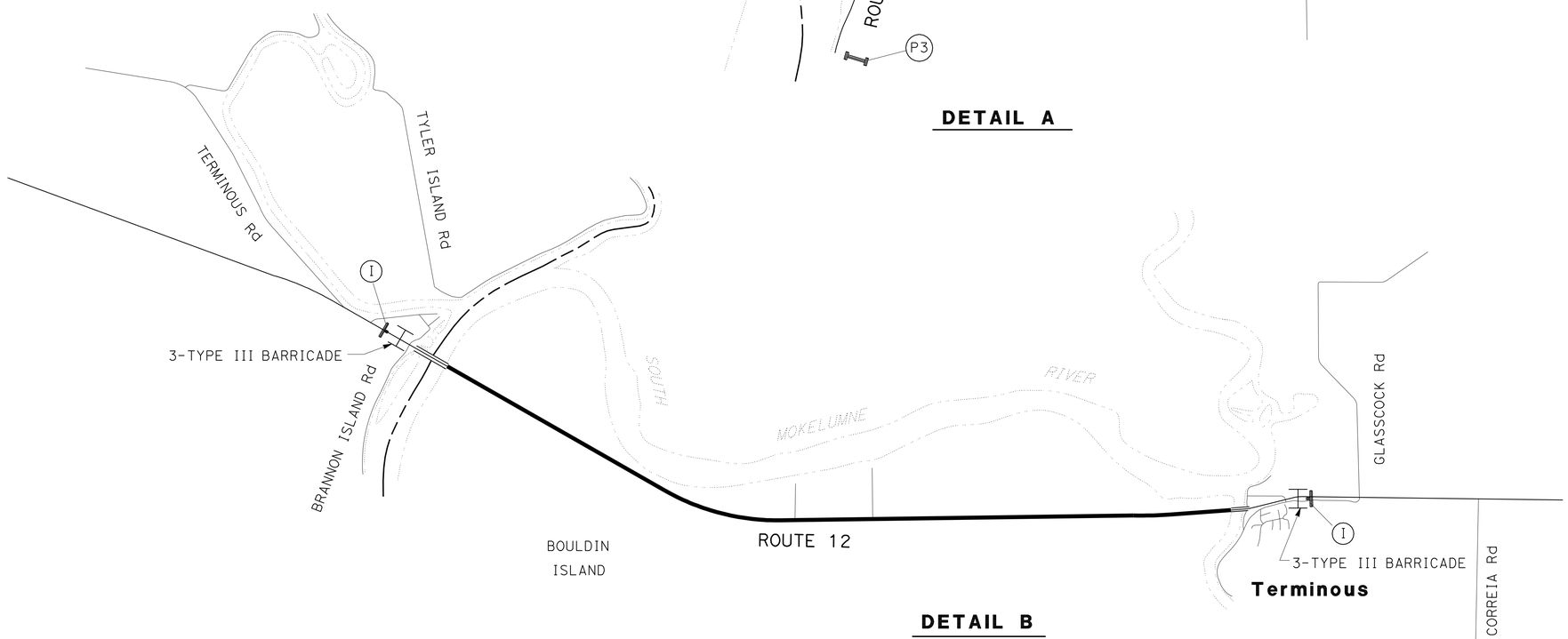

DETAIL B

MOTORIST INFORMATION DETAILS

NO SCALE

MID-1

STATE OF CALIFORNIA - DEPARTMENT OF TRANSPORTATION
Caltrans
DESIGN

FUNCTIONAL SUPERVISOR: NOMER GUITERREZ
CALCULATED-DESIGNED BY: OSAMA ABDEL-MAGIED
CHECKED BY: RICHARD BOYER
REVISED BY: OA
DATE REVISED: 04/26/12

LAST REVISION 00-00-00
DATE PLOTTED => 27-DEC-2012
TIME PLOTTED => 16:11

BORDER LAST REVISED 7/2/2010
USERNAME => s123631
DGN FILE => a0g8001c001.dgn
RELATIVE BORDER SCALE IS IN INCHES 0 1 2 3
UNIT 1454
PROJECT NUMBER & PHASE 10000000521

Dist	COUNTY	ROUTE	POST MILES TOTAL PROJECT	SHEET No.	TOTAL SHEETS
10	SJ	12	0.1/R4.4	58	130

REGISTERED CIVIL ENGINEER 4/16/12 DATE

12-24-12
PLANS APPROVAL DATE

REGISTERED PROFESSIONAL ENGINEER
RICHARD BOYER
No. 75844
Exp. 6/30/14
CIVIL
STATE OF CALIFORNIA

THE STATE OF CALIFORNIA OR ITS OFFICERS OR AGENTS SHALL NOT BE RESPONSIBLE FOR THE ACCURACY OR COMPLETENESS OF SCANNED COPIES OF THIS PLAN SHEET.

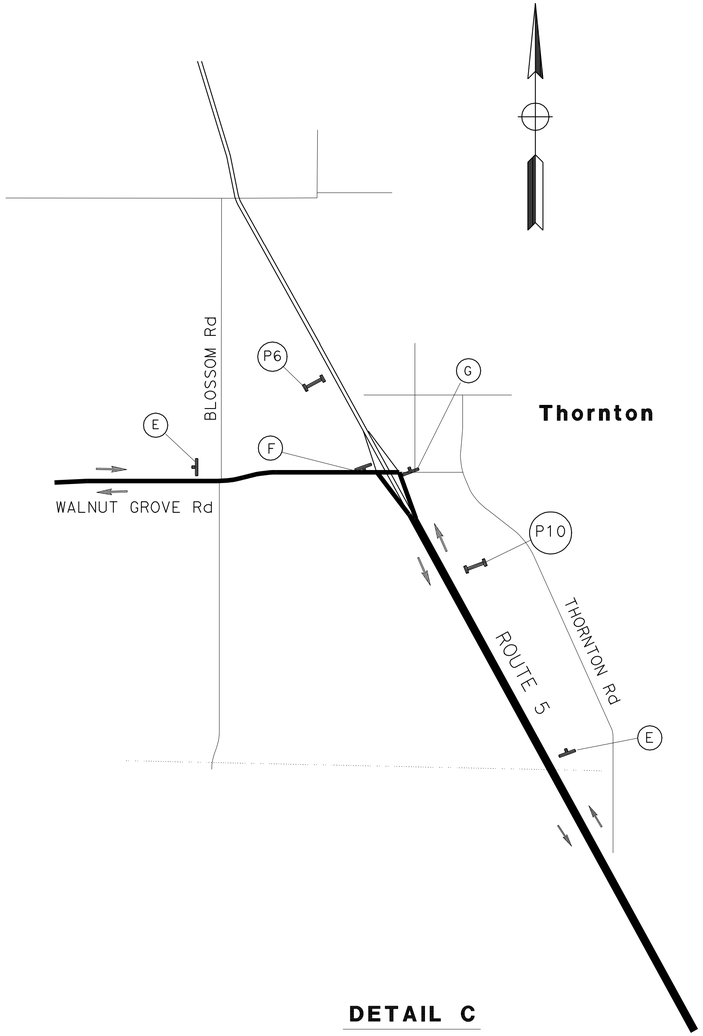

DETAIL C

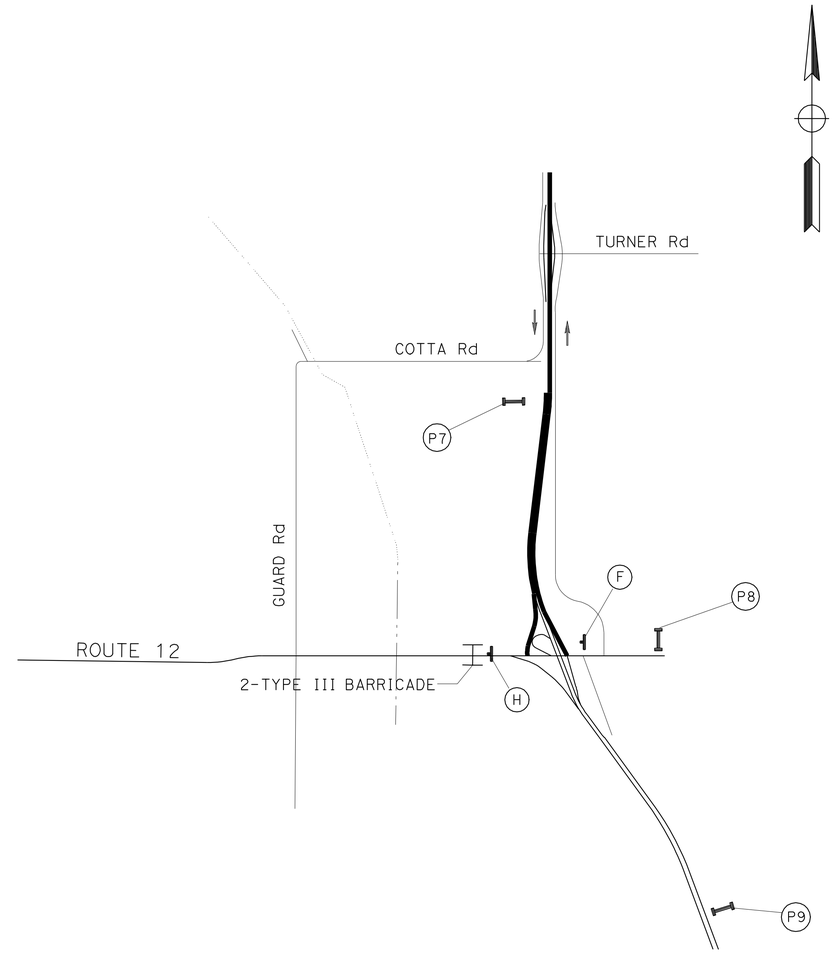

DETAIL D

MOTORIST INFORMATION DETAILS

NO SCALE

MID-2

STATE OF CALIFORNIA - DEPARTMENT OF TRANSPORTATION
Caltrans®
DESIGN

FUNCTIONAL SUPERVISOR: NOMER GUITERREZ
CALCULATED-DESIGNED BY: OSAMA ABDEL-MAGIED
CHECKED BY: RICHARD BOYER
REVISED BY: OA
DATE REVISED: 04/26/12

LAST REVISION 00-00-00
DATE PLOTTED => 27-DEC-2012
TIME PLOTTED => 16:11

Dist	COUNTY	ROUTE	POST MILES TOTAL PROJECT	SHEET No.	TOTAL SHEETS
10	SJ	12	0.1/R4.4	59	130

Richard Boyer 4/16/12
REGISTERED CIVIL ENGINEER DATE

12-24-12
PLANS APPROVAL DATE

REGISTERED PROFESSIONAL ENGINEER
RICHARD BOYER
No. 75844
Exp. 6/30/14
CIVIL
STATE OF CALIFORNIA

THE STATE OF CALIFORNIA OR ITS OFFICERS OR AGENTS SHALL NOT BE RESPONSIBLE FOR THE ACCURACY OR COMPLETENESS OF SCANNED COPIES OF THIS PLAN SHEET.

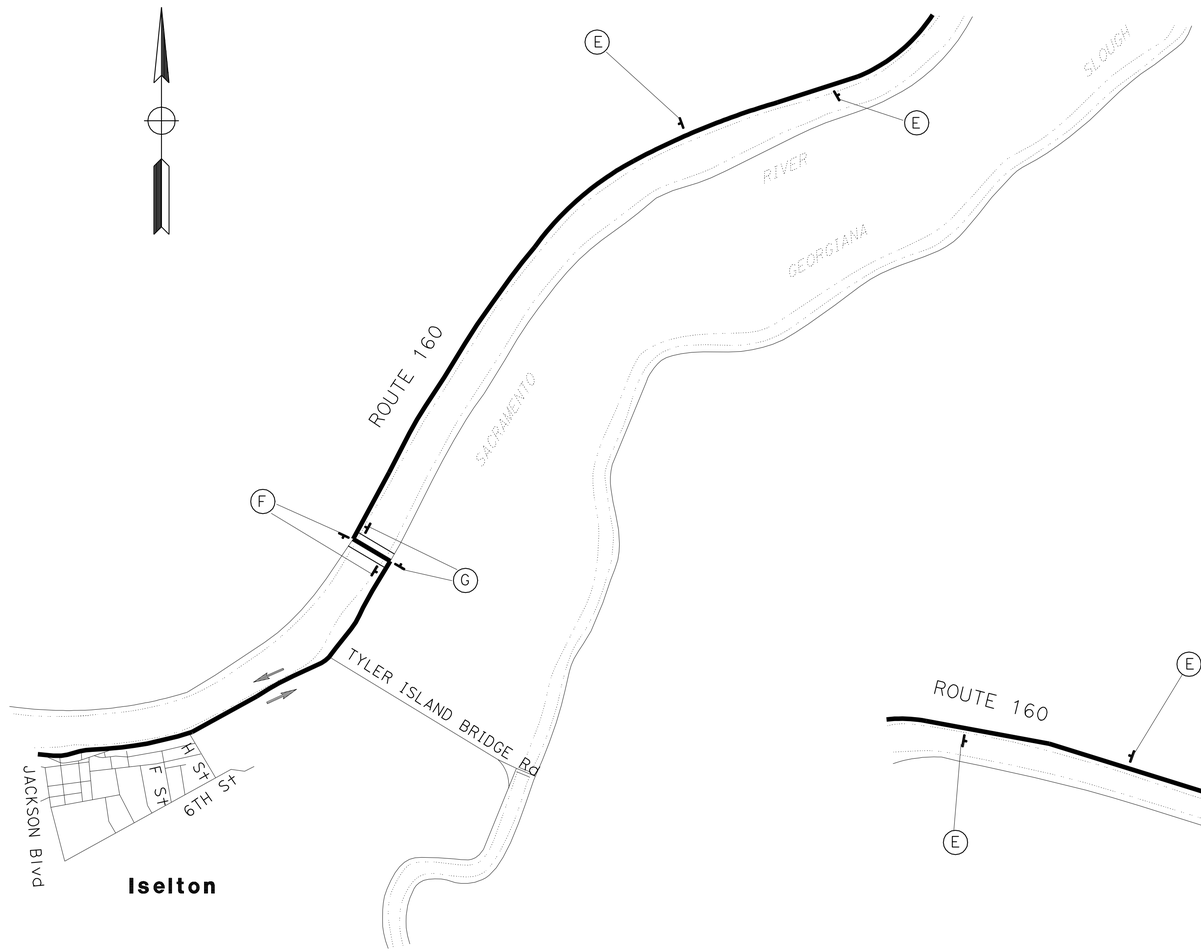

DETAIL E

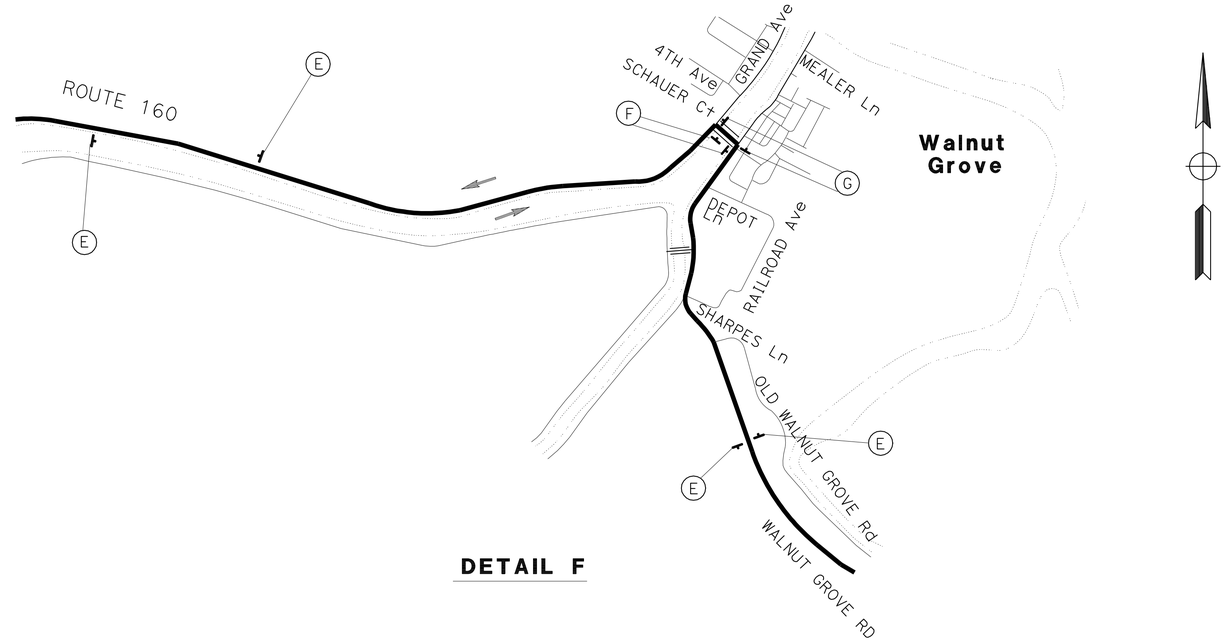

DETAIL F

MOTORIST INFORMATION DETAILS

NO SCALE

MID-3

STATE OF CALIFORNIA - DEPARTMENT OF TRANSPORTATION
Caltrans
DESIGN

FUNCTIONAL SUPERVISOR: NOMER GUTTERREZ
CALCULATED-DESIGNED BY: OSAMA ABDEL-MAGIED
CHECKED BY: RICHARD BOYER
REVISED BY: OA
DATE REVISED: 04/26/12

LAST REVISION 00-00-00
DATE PLOTTED => 27-DEC-2012
TIME PLOTTED => 16:11

Dist	COUNTY	ROUTE	POST MILES TOTAL PROJECT	SHEET No.	TOTAL SHEETS
10	SJ	12	0.1/R4.4	60	130

REGISTERED CIVIL ENGINEER 4/16/12 DATE

12-24-12
PLANS APPROVAL DATE

REGISTERED PROFESSIONAL ENGINEER RICHARD BOYER No. 75844 Exp. 6/30/14 CIVIL STATE OF CALIFORNIA

THE STATE OF CALIFORNIA OR ITS OFFICERS OR AGENTS SHALL NOT BE RESPONSIBLE FOR THE ACCURACY OR COMPLETENESS OF SCANNED COPIES OF THIS PLAN SHEET.

STATIONARY MOUNTED CONSTRUCTION AREA SIGNS

SIGN No.	SIGN CODE FEDERAL	SIGN CODE CALIFORNIA	PANEL SIZE	MESSAGE OR DISCRIPTION	No. OF POSTS AND SIZE	No. OF SIGNS	REMARK
E		SC3	36" x 36"	DETOUR WITH ARROW	1 - 4" x 6"	12	
F	M4-10		48" x 18"	DETOUR RIGHT ARROW	1 - 4" x 6"	6	
G	M4-10		48" x 18"	DETOUR LEFT ARROW	1 - 4" x 6"	6	
H	R11-4		60" x 30"	ROAD CLOSED TO THRU TRAFFIC	1 - 4" x 6"	2	MOUNT ON BARRICADE
I	R11-2		48" x 30"	ROAD CLOSED	1 - 4" x 6"	2	MOUNT ON BARRICADE

TYPE III BARRICADE

SHEET No.	EA
MID-1	8
MID-2	2
TOTAL	10

PORTABLE MESSAGE SIGN MESSAGES

CONSTRUCTION PERIOD	PCMS No.	PORTABLE CHANGEABLE MESSAGE SIGN MESSAGE		
14 DAY ADVANCE WARNING	P1, P7, P8, P9, P11	HWY-12 WILL BE CLOSED	MMM DD TO MMM DD 9PM - 4AM	TUNE RADIO AM-1610
DETOUR IS NOT IN PROGRESS	P1-P10	HWY-12 WILL BE CLOSED	MMM DD TO MMM DD 9PM - 4AM	TUNE RADIO AM-1610
DURING FULL CLOSURE	P1	HWY-12 CLOSED	AT BRANNON ISLAND	USE HWY 160 DETOUR
	P2, P3	HWY-12 EAST CLOSED	AT BRANNON ISLAND	USE HWY 160 DETOUR
	P4, P5, P9	HWY-12 WEST CLOSED	USE WALNUT GRV EXIT	
	P7	HWY-12 WEST CLOSED	AT TOWER PARK	
	P8	HWY-12 WEST CLOSED	AT TOWER PARK	USE HWY 160 DETOUR
	P6, P10	HWY-12 DETOUR NEXT EXIT		

MOTORIST INFORMATION QUANTITIES

MIQ-1

OA	04/30/12
REVISED BY	DATE REVISED
OSAMA ABDEL-MAGIED	RICHARD BOYER
CALCULATED-DESIGNED BY	CHECKED BY
FUNCTIONAL SUPERVISOR	NOMER GUITERREZ

STATE OF CALIFORNIA - DEPARTMENT OF TRANSPORTATION
Caltrans® DESIGN

LAST REVISION 00-00-00 | DATE PLOTTED => 27-DEC-2012 TIME PLOTTED => 16:11

Dist	COUNTY	ROUTE	POST MILES TOTAL PROJECT	SHEET No.	TOTAL SHEETS
10	SJ	12	0.1/R4.4	61	130

REGISTERED CIVIL ENGINEER 4/16/12 DATE

12-24-12
PLANS APPROVAL DATE

REGISTERED PROFESSIONAL ENGINEER RICHARD BOYER No. 75844 Exp. 6/30/14 CIVIL STATE OF CALIFORNIA

THE STATE OF CALIFORNIA OR ITS OFFICERS OR AGENTS SHALL NOT BE RESPONSIBLE FOR THE ACCURACY OR COMPLETENESS OF SCANNED COPIES OF THIS PLAN SHEET.

NOTE:

FOR ACCURATE RIGHT OF WAY DATA, CONTACT RIGHT OF WAY ENGINEERING AT THE DISTRICT OFFICE.

LEGEND:

- WORK AREA
- IMPORTED BORROW (LIGHTWEIGHT AGGRAGATE)
- CONSTRUCTION COMPLETED IN PREVIOUS STAGE
- DIRECTION OF TRAFFIC

STAGE 1

CONSTRUCTION SEQUENCE

- HMA LEVELING COURSE (Exist Rte 12)
- PLACE TEMPORARY RAILING (TYPE K)
- CONSTRUCT CONSOLIDATION FILL TO INCLUDE:
  - WICK DRAINS
  - PIEZOMETER
  - HORIZONTAL STRIP DRAIN
  - IMPORTED BORROW (SURCHARGE)
  - OPENINGS FOR EXISITING DRIVEWAYS (SEE SHEET SCD-1 FOR DETAILS)

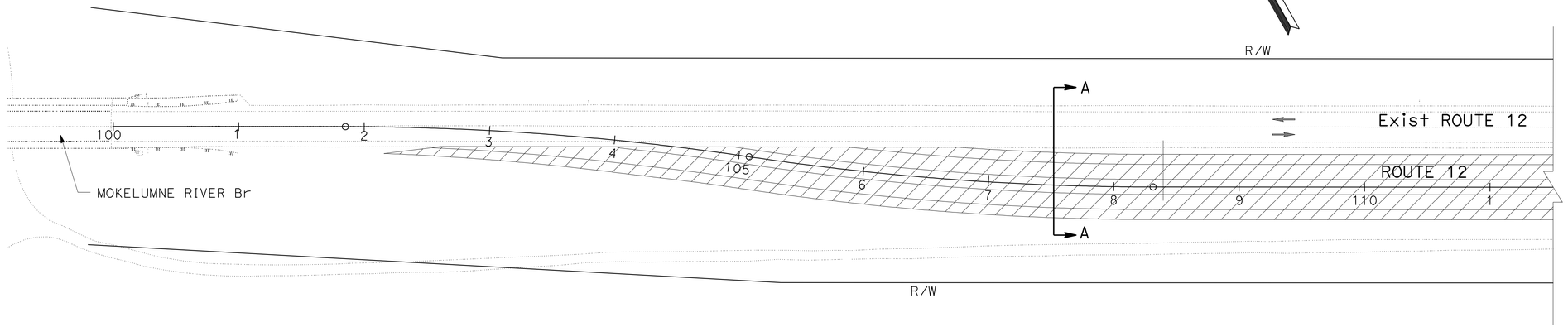

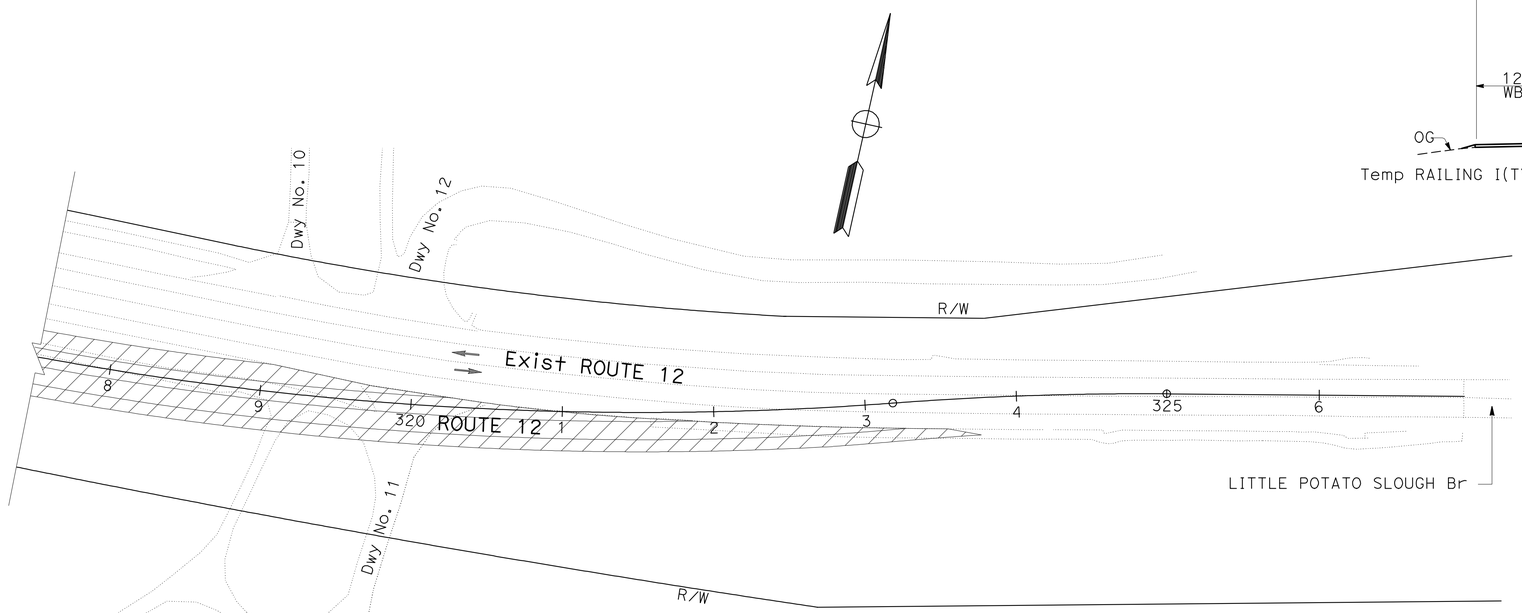

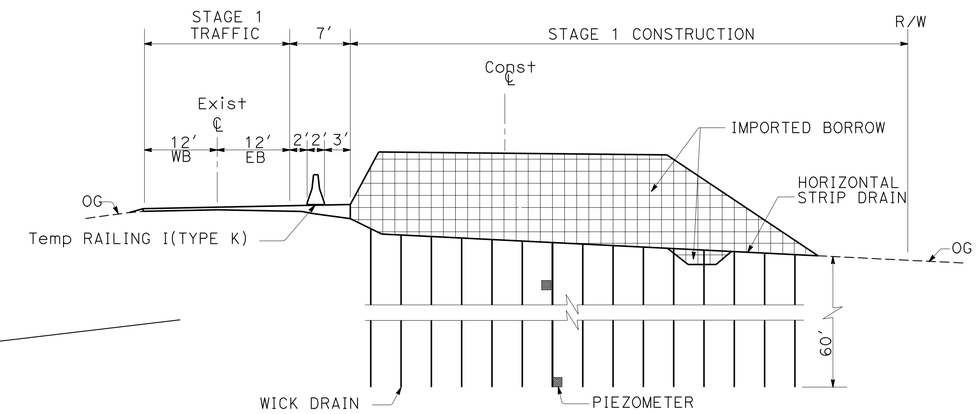

SECTION A-A
STAGE 1

APPROVED FOR STAGE CONSTRUCTION WORK ONLY

STAGE CONSTRUCTION
(STAGE 1)

SCALE: 1" = 50'

SC-1

STATE OF CALIFORNIA - DEPARTMENT OF TRANSPORTATION
Caltrans
DESIGN

FUNCTIONAL SUPERVISOR: NOMER GUITERREZ
CALCULATED-DESIGNED BY: OSAMA ABDEL-MAGIED
CHECKED BY: RICHARD BOYER
REVISED BY: OA
DATE REVISED: 04/30/12

LAST REVISION 00-00-00
DATE PLOTTED => 27-DEC-2012
TIME PLOTTED => 16:11

Dist	COUNTY	ROUTE	POST MILES TOTAL PROJECT	SHEET No.	TOTAL SHEETS
10	SJ	12	0.1/R4.4	62	130

REGISTERED CIVIL ENGINEER 4/16/12 DATE

12-24-12
PLANS APPROVAL DATE

REGISTERED PROFESSIONAL ENGINEER RICHARD BOYER No. 75844 Exp. 6/30/14 CIVIL STATE OF CALIFORNIA

THE STATE OF CALIFORNIA OR ITS OFFICERS OR AGENTS SHALL NOT BE RESPONSIBLE FOR THE ACCURACY OR COMPLETENESS OF SCANNED COPIES OF THIS PLAN SHEET.

NOTE:

FOR ACCURATE RIGHT OF WAY DATA, CONTACT RIGHT OF WAY ENGINEERING AT THE DISTRICT OFFICE.

STAGE 2

CONSTRUCTION SEQUENCE

- CONSTRUCT NEW ROADWAY
- CONSTRUCT UNDERCROSSING, RETAINING WALLS AND PRIVATE DRIVEWAYS

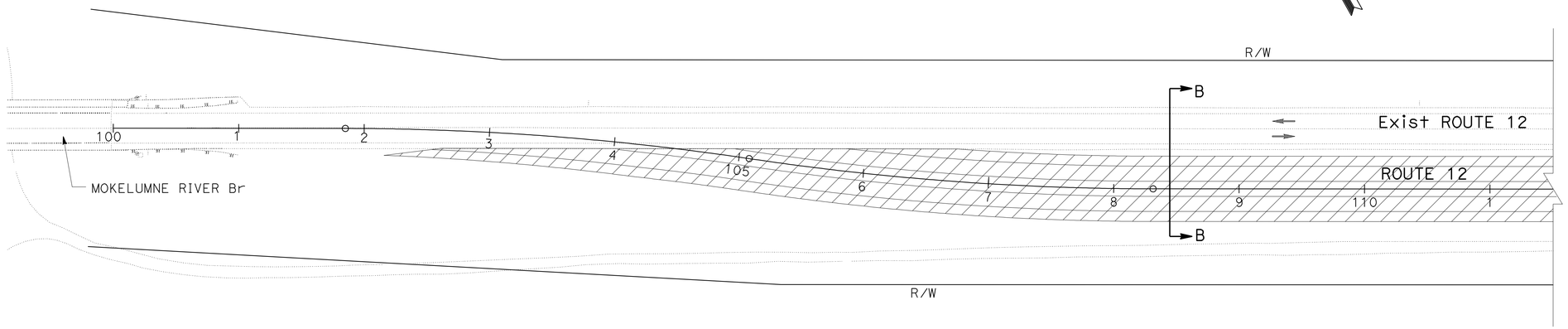

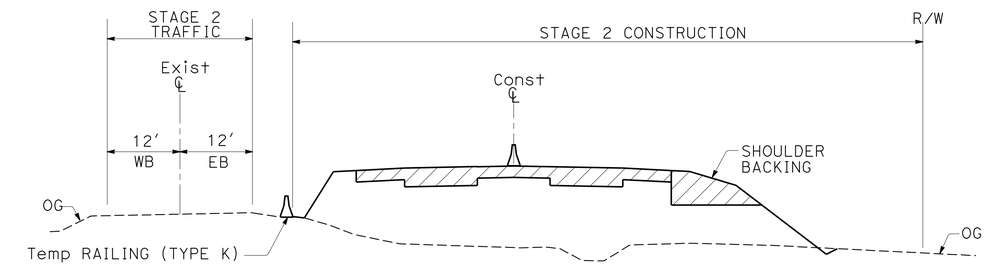

SECTION B-B
STAGE 2

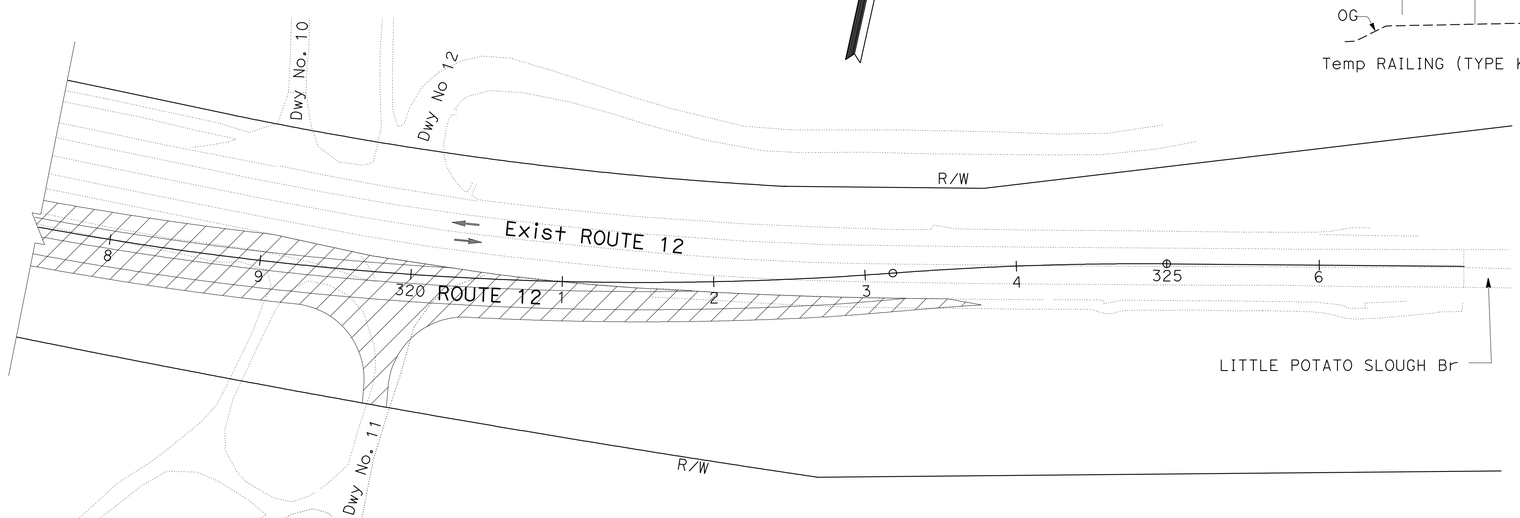

APPROVED FOR STAGE CONSTRUCTION WORK ONLY

STAGE CONSTRUCTION
(STAGE 2)

SCALE: 1" = 50′

SC-2

OA	04/30/12
REVISED BY	DATE REVISED
OSAMA ABDEL-MAGIED	RICHARD BOYER
CALCULATED-DESIGNED BY	CHECKED BY
FUNCTIONAL SUPERVISOR	NOMER GUITERREZ

STATE OF CALIFORNIA - DEPARTMENT OF TRANSPORTATION
Caltrans
DESIGN

LAST REVISION 00-00-00 | DATE PLOTTED => 27-DEC-2012 | TIME PLOTTED => 16:11

Dist	COUNTY	ROUTE	POST MILES TOTAL PROJECT	SHEET No.	TOTAL SHEETS
10	SJ	12	0.1/R4.4	63	130

REGISTERED CIVIL ENGINEER 4/16/12 DATE

12-24-12
PLANS APPROVAL DATE

REGISTERED PROFESSIONAL ENGINEER RICHARD BOYER No. 75844 Exp. 6/30/14 CIVIL STATE OF CALIFORNIA

THE STATE OF CALIFORNIA OR ITS OFFICERS OR AGENTS SHALL NOT BE RESPONSIBLE FOR THE ACCURACY OR COMPLETENESS OF SCANNED COPIES OF THIS PLAN SHEET.

NOTE:

FOR ACCURATE RIGHT OF WAY DATA, CONTACT RIGHT OF WAY ENGINEERING AT THE DISTRICT OFFICE.

STAGE 3

CONSTRUCTION SEQUENCE

- MOVE TEMPORARY RAILING (TYPE K)
- REMOVE BASE AND SURFACING
- CONSTRUCT SIDE SLOPES ON THE LEFT SIDE
- CONNECT DRIVEWAYS TO NEW ROUTE 12 ALIGNMENT

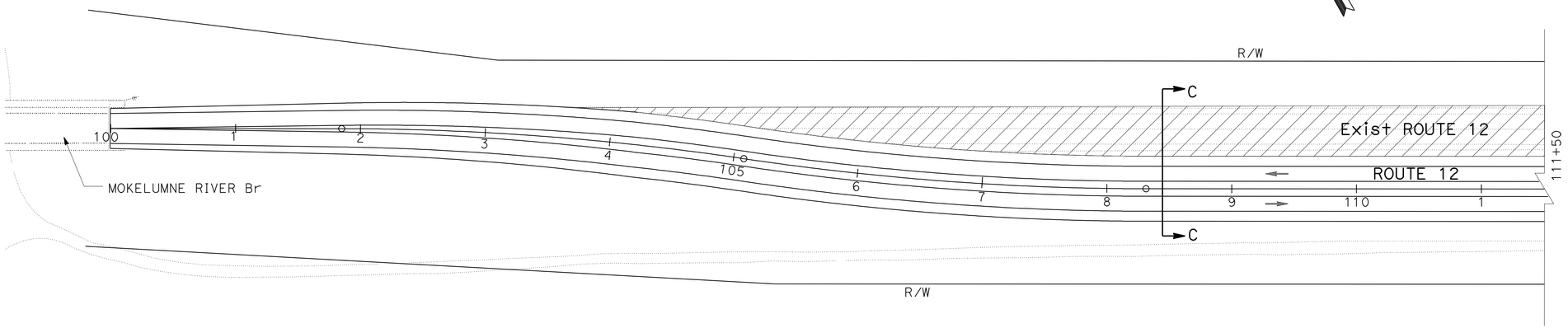

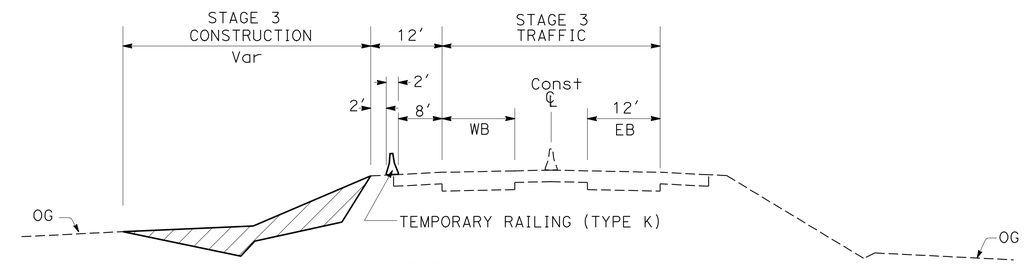

SECTION C-C
STAGE 3

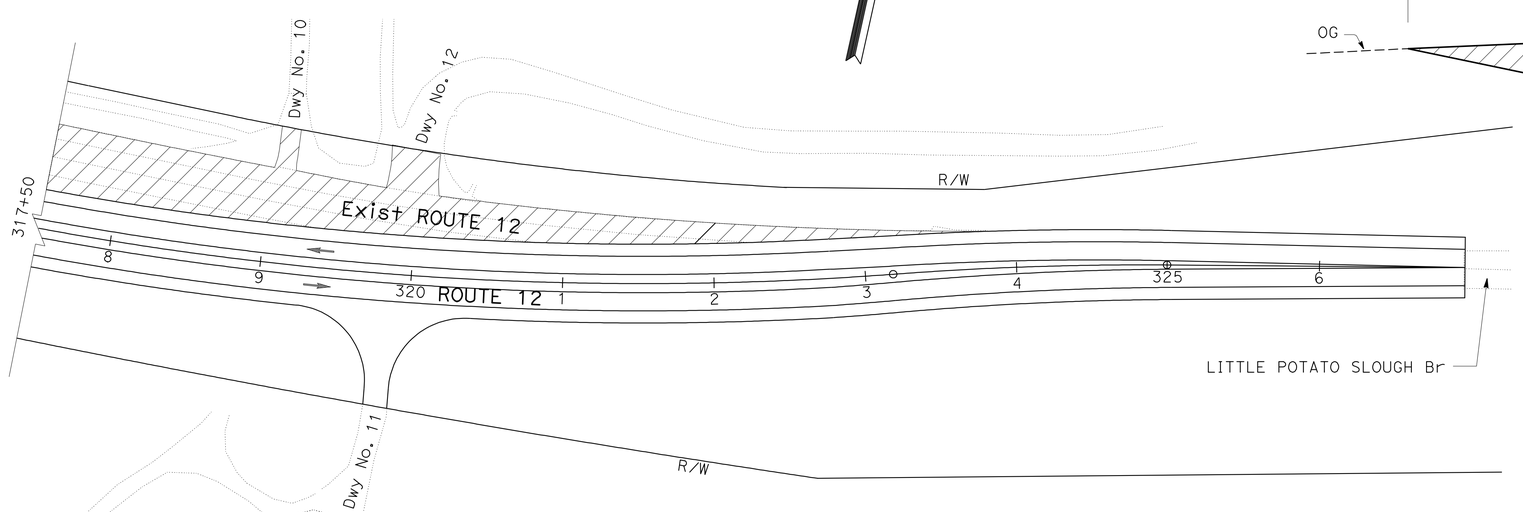

APPROVED FOR STAGE CONSTRUCTION WORK ONLY

STAGE CONSTRUCTION
(STAGE 3)

SCALE: 1" = 50'

SC-3

OA	04/30/12
REVISED BY	DATE REVISED
OSAMA ABDEL-MAGIED	RICHARD BOYER
CALCULATED-DESIGNED BY	CHECKED BY
FUNCTIONAL SUPERVISOR	NOMER GUITERREZ

STATE OF CALIFORNIA - DEPARTMENT OF TRANSPORTATION
Caltrans
DESIGN

LAST REVISION 00-00-00 | DATE PLOTTED => 27-DEC-2012 | TIME PLOTTED => 15:35

Dist	COUNTY	ROUTE	POST MILES TOTAL PROJECT	SHEET No.	TOTAL SHEETS
10	SJ	12	0.1/R4.4	64	130

REGISTERED CIVIL ENGINEER 4/16/12 DATE

12-24-12
PLANS APPROVAL DATE

REGISTERED PROFESSIONAL ENGINEER RICHARD BOYER No. 75844 Exp. 6/30/14 CIVIL STATE OF CALIFORNIA

THE STATE OF CALIFORNIA OR ITS OFFICERS OR AGENTS SHALL NOT BE RESPONSIBLE FOR THE ACCURACY OR COMPLETENESS OF SCANNED COPIES OF THIS PLAN SHEET.

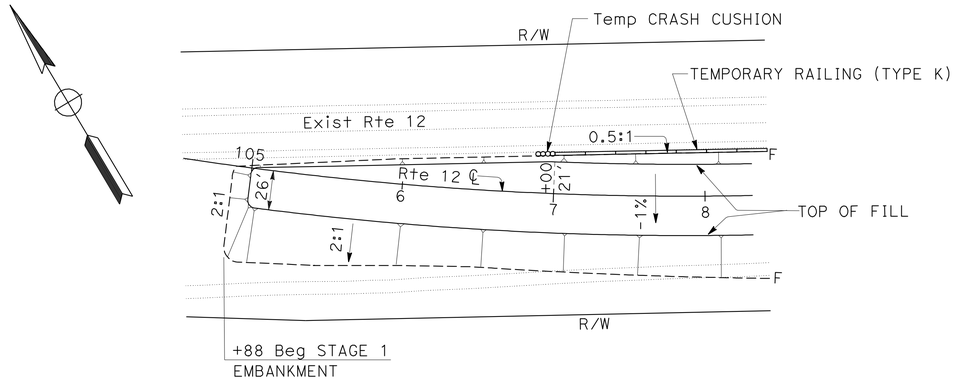

STATION 105+00

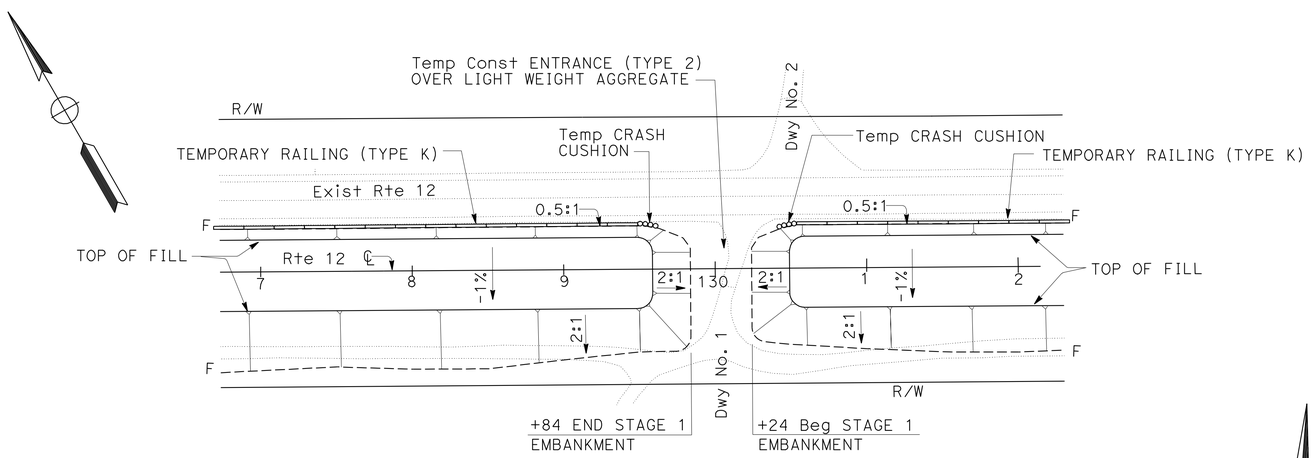

STATION 130+00

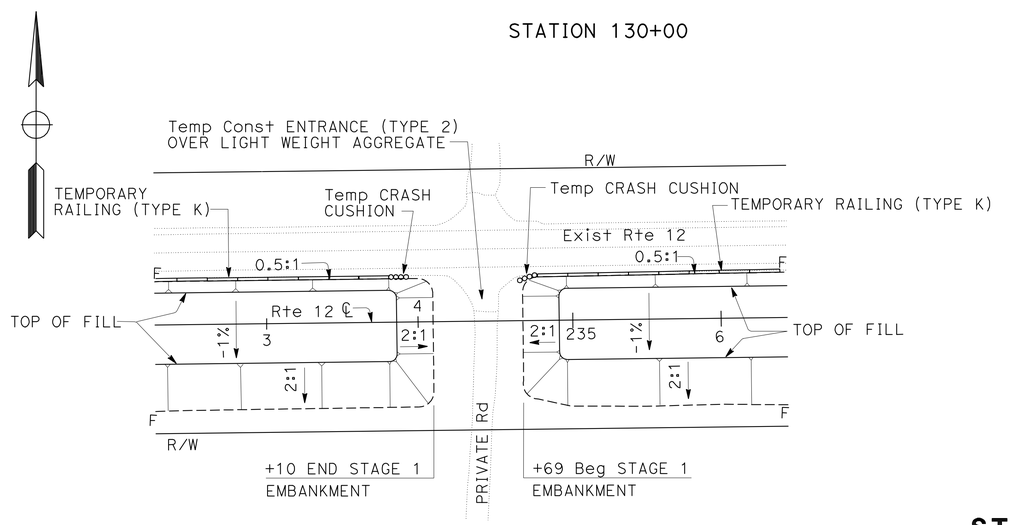

STATION 234+44

STAGE 1 EMBANKMENT

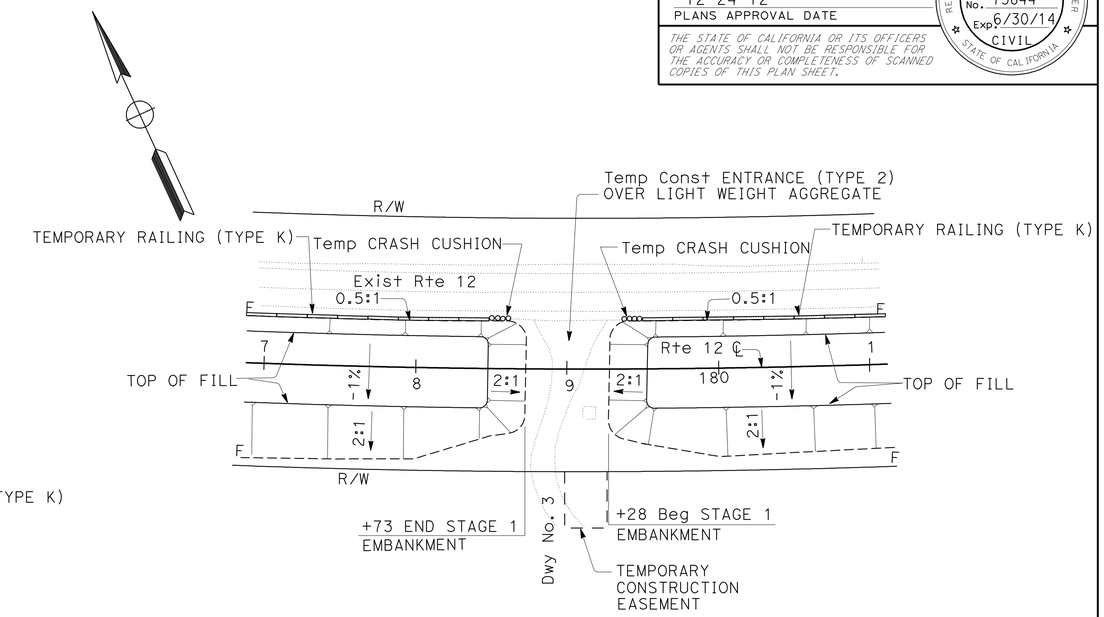

STATION 179+00

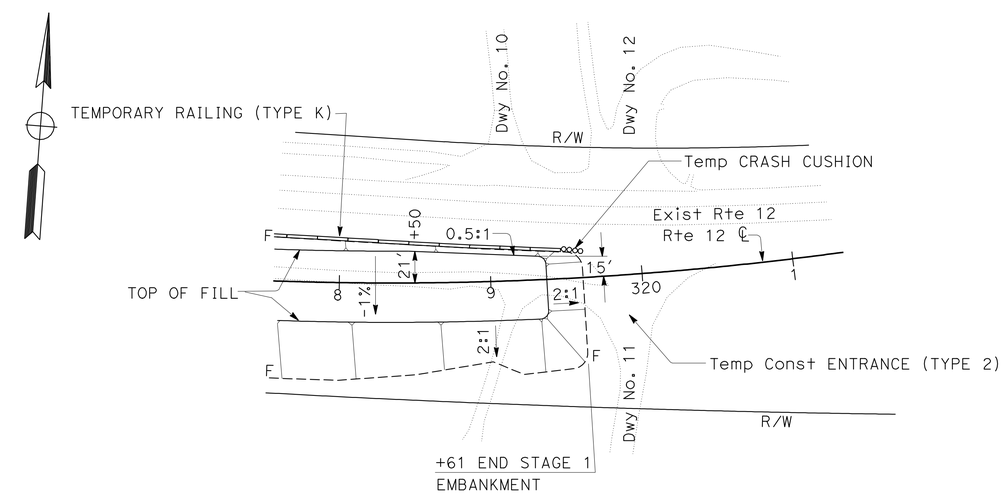

STATION 319+37

STAGE CONSTRUCTION DETAILS

NO SCALE

SCD-1

STATE OF CALIFORNIA - DEPARTMENT OF TRANSPORTATION
Caltrans
DESIGN

FUNCTIONAL SUPERVISOR: NOMER GUITERREZ
CALCULATED-DESIGNED BY: OSAMA ABDEL-MAGIED
CHECKED BY: RICHARD BOYER
REVISED BY: OA
DATE REVISED: 04/27/12

LAST REVISION 00-00-00
DATE PLOTTED => 27-DEC-2012
TIME PLOTTED => 16:34

Dist	COUNTY	ROUTE	POST MILES TOTAL PROJECT	SHEET No.	TOTAL SHEETS
10	SJ	12	0.1/R4.4	65	130

REGISTERED CIVIL ENGINEER 4/16/12 DATE

12-24-12
PLANS APPROVAL DATE

REGISTERED PROFESSIONAL ENGINEER HUE NGUYEN No. 74484 Exp 12/31/13 CIVIL STATE OF CALIFORNIA

THE STATE OF CALIFORNIA OR ITS OFFICERS OR AGENTS SHALL NOT BE RESPONSIBLE FOR THE ACCURACY OR COMPLETENESS OF SCANNED COPIES OF THIS PLAN SHEET.

NOTE:

FOR ACCURATE RIGHT OF WAY DATA, CONTACT RIGHT OF WAY ENGINEERING AT THE DISTRICT OFFICE.

LEGEND:

- CONSTRUCTION PER STAGE
- TEMPORARY RAILING (TYPE K)
- TEMPORARY CRASH CUSHION ARRAY TS14
- DIRECTION OF TRAFFIC
- CHANNELIZER (SURFACE MOUNTED)
- ROADSIDE SIGN ONE POST
- RELOCATE ROADSIDE SIGN FROM TO
- ROADSIDE SIGN TO REMAIN IN PLACE

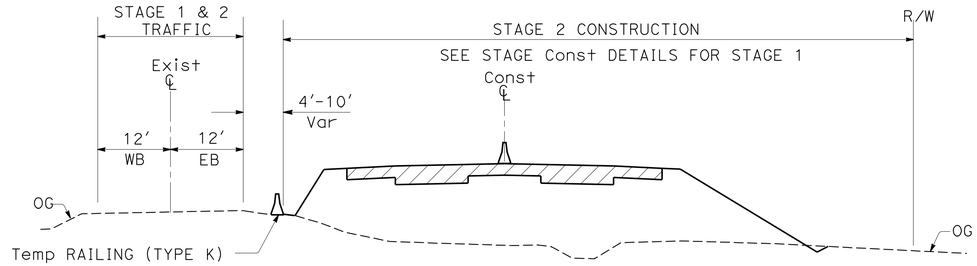

SECTION A-A
NO SCALE

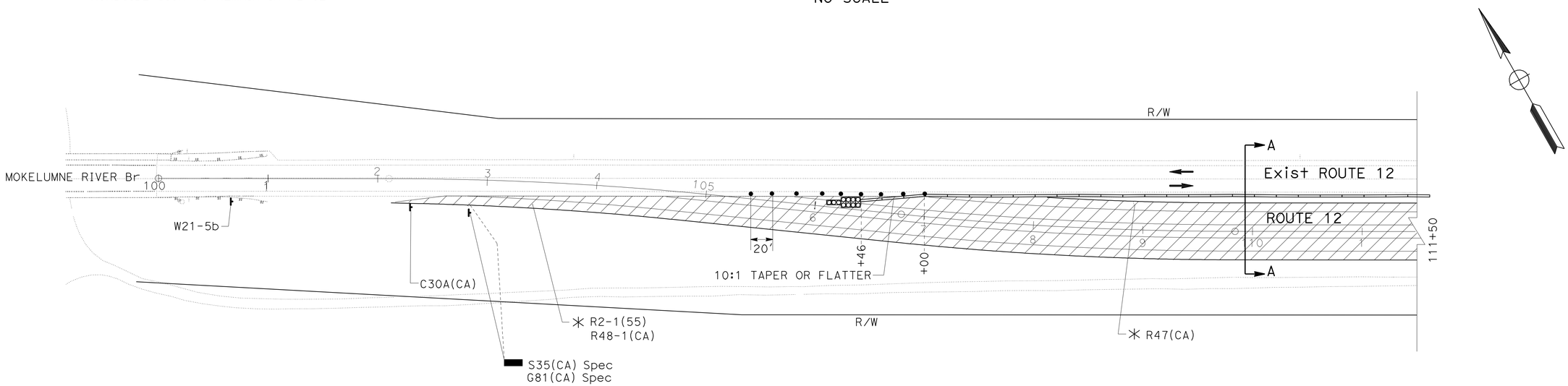

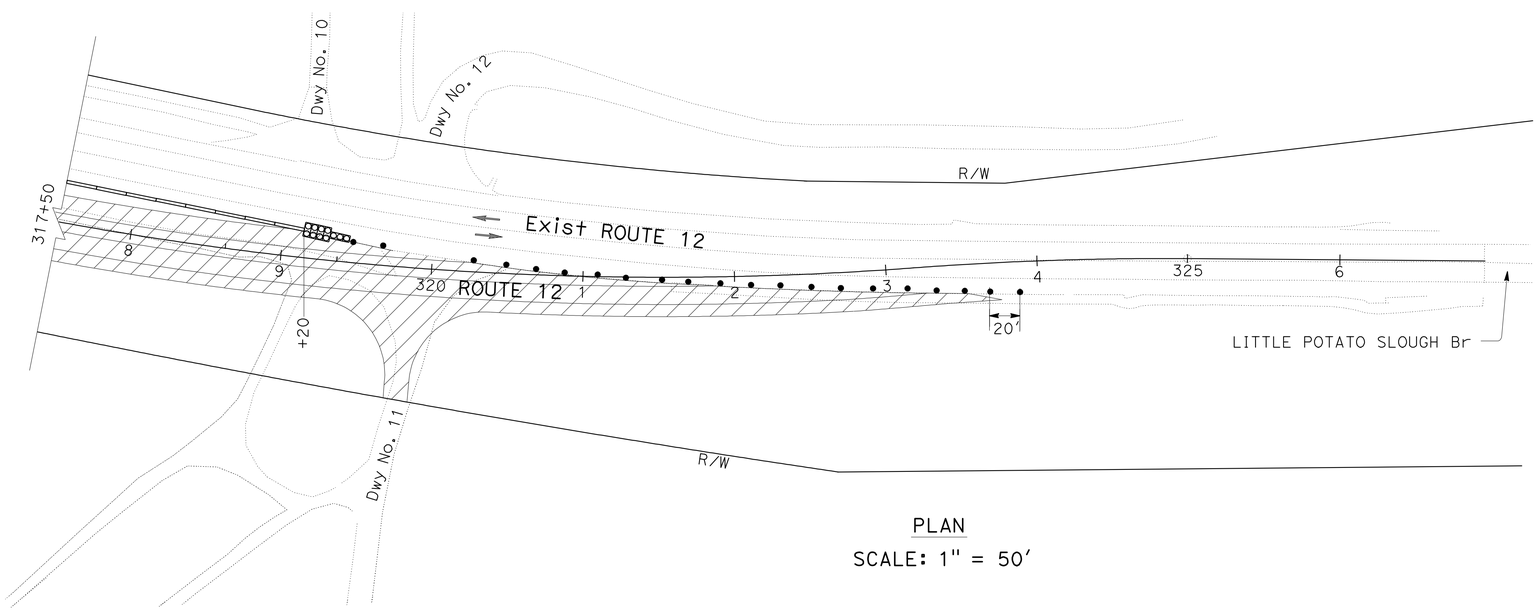

PLAN
SCALE: 1" = 50′

APPROVED FOR TRAFFIC HANDLING WORK ONLY

TRAFFIC HANDLING PLAN
(STAGE 1 & 2)
SCALE AS SHOWN

TH-1

STATE OF CALIFORNIA - DEPARTMENT OF TRANSPORTATION
Caltrans®
TRAFFIC DESIGN

FUNCTIONAL SUPERVISOR: MOHAMMED QATAMI
CALCULATED-DESIGNED BY: CECIL NGUYEN
CHECKED BY: HUE NGUYEN
REVISED BY: CN
DATE REVISED: 04/27/12

LAST REVISION DATE PLOTTED => 27-DEC-2012
00-00-00 TIME PLOTTED => 15:35

Dist	COUNTY	ROUTE	POST MILES TOTAL PROJECT	SHEET No.	TOTAL SHEETS
10	SJ	12	0.1/R4.4	66	130

REGISTERED CIVIL ENGINEER — DATE 4/16/12

12-24-12
PLANS APPROVAL DATE

REGISTERED PROFESSIONAL ENGINEER HUE NGUYEN No. 74484 Exp 12/31/13 CIVIL STATE OF CALIFORNIA

THE STATE OF CALIFORNIA OR ITS OFFICERS OR AGENTS SHALL NOT BE RESPONSIBLE FOR THE ACCURACY OR COMPLETENESS OF SCANNED COPIES OF THIS PLAN SHEET.

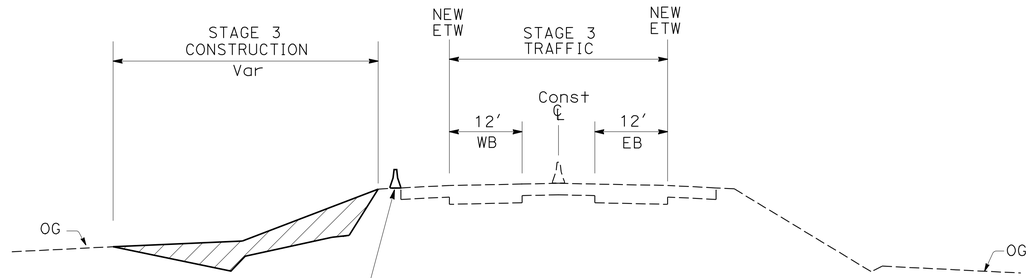

SECTION A-A
NO SCALE

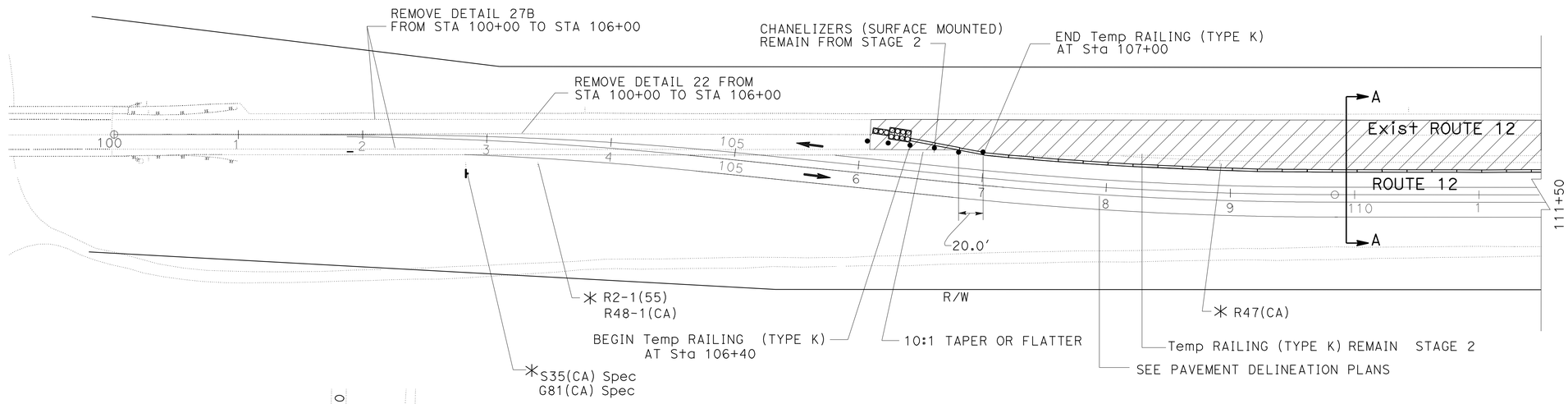

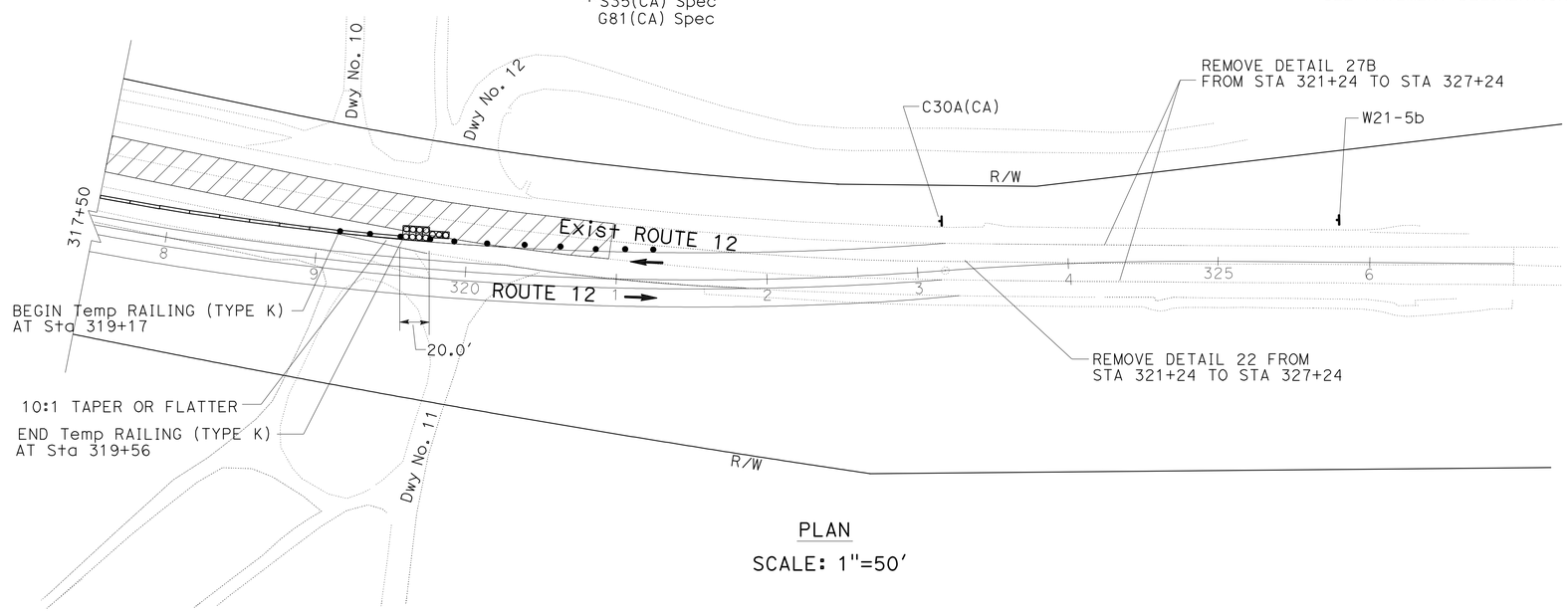

PLAN
SCALE: 1"=50′

APPROVED FOR TRAFFIC HANDLING WORK ONLY

TRAFFIC HANDLING PLAN
(STAGE 3)
SCALE AS SHOWN

TH-2

REVISED BY	DATE REVISED
CN	04/30/12

CALCULATED-DESIGNED BY: CECIL NGUYEN
CHECKED BY: HUE NGUYEN
FUNCTIONAL SUPERVISOR: MOHAMMED QATAMI

STATE OF CALIFORNIA - DEPARTMENT OF TRANSPORTATION
Caltrans
TRAFFIC DESIGN

LAST REVISION 00-00-00
DATE PLOTTED => 27-DEC-2012
TIME PLOTTED => 15:35

Dist	COUNTY	ROUTE	POST MILES TOTAL PROJECT	SHEET No.	TOTAL SHEETS
10	SJ	12	0.1/R4.4	67	130

REGISTERED CIVIL ENGINEER 4/16/12 DATE

12-24-12
PLANS APPROVAL DATE

REGISTERED PROFESSIONAL ENGINEER HUE NGUYEN No. 74484 Exp 12/31/13 CIVIL STATE OF CALIFORNIA

THE STATE OF CALIFORNIA OR ITS OFFICERS OR AGENTS SHALL NOT BE RESPONSIBLE FOR THE ACCURACY OR COMPLETENESS OF SCANNED COPIES OF THIS PLAN SHEET.

NOTES:

1. (N) - NOT A SEPARATE PAY ITEM, FOR INFORMATION ONLY.
2. EXACT SIGN LOCATIONS TO BE DETERMINED BY THE ENGINEER.

TEMPORARY PAVEMENT DELINEATION ITEMS

LOCATION	CHANNELIZER (SURFACE MOUNTED)	TEMPORARY RAILING (TYPE K)	TEMPORARY CRASH CUSHION MODULE	OBJECT MARKER (N) TYPE P	TEMPORARY TRAFFIC SCREEN	REMOVE YELLOW PAINTED TRAFFIC STRIPE (HAZARDOUS WASTE)	REMOVE THERMOPLASTIC TRAFFIC STRIPE
	EA	LF	EA	EA	LF	LF	LF
Sta 106+40 TO Sta 319+56		21,316			21,316		
Sta 107+50	9		14	1			
Sta 319+20	21		14	1			
Sta 100+00 TO Sta 106+00						1,200	1,200
Sta 321+24 TO Sta 327+24						1,200	1,200
Sta 106+40	6		14	1			
Sta 319+56	11		14	1			
TOTAL	47	21,316	56		21,316	2,400	2,400

TRAFFIC HANDLING (CONSTRUCTION AREA SIGNS) ITEMS

SIGN CODE FEDERAL	SIGN CODE CALIFORNIA	SIGN MESSAGE	SIGN PANEL	No. OF POSTS AND SIZE	(N) No. OF SIGNS	RELOCATE ROADSIDE SIGN
						EA
W21-5b		RIGHT SHOULDER CLOSED AHEAD	48" x 48"	1- 6" x 6"	2	
	C30A	SHOULDER CLOSED	48" x 48"	1- 6" x 6"	2	
	S35 Spec					1
	G81 Spec					

TRAFFIC HANDLING QUANTITIES

THQ-1

STATE OF CALIFORNIA - DEPARTMENT OF TRANSPORTATION
Caltrans TRAFFIC DESIGN

FUNCTIONAL SUPERVISOR: MOHAMMED QATAMI
CALCULATED-DESIGNED BY: CECIL NGUYEN
CHECKED BY: HUE NGUYEN
REVISED BY: CN
DATE REVISED: 04/30/12

LAST REVISION 00-00-00 | DATE PLOTTED => 27-DEC-2012 | TIME PLOTTED => 15:35

Dist	COUNTY	ROUTE	POST MILES TOTAL PROJECT	SHEET No.	TOTAL SHEETS
10	SJ	12	0.1/R4.4	68	130

REGISTERED CIVIL ENGINEER 4/16/12 DATE

12-24-12
PLANS APPROVAL DATE

REGISTERED PROFESSIONAL ENGINEER HUE NGUYEN No. 74484 Exp 12/31/13 CIVIL STATE OF CALIFORNIA

THE STATE OF CALIFORNIA OR ITS OFFICERS OR AGENTS SHALL NOT BE RESPONSIBLE FOR THE ACCURACY OR COMPLETENESS OF SCANNED COPIES OF THIS PLAN SHEET.

LEGEND

- THERMOPLASTIC TRAFFIC STRIPE (SPRAYABLE) DETAIL No.
- THERMOPLASTIC TRAFFIC STRIPE DETAIL No.
- THERMOPLASTIC PAVEMENT MARKING
- ROADSIDE SIGN
- REMOVE ROADSIDE SIGN
- RELOCATE ROADSIDE SIGN (FROM / TO)
- ROADSIDE SIGN PANEL
- ROADSIDE SIGN TO REMAIN IN PLACE
- ROADSIDE SIGN No.
- ROADSIDE SIGN ONE POST
- ROADSIDE SIGN TWO POST
- MILEPOST MARKER (PM)
- REMOVE MILEPOST MARKER (PM)
- DIRECTION OF TRAFFIC
- CONCRETE BARRIER MARKER
- OBJECT MARKER (TYPE P)
- GUARD RAILING DELINEATOR (TYPE F)

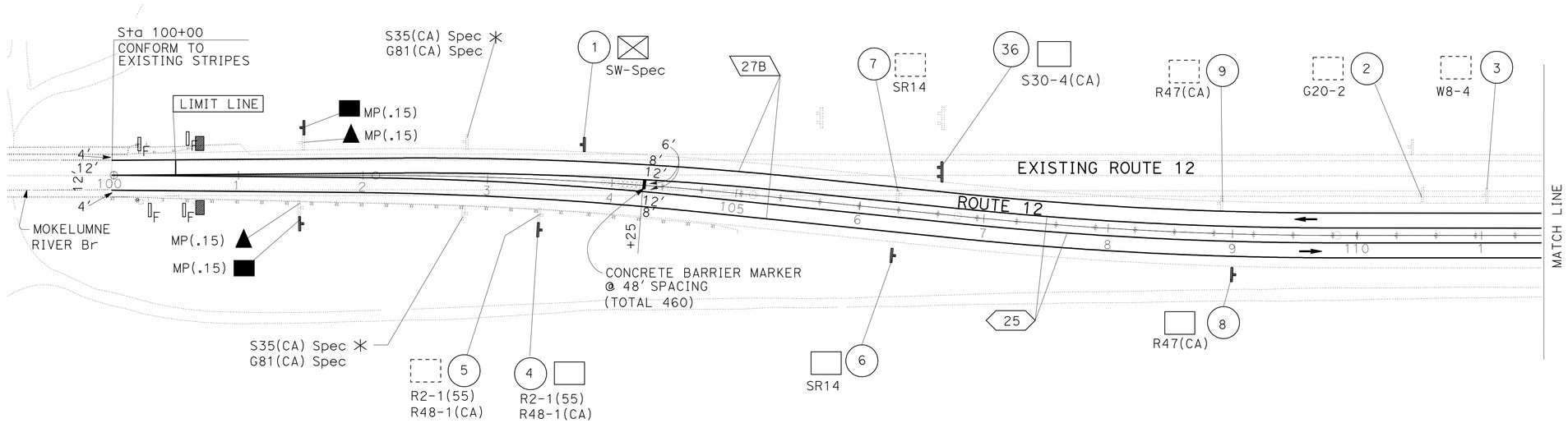

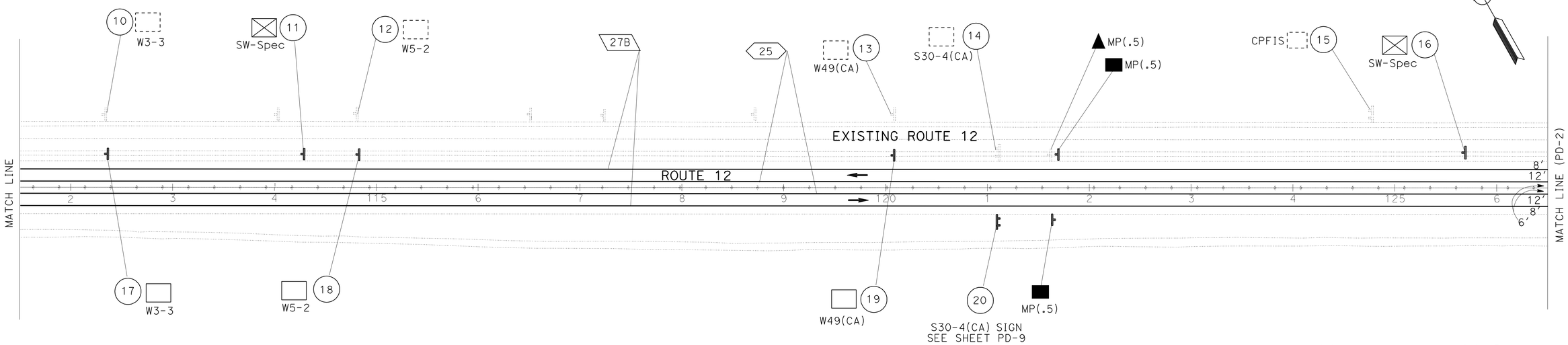

PAVEMENT DELINEATION AND SIGN PLAN

SCALE: 1" = 50'

PD-1

APPROVED FOR PAVEMENT DELINEATION AND SIGN WORK ONLY

REVISED BY	CN
DATE REVISED	02/26/12
CALCULATED-DESIGNED BY	CECIL NGUYEN
CHECKED BY	HUE NGUYEN
FUNCTIONAL SUPERVISOR	MOHAMMED QATAMI

STATE OF CALIFORNIA - DEPARTMENT OF TRANSPORTATION
Caltrans
TRAFFIC DESIGN

LAST REVISION 00-00-00
DATE PLOTTED => 27-DEC-2012
TIME PLOTTED => 15:36

Dist	COUNTY	ROUTE	POST MILES TOTAL PROJECT	SHEET No.	TOTAL SHEETS
10	SJ	12	0.1/R4.4	69	130

REGISTERED CIVIL ENGINEER 4/16/12 DATE

12-24-12
PLANS APPROVAL DATE

REGISTERED PROFESSIONAL ENGINEER
HUE NGUYEN
No. 74484
Exp. 12/31/13
CIVIL
STATE OF CALIFORNIA

THE STATE OF CALIFORNIA OR ITS OFFICERS OR AGENTS SHALL NOT BE RESPONSIBLE FOR THE ACCURACY OR COMPLETENESS OF SCANNED COPIES OF THIS PLAN SHEET.

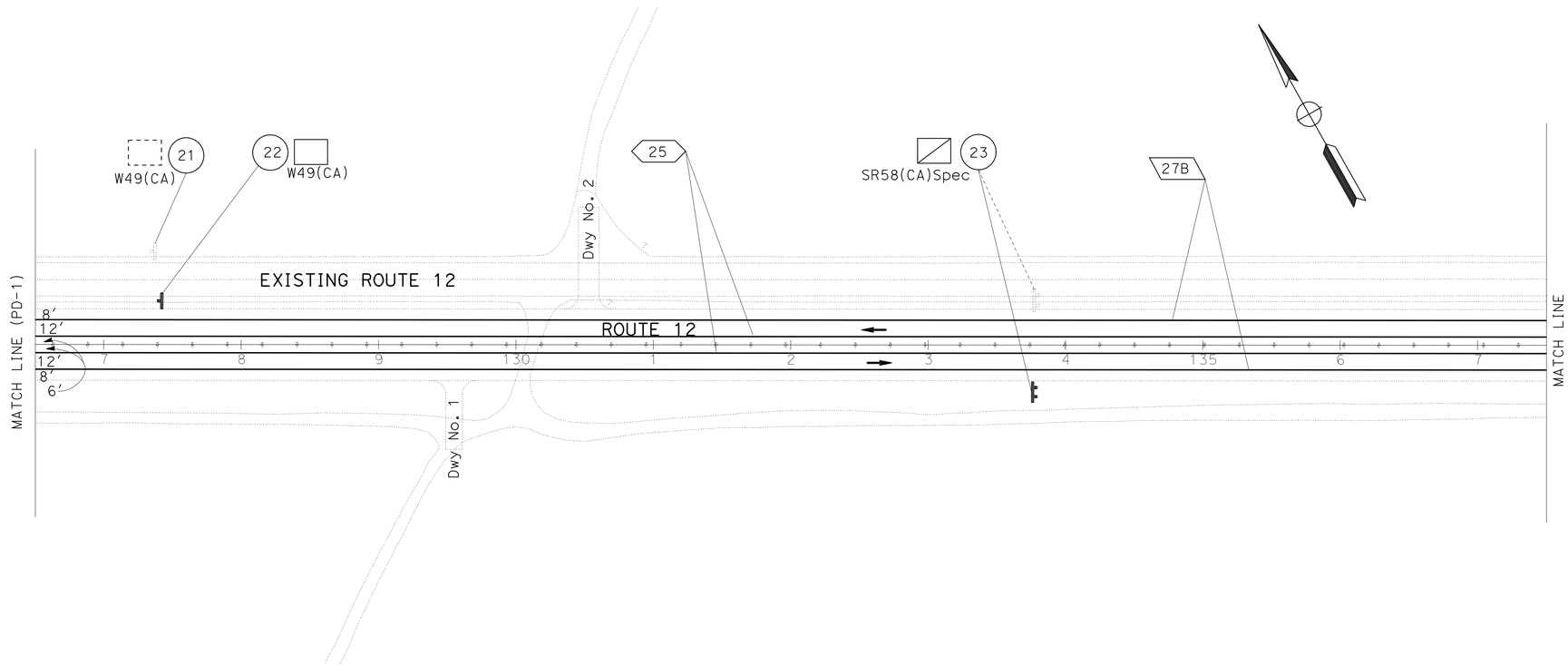

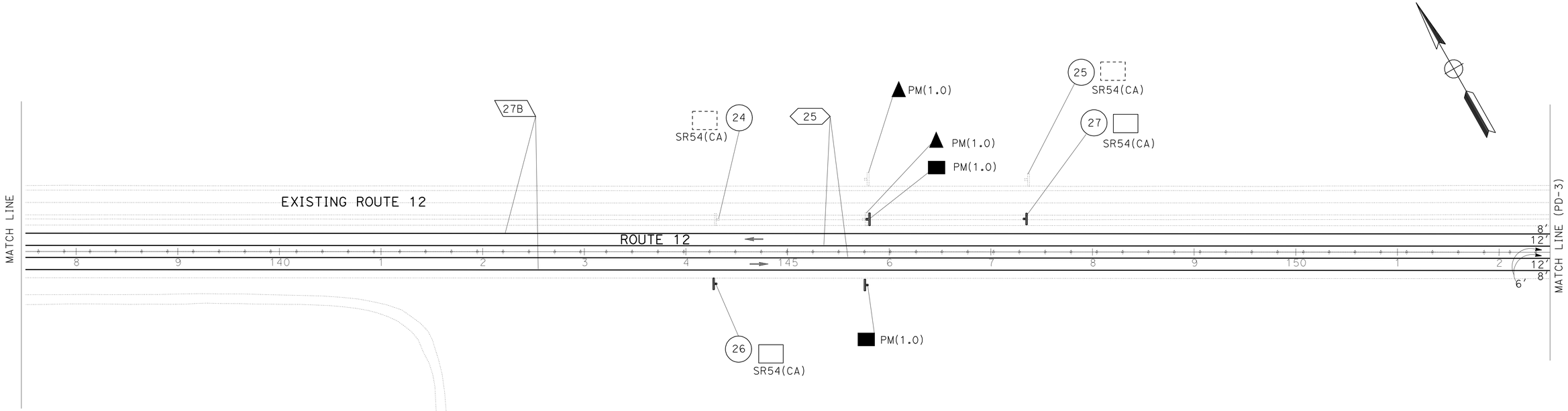

PAVEMENT DELINEATION AND SIGN PLAN

SCALE: 1" = 50'

PD-2

APPROVED FOR PAVEMENT DELINEATION AND SIGN WORK ONLY

REVISED BY	CN
DATE REVISED	04/23/12
CALCULATED-DESIGNED BY	CECIL NGUYEN
CHECKED BY	HUE NGUYEN
FUNCTIONAL SUPERVISOR	MOHAMMED QATAMI

STATE OF CALIFORNIA - DEPARTMENT OF TRANSPORTATION
Caltrans
TRAFFIC DESIGN

LAST REVISION 00-00-00
DATE PLOTTED => 27-DEC-2012
TIME PLOTTED => 15:36

Dist	COUNTY	ROUTE	POST MILES TOTAL PROJECT	SHEET No.	TOTAL SHEETS
10	SJ	12	0.1/R4.4	70	130

REGISTERED CIVIL ENGINEER 4/16/12 DATE

12-24-12
PLANS APPROVAL DATE

REGISTERED PROFESSIONAL ENGINEER
HUE NGUYEN
No. 74484
Exp. 12/31/13
CIVIL
STATE OF CALIFORNIA

THE STATE OF CALIFORNIA OR ITS OFFICERS OR AGENTS SHALL NOT BE RESPONSIBLE FOR THE ACCURACY OR COMPLETENESS OF SCANNED COPIES OF THIS PLAN SHEET.

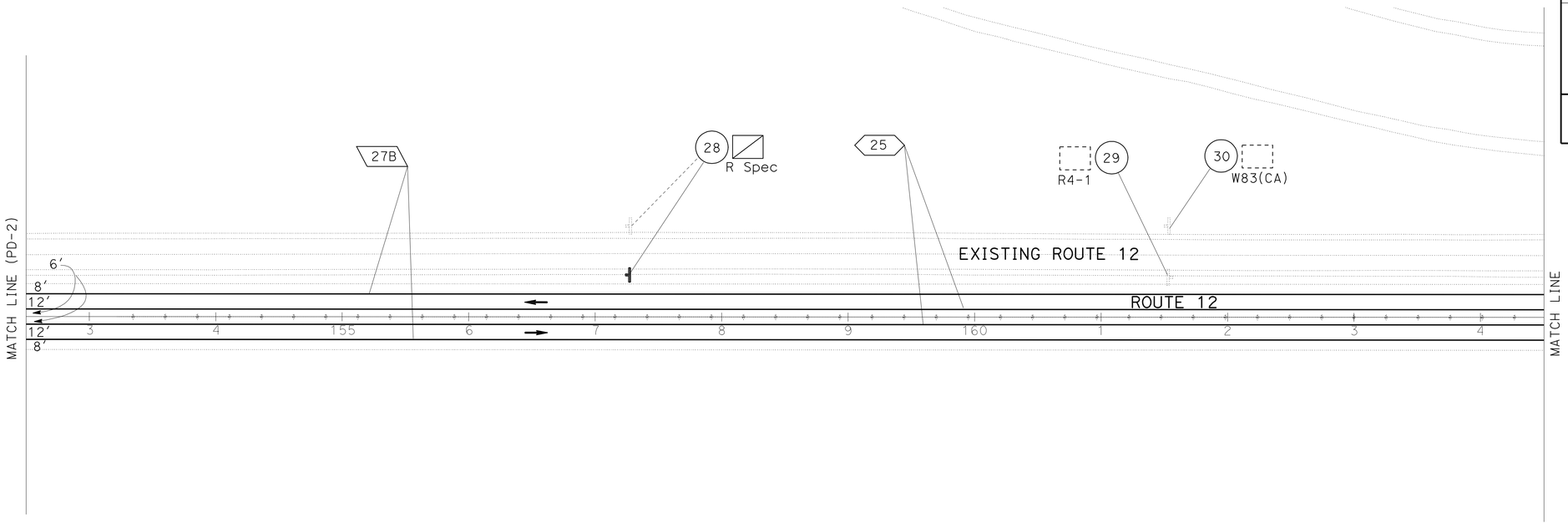

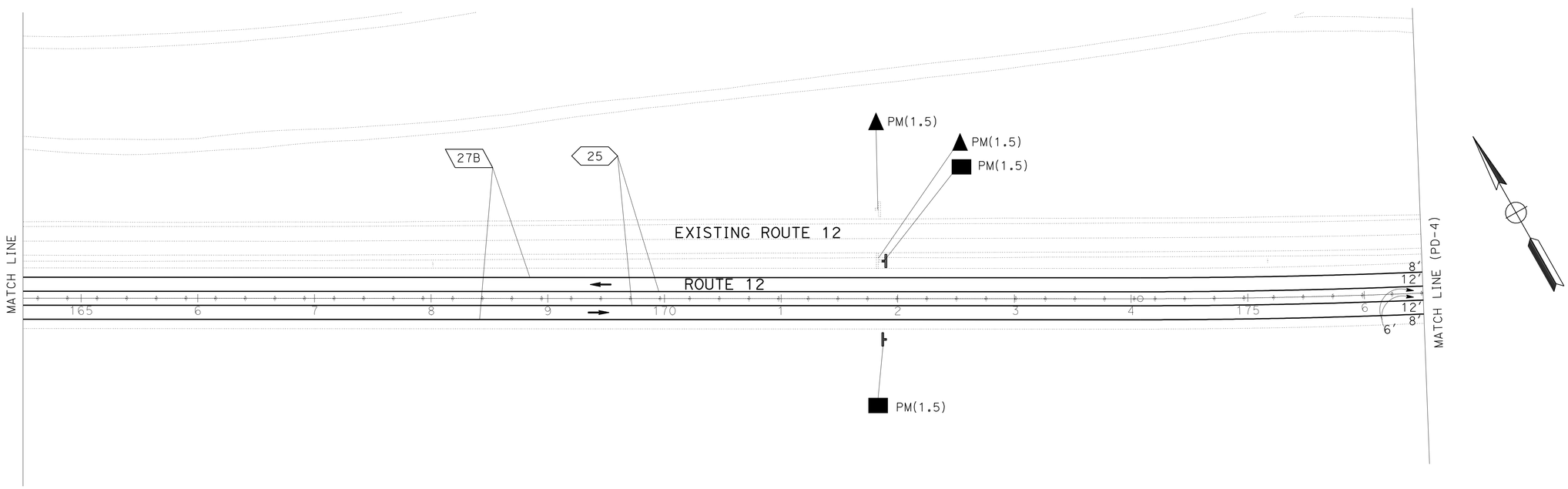

APPROVED FOR PAVEMENT DELINEATION AND SIGN WORK ONLY

PAVEMENT DELINEATION AND SIGN PLAN

SCALE: 1" = 50'

PD-3

REVISED BY	CN
DATE REVISED	04/23/12
CALCULATED-DESIGNED BY	CECIL NGUYEN
CHECKED BY	HUE NGUYEN
FUNCTIONAL SUPERVISOR	MOHAMMED QATAMI

STATE OF CALIFORNIA - DEPARTMENT OF TRANSPORTATION
Caltrans
TRAFFIC DESIGN

LAST REVISION 00-00-00
DATE PLOTTED => 27-DEC-2012
TIME PLOTTED => 15:36

Dist	COUNTY	ROUTE	POST MILES TOTAL PROJECT	SHEET No.	TOTAL SHEETS
10	SJ	12	0.1/R4.4	71	130

REGISTERED CIVIL ENGINEER 4/16/12 DATE

12-24-12
PLANS APPROVAL DATE

REGISTERED PROFESSIONAL ENGINEER
HUE NGUYEN
No. 74484
Exp. 12/31/13
CIVIL
STATE OF CALIFORNIA

THE STATE OF CALIFORNIA OR ITS OFFICERS OR AGENTS SHALL NOT BE RESPONSIBLE FOR THE ACCURACY OR COMPLETENESS OF SCANNED COPIES OF THIS PLAN SHEET.

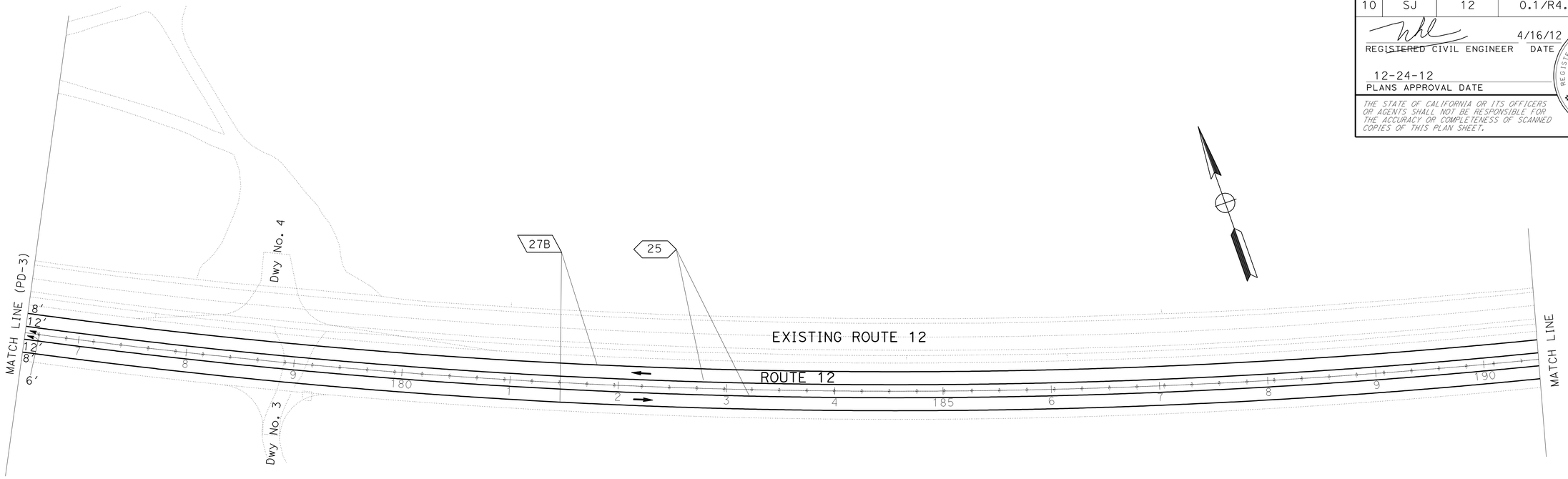

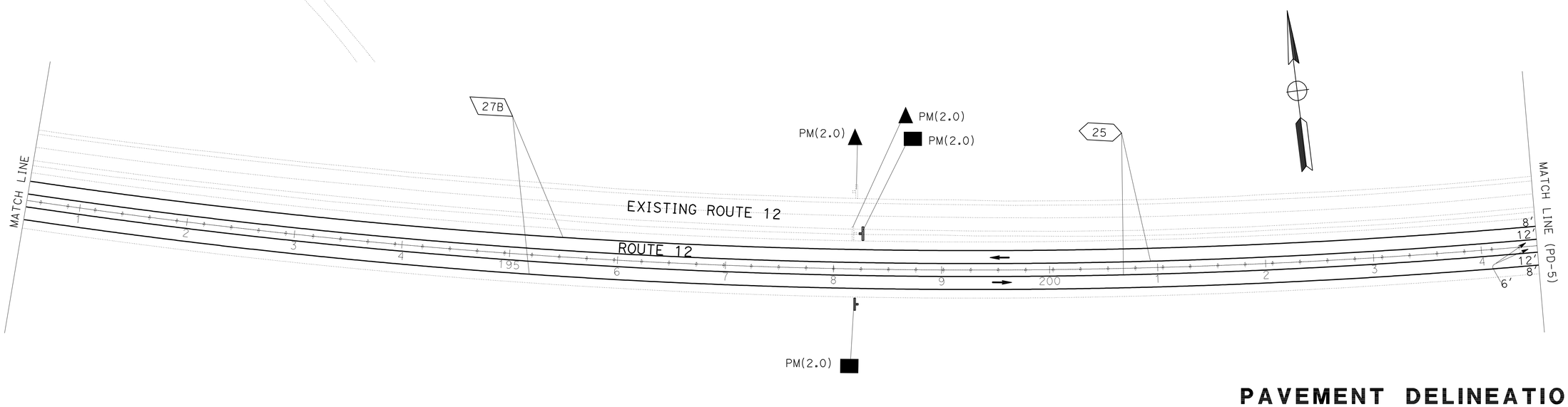

PAVEMENT DELINEATION AND SIGN PLAN

SCALE: 1" = 50'

PD-4

APPROVED FOR PAVEMENT DELINEATION AND SIGN WORK ONLY

STATE OF CALIFORNIA - DEPARTMENT OF TRANSPORTATION
Caltrans®
TRAFFIC DESIGN

FUNCTIONAL SUPERVISOR: MOHAMMED QATAMI
CALCULATED-DESIGNED BY: CECIL NGUYEN
CHECKED BY: HUE NGUYEN
REVISED BY: CN
DATE REVISED: 04/23/12

LAST REVISION 00-00-00
DATE PLOTTED => 27-DEC-2012
TIME PLOTTED => 15:36

Dist	COUNTY	ROUTE	POST MILES TOTAL PROJECT	SHEET No.	TOTAL SHEETS
10	SJ	12	0.1/R4.4	72	130

REGISTERED CIVIL ENGINEER 4/16/12 DATE

12-24-12
PLANS APPROVAL DATE

REGISTERED PROFESSIONAL ENGINEER
HUE NGUYEN
No. 74484
Exp. 12/31/13
CIVIL
STATE OF CALIFORNIA

THE STATE OF CALIFORNIA OR ITS OFFICERS OR AGENTS SHALL NOT BE RESPONSIBLE FOR THE ACCURACY OR COMPLETENESS OF SCANNED COPIES OF THIS PLAN SHEET.

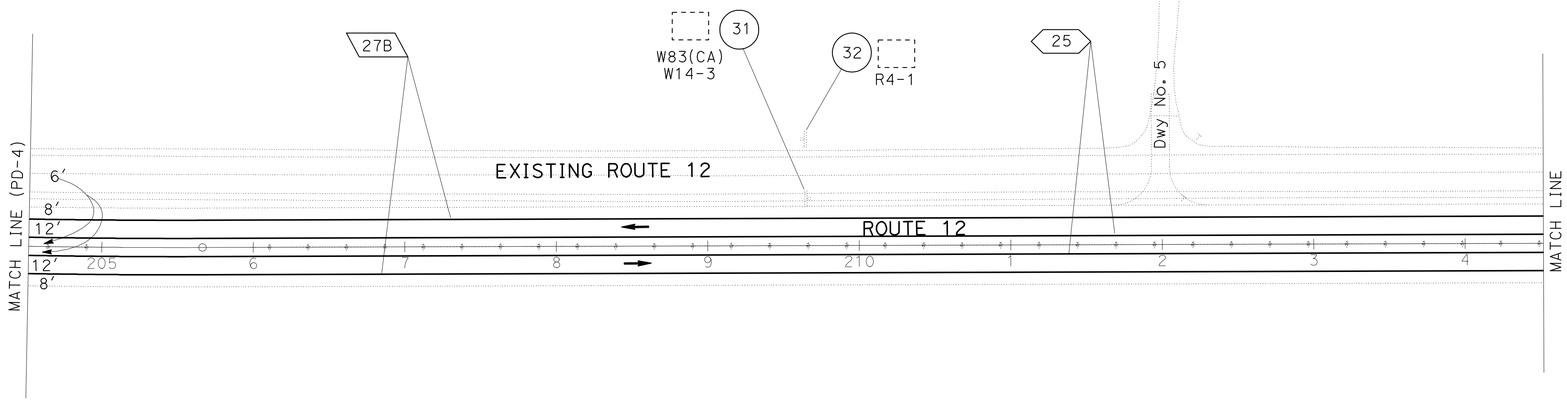

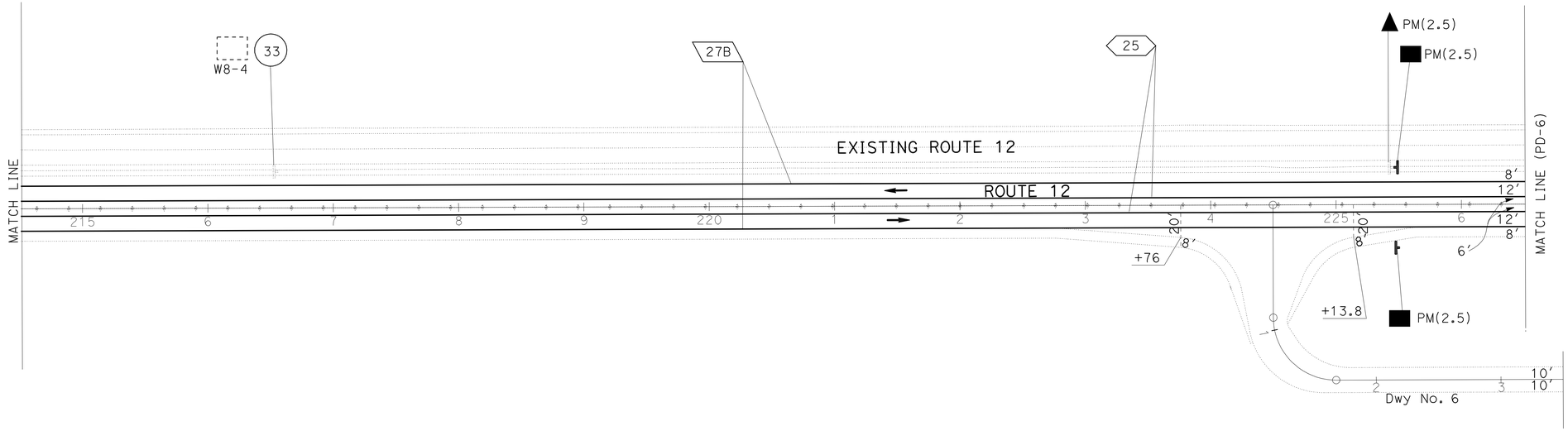

PAVEMENT DELINEATION AND SIGN PLAN

SCALE: 1" = 50′

PD-5

APPROVED FOR PAVEMENT DELINEATION AND SIGN WORK ONLY

REVISED BY	DATE REVISED
CN	04/23/12

CALCULATED-DESIGNED BY: CECIL NGUYEN
CHECKED BY: HUE NGUYEN
FUNCTIONAL SUPERVISOR: MOHAMMED QATAMI

STATE OF CALIFORNIA - DEPARTMENT OF TRANSPORTATION
Caltrans
TRAFFIC DESIGN

LAST REVISION 00-00-00 | DATE PLOTTED => 27-DEC-2012 | TIME PLOTTED => 15:36

Dist	COUNTY	ROUTE	POST MILES TOTAL PROJECT	SHEET No.	TOTAL SHEETS
10	SJ	12	0.1/R4.4	73	130

REGISTERED CIVIL ENGINEER 4/16/12 DATE

12-24-12
PLANS APPROVAL DATE

REGISTERED PROFESSIONAL ENGINEER HUE NGUYEN No. 74484 Exp. 12/31/13 CIVIL STATE OF CALIFORNIA

THE STATE OF CALIFORNIA OR ITS OFFICERS OR AGENTS SHALL NOT BE RESPONSIBLE FOR THE ACCURACY OR COMPLETENESS OF SCANNED COPIES OF THIS PLAN SHEET.

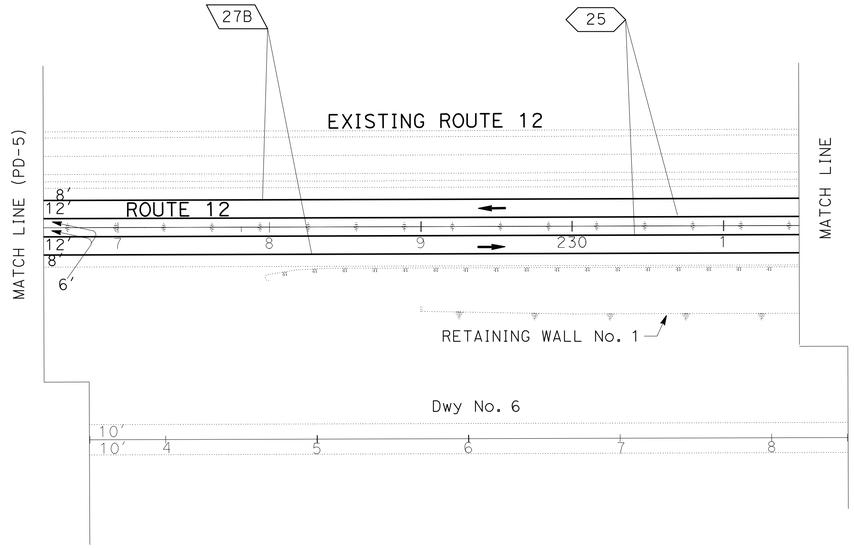

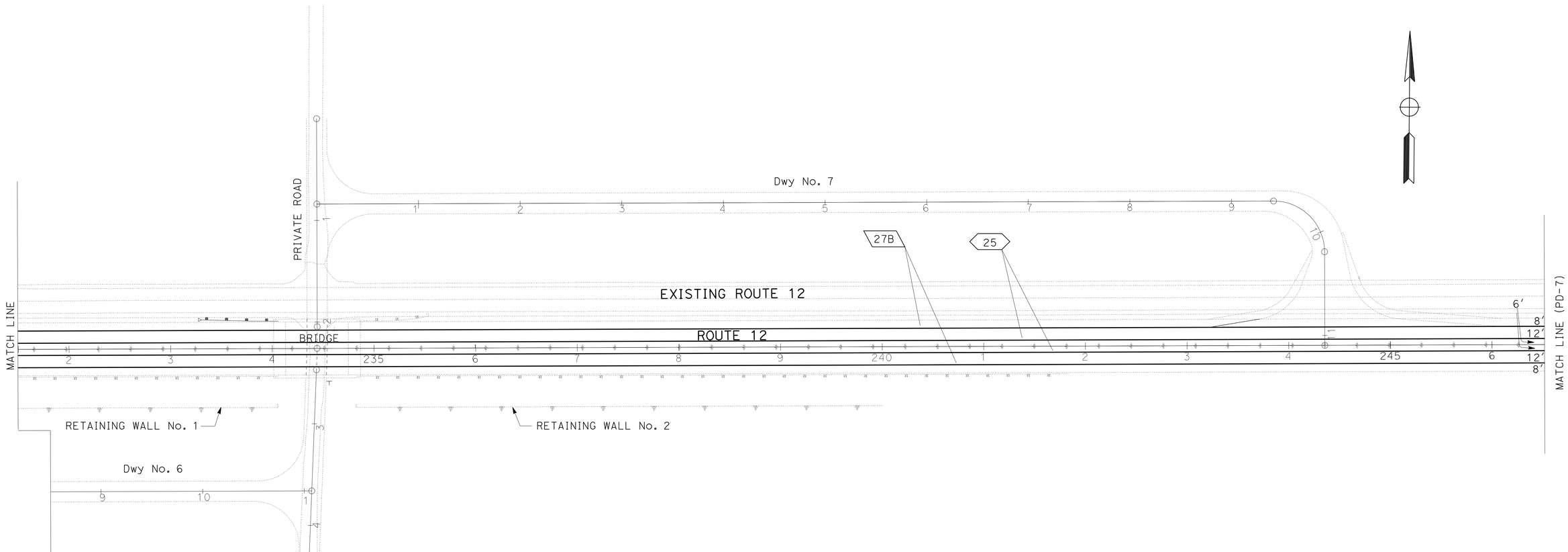

PAVEMENT DELINEATION AND SIGN PLAN

SCALE: 1" = 50'

PD-6

APPROVED FOR PAVEMENT DELINEATION AND SIGN WORK ONLY

CALCULATED-DESIGNED BY	CECIL NGUYEN
CHECKED BY	HUE NGUYEN
REVISED BY	CN
DATE REVISED	04/23/12
FUNCTIONAL SUPERVISOR	MOHAMMED QATAMI

STATE OF CALIFORNIA - DEPARTMENT OF TRANSPORTATION
Caltrans
TRAFFIC DESIGN

LAST REVISION 00-00-00 | DATE PLOTTED => 27-DEC-2012 | TIME PLOTTED => 15:36

Dist	COUNTY	ROUTE	POST MILES TOTAL PROJECT	SHEET No.	TOTAL SHEETS
10	SJ	12	0.1/R4.4	74	130

REGISTERED CIVIL ENGINEER 4/16/12 DATE

12-24-12
PLANS APPROVAL DATE

REGISTERED PROFESSIONAL ENGINEER HUE NGUYEN No. 74484 Exp 12/31/13 CIVIL STATE OF CALIFORNIA

THE STATE OF CALIFORNIA OR ITS OFFICERS OR AGENTS SHALL NOT BE RESPONSIBLE FOR THE ACCURACY OR COMPLETENESS OF SCANNED COPIES OF THIS PLAN SHEET.

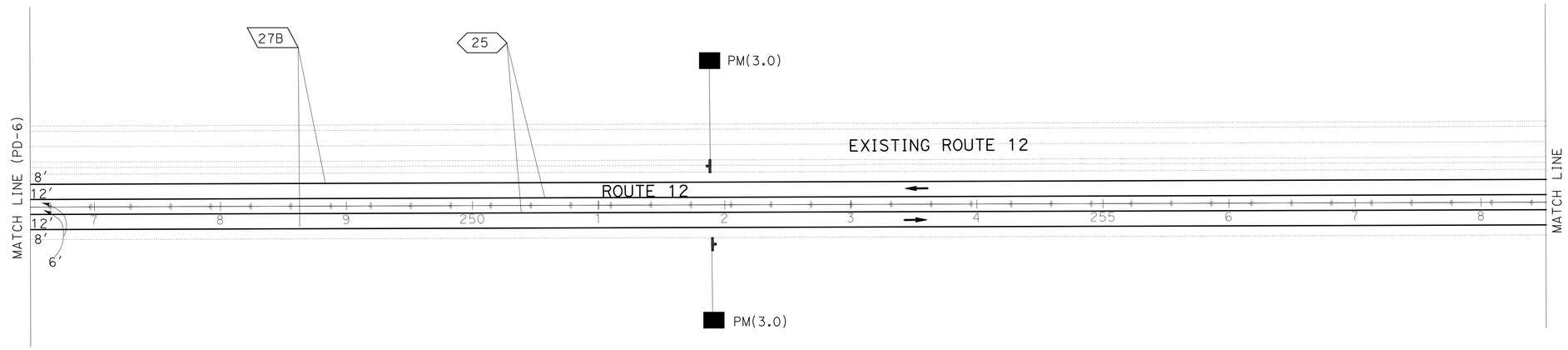

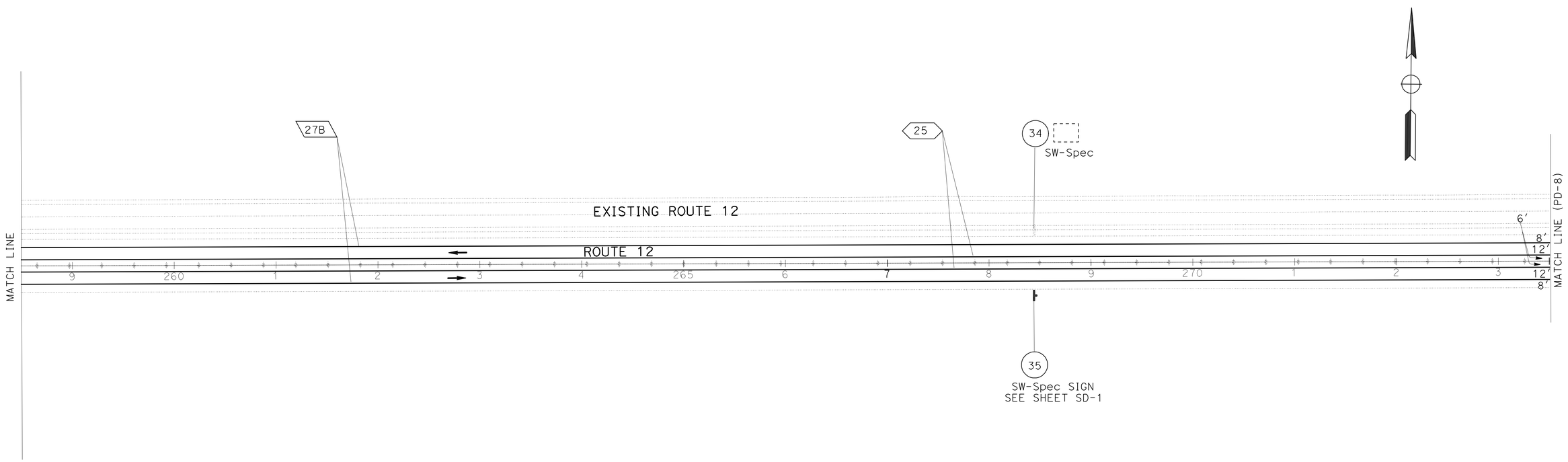

PAVEMENT DELINEATION AND SIGN PLAN

SCALE: 1" = 50'

PD-7

APPROVED FOR PAVEMENT DELINEATION AND SIGN WORK ONLY

CN	04/26/12
REVISED BY	DATE REVISED
CECIL NGUYEN	HUE NGUYEN
CALCULATED-DESIGNED BY	CHECKED BY
FUNCTIONAL SUPERVISOR	MOHAMMED QATAMI

STATE OF CALIFORNIA - DEPARTMENT OF TRANSPORTATION

Caltrans

TRAFFIC DESIGN

LAST REVISION 00-00-00 | DATE PLOTTED => 27-DEC-2012 | TIME PLOTTED => 15:36

Dist	COUNTY	ROUTE	POST MILES TOTAL PROJECT	SHEET No.	TOTAL SHEETS
10	SJ	12	0.1/R4.4	75	130

REGISTERED CIVIL ENGINEER 4/16/12 DATE

12-24-12
PLANS APPROVAL DATE

REGISTERED PROFESSIONAL ENGINEER
HUE NGUYEN
No. 74484
Exp. 12/31/13
CIVIL
STATE OF CALIFORNIA

THE STATE OF CALIFORNIA OR ITS OFFICERS OR AGENTS SHALL NOT BE RESPONSIBLE FOR THE ACCURACY OR COMPLETENESS OF SCANNED COPIES OF THIS PLAN SHEET.

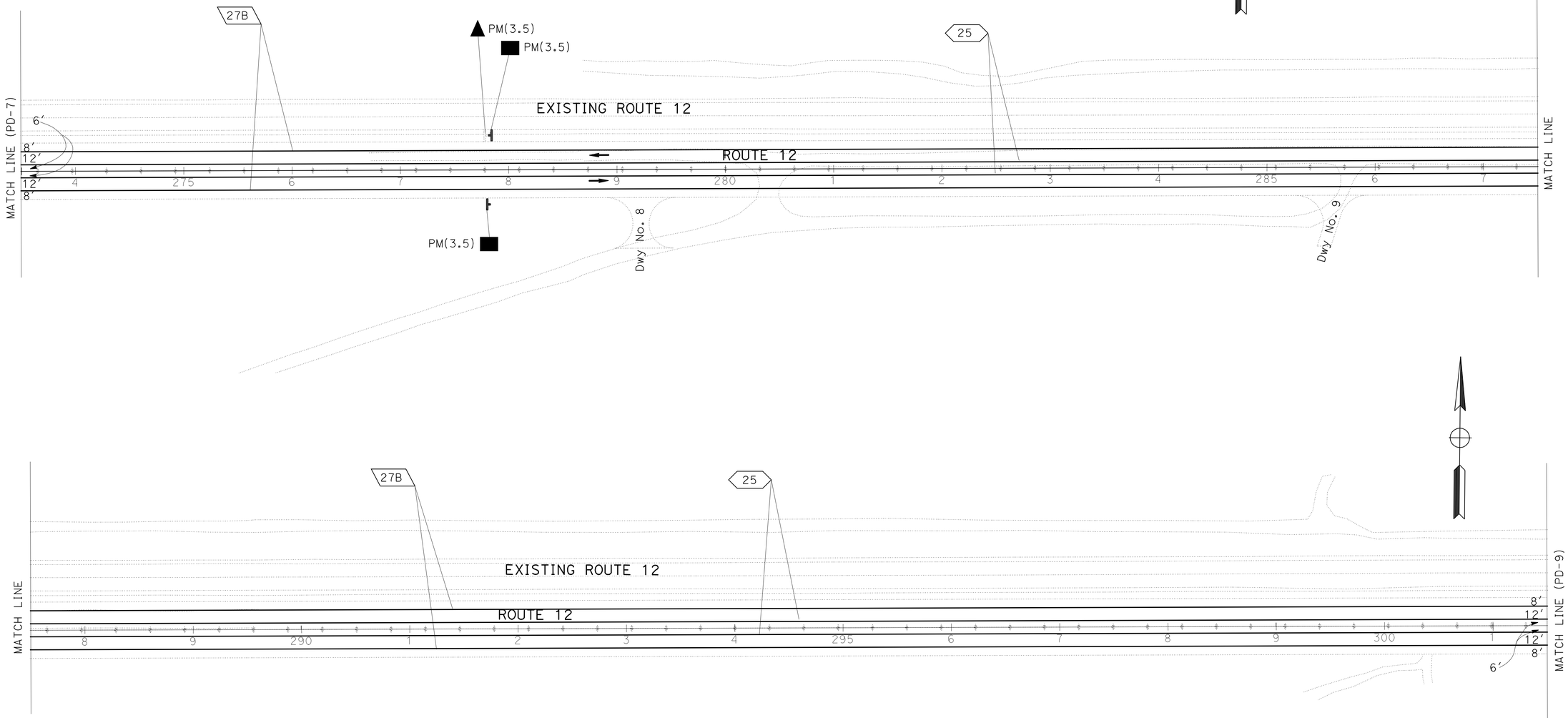

PAVEMENT DELINEATION AND SIGN PLAN

SCALE: 1" = 50'

PD-8

APPROVED FOR PAVEMENT DELINEATION AND SIGN WORK ONLY

STATE OF CALIFORNIA - DEPARTMENT OF TRANSPORTATION
Caltrans®
TRAFFIC DESIGN

FUNCTIONAL SUPERVISOR: MOHAMMED QATAMI
CALCULATED-DESIGNED BY: CECIL NGUYEN
CHECKED BY: HUE NGUYEN
REVISED BY: CN
DATE REVISED: 04/23/12

LAST REVISION 00-00-00
DATE PLOTTED => 27-DEC-2012
TIME PLOTTED => 15:21

Dist	COUNTY	ROUTE	POST MILES TOTAL PROJECT	SHEET No.	TOTAL SHEETS
10	SJ	12	0.1/R4.4	76	130

REGISTERED CIVIL ENGINEER 4/16/12 DATE

12-24-12
PLANS APPROVAL DATE

REGISTERED PROFESSIONAL ENGINEER HUE NGUYEN No. 74484 Exp. 12/31/13 CIVIL STATE OF CALIFORNIA

THE STATE OF CALIFORNIA OR ITS OFFICERS OR AGENTS SHALL NOT BE RESPONSIBLE FOR THE ACCURACY OR COMPLETENESS OF SCANNED COPIES OF THIS PLAN SHEET.

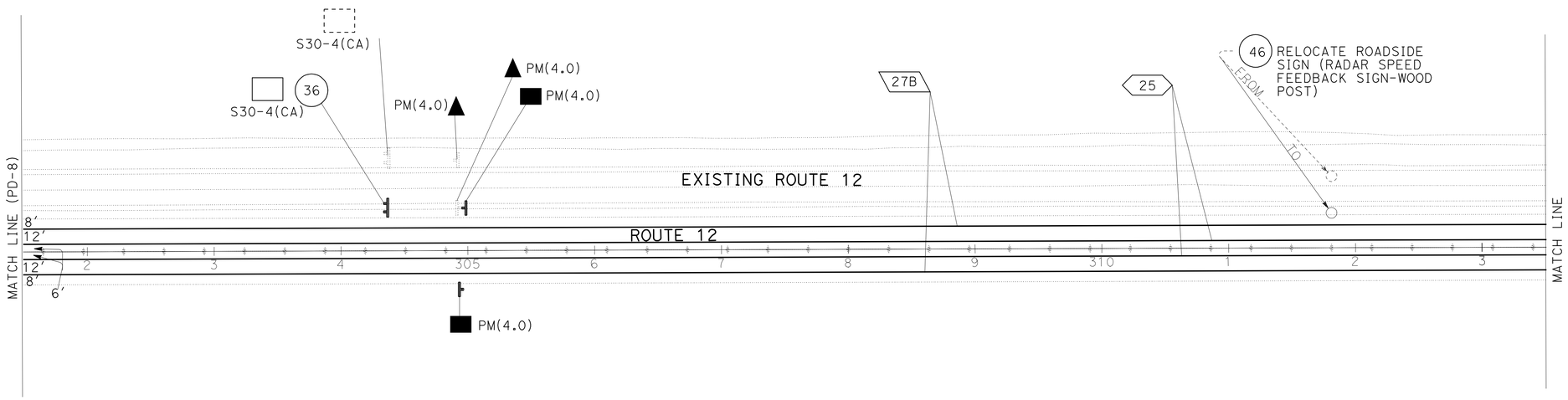

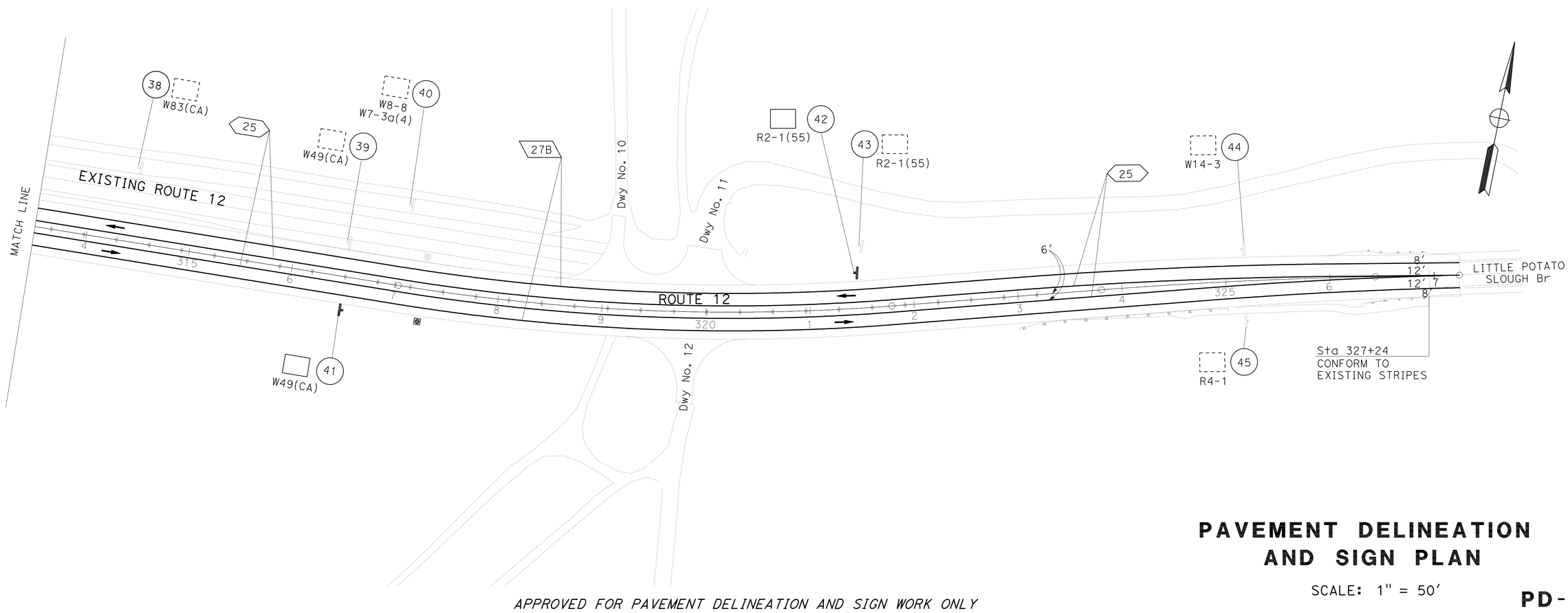

PAVEMENT DELINEATION AND SIGN PLAN

SCALE: 1" = 50'

PD-9

APPROVED FOR PAVEMENT DELINEATION AND SIGN WORK ONLY

REVISED BY	CN
DATE REVISED	04/23/12
CALCULATED-DESIGNED BY	CECIL NGUYEN
CHECKED BY	HUE NGUYEN
FUNCTIONAL SUPERVISOR	MOHAMMED QATAMI

STATE OF CALIFORNIA - DEPARTMENT OF TRANSPORTATION
Caltrans
TRAFFIC DESIGN

LAST REVISION 00-00-00 | DATE PLOTTED => 27-DEC-2012 | TIME PLOTTED => 15:21

Dist	COUNTY	ROUTE	POST MILES TOTAL PROJECT	SHEET No.	TOTAL SHEETS
10	SJ	12	0.1/R4.4	77	130

REGISTERED CIVIL ENGINEER 4/16/12 DATE

12-24-12
PLANS APPROVAL DATE

REGISTERED PROFESSIONAL ENGINEER HUE NGUYEN No. 74484 Exp 12/31/13 CIVIL STATE OF CALIFORNIA

THE STATE OF CALIFORNIA OR ITS OFFICERS OR AGENTS SHALL NOT BE RESPONSIBLE FOR THE ACCURACY OR COMPLETENESS OF SCANNED COPIES OF THIS PLAN SHEET.

PAVEMENT DELINEATION ITEMS

SHEET No.	LOCATION	THERMOPLASTIC TRAFFIC STRIPE (SPRAYABLE) 4" WHITE	THERMOPLASTIC TRAFFIC STRIPE (SPRAYABLE) 4" YELLOW	THERMOPLASTIC PAVEMENT MARKING	PAVEMENT MARKER RETROREFLECTIVE	REMOVE MILEPOST MARKER	MILEPOST MARKER	CONCRETE BARRIER MARKER (N)	OBJECT MARKER (TYPE P)	GUARD RAILING DELINEATOR (TYPE F)	REMARK
		DETAIL 27B	DETAIL 25	LIMIT LINE	TYPE H						
	Sta TO Sta	LF	LF	SQFT	EA	EA	EA	EA	EA	EA	
PD-1	100+00 TO 126+50	5300	5300	12.0	112	3	4	460	2	4	PM 0.15 & PM 0.5
PD-2	126+50 TO 152+50	5200	5200		110	2	2				PM 1.0
PD-3	152+50 TO 176+50	4800	4800		102	2	2				PM 1.5
PD-4	176+50 TO 204+52	5604	5604		118	2	2				PM 2.0
PD-5	204+52 TO 226+51	4398	4398		94	1	2				PM 2.5
PD-6	226+51 TO 246+52	4002	4002		86		2				PM 3.0
PD-7	246+52 TO 273+51	5398	5398		114	1	2				PM 3.5
PD-8	273+51 TO 301+50	5598	5598		118	2	2				PM 4.0
PD-9	301+50 TO 327+24	5148	5148		108						
TOTAL		90,896		12.0	962	13	18	460	2	4	

(N) - NOT A SEPARATE PAY ITEM, FOR INFORMATION ONLY

PAVEMENT DELINEATION QUANTITIES

PDQ-1

STATE OF CALIFORNIA - DEPARTMENT OF TRANSPORTATION
Caltrans® TRAFFIC DESIGN

FUNCTIONAL SUPERVISOR: MOHAMMED QATAMI
CALCULATED-DESIGNED BY: CECIL NGUYEN
CHECKED BY: HUE NGUYEN
REVISED BY: CN
DATE REVISED: 04/26/12

LAST REVISION DATE PLOTTED => 27-DEC-2012
00-00-00 TIME PLOTTED => 15:21

Dist	COUNTY	ROUTE	POST MILES TOTAL PROJECT	SHEET No.	TOTAL SHEETS
10	SJ	12	0.1/R4.4	78	130

REGISTERED CIVIL ENGINEER 4/16/12 DATE

12-24-12
PLANS APPROVAL DATE

REGISTERED PROFESSIONAL ENGINEER HUE NGUYEN No. 74484 Exp. 12/31/13 CIVIL STATE OF CALIFORNIA

THE STATE OF CALIFORNIA OR ITS OFFICERS OR AGENTS SHALL NOT BE RESPONSIBLE FOR THE ACCURACY OR COMPLETENESS OF SCANNED COPIES OF THIS PLAN SHEET.

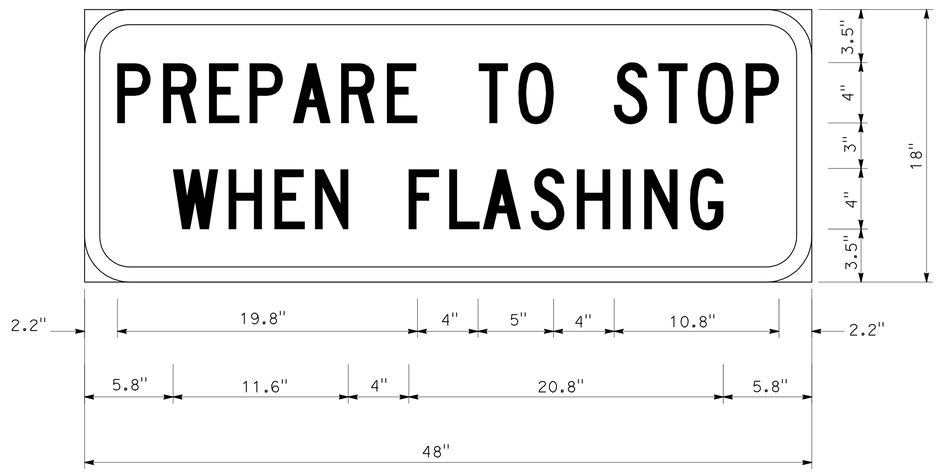

3.0" RADIUS, 1.0" BORDER, BLACK ON YELLOW;
[PREPARE TO STOP] C;
[WHEN FLASHING] C;

SIGNS No. 1, 11 & 16 SW-Spec

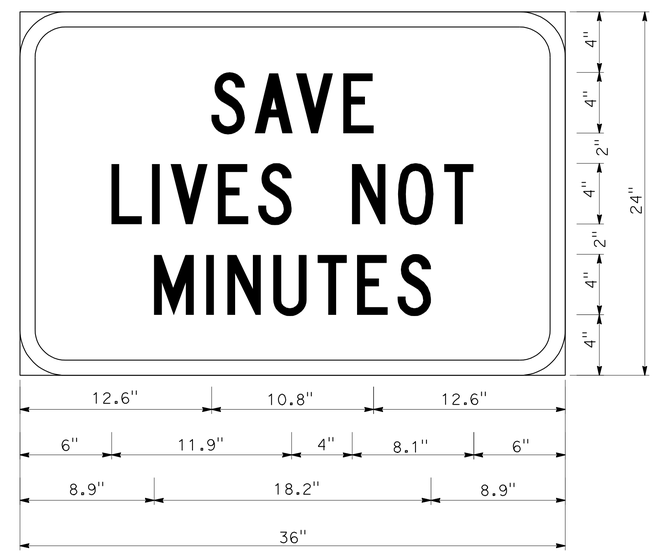

3.0" RADIUS, 1.0" BORDER, BLACK ON YELLOW;
[SAVE] C; [LIVES NOT] C; [MINUTES] C;

SIGN No. 35 SW-Spec

SIGN DETAILS

NO SCALE

SD-1

CN	04/23/12
REVISED BY	DATE REVISED
CECIL NGUYEN	
HUE NGUYEN	
CALCULATED-DESIGNED BY	
CHECKED BY	
FUNCTIONAL SUPERVISOR	
MOHAMMED QATAMI	

STATE OF CALIFORNIA - DEPARTMENT OF TRANSPORTATION
Caltrans
TRAFFIC DESIGN

LAST REVISION 00-00-00 | DATE PLOTTED => 27-DEC-2012 | TIME PLOTTED => 15:21

Dist	COUNTY	ROUTE	POST MILES TOTAL PROJECT	SHEET No.	TOTAL SHEETS
10	SJ	12	0.1/R4.4	79	130

REGISTERED CIVIL ENGINEER 4/16/12 DATE

12-24-12
PLANS APPROVAL DATE

REGISTERED PROFESSIONAL ENGINEER HUE NGUYEN No. 74484 Exp. 12/31/13 CIVIL STATE OF CALIFORNIA

THE STATE OF CALIFORNIA OR ITS OFFICERS OR AGENTS SHALL NOT BE RESPONSIBLE FOR THE ACCURACY OR COMPLETENESS OF SCANNED COPIES OF THIS PLAN SHEET.

SIGN ITEMS

SHEET No.	SIGN No.	SIGN CODE FEDERAL	SIGN CODE CALIFORNIA	SIGN MESSAGE	SIGN SIZE (L X D)	POST SIZE	REMOVE ROADSIDE SIGN (EA)	RELOCATE ROADSIDE SIGN (EA)	INSTALL SIGN (STRAP & SADDLE BRACKET METHOD) (N) (EA)	ROADSIDE SIGN (ONE POST) (EA)	ROADSIDE SIGN (TWO POST) (EA)	SIGN MATERIALS: FURNISH SINGLE SHEET ALUMINUM SIGN 0.080 - FRAMED (SQFT)	0.063 - UNFRAMED (SQFT)	0.080 - UNFRAMED (SQFT)	SINGLE FACED	DOUBLE FACED	BACKGROUND SHEETING COLOR	BACKGROUND RETROFLECTIVE ASTM TYPE	LEGEND SHEETING COLOR	LEGEND RETROFLECTIVE ASTM TYPE	GRAFFITI FILM STANDARD	GRAFFITI FILM PREMIUM	REMARKS
PD-1	1	SW-Spec		PREPARE TO STOP WHEN FLASHING	4.0′ x 1.5′				1					6.0									ON FLASHING BEACON
	2	G20-2		END ROAD WORK			1																
	3	W8-4		SOFT SHOULDER			1																
	4	R2-1(55)		SPEED LIMIT (55 MPH)	3.0′ x 3.9′	0.3′ x 0.5′				1			11.7		×		WHITE	III	BLACK			×	
			R48-1	RADAR ENFORCED	3.0′ x 1.5′								4.5				WHITE	III	BLACK				
	5	R2-1		SPEED LIMIT (55 MPH)			1																
			R48-1	RADAR ENFORCED																			
	6	SR14		SPEED ENFORCED BY AIRCRAFT	3.0′ x 4.5′	0.3′ x 0.5′				1			13.5		×		WHITE	III	BLACK			×	
	7	SR14		SPEED ENFORCED BY AIRCRAFT			1																
	8		R47	$1000 FINE FOR LITTERING	4.3′ x 3.0′	0.3′ x 0.5′				1				12.9	×		WHITE	III	BLACK			×	
	9		R47	$1000 FINE FOR LITTERING			1																
	10	W3-3		SIGNAL AHEAD			1																
	11	SW-Spec		PREPARE TO STOP WHEN FLASHING	4.0′ x 1.5′				1					6.0									ON FLASHING BEACON
	12	W5-2		NARROW BRIDGE			1																
	13		W49	DRAW BRIDGE			1																
	14		S30-4	TURN ON HEADLIGHT			1																
	15	CPFIS		PROJECT FUNDING SIGN			1																
	16	SW-Spec		PREPARE TO STOP WHEN FLASHING	4.0′ x 1.5′				1					6.0									ON FLASHING BEACON
	17	W3-3		SIGNAL AHEAD	3.0′ x 3.0′	0.3′ x 0.5′				1			9.0		×		YELLOW	VII	R/G/B			×	
	18	W5-2		NARROW BRIDGE	3.0′ x 3.0′	0.3′ x 0.5′				1			9.0		×		YELLOW	III	BLACK			×	
	19		W49	DRAW BRIDGE	3.0′ x 3.0′	0.3′ x 0.5′				1			9.0		×		YELLOW	III	BLACK			×	
	20		S30-4	TURN ON HEADLIGHT	7.0′ x 3.5′	0.3′ x 0.5′					1	24.5			×		WHITE	III	BLACK			×	LOCATION SEE PD-9
PD-2	21		W49	DRAW BRIDGE			1																
	22		W49	DRAW BRIDGE	3.0′ x 3.0′	0.3′ x 0.5′				1			9.0		×		YELLOW	III	BLACK			×	
	23		SR58 Spec	RECKLESS DRIVING MINIMUM $2500 FINE				1															
	24		SR54	DOUBLE FINE ZONE			1																
	25		SR54	DOUBLE FINE ZONE			1																
	26		SR54	DOUBLE FINE ZONE	2.5′ x 2.5′	0.3′ x 0.3′				1			6.25		×		WHITE	III	BLACK			×	
	27		SR54	DOUBLE FINE ZONE	2.5′ x 2.5′	0.3′ x 0.3′				1			6.25		×		WHITE	III	BLACK			×	
PD-3	28	R Spec		CLICK IT OR TICKET				1															
	29	R4-1		DO NOT PASS			1																
	30		W83	PASS WITH CARE			1																
PD-5	31		W83(CA) W14-3	PASS WITH CARE NO PASSING ZONE			1																
	32	R4-1		DO NOT PASS			1																
	33	W8-4		SOFT SHOULDER			1																
PD-7	34	SW-Spec		SAVE LIVES NOT MINUTES			1																
	35	SW-Spec		SAVE LIVES NOT MINUTES	3.0′ x 2.0′	0.3′ x 0.3′				1				6.0	×		YELLOW	III	BLACK			×	SEE SD-1 FOR DETAILS
				TOTAL 1			19	2		10	1	24.5	78.2	36.9									

NOTES:

1. CALIFORNIA SIGN CODES ARE DESIGNATED BY (CA). OTHERWISE, FEDERAL SIGN CODES ARE SHOWN.
2. EXACT SIGN LOCATIONS TO BE DETERMINED BY THE ENGINEER.
3. (N) - NOT A SEPARATE PAY ITEM, FOR INFORMATION ONLY.

SIGN QUANTITIES
SQ-1

STATE OF CALIFORNIA - DEPARTMENT OF TRANSPORTATION
Caltrans® TRAFFIC DESIGN

FUNCTIONAL SUPERVISOR: MOHAMMED QATAMI
CALCULATED-DESIGNED BY: CECIL NGUYEN
CHECKED BY: HUE NGUYEN
REVISED BY: CN
DATE REVISED: 04/30/12

LAST REVISION 00-00-00
DATE PLOTTED => 27-DEC-2012
TIME PLOTTED => 16:10

Dist	COUNTY	ROUTE	POST MILES TOTAL PROJECT	SHEET No.	TOTAL SHEETS
10	SJ	12	0.1/R4.4	80	130

REGISTERED CIVIL ENGINEER 4/16/12 DATE

12-24-12
PLANS APPROVAL DATE

REGISTERED PROFESSIONAL ENGINEER HUE NGUYEN No. 74484 Exp. 12/31/13 CIVIL STATE OF CALIFORNIA

THE STATE OF CALIFORNIA OR ITS OFFICERS OR AGENTS SHALL NOT BE RESPONSIBLE FOR THE ACCURACY OR COMPLETENESS OF SCANNED COPIES OF THIS PLAN SHEET.

SIGN ITEMS

SHEET No.	SIGN No.	SIGN CODE FEDERAL	SIGN CODE CALIFORNIA	SIGN MESSAGE	SIGN SIZE (L X D)	POST SIZE	REMOVE ROADSIDE SIGN (EA)	RELOCATE ROADSIDE SIGN (EA)	INSTALL SIGN (STRAP & SADDLE BRACKET METHOD) (N) (EA)	ROADSIDE SIGN (ONE POST) (EA)	ROADSIDE SIGN (TWO POST) (EA)	SIGN MATERIALS: FURNISH SINGLE SHEET ALUMINUM SIGN 0.080 - FRAMED (SQFT)	0.063 - UNFRAMED (SQFT)	0.080 - UNFRAMED (SQFT)	SINGLE FACED	DOUBLE FACED	BACKGROUND SHEETING COLOR	BACKGROUND RETROFLECTIVE ASTM TYPE	LEGEND SHEETING COLOR	LEGEND RETROFLECTIVE ASTM TYPE	GRAFFITI FILM STANDARD	GRAFFITI FILM PREMIUM	REMARKS
PD-9	36		S30-4	TURN ON HEADLIGHT	7.0′ x 3.5′	0.3′ x 0.5′					1	24.5			×		WHITE	III	BLACK			×	LOCATION SEE PD-1
	37		S30-4	TURN ON HEADLIGHT			1																
	38		W83	PASS WITH CARE			1																
	39		W49	DRAW BRIDGE			1																
	40	W8-8		ROUGH ROAD			1																
		W7-3a(4)		NEXT 4 MILES																			
	41		W49	DRAW BRIDGE	3.0′ x 3.0′	0.3′ x 0.5′				1			9.0		×		YELLOW	III	BLACK			×	
	42	R2-1		SPEED LIMIT 55	3.0′ x 3.9′	0.3′ x 0.5′				1			11.7		×		WHITE	III	BLACK			×	
	43	R2-1		SPEED LIMIT 55			1																
	44	W14-3		NO PASSING ZONE			1																
	45	R4-1		DO NOT PASS			1																
	46	SPECIAL		RADAR SPEED FEEDBACK SIGN				1															
				TOTAL 2			7			2	1	24.5	20.7										
				TOTAL 1			19	2		10	1	24.5	78.2	36.9									
				TOTAL THQ-1				1															
				TOTAL			26	4		12	2	49	98.9	36.9									

CALCULATED-DESIGNED BY	CN
CHECKED BY	04/30/12
REVISED BY	CECIL NGUYEN
DATE REVISED	HUE NGUYEN
FUNCTIONAL SUPERVISOR	MOHAMMED QATAMI

STATE OF CALIFORNIA - DEPARTMENT OF TRANSPORTATION
Caltrans® TRAFFIC DESIGN

SIGN QUANTITIES
SQ-2

Dist	COUNTY	ROUTE	POST MILES TOTAL PROJECT	SHEET No.	TOTAL SHEETS
10	SJ	12	0.1/R4.4	81	130

REGISTERED CIVIL ENGINEER DATE 4/16/12

12-24-12
PLANS APPROVAL DATE

REGISTERED PROFESSIONAL ENGINEER RICHARD BOYER No. 75844 Exp. 6/30/14 CIVIL STATE OF CALIFORNIA

THE STATE OF CALIFORNIA OR ITS OFFICERS OR AGENTS SHALL NOT BE RESPONSIBLE FOR THE ACCURACY OR COMPLETENESS OF SCANNED COPIES OF THIS PLAN SHEET.

ABBREVIATIONS:

RHMA - RUBBERIZED HOT MIX ASPHALT
ESA - ENVIRONMENTALLY SENSITIVE AREA

ROADWAY ITEMS

LOCATION	Sta - Sta	HMA (TYPE B)	RHMA (GAP GRADED)	TACK COAT	CLASS 2 AB	SHOULDER BACKING	IMPORTED BORROW LIGHTWEIGHT AGGREGATE
		TON	TON	TON	CY	TON	CY
MAINLINE	100+00 - 327+24	18,800	8390	114	49,900		
SHOULDER	100+00 - 327+24		9600		35,900		
DRIVEWAYS	100+00 - 327+24						100
Exist Rte 12	100+00 - 327+24	16,000					
STAGE 1	100+00 - 327+20					240	
STAGE 2	100+00 - 327+20					17,504	
TOTAL		34,800	17,990	114	85,800	17,744	100

EARTHWORK ITEMS

LOCATION	Sta - Sta	ROADWAY EXCAVATION	IMPORT BORROW
		CY	CY
STAGE 1	100+00 - 327+24		799,900
STAGE 2 & 3	100+00 - 327+24	364,950	
TOTAL		364,950	799,900

GEOTECHNICAL ITEMS

LOCATION	DRAINAGE WICK	HORIZONTAL STRIP DRAIN	(N) PIEZOMETER	GEOSYNTHETIC REINFORCEMENT
Sta - Sta	LF	LF	EA	SQYD
100+00 - 327+24	2,832,300	22,704	16	131,111

SHOULDER RUMBLE STRIP (AC, GROUND-IN INDENTATIONS)

Sta - Sta	SHOULDER	LF	STA
100+00 - 327+24	Lt OUTSIDE	22,696	227
100+00 - 327+24	Rt OUTSIDE	22,696	227
104+20 - 322+76	Lt INSIDE	21,856	219
104+20 - 322+76	Rt INSIDE	21,856	219
TOTAL			892

CRASH CUSHION TYPE REACT 9SCBS

Sta	EA
124+25	1
323+25	1
TOTAL	2

BARRIER GATE (CONCRETE BARRIER)

Sta	EA
152+96	1
205+84	1
258+64	1
TOTAL	3

CONCRETE BARRIER (TYPE 50 MODIFIED)

Sta - Sta	LF
152+21 - 152+36	15
153+56 - 153+71	15
205+09 - 205+24	15
206+44 - 206+59	15
257+89 - 258+04	15
259+24 - 259+39	15
TOTAL	90

RELOCATE MAILBOX

Sta	SIDE	EA
130+53	Lt	1
212+15	Lt	1
TOTAL		2

CONCRETE BARRIER (TYPE 60)

Sta - Sta	LF
104+25 - 152+21	4796
153+71 - 205+09	5138
206+59 - 257+89	5130
259+39 - 323+25	6386
TOTAL	21,450

RETAINING WALL ITEMS

LOCATION	STRUCTURE EXCAVATION (RETAINING WALL)	STRUCTURE BACKFILL (RETAINING WALL)	STRUCTURAL CONCRETE (RETAINING WALL)	BAR REINFORCING STEEL (RETAINING WALL)	Cl 2 AB	CABLE RAILING	MINOR CONCRETE (GUTTER)
Sta - Sta	CY	CY	CY	LB	CY	LF	CY
229+00 - 234+05 Rt (RW No. 1)	389	529	171	15,861	235	505	21.2
234+83 - 340+00 Rt (RW No. 2)	399	542	175	16,239	240	517	21.8
TOTAL	788	1071	346	32,100	475	1,022	43.0

SUMMARY OF QUANTITIES
Q-1

STATE OF CALIFORNIA - DEPARTMENT OF TRANSPORTATION
Caltrans DESIGN

FUNCTIONAL SUPERVISOR: NOMER GUITERREZ
CALCULATED-DESIGNED BY: OSAMA ABDEL-MAGIED
CHECKED BY: RICHARD BOYER
REVISED BY: OA
DATE REVISED: 04/30/12

LAST REVISION 00-00-00
DATE PLOTTED => 27-DEC-2012
TIME PLOTTED => 15:21

Dist	COUNTY	ROUTE	POST MILES TOTAL PROJECT	SHEET No.	TOTAL SHEETS
10	SJ	12	0.1/R4.4	82	130

REGISTERED CIVIL ENGINEER 4/16/12 DATE

12-24-12
PLANS APPROVAL DATE

REGISTERED PROFESSIONAL ENGINEER RICHARD BOYER No. 75844 Exp. 6/30/14 CIVIL STATE OF CALIFORNIA

THE STATE OF CALIFORNIA OR ITS OFFICERS OR AGENTS SHALL NOT BE RESPONSIBLE FOR THE ACCURACY OR COMPLETENESS OF SCANNED COPIES OF THIS PLAN SHEET.

METAL BEAM GUARDRAIL ITEMS

LOCATION	SIDE	REMOVE MBGR	TRANSITION RAILING (TYPE WB)	MBGR (WOOD POST)		ALTERNATIVE FLARED TERMINAL SYSTEM	ALTERNATIVE IN-LINE TERMINAL SYSTEM	END ANCHOR ASSEMBLY (TYPE SPT)
				TYPE 12B	TYPE 12BB			
Sta - Sta		LF	EA			EA	EA	EA
100+00 - 100+62.5	L†	62.5	1			1		
100+00 - 104+80	R†	62.5	1		417.5		1	
228+20 - 234+05	R†		1	522.5		1		
234+83 - 240+90	R†		1		522.5		1	
232+92.5 - 234+05	L†		1				1	
234+83 - 235+95.5	L†		1			1		
322+50 - 327+24	L†	62.5	1		450		1	
325+83 - 327+24	R†	62.5	1			1		
136+80	L†					1		1
103+60	L†					1		
114+30	L†					1		
125+80	L†					1		
SUBTOTAL		250	8	522.5	1,390	8	4	1
TOTAL		250	8	1,912.5		8	4	1

TEMPORARY FENCE (TYPE ESA)

LOCATION	SIDE	LF
Sta - Sta		
100+00	R†	77
100+00 - 106+79	L†	749
178+97 - 179+26	R†	103
223+86 - 234+79	R†	1,465
234+02 - 245+00	L†	1,406
318+00 - 318+88.5	R†	95
318+98 - 319+76	R†	84
319+91 - 327+00	R†	830
320+17.5 - 327+00	L†	758
TOTAL		5,567

TEMPORARY CONSTRUCTION ENTRANCE (TYPE 2)

STATION	EA
130+00	1
179+00	1
234+50	1
319+37	1
TOTAL	4

SUMMARY OF QUANTITIES
Q-2

STATE OF CALIFORNIA - DEPARTMENT OF TRANSPORTATION
Caltrans® DESIGN

FUNCTIONAL SUPERVISOR: NOMER GUITERREZ
CALCULATED-DESIGNED BY: OSAMA ABDEL-MAGIED
CHECKED BY: RICHARD BOYER
REVISED BY: OA
DATE REVISED: 04/27/12

LAST REVISION 00-00-00
DATE PLOTTED => 27-DEC-2012
TIME PLOTTED => 15:21

Dist	COUNTY	ROUTE	POST MILES TOTAL PROJECT	SHEET No.	TOTAL SHEETS
10	SJ	12	0.1/R4.4	83	130

REGISTERED CIVIL ENGINEER 4/16/12 DATE

12-24-12
PLANS APPROVAL DATE

REGISTERED PROFESSIONAL ENGINEER RICHARD BOYER No. 75844 Exp. 6/30/14 CIVIL STATE OF CALIFORNIA

THE STATE OF CALIFORNIA OR ITS OFFICERS OR AGENTS SHALL NOT BE RESPONSIBLE FOR THE ACCURACY OR COMPLETENESS OF SCANNED COPIES OF THIS PLAN SHEET.

NOTES:

1. FOR ACCURATE RIGHT OF WAY DATA, CONTACT RIGHT OF WAY ENGINEERING AT THE DISTRICT OFFICE.
2. CABLE RAILING TO FOLLOW R/W PER STANDARD PLAN B11-47.
3. WALL DRAIN TO FOLLOW SPACING (25' APART ON CENTER) PER STANDARD PLAN B3-9.
4. FOR ADDITIONAL RETAINING WALL DETAILS AND QUANTITIES, SEE RETAINING WALL No. 1 AND RETAINING WALL No. 2 PILE LAYOUT AND Q-1 SHEETS.

LEGEND

- STRUCTURE EXCAVATION
- STRUCTURE BACKFILL
- IMPORTED BORROW
- Class 2 AB
- RETAINING WALL (TYPE 1)
- RETAINING WALL PILE

QUANTITIES

FURNISH PILING (CLASS 90) (ALTERNATIVE W)	12,000 LF
DRIVE PILE (CLASS 90) (ALTERNATIVE W)	152 EA

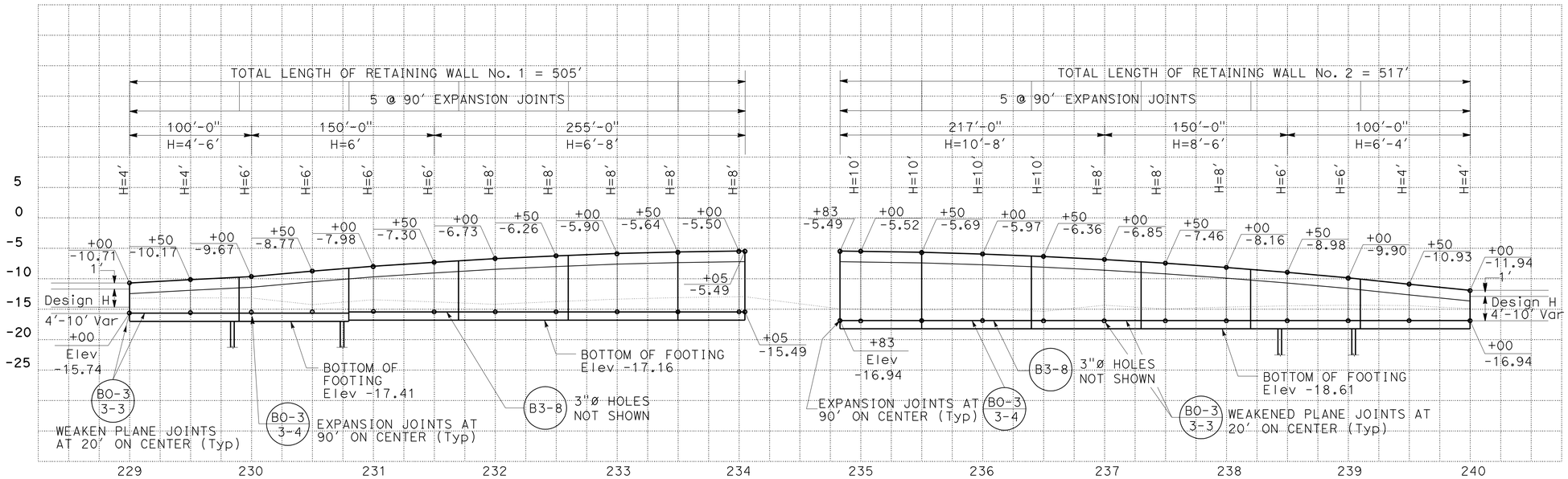

ELEVATION
SCALE: Horiz 1" = 50'
Vert 1" = 10'

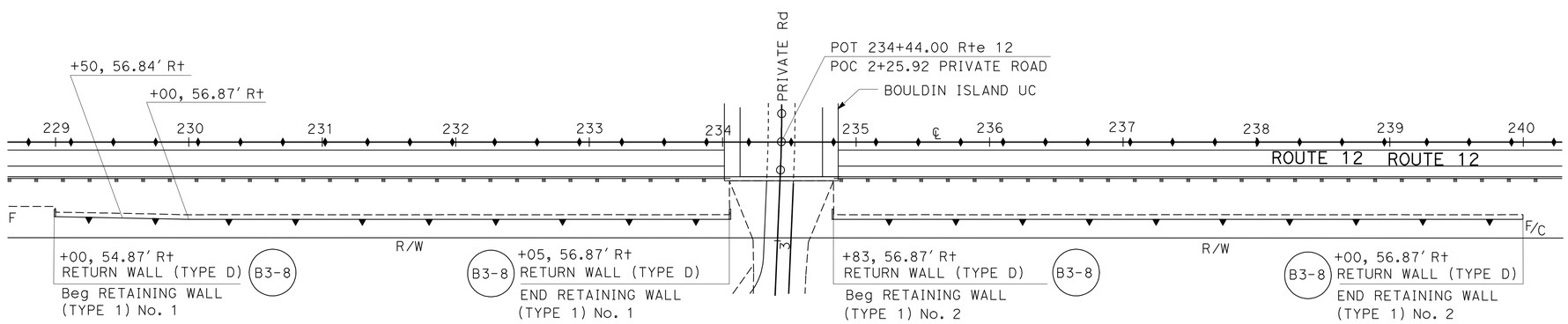

PLAN
SCALE: 1 = 50'

RETAINING WALL No. 1 AND 2 (TYPE 1) B3-1

APPROVED FOR RETAINING WALL WORK ONLY

RETAINING WALL PLAN

SCALE AS SHOWN

R-1

STATE OF CALIFORNIA - DEPARTMENT OF TRANSPORTATION
Caltrans DESIGN
FUNCTIONAL SUPERVISOR: NOMER GUITERREZ
CALCULATED-DESIGNED BY: OSAMA ABDEL-MAGIED
CHECKED BY: RICHARD BOYER
REVISED BY: OA
DATE REVISED: 04/27/12

LAST REVISION 00-00-00 DATE PLOTTED => 28-DEC-2012 TIME PLOTTED => 11:34

Dist	COUNTY	ROUTE	POST MILES TOTAL PROJECT	SHEET No.	TOTAL SHEETS
10	SJ	12	0.1/R4.4	84	130

REGISTERED CIVIL ENGINEER 4/16/12 DATE

12-24-12
PLANS APPROVAL DATE

REGISTERED PROFESSIONAL ENGINEER
RICHARD BOYER
No. 75844
Exp. 6/30/14
CIVIL
STATE OF CALIFORNIA

THE STATE OF CALIFORNIA OR ITS OFFICERS OR AGENTS SHALL NOT BE RESPONSIBLE FOR THE ACCURACY OR COMPLETENESS OF SCANNED COPIES OF THIS PLAN SHEET.

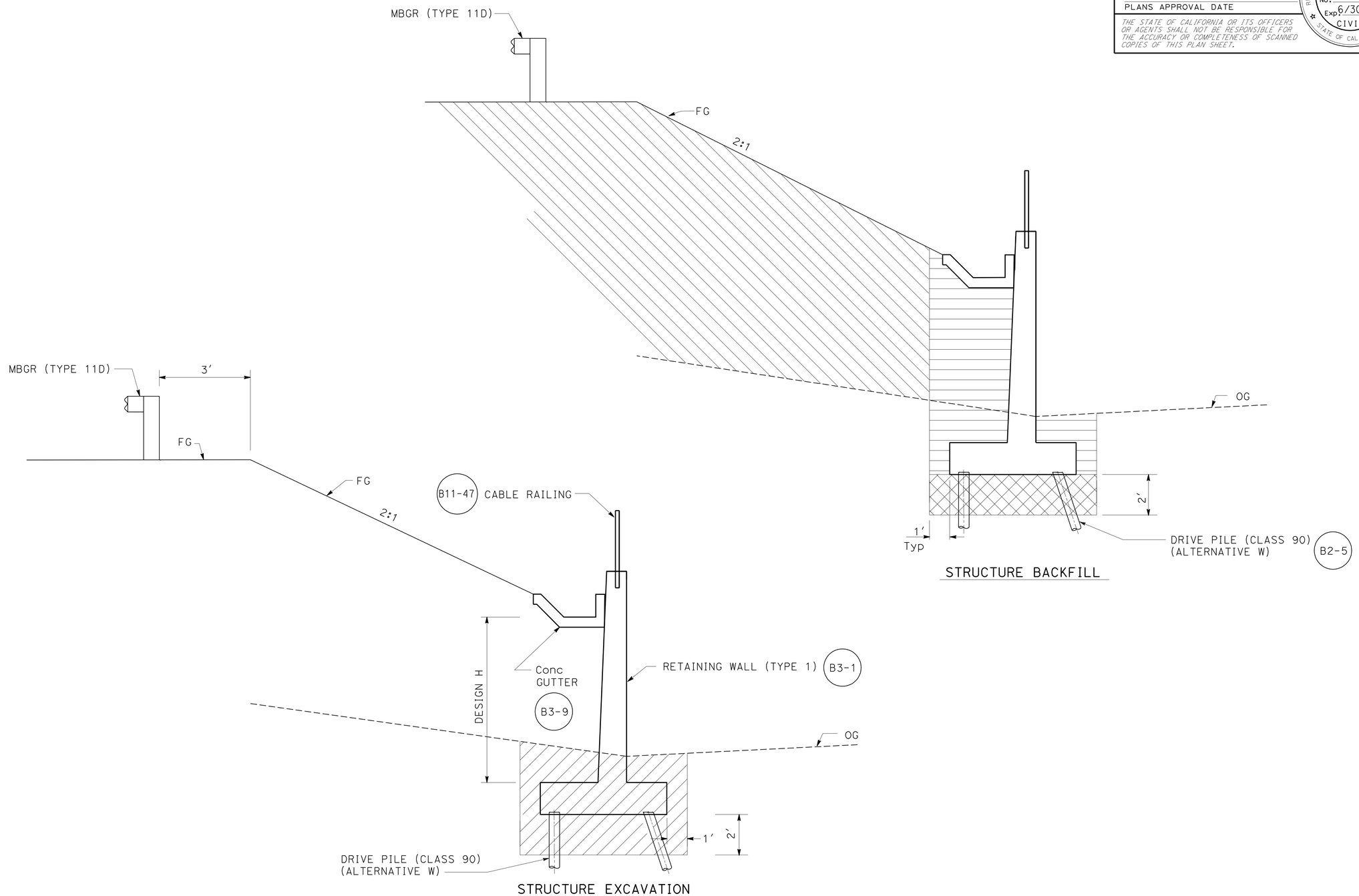

RETAINING WALL (TYPE 1)

RETAINING WALL DETAILS

NO SCALE

R-2

REVISED BY	DATE REVISED
OA	04/30/12

CALCULATED-DESIGNED BY: OSAMA ABDEL-MAGIED
CHECKED BY: RICHARD BOYER

FUNCTIONAL SUPERVISOR: NOMER GUITERREZ

STATE OF CALIFORNIA - DEPARTMENT OF TRANSPORTATION
Caltrans
DESIGN

LAST REVISION 00-00-00
DATE PLOTTED => 14-JAN-2013
TIME PLOTTED => 13:45

Dist	COUNTY	ROUTE	POST MILES TOTAL PROJECT	SHEET No.	TOTAL SHEETS
10	SJ	12	0.1/R4.4	85	130

REGISTERED ELECTRICAL ENGINEER 4/16/12 DATE

12-24-12
PLANS APPROVAL DATE

REGISTERED PROFESSIONAL ENGINEER JASPAL SINGH No. 16657 Exp. 6/30/14 STATE OF CALIFORNIA

THE STATE OF CALIFORNIA OR ITS OFFICERS OR AGENTS SHALL NOT BE RESPONSIBLE FOR THE ACCURACY OR COMPLETENESS OF SCANNED COPIES OF THIS PLAN SHEET.

LEGEND: (FOR SHEET E-1 AND E-2)

1. RS Exist ADVANCE FB INSTALLATION.
2. INSTALL TYPE 15-FBS ADVANCE FLASHING BEACON (MODIFIED) 500 VA, 480/120 V, 1 Ø, GENERAL PURPOSE STEP DOWN TRANSFORMER WITH 2 A PRIMARY FUSE IN NEMA 3R ENCLOSURE AND 12" WARNING GONG TYPE 1 BELL, SEE DETAIL A ON THIS SHEET. SEE INSTALLATION DETAILS FOR MODIFIED TYPE 15-FBS ON SHEETS SES-1 AND SES-2.
3. RS Exist EXTINGUISHABLE MESSAGE SIGN INSTALLATION.
4. EXTINGUISHABLE MESSAGE SIGN WITH FLASHING BEACON SEE Std PLAN RSP ES-14A AND SHEET E-2 DETAILS. INSTALL 1000 VA, 480/120 V, 1 Ø, GENERAL PURPOSE STEP DOWN TRANSFORMER WITH 3 A PRIMARY FUSE IN NEMA 3R ENCLOSURE, SEE DETAIL B ON THIS SHEET.
5. PLACE TRAFFIC PULL BOX WITHIN 200 FEET OF EACH OTHER.

NOTES:

1. THE CONTRACTOR SHALL INSTALL SPECIAL WARNING SIGN ON FB, SEE SIGN SHEETS FOR DETAILS.
2. Exist SERVICE DISCONNECTS ARE LOCATED IN THE CONTROL ROOM, BEFORE DISCONNECTING SERVICE, THE CONTRACTOR SHALL COORDINATE WITH THE MAINTENANCE SUPERVISOR AT 707-428-2111.
3. FOR ACCURATE RIGHT OF WAY DATA, CONTACT RIGHT OF WAY ENGINEERING AT THE DISTRICT OFFICE.

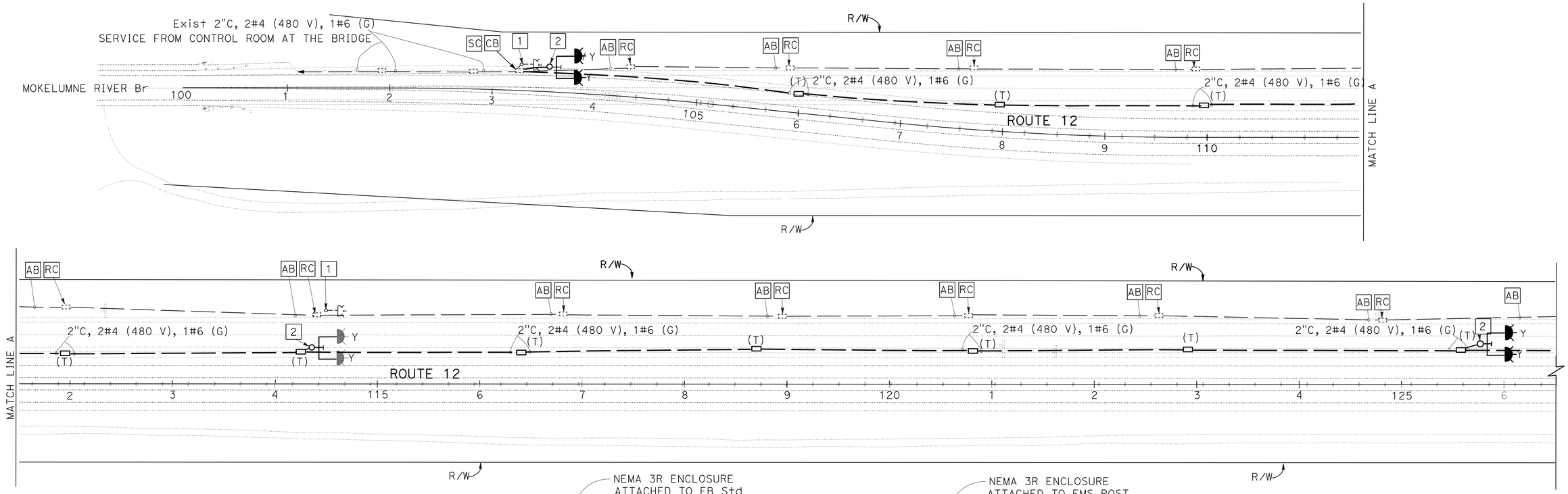

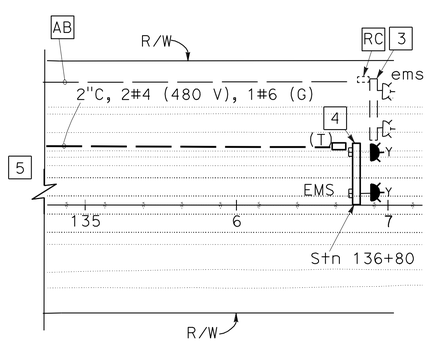

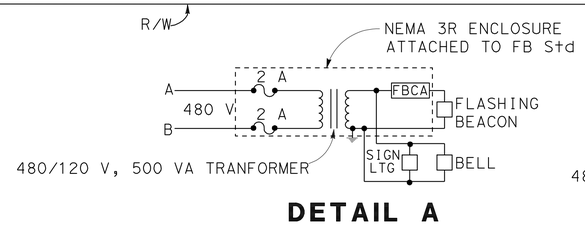

DETAIL A

CONTROL DIAGRAM FOR FLASHING BEACON

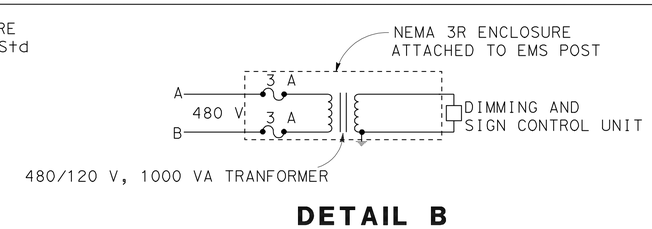

DETAIL B

CONTROL DIAGRAM FOR EMS AND FLASHING BEACON

APPROVED FOR ELECTRICAL WORK ONLY

MODIFY EXTINGUISHABLE MESSAGE SIGN
MODIFY FLASHING BEACON

SCALE: 1" = 50'

E-1

STATE OF CALIFORNIA - DEPARTMENT OF TRANSPORTATION
Caltrans® **ELECTRICAL DESIGN**

FUNCTIONAL SUPERVISOR: ALI BAKHDOUD
CALCULATED-DESIGNED BY: JASPAL SINGH
CHECKED BY: JORGE RAMIREZ
REVISED BY: JS
DATE REVISED: 04/25/12

LAST REVISION 04-24-12
DATE PLOTTED => 27-DEC-2012
TIME PLOTTED => 15:22

Dist	COUNTY	ROUTE	POST MILES TOTAL PROJECT	SHEET No.	TOTAL SHEETS
10	SJ	12	0.1/R4.4	86	130

REGISTERED ELECTRICAL ENGINEER 4/16/12 DATE

12-24-12
PLANS APPROVAL DATE

REGISTERED PROFESSIONAL ENGINEER JASPAL SINGH No. 16657 Exp. 6/30/14 STATE OF CALIFORNIA

THE STATE OF CALIFORNIA OR ITS OFFICERS OR AGENTS SHALL NOT BE RESPONSIBLE FOR THE ACCURACY OR COMPLETENESS OF SCANNED COPIES OF THIS PLAN SHEET.

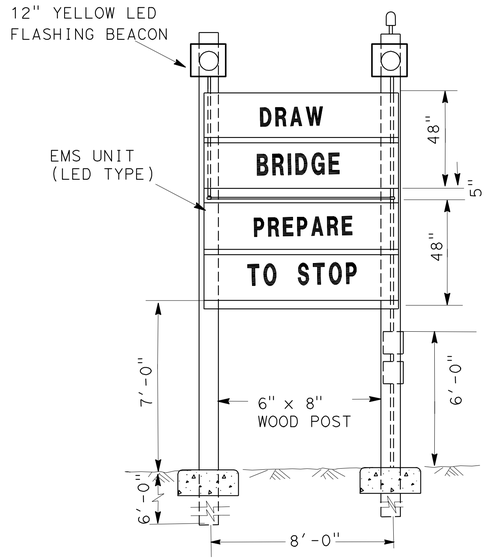

FRONT VIEW

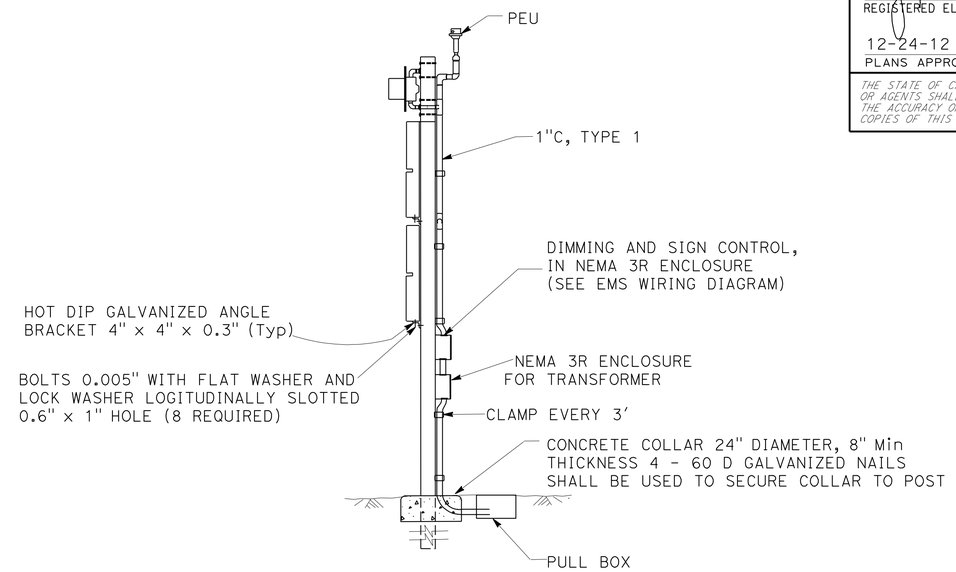

SIDE VIEW

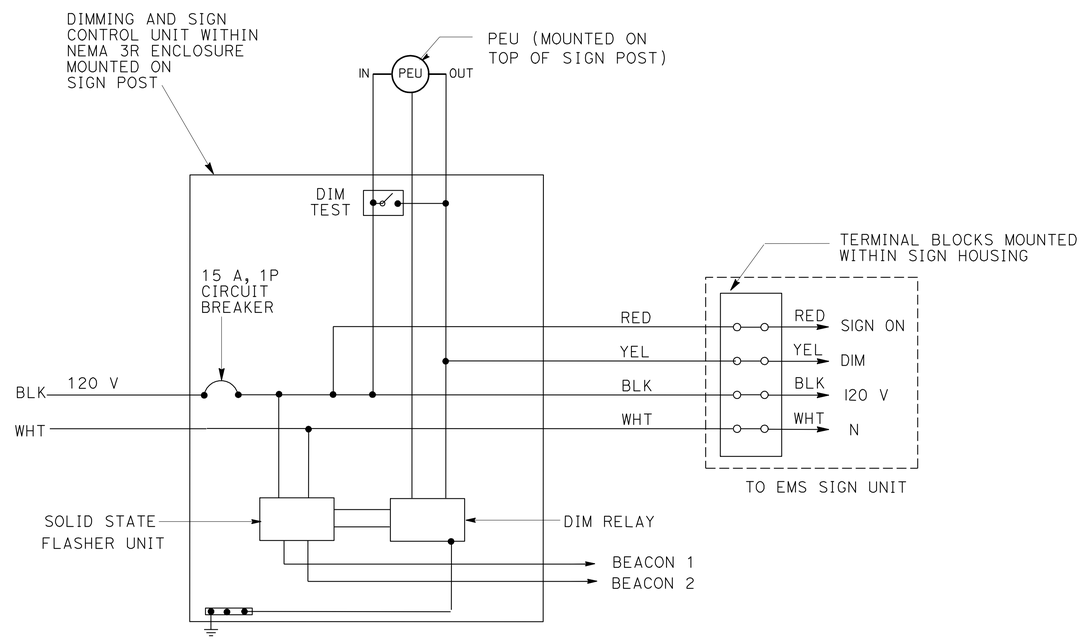

EMS WIRING DIAGRAM

MODIFY EXTINGUISHABLE MESSAGE SIGN (ELECTRICAL DETAILS)

NO SCALE

E-2

STATE OF CALIFORNIA - DEPARTMENT OF TRANSPORTATION
Caltrans® ELECTRICAL DESIGN

FUNCTIONAL SUPERVISOR: ALI BAKHDOUD
CALCULATED-DESIGNED BY: JASPAL SINGH
CHECKED BY: JORGE RAMIREZ
REVISED BY: JS
DATE REVISED: 04/25/12

LAST REVISION 04-24-12 | DATE PLOTTED => 27-DEC-2012 | TIME PLOTTED => 15:21

DIST	COUNTY	ROUTE	POST MILES TOTAL PROJECT	SHEET No	TOTAL SHEETS
10	SJ	12	0.1/4.1	87	130

Eliseo Lopez 12/15/09
REGISTERED CIVIL ENGINEER DATE

12-24-12
PLANS APPROVAL DATE

REGISTERED PROFESSIONAL ENGINEER ELISEO LOPEZ No. C72910 Exp. 12/31/10 CIVIL STATE OF CALIFORNIA

The State of California or its officers or agents shall not be responsible for the accuracy or completeness of electronic copies of this plan sheet.

TABLE A

Pole Type	Pole Data				Base Plate Data				"d" 2'-6" ø CIDH Pile		Structural Steel lbs plus 3.5% Galvanizing
	Height "h"	Min OD		Thickness	"C"	Thickness	Anchor Bolts				
		Base	Top				Size	BC = Bolt circle	Level Ground	Sloping Ground	
15-FBS (Modified)	18'-0"	8"	5.5"	0.1793"	1'-0"	1"	1"x 3'-0"x 4"	11"	7'-0"	9'-0"	330

TABLE B

Attachment	Mounting Height
Nema Enclosure	4'-0" Max Bottom Clr
4'-0" X 1'-6" Sign Panel	9'-9" Max Bottom Clr

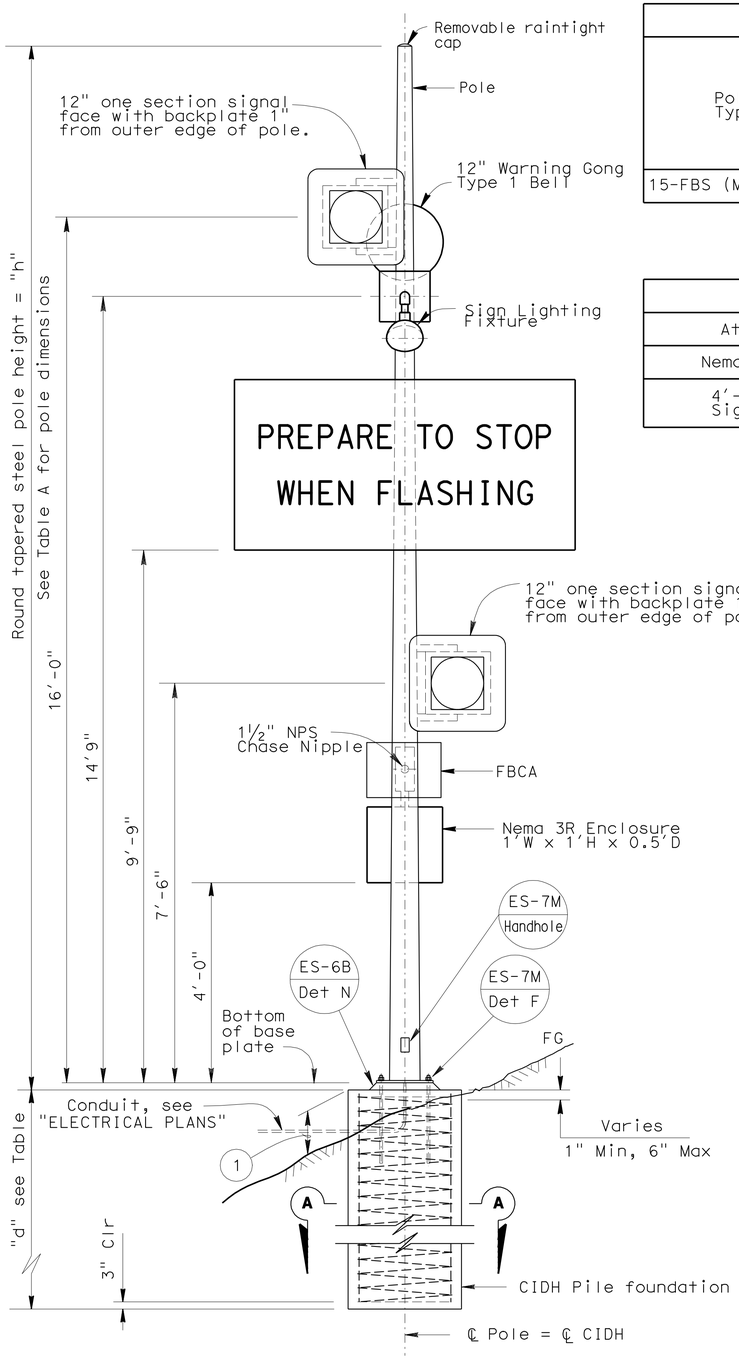

ELEVATION

NO SCALE

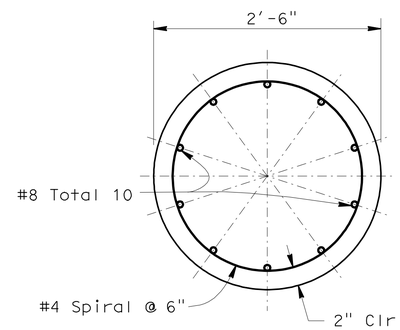

SECTION A-A

NO SCALE

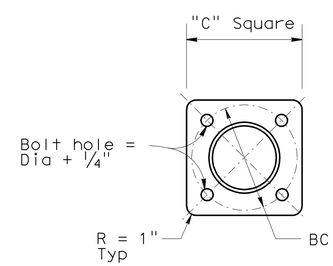

BASE PLATE

NO SCALE

GENERAL NOTES:

SPECIFICATIONS

Design: AASHTO Standard Specifications for Structural Supports for Highway Signs, Luminaires and Traffic Signals dated 2001.

LOADING

Wind Loadings: 100 MPH

UNIT STRESSES

Structural Steel: fy = 48,000 psi tapered steel tube
fy = 36,000 psi unless otherwise noted.

Anchor bolts = A307

Reinforced Concrete: f'c = 3,600 psi
fy = 60,000 psi

NOTES:

1. All steel shall be galvanized after fabrication.
2. During pole erection the post shall be raked as necessary with the use of leveling nuts to provide a plumb pole axis.
3. The foundation shall be treated as level ground condition if the slope inclination is flatter than 4H:1V.
4. Weight of Nema 3R Enclosure to be 25 lb Max and weight of 12" Warning Gong Type 1 Bell to be 30 lb Max.
5. See "2006 STANDARD PLANS" RS4 for back brace details for sign panels.
6. See "2006 STANDARD PLANS" ES-7J for Type 15-FBS pole, and ES-7M for Anchorage Details.
7. See "2006 STANDARD PLANS" RSP ES-4D and ES-4E for mounting details.
8. Foundation design is based on 2001 AASHTO article 13.6 Broms' approximate procedure assuming a cohesionless material. The angle of internal friction used is 30 degrees and unit weight of soil used is 120 lb/ft³.
9. For details not shown, see "2006 STANDARD PLANS" and "2006 REVISED STANDARD PLANS".

NOTE:
THE CONTRACTOR SHALL VERIFY ALL CONTROLLING FIELD DIMENSIONS BEFORE ORDERING OR FABRICATING ANY MATERIAL.

(1) 1"-3" Max for sloped finished grade.

BRANCH CHIEF Jeffrey B Woody

	BY	CHECKED
DESIGN	ELISEO LOPEZ	DEVANG VORA
DETAILS	A R DUDSAK	DEVANG VORA
QUANTITIES	ELISEO LOPEZ	DEVANG VORA

STATE OF CALIFORNIA
DEPARTMENT OF TRANSPORTATION

DIVISION OF ENGINEERING SERVICES
DESIGN AND TECHNICAL SERVICES
SPECIAL DESIGNS BRANCH A

BRIDGE NO. X
POST MILE 0.1/4.1

ADVANCE FLASHING BEACON TYPE 15-FBS (MODIFIED)

POLE DETAILS

SES-1

(ENGLISH) SPECIAL DESIGNS BRANCH BORDER SHEET (REV. 7-1-09)

ORIGINAL SCALE IN INCHES FOR REDUCED PLANS 0 1 2 3

CU 10
EA 0g8001

DISREGARD PRINTS BEARING EARLIER REVISION DATES

REVISION DATES: 9/12/09 11/24/09 12/16/09 8/18/10

SHEET X OF X

FILE => spec_des_br_prj/2009sd/10-0g8001/10-0g8001_e2.dgn

USERNAME => s117606 DATE PLOTTED => 27-DEC-2012 TIME PLOTTED => 15:50

DIST	COUNTY	ROUTE	POST MILES TOTAL PROJECT	SHEET No	TOTAL SHEETS
10	SJ	12	0.1/4.1	88	130

Eliseo Lopez 12/15/09
REGISTERED CIVIL ENGINEER DATE

12-24-12
PLANS APPROVAL DATE

REGISTERED PROFESSIONAL ENGINEER
ELISEO LOPEZ
No. C72910
Exp. 12/31/10
CIVIL
STATE OF CALIFORNIA

The State of California or its officers or agents shall not be responsible for the accuracy or completeness of electronic copies of this plan sheet.

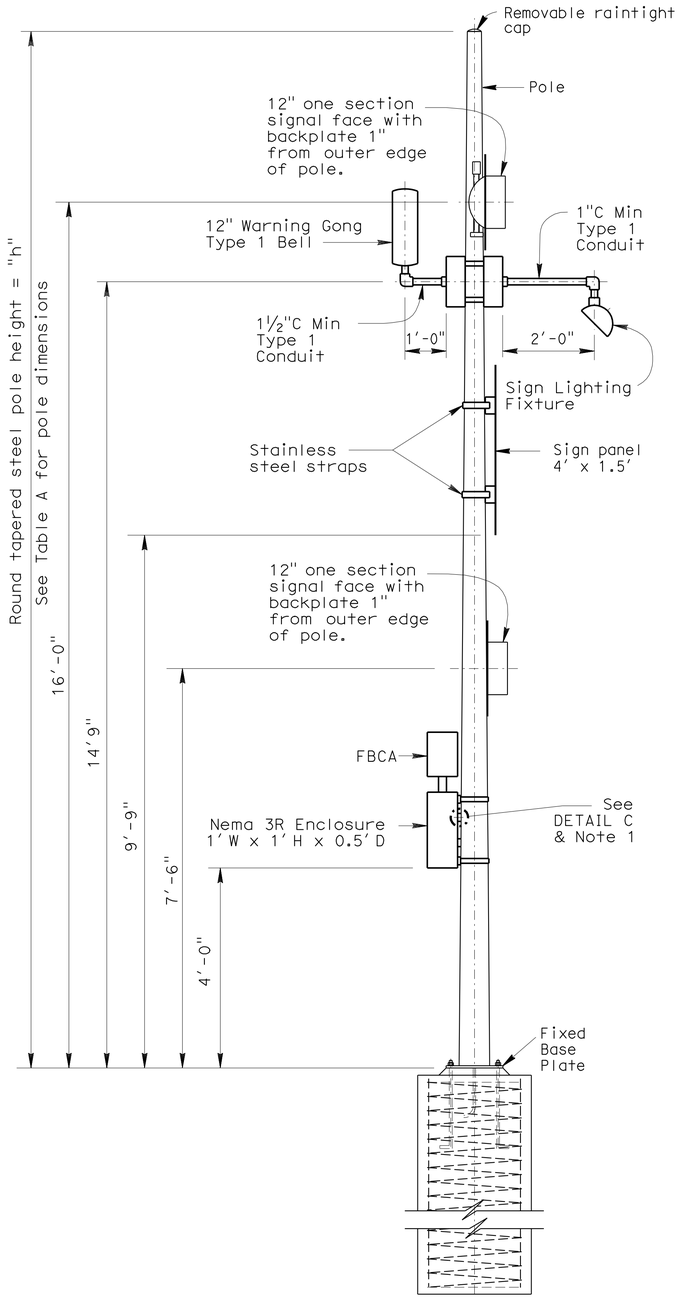

SIDE VIEW

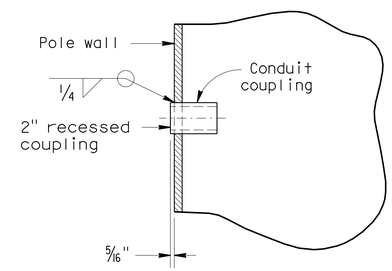

2" RECESSED COUPLING DETAIL C (TYPICAL)

NOTES:

1. Coupling location above ground and spacing shall be verified to match choice of enclosure, prior to fabrication.
2. All attachments, unless otherwise noted, shall be mounted to pole with stainless steel straps or other method without drilling holes in pole. Enclosure may require drilling through post for mounting. Method of mounting enclosure will require the Engineer's approval.
3. Type 15-FBS (Modified) Pole to have Fixed Base Plate.
4. For Details not shown, see "2006 Standard Plans" and "2006 Revised Standard Plans".

NOTE:
THE CONTRACTOR SHALL VERIFY ALL CONTROLLING FIELD DIMENSIONS BEFORE ORDERING OR FABRICATING ANY MATERIAL.

BRANCH CHIEF Jeffrey B Woody

	BY	CHECKED
DESIGN	ELISEO LOPEZ	DEVANG VORA
DETAILS	A R DUDSAK	DEVANG VORA
QUANTITIES	ELISEO LOPEZ	DEVANG VORA

STATE OF CALIFORNIA
DEPARTMENT OF TRANSPORTATION

DIVISION OF ENGINEERING SERVICES
DESIGN AND TECHNICAL SERVICES
SPECIAL DESIGNS BRANCH A

BRIDGE NO. X
POST MILE 0.1/4.1

ADVANCE FLASHING BEACON TYPE 15-FBS (MODIFIED)

POLE DETAILS-SIDE ELEVATION

SES-2

(ENGLISH) SPECIAL DESIGNS BRANCH BORDER SHEET (REV. 7-1-09)

ORIGINAL SCALE IN INCHES FOR REDUCED PLANS 0 1 2 3

CU 10
EA 0g8001

DISREGARD PRINTS BEARING EARLIER REVISION DATES

REVISION DATES: ~~9/12/09~~ ~~11/24/09~~ ~~12/18/09~~ 8/18/10

SHEET X OF X

FILE => spec_des_br_prj/2009sd/10-0g8001/10-0g8001_e3.dgn

USERNAME => s117606 DATE PLOTTED => 27-DEC-2012 TIME PLOTTED => 15:50

DIST	COUNTY	ROUTE	POST MILES TOTAL PROJECT	SHEET NO.	TOTAL SHEETS
10	SJ	12	0.1/R4.4	89	130

REGISTERED CIVIL ENGINEER

November 17, 2006
PLANS APPROVAL DATE

REGISTERED PROFESSIONAL ENGINEER
Dallas Forester
No. C37765
Exp. 12-31-06
CIVIL
STATE OF CALIFORNIA

The State of California or its officers or agents shall not be responsible for the accuracy or completeness of electronic copies of this plan sheet.

To accompany plans dated 12-24-12

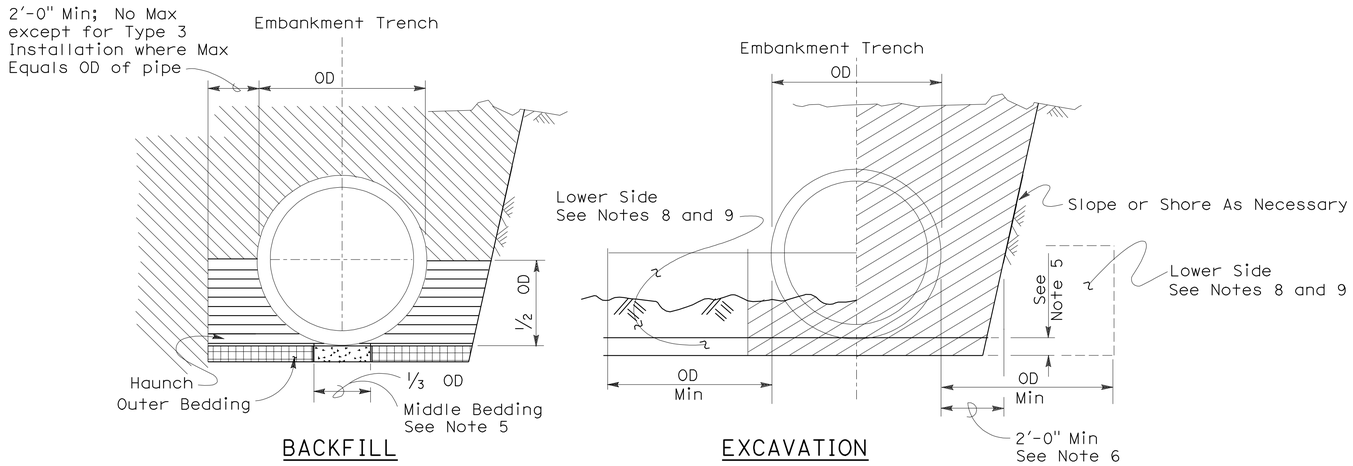

Roadway Embankment

Structure Backfill (Culvert) See Note 6

Structure Backfill (Culvert) See Note 6

Loose Backfill

Excavation Structure (Culvert)

TYPE 1 INSTALLATION:

The haunch and outer bedding shall be compacted to a minimum 90 percent relative compaction. In addition, the minimum sand equivalent in these areas shall be 30 and the maximum percentage passing the 75 μm sieve size shall be 12.

TYPE 2 INSTALLATION:

The haunch and outer bedding shall be compacted to a minimum 90 percent relative compaction. In addition, the minimum sand equivalent in these areas shall be 25.

TYPE 3 INSTALLATION:

The haunch and outer bedding shall be compacted to a minimum 85 percent relative compaction. 90 percent relative compaction will be required where the fill over the pipe is less than 4'-0" or 1/2 OD.

INSTALLATION TYPE 1

MINIMUM CLASS AND D-LOAD	COVER	
	108" Dia AND SMALLER	OVER 108" Dia
Class II 1000D	14.9'	12.9'
Class III 1350D	15.0' - 20.9'	13.0' - 18.9'
Class III Special 1700D	21.0' - 26.9'	19.0' - 24.9'
Class IV 2000D	27.0' - 31.9'	25.0' - 29.9'
Class IV Special 2500D	32.0' - 40.9'	30.0' - 38.9'
Class V 3000D	41.0' - 49.9'	39.0' - 46.9'
Class V Special 3600D	50.0' - 59.0'	47.0' - 58.0'

INSTALLATION TYPE 2

MINIMUM CLASS AND D-LOAD	COVER
Class II 1000D	9.9'
Class III 1350D	10.0'- 14.9'
Class III Special 1700D	15.0' - 19.9'
Class IV 2000D	20.0' - 24.9'
Class IV Special 2500D	25.0' - 31.9'
Class V 3000D	32.0' - 38.9'
Class V Special 3600D	39.0' - 47.0'

INSTALLATION TYPE 3

MINIMUM CLASS AND D-LOAD	COVER	
	48" Dia AND SMALLER	OVER 48" Dia
Class II 1000D	7.9'	5.9'
Class III 1350D	8.0' - 10.9'	6.0' - 8.9'
Class III Special 1700D	11.0' - 14.9'	9.0' - 12.9'
Class IV 2000D	15.0' - 17.9'	13.0' - 15.9'
Class IV Special 2500D	18.0' - 21.9'	16.0' - 19.9'
Class V 3000D	22.0' - 26.9'	20.0' - 24.9'
Class V Special 3600D	30.0' - 33.0'	25.0' - 31.0'

NOTES:

1. Unless otherwise shown on the plans or specified in the special provision, the Contractor shall have the option of selecting the class of RCP and the type of installation to be used, provided the height of cover does not exceed the value shown for the RCP selected.
   Example: 24" RCP culvert with maximum cover of 19'-0" the options are:
   a) Class III or stronger with Installation Type 1.
   b) Class III Special or stronger with Installation Type 2.
   c) Class IV Special or stronger with Installation Type 3.
   Cover is defined as the maximum vertical distance from top of the pipe to finished grade within the length of any given culvert.
2. The class of RCP and Installation Type selected shall be the same throughout the length of any given culvert.
3. The "length of any culvert" is defined as the culvert between:
   a) Successive drainage structure (inlets, junction boxes, headwalls, etc.).
   b) A drainage structure and the inlet or outlet end of the culvert.
   c) The inlet and outlet end of the culvert when there are no intervening drainage structures.
4. Oval and arch shaped RCP shall not be used.
5. 1/25 OD Min, not less than 3".
6. Slurry cement backfill may be substituted for backfill in the outer bedding and haunch areas. If slurry is used the outer and middle beddings shall be omitted. Prior to installation the soil under the middle 1/3 of the outside diameter of the pipe shall be softened by scarifying or other means to a minimum depth of 1/25 OD, but not less than 3". Where slurry cement backfill is used clear distance to trench wall may be reduced as set forth in Section 19-3.062 of the Standard Specifications.
7. Backfill shall be placed full width of excavation except where dimensions are shown for backfill width or thickness. Dimensions shown are minimums.
8. Lower side shall be suitable material as determined by the Engineer. Otherwise it shall be considered unsuitable as set forth in Section 19-2.02 of the Standard Specifications. See Note 9.
9. Where the pipe is placed in a trench, if the trench walls are sloped at 5 vertical to 1 horizontal or steeper for at least 90 percent of the trench height or up to not less than 12" from the grading plane, the firmness of the soil in the lower side need not be considered.
10. Non-reinforced precast concrete pipe sizes 3'-0" or smaller may be placed under installation Types 1, 2 or 3.

STATE OF CALIFORNIA
DEPARTMENT OF TRANSPORTATION

EXCAVATION AND BACKFILL CONCRETE PIPE CULVERTS

NO SCALE

RSP A62DA DATED NOVEMBER 17, 2006 SUPERSEDES STANDARD PLAN A62DA DATED MAY 1, 2006 - PAGE 20 OF THE STANDARD PLANS BOOK DATED MAY 2006.

REVISED STANDARD PLAN RSP A62DA

2006 REVISED STANDARD PLAN RSP A62DA

10-26-06

DIST	COUNTY	ROUTE	POST MILES TOTAL PROJECT	SHEET NO.	TOTAL SHEETS
10	SJ	12	0.1/R4.4	90	130

Randell D. Hiatt
REGISTERED CIVIL ENGINEER

June 6, 2008
PLANS APPROVAL DATE

REGISTERED PROFESSIONAL ENGINEER
Randell D. Hiatt
No. C50200
Exp. 6-30-09
CIVIL
STATE OF CALIFORNIA

The State of California or its officers or agents shall not be responsible for the accuracy or completeness of electronic copies of this plan sheet.

To accompany plans dated 12-24-12

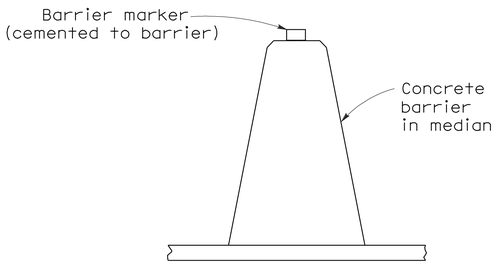

CONCRETE BARRIER TYPE 60 DELINEATION

See Notes 7 and 8

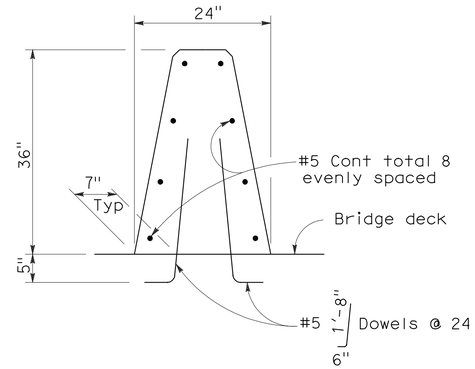

CONCRETE BARRIER TYPE 60A

Details similar to Type 60 except as noted.

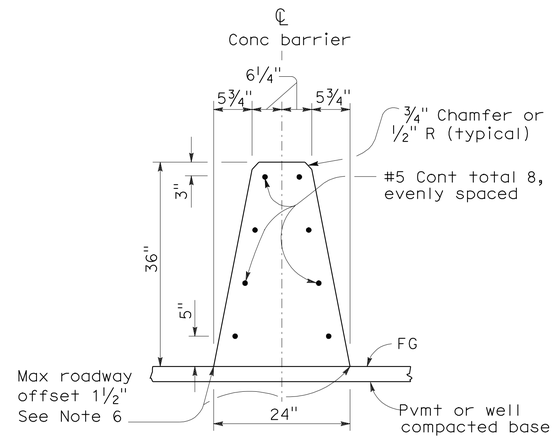

CONCRETE BARRIER TYPE 60

NOTES:

1. See Standard Plan A76B for details of Concrete Barrier Type 60 end anchors, connection to structures and transitions to Concrete Barrier Type 50 and Concrete Barrier Type 60S.
2. See Standard Plan A76C for Concrete Barrier Type 60 transitions at bridge column and sign pedestals.
3. Where glare screen is required on Concrete Barrier Type 60, use Concrete Barrier Type 60G.
4. Where the concrete barrier is added to the face of existing concrete structure, match existing weep holes.
5. Expansion joints in concrete barrier shall be located at all deck, pavement and principal wall joints. Expansion joint filler material shall be the same size as joint or ½" minimum.
6. Where roadway offset is greater than 1½", see Concrete Barrier Type 60C.
7. Barrier delineation to be used when required by the Special Provisions.
8. Spacing of barrier markers to match spacing of raised pavement markers on the adjacent median edgeline pavement delineation.
9. Reinforcing stirrup not required for roadway offsets less than 1'-0".
10. For roadway surfaces offset greater than 1½" to 3", no rebars required. For roadway surfaces offset greater than 3" to 8" use two #4 rebars at 3" above the lower roadway surface. For roadway surfaces offset greater than 8" to 12", use two #4 rebars at 3" above the lower roadway surface and two #4 rebars at 8" above the lower roadway surface. For roadway surfaces offset greater than 12" to 36", use two #4 rebars at 3" above the lower roadway surface and two #4 rebars at every 8" increment vertical spacing above the first two #4 rebars.

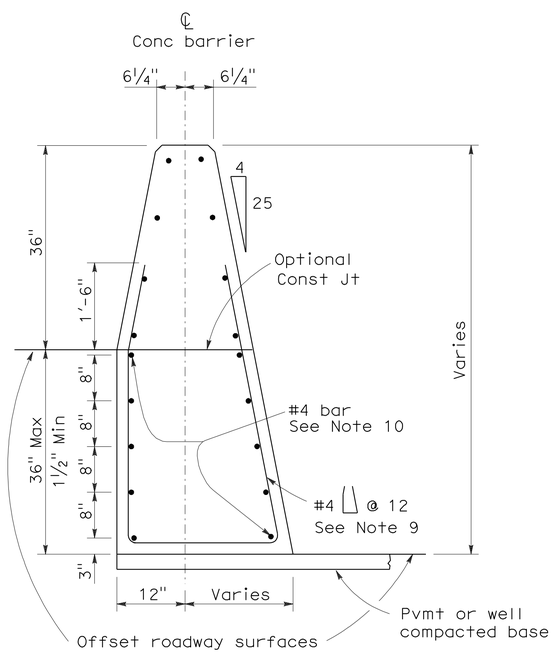

CONCRETE BARRIER TYPE 60C

Details similar to Type 60 except as noted.
Concrete barrier end anchor when necessary.
36" roadway surfaces offset shown.

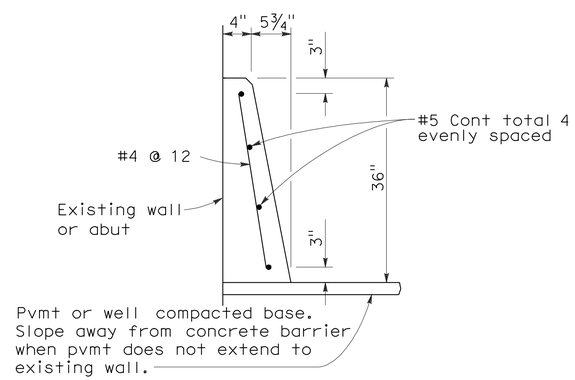

CONCRETE BARRIER TYPE 60D

STATE OF CALIFORNIA
DEPARTMENT OF TRANSPORTATION

CONCRETE BARRIER TYPE 60

NO SCALE

RSP A76A DATED JUNE 6, 2008 SUPERSEDES STANDARD PLAN A76A
DATED MAY 1, 2006 - PAGE 29 OF THE STANDARD PLANS BOOK DATED MAY 2006.

REVISED STANDARD PLAN RSP A76A

2006 REVISED STANDARD PLAN RSP A76A

5-21-08

Dist	COUNTY	ROUTE	POST MILES TOTAL PROJECT	SHEET No.	TOTAL SHEETS
10	SJ	12	0.1/R4.4	91	130

Randell D. Hiatt
REGISTERED CIVIL ENGINEER

May 20, 2011
PLANS APPROVAL DATE

REGISTERED PROFESSIONAL ENGINEER
Randell D. Hiatt
No. C50200
Exp. 6-30-11
CIVIL
STATE OF CALIFORNIA

The State of California or its officers or agents shall not be responsible for the accuracy or completeness of electronic copies of this plan sheet.

To accompany plans dated 12-24-12

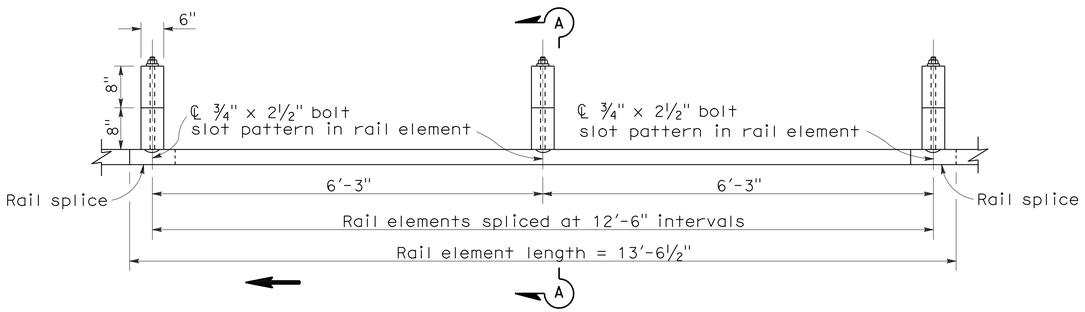

PLAN

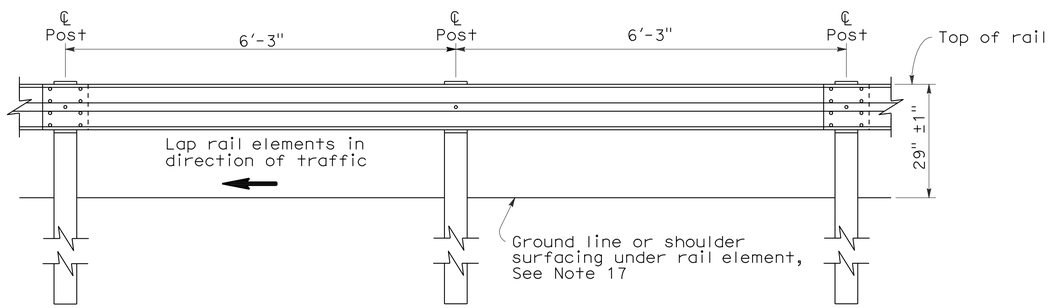

ELEVATION

METAL BEAM GUARD RAILING WITH WOOD POST AND BLOCKS

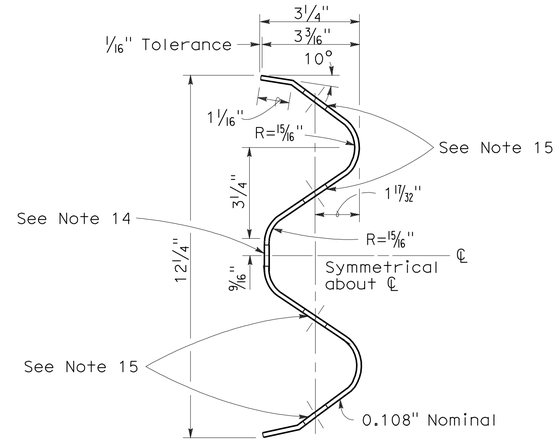

SECTION THRU RAIL ELEMENT

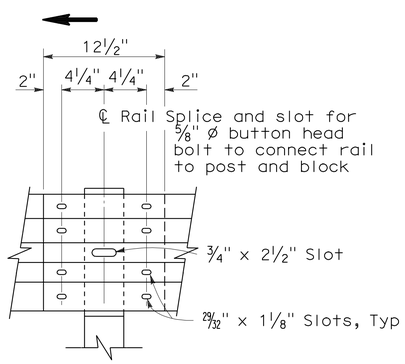

ELEVATION

RAIL ELEMENT SPLICE DETAIL

a) Connect the over lapped end of the rail elements with ⅝" ø x 1⅜" button head oval shoulder splice bolts inserted into the 29⁄32" x 1⅛" slots and bolted together with ⅝" ø recessed hex nuts. Recess of hex nut points toward rail element. A total of 8 bolts and nuts are to be used at each rail splice connection.

b) The ends of the rail elements are to be overlapped in the direction of traffic (see details).

c) Where end cap is to be attached to the end of a rail element, a total of 4 of the above described splice bolts and nuts are to be used.

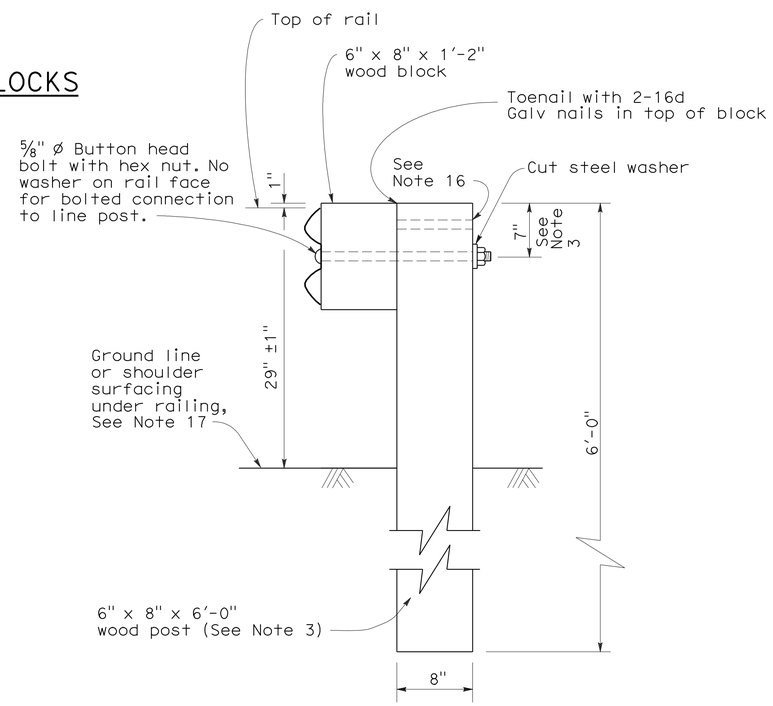

SECTION A-A

TYPICAL WOOD LINE POST INSTALLATION

See Note 4

NOTES:

1. For details of steel post installations, see Standard Plan A77A2.
2. For details of standard hardware used to construct guard railing, see Standard Plan A77B1.
3. For details of wood posts and wood blocks used to construct guard railing, see Standard Plan A77C1.
4. For additional installation details, see Standard Plan A77C3.
5. Guard railing post spacing to be 6'-3" center to center, except as otherwise noted.
6. For guard railing typical layouts, see the A77E, A77F and A77G Series of Standard Plans.
7. For terminal system end treatment details, see the A77L Series of Standard Plans. To connect railing to terminal system end treatment, transition the top of railing height at a ratio of 120:1 to terminal system end treatment height plus one 12'-6" standard railing section at the transitioned height for a horizontal connection to the end treatment.
8. For guard railing end anchor details, see Standard Plans A77H1 and A77I2.
9. For details of guard railing transition to bridge railing, see Standard Plan A77J4.
10. For additional details of guard railing connection to bridge railings, see Standard Plans A77J1, A77J2 and A77K1.
11. For guard railing connection details to abutments and walls, see Standard Plan A77J3.
12. Direction of adjacent traffic indicated by ➡.
13. For typical guard railing delineation and dike positioning details, see Standard Plan A77C4.
14. Slotted hole for bolted connection of rail element to block and post. See "Section Thru Rail Element".
15. Slotted holes for splice bolts to overlap ends of rail element. See "Section Thru Rail Element".
16. Additional hole in uppermost portion of line post is for potential future adjustments of railing height. See Standard Plan A77C1.
17. Install posts in soil.

STATE OF CALIFORNIA
DEPARTMENT OF TRANSPORTATION

METAL BEAM GUARD RAILING STANDARD RAILING SECTION (WOOD POST WITH WOOD BLOCK)

NO SCALE

RSP A77A1 DATED MAY 20, 2011 SUPERSEDES STANDARD PLAN A77A1 DATED MAY 1, 2006 - PAGE 41 OF THE STANDARD PLANS BOOK DATED MAY 2006.

REVISED STANDARD PLAN RSP A77A1

2006 REVISED STANDARD PLAN RSP A77A1

3-10-11

DIST	COUNTY	ROUTE	POST MILES TOTAL PROJECT	SHEET NO.	TOTAL SHEETS
10	SJ	12	0.1/R4.4	92	130

Randell D. Hiatt
REGISTERED CIVIL ENGINEER

June 6, 2008
PLANS APPROVAL DATE

REGISTERED PROFESSIONAL ENGINEER
Randell D. Hiatt
No. C50200
Exp. 6-30-09
CIVIL
STATE OF CALIFORNIA

The State of California or its officers or agents shall not be responsible for the accuracy or completeness of electronic copies of this plan sheet.

To accompany plans dated 12-24-12

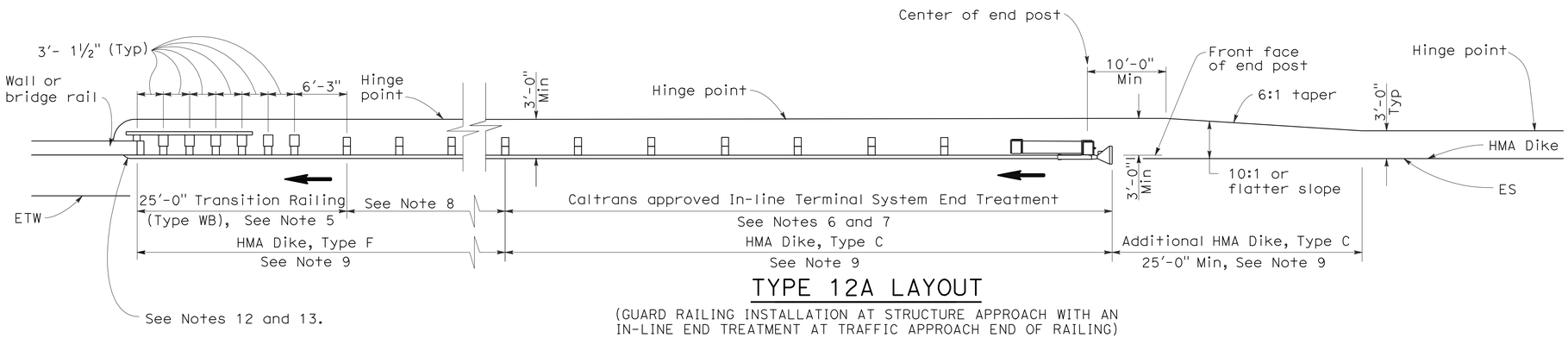

TYPE 12A LAYOUT

(GUARD RAILING INSTALLATION AT STRUCTURE APPROACH WITH AN IN-LINE END TREATMENT AT TRAFFIC APPROACH END OF RAILING)
See Notes 10

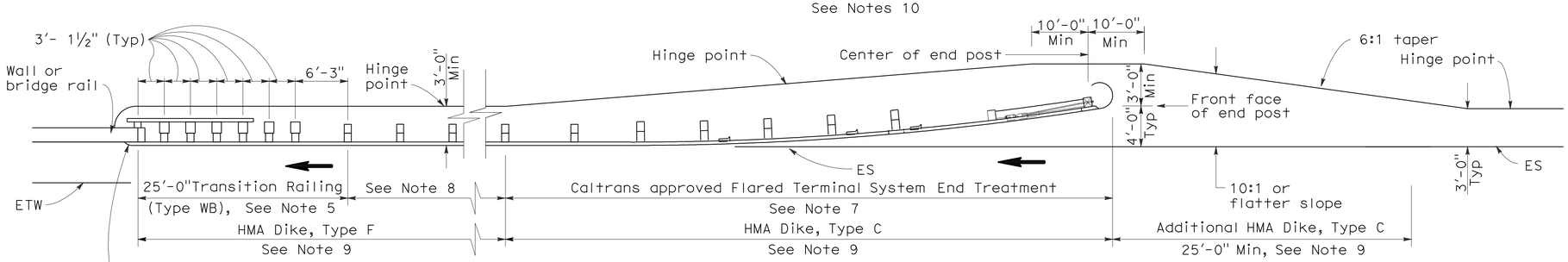

TYPE 12B LAYOUT

(GUARD RAILING INSTALLATION AT STRUCTURE APPROACH WITH A FLARED END TREATMENT AT TRAFFIC APPROACH END OF RAILING)
See Notes 10

NOTES:

1. Line post, blocks and hardware to be used are shown on Standard Plans A77A1, A77A2, A77B1, A77C1 and A77C2.
2. Guard rail post spacing to be 6'-3" center to center, except as otherwise noted.
3. Except as noted, line posts are 6" x 8" x 6'-0" wood with 6" x 8" x 1'-2" wood blocks. W6 x 9 steel posts, 6'-0" in length, with 6" x 8" x 1'-2" notched wood blocks or plastic blocks may be used for 6" x 8" x 6'-0" wood posts with 6" x 8" x 1'-2" wood blocks where applicable and when specified.
4. Direction of adjacent traffic indicated by ➡.
5. For Transition Railing (Type WB) details for Types 12A and 12B Layouts, see Standard Plan A77J4.
6. In-line Terminal System End Treatments are used where site conditions will not accommodate a flared end treatment.
7. The type of terminal system end treatment to be used will be shown on the Project Plans.
8. Dependent on site conditions (embankment height, side slopes, or other fixed objects), it may be advisable to construct additional guard railing (a length equal to multiples of 12'-6" with 6'-3" post spacing) between the transition railing and end treatment.
9. Where placement of dike is required with guard railing installations, see Revised Standard Plan RSP A77C4 for dike positioning details.
10. Type 12A or Type 12B Layouts are typically used:
    a. To the right of approaching traffic, at the end of a structure, on two-lane conventional highway where the roadbed width across the structure is less than 40 feet.
    b. To the left of approaching traffic, at the end of a structure, on two-lane conventional highway where the roadbed width across the structure is less than 40 feet.
    c. To the right of approaching traffic at the end of each structure on multilane freeways or expressways with separate adjacent or parallel bridges.
    d. To the right of approaching traffic at the end of the structure on multilane freeways or expressways with decked median on the bridge.
11. See Revised Standard Plan RSP A77F3 for typical layout used left of approaching traffic at the ends of each structure on multilane freeways or expressways with separate adjacent or parallel bridges.
12. For additional details of typical connections to bridge rail, see Connection Detail AA on Revised Standard Plans RSP A77J1 and RSP A77J2 and Connection Detail FF on Standard Plans A77K1 and A77K2.
13. For additional details of a typical connection to walls or abutments, see Standard Plan A77J3.

STATE OF CALIFORNIA
DEPARTMENT OF TRANSPORTATION

METAL BEAM GUARD RAILING TYPICAL LAYOUTS FOR STRUCTURE APPROACH

NO SCALE

RSP A77F1 DATED JUNE 6, 2008 SUPERSEDES STANDARD PLAN A77F1
DATED MAY 1, 2006 - PAGE 54 OF THE STANDARD PLANS BOOK DATED MAY 2006.

REVISED STANDARD PLAN RSP A77F1

2006 REVISED STANDARD PLAN RSP A77F1

DIST	COUNTY	ROUTE	POST MILES TOTAL PROJECT	SHEET NO.	TOTAL SHEETS
10	SJ	12	0.1/R4.4	93	130

Randell D. Hiatt
REGISTERED CIVIL ENGINEER

June 6, 2008
PLANS APPROVAL DATE

REGISTERED PROFESSIONAL ENGINEER
Randell D. Hiatt
No. C50200
Exp. 6-30-09
CIVIL
STATE OF CALIFORNIA

The State of California or its officers or agents shall not be responsible for the accuracy or completeness of electronic copies of this plan sheet.

To accompany plans dated 12-24-12

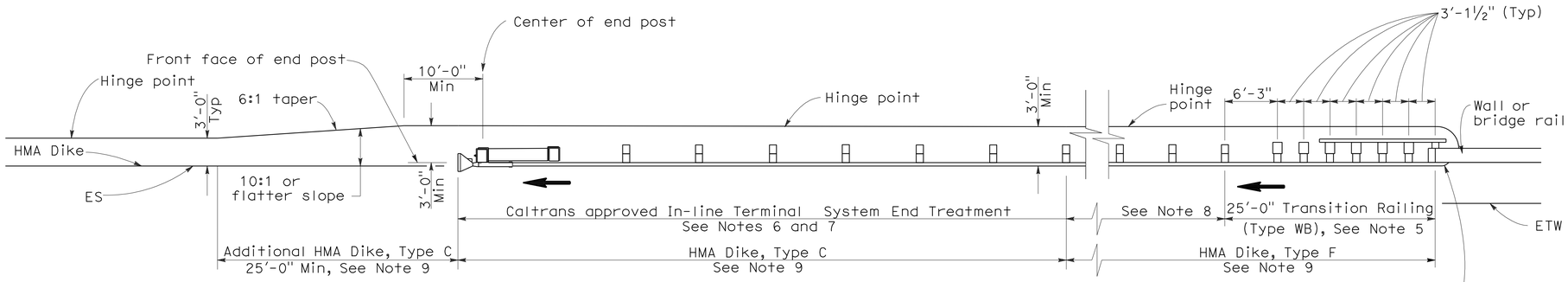

TYPE 12AA LAYOUT

(GUARD RAILING INSTALLATION AT STRUCTURE DEPARTURE WITH AN IN-LINE END TREATMENT AT TRAILING END OF RAILING)
See Notes 9 and 10

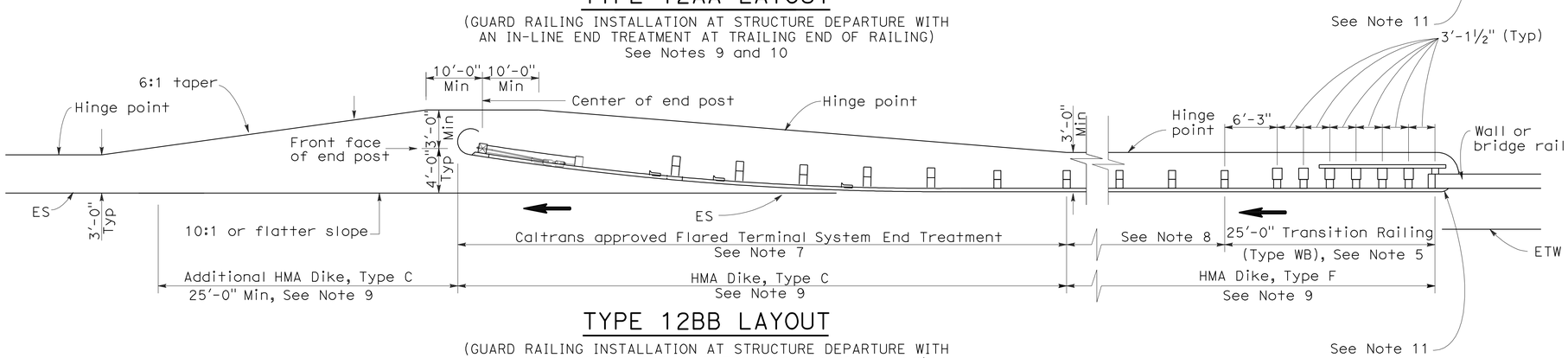

TYPE 12BB LAYOUT

(GUARD RAILING INSTALLATION AT STRUCTURE DEPARTURE WITH A FLARED END TREATMENT AT TRAILING END OF RAILING)
See Notes 9 and 10

NOTES:

1. Line post, blocks and hardware to be used are shown on Standard Plans A77A1, A77A2, A77B1, A77C1 and A77C2.
2. Guard rail post spacing to be 6'-3" center to center, except as otherwise noted.
3. Except as noted, line posts are 6" x 8" x 6'-0" wood with 6" x 8" x 1'-2" wood blocks. W6 x 9 steel posts, 6'-0" in length, with 6" x 8" x 1-2" notched wood blocks or notched recycled plastic blocks may be used for 6" x 8" x 6'-0" wood posts with 6" x 8" x 1'-2" wood blocks where applicable and when specified.
4. Direction of adjacent traffic indicated by ⟶.
5. For Transition Railing (Type WB) details for Types 12AA and 12BB Layouts, see Standard Plan A77J4.
6. In-line Terminal System Treatments are used where site conditions will not accommodate a flared end treatment.
7. The type of terminal system to be used will be shown on the Project Plans.
8. Dependent on site conditions (embankment height, side slopes, other fixed objects), it may be advisable to construct additional guard railing (a length equal to multiples of 12'-6" with 6'-3" post spacing) between the transition railing and end treatments.
9. Where placement of dike is required with guard railing installations, see Revised Standard Plan RSP A77C4 for dike positioning details.
10. Type 12AA or Type 12BB Layouts are typically used to the right of traffic departing a structure on two-way conventional highways where the roadbed width across the structure is less than 40 feet.
11. For additional details of typical connections to bridge rail, see Connection Detail CC on Revised Standard Plan RSP A77J2 and Connection Detail HH on Standard Plans A77k2.

STATE OF CALIFORNIA
DEPARTMENT OF TRANSPORTATION

METAL BEAM GUARD RAILING TYPICAL LAYOUTS FOR STRUCTURE DEPARTURE

NO SCALE

RSP A77F4 DATED JUNE 6, 2008 SUPERSEDES STANDARD PLAN A77F4
DATED MAY 1, 2006 - PAGE 57 OF THE STANDARD PLANS BOOK DATED MAY 2006.

REVISED STANDARD PLAN RSP A77F4

2006 REVISED STANDARD PLAN RSP A77F4

Dist	COUNTY	ROUTE	POST MILES TOTAL PROJECT	SHEET No.	TOTAL SHEETS
10	SJ	12	0.1/R4.4	94	130

Randell D. Hiatt
REGISTERED CIVIL ENGINEER

May 20, 2011
PLANS APPROVAL DATE

REGISTERED PROFESSIONAL ENGINEER
Randell D. Hiatt
No. C50200
Exp. 6-30-11
CIVIL
STATE OF CALIFORNIA

To accompany plans dated 12-24-12

The State of California or its officers or agents shall not be responsible for the accuracy or completeness of electronic copies of this plan sheet.

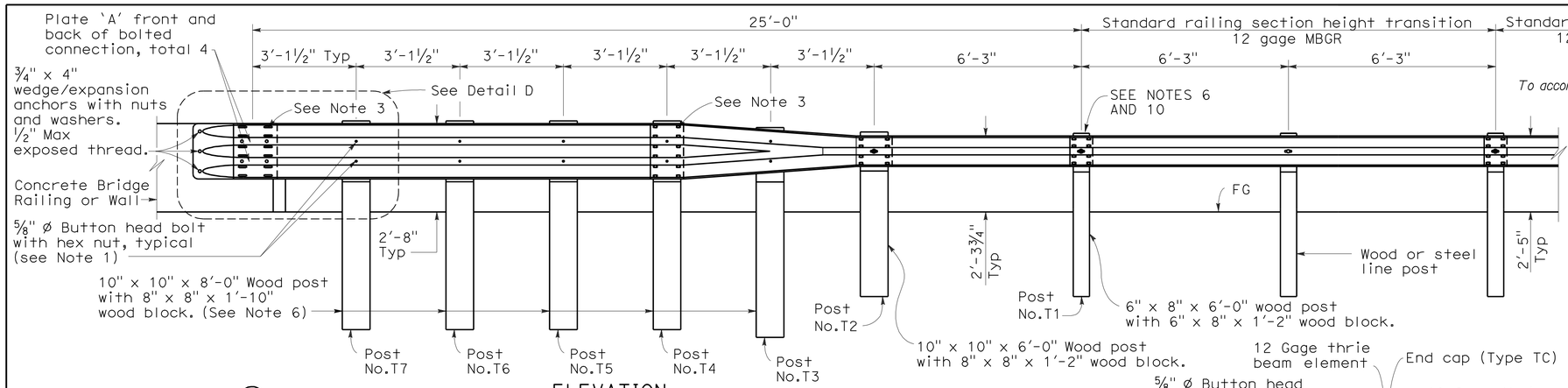

ELEVATION

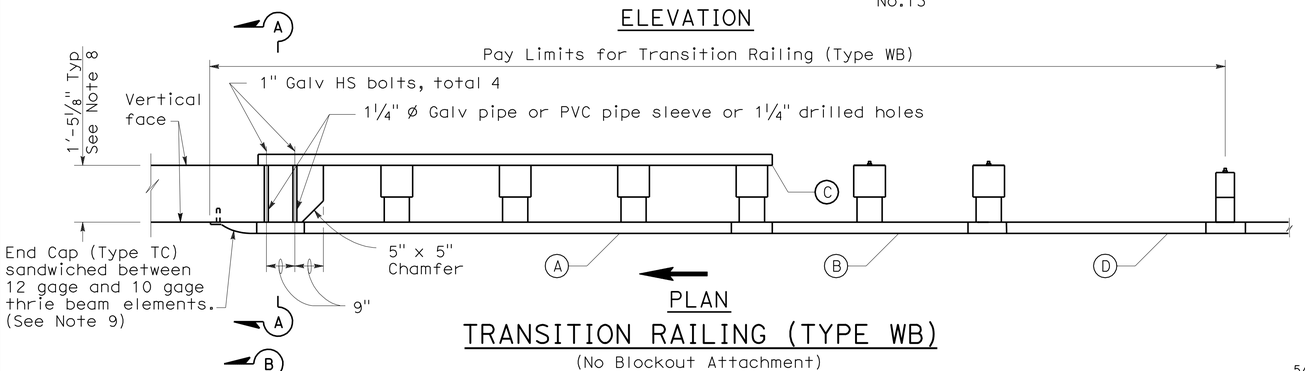

PLAN

TRANSITION RAILING (TYPE WB)

(No Blockout Attachment)

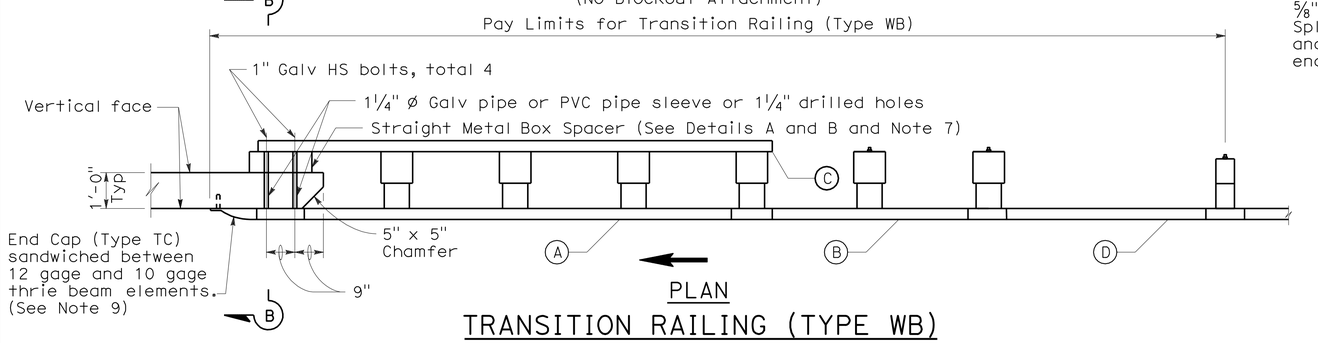

PLAN

TRANSITION RAILING (TYPE WB)

(Blockout Attachment)

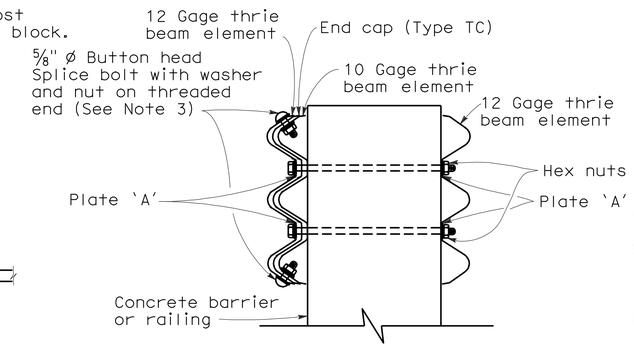

SECTION A-A

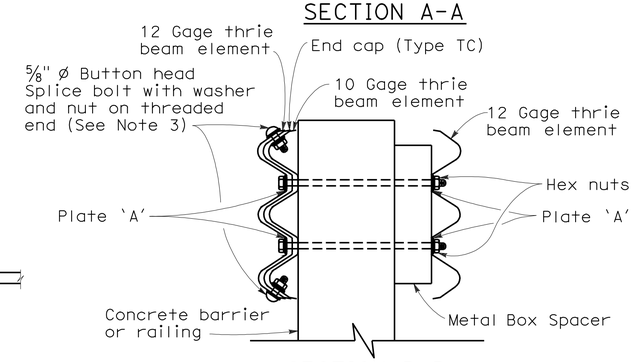

SECTION B-B

NOTES:

1. Use ⅝" ø Button head bolts and hex nuts for connections to posts. No washer on rail face for bolted connections to post.
2. The nested rail elements, end cap, and 'W' beam to thrie beam element may be spliced together prior to bolting the elements to the wood post and concrete barrier or railing.
3. Exterior splice bolt holes for rail element splices at Post No. T4 and the connection to the concrete barrier or railing shall be the standard 29/32" x 1⅛" slot size. Interior splice bolt holes at these locations may be increased up to 1¼" ø. Only the top 2 and the bottom 2 splice bolts with washers and nuts are required for rail splices at Post No. T4 and the connection to the concrete barrier or railing.
4. Direction of adjacent traffic indicated by ➡.
5. The top elevation of Posts No. T2 through No. T7 shall not project more than 1" above the top elevation of the rail element.
6. Typically, the railing connected to Transition Railing (Type WB) will be either standard railing section of metal beam guard railing with height transition ratio of 120:1 or an approved Caltrans end treatment attached to Post No. T1.
7. The depth of the metal box spacer varies from the 5⅛" to 1½" and is dependent on the width of the concrete railing or wall. The combined dimension for the depth of the metal box spacer plus the width of railing or wall is typically 17⅛". Where the space between the backside of the concrete railing or wall and the rear thrie beam element is less than 1½", metal plates similar to Plate 'A' are to be used as spacers.
8. Where the width of the concrete railing or wall is greater than 17⅛", wood blocks are to be used to fill the space created between the backside of Posts No. T4 through No. T7 and the rear thrie beam element. These wood blocks shall be 8" in width and 1'-2" in length. The dimension between the front thrie beam element and the rear thrie beam element is to match the width of the concrete railing or wall.
9. End cap may be installed over 12 gage and 10 gage thrie beam elements where transition railing is installed on the departure end of bridge railing.
10. Conform standard railing section height to 2'-3¾" at Post No. T1 using height transition ratio of 120:1.

LEGEND

(A) Nested thrie beam elements (one 12 gage element nested over one 10 gage element).

(B) One 10 gage "W" beam to thrie beam element.

(C) One 12 gage thrie beam element.

(D) One 10 gage "W" beam rail element (7'-3½" length)

10 gage = 0.135" thick

12 gage = 0.108" thick

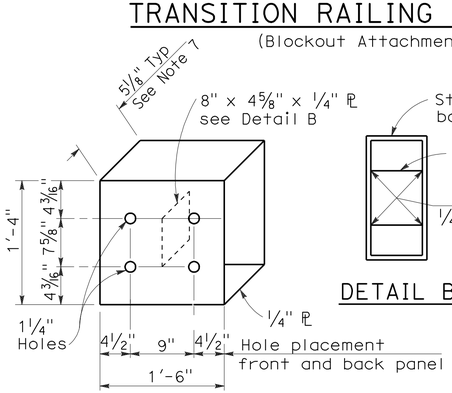

DETAIL A

STRAIGHT METAL BOX SPACER

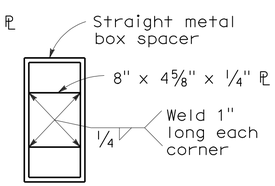

DETAIL B

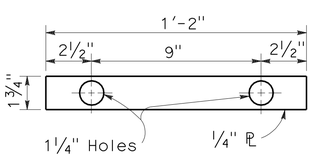

DETAIL C

PLATE 'A'

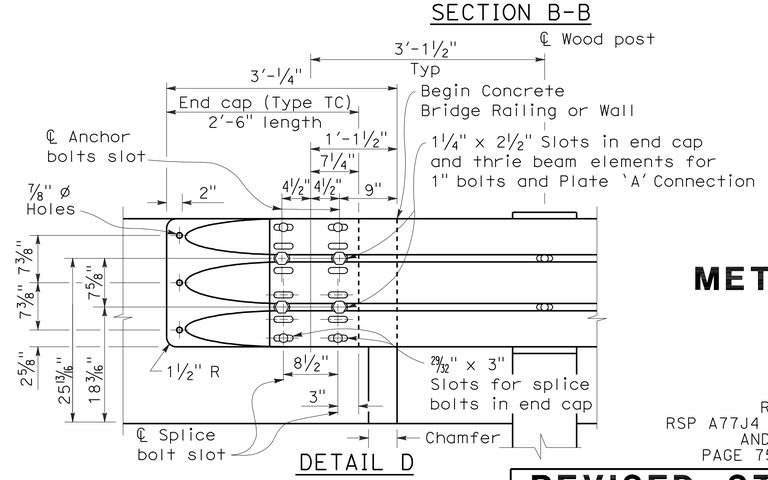

DETAIL D

STATE OF CALIFORNIA
DEPARTMENT OF TRANSPORTATION

METAL BEAM GUARD RAILING TRANSITION RAILING (TYPE WB)

NO SCALE

RSP A77J4 DATED MAY 20, 2011 SUPERSEDES
RSP A77J4 DATED JUNE 5, 2009, RSP A77J4 DATED JUNE 6, 2008
AND STANDARD PLAN A77J4 DATED MAY 1, 2006 -
PAGE 75 OF THE STANDARD PLANS BOOK DATED MAY 2006.

REVISED STANDARD PLAN RSP A77J4

2006 REVISED STANDARD PLAN RSP A77J4

5-14-09

DIST	COUNTY	ROUTE	POST MILES TOTAL PROJECT	SHEET NO.	TOTAL SHEETS
10	SJ	12	0.1/R4.4	95	130

Randell D. Hiatt
REGISTERED CIVIL ENGINEER

October 20, 2006
PLANS APPROVAL DATE

REGISTERED PROFESSIONAL ENGINEER
Randell D. Hiatt
No. C50200
Exp. 6-30-07
CIVIL
STATE OF CALIFORNIA

The State of California or its officers or agents shall not be responsible for the accuracy or completeness of electronic copies of this plan sheet.

To accompany plans dated 12-24-12

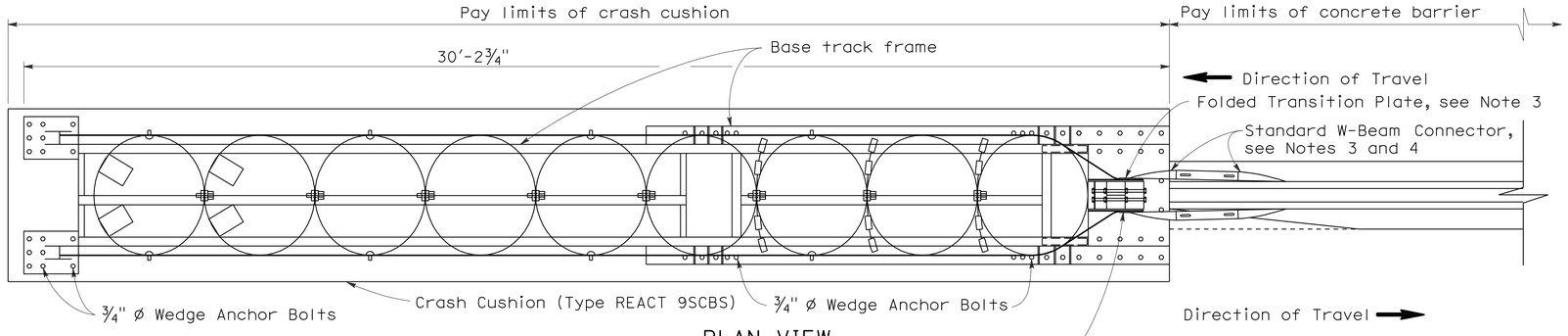

PLAN VIEW

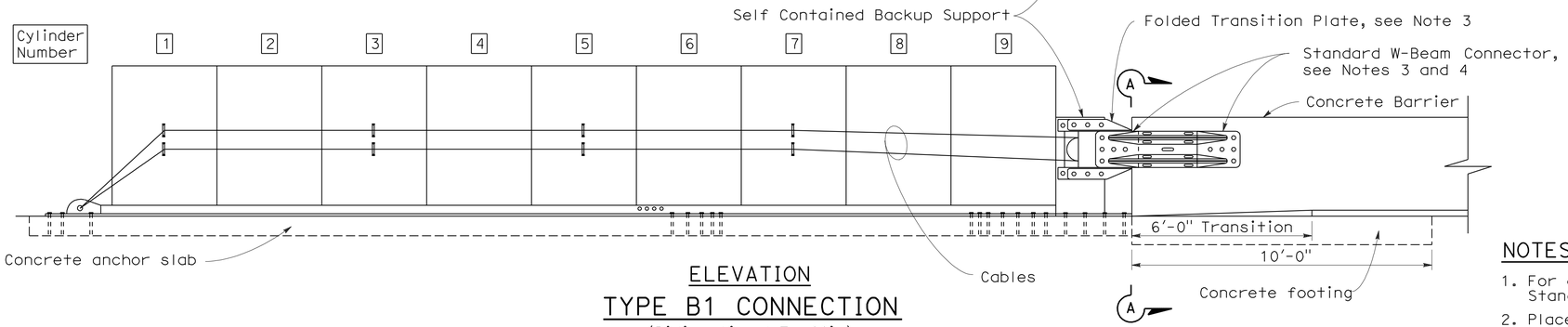

ELEVATION

TYPE B1 CONNECTION

(Bidirectional Traffic)

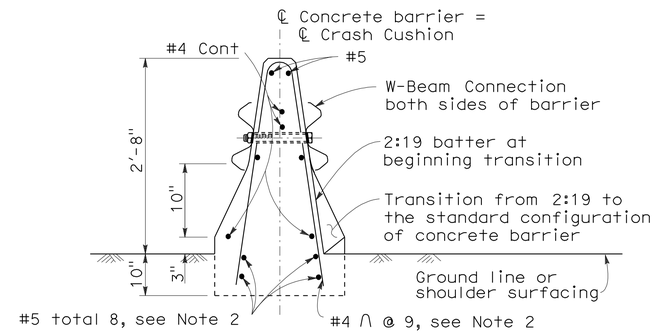

SECTION A-A

(Type 50 Barrier shown)

NOTES:

1. For additional details of Crash Cushion (Type REACT 9SCBS), see Standard Plan A82D1.
2. Place this reinforcement for the full 10'-0" length of the terminus of the concrete barrier.
3. Attach manufacturer supplied folded transition plates and W-Beam connectors to backup support with manufacturer supplied bolts.
4. Attach W-Beam Connectors to barrier with manufacturer supplied anchor bolts in the manner recommended by the manufacturer.

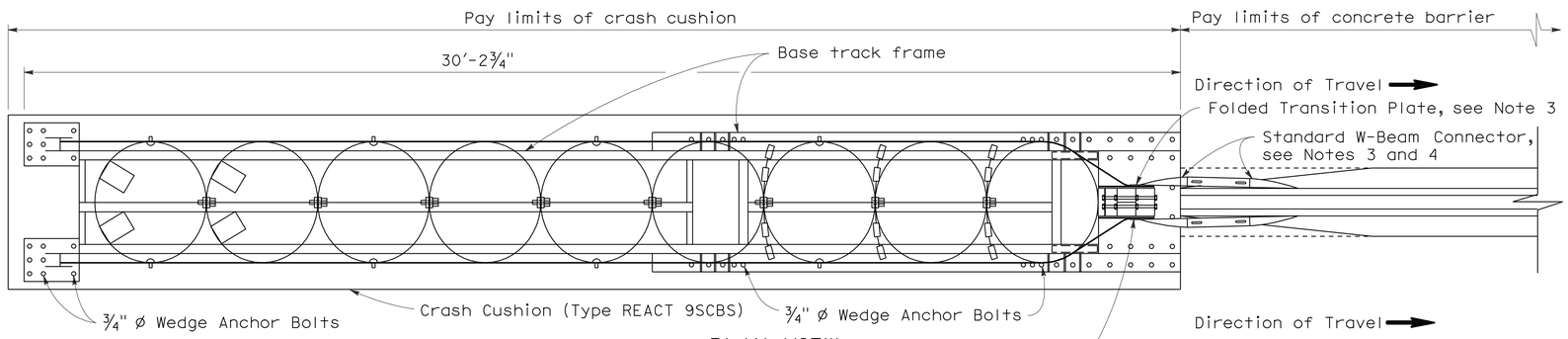

PLAN VIEW

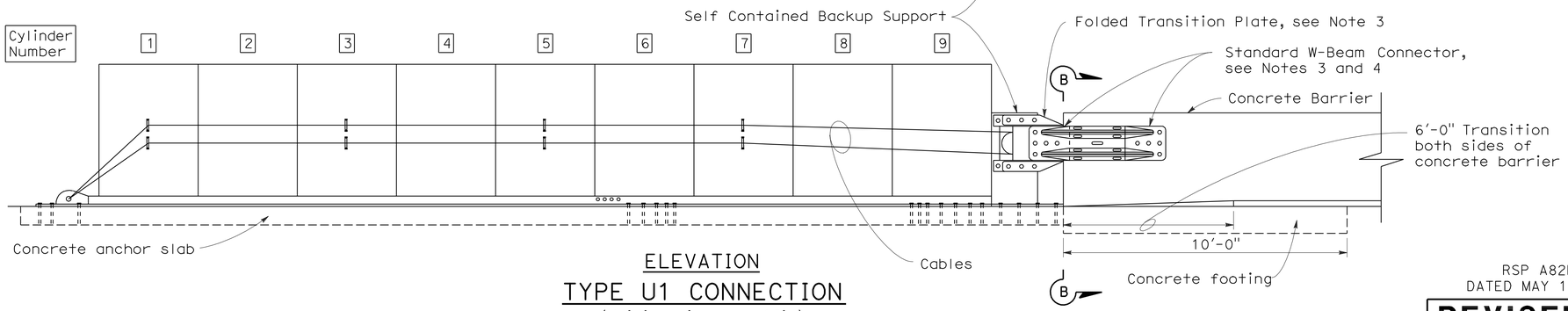

ELEVATION

TYPE U1 CONNECTION

(Unidirectional Traffic)

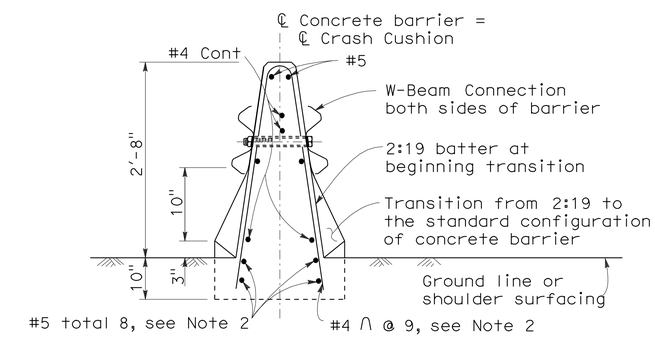

SECTION B-B

(Type 50 Barrier shown)

STATE OF CALIFORNIA
DEPARTMENT OF TRANSPORTATION

CRASH CUSHION (TYPE REACT 9SCBS) CONNECTION TO CONCRETE BARRIER

NO SCALE

RSP A82D2 DATED OCTOBER 20, 2006 SUPERSEDES STANDARD PLAN A82D2 DATED MAY 1, 2006 - PAGE 108 OF THE STANDARD PLANS BOOK DATED MAY 2006.

REVISED STANDARD PLAN RSP A82D2

2006 REVISED STANDARD PLAN RSP A82D2

9-13-06

DIST	COUNTY	ROUTE	POST MILES TOTAL PROJECT	SHEET NO.	TOTAL SHEETS
10	SJ	12	0.1/R4.4	96	130

Randell D. Hiatt
REGISTERED CIVIL ENGINEER

June 6, 2008
PLANS APPROVAL DATE

REGISTERED PROFESSIONAL ENGINEER
Randell D. Hiatt
No. C50200
Exp. 6-30-09
CIVIL
STATE OF CALIFORNIA

The State of California or its officers or agents shall not be responsible for the accuracy or completeness of electronic copies of this plan sheet.

To accompany plans dated 12-24-12

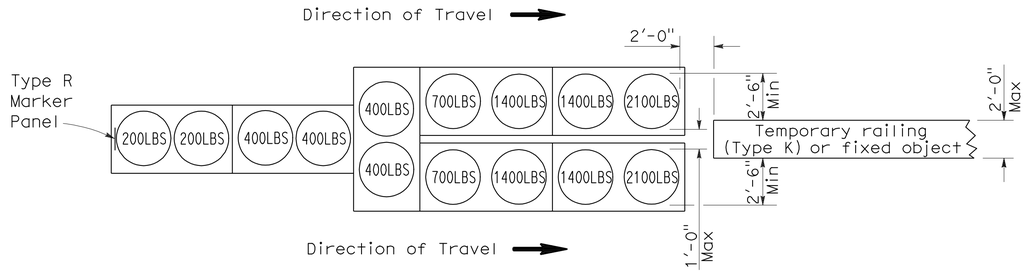

ARRAY 'TU14'

Approach speed 45 mph or more

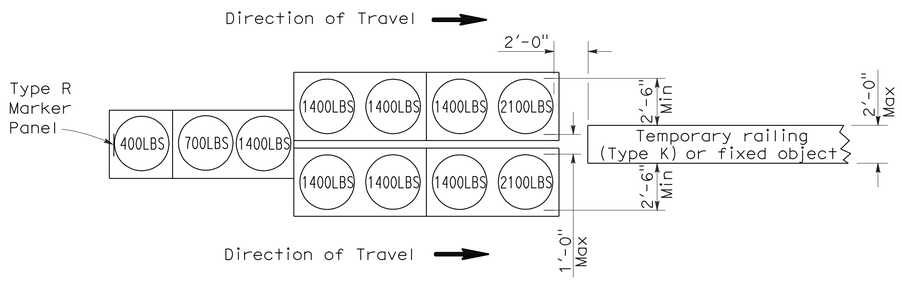

ARRAY 'TU11'

Approach speed less than 45 mph

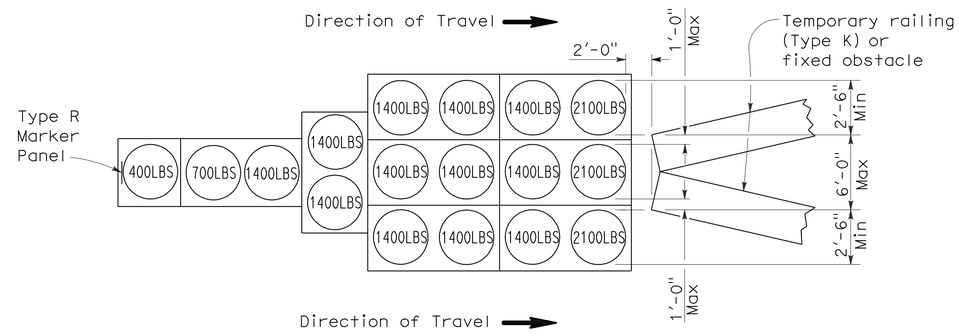

ARRAY 'TU17'

Approach speed less than 45 mph

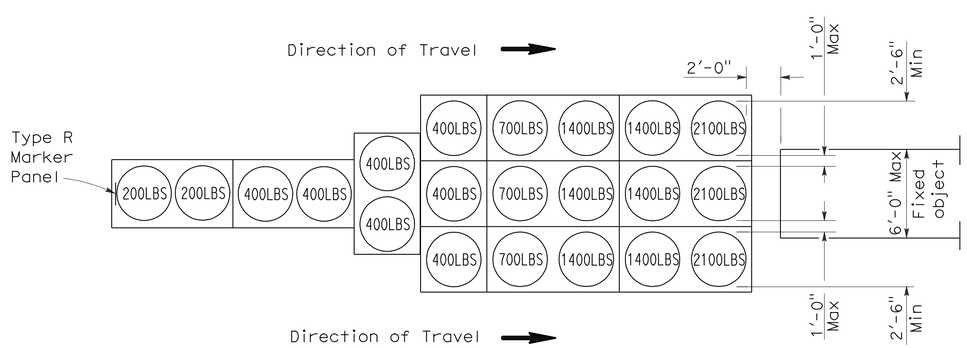

ARRAY 'TU21'

Approach speed 45 mph or more

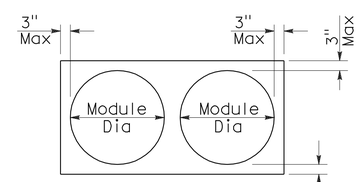

PLAN

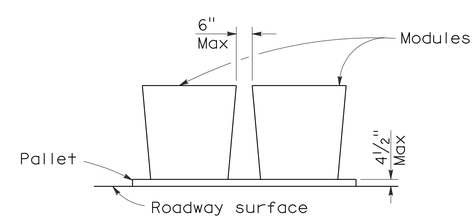

ELEVATION

CRASH CUSHION PALLET DETAIL

See Note 7

NOTES:

1. (XXX) Indicates sand filled module location and weight of sand in pounds for each module. Module spacing is based on the greater diameter of the module.
2. All sand weights are nominal.
3. Temporary crash cushion arrays shall not encroach on the traveled way.
4. Place the top of Type R marker panel 1" below the module lid.
5. Refer to Standard Plan A73B for marker details.
6. Approach speeds indicated conform to NCHRP 350 Report criteria.
7. Use of pallets is optional.

STATE OF CALIFORNIA
DEPARTMENT OF TRANSPORTATION

TEMPORARY CRASH CUSHION, SAND FILLED (UNIDIRECTIONAL)

NO SCALE

RSP T1A DATED JUNE 6, 2008 SUPERSEDES STANDARD PLAN T1A
DATED MAY 1, 2006 - PAGE 211 OF THE STANDARD PLANS BOOK DATED MAY 2006.

REVISED STANDARD PLAN RSP T1A

2006 REVISED STANDARD PLAN RSP T1A

5-15-08

DIST	COUNTY	ROUTE	POST MILES TOTAL PROJECT	SHEET NO.	TOTAL SHEETS
10	SJ	12	0.1/R4.4	97	130

Randell D. Hiatt
REGISTERED CIVIL ENGINEER

June 6, 2008
PLANS APPROVAL DATE

REGISTERED PROFESSIONAL ENGINEER
Randell D. Hiatt
No. C50200
Exp. 6-30-09
CIVIL
STATE OF CALIFORNIA

The State of California or its officers or agents shall not be responsible for the accuracy or completeness of electronic copies of this plan sheet.

To accompany plans dated 12-24-12

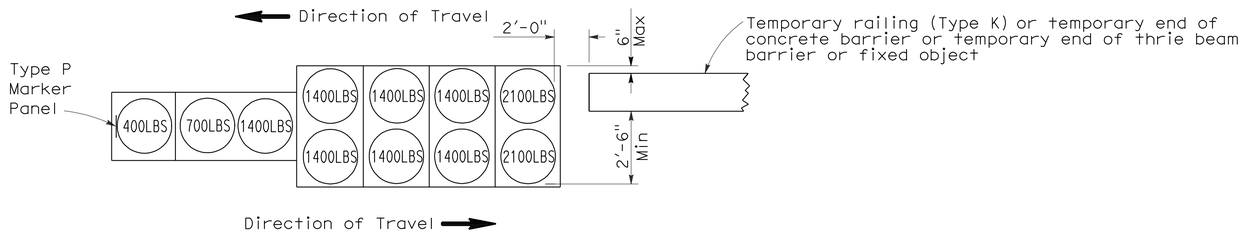

ARRAY 'TB11'

Approach speed less than 45 mph

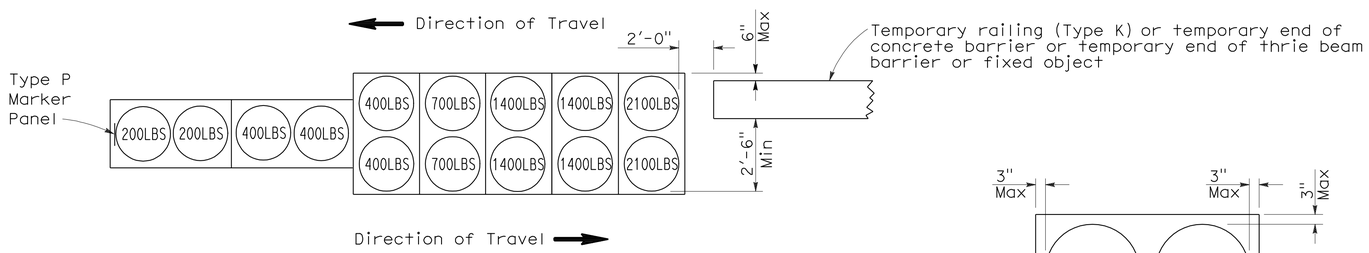

ARRAY 'TB14'

Approach speed 45 mph or more

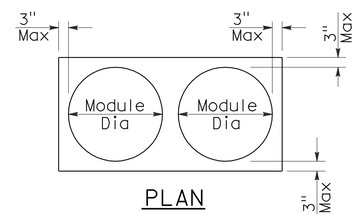

PLAN

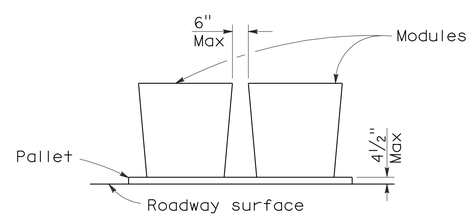

ELEVATION

CRASH CUSHION PALLET DETAIL

See Note 7

NOTES:

1. (XXX) Indicates sand filled module location and weight of sand in pounds for each module. Module spacing is based on the greater diameter of the module.
2. All sand weights are nominal.
3. Temporary crash cushion arrays shall not encroach on the traveled way.
4. Place the Type P marker panel so that the bottom of the panel rests upon the pallet.
5. Refer to Standard Plan A73B for marker details.
6. Approach speeds indicated conform to NCHRP 350 Report criteria.
7. Use of pallets is optional.

STATE OF CALIFORNIA
DEPARTMENT OF TRANSPORTATION

TEMPORARY CRASH CUSHION, SAND FILLED (BIDIRECTIONAL)

NO SCALE

RSP T1B DATED JUNE 6, 2008 SUPERSEDES STANDARD PLAN T1B
DATED MAY 1, 2006 - PAGE 212 OF THE STANDARD PLANS BOOK DATED MAY 2006.

REVISED STANDARD PLAN RSP T1B

2006 REVISED STANDARD PLAN RSP T1B

5-15-08

DIST	COUNTY	ROUTE	POST MILES TOTAL PROJECT	SHEET NO.	TOTAL SHEETS
10	SJ	12	0.1/R4.4	98	130

Randell D. Hiatt
REGISTERED CIVIL ENGINEER

June 6, 2008
PLANS APPROVAL DATE

REGISTERED PROFESSIONAL ENGINEER
Randell D. Hiatt
No. C50200
Exp. 6-30-09
CIVIL
STATE OF CALIFORNIA

The State of California or its officers or agents shall not be responsible for the accuracy or completeness of electronic copies of this plan sheet.

To accompany plans dated 12-24-12

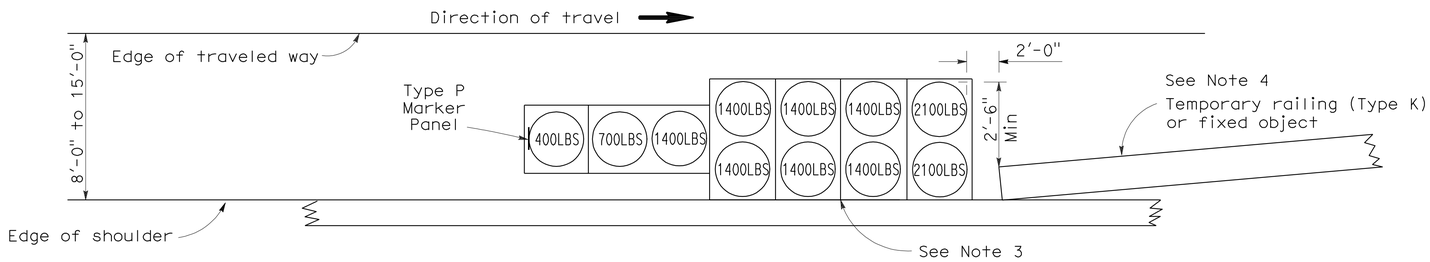

ARRAY 'TS11'

Approach speed less than 45 mph
See Note 9

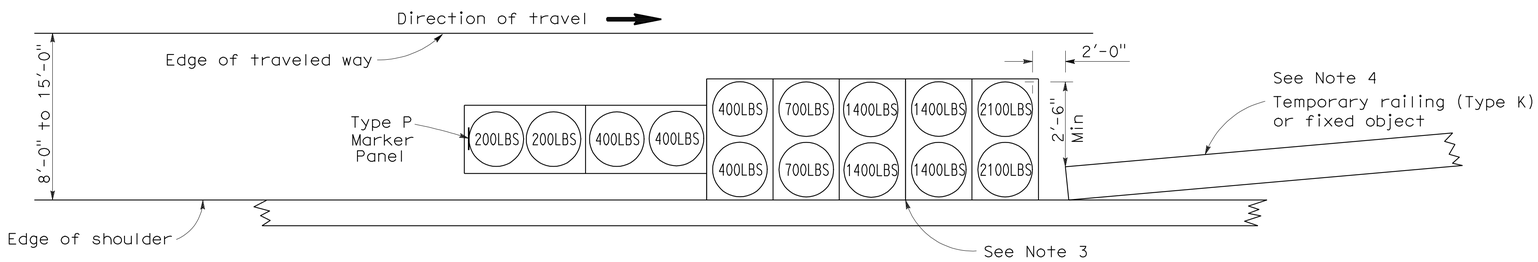

ARRAY 'TS14'

Approach speed 45 mph or more
See Note 9

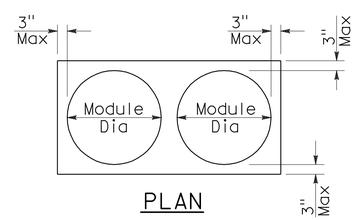

PLAN

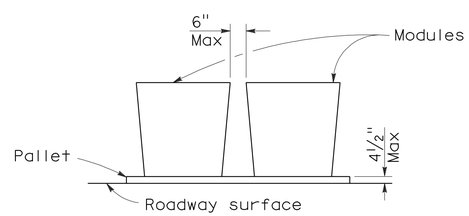

ELEVATION

CRASH CUSHION PALLET DETAIL

See Note 11

NOTES:

1. (XXX) Indicates sand filled module location and weight of sand in pounds for each module. Module spacing is based on the greater diameter of the module.
2. All sand weights are nominal.
3. The temporary crash cushion arrays shown on this plan shall be used only in locations where there will be traffic on one side of the temporary crash cushion array.
4. If the fixed object or approach end of the temporary railing is less than 15'-0" from the edge of traveled way, a temporary crash cushion is required in a construction or work zone.
5. Temporary crash cushion arrays shall not encroach on the traveled way.
6. Arrays for median shoulders shall conform to details shown on this plan for outside shoulders.
7. Place the Type P marker panel so that the bottom of the panel rests upon the pallet and faces traffic.
8. Refer to Standard Plan A73B for marker details.
9. For shoulder widths less than 8'-0", appropriate approved crash cushion protection, other than sand filled modules, shall be provided at fixed objects and at approach ends of temporary railing. The specific type of crash cushion shall be as shown on the project plans or as specified in the Special Provisions, or if not shown on the project plans or specified in the Special Provisions, shall be as approved by the Engineer.
10. Approach speeds indicated conform to NCHRP 350 Report criteria.
11. Use of pallets is optional.

STATE OF CALIFORNIA
DEPARTMENT OF TRANSPORTATION

TEMPORARY CRASH CUSHION, SAND FILLED (SHOULDER INSTALLATIONS)

NO SCALE

RSP T2 DATED JUNE 6, 2008 SUPERSEDES STANDARD PLAN T2
DATED MAY 1, 2006 - PAGE 213 OF THE STANDARD PLANS BOOK DATED MAY 2006.

REVISED STANDARD PLAN RSP T2

2006 REVISED STANDARD PLAN RSP T2

5-15-08

Dist	COUNTY	ROUTE	POST MILES TOTAL PROJECT	SHEET No.	TOTAL SHEETS
10	SJ	12	0.1/R4.4	99	130

Randell D. Hiatt
REGISTERED CIVIL ENGINEER

May 20, 2011
PLANS APPROVAL DATE

REGISTERED PROFESSIONAL ENGINEER
Randell D. Hiatt
No. C50200
Exp. 6-30-11
CIVIL
STATE OF CALIFORNIA

The State of California or its officers or agents shall not be responsible for the accuracy or completeness of electronic copies of this plan sheet.

To accompany plans dated 12-24-12

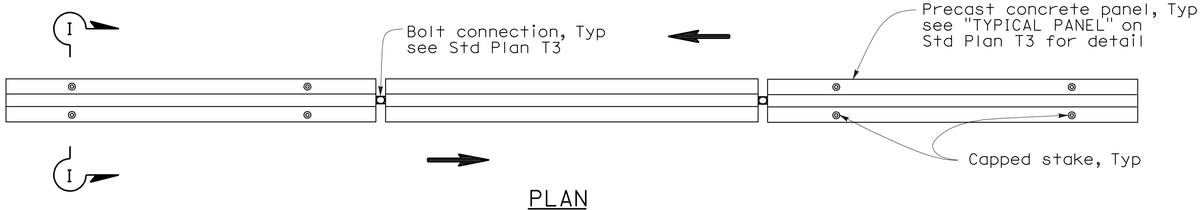

PLAN

RAILING STAKING CONFIGURATION FOR TWO-WAY TRAFFIC

See Note 1

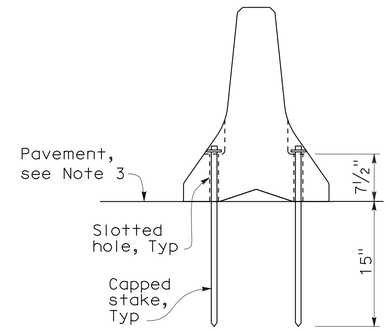

SECTION I-I

NOTES:

1. Where Type K Temporary Railing is placed as a temporary or long term barrier in two-way traffic on highways with less than 24" from the edge of traveled way, use four capped stakes per every other panel with end panels staked.
2. Where Type K Temporary Railing is placed 3" to 24" from the edge of an excavation on highways, use two capped stakes per panel along the traffic side.
3. Staked Type K Temporary Railing must be supported by at least 4" thick concrete, hot mix asphalt or existing asphalt concrete pavement.
4. The minimum yield strength for the washer must be 60,000 psi.
5. Direction of adjacent traffic indicated by ⟹.

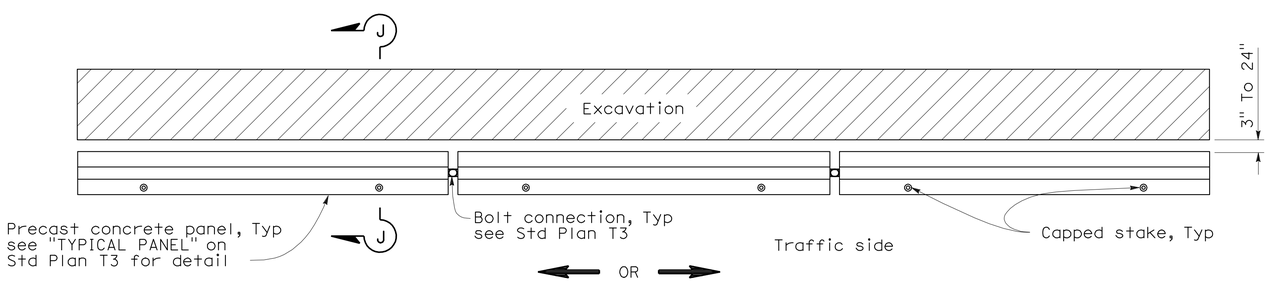

PLAN

RAILING STAKING CONFIGURATION ADJACENT TO AN EXCAVATION

See Note 2

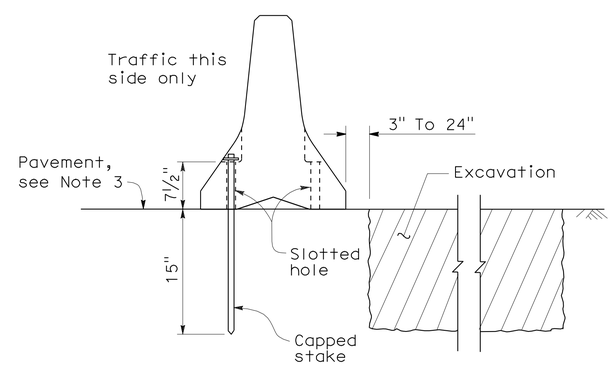

SECTION J-J

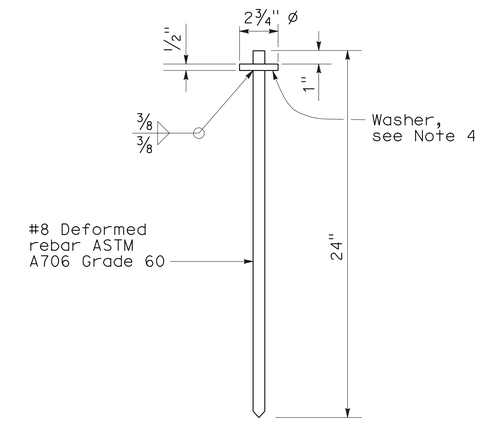

CAPPED STAKE DETAIL

STATE OF CALIFORNIA
DEPARTMENT OF TRANSPORTATION

TEMPORARY RAILING (TYPE K)

NO SCALE

NSP T3A DATED MAY 20, 2011 SUPPLEMENTS THE STANDARD PLANS BOOK DATED MAY 2006.

NEW STANDARD PLAN NSP T3A

2006 NEW STANDARD PLAN NSP T3A

DIST	COUNTY	ROUTE	POST MILES TOTAL PROJECT	SHEET NO.	TOTAL SHEETS
10	SJ	12	0.1/R4.4	100	130

REGISTERED CIVIL ENGINEER

November 17, 2006
PLANS APPROVAL DATE

REGISTERED PROFESSIONAL ENGINEER — Greg W. Edwards — No. C36386 — Exp. 6-30-08 — CIVIL — STATE OF CALIFORNIA

The State of California or its officers or agents shall not be responsible for the accuracy or completeness of electronic copies of this plan sheet.

To accompany plans dated 12-24-12

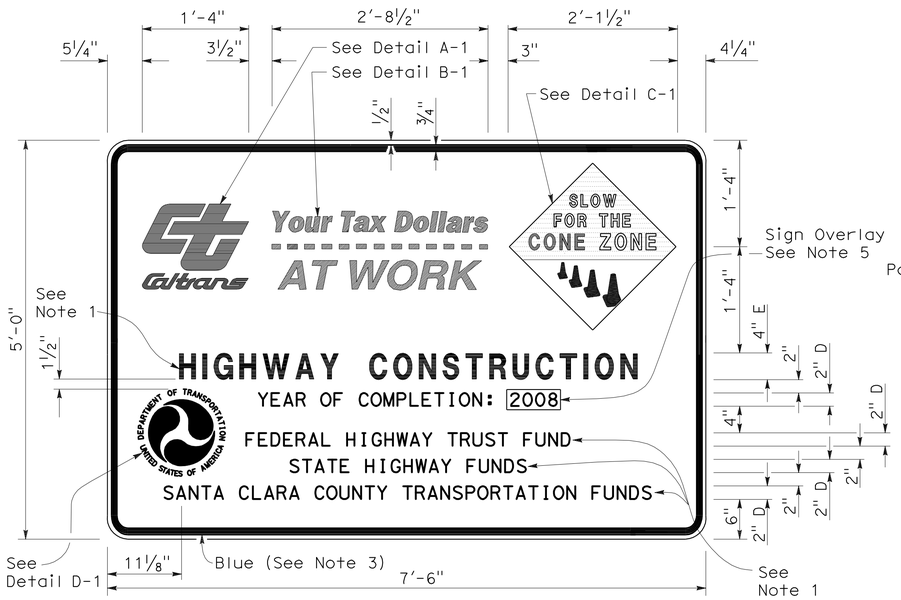

TYPE 1

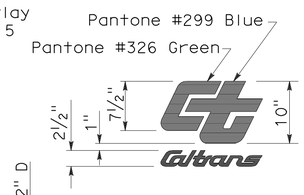

DETAIL A-1

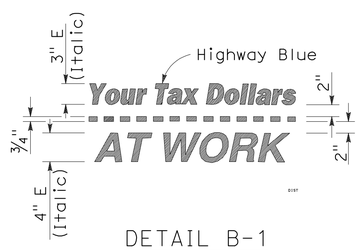

DETAIL B-1
(See Note 3)

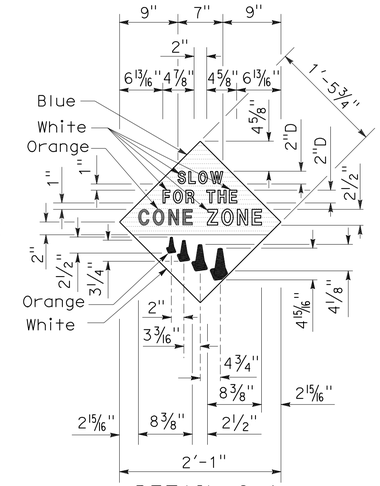

DETAIL C-1
(See Note 4)

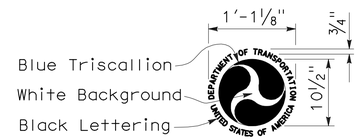

DETAIL D-1
(See Note 6)

NOTES:

1. The sign messages shown for type of project and fund types are examples only. See the Special Provisions for the applicable type of project and fund type messages to be used.
2. Except as otherwise shown, the legend of sign shall be black on a white background (non-reflective).
3. The border of the signs and details "B-1" and "B-2" shall be blue (non-reflective).
4. The diamond in details "C-1" and "C-2" shall be blue for the background of message, " SLOW FOR THE CONE ZONE", and white background for the orange cones. The color and type of font for the "SLOW FOR THE CONE ZONE" message shall be: "SLOW" white D; "FOR THE" white D; "CONE" orange Arial font; "ZONE" white Arial font.
5. Year of completion of project construction shown on the overlay is an example only. See the Special Provisions.
6. Use when the Project involves Federal Highway Trust Fund.

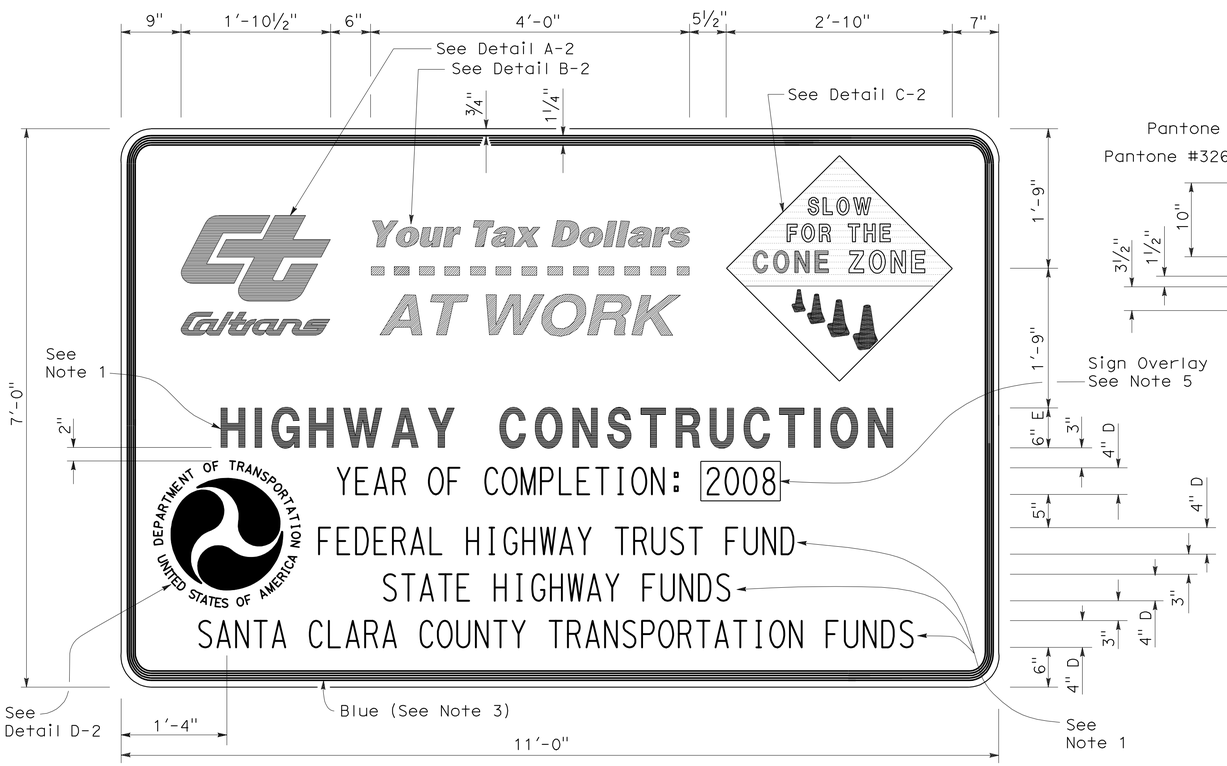

TYPE 2

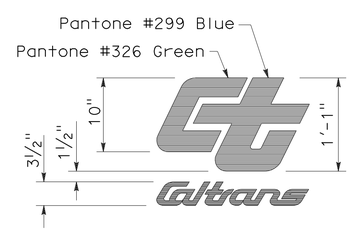

DETAIL A-2

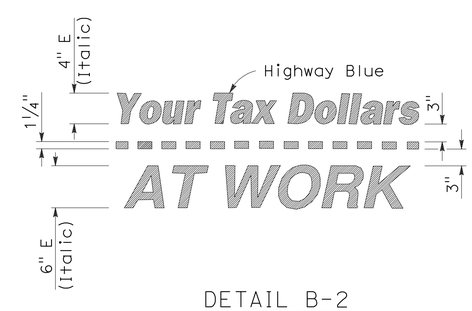

DETAIL B-2
(See Note 3)

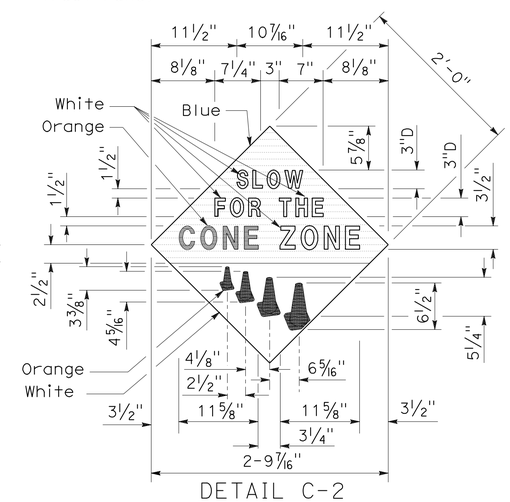

DETAIL C-2
(See Note 4)

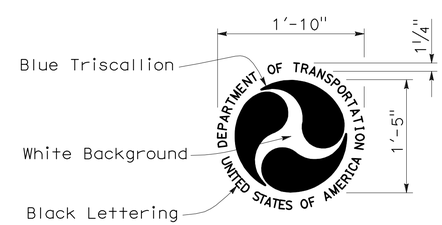

DETAIL D-2
(See Note 6)

STATE OF CALIFORNIA
DEPARTMENT OF TRANSPORTATION

CONSTRUCTION PROJECT FUNDING IDENTIFICATION SIGNS

NO SCALE

RSP T7 DATED NOVEMBER 17, 2006 SUPERSEDES STANDARD PLAN T7
DATED MAY 1, 2006 - PAGE 217 OF THE STANDARD PLANS BOOK DATED MAY 2006.

REVISED STANDARD PLAN RSP T7

2006 REVISED STANDARD PLAN RSP T7

9-7-06

DIST	COUNTY	ROUTE	POST MILES TOTAL PROJECT	SHEET NO.	TOTAL SHEETS
10	SJ	12	0.1/R4.4	101	130

LICENSED LANDSCAPE ARCHITECT

August 15, 2008
PLANS Approval DATE

LICENSED LANDSCAPE ARCHITECT
Robert B. Schott 3025
Signature
11-04-08
Renewal Date
08-11-08
Date
STATE OF CALIFORNIA

The State of California or its officers or agents shall not be responsible for the accuracy or completeness of electronic copies of this plan sheet.

To accompany plans dated 12-24-12

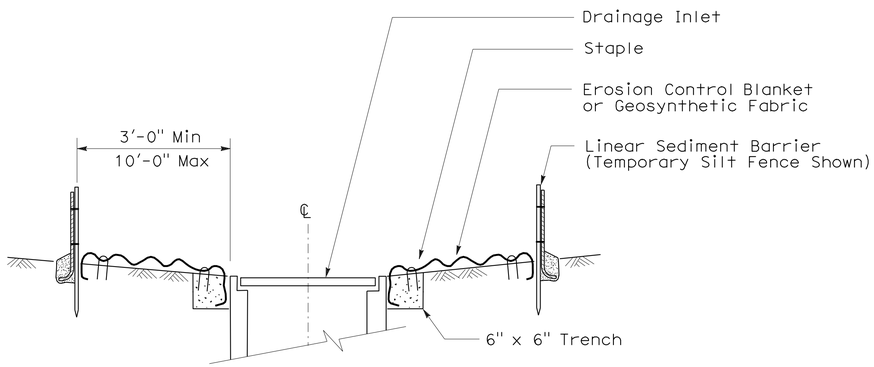

SECTION A-A

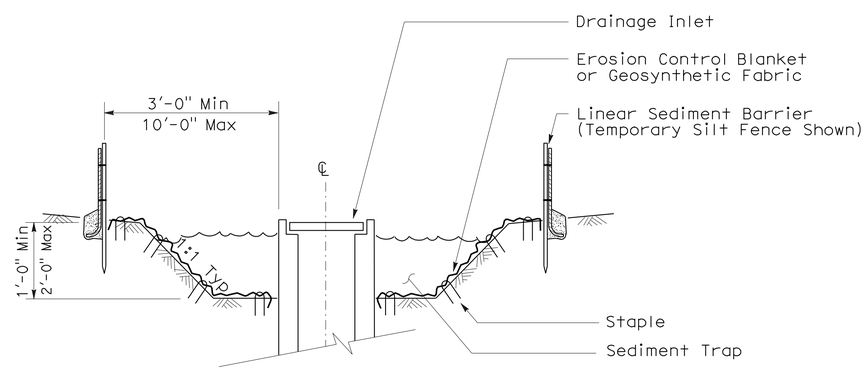

SECTION B-B

NOTES:

1. See Standard Plan T51 for Temporary Silt Fence.
2. Dimensions may vary to fit field conditions.

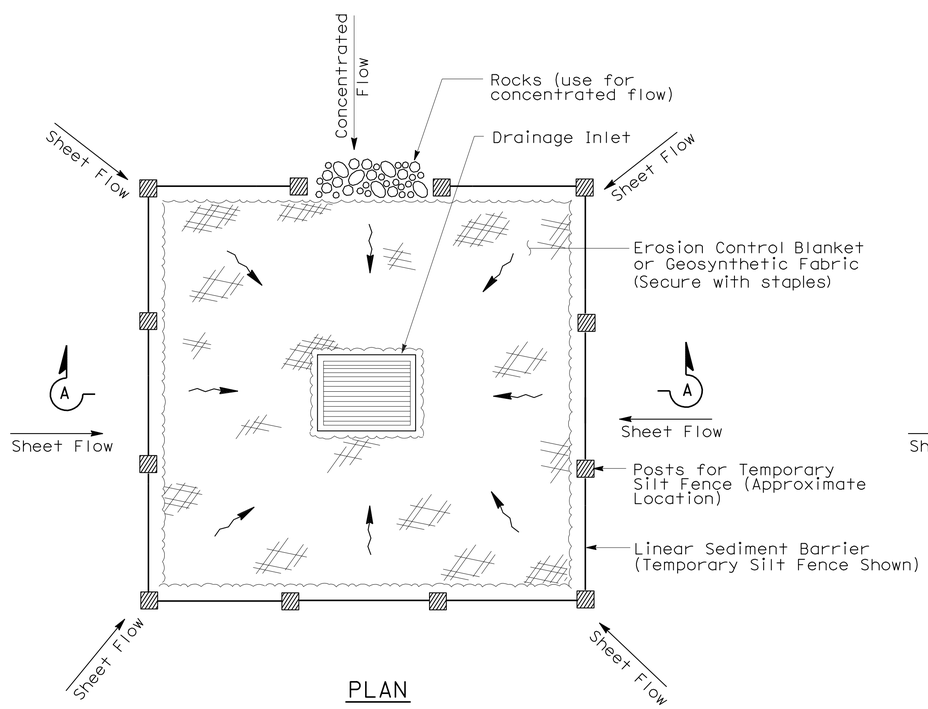

PLAN

TEMPORARY DRAINAGE
INLET PROTECTION (TYPE 1)

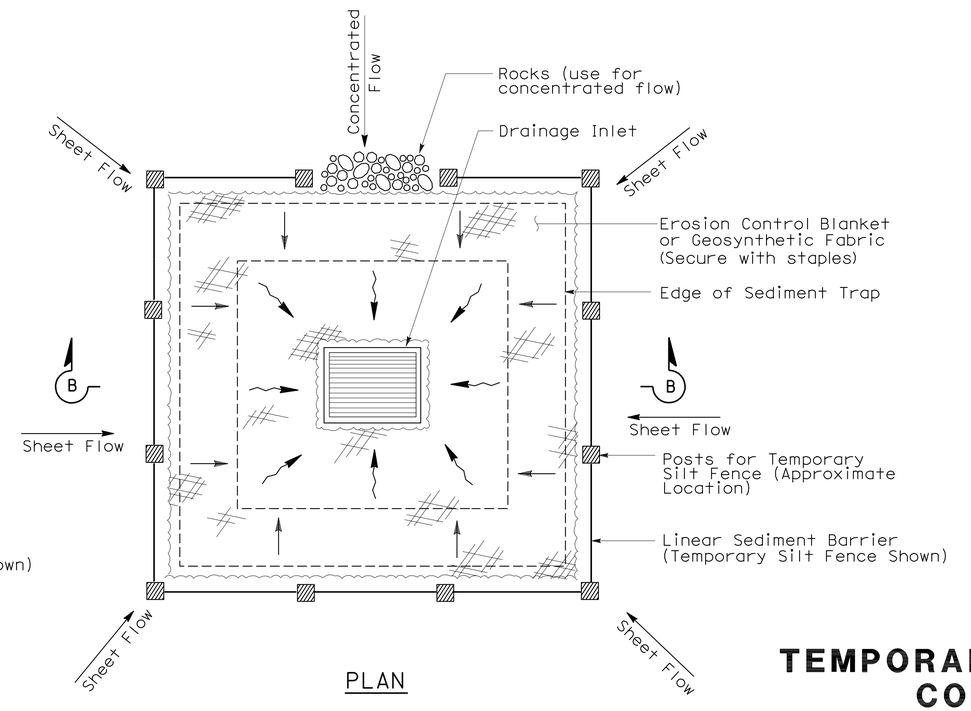

PLAN

TEMPORARY DRAINAGE
INLET PROTECTION (TYPE 2)
(EXCAVATED SEDIMENT TRAP)

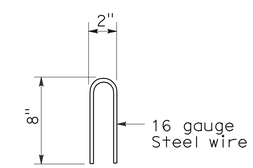

STAPLE DETAIL

STATE OF CALIFORNIA
DEPARTMENT OF TRANSPORTATION

TEMPORARY WATER POLLUTION CONTROL DETAILS (TEMPORARY DRAINAGE INLET PROTECTION)

NO SCALE

NSP T61 DATED AUGUST 15, 2008 SUPPLEMENTS
THE STANDARD PLANS BOOK DATED MAY 2006.

NEW STANDARD PLAN NSP T61

2006 NEW STANDARD PLAN NSP T61

7-11-08

DIST	COUNTY	ROUTE	POST MILES TOTAL PROJECT	SHEET NO.	TOTAL SHEETS
10	SJ	12	0.1/R4.4	102	130

LICENSED LANDSCAPE ARCHITECT

August 15, 2008
PLANS APPROVAL DATE

LICENSED LANDSCAPE ARCHITECT — Robert B. Schott — Signature Date 11-04-08 — Renewal Date 08-11-08 — Date — STATE OF CALIFORNIA

The State of California or its officers or agents shall not be responsible for the accuracy or completeness of electronic copies of this plan sheet.

To accompany plans dated 12-24-12

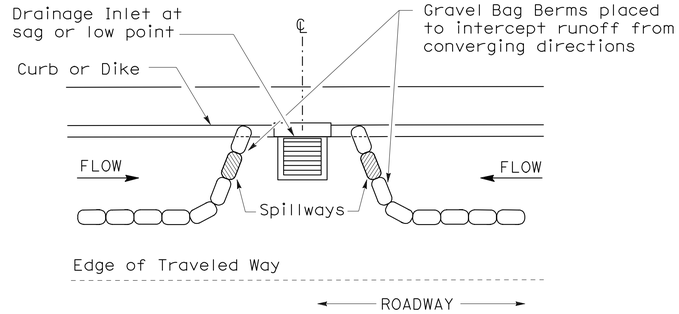

PLAN

CONFIGURATION FOR SAG POINT INLET (GRAVEL BAG BERM)

GRAVEL BAG BERM (TYPE 3A) SPACING TABLE

SLOPE OF ROADWAY (PERCENT)	1 to 3.9	4 to 5.9	6 to 7.9	8 to 10	10+
INTERVAL BETWEEN BERM	100′	75′	50′	25′	12′

For slope of less than 1%, install barriers only if erosion/sediment is prevalent

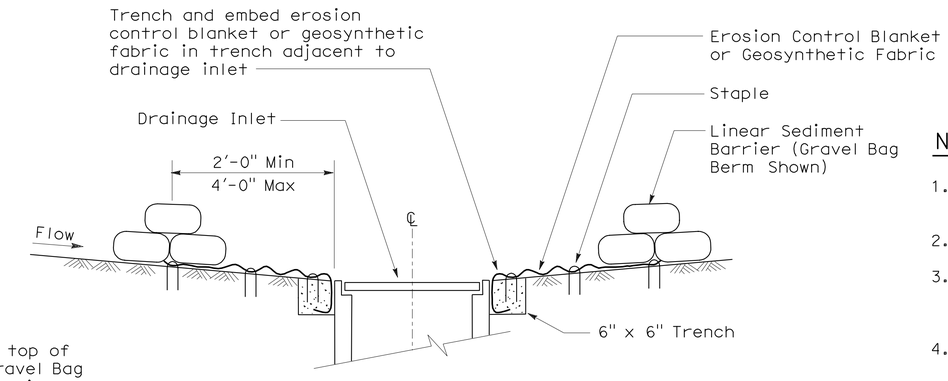

SECTION A-A

NOTES:

1. Place safety cones adjacent to drainage inlet protection.
2. Dimensions may vary to fit field conditions.
3. Install a minimum of 3 gravel bag berms upstream of each drainage inlet to be protected.
4. Position erosion control blanket or geosynthetic fabric at edge of concrete apron and secure in trench.
5. Erosion control blanket or geosynthetic fabric is not required if the area adjacent to the drainage inlet is vegetated or paved.

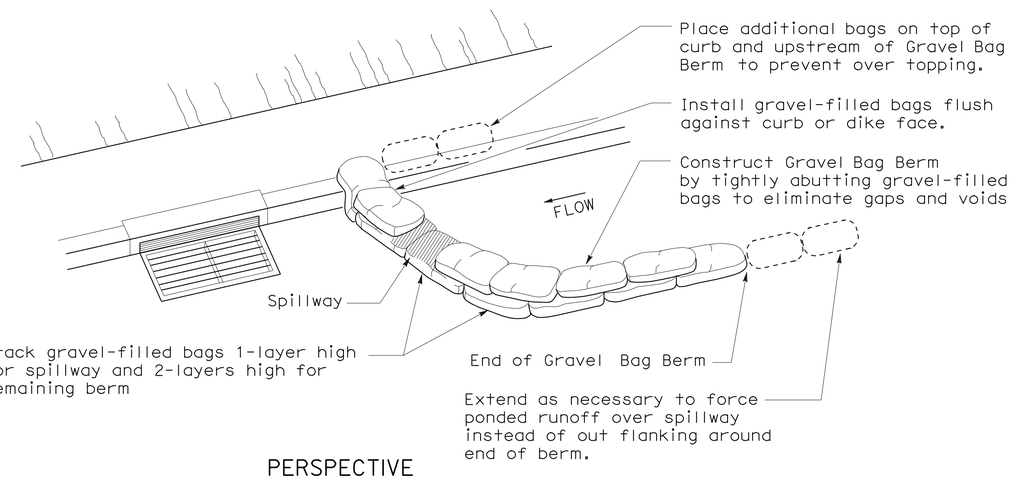

PERSPECTIVE

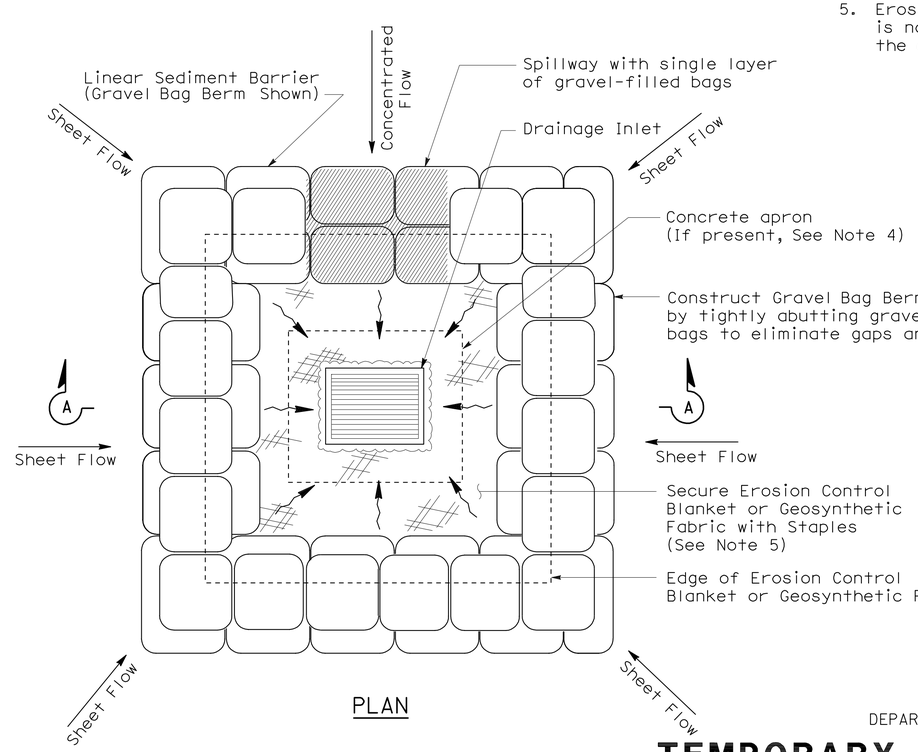

PLAN

TEMPORARY DRAINAGE INLET PROTECTION (TYPE 3B)

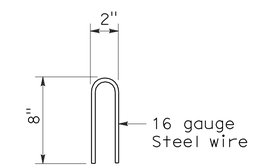

STAPLE DETAIL

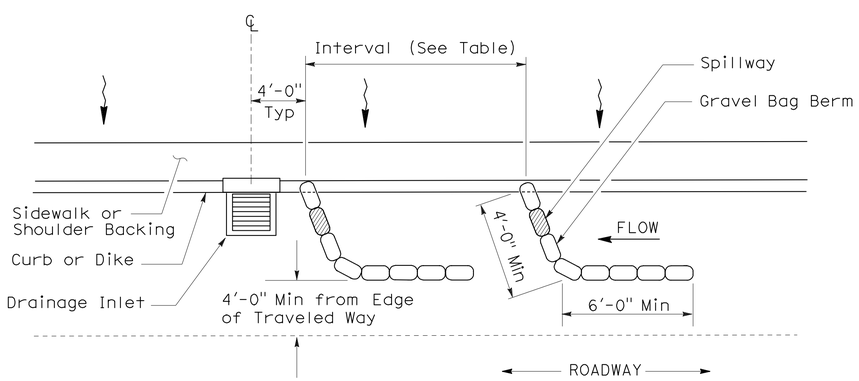

PLAN

TEMPORARY DRAINAGE INLET PROTECTION (TYPE 3A) (GRAVEL BAG BERM)

STATE OF CALIFORNIA
DEPARTMENT OF TRANSPORTATION

TEMPORARY WATER POLLUTION CONTROL DETAILS (TEMPORARY DRAINAGE INLET PROTECTION)

NO SCALE

NSP T62 DATED AUGUST 15, 2008 SUPPLEMENTS THE STANDARD PLANS BOOK DATED MAY 2006.

NEW STANDARD PLAN NSP T62

2006 NEW STANDARD PLAN NSP T62

7-11-08

DIST	COUNTY	ROUTE	POST MILES TOTAL PROJECT	SHEET NO.	TOTAL SHEETS
10	SJ	12	0.1/R4.4	103	130

Robert B Schott
LICENSED LANDSCAPE ARCHITECT

August 15, 2008
PLANS APPROVAL DATE

LICENSED LANDSCAPE ARCHITECT Robert B. Schott 3025 Signature 11-04-08 Renewal Date 08-11-08 Date STATE OF CALIFORNIA

The State of California or its officers or agents shall not be responsible for the accuracy or completeness of electronic copies of this plan sheet.

To accompany plans dated 12-24-12

FLEXIBLE SEDIMENT BARRIER SPACING TABLE

SLOPE OF ROADWAY (PERCENT)	0 to 0.9	1 to 1.9	2 to 2.9	3 to 4	5+
INTERVAL BETWEEN BARRIERS	50′	35′	30′	25′	20′
ANGLE FROM FACE OF CURB	70°	70°	70°	45°	45°
SUGGESTED BARRIER LENGTH	6′	6′	6′	6′	6′

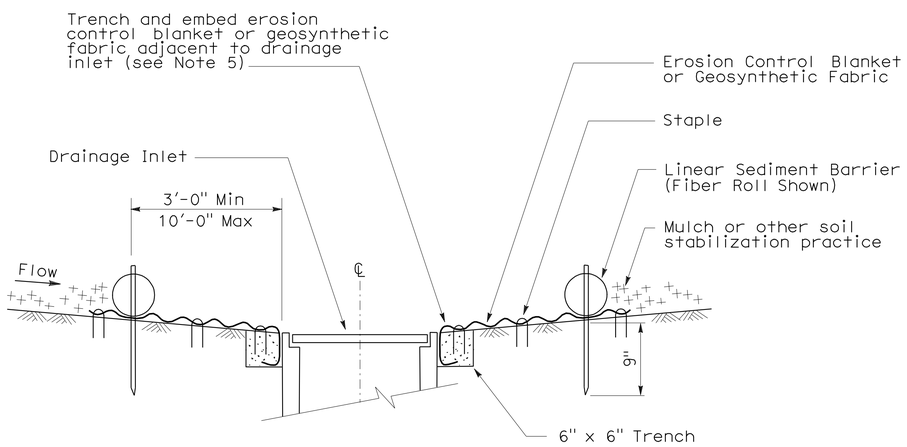

SECTION A-A

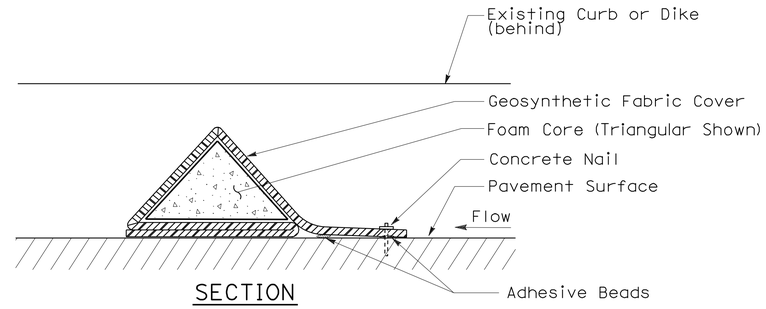

SECTION

FLEXIBLE SEDIMENT BARRIER DETAIL (FOAM BARRIER SHOWN)

NOTES:

1. See Standard Plan T51 for Temporary Silt Fence.
2. Dimensions may vary to fit field conditions.
3. Install a minimum of 3 flexible sediment barriers upstream of each drainage inlet to be protected.
4. Position erosion control blanket or geosynthetic fabric at edge of concrete apron and secure in trench.
5. Erosion control blanket or geosynthetic fabric is not required if the area adjacent to the drainage inlet is vegetated.

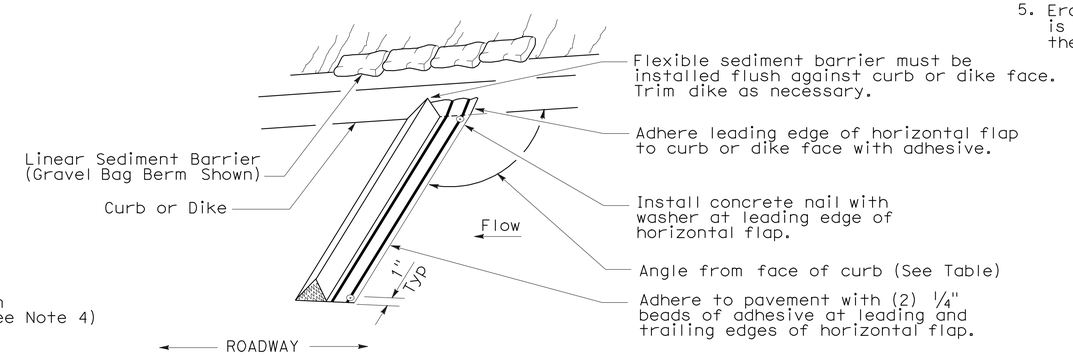

PERSPECTIVE

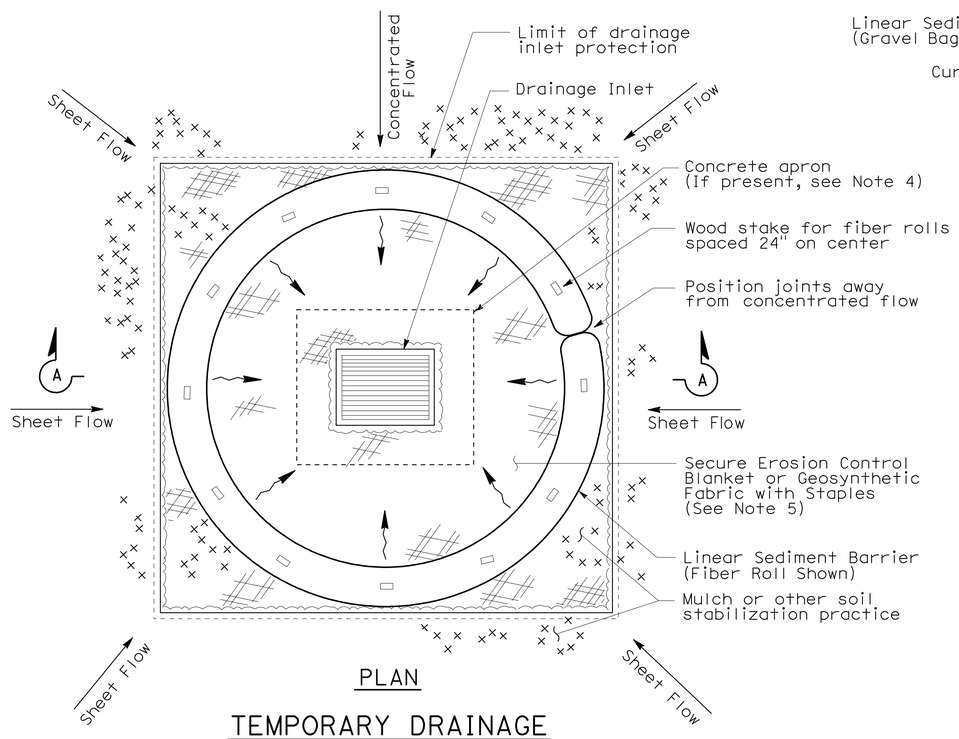

PLAN

TEMPORARY DRAINAGE INLET PROTECTION (TYPE 4A)

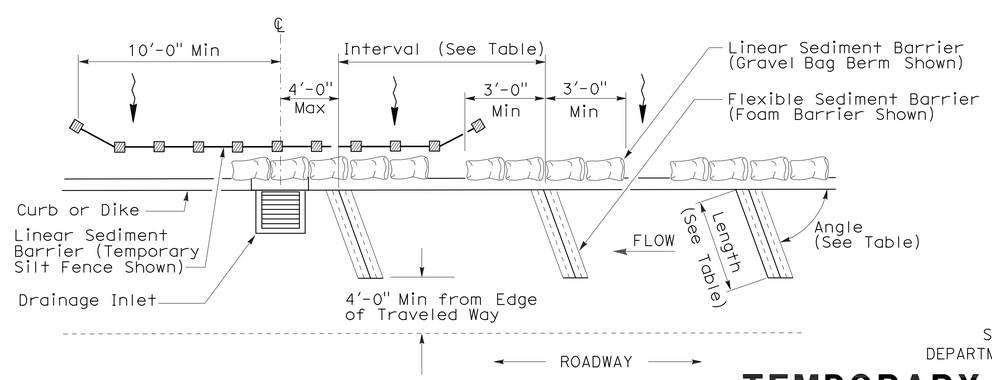

PLAN

TEMPORARY DRAINAGE INLET PROTECTION (TYPE 4B) FLEXIBLE SEDIMENT BARRIER

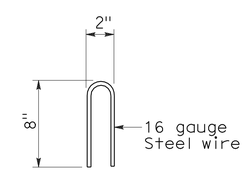

STAPLE DETAIL

STATE OF CALIFORNIA
DEPARTMENT OF TRANSPORTATION

TEMPORARY WATER POLLUTION CONTROL DETAILS (TEMPORARY DRAINAGE INLET PROTECTION)

NO SCALE

NSP T63 DATED AUGUST 15, 2008 SUPPLEMENTS THE STANDARD PLANS BOOK DATED MAY 2006.

NEW STANDARD PLAN NSP T63

2006 NEW STANDARD PLAN NSP T63

7-11-08

DIST	COUNTY	ROUTE	POST MILES TOTAL PROJECT	SHEET NO.	TOTAL SHEETS
10	SJ	12	0.1/R4.4	104	130

LICENSED LANDSCAPE ARCHITECT

August 15, 2008
PLANS APPROVAL DATE

LICENSED LANDSCAPE ARCHITECT
Robert B. Schott 3025
Signature
11-04-08
Renewal Date
08-11-08
Date
STATE OF CALIFORNIA

The State of California or its officers or agents shall not be responsible for the accuracy or completeness of electronic copies of this plan sheet.

To accompany plans dated 12-24-12

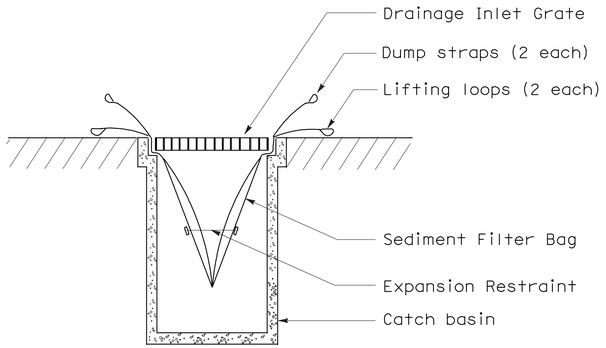

SECTION B-B

SEDIMENT FILTER BAG DETAIL

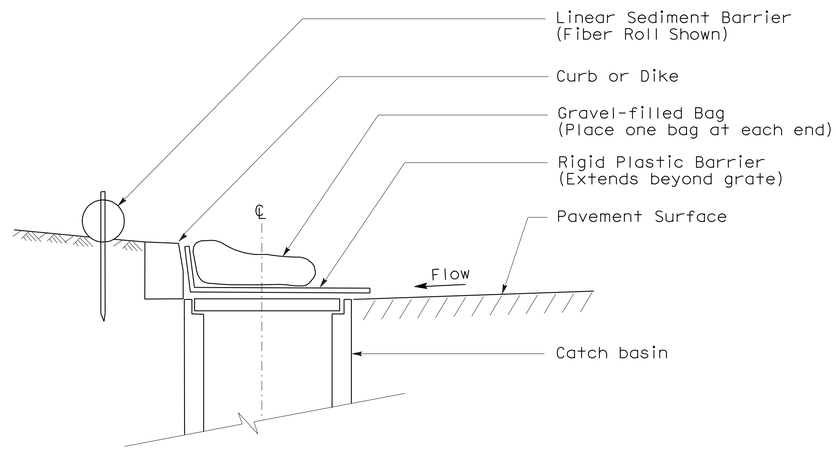

SECTION

TEMPORARY DRAINAGE INLET PROTECTION (TYPE 6A) (CATCH BASIN WITH GRATE)

NOTES:

1. See Standard Plan T51 for Temporary Silt Fence.
2. Dimensions may vary to fit field conditions.

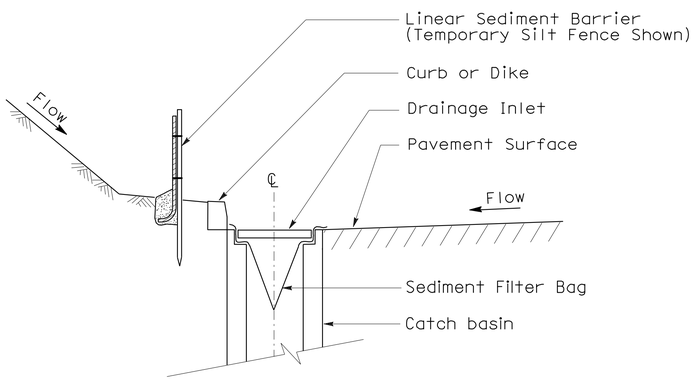

SECTION A-A

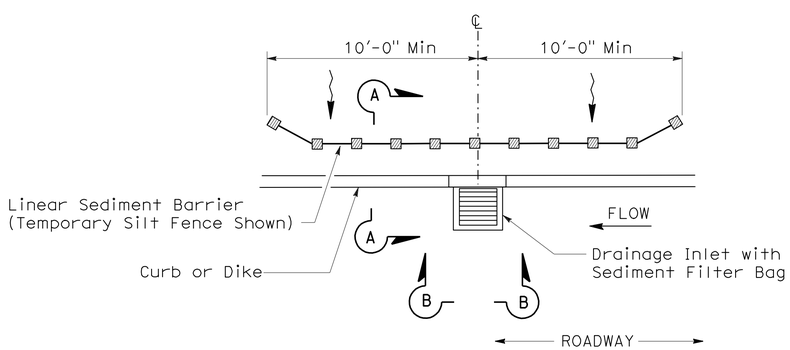

PLAN

TEMPORARY DRAINAGE INLET PROTECTION (TYPE 5) (SEDIMENT FILTER BAG)

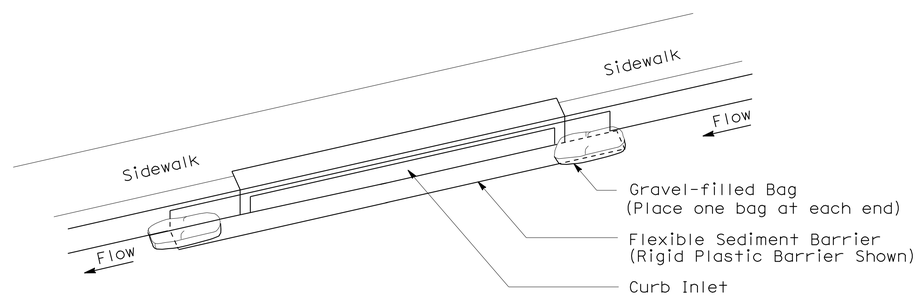

PERSPECTIVE

TEMPORARY DRAINAGE INLET PROTECTION (TYPE 6B) (CURB INLET WITHOUT GRATE)

STATE OF CALIFORNIA
DEPARTMENT OF TRANSPORTATION

TEMPORARY WATER POLLUTION CONTROL DETAILS (TEMPORARY DRAINAGE INLET PROTECTION)

NO SCALE

NSP T64 DATED AUGUST 15, 2008 SUPPLEMENTS
THE STANDARD PLANS BOOK DATED MAY 2006.

NEW STANDARD PLAN NSP T64

2006 NEW STANDARD PLAN NSP T64

7-11-08

DIST	COUNTY	ROUTE	POST MILES TOTAL PROJECT	SHEET NO.	TOTAL SHEETS
10	SJ	12	0.1/R4.4	105	130

LICENSED LANDSCAPE ARCHITECT

April 3, 2009
PLANS APPROVAL DATE

The State of California or its officers or agents shall not be responsible for the accuracy or completeness of electronic copies of this plan sheet.

LICENSED LANDSCAPE ARCHITECT — Robert B. Schott — 3025 — Signature — 11-30-10 Renewal Date — 2-25-09 Date — STATE OF CALIFORNIA

To accompany plans dated 12-24-12

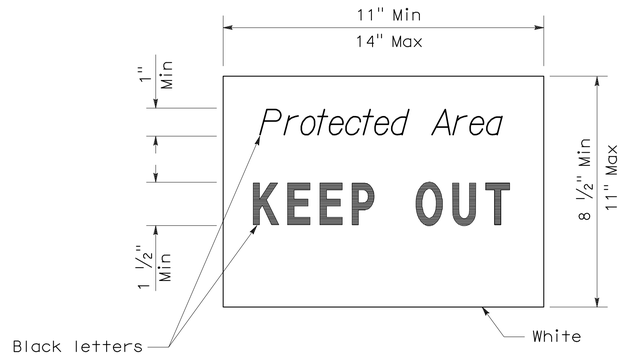

SIGN DETAIL

NOTE:

1. Temporary silt fence and temporary straw bale barrier shown for reference purposes only.

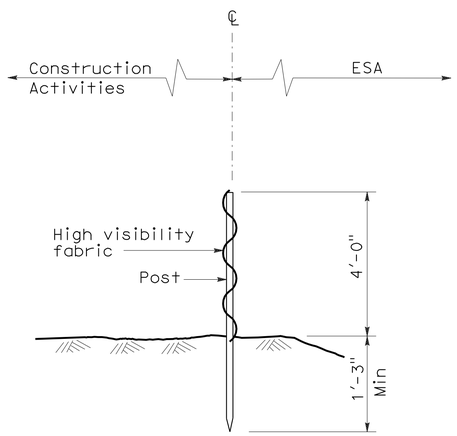

SECTION
TEMPORARY FENCE (TYPE ESA)

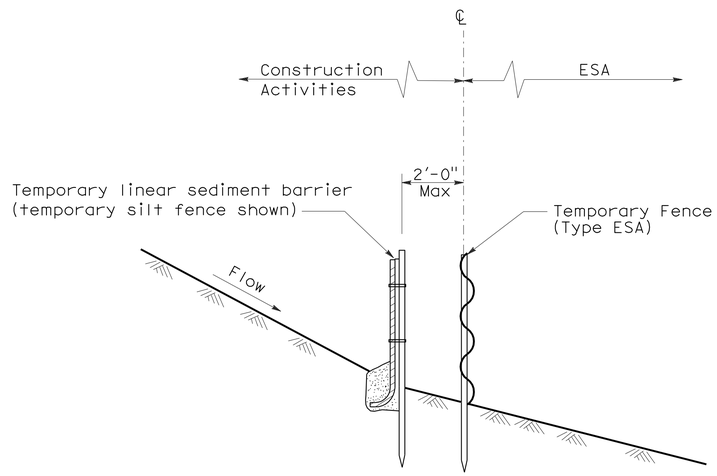

SECTION
PLACEMENT DETAIL
FOR TEMPORARY LINEAR SEDIMENT BARRIER
USED WITH TEMPORARY
FENCE (TYPE ESA)
(See Note 1)

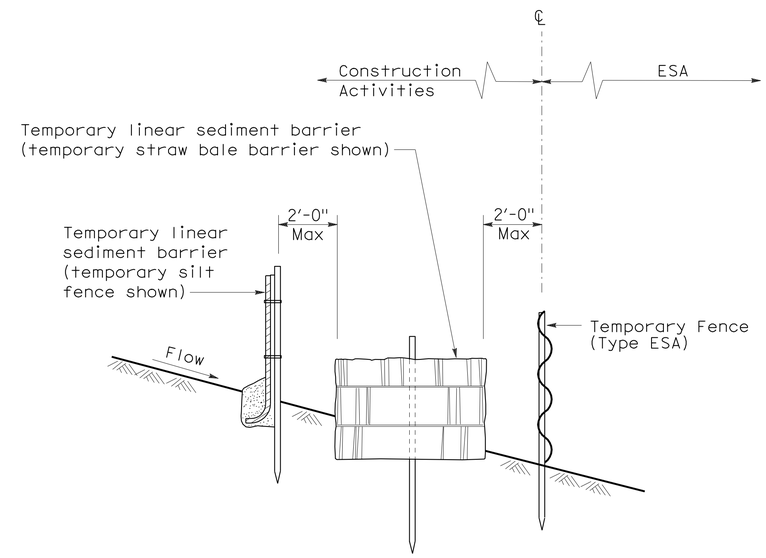

SECTION
PLACEMENT DETAIL
FOR TEMPORARY SILT FENCE
AND TEMPORARY STRAW BALE BARRIER
USED WITH TEMPORARY FENCE (TYPE ESA)
(See Note 1)

STATE OF CALIFORNIA
DEPARTMENT OF TRANSPORTATION

TEMPORARY WATER POLLUTION CONTROL DETAILS [TEMPORARY FENCE (TYPE ESA)]

NO SCALE

NSP T65 DATED APRIL 3, 2009 SUPPLEMENTS
THE STANDARD PLANS BOOK DATED MAY 2006.

NEW STANDARD PLAN NSP T65

2006 NEW STANDARD PLAN NSP T65

DIST	COUNTY	ROUTE	POST MILES TOTAL PROJECT	SHEET NO.	TOTAL SHEETS
10	SJ	12	0.1/R4.4	106	130

REGISTERED CIVIL ENGINEER

October 5, 2007
PLANS APPROVAL DATE

REGISTERED PROFESSIONAL ENGINEER Efthymios Delis No. C51434 Exp. 6-30-08 CIVIL STATE OF CALIFORNIA

The State of California or its officers or agents shall not be responsible for the accuracy or completeness of electronic copies of this plan sheet.

To accompany plans dated 12-24-12

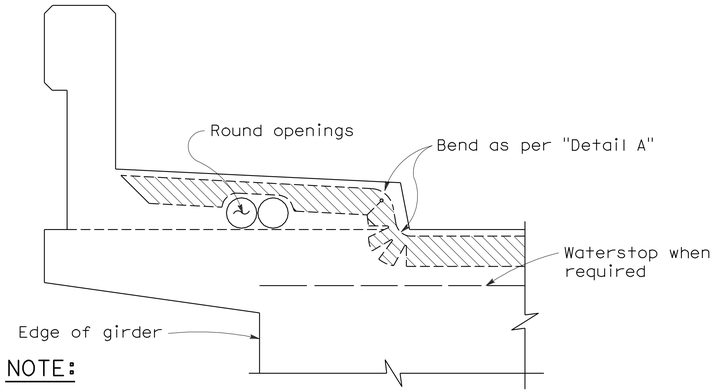

NOTE:

Type "B" seal shown. Type "A" seals to comform to the general path of seal shown, cuts for bending not required. Bend Type "A" seals 3" up into curb or barrier rail on only the low end of the seal.

CONCRETE BARRIER AND SIDEWALK

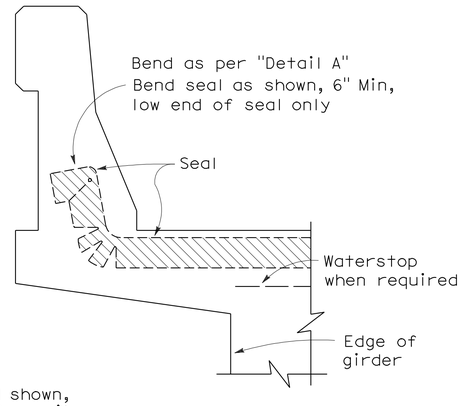

CONCRETE BARRIER

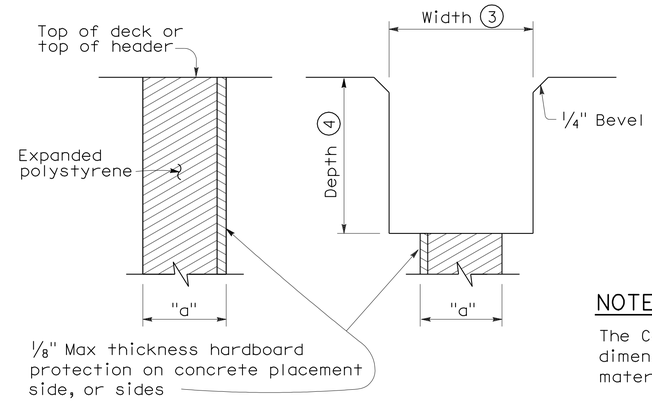

FORMING DETAIL SAWCUT DETAIL

NOTE:

The Contractor shall verify all controlling field dimensions before ordering or fabricatiing any material.

JOINT SEALS DETAILS

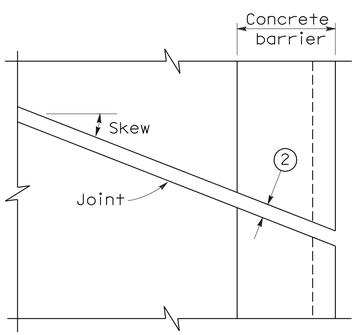

PLAN OF JOINT (SKEW ≤ 20°)

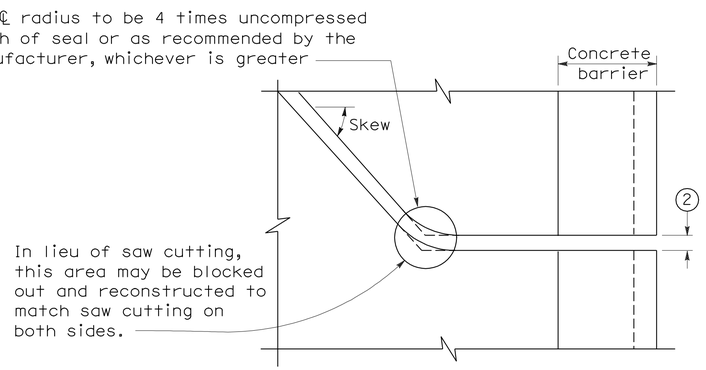

PLAN OF JOINT (SKEW > 20°)

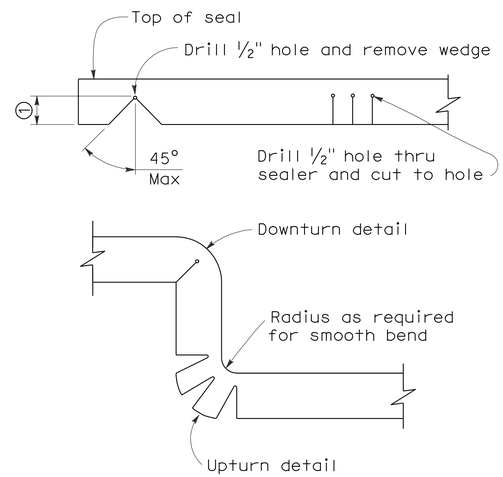

DETAIL A

NOTES:

1. Make smooth cuts from the bottom of seal to 1½" clear of top leaving at least one complete cell between the top of the cut and top of the seal. When necessary cut back of seal to clear conduit and round openings.
2. Opening in barrier to match width of sawn deck joint.
3. Sawcut groove widths shall be as ordered by the Engineer.
4. Depth of sawcut: Type A - Depth to be 2" minimum.
   Type B - Depth to be equal to or greater than the depth of seal measured along the contact surface, when compressed to minimum width position (W_2) plus dimensions shown.
5. MR (movement rating) as shown on other plan sheets.
6. Other depths must be approved by the Engineer.

DIMENSIONS "a" OF JOINT REQUIRED

Movement Rating (MR) (5)	Bridge Type	"a" Dimension Deck Concrete Placed		
		Winter	Fall-Spring	Summer
2"	All except CIP/PS	1½"	1¼"	¾"
	CIP/PS	1¼"	1"	½"
1½"	All except CIP/PS	1¼"	1"	½"
	CIP/PS	1"	¾"	½"
1"	All except CIP/PS	1"	¾"	½"
	CIP/PS	¾"	½"	½"
½"	All except CIP/PS	¾"	¾"	½"
	CIP/PS	½"	½"	½"

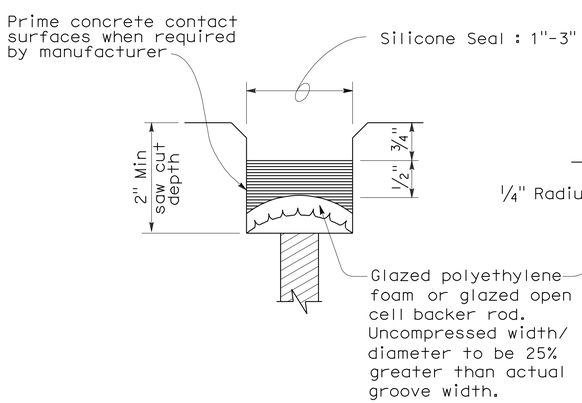

TYPE A SEAL

Movement rating : Silicone = 1" Max

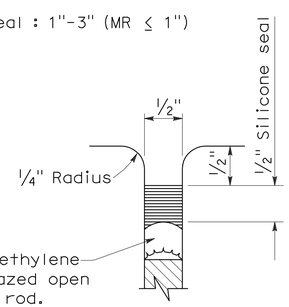

TYPE AL SEAL

Longitudinal joints only

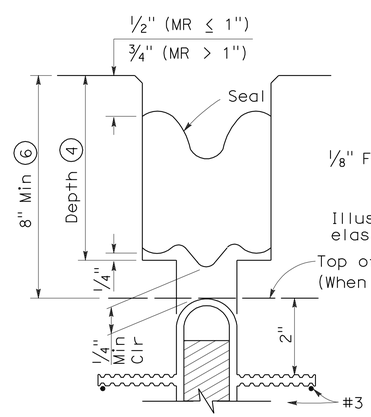

TYPE B JOINT SEAL
IN MINIMUM WIDTH POSITION (W_2)

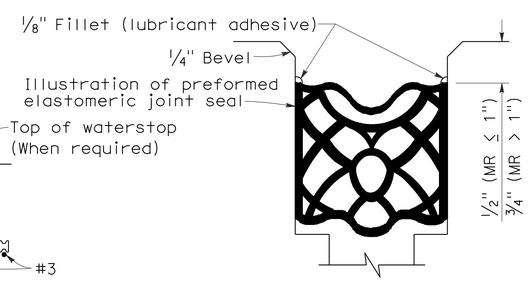

TYPE B SEAL

Movement Rating ≤ 2"

STATE OF CALIFORNIA
DEPARTMENT OF TRANSPORTATION

JOINT SEALS (MAXIMUM MOVEMENT RATING = 2")

NO SCALE

RSP B6-21 DATED OCTOBER 5, 2007 SUPERSEDES STANDARD PLAN B6-21 DATED MAY 1, 2006 - PAGE 258 OF THE STANDARD PLANS BOOK DATED MAY 2006.

REVISED STANDARD PLAN RSP B6-21

2006 REVISED STANDARD PLAN RSP B6-21

5-8-07

DIST	COUNTY	ROUTE	POST MILES TOTAL PROJECT	SHEET NO.	TOTAL SHEETS
10	SJ	12	0.1/R4.4	107	130

REGISTERED CIVIL ENGINEER

October 21, 2011
PLANS APPROVAL DATE

REGISTERED PROFESSIONAL ENGINEER Tillat Satter No. C42892 Exp. 3-31-12 CIVIL STATE OF CALIFORNIA

The State of California or its officers or agents shall not be responsible for the accuracy or completeness of electronic copies of this plan sheet.

To accompany plans dated 12-24-12

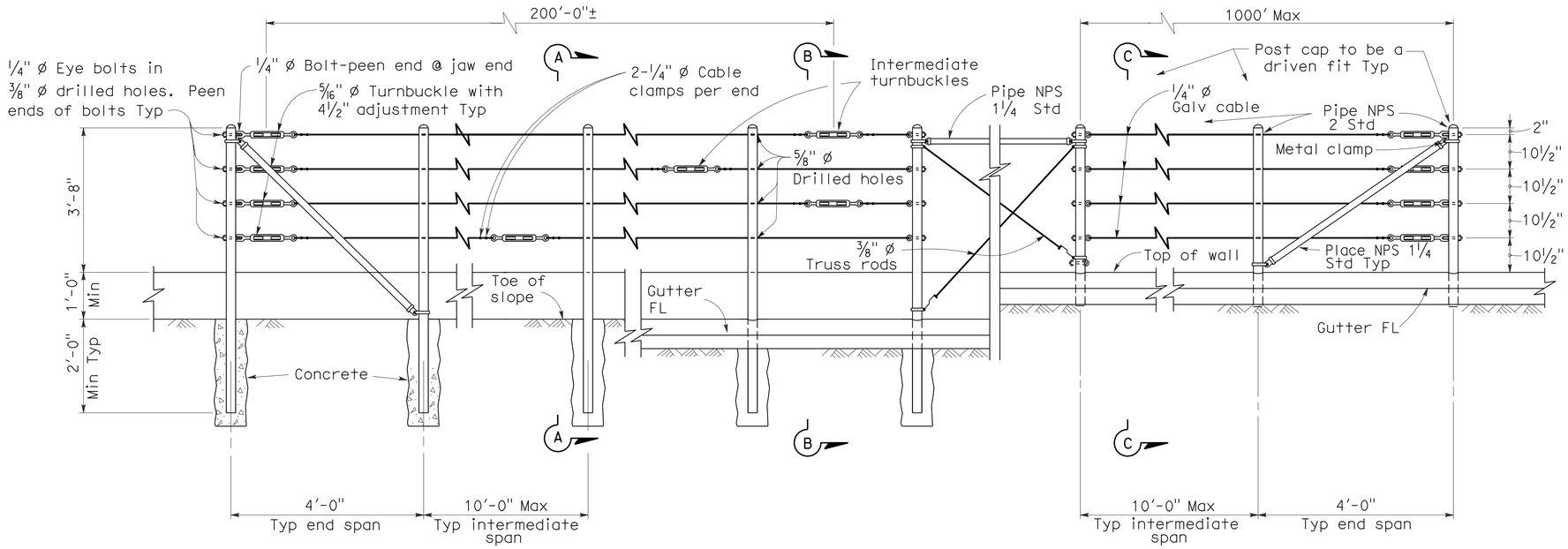

EXISTING WALL (WITHOUT GUTTER)
Existing

RETAINING WALL (WITH GUTTER)
Existing

RETAINING WALL (WITH GUTTER)
New construction

ELEVATION

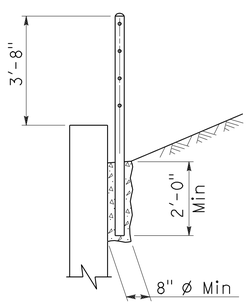

SECTION A-A
Existing

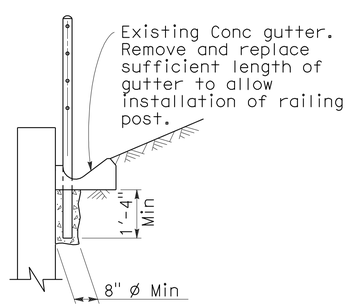

SECTION B-B
Existing

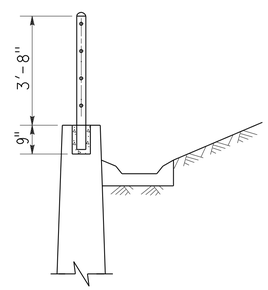

SECTION C-C
New construction

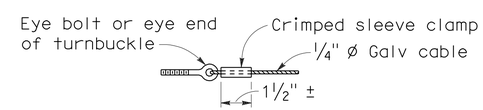

ALTERNATIVE CABLE CONNECTION

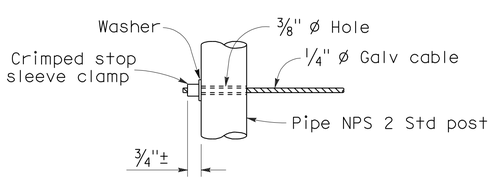

ALTERNATIVE DEAD END ANCHORAGE

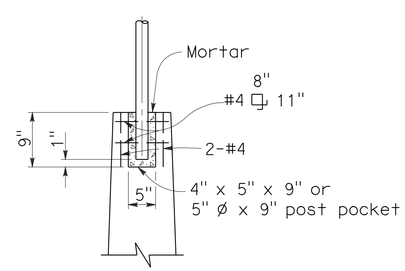

POST POCKET

NOTES:

1. Maximum distance between turnbuckles shall be 200'-0"±.
2. Intermediate turnbuckles to be placed in adjacent spans.
3. Cable shall not be spliced between intermediate turnbuckles and end posts.
4. All posts, cable, and hardware to be galvanized.
5. Posts to be vertical.
6. Alignment of holes in posts may vary to conform to slope of top of retaining wall.
7. The Contractor shall verify all dependent dimensions in the field before ordering or fabricating any material.
8. Alternative details may be submitted by the Contractor for approval by the Engineer.
9. Line posts shall be braced horizontally and trussed diagonally in both directions at intervals not to exceed 1000'.
10. Post pockets to be centered in top of wall.
11. Typical end spans, braced in both directions, shall be constructed at changes in line where the angle of deflection is 15° or more.
12. Provide thimbles at all cable loops.

STATE OF CALIFORNIA
DEPARTMENT OF TRANSPORTATION

CABLE RAILING

NO SCALE

RSP B11-47 DATED OCTOBER 21, 2011 SUPERSEDES STANDARD PLAN B11-47 DATED MAY 1, 2006 - PAGE 268 OF THE STANDARD PLANS BOOK DATED MAY 2006.

REVISED STANDARD PLAN RSP B11-47

2006 REVISED STANDARD PLAN RSP B11-47

9-19-11

DIST	COUNTY	ROUTE	POST MILES TOTAL PROJECT	SHEET NO.	TOTAL SHEETS
10	SJ	12	0.1/R4.4	108	130

REGISTERED ELECTRICAL ENGINEER

October 5, 2007
PLANS APPROVAL DATE

REGISTERED PROFESSIONAL ENGINEER Jeffery G. McRae No. E14512 Exp. 6-30-08 ELECTRICAL STATE OF CALIFORNIA

The State of California or its officers or agents shall not be responsible for the accuracy or completeness of electronic copies of this plan sheet.

To accompany plans dated 12-24-12

2006 REVISED STANDARD PLAN RSP ES-1A

ELECTROLIERS

STANDARD TYPES
15, 15D
15 STRUCTURE
21, 21D STRUCTURE
30
31
32
35
36-20A

High mast light pole

Double Arm lighting standard

Existing electrolier

Electrolier foundation (Future installation)

NOTES:

1. Luminaires shall be 310 W HPS when installed on Type 21, 21D, 30, 31, 32, 35 and 36-20A Standards, unless otherwise specified. Luminaires shall be 200 W HPS when installed on other type standards or poles, unless otherwise specified.
2. Luminaires shall be the cutoff type, ANSI Type Ⅲ medium cutoff lighting distribution, unless otherwise specified.
3. Variations noted adjacent to symbol on project plans.

Electrolier (see project notes or project plans)

Luminaire on wood pole

STANDARD NOTES:

- AB — Abandon. If applied to conduit, remove conductors.
- BC — Install pull box in existing conduit run.
- BP — Pedestrian barricade, type as indicated on plan.
- CB — Install conduit into existing pull box.
- CC — Connect new and existing conduit. Remove existing conductors and install conductors as indicated.
- CF — Conduit to remain for future use. Remove conductors. Install pull wire or rope.
- DH — Detector handhole.
- FA — Foundation to be abandoned.
- IS — Install sign on signal mast arm.
- NS — No slip base on standard.
- PEC — Photoelectric control.
- PEU — Photoelectric unit.
- RC — Equipment or material to be removed and become the property of the Contractor.
- RE — Remove electrolier, fuses and ballast. Tape ends of conductors.
- RL — Relocate equipment.
- RR — Remove and reuse equipment.
- RS — Remove and salvage equipment.
- SC — Splice new to existing conductors.
- SD — Service disconnect.
- SF — Standard to remain for future use. Remove luminaire, pole conductors, fuses and ballast.
- TSP — Telephone service point.

ABBREVIATIONS AND EQUIPMENT DESIGNATIONS

PROPOSED	EXISTING	
BBS	bbs	Battery backup system
BC	bc	Bolt circle
C	C	Conduit
CCTV	cctv	Closed circuit television
CKT	ckt	Circuit
CMS	cms	Changeable message sign
DLC	dlc	Loop detector lead-in cable
EMS	ems	Extinguishable message sign
EVC	evc	Emergency vehicle cable
EVD	evd	Emergency vehicle detector
FB	fb	Flashing beacon
FBCA	fbca	Flashing beacon control assembly
FBS	fbs	Flashing beacon with slip base
FO	fo	Fiber optic
G	G	Ground (Equipment Grounding Conductor)
GFCI	GFCI	Ground fault circuit interrupt
HAR	har	Highway advisory radio
HEX	hex	Hexagonal
HPS	hps	High pressure sodium
IISNS	iisns	Internally illuminated street name sign
ISL	isl	Induction sign lighting
LED	led	Light emitting diode
LMA	lma	Luminaire mast arm
LPS	lps	Low pressure sodium
LTG	ltg	Lighting
LUM	lum	Luminaire
MAT	mat	Mast arm mounting vehicle signal faces, top attachment
MAS	mas	Mast arm mounting vehicle signal faces, side attachment
MAS-4A	mas-4A	Mast arm mounting vehicle signal faces, side attachment - 4 signal section
MAS-4B	mas-4B	
MAS-4C	mas-4C	
MAS-5A	mas-5A	Mast arm mounting vehicle signal faces, side attachment - 5 signal section
MAS-5B	mas-5B	
MC	mc	Mercury contactor
M/M	m/m	Multiple to multiple transformer
MT	mt	Conduit with pull wire or rope only
MTG	mtg	Mounting
	mv	Mercury vapor lighting fixture
N	N	Neutral (Grounded Conductor)
NC	NC	Normally closed
NO	NO	Normally open
PB	pb	Pull box
PEC	pec	Photoelectric control (Type Ⅰ, Ⅱ, Ⅲ, Ⅳ or Ⅴ as shown)
PED	ped	Pedestrian
PEU	peu	Photoelectric unit
PPB	ppb	Pedestrian push button
RL		Relocated equipment
RM	rm	Ramp metering
SB	sb	Slip base
SIC	sic	Signal interconnect cable
SIG	sig	Signal
SMA	sma	Signal mast arm
SNS	sns	Street name sign
SP	sp	Service point
TDC	tdc	Telephone demarcation cabinet
TMS	tms	Traffic monitoring station
TOS	tos	Traffic Operations System
VEH	veh	Vehicle
XFMR	xfmr	Transformer
COMM	comm	Communication
RWIS	rwis	Roadway weather information system

SOFFIT AND WALL MOUNTED LUMINAIRES

Pendant, 70 W HPS unless otherwise specified.

Flush, 70 W HPS unless otherwise specified.

Wall surface, 70 W HPS unless otherwise specified.

Existing soffit or wall luminaire to remain unmodified.

Existing soffit or wall luminaire to be modified as specified.

NOTE:

Arrow indicates "street side" of luminaire.

STATE OF CALIFORNIA
DEPARTMENT OF TRANSPORTATION

ELECTRICAL SYSTEMS (SYMBOLS AND ABBREVIATIONS)

NO SCALE

RSP ES-1A DATED OCTOBER 5, 2007 SUPERSEDES STANDARD PLAN ES-1A DATED MAY 1, 2006 - PAGE 400 OF THE STANDARD PLANS BOOK DATED MAY 2006.

REVISED STANDARD PLAN RSP ES-1A

DIST	COUNTY	ROUTE	POST MILES TOTAL PROJECT	SHEET NO.	TOTAL SHEETS
10	SJ	12	0.1/R4.4	109	130

REGISTERED ELECTRICAL ENGINEER

October 5, 2007
PLANS APPROVAL DATE

REGISTERED PROFESSIONAL ENGINEER Jeffery G. McRae No. E14512 Exp. 6-30-08 ELECTRICAL STATE OF CALIFORNIA

The State of California or its officers or agents shall not be responsible for the accuracy or completeness of electronic copies of this plan sheet.

To accompany plans dated 12-24-12

CONDUIT

PROPOSED	EXISTING	
		Lighting Conduit, unless otherwise indicated or noted
		Traffic signal conduit
C	c	Communication conduit
T	t	Telephone conduit
F	f	Fire alarm conduit
FO	fo	Fiber optic conduit
		Conduit termination (RSP ES-9A C)
R	r	Conduit riser in/on structure or service pole

SERVICE EQUIPMENT

PROPOSED	EXISTING	
OH	oh	Overhead lines
U	U	Wood pole "U" indicates utility owned
		Pole guy with anchor
		Utility transformer - ground mounted
III		Service equipment enclosure type
		Service equipment enclosure door indicates front of enclosure
T	t	Telephone demarcation cabinet

POLE-MOUNTED SERVICE DESIGNATION

Type of installation

TYPE H SERVICE - 28'-10" ← Pole height above grade

ILLUMINATED OVERHEAD SIGN

PROPOSED	EXISTING	
		Overhead sign - Single post
		Overhead sign - Two post
		Overhead sign - Mounted on structure
		Overhead sign with electrolier

SIGNAL EQUIPMENT

PROPOSED	EXISTING	
		Pedestrian signal face
		Pedestrian push button post
		Pedestrian barricade
		Vehicle signal face (with backplate, 3-Section: red, yellow and green)
		Vehicle signal face with angle visors
PV	PV	Modifications of basic symbols: "L" indicates all non-arrow sections louvered "LG" indicates louvered green section only "PV" indicates 12" programmed visibility sections "8" indicates all 8" sections (only when specified)
		Type 15TS and Vehicle signal face
		Vehicle signal face with red, yellow and green left arrow sections
		Vehicle signal face with red and yellow sections and up green arrow
		Vehicle signal face (5 Section) with red, yellow and green sections and yellow and green right arrows
		Type 1 Standard and attached vehicle signal faces
		Standard with signal mast arm only and attached vehicle signal faces and internally illuminated street name sign
		Type 33 Standard, Left-turn vehicle signal face and sign
		Standard with luminaire and signal mast arms and attached vehicle signal faces
		Cantilever flashing beacon Type 9 Frame, with a sign unless otherwise specified or indicated
		Type 15-FBS Standard with two vehicle signal face sections with lens, backplate and visor with a sign
R	Y	Flashing beacon. One vehicle signal face section with lens, backplate and visor. "R" indicates red indication, "Y" indicates yellow indication
		Controller assembly. Door indicates front of cabinet

SIGNAL EQUIPMENT Cont

PROPOSED	EXISTING	
		Guard post
		Type 1 Standard with "Meter On" sign
		Emergency Vehicle detector

NOTES:

1. All signal sections shall be 12" unless shown otherwise.
2. Signal heads shall be provided with backplates unless shown otherwise.
3. Signal indication shall be LED.

STATE OF CALIFORNIA
DEPARTMENT OF TRANSPORTATION

ELECTRICAL SYSTEMS (SYMBOLS AND ABBREVIATIONS)

NO SCALE

RSP ES-1B DATED OCTOBER 5, 2007 SUPERCEDES STANDARD PLAN ES-1B DATED MAY 1, 2006 - PAGE 401 OF THE STANDARD PLANS BOOK DATED MAY 2006.

REVISED STANDARD PLAN RSP ES-1B

2006 REVISED STANDARD PLAN RSP ES-1B

DIST	COUNTY	ROUTE	POST MILES TOTAL PROJECT	SHEET NO.	TOTAL SHEETS
10	SJ	12	0.1/R4.4	110	130

REGISTERED ELECTRICAL ENGINEER

October 5, 2007
PLANS APPROVAL DATE

REGISTERED PROFESSIONAL ENGINEER Jeffery G. McRae No. E14512 Exp. 6-30-08 ELECTRICAL STATE OF CALIFORNIA

The State of California or its officers or agents shall not be responsible for the accuracy or completeness of electronic copies of this plan sheet.

To accompany plans dated 12-24-12

EQUIPMENT IDENTIFICATION

ILLUMINATED SIGN IDENTIFICATION NUMBER:

Sign No. 12345 — Sign number - Place on post or structure

10 ISL SCI 1.0

- 1.0 — Transformer rating (kVA)
- SCI — Lighting control type
- ISL — Number and type of fixtures

Do NOT place on standard or structure

ELECTROLIER OR EQUIPMENT IDENTIFICATION NUMBER:

12345 - 15'-0"

- 15'-0" — Mast arm length, if shown. Do not place on standard or structure.
- 12345 — Equipment number - Place on standard or structure. Existing equipment numbers are shown in parenthesis

CONDUIT AND CONDUCTOR IDENTIFICATION:

1½"C, 2#10, 15#14, 2 DLC

- 2#10, 15#14, 2 DLC — Number and size of conductors and cables
- 1½"C — Size of conduit in inches

Ø1, Ø2, Ø2P, etc.	Traffic phase identification for signal faces, detectors and phase diagrams
1 2 3	Project note numbers
A B C	Equipment description, installation or item numbers
1 2 3	Conduit run numbers

SIGNAL AND LIGHTING STANDARD (TYPICAL DESIGNATION):

19A - 3 - 100

- 100 — Wind velocity = 100 mph
- 3 — Case 3 arm loading
- 19A — Standard type
- Standard Plan sheet number
- Detail number or letter

MISCELLANEOUS EQUIPMENT

PROPOSED	EXISTING	
CMS	cms	Changeable message sign
		Closed circuit television camera
		Highway advisory radio pole and antenna
EMS	ems	Extinguishable message sign
M V	m v	Detection device M = Microwave sensor V = Video image sensor

WIRING DIAGRAM LEGEND

P	Pole
CB	Circuit breaker
A	Ampere
V	Volt
M	Metered
UM	Unmetered
NB	Neutral bus
GB	Ground bus
G	Equipment grounding conductor
N	Grounded conductor (Neutral)

- External conductor
- Conductor or bus
- Tie point
- Contactor coil
- Contactor, Contact NO
- Terminal blocks
- Contactor, Contact NC
- Enclosure bond
- Grounding electrode
- Circuit breaker
- Receptacle

PULL BOXES

PROPOSED EXISTING

Pull box-No. 5 unless otherwise indicated or noted.

3 — 9A(21)

Pull box-Additional designations or descriptions

3	= No. 3½ pull box
5	= No. 5 pull box
6	= No. 6 pull box
7	= No. 7 (Ceiling pull box)
8	= No. 8 (Pendant soffit pull box)
9	= No. 9 pull box
9A	= No. 9A pull box

(C) = Communications pull box
(E) = Pull box with extension
(S) = Sprinkler control pull box
(21) = Anchor bolts and conduit for future installation of Type 21 Standard
(T) = Traffic pull box

VEHICLE DETECTORS

5 J 9 U

- U = Upper
- L = Lower
- Slot number in input file
- Input file (I or J)
- Phase
- Vehicle detector designation

PROPOSED EXISTING

- Type A detector loop. Outline of sawcut shown.
- Type B detector loop. Outline of sawcut shown.
- Type C detector loop. Outline of sawcut shown.
- Type D detector loop. Outline of sawcut shown.
- Type E detector loop. Outline of sawcut shown.
- Type Q detector loop. Outline of sawcut shown.
- Magnetic detector
- DH / dh — Detector handhole
- Microwave or video detection zone

STATE OF CALIFORNIA
DEPARTMENT OF TRANSPORTATION

ELECTRICAL SYSTEMS (SYMBOLS AND ABBREVIATIONS)

NO SCALE

RSP ES-1C DATED OCTOBER 5, 2007 SUPERCEDES STANDARD PLAN ES-1C DATED MAY 1, 2006 - PAGE 402 OF THE STANDARD PLANS BOOK DATED MAY 2006.

REVISED STANDARD PLAN RSP ES-1C

2006 REVISED STANDARD PLAN RSP ES-1C

DIST	COUNTY	ROUTE	POST MILES TOTAL PROJECT	SHEET NO.	TOTAL SHEETS
10	SJ	12	0.1/R4.4	111	130

REGISTERED ELECTRICAL ENGINEER

June 6, 2008
PLANS APPROVAL DATE

REGISTERED PROFESSIONAL ENGINEER
Jeffery G. McRae
No. E14512
Exp. 6-30-10
ELECTRICAL
STATE OF CALIFORNIA

The State of California or its officers or agents shall not be responsible for the accuracy or completeness of electronic copies of this plan sheet.

To accompany plans dated 12-24-12

VISORS

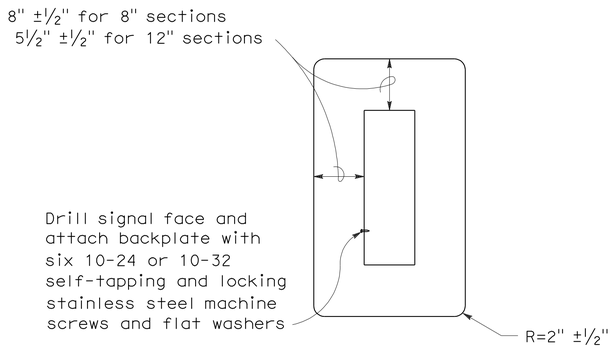

8" AND 12" SECTIONS

BACKPLATE

1/16" minimum thickness
3001-14 aluminum, or plastic when specified

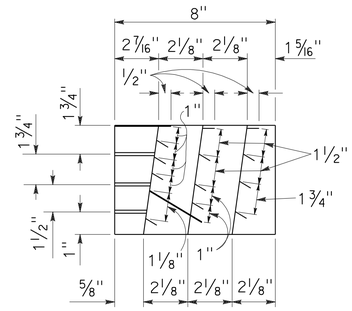

SECTION A-A

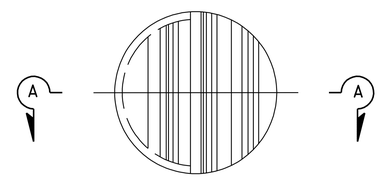

FRONT VIEW

DIRECTIONAL LOUVER

Directional louvers shall be oriented as directed by the Engineer and secured in place with one plated brass machine screw and nut.

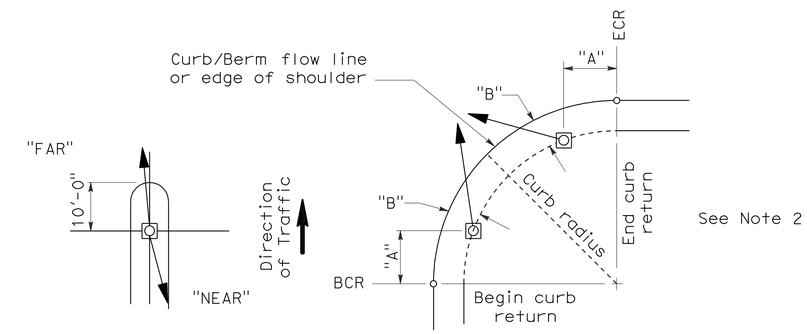

NOTES:

1. Typical signal pole placement unless dimensioned on plans.
2. For "A" and "B" dimensions, see Pole Schedule, or as directed by the Engineer.

SIGNAL STANDARD PLACEMENT DIMENSIONS AND EQUIPMENT LOCATIONS

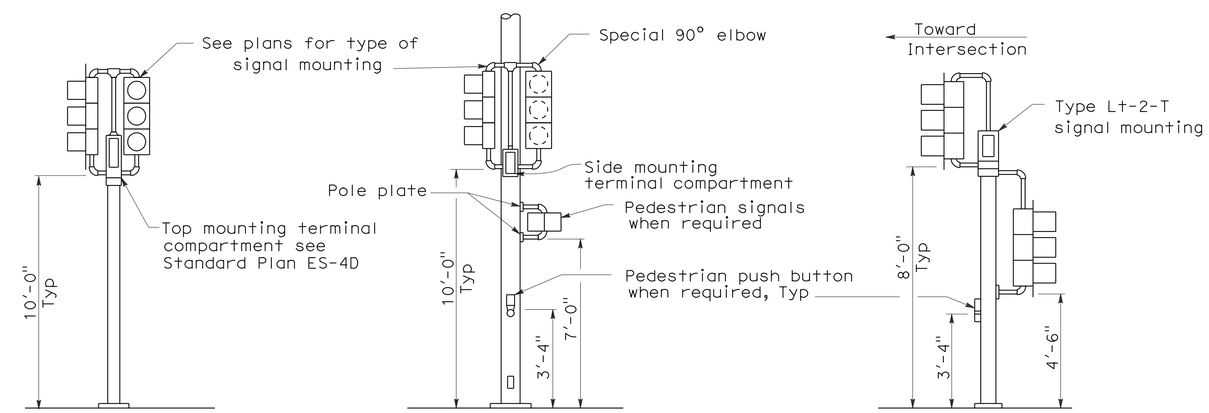

TOP MOUNTED SIGNALS (TV)

Type 1-A, 1-B, 1-C and 1-D standard as indicated on the plans

SIDE MOUNTED SIGNALS (SV AND SP)

Normally used on standards with luminaire or signal mast arm

LEFT TURN LANE SIGNAL

Type 1-A, 1-B, 1-C and 1-D standard as indicated on plans

TYPICAL SIGNAL INSTALLATIONS

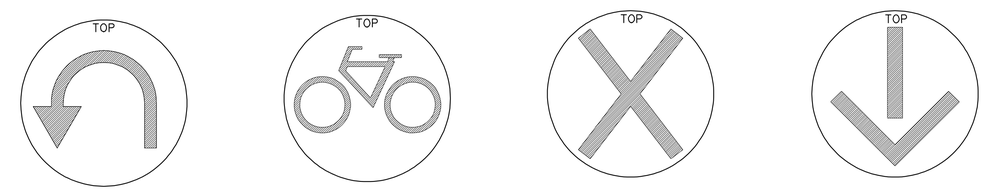

U-TURN SIGNAL FACE | BICYCLE SIGNAL FACE | LANE CONTROL SIGNAL FACE | LANE CONTROL SIGNAL FACE

STATE OF CALIFORNIA
DEPARTMENT OF TRANSPORTATION

ELECTRICAL SYSTEMS (SIGNAL HEADS AND MOUNTINGS)

NO SCALE

RSP ES-4C DATED JUNE 6, 2008 SUPERSEDES STANDARD PLAN ES-4C DATED MAY 1, 2006 - PAGE 420 OF THE STANDARD PLANS BOOK DATED MAY 2006.

REVISED STANDARD PLAN RSP ES-4C

2006 REVISED STANDARD PLAN RSP ES-4C

5-19-08

DIST	COUNTY	ROUTE	POST MILES TOTAL PROJECT	SHEET NO.	TOTAL SHEETS
10	SJ	12	0.1/R4.4	112	130

REGISTERED ELECTRICAL ENGINEER

June 6, 2008
PLANS APPROVAL DATE

REGISTERED PROFESSIONAL ENGINEER Jeffery G. McRae No. E14512 Exp. 6-30-10 ELECTRICAL STATE OF CALIFORNIA

The State of California or its officers or agents shall not be responsible for the accuracy or completeness of electronic copies of this plan sheet.

To accompany plans dated 12-24-12

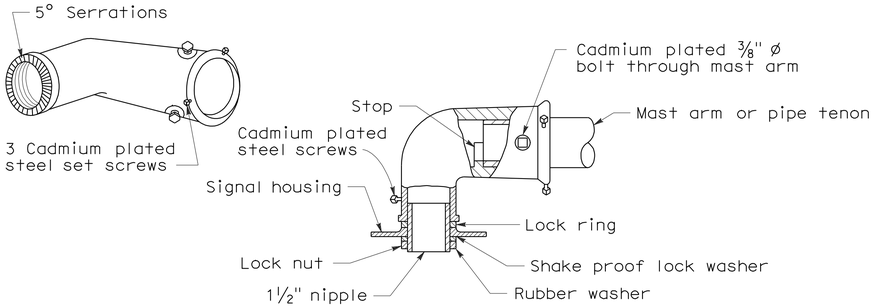

MAST ARM MOUNTING - TYPE "MAT"

For 2 NPS pipe, see Note 1.

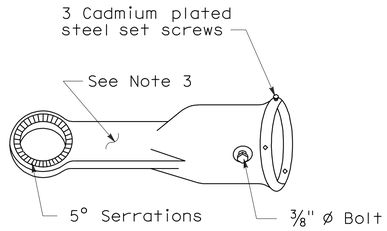

MAST ARM MOUNTING - TYPE "MAS"

For 2 NPS pipe. See Note 1.

SIGNAL SLIP FITTERS

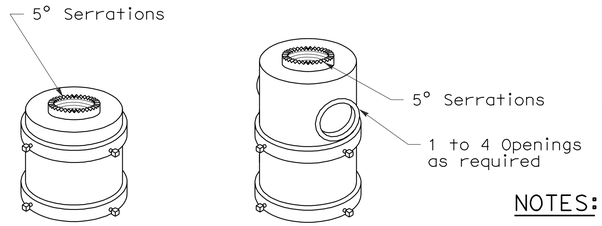

For one mounting For mulitiple mountings

TOP MOUNTINGS

For 4 NPS pipe, see Note 2.

NOTES:

1. After mast arm signal has been plumbed and secured, drill 7/16" hole through mast arm tenon in line with slip fitter hole. Place a cadmium plated 3/8" ø galvanized bolt with washer under bolt head through hole and secure with washer, nut, and locknut. Seal openings between mast arm mountings and mast arm with mastic.
2. (a) Threaded top mounted slip fitter openings shall be 1½ NPS.

   (b) Serrations in fittings shall match those on bottom of signal heads or in lock ring.

   (c) Top opening shall be offset when backplate is used.
3. Wireway shall have a cross section area of 0.95 square inch minimum. Minimum width of ½".

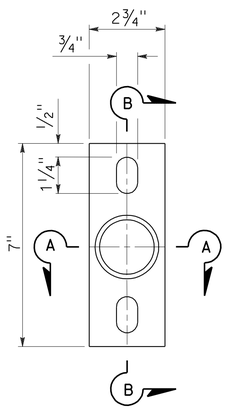

POLE PLATE

For side mountings

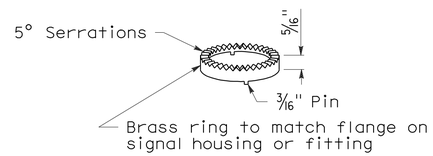

LOCK RING

Use where locking ring is not integral with signal housing or fitting.

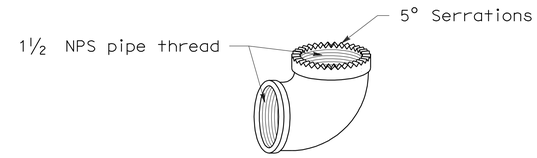

SPECIAL 90° ELBOW

One for each signal head, except those with special slip fitter mounting

MISCELLANEOUS MOUNTING HARDWARE

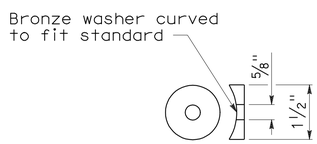

DETAIL "C"

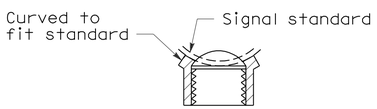

SECTION A-A

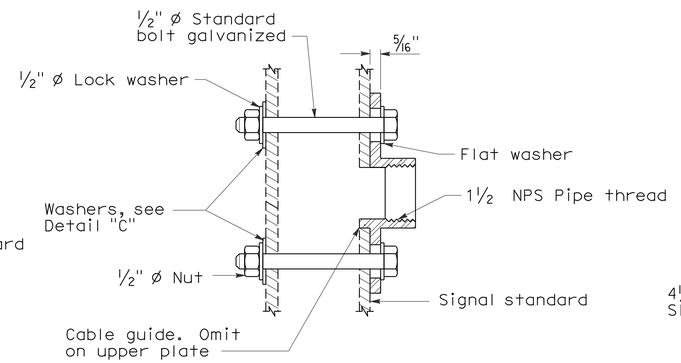

SECTION B-B

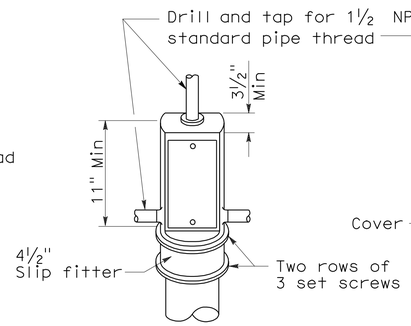

TOP MOUNTING

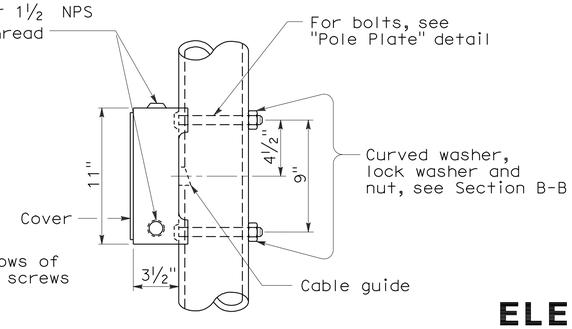

SIDE MOUNTING

TERMINAL COMPARTMENTS

STATE OF CALIFORNIA
DEPARTMENT OF TRANSPORTATION

ELECTRICAL SYSTEMS (SIGNAL HEADS AND MOUNTINGS)

NO SCALE

RSP ES-4D DATED June 6, 2008 SUPERSEDES STANDARD PLAN ES-4D
DATED MAY 1, 2006 - PAGE 421 OF THE STANDARD PLANS BOOK DATED MAY 2006.

REVISED STANDARD PLAN RSP ES-4D

2006 REVISED STANDARD PLAN RSP ES-4D

5-19-08

DIST	COUNTY	ROUTE	POST MILES TOTAL PROJECT	SHEET NO.	TOTAL SHEETS
10	SJ	12	0.1/R4.4	113	130

Jeffery G. McRae
REGISTERED ELECTRICAL ENGINEER

January 20, 2012
PLANS APPROVAL DATE

REGISTERED PROFESSIONAL ENGINEER
Jeffery G. McRae
No. E14512
Exp. 6-30-12
ELECTRICAL
STATE OF CALIFORNIA

The State of California or its officers or agents shall not be responsible for the accuracy or completeness of electronic copies of this plan sheet.

To accompany plans dated 12-24-12

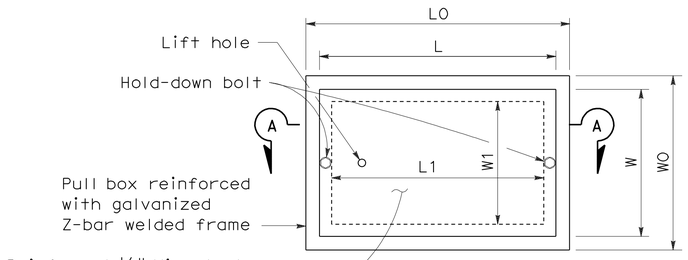

TOP VIEW

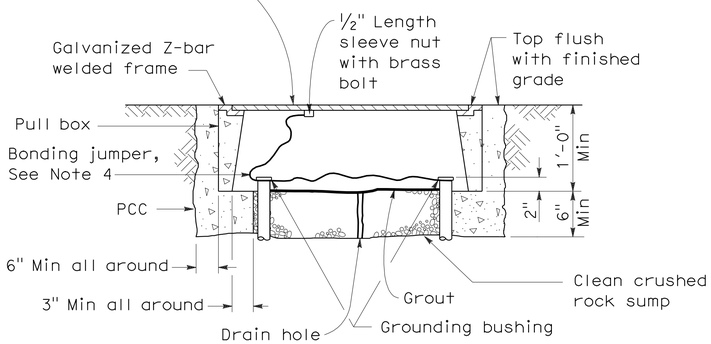

SECTION A-A

No. 3½(T), No. 5(T) AND No. 6(T) TRAFFIC PULL BOX

NOTES ON PULL BOXES:

1. Traffic pull box shall be provided with steel cover and special concrete footing. Steel cover shall have embossed non-skid pattern.
2. Steel reinforcing shall be as regularly used in the standard products of the respective manufacturer.
3. Pull box covers must be marked as follows: "SERVICE" Service circuits between service point and service disconnect; "SPRINKLER-CONTROL" Sprinkler control circuits, 50 V or less; "CALTRANS" On all pull boxes, except pull boxes marked "SPRINKLER-CONTROL"; and "TELEPHONE" Telephone service.
   A) No. 3½(T) pull box.
      1) "SIGNAL" - Traffic signal circuits with or without street or sign lighting circuits.
      2) "ST LIGHTING" - Street or sign lighting circuits where voltage is under 600 V.
   B) No. 5(T) or 6(T) pull box.
      1) "TRAFFIC SIGNAL" - Traffic signal circuits with or without street or sign lighting circuits.
      2) "STREET LIGHTING" - Street or sign lighting circuits where voltage is under 600 V.
      3) "STREET LIGHTING-HIGH VOLTAGE" - Street or sign lighting circuits where voltage is above 600 V.
      4) "IRRIGATION" - Circuits to irrigation controller 120 V or more.
      5) "RAMP METER" - Ramp meter circuits.
      6) "COUNT STATION" - Count or speed monitor circuits.
      7) "COMMUNICATION" - Communication circuits.
      8) "TOS COMMUNICATIONS" - TOS communications line.
      9) "TOS POWER" - TOS power.
      10) "TDC POWER" - Telephone demarcation cabinet power.
      11) "CCTV" - Closed circuit television circuits.
      12) "TMS" - Traffic monitoring station circuits.
      13) "CMS" - Changeable message sign circuits.
      14) "HAR" - Highway advisory radio circuits.
4. Bonding jumper for metal covers shall be 3' long, minimum.
5. The nominal dimensions of the opening in which the cover sets must be the same as the cover dimensions except the length and width dimensions shall be ⅛" greater.
6. Covers and boxes must be interchangeable with California standard male and female gages. When interchanged with a standard male or female gage, the top surfaces must be flush within ⅛".

DIMENSION TABLE

PULL BOX	BOX						COVER				
	Minimum * Thickness	Minimum Depth Box and Extension	WO	LO	L1	W1	L **	W **	R	Edge Thickness	Edge Taper
No. 3½(T)	1½"	1'-0"	1'-5"± 1"	1'-8⅞"±	1'-2½"±	10⅝"± 1"	1'-8"±	1'-1¾"±	0"	½"	None
No. 5(T)	1¾"	1'-0"	1'-11½"± 1"	2'-5½"±	1'-7"±	1'-1"± 1"	2'-3"±	1'-4"±	0"	½"	None
No. 6(T)	2"	1'-0"	2'-6"± 1"	2'-11½"±	1'-11½"±	1'-5"± 1"	2'-9"±	1'-8"±	0"	½"	None

* Excluding conduit web ** Top dimension

STATE OF CALIFORNIA
DEPARTMENT OF TRANSPORTATION

ELECTRICAL SYSTEMS (TRAFFIC RATED PULL BOX)

NO SCALE

NSP ES-8B DATED JANUARY 20, 2012 SUPPLEMENTS THE STANDARD PLANS BOOK DATED MAY 2006.

NEW STANDARD PLAN NSP ES-8B

2006 NEW STANDARD PLAN NSP ES-8B

DIST	COUNTY	ROUTE	POST MILES TOTAL PROJECT	SHEET NO.	TOTAL SHEETS
10	SJ	12	0.1/R4.4	114	130

REGISTERED ELECTRICAL ENGINEER

October 5, 2007
PLANS APPROVAL DATE

REGISTERED PROFESSIONAL ENGINEER
Jeffery G. McRae
No. E14512
Exp. 6-30-08
ELECTRICAL
STATE OF CALIFORNIA

The State of California or its officers or agents shall not be responsible for the accuracy or completeness of electronic copies of this plan sheet.

To accompany plans dated 12-24-12

2006 REVISED STANDARD PLAN RSP ES-14A

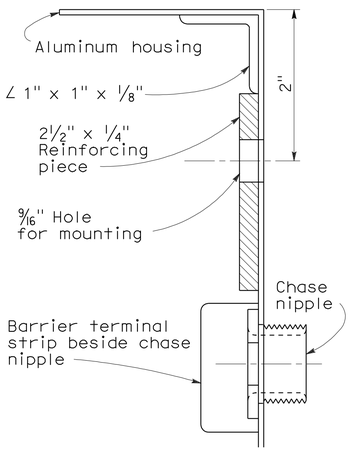

REINFORCING DETAIL

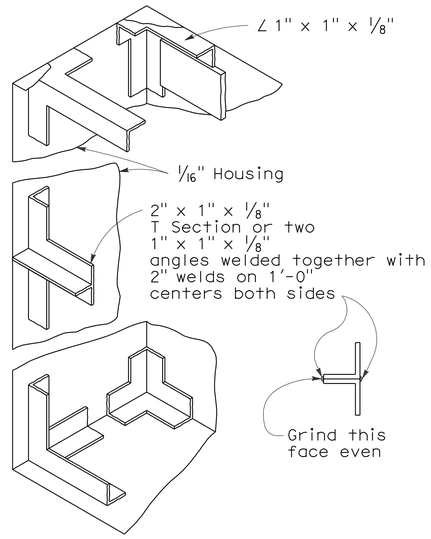

FRAMING DETAILS

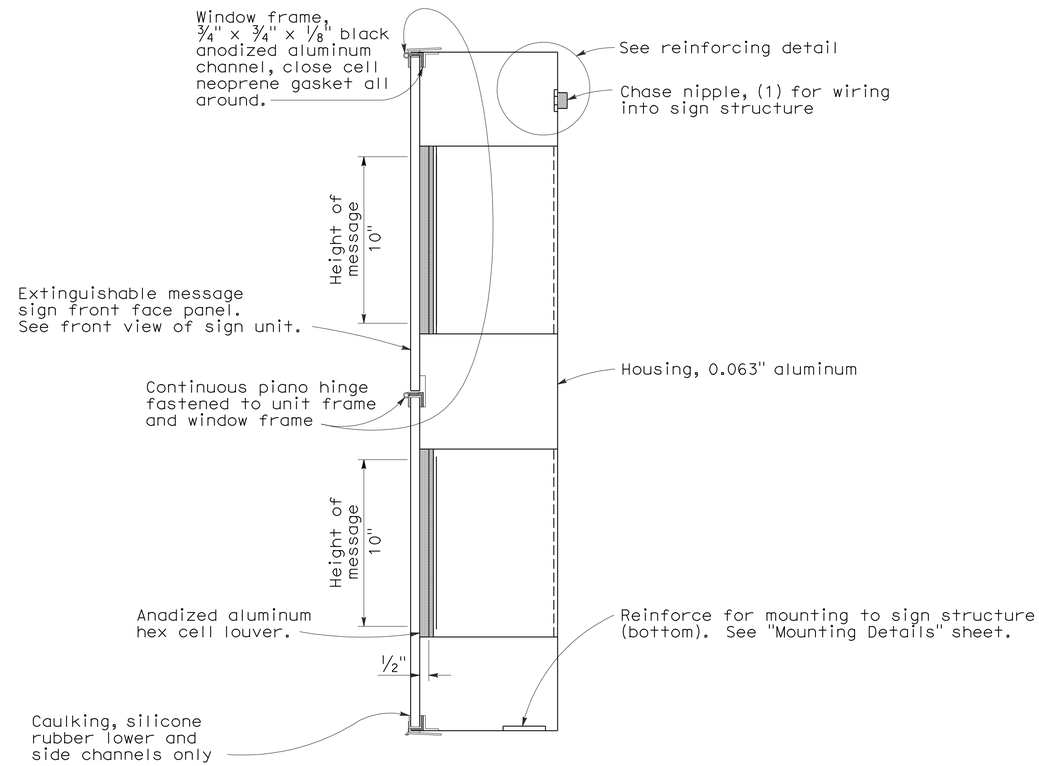

CROSS-SECTION OF SIGN

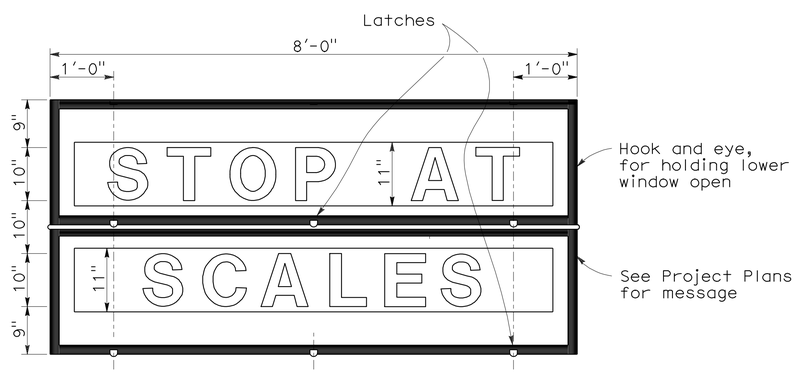

FRONT VIEW OF SIGN

Note:

See Wiring Notes and Symbols on Revised Standard Plan RSP ES-14B.

STATE OF CALIFORNIA
DEPARTMENT OF TRANSPORTATION

ELECTRICAL SYSTEMS (LED EXTINGUISHABLE MESSAGE SIGN 10" LETTERS)

NO SCALE

RSP ES-14A DATED OCTOBER 5, 2007 SUPERCEDES STANDARD PLAN ES-14A DATED MAY 1, 2006 - PAGE 466 OF THE STANDARD PLANS BOOK DATED MAY 2006.

REVISED STANDARD PLAN RSP ES-14A

8-17-07

DIST	COUNTY	ROUTE	POST MILES TOTAL PROJECT	SHEET No.	TOTAL SHEETS
10	SJ	12	0.1/R4.4	115	130

REGISTERED CIVIL ENGINEER 7-1-12 DATE

12-24-12
PLANS APPROVAL DATE

REGISTERED PROFESSIONAL ENGINEER
Rene Coria
No. C78907
Exp. 03-31-14
CIVIL
STATE OF CALIFORNIA

The State of California or its officers or agents shall not be responsible for the accuracy or completeness of electronic copies of this plan sheet.

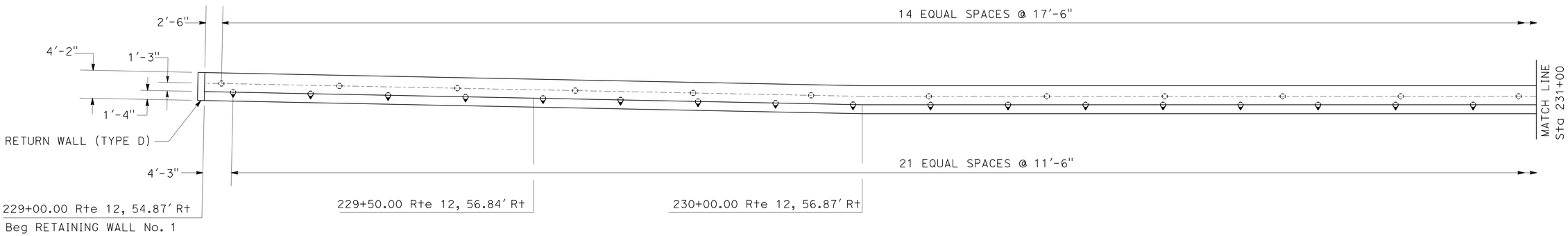

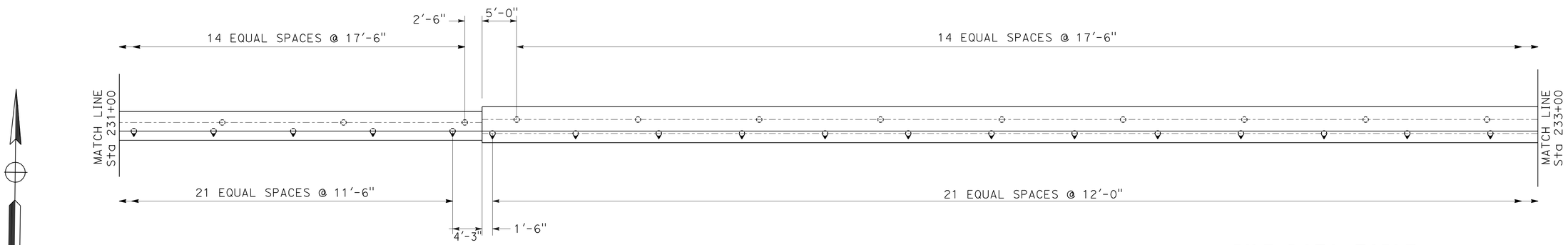

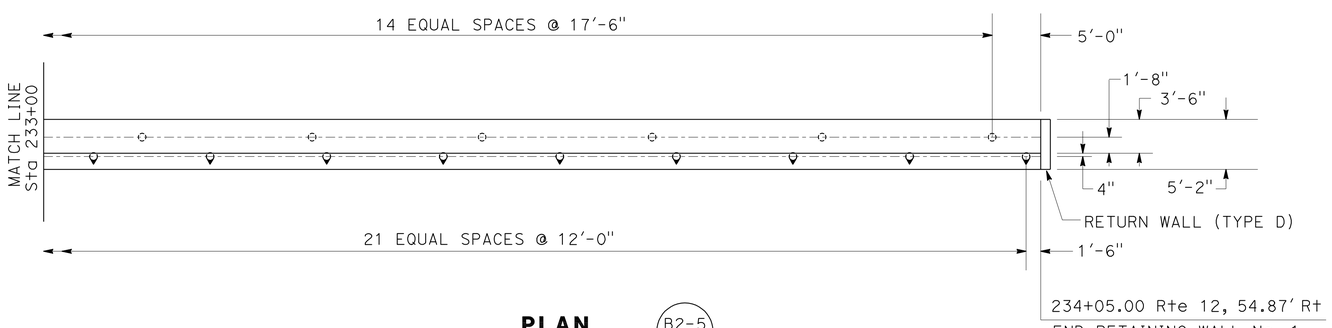

PLAN
1/8" = 1'-0"

B2-5

PILE DATA TABLE

SUPPORT LOCATION	PILE TYPE	NOMINAL RESISTANCE		DESIGN TIP ELEVATION (Ft)	SPECIFIED TIP ELEVATION (Ft)
		COMPRESSION	TENSION		
229+00.00 TO 230+00.00 (H=4 Ft)	CL 90 Alt. W	180	0	-94 (a)	-94
230+00.00 TO 231+50.00 (H=6 Ft)	CL 90 Alt. W	180	0	-94 (a)	-94
231+50.00 TO 234+05.00 (H=4 Ft)	CL 90 Alt. W	180	0	-94 (a)	-94

Notes:

1. The design tip elevations recommended herein are controlled by (a) compression.
2. The specified tip elevations recommended herein shall not be raised if controlled by lateral load.

LEGEND

INDICATE VERTICAL PILE

INDICATE BATTERED PILE (1:3)

	BY	CHECKED
DESIGN	R. Coria	X
DETAILS	B. Colvin	R. Coria
QUANTITIES	X	X

STATE OF CALIFORNIA
DEPARTMENT OF TRANSPORTATION

DIVISION OF ENGINEERING SERVICES
STRUCTURE DESIGN
DESIGN BRANCH 17

BRIDGE NO. 29-0336
POST MILE 2.65

RETAINING WALL NO. 1
PILE LAYOUT

STRUCTURES DESIGN DETAIL SHEET (ENGLISH) (REV. 09-01-10)

ORIGINAL SCALE IN INCHES FOR REDUCED PLANS 0 1 2 3

UNIT: 3586
PROJECT NUMBER & PHASE: 10000000521
CONTRACT NO.: 10-0G8001

DISREGARD PRINTS BEARING EARLIER REVISION DATES

REVISION DATES 7-12-12

SHEET $PAGENUM OF $PAGETOT

FILE => a0g800qa004.dgn

USERNAME => s117606 DATE PLOTTED => 27-DEC-2012 TIME PLOTTED => 16:10

DIST	COUNTY	ROUTE	POST MILES TOTAL PROJECT	SHEET No.	TOTAL SHEETS
10	SJ	12	0.1/R4.4	116	130

REGISTERED CIVIL ENGINEER 7-1-12 DATE

12-24-12
PLANS APPROVAL DATE

REGISTERED PROFESSIONAL ENGINEER
Rene Coria
No. C78907
Exp. 03-31-14
CIVIL
STATE OF CALIFORNIA

The State of California or its officers or agents shall not be responsible for the accuracy or completeness of electronic copies of this plan sheet.

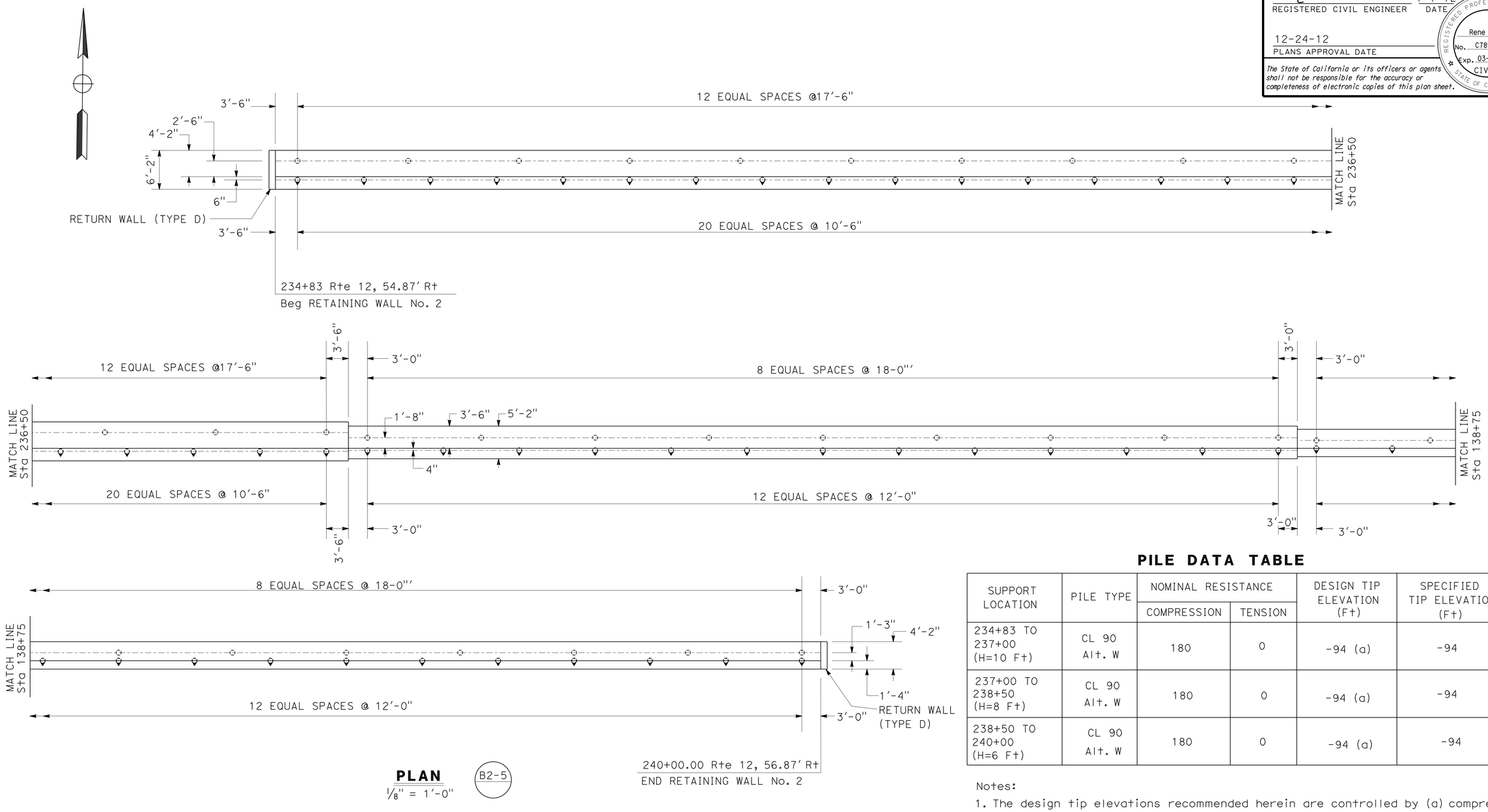

PLAN
1/8" = 1'-0"

B2-5

PILE DATA TABLE

SUPPORT LOCATION	PILE TYPE	NOMINAL RESISTANCE		DESIGN TIP ELEVATION (Ft)	SPECIFIED TIP ELEVATION (Ft)
		COMPRESSION	TENSION		
234+83 TO 237+00 (H=10 Ft)	CL 90 Alt. W	180	0	-94 (a)	-94
237+00 TO 238+50 (H=8 Ft)	CL 90 Alt. W	180	0	-94 (a)	-94
238+50 TO 240+00 (H=6 Ft)	CL 90 Alt. W	180	0	-94 (a)	-94

Notes:

1. The design tip elevations recommended herein are controlled by (a) compression.
2. The specified tip elevations recommended herein shall not be raised if controlled by lateral load.

	BY	CHECKED
DESIGN	R. Coria	X
DETAILS	B. Colvin	R. Coria
QUANTITIES	X	X

STATE OF CALIFORNIA
DEPARTMENT OF TRANSPORTATION

DIVISION OF ENGINEERING SERVICES
STRUCTURE DESIGN
DESIGN BRANCH 17

BRIDGE NO. 29-0336
POST MILE 2.65

RETAINING WALL NO. 2
PILE LAYOUT

STRUCTURES DESIGN DETAIL SHEET (ENGLISH) (REV. 09-01-10)

ORIGINAL SCALE IN INCHES FOR REDUCED PLANS 0 1 2 3

UNIT: 3586
PROJECT NUMBER & PHASE: 10000000521
CONTRACT NO.: 10-0G8001

DISREGARD PRINTS BEARING EARLIER REVISION DATES

REVISION DATES 7-12-12

SHEET $PAGENUM OF $PAGETOT

FILE => a0g800qa005.dgn

USERNAME => s117606 DATE PLOTTED => 27-DEC-2012 TIME PLOTTED => 16:11

DIST	COUNTY	ROUTE	POST MILES TOTAL PROJECT	SHEET No.	TOTAL SHEETS
10	SJ	12	0.1./R4.4	117	130

REGISTERED CIVIL ENGINEER 01-02-12 DATE

12-24-12
PLANS APPROVAL DATE

REGISTERED PROFESSIONAL ENGINEER Ramon Reyes No. C63767 Exp. 09-30-12 CIVIL STATE OF CALIFORNIA

The State of California or its officers or agents shall not be responsible for the accuracy or completeness of electronic copies of this plan sheet.

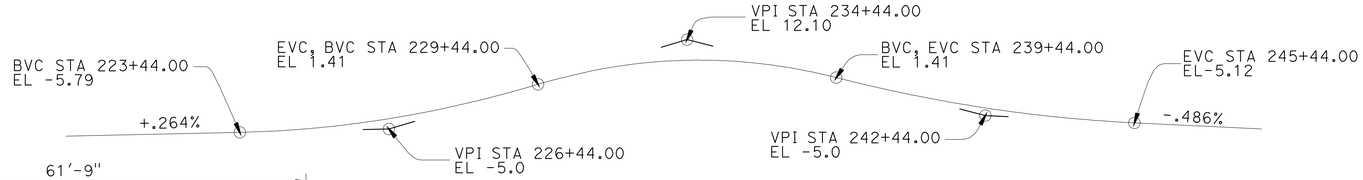

PROFILE GRADE

NO SCALE

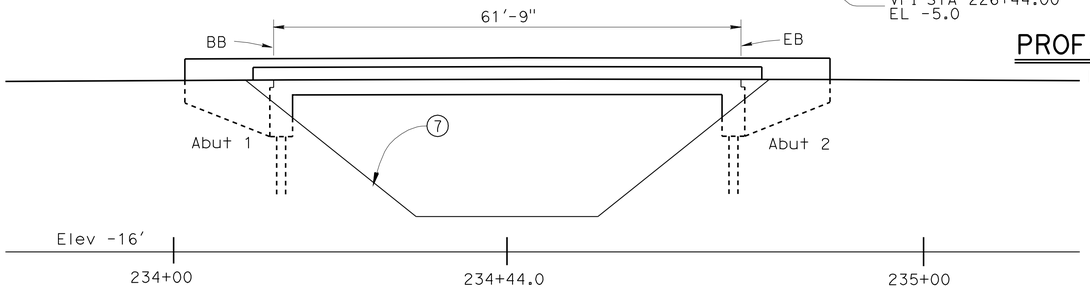

ELEVATION

1" = 10'

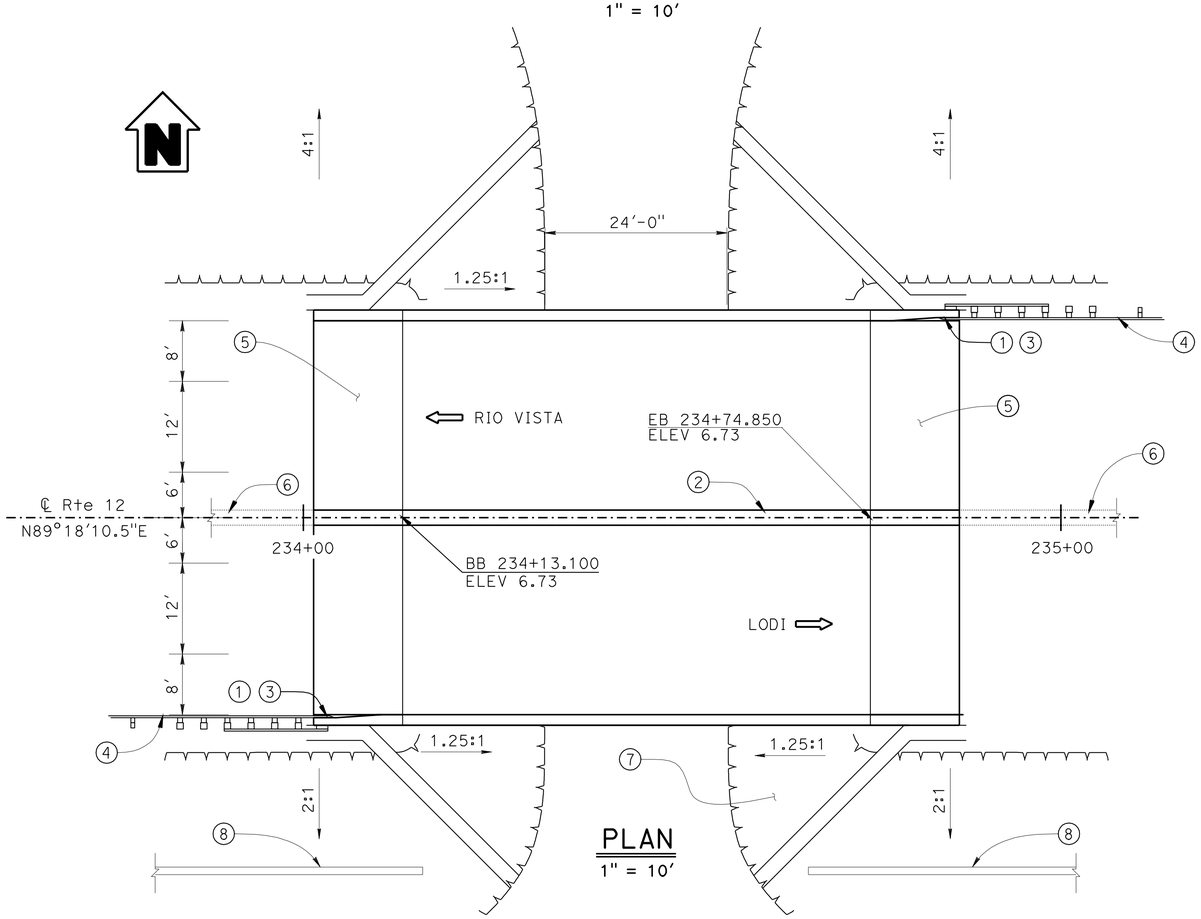

PLAN

1" = 10'

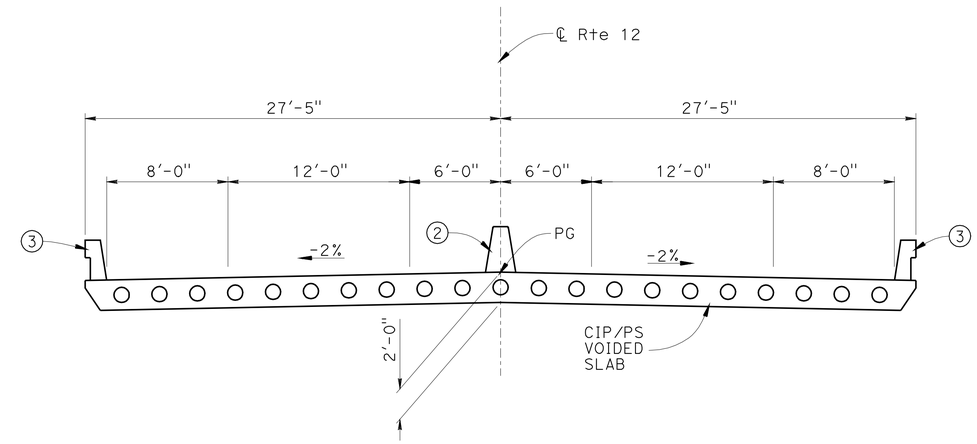

TYPICAL SECTION

1" = 5'

NOTES

1. Paint "Br No. 29-0336"
2. Concrete Barrier (Type 60A)
3. Concrete Barrier (Type 732)
4. MBGR, see "Road Plans"
5. Structure Concrete, Approach Slab Type N (30D) Modified, L=11'-9"
6. See "Road Plans"
7. Slope Paving
8. Retaining Wall by District, see Road Plans

QUANTITIES

STRUCTURE EXCAVATION (BRIDGE)	105 CY
STRUCTURE BACKFILL (BRIDGE)	50 CY
FURNISH PILING (CLASS 140) (ALTERNATIVE W)	1,816 LF
DRIVE PILE (CLASS 140) (ALTERNATIVE W)	16 EA
PRESTRESSING CAST-IN-PLACE CONCRETE	LUMP SUM
STRUCTURE CONCRETE, BRIDGE	295 CY
STRUCTURE CONCRETE, APPROACH SLAB (TYPE N MODIFIED)	46 CY
JOINT SEAL(MR 1")	110 LF
BAR REINFORCING STEEL (BRIDGE)	43,300 LB
SLOPE PAVING (CONCRETE)	34 CY
CONCRETE BARRIER (TYPE 60A)	86 LF
CONCRETE BARRIER (TYPE 732)	172 LF

X
DESIGN ENGINEER

	BY	CHECKED
DESIGN	Cory Cowden	Ramon Reyes
DETAILS	Ramon Reyes	Cory Cowden
QUANTITIES	Cory Cowden	Ramon Reyes

LOAD & RESISTANCE FACTOR DESIGN — LIVE LOADING: HL93 W/"LOW-BOY"; PERMIT DESIGN VEHICLE

	BY	CHECKED
LAYOUT	Cory Cowden	Ramon Reyes
SPECIFICATIONS	James Choi	PLANS AND SPECS COMPARED Ramon Reyes

ORIGINAL SCALE IN INCHES FOR REDUCED PLANS 0 1 2 3

STATE OF CALIFORNIA
DEPARTMENT OF TRANSPORTATION

DIVISION OF ENGINEERING SERVICES
STRUCTURE DESIGN
DESIGN BRANCH 17

BRIDGE NO. 29-0336
POST MILE 2.65

BOULDIN ISLAND UC
GENERAL PLAN

UNIT: 3586
PROJECT NUMBER & PHASE: 10000000521 CONTRACT NO.: 10-0G8001

DISREGARD PRINTS BEARING EARLIER REVISION DATES

REVISION DATES 3-23-11 1-25-12 01-10-12 SHEET 1 OF 14

USERNAME => s124496 DATE PLOTTED => 28-DEC-2012 TIME PLOTTED => 11:50

STRUCTURES DESIGN GENERAL PLAN SHEET (ENGLISH) (REV.09-01-10)

FILE => 29-0336-a-gp.dgn

DIST	COUNTY	ROUTE	POST MILES TOTAL PROJECT	SHEET No.	TOTAL SHEETS
10	SJ	12	0.1/R4.4	118	130

REGISTERED CIVIL ENGINEER 01-02-12 DATE

12-24-12
PLANS APPROVAL DATE

REGISTERED PROFESSIONAL ENGINEER Ramon Reyes No. C63767 Exp. 09-30-12 CIVIL STATE OF CALIFORNIA

The State of California or its officers or agents shall not be responsible for the accuracy or completeness of electronic copies of this plan sheet.

INDEX TO PLANS

SHEET NO.	TITLE
1.	GENERAL PLAN
2.	INDEX TO PLANS
3.	DECK CONTOURS
4.	FOUNDATION PLAN
5.	ABUTMENT LAYOUT
6.	TYPICAL SECTION
7.	LONGITUDINAL SECTION
8.	STRUCTURE APPROACH TYPE N(30D)
9.	STRUCTURE APPROACH DRAINAGE DETAILS
10.	SLOPE PAVING
11.	LOG OF TEST BORINGS 1 OF 4
12.	LOG OF TEST BORINGS 2 OF 4
13.	LOG OF TEST BORINGS 3 OF 4
14.	LOG OF TEST BORINGS 4 OF 4

STANDARD PLANS DATED MAY 2006

A10A	ACRONYMS AND ABBREVIATIONS (A-L)
A10B	ACRONYMS AND ABBREVIATIONS (M-Z)
A10C	SYMBOLS (SHEET 1 OF 2)
A10D	SYMBOLS (SHEET 2 OF 2)
A62A	EXCAVATION AND BACKFILL-MISCELLANCEOUS
A62B	LIMITS OF PAYMENT FOR EXCAVATION AND BACKFILL
A62C	LIMITS OF PAYMENT FOR EXCAVATION AND BACKFILL-BRIDGE
BO-1	BRIDGE DETAILS
BO-3	BRIDGE DETAILS
BO-13	BRIDGE DETAILS
B2-5	PILE DETAILS CLASS 90 AND CLASS 140
RSP B6-21	JOINT SEAL (MAXIMIUM MOVEMENT RATING = 2")
B8-5	CAST-IN-PLACE PRESTRESSED GIRDER DETAILS
RSP A76A	CONCRETE BARRIER TYPE 60
B11-55	CONCRETE BARRIER TYPE 732

STANDARD PLAN SHEET NO.

DETAIL NO.

GENERAL NOTES

LOAD AND RESISTANCE FACTOR DESIGN

DESIGN:

AASHTO LRFD Bridge Design Specifications, fourth edition with the California Amendments, preface date; December 2008 except that Concrete Barriers, and Wingwalls are designed using Bridge Design Specifications ('96 AASHTO w/Revisions by Caltrans)

SEISMIC DESIGN:

Caltrans Seismic Design Criteria (SDC), Version 1.6 dated June 2010

DEAD LOAD:

Includes 35 psf for future wearing surface.

LIVE LOADING:

HL93 and permit design load.

SEISMIC LOADING:

Site Specific Acceleration Response Spectra, see ARS Curve.

REINFORCED CONCRETE:

fy = 60 ksi
f'c = 3.6 ksi
n = 8

PRESTRESSED CONCRETE:

See "Prestressing Notes" on "LONGITUDINAL SECTION" sheet

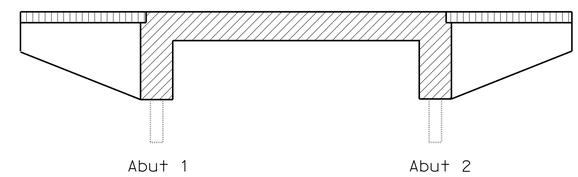

Structural Concrete, Bridge (5000 psi at 28 days)

Structural Concrete, Bridge

Structural Concrete, Approach Slab

CONCRETE STRENGTH AND TYPE LIMITS

No Scale

PILE DATA TABLE

SUPPORT LOCATION	PILE TYPE	NOMINAL RESISTANCE		DESIGN TIP ELEVATION (ft)	SPECIFIED TIP ELEVATION (ft)	NOMINAL DRIVING RESISTANCE REQD (kips)
		COMPRESSION	TENSION			
Abut 1	Class 140 Alt W	246	N/A	-114	-114	280
Abut 2	Class 140 Alt W	246	N/A	-114	-114	280

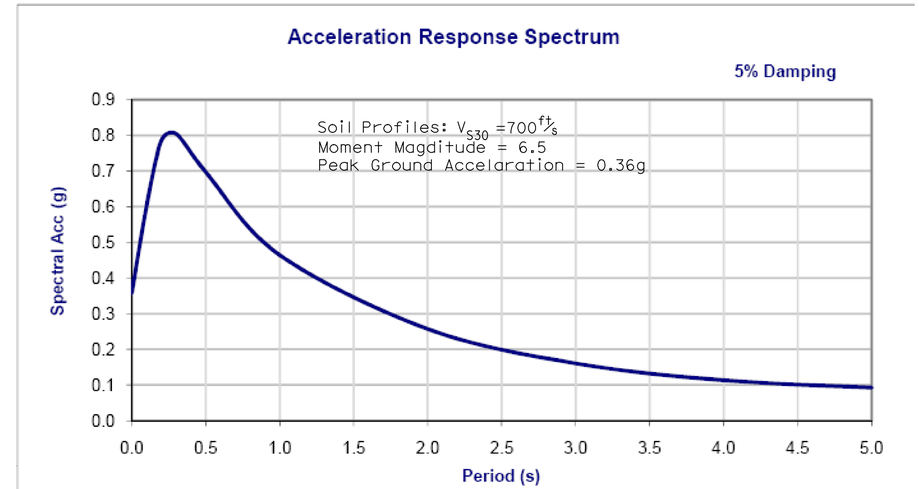

DESIGN	BY Cory Cowden	CHECKED Ramon Reyes	
DETAILS	BY Ramon Reyes	CHECKED Cory Cowden	
QUANTITIES	BY Cory Cowden	CHECKED Ramon Reyes	

STATE OF CALIFORNIA
DEPARTMENT OF TRANSPORTATION

DIVISION OF ENGINEERING SERVICES
STRUCTURE DESIGN
DESIGN BRANCH 17

BRIDGE NO. 29-0336
POST MILE 2.65

BOULDIN ISLAND UC
INDEX TO PLANS

STRUCTURES DESIGN DETAIL SHEET (ENGLISH) (REV. 09-01-10)

ORIGINAL SCALE IN INCHES FOR REDUCED PLANS 0 1 2 3

UNIT: 3586
PROJECT NUMBER & PHASE: 10000000521 CONTRACT NO.: 10-0G8001

DISREGARD PRINTS BEARING EARLIER REVISION DATES

REVISION DATES 05-27-11 01-25-12

SHEET 2 OF 14

FILE => 29-0336-a-ltp.dgn

USERNAME => s117606 DATE PLOTTED => 27-DEC-2012 TIME PLOTTED => 16:23

DIST	COUNTY	ROUTE	POST MILES TOTAL PROJECT	SHEET No.	TOTAL SHEETS
10	SJ	12	0.1/R4.4	119	130

REGISTERED CIVIL ENGINEER — DATE 01-02-12

12-24-12
PLANS APPROVAL DATE

REGISTERED PROFESSIONAL ENGINEER — Ramon Reyes — No. C63767 — Exp. 09-30-12 — CIVIL — STATE OF CALIFORNIA

The State of California or its officers or agents shall not be responsible for the accuracy or completeness of electronic copies of this plan sheet.

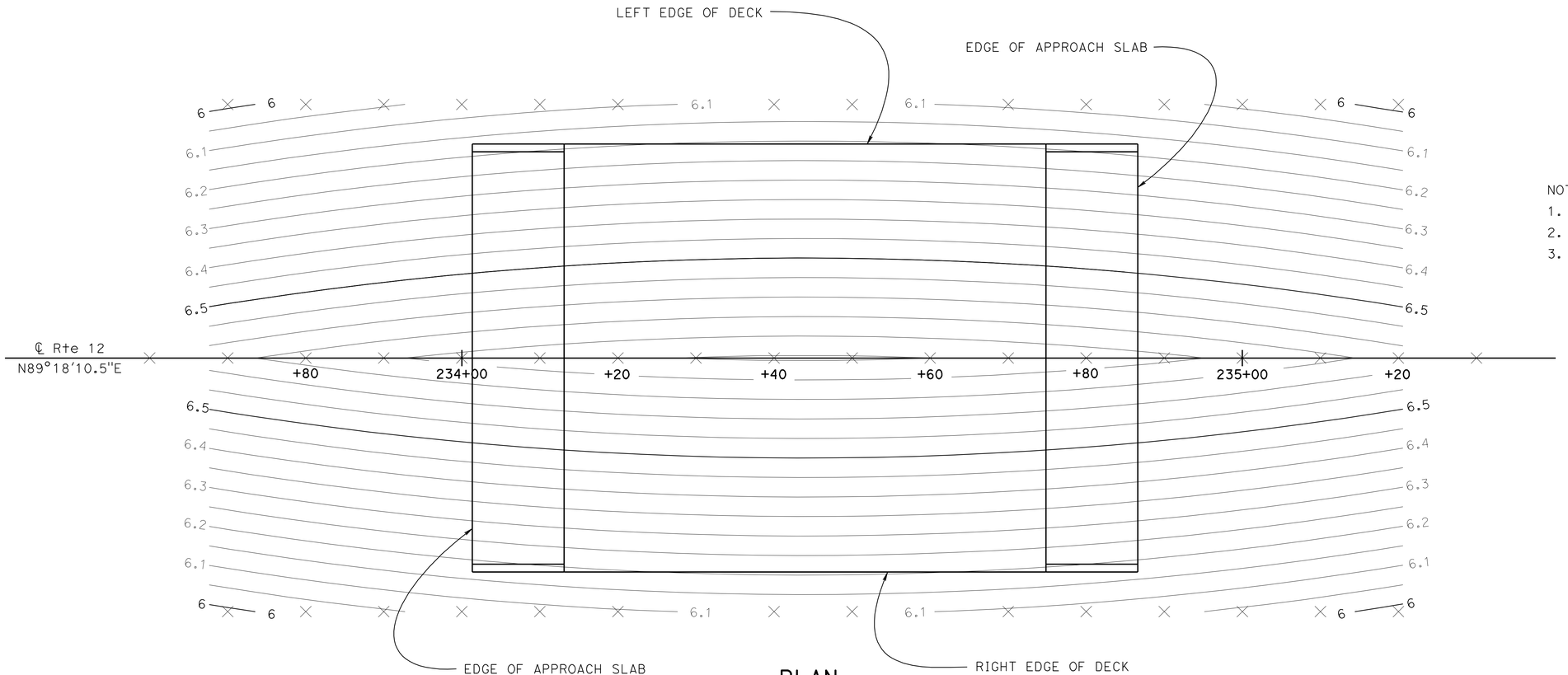

PLAN
1/8" = 1'-0"

NOTES:
1. Contour interval = 0.05 ft
2. × = 10 ft intervals along station line
3. Contours do not include camber

	BY	CHECKED
DESIGN	Cory Cowden	Ramon Reyes
DETAILS	Ramon Reyes	Cory Cowden
QUANTITIES	Cory Cowden	Ramon Reyes

STATE OF CALIFORNIA
DEPARTMENT OF TRANSPORTATION

DIVISION OF ENGINEERING SERVICES
STRUCTURE DESIGN
DESIGN BRANCH 17

BRIDGE NO. 29-0336
POST MILE 2.65

BOULDIN ISLAND UC
DECK CONTOURS

STRUCTURES DESIGN DETAIL SHEET (ENGLISH) (REV. 09-01-10)

ORIGINAL SCALE IN INCHES FOR REDUCED PLANS 0 1 2 3

UNIT: 3586
PROJECT NUMBER & PHASE: 10000000521
CONTRACT NO.: 10-0G8001

DISREGARD PRINTS BEARING EARLIER REVISION DATES → 05-27-11 01-25-12

SHEET 3 OF 14

FILE => 29-0336-d-dc01.dgn

USERNAME => s117606 DATE PLOTTED => 27-DEC-2012 TIME PLOTTED => 16:23

DIST	COUNTY	ROUTE	POST MILES TOTAL PROJECT	SHEET No.	TOTAL SHEETS
10	SJ	12	0.1/R4.4	120	130

REGISTERED CIVIL ENGINEER 01-02-12 DATE

12-24-12
PLANS APPROVAL DATE

REGISTERED PROFESSIONAL ENGINEER
Ramon Reyes
No. C63767
Exp. 09-30-12
CIVIL
STATE OF CALIFORNIA

The State of California or its officers or agents shall not be responsible for the accuracy or completeness of electronic copies of this plan sheet.

CURVE DATA

No.	R	Δ	T	L
A	1000.00	2°25'16"	21.13	42.25

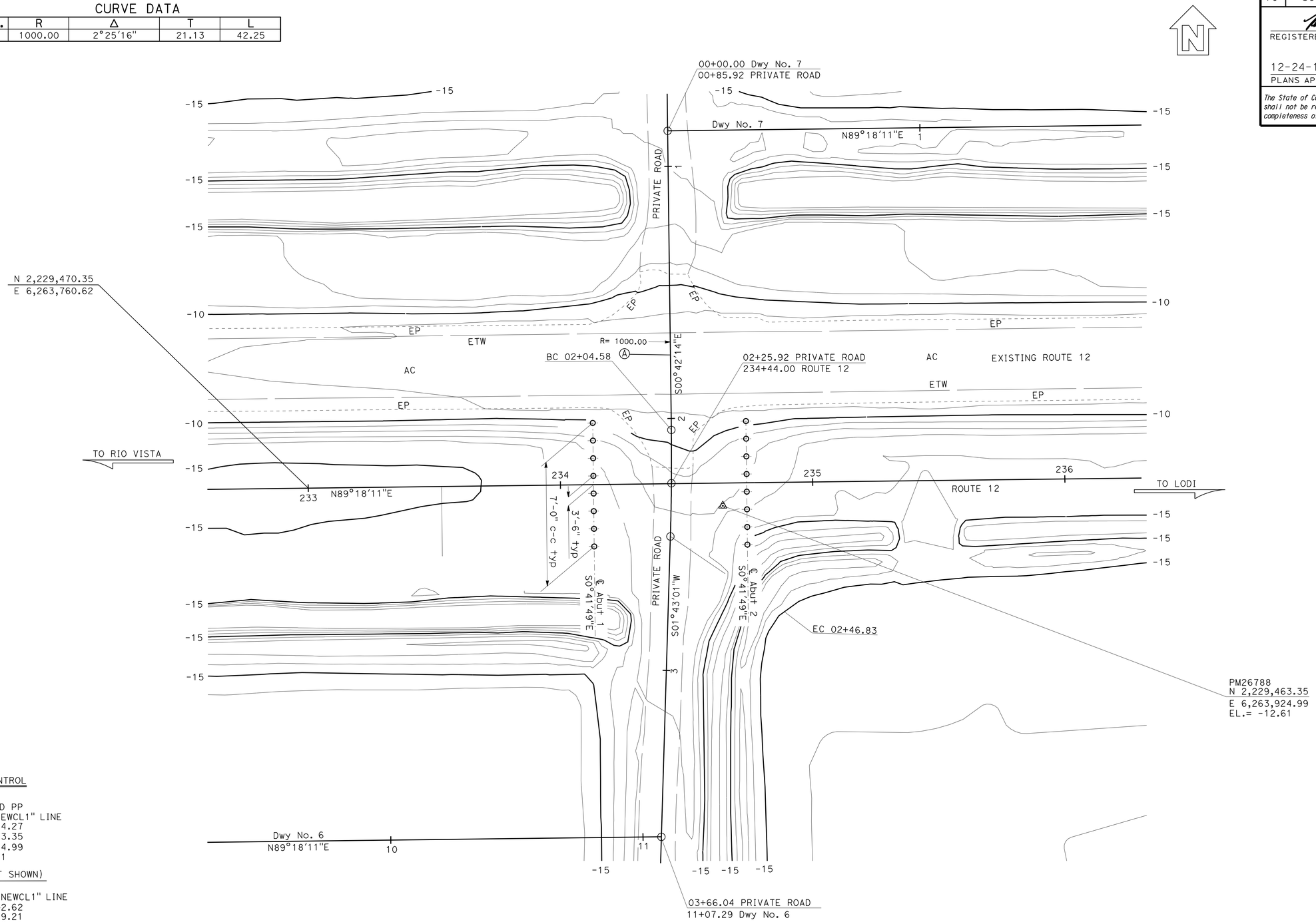

SURVEY CONTROL

PM26788
1" IP w/RED PP
9.00 Rt "NEWCL1" LINE
Sta. 234+64.27
N 2,229,463.35
E 6,263,924.99
EL.= -12.61

15H88 (NOT SHOWN)
SPIKE
76.26 Lt "NEWCL1" LINE
Sta. 226+92.62
N 2,229,539.21
E 6,263,152.35
EL.= -11.89

PRELIMINARY INVESTIGATION SECTION

SCALE	VERT.DATUM NAVD 88	PHOTOGRAMMETRY AS OF: X		
1"=20'	HORZ.DATUM NAD 83 (1991.35)	SURVEYED	BY DISTRICT	CHECKED BY L. Lawrence 06/2011
ALIGNMENT TIES Dist. Traverse Sheet		DRAFTED	BY J. Zhou 06/2011	CHECKED BY T. Zolnikov 06/2011

DESIGN	BY Cory Cowden	CHECKED Ramon Reyes
DETAILS	BY Ramon Reyes	CHECKED Cory Cowden
QUANTITIES	BY Cory Cowden	CHECKED Ramon Reyes

STATE OF CALIFORNIA
DEPARTMENT OF TRANSPORTATION

DIVISION OF ENGINEERING SERVICES
STRUCTURE DESIGN
DESIGN BRANCH 17

BRIDGE NO. 29-0336
POST MILE 2.65

BOULDIN ISLAND UC
FOUNDATION PLAN

STRUCTURES FOUNDATION PLAN SHEET (ENGLISH) (REV. 09-01-10)

ORIGINAL SCALE IN INCHES FOR REDUCED PLANS 0 1 2 3

UNIT: 3586
PROJECT NUMBER & PHASE: 10000000521
CONTRACT NO.: 10-0G8001

DISREGARD PRINTS BEARING EARLIER REVISION DATES

REVISION DATES 06/30/11

SHEET 4 OF 14

FILE => 29-0336e-fp101.dgn

DIST	COUNTY	ROUTE	POST MILES TOTAL PROJECT	SHEET No.	TOTAL SHEETS
10	SJ	12	0.1/R4.4	121	130

REGISTERED CIVIL ENGINEER — DATE 01-02-12

12-24-12
PLANS APPROVAL DATE

REGISTERED PROFESSIONAL ENGINEER — Ramon Reyes — No. C63767 — Exp. 09-30-12 — CIVIL — STATE OF CALIFORNIA

The State of California or its officers or agents shall not be responsible for the accuracy or completeness of electronic copies of this plan sheet.

NOTES:

1. Abutment 1 shown. Abutment 2 similar.
2. Extend all longitudinal deck reinf 24" into abutment diaphragm.

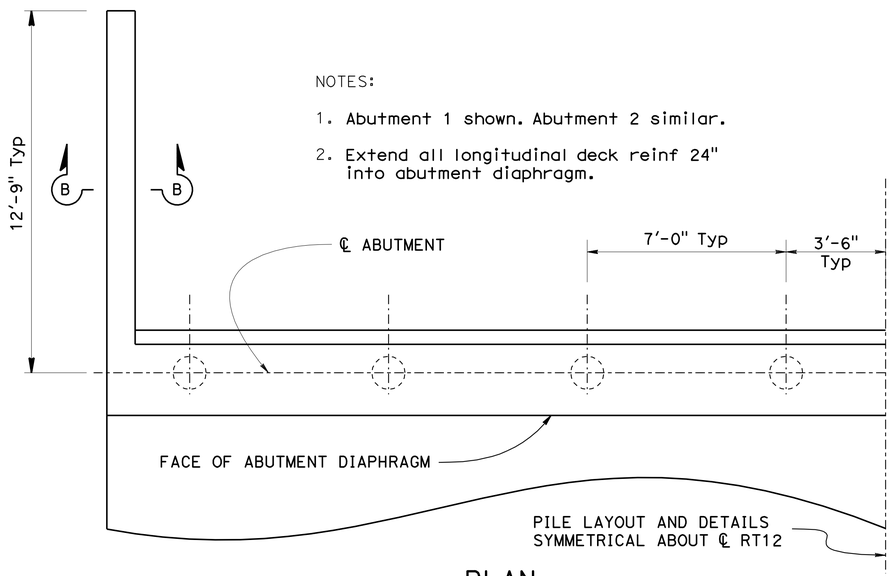

PLAN

3/8" = 1'-0"

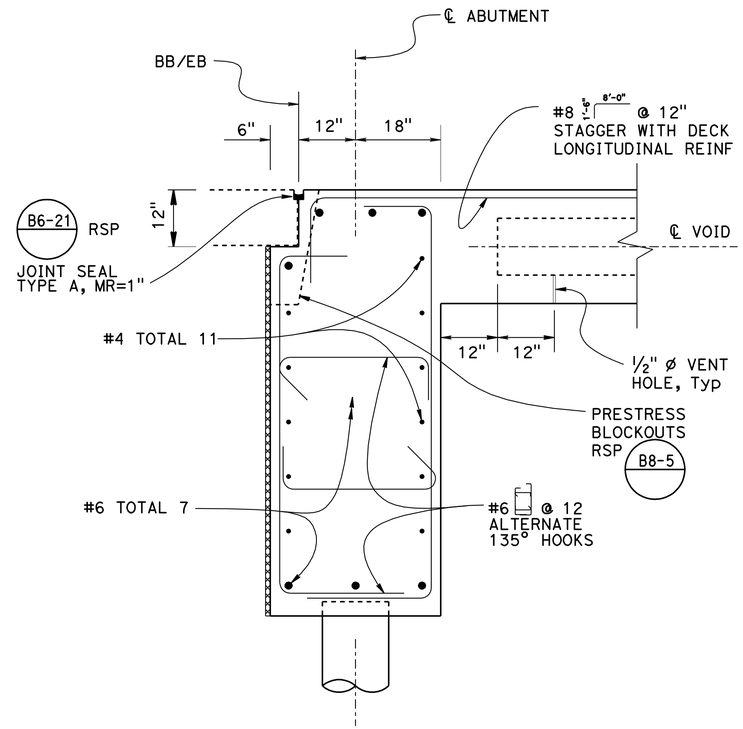

SECTION A-A

3/4" = 1'-0"

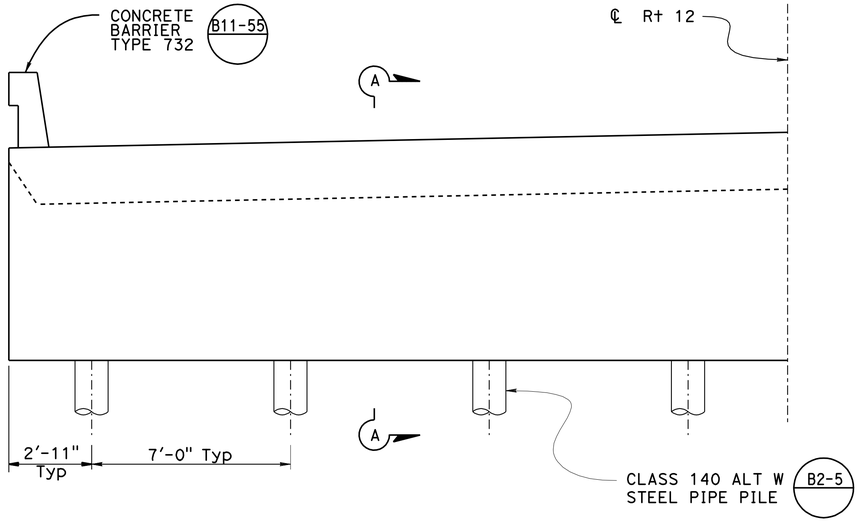

ELEVATION

3/8" = 1'-0"

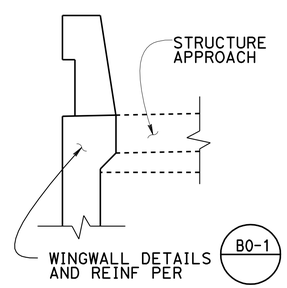

SECTION B-B

1/2" = 1'-0"

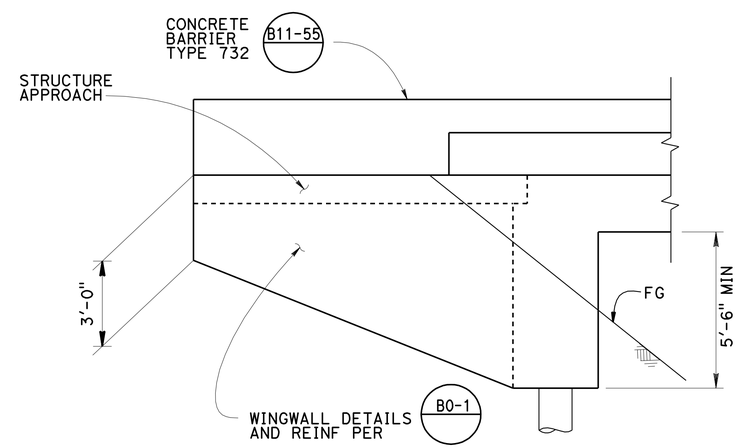

WINGWALL ELEVATION

3/8" = 1'-0"

DESIGN	BY Cory Cowden	CHECKED Ramon Reyes	
DETAILS	BY Ramon Reyes	CHECKED Cory Cowden	
QUANTITIES	BY Cory Cowden	CHECKED Ramon Reyes	

STATE OF CALIFORNIA
DEPARTMENT OF TRANSPORTATION

DIVISION OF ENGINEERING SERVICES
STRUCTURE DESIGN
DESIGN BRANCH 17

BRIDGE NO. 29-0336
POST MILE 2.65

BOULDIN ISLAND UC
ABUTMENT LAYOUT

STRUCTURES DESIGN DETAIL SHEET (ENGLISH) (REV. 09-01-10)

ORIGINAL SCALE IN INCHES FOR REDUCED PLANS 0 1 2 3

UNIT: 3586
PROJECT NUMBER & PHASE: 10000000521
CONTRACT NO.: 10-0G8001

DISREGARD PRINTS BEARING EARLIER REVISION DATES

REVISION DATES: 05-22-11 01-10-12 01-25-12

SHEET 5 OF 14

FILE => 29-0336-f-a01_l01.dgn

USERNAME => s117606 DATE PLOTTED => 27-DEC-2012 TIME PLOTTED => 16:23

DIST	COUNTY	ROUTE	POST MILES TOTAL PROJECT	SHEET No.	TOTAL SHEETS
10	SJ	12	0.1/R4.4	122	130

REGISTERED CIVIL ENGINEER 01-02-12 DATE

12-24-12
PLANS APPROVAL DATE

REGISTERED PROFESSIONAL ENGINEER
Ramon Reyes
No. C63767
Exp. 09-30-12
CIVIL
STATE OF CALIFORNIA

The State of California or its officers or agents shall not be responsible for the accuracy or completeness of electronic copies of this plan sheet.

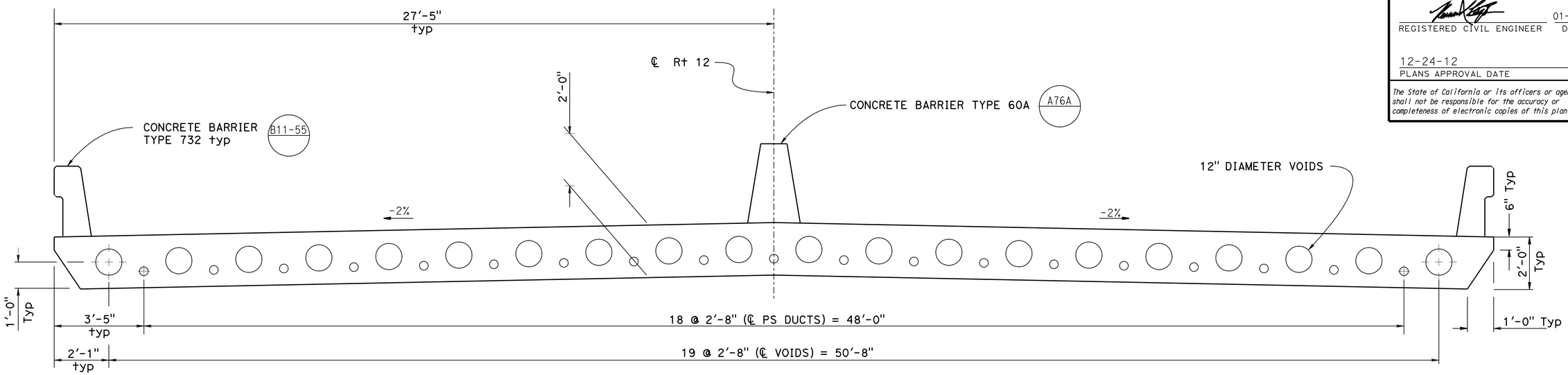

TYPICAL SECTION

1/2" = 1'

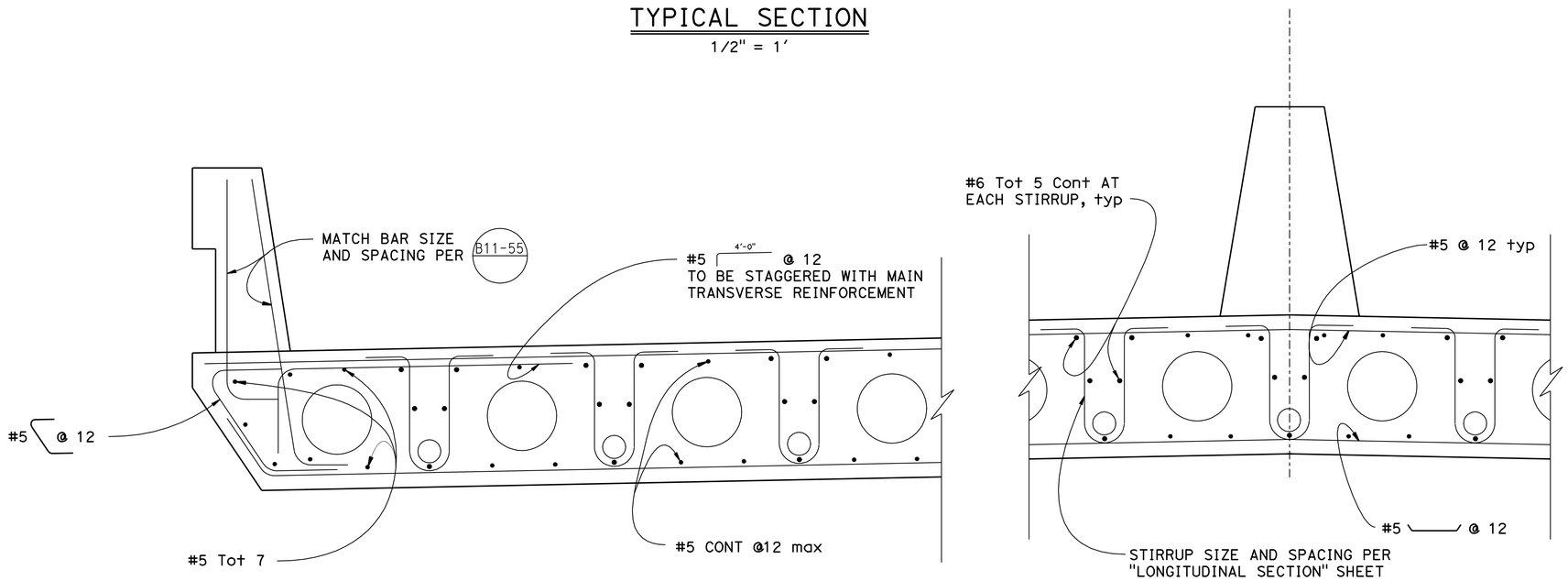

PART TYPICAL SECTION

1" = 1'-0"

NOTE:
EXTEND LONGITUDINAL DECK REINF 24" INTO ABUTMENT DIAPHRAGM

	BY	CHECKED
DESIGN	Cory Cowden	Ramon Reyes
DETAILS	Ramon Reyes	Cory Cowden
QUANTITIES	Cory Cowden	Ramon Reyes

STATE OF CALIFORNIA
DEPARTMENT OF TRANSPORTATION

DIVISION OF ENGINEERING SERVICES
STRUCTURE DESIGN
DESIGN BRANCH 17

BRIDGE NO. 29-0336
POST MILE 2.65

BOULDIN ISLAND UC
TYPICAL SECTION

STRUCTURES DESIGN DETAIL SHEET (ENGLISH) (REV. 09-01-10)

ORIGINAL SCALE IN INCHES FOR REDUCED PLANS 0 1 2 3

UNIT: 3586
PROJECT NUMBER & PHASE: 10000000521
CONTRACT NO.: 10-0G8001

DISREGARD PRINTS BEARING EARLIER REVISION DATES

REVISION DATES 05-22-11 01-10-12 1-25-12

SHEET 6 OF 14

FILE => 29-0336-k-ts.dgn

USERNAME => s123631 DATE PLOTTED => 27-DEC-2012 TIME PLOTTED => 15:40

DIST	COUNTY	ROUTE	POST MILES TOTAL PROJECT	SHEET No.	TOTAL SHEETS
10	SJ	12	0.1/R4.4	123	130

REGISTERED CIVIL ENGINEER 01-02-12 DATE

12-24-12
PLANS APPROVAL DATE

REGISTERED PROFESSIONAL ENGINEER
Ramon Reyes
No. C63767
Exp. 09-30-12
CIVIL
STATE OF CALIFORNIA

The State of California or its officers or agents shall not be responsible for the accuracy or completeness of electronic copies of this plan sheet.

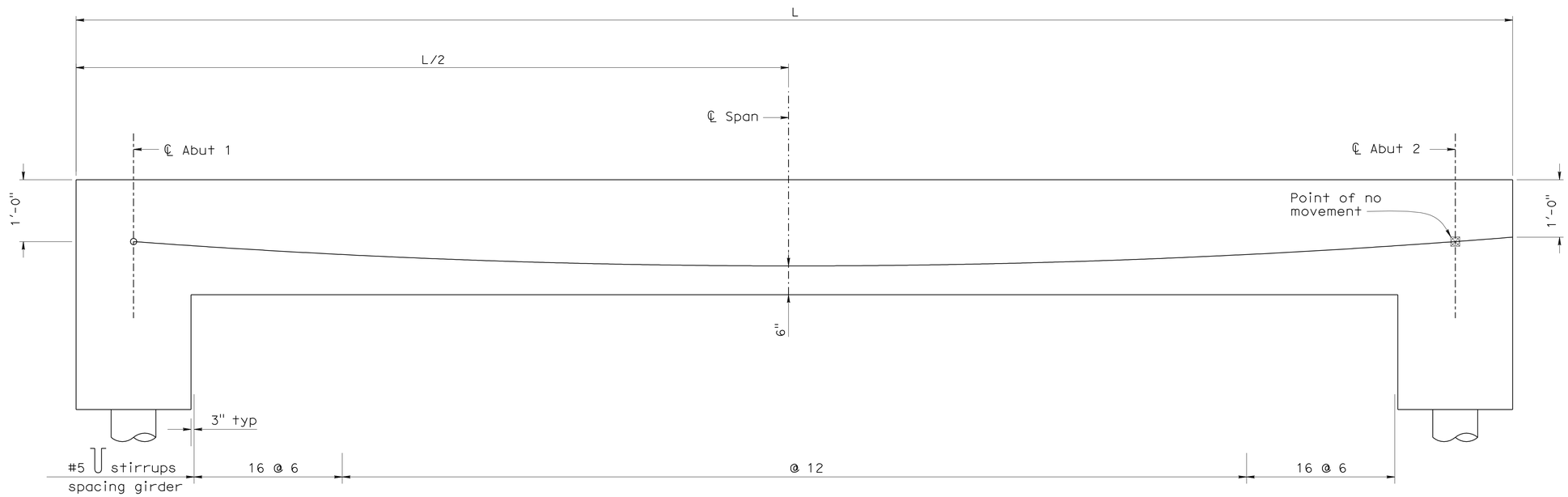

LONGITUDINAL SECTION

NO SCALE

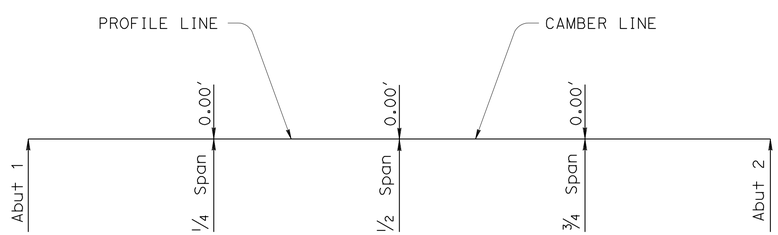

CAMBER DIAGRAM

No Scale

Does not include allowance for falsework settlement

PRESTRESSING NOTES

270 KSi Low Relaxation Strand:

P_{jack} = 15,500 kips

Anchor Set = 3/8"

Total Number of Cable Paths = 19

Friction curvature coefficient, μ = 0.15

Friction wobble coefficient, K = 2×10^{-4}/ft

Long term losses assumed to be: 25 Ksi

Concrete: f'_c = 5000 psi @ 28 days

f'_{ci} = 4000 psi @ time of stressing

Contractor shall submit elongation calculations based on initial stress at

$\boxtimes$ = 0.9238 times jacking stress.

One end stressing shall be performed from Abutment 1 only.

DESIGN	BY Cory Cowden	CHECKED Ramon Reyes	
DETAILS	BY Ramon Reyes	CHECKED Cory Cowden	
QUANTITIES	BY Cory Cowden	CHECKED Ramon Reyes	

STATE OF CALIFORNIA
DEPARTMENT OF TRANSPORTATION

DIVISION OF ENGINEERING SERVICES
STRUCTURE DESIGN
DESIGN BRANCH 17

BRIDGE NO. 29-0336
POST MILE 2.65

BOULDIN ISLAND UC
LONGITUDINAL SECTION

STRUCTURES DESIGN DETAIL SHEET (ENGLISH) (REV. 09-01-10)

ORIGINAL SCALE IN INCHES FOR REDUCED PLANS 0 1 2 3

UNIT: 3586
PROJECT NUMBER & PHASE: 10000000521 CONTRACT NO.: 10-0G8001

DISREGARD PRINTS BEARING EARLIER REVISION DATES

REVISION DATES 05-22-11 01-25-12

SHEET 7 OF 14

FILE => 29-0336-m-lsec.dgn

USERNAME => s123631 DATE PLOTTED => 27-DEC-2012 TIME PLOTTED => 15:40

DIST	COUNTY	ROUTE	POST MILES TOTAL PROJECT	SHEET No.	TOTAL SHEETS
10	SJ	12	0.1/R4.4	124	130

REGISTERED CIVIL ENGINEER 01-02-12 DATE

12-24-12
PLANS APPROVAL DATE

REGISTERED PROFESSIONAL ENGINEER Ramon Reyes No. C63767 Exp. 09-30-12 CIVIL STATE OF CALIFORNIA

The State of California or its officers or agents shall not be responsible for the accuracy or completeness of electronic copies of this plan sheet.

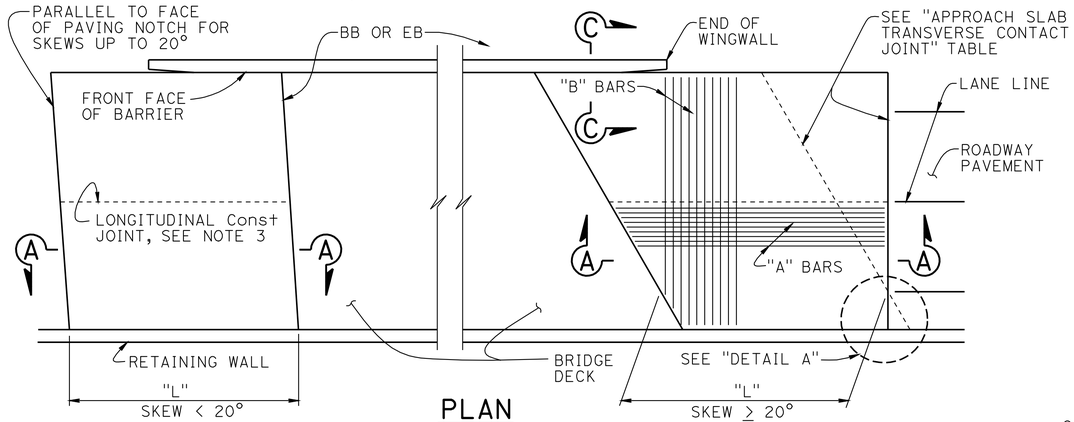

PLAN
1" = 10'

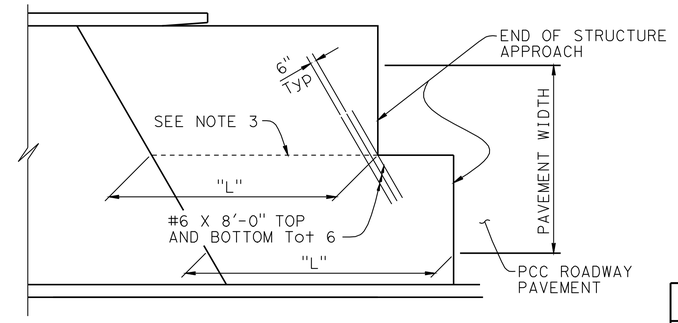

STRUCTURE APPROACH - END STAGGER DETAIL
NO SCALE

APPROACH SLAB TRANSVERSE CONTACT JOINT		
APPROACH SKEW	WITH AC ROADWAY PAVEMENT	WITH PCC ROADWAY PAVEMENT
< 20°	PARALLEL TO FACE OF PN	PARALLEL TO FACE OF PN
20° - 45°	PARALLEL TO FACE OF PN USE "DETAIL A"	STAGGER LINES 24' TO 36' APART
> 45°	PARALLEL TO FACE OF PN USE "DETAIL A"	STAGGER AT EACH LANE LINE

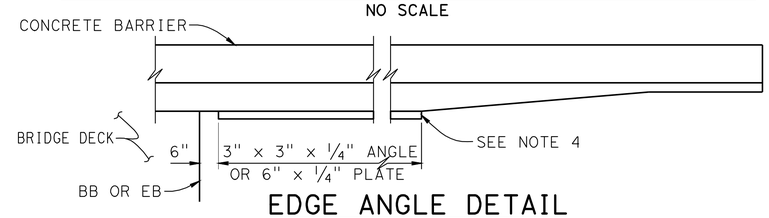

EDGE ANGLE DETAIL
1/2" = 1'-0"

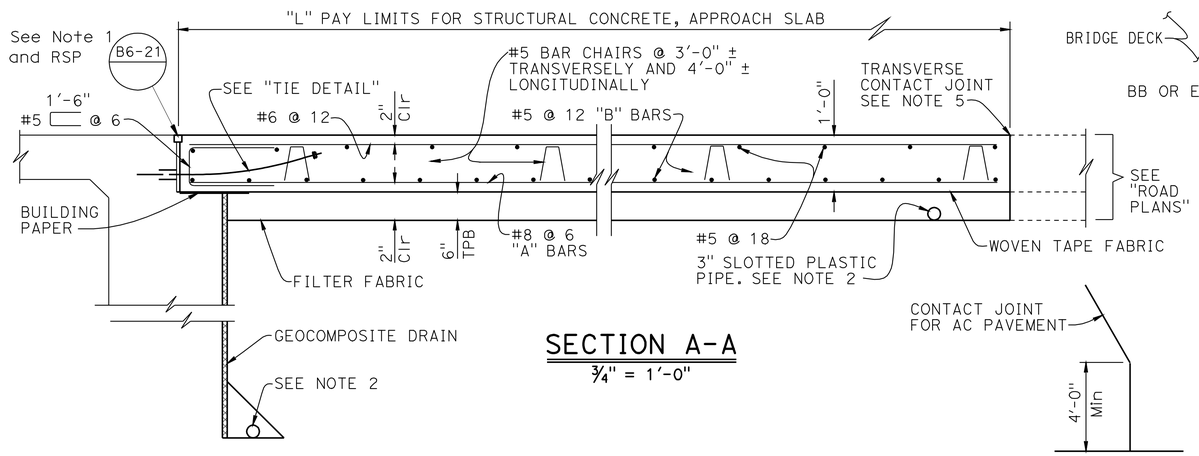

SECTION A-A
3/4" = 1'-0"

DETAIL A
NO SCALE

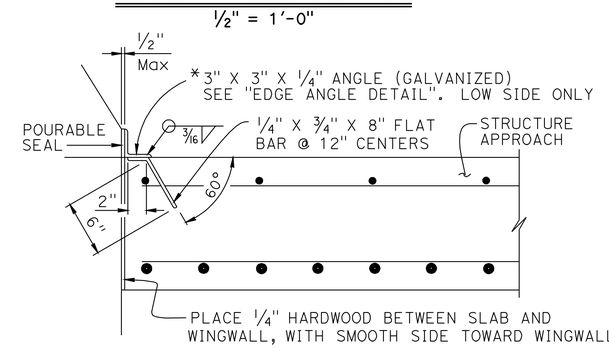

*(TO BE USED WITH CONCRETE BARRIER WITH VERTICAL FACE)

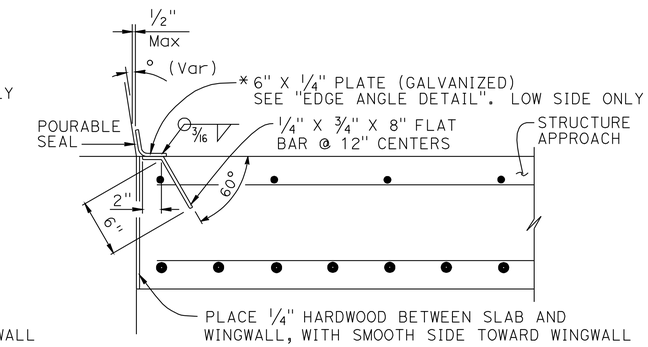

*(TO BE USED WITH CONCRETE BARRIER WITH SLOPING FACE)

DETAIL B
1 1/2" = 1'-0"

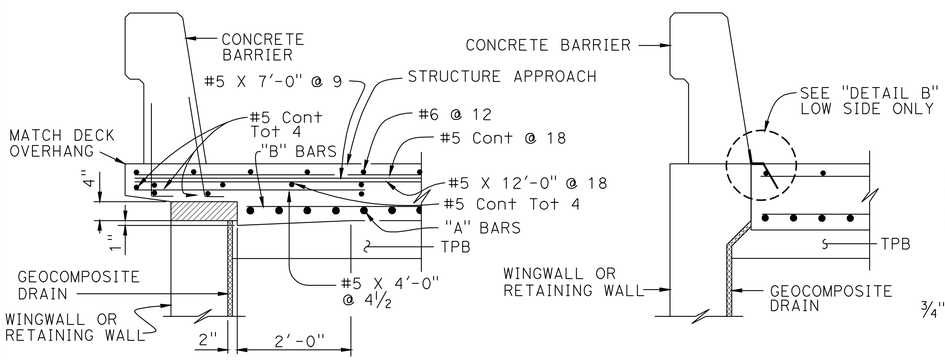

SECTION C-C
3/4" = 1'-0"
(Type E-1 to be used, unless otherwise shown on plans)

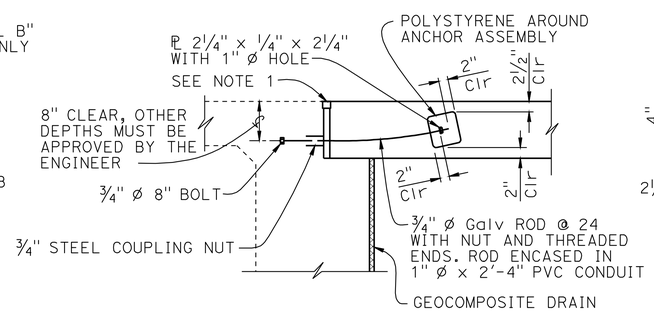

TIE DETAIL
3/4" = 1'-0"

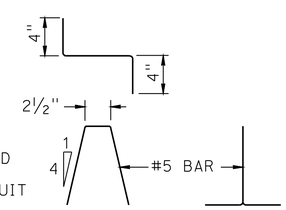

BAR CHAIR DETAIL
1 1/2" = 1'-0"

NOTES:
1. For details not noted or shown, see Structure Plans
2. For drainage details, see "STRUCTURE APPROACH DRAINAGE DETAILS" sheet
3. Longitudinal construction joints, when permitted by the Engineer, shall be located on lane lines
4. End angle or plate at beginning of barrier transition, end of wingwall or end of structure approach, as applicable
5. For transverse contact joint with new PCC paving, refer to Standard Plan P10
6. At the contractor's option, approach slab transverse reinforcement may be placed parallel to paving notch. Spacing of transverse reinforcement is measured along ℄ roadway

STANDARD DRAWING
FILE NO. xs3-140
APPROVAL DATE July 2011

STATE OF CALIFORNIA DEPARTMENT OF TRANSPORTATION
DIVISION OF ENGINEERING SERVICES

BRIDGE NO. 29-0336
POST MILE 2.65

BOULDIN ISLAND UC
STRUCTURE CONCRETE, APPROACH (TYPE N 30D) MODIFIED

DS OSD 2147A (ENGLISH STANDARD DRAWING "XS" BORDER REV. (02-02-11))
ORIGINAL SCALE IN INCHES FOR REDUCED PLANS 0 1 2 3
UNIT: 3586
PROJECT NUMBER & PHASE: 10000000521
CONTRACT NO.: 10-0G8001
DISREGARD PRINTS BEARING EARLIER REVISION DATES
REVISION DATES
SHEET 8 OF 14
FILE => 29-0336-xs3-140-str-appro-n30d.dgn
USERNAME => s124496 DATE PLOTTED => 28-DEC-2012 TIME PLOTTED => 11:50

DIST	COUNTY	ROUTE	POST MILES TOTAL PROJECT	SHEET No.	TOTAL SHEETS
10	SJ	12	0.1/R4.4	125	130

REGISTERED CIVIL ENGINEER — DATE 01-02-12

12-24-12
PLANS APPROVAL DATE

REGISTERED PROFESSIONAL ENGINEER — Ramon Reyes — No. C63767 — Exp. 09-30-12 — CIVIL — STATE OF CALIFORNIA

The State of California or its officers or agents shall not be responsible for the accuracy or completeness of electronic copies of this plan sheet.

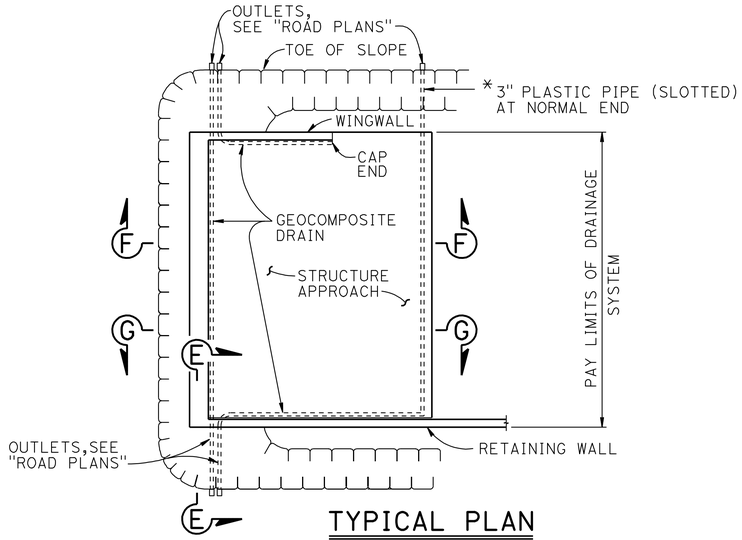

TYPICAL PLAN

1" = 10'

* FOR PIPE LAYOUT AT STAGGERED END, SEE "DETAIL B"

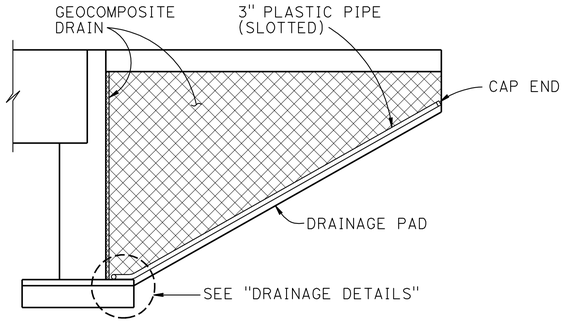

CANTILEVER WINGWALL

SECTION F-F

1/4" = 1'-0"

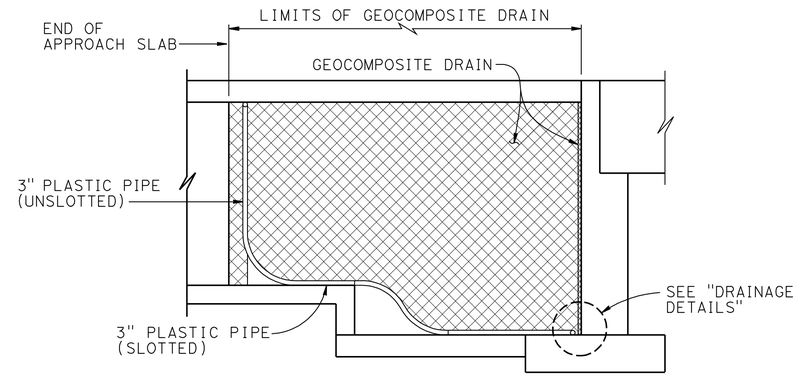

RETAINING WALL WINGWALL DRAINAGE DETAILS

SECTION G-G

1/4" = 1'-0"

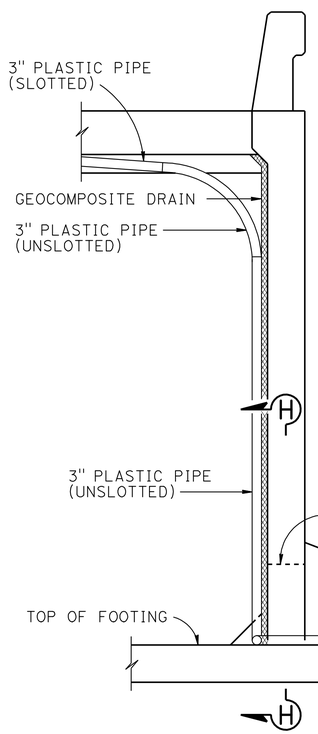

SECTION E-E

1/2" = 1'-0"

NOTE: Bends and junctions in 3" plastic pipe are 30" radius Min

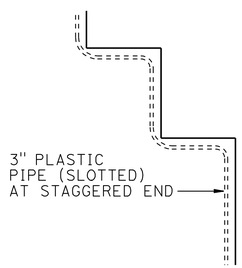

DETAIL B

No Scale

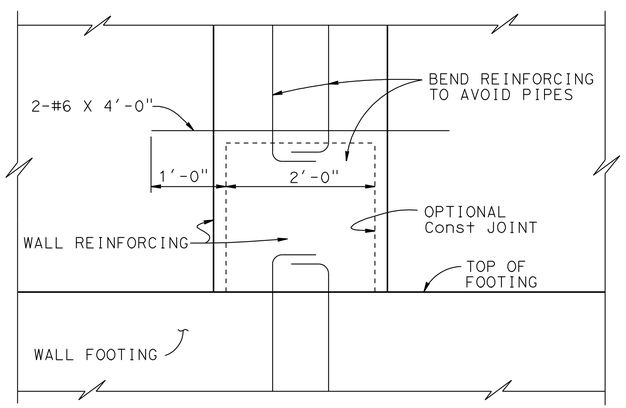

SECTION H-H

1" = 1'-0"

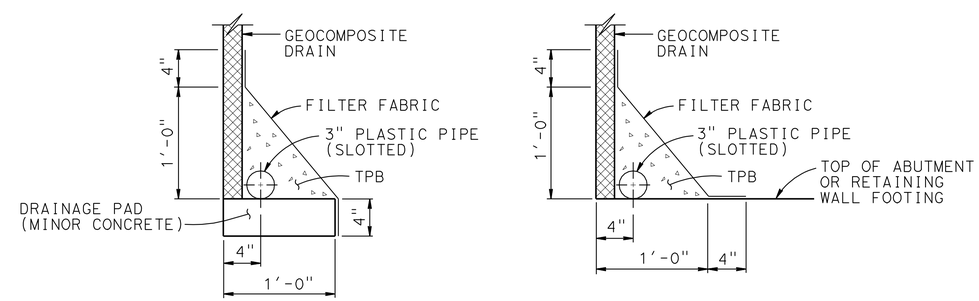

WITHOUT FOOTING — WITH FOOTING

DRAINAGE DETAILS

1 1/2" = 1'-0"

STANDARD DRAWING					
FILE NO. xs3-110	APPROVAL DATE July 2011	STATE OF CALIFORNIA DEPARTMENT OF TRANSPORTATION	DIVISION OF ENGINEERING SERVICES	BRIDGE NO. 29-0336 / POST MILE 2.65	BOULDIN ISLAND UC — STRUCTURE APPROACH DRAINAGE DETAILS

DS OSD 2147A (ENGLISH STANDARD DRAWING "XS" BORDER REV. (02-02-11)

ORIGINAL SCALE IN INCHES FOR REDUCED PLANS 0 1 2 3

UNIT: 3586
PROJECT NUMBER & PHASE: 10000000521 CONTRACT NO.: 10-0G8001

DISREGARD PRINTS BEARING EARLIER REVISION DATES → REVISION DATES

SHEET 9 OF 14

FILE => 29-0336-xs3-110-str-aprodd.dgn

USERNAME => s123631 DATE PLOTTED => 27-DEC-2012 TIME PLOTTED => 15:40

DIST	COUNTY	ROUTE	POST MILES TOTAL PROJECT	SHEET No.	TOTAL SHEETS
10	SJ	12	0.1/R4.4	126	130

REGISTERED CIVIL ENGINEER — DATE 01-02-12

12-24-12
PLANS APPROVAL DATE

REGISTERED PROFESSIONAL ENGINEER — Ramon Reyes No. C63767 Exp. 09-30-12 CIVIL — STATE OF CALIFORNIA

The State of California or its officers or agents shall not be responsible for the accuracy or completeness of electronic copies of this plan sheet.

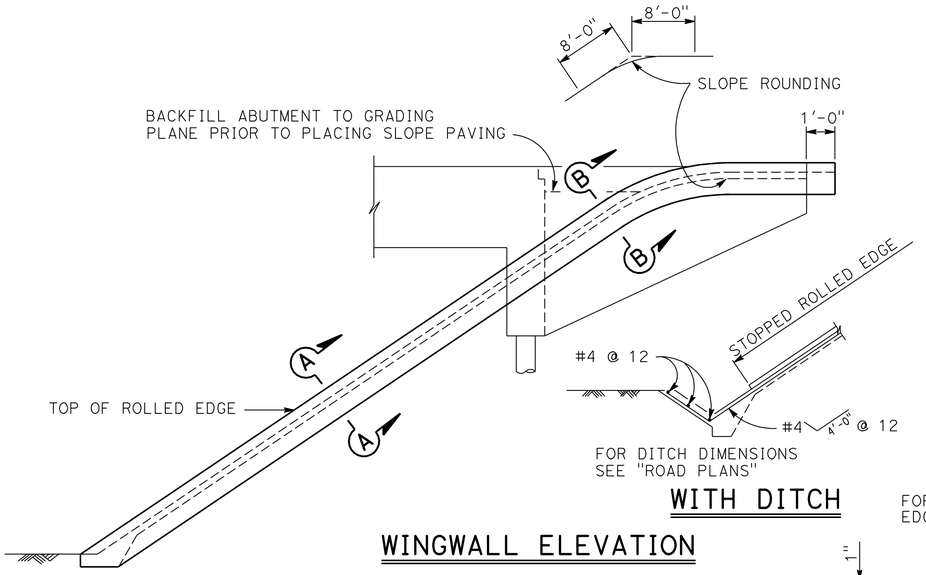

WITH DITCH

WINGWALL ELEVATION

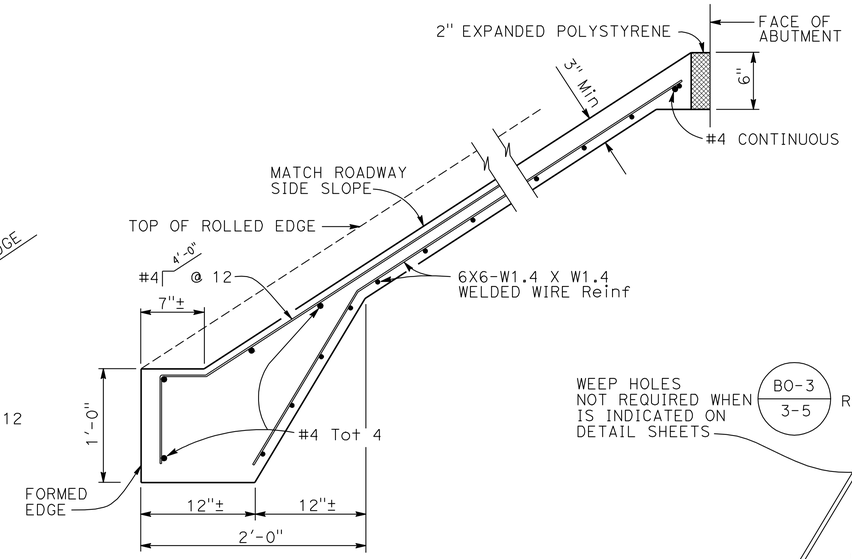

TYPICAL SECTION - CONCRETE PAVING

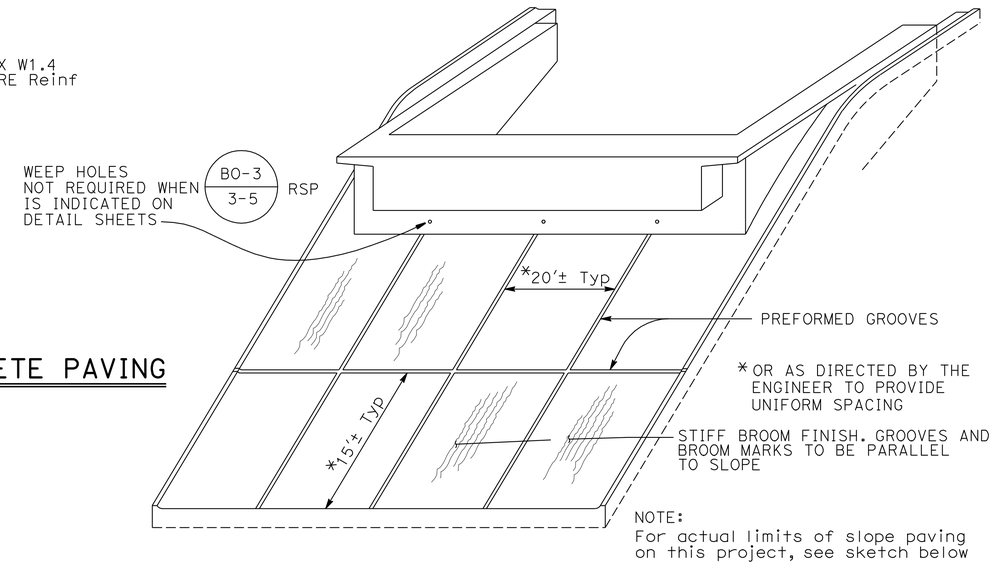

NOTE:
For actual limits of slope paving on this project, see sketch below

PICTORIAL VIEW OF TYPICAL INSTALLATION

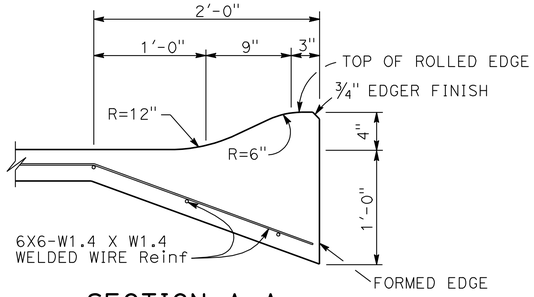

SECTION A-A

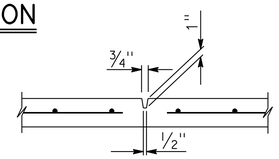

PREFORMED GROOVE

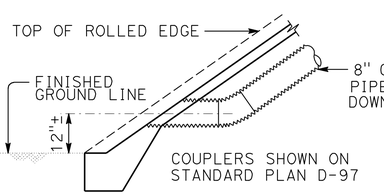

TYPICAL - NO CURB

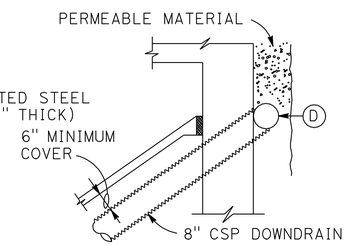

TYPICAL - DRAIN CONNECTION

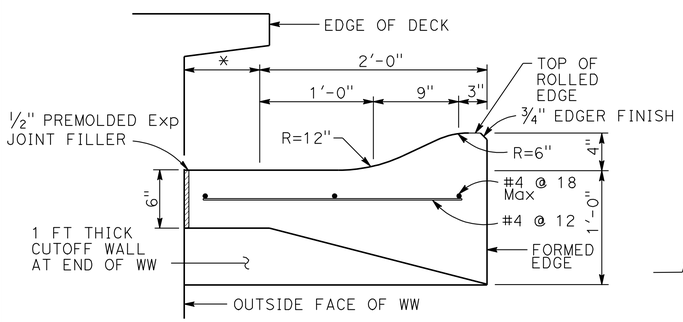

SECTION B-B

* THIS DIMENSION BECOMES ZERO WHEN EDGE OF DECK IS AT OUTSIDE FACE OF WW

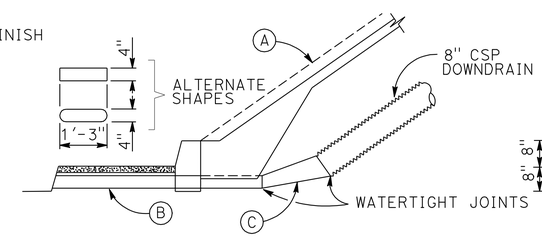

TYPICAL - WITH SIDEWALK

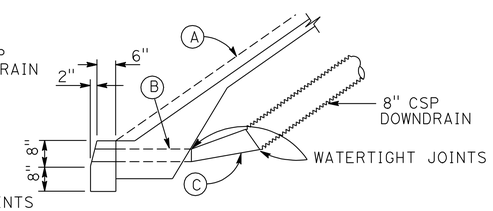

TYPICAL - WITH CURB

DRAINAGE DETAILS

NOTE:
Drainage details are only applicable when BO-3 / 3-5 RSP is indicated on detail sheets.

LIMITS OF SLOPE PAVING & DRAINAGE LAYOUT

(A) Top of rolled edge

(B) Conduit:
0.064" galv corrugated steel or 0.109" smooth galv steel

(C) Taper: { 0.064" galv corrugated steel or 0.109" smooth galv steel

(D) 8" perforated steel pipe (0.064" thick) underdrain behind abutment. Connect to downdrain as shown on limits of Slope Paving & Drainage layout.

NO SCALE

STANDARD DRAWING

FILE NO. xs4-210

APPROVAL DATE July 2011

STATE OF CALIFORNIA DEPARTMENT OF TRANSPORTATION

DIVISION OF ENGINEERING SERVICES

BRIDGE NO. 29-0336

POST MILE 2.65

BOULDIN ISLAND UC

SLOPE PAVING-FULL SLOPE

DS OSD 2147A (ENGLISH STANDARD DRAWING "XS" BORDER REV. (02-02-11)

ORIGINAL SCALE IN INCHES FOR REDUCED PLANS 0 1 2 3

UNIT: 3586
PROJECT NUMBER & PHASE: 10000000521 CONTRACT NO.: 10-0G8001

DISREGARD PRINTS BEARING EARLIER REVISION DATES

REVISION DATES

SHEET 10 OF 14

FILE => 29-0336-xs4-210-spav.dgn

USERNAME => s123631 DATE PLOTTED => 27-DEC-2012 TIME PLOTTED => 15:40

DIST	COUNTY	ROUTE	POST MILES TOTAL PROJECT	SHEET No.	TOTAL SHEETS
10	SJ	12	0.1/R4.4	127	130

Benjamin Barnes 8-2-11
REGISTERED CIVIL ENGINEER DATE

12-24-12
PLANS APPROVAL DATE

REGISTERED PROFESSIONAL ENGINEER
Benjamin Barnes
No. C66090
Exp. 6-30-12
CIVIL
STATE OF CALIFORNIA

The State of California or its officers or agents shall not be responsible for the accuracy or completeness of electronic copies of this plan sheet.

This LOTB sheet was prepared in accordance with the Caltrans Soil & Rock Logging, Classification, & Presentation Manual (2010 Edition).

BENCH MARK

Set top of 7" dia. concrete filled steel post, Approx. 40 ft south of ℄ Rte 12, side of driveway, Sta 234+55.
Assumed Elev -7.0'
Vertical Datum NAVD 88

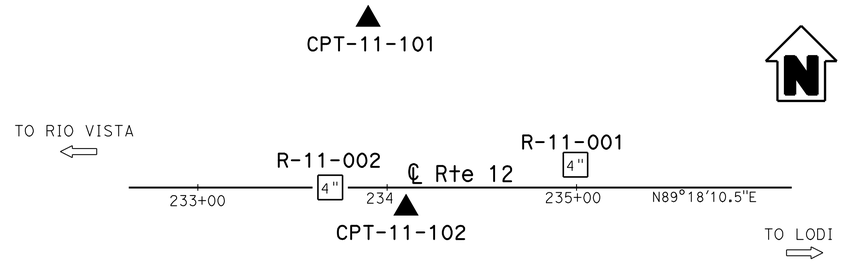

PLAN
1" = 40'

Note: Groundwater was encountered but not measured. Refer to Boring R-11-001 for groundwater elevation.

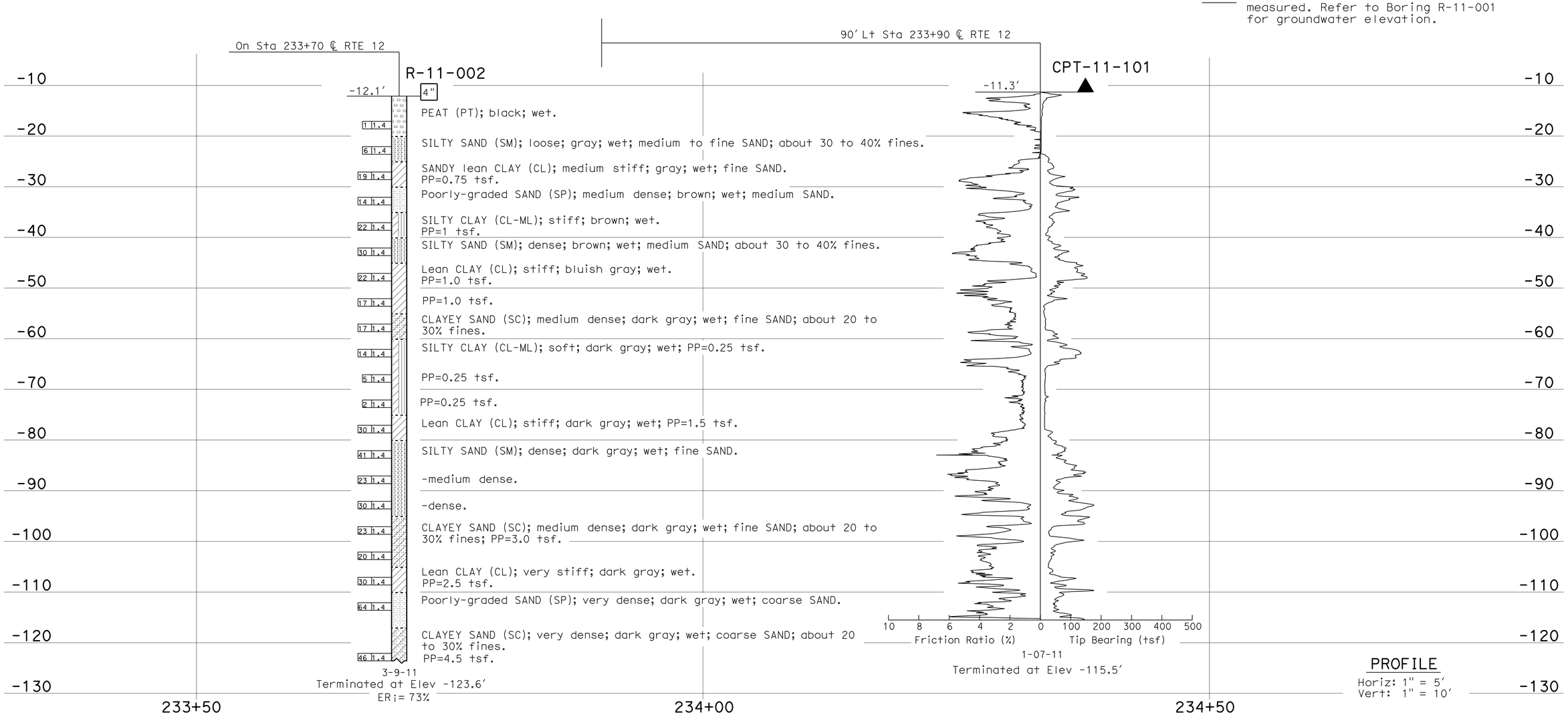

PROFILE
Horiz: 1" = 5'
Vert: 1" = 10'

ENGINEERING SERVICES	MATERIALS AND GEOTECHNICAL SERVICES	STATE OF CALIFORNIA DEPARTMENT OF TRANSPORTATION	DIVISION OF ENGINEERING SERVICES STRUCTURE DESIGN DESIGN BRANCH 17	BRIDGE NO. 29-0336 POST MILE 2.65	BOULDIN ISLAND UC LOG OF TEST BORINGS 1 OF 4
FUNCTIONAL SUPERVISOR NAME: Q. Huang	DRAWN BY: I.G-Remmen CHECKED BY: C. Zhen-Ru	FIELD INVESTIGATION BY: B. Barnes			

OGS CIVIL LOG OF TEST BORINGS SHEET

ORIGINAL SCALE IN INCHES FOR REDUCED PLANS 0 1 2 3

UNIT: 3643
PROJECT NUMBER & PHASE: 10000000521 CONTRACT NO.: 10-0G8001

DISREGARD PRINTS BEARING EARLIER REVISION DATES

REVISION DATES: ~~07-29-11~~ 08-02-11

SHEET 11 OF 14

FILE => 29-0336-z-1tb1 of 4.dgn

USERNAME => s123631 DATE PLOTTED => 27-DEC-2012 TIME PLOTTED => 15:41

DIST	COUNTY	ROUTE	POST MILES TOTAL PROJECT	SHEET No.	TOTAL SHEETS
10	SJ	12	0.1/R4.4	128	130

Benjamin Barnes 8-2-11
REGISTERED CIVIL ENGINEER DATE

12-24-12
PLANS APPROVAL DATE

REGISTERED PROFESSIONAL ENGINEER
Benjamin Barnes
No. C66090
Exp. 6-30-12
CIVIL
STATE OF CALIFORNIA

The State of California or its officers or agents shall not be responsible for the accuracy or completeness of electronic copies of this plan sheet.

This LOTB sheet was prepared in accordance with the Caltrans Soil & Rock Logging, Classification, & Presentation Manual (2010 Edition).

FOR PLAN VIEW, SEE
"LOG OF TEST BORINGS 1 OF 4"

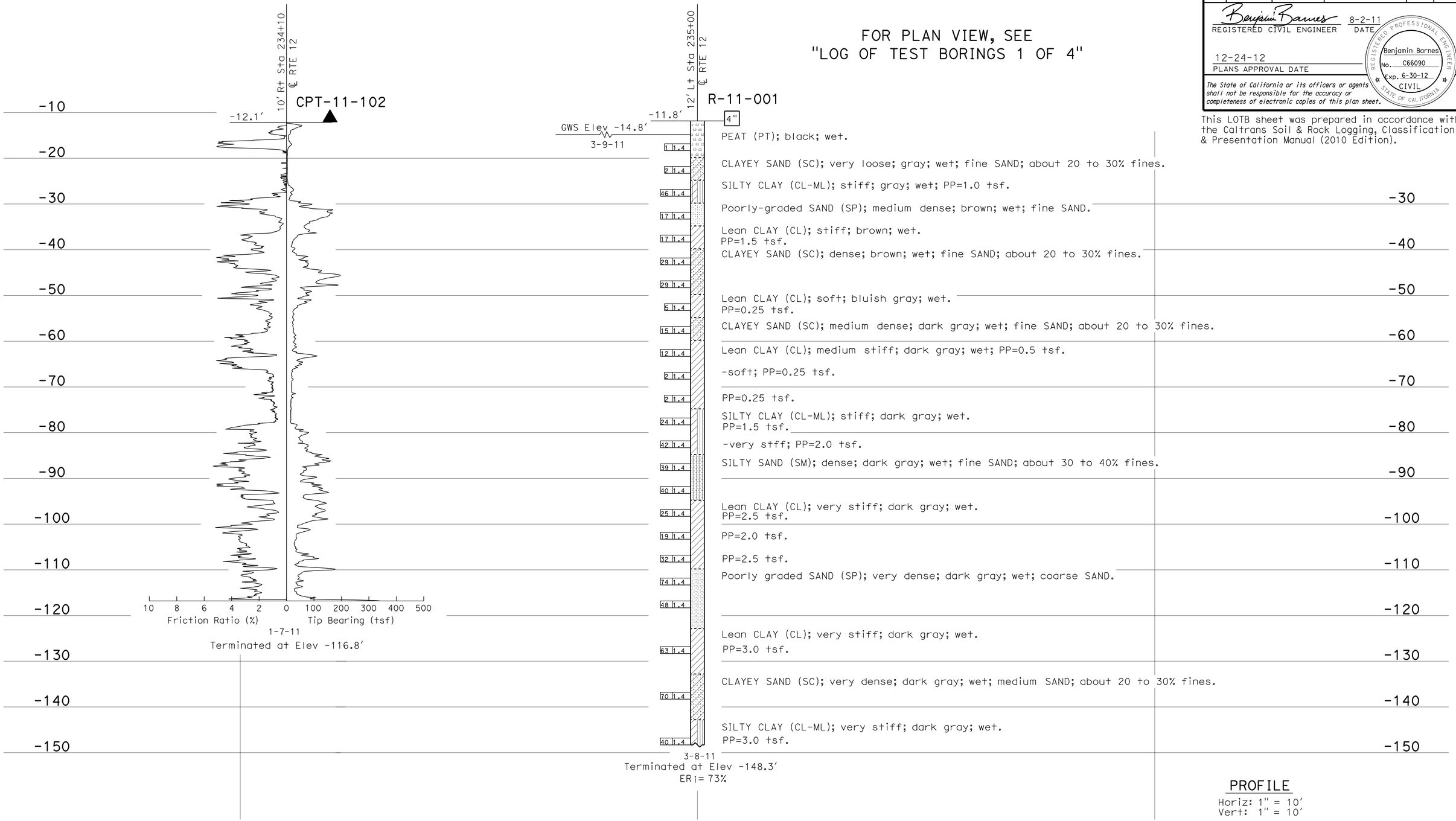

PROFILE
Horiz: 1" = 10'
Vert: 1" = 10'

ENGINEERING SERVICES	MATERIALS AND GEOTECHNICAL SERVICES	STATE OF CALIFORNIA DEPARTMENT OF TRANSPORTATION	DIVISION OF ENGINEERING SERVICES STRUCTURE DESIGN DESIGN BRANCH 17	BRIDGE NO. 29-0336 POST MILE 2.65	BOULDIN ISLAND UC LOG OF TEST BORINGS 2 OF 4
FUNCTIONAL SUPERVISOR NAME: Q. Huang	DRAWN BY: I.G-Remmen CHECKED BY: C. Zhen-Ru	FIELD INVESTIGATION BY: B. Barnes			

OGS CIVIL LOG OF TEST BORINGS SHEET

ORIGINAL SCALE IN INCHES FOR REDUCED PLANS 0 1 2 3

UNIT: 3643
PROJECT NUMBER & PHASE: 10000000521 CONTRACT NO.: 10-0G8001

DISREGARD PRINTS BEARING EARLIER REVISION DATES

REVISION DATES: ~~07-29-11~~ 08-02-11 SHEET 12 OF 14

FILE => 29-0336-z-ltb2 of 4.dgn

USERNAME => s123631 DATE PLOTTED => 27-DEC-2012 TIME PLOTTED => 15:41

REFERENCE: CALTRANS SOIL & ROCK LOGGING, CLASSIFICATION, AND PRESENTATION MANUAL (2010)

DIST	COUNTY	ROUTE	POST MILES TOTAL PROJECT	SHEET No.	TOTAL SHEETS
10	SJ	12	0.1/R4.4	129	130

Benjamin Barnes 8-2-11
REGISTERED CIVIL ENGINEER DATE

12-24-12
PLANS APPROVAL DATE

REGISTERED PROFESSIONAL ENGINEER Benjamin Barnes No. C66090 Exp. 6-30-12 CIVIL STATE OF CALIFORNIA

The State of California or its officers or agents shall not be responsible for the accuracy or completeness of electronic copies of this plan sheet.

This LOTB sheet was prepared in accordance with the Caltrans Soil & Rock Logging, Classification, & Presentation Manual (2010 Edition).

CEMENTATION

Description	Criteria
Weak	Crumbles or breaks with handling or little finger pressure.
Moderate	Crumbles or breaks with considerable finger pressure.
Strong	Will not crumble or break with finger pressure.

BOREHOLE IDENTIFICATION

Symbol	Hole Type	Description
Size	A	Auger Boring (hollow or solid stem bucket)
Size	R RW RC P	Rotary drilled boring (conventional) Rotary drilled with self-casing wire-line Rotary core with continuously-sampled, self-casing wire-line Rotary percussion boring (air)
Size	R	Rotary drilled diamond core
Size	HD HA	Hand driven (1-inch soil tube) Hand Auger
●	D	Dynamic Cone Penetration Boring
▲	CPT	Cone Penetration Test (ASTM D 5778)
⬚	O	Other (note on LOTB)

Note: Size in inches.

CONSISTENCY OF COHESIVE SOILS

Description	Shear Strength (tsf)	Pocket Penetrometer Measurement, PP, (tsf)	Torvane Measurement, TV, (tsf)	Vane Shear Measurement, VS, (tsf)
Very Soft	Less than 0.12	Less than 0.25	Less than 0.12	Less than 0.12
Soft	0.12 - 0.25	0.25 - 0.5	0.12 - 0.25	0.12 - 0.25
Medium Stiff	0.25 - 0.5	0.5 - 1	0.25 - 0.5	0.25 - 0.5
Stiff	0.5 - 1	1 - 2	0.5 - 1	0.5 - 1
Very Stiff	1 - 2	2 - 4	1 - 2	1 - 2
Hard	Greater than 2	Greater than 4	Greater than 2	Greater than 2

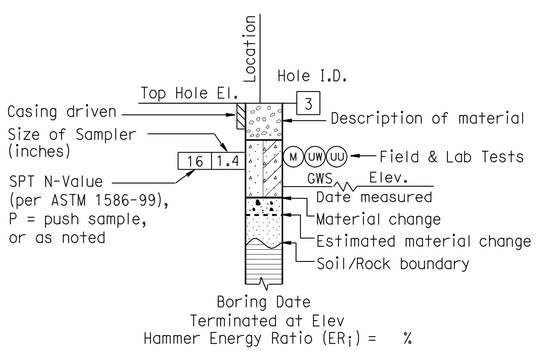

ROTARY BORING

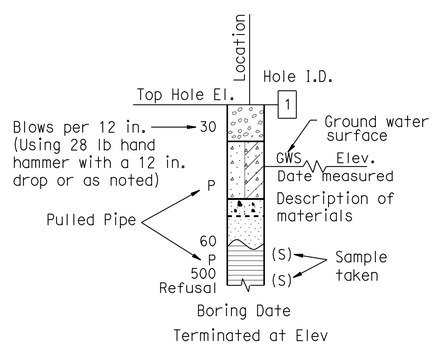

HAND BORING

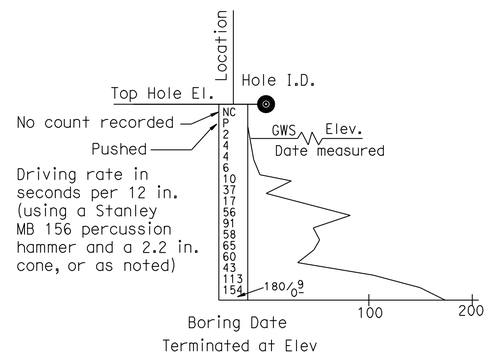

DYNAMIC CONE PENETRATION BORING

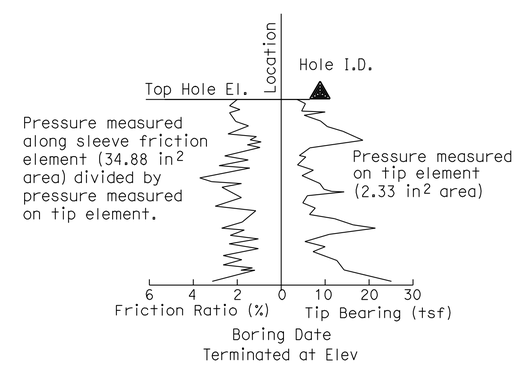

CONE PENETRATION TEST (CPT) BORING

ENGINEERING SERVICES	GEOTECHNICAL SERVICES	STATE OF CALIFORNIA DEPARTMENT OF TRANSPORTATION	DIVISION OF ENGINEERING SERVICES STRUCTURE DESIGN DESIGN BRANCH 17	BRIDGE NO. 29-0336 POST MILE 2.65	BOULDIN ISLAND UC LOG OF TEST BORINGS 3 OF 4
	PREPARED BY: I.G-Remmen				

GS LOTB SOIL LEGEND

ORIGINAL SCALE IN INCHES FOR REDUCED PLANS 0 1 2 3

UNIT: 3643
PROJECT NUMBER & PHASE: 10000000521 CONTRACT NO.: 10-0G8001

DISREGARD PRINTS BEARING EARLIER REVISION DATES

REVISION DATES

SHEET 13 OF 14

FILE => 29-0336-z-ltb3 of 4.dgn

USERNAME => s123631 DATE PLOTTED => 27-DEC-2012 TIME PLOTTED => 15:41

REFERENCE: CALTRANS SOIL & ROCK LOGGING, CLASSIFICATION, AND PRESENTATION MANUAL (2010)

DIST	COUNTY	ROUTE	POST MILES TOTAL PROJECT	SHEET No.	TOTAL SHEETS
10	SJ	12	0.1/R4.4	130	130

Benjamin Barnes 8-2-11
REGISTERED CIVIL ENGINEER DATE

12-24-12
PLANS APPROVAL DATE

REGISTERED PROFESSIONAL ENGINEER
Benjamin Barnes
No. C66090
Exp. 6-30-12
CIVIL
STATE OF CALIFORNIA

The State of California or its officers or agents shall not be responsible for the accuracy or completeness of electronic copies of this plan sheet.

GROUP SYMBOLS AND NAMES

Graphic/Symbol	Group Names	Graphic/Symbol	Group Names
GW	Well-graded GRAVEL Well-graded GRAVEL with SAND	CL	Lean CLAY Lean CLAY with SAND Lean CLAY with GRAVEL SANDY lean CLAY SANDY lean CLAY with GRAVEL GRAVELLY lean CLAY GRAVELLY lean CLAY with SAND
GP	Poorly-graded GRAVEL Poorly-graded GRAVEL with SAND		
GW-GM	Well-graded GRAVEL with SILT Well-graded GRAVEL with SILT and SAND	CL-ML	SILTY CLAY SILTY CLAY with SAND SILTY CLAY with GRAVEL SANDY SILTY CLAY SANDY SILTY CLAY with GRAVEL GRAVELLY SILTY CLAY GRAVELLY SILTY CLAY with SAND
GW-GC	Well-graded GRAVEL with CLAY (or SILTY CLAY) Well-graded GRAVEL with CLAY and SAND (or SILTY CLAY and SAND)		
GP-GM	Poorly-graded GRAVEL with SILT Poorly-graded GRAVEL with SILT and SAND	ML	SILT SILT with SAND SILT with GRAVEL SANDY SILT SANDY SILT with GRAVEL GRAVELLY SILT GRAVELLY SILT with SAND
GP-GC	Poorly-graded GRAVEL with CLAY (or SILTY CLAY) Poorly-graded GRAVEL with CLAY and SAND (or SILTY CLAY and SAND)		
GM	SILTY GRAVEL SILTY GRAVEL with SAND	OL	ORGANIC lean CLAY ORGANIC lean CLAY with SAND ORGANIC lean CLAY with GRAVEL SANDY ORGANIC lean CLAY SANDY ORGANIC lean CLAY with GRAVEL GRAVELLY ORGANIC lean CLAY GRAVELLY ORGANIC lean CLAY with SAND
GC	CLAYEY GRAVEL CLAYEY GRAVEL with SAND		
GC-GM	SILTY, CLAYEY GRAVEL SILTY, CLAYEY GRAVEL with SAND	OL	ORGANIC SILT ORGANIC SILT with SAND ORGANIC SILT with GRAVEL SANDY ORGANIC SILT SANDY ORGANIC SILT with GRAVEL GRAVELLY ORGANIC SILT GRAVELLY ORGANIC SILT with SAND
SW	Well-graded SAND Well-graded SAND with GRAVEL		
SP	Poorly-graded SAND Poorly-graded SAND with GRAVEL	CH	Fat CLAY Fat CLAY with SAND Fat CLAY with GRAVEL SANDY fat CLAY SANDY fat CLAY with GRAVEL GRAVELLY fat CLAY GRAVELLY fat CLAY with SAND
SW-SM	Well-graded SAND with SILT Well-graded SAND with SILT and GRAVEL		
SW-SC	Well-graded SAND with CLAY (or SILTY CLAY) Well-graded SAND with CLAY and GRAVEL (or SILTY CLAY and GRAVEL)	MH	Elastic SILT Elastic SILT with SAND Elastic SILT with GRAVEL SANDY elastic SILT SANDY elastic SILT with GRAVEL GRAVELLY elastic SILT GRAVELLY elastic SILT with SAND
SP-SM	Poorly-graded SAND with SILT Poorly-graded SAND with SILT and GRAVEL		
SP-SC	Poorly-graded SAND with CLAY (or SILTY CLAY) Poorly-graded SAND with CLAY and GRAVEL (or SILTY CLAY and GRAVEL)	OH	ORGANIC fat CLAY ORGANIC fat CLAY with SAND ORGANIC fat CLAY with GRAVEL SANDY ORGANIC fat CLAY SANDY ORGANIC fat CLAY with GRAVEL GRAVELLY ORGANIC fat CLAY GRAVELLY ORGANIC fat CLAY with SAND
SM	SILTY SAND SILTY SAND with GRAVEL		
SC	CLAYEY SAND CLAYEY SAND with GRAVEL	OH	ORGANIC elastic SILT ORGANIC elastic SILT with SAND ORGANIC elastic SILT with GRAVEL SANDY ORGANIC elastic SILT SANDY ORGANIC elastic SILT with GRAVEL GRAVELLY ORGANIC elastic SILT GRAVELLY ORGANIC elastic SILT with SAND
SC-SM	SILTY, CLAYEY SAND SILTY, CLAYEY SAND with GRAVEL		
PT	PEAT	OL/OH	ORGANIC SOIL ORGANIC SOIL with SAND ORGANIC SOIL with GRAVEL SANDY ORGANIC SOIL SANDY ORGANIC SOIL with GRAVEL GRAVELLY ORGANIC SOIL GRAVELLY ORGANIC SOIL with SAND
	COBBLES COBBLES and BOULDERS BOULDERS		

FIELD AND LABORATORY TESTING

- (C) Consolidation (ASTM D 2435)
- (CL) Collapse Potential (ASTM D 5333)
- (CP) Compaction Curve (CTM 216)
- (CR) Corrosivity Testing (CTM 643, CTM 422, CTM 417)
- (CU) Consolidated Undrained Triaxial (ASTM D 4767)
- (DS) Direct Shear (ASTM D 3080)
- (EI) Expansion Index (ASTM D 4829)
- (M) Moisture Content (ASTM D 2216)
- (OC) Organic Content-% (ASTM D 2974)
- (P) Permeability (CTM 220)
- (PA) Particle Size Analysis (ASTM D 422)
- (PI) Plasticity Index (AASHTO T 90) Liquid Limit (AASHTO T 89)
- (PL) Point Load Index (ASTM D 5731)
- (PM) Pressure Meter
- (R) R-Value (CTM 301)
- (SE) Sand Equivalent (CTM 217)
- (SG) Specific Gravity (AASHTO T 100)
- (SL) Shrinkage Limit (ASTM D 427)
- (SW) Swell Potential (ASTM D 4546)
- (UC) Unconfined Compression-Soil (ASTM D 2166) Unconfined Compression-Rock (ASTM D 2938)
- (UU) Unconsolidated Undrained Triaxial (ASTM D 2850)
- (UW) Unit Weight (ASTM D 4767)

APPARENT DENSITY OF COHESIONLESS SOILS

Description	SPT N_{60} (Blows / 12 in.)
Very Loose	0 - 5
Loose	5 - 10
Medium Dense	10 - 30
Dense	30 - 50
Very Dense	Greater than 50

MOISTURE

Description	Criteria
Dry	No discernable moisture
Moist	Moisture present, but no free water
Wet	Visible free water

PERCENT OR PROPORTION OF SOILS

Description	Criteria
Trace	Particles are present but estimated to be less than 5%
Few	5% - 10%
Little	15% - 25%
Some	30% - 45%
Mostly	50% - 100%

PARTICLE SIZE

Description		Size (in.)
Boulder		Greater than 12
Cobble		3 - 12
Gravel	Coarse	3/4 - 3
	Fine	1/5 - 3/4
Sand	Coarse	1/16 - 1/5
	Medium	1/64 - 1/16
	Fine	1/300 - 1/64
Silt and Clay		Less than 1/300

ENGINEERING SERVICES

GEOTECHNICAL SERVICES

PREPARED BY: I.G-Remmen

STATE OF CALIFORNIA
DEPARTMENT OF TRANSPORTATION

DIVISION OF ENGINEERING SERVICES
STRUCTURE DESIGN
DESIGN BRANCH 17

BRIDGE NO. 29-0336
POST MILE 2.65

BOULDIN ISLAND UC
LOG OF TEST BORINGS 4 OF 4

GS LOTB SOIL LEGEND

ORIGINAL SCALE IN INCHES FOR REDUCED PLANS 0 1 2 3

UNIT: 3643
PROJECT NUMBER & PHASE: 10000000521
CONTRACT NO.: 10-0G8001

DISREGARD PRINTS BEARING EARLIER REVISION DATES

REVISION DATES

SHEET 14 OF 14

FILE => 29-0336-z-ltb4 of 4.dgn

USERNAME => s123631 DATE PLOTTED => 27-DEC-2012 TIME PLOTTED => 15:41