Dist	COUNTY	ROUTE	POST MILES TOTAL PROJECT	SHEET No.	TOTAL SHEETS
10	Sta	33	0.5/1.5, 12.6/14.5	1	21

SARRA-S033(069)E

STATE OF CALIFORNIA
DEPARTMENT OF TRANSPORTATION

PROJECT PLANS FOR CONSTRUCTION ON
STATE HIGHWAY
IN STANISLAUS COUNTY
IN NEWMAN
FROM INYO AVENUE TO
0.1 MILE SOUTH OF JENSEN ROAD
AND IN PATTERSON
FROM SPERRY AVENUE TO WARD AVENUE

TO BE SUPPLEMENTED BY STANDARD PLANS DATED MAY 2006

INDEX OF PLANS

SHEET No.	DESCRIPTION
1	TITLE AND LOCATION MAP
2	TYPICAL CROSS SECTIONS
3-5	CONSTRUCTION DETAILS
6-7	CONSTRUCTION AREA SIGNS
8	PAVEMENT DELINEATION QUANTITIES
9-10	SUMMARY OF QUANTITIES
11-13	ELECTRICAL PLANS
14-21	REVISED STANDARD PLANS

THE STANDARD PLANS LIST APPLICABLE TO THIS CONTRACT IS INCLUDED IN THE NOTICE TO BIDDERS AND SPECIAL PROVISIONS BOOK.

LOCATION MAP

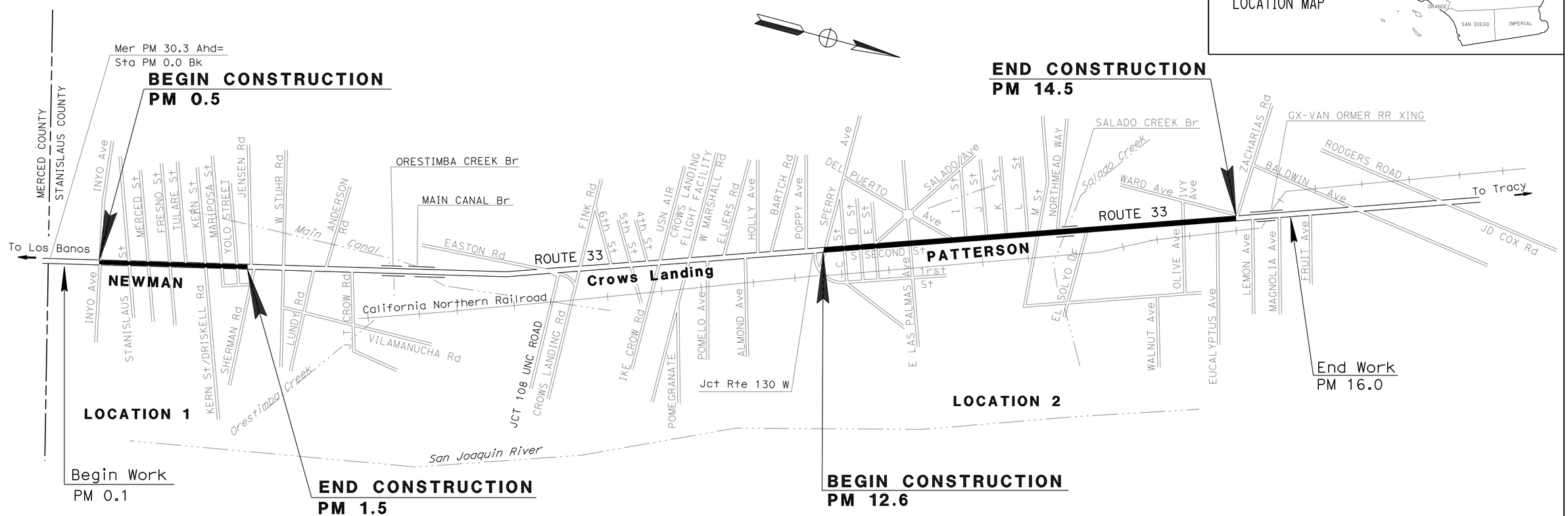

NO SCALE

THE CONTRACTOR SHALL POSSESS THE CLASS (OR CLASSES) OF LICENSE AS SPECIFIED IN THE "NOTICE TO BIDDERS."

PROJECT MANAGER: DANIEL CLARK
DESIGN ENGINEER: JOSE HUERTA

03-16-09
PROJECT ENGINEER REGISTERED CIVIL ENGINEER — DATE

May 11, 2009
PLANS APPROVAL DATE

REGISTERED PROFESSIONAL ENGINEER — JOSE A. HUERTA — No. 52380 — Exp. 12/31/10 — CIVIL — STATE OF CALIFORNIA

THE STATE OF CALIFORNIA OR ITS OFFICERS OR AGENTS SHALL NOT BE RESPONSIBLE FOR THE ACCURACY OR COMPLETENESS OF SCANNED COPIES OF THIS PLAN SHEET.

CONTRACT No. **10-0G7704**

LAST REVISION 00-00-00 — DATE PLOTTED => 09-JUN-2009 — TIME PLOTTED => 14:04

Dist	COUNTY	ROUTE	POST MILES TOTAL PROJECT	SHEET No.	TOTAL SHEETS
10	Sta	33	0.5/1.5, 12.6/14.5	2	21

REGISTERED CIVIL ENGINEER 03-16-09 DATE

5-11-09
PLANS APPROVAL DATE

REGISTERED PROFESSIONAL ENGINEER JOSE A. HUERTA No. 52380 Exp. 12/31/10 CIVIL STATE OF CALIFORNIA

THE STATE OF CALIFORNIA OR ITS OFFICERS OR AGENTS SHALL NOT BE RESPONSIBLE FOR THE ACCURACY OR COMPLETENESS OF SCANNED COPIES OF THIS PLAN SHEET.

NOTES:

1. DIMENSIONS OF THE PAVEMENT STRUCTURES (STRUCTURAL SECTIONS) ARE SUBJECT TO TOLERANCES SPECIFIED IN THE STANDARD SPECIFICATIONS.
2. SUPERELEVATIONS AS SHOWN OR AS DIRECTED BY THE ENGINEER.
3. FOR COMPLETE R/W, SEE R/W RECORD MAPS AT DISTRICT OFFICE.
4. EXISTING UTILITY FACILITIES HAVE NOT BEEN PLOTTED ON THESE PLANS.
5. FOR COLD PLANE AC PAVEMENT DIMENSIONS AND LOCATIONS SEE SUMMARY OF QUANTITIES.
6. "X" REPRESENTS DISTANCE OF COLD PLANE AC FROM CENTERLINE FOR DISTANCES SEE SUMMARY OF QUANTITIES.

ABBREVIATIONS:

RHMA-G - RUBBERIZED HOT MIX ASPHALT (GAP GRADED)

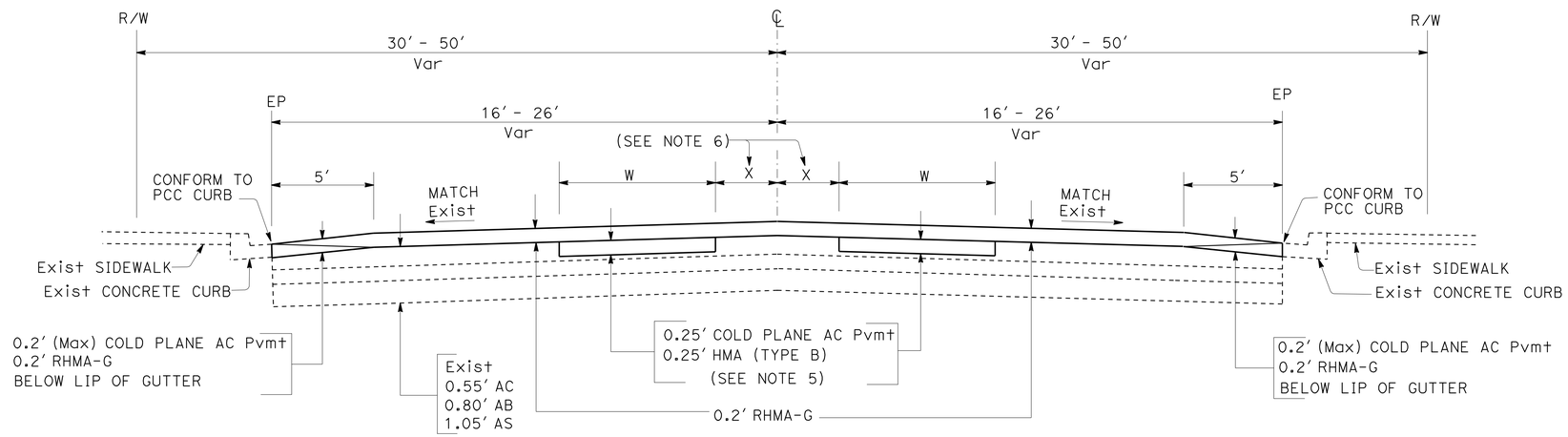

PM 0.5 TO 1.5
LOCATION 1

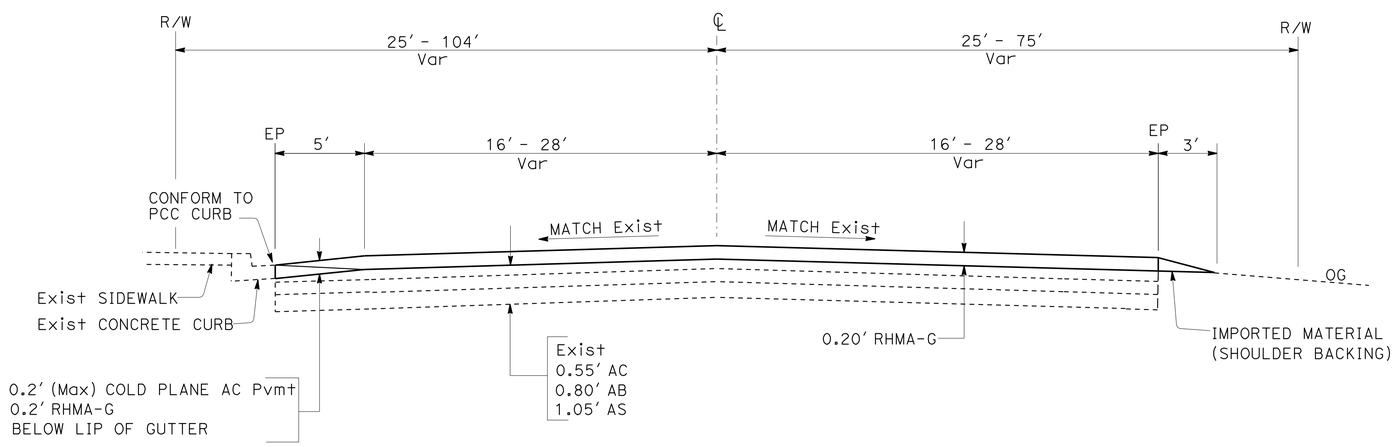

PM 12.6 TO 14.5
LOCATION 2

ROUTE 33

TYPICAL CROSS SECTIONS

NO SCALE

X-1

STATE OF CALIFORNIA - DEPARTMENT OF TRANSPORTATION
Caltrans
DESIGN

FUNCTIONAL SUPERVISOR: JOSE HUERTA
CALCULATED-DESIGNED BY: KAM LUANGRATH
CHECKED BY: PERCY MARAGOS
REVISED BY: RS
DATE REVISED: 03/10/09

LAST REVISION 00-00-00
DATE PLOTTED => 09-JUN-2009
TIME PLOTTED => 14:05

Dist	COUNTY	ROUTE	POST MILES TOTAL PROJECT	SHEET No.	TOTAL SHEETS
10	Sta	33	0.5/1.5, 12.6/14.5	3	21

REGISTERED CIVIL ENGINEER DATE 03-16-09

5-11-09
PLANS APPROVAL DATE

REGISTERED PROFESSIONAL ENGINEER JOSE A. HUERTA No. 52380 Exp. 12/31/10 CIVIL STATE OF CALIFORNIA

THE STATE OF CALIFORNIA OR ITS OFFICERS OR AGENTS SHALL NOT BE RESPONSIBLE FOR THE ACCURACY OR COMPLETENESS OF SCANNED COPIES OF THIS PLAN SHEET.

LEGEND

- RHMA-G
- COLD PLANE AC PAVEMENT RHMA-G
- PORTLAND CEMENT CONCRETE

ABBREVIATIONS:

RHMA-G - RUBBERIZED HOT MIX ASPHALT (GAP GRADED)

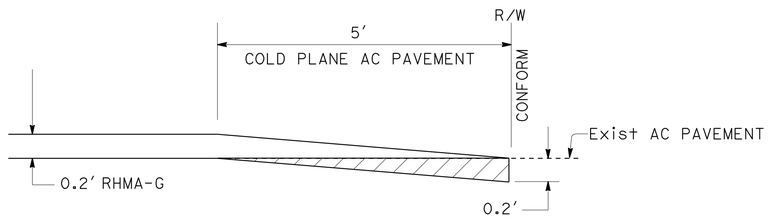

SECTION

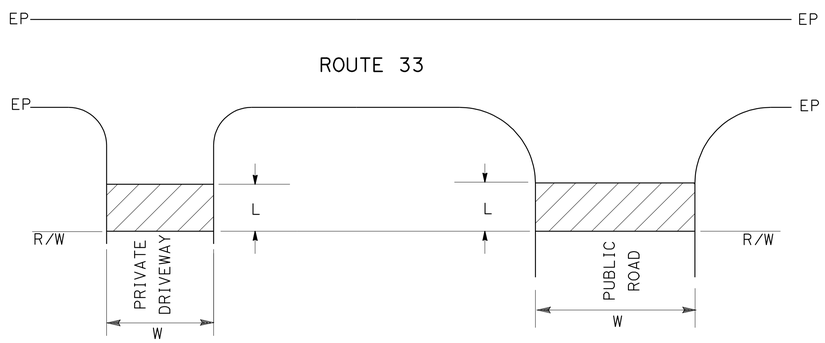

PLAN

PAVING CONFORMS AT PRIVATE DRIVEWAYS AND PUBLIC ROAD INTERSECTIONS

NOTE: SEE PRIVATE DRIVEWAYS AND PUBLIC ROAD INTERSECTIONS TABLES

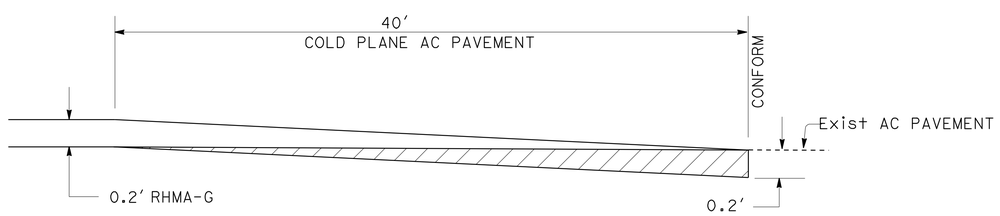

PM 0.48, 1.54, 12.56, 14.5

LONGITUDUAL CONFORM TAPER TO EXISTING AC PAVEMENT

PUBLIC ROAD INTERSECTIONS

	LOCATION	PM	SIDE	L Ft	W Ft
LOCATION 1	INYO STREET	0.49	Lt	5	51
	INYO STREET	0.49	Rt	5	158
	STANILAUS STREET	0.58	Lt	5	41
	STANILAUS STREET	0.58	Rt	5	52
	MERCED STREET	0.68	Lt	5	53
	MERCED STREET	0.68	Rt	5	53
	FRESNO STREET	0.76	Lt	5	52
	TULARE STREET	0.86	Lt	5	52
	KERN St/DRISKELL Rd	0.95	Lt	5	47
	KERN STREET	0.95	Rt	5	47
	MARIPOSA STREET	1.04	Lt	5	52
	MARIPOSA STREET	1.04	Rt	5	46
	OLD ROUTE	1.10	Rt	5	52
	YOLO STREET	1.13	Lt	5	41
	YOLO STREET	1.13	Rt	5	30
LOCATION 2	SPERRY Ave	12.57	Lt	5	65
	SPERRY Ave	12.57	Rt	5	62
	C STREET	12.82	Lt	5	50
	D STREET	12.92	Lt	5	52
	E STREET	13.00	Lt	5	52
	E STREET	13.00	Rt	5	40
	S EL CIRCULO Ave	13.10	Lt	5	66
	S SALADO Ave	13.10	Lt	5	66
	W LAS PALMAS Ave	13.18	Lt	5	50
	W LAS PALMAS Ave	13.18	Rt	5	50
	N DEL PUERTO Ave	13.26	Lt	5	20
	N EL CIRCULO Ave	13.26	Lt	5	79
	I STREET	13.36	Lt	5	48
	J STREET	13.46	Lt	5	48
	K STREET	13.55	Lt	5	48
	L STREET	13.64	Lt	5	48
	M STREET	13.70	Lt	5	50
	M STREET	13.70	Rt	5	40
	NORTHMEAD WAY	13.83	Lt	5	40
	EL SOLYO Dr	13.97	Lt	5	100
	IVY Ave	14.19	Lt	5	137
	OLIVE Ave	14.19	Rt	5	40

PRIVATE DRIVEWAY CONNECTIONS

	LOCATION (BUSINESSES/HOME)	PM	L Ft	W Ft
LOCATION 1	SHELL STATION	0.70	5	35
	SHELL STATION	0.72	5	41
	PACIFIC BELL	1.20	5	30
	GAS STATION	1.29	5	185
LOCATION 2	CAR DEALERSHIP	12.51	5	38
	HOME DRIVEWAY	13.81	5	18
	HOME DRIVEWAY	13.91	5	24
	HOME DRIVEWAY	13.91	5	24
	TRACTOR DEALER	14.40	5	26

CONSTRUCTION DETAILS

NO SCALE

C-1

STATE OF CALIFORNIA - DEPARTMENT OF TRANSPORTATION
DESIGN
Caltrans
FUNCTIONAL SUPERVISOR: JOSE HUERTA
CALCULATED-DESIGNED BY: KAM LUANGRATH
CHECKED BY: PERCY MARAGOS
REVISED BY: RS
DATE REVISED: 03/10/09

LAST REVISION 00-00-00
DATE PLOTTED => 09-JUN-2009
TIME PLOTTED => 14:05

Dist	COUNTY	ROUTE	POST MILES TOTAL PROJECT	SHEET No.	TOTAL SHEETS
10	Sta	33	0.5/1.5, 12.6/14.5	4	21

REGISTERED CIVIL ENGINEER 03-16-09 DATE

5-11-09
PLANS APPROVAL DATE

REGISTERED PROFESSIONAL ENGINEER JOSE A. HUERTA No. 52380 Exp. 12/31/10 CIVIL STATE OF CALIFORNIA

THE STATE OF CALIFORNIA OR ITS OFFICERS OR AGENTS SHALL NOT BE RESPONSIBLE FOR THE ACCURACY OR COMPLETENESS OF SCANNED COPIES OF THIS PLAN SHEET.

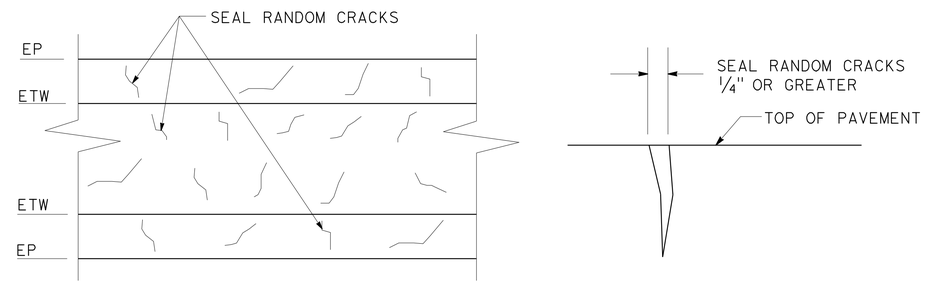

PLAN DETAIL

SEAL RANDOM CRACKS

(FOR CRACKS GREATER THAN 1/4")

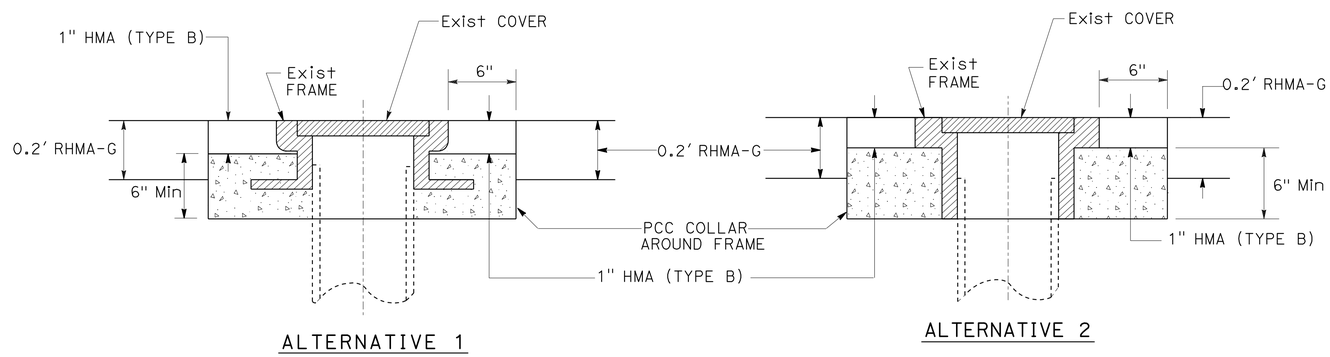

ALTERNATIVE 1 ALTERNATIVE 2

ADJUST FRAME AND COVER TO GRADE

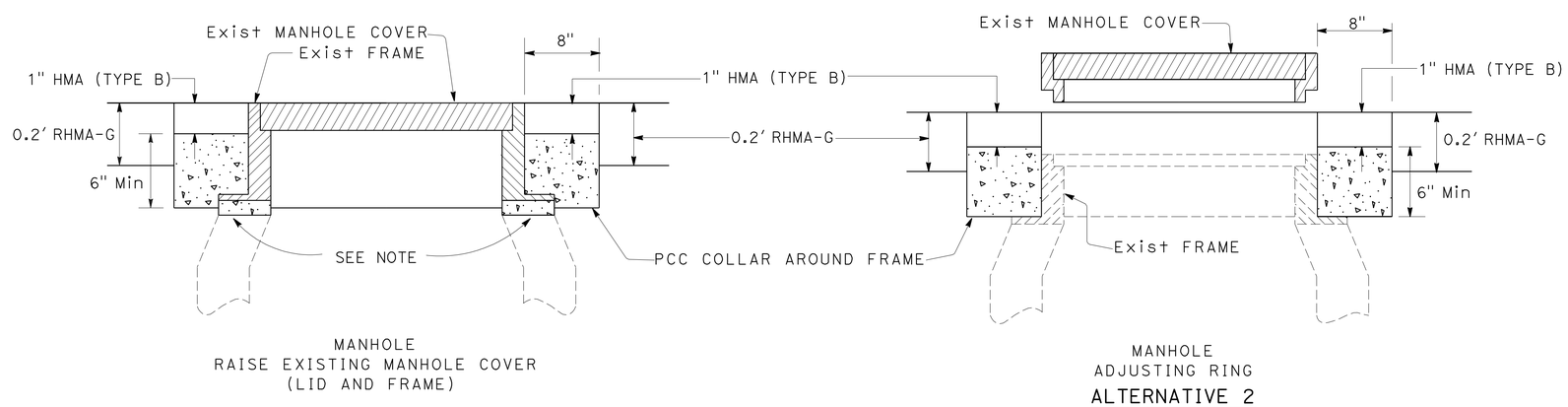

MANHOLE
RAISE EXISTING MANHOLE COVER
(LID AND FRAME)

ALTERNATIVE 1

MANHOLE
ADJUSTING RING

ALTERNATIVE 2

ADJUST MANHOLE TO GRADE

NOTE: CAST IRON ADJUSTING RING THICKNESS VARIES FROM MINIMUM THICKNESS 0.75" TO MAXIMUM OF 2.5".

CONSTRUCTION DETAILS

NO SCALE

C-2

STATE OF CALIFORNIA - DEPARTMENT OF TRANSPORTATION
Caltrans DESIGN

FUNCTIONAL SUPERVISOR: JOSE HUERTA

CALCULATED-DESIGNED BY: KAM LUANGRATH
CHECKED BY: PERCY MARAGOS

REVISED BY: RS
DATE REVISED: 03/10/09

LAST REVISION 00-00-00
DATE PLOTTED => 09-JUN-2009
TIME PLOTTED => 14:05

Dist	COUNTY	ROUTE	POST MILES TOTAL PROJECT	SHEET No.	TOTAL SHEETS
10	Sta	33	0.5/1.5, 12.6/14.5	5	21

REGISTERED CIVIL ENGINEER 03-16-09 DATE

5-11-09
PLANS APPROVAL DATE

REGISTERED PROFESSIONAL ENGINEER JOSE A. HUERTA No. 52380 Exp. 12/31/10 CIVIL STATE OF CALIFORNIA

THE STATE OF CALIFORNIA OR ITS OFFICERS OR AGENTS SHALL NOT BE RESPONSIBLE FOR THE ACCURACY OR COMPLETENESS OF SCANNED COPIES OF THIS PLAN SHEET.

NOTES:

1. CUT AND REMOVE THAT PORTION OF TYPE 9, 9-11 AND MBGR AS REQUIRED.
2. EXTERIOR SPLICE BOLT HOLES SHALL BE THE STANDARD 7/8" X 1 1/8" SLOT SIZE FOR RAIL SPLICES AT POST # T4 AND THE CONNECTION TO THE CONCRETE BARRIER OR RAILING. INTERIOR SPLICE BOLT HOLES MAY BE INCREASED UP TO 1 1/8" DIA. WASHERS SHALL BE USED WITH SPLICE BOLTS ON BACK SIDE OF RAIL ELEMENT AT POST # T4 AND CONNECTION TO THE CONCRETE BARRIER OR RAILING.
3. SEE STANDARD PLANS FOR MBGR LAYOUT TYPE.

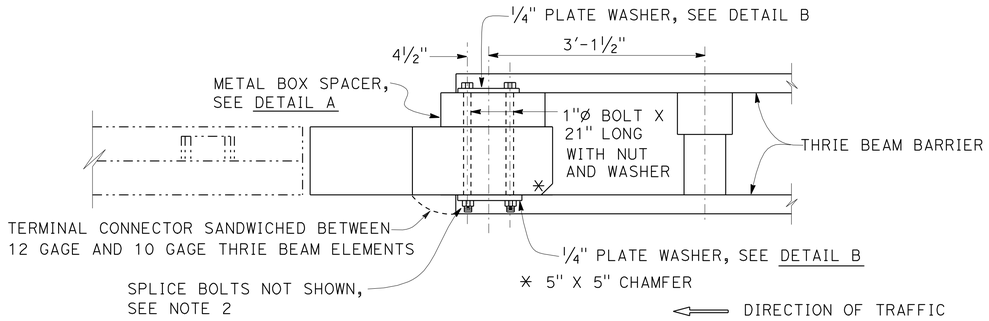

APPROACH SIDE
PLAN

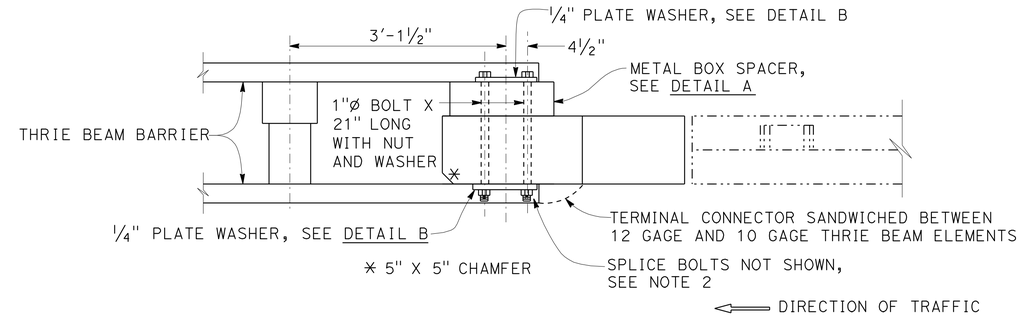

DEPARTURE SIDE
PLAN

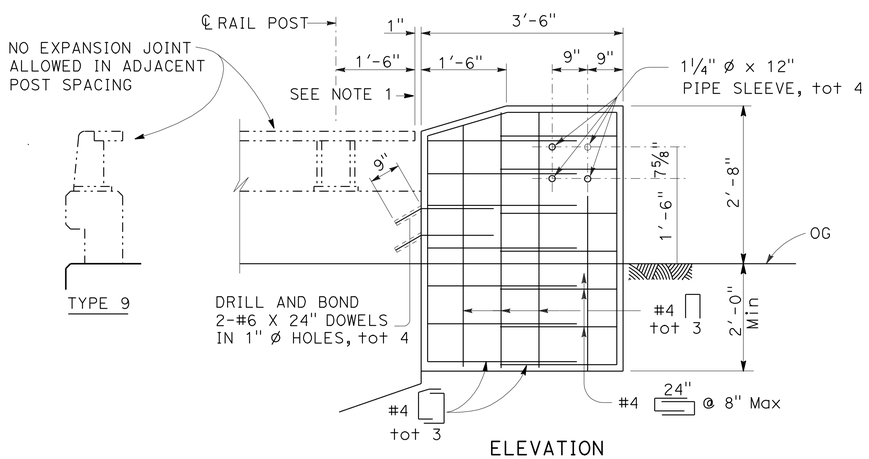

ELEVATION

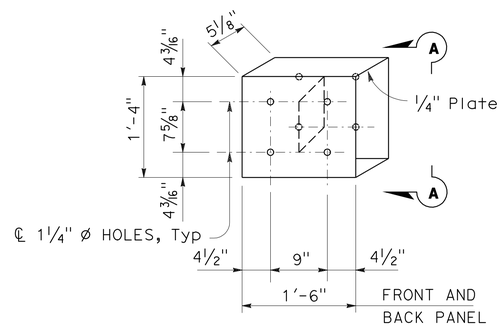

DETAIL A

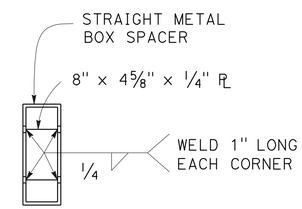

SECTION A-A

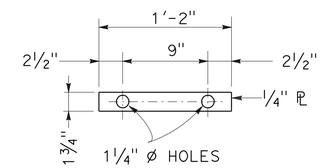

DETAIL B

TYPE 9 BRIDGE RAILING
METAL BEAM GUARD RAILING ANCHOR SYSTEM

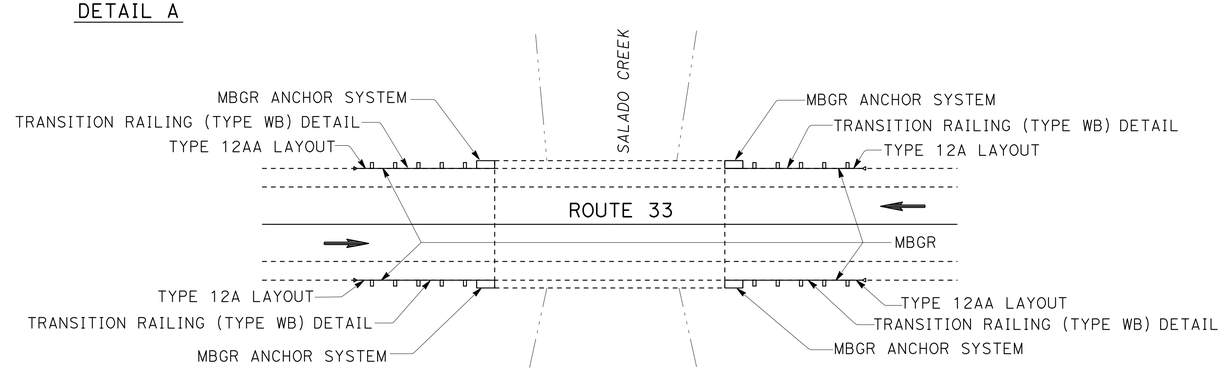

PLAN
PM 13.94

SALADO CREEK BRIDGE 38-0020

CONSTRUCTION DETAILS

NO SCALE

C-3

STATE OF CALIFORNIA - DEPARTMENT OF TRANSPORTATION
DESIGN
Caltrans

FUNCTIONAL SUPERVISOR: JOSE HUERTA
CALCULATED-DESIGNED BY: KAM LUANGRATH
CHECKED BY: PERCY MARAGOS
REVISED BY: RS
DATE REVISED: 03/10/09

LAST REVISION 00-00-00
DATE PLOTTED => 09-JUN-2009
TIME PLOTTED => 14:05

Dist	COUNTY	ROUTE	POST MILES TOTAL PROJECT	SHEET No.	TOTAL SHEETS
10	Sta	33	0.5/1.5, 12.6/14.5	6	21

REGISTERED CIVIL ENGINEER 03-16-09 DATE

5-11-09
PLANS APPROVAL DATE

REGISTERED PROFESSIONAL ENGINEER Hassan Marei No. 35068 Exp.9/30/09 CIVIL STATE OF CALIFORNIA

THE STATE OF CALIFORNIA OR ITS OFFICERS OR AGENTS SHALL NOT BE RESPONSIBLE FOR THE ACCURACY OR COMPLETENESS OF SCANNED COPIES OF THIS PLAN SHEET.

STATIONARY MOUNTED CONSTRUCTION AREA SIGNS

SIGN No.	SIGN CODE	PANEL SIZE	No. OF POST AND SIZE	SIGN MESSAGE	No. OF SIGNS
A	W20-1	48" x 48"	1 - 6" x 6"	ROAD WORK AHEAD	2
B	G20-2	36" x 18"	1 - 4" x 4"	END ROAD WORK	4
C	W20-1	36" x 36"	1 - 4" x 4"	ROAD WORK AHEAD	16

NOTE:

SIGN LOCATIONS SHOWN ARE APPROXIMATE, EXACT LOCATIONS TO BE DETERMINED BY THE ENGINEER.

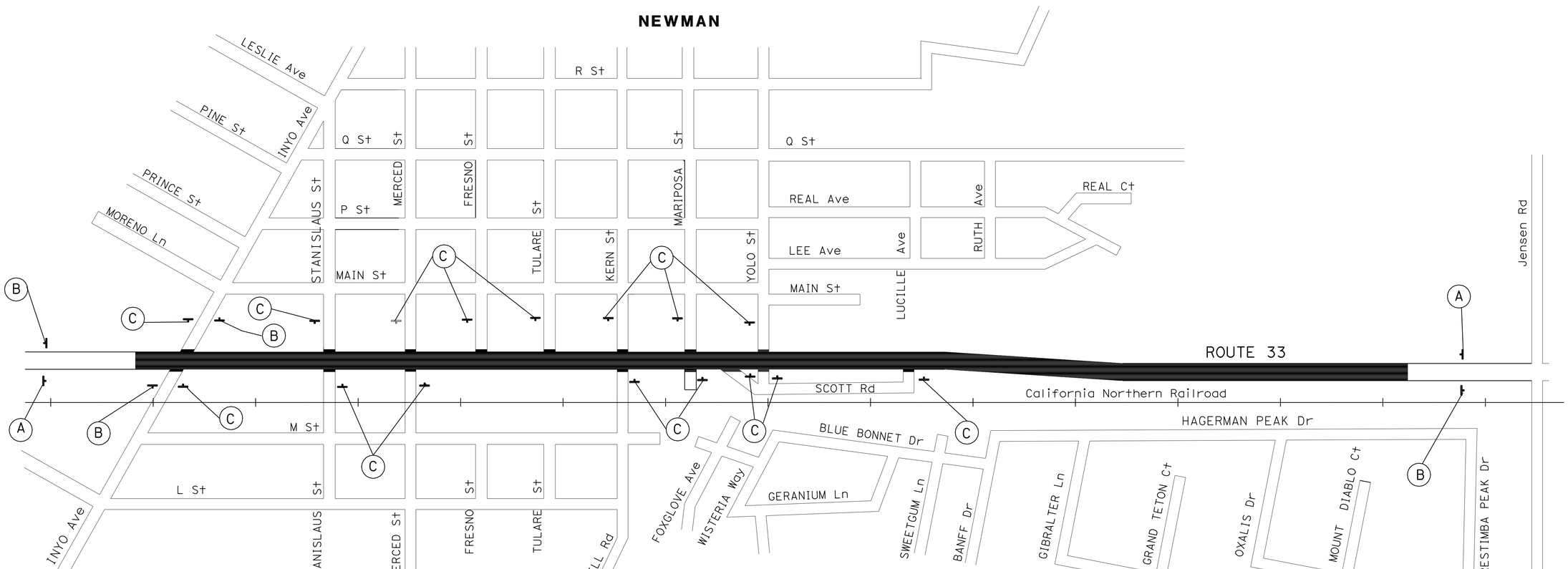

LOCATION 1

CONSTRUCTION AREA SIGNS

NO SCALE

CS-1

THIS PLAN ACCURATE FOR CONSTRUCTION AREA SIGN WORK ONLY.

STATE OF CALIFORNIA - DEPARTMENT OF TRANSPORTATION
Caltrans
TRAFFIC DESIGN

FUNCTIONAL SUPERVISOR: HASSAN MAREI
CALCULATED-DESIGNED BY: QUAN TRINH
CHECKED BY: CECILE NGUYEN
REVISED BY: QT
DATE REVISED: 12/31/08

LAST REVISION 00-00-00
DATE PLOTTED => 09-JUN-2009
TIME PLOTTED => 14:05

Dist	COUNTY	ROUTE	POST MILES TOTAL PROJECT	SHEET No.	TOTAL SHEETS
10	Sta	33	0.5/1.5, 12.6/14.5	7	21

REGISTERED CIVIL ENGINEER 03-16-09 DATE

5-11-09
PLANS APPROVAL DATE

REGISTERED PROFESSIONAL ENGINEER Hassan Marei No. 35068 Exp. 9/30/09 CIVIL STATE OF CALIFORNIA

THE STATE OF CALIFORNIA OR ITS OFFICERS OR AGENTS SHALL NOT BE RESPONSIBLE FOR THE ACCURACY OR COMPLETENESS OF SCANNED COPIES OF THIS PLAN SHEET.

STATIONARY MOUNTED CONSTRUCTION AREA SIGNS

SIGN No.	SIGN CODE	PANEL SIZE	No. OF POST AND SIZE	SIGN MESSAGE	No. OF SIGNS
A	W20-1	48" x 48"	1 - 6" x 6"	ROAD WORK AHEAD	2
B	G20-2	36" x 18"	1 - 4" x 4"	END ROAD WORK	4
C	W20-1	36" x 36"	1 - 4" x 4"	ROAD WORK AHEAD	24

NOTE:

EXACT SIGN LOCATIONS TO BE DETERMINED BY THE ENGINEER.

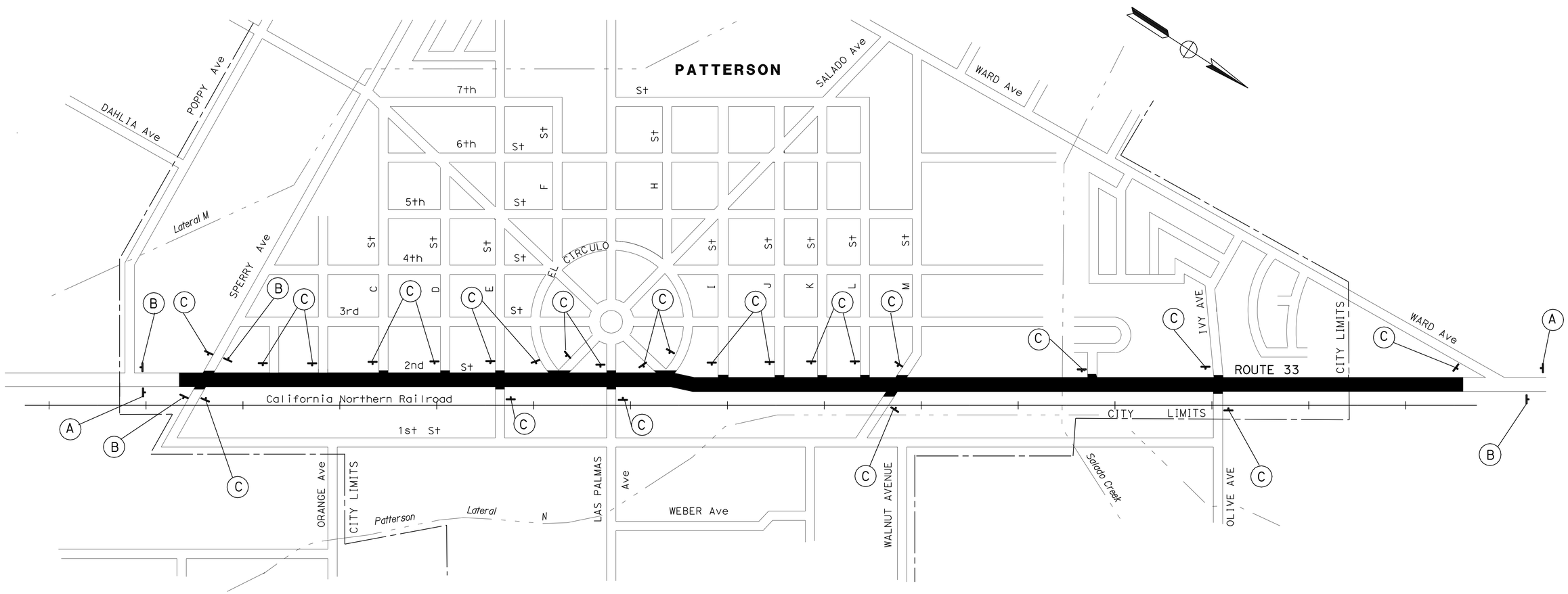

LOCATION 2

CONSTRUCTION AREA SIGNS

THIS PLAN ACCURATE FOR CONSTRUCTION AREA SIGN WORK ONLY.

NO SCALE

CS-2

STATE OF CALIFORNIA - DEPARTMENT OF TRANSPORTATION
Caltrans®
TRAFFIC DESIGN

FUNCTIONAL SUPERVISOR: HASSAN MAREI
CALCULATED-DESIGNED BY: QUAN TRINH
CHECKED BY: CECILE NGUYEN
REVISED BY: QT
DATE REVISED: 12/31/08

LAST REVISION 00-00-00
DATE PLOTTED => 09-JUN-2009
TIME PLOTTED => 14:06

Dist	COUNTY	ROUTE	POST MILES TOTAL PROJECT	SHEET No.	TOTAL SHEETS
10	Sta	33	0.5/1.5, 12.6/14.5	8	21

REGISTERED CIVIL ENGINEER 03-16-09 DATE

5-11-09
PLANS APPROVAL DATE

REGISTERED PROFESSIONAL ENGINEER Hassan Marei No. 35068 Exp.9/30/09 CIVIL STATE OF CALIFORNIA

THE STATE OF CALIFORNIA OR ITS OFFICERS OR AGENTS SHALL NOT BE RESPONSIBLE FOR THE ACCURACY OR COMPLETENESS OF SCANNED COPIES OF THIS PLAN SHEET.

REMOVE PAVEMENT DELINEATION ITEMS

LOCATION	REMOVE YELLOW THERMOPLASTIC TRAFFIC STRIPE	REMOVE THERMOPLASTIC TRAFFIC STRIPE	REMOVE YELLOW THERMOPLASTIC PAVEMENT MARKING	REMOVE THERMOPLASTIC PAVEMENT MARKING							REMOVE PAVEMENT MARKER
				LIMIT LINE	STOP	SIGNAL	AHEAD	TYPE III (L) ARROW	TYPE I ARROW	TYPE VI ARROW	
	LF	LF	SQFT	SQFT							EA
LOCATION 1	11,366	5862	741	254	110			714	25		755
LOCATION 2	19,000	14,060		821	110	128	124	294	24	84	2062
SUBTOTAL	30,366	19,922	741	1075	220	128	124	1008	49	84	2817
TOTAL	30,366	19,922	741	2688							2817

PAVEMENT DELINEATION ITEMS

LOCATION	4" THERMOPLASTIC TRAFFIC STRIPE	THERMOPLASTIC TRAFFIC STRIPE (SPRAYABLE)							THERMOPLASTIC PAVEMENT MARKING								PAVEMENT MARKER (RETROREFLECTIVE)		
		4" WHITE				4" YELLOW	8" WHITE		CROSS WALK	LIMIT LINE	STOP	SIGNAL	AHEAD	TYPE III (L) ARROW	TYPE I ARROW	TYPE VI ARROW	TWO-WAY YELLOW	ONE-WAY YELLOW	ONE-WAY CLEAR
	Det 27B	Det 9	Det 19	Det 27C	Det 38A	Det 22	Det 38	Det 37B									TYPE D	TYPE H	TYPE G
	LF	LF							SQFT								EA		
LOCATION 1	3850		4375	2948			1006		853	254	110			714	75		503	197	55
LOCATION 2	13,900	10,562		9500	800	145	655	1080		1098	154	128	124	294	31	84	1322		740
SUBTOTAL	17,750	10,562	4375	12,448	800	145	1661	1080	853	1352	264	128	124	1008	106	84	1825	197	795
TOTAL	17,750	31,071							3919								2817		

PAVEMENT DELINEATION QUANTITIES

PDQ-1

REVISED BY	DATE REVISED	QUAN TRINH	CECILE NGUYEN	RS	03/10/09
CALCULATED-DESIGNED BY	CHECKED BY	FUNCTIONAL SUPERVISOR	HASSAN MAREI		

STATE OF CALIFORNIA - DEPARTMENT OF TRANSPORTATION
Caltrans
TRAFFIC DESIGN

LAST REVISION 00-00-00 | DATE PLOTTED => 09-JUN-2009 | TIME PLOTTED => 14:06

Dist	COUNTY	ROUTE	POST MILES TOTAL PROJECT	SHEET No.	TOTAL SHEETS
10	Sta	33	0.5/1.5, 12.6/14.5	9	21

REGISTERED CIVIL ENGINEER DATE 03-16-09

5-11-09
PLANS APPROVAL DATE

REGISTERED PROFESSIONAL ENGINEER JOSE A. HUERTA No. 52380 Exp. 12/31/10 CIVIL STATE OF CALIFORNIA

THE STATE OF CALIFORNIA OR ITS OFFICERS OR AGENTS SHALL NOT BE RESPONSIBLE FOR THE ACCURACY OR COMPLETENESS OF SCANNED COPIES OF THIS PLAN SHEET.

COLD PLANE AC PAVEMENT

LOCATION	PM/PM	L (N) F†	W (N) F†	X (N) F†	HMA (TYPE A) TON	TACK COAT TON
LOCATION 2 (NORTHBOUND)	12.550/12.583	172	10	11	32.3	0.050
	12.601/12.610	45	9	11	7.6	0.012
	12.613/12.625	62	9	11	10.5	0.016
	12.627/12.631	19	9	11	3.2	0.005
	12.636/12.644	44	9	11	7.4	0.012
	12.694/12.701	35	10	12	6.6	0.010
	12.716/12.722	31	10	12	5.8	0.009
	12.725/12.732	36	10	12	6.8	0.011
	12.734/12.739	28	10	12	5.3	0.008
	12.740/12.746	31	4	12	2.3	0.004
	12.746/12.771	134	4	19	10.1	0.017
	12.754/12.771	91	4	12	6.8	0.011
	12.773/12.782	49	4	19	3.7	0.006
	12.773/12.780	36	4	12	2.7	0.005
	12.789/12.797	40	8	12	14.4	0.022
	12.960/12.972	64	12	0	8.0	0.013
	12.980/13.000	107	4	4	23.8	0.037
	13.183/13.207	127	10	13	14.0	0.022
	13.208/13.226	93	8	10	20.0	0.031
	13.234/13.252	97	11	18	5.2	0.008
	13.258/13.267	46	6	12	5.5	0.009
	13.270/13.281	59	5	12	17.6	0.027
	13.483/13.503	78	4	0	1.4	0.002
	13.356/13.357	6	12	0	5.3	0.009
	13.485/13.496	56	5	18	8.0	0.013
	13.483/13.503	107	4	13	11.3	0.019
	13.511/13.540	151	4	12	2.4	0.004
	13.513/13.519	32	4	19	4.4	0.007
	13.528/13.539	59	4	19	4.4	0.007
	13.544/13.564	105	4	19	7.9	0.013
	13.545/13.560	80	4	12	6.0	0.010
	13.570/13.575	26	4	19	2.0	0.003
	13.685/13.701	86	5	19	8.1	0.013
	13.687/13.688	4	4	12	0.3	0.001
	13.695/13.699	22	5	25	2.1	0.003
	13.698/13.700	10	5	11	0.9	0.002
	13.748/13.752	22	4	13	1.7	0.003
	13.769/13.787	94	4	2	7.1	0.012
	13.800/13.805	26	4	1	2.0	0.003
	13.957/13.965	43	4	3	3.2	0.005
	13.987/13.996	45	3	3	2.5	0.004
	13.999/14.010	56	6	0	6.3	0.010
	14.016/14.019	16	4	1	1.2	0.002
	14.071/14.074	18	3	8	1.0	0.002
	14.113/14.120	36	4	7	2.7	0.005
	14.136/14.143	35	3	8	2.0	0.003
	14.159/14.174	81	3	8	4.6	0.008
	14.252/14.254	10	4	7	0.8	0.001
	14.273/14.276	14	4	8	1.1	0.002
	14.352/14.361	48	4	7	3.6	0.006
	14.363/14.371	44	4	7	3.3	0.006
	14.376/14.378	13	4	7	1.0	0.002
	14.379/14.383	22	4	7	1.7	0.003
	14.393/14.395	11	4	7	0.8	0.001
	14.467/14.473	30	4	7	2.3	0.004
	TOTAL				333.0 *	0.533*

(N) - NOT A SEPARATE PAY ITEM, FOR INFORMATION ONLY.
* - TOTAL INCLUDED IN SUMMARY OF QUANTITIES, ROADWAY ITEMS TABLE.

COLD PLANE AC PAVEMENT

LOCATION	PM/PM	L (N) F†	W (N) F†	X (N) F†	HMA (TYPE A) TON	TACK COAT TON
LOCATION 2 (SOUTHBOUND)	12.688/12.691	15	5	19	1.4	0.002
	12.694/12.701	35	9	13	5.9	0.009
	12.727/12.731	21	10	12	3.9	0.006
	12.731/12.738	38	4	12	2.9	0.005
	12.738/12.742	21	10	12	3.9	0.006
	12.767/12.793	138	9	13	23.3	0.036
	12.807/12.811	22	4	20	1.7	0.003
	12.817/12.885	357	4	20	26.8	0.045
	12.823/12.893	368	4	12	27.6	0.046
	12.899/12.928	152	4	12	11.4	0.019
	12.903/12.947	234	4	18	17.6	0.029
	12.904/12.906	8	12	0	1.8	0.003
	12.934/12.984	265	4	12	19.9	0.033
	12.952/12.963	60	4	18	4.5	0.008
	12.973/12.976	15	4	18	1.1	0.002
	12.992/13.010	97	4	12	7.3	0.012
	12.993/12.995	9	12	0	2.0	0.003
	12.997/13.002	25	4	18	1.9	0.003
	12.741/12.753	65	5	18	6.1	0.010
	12.505/12.509	21	4	12	1.6	0.003
	13.056/13.066	51	5	18	4.8	0.008
	13.064/13.067	8	12	0	1.8	0.003
	13.188/13.218	265	4	12	19.9	0.033
	13.210/13.215	60	4	18	4.5	0.008
	13.224/13.229	15	4	18	1.1	0.002
	13.255/13.272	97	4	12	7.3	0.012
	13.232/13.236	9	12	0	2.0	0.003
	13.244/13.254	25	4	18	1.9	0.003
	13.249/13.282	65	5	18	6.1	0.010
	13.255/13.363	21	4	12	1.6	0.003
	13.258/13.269	51	5	18	4.8	0.008
	13.267/13.323	17	20	0	6.4	0.010
	13.284/13.293	159	5	22	15.0	0.024
	13.295/13.329	28	4	11	2.1	0.004
	13.296/13.314	94	4	7	7.1	0.012
	13.336/13.400	337	4	12	25.3	0.042
	13.341/13.412	376	4	8	28.2	0.047
	13.367/13.371	19	5	18	1.8	0.003
	13.380/13.395	80	6	19	9.0	0.014
	13.410/13.459	257	4	12	19.3	0.032
	13.411/13.445	180	5	19	16.9	0.028
	13.424/14.426	8	4	8	0.6	0.001
	13.429/13.435	32	4	8	2.4	0.004
	13.738/13.747	48	4	6	3.6	0.006
	13.738/13.741	17	4	12	1.3	0.002
	13.746/13.748	9	4	10	0.7	0.001
	13.837/13.854	91	5	6	8.5	0.014
	TOTAL				376.6 *	0.621*

COLD PLANE AC PAVEMENT

LOCATION	PM/PM	L (N) F†	W (N) F†	X (N) F†	HMA (TYPE A) TON	TACK COAT TON
LOCATION 1	NORTHBOUND					
	0.667/0.683	82	4	18.5	6.2	0.010
	0.659/0.661	12	4	14	0.9	0.002
	0.684/0.688	19	6	19	2.1	0.003
	0.851/0.867	86	6	13	9.7	0.016
	1.108/1.111	16	4	10	1.2	0.002
	1.164/1.169	26	8	9	3.9	0.006
	1.251/1.262	60	4	13	4.5	0.008
	SOUTHBOUND					
	0.483/0.487	21	6	15.5	2.4	0.004
	0.494/0.498	21	5	15	2.0	0.003
	0.605/0.609	20	7	11	2.6	0.004
	0.647/0.653	31	6	13	3.5	0.006
	0.765/0.767	13	6	22.5	1.5	0.002
	0.852/0.869	90	14	11	23.6	0.036
	1.070/1.088	93	3	5	5.2	0.009
	1.072/1.077	25	5	13	2.3	0.004
	1.130/1.134	23	10	0	4.3	0.007
	1.156/1.242	453	3	6	25.5	0.044
	1.316/1.336	103	4	14	7.7	0.013
	TOTAL				109.1 *	0.179*

SUMMARY OF QUANTITIES

Q-1

STATE OF CALIFORNIA - DEPARTMENT OF TRANSPORTATION
Caltrans® DESIGN

FUNCTIONAL SUPERVISOR: JOSE HUERTA
CALCULATED-DESIGNED BY: KAM LUANGRATH
CHECKED BY: PERCY MARAGOS
REVISED BY: RS
DATE REVISED: 03/10/09

LAST REVISION 00-00-00 | DATE PLOTTED => 09-JUN-2009 | TIME PLOTTED => 14:06

Dist	COUNTY	ROUTE	POST MILES TOTAL PROJECT	SHEET No.	TOTAL SHEETS
10	Sta	33	0.5/1.5, 12.6/14.5	10	21

REGISTERED CIVIL ENGINEER 03-16-09 DATE

5-11-09
PLANS APPROVAL DATE

REGISTERED PROFESSIONAL ENGINEER JOSE A. HUERTA No. 52380 Exp. 12/31/10 CIVIL STATE OF CALIFORNIA

THE STATE OF CALIFORNIA OR ITS OFFICERS OR AGENTS SHALL NOT BE RESPONSIBLE FOR THE ACCURACY OR COMPLETENESS OF SCANNED COPIES OF THIS PLAN SHEET.

ADJUST MANHOLE AND COVER TO GRADE

LOCATION	PM	SIDE	EA
1	0.49	R+	1
	0.49	R+	1
	0.58	℄	1
	0.68	℄	1
	0.76	℄	1
	0.95	R+	1
	1.13	L+	1
	1.13	R+	1
	1.13	L+	1
	1.16	℄	1
	1.20	R+	1
2	12.57	L+	1
	12.70	L+	1
	12.76	L+	1
	13.18	L+	1
	13.18	L+	1
	13.31	L+	1
	13.34	L+	1
	13.46	L+	1
	13.68	L+	1
	13.70	L+	1
	13.70	L+	1
TOTAL			22

ADJUST FRAME AND COVER TO GRADE

LOCATION	PM	SIDE	EA	TYPE
1	0.67	R+	1	MONITOR WELL
	0.68	R+	1	
	0.68	L+	1	
	0.68		1	
	0.70		1	
	0.99		1	
2	12.74	R+	1	MONITOR WELL
	13.17	R+	1	
	13.19	R+	1	WATER VALVE
	13.19	L+	1	MONITOR WELL
	13.19	L+	1	
	13.26	L+	1	
	13.70	R+	1	SURVEY WELL
TOTAL			13	

METAL BEAM GUARD RAILING ITEMS

LOCATION	PM	SIDE	GUARD RAIL LAYOUT (N)	REMOVE MBGR	TRANSITION RAILING (TYPE WB)	ALTERNATIVE IN-LINE TERMINAL SYSTEM
			TYPE	LF	EA	EA
2	13.94	R+	12A	45	1	1
	13.94	L+	12AA		1	1
	13.95	R+	12AA		1	1
	13.95	L+	12A	45	1	1
TOTAL				90	4	4

ROADWAY ITEMS

LOCATION	RUBBERIZED HOT MIX ASPHALT (GAP GRADED)	HOT MIX ASPHALT (TYPE B)	TACK COAT	IMPORTED MATERIAL (SHOULDER BACKING)	COLD PLANE AC PAVEMENT	SEAL RANDOM CRACKS
	TON	TON	TON	TON	SQYD	LNMI
LOCATION 1 - MAINLINE	3095	109.1	7.80	70	3315	3.0
LOCATION 2 - MAINLINE	8418	709.6	15.15	194	8440	6.3
PUBLIC ROADS	196		0.50	2	1950	
PRIVATE DRIVEWAYS	61		0.15	4	598	
TOTAL	11,770	818.7	23.60	270	14,303	9.3

SUMMARY OF QUANTITIES

Q-2

STATE OF CALIFORNIA - DEPARTMENT OF TRANSPORTATION
Caltrans DESIGN

FUNCTIONAL SUPERVISOR: JOSE HUERTA
CALCULATED-DESIGNED BY: KAM LUANGRATH
CHECKED BY: PERCY MARAGOS
REVISED BY: RS
DATE REVISED: 03/10/09

LAST REVISION 00-00-00
DATE PLOTTED => 09-JUN-2009
TIME PLOTTED => 14:06

Dist	COUNTY	ROUTE	POST MILES TOTAL PROJECT	SHEET No.	TOTAL SHEETS
10	Sta	33	0.5/1.5, 12.6/14.5	11	21

REGISTERED ELECTRICAL ENGINEER 03-16-09 DATE

5-11-09
PLANS APPROVAL DATE

REGISTERED PROFESSIONAL ENGINEER JASPAL SINGH No. 16657 Exp. 6/30/10 ELECTRICAL STATE OF CALIFORNIA

THE STATE OF CALIFORNIA OR ITS OFFICERS OR AGENTS SHALL NOT BE RESPONSIBLE FOR THE ACCURACY OR COMPLETENESS OF ELECTRONIC COPIES OF THIS PLAN SHEET.

FOR COMPLETE RIGHT OF WAY DATA, SEE RIGHT OF WAY RECORD MAPS AT DISTRICT OFFICE.

NOTES: (FOR SHEET E-1 THROUGH E-3)

1. Exist 120/240 V 1Ø, 3-WIRE, TYPE III-AF SERVICE EQUIPMENT ENCLOSURE.
2. Exist MODEL 170 CONTROLLER ASSEMBLY WITH MODEL 332 CABINET.
3. AB Exist LOOP DETECTORS AND INSTALL LOOP DETECTORS AS SHOWN.
4. DETAILS OF Exist TRAFFIC SIGNAL NOT SHOWN.

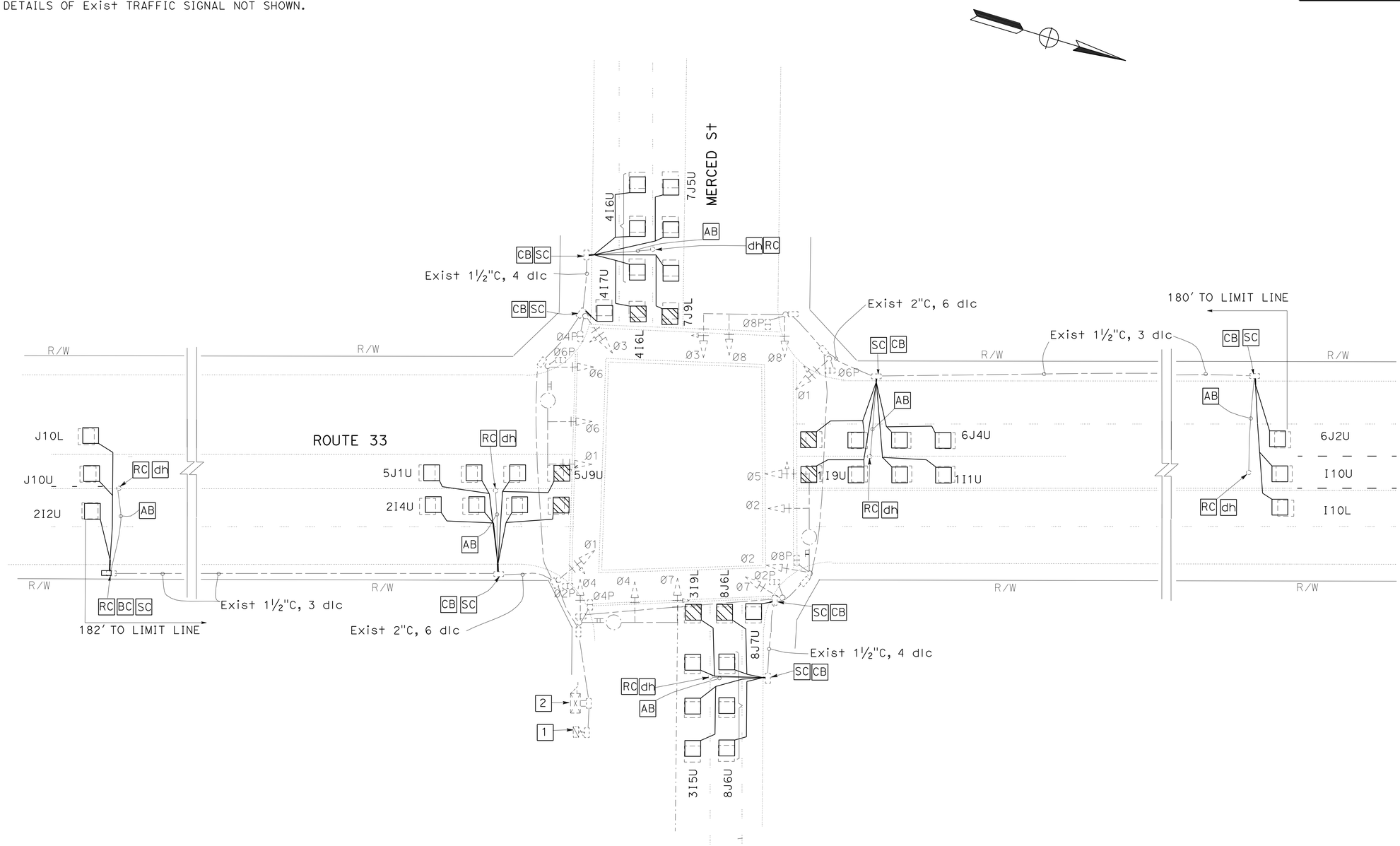

THIS PLAN IS ACCURATE FOR ELECTRICAL WORK ONLY.

NO SCALE

MODIFY SIGNAL

E-1

REVISED BY	DATE REVISED

CALCULATED-DESIGNED BY: JASPAL SINGH
CHECKED BY: JORGE RAMIREZ
FUNCTIONAL SUPERVISOR: ALI BAKHDOUD

STATE OF CALIFORNIA - DEPARTMENT OF TRANSPORTATION
Caltrans
ELECTRICAL DESIGN

LAST REVISION 03-13-09
DATE PLOTTED => 09-JUN-2009
TIME PLOTTED => 14:06

FOR COMPLETE RIGHT OF WAY DATA, SEE RIGHT OF WAY RECORD MAPS AT DISTRICT OFFICE.

Dist	COUNTY	ROUTE	POST MILES TOTAL PROJECT	SHEET No.	TOTAL SHEETS
10	Sta	33	0.5/1.5, 12.6/14.5	12	21

REGISTERED ELECTRICAL ENGINEER 03-16-09 DATE

5-11-09
PLANS APPROVAL DATE

REGISTERED PROFESSIONAL ENGINEER
JASPAL SINGH
No. 16657
Exp. 6/30/10
ELECTRICAL
STATE OF CALIFORNIA

THE STATE OF CALIFORNIA OR ITS OFFICERS OR AGENTS SHALL NOT BE RESPONSIBLE FOR THE ACCURACY OR COMPLETENESS OF ELECTRONIC COPIES OF THIS PLAN SHEET.

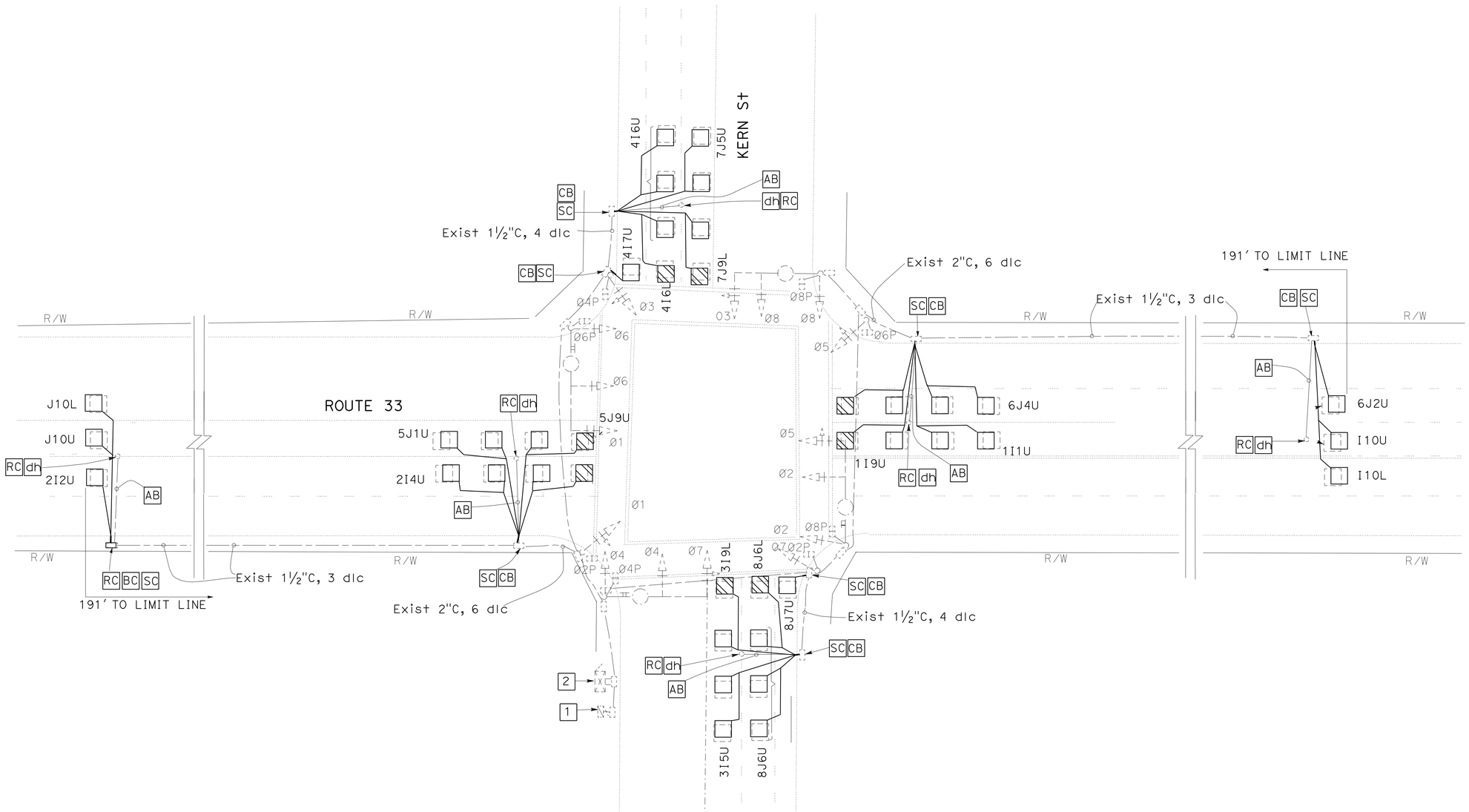

THIS PLAN IS ACCURATE FOR ELECTRICAL WORK ONLY.

MODIFY SIGNAL

NO SCALE

E-2

STATE OF CALIFORNIA - DEPARTMENT OF TRANSPORTATION
Caltrans
ELECTRICAL DESIGN

FUNCTIONAL SUPERVISOR: ALI BAKHDOUD
CALCULATED-DESIGNED BY: JASPAL SINGH
CHECKED BY: JORGE RAMIREZ
REVISED BY: RS
DATE REVISED: 3/10//09

LAST REVISION 03-13-09 | DATE PLOTTED => 09-JUN-2009 | TIME PLOTTED => 14:06

FOR COMPLETE RIGHT OF WAY DATA, SEE RIGHT OF WAY RECORD MAPS AT DISTRICT OFFICE.

Dist	COUNTY	ROUTE	POST MILES TOTAL PROJECT	SHEET No.	TOTAL SHEETS
10	Sta	33	0.5/1.5, 12.6/14.5	13	21

03-16-09
REGISTERED ELECTRICAL ENGINEER DATE

5-11-09
PLANS APPROVAL DATE

REGISTERED PROFESSIONAL ENGINEER
JASPAL SINGH
No. 16657
Exp. 6/30/10
ELECTRICAL
STATE OF CALIFORNIA

THE STATE OF CALIFORNIA OR ITS OFFICERS OR AGENTS SHALL NOT BE RESPONSIBLE FOR THE ACCURACY OR COMPLETENESS OF ELECTRONIC COPIES OF THIS PLAN SHEET.

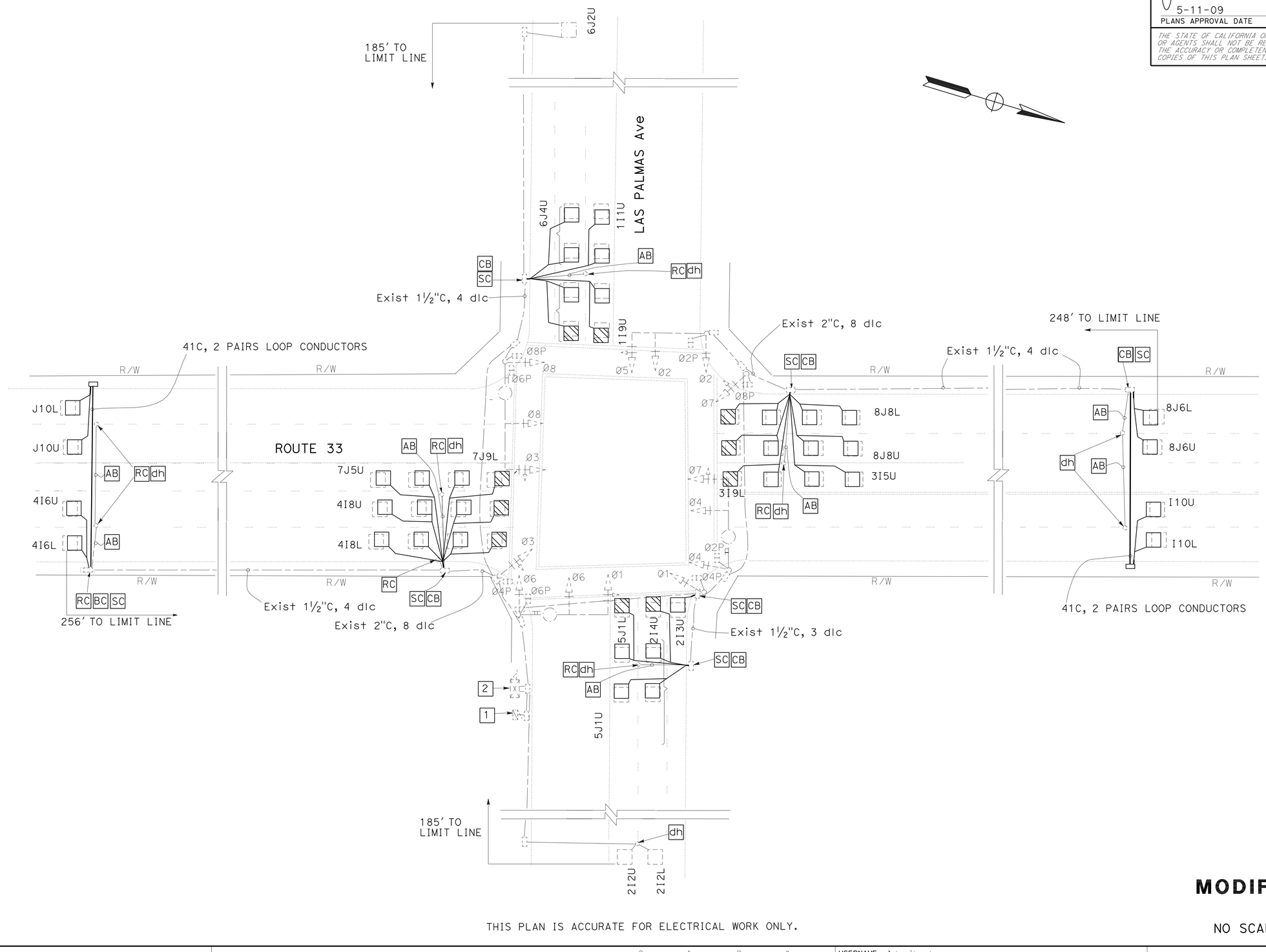

THIS PLAN IS ACCURATE FOR ELECTRICAL WORK ONLY.

MODIFY SIGNAL

NO SCALE

E-3

STATE OF CALIFORNIA - DEPARTMENT OF TRANSPORTATION
Caltrans
ELECTRICAL DESIGN

FUNCTIONAL SUPERVISOR: ALI BAKHDOUD
CALCULATED-DESIGNED BY: JASPAL SINGH
CHECKED BY: JORGE RAMIREZ
REVISED BY: RS
DATE REVISED: 3/10//09

LAST REVISION 03-13-09
DATE PLOTTED => 09-JUN-2009
TIME PLOTTED => 14:07

BORDER LAST REVISED 4/11/2008
RELATIVE BORDER SCALE IS IN INCHES 0 1 2 3
USERNAME => trmikesl
DGN FILE => a0g770ua003.dgn
CU 06391
EA 0G7701

DIST	COUNTY	ROUTE	POST MILES TOTAL PROJECT	SHEET NO.	TOTAL SHEETS
10	Sta	33	0.5/1.5, 12.6/14.5	14	21

Randell D. Hiatt
REGISTERED CIVIL ENGINEER

June 6, 2008
PLANS APPROVAL DATE

REGISTERED PROFESSIONAL ENGINEER
Randell D. Hiatt
No. C50200
Exp. 6-30-09
CIVIL
STATE OF CALIFORNIA

The State of California or its officers or agents shall not be responsible for the accuracy or completeness of electronic copies of this plan sheet.

To accompany plans dated 5-11-09

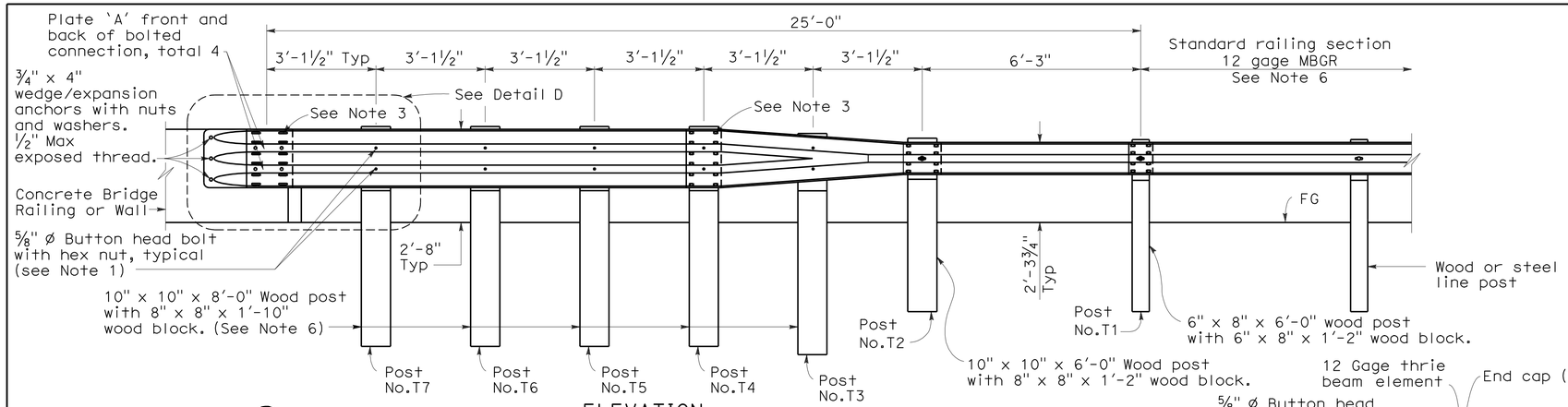

ELEVATION

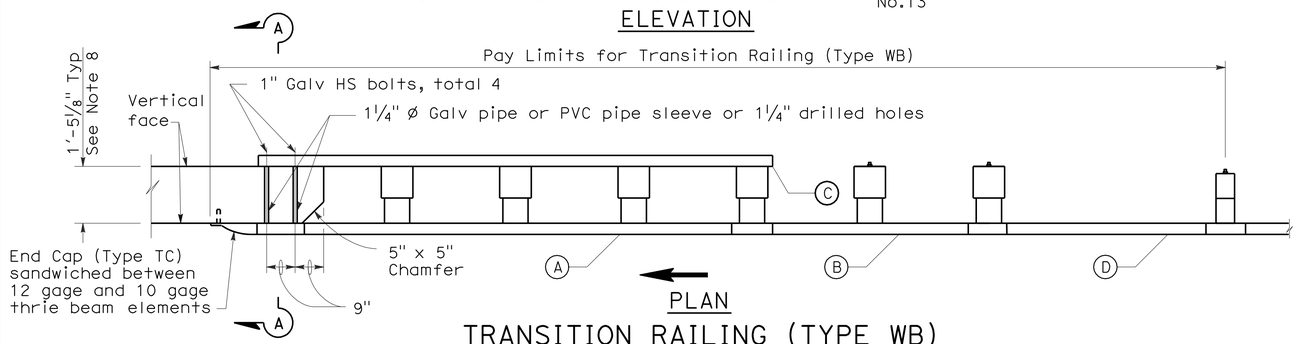

PLAN

TRANSITION RAILING (TYPE WB)

(No Blockout Attachment)

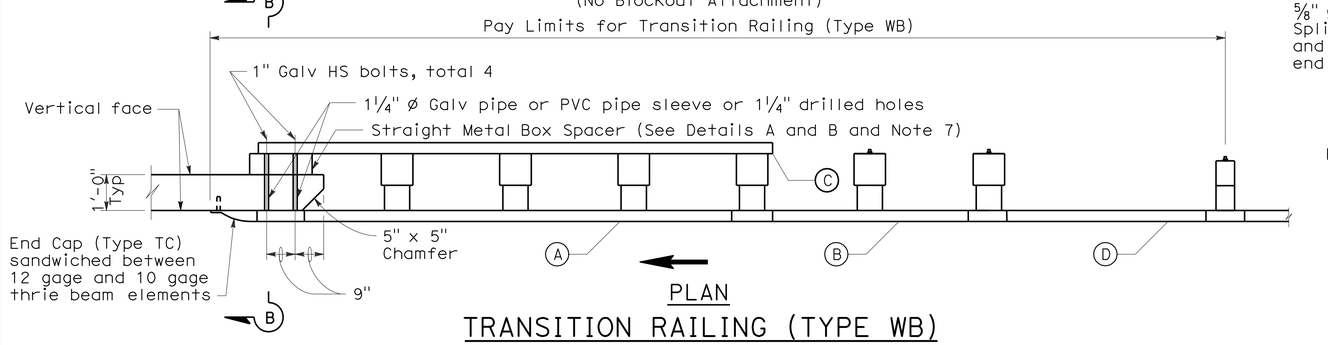

PLAN

TRANSITION RAILING (TYPE WB)

(Blockout Attachment)

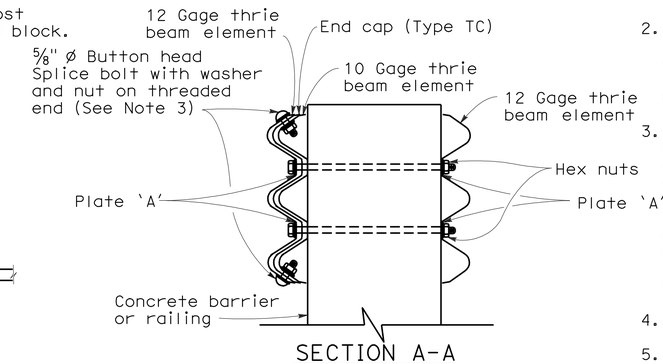

SECTION A-A

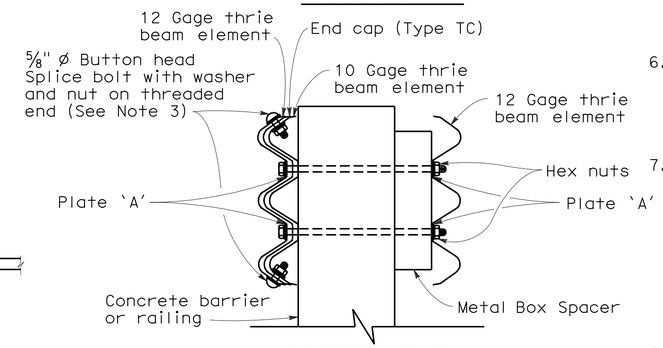

SECTION B-B

NOTES:

1. Use ⅝" Ø Button head bolts and hex nuts for connections to posts. No washer on rail face for bolted connections to post.
2. The nested rail elements, end cap, and 'W' beam to thrie beam element may be spliced together prior to bolting the elements to the wood post and concrete barrier or railing.
3. Exterior splice bolt holes for rail element splices at Post No.T4 and the connection to the concrete barrier or railing shall be the standard 29/32" x 1⅛" slot size. Interior splice bolt holes at these locations may be increased up to 1¼" Ø. Only the top 2 and the bottom 2 splice bolts with washers and nuts are required for rail splices at Post No.T4 and the connection to the concrete barrier or railing.
4. Direction of adjacent traffic indicated by →.
5. The top elevation of Post Nos.T2 through T7 shall not project more than 1" above the top elevation of the rail element.
6. Typically, the railing connected to Transition Railing (Type WB) will be either standard railing section of metal beam guard railing or an approved Caltrans end treatment attached to Post No.T1.
7. The depth of the metal box spacer varies from the 5⅛" to 1½" and is dependent on the width of the concrete railing or wall. The combined dimension for the depth of the metal box spacer plus the width of railing or wall is typically 17⅛". Where the space between the backside of the concrete railing or wall and the rear thrie beam element is less than 1½", metal plates similar to Plate 'A' are to be used as spacers.
8. Where the width of the concrete railing or wall is greater than 17⅛", wood blocks are to be used to fill the space created between the backside of Posts No.4 through No.7 and the rear thrie beam element. These wood blocks shall be 8" in width and 1'-2" in length. The dimension between the front thrie beam element and the rear thrie beam element is to match the width of the concrete railing or wall.

LEGEND

(A) Nested thrie beam elements (one 12 gage element nested over one 10 gage element).

(B) One 10 gage "W" beam to thrie beam element.

(C) One 12 gage thrie beam element.

(D) One 10 gage "W" beam rail element (7'-3½" length)

10 gage = 0.135" thick

12 gage = 0.108" thick

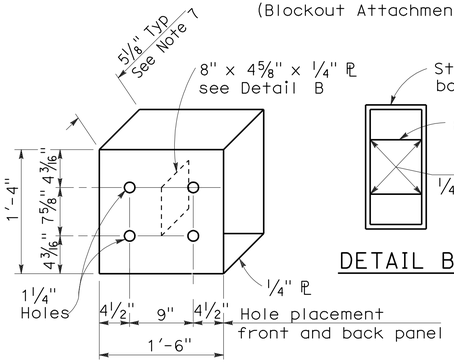

DETAIL A

STRAIGHT METAL BOX SPACER

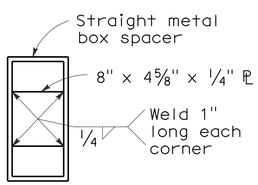

DETAIL B

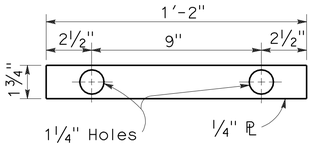

DETAIL C

PLATE 'A'

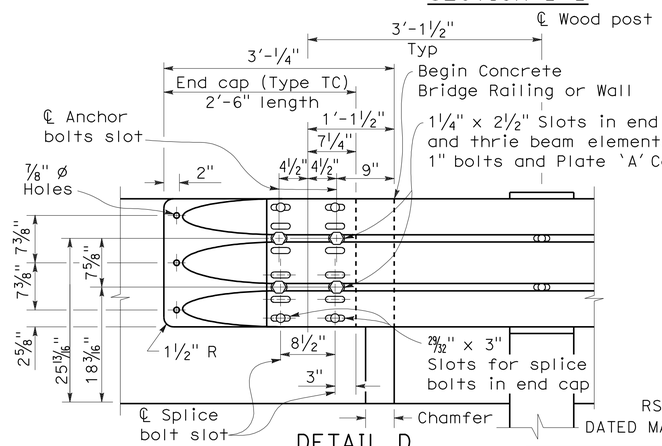

DETAIL D

STATE OF CALIFORNIA
DEPARTMENT OF TRANSPORTATION

METAL BEAM GUARD RAILING TRANSITION RAILING (TYPE WB)

NO SCALE

RSP A77J4 DATED JUNE 6, 2008 SUPERSEDES STANDARD PLAN A77J4 DATED MAY 1, 2006 - PAGE 75 OF THE STANDARD PLANS BOOK DATED MAY 2006.

REVISED STANDARD PLAN RSP A77J4

2006 REVISED STANDARD PLAN RSP A77J4

4-21-08

DIST	COUNTY	ROUTE	POST MILES TOTAL PROJECT	SHEET NO.	TOTAL SHEETS
10	Sta	33	0.5/1.5, 12.6/14.5	15	21

Randell D. Hiatt
REGISTERED CIVIL ENGINEER

June 6, 2008
PLANS APPROVAL DATE

REGISTERED PROFESSIONAL ENGINEER
Randell D. Hiatt
No. C50200
Exp. 6-30-09
CIVIL
STATE OF CALIFORNIA

The State of California or its officers or agents shall not be responsible for the accuracy or completeness of electronic copies of this plan sheet.

To accompany plans dated 5-11-09

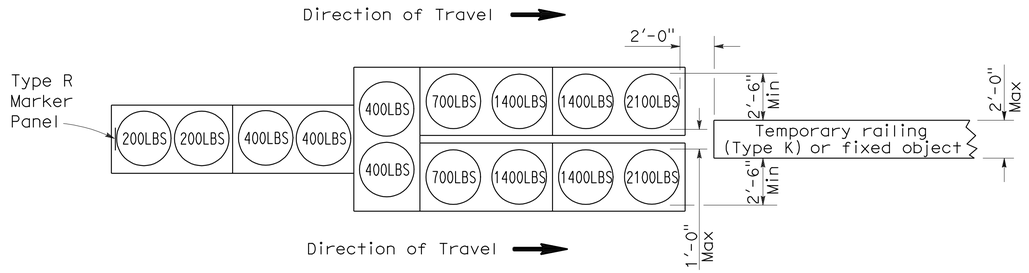

ARRAY 'TU14'

Approach speed 45 mph or more

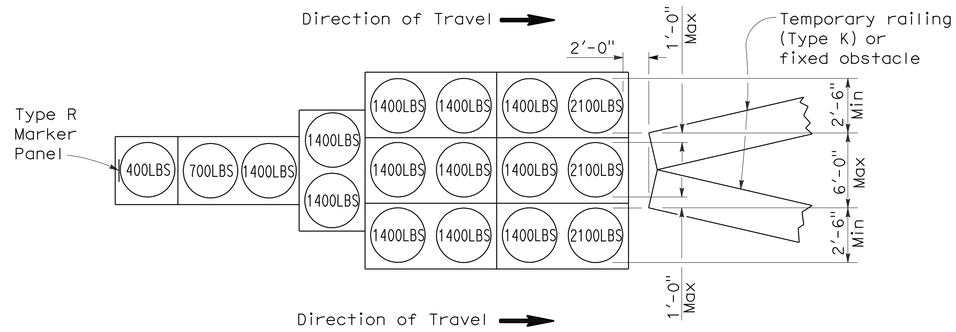

ARRAY 'TU17'

Approach speed less than 45 mph

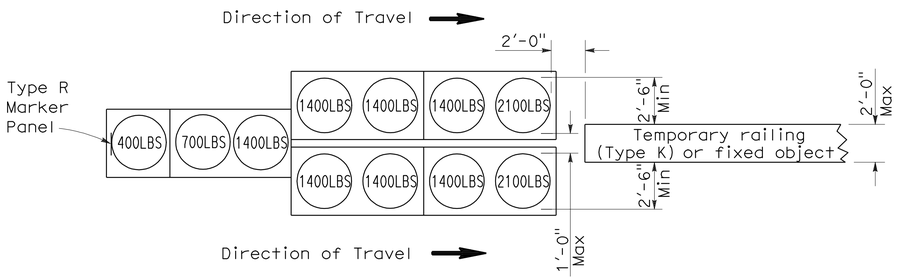

ARRAY 'TU11'

Approach speed less than 45 mph

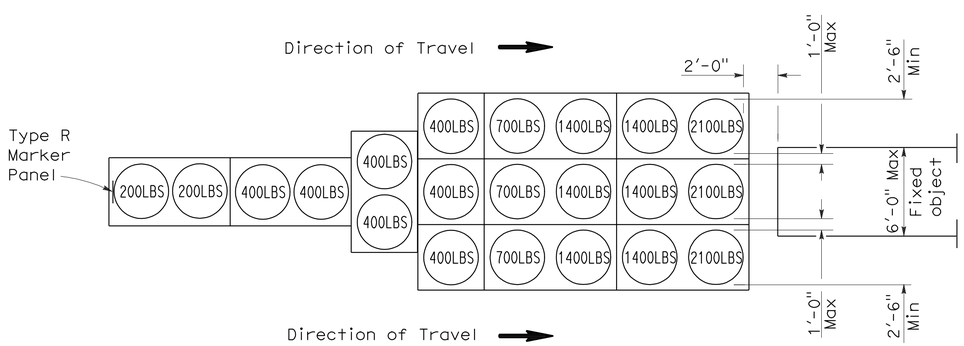

ARRAY 'TU21'

Approach speed 45 mph or more

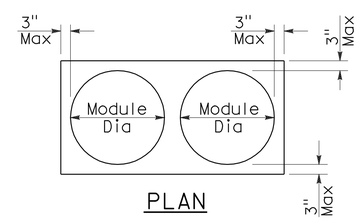

PLAN

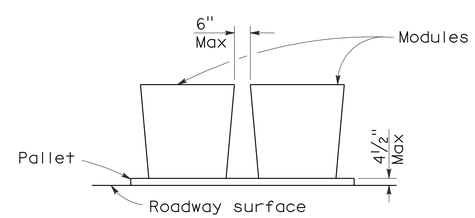

ELEVATION

CRASH CUSHION PALLET DETAIL

See Note 7

NOTES:

1. (XXX) Indicates sand filled module location and weight of sand in pounds for each module. Module spacing is based on the greater diameter of the module.
2. All sand weights are nominal.
3. Temporary crash cushion arrays shall not encroach on the traveled way.
4. Place the top of Type R marker panel 1" below the module lid.
5. Refer to Standard Plan A73B for marker details.
6. Approach speeds indicated conform to NCHRP 350 Report criteria.
7. Use of pallets is optional.

STATE OF CALIFORNIA
DEPARTMENT OF TRANSPORTATION

TEMPORARY CRASH CUSHION, SAND FILLED (UNIDIRECTIONAL)

NO SCALE

RSP T1A DATED JUNE 6, 2008 SUPERSEDES STANDARD PLAN T1A
DATED MAY 1, 2006 - PAGE 211 OF THE STANDARD PLANS BOOK DATED MAY 2006.

REVISED STANDARD PLAN RSP T1A

2006 REVISED STANDARD PLAN RSP T1A

DIST	COUNTY	ROUTE	POST MILES TOTAL PROJECT	SHEET NO.	TOTAL SHEETS
10	Sta	33	0.5/1.5, 12.6/14.5	16	21

Randell D. Hiatt
REGISTERED CIVIL ENGINEER

June 6, 2008
PLANS APPROVAL DATE

REGISTERED PROFESSIONAL ENGINEER
Randell D. Hiatt
No. C50200
Exp. 6-30-09
CIVIL
STATE OF CALIFORNIA

The State of California or its officers or agents shall not be responsible for the accuracy or completeness of electronic copies of this plan sheet.

To accompany plans dated 5-11-09

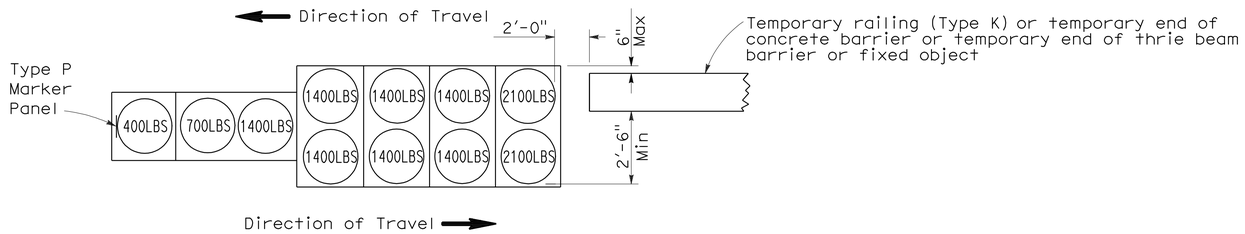

ARRAY 'TB11'

Approach speed less than 45 mph

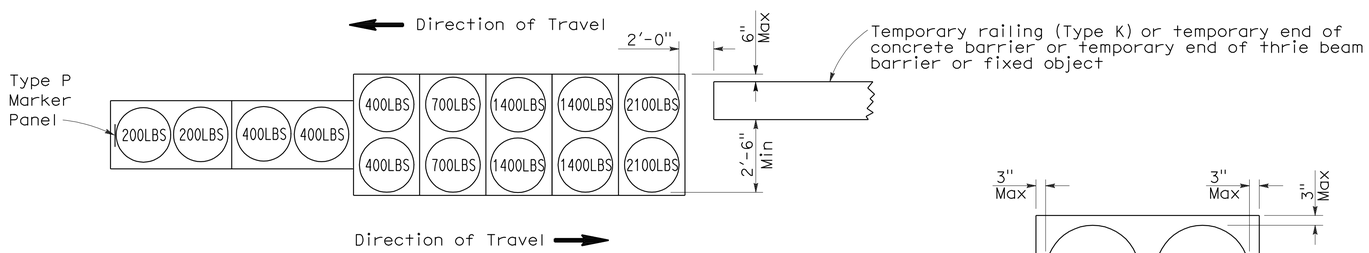

ARRAY 'TB14'

Approach speed 45 mph or more

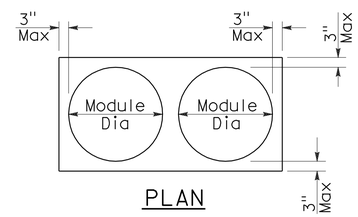

PLAN

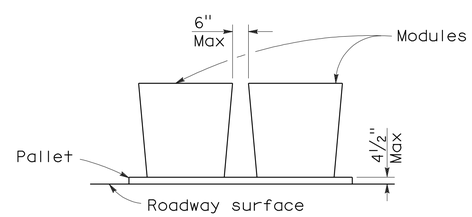

ELEVATION

CRASH CUSHION PALLET DETAIL

See Note 7

NOTES:

1. (XXX) Indicates sand filled module location and weight of sand in pounds for each module. Module spacing is based on the greater diameter of the module.
2. All sand weights are nominal.
3. Temporary crash cushion arrays shall not encroach on the traveled way.
4. Place the Type P marker panel so that the bottom of the panel rests upon the pallet.
5. Refer to Standard Plan A73B for marker details.
6. Approach speeds indicated conform to NCHRP 350 Report criteria.
7. Use of pallets is optional.

STATE OF CALIFORNIA
DEPARTMENT OF TRANSPORTATION

TEMPORARY CRASH CUSHION, SAND FILLED (BIDIRECTIONAL)

NO SCALE

RSP T1B DATED JUNE 6, 2008 SUPERSEDES STANDARD PLAN T1B
DATED MAY 1, 2006 - PAGE 212 OF THE STANDARD PLANS BOOK DATED MAY 2006.

REVISED STANDARD PLAN RSP T1B

2006 REVISED STANDARD PLAN RSP T1B

5-15-08

DIST	COUNTY	ROUTE	POST MILES TOTAL PROJECT	SHEET NO.	TOTAL SHEETS
10	Sta	33	0.5/1.5, 12.6/14.5	17	21

Randell D. Hiatt
REGISTERED CIVIL ENGINEER

June 6, 2008
PLANS APPROVAL DATE

REGISTERED PROFESSIONAL ENGINEER
Randell D. Hiatt
No. C50200
Exp. 6-30-09
CIVIL
STATE OF CALIFORNIA

The State of California or its officers or agents shall not be responsible for the accuracy or completeness of electronic copies of this plan sheet.

To accompany plans dated 5-11-09

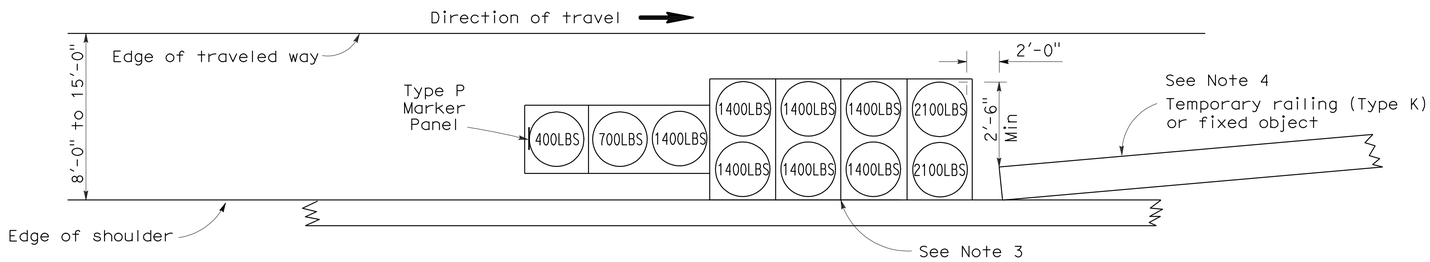

ARRAY 'TS11'

Approach speed less than 45 mph
See Note 9

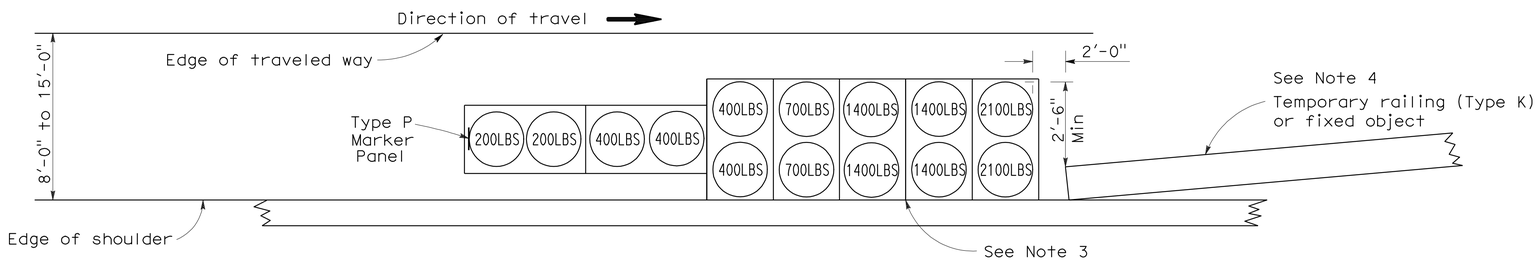

ARRAY 'TS14'

Approach speed 45 mph or more
See Note 9

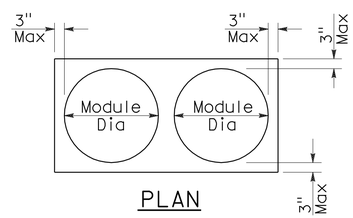

PLAN

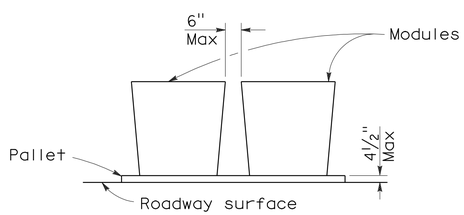

ELEVATION

CRASH CUSHION PALLET DETAIL

See Note 11

NOTES:

1. (XXX) Indicates sand filled module location and weight of sand in pounds for each module. Module spacing is based on the greater diameter of the module.
2. All sand weights are nominal.
3. The temporary crash cushion arrays shown on this plan shall be used only in locations where there will be traffic on one side of the temporary crash cushion array.
4. If the fixed object or approach end of the temporary railing is less than 15'-0" from the edge of traveled way, a temporary crash cushion is required in a construction or work zone.
5. Temporary crash cushion arrays shall not encroach on the traveled way.
6. Arrays for median shoulders shall conform to details shown on this plan for outside shoulders.
7. Place the Type P marker panel so that the bottom of the panel rests upon the pallet and faces traffic.
8. Refer to Standard Plan A73B for marker details.
9. For shoulder widths less than 8'-0", appropriate approved crash cushion protection, other than sand filled modules, shall be provided at fixed objects and at approach ends of temporary railing. The specific type of crash cushion shall be as shown on the project plans or as specified in the Special Provisions, or if not shown on the project plans or specified in the Special Provisions, shall be as approved by the Engineer.
10. Approach speeds indicated conform to NCHRP 350 Report criteria.
11. Use of pallets is optional.

STATE OF CALIFORNIA
DEPARTMENT OF TRANSPORTATION

TEMPORARY CRASH CUSHION, SAND FILLED (SHOULDER INSTALLATIONS)

NO SCALE

RSP T2 DATED JUNE 6, 2008 SUPERSEDES STANDARD PLAN T2
DATED MAY 1, 2006 - PAGE 213 OF THE STANDARD PLANS BOOK DATED MAY 2006.

REVISED STANDARD PLAN RSP T2

2006 REVISED STANDARD PLAN RSP T2

5-15-08

DIST	COUNTY	ROUTE	POST MILES TOTAL PROJECT	SHEET NO.	TOTAL SHEETS
10	Sta	33	0.5/1.5, 12.6/14.5	18	21

REGISTERED ELECTRICAL ENGINEER

October 5, 2007
PLANS APPROVAL DATE

REGISTERED PROFESSIONAL ENGINEER Jeffery G. McRae No. E14512 Exp. 6-30-08 ELECTRICAL STATE OF CALIFORNIA

The State of California or its officers or agents shall not be responsible for the accuracy or completeness of electronic copies of this plan sheet.

To accompany plans dated 5-11-09

2006 REVISED STANDARD PLAN RSP ES-1A

ELECTROLIERS

STANDARD TYPES
15, 15D
15 STRUCTURE
21, 21D STRUCTURE
30
31
32
35
36-20A

High mast light pole

Double Arm lighting standard

Existing electrolier

Electrolier foundation (Future installation)

NOTES:

1. Luminaires shall be 310 W HPS when installed on Type 21, 21D, 30, 31, 32, 35 and 36-20A Standards, unless otherwise specified. Luminaires shall be 200 W HPS when installed on other type standards or poles, unless otherwise specified.
2. Luminaires shall be the cutoff type, ANSI Type III medium cutoff lighting distribution, unless otherwise specified.
3. Variations noted adjacent to symbol on project plans.

Electrolier (see project notes or project plans)

Luminaire on wood pole

STANDARD NOTES:

- AB — Abandon. If applied to conduit, remove conductors.
- BC — Install pull box in existing conduit run.
- BP — Pedestrian barricade, type as indicated on plan.
- CB — Install conduit into existing pull box.
- CC — Connect new and existing conduit. Remove existing conductors and install conductors as indicated.
- CF — Conduit to remain for future use. Remove conductors. Install pull wire or rope.
- DH — Detector handhole.
- FA — Foundation to be abandoned.
- IS — Install sign on signal mast arm.
- NS — No slip base on standard.
- PEC — Photoelectric control.
- PEU — Photoelectric unit.
- RC — Equipment or material to be removed and become the property of the Contractor.
- RE — Remove electrolier, fuses and ballast. Tape ends of conductors.
- RL — Relocate equipment.
- RR — Remove and reuse equipment.
- RS — Remove and salvage equipment.
- SC — Splice new to existing conductors.
- SD — Service disconnect.
- SF — Standard to remain for future use. Remove luminaire, pole conductors, fuses and ballast.
- TSP — Telephone service point.

ABBREVIATIONS AND EQUIPMENT DESIGNATIONS

PROPOSED	EXISTING	
BBS	bbs	Battery backup system
BC	bc	Bolt circle
C	C	Conduit
CCTV	cctv	Closed circuit television
CKT	ckt	Circuit
CMS	cms	Changeable message sign
DLC	dlc	Loop detector lead-in cable
EMS	ems	Extinguishable message sign
EVC	evc	Emergency vehicle cable
EVD	evd	Emergency vehicle detector
FB	fb	Flashing beacon
FBCA	fbca	Flashing beacon control assembly
FBS	fbs	Flashing beacon with slip base
FO	fo	Fiber optic
G	G	Ground (Equipment Grounding Conductor)
GFCI	GFCI	Ground fault circuit interrupt
HAR	har	Highway advisory radio
HEX	hex	Hexagonal
HPS	hps	High pressure sodium
IISNS	iisns	Internally illuminated street name sign
ISL	isl	Induction sign lighting
LED	led	Light emitting diode
LMA	lma	Luminaire mast arm
LPS	lps	Low pressure sodium
LTG	ltg	Lighting
LUM	lum	Luminaire
MAT	mat	Mast arm mounting vehicle signal faces, top attachment
MAS	mas	Mast arm mounting vehicle signal faces, side attachment
MAS-4A	mas-4A	Mast arm mounting vehicle signal faces, side attachment - 4 signal section
MAS-4B	mas-4B	
MAS-4C	mas-4C	
MAS-5A	mas-5A	Mast arm mounting vehicle signal faces, side attachment - 5 signal section
MAS-5B	mas-5B	
MC	mc	Mercury contactor
M/M	m/m	Multiple to multiple transformer
MT	mt	Conduit with pull wire or rope only
MTG	mtg	Mounting
	mv	Mercury vapor lighting fixture
N	N	Neutral (Grounded Conductor)
NC	NC	Normally closed
NO	NO	Normally open
PB	pb	Pull box
PEC	pec	Photoelectric control (Type I, II, III, IV or V as shown)
PED	ped	Pedestrian
PEU	peu	Photoelectric unit
PPB	ppb	Pedestrian push button
RL		Relocated equipment
RM	rm	Ramp metering
SB	sb	Slip base
SIC	sic	Signal interconnect cable
SIG	sig	Signal
SMA	sma	Signal mast arm
SNS	sns	Street name sign
SP	sp	Service point
TDC	tdc	Telephone demarcation cabinet
TMS	tms	Traffic monitoring station
TOS	tos	Traffic Operations System
VEH	veh	Vehicle
XFMR	xfmr	Transformer
COMM	comm	Communication
RWIS	rwis	Roadway weather information system

SOFFIT AND WALL MOUNTED LUMINAIRES

Pendant, 70 W HPS unless otherwise specified.

Flush, 70 W HPS unless otherwise specified.

Wall surface, 70 W HPS unless otherwise specified.

Existing soffit or wall luminaire to remain unmodified.

Existing soffit or wall luminaire to be modified as specified.

NOTE:

Arrow indicates "street side" of luminaire.

STATE OF CALIFORNIA
DEPARTMENT OF TRANSPORTATION

ELECTRICAL SYSTEMS (SYMBOLS AND ABBREVIATIONS)

NO SCALE

RSP ES-1A DATED OCTOBER 5, 2007 SUPERSEDES STANDARD PLAN ES-1A DATED MAY 1, 2006 - PAGE 400 OF THE STANDARD PLANS BOOK DATED MAY 2006.

REVISED STANDARD PLAN RSP ES-1A

DIST	COUNTY	ROUTE	POST MILES TOTAL PROJECT	SHEET NO.	TOTAL SHEETS
10	Sta	33	0.5/1.5, 12.6/14.5	19	21

REGISTERED ELECTRICAL ENGINEER

October 5, 2007
PLANS APPROVAL DATE

REGISTERED PROFESSIONAL ENGINEER
Jeffery G. McRae
No. E14512
Exp. 6-30-08
ELECTRICAL
STATE OF CALIFORNIA

The State of California or its officers or agents shall not be responsible for the accuracy or completeness of electronic copies of this plan sheet.

To accompany plans dated 5-11-09

CONDUIT

PROPOSED	EXISTING	
		Lighting Conduit, unless otherwise indicated or noted
		Traffic signal conduit
C	c	Communication conduit
T	t	Telephone conduit
F	f	Fire alarm conduit
FO	fo	Fiber optic conduit
		Conduit termination (RSP ES-9A C)
R	r	Conduit riser in/on structure or service pole

SERVICE EQUIPMENT

PROPOSED	EXISTING	
OH	oh	Overhead lines
U	U	Wood pole "U" indicates utility owned
		Pole guy with anchor
		Utility transformer - ground mounted
III		Service equipment enclosure type
		Service equipment enclosure door indicates front of enclosure
T	t	Telephone demarcation cabinet

POLE-MOUNTED SERVICE DESIGNATION

Type of installation

TYPE H SERVICE - 28'-10" ← Pole height above grade

ILLUMINATED OVERHEAD SIGN

PROPOSED	EXISTING	
		Overhead sign - Single post
		Overhead sign - Two post
		Overhead sign - Mounted on structure
		Overhead sign with electrolier

SIGNAL EQUIPMENT

PROPOSED	EXISTING	
		Pedestrian signal face
		Pedestrian push button post
		Pedestrian barricade
		Vehicle signal face (with backplate, 3-Section: red, yellow and green)
		Vehicle signal face with angle visors
PV	PV	Modifications of basic symbols: "L" indicates all non-arrow sections louvered "LG" indicates louvered green section only "PV" indicates 12" programmed visibility sections "8" indicates all 8" sections (only when specified)
		Type 15TS and Vehicle signal face
		Vehicle signal face with red, yellow and green left arrow sections
		Vehicle signal face with red and yellow sections and up green arrow
		Vehicle signal face (5 Section) with red, yellow and green sections and yellow and green right arrows
		Type 1 Standard and attached vehicle signal faces
		Standard with signal mast arm only and attached vehicle signal faces and internally illuminated street name sign
		Type 33 Standard, Left-turn vehicle signal face and sign
		Standard with luminaire and signal mast arms and attached vehicle signal faces
		Cantilever flashing beacon Type 9 Frame, with a sign unless otherwise specified or indicated
		Type 15-FBS Standard with two vehicle signal face sections with lens, backplate and visor with a sign
R	Y	Flashing beacon. One vehicle signal face section with lens, backplate and visor. "R" indicates red indication, "Y" indicates yellow indication
		Controller assembly. Door indicates front of cabinet

SIGNAL EQUIPMENT Cont

PROPOSED	EXISTING	
		Guard post
		Type 1 Standard with "Meter On" sign
		Emergency Vehicle detector

NOTES:

1. All signal sections shall be 12" unless shown otherwise.
2. Signal heads shall be provided with backplates unless shown otherwise.
3. Signal indication shall be LED.

STATE OF CALIFORNIA
DEPARTMENT OF TRANSPORTATION

ELECTRICAL SYSTEMS (SYMBOLS AND ABBREVIATIONS)

NO SCALE

RSP ES-1B DATED OCTOBER 5, 2007 SUPERCEDES STANDARD PLAN ES-1B DATED MAY 1, 2006 - PAGE 401 OF THE STANDARD PLANS BOOK DATED MAY 2006.

REVISED STANDARD PLAN RSP ES-1B

2006 REVISED STANDARD PLAN RSP ES-1B

7-10-07

DIST	COUNTY	ROUTE	POST MILES TOTAL PROJECT	SHEET NO.	TOTAL SHEETS
10	Sta	33	0.5/1.5, 12.6/14.5	20	21

REGISTERED ELECTRICAL ENGINEER

October 5, 2007
PLANS APPROVAL DATE

REGISTERED PROFESSIONAL ENGINEER
Jeffery G. McRae
No. E14512
Exp. 6-30-08
ELECTRICAL
STATE OF CALIFORNIA

The State of California or its officers or agents shall not be responsible for the accuracy or completeness of electronic copies of this plan sheet.

To accompany plans dated 5-11-09

EQUIPMENT IDENTIFICATION

ILLUMINATED SIGN IDENTIFICATION NUMBER:

Sign No. 12345

- Sign number - Place on post or structure

10 ISL SCI 1.0

- Transformer rating (kVA)
- Lighting control type
- Number and type of fixtures

Do NOT place on standard or structure

ELECTROLIER OR EQUIPMENT IDENTIFICATION NUMBER:

12345 - 15'-0"

- Mast arm length, if shown. Do not place on standard or structure.
- Equipment number - Place on standard or structure. Existing equipment numbers are shown in parenthesis

CONDUIT AND CONDUCTOR IDENTIFICATION:

1½"C, 2#10, 15#14, 2 DLC

- Number and size of conductors and cables
- Size of conduit in inches

Ø1, Ø2, Ø2P, etc.	Traffic phase identification for signal faces, detectors and phase diagrams
1 2 3	Project note numbers
A B C	Equipment description, installation or item numbers
1 2 3	Conduit run numbers

SIGNAL AND LIGHTING STANDARD (TYPICAL DESIGNATION):

19A - 3 - 100

- Wind velocity = 100 mph
- Case 3 arm loading
- Standard type
- Standard Plan sheet number
- Detail number or letter

MISCELLANEOUS EQUIPMENT

PROPOSED	EXISTING	
CMS	cms	Changeable message sign
		Closed circuit television camera
		Highway advisory radio pole and antenna
EMS	ems	Extinguishable message sign
M V	m v	Detection device M = Microwave sensor V = Video image sensor

WIRING DIAGRAM LEGEND

P	Pole
CB	Circuit breaker
A	Ampere
V	Volt
M	Metered
UM	Unmetered
NB	Neutral bus
GB	Ground bus
G	Equipment grounding conductor
N	Grounded conductor (Neutral)

- External conductor
- Conductor or bus
- Tie point
- Contactor coil
- Contactor, Contact NO
- Terminal blocks
- Contactor, Contact NC
- Enclosure bond
- Grounding electrode
- Circuit breaker
- Receptacle

PULL BOXES

PROPOSED	EXISTING	
		Pull box-No. 5 unless otherwise indicated or noted.
3	9A(21)	Pull box-Additional designations or descriptions

3 = No. 3½ pull box
5 = No. 5 pull box
6 = No. 6 pull box
7 = No. 7 (Ceiling pull box)
8 = No. 8 (Pendant soffit pull box)
9 = No. 9 pull box
9A = No. 9A pull box

(C) = Communications pull box
(E) = Pull box with extension
(S) = Sprinkler control pull box
(21) = Anchor bolts and conduit for future installation of Type 21 Standard
(T) = Traffic pull box

VEHICLE DETECTORS

5 J 9 U

- Vehicle detector designation
- U = Upper
  L = Lower
- Slot number in input file
- Input file (I or J)
- Phase

PROPOSED	EXISTING	
		Type A detector loop. Outline of sawcut shown.
		Type B detector loop. Outline of sawcut shown.
		Type C detector loop. Outline of sawcut shown.
		Type D detector loop. Outline of sawcut shown.
		Type E detector loop. Outline of sawcut shown.
		Type Q detector loop. Outline of sawcut shown.
		Magnetic detector
DH	dh	Detector handhole
		Microwave or video detection zone

STATE OF CALIFORNIA
DEPARTMENT OF TRANSPORTATION

ELECTRICAL SYSTEMS (SYMBOLS AND ABBREVIATIONS)

NO SCALE

RSP ES-1C DATED OCTOBER 5, 2007 SUPERCEDES STANDARD PLAN ES-1C DATED MAY 1, 2006 - PAGE 402 OF THE STANDARD PLANS BOOK DATED MAY 2006.

REVISED STANDARD PLAN RSP ES-1C

2006 REVISED STANDARD PLAN RSP ES-1C

DIST	COUNTY	ROUTE	POST MILES TOTAL PROJECT	SHEET NO.	TOTAL SHEETS
10	Sta	33	0.5/1.5, 12.6/14.5	21	21

REGISTERED ELECTRICAL ENGINEER

October 5, 2007
PLANS APPROVAL DATE

REGISTERED PROFESSIONAL ENGINEER Jeffery G. McRae No. E14512 Exp. 6-30-08 ELECTRICAL STATE OF CALIFORNIA

The State of California or its officers or agents shall not be responsible for the accuracy or completeness of electronic copies of this plan sheet.

To accompany plans dated 5-11-09

LOOP INSTALLATION PROCEDURE

1. Loops shall be centered in lanes.
2. Saw slots in pavement for loop conductors as shown in details.
3. Distance between side of loop and a lead-in saw cut from adjacent detectors shall be 2'-0" minimum. Distance between lead-in saw cuts shall be 6" minimum.
4. Bottom of saw slot shall be smooth with no sharp edges.
5. Slots shall be washed until clean, blown out and thoroughly dried before installing loop conductors.
6. Adjacent loops on the same sensor unit channel shall be wound in opposite directions.
7. Identify and tag loop circuit pairs in the pull box with loop number, start (S) and finish (F) of conductor. Identify and tag lead-in-cable with sensor number and phase.
8. Install loop conductor in slot using a 3/16" to 1/4" thick wood paddle. Hold loop conductors with wood paddles (at the bottom of the sawed slot) during sealant placement.
9. No more than 2 twisted pairs shall be installed in one sawed slot.
10. Allow additional 5'-0" of slack length of conductor for the lead-in run to pull box.
11. The additional length of each conductor for each loop shall be twisted together into a pair (6 turns per 3'-4" minimum) before being placed in the slot and conduit leading to pull box.
12. Test each loop circuit for continuity, circuit resistance and insulation resistance at the pull box before filling slots.
13. Fill slots as shown in details.
14. Splice loop conductors to lead-in-cable. Splices shall be soldered.
15. End of lead-in-cable and Type 2 loop conductor shall be waterproofed prior to installing in conduit to prevent moisture from entering the cable.
16. Lead-in-cable shall not be spliced between the pull box and the controller cabinet terminals.
17. Test each loop circuit for continuity, circuit resistance and insulation resistance at the controller cabinet location.
18. Where loop conductors are not to be spliced to a lead-in-cable, the ends of the conductors shall be taped and waterproofed with electrical insulating coating.

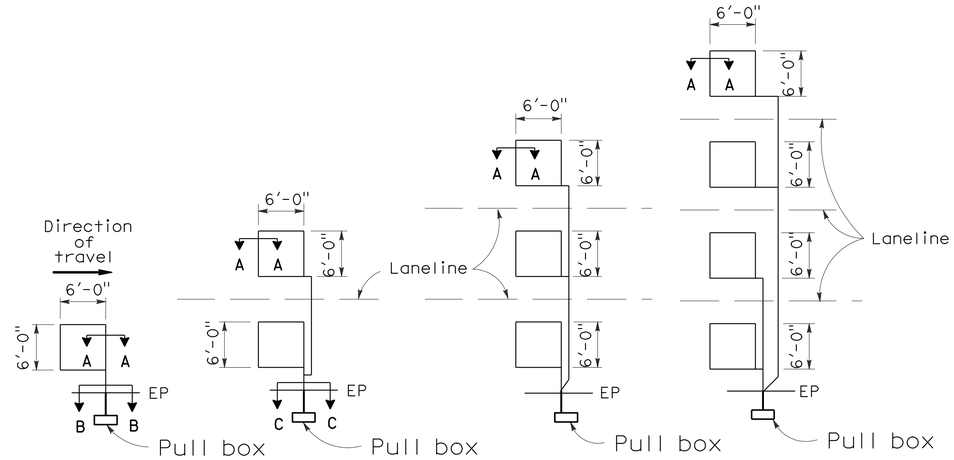

TYPE 1A INSTALLATION | TYPE 2A INSTALLATION | TYPE 3A INSTALLATION | TYPE 4A INSTALLATION

SAWCUT DETAILS

(Type A loop detector configurations illustrated)

1. 1A thru 4A = 1 Type A loop configuration in each lane.
2. 1B thru 4B = 1 Type B loop configuration in each lane.
3. 1C = 1 Type C loop configuration entering lanes as required.
4. 1D thru 4D = 1 Type D loop configuration in each lane.
5. 1E thru 4E = 1 Type E loop configuration in each lane.
6. 1Q thru 4Q = 1 Type Q loop configuration in each lane.
   (Use Type A, B, C, D, E or Q loop detector configurations only when specified or shown on plans)

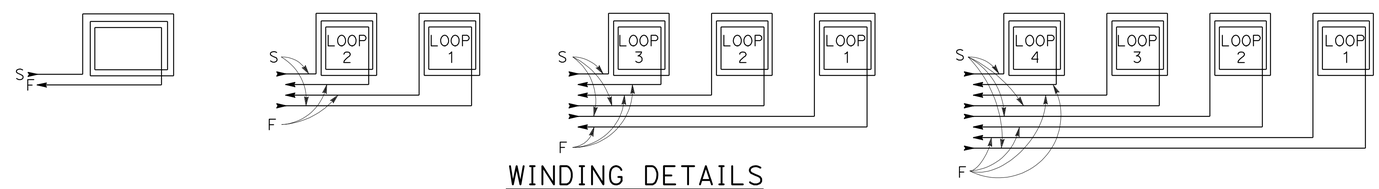

WINDING DETAILS

See Notes 6 and 7

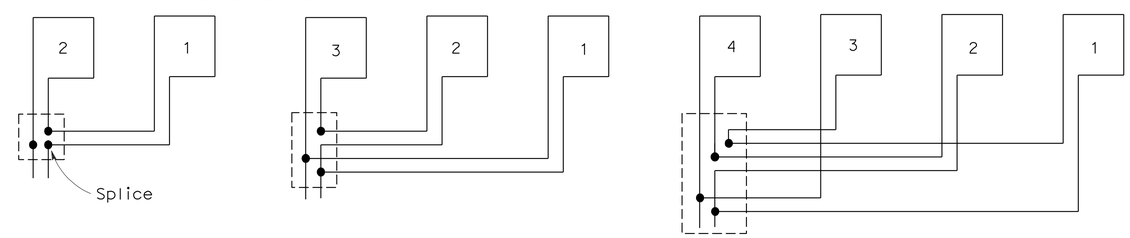

TYPICAL LOOP CONNECTIONS

(Dashed lines represent the pull box)

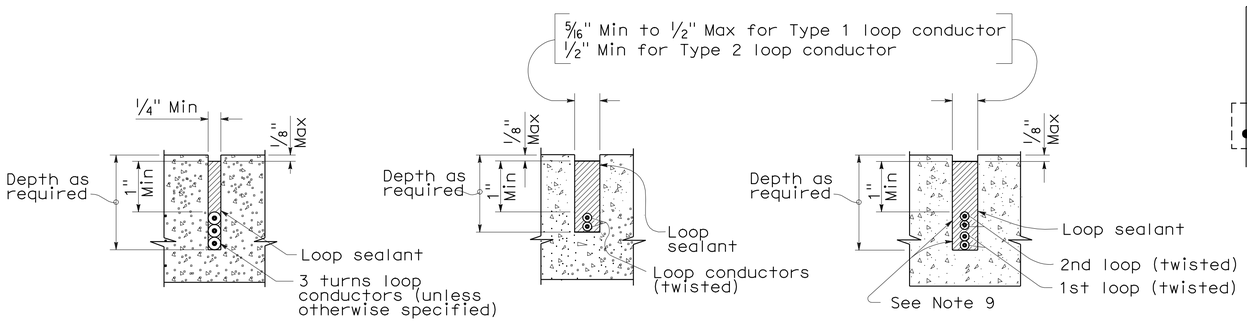

SECTION A-A | SECTION B-B | SECTION C-C

SLOT DETAILS - TYPE 1 AND TYPE 2 LOOP CONDUCTOR

STATE OF CALIFORNIA
DEPARTMENT OF TRANSPORTATION

ELECTRICAL SYSTEMS (DETECTORS)

NO SCALE

RSP ES-5A DATED OCTOBER 5, 2007 SUPERCEDES STANDARD PLAN ES-5A DATED MAY 1, 2006 - PAGE 423 OF THE STANDARD PLANS BOOK DATED MAY 2006.

REVISED STANDARD PLAN RSP ES-5A

2006 REVISED STANDARD PLAN RSP ES-5A

8-17-07