REFERENCE: CALTRANS SOIL & ROCK LOGGING, CLASSIFICATION, AND PRESENTATION MANUAL (JUNE 2007)

DIST	COUNTY	ROUTE	POST MILES TOTAL PROJECT	SHEET No	TOTAL SHEETS
10	SJ	5	25.0/32.7	901	1132

GEOTECHNICAL PROFESSIONAL — DATE 7/28/10

PLANS APPROVAL DATE 10-11-10

REGISTERED PROFESSIONAL ENGINEER — GARY PARIKH — No. G.E. 666 — Exp. 12/31/11 — GEOTECHNICAL — STATE OF CALIFORNIA

The State of California or its officers or agents shall not be responsible for the accuracy or completeness of scanned copies of this plan sheet.

SAN JOAQUIN COUNCIL OF GOVERNMENTS
555 EAST WEBER AVENUE
STOCKTON, CALIFORNIA 95202

PARIKH CONSULTANTS, INC.
2360 QUME DRIVE, SUITE A
SAN JOSE, CA 95131

GROUP SYMBOLS AND NAMES

Graphic/Symbol	Group Names	Graphic/Symbol	Group Names
GW	Well-graded GRAVEL Well-graded GRAVEL with SAND	CL	Lean CLAY Lean CLAY with SAND Lean CLAY with GRAVEL SANDY lean CLAY SANDY lean CLAY with GRAVEL GRAVELLY lean CLAY GRAVELLY lean CLAY with SAND
GP	Poorly graded GRAVEL Poorly graded GRAVEL with SAND		
GW-GM	Well-graded GRAVEL with SILT Well-graded GRAVEL with SILT and SAND	CL-ML	SILTY CLAY SILTY CLAY with SAND SILTY CLAY with GRAVEL SANDY SILTY CLAY SANDY SILTY CLAY with GRAVEL GRAVELLY SILTY CLAY GRAVELLY SILTY CLAY with SAND
GW-GC	Well-graded GRAVEL with CLAY (or SILTY CLAY) Well-graded GRAVEL with CLAY and SAND (or SILTY CLAY and SAND)		
GP-GM	Poorly graded GRAVEL with SILT Poorly graded GRAVEL with SILT and SAND	ML	SILT SILT with SAND SILT with GRAVEL SANDY SILT SANDY SILT with GRAVEL GRAVELLY SILT GRAVELLY SILT with SAND
GP-GC	Poorly graded GRAVEL with CLAY (or SILTY CLAY) Poorly graded GRAVEL with CLAY and SAND (or SILTY CLAY and SAND)		
GM	SILTY GRAVEL SILTY GRAVEL with SAND	OL	ORGANIC lean CLAY ORGANIC lean CLAY with SAND ORGANIC lean CLAY with GRAVEL SANDY ORGANIC lean CLAY SANDY ORGANIC lean CLAY with GRAVEL GRAVELLY ORGANIC lean CLAY GRAVELLY ORGANIC lean CLAY with SAND
GC	CLAYEY GRAVEL CLAYEY GRAVEL with SAND		
GC-GM	SILTY, CLAYEY GRAVEL SILTY, CLAYEY GRAVEL with SAND	OL	ORGANIC SILT ORGANIC SILT with SAND ORGANIC SILT with GRAVEL SANDY ORGANIC SILT SANDY ORGANIC SILT with GRAVEL GRAVELLY ORGANIC SILT GRAVELLY ORGANIC SILT with SAND
SW	Well-graded SAND Well-graded SAND with GRAVEL		
SP	Poorly graded SAND Poorly graded SAND with GRAVEL	CH	Fat CLAY Fat CLAY with SAND Fat CLAY with GRAVEL SANDY fat CLAY SANDY fat CLAY with GRAVEL GRAVELLY fat CLAY GRAVELLY fat CLAY with SAND
SW-SM	Well-graded SAND with SILT Well-graded SAND with SILT and GRAVEL		
SW-SC	Well-graded SAND with CLAY (or SILTY CLAY) Well-graded SAND with CLAY and GRAVEL (or SILTY CLAY and GRAVEL)	MH	Elastic SILT Elastic SILT with SAND Elastic SILT with GRAVEL SANDY elastic SILT SANDY elastic SILT with GRAVEL GRAVELLY elastic SILT GRAVELLY elastic SILT with SAND
SP-SM	Poorly graded SAND with SILT Poorly graded SAND with SILT and GRAVEL		
SP-SC	Poorly graded SAND with CLAY (or SILTY CLAY) Poorly graded SAND with CLAY and GRAVEL (or SILTY CLAY and GRAVEL)	OH	ORGANIC fat CLAY ORGANIC fat CLAY with SAND ORGANIC fat CLAY with GRAVEL SANDY ORGANIC fat CLAY SANDY ORGANIC fat CLAY with GRAVEL GRAVELLY ORGANIC fat CLAY GRAVELLY ORGANIC fat CLAY with SAND
SM	SILTY SAND SILTY SAND with GRAVEL		
SC	CLAYEY SAND CLAYEY SAND with GRAVEL	OH	ORGANIC elastic SILT ORGANIC elastic SILT with SAND ORGANIC elastic SILT with GRAVEL SANDY ORGANIC elastic SILT SANDY ORGANIC elastic SILT with GRAVEL GRAVELLY ORGANIC elastic SILT GRAVELLY ORGANIC elastic SILT with SAND
SC-SM	SILTY, CLAYEY SAND SILTY, CLAYEY SAND with GRAVEL		
PT	PEAT	OL/OH	ORGANIC SOIL ORGANIC SOIL with SAND ORGANIC SOIL with GRAVEL SANDY ORGANIC SOIL SANDY ORGANIC SOIL with GRAVEL GRAVELLY ORGANIC SOIL GRAVELLY ORGANIC SOIL with SAND
	COBBLES COBBLES and BOULDERS BOULDERS		

FIELD AND LABORATORY TESTING

- (C) Consolidation (ASTM D 2435)
- (CL) Collapse Potential (ASTM D 5333)
- (CP) Compaction Curve (CTM 216)
- (CR) Corrosivity Testing (CTM 643, CTM 422, CTM 417)
- (CU) Consolidated Undrained Triaxial (ASTM D 4767)
- (DS) Direct Shear (ASTM D 3080)
- (EI) Expansion Index (ASTM D 4829)
- (M) Moisture Content (ASTM D 2216)
- (OC) Organic Content-% (ASTM D 2974)
- (P) Permeability (CTM 220)
- (PA) Particle Size Analysis (ASTM D 422)
- (PI) Plasticity Index (AASHTO T 90) Liquid Limit (AASHTO T 89)
- (PL) Point Load Index (ASTM D 5731)
- (PM) Pressure Meter
- (PP) Pocket Penetrometer
- (R) R-Value (CTM 301)
- (SE) Sand Equivalent (CTM 217)
- (SG) Specific Gravity (AASHTO T 100)
- (SL) Shrinkage Limit (ASTM D 427)
- (SW) Swell Potential (ASTM D 4546)
- (TV) Pocket Torvane
- (UC) Unconfined Compression-Soil (ASTM D 2166) Unconfined Compression-Rock (ASTM D 2938)
- (UU) Unconsolidated Undrained Triaxial (ASTM D 2850)
- (UW) Unit Weight (ASTM D 4767)
- (VS) Vane Shear (AASHTO T 223)

APPARENT DENSITY OF COHESIONLESS SOILS

Description	SPT N_{60} (Blows / 12 inches)
Very loose	0 - 4
Loose	5 - 10
Medium Dense	11 - 30
Dense	31 - 50
Very Dense	> 50

MOISTURE

Description	Criteria
Dry	Absence of moisture, dusty, dry to the touch
Moist	Damp but no visible water
Wet	Visible free water, usually soil is below water table

PERCENT OR PROPORTION OF SOILS

Description	Criteria
Trace	Particles are present but estimated to be less than 5%
Few	5 to 10%
Little	15 to 25%
Some	30 to 45%
Mostly	50 to 100%

PARTICLE SIZE

Description		Size
Boulder		> 12"
Cobble		3" to 12"
Gravel	Coarse	3/4" to 3"
	Fine	No. 4 to 3/4"
Sand	Coarse	No. 10 to No. 4
	Medium	No. 40 to No. 10
	Fine	No. 200 to No. 40

DESIGN OVERSIGHT John Fujimoto — 8-2-10 SIGN OFF DATE

DRAWN BY O. GOUTHIER
CHECKED BY D. WANG

S. DUDDU - A. R. BHARADWAJ
FIELD INVESTIGATION BY:
DATE: MARCH 2009 - APRIL 2009

PREPARED FOR THE STATE OF CALIFORNIA DEPARTMENT OF TRANSPORTATION

A. LAM
PROJECT ENGINEER

BRIDGE NO. 29-0175
POST MILES 31.00

FOURTEEN MILE SLOUGH BRIDGE (WIDEN)

SOIL LEGEND 2 OF 2

OGS CIVIL LOG OF TEST BORINGS SHEET (ENGLISH) (REV. 06-01-09)

ORIGINAL SCALE IN INCHES FOR REDUCED PLANS 0 1 2 3

CU 06240
EA 0G4701

DISREGARD PRINTS BEARING EARLIER REVISION DATES — REVISION DATES: 10/15/09 12/04/09 01/15/10 04/23/10 06/11/10 7/28/10

SHEET 24 OF 26

FILE => 29-0175-z-ltb02.dgn

USERNAME => trmikes1 DATE PLOTTED => 14-OCT-2010 TIME PLOTTED => 11:03

DIST	COUNTY	ROUTE	POST MILES TOTAL PROJECT	SHEET No	TOTAL SHEETS
10	SJ	5	25.0/32.7	902	1132

GEOTECHNICAL PROFESSIONAL — DATE 7/28/10

REGISTERED PROFESSIONAL ENGINEER — GARY PARIKH — No. G.E. 666 — Exp. 12/31/11 — GEOTECHNICAL — STATE OF CALIFORNIA

10-11-10
PLANS APPROVAL DATE

The State of California or its officers or agents shall not be responsible for the accuracy or completeness of scanned copies of this plan sheet.

SAN JOAQUIN COUNCIL OF GOVERNMENTS
555 EAST WEBER AVENUE
STOCKTON, CALIFORNIA 95202

PARIKH CONSULTANTS, INC.
2360 QUME DRIVE, SUITE A
SAN JOSE, CA 95131

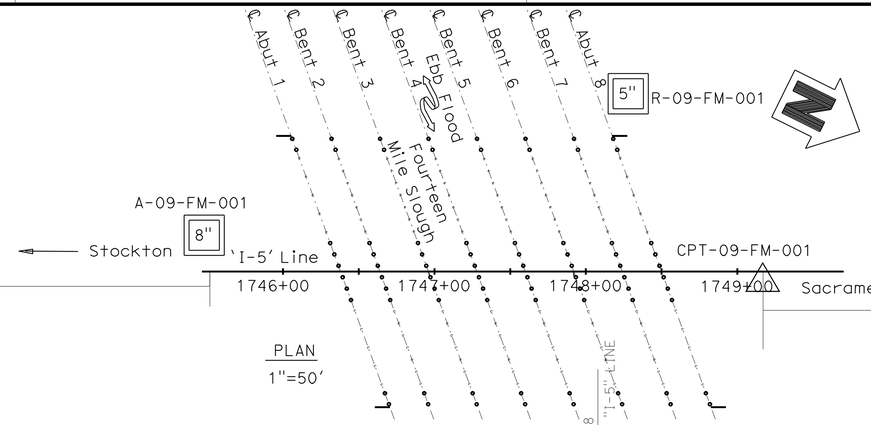

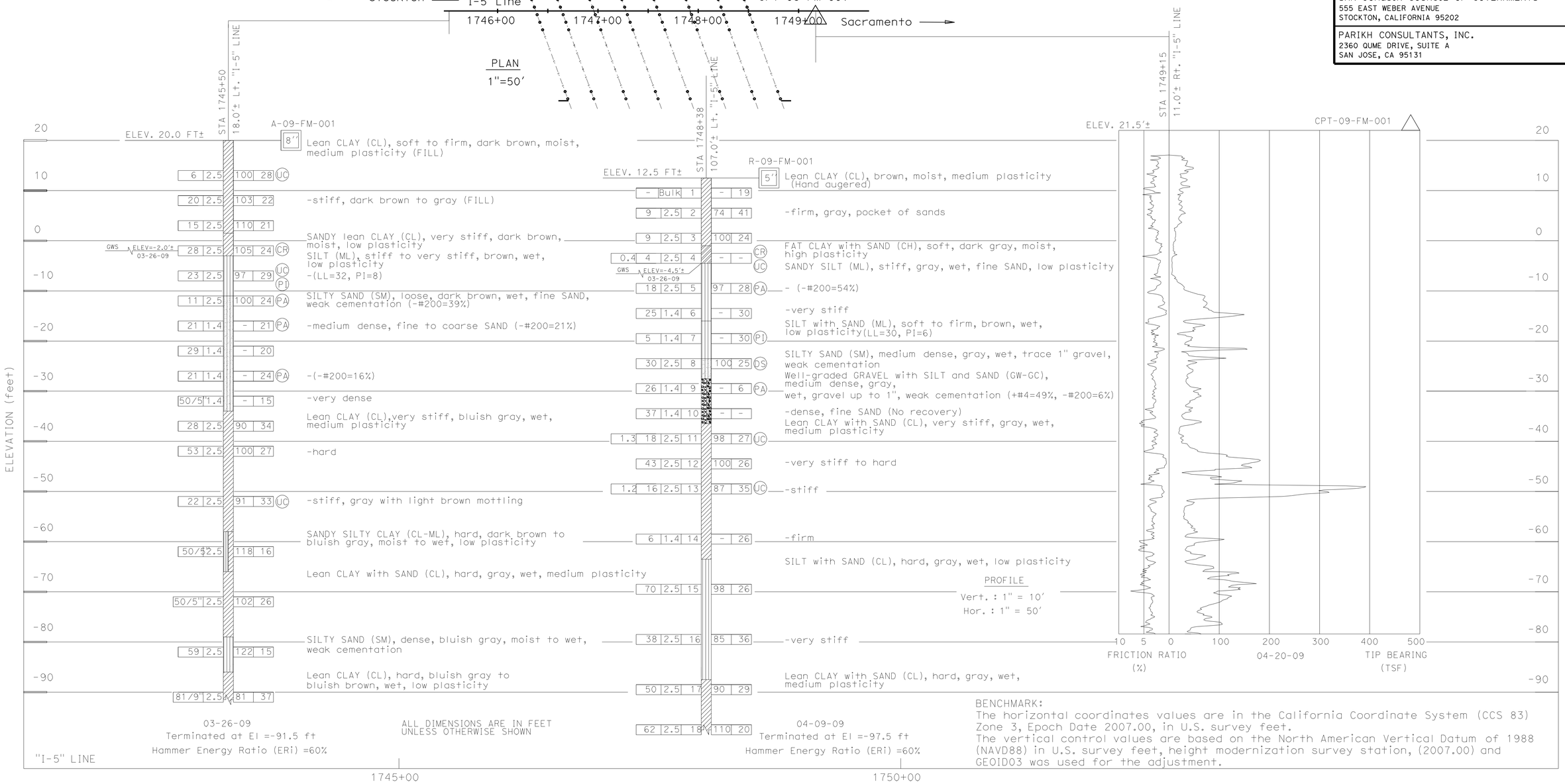

ALL DIMENSIONS ARE IN FEET UNLESS OTHERWISE SHOWN

BENCHMARK:
The horizontal coordinates values are in the California Coordinate System (CCS 83) Zone 3, Epoch Date 2007.00, in U.S. survey feet.
The vertical control values are based on the North American Vertical Datum of 1988 (NAVD88) in U.S. survey feet, height modernization survey station, (2007.00) and GEOID03 was used for the adjustment.

John Fujimoto
DESIGN OVERSIGHT — John Fujimoto
8-2-10
SIGN OFF DATE

DRAWN BY: O. GOUTHIER
CHECKED BY: D. WANG

S. DUDDU - A. R. BHARADWAJ
FIELD INVESTIGATION BY:
DATE: MARCH 2009 - APRIL 2009

PREPARED FOR THE STATE OF CALIFORNIA DEPARTMENT OF TRANSPORTATION

A. LAM
PROJECT ENGINEER

BRIDGE NO. 29-0175
POST MILES 31.00

FOURTEEN MILE SLOUGH BRIDGE (WIDEN)
LOG OF TEST BORINGS 1 OF 2

OGS GEOTECHNICAL LOG OF TEST BORINGS SHEET (ENGLISH) (REV. 06-01-09)

ORIGINAL SCALE IN INCHES FOR REDUCED PLANS 0 1 2 3

CU 06240
EA 0G4701

DISREGARD PRINTS BEARING EARLIER REVISION DATES
REVISION DATES: 10/15/09 12/04/09 01/15/10 04/23/10 06/11/10 7/28/10

SHEET 25 OF 26

FILE => 29-0175-z-ltb03.dgn

USERNAME => rtmrkes; DATE PLOTTED => 14-OCT-2010 TIME PLOTTED => 11:03

DIST.	COUNTY	ROUTE	SECTION	BRIDGE NO.	TOTAL SHEETS
10	SJ	5	25.0/29.8	86	113

DISTRICT APPROVED January 3, 1967

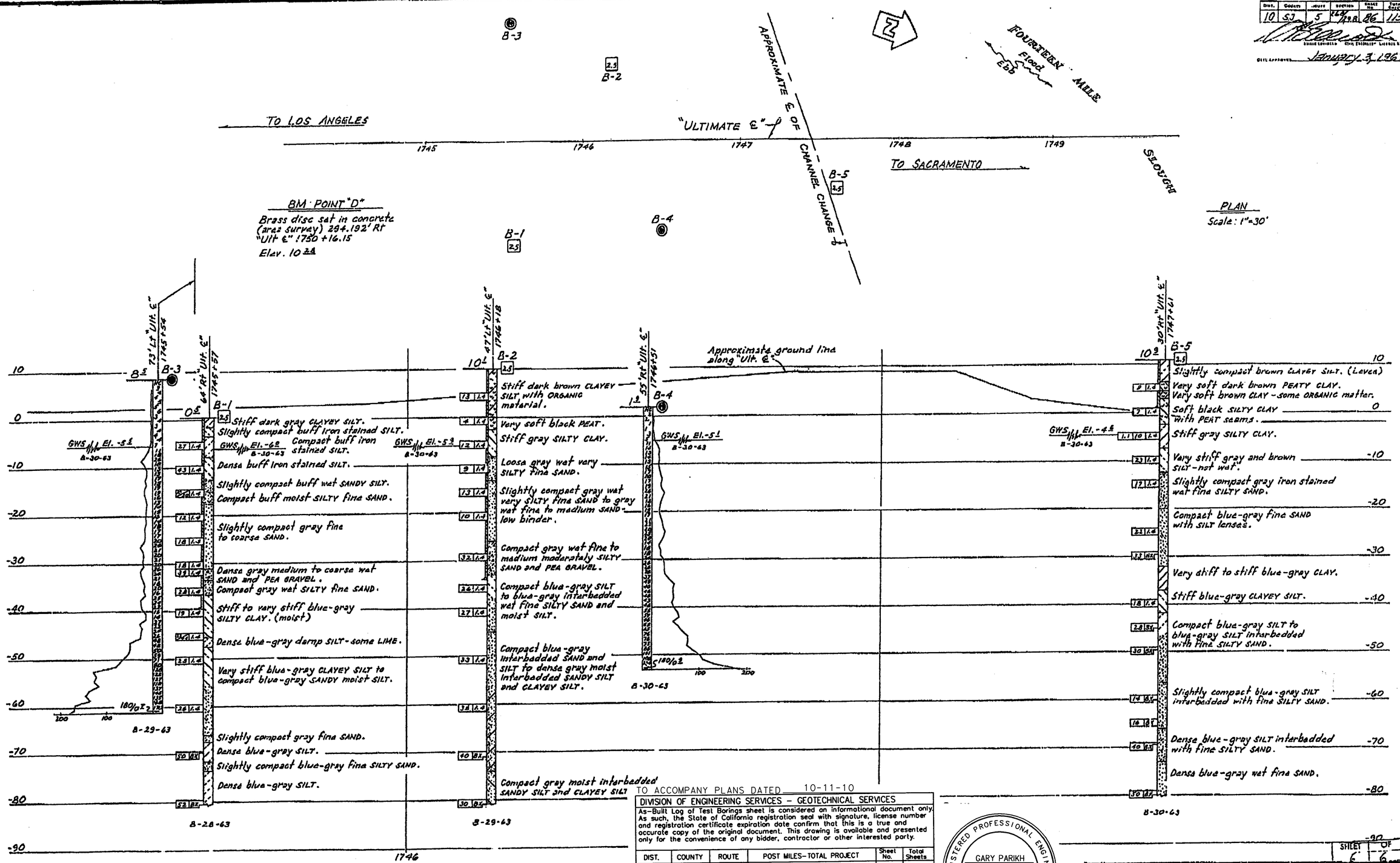

TO ACCOMPANY PLANS DATED 10-11-10

DIVISION OF ENGINEERING SERVICES – GEOTECHNICAL SERVICES

As-Built Log of Test Borings sheet is considered an informational document only. As such, the State of California registration seal with signature, license number and registration certificate expiration date confirm that this is a true and accurate copy of the original document. This drawing is available and presented only for the convenience of any bidder, contractor or other interested party.

DIST.	COUNTY	ROUTE	POST MILES-TOTAL PROJECT	Sheet No.	Total Sheets
10	SJ	5	25.0/32.7	903	1132

REGISTERED CIVIL ENGINEER — DATE 7/28/10

FOURTEEN MILE SLOUGH BRIDGE (WIDEN)

LOG OF TEST BORINGS 2 OF 2

NOTE: A COPY OF THIS LOG OF TEST BORINGS IS AVAILABLE AT OFFICE OF STRUCTURE MAINTENANCE AND INVESTIGATIONS, SACRAMENTO, CALIFORNIA

CU: 06240
EA: 0G4701

BRIDGE No. 29-0175

Sheet 26 of 26

REGISTERED PROFESSIONAL ENGINEER — GARY PARIKH — No. G.E. 666 — Exp. 12/31/11 — GEOTECHNICAL — STATE OF CALIFORNIA

SHEET 6 OF 6

STATE OF CALIFORNIA
DEPARTMENT OF PUBLIC WORKS
DIVISION OF HIGHWAYS

FOURTEEN MILE SLOUGH BR.

LOG OF TEST BORINGS

SCALE As Noted | BRIDGE 29-175 R/L | FILE | DRAWING 2.9175.09

FILENAME => 29-0175-z-ltb04.tif

AS
Contra
Date
Docum

PENETRATION BORING
ROTARY BORING
1" SOIL TUBE
PIEZOMETER
2½" CONE PENETROMETER
SAMPLER BORING (DRY)
ROTARY BORING (WET)
AUGER BORING (DRY)
JET BORING
CONE BORING
TEST PIT
SILTY CLAY OR CLAYEY SILT
PEAT OR ORGANIC MATTER
FILL MATERIAL
TENTATIVE ROCK
SEDIMENTARY ROCK
METAMORPHIC ROCK
GRAVEL
SAND
SILT
CLAY
SANDY CLAY OR CLAYEY SAND
SANDY SILT OR SILTY SAND

OTE: Classification of earth material as shown on this sheet is based on field inspection and is not to be construed to imply mechanical analysis.

DIST	COUNTY	ROUTE	POST MILES TOTAL PROJECT	SHEET No	TOTAL SHEETS
10	SJ	5	25.0/32.7	904	1132

REGISTERED CIVIL ENGINEER — DATE 7/28/10

PLANS APPROVAL DATE 10-11-10

REGISTERED PROFESSIONAL ENGINEER — Robert Sennett — No. 3976 — Exp. 12/31/10 — STRUCTURAL — STATE OF CALIFORNIA

The State of California or its officers or agents shall not be responsible for the accuracy or completeness of scanned copies of this plan sheet.

SAN JOAQUIN COUNCIL OF GOVERMENT
555 E. WEBER AVENUE
STOCKTON, CA 95202

MGE ENGINEERING, INC.
7415 GREENHAVEN DRIVE, SUITE 100
SACRAMENTO, CA 95831

"I-5" Line 1616+10.75
Elev 24.95

See "DECK GRADES" sheets

"I-5" Line 1617+96.75
Elev 24.90

PROFILE GRADE

No Scale

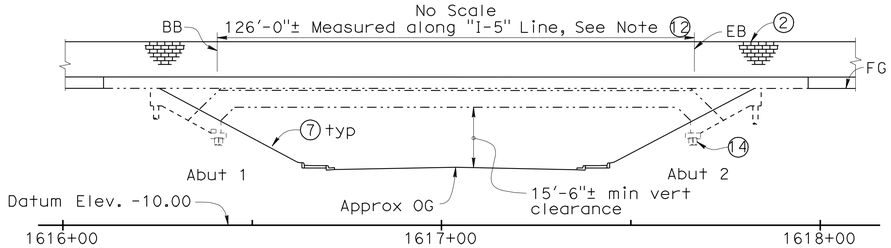

ELEVATION

1" = 20'

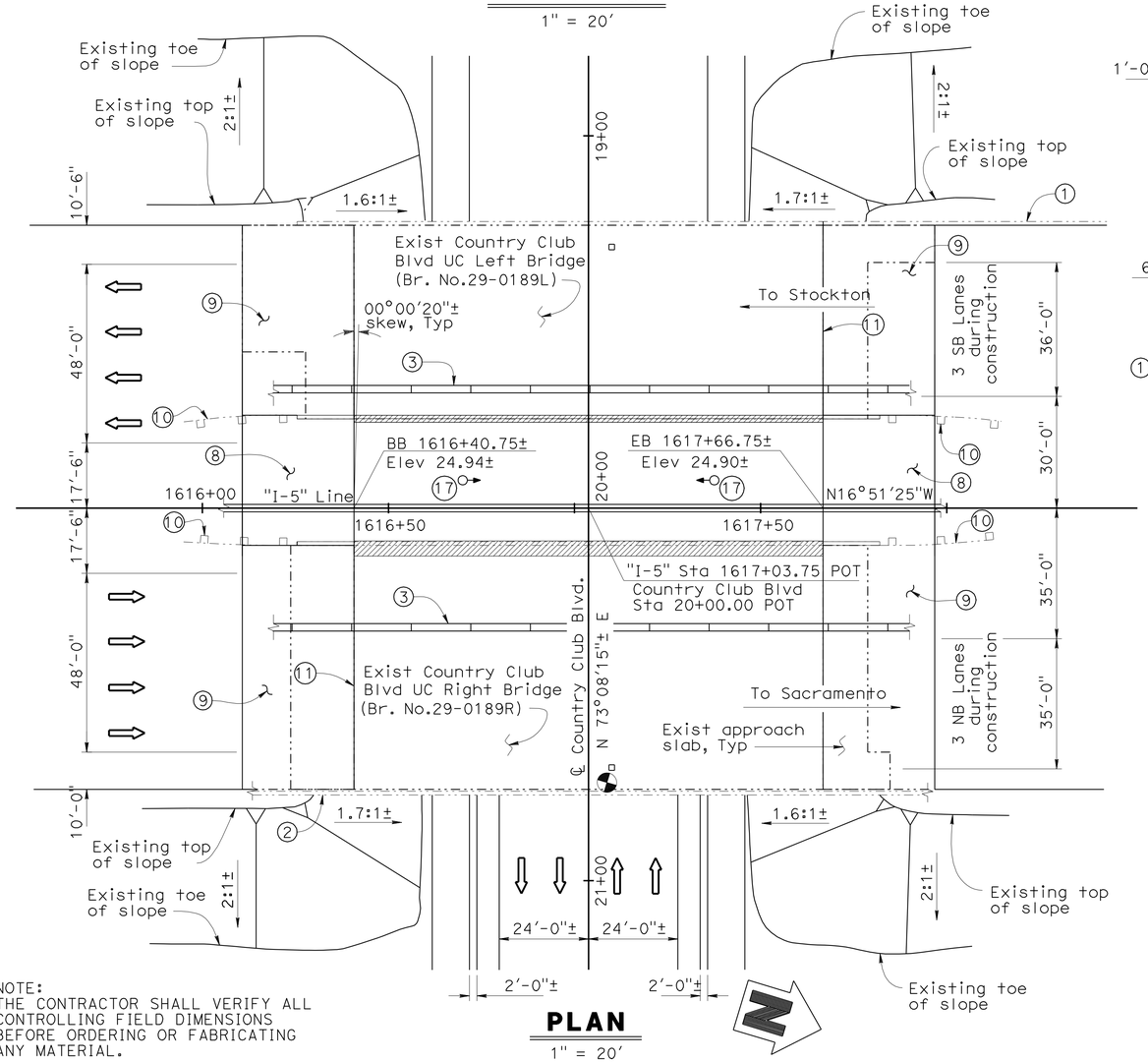

NOTE:
THE CONTRACTOR SHALL VERIFY ALL CONTROLLING FIELD DIMENSIONS BEFORE ORDERING OR FABRICATING ANY MATERIAL.

PLAN

1" = 20'

LEGEND:

- Bridge Removal (Portion)
- Indicates Point of Minimum Vertical Clearance
- Indicates Existing Structure
- Indicates Direction of Traffic
- Indicates Soffit Lighting, see Electrical Plans
- Deck Drain Through Exist Deck

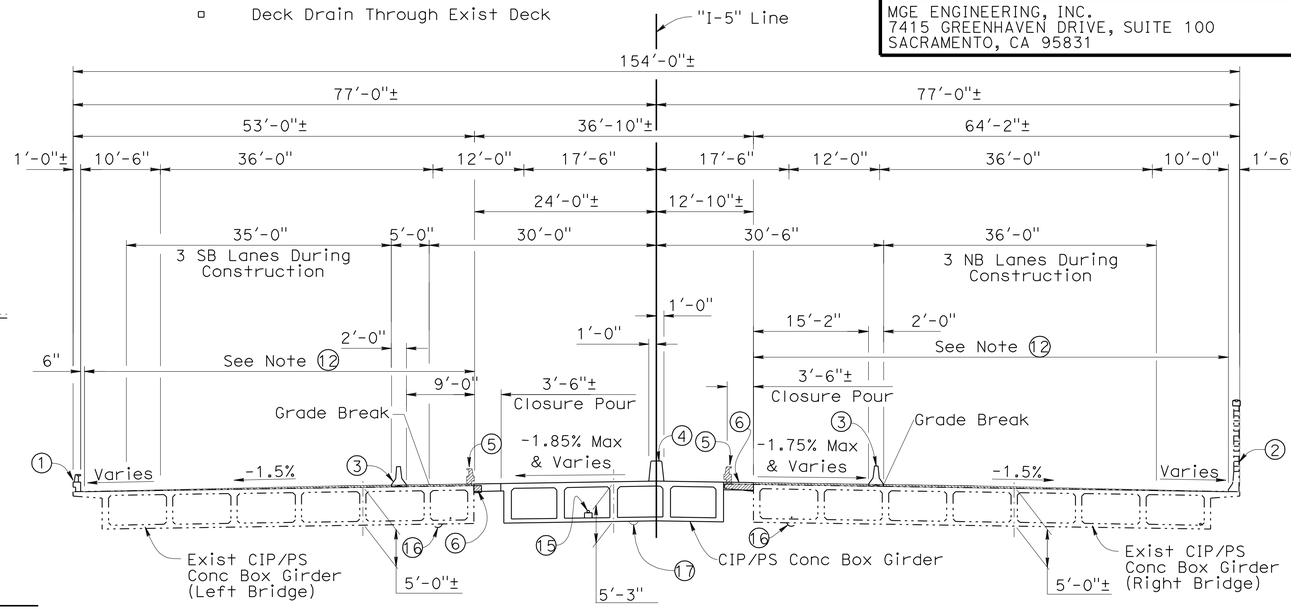

TYPICAL SECTION

1" = 10'

NOTES:

1. Exist Type 9 Barrier Railing
2. Exist Concrete Barrier Type 27R with Masonry Block Sound Wall
3. Temporary Railing Type K, see Road Plans
4. Concrete Barrier Type 60A (MOD)
5. Salvage Exist Type 9 Barrier Railing
6. Remove Exist Overhang
7. Remove Exist Slope Paving (Portion) and Exist toe wall between Bridges and reconstruct
8. Structure Approach Type N(30D)
9. Structure Approach Type R(30D)
10. Remove Exist Bridge Approach Guard Railing at Median, see Road Plans
11. Remove and Replace Exist Joint Seal, Full Width
12. Limits of Prepare Concrete Bridge Deck Surface, Furnish and Place Polyester Concrete Overlay with Longitudinal Grooving.
13. For General Notes, Index to Bridge Plans and Quantities, See "GENERAL NOTES" Sheet
14. For Pile Data Table, see "FOUNDATION PLAN" Sheet
15. 4" ø Fiber Optic Conduit (Future), See Electrical Plans
16. Exist Soffit Light with 2" ø core drill through Exist abutments for power conduit, see Electrical Plan
17. Soffit Lighting Location:

"I-5" Station	Offset
1616+80.75	3.0' Lt
1617+26.75	3.0' Lt

DESIGN OVERSIGHT — John Fujimoto — 8-2-10 — SIGN OFF DATE

DESIGN	BY P. Zhao	CHECKED D. Chan	LOAD & RESISTANCE FACTOR DESIGN — LIVE LOADING: HL93 w/ "LOW-BOY" AND PERMIT DESIGN VEHICLE
DETAILS	BY P. Zhao	CHECKED D. Chan	LAYOUT — BY R. Sennett — CHECKED D. Chan
QUANTITIES	BY R. Huang	CHECKED S. Kotamala	SPECIFICATIONS — BY R. Sennett — PLANS AND SPECS COMPARED

PREPARED FOR THE STATE OF CALIFORNIA DEPARTMENT OF TRANSPORTATION

Robert Sennett — PROJECT ENGINEER

BRIDGE NO. 29-0189
POST MILES 28.53

COUNTRY CLUB BLVD UC (WIDEN)
GENERAL PLAN

DESIGN GENERAL PLAN SHEET (ENGLISH) (REV. 06-01-09)

ORIGINAL SCALE IN INCHES FOR REDUCED PLANS 0 1 2 3

CU 06240
EA 0G4704

DISREGARD PRINTS BEARING EARLIER REVISION DATES

REVISION DATES (PRELIMINARY STAGE ONLY): 06/02/09 10/26/09 12/04/09 01/15/10 04/23/10 06/17/10 07/28/10

SHEET 1 OF 28

FILE => 29-0189rl-a-gp01.dgn

USERNAME => ttmirkes1 DATE PLOTTED => 14-OCT-2010 TIME PLOTTED => 11:03

DIST	COUNTY	ROUTE	POST MILES TOTAL PROJECT	SHEET No	TOTAL SHEETS
10	SJ	5	25.0/32.7	905	1132

REGISTERED CIVIL ENGINEER 7/28/10 DATE

10-11-10
PLANS APPROVAL DATE

The State of California or its officers or agents shall not be responsible for the accuracy or completeness of scanned copies of this plan sheet.

REGISTERED PROFESSIONAL ENGINEER Robert Sennett No. 3976 Exp. 12/31/10 STRUCTURAL STATE OF CALIFORNIA

SAN JOAQUIN COUNCIL OF GOVERMENT
555 E. WEBER AVENUE
STOCKTON, CA 95202

MGE ENGINEERING, INC.
7415 GREENHAVEN DRIVE, SUITE 100
SACRAMENTO, CA 95831

INDEX TO BRIDGE PLANS

SHEET NO.	TITLE
1	GENERAL PLAN
2	GENERAL NOTES
3	DECK GRADES NO. 1
4	DECK GRADES NO. 2
5	DECK GRADES NO. 3
6	FOUNDATION PLAN
7	ABUTMENT LAYOUT
8	ABUTMENT DETAILS NO. 1
9	ABUTMENT DETAILS NO. 2
10	ABUTMENT DETAILS NO. 3
11	ABUTMENT DETAILS NO. 4
12	TYPICAL SECTION
13	GIRDER LAYOUT
14	GIRDER REINFORCEMENT
15	DECK DRAIN PLAN
16	DECK DRAIN DETAILS
17	SOFFIT ACCESS OPENING DETAILS
18	LIMITS OF STRUCTURE APPROACH
19	STRUCTURE APPROACH TYPE N(30D)
20	STRUCTURE APPROACH TYPE R(30D)
21	STRUCTURE APPROACH DRAINAGE DETAILS
22	SLOPE PAVING DETAILS NO. 1
23	SLOPE PAVING DETAILS NO. 2
24	SLOPE PAVING DETAILS NO. 3
25	LOG OF TEST BORINGS - SOIL LEGENTS NO. 1
26	LOG OF TEST BORINGS - SOIL LEGENTS NO. 2
27	LOG OF TEST BORINGS
28	AS BUILT LOG OF TEST BORINGS

STANDARD PLANS

DATED MAY 2006

	A10A	ACRONYMS AND ABBREVIATIONS (SHEET 1 OF 2)
	A10B	ACRONYMS AND ABBREVIATIONS (SHEET 2 OF 2)
	A10C	SYMBOLS (SHEET 1 OF 2)
	A10D	SYMBOLS (SHEET 2 OF 2)
	A62C	LIMITS OF PAYMENT FOR EXCAVATION AND BACKFILL - BRIDGE
RSP	A76A	CONCRETE BARRIER TYPE 60
	B0-1	BRIDGE DETAILS
	B0-3	BRIDGE DETAILS
	B0-5	BRIDGE DETAILS
	B0-13	BRIDGE DETAILS
	B2-5	PILE DETAILS CALSS 90 AND CLASS 140
RSP	B6-21	JOINT SEALS (MAXIMUM MOVEMENT RATING = 2")
	B7-1	BOX GIRDER DETAILS
	B7-6	DECK DRAINS TYPES D-1 AND D-2
	B7-8	DECK DRAINS DETAILS
	B7-10	DECK UTILITY OPENING BOX GIRDER
	B8-5	CAST-IN-PLACE PRESTRESSED GIRDER DETAILS
	B14-3	COMMUNICATION AND SPRINKLER CONTROL CONDUITS (CONDUIT LESS THAN 4")
	B14-5	WATER SUPPLY LINE (DETAILS) (PIPE SIZES LESS THAN 4")
	ES-9B	ELECTRICAL SYSTEMS (ELECTRICAL DETAILS STRUCTURE INSTALLATIONS)

STANDARD PLAN SHEET NO.

Detail No.

GENERAL NOTES
LOAD AND RESISTANCE FACTOR DESIGN

Design: AASHTO LRFD Bridge Design Specifications, 4th Edition and the Caltrans Amendments, preface dated Dec. 2008, except that Abutments, Concrete Barrier Type 60A (Mod), Structural Approach Type N (30D) and Structural Approach Type R (30D) are designed using Bridge Design Specifications (1996 AASHTO with Revisions by Caltrans).

Seismic Design: Caltrans Seismic Design Criteria (SDC) Version 1.4 dated June 2006

Dead Load: Includes 35 psf for future wearing surface

Live Loading: HL93 with "Low-Boy" and Permit Design Vehicle

Seismic Loading: Soil Profile Type D
Magnitude group 7.25 ± 0.25
Peak Rock Acceleration 0.2g

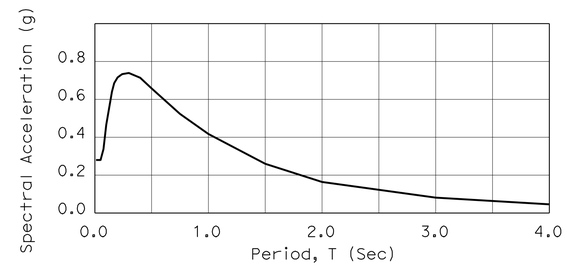

Reinforced Concrete:
fy = 60 ksi
fc' = 3.6 ksi (Except as shown "Concrete Strength and Type Limits" Diagram)
n = 8

See 'Prestressing Notes' on "GIRDER LAYOUT" Sheet.

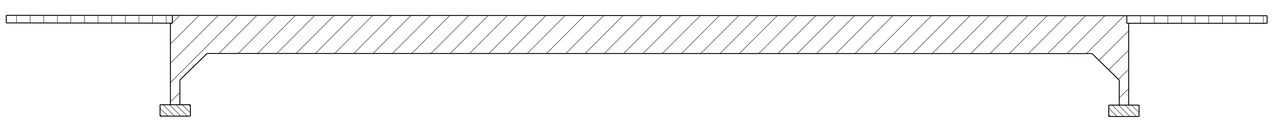

Indicates Structural Concrete, Bridge (fc' = 5.0 ksi @ 28 days)

Indicates Structural Concrete, Bridge Footing

Indicates Structural Concrete, Approach Slab

CONCRETE STRENGTH AND TYPE LIMITS

NOTE:
THE CONTRACTOR SHALL VERIFY ALL CONTROLLING FIELD DIMENSIONS BEFORE ORDERING OR FABRICATING ANY MATERIAL.

COUNTRY CLUB BLVD UC #29-0189
QUANTITIES

PUBLIC SAFETY PLAN	LUMP	SUM
REMOVE CONCRETE DECK SURFACE	4,220	SQFT
SALVAGE METAL BRIDGE RAILING	372	LF
PREPARE CONCRETE BRIDGE DECK SURFACE	14,440	SQFT
ACCESS OPENING, SOFFIT	6	EA
BRIDGE REMOVAL (PORTION), LOCATION A	LUMP	SUM
STRUCTURE EXCAVATION (BRIDGE)	64	CY
STRUCTURE BACKFILL (BRIDGE)	75	CY
AGGREGATE BASE (APPROACH SLAB)	26	CY
GROOVE POLYESTER CONCRETE OVERLAY	1,600	SQYD
FURNISH PILING (CLASS 140) (ALTERNATIVE X)(MODIFIED)	1,030	LF
DRIVE PILE (CLASS 140)(ALTERNATIVE X)(MODIFIED)	18	EA
PRESTRESSING CAST-IN-PLACE CONCRETE	LUMP	SUM
STRUCTURAL CONCRETE, BRIDGE FOOTING	16	CY
STRUCTURAL CONCRETE, BRIDGE	365	CY
STRUCTURAL CONCRETE, APPROACH SLAB (TYPE N)	82	CY
STRUCTURAL CONCRETE, APPROACH SLAB (TYPE R)	260	CY
PAVING NOTCH EXTENSION	180	CF
DRILL AND BOND DOWEL	260	LF
FURNISH POLYESTER CONCRETE OVERLAY	1,340	CF
PLACE POLYESTER CONCRETE OVERLAY	14,440	SQFT
CORE CONCRETE (2")	10	LF
CORE CONCRETE (14")	5	LF
JOINT SEAL (MR 1/2")	154	LF
JOINT SEAL (MR 1 1/2")	154	LF
BAR REINFORCING STEEL (BRIDGE)	72,000	LB
SLOPE PAVING (PATTERNED CONCRETE)	10	CY
BRIDGE DECK DRAINAGE SYSTEM	3,300	LB
CONCRETE BARRIER (TYPE 60A MODIFIED)	186	LF

DESIGN OVERSIGHT John Fujimoto
8-2-10
SIGN OFF DATE

	BY	CHECKED
DESIGN	P. Zhao	D. Chan
DETAILS	P. Zhao	D. Chan
QUANTITIES	R. Huang	S. Kotamala

PREPARED FOR THE STATE OF CALIFORNIA DEPARTMENT OF TRANSPORTATION

Robert Sennett
PROJECT ENGINEER

BRIDGE NO. 29-0189
POST MILE 28.53

COUNTRY CLUB BLVD UC (WIDEN)
GENERAL NOTES

DESIGN DETAIL SHEET (ENGLISH) (REV. 06-01-09)

ORIGINAL SCALE IN INCHES FOR REDUCED PLANS 0 1 2 3

CU 06240
EA 0G4701

DISREGARD PRINTS BEARING EARLIER REVISION DATES

REVISION DATES (PRELIMINARY STAGE ONLY) 10/16/09 12/04/09 01/25/10 04/23/10 06/11/10 07/28/10

SHEET 2 OF 28

FILE => 29-0189rl-a-itp.dgn

USERNAME => trmikesl DATE PLOTTED => 14-OCT-2010 TIME PLOTTED => 11:03

DIST	COUNTY	ROUTE	POST MILES TOTAL PROJECT	SHEET No	TOTAL SHEETS
10	SJ	5	25.0/32.7	906	1132

REGISTERED CIVIL ENGINEER — DATE 7/28/10

10-11-10
PLANS APPROVAL DATE

REGISTERED PROFESSIONAL ENGINEER — Robert Sennett — No. 3976 — Exp. 12/31/10 — STRUCTURAL — STATE OF CALIFORNIA

The State of California or its officers or agents shall not be responsible for the accuracy or completeness of scanned copies of this plan sheet.

SAN JOAQUIN COUNCIL OF GOVERMENT
555 E. WEBER AVENUE
STOCKTON, CA 95202

MGE ENGINEERING, INC.
7415 GREENHAVEN DRIVE, SUITE 100
SACRAMENTO, CA 95831

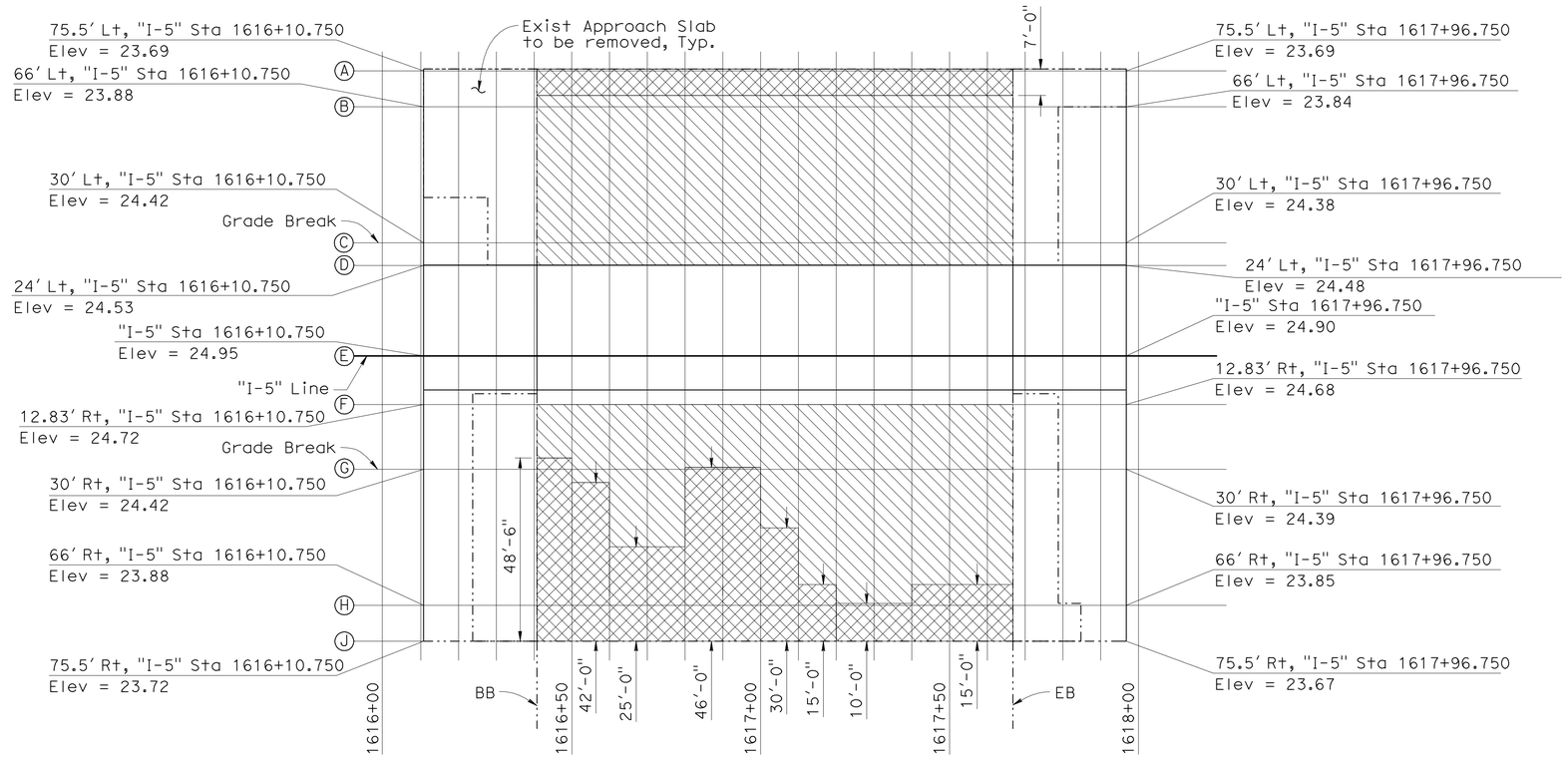

PLAN

1" = 20'

NOTES:

1. Deck grades shown do not include camber and falsework settlement
2. Approach slabs shown are for illustration only
3. See Road Plans for finish grade beyond approach slabs
4. For Remove Concrete Deck Surface at deck drains, see "DECK DRAIN DETAILS" sheet.

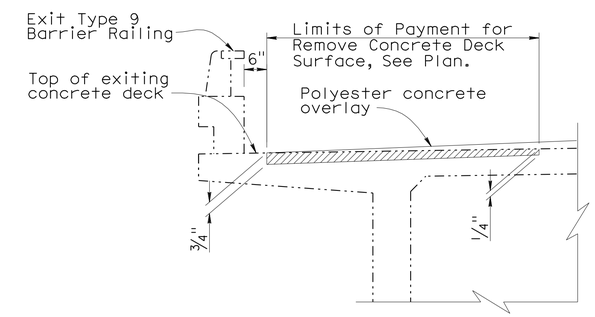

DETAIL 1

NO SCALE

LEGEND

Indicates Limits of Prepare Concrete Bridge Deck Surface and Furnish and Place Polyester Concrete Overlay with Longitudinal Grooving

Indicates Approx Limits of Remove Concrete Deck Surface

Indicates Existing Structure

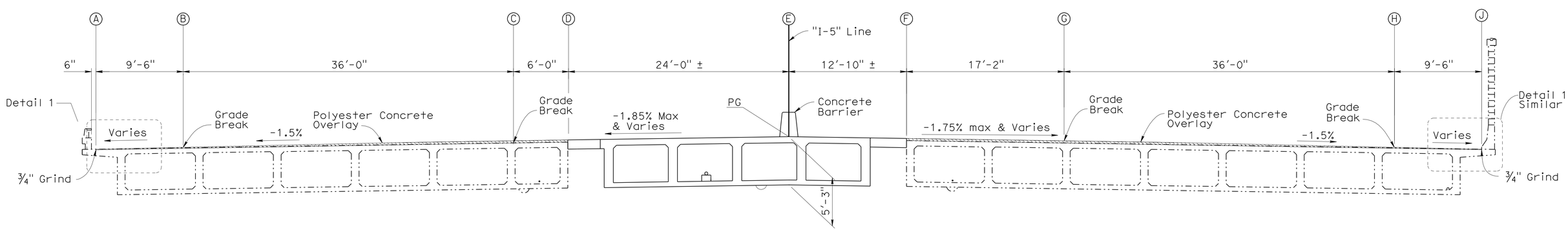

TYPICAL SECTION

NO SCALE

NOTE:
THE CONTRACTOR SHALL VERIFY ALL CONTROLLING FIELD DIMENSIONS BEFORE ORDERING OR FABRICATING ANY MATERIAL.

DESIGN OVERSIGHT — John Fujimoto
8-2-10
SIGN OFF DATE

	BY	CHECKED
DESIGN	P. Zhao	D. Chan
DETAILS	P. Zhao	D. Chan
QUANTITIES	R. Huang	S. Kotamala

PREPARED FOR THE STATE OF CALIFORNIA DEPARTMENT OF TRANSPORTATION

Robert Sennett
PROJECT ENGINEER

BRIDGE NO. 29-0189
POST MILE 28.53

COUNTRY CLUB BLVD UC (WIDEN)
DECK GRADES NO. 1

DESIGN DETAIL SHEET (ENGLISH) (REV. 06-01-09)

ORIGINAL SCALE IN INCHES FOR REDUCED PLANS 0 1 2 3

CU 06240
EA 0G4701

DISREGARD PRINTS BEARING EARLIER REVISION DATES

REVISION DATES (PRELIMINARY STAGE ONLY): 10/16/09 12/04/09 01/13/10 04/23/10 06/11/10 07/28/10

SHEET 3 OF 28

FILE => 29-0189rl-d-dc01.dgn

USERNAME => rmikesi DATE PLOTTED => 14-OCT-2010 TIME PLOTTED => 11:03

DIST	COUNTY	ROUTE	POST MILES TOTAL PROJECT	SHEET No	TOTAL SHEETS
10	SJ	5	25.0/32.7	907	1132

R E Sennett 7/28/10
REGISTERED CIVIL ENGINEER DATE

10-11-10
PLANS APPROVAL DATE

REGISTERED PROFESSIONAL ENGINEER
Robert Sennett
No. 3976
Exp. 12/31/10
STRUCTURAL
STATE OF CALIFORNIA

The State of California or its officers or agents shall not be responsible for the accuracy or completeness of scanned copies of this plan sheet.

SAN JOAQUIN COUNCIL OF GOVERMENT
555 E. WEBER AVENUE
STOCKTON, CA 95202

MGE ENGINEERING, INC.
7415 GREENHAVEN DRIVE, SUITE 100
SACRAMENTO, CA 95831

"I-5" Line Station	Line	Offset from "I-5" Line (ft)	Proposed Top of Deck/Overlay Elev (ft)	Existing Top of Deck Elev (ft)
1616+10	A	75.50 Lt	23.69	N/A
	B	66.00 Lt	23.88	N/A
	C	30.00 Lt	24.42	N/A
	D	24.00 Lt	24.53	N/A
	E	0.00	24.95	N/A
	F	12.83 Rt	24.72	N/A
	G	30.00 Rt	24.42	N/A
	H	66.00 Rt	23.88	N/A
	J	75.50 Rt	23.72	N/A
1616+20	A	75.50 Lt	23.69	N/A
	B	66.00 Lt	23.88	N/A
	C	30.00 Lt	24.42	N/A
	D	24.00 Lt	24.53	N/A
	E	0.00	24.95	N/A
	F	12.83 Rt	24.72	N/A
	G	30.00 Rt	24.42	N/A
	H	66.00 Rt	23.88	N/A
	J	75.50 Rt	23.72	N/A
1616+30	A	75.50 Lt	23.69	N/A
	B	66.00 Lt	23.88	N/A
	C	30.00 Lt	24.42	N/A
	D	24.00 Lt	24.53	N/A
	E	0.00	24.95	N/A
	F	12.83 Rt	24.72	N/A
	G	30.00 Rt	24.42	N/A
	H	66.00 Rt	23.88	N/A
	J	75.50 Rt	23.72	N/A
1616+40	A	75.50 Lt	23.69	23.69
	B	66.00 Lt	23.87	23.80
	C	30.00 Lt	24.41	24.25
	D	24.00 Lt	24.51	24.32
	E	0.00	24.93	N/A
	F	12.83 Rt	24.71	24.67
	G	30.00 Rt	24.41	24.41
	H	66.00 Rt	23.87	23.86
	J	75.50 Rt	23.72	23.72

"I-5" Line Station	Line	Offset from "I-5" Line (ft)	Proposed Top of Deck/Overlay Elev (ft)	Existing Top of Deck Elev (ft)
1616+50	A	75.50 Lt	23.56	23.56
	B	66.00 Lt	23.81	23.70
	C	30.00 Lt	24.35	24.20
	D	24.00 Lt	24.46	24.29
	E	0.00	24.89	N/A
	F	12.83 Rt	24.68	24.58
	G	30.00 Rt	24.38	24.34
	H	66.00 Rt	23.84	23.83
	J	75.50 Rt	23.69	23.69
1616+60	A	75.50 Lt	23.50	23.50
	B	66.00 Lt	23.74	23.64
	C	30.00 Lt	24.28	24.16
	D	24.00 Lt	24.39	24.24
	E	0.00	24.82	N/A
	F	12.83 Rt	24.61	24.54
	G	30.00 Rt	24.32	24.28
	H	66.00 Rt	23.78	23.75
	J	75.50 Rt	23.61	23.61
1616+70	A	75.50 Lt	23.46	23.46
	B	66.00 Lt	23.66	23.59
	C	30.00 Lt	24.20	24.10
	D	24.00 Lt	24.31	24.18
	E	0.00	24.74	N/A
	F	12.83 Rt	24.53	24.45
	G	30.00 Rt	24.25	24.19
	H	66.00 Rt	23.71	23.66
	J	75.50 Rt	23.52	23.52
1616+80	A	75.50 Lt	23.40	23.40
	B	66.00 Lt	23.59	23.53
	C	30.00 Lt	24.13	24.04
	D	24.00 Lt	24.24	24.13
	E	0.00	24.68	N/A
	F	12.83 Rt	24.48	24.41
	G	30.00 Rt	24.20	24.16
	H	66.00 Rt	23.66	23.63
	J	75.50 Rt	23.49	23.49

"I-5" Line Station	Line	Offset from "I-5" Line (ft)	Proposed Top of Deck/Overlay Elev (ft)	Existing Top of Deck Elev (ft)
1616+90	A	75.50 Lt	23.37	23.37
	B	66.00 Lt	23.55	23.50
	C	30.00 Lt	24.09	24.00
	D	24.00 Lt	24.20	24.08
	E	0.00	24.65	N/A
	F	12.83 Rt	24.44	24.38
	G	30.00 Rt	24.17	24.13
	H	66.00 Rt	23.63	23.60
	J	75.50 Rt	23.46	23.46
1617+00.00	A	75.50 Lt	23.36	23.36
	B	66.00 Lt	23.53	23.49
	C	30.00 Lt	24.07	23.98
	D	24.00 Lt	24.18	24.06
	E	0.00	24.63	N/A
	F	12.83 Rt	24.42	24.36
	G	30.00 Rt	24.15	24.11
	H	66.00 Rt	23.61	23.59
	J	75.50 Rt	23.45	23.45

NOTE:
THE CONTRACTOR SHALL VERIFY ALL CONTROLLING FIELD DIMENSIONS BEFORE ORDERING OR FABRICATING ANY MATERIAL.

NOTE: Exist Deck Elevations are Approximate.

John Fujimoto
DESIGN OVERSIGHT John Fujimoto
8-2-10
SIGN OFF DATE

	BY	CHECKED
DESIGN	P. Zhao	D. Chan
DETAILS	P. Zhao	D. Chan
QUANTITIES	R. Huang	S. Kotamala

PREPARED FOR THE STATE OF CALIFORNIA DEPARTMENT OF TRANSPORTATION

Robert Sennett
PROJECT ENGINEER

BRIDGE NO. 29-0189
POST MILE 28.53

COUNTRY CLUB BLVD UC (WIDEN)
DECK GRADES NO. 2

DESIGN DETAIL SHEET (ENGLISH) (REV. 06-01-09)

ORIGINAL SCALE IN INCHES FOR REDUCED PLANS 0 1 2 3

CU 06240
EA 0G4701

DISREGARD PRINTS BEARING EARLIER REVISION DATES
REVISION DATES (PRELIMINARY STAGE ONLY) 10/16/09 12/04/09 01/15/10 04/23/10 06/17/10 07/28/10

SHEET 4 OF 28

FILE => 29-0189rl-d-dc02.dgn

USERNAME => trmikes1 DATE PLOTTED => 14-OCT-2010 TIME PLOTTED => 11:04

DIST	COUNTY	ROUTE	POST MILES TOTAL PROJECT	SHEET No	TOTAL SHEETS
10	SJ	5	25.0/32.7	908	1132

REGISTERED CIVIL ENGINEER 7/28/10 DATE

10-11-10
PLANS APPROVAL DATE

REGISTERED PROFESSIONAL ENGINEER Robert Sennett No. 3976 Exp. 12/31/10 STRUCTURAL STATE OF CALIFORNIA

The State of California or its officers or agents shall not be responsible for the accuracy or completeness of scanned copies of this plan sheet.

SAN JOAQUIN COUNCIL OF GOVERMENT
555 E. WEBER AVENUE
STOCKTON, CA 95202

MGE ENGINEERING, INC.
7415 GREENHAVEN DRIVE, SUITE 100
SACRAMENTO, CA 95831

"I-5" Line Station	Line	Offset from "I-5" Line (ft)	Proposed Top of Deck/Overlay Elev (ft)	Existing Top of Deck Elev (ft)
1617+10.00	A	75.50 Lt	23.37	23.37
	B	66.00 Lt	23.54	23.49
	C	30.00 Lt	24.08	23.95
	D	24.00 Lt	24.19	24.03
	E	0.00	24.63	N/A
	F	12.83 Rt	24.43	24.34
	G	30.00 Rt	24.15	24.09
	H	66.00 Rt	23.61	23.57
	J	75.50 Rt	23.43	23.43
1617+20.00	A	75.50 Lt	23.37	23.37
	B	66.00 Lt	23.56	23.50
	C	30.00 Lt	24.10	23.99
	D	24.00 Lt	24.21	24.08
	E	0.00	24.65	N/A
	F	12.83 Rt	24.45	24.34
	G	30.00 Rt	24.17	24.10
	H	66.00 Rt	23.63	23.61
	J	75.50 Rt	23.47	23.47
1617+30.00	A	75.50 Lt	23.42	23.42
	B	66.00 Lt	23.60	23.55
	C	30.00 Lt	24.14	24.04
	D	24.00 Lt	24.25	24.12
	E	0.00	24.69	N/A
	F	12.83 Rt	24.49	24.37
	G	30.00 Rt	24.21	24.12
	H	66.00 Rt	23.67	23.61
	J	75.50 Rt	23.48	23.48
1617+40.00	A	75.50 Lt	23.48	23.48
	B	66.00 Lt	23.67	23.60
	C	30.00 Lt	24.21	24.07
	D	24.00 Lt	24.32	24.15
	E	0.00	24.75	N/A
	F	12.83 Rt	24.54	24.43
	G	30.00 Rt	24.26	24.19
	H	66.00 Rt	23.72	23.67
	J	75.50 Rt	23.53	23.53

"I-5" Line Station	Line	Offset from "I-5" Line (ft)	Proposed Top of Deck/Overlay Elev (ft)	Existing Top of Deck Elev (ft)
1617+50.00	A	75.50 Lt	23.56	23.56
	B	66.00 Lt	23.75	23.68
	C	30.00 Lt	24.29	24.14
	D	24.00 Lt	24.40	24.21
	E	0.00	24.83	N/A
	F	12.83 Rt	24.62	24.52
	G	30.00 Rt	24.34	24.27
	H	66.00 Rt	23.80	23.76
	J	75.50 Rt	23.63	23.63
1617+60.00	A	75.50 Lt	23.64	23.64
	B	66.00 Lt	23.80	24.75
	C	30.00 Lt	24.34	24.17
	D	24.00 Lt	24.45	24.24
	E	0.00	24.88	N/A
	F	12.83 Rt	24.67	24.56
	G	30.00 Rt	24.39	24.32
	H	66.00 Rt	23.85	23.82
	J	75.50 Rt	23.68	23.68
1617+70.00	A	75.50 Lt	23.69	N/A
	B	66.00 Lt	23.84	N/A
	C	30.00 Lt	24.38	N/A
	D	24.00 Lt	24.49	N/A
	E	0.00	24.90	N/A
	F	12.83 Rt	24.68	N/A
	G	30.00 Rt	24.40	N/A
	H	66.00 Rt	23.86	N/A
	J	75.50 Rt	23.67	N/A
1617+80.00	A	75.50 Lt	23.69	N/A
	B	66.00 Lt	23.84	N/A
	C	30.00 Lt	24.38	N/A
	D	24.00 Lt	24.48	N/A
	E	0.00	24.90	N/A
	F	12.83 Rt	24.69	N/A
	G	30.00 Rt	24.41	N/A
	H	66.00 Rt	23.87	N/A
	J	75.50 Rt	23.67	N/A

"I-5" Line Station	Line	Offset from "I-5" Line (ft)	Proposed Top of Deck/Overlay Elev (ft)	Existing Top of Deck Elev (ft)
1617+90.00	A	75.50 Lt	23.69	N/A
	B	66.00 Lt	23.84	N/A
	C	30.00 Lt	24.38	N/A
	D	24.00 Lt	24.48	N/A
	E	0.00	24.90	N/A
	F	12.83 Rt	24.69	N/A
	G	30.00 Rt	24.41	N/A
	H	66.00 Rt	23.87	N/A
	J	75.50 Rt	23.67	N/A
1618+00.00	A	75.50 Lt	23.69	N/A
	B	66.00 Lt	23.84	N/A
	C	30.00 Lt	24.38	N/A
	D	24.00 Lt	24.48	N/A
	E	0.00	24.90	N/A
	F	12.83 Rt	24.69	N/A
	G	30.00 Rt	24.41	N/A
	H	66.00 Rt	23.87	N/A
	J	75.50 Rt	23.67	N/A

NOTE:
THE CONTRACTOR SHALL VERIFY ALL CONTROLLING FIELD DIMENSIONS BEFORE ORDERING OR FABRICATING ANY MATERIAL.

NOTE: Exist Deck Elevations are Approximate

DESIGN OVERSIGHT John Fujimoto
8-2-10
SIGN OFF DATE

	BY	CHECKED
DESIGN	P. Zhao	D. Chan
DETAILS	P. Zhao	D. Chan
QUANTITIES	R. Huang	S. Kotamala

PREPARED FOR THE STATE OF CALIFORNIA DEPARTMENT OF TRANSPORTATION

Robert Sennett
PROJECT ENGINEER

BRIDGE NO. 29-0189
POST MILE 28.53

COUNTRY CLUB BLVD UC (WIDEN)
DECK GRADES NO. 3

DESIGN DETAIL SHEET (ENGLISH) (REV. 06-01-09)

ORIGINAL SCALE IN INCHES FOR REDUCED PLANS 0 1 2 3

CU 06240
EA 0G4701

DISREGARD PRINTS BEARING EARLIER REVISION DATES

REVISION DATES (PRELIMINARY STAGE ONLY) 10/16/09 12/04/09 01/13/10 04/23/10 06/17/10 07/28/10

SHEET 5 OF 28

FILE => 29-0189rl-d-dc03.dgn

USERNAME => trmikes1 DATE PLOTTED => 14-OCT-2010 TIME PLOTTED => 11:04

DIST	COUNTY	ROUTE	POST MILES TOTAL PROJECT	SHEET No	TOTAL SHEETS
10	SJ	5	25.0/32.7	909	1132

REGISTERED CIVIL ENGINEER — DATE 7/28/10

10-11-10
PLANS APPROVAL DATE

REGISTERED PROFESSIONAL ENGINEER — Robert Sennett — No. 3976 — Exp. 12/31/10 — STRUCTURAL — STATE OF CALIFORNIA

The State of California or its officers or agents shall not be responsible for the accuracy or completeness of scanned copies of this plan sheet.

SAN JOAQUIN COUNCIL OF GOVERMENT
555 E. WEBER AVENUE
STOCKTON, CA 95202

MGE ENGINEERING, INC.
7415 GREENHAVEN DRIVE, SUITE 100
SACRAMENTO, CA 95831

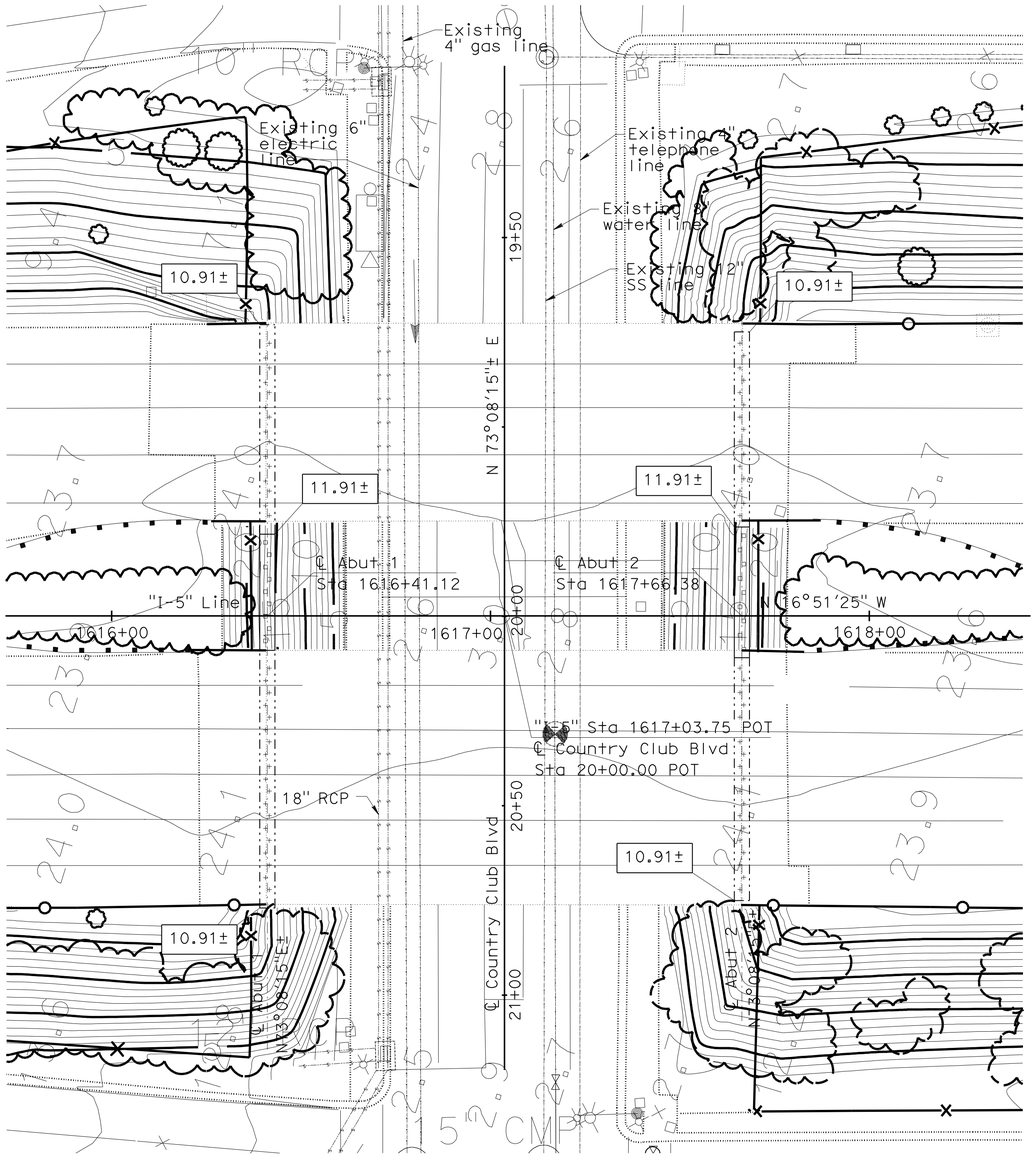

PLAN

1" = 20'

PILE DATA TABLE

Location	Pile Type	Nominal Resistance, (kips)		Design Tip Elevations (ft)	Specified Tip Elevations (ft)	Nominal Driving Resistance Required (kips)
		Compression	Tension			
Abut 1	Class 140 (Mod) Alternative "X"	270	0	-50.0 (a) -7.0 (b)	-50.0	270
Abut 2	Class 140 (Mod) Alternative "X"	270	0	-45.5 (a) -7.0 (b)	-50.0	270

NOTE: Design tip elevations are controlled by (a) Compression, (b) Lateral Load.

NOTES:

1 — Indicates Existing Footing
2 — Indicates New Footing
3 + Indicates Existing Pile
4 □ Indicates New Pile
5 X.xx Indicates Bottom of Footing Elevation
6 23.7 x Indicates spot elevation, Typ
7 Utilities shown are for illustrative purposes only, verify with Road Plans

BENCH MARK AND DATUM

Monument	Coordinates		Elevation	Description/Location
	Northing	Easting		
129M	2174534.71	6320890.42	23.99	Magentic Nail
119M	2174842.37	6320760.42	23.43	Iron Pipe w/ "MVE CONTROL" Cap

NOTE:
There is a vertical datum difference between the project datum (NAVD 88) and the as-built datum (NGVD 29). The following conversion was used in design:
Datum Conversion: Elev (NAVD 88) = Elev (NGVD 29) + 1.41'

GEOTECHNICAL PROFESSIONAL APPROVAL DATE 1/15/10

NOTE:
THE CONTRACTOR SHALL VERIFY ALL CONTROLLING FIELD DIMENSIONS BEFORE ORDERING OR FABRICATING ANY MATERIAL.

DESIGN OVERSIGHT John Fujimoto
8-2-10
SIGN OFF DATE

SCALE: 1" = 20'	VERT.DATUM NAVD88	HORZ.DATUM CCS83, (2007.00), ZONE 3	
PHOTOGRAMMETRY AS OF: (N/A) FIELD SURVEYS	ALIGNMENT TIES APPROVED GPS REPORT DATED 7-6-09		
SURVEYED BY RYAN VANCE	DRAFTED BY MIKE KORDAZAKIS		
FIELD CHECKED BY JEFF CISSELL	CHECKED BY KEVIN LANG		

	BY	CHECKED
DESIGN	P. Zhao	D. Chan
DETAILS	P. Zhao	D. Chan
QUANTITIES	R. Huang	S. Kotamala

PREPARED FOR THE STATE OF CALIFORNIA DEPARTMENT OF TRANSPORTATION

Robert Sennett
PROJECT ENGINEER

BRIDGE NO. 29-0189R/L
POST MILE 28.53

COUNTRY CLUB BLVD UC (WIDEN)
FOUNDATION PLAN

FOUNDATION PLAN SHEET (ENGLISH) (REV. 06-01-09)

ORIGINAL SCALE IN INCHES FOR REDUCED PLANS 0 1 2 3

CU 06240
EA 0G4701

DISREGARD PRINTS BEARING EARLIER REVISION DATES

REVISION DATES (PRELIMINARY STAGE ONLY) 06/01/09 10/16/09 12/04/09 01/15/10 04/23/10 06/11/10 07/28/10

SHEET 6 OF 28

FILE => 29-0189rl-e-fp101.dgn

USERNAME => trmikes1 DATE PLOTTED => 14-OCT-2010 TIME PLOTTED => 11:04

DIST	COUNTY	ROUTE	POST MILES TOTAL PROJECT	SHEET No	TOTAL SHEETS
10	SJ	5	25.0/32.7	910	1132

REGISTERED CIVIL ENGINEER — DATE 7/28/10

PLANS APPROVAL DATE 10-11-10

REGISTERED PROFESSIONAL ENGINEER — Robert Sennett — No. 3976 — Exp. 12/31/10 — STRUCTURAL — STATE OF CALIFORNIA

The State of California or its officers or agents shall not be responsible for the accuracy or completeness of scanned copies of this plan sheet.

SAN JOAQUIN COUNCIL OF GOVERMENT
555 E. WEBER AVENUE
STOCKTON, CA 95202

MGE ENGINEERING, INC.
7415 GREENHAVEN DRIVE, SUITE 100
SACRAMENTO, CA 95831

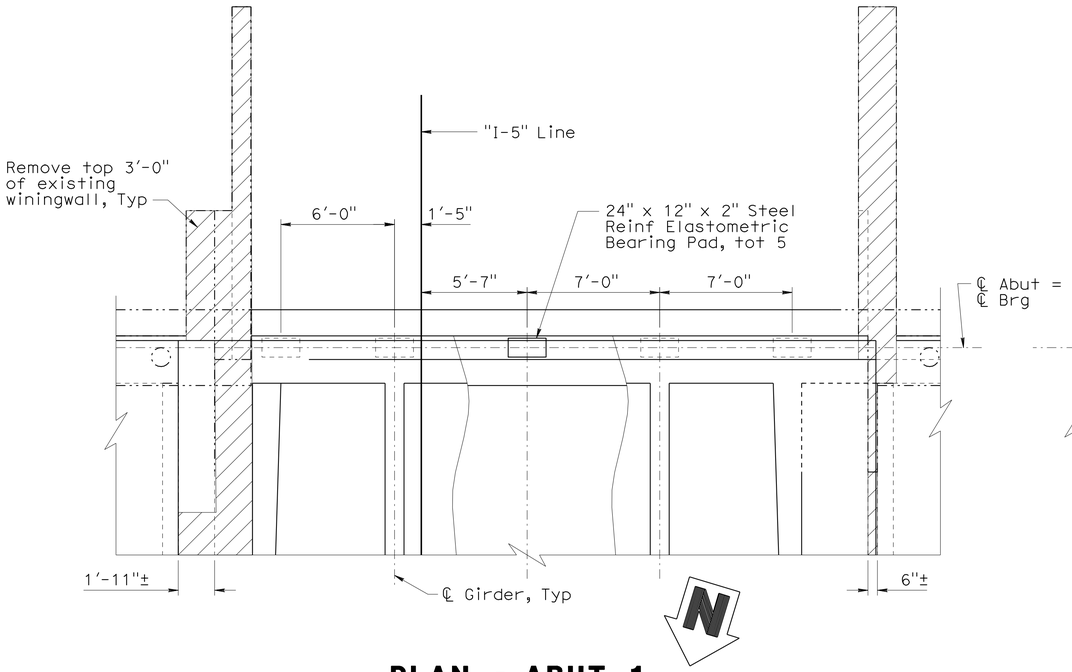

PLAN - ABUT 1

1/4" = 1'-0"

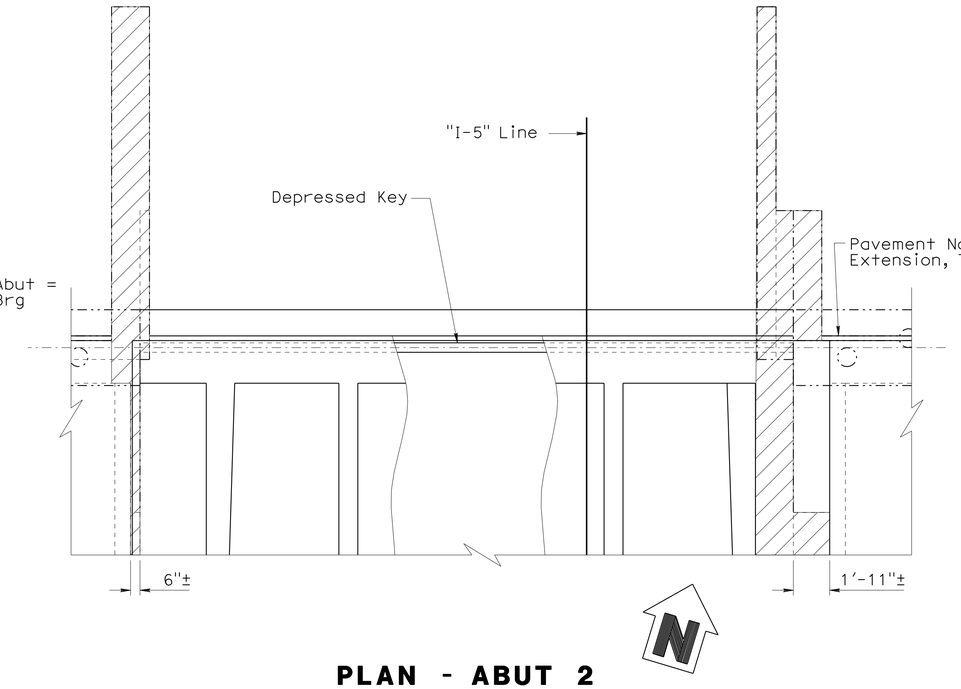

PLAN - ABUT 2

1/4" = 1'-0"

NOTES:

1. For Sections A-A, B-B & Bearing Pad Details, see "ABUTMENT DETAILS NO. 1" sheet.
2. For Pile Layout, see "ABUTMENT DETAILS NO. 2" sheet.
3. For Section C-C, see "ABUTMENT DETAILS NO. 3" sheet; for Section D-D, see "ABUTMENT DETAILS NO.4" sheet.

LEGEND

- Bridge Removal (Portion)
- Deck/Diaphragm Closure
- Polyester Concrete Overlay
- Indicates Existing Structure

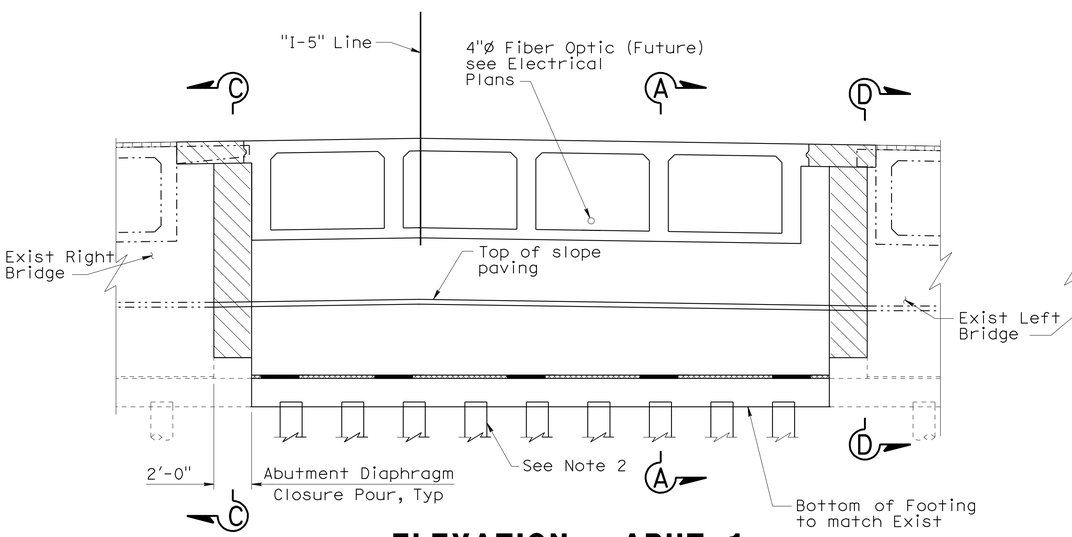

ELEVATION - ABUT 1

1/4" = 1'-0"

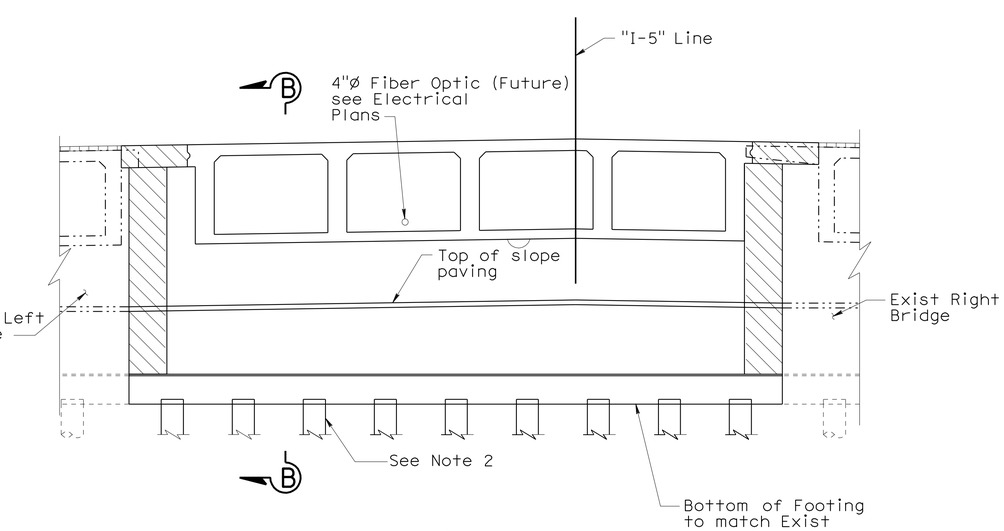

ELEVATION - ABUT 2

1/4" = 1'-0"

NOTE:
THE CONTRACTOR SHALL VERIFY ALL CONTROLLING FIELD DIMENSIONS BEFORE ORDERING OR FABRICATING ANY MATERIAL.

DESIGN OVERSIGHT — John Fujimoto — 8-2-10 — SIGN OFF DATE

	BY	CHECKED
DESIGN	P. Zhao	D. Chan
DETAILS	P. Zhao	D. Chan
QUANTITIES	R. Huang	S. Kotamala

PREPARED FOR THE STATE OF CALIFORNIA DEPARTMENT OF TRANSPORTATION

Robert Sennett — PROJECT ENGINEER

BRIDGE NO. 29-0189
POST MILE 28.53

COUNTRY CLUB BLVD UC (WIDEN)

ABUTMENT LAYOUT

DESIGN DETAIL SHEET (ENGLISH) (REV. 06-01-09)

ORIGINAL SCALE IN INCHES FOR REDUCED PLANS 0 1 2 3

CU 06240
EA 0G4701

DISREGARD PRINTS BEARING EARLIER REVISION DATES

REVISION DATES (PRELIMINARY STAGE ONLY): 10/16/09 12/04/09 01/25/10 04/23/10 06/11/10 07/28/10

SHEET 7 OF 28

FILE => 29-0189rl-f-a01_lo1.dgn

USERNAME => trlenard DATE PLOTTED => 18-OCT-2010 TIME PLOTTED => 08:59

DIST	COUNTY	ROUTE	POST MILES TOTAL PROJECT	SHEET No	TOTAL SHEETS
10	SJ	5	25.0/32.7	911	1132

R E Sennett 7/28/10
REGISTERED CIVIL ENGINEER DATE

10-11-10
PLANS APPROVAL DATE

REGISTERED PROFESSIONAL ENGINEER Robert Sennett No. 3976 Exp. 12/31/10 STRUCTURAL STATE OF CALIFORNIA

The State of California or its officers or agents shall not be responsible for the accuracy or completeness of scanned copies of this plan sheet.

SAN JOAQUIN COUNCIL OF GOVERMENT
555 E. WEBER AVENUE
STOCKTON, CA 95202

MGE ENGINEERING, INC.
7415 GREENHAVEN DRIVE, SUITE 100
SACRAMENTO, CA 95831

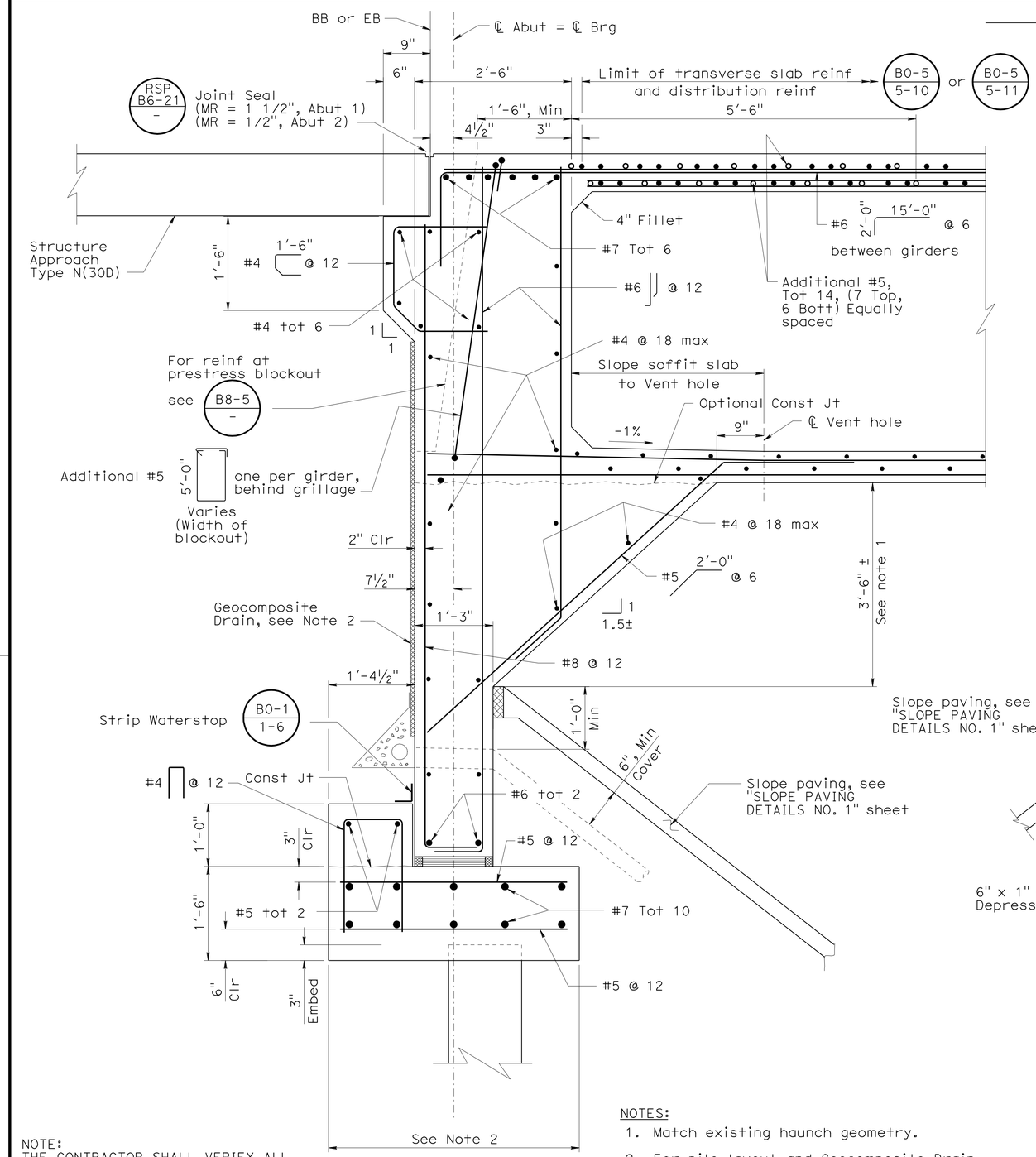

SECTION A-A

1" = 1'-0"

NOTE:
THE CONTRACTOR SHALL VERIFY ALL CONTROLLING FIELD DIMENSIONS BEFORE ORDERING OR FABRICATING ANY MATERIAL.

NOTES:

1. Match existing haunch geometry.
2. For pile layout and Geocomposite Drain details, see "ABUTMENT DETAILS NO. 2" sheet.

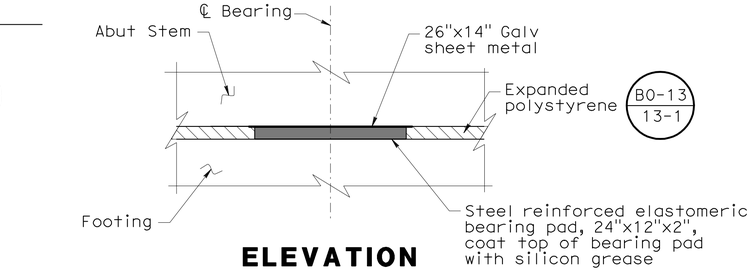

ELEVATION

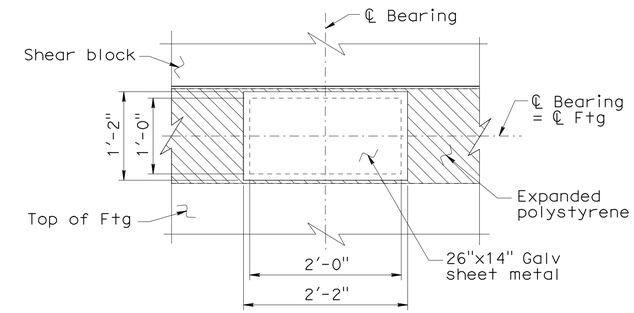

PLAN

BEARING PAD DETAILS

1" = 1'-0"

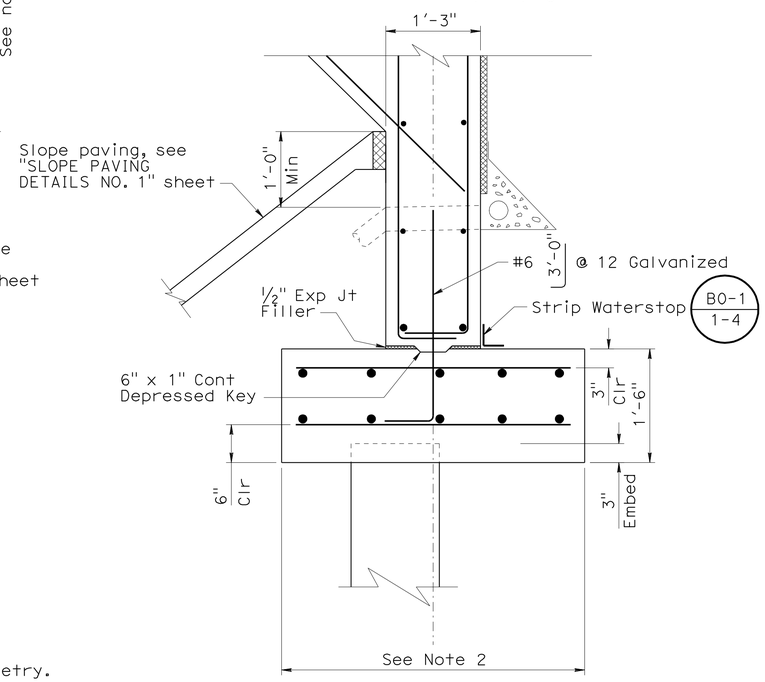

NOTE: For details not shown, see "Section A-A"

SECTION B-B

1" = 1'-0"

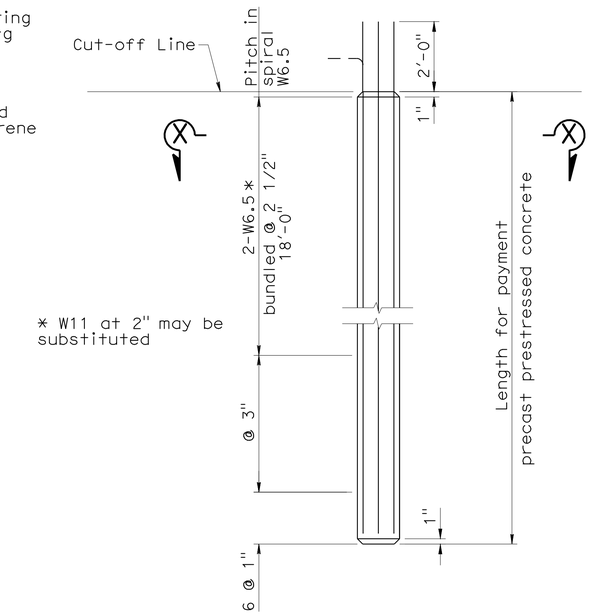

* W11 at 2" may be substituted

ALTERNATIVE "X"

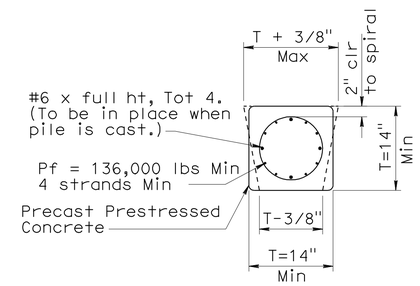

SECTION X-X

CLASS 140 MOD PILE DETAIL

NO SCALE

John Fujimoto
DESIGN OVERSIGHT John Fujimoto
8-2-10
SIGN OFF DATE

	BY	CHECKED
DESIGN	P. Zhao	D. Chan
DETAILS	P. Zhao	D. Chan
QUANTITIES	R. Huang	S. Kotamala

PREPARED FOR THE STATE OF CALIFORNIA DEPARTMENT OF TRANSPORTATION

Robert Sennett
PROJECT ENGINEER

BRIDGE NO. 29-0189
POST MILE 28.53

COUNTRY CLUB BLVD UC (WIDEN)

ABUTMENT DETAILS NO. 1

DESIGN DETAIL SHEET (ENGLISH) (REV. 06-01-09)

ORIGINAL SCALE IN INCHES FOR REDUCED PLANS 0 1 2 3

CU 06240
EA 0G4701

DISREGARD PRINTS BEARING EARLIER REVISION DATES

REVISION DATES (PRELIMINARY STAGE ONLY) 10/15/09 12/04/09 01/13/10 04/23/10 06/11/10 07/28/10

SHEET 8 OF 28

FILE => 29-0189r1-f-a01dt01.dgn

USERNAME => trmikesi DATE PLOTTED => 14-OCT-2010 TIME PLOTTED => 11:04

DIST	COUNTY	ROUTE	POST MILES TOTAL PROJECT	SHEET No	TOTAL SHEETS
10	SJ	5	25.0/32.7	912	1132

REGISTERED CIVIL ENGINEER — DATE 7/28/10

PLANS APPROVAL DATE 10-11-10

REGISTERED PROFESSIONAL ENGINEER — Robert Sennett No. 3976 Exp. 12/31/10 STRUCTURAL — STATE OF CALIFORNIA

The State of California or its officers or agents shall not be responsible for the accuracy or completeness of scanned copies of this plan sheet.

SAN JOAQUIN COUNCIL OF GOVERMENT
555 E. WEBER AVENUE
STOCKTON, CA 95202

MGE ENGINEERING, INC.
7415 GREENHAVEN DRIVE, SUITE 100
SACRAMENTO, CA 95831

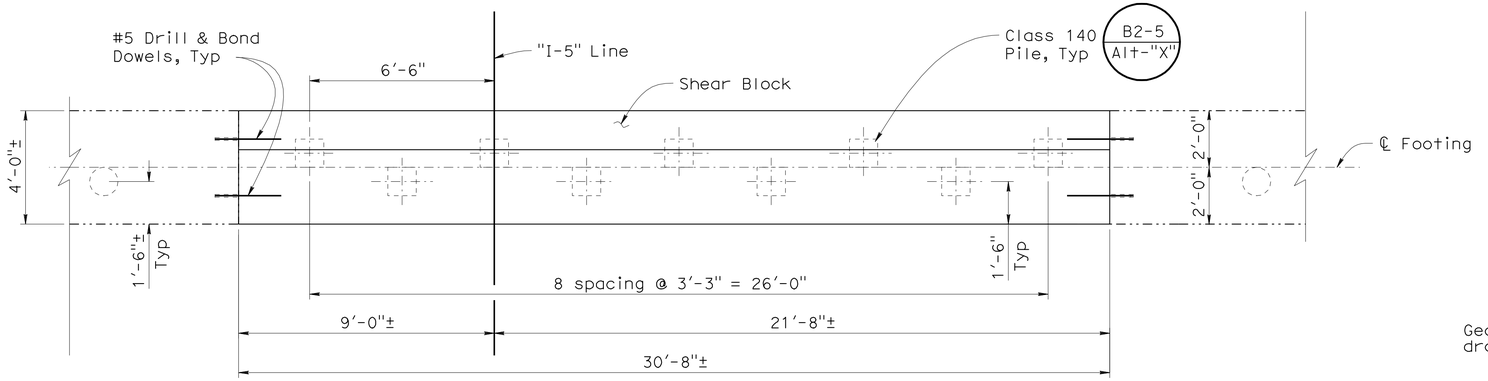

NOTE: Place Shear Block after stressing.

PILE LAYOUT - ABUT 1

3/8" = 1'-0"

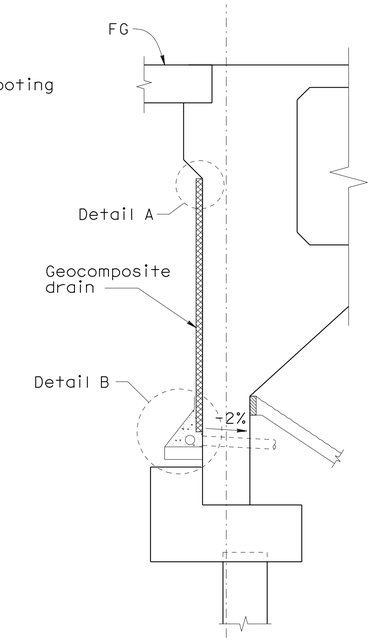

ABUTMENT SECTION

1/2" = 1'-0"

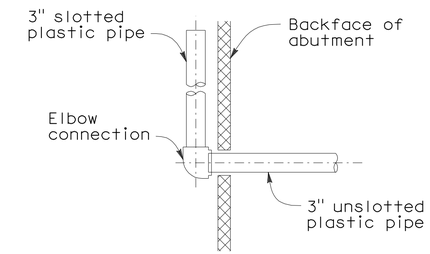

SECTION M-M

1" = 1'-0"

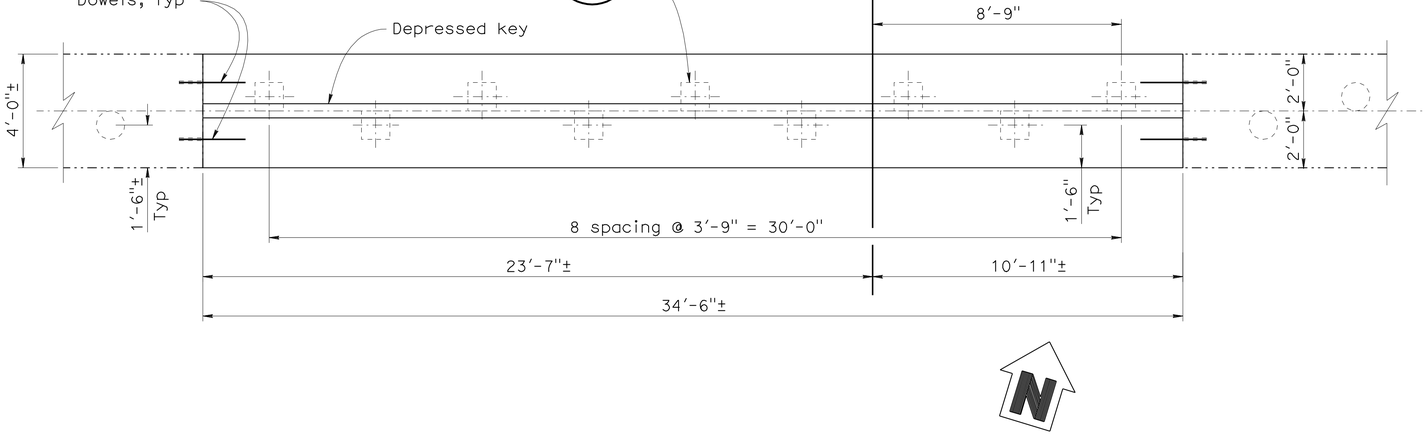

PILE LAYOUT - ABUT 2

3/8" = 1'-0"

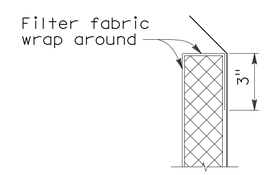

DETAIL A

No Scale

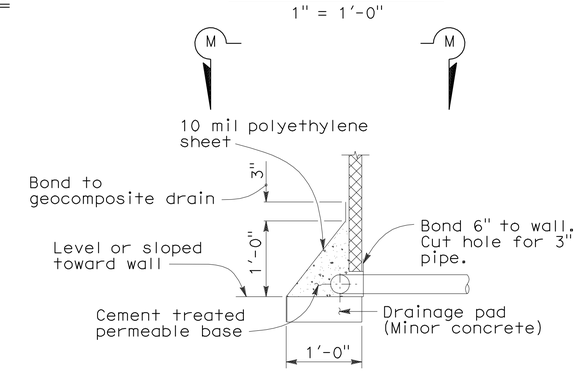

DETAIL B

1" = 1'-0"

GEOCOMPOSITE DRAIN

LEGEND:

-·-·-·-·- Indicates Existing Structure

NOTE:
THE CONTRACTOR SHALL VERIFY ALL CONTROLLING FIELD DIMENSIONS BEFORE ORDERING OR FABRICATING ANY MATERIAL.

DESIGN OVERSIGHT — John Fujimoto — 8-2-10 SIGN OFF DATE

	BY	CHECKED
DESIGN	P. Zhao	D. Chan
DETAILS	P. Zhao	D. Chan
QUANTITIES	R. Huang	S. Kotamala

PREPARED FOR THE STATE OF CALIFORNIA DEPARTMENT OF TRANSPORTATION

Robert Sennett — PROJECT ENGINEER

BRIDGE NO. 29-0189 — POST MILE 28.53

COUNTRY CLUB BLVD UC (WIDEN)
ABUTMENT DETAILS NO. 2

DESIGN DETAIL SHEET (ENGLISH) (REV. 06-01-09)

ORIGINAL SCALE IN INCHES FOR REDUCED PLANS 0 1 2 3

CU 06240
EA 0G4701

DISREGARD PRINTS BEARING EARLIER REVISION DATES

REVISION DATES (PRELIMINARY STAGE ONLY): 10/16/09 12/04/09 01/12/10 04/23/10 06/11/10 07/28/10

SHEET 9 OF 28

FILE => 29-0189rl-f-a01dt02.dgn

USERNAME => trmikes1 DATE PLOTTED => 14-OCT-2010 TIME PLOTTED => 11:04

DIST	COUNTY	ROUTE	POST MILES TOTAL PROJECT	SHEET No	TOTAL SHEETS
10	SJ	5	25.0/32.7	913	1132

R E Sennett 7/28/10
REGISTERED CIVIL ENGINEER DATE

10-11-10
PLANS APPROVAL DATE

REGISTERED PROFESSIONAL ENGINEER Robert Sennett No. 3976 Exp. 12/31/10 STRUCTURAL STATE OF CALIFORNIA

The State of California or its officers or agents shall not be responsible for the accuracy or completeness of scanned copies of this plan sheet.

SAN JOAQUIN COUNCIL OF GOVERMENT
555 E. WEBER AVENUE
STOCKTON, CA 95202

MGE ENGINEERING, INC.
7415 GREENHAVEN DRIVE, SUITE 100
SACRAMENTO, CA 95831

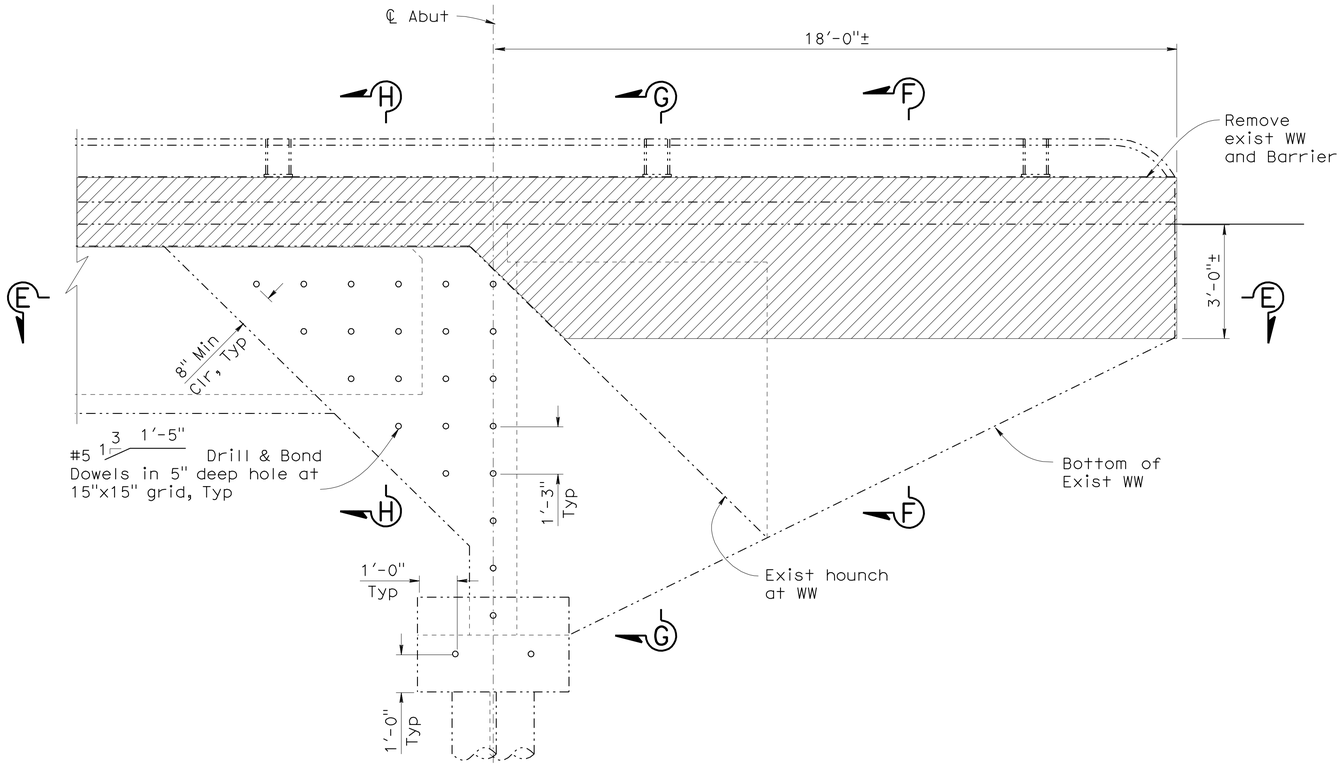

SECTION C-C

½" = 1'-0"

Abut 1 shown, Abut 2 similar

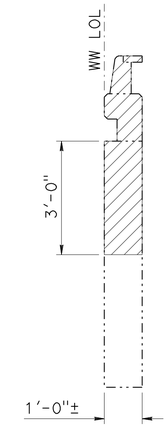

SECTION F-F

½" = 1'-0"

LEGEND:

Bridge Removal (Portion)

Indicates Existing Structure

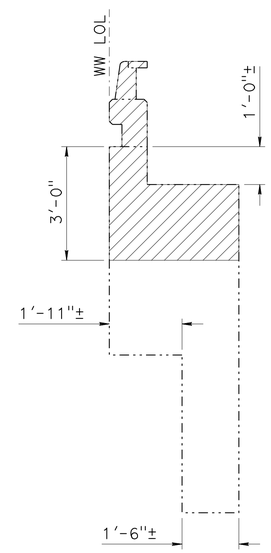

SECTION G-G

½" = 1'-0"

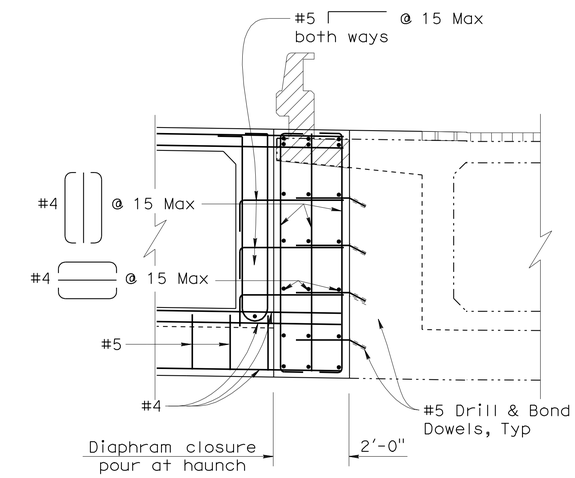

SECTION H-H

½" = 1'-0"

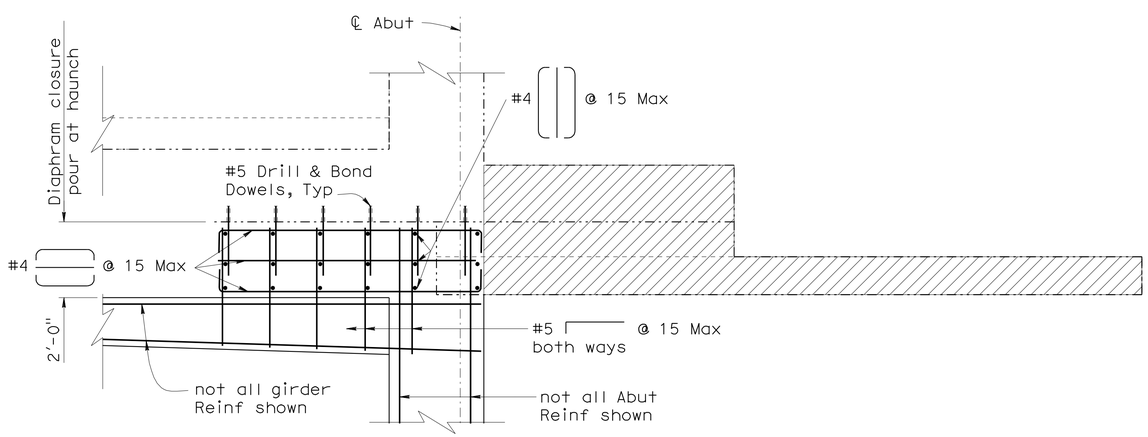

SECTION E-E

½" = 1'-0"

NOTE:
THE CONTRACTOR SHALL VERIFY ALL CONTROLLING FIELD DIMENSIONS BEFORE ORDERING OR FABRICATING ANY MATERIAL.

John Fujimoto
DESIGN OVERSIGHT John Fujimoto
8-2-10
SIGN OFF DATE

	BY	CHECKED
DESIGN	P. Zhao	D. Chan
DETAILS	P. Zhao	D. Chan
QUANTITIES	R. Huang	S. Kotamala

PREPARED FOR THE STATE OF CALIFORNIA DEPARTMENT OF TRANSPORTATION

Robert Sennett
PROJECT ENGINEER

BRIDGE NO. 29-0189
POST MILE 28.53

COUNTRY CLUB BLVD UC (WIDEN)
ABUTMENT DETAILS NO. 3

DESIGN DETAIL SHEET (ENGLISH) (REV. 06-01-09)

ORIGINAL SCALE IN INCHES FOR REDUCED PLANS 0 1 2 3

CU 06240
EA 0G4701

DISREGARD PRINTS BEARING EARLIER REVISION DATES

REVISION DATES (PRELIMINARY STAGE ONLY) 10/16/09 12/04/09 01/13/10 04/23/10 06/14/10 07/28/10

SHEET 10 OF 28

FILE => 29-0189rl-f-a01dt03.dgn

USERNAME => frmartin DATE PLOTTED => 13-OCT-2010 TIME PLOTTED => 13:51

DIST	COUNTY	ROUTE	POST MILES TOTAL PROJECT	SHEET No	TOTAL SHEETS
10	SJ	5	25.0/32.7	914	1132

R E Sennett 7/28/10
REGISTERED CIVIL ENGINEER DATE

10-11-10
PLANS APPROVAL DATE

REGISTERED PROFESSIONAL ENGINEER
Robert Sennett
No. 3976
Exp. 12/31/10
STRUCTURAL
STATE OF CALIFORNIA

The State of California or its officers or agents shall not be responsible for the accuracy or completeness of scanned copies of this plan sheet.

SAN JOAQUIN COUNCIL OF GOVERMENT
555 E. WEBER AVENUE
STOCKTON, CA 95202

MGE ENGINEERING, INC.
7415 GREENHAVEN DRIVE, SUITE 100
SACRAMENTO, CA 95831

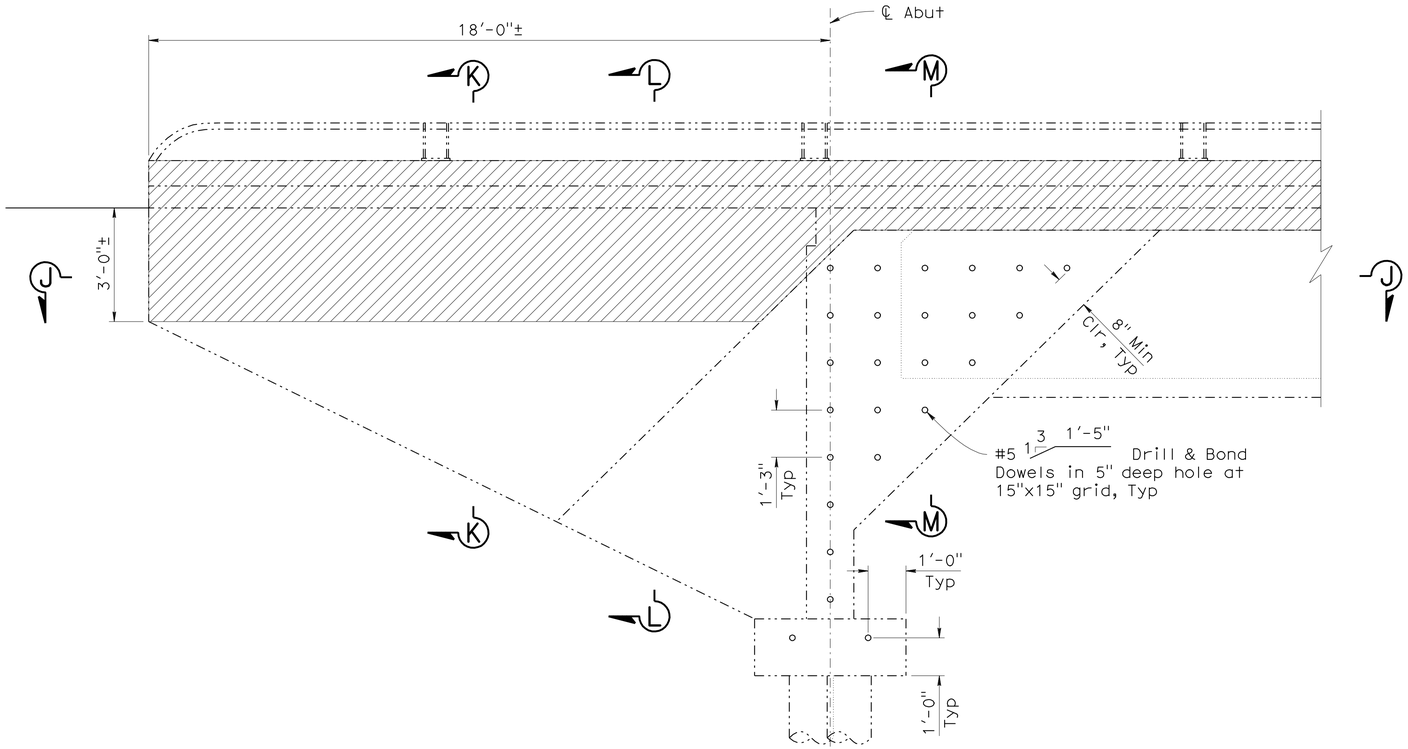

SECTION D-D
½" = 1'-0"

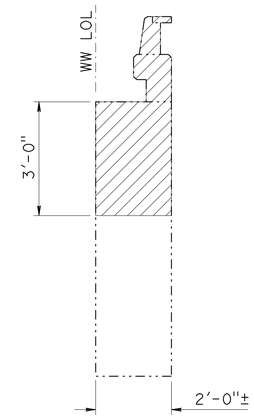

SECTION K-K
½" = 1'-0"

LEGEND:

Bridge Removal (Portion)

Indicates Existing Structure

Abut 1 shown
Abut 2 similar

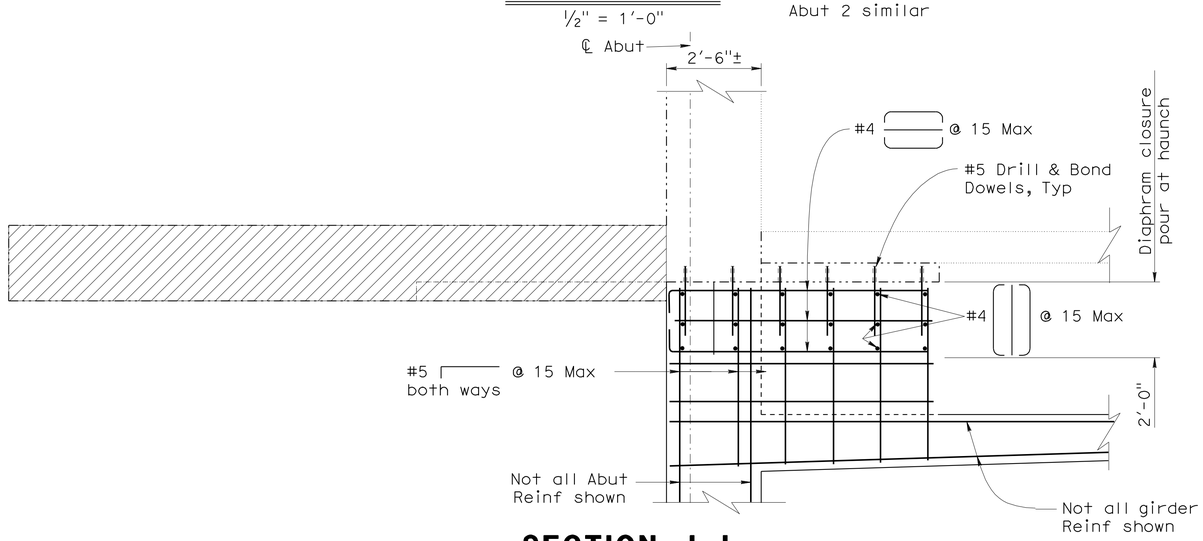

SECTION J-J
½" = 1'-0"

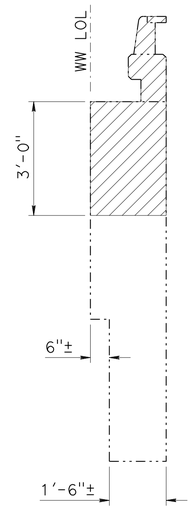

SECTION L-L
½" = 1'-0"

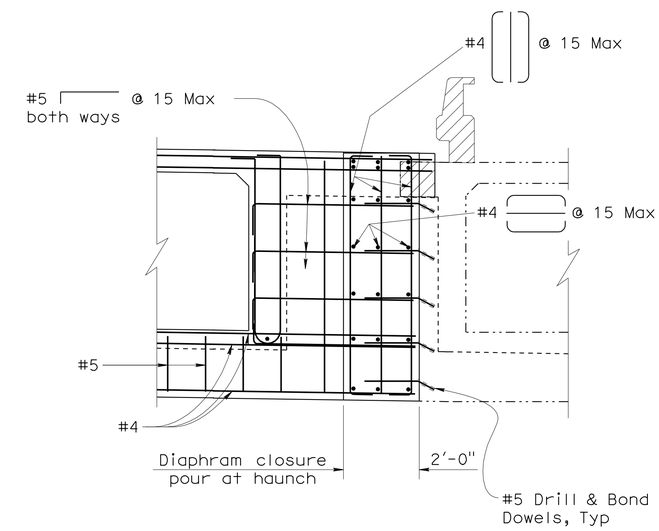

SECTION M-M
½" = 1'-0"

NOTE:
THE CONTRACTOR SHALL VERIFY ALL CONTROLLING FIELD DIMENSIONS BEFORE ORDERING OR FABRICATING ANY MATERIAL.

John Fujimoto
DESIGN OVERSIGHT John Fujimoto
8-2-10
SIGN OFF DATE

	BY	CHECKED
DESIGN	P. Zhao	D. Chan
DETAILS	P. Zhao	D. Chan
QUANTITIES	R. Huang	S. Kotamala

PREPARED FOR THE
STATE OF CALIFORNIA
DEPARTMENT OF TRANSPORTATION

Robert Sennett
PROJECT ENGINEER

BRIDGE NO. 29-0189
POST MILE 28.53

COUNTRY CLUB BLVD UC (WIDEN)
ABUTMENT DETAILS NO. 4

DESIGN DETAIL SHEET (ENGLISH) (REV. 06-01-09)

ORIGINAL SCALE IN INCHES FOR REDUCED PLANS 0 1 2 3

CU 06240
EA 0G4701

DISREGARD PRINTS BEARING EARLIER REVISION DATES
REVISION DATES (PRELIMINARY STAGE ONLY) 10/14/09 12/04/09 01/15/10 04/23/10 06/17/10 07/28/10

SHEET 11 OF 28

FILE => 29-0189rl-f-a01dt04.dgn

USERNAME => trmartin DATE PLOTTED => 13-OCT-2010 TIME PLOTTED => 13:51

DIST	COUNTY	ROUTE	POST MILES TOTAL PROJECT	SHEET No	TOTAL SHEETS
10	SJ	5	25.0/32.7	915	1132

REGISTERED CIVIL ENGINEER — DATE 7/28/10

PLANS APPROVAL DATE 10-11-10

REGISTERED PROFESSIONAL ENGINEER — Robert Sennett No. 3976 Exp. 12/31/10 STRUCTURAL — STATE OF CALIFORNIA

The State of California or its officers or agents shall not be responsible for the accuracy or completeness of scanned copies of this plan sheet.

SAN JOAQUIN COUNCIL OF GOVERMENT
555 E. WEBER AVENUE
STOCKTON, CA 95202

MGE ENGINEERING, INC.
7415 GREENHAVEN DRIVE, SUITE 100
SACRAMENTO, CA 95831

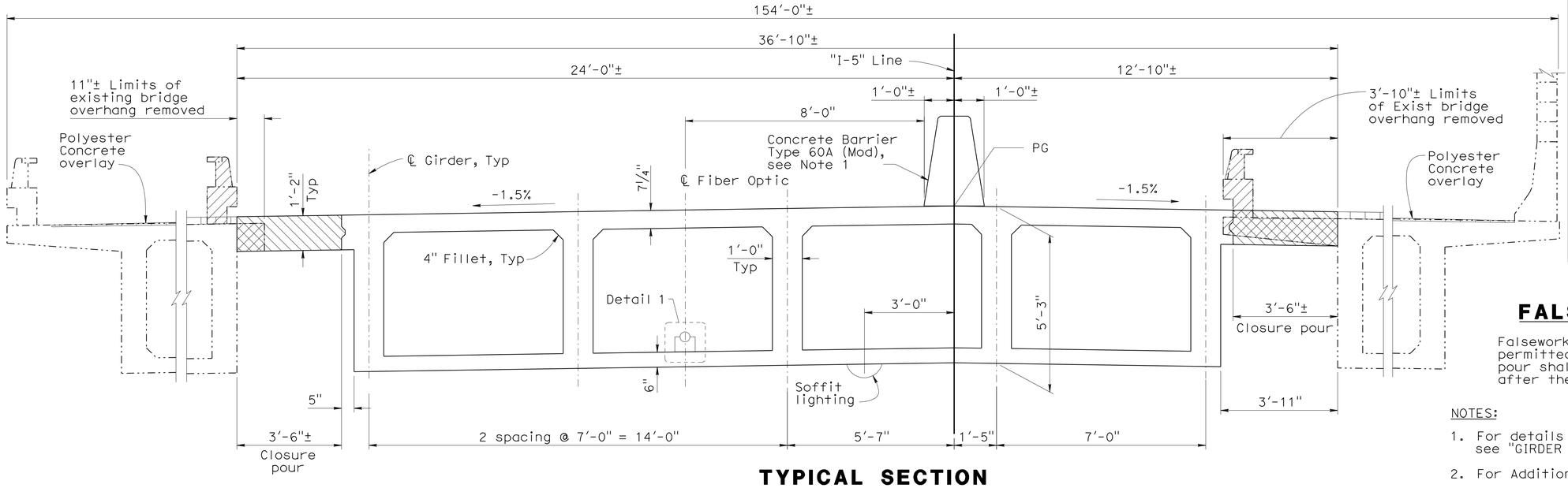

TYPICAL SECTION

½" = 1'-0"

FALSEWORK RELEASE

Falsework shall be released as soon as permitted by the specifications. Closure pour shall not be placed sooner than 60 days after the falsework had been released.

NOTES:

1. For details of Concrete Barrier Type 60A (Mod), see "GIRDER REINFORCEMENT" sheet.
2. For Additional Reinf, see "GIRDER REINFORCEMENT" sheet.
3. For Camber Diagram, see "GIRDER REINFORCEMENT" sheet.
4. For Detail 1, see 'CONCRETE CRADLE DETAIL' on "GIRDER REINFORCEMENT" sheet.

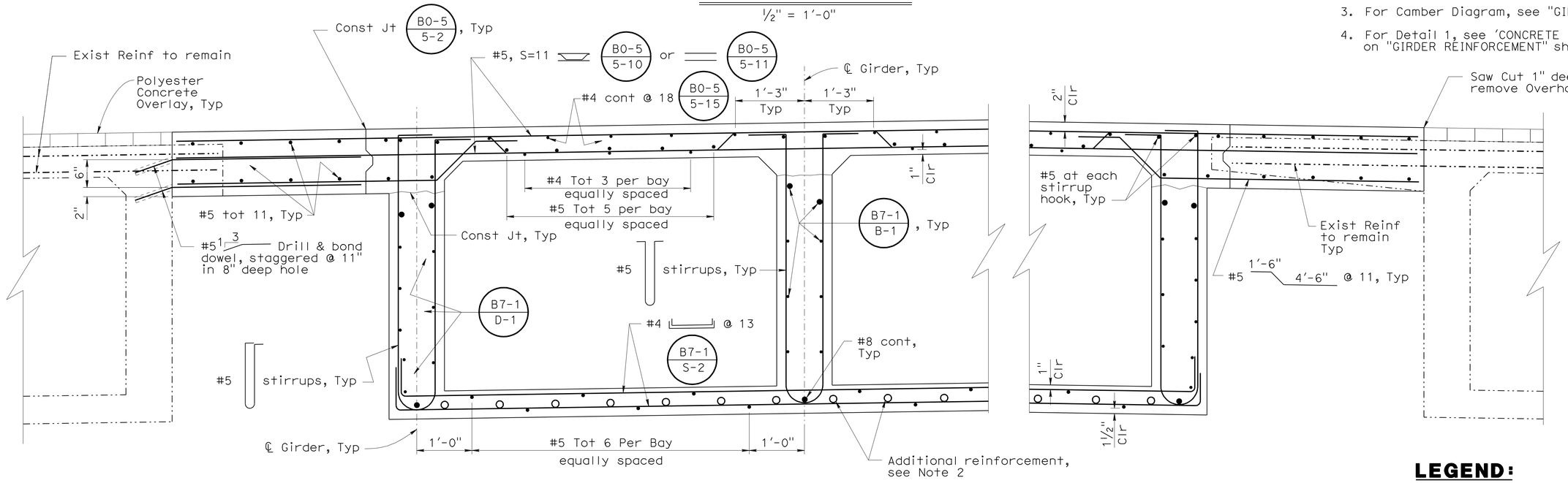

PART TYPICAL SECTION

1" = 1'-0"

(B0-5) (B7-1) (B8-5)

LEGEND:

- Bridge Removal (Portion)
- Deck Closure Pour
- Polyester Concrete Overlay
- Indicates Existing Structure

NOTE:
THE CONTRACTOR SHALL VERIFY ALL CONTROLLING FIELD DIMENSIONS BEFORE ORDERING OR FABRICATING ANY MATERIAL.

DESIGN OVERSIGHT — John Fujimoto — 8-2-10 SIGN OFF DATE

	BY	CHECKED
DESIGN	P. Zhao	D. Chan
DETAILS	P. Zhao	D. Chan
QUANTITIES	R. Huang	S. Kotamala

PREPARED FOR THE STATE OF CALIFORNIA DEPARTMENT OF TRANSPORTATION

Robert Sennett — PROJECT ENGINEER

BRIDGE NO. 29-0189 — POST MILE 28.53

COUNTRY CLUB BLVD UC (WIDEN)

TYPICAL SECTION

DESIGN DETAIL SHEET (ENGLISH) (REV. 06-01-09)

ORIGINAL SCALE IN INCHES FOR REDUCED PLANS 0 1 2 3

CU 06240
EA 0G4701

DISREGARD PRINTS BEARING EARLIER REVISION DATES — REVISION DATES (PRELIMINARY STAGE ONLY) 10/16/09 12/04/09 01/12/10 04/23/10 06/11/10 07/28/10

SHEET 12 OF 28

FILE => 29-0189rl-k-ts01.dgn

USERNAME => rmartin DATE PLOTTED => 13-OCT-2010 TIME PLOTTED => 13:46

DIST	COUNTY	ROUTE	POST MILES TOTAL PROJECT	SHEET No	TOTAL SHEETS
10	SJ	5	25.0/32.7	916	1132

REGISTERED CIVIL ENGINEER — DATE 7/28/10

10-11-10
PLANS APPROVAL DATE

REGISTERED PROFESSIONAL ENGINEER — Robert Sennett — No. 3976 — Exp. 12/31/10 — STRUCTURAL — STATE OF CALIFORNIA

The State of California or its officers or agents shall not be responsible for the accuracy or completeness of scanned copies of this plan sheet.

SAN JOAQUIN COUNCIL OF GOVERMENT
555 E. WEBER AVENUE
STOCKTON, CA 95202

MGE ENGINEERING, INC.
7415 GREENHAVEN DRIVE, SUITE 100
SACRAMENTO, CA 95831

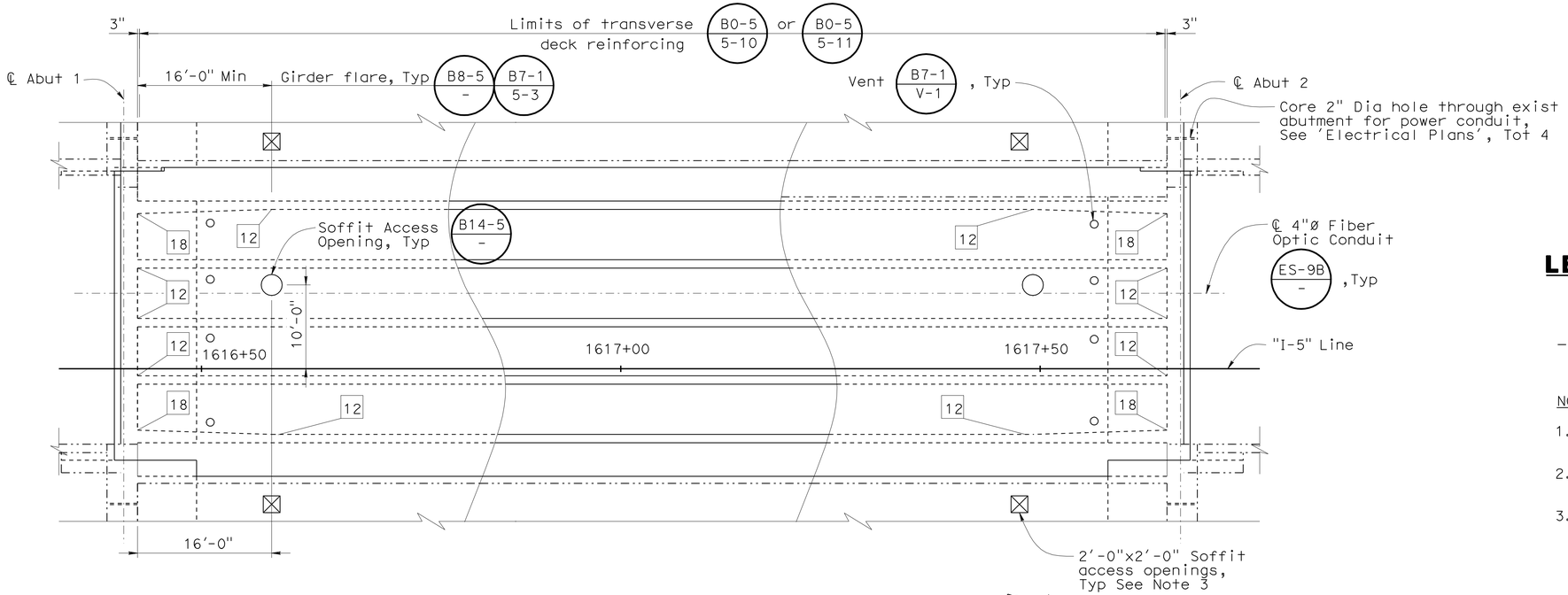

GIRDER LAYOUT

B0-5 / - B7-1 / - B8-5 / -

1/8" = 1'-0"

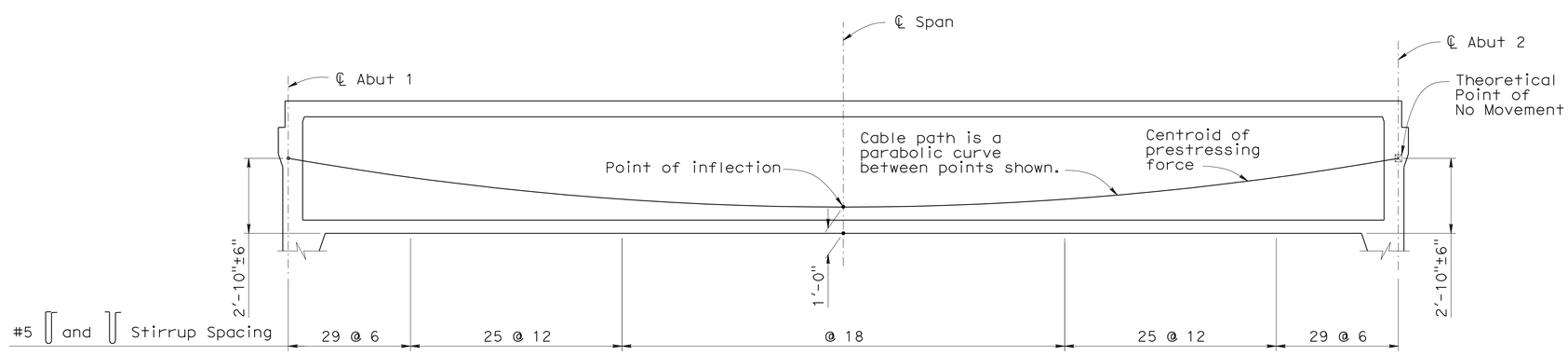

LONGITUDINAL SECTION

NO SCALE

NOTE:
THE CONTRACTOR SHALL VERIFY ALL CONTROLLING FIELD DIMENSIONS BEFORE ORDERING OR FABRICATING ANY MATERIAL.

LEGEND:

12 — Indicates Girder Width in inches

-·-·-·- Indicates Existing Structure

NOTES:

1. For Camber Diagram, see "GIRDER REINFORCEMENT" sheet.
2. For Concrete Strength and Type Limits, see "GENERAL NOTES" sheet.
3. For soffit access opening details, See 'Soffit Access Opening Details' sheet.

PRESTRESSING NOTES

270 KSI Low Relaxation Strand:

P_{jack} = 9270 kips

Anchor Set = 3/8 in

Total Number of Girders = 5

Distribution of prestress force (Pjack) between girders shall not exceed the ratio of 3:2. Maximum final force variation between girders shall not exceed 725 kips.

Concrete: f'_c = 5000 psi @ 28 days

f'_{ci} = 3500 psi @ time of stressing

Contractor shall submit elongation calculations based on initial stress at

⊠ = 0.962 times jacking stress.

One end stressing shall be performed from Abutment 1 end only.

Prestress force design is based on friction coefficient μ = 0.15 and friction wobble coefficient k = 0.0002/ft and modified for curvature.

DESIGN OVERSIGHT — John Fujimoto
8-2-10
SIGN OFF DATE

	BY	CHECKED
DESIGN	P. Zhao	D. Chan
DETAILS	P. Zhao	D. Chan
QUANTITIES	R. Huang	S. Kotamala

PREPARED FOR THE STATE OF CALIFORNIA DEPARTMENT OF TRANSPORTATION

Robert Sennett
PROJECT ENGINEER

BRIDGE NO. 29-0189
POST MILE 28.53

COUNTRY CLUB BLVD UC (WIDEN)
GIRDER LAYOUT

DESIGN DETAIL SHEET (ENGLISH) (REV. 06-01-09)

ORIGINAL SCALE IN INCHES FOR REDUCED PLANS 0 1 2 3

CU 06240
EA 0G4701

DISREGARD PRINTS BEARING EARLIER REVISION DATES — REVISION DATES (PRELIMINARY STAGE ONLY) 10/16/09 12/04/09 01/13/10 04/23/10 06/14/10 07/28/10

SHEET 13 OF 28

FILE => 29-0189rl-l-g_lo01.dgn

USERNAME => trmartin DATE PLOTTED => 13-OCT-2010 TIME PLOTTED => 13:46

DIST	COUNTY	ROUTE	POST MILES TOTAL PROJECT	SHEET No	TOTAL SHEETS
10	SJ	5	25.0/32.7	917	1132

REGISTERED CIVIL ENGINEER — DATE 7/28/10

10-11-10
PLANS APPROVAL DATE

REGISTERED PROFESSIONAL ENGINEER — Robert Sennett — No. 3976 — Exp. 12/31/10 — STRUCTURAL — STATE OF CALIFORNIA

The State of California or its officers or agents shall not be responsible for the accuracy or completeness of scanned copies of this plan sheet.

SAN JOAQUIN COUNCIL OF GOVERMENT
555 E. WEBER AVENUE
STOCKTON, CA 95202

MGE ENGINEERING, INC.
7415 GREENHAVEN DRIVE, SUITE 100
SACRAMENTO, CA 95831

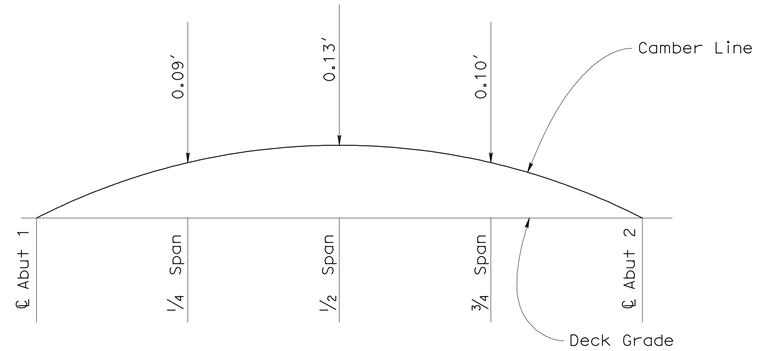

NOTE: Camber does not include allowance for Falsework Settlement.

CAMBER DIAGRAM

NO SCALE

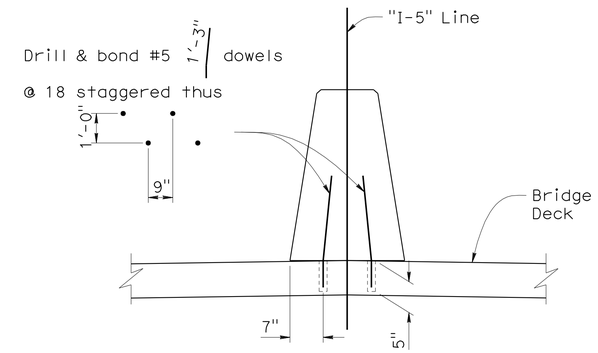

For details not shown, see RSP A76A –

CONCRETE BARRIER TYPE 60A (MOD)

NO SCALE

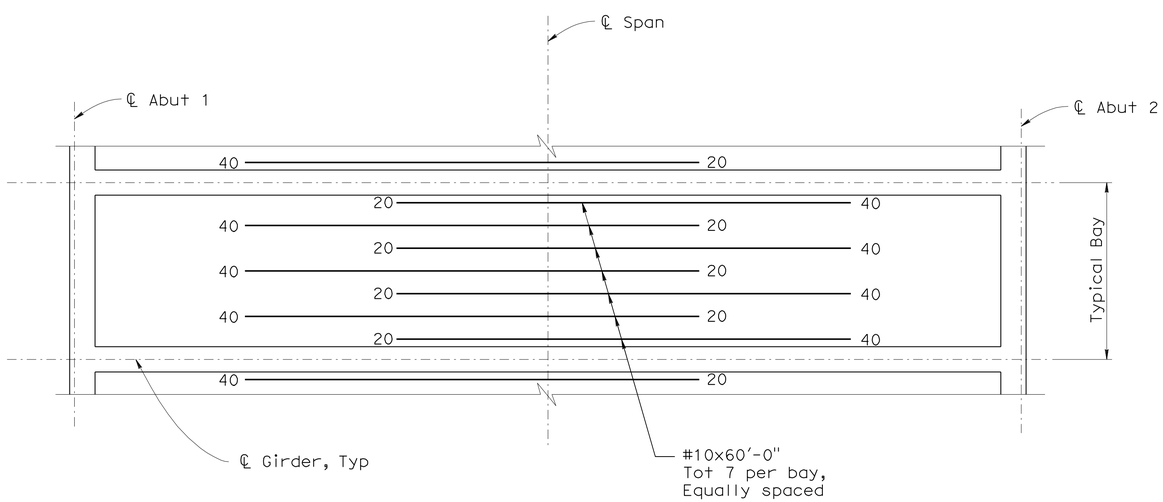

ADDITIONAL SOFFIT REINFORCEMENT

NO SCALE

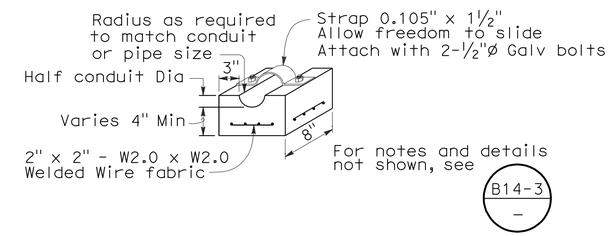

CONCRETE CRADLE DETAIL

NO SCALE

NOTES:

1. Space bar approximately equal within each bay.
2. Reinforcement shall be placed parallel to ℄ bridge.
3. No lap splice permitted.
4. Numbers at end of bar indicates distance in feet from ℄ span.

NOTE:
THE CONTRACTOR SHALL VERIFY ALL CONTROLLING FIELD DIMENSIONS BEFORE ORDERING OR FABRICATING ANY MATERIAL.

DESIGN OVERSIGHT — John Fujimoto
8-2-10
SIGN OFF DATE

	BY	CHECKED
DESIGN	P. Zhao	D. Chan
DETAILS	P. Zhao	D. Chan
QUANTITIES	R. Huang	S. Kotamala

PREPARED FOR THE STATE OF CALIFORNIA DEPARTMENT OF TRANSPORTATION

Robert Sennett
PROJECT ENGINEER

BRIDGE NO. 29-0189
POST MILE 28.53

COUNTRY CLUB BLVD UC (WIDEN)
GIRDER REINFORCEMENT

DESIGN DETAIL SHEET (ENGLISH) (REV. 06-01-09)

ORIGINAL SCALE IN INCHES FOR REDUCED PLANS 0 1 2 3

CU 06240
EA 0G4701

DISREGARD PRINTS BEARING EARLIER REVISION DATES — REVISION DATES (PRELIMINARY STAGE ONLY) 10/14/09 12/04/09 01/15/10 04/23/10 06/17/10 07/28/10

SHEET 14 OF 28

FILE => 29-0189r1-1-gdt01.dgn

USERNAME => trmartin DATE PLOTTED => 13-OCT-2010 TIME PLOTTED => 13:46

DIST	COUNTY	ROUTE	POST MILES TOTAL PROJECT	SHEET No	TOTAL SHEETS
10	SJ	5	25.0/32.7	918	1132

R E Sennett 7/28/10
REGISTERED CIVIL ENGINEER DATE

10-11-10
PLANS APPROVAL DATE

REGISTERED PROFESSIONAL ENGINEER
Robert Sennett
No. 3976
Exp. 12/31/10
STRUCTURAL
STATE OF CALIFORNIA

The State of California or its officers or agents shall not be responsible for the accuracy or completeness of scanned copies of this plan sheet.

SAN JOAQUIN COUNCIL OF GOVERMENT
555 E. WEBER AVENUE
STOCKTON, CA 95202

MGE ENGINEERING, INC.
7415 GREENHAVEN DRIVE, SUITE 100
SACRAMENTO, CA 95831

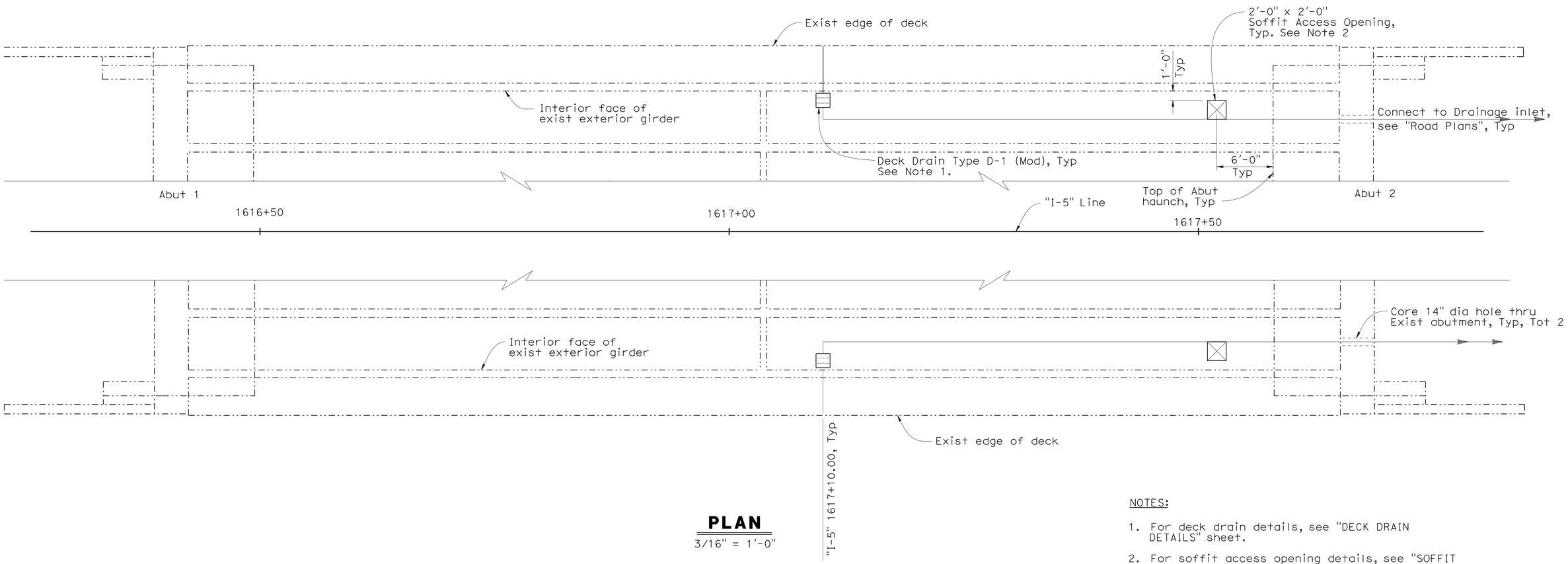

PLAN
3/16" = 1'-0"

NOTES:

1. For deck drain details, see "DECK DRAIN DETAILS" sheet.
2. For soffit access opening details, see "SOFFIT ACCESS OPENING DETAILS" sheet.

LEGEND:

-·-·-·-·- Indicates Existing Structure

NOTE:
THE CONTRACTOR SHALL VERIFY ALL CONTROLLING FIELD DIMENSIONS BEFORE ORDERING OR FABRICATING ANY MATERIAL.

John Fujimoto
DESIGN OVERSIGHT John Fujimoto
8-2-10
SIGN OFF DATE

	BY	CHECKED
DESIGN	P. Zhao	D. Chan
DETAILS	P. Zhao	D. Chan
QUANTITIES	R. Huang	S. Kotamala

PREPARED FOR THE
STATE OF CALIFORNIA
DEPARTMENT OF TRANSPORTATION

Robert Sennett
PROJECT ENGINEER

BRIDGE NO. 29-0189
POST MILE 28.53

COUNTRY CLUB BLVD UC (WIDEN)
DECK DRAIN PLAN

DESIGN DETAIL SHEET (ENGLISH) (REV. 06-01-09)

ORIGINAL SCALE IN INCHES FOR REDUCED PLANS 0 1 2 3

CU 06240
EA 0G4701

DISREGARD PRINTS BEARING EARLIER REVISION DATES

REVISION DATES (PRELIMINARY STAGE ONLY): 10/16/09 12/04/09 01/15/10 04/23/10 06/11/10 07/28/10

SHEET 15 OF 28

FILE => 29-0189rl-r-dd.dgn

USERNAME => trmartin DATE PLOTTED => 13-OCT-2010 TIME PLOTTED => 13:46

DIST	COUNTY	ROUTE	POST MILES TOTAL PROJECT	SHEET No	TOTAL SHEETS
10	SJ	5	25.0/32.7	919	1132

REGISTERED CIVIL ENGINEER — DATE 7/28/10

10-11-10
PLANS APPROVAL DATE

REGISTERED PROFESSIONAL ENGINEER — Robert Sennett — No. 3976 — Exp. 12/31/10 — STRUCTURAL — STATE OF CALIFORNIA

The State of California or its officers or agents shall not be responsible for the accuracy or completeness of scanned copies of this plan sheet.

SAN JOAQUIN COUNCIL OF GOVERMENT
555 E. WEBER AVENUE
STOCKTON, CA 95202

MGE ENGINEERING, INC.
7415 GREENHAVEN DRIVE, SUITE 100
SACRAMENTO, CA 95831

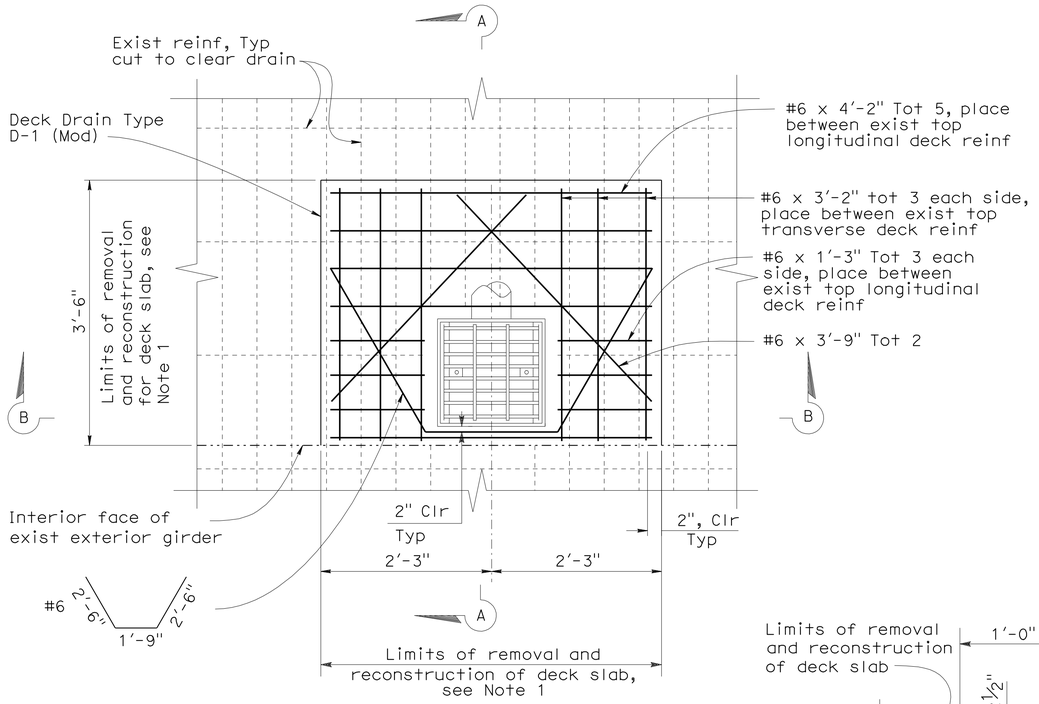

DECK DRAIN PARTIAL PLAN

1" = 1'-0"

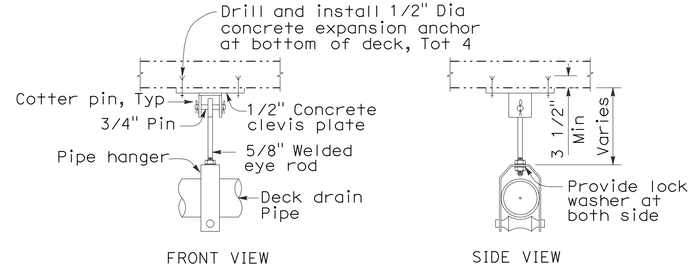

PIPE HANGER

NO SCALE

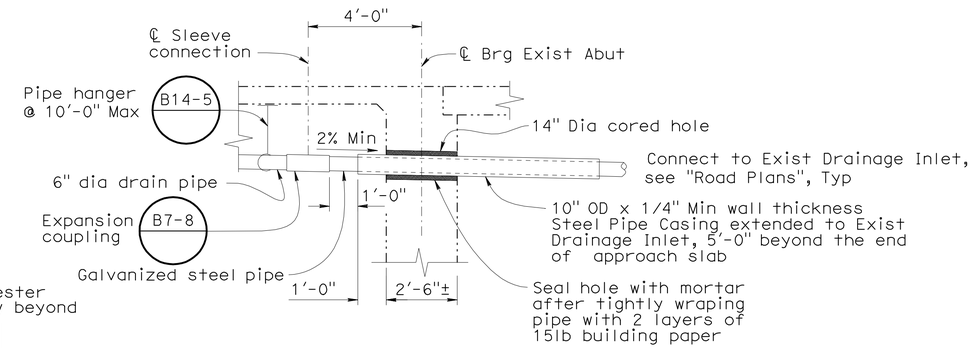

DECK DRAIN AT ABUT

3/8" = 1'-0"

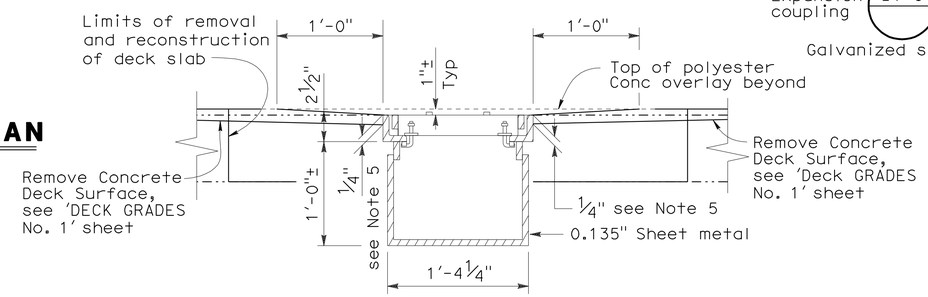

SECTION B-B

NO SCALE

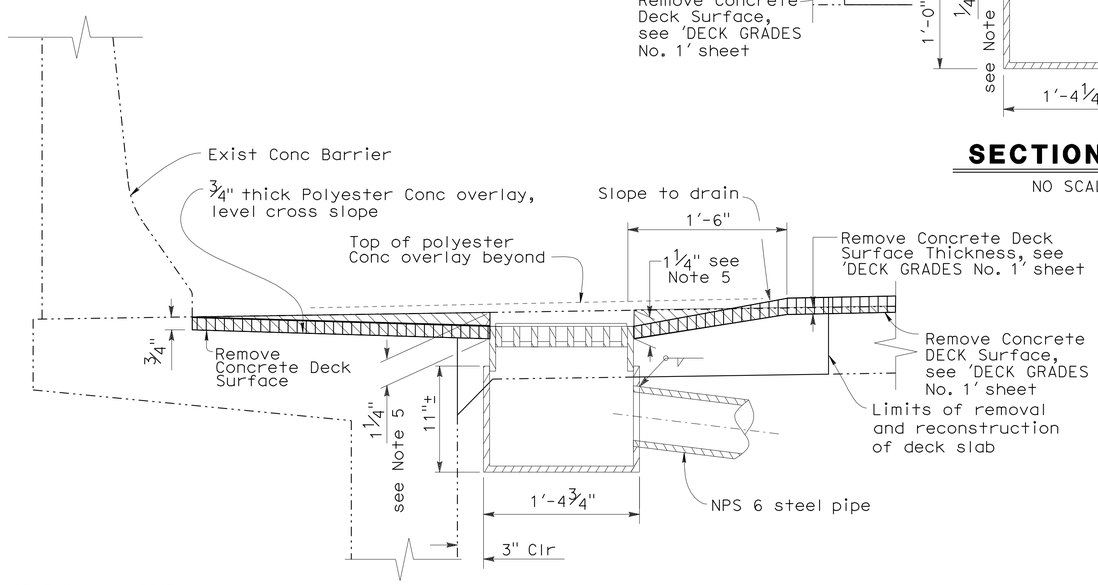

SECTION A-A

NO SCALE

NOTE:
THE CONTRACTOR SHALL VERIFY ALL CONTROLLING FIELD DIMENSIONS BEFORE ORDERING OR FABRICATING ANY MATERIAL.

LEGEND:

- Indicates Existing Structure
- Polyester Concrete Overlay
- Indicates Limits of Remove Concrete Deck Surface

NOTES:

1. For partial deck removal: any existing reinforcement that is damaged shall be removed and equal size reinforcement shall be butt welded to it.
2. All pipes in the deck shall be installed with a down slope greater than 2%.
3. All drains and drainage assemblies to be galvanized.
4. For sleeve connection and other details not shown, see B7-6
5. Depth shown for Remove Concrete Deck Surface is at deck drain only. For limits of Remove Concrete Surface, see 'DECK GRADES No. 1' sheet.
6. If existing deck reinf is exposed after deck concrete is removed, The Engineer shall be notified.

DESIGN OVERSIGHT — John Fujimoto
8-2-10
SIGN OFF DATE

	BY	CHECKED
DESIGN	P. Zhao	D. Chan
DETAILS	P. Zhao	D. Chan
QUANTITIES	R. Huang	S. Kotamala

PREPARED FOR THE STATE OF CALIFORNIA DEPARTMENT OF TRANSPORTATION

Robert Sennett
PROJECT ENGINEER

BRIDGE NO. 29-0189
POST MILE 28.53

COUNTRY CLUB BLVD UC (WIDEN)
DECK DRAIN DETAILS

DESIGN DETAIL SHEET (ENGLISH) (REV. 06-01-09)

ORIGINAL SCALE IN INCHES FOR REDUCED PLANS 0 1 2 3

CU 06240
EA 0G4701

DISREGARD PRINTS BEARING EARLIER REVISION DATES

REVISION DATES (PRELIMINARY STAGE ONLY): 10/16/09 12/04/09 01/25/10 04/23/10 06/21/10 01/28/10

SHEET 16 OF 28

FILE => 29-0189rl-r-ddet01.dgn

USERNAME => trlenard DATE PLOTTED => 18-OCT-2010 TIME PLOTTED => 13:41

DIST	COUNTY	ROUTE	POST MILES TOTAL PROJECT	SHEET No	TOTAL SHEETS
10	SJ	5	25.0/32.7	920	1132

R E Sennett 7/28/10
REGISTERED CIVIL ENGINEER DATE

10-11-10
PLANS APPROVAL DATE

REGISTERED PROFESSIONAL ENGINEER Robert Sennett No. 3976 Exp. 12/31/10 STRUCTURAL STATE OF CALIFORNIA

The State of California or its officers or agents shall not be responsible for the accuracy or completeness of scanned copies of this plan sheet.

SAN JOAQUIN COUNCIL OF GOVERMENT
555 E. WEBER AVENUE
STOCKTON, CA 95202

MGE ENGINEERING, INC.
7415 GREENHAVEN DRIVE, SUITE 100
SACRAMENTO, CA 95831

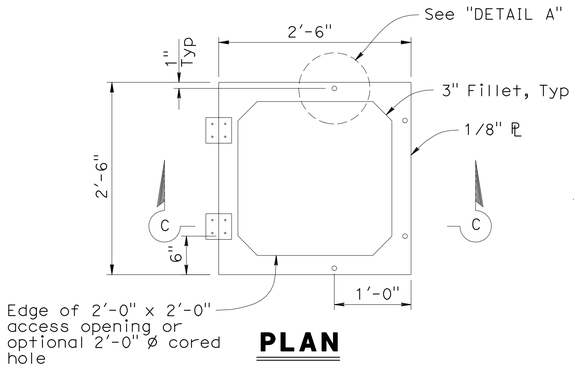

PLAN

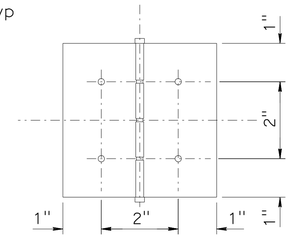

HINGE DETAIL

SOFFIT ACCESS OPENING & DOOR ASSEMBLY DETAILS

NO SCALE

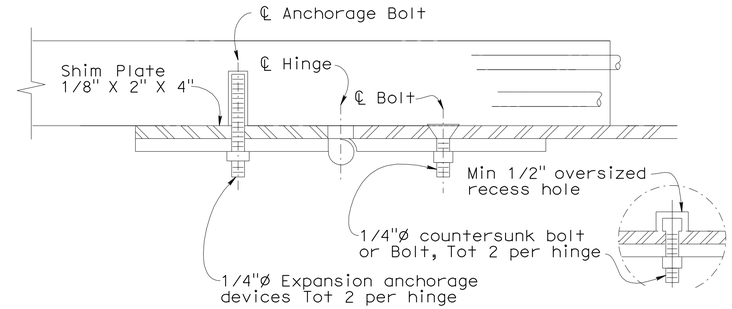

HINGE ANCHORAGE DETAIL

NO SCALE

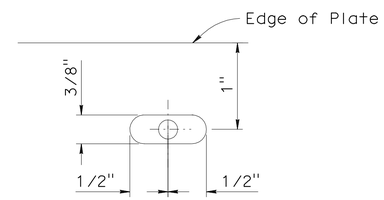

DETAIL A

NO SCALE

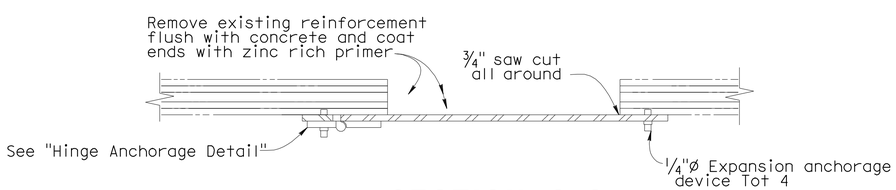

SECTION C-C

NO SCALE

LEGEND:

—··—··—··— Indicates Existing Structure

NOTES:

1. Non-removable pin in hinge.
2. Hinge assembly to be galvinized, brass or stainless steel.
3. Use thread locking system for all hinge nuts.
4. Hinge assembly to be minimum 1/8" thick.

NOTE:
THE CONTRACTOR SHALL VERIFY ALL CONTROLLING FIELD DIMENSIONS BEFORE ORDERING OR FABRICATING ANY MATERIAL.

John Fujimoto
DESIGN OVERSIGHT John Fujimoto
8-2-10
SIGN OFF DATE

	BY	CHECKED
DESIGN	P. Zhao	D. Chan
DETAILS	P. Zhao	D. Chan
QUANTITIES	R. Huang	S. Kotamala

PREPARED FOR THE STATE OF CALIFORNIA DEPARTMENT OF TRANSPORTATION

Robert Sennett
PROJECT ENGINEER

BRIDGE NO. 29-0189
POST MILE 28.53

COUNTRY CLUB BLVD UC (WIDEN)
SOFFIT ACCESS OPENING DETAILS

DESIGN DETAIL SHEET (ENGLISH) (REV. 06-01-09)

ORIGINAL SCALE IN INCHES FOR REDUCED PLANS 0 1 2 3

CU 06240
EA 0G4701

DISREGARD PRINTS BEARING EARLIER REVISION DATES

REVISION DATES (PRELIMINARY STAGE ONLY) 10/16/09 12/04/09 01/13/10 04/23/10 06/11/10 07/28/10

SHEET 17 OF 28

FILE => 29-0189r1-r-sao01.dgn

USERNAME => rmartin DATE PLOTTED => 13-OCT-2010 TIME PLOTTED => 13:46

DIST	COUNTY	ROUTE	POST MILES TOTAL PROJECT	SHEET No	TOTAL SHEETS
10	SJ	5	25.0/32.7	921	1132

REGISTERED CIVIL ENGINEER — DATE 7/28/10

10-11-10
PLANS APPROVAL DATE

REGISTERED PROFESSIONAL ENGINEER — Robert Sennett — No. 3976 — Exp. 12/31/10 — STRUCTURAL — STATE OF CALIFORNIA

The State of California or its officers or agents shall not be responsible for the accuracy or completeness of scanned copies of this plan sheet.

SAN JOAQUIN COUNCIL OF GOVERMENT
555 E. WEBER AVENUE
STOCKTON, CA 95202

MGE ENGINEERING, INC.
7415 GREENHAVEN DRIVE, SUITE 100
SACRAMENTO, CA 95831

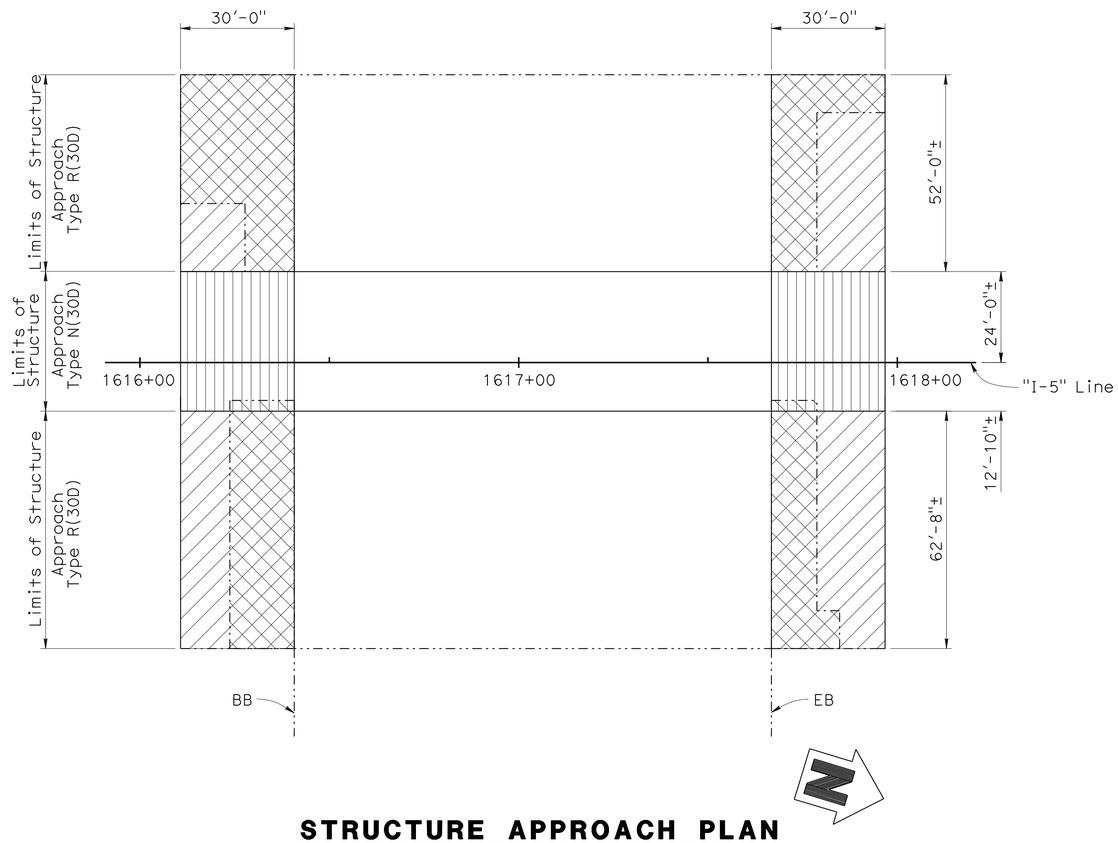

STRUCTURE APPROACH PLAN

SCALE: 1" = 20'

LEGEND:

- Indicates pay limits of Structure Approach Type N(30D)
- Indicates pay limits of Structure Approach Type R(30D)
- Indicates Existing Structure
- Indicates Existing Approach Slab to be Removed

NOTE:

Longitudinal construction joints shall be at lane lines as required for roadway staging, see Road Plans. See 'STRUCTURE APPROACH' sheets for details.

NOTE:
THE CONTRACTOR SHALL VERIFY ALL CONTROLLING FIELD DIMENSIONS BEFORE ORDERING OR FABRICATING ANY MATERIAL.

DESIGN OVERSIGHT — John Fujimoto
8-2-10
SIGN OFF DATE

	BY	CHECKED
DESIGN	P. Zhao	D. Chan
DETAILS	P. Zhao	D. Chan
QUANTITIES	R. Huang	S. Kotamala

PREPARED FOR THE STATE OF CALIFORNIA DEPARTMENT OF TRANSPORTATION

Robert Sennett
PROJECT ENGINEER

BRIDGE NO. 29-0189
POST MILE 28.53

COUNTRY CLUB BLVD UC (WIDEN)
LIMITS OF STRUCTURE APPROACH

DESIGN DETAIL SHEET (ENGLISH) (REV. 06-01-09)

ORIGINAL SCALE IN INCHES FOR REDUCED PLANS 0 1 2 3

CU 06240
EA 0G4701

DISREGARD PRINTS BEARING EARLIER REVISION DATES — REVISION DATES (PRELIMINARY STAGE ONLY): ~~10/16/09~~ ~~12/04/09~~ ~~01/15/10~~ ~~04/23/10~~ ~~06/11/10~~ 07/28/10

SHEET 18 OF 28

FILE => 29-0189rl-s-sadd00.dgn

USERNAME => ttmartin DATE PLOTTED => 13-OCT-2010 TIME PLOTTED => 13:47

DIST	COUNTY	ROUTE	POST MILES TOTAL PROJECT	SHEET No	TOTAL SHEETS
10	SJ	5	25.0/32.7	922	1132

R E Sennett 7/28/10
REGISTERED CIVIL ENGINEER DATE

10-11-10
PLANS APPROVAL DATE

REGISTERED PROFESSIONAL ENGINEER Robert Sennett No. 3976 Exp. 12/31/10 STRUCTURAL STATE OF CALIFORNIA

The State of California or its officers or agents shall not be responsible for the accuracy or completeness of scanned copies of this plan sheet.

SAN JOAQUIN COUNCIL OF GOVERMENT
555 E. WEBER AVENUE
STOCKTON, CA 95202

MGE ENGINEERING, INC.
7415 GREENHAVEN DRIVE, SUITE 100
SACRAMENTO, CA 95831

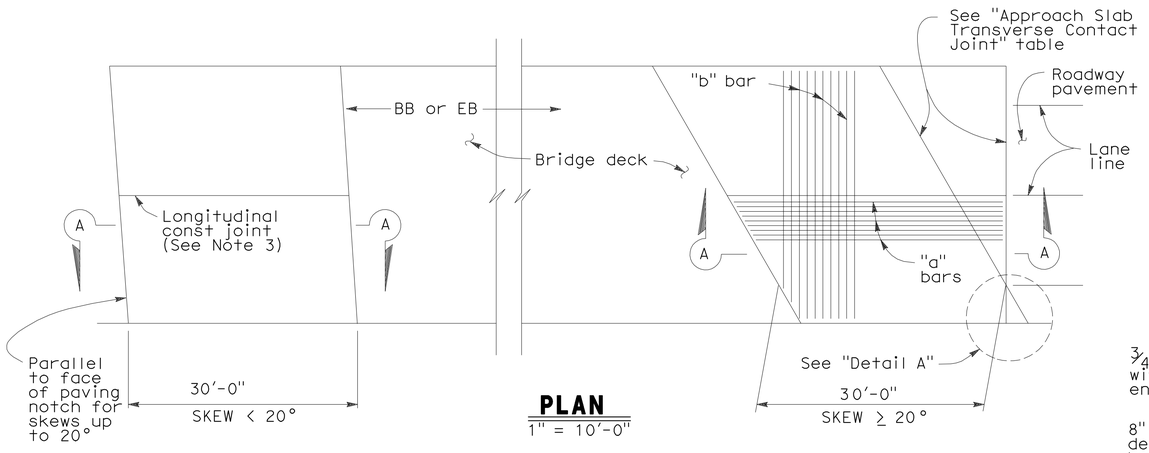

PLAN
1" = 10'-0"

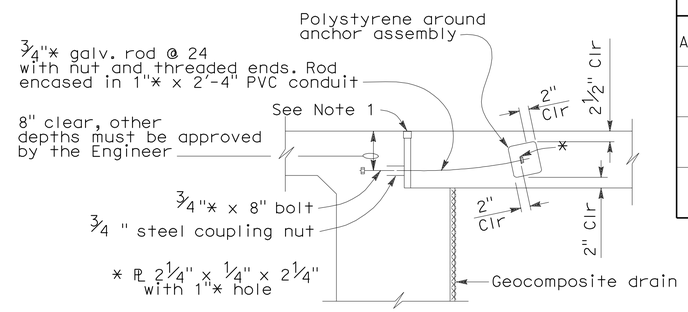

TIE DETAIL

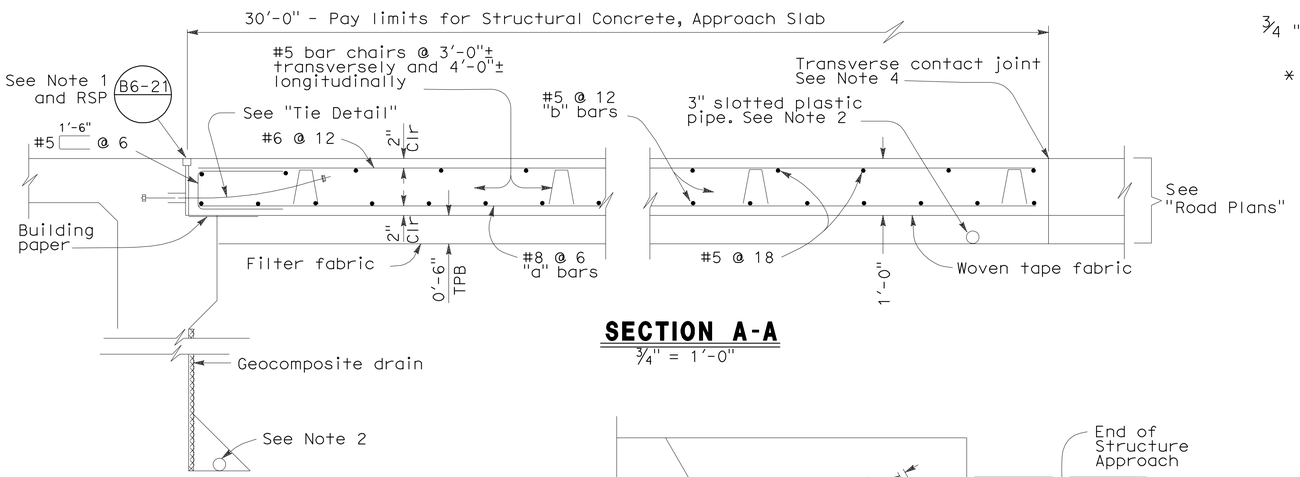

SECTION A-A
3/4" = 1'-0"

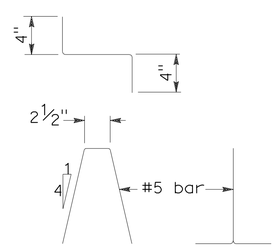

BAR CHAIR DETAIL

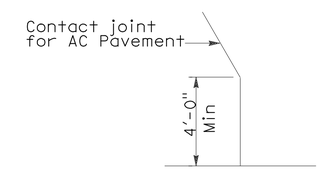

DETAIL A

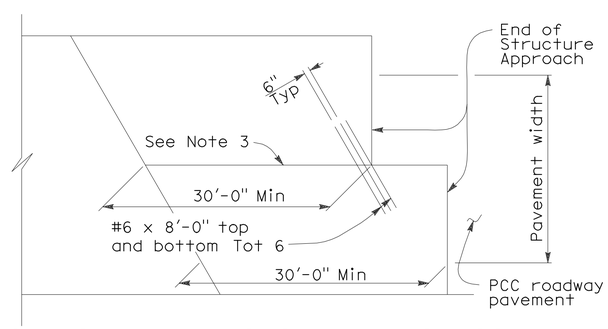

STRUCTURE APPROACH - END STAGGER DETAIL
NO SCALE

APPROACH SLAB TRANSVERSE CONTACT JOINT

APPROACH SKEW	WITH AC ROADWAY PAVEMENT	WITH PCC ROADWAY PAVEMENT
< 20°	Parallel to face of paving notch	Parallel to face of paving notch
20°- 45°	Parallel to face of P N use (Detail A)	Stagger lines 24' to 36' apart.
> 45°	Parallel to face of P N use (Detail A)	Stagger at each lane line.

NOTES:

1. For details not noted or shown, see Structure Plans.
2. For drainage details, see "Structure Approach Drainage Details" sheet.
3. Longitudinal construction joints, when permitted by the Engineer, shall be located on lane lines.
4. For transverse contact joint with new PCC paving, refer to Standard Plan P10.
5. At the contractor's option, approach slab transverse reinforcement may be placed parallel to paving notch. Spacing of transverse reinforcement is measured along ℄ roadway.

NOTE:
THE CONTRACTOR SHALL VERIFY ALL CONTROLLING FIELD DIMENSIONS BEFORE ORDERING OR FABRICATING ANY MATERIAL.

John Fujimoto
DESIGN OVERSIGHT John Fujimoto
8-2-10
SIGN OFF DATE

	BY	CHECKED
DESIGN	P. Zhao	D. Chan
DETAILS	P. Zhao	D. Chan
QUANTITIES	R. Huang	S. Kotamala

PREPARED FOR THE STATE OF CALIFORNIA DEPARTMENT OF TRANSPORTATION

Robert Sennett
PROJECT ENGINEER

BRIDGE NO. 29-0189
POST MILE 28.53

COUNTRY CLUB BLVD UC (WIDEN)
STRUCTURE APPROACH TYPE N(30D)

DESIGN DETAIL SHEET (ENGLISH) (REV. 06-01-09)

ORIGINAL SCALE IN INCHES FOR REDUCED PLANS 0 1 2 3

CU 06240
EA 0G4701

DISREGARD PRINTS BEARING EARLIER REVISION DATES
REVISION DATES (PRELIMINARY STAGE ONLY) 10/16/09 12/04/09 01/15/10 04/23/10 06/11/10 07/28/10

SHEET 19 OF 28

FILE => 29-0189rl-s-sadd01.dgn

USERNAME => trmartin DATE PLOTTED => 13-OCT-2010 TIME PLOTTED => 13:47

DIST.	COUNTY	ROUTE	MILE POST TOTAL PROJECT	SHEET NO.	TOTAL SHEETS
10	SJ	5	25.0/32.7	923	1132

REGISTERED CIVIL ENGINEER 7/28/10 DATE

10-11-10
PLANS APPROVAL DATE

REGISTERED PROFESSIONAL ENGINEER Robert Sennett No. 3976 Exp. 12/31/10 STRUCTURAL STATE OF CALIFORNIA

The State of California or its officers or agents shall not be responsible for the accuracy or completeness of electronic copies of this plan sheet.

MGE ENGINEERING, INC.
7415 GREENHAVEN DRIVE, SUITE 100
SACRAMENTO, CA 95831

SAN JOAQUIN COUNCIL OF GOVERMENT
555 E. WEBER AVENUE
STOCKTON, CA 95202

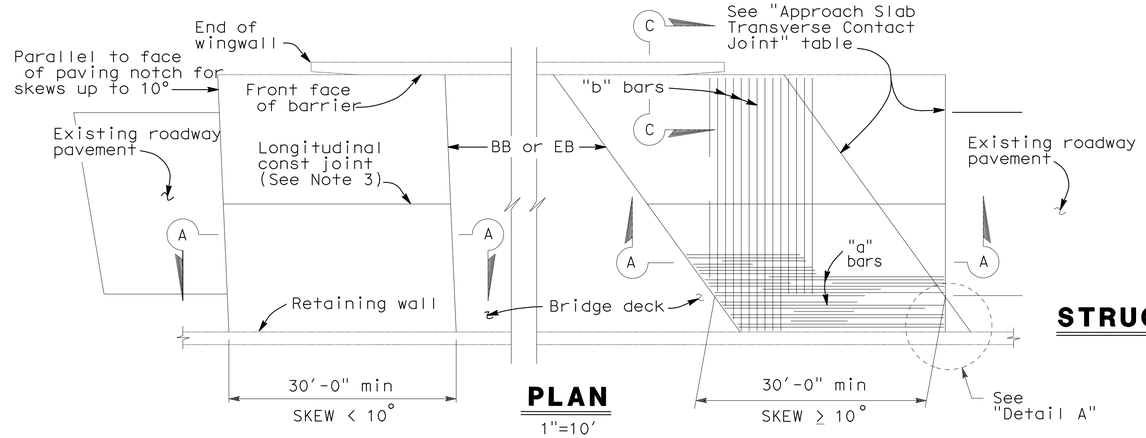

PLAN

1"=10'

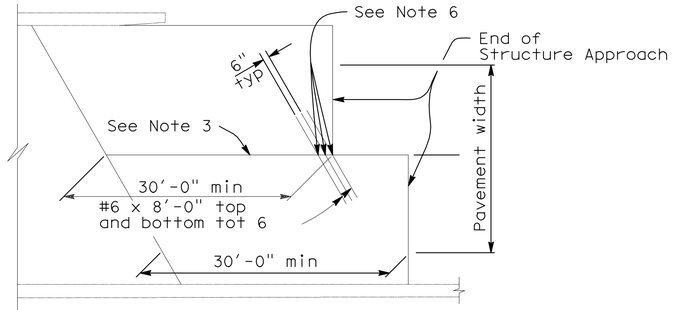

STRUCTURE APPROACH - END STAGGER DETAIL

NO SCALE

APPROACH SLAB TRANSVERSE CONTACT JOINT		
APPROACH SKEW	WITH AC ROADWAY PAVEMENT	WITH PCC ROADWAY PAVEMENT
< 10 °	Parallel to face of paving notch	Parallel to face of paving notch
10°- 45°	Parallel to face of P N use (Detail A)	Stagger lines 24' to 36' apart
> 45 °	Parallel to face of P N use (Detail A)	Stagger at each lane line

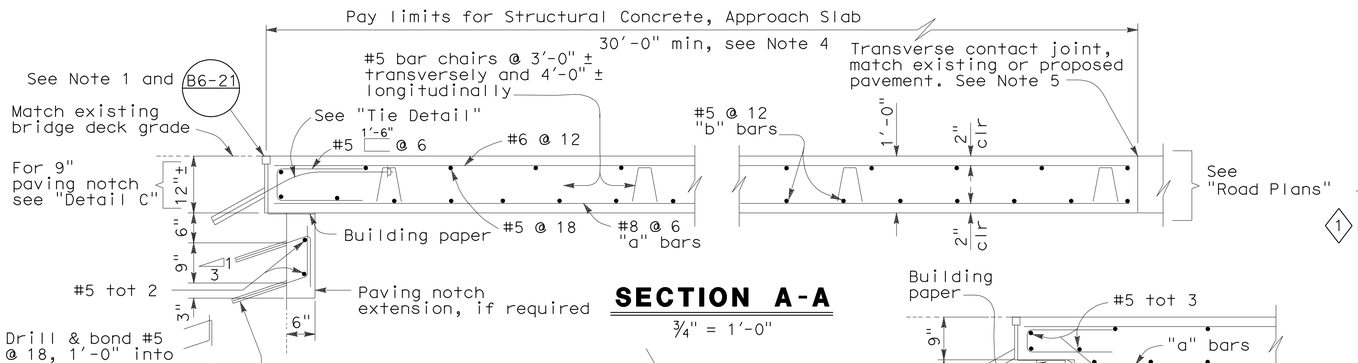

SECTION A-A

¾" = 1'-0"

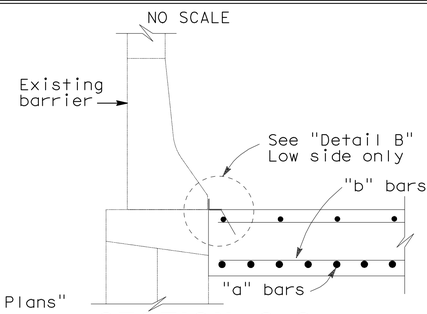

SECTION C-C

¾" = 1'-0"

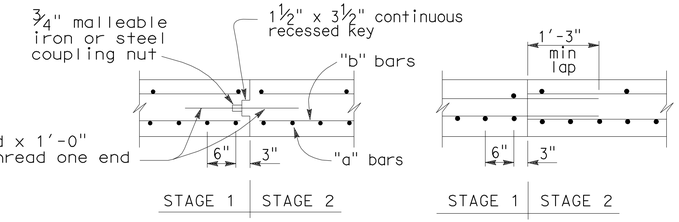

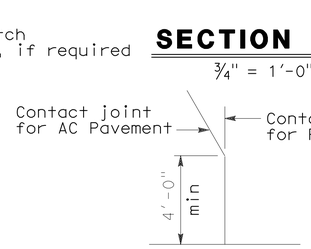

DETAIL A

NO SCALE

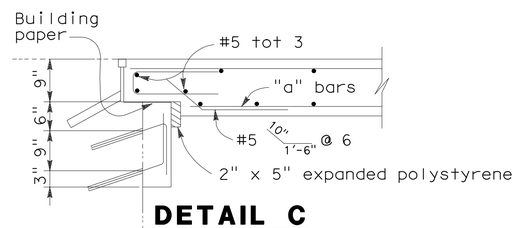

DETAIL C

¾" = 1'-0"

NOTE: For details not shown, see "Section A-A".

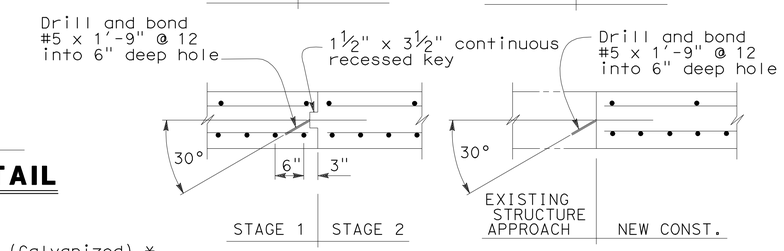

LONGITUDINAL CONSTRUCTION JOINT ALTERNATIVES

¾" = 1'-0"

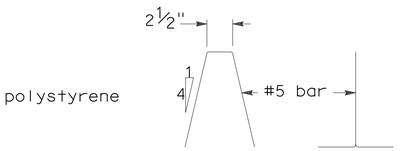

BAR CHAIR DETAIL

1½" = 1'-0"

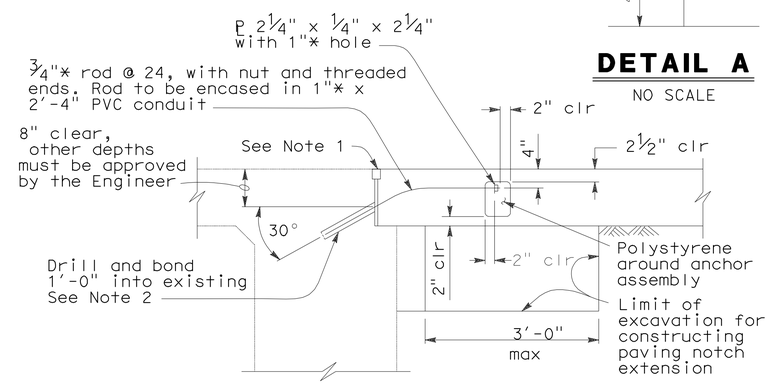

TIE DETAIL

¾" = 1'-0"

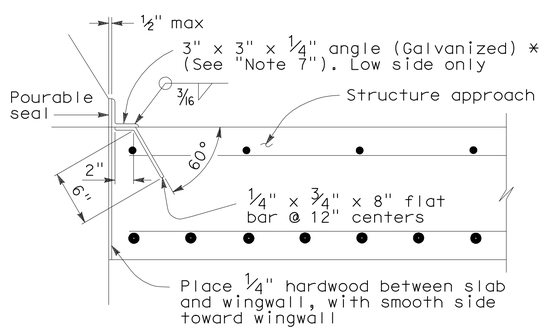

*** (TO BE USED WITH TYPE 25 OR TYPE 27 CONCRETE BARRIER)**

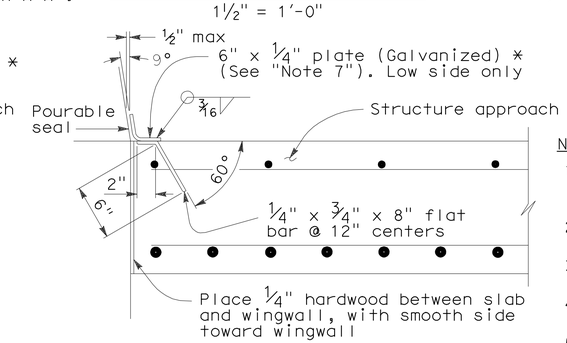

*** (TO BE USED WITH TYPE 732 OR TYPE 736 CONCRETE BARRIER)**

DETAIL B

1½" = 1'-0"

NOTES:

1. For details not shown or noted, see Structure Plans. Adjust bar reinforcement to clear a sawcut for sealed joint, when required.
2. Space to avoid existing prestress anchorages and main reinforcement.
3. Longitudinal construction joints, when permitted by the Engineer, shall be located on lane lines.
4. Transverse contact joint shall be a minimum of 5'-0" from an existing or constructed weakened plane joint.
5. For transverse contact joint with new PCC paving, refer to Standard Plan P10.
6. Couplers are required for stge construction.
7. End angle or plate at beginning of barrier transition, end of wingwall or end of structure approach as applicable.

NOTE:
THE CONTRACTOR SHALL VERIFY ALL CONTROLLING FIELD DIMENSIONS BEFORE ORDERING OR FABRICATING ANY MATERIAL.

STANDARD DRAWING				
RELEASE DATE 3/14/05	DESIGN	BY M.TRAFFALIS	CHECKED E.THORKILDSEN	RELEASED BY
FILE NO. xs3-140e	DETAILS	BY R.YEE	CHECKED E.THORKILDSEN	
	SUBMITTED	BY M.HA	DRAWING DATE 8/92	OFFICE CHIEF

1 Detail Modified

STATE OF CALIFORNIA
DEPARTMENT OF TRANSPORTATION

DIVISION OF ENGINEERING SERVICES

BRIDGE NO. 29-0189 R/L
MILE POST 28.53

COUNTRY CLUB BLVD UC (WIDEN)
STRUCTURE APPROACH TYPE R(30D)

DS OSD 2147A (ENGLISH) (REV. X/XX/XX)

ORIGINAL SCALE IN INCHES FOR REDUCED PLANS 0 1 2 3

CU 06240
EA 10-0G4701

DISREGARD PRINTS BEARING EARLIER REVISION DATES

REVISION DATES (PRELIMINARY STAGE ONLY) 10/16/09 12/04/09 01/13/10 06/17/10 07/28/10

SHEET 20 OF 28

USERNAME => trmikesl

29-0189rl-s-sadd02

DATE PLOTTED => 14-OCT-2010 TIME PLOTTED => 06:10

DIST	COUNTY	ROUTE	POST MILES TOTAL PROJECT	SHEET No	TOTAL SHEETS
10	SJ	5	25.0/32.7	924	1132

REGISTERED CIVIL ENGINEER — DATE 7/28/10

10-11-10
PLANS APPROVAL DATE

REGISTERED PROFESSIONAL ENGINEER — Robert Sennett — No. 3976 — Exp. 12/31/10 — STRUCTURAL — STATE OF CALIFORNIA

The State of California or its officers or agents shall not be responsible for the accuracy or completeness of scanned copies of this plan sheet.

SAN JOAQUIN COUNCIL OF GOVERMENT
555 E. WEBER AVENUE
STOCKTON, CA 95202

MGE ENGINEERING, INC.
7415 GREENHAVEN DRIVE, SUITE 100
SACRAMENTO, CA 95831

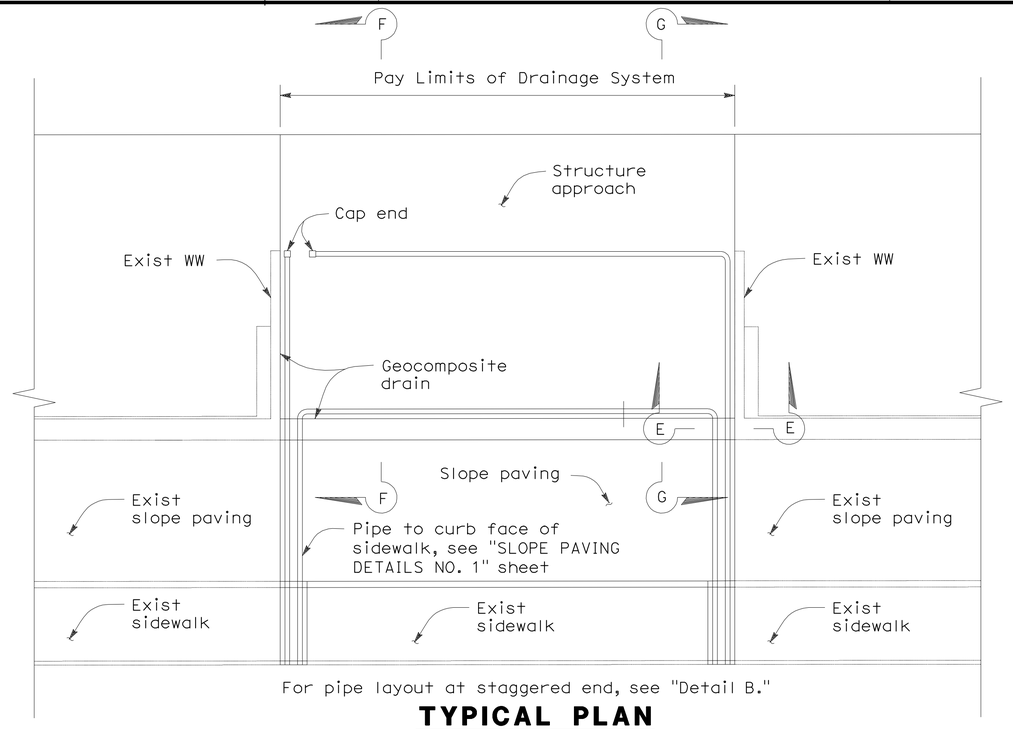

For pipe layout at staggered end, see "Detail B."

TYPICAL PLAN

1/8" = 1'-0"

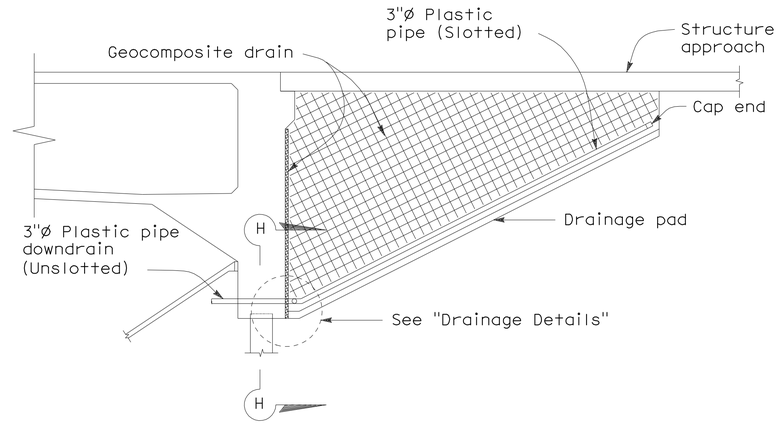

SECTION F-F

1/4" = 1'-0"

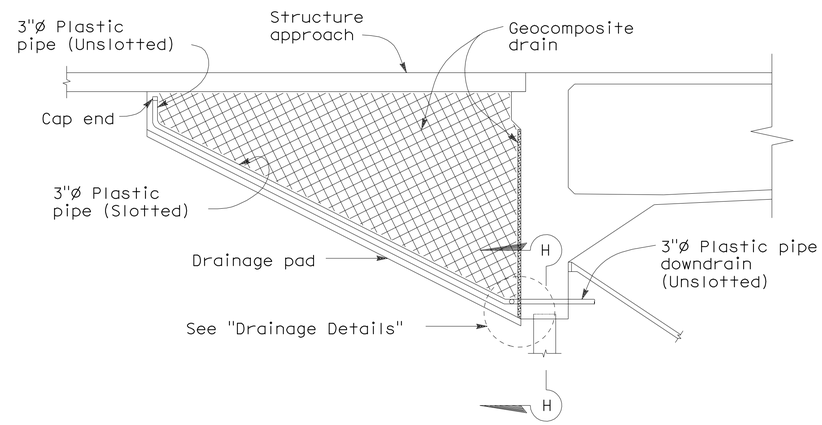

SECTION G-G

1/4" = 1'-0"

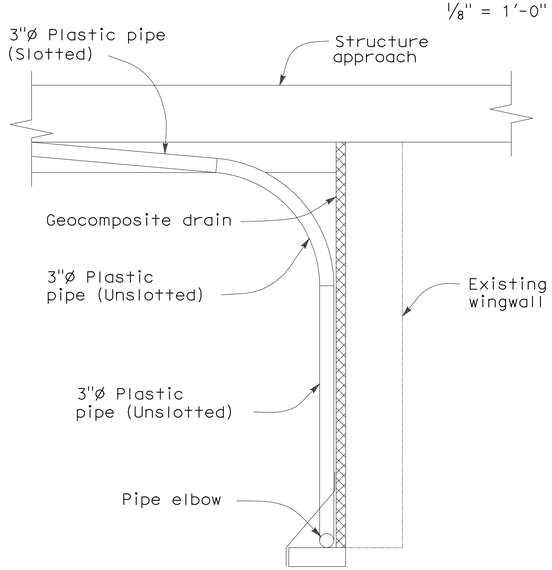

NOTE: Bends and junctions in 3"ø plastic pipe are 30" radius min.

SECTION E-E

3/4" = 1'-0"

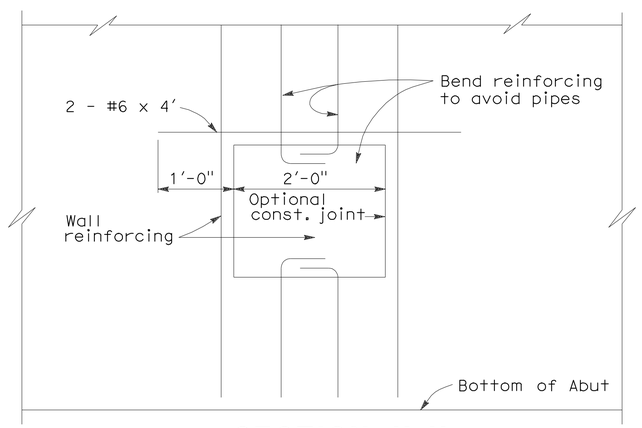

SECTION H-H

1" = 1'-0"

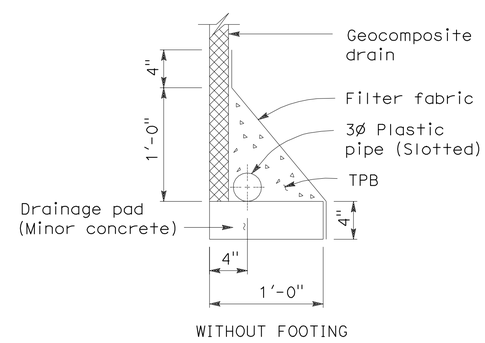

WITHOUT FOOTING

DRAINAGE DETAILS

1 1/2" = 1'-0"

NOTE:
THE CONTRACTOR SHALL VERIFY ALL CONTROLLING FIELD DIMENSIONS BEFORE ORDERING OR FABRICATING ANY MATERIAL.

DESIGN OVERSIGHT — John Fujimoto
8-2-10
SIGN OFF DATE

	BY	CHECKED
DESIGN	P. Zhao	D. Chan
DETAILS	P. Zhao	D. Chan
QUANTITIES	R. Huang	S. Kotamala

PREPARED FOR THE STATE OF CALIFORNIA DEPARTMENT OF TRANSPORTATION

Robert Sennett
PROJECT ENGINEER

BRIDGE NO. 29-0189
POST MILE 28.53

COUNTRY CLUB BLVD UC (WIDEN)
STRUCTURE APPROACH DRAINAGE DETAILS

DESIGN DETAIL SHEET (ENGLISH) (REV. 06-01-09)

ORIGINAL SCALE IN INCHES FOR REDUCED PLANS 0 1 2 3

CU 06240
EA 0G4701

DISREGARD PRINTS BEARING EARLIER REVISION DATES — REVISION DATES (PRELIMINARY STAGE ONLY): ~~10/14/09~~ ~~12/04/09~~ ~~01/12/10~~ ~~04/23/10~~ ~~06/17/10~~ 07/28/10

SHEET 21 OF 28

FILE => 29-0189rl-s-sadd03.dgn

29-0189rl-s-sadd03

USERNAME => frmnguye DATE PLOTTED => 13-OCT-2010 TIME PLOTTED => 08:51

DIST	COUNTY	ROUTE	POST MILES TOTAL PROJECT	SHEET No	TOTAL SHEETS
10	SJ	5	25.0/32.7	925	1132

REGISTERED CIVIL ENGINEER — DATE 7/28/10

10-11-10
PLANS APPROVAL DATE

REGISTERED PROFESSIONAL ENGINEER — Robert Sennett — No. 3976 — Exp. 12/31/10 — STRUCTURAL — STATE OF CALIFORNIA

The State of California or its officers or agents shall not be responsible for the accuracy or completeness of scanned copies of this plan sheet.

SAN JOAQUIN COUNCIL OF GOVERMENT
555 E. WEBER AVENUE
STOCKTON, CA 95202

MGE ENGINEERING, INC.
7415 GREENHAVEN DRIVE, SUITE 100
SACRAMENTO, CA 95831

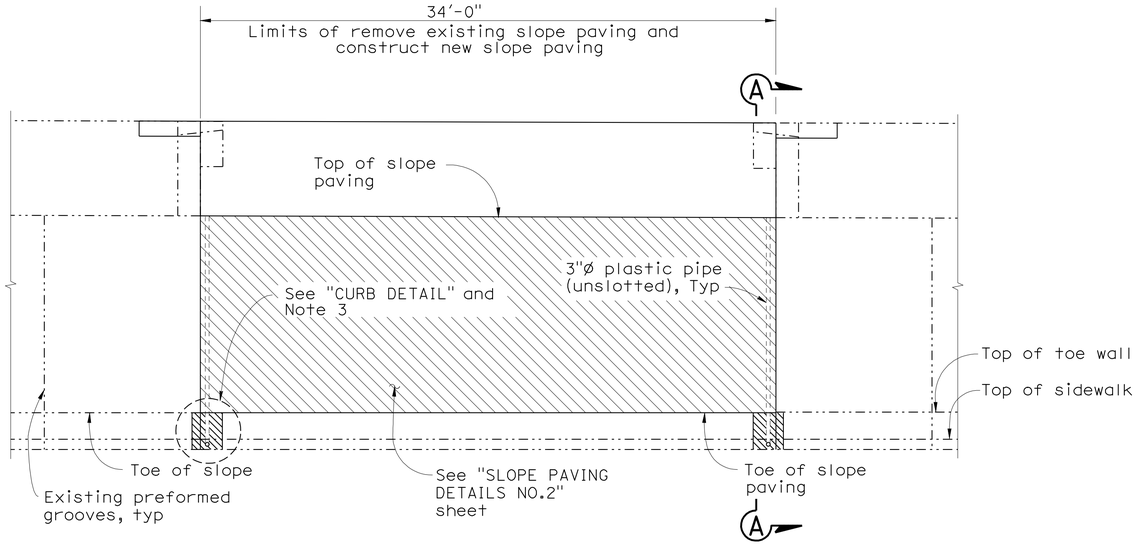

SCHEMATIC SLOPE PAVING LAYOUT-INTERIOR WIDENING

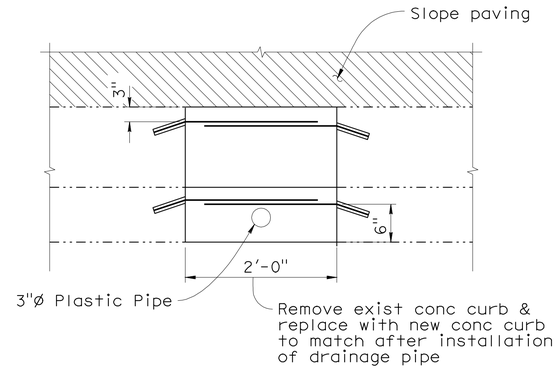

CURB DETAIL

1" = 1'-0"

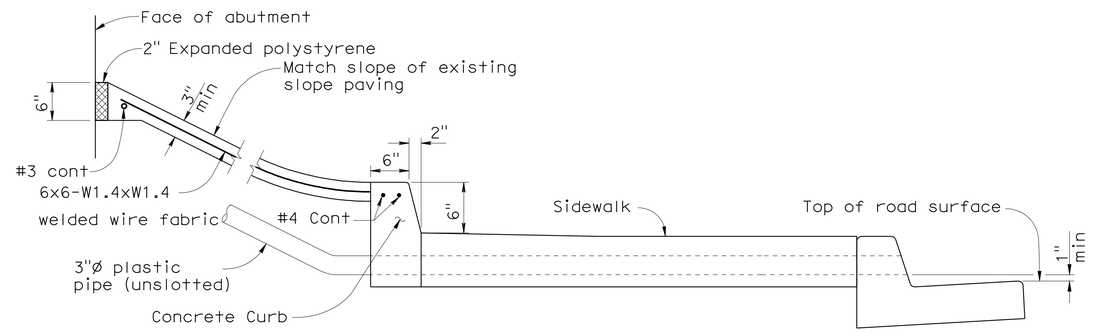

SECTION A-A

1" = 1'-0"

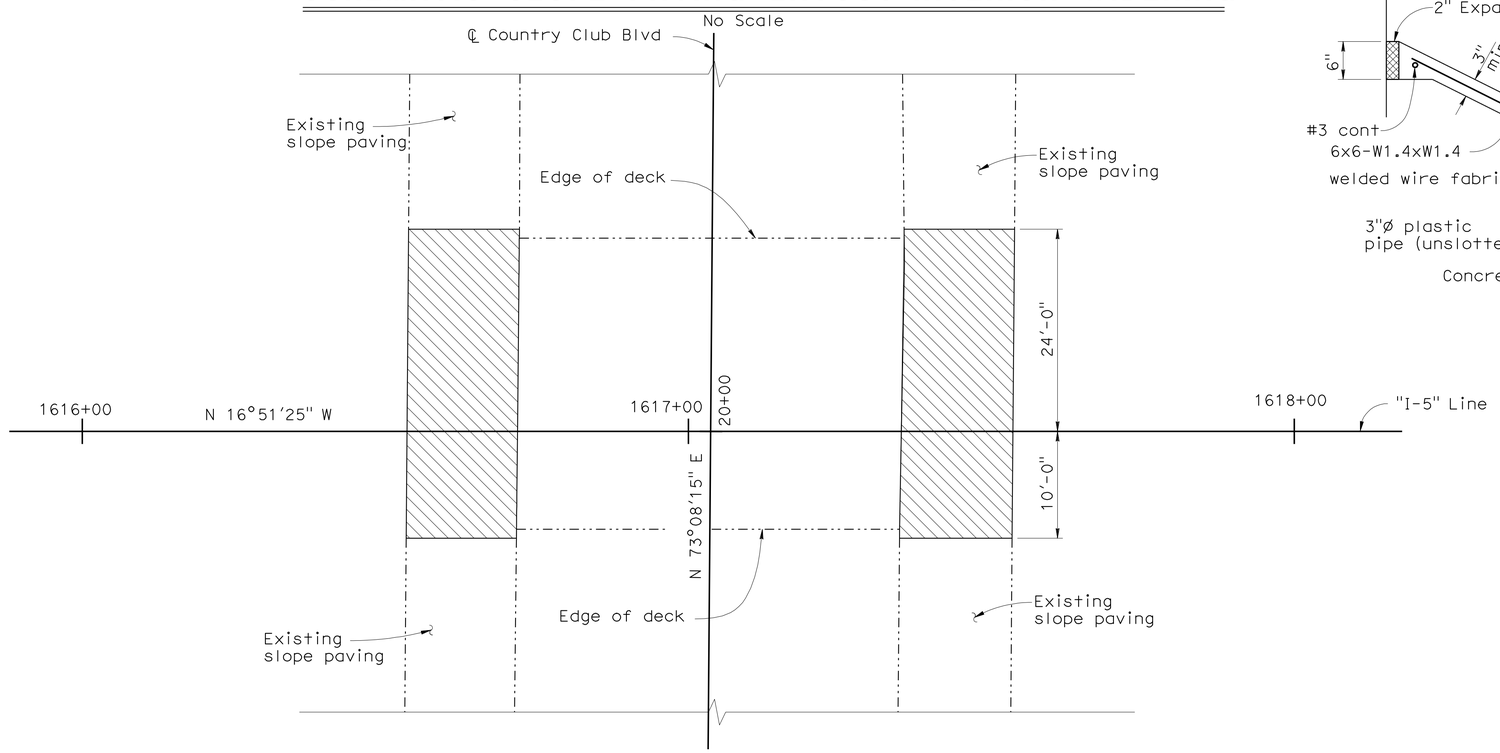

LIMITS OF SLOPE PAVING

NO SCALE

LEGEND

Indicates limits of Bridge Removal (Portion) and Slope Paving (Patterned Concrete)

Notes:

1. New slope paving shall match height of existing slope paving.
2. Abutment 1 shown, Abutment 2 similar.
3. Remove a 2'-0' strip of concrete curb and sidewalk and place a 3" dia plastic pipe (unslotted) to discharge through curb face.
4. Reconstruct curb and sidewalk. Connect new curb to existing curb per "CURB DETAIL."

NOTE:
THE CONTRACTOR SHALL VERIFY ALL CONTROLLING FIELD DIMENSIONS BEFORE ORDERING OR FABRICATING ANY MATERIAL.

DESIGN OVERSIGHT — John Fujimoto
8-2-10
SIGN OFF DATE

	BY	CHECKED
DESIGN	P. Zhao	D. Chan
DETAILS	P. Zhao	D. Chan
QUANTITIES	R. Huang	S. Kotamala

PREPARED FOR THE STATE OF CALIFORNIA DEPARTMENT OF TRANSPORTATION

Robert Sennett
PROJECT ENGINEER

BRIDGE NO. 29-0189
POST MILE 28.53

COUNTRY CLUB BLVD UC (WIDEN)
SLOPE PAVING DETAILS NO. 1

DESIGN DETAIL SHEET (ENGLISH) (REV. 06-01-09)

ORIGINAL SCALE IN INCHES FOR REDUCED PLANS 0 1 2 3

CU 06240
EA 0G4701

DISREGARD PRINTS BEARING EARLIER REVISION DATES

REVISION DATES (PRELIMINARY STAGE ONLY): 10/14/09 12/04/09 01/13/10 04/23/10 06/11/10 07/28/10

SHEET 22 OF 28

FILE => 29-0189rl-v-slpd01.dgn

USERNAME => trmnguye DATE PLOTTED => 13-OCT-2010 TIME PLOTTED => 08:52

DIST	COUNTY	ROUTE	POST MILES TOTAL PROJECT	SHEET No	TOTAL SHEETS
10	SJ	5	25.0/32.7	926	1132

REGISTERED CIVIL ENGINEER — DATE 7/28/10

10-11-10
PLANS APPROVAL DATE

REGISTERED PROFESSIONAL ENGINEER — Robert Sennett — No. 3976 — Exp. 12/31/10 — STRUCTURAL — STATE OF CALIFORNIA

The State of California or its officers or agents shall not be responsible for the accuracy or completeness of scanned copies of this plan sheet.

SAN JOAQUIN COUNCIL OF GOVERMENT
555 E. WEBER AVENUE
STOCKTON, CA 95202

MGE ENGINEERING, INC.
7415 GREENHAVEN DRIVE, SUITE 100
SACRAMENTO, CA 95831

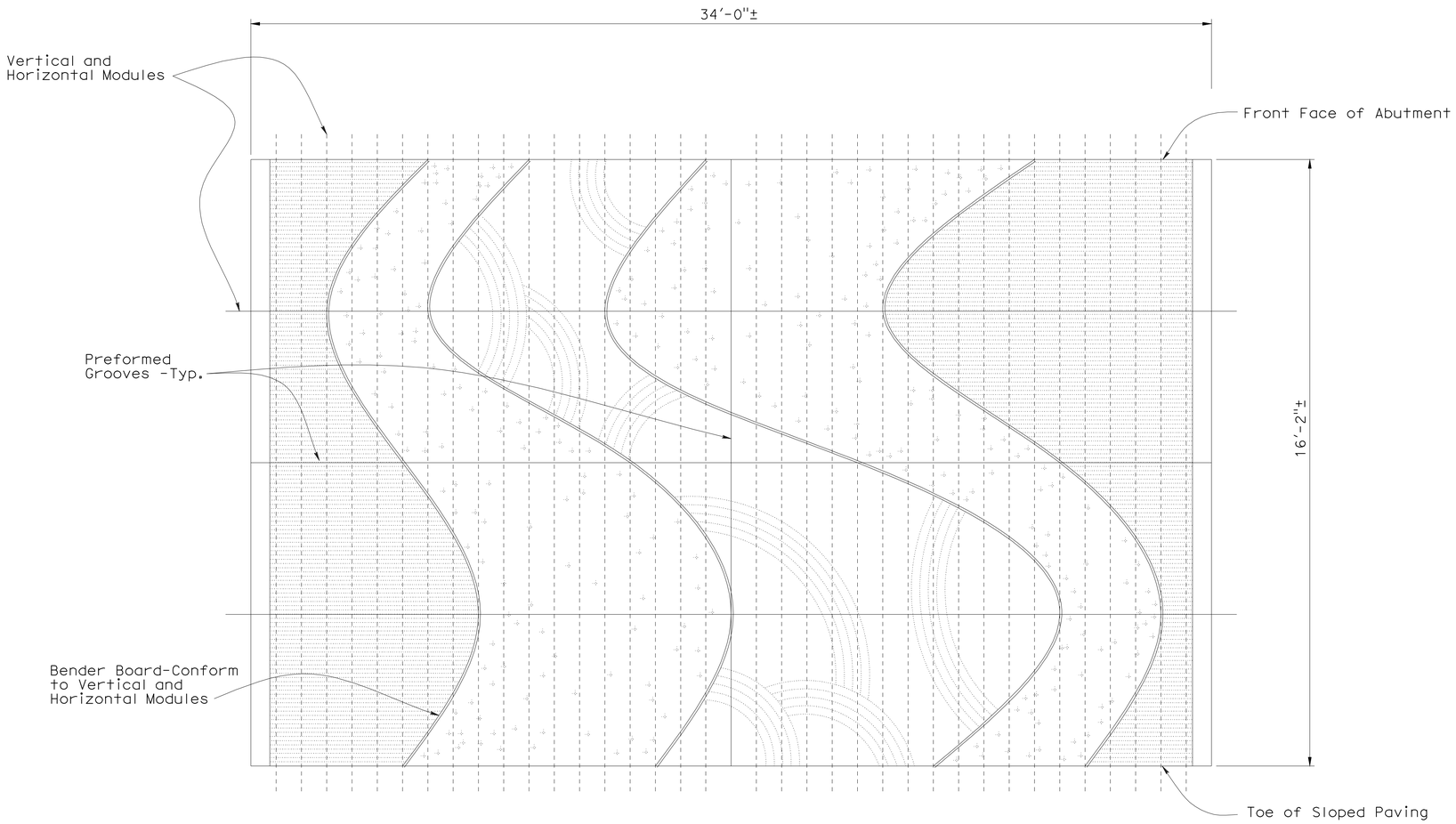

NORTH ELEVATION

3/8" = 1'-0"

Pattern Legend

Curves Plastic Lumber Bender Board ($\frac{1}{2}$" width x 3$\frac{1}{2}$" depth) Between Concrete Patterns

Concrete Pattern A Vertical Rough Broom Finish

Concrete Pattern B Horizontal Scored Metal Rake Tooling (1" on center +/- x $\frac{1}{2}$"Depth Max) over Horizontal Rough Broom Finish

Concrete Pattern C Randomly Seeded Aggregate (40% of Surface Covered) with 1 $\frac{1}{2}$"-2" Aggregate

Concrete Pattern D 5-Prong Rake Tooling (4" on center x $\frac{1}{2}$" Depth Max) Score in Arcs over Vertical Rough Broom Finish -Start and End Points Shall Not Overlap Other Patterns -Pattern Shown is Schematic

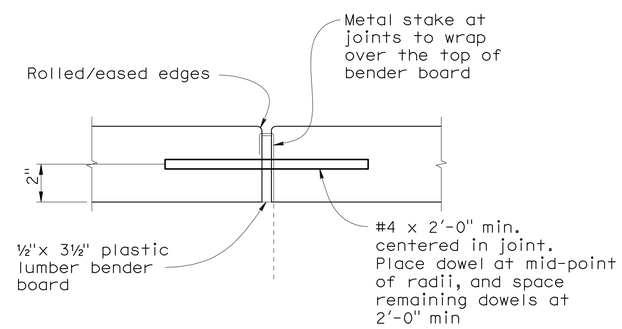

DOWEL DETAIL

3" = 1'-0"

NOTE:
THE CONTRACTOR SHALL VERIFY ALL CONTROLLING FIELD DIMENSIONS BEFORE ORDERING OR FABRICATING ANY MATERIAL.

DESIGN OVERSIGHT — John Fujimoto
8-2-10
SIGN OFF DATE

	BY	CHECKED
DESIGN	P. Zhao	D. Chan
DETAILS	P. Zhao	D. Chan
QUANTITIES	R. Huang	S. Kotamala

PREPARED FOR THE STATE OF CALIFORNIA DEPARTMENT OF TRANSPORTATION

Robert Sennett
PROJECT ENGINEER

BRIDGE NO. 29-0189
POST MILE 28.53

COUNTRY CLUB BLVD UC (WIDEN)
SLOPE PAVING DETAILS NO. 2

DESIGN DETAIL SHEET (ENGLISH) (REV. 06-01-09)

ORIGINAL SCALE IN INCHES FOR REDUCED PLANS 0 1 2 3

CU 06240
EA 0G4701

DISREGARD PRINTS BEARING EARLIER REVISION DATES → REVISION DATES (PRELIMINARY STAGE ONLY) 10/16/09 12/04/09 01/12/10 04/23/10 06/11/10 07/28/10

SHEET 23 OF 28

FILE => 29-0189rl-v-slpd02.dgn

USERNAME => frmmguye DATE PLOTTED => 13-OCT-2010 TIME PLOTTED => 08:52

DIST	COUNTY	ROUTE	POST MILES TOTAL PROJECT	SHEET No	TOTAL SHEETS
10	SJ	5	25.0/32.7	927	1132

R E Sennett 7/28/10
REGISTERED CIVIL ENGINEER DATE

10-11-10
PLANS APPROVAL DATE

REGISTERED PROFESSIONAL ENGINEER
Robert Sennett
No. 3976
Exp. 12/31/10
STRUCTURAL
STATE OF CALIFORNIA

The State of California or its officers or agents shall not be responsible for the accuracy or completeness of scanned copies of this plan sheet.

SAN JOAQUIN COUNCIL OF GOVERMENT
555 E. WEBER AVENUE
STOCKTON, CA 95202

MGE ENGINEERING, INC.
7415 GREENHAVEN DRIVE, SUITE 100
SACRAMENTO, CA 95831

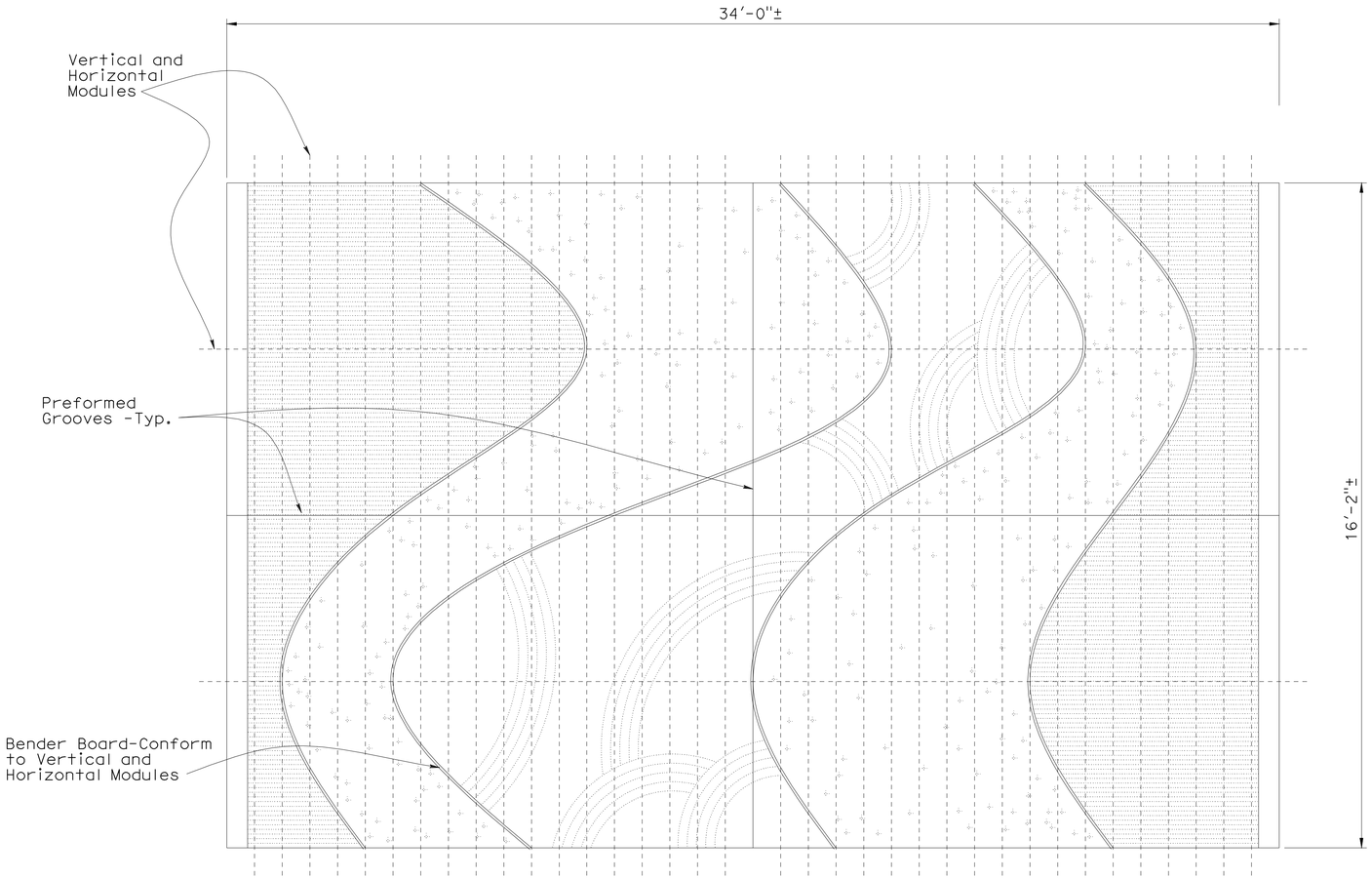

SOUTH ELEVATION

$\frac{3}{8}$" = 1'-0"

Pattern Legend

Curves Plastic Lumber Bender Board ($\frac{1}{2}$" width x 3$\frac{1}{2}$" depth) Between Concrete Patterns

Concrete Pattern A Vertical Rough Broom Finish

Concrete Pattern B Horizontal Scored Metal Rake Tooling (1" on center +/- x $\frac{1}{2}$"Depth Max) over Horizontal Rough Broom Finish

Concrete Pattern C Randomly Seeded Aggregate (40% of Surface Covered) with 1 $\frac{1}{2}$"-2" Aggregate

Concrete Pattern D 5-Prong Rake Tooling (4" on center x $\frac{1}{2}$" Depth Max) Score in Arcs over Vertical Rough Broom Finish -Start and End Points Shall Not Overlap Other Patterns -Pattern Shown is Schematic

NOTE:
THE CONTRACTOR SHALL VERIFY ALL CONTROLLING FIELD DIMENSIONS BEFORE ORDERING OR FABRICATING ANY MATERIAL.

John Fujimoto
DESIGN OVERSIGHT John Fujimoto
8-2-10
SIGN OFF DATE

	BY	CHECKED
DESIGN	P. Zhao	D. Chan
DETAILS	P. Zhao	D. Chan
QUANTITIES	R. Huang	S. Kotamala

PREPARED FOR THE STATE OF CALIFORNIA DEPARTMENT OF TRANSPORTATION

Robert Sennett
PROJECT ENGINEER

BRIDGE NO. 29-0189
POST MILE 28.53

COUNTRY CLUB BLVD UC (WIDEN)
SLOPE PAVING DETAILS NO. 3

DESIGN DETAIL SHEET (ENGLISH) (REV. 06-01-09)

ORIGINAL SCALE IN INCHES FOR REDUCED PLANS 0 1 2 3

CU 06240
EA 0G4701

DISREGARD PRINTS BEARING EARLIER REVISION DATES

REVISION DATES (PRELIMINARY STAGE ONLY) 10/16/09 12/04/09 01/25/10 04/23/10 06/17/10 07/28/10

SHEET 24 OF 28

FILE => 29-0189rl-v-slpd03.dgn

USERNAME => trmnguye DATE PLOTTED => 13-OCT-2010 TIME PLOTTED => 08:52

REFERENCE: CALTRANS SOIL & ROCK LOGGING, CLASSIFICATION, AND PRESENTATION MANUAL (JUNE 2007)

DIST	COUNTY	ROUTE	POST MILES TOTAL PROJECT	SHEET No	TOTAL SHEETS
10	SJ	5	25.0/32.7	928	1132

GEOTECHNICAL PROFESSIONAL 7/28/10 DATE

10-11-10
PLANS APPROVAL DATE

REGISTERED PROFESSIONAL ENGINEER
GARY PARIKH
No. G.E. 666
Exp. 12/31/11
GEOTECHNICAL
STATE OF CALIFORNIA

The State of California or its officers or agents shall not be responsible for the accuracy or completeness of scanned copies of this plan sheet.

SAN JOAQUIN COUNCIL OF GOVERNMENTS
555 EAST WEBER AVENUE
STOCKTON, CALIFORNIA 95202

PARIKH CONSULTANTS, INC.
2360 QUME DRIVE, SUITE A
SAN JOSE, CA 95131

CEMENTATION

Description	Criteria
Weak	Crumbles or breaks with handling or little finger pressure.
Moderate	Crumbles or breaks with considerable finger pressure.
Strong	Will not crumble or break with finger pressure.

CONSISTENCY OF COHESIVE SOILS

Description	Unconfined Compressive Strength (tsf)	Pocket Penetrometer Measurement (tsf)	Torvane Measurement (tsf)	Field Approximation
Very Soft	< 0.25	< 0.25	< 0.12	Easily penetrated several inches by fist
Soft	0.25 to 0.50	0.25 to 0.50	0.12 to 0.25	Easily penetrated several inches by thumb
Medium Stiff	0.50 to 1.0	0.50 to 1.0	0.25 to 0.50	Penetrated several inches by thumb with moderate effort
Stiff	1 to 2	1 to 2	0.50 to 1.0	Readily indented by thumb but penetrated only with great effort
Very Stiff	2 to 4	2 to 4	1.0 to 2.0	Readily indented by thumbnail
Hard	> 4.0	> 4.0	> 2.0	Indented by thumbnail with difficulty

BOREHOLE IDENTIFICATION

Symbol	Hole Type	Description
Size	A	Auger Boring
Size	R P	Rotary drilled boring Rotary percussion boring (air)
Size	R	Rotary drilled diamond core
Size	HD HA	Hand driven (1-inch soil tube) Hand Auger
●	D	Dynamic Cone Penetration Boring
▲	CPT	Cone Penetration Test (ASTM D 5778-95)
⬚	O	Other

Note: Size in inches.

PLASTICITY OF FINE-GRAINED SOILS

Description	Criteria
Nonplastic	A 1/8-inch thread cannot be rolled at any water content.
Low	The thread can barely be rolled and the lump cannot be formed when drier than the plastic limit.
Medium	The thread is easy to roll and not much time is required to reach the plastic limit. The thread cannot be rerolled after reaching the plastic limit. The lump crumbles when drier than the plastic limit.
High	It takes considerable time rolling and kneading to reach the plastic limit. The thread can be rerolled several times after reaching the plastic limit. The lump can be formed without crumbling when drier than the plastic limit.

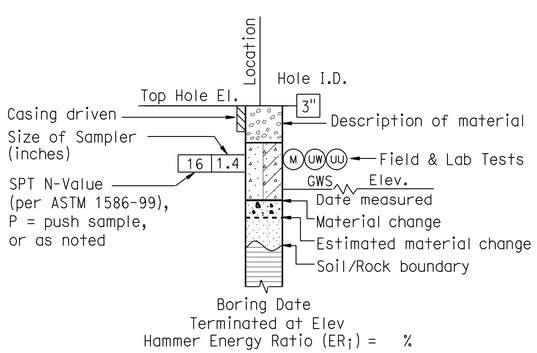

ROTARY BORING

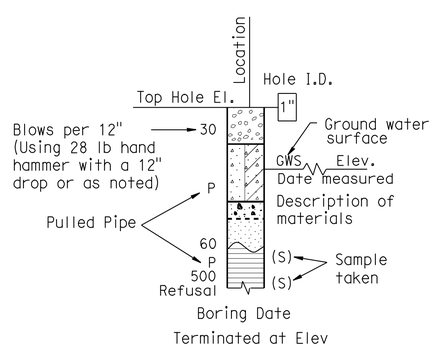

HAND BORING

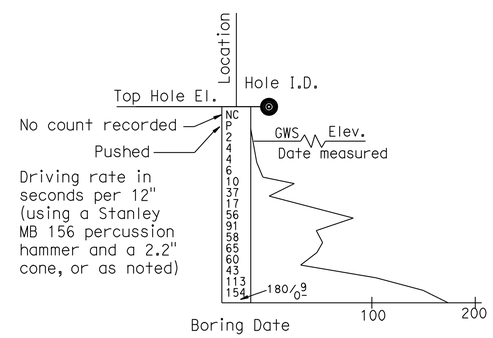

DYNAMIC CONE PENETRATION BORING

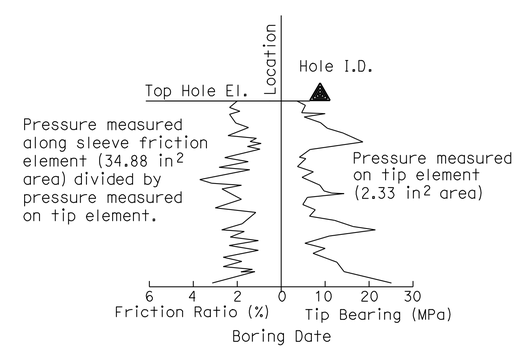

CONE PENETRATION TEST (CPT) SOUNDING

John Fujimoto
DESIGN OVERSIGHT John Fujimoto
8-2-10
SIGN OFF DATE

DRAWN BY O. GOUTHIER
CHECKED BY D. WANG

S. DUDDU - A. R. BHARADWAJ
FIELD INVESTIGATION BY:
DATE: MARCH 2009 - APRIL 2009

PREPARED FOR THE
STATE OF CALIFORNIA
DEPARTMENT OF TRANSPORTATION

A. LAM
PROJECT ENGINEER

BRIDGE NO. 29-0189
POST MILES 28.53

COUNTRY CLUB BLVD. UC (WIDEN)
SOIL LEGEND 1 OF 2

OGS CIVIL LOG OF TEST BORINGS SHEET (ENGLISH) (REV. 06-01-09)

ORIGINAL SCALE IN INCHES FOR REDUCED PLANS 0 1 2 3

CU 06240
EA 0G4701

DISREGARD PRINTS BEARING EARLIER REVISION DATES
REVISION DATES: 10/16/09 12/04/09 01/15/10 04/23/10 06/14/10 7/28/10

SHEET 25 OF 28

FILE => 29-0189-z-1tb01.dgn

USERNAME => trimguye DATE PLOTTED => 13-OCT-2010 TIME PLOTTED => 08:52

REFERENCE: CALTRANS SOIL & ROCK LOGGING, CLASSIFICATION, AND PRESENTATION MANUAL (JUNE 2007)

DIST	COUNTY	ROUTE	POST MILES TOTAL PROJECT	SHEET No	TOTAL SHEETS
10	SJ	5	25.0/32.7	929	1132

GEOTECHNICAL PROFESSIONAL — DATE 7/28/10

PLANS APPROVAL DATE 10-11-10

The State of California or its officers or agents shall not be responsible for the accuracy or completeness of scanned copies of this plan sheet.

REGISTERED PROFESSIONAL ENGINEER — GARY PARIKH — No. G.E. 666 — Exp. 12/31/11 — GEOTECHNICAL — STATE OF CALIFORNIA

SAN JOAQUIN COUNCIL OF GOVERNMENTS
555 EAST WEBER AVENUE
STOCKTON, CALIFORNIA 95202

PARIKH CONSULTANTS, INC.
2360 QUME DRIVE, SUITE A
SAN JOSE, CA 95131

GROUP SYMBOLS AND NAMES

Graphic/Symbol	Group Names	Graphic/Symbol	Group Names
GW	Well-graded GRAVEL Well-graded GRAVEL with SAND	CL	Lean CLAY Lean CLAY with SAND Lean CLAY with GRAVEL SANDY lean CLAY SANDY lean CLAY with GRAVEL GRAVELLY lean CLAY GRAVELLY lean CLAY with SAND
GP	Poorly graded GRAVEL Poorly graded GRAVEL with SAND		
GW-GM	Well-graded GRAVEL with SILT Well-graded GRAVEL with SILT and SAND	CL-ML	SILTY CLAY SILTY CLAY with SAND SILTY CLAY with GRAVEL SANDY SILTY CLAY SANDY SILTY CLAY with GRAVEL GRAVELLY SILTY CLAY GRAVELLY SILTY CLAY with SAND
GW-GC	Well-graded GRAVEL with CLAY (or SILTY CLAY) Well-graded GRAVEL with CLAY and SAND (or SILTY CLAY and SAND)		
GP-GM	Poorly graded GRAVEL with SILT Poorly graded GRAVEL with SILT and SAND	ML	SILT SILT with SAND SILT with GRAVEL SANDY SILT SANDY SILT with GRAVEL GRAVELLY SILT GRAVELLY SILT with SAND
GP-GC	Poorly graded GRAVEL with CLAY (or SILTY CLAY) Poorly graded GRAVEL with CLAY and SAND (or SILTY CLAY and SAND)		
GM	SILTY GRAVEL SILTY GRAVEL with SAND	OL	ORGANIC lean CLAY ORGANIC lean CLAY with SAND ORGANIC lean CLAY with GRAVEL SANDY ORGANIC lean CLAY SANDY ORGANIC lean CLAY with GRAVEL GRAVELLY ORGANIC lean CLAY GRAVELLY ORGANIC lean CLAY with SAND
GC	CLAYEY GRAVEL CLAYEY GRAVEL with SAND		
GC-GM	SILTY, CLAYEY GRAVEL SILTY, CLAYEY GRAVEL with SAND	OL	ORGANIC SILT ORGANIC SILT with SAND ORGANIC SILT with GRAVEL SANDY ORGANIC SILT SANDY ORGANIC SILT with GRAVEL GRAVELLY ORGANIC SILT GRAVELLY ORGANIC SILT with SAND
SW	Well-graded SAND Well-graded SAND with GRAVEL		
SP	Poorly graded SAND Poorly graded SAND with GRAVEL	CH	Fat CLAY Fat CLAY with SAND Fat CLAY with GRAVEL SANDY fat CLAY SANDY fat CLAY with GRAVEL GRAVELLY fat CLAY GRAVELLY fat CLAY with SAND
SW-SM	Well-graded SAND with SILT Well-graded SAND with SILT and GRAVEL		
SW-SC	Well-graded SAND with CLAY (or SILTY CLAY) Well-graded SAND with CLAY and GRAVEL (or SILTY CLAY and GRAVEL)	MH	Elastic SILT Elastic SILT with SAND Elastic SILT with GRAVEL SANDY elastic SILT SANDY elastic SILT with GRAVEL GRAVELLY elastic SILT GRAVELLY elastic SILT with SAND
SP-SM	Poorly graded SAND with SILT Poorly graded SAND with SILT and GRAVEL		
SP-SC	Poorly graded SAND with CLAY (or SILTY CLAY) Poorly graded SAND with CLAY and GRAVEL (or SILTY CLAY and GRAVEL)	OH	ORGANIC fat CLAY ORGANIC fat CLAY with SAND ORGANIC fat CLAY with GRAVEL SANDY ORGANIC fat CLAY SANDY ORGANIC fat CLAY with GRAVEL GRAVELLY ORGANIC fat CLAY GRAVELLY ORGANIC fat CLAY with SAND
SM	SILTY SAND SILTY SAND with GRAVEL		
SC	CLAYEY SAND CLAYEY SAND with GRAVEL	OH	ORGANIC elastic SILT ORGANIC elastic SILT with SAND ORGANIC elastic SILT with GRAVEL SANDY ORGANIC elastic SILT SANDY ORGANIC elastic SILT with GRAVEL GRAVELLY ORGANIC elastic SILT GRAVELLY ORGANIC elastic SILT with SAND
SC-SM	SILTY, CLAYEY SAND SILTY, CLAYEY SAND with GRAVEL		
PT	PEAT	OL/OH	ORGANIC SOIL ORGANIC SOIL with SAND ORGANIC SOIL with GRAVEL SANDY ORGANIC SOIL SANDY ORGANIC SOIL with GRAVEL GRAVELLY ORGANIC SOIL GRAVELLY ORGANIC SOIL with SAND
	COBBLES COBBLES and BOULDERS BOULDERS		

FIELD AND LABORATORY TESTING

- (C) Consolidation (ASTM D 2435)
- (CL) Collapse Potential (ASTM D 5333)
- (CP) Compaction Curve (CTM 216)
- (CR) Corrosivity Testing (CTM 643, CTM 422, CTM 417)
- (CU) Consolidated Undrained Triaxial (ASTM D 4767)
- (DS) Direct Shear (ASTM D 3080)
- (EI) Expansion Index (ASTM D 4829)
- (M) Moisture Content (ASTM D 2216)
- (OC) Organic Content-% (ASTM D 2974)
- (P) Permeability (CTM 220)
- (PA) Particle Size Analysis (ASTM D 422)
- (PI) Plasticity Index (AASHTO T 90) Liquid Limit (AASHTO T 89)
- (PL) Point Load Index (ASTM D 5731)
- (PM) Pressure Meter
- (PP) Pocket Penetrometer
- (R) R-Value (CTM 301)
- (SE) Sand Equivalent (CTM 217)
- (SG) Specific Gravity (AASHTO T 100)
- (SL) Shrinkage Limit (ASTM D 427)
- (SW) Swell Potential (ASTM D 4546)
- (TV) Pocket Torvane
- (UC) Unconfined Compression-Soil (ASTM D 2166) Unconfined Compression-Rock (ASTM D 2938)
- (UU) Unconsolidated Undrained Triaxial (ASTM D 2850)
- (UW) Unit Weight (ASTM D 4767)
- (VS) Vane Shear (AASHTO T 223)

APPARENT DENSITY OF COHESIONLESS SOILS

Description	SPT N_{60} (Blows / 12 inches)
Very loose	0 - 4
Loose	5 - 10
Medium Dense	11 - 30
Dense	31 - 50
Very Dense	> 50

MOISTURE

Description	Criteria
Dry	Absence of moisture, dusty, dry to the touch
Moist	Damp but no visible water
Wet	Visible free water, usually soil is below water table

PERCENT OR PROPORTION OF SOILS

Description	Criteria
Trace	Particles are present but estimated to be less than 5%
Few	5 to 10%
Little	15 to 25%
Some	30 to 45%
Mostly	50 to 100%

PARTICLE SIZE

Description		Size
Boulder		> 12"
Cobble		3" to 12"
Gravel	Coarse	3/4" to 3"
	Fine	No. 4 to 3/4"
Sand	Coarse	No. 10 to No. 4
	Medium	No. 40 to No. 10
	Fine	No. 200 to No. 40

DESIGN OVERSIGHT — John Fujimoto — 8-2-10 — SIGN OFF DATE

DRAWN BY: O. GOUTHIER
CHECKED BY: D. WANG

S. DUDDU - A. R. BHARADWAJ — FIELD INVESTIGATION BY:
DATE: MARCH 2009 - APRIL 2009

PREPARED FOR THE STATE OF CALIFORNIA DEPARTMENT OF TRANSPORTATION

A. LAM — PROJECT ENGINEER

BRIDGE NO. 29-0189
POST MILES 28.53

COUNTRY CLUB BLVD. UC (WIDEN)
SOIL LEGEND 2 OF 2

OGS CIVIL LOG OF TEST BORINGS SHEET (ENGLISH) (REV. 06-01-09)

ORIGINAL SCALE IN INCHES FOR REDUCED PLANS 0 1 2 3

CU 06240
EA 0G4701

DISREGARD PRINTS BEARING EARLIER REVISION DATES

REVISION DATES: 10/16/09 12/04/09 01/25/10 04/23/10 06/11/10 7/28/10

SHEET 26 OF 28

FILE => 29-0189-z-1tb02.dgn

USERNAME => trmguye DATE PLOTTED => 13-OCT-2010 TIME PLOTTED => 08:52

DIST	COUNTY	ROUTE	POST MILES TOTAL PROJECT	SHEET No	TOTAL SHEETS
10	SJ	5	25.0/32.7	930	1132

GEOTECHNICAL PROFESSIONAL — DATE 7/28/10

10-11-10
PLANS APPROVAL DATE

REGISTERED PROFESSIONAL ENGINEER — GARY PARIKH — No. G.E. 666 — Exp. 12/31/11 — GEOTECHNICAL — STATE OF CALIFORNIA

The State of California or its officers or agents shall not be responsible for the accuracy or completeness of scanned copies of this plan sheet.

SAN JOAQUIN COUNCIL OF GOVERNMENTS
555 EAST WEBER AVENUE
STOCKTON, CALIFORNIA 95202

PARIKH CONSULTANTS, INC.
2360 QUME DRIVE, SUITE A
SAN JOSE, CA 95131

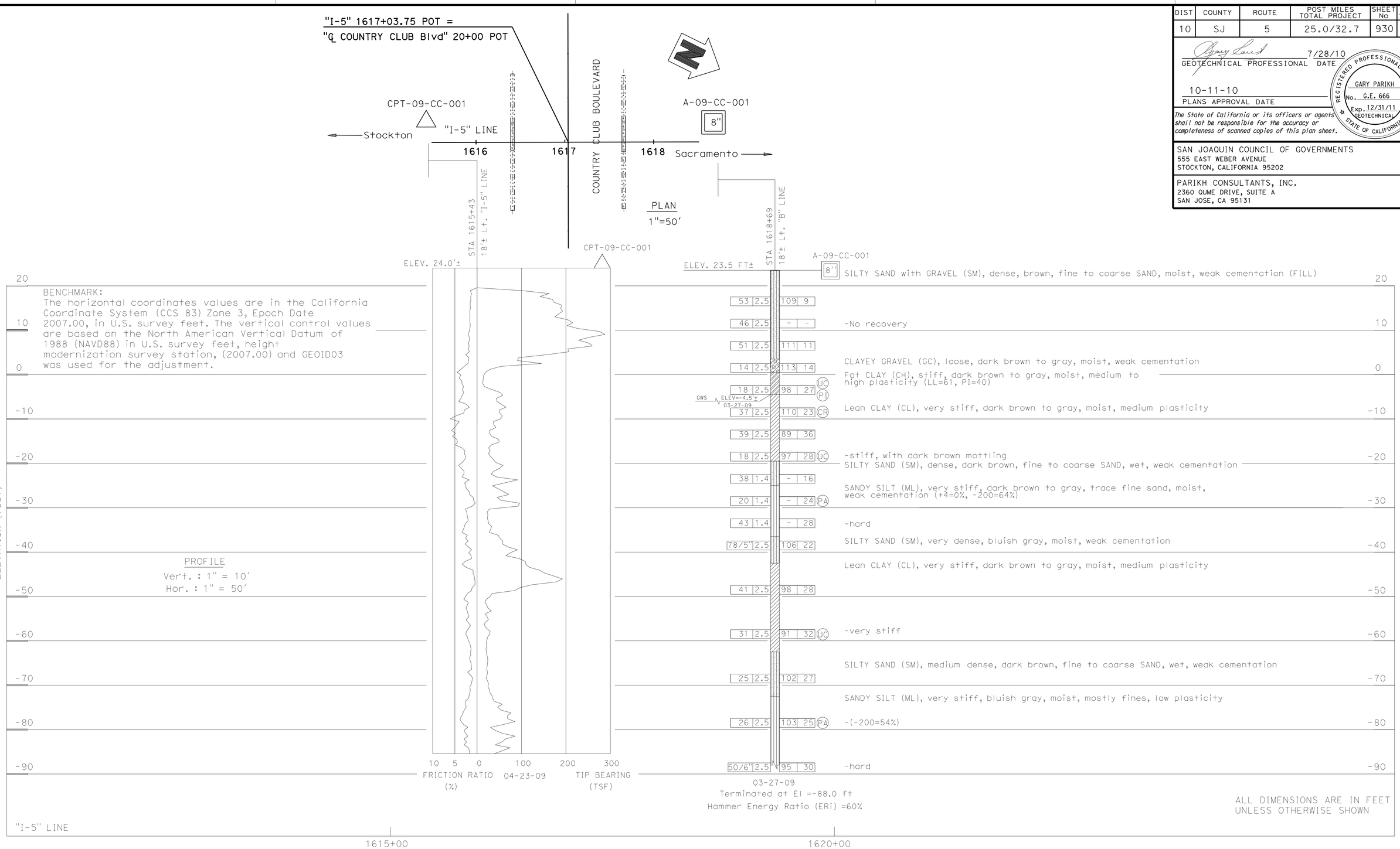

DESIGN OVERSIGHT — John Fujimoto	DRAWN BY	O. GOUTHIER	S. DUDDU - A. R. BHARADWAJ — FIELD INVESTIGATION BY:
8-2-10 — SIGN OFF DATE	CHECKED BY	D. WANG	DATE: MARCH 2009 - APRIL 2009

PREPARED FOR THE STATE OF CALIFORNIA DEPARTMENT OF TRANSPORTATION

A. LAM — PROJECT ENGINEER

BRIDGE NO. 29-0189
POST MILES 28.53

COUNTRY CLUB BLVD. UC (WIDEN)
LOG OF TEST BORINGS 1 OF 2

OGS GEOTECHNICAL LOG OF TEST BORINGS SHEET (ENGLISH) (REV. 06-01-09)

ORIGINAL SCALE IN INCHES FOR REDUCED PLANS 0 1 2 3

CU 06240
EA 0G4701

DISREGARD PRINTS BEARING EARLIER REVISION DATES → 10/16/09 12/04/09 01/15/10 04/28/10 06/14/10 7/28/10

REVISION DATES — SHEET 27 OF 28

FILE => 29-0189-z-1tb03.dgn

USERNAME => trmnguye DATE PLOTTED => 13-OCT-2010 TIME PLOTTED => 08:53

DIST.	COUNTY	ROUTE	SECTION	SHEET No.	TOTAL SHEETS
10	SJ	5	25.5/31.5	294	392

September 5, 1967

TO ACCOMPANY PLANS DATED 10-11-10

DIVISION OF ENGINEERING SERVICES – GEOTECHNICAL SERVICES

As-Built Log of Test Borings sheet is considered an informational document only. As such, the State of California registration seal with signature, license number and registration certificate expiration date confirm that this is a true and accurate copy of the original document. This drawing is available and presented only for the convenience of any bidder, contractor or other interested party.

DIST.	COUNTY	ROUTE	POST MILES-TOTAL PROJECT	Sheet No.	Total Sheets
10	SJ	5	25.0/32.7	931	1132

REGISTERED CIVIL ENGINEER — DATE 7/28/10

REGISTERED PROFESSIONAL ENGINEER — GARY PARIKH — No. G.E. 666 — Exp. 12/31/11 — GEOTECHNICAL — STATE OF CALIFORNIA

COUNTRY CLUB BLVD. UC (WIDEN)

LOG OF TEST BORINGS 2 OF 2

NOTE: A COPY OF THIS LOG OF TEST BORINGS IS AVAILABLE AT OFFICE OF STRUCTURE MAINTENANCE AND INVESTIGATIONS, SACRAMENTO, CALIFORNIA

CU: 06240
EA: 0G4701

BRIDGE No. 29-0189

Sheet 28 of 28

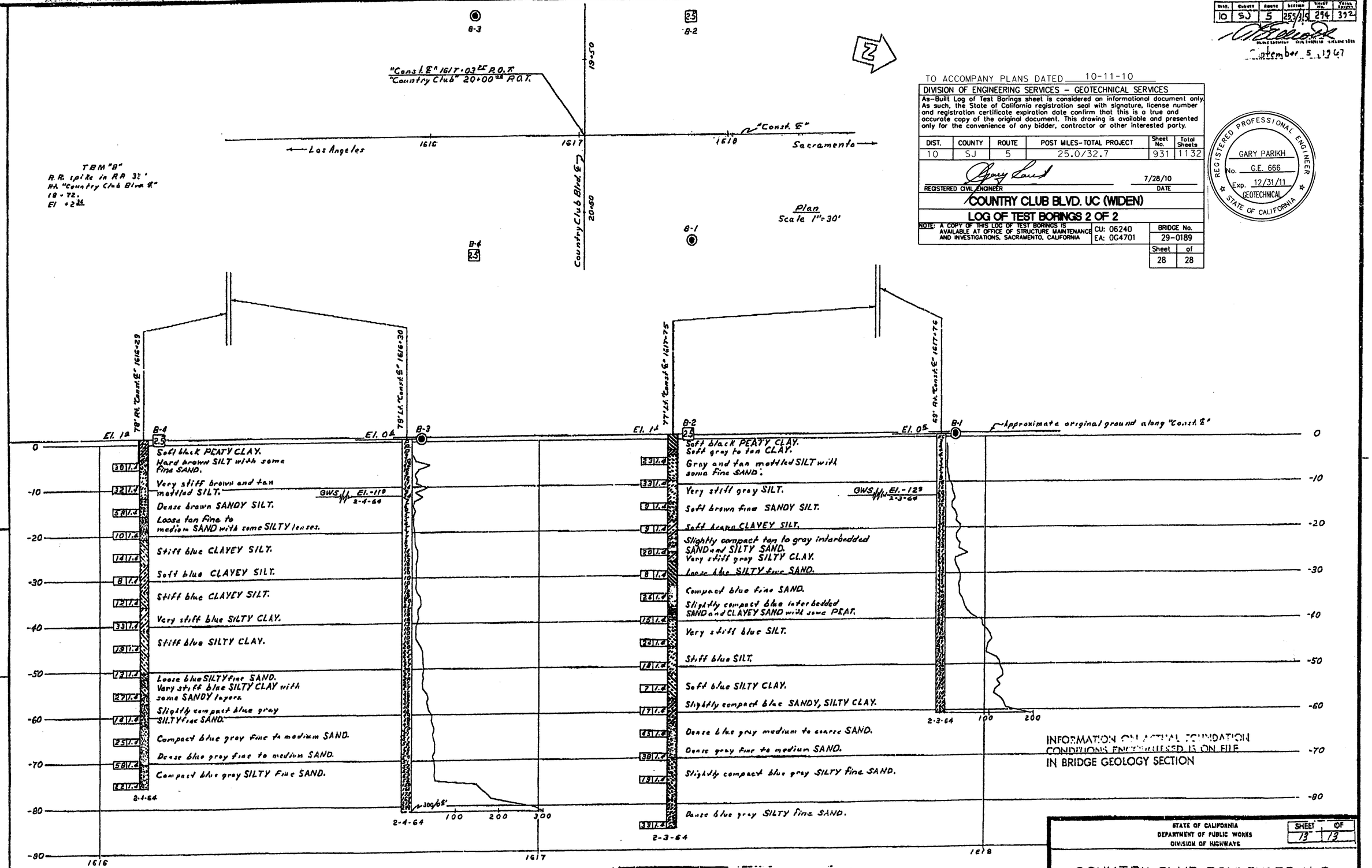

INFORMATION ON ACTUAL FOUNDATION CONDITIONS ENCOUNTERED IS ON FILE IN BRIDGE GEOLOGY SECTION

LEGEND OF BORING OPERATIONS

Penetrometer; 2.5" Core Penetrometer; Standard Boring (Dry); Rotary Boring (Wet); Auger Boring (Dry); Jet Boring; Core Boring; Test Pit; Test Hole; Rotary Drilling; Combination Test Hole; Rotary Core Drilling; Rotary Core Boring; Rotary Boring; 1" Soil Tube

LEGEND OF EARTH MATERIALS

Gravel; Sand; Silt; Clay; Sandy Clay or Clayey Sand; Silty Clay or Clayey Silt; Peat or Organic Matter; Fill Material; Igneous Rock; Sedimentary Rock; Sandy Silt or Silty Sand; Metamorphic Rock

CLASSIFICATION OF MATERIAL: BASED ON STANDARD GRADE SIZE LIMITS

Diagram shows the base for estimated percentages of clay, silt, sand and gravel as determined by visual inspection of grain size. If clay is present in appreciable quantities the term "clayey" may be used in place of "silty" or "sandy". The terms "gravelly", "trace" and "with" when used to describe sand, silt and clay, refer to gravel size limits.

NOTE: Classification of earth material as shown on this sheet is based upon field inspection and is not to be construed to imply mechanical analysis.

STATE OF CALIFORNIA
DEPARTMENT OF PUBLIC WORKS
DIVISION OF HIGHWAYS

SHEET 13 OF 13

COUNTRY CLUB BOULEVARD U. C.

LOG OF TEST BORINGS

SCALE As Noted | BRIDGE 29-189 | FILE | DRAWING 29189-B

AS BUILT PLANS
Contract No. 10-080924
Date Completed
Document No. 00001-89

Discard prior bearing earlier numbers →

PREL. DRAWING No. PR-

FILENAME => 29-0189-z-1tb04.tif

DIST	COUNTY	ROUTE	POST MILES TOTAL PROJECT	SHEET No	TOTAL SHEETS
10	SJ	5	25.0/32.7	932	1132

REGISTERED CIVIL ENGINEER — DATE 7/28/10

PLANS APPROVAL DATE 10-11-10

REGISTERED PROFESSIONAL ENGINEER RONALD L OEN No. 46945 Exp. 9/30/11 CIVIL STATE OF CALIFORNIA

The State of California or its officers or agents shall not be responsible for the accuracy or completeness of scanned copies of this plan sheet.

SAN JOAQUIN COUNCIL OF GOVERNMENTS
555 E. WEBER AVENUE
STOCKTON, CA 95202

BIGGS CARDOSA ASSOCIATES INC.
865 THE ALAMEDA
SAN JOSE, CALIFORNIA 95126

Legend:

- Bridge Removal (Portion)
- Closure Pour
- Indicates point of minimum vertical clearance
- Indicates existing structure
- Indicates direction of traffic
- Soffit lighting, see Electrical Plans

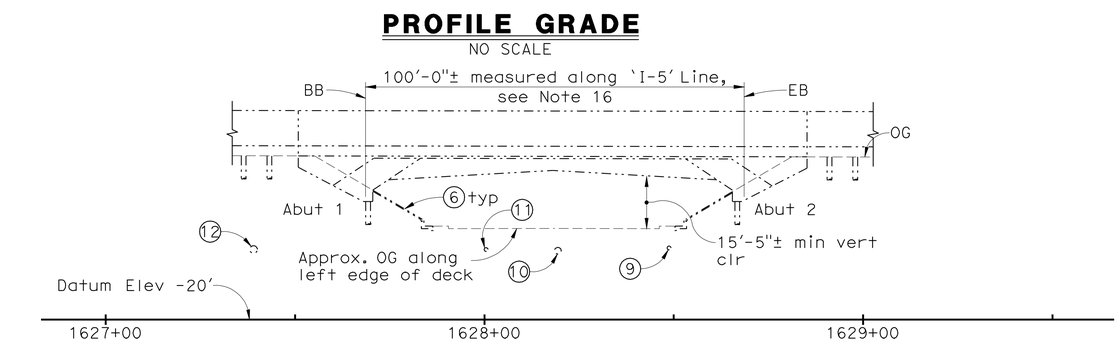

PROFILE GRADE

NO SCALE

ELEVATION

1" = 20'

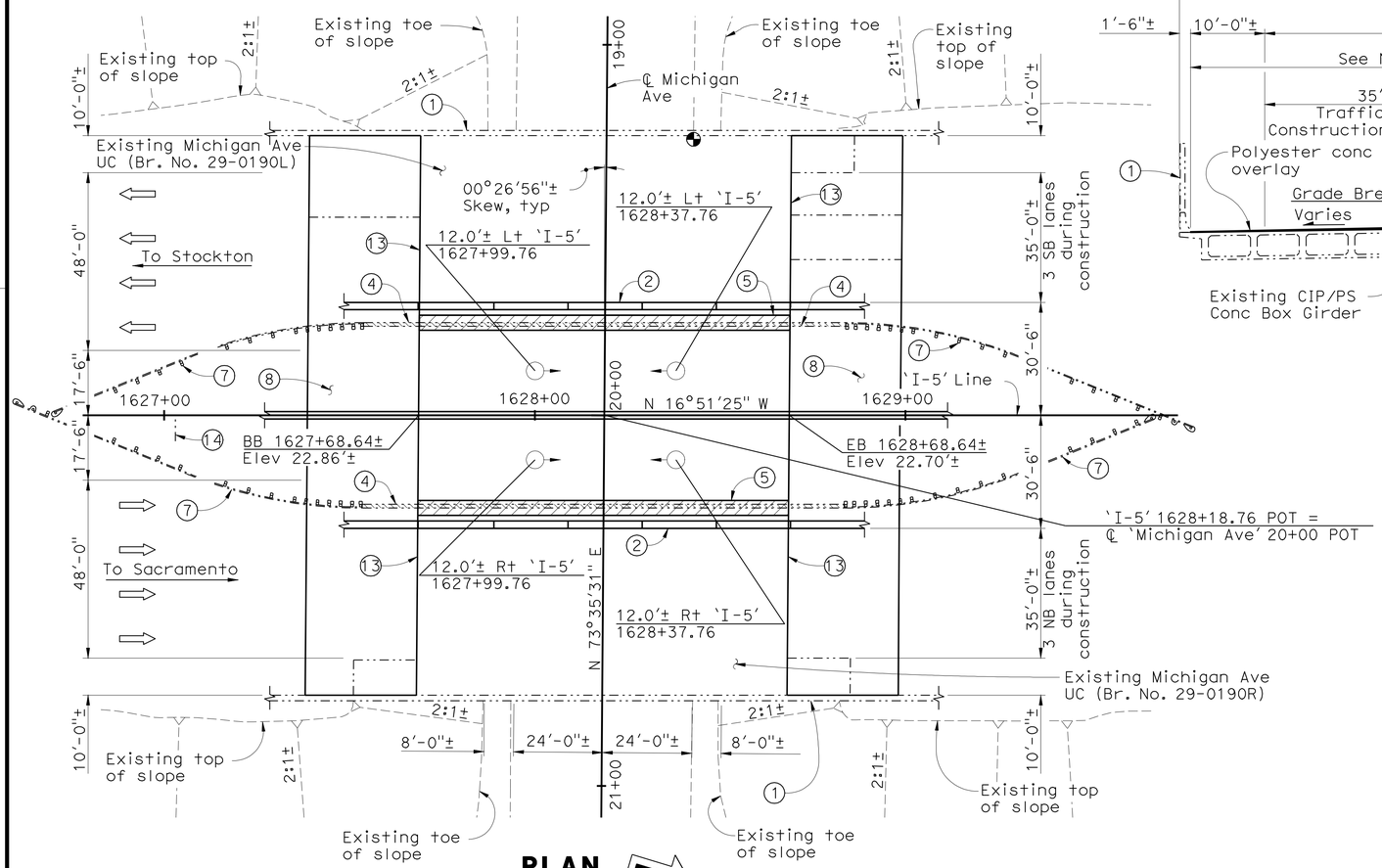

PLAN

1" = 20'

Note:
The Contractor shall verify all controlling field dimensions before ordering or fabricating any material

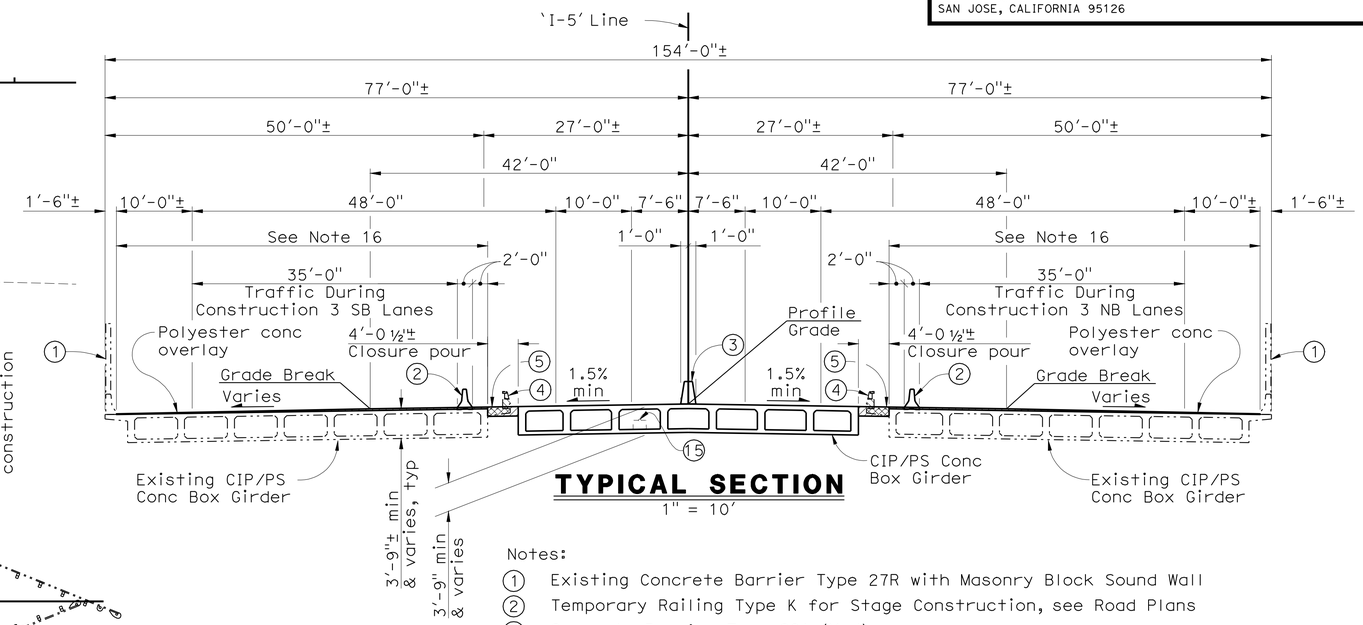

TYPICAL SECTION

1" = 10'

Notes:

1. Existing Concrete Barrier Type 27R with Masonry Block Sound Wall
2. Temporary Railing Type K for Stage Construction, see Road Plans
3. Concrete Barrier Type 60A (Mod)
4. Salvage existing Type 9 Barrier Railing after removal
5. Remove existing Overhang
6. Remove and replace existing Slope Paving between Bridges
7. Remove existing Bridge Approach Guard Railing at Median, see Road Plans
8. Structure Approach Type N(30D) and Type R(30D), see 'LIMITS OF STRUCTURE APPROACH ' sheet
9. Existing 12" water line (California Water Company), see Road Plans
10. Existing 18" dia storm drain, see Road Plans
11. Existing Gas Line, see Road Plans
12. Existing 24" dia storm drain, see Road Plans
13. Remove and replace existing joint seal, full width
14. Existing overhead sign to be relocated see Road Plans
15. 4" dia Fiber Optic (Future), see Electrical Plans
16. Indicates limits of Prepare Concrete Bridge Deck Surface, and Furnish and Place Polyester Concrete Overlay with Longitudinal Grooving
17. For Pile Data Table, see 'FOUNDATION PLAN'
18. For General Notes, Quantities and Index to Bridge Plans, see 'GENERAL NOTES' sheet

	BY	CHECKED			
DESIGN	R. OEN	M. THOMAS	LOAD & RESISTANCE FACTOR DESIGN	LIVE LOADING: HL93 W/"LOW-BOY" AND PERMIT DESIGN VEHICLE	
DETAILS	D. UPADHYAY	R. CASTRO	LAYOUT	D. UPADHYAY	R. SANGUINETTI
QUANTITIES	D. UPADHYAY	R. CASTRO	SPECIFICATIONS	F. ARON	PLANS AND SPECS COMPARED A. NOTARO

DESIGN OVERSIGHT John Fujimoto
8-2-10
SIGN OFF DATE

PREPARED FOR THE STATE OF CALIFORNIA DEPARTMENT OF TRANSPORTATION

JOHN A. ALCIATI
PROJECT ENGINEER

BRIDGE NO. 29-0190
POST MILES 28.75

MICHIGAN AVENUE UC (WIDEN)

GENERAL PLAN

DESIGN GENERAL PLAN SHEET (ENGLISH) (REV. 6-01-09)

ORIGINAL SCALE IN INCHES FOR REDUCED PLANS 0 1 2 3

CU 06240
EA 0G4701

DISREGARD PRINTS BEARING EARLIER REVISION DATES

REVISION DATES (PRELIMINARY STAGE ONLY) 6/2/09 9/14/09 10/16/09 12/4/09 1/15/10 4/23/10 6/11/10 7/28/10

SHEET 1 OF 24

FILE => 29-0190-a-gp01.dgn

USERNAME => trimmguye DATE PLOTTED => 13-OCT-2010 TIME PLOTTED => 08:53

(20060485TA) 20060485

DIST	COUNTY	ROUTE	POST MILES TOTAL PROJECT	SHEET No	TOTAL SHEETS
10	SJ	5	25.0/32.7	933	1132

REGISTERED CIVIL ENGINEER — DATE 7/28/10

PLANS APPROVAL DATE 10-11-10

REGISTERED PROFESSIONAL ENGINEER RONALD L OEN No. 46945 Exp. 9/30/11 CIVIL STATE OF CALIFORNIA

The State of California or its officers or agents shall not be responsible for the accuracy or completeness of scanned copies of this plan sheet.

SAN JOAQUIN COUNCIL OF GOVERNMENTS
555 E. WEBER AVENUE
STOCKTON, CA 95202

BIGGS CARDOSA ASSOCIATES INC.
865 THE ALAMEDA
SAN JOSE, CALIFORNIA 95126

GENERAL NOTES
LOAD & RESISTANCE FACTOR DESIGN

DESIGN: AASHTO LRFD Bridge Design Specifications, 4th Edition, and Caltrans Amendments Preface dated December 2008; except that andgeotechnical design of deep foundations, Concrete Barrier Type 60A (Mod), Structural Approach Type N (30D), Structure Approach Type R (30D), is using Bridge Design Specifications (1996 AASHTO with Revisions by Caltrans)

SEISMIC LOADING: Caltrans Seismic Design Criteria (SDC) Version 1.4, dated June 2006

DEAD LOAD: Includes 35 psf for future wearing surface

LIVE LOAD: HL93 with "Low-Boy" and Permit Design Vehicle

SEISMIC LOAD: Soil profile type D
Magnitude group 7.25 ±0.25
Peak Rock Acceleration 0.2g

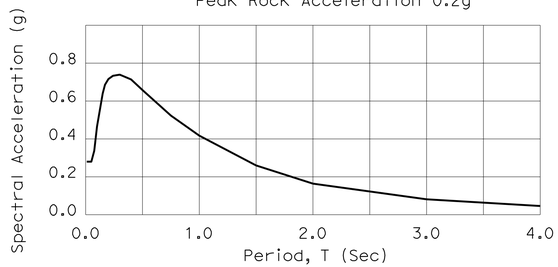

CONCRETE: fy = 60 ksi
f'c = 3.6 ksi (except as shown on 'CONCRETE STRENGTH & TYPE LIMITS' diagram)
n = 8

PRESTRESSED CONCRETE: See 'Prestressing Notes' on 'GIRDER LAYOUT' sheet

REINFORCED CONCRETE: fy = 60 ksi
f'c = See 'CONCRETE STRENGTH AND TYPE LIMITS'
N = 8

INDEX TO BRIDGE PLANS

SHEET NO.	TITLE
1	GENERAL PLAN
2	GENERAL NOTES
3	DECK GRADES No. 1
4	DECK GRADES No. 2
5	FOUNDATION PLAN
6	ABUTMENT LAYOUT
7	ABUTMENT DETAILS No. 1
8	ABUTMENT DETAILS No. 2
9	ABUTMENT DETAILS No. 3
10	TYPICAL SECTION
11	GIRDER LAYOUT
12	GIRDER DETAILS
13	LIMITS OF STRUCTURE APPROACH
14	STRUCTURE APPROACH TYPE N(30D)
15	STRUCTURE APPROACH TYPE R(30D)
16	STRUCTURE APPROACH DRAINAGE DETAILS
17	SLOPE PAVING DETAILS No. 1
18	SLOPE PAVING DETAILS No. 2
19	SLOPE PAVING DETAILS No. 3
20	SLOPE PAVING DETAILS No. 4
21	SOIL LEGEND 1 OF 2
22	SOIL LEGEND 2 OF 2
23	LOG OF TEST BORINGS 1 OF 2
24	LOG OF TEST BORINGS 2 OF 2

STANDARD PLANS DATED MAY 2006

	A10A	ACRONYMS AND ABBREVIATIONS (SHEET 1 OF 2)
	A10B	ACRONYMS AND ABBREVIATIONS (SHEET 2 OF 2)
	A10C	SYMBOLS (SHEET 1 OF 2)
	A10D	SYMBOLS (SHEET 2 OF 2)
	A62C	LIMITS OF PAYMENT FOR EXCAVATION AND BACKFILL - BRIDGE SURCHARGE AND WALL
RSP	A76A	CONCRETE BARRIER TYPE 60
	T3	TEMPORARY RAILING (TYPE K)
	BO-5	BRIDGE DETAILS
	B2-5	PILE DETAILS-CLASS 90 AND CLASS 140
RSP	B6-21	JOINT SEALS (MAXIMUM MOVEMENT RATING = 1½")
	B7-1	BOX GIRDER DETAILS
	B8-5	CAST-IN-PLACE PRESTRESSED GIRDER DETAILS
	B14-5	WATER SUPPLY LINE (DETAILS)

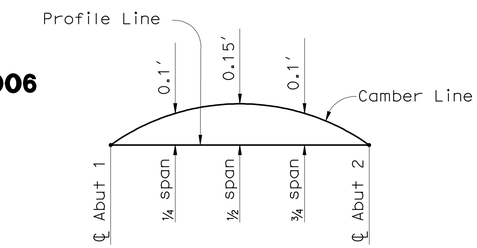

CAMBER DIAGRAM
NO SCALE

Note:
Camber does not include allowance for falsework settlement

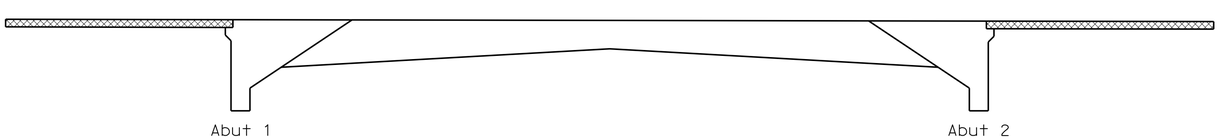

Structural Concrete, Bridge, see 'PRESTRESSING NOTES' on 'GIRDER LAYOUT' sheet

Structural Concrete, Approach Slab (f'c = 3.6 ksi @ 28 days)

Note:
The Contractor shall verify all controlling field dimensions before ordering or fabricating any material

CONCRETE STRENGTH AND TYPE LIMITS
NO SCALE

MICHIGAN AVE UC #29-0190
QUANTITIES

PUBLIC SAFETY PLAN	LUMP	SUM
REMOVE CONCRETE DECK SURFACE	375	SQFT
SALVAGE METAL BRIDGE RAILING	260	LF
PREPARE CONCRETE BRIDGE DECK SURFACE	9,700	SQFT
BRIDGE REMOVAL (PORTION), LOCATION B	LUMP	SUM
STRUCTURE EXCAVATION (BRIDGE)	66	CY
STRUCTURE BACKFILL (BRIDGE)	52	CY
AGGREGATE BASE (APPROACH SLAB)	22	CY
GROOVE POLYESTER CONCRETE OVERLAY	1,080	SQYD
FURNISH PILING (CLASS 140) (ALTERNATIVE X)(MODIFIED)	1,210	LF
DRIVE PILE (CLASS 140)(ALTERNATIVE X)(MODIFIED)	20	EA
PRESTRESSING CAST-IN-PLACE CONCRETE	LUMP	SUM
STRUCTURAL CONCRETE, BRIDGE	470	CY
STRUCTURAL CONCRETE, APPROACH SLAB (TYPE N)	120	CY
STRUCTURAL CONCRETE, APPROACH SLAB (TYPE R)	216	CY
PAVING NOTCH EXTENSION	120	CF
DRILL AND BOND DOWEL	60	LF
FURNISH POLYESTER CONCRETE OVERLAY	1,560	CF
PLACE POLYESTER CONCRETE OVERLAY	9,700	SQFT
JOINT SEAL (MR 1½")	308	LF
BAR REINFORCING STEEL (BRIDGE)	82,000	LB
SLOPE PAVING (PATTERNED CONCRETE)	18	CY
CONCRETE BARRIER (TYPE 60A MODIFIED)	160	LF

DESIGN OVERSIGHT John Fujimoto — 8-2-10 SIGN OFF DATE

	BY	CHECKED
DESIGN	R. OEN	M. THOMAS
DETAILS	D. UPADHYAY	R. CASTRO
QUANTITIES	D. UPADHYAY	R. CASTRO

PREPARED FOR THE STATE OF CALIFORNIA DEPARTMENT OF TRANSPORTATION

JOHN A. ALCIATI
PROJECT ENGINEER

BRIDGE NO. 29-0190
POST MILES 28.75

MICHIGAN AVENUE UC (WIDEN)
GENERAL NOTES

DESIGN DETAIL SHEET (ENGLISH) (REV. 6-01-09)

ORIGINAL SCALE IN INCHES FOR REDUCED PLANS 0 1 2 3

CU 06240
EA 0G4701

DISREGARD PRINTS BEARING EARLIER REVISION DATES

REVISION DATES (PRELIMINARY STAGE ONLY): 10/16/09 ~~12/4/09~~ ~~1/15/10~~ ~~4/23/10~~ ~~6/11/10~~ 7/28/10

SHEET 2 OF 24

FILE => 29-0190-a-itp.dgn

USERNAME => trmnguye DATE PLOTTED => 13-OCT-2010 TIME PLOTTED => 08:53

2006048 (2006048S2A)

DIST	COUNTY	ROUTE	POST MILES TOTAL PROJECT	SHEET No	TOTAL SHEETS
10	SJ	5	25.0/32.7	934	1132

REGISTERED CIVIL ENGINEER 7/28/10 DATE

10-11-10
PLANS APPROVAL DATE

REGISTERED PROFESSIONAL ENGINEER RONALD L OEN No. 46945 Exp. 9/30/11 CIVIL STATE OF CALIFORNIA

The State of California or its officers or agents shall not be responsible for the accuracy or completeness of scanned copies of this plan sheet.

SAN JOAQUIN COUNCIL OF GOVERNMENTS
555 E. WEBER AVENUE
STOCKTON, CA 95202

BIGGS CARDOSA ASSOCIATES INC.
865 THE ALAMEDA
SAN JOSE, CALIFORNIA 95126

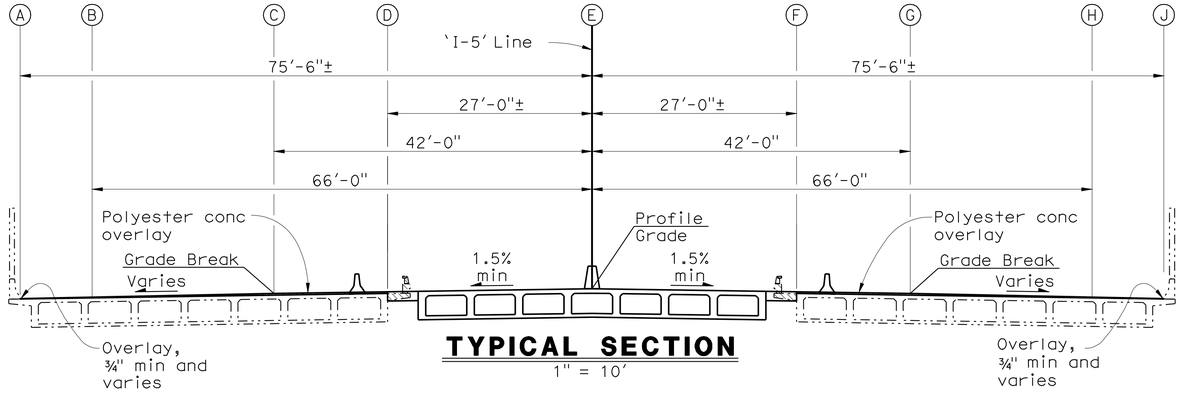

TYPICAL SECTION

1" = 10'

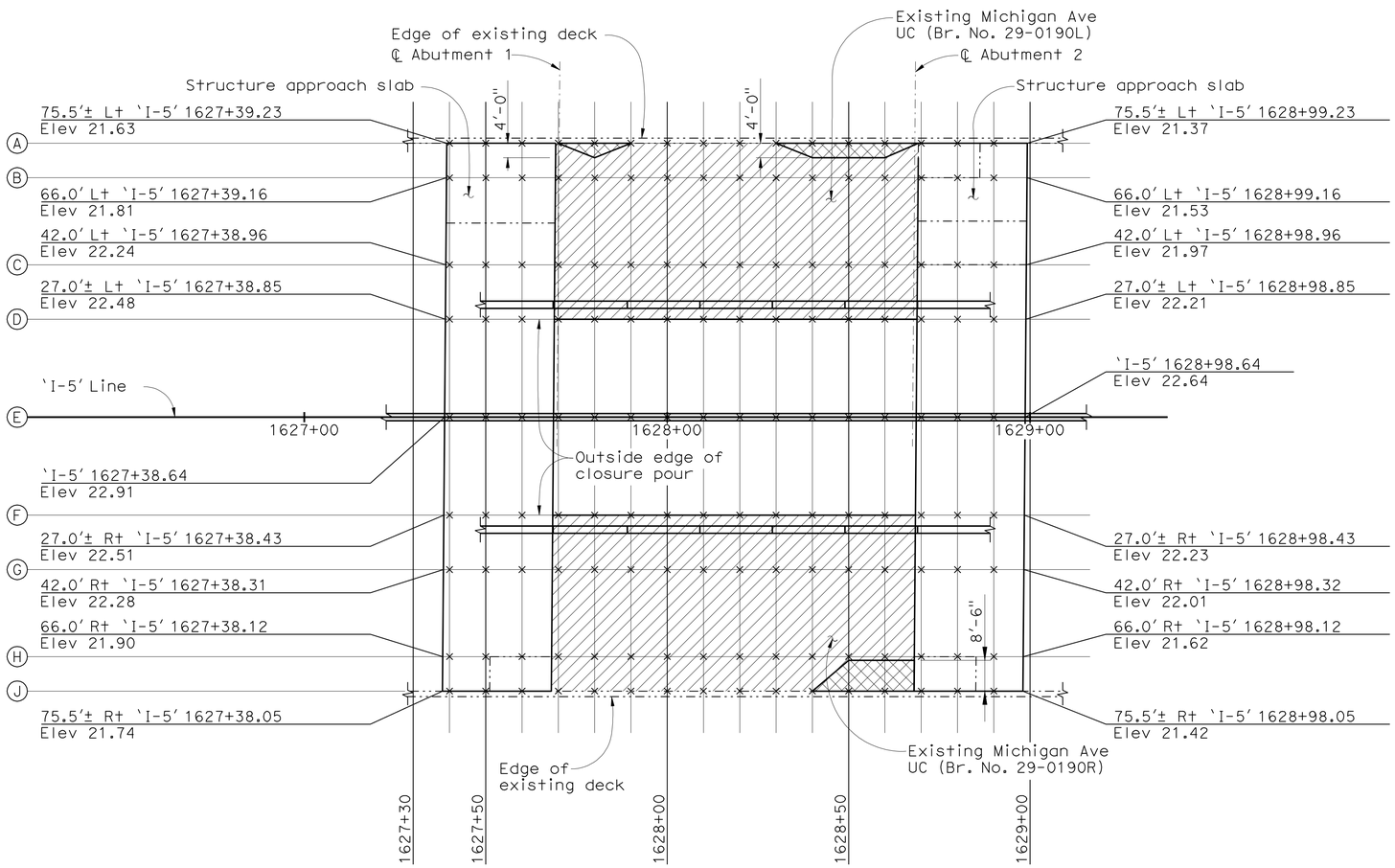

PLAN

1" = 20'

Note:
The Contractor shall verify all controlling field dimensions before ordering or fabricating any material

Notes:

1. Deck grades shown do not include camber and falsework settlement
2. Approach slabs shown are for illustration only
3. See Road Plans for finish grade beyond approach slabs
4. The depth and limits of remove concrete deck Surface should be interpolated for locations not specified in 'REMOVE CONCRETE DECK SURFACE INFORMATION' table.

Legend:

- Indicates limits of Prepare Concrete Bridge Deck Surface and Furnish and Place Polyester Concrete Overlay with longitudinal grooving
- Indicates limits of Remove Concrete Deck Surface
- Bridge removal (portion)
- × Indicates 10 ft interval measured along grid line

REMOVE CONCRETE DECK SURFACE INFORMATION

Location	Depth of Remove Concrete Deck Surface	Offset from 'I-5' Line
Bridge No. 29-0190R		
Sta 1628+40	0"	75.5'
Sta 1628+50	½"	75.5'
	¼"	67.0'
Sta 1628+68.05	¾"	75.5'
	¼"	67.0'
Bridge No. 29-0190L		
Sta 1627+70	0"	75.5'
Sta 1627+80	½"	75.5'
	¼"	71.5'
Sta 1628+30	0"	75.5'
Sta 1628+40	½"	75.5'
	¼"	71.5'
Sta 1628+60	½"	75.5'
	¼"	71.5'
Sta 1628+69.23	0"	75.5'

DESIGN OVERSIGHT John Fujimoto
8-2-10
SIGN OFF DATE

	BY	CHECKED
DESIGN	R. OEN	M. THOMAS
DETAILS	D. UPADHYAY	R. CASTRO
QUANTITIES	D. UPADHYAY	R. CASTRO

PREPARED FOR THE STATE OF CALIFORNIA DEPARTMENT OF TRANSPORTATION

JOHN A. ALCIATI
PROJECT ENGINEER

BRIDGE NO. 29-0190
POST MILES 28.75

MICHIGAN AVENUE UC (WIDEN)
DECK GRADES No. 1

DESIGN DETAIL SHEET (ENGLISH) (REV. 6-01-09)

ORIGINAL SCALE IN INCHES FOR REDUCED PLANS 0 1 2 3

CU 06240
EA 0G4701

DISREGARD PRINTS BEARING EARLIER REVISION DATES

REVISION DATES (PRELIMINARY STAGE ONLY): 10/16/09 12/4/09 1/15/10 4/23/10 6/11/10 7/28/10

SHEET 3 OF 24

FILE => 29-0190-d-dkg01.dgn

USERNAME => trmnguye DATE PLOTTED => 13-OCT-2010 TIME PLOTTED => 08:53

2006048 (2006048S3A)

DIST	COUNTY	ROUTE	POST MILES TOTAL PROJECT	SHEET No	TOTAL SHEETS
10	SJ	5	25.0/32.7	935	1132

REGISTERED CIVIL ENGINEER 7/28/10 DATE

10-11-10
PLANS APPROVAL DATE

REGISTERED PROFESSIONAL ENGINEER RONALD L OEN No. 46945 Exp. 9/30/11 CIVIL STATE OF CALIFORNIA

The State of California or its officers or agents shall not be responsible for the accuracy or completeness of scanned copies of this plan sheet.

SAN JOAQUIN COUNCIL OF GOVERNMENTS
555 E. WEBER AVENUE
STOCKTON, CA 95202

BIGGS CARDOSA ASSOCIATES INC.
865 THE ALAMEDA
SAN JOSE, CALIFORNIA 95126

'I-5' Line Station	Line	Offset from 'I-5' Line (ft)	Proposed Top of Deck/Overlay Elev (ft)	Existing Top of Deck Elev (ft)
1627+40	A	75.50 L+	21.63	N/A
	B	66.00 L+	21.81	N/A
	C	42.00 L+	22.24	N/A
	D	27.00 L+	22.48	N/A
	E	0.00	22.91	N/A
	F	27.00 R+	22.50	N/A
	G	42.00 R+	22.28	N/A
	H	66.00 R+	21.90	N/A
	J	75.50 R+	21.74	N/A
1627+50	A	75.50 L+	21.62	N/A
	B	66.00 L+	21.79	N/A
	C	42.00 L+	22.22	N/A
	D	27.00 L+	22.46	N/A
	E	0.00	22.89	N/A
	F	27.00 R+	22.49	N/A
	G	42.00 R+	22.26	N/A
	H	66.00 R+	21.88	N/A
	J	75.50 R+	21.73	N/A
1627+60	A	75.50 L+	21.60	N/A
	B	66.00 L+	21.78	N/A
	C	42.00 L+	22.21	N/A
	D	27.00 L+	22.45	N/A
	E	0.00	22.88	N/A
	F	27.00 R+	22.47	N/A
	G	42.00 R+	22.25	N/A
	H	66.00 R+	21.86	N/A
	J	75.50 R+	21.71	N/A
1627+70	A	75.50 L+	21.56	21.53±
	B	66.00 L+	21.76	21.65±
	C	42.00 L+	22.19	22.10±
	D	27.00 L+	22.43	22.33±
	E	0.00	22.86	N/A
	F	27.00 R+	22.45	22.28±
	G	42.00 R+	22.23	22.03±
	H	66.00 R+	21.85	21.71±
	J	75.50 R+	21.68	21.64±
1627+80	A	75.50 L+	21.55	21.51±
	B	66.00 L+	21.74	21.64±
	C	42.00 L+	22.17	22.07±
	D	27.00 L+	22.41	22.33±
	E	0.00	22.84	N/A
	F	27.00 R+	22.44	22.26±
	G	42.00 R+	22.21	21.99±
	H	66.00 R+	21.83	21.69±
	J	75.50 R+	21.66	21.60±
1627+90	A	75.50 L+	21.54	21.51±
	B	66.00 L+	21.73	21.62±
	C	42.00 L+	22.16	22.04±
	D	27.00 L+	22.40	22.31±
	E	0.00	22.83	N/A
	F	27.00 R+	22.42	22.23±
	G	42.00 R+	22.20	21.96±
	H	66.00 R+	21.81	21.68±
	J	75.50 R+	21.64	21.58±

'I-5' Line Station	Line	Offset from 'I-5' Line (ft)	Proposed Top of Deck/Overlay Elev (ft)	Existing Top of Deck Elev (ft)
1628+00	A	75.50 L+	21.53	21.47±
	B	66.00 L+	21.71	21.60±
	C	42.00 L+	22.14	22.03±
	D	27.00 L+	22.38	22.26±
	E	0.00	22.81	N/A
	F	27.00 R+	22.40	22.20±
	G	42.00 R+	22.18	21.94±
	H	66.00 R+	21.80	21.64±
	J	75.50 R+	21.62	21.52±
1628+10	A	75.50 L+	21.51	21.47±
	B	66.00 L+	21.69	21.58±
	C	42.00 L+	22.12	21.99±
	D	27.00 L+	22.36	22.23±
	E	0.00	22.79	N/A
	F	27.00 R+	22.39	22.18±
	G	42.00 R+	22.16	21.93±
	H	66.00 R+	21.78	21.63±
	J	75.50 R+	21.60	21.53±
1628+20	A	75.50 L+	21.49	21.43±
	B	66.00 L+	21.68	21.56±
	C	42.00 L+	22.11	21.97±
	D	27.00 L+	22.35	22.20±
	E	0.00	22.78	N/A
	F	27.00 R+	22.37	22.15±
	G	42.00 R+	22.15	21.90±
	H	66.00 R+	21.76	21.61±
	J	75.50 R+	21.58	21.52±
1628+30	A	75.50 L+	21.47	21.41±
	B	66.00 L+	21.66	21.53±
	C	42.00 L+	22.09	21.94±
	D	27.00 L+	22.33	22.16±
	E	0.00	22.76	N/A
	F	27.00 R+	22.35	22.14±
	G	42.00 R+	22.13	21.88±
	H	66.00 R+	21.75	21.61±
	J	75.50 R+	21.56	21.52±
1628+40	A	75.50 L+	21.46	21.43±
	B	66.00 L+	21.64	21.55±
	C	42.00 L+	22.07	21.97±
	D	27.00 L+	22.31	22.20±
	E	0.00	22.74	N/A
	F	27.00 R+	22.34	22.14±
	G	42.00 R+	22.11	21.88±
	H	66.00 R+	21.73	21.61±
	J	75.50 R+	21.54	21.50±
1628+50	A	75.50 L+	21.45	21.42±
	B	66.00 L+	21.63	21.54±
	C	42.00 L+	22.06	21.96±
	D	27.00 L+	22.30	22.20±
	E	0.00	22.73	N/A
	F	27.00 R+	22.32	22.11±
	G	42.00 R+	22.10	21.87±
	H	66.00 R+	21.71	21.60±
	J	75.50 R+	21.52	21.50±

'I-5' Line Station	Line	Offset from 'I-5' Line (ft)	Proposed Top of Deck/Overlay Elev (ft)	Existing Top of Deck Elev (ft)
1628+60	A	75.50 L+	21.44	21.42±
	B	66.00 L+	21.61	21.53±
	C	42.00 L+	22.04	21.94±
	D	27.00 L+	22.28	22.20±
	E	0.00	22.71	N/A
	F	27.00 R+	22.30	22.14±
	G	42.00 R+	22.08	21.89±
	H	66.00 R+	21.70	21.61±
	J	75.50 R+	21.50	21.50±
1628+70	A	75.50 L+	21.42	21.38±
	B	66.00 L+	21.59	21.52±
	C	42.00 L+	22.02	21.88±
	D	27.00 L+	22.26	22.14±
	E	0.00	22.69	N/A
	F	27.00 R+	22.29	22.13±
	G	42.00 R+	22.06	21.88±
	H	66.00 R+	21.68	21.57±
	J	75.50 R+	21.47	21.46±
1628+80	A	75.50 L+	21.41	N/A
	B	66.00 L+	21.58	N/A
	C	42.00 L+	22.01	N/A
	D	27.00 L+	22.25	N/A
	E	0.00	22.68	N/A
	F	27.00 R+	22.27	N/A
	G	42.00 R+	22.05	N/A
	H	66.00 R+	21.66	N/A
	J	75.50 R+	21.45	N/A
1628+90	A	75.50 L+	21.39	N/A
	B	66.00 L+	21.56	N/A
	C	42.00 L+	21.99	N/A
	D	27.00 L+	22.23	N/A
	E	0.00	22.66	N/A
	F	27.00 R+	22.25	N/A
	G	42.00 R+	22.03	N/A
	H	66.00 R+	21.65	N/A
	J	75.50 R+	21.43	N/A

Note:
The Contractor shall verify all controlling field dimensions before ordering or fabricating any material

DESIGN OVERSIGHT John Fujimoto
8-2-10
SIGN OFF DATE

	BY	CHECKED
DESIGN	R. OEN	M. THOMAS
DETAILS	D. UPADHYAY	R. CASTRO
QUANTITIES	D. UPADHYAY	R. CASTRO

PREPARED FOR THE STATE OF CALIFORNIA DEPARTMENT OF TRANSPORTATION

JOHN A. ALCIATI
PROJECT ENGINEER

BRIDGE NO. 29-0190
POST MILES 28.75

MICHIGAN AVENUE UC (WIDEN)
DECK GRADES No. 2

DESIGN DETAIL SHEET (ENGLISH) (REV. 6-01-09)

ORIGINAL SCALE IN INCHES FOR REDUCED PLANS 0 1 2 3

CU 06240
EA 0G4701

DISREGARD PRINTS BEARING EARLIER REVISION DATES

REVISION DATES (PRELIMINARY STAGE ONLY) 10/16/09 12/4/09 1/15/10 4/23/10 6/11/10 7/28/10

SHEET 4 OF 24

FILE => 29-0190-d-dkg02.dgn

USERNAME => trmnguye DATE PLOTTED => 13-OCT-2010 TIME PLOTTED => 08:53

20060048 (20060485A)

DIST	COUNTY	ROUTE	POST MILES TOTAL PROJECT	SHEET No	TOTAL SHEETS
10	SJ	5	25.0/32.7	936	1132

REGISTERED CIVIL ENGINEER — DATE 7/28/10

10-11-10
PLANS APPROVAL DATE

REGISTERED PROFESSIONAL ENGINEER RONALD L OEN No. 46945 Exp. 9/30/11 CIVIL STATE OF CALIFORNIA

The State of California or its officers or agents shall not be responsible for the accuracy or completeness of scanned copies of this plan sheet.

SAN JOAQUIN COUNCIL OF GOVERNMENTS
555 E. WEBER AVENUE
STOCKTON, CA 95202

BIGGS CARDOSA ASSOCIATES INC.
865 THE ALAMEDA
SAN JOSE, CALIFORNIA 95126

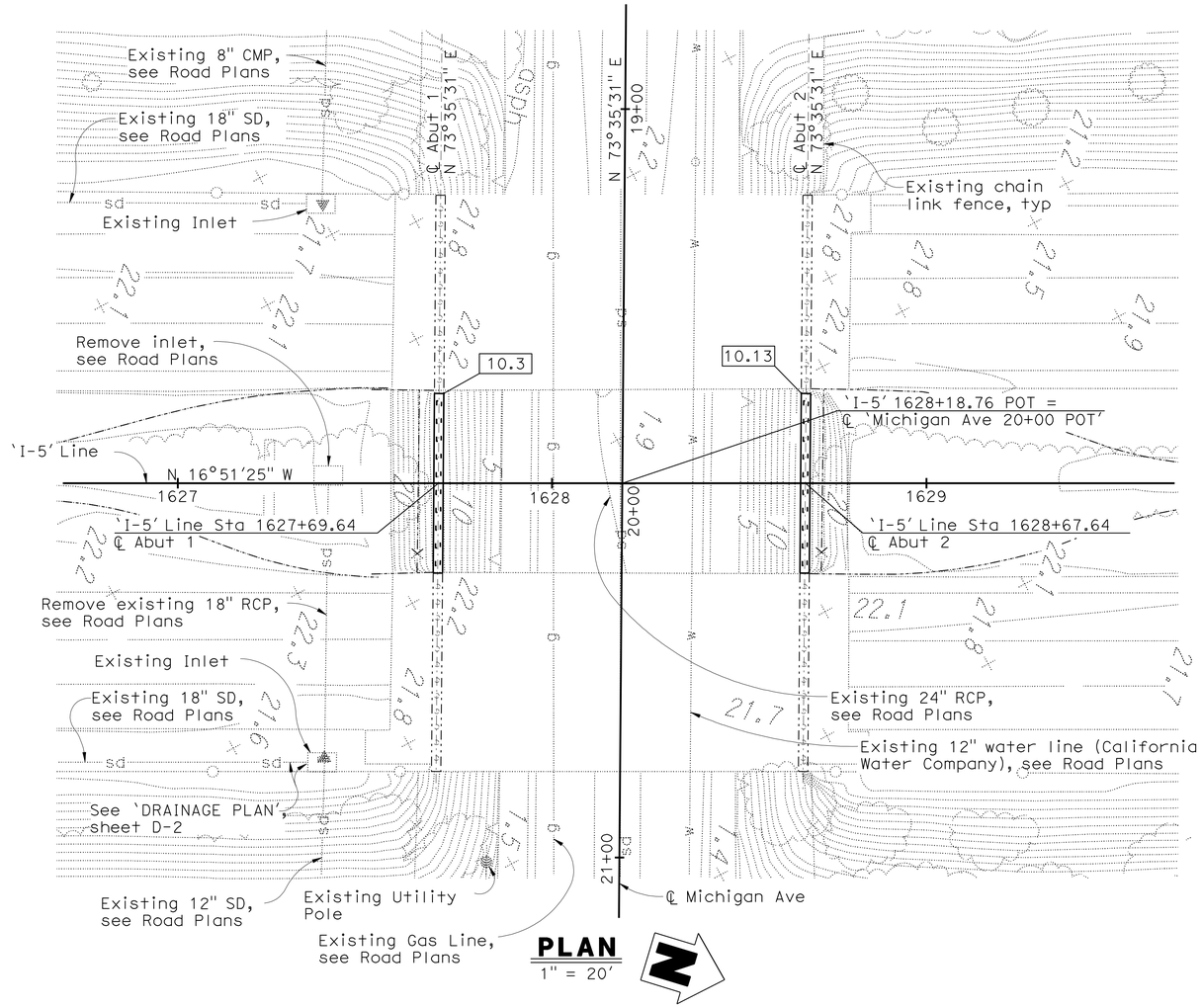

PLAN
1" = 20'

Notes:
1. " Indicates piles
2. ◦ Indicates existing piles
3. [X.X] Indicates bottom of footing elevation
4. × 22.1 Indicates spot elevation, typ
5. Utilities shown are for illustrative purposes only, verify with Road Plans

PILE DATA TABLE

Location	Type	Nominal Resistance		Design Tip Elev	Specified Tip Elev	Nominal Driving Resistance
		Compression	Tension			
Abutment 1	Class 140 Alt X (Mod)	260 Kips	-	-45.5(a), -1.7(b)	-50.0	260 Kips
Abutment 2	Class 140 Alt X (Mod)	260 Kips	-	-50.0(a), -1.7(b)	-50.0	260 Kips

Notes:
1. Design tip elevation is controlled by (a) Compression, (b) Lateral Load.

BENCH MARK AND DATUM

Monument	Coordinates		Elev	Description/Location
	Northing	Easting		
103	2175749.32	6320362.27	1.95	PK Nail
104	2175764.22	6320632.88	1.48	PK Nail

Note: There is a vertical datum difference between the project datum (NAVD 88) and the as-built datum (NGVD 29). The following conversion was used in design:
Datum Conversion: Elev (NAVD 88) = Elev (NGVD 29) + 1.87'±

GEOTECHNICAL PROFESSIONAL — APPROVAL DATE 1/15/10

Note:
The Contractor shall verify all controlling field dimensions before ordering or fabricating any material

DESIGN OVERSIGHT John Fujimoto — 8-2-10 SIGN OFF DATE

SCALE: AS SHOWN	VERT.DATUM NAVD88	HORZ.DATUM CCS83,(2007.00), ZONE 3	
PHOTOGRAMMETRY AS OF: (N/A)	FIELD SURVEYS	ALIGNMENT TIES	APPROVED GPS REPORT DATED 7-6-09
SURVEYED	BY RYAN VANCE	DRAFTED	BY MIKE KORDAZAKIS
FIELD CHECKED	BY JEFF CISSELL	CHECKED	BY KEVIN LANG

DESIGN	BY R. OEN	CHECKED	M. THOMAS
DETAILS	BY D. UPADHYAY	CHECKED	R. CASTRO
QUANTITIES	BY D. UPADHYAY	CHECKED	R. CASTRO

PREPARED FOR THE STATE OF CALIFORNIA DEPARTMENT OF TRANSPORTATION

JOHN A. ALCIATI
PROJECT ENGINEER

BRIDGE NO. 29-0190
POST MILE 28.75

MICHIGAN AVENUE UC (WIDEN)
FOUNDATION PLAN

FOUNDATION PLAN SHEET (ENGLISH) (REV. 6-01-09)

ORIGINAL SCALE IN INCHES FOR REDUCED PLANS 0 1 2 3

CU 06240
EA 0G4701

DISREGARD PRINTS BEARING EARLIER REVISION DATES — REVISION DATES (PRELIMINARY STAGE ONLY): 6/2/09 9/4/09 10/16/09 12/4/09 1/15/10 4/23/10 6/11/10 7/28/10

SHEET 5 OF 24

FILE => 29-0190-e-fp01.dgn

USERNAME => trmnguye DATE PLOTTED => 13-OCT-2010 TIME PLOTTED => 08:53

20060048 (20060485SA)

DIST	COUNTY	ROUTE	POST MILES TOTAL PROJECT	SHEET No	TOTAL SHEETS
10	SJ	5	25.0/32.7	937	1132

REGISTERED CIVIL ENGINEER 7/28/10 DATE

10-11-10
PLANS APPROVAL DATE

REGISTERED PROFESSIONAL ENGINEER RONALD L OEN No. 46945 Exp. 9/30/11 CIVIL STATE OF CALIFORNIA

The State of California or its officers or agents shall not be responsible for the accuracy or completeness of scanned copies of this plan sheet.

SAN JOAQUIN COUNCIL OF GOVERNMENTS
555 E. WEBER AVENUE
STOCKTON, CA 95202

BIGGS CARDOSA ASSOCIATES INC.
865 THE ALAMEDA
SAN JOSE, CALIFORNIA 95126

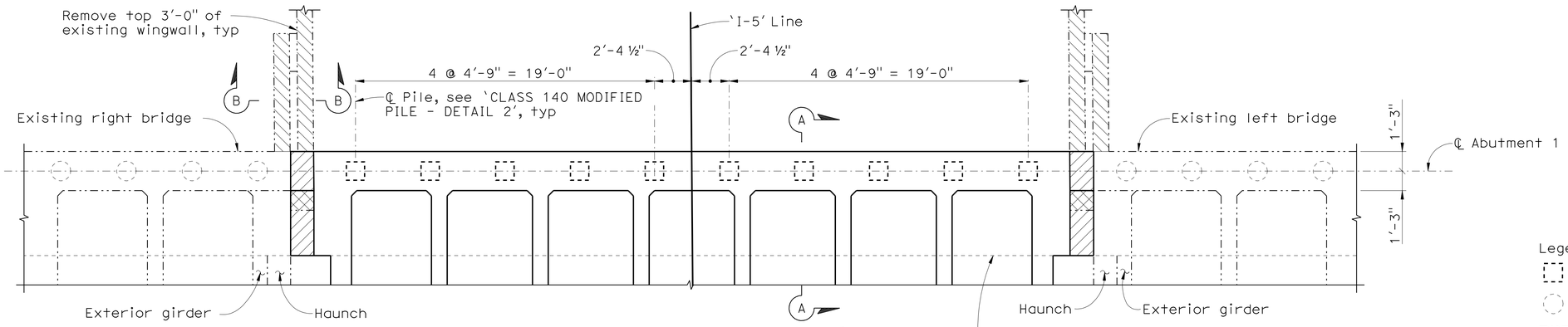

ABUTMENT PLAN

1/4" = 1'-0"

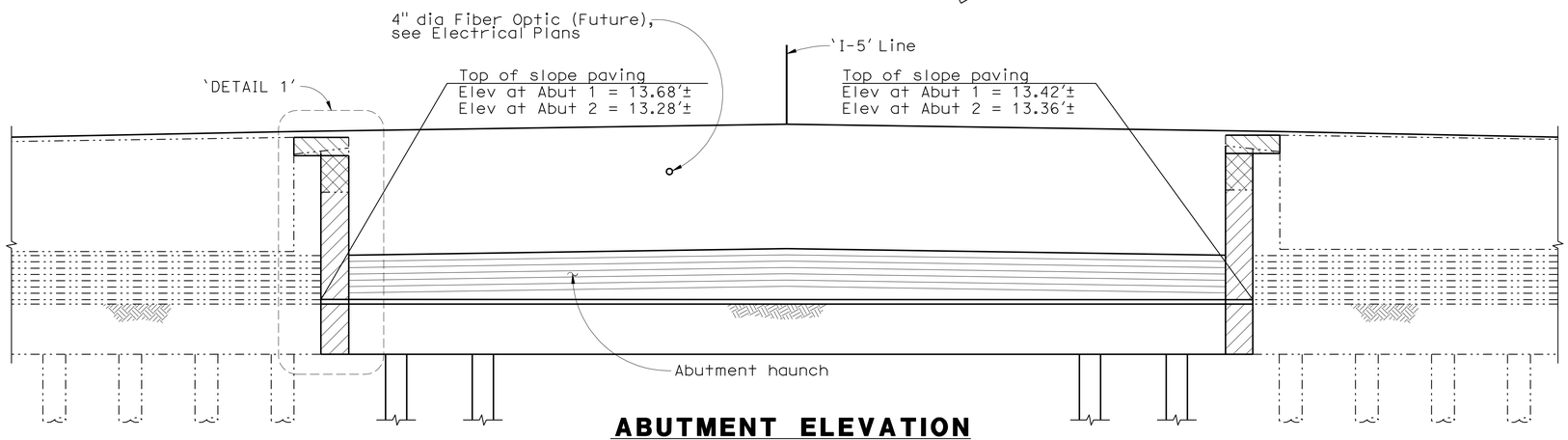

ABUTMENT ELEVATION

1/4" = 1'-0"

Legend:

- Indicates new piles
- Indicates existing piles
- Bridge Removal (Portion)
- Diaphragm closure pour

Notes:

1. Abutment 1 shown, Abutment 2 similar.
2. All piles not shown in 'ABUTMENT ELEVATION'.
3. Barriers not shown for clarity.
4. Structure approach not shown for clarity.
5. For 'DETAIL 1', 'CLASS 140 MODIFIED PILE - DETAIL 2' and 'SECTION A-A', see 'ABUTMENT DETAILS No. 1' sheet.
6. For 'SECTION B-B' see 'ABUTMENT DETAILS No. 2' sheet.
7. Girders not shown in Abutment Elevation for clarity.

Note:
The Contractor shall verify all controlling field dimensions before ordering or fabricating any material

DESIGN OVERSIGHT John Fujimoto
8-2-10
SIGN OFF DATE

	BY	CHECKED
DESIGN	R. OEN	M. THOMAS
DETAILS	D. UPADHYAY	R. CASTRO
QUANTITIES	D. UPADHYAY	R. CASTRO

PREPARED FOR THE STATE OF CALIFORNIA DEPARTMENT OF TRANSPORTATION

JOHN A. ALCIATI
PROJECT ENGINEER

BRIDGE NO. 29-0190
POST MILES 28.75

MICHIGAN AVENUE UC (WIDEN)
ABUTMENT LAYOUT

DESIGN DETAIL SHEET (ENGLISH) (REV. 6-01-09)

ORIGINAL SCALE IN INCHES FOR REDUCED PLANS 0 1 2 3

CU 06240
EA 0G4701

DISREGARD PRINTS BEARING EARLIER REVISION DATES

REVISION DATES (PRELIMINARY STAGE ONLY): 10/16/09 12/4/09 1/15/10 4/23/10 6/11/10 7/28/10

SHEET 6 OF 24

FILE => 29-0190-h-a06-lo01.dgn

USERNAME => rfriemard DATE PLOTTED => 13-OCT-2010 TIME PLOTTED => 13:16

20060048 (20060485SA)

DIST	COUNTY	ROUTE	POST MILES TOTAL PROJECT	SHEET No	TOTAL SHEETS
10	SJ	5	25.0/32.7	938	1132

REGISTERED CIVIL ENGINEER 7/28/10 DATE

10-11-10
PLANS APPROVAL DATE

REGISTERED PROFESSIONAL ENGINEER RONALD L OEN No. 46945 Exp. 9/30/11 CIVIL STATE OF CALIFORNIA

The State of California or its officers or agents shall not be responsible for the accuracy or completeness of scanned copies of scanned plans sheet.

SAN JOAQUIN COUNCIL OF GOVERNMENTS
555 E. WEBER AVENUE
STOCKTON, CA 95202

BIGGS CARDOSA ASSOCIATES INC.
865 THE ALAMEDA
SAN JOSE, CALIFORNIA 95126

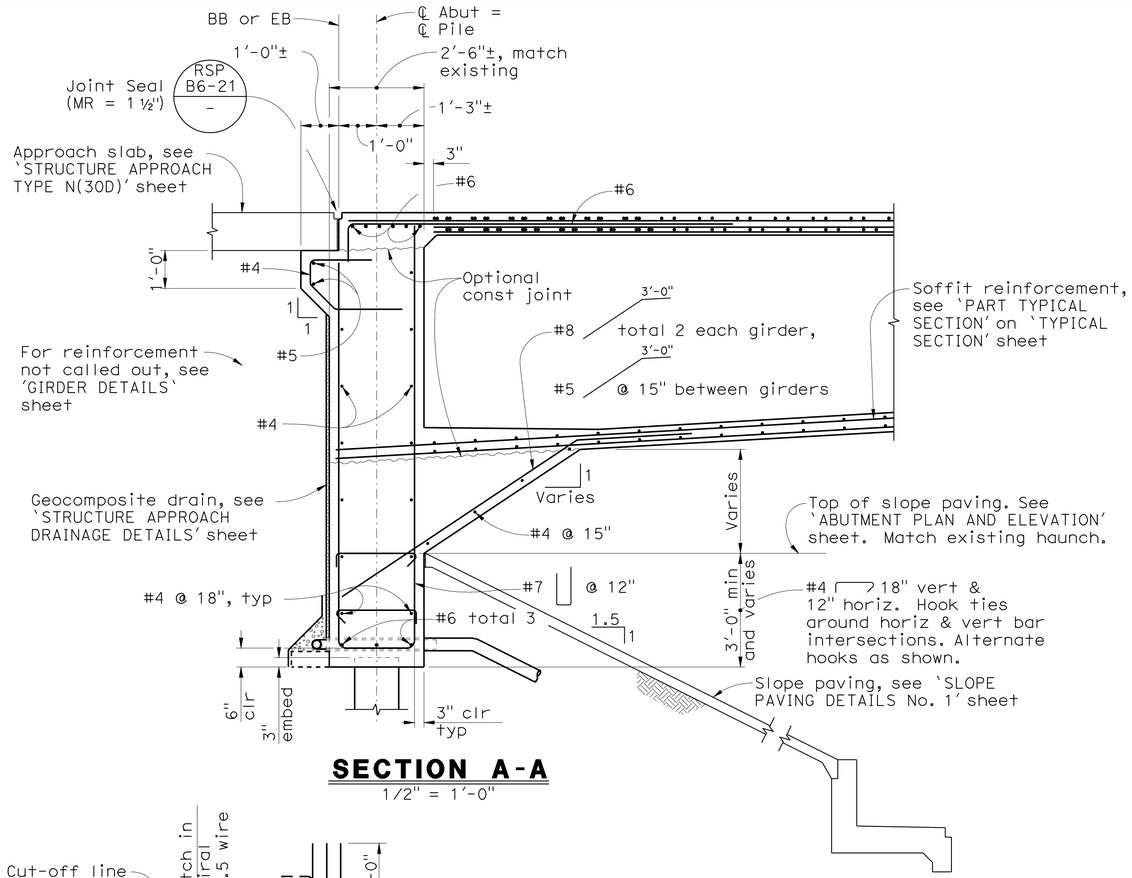

SECTION A-A

1/2" = 1'-0"

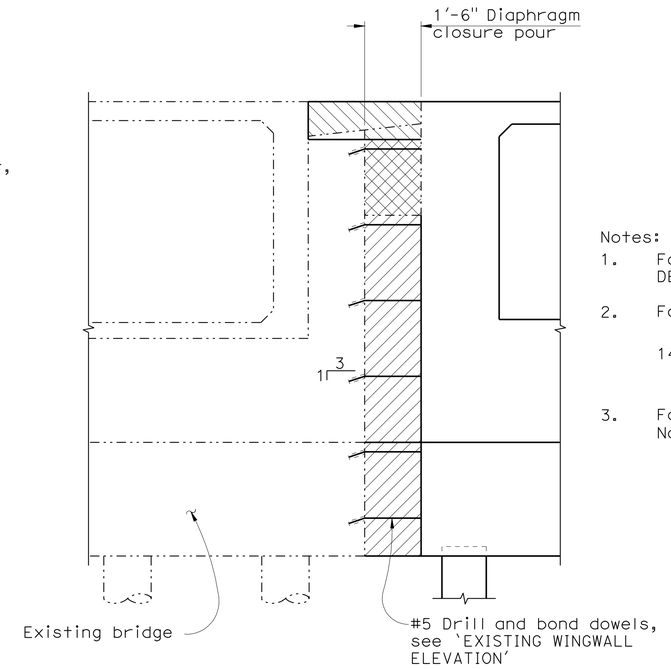

DETAIL 1

1/2" = 1'-0"

Notes:

1. For 'EXISTING WINGWALL ELEVATION', see 'ABUTMENT DETAILS No. 2' sheet
2. For notes and additional details of Class 140 Modified Pile not shown, see B2-5
3. For diaphragm closure pour, see 'ABUTMENT DETAILS No. 3' sheet

Legend:

Bridge Removal (Portion)

Diaphragm closure pour

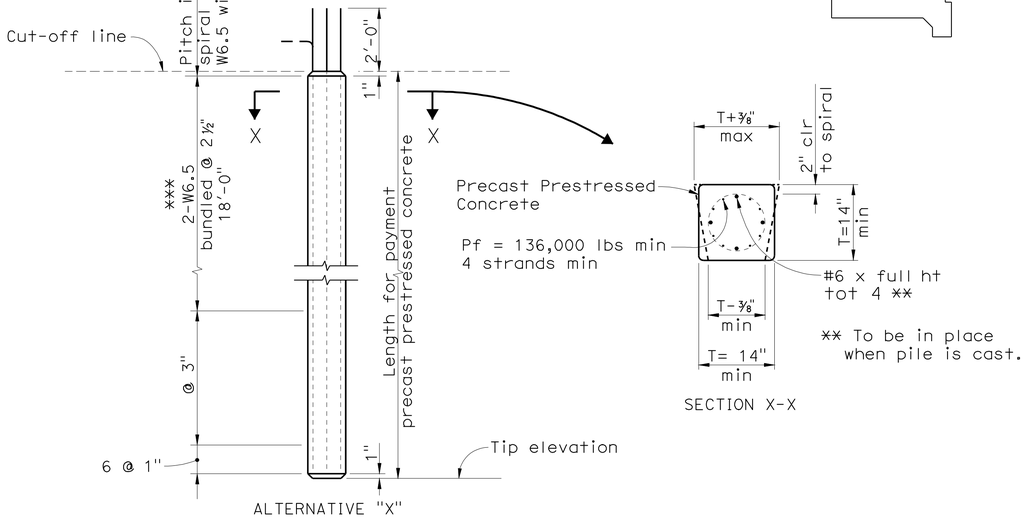

ALTERNATIVE "X"

*** W11 at 2" may be substituted

CLASS 140 MODIFIED PILE - DETAIL 2

NO SCALE

Note:
The Contractor shall verify all controlling field dimensions before ordering or fabricating any material

DESIGN	BY R. OEN	CHECKED M. THOMAS	
DETAILS	BY D. UPADHYAY	CHECKED R. CASTRO	
QUANTITIES	BY D. UPADHYAY	CHECKED R. CASTRO	

DESIGN OVERSIGHT John Fujimoto
8-2-10
SIGN OFF DATE

PREPARED FOR THE STATE OF CALIFORNIA DEPARTMENT OF TRANSPORTATION

JOHN A. ALCIATI
PROJECT ENGINEER

BRIDGE NO. 29-0190
POST MILES 28.75

MICHIGAN AVENUE UC (WIDEN)
ABUTMENT DETAILS No. 1

DISREGARD PRINTS BEARING EARLIER REVISION DATES

REVISION DATES (PRELIMINARY STAGE ONLY) 10/16/09 12/4/09 1/15/10 4/23/10 6/14/10 7/28/10

SHEET 7 OF 24

DESIGN DETAIL SHEET (ENGLISH) (REV. 6-01-09)

ORIGINAL SCALE IN INCHES FOR REDUCED PLANS 0 1 2 3

CU 06240
EA 0G4701

FILE => 29-0190-h-a07d1.dgn

USERNAME => trlenard DATE PLOTTED => 13-OCT-2010 TIME PLOTTED => 12:55

(20060485TA) 20060485

DIST	COUNTY	ROUTE	POST MILES TOTAL PROJECT	SHEET No	TOTAL SHEETS
10	SJ	5	25.0/32.7	939	1132

REGISTERED CIVIL ENGINEER 7/28/10 DATE

10-11-10
PLANS APPROVAL DATE

REGISTERED PROFESSIONAL ENGINEER RONALD L OEN No. 46945 Exp. 9/30/11 CIVIL STATE OF CALIFORNIA

The State of California or its officers or agents shall not be responsible for the accuracy or completeness of scanned copies of this plan sheet.

SAN JOAQUIN COUNCIL OF GOVERNMENTS
555 E. WEBER AVENUE
STOCKTON, CA 95202

BIGGS CARDOSA ASSOCIATES INC.
865 THE ALAMEDA
SAN JOSE, CALIFORNIA 95126

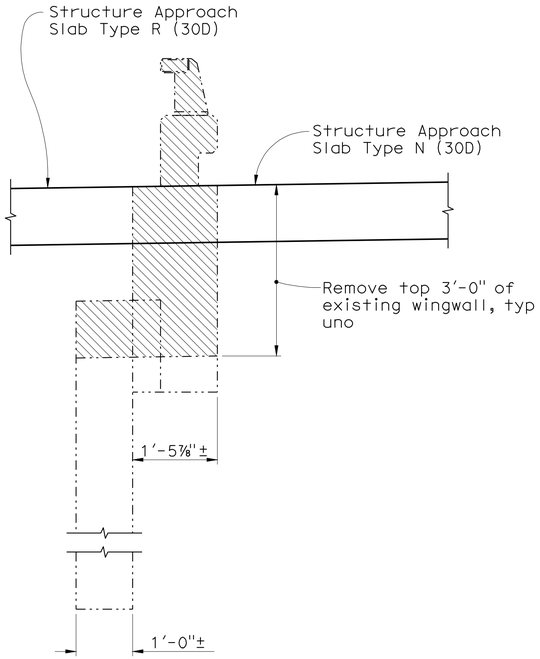

SECTION B-B
3/4" = 1'-0"

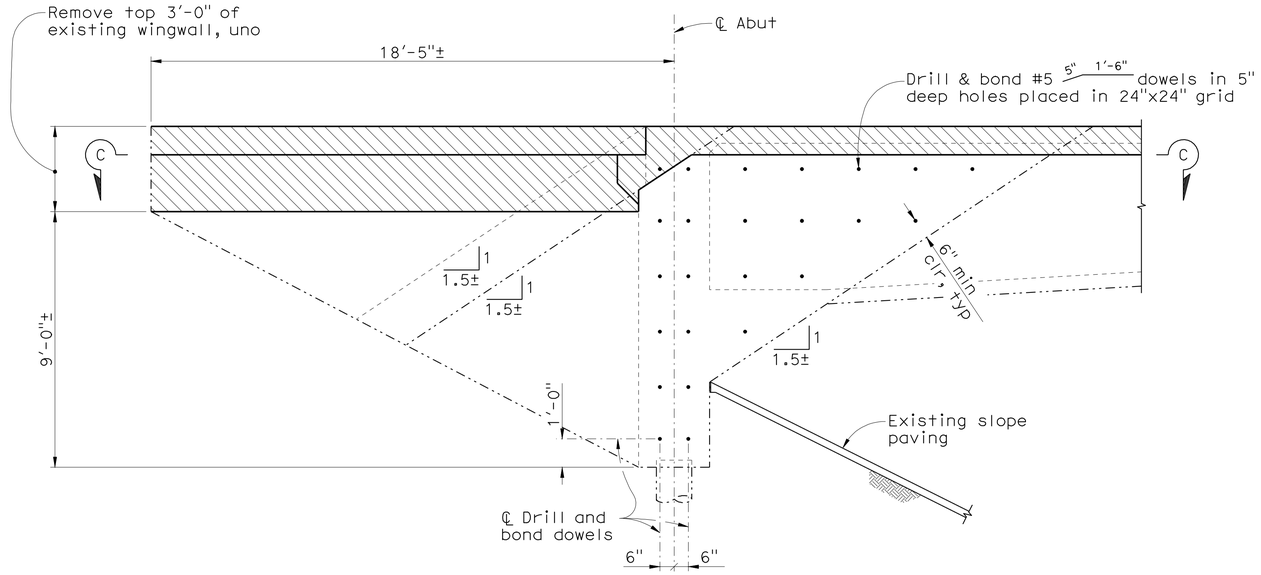

EXISTING WINGWALL ELEVATION
3/8" = 1'-0"

Legend:

Bridge Removal (Portion)

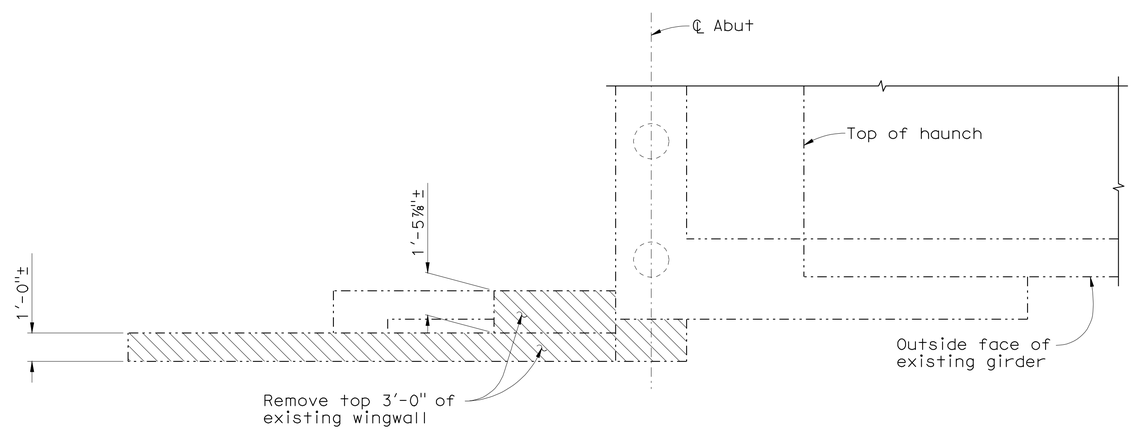

SECTION C-C
3/8" = 1'-0"

Note:
The Contractor shall verify all controlling field dimensions before ordering or fabricating any material

DESIGN OVERSIGHT John Fujimoto
8-2-10
SIGN OFF DATE

	BY	CHECKED
DESIGN	R. OEN	M. THOMAS
DETAILS	D. UPADHYAY	R. CASTRO
QUANTITIES	D. UPADHYAY	R. CASTRO

PREPARED FOR THE STATE OF CALIFORNIA DEPARTMENT OF TRANSPORTATION

JOHN A. ALCIATI
PROJECT ENGINEER

BRIDGE NO. 29-0190
POST MILES 28.75

MICHIGAN AVENUE UC (WIDEN)
ABUTMENT DETAILS No. 2

DESIGN DETAIL SHEET (ENGLISH) (REV. 6-01-09)

ORIGINAL SCALE IN INCHES FOR REDUCED PLANS 0 1 2 3

CU 06240
EA 0G4701

DISREGARD PRINTS BEARING EARLIER REVISION DATES

REVISION DATES (PRELIMINARY STAGE ONLY) 10/16/09 12/4/09 1/15/10 4/23/10 6/11/10 7/28/10

SHEET 8 OF 24

FILE => 29-0190-h-a08d2.dgn

USERNAME => trlenard DATE PLOTTED => 13-OCT-2010 TIME PLOTTED => 12:55

20060048 (20060485BA)

DIST	COUNTY	ROUTE	POST MILES TOTAL PROJECT	SHEET No	TOTAL SHEETS
10	SJ	5	25.0/32.7	940	1132

REGISTERED CIVIL ENGINEER — DATE 7/28/10

PLANS APPROVAL DATE 10-11-10

REGISTERED PROFESSIONAL ENGINEER RONALD L OEN No. 46945 Exp. 9/30/11 CIVIL STATE OF CALIFORNIA

The State of California or its officers or agents shall not be responsible for the accuracy or completeness of scanned copies of this plan sheet.

SAN JOAQUIN COUNCIL OF GOVERNMENTS
555 E. WEBER AVENUE
STOCKTON, CA 95202

BIGGS CARDOSA ASSOCIATES INC.
865 THE ALAMEDA
SAN JOSE, CALIFORNIA 95126

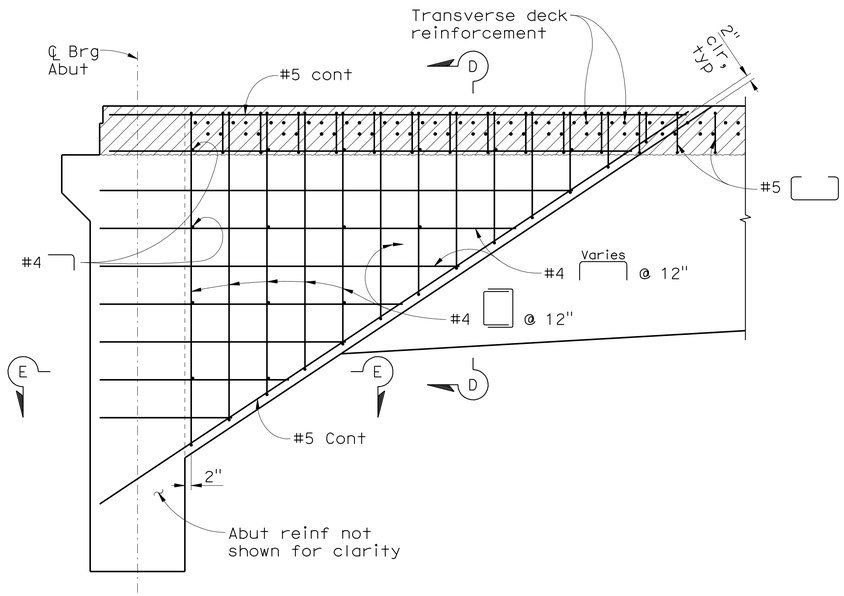

END DIAPHRAGM ELEVATION

1/2" = 1'-0"

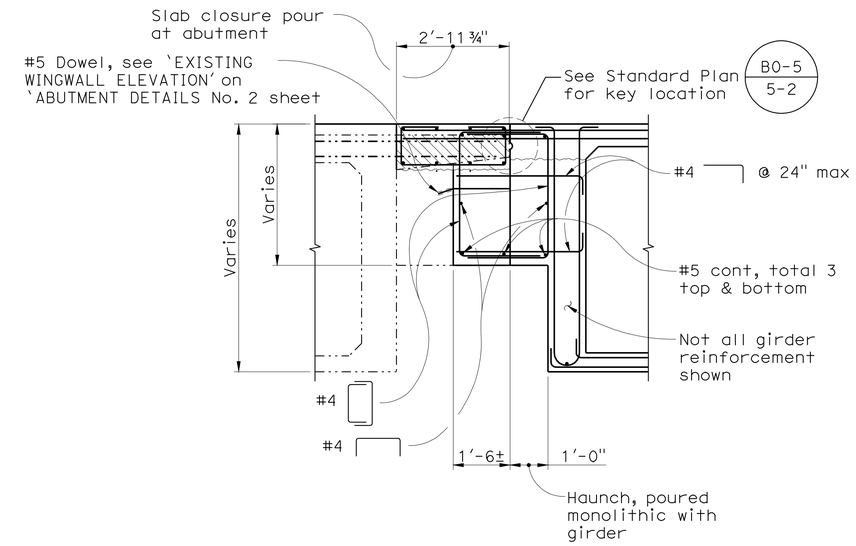

SECTION D-D

1/2" = 1'-0"

Note:

1. Place diaphragm closure pour after falsework has been released and prior to slab closure pour.

Legend:

Bridge removal (portion)

Slab closure pour

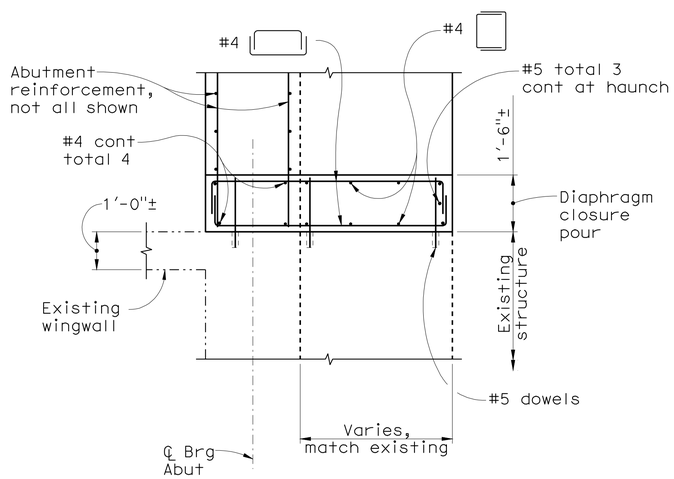

SECTION E-E

1/2" = 1'-0"

Note:
The Contractor shall verify all controlling field dimensions before ordering or fabricating any material

DESIGN OVERSIGHT John Fujimoto — 8-2-10 SIGN OFF DATE

	BY	CHECKED
DESIGN	R. OEN	M. THOMAS
DETAILS	D. UPADHYAY	R. CASTRO
QUANTITIES	D. UPADHYAY	R. CASTRO

PREPARED FOR THE STATE OF CALIFORNIA DEPARTMENT OF TRANSPORTATION

JOHN A. ALCIATI
PROJECT ENGINEER

BRIDGE NO. 29-0190
POST MILES 28.75

MICHIGAN AVENUE UC (WIDEN)
ABUTMENT DETAILS No. 3

DESIGN DETAIL SHEET (ENGLISH) (REV. 6-01-09)

ORIGINAL SCALE IN INCHES FOR REDUCED PLANS 0 1 2 3

CU 06240
EA 0G4701

DISREGARD PRINTS BEARING EARLIER REVISION DATES

REVISION DATES (PRELIMINARY STAGE ONLY) 12/4/09 1/15/10 4/23/10 6/11/10 7/28/10

SHEET 9 OF 24

FILE => 29-0190-h-a09d31.dgn

USERNAME => trlenard DATE PLOTTED => 13-OCT-2010 TIME PLOTTED => 12:55

20060048 (20060485 9A)

DIST	COUNTY	ROUTE	POST MILES TOTAL PROJECT	SHEET No	TOTAL SHEETS
10	SJ	5	25.0/32.7	941	1132

REGISTERED CIVIL ENGINEER 7/28/10 DATE

10-11-10
PLANS APPROVAL DATE

REGISTERED PROFESSIONAL ENGINEER RONALD L OEN No. 46945 Exp. 9/30/11 CIVIL STATE OF CALIFORNIA

The State of California or its officers or agents shall not be responsible for the accuracy or completeness of scanned copies of this plan sheet.

SAN JOAQUIN COUNCIL OF GOVERNMENTS
555 E. WEBER AVENUE
STOCKTON, CA 95202

BIGGS CARDOSA ASSOCIATES INC.
865 THE ALAMEDA
SAN JOSE, CALIFORNIA 95126

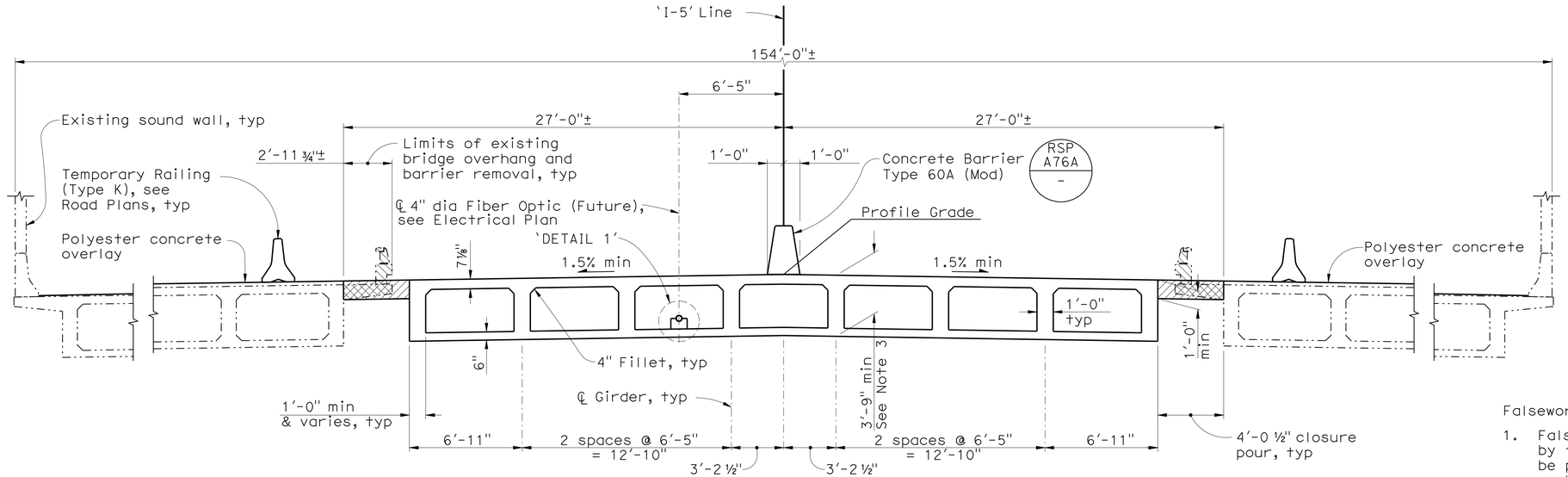

TYPICAL SECTION

1/4" = 1'-0"

Falsework Release Notes:

1. Falsework shall be released as soon as permitted by the specifications. Closure pour shall not be placed sooner than 60 days after the falsework has been released.

Notes:

1. All dimensions are measured normal to 'I-5' Line.
2. Transverse deck and soffit reinforcement shall be placed and spaced normal to 'I-5 Line'
3. Depth of superstructure at mid-span shown. Depth of superstructure at ℄ of abutment = 6'-3".
4. For 'DETAIL 1' see 'GIRDER LAYOUT' sheet.

Bridge Removal (Portion)

Closure pour

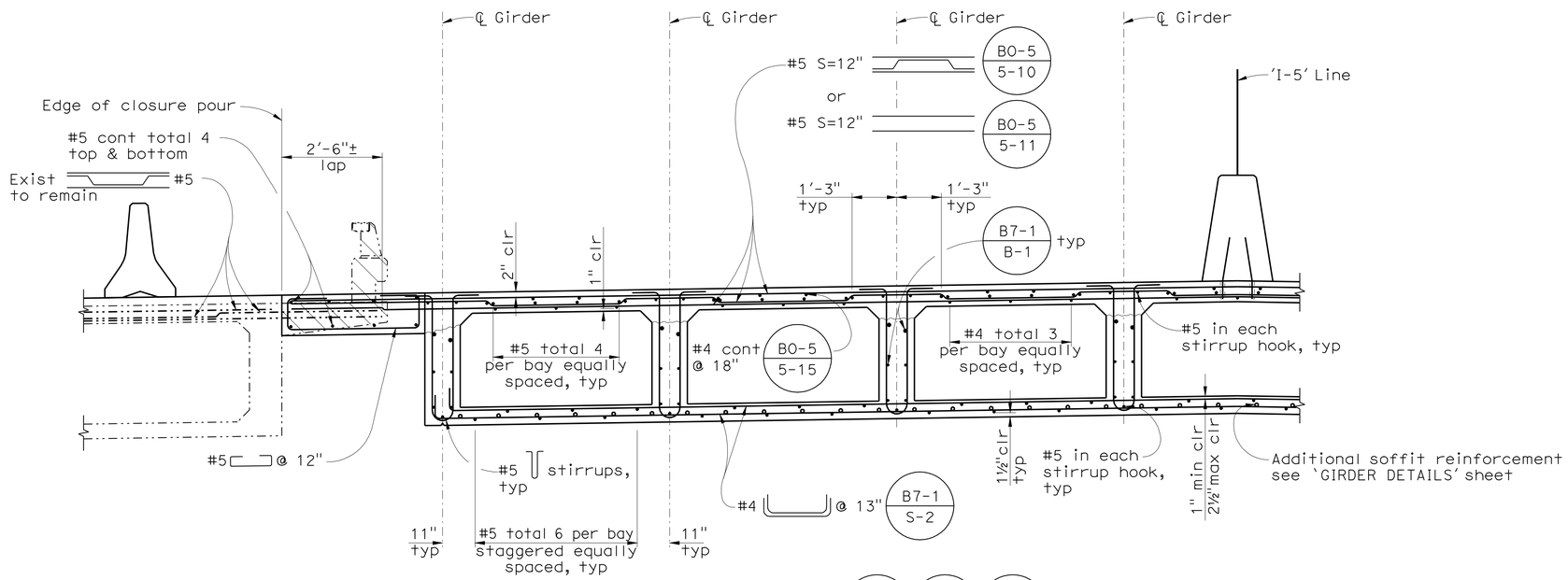

PARTIAL TYPICAL SECTION

1/2" = 1'-0"

BO-5 - B7-1 - B8-5 -

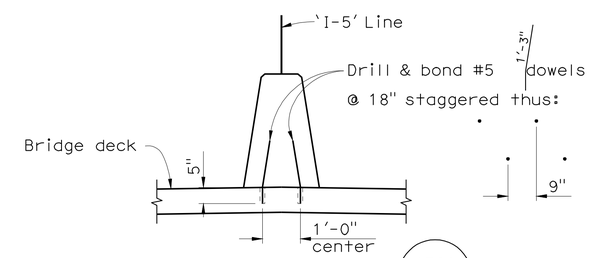

For details not shown, see A76A -

CONCRETE BARRIER TYPE 60A (MOD)

NO SCALE

Note:
The Contractor shall verify all controlling field dimensions before ordering or fabricating any material

John Fujimoto
DESIGN OVERSIGHT John Fujimoto
8-2-10
SIGN OFF DATE

	BY	CHECKED
DESIGN	R. OEN	M. THOMAS
DETAILS	D. UPADHYAY	R. CASTRO
QUANTITIES	D. UPADHYAY	R. CASTRO

PREPARED FOR THE STATE OF CALIFORNIA DEPARTMENT OF TRANSPORTATION

JOHN A. ALCIATI
PROJECT ENGINEER

BRIDGE NO. 29-0190
POST MILES 28.75

MICHIGAN AVENUE UC (WIDEN)
TYPICAL SECTION

DESIGN DETAIL SHEET (ENGLISH) (REV. 6-01-09)

ORIGINAL SCALE IN INCHES FOR REDUCED PLANS 0 1 2 3

CU 06240
EA 0G4701

FILE => 29-0190-m-ts1.dgn

DISREGARD PRINTS BEARING EARLIER REVISION DATES

REVISION DATES (PRELIMINARY STAGE ONLY) 10/16/09 12/4/09 1/15/10 4/23/10 6/11/10 7/28/10

SHEET 10 OF 24

USERNAME => trhenard DATE PLOTTED => 13-OCT-2010 TIME PLOTTED => 15:32

20060485 10A)

DIST	COUNTY	ROUTE	POST MILES TOTAL PROJECT	SHEET No	TOTAL SHEETS
10	SJ	5	25.0/32.7	942	1132

REGISTERED CIVIL ENGINEER 7/28/10 DATE

REGISTERED PROFESSIONAL ENGINEER RONALD L OEN No. 46945 Exp. 9/30/11 CIVIL STATE OF CALIFORNIA

10-11-10
PLANS APPROVAL DATE

The State of California or its officers or agents shall not be responsible for the accuracy or completeness of scanned copies of this plan sheet.

SAN JOAQUIN COUNCIL OF GOVERNMENTS
555 E. WEBER AVENUE
STOCKTON, CA 95202

BIGGS CARDOSA ASSOCIATES INC.
865 THE ALAMEDA
SAN JOSE, CALIFORNIA 95126

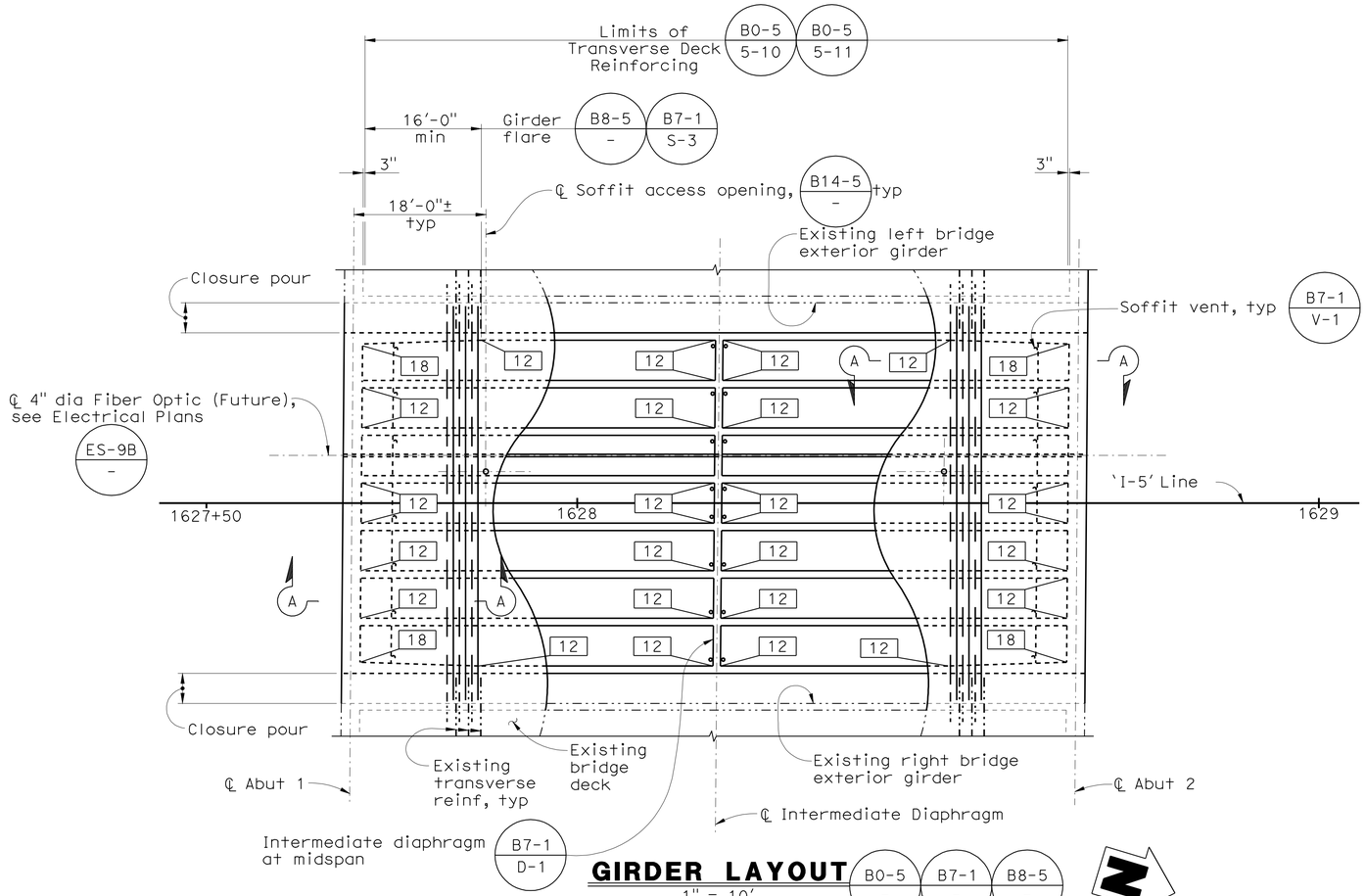

GIRDER LAYOUT

1" = 10'

B0-5 / - B7-1 / - B8-5 / -

Notes:

1. 12 Indicates girder stem width in inches
2. For 'CAMBER DIAGRAM' and 'CONCRETE STRENGTH AND TYPE LIMITS', see 'GENERAL NOTES' sheet
3. For 'SECTION A-A' see 'GIRDER DETAILS ' sheet
4. L is measured along the ℄ of each girder

Prestressing Notes

270 ksi Low Relaxation Strand:

Pjack	= 12,900 kips
Anchor set	= ⅜ in
Total No. of girders	= 8

Distribution of prestress force (Pjack) between girders shall not exceed the ratio of 3:2. Maximum final force variation between girders shall not exceed 725k

Concrete: f'c = 5000 psi @ 28 days
f'ci = 3700 psi @ time of stressing

Contractor shall submit elongation calculations based on initial stress at ⊠ = 0.967 times jacking stress

⊠ Denotes theoretical point of no movement

Stressing shall be performed from Abutment 1 end only

Prestress force design is based on friction coefficient ψ = 0.15 and friction wobble coefficient k=0.0002/ft and modified for curvature

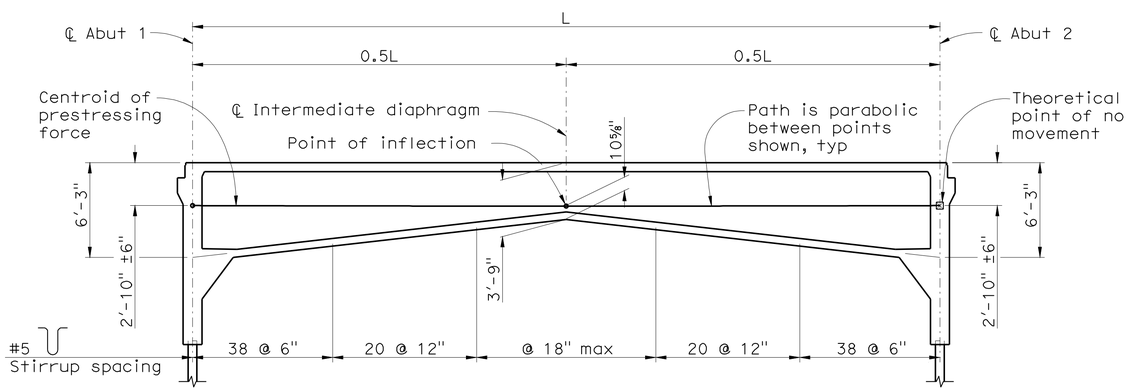

LONGITUDINAL SECTION

NO SCALE

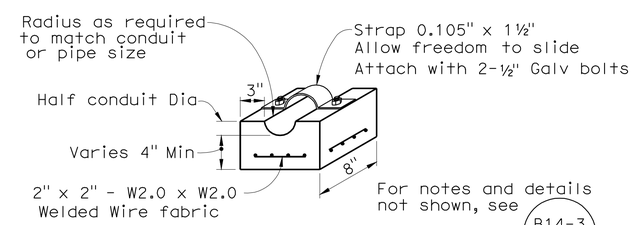

DETAIL 1

NO SCALE

Note:
The Contractor shall verify all controlling field dimensions before ordering or fabricating any material

DESIGN	BY R. OEN	CHECKED M. THOMAS	
DETAILS	BY D. UPADHYAY	CHECKED R. CASTRO	
QUANTITIES	BY D. UPADHYAY	CHECKED R. CASTRO	

DESIGN OVERSIGHT John Fujimoto
8-2-10
SIGN OFF DATE

PREPARED FOR THE STATE OF CALIFORNIA DEPARTMENT OF TRANSPORTATION

JOHN A. ALCIATI
PROJECT ENGINEER

BRIDGE NO. 29-0190
POST MILES 28.75

MICHIGAN AVENUE UC (WIDEN)
GIRDER LAYOUT

DESIGN DETAIL SHEET (ENGLISH) (REV. 6-01-09)

ORIGINAL SCALE IN INCHES FOR REDUCED PLANS 0 1 2 3

CU 06240
EA 0G4701

DISREGARD PRINTS BEARING EARLIER REVISION DATES

REVISION DATES (PRELIMINARY STAGE ONLY) 10/16/09 12/4/09 1/15/10 4/23/10 6/11/10 7/28/10

SHEET 11 OF 24

FILE => 29-0190-n-g-lo01.dgn

USERNAME => friehard DATE PLOTTED => 13-OCT-2010 TIME PLOTTED => 15:32

20060048 (20060485 11A)

DIST	COUNTY	ROUTE	POST MILES TOTAL PROJECT	SHEET No	TOTAL SHEETS
10	SJ	5	25.0/32.7	943	1132

REGISTERED CIVIL ENGINEER 7/28/10 DATE

10-11-10
PLANS APPROVAL DATE

REGISTERED PROFESSIONAL ENGINEER RONALD L OEN No. 46945 Exp. 9/30/11 CIVIL STATE OF CALIFORNIA

The State of California or its officers or agents shall not be responsible for the accuracy or completeness of scanned copies of this plan sheet.

SAN JOAQUIN COUNCIL OF GOVERNMENTS
555 E. WEBER AVENUE
STOCKTON, CA 95202

BIGGS CARDOSA ASSOCIATES INC.
865 THE ALAMEDA
SAN JOSE, CALIFORNIA 95126

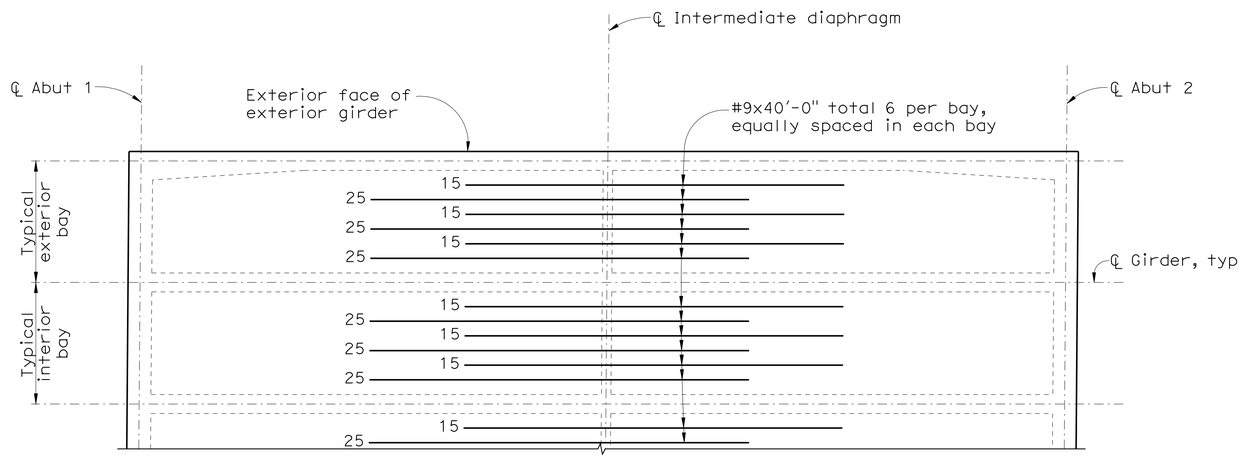

ADDITIONAL SOFFIT REINFORCEMENT

NO SCALE

Notes:

1. Space bars approximately equal within limits shown.
2. Reinforcement shall be placed parallel to ℄ bridge
3. No lap splices permitted.
4. Number at end of bar indicates distance in feet from the ℄ Midspan diaphragm.

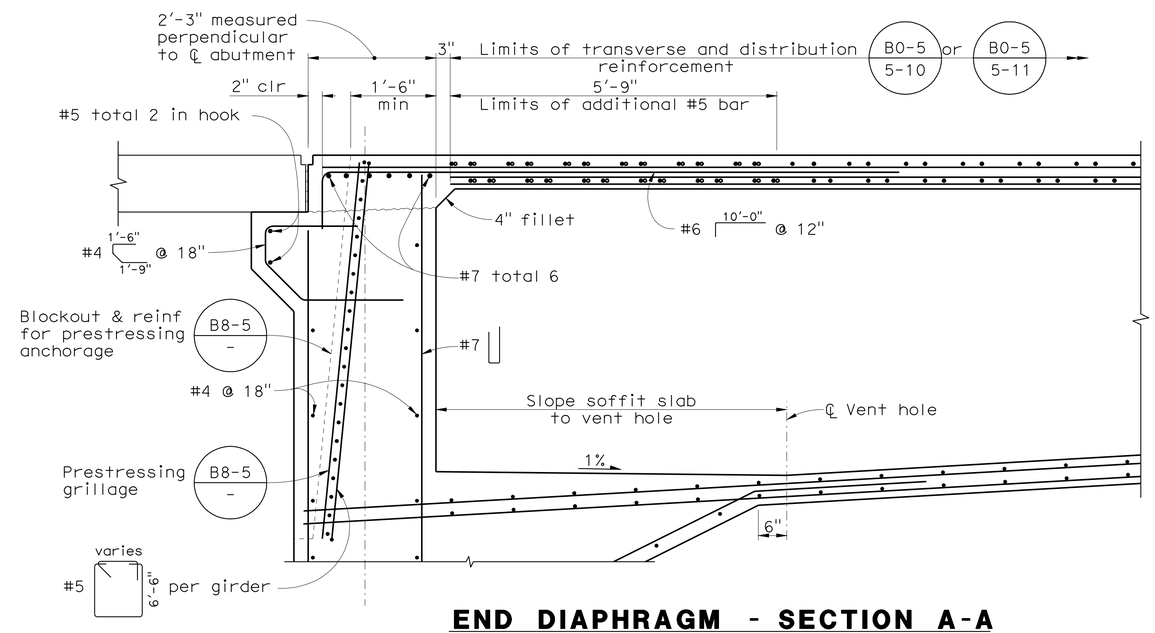

END DIAPHRAGM - SECTION A-A

3/4" = 1'-0"

Note:
The Contractor shall verify all controlling field dimensions before ordering or fabricating any material

DESIGN OVERSIGHT John Fujimoto
8-2-10
SIGN OFF DATE

	BY	CHECKED
DESIGN	R. OEN	M. THOMAS
DETAILS	D. UPADHYAY	R. CASTRO
QUANTITIES	D. UPADHYAY	R. CASTRO

PREPARED FOR THE STATE OF CALIFORNIA DEPARTMENT OF TRANSPORTATION

JOHN A. ALCIATI
PROJECT ENGINEER

BRIDGE NO. 29-0190
POST MILES 28.75

MICHIGAN AVENUE UC (WIDEN)

GIRDER DETAILS

DESIGN DETAIL SHEET (ENGLISH) (REV. 6-01-09)

ORIGINAL SCALE IN INCHES FOR REDUCED PLANS 0 1 2 3

CU 06240
EA 0G4701

DISREGARD PRINTS BEARING EARLIER REVISION DATES

REVISION DATES (PRELIMINARY STAGE ONLY): 10/16/09 12/4/09 1/15/10 4/23/10 6/11/10 7/28/10

SHEET 12 OF 24

FILE => 29-0190-n-gd01.dgn

USERNAME => trhenard DATE PLOTTED => 18-OCT-2010 TIME PLOTTED => 11:56

DIST	COUNTY	ROUTE	POST MILES TOTAL PROJECT	SHEET No	TOTAL SHEETS
10	SJ	5	25.0/32.7	944	1132

REGISTERED CIVIL ENGINEER 7/28/10 DATE

10-11-10
PLANS APPROVAL DATE

REGISTERED PROFESSIONAL ENGINEER RONALD L OEN No. 46945 Exp. 9/30/11 CIVIL STATE OF CALIFORNIA

The State of California or its officers or agents shall not be responsible for the accuracy or completeness of scanned copies of this plan sheet.

SAN JOAQUIN COUNCIL OF GOVERNMENTS
555 E. WEBER AVENUE
STOCKTON, CA 95202

BIGGS CARDOSA ASSOCIATES INC.
865 THE ALAMEDA
SAN JOSE, CALIFORNIA 95126

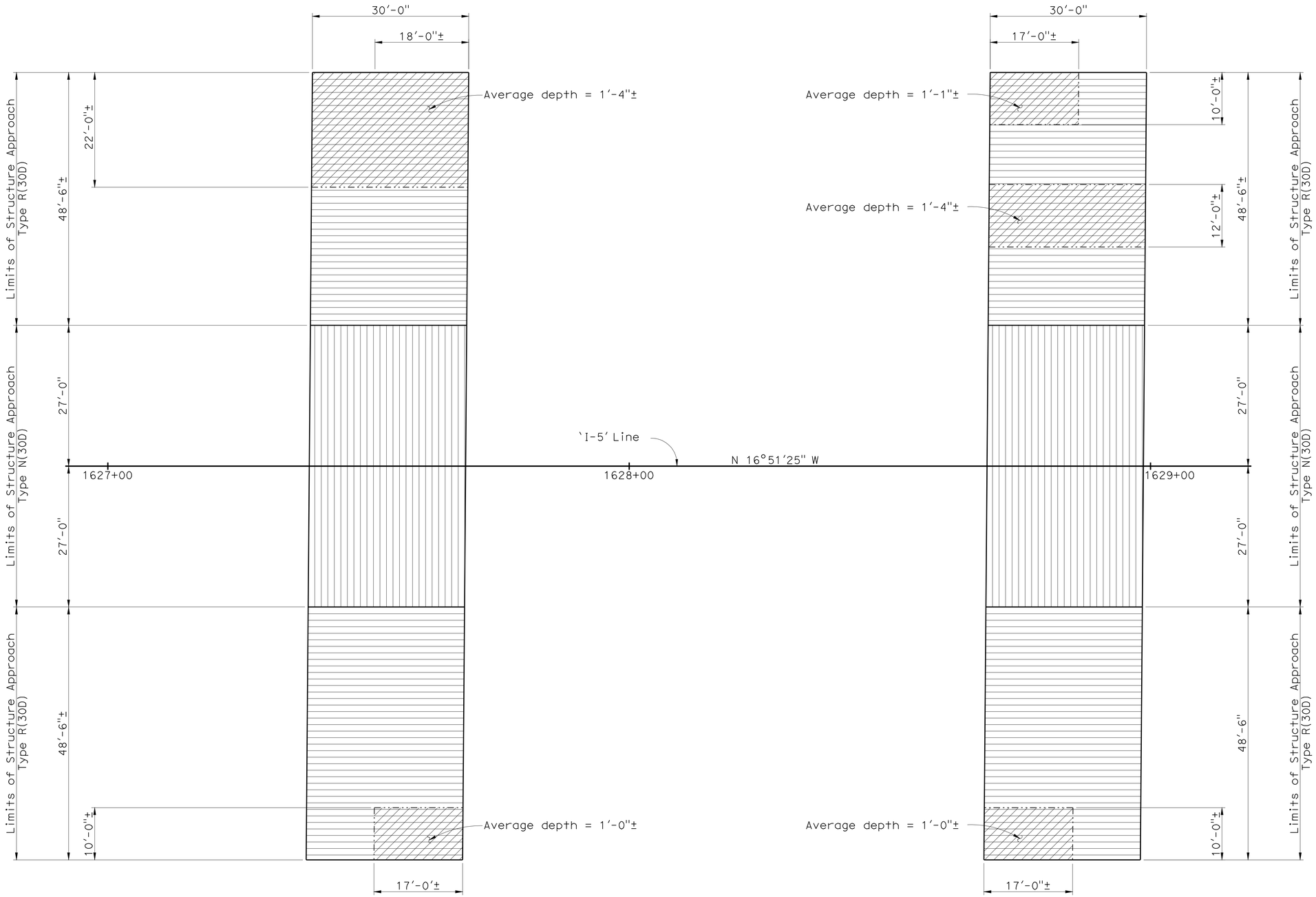

STRUCTURE APPROACH SLAB

1" = 10'

Notes:

1. Indicates limits of remove existing approach slab
2. Indicates Pay Limits of Structure Approach Slab Type N(30D)
3. Indicates Pay Limits of Structure Approach Slab Type R(30D)
4. For details not shown, see 'STRUCTURE APPROACH TYPE R(30D)' and 'STRUCTURE APPROACH TYPE N(30D) sheets.
5. Longitudinal construction joints shall be at lane lines as required for roadway staging, see Road Plans. See 'STRUCTURE APPROACH' sheets for details

Note:
The Contractor shall verify all controlling field dimensions before ordering or fabricating any material

DESIGN OVERSIGHT John Fujimoto
8-2-10
SIGN OFF DATE

	BY	CHECKED
DESIGN	R. OEN	M. THOMAS
DETAILS	D. UPADHYAY	R. CASTRO
QUANTITIES	D. UPADHYAY	R. CASTRO

PREPARED FOR THE STATE OF CALIFORNIA DEPARTMENT OF TRANSPORTATION

JOHN A. ALCIATI
PROJECT ENGINEER

BRIDGE NO. 29-0190
POST MILES 28.75

MICHIGAN AVENUE UC (WIDEN)
LIMITS OF STRUCTURE APPROACH

DESIGN DETAIL SHEET (ENGLISH) (REV. 6-01-09)

ORIGINAL SCALE IN INCHES FOR REDUCED PLANS 0 1 2 3

CU 06240
EA 0G4701

DISREGARD PRINTS BEARING EARLIER REVISION DATES

REVISION DATES (PRELIMINARY STAGE ONLY) 10/16/09 12/4/09 1/15/10 4/23/10 6/11/10 7/28/10

SHEET 13 OF 24

FILE => 29-0190-t-lsad.dgn

USERNAME => friehard DATE PLOTTED => 13-OCT-2010 TIME PLOTTED => 12:55

(20060485 13A) 20060485

DIST	COUNTY	ROUTE	POST MILES TOTAL PROJECT	SHEET NO.	TOTAL SHEETS
10	SJ	5	25.0/32.7	945	1132

REGISTERED CIVIL ENGINEER 7/28/10

PLANS APPROVAL DATE 10-11-10

REGISTERED PROFESSIONAL ENGINEER RONALD L OEN No. 46945 Exp. 9/30/11 CIVIL STATE OF CALIFORNIA

The State of California or its officers or agents shall not be responsible for the accuracy or completeness of scanned copies of this plan sheet.

SAN JOAQUIN COUNCIL OF GOVERNMENTS
555 E. WEBER AVENUE
STOCKTON, CA 95202

BIGGS CARDOSA ASSOCIATES INC.
865 THE ALAMEDA
SAN JOSE, CALIFORNIA 95126

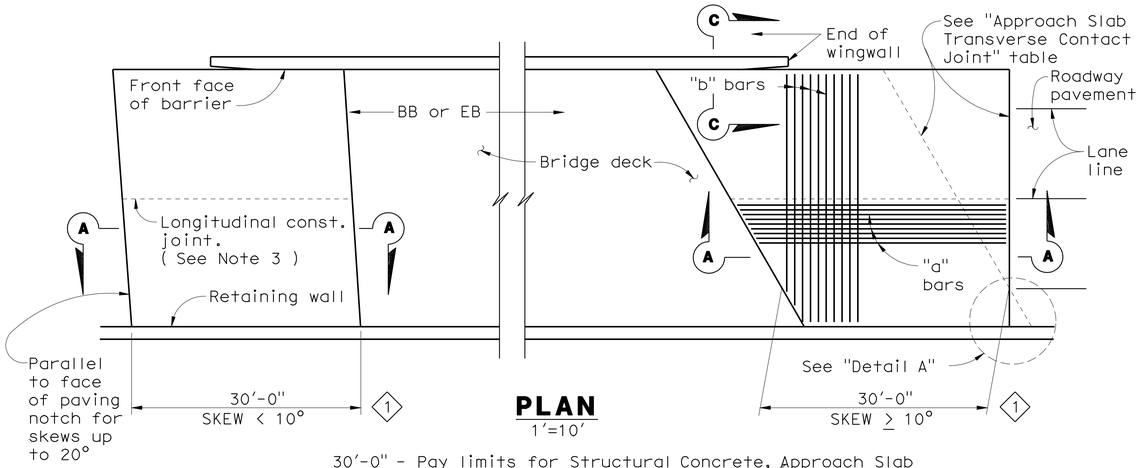

PLAN
1'=10'

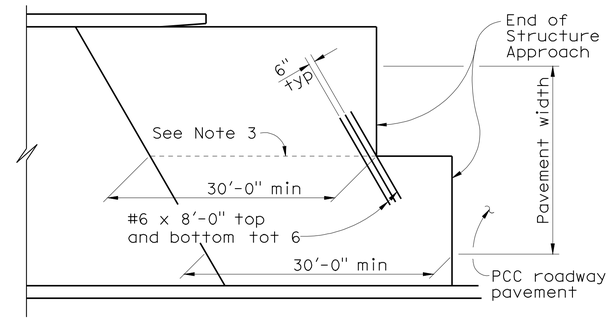

STRUCTURE APPROACH - END STAGGER DETAIL
No Scale

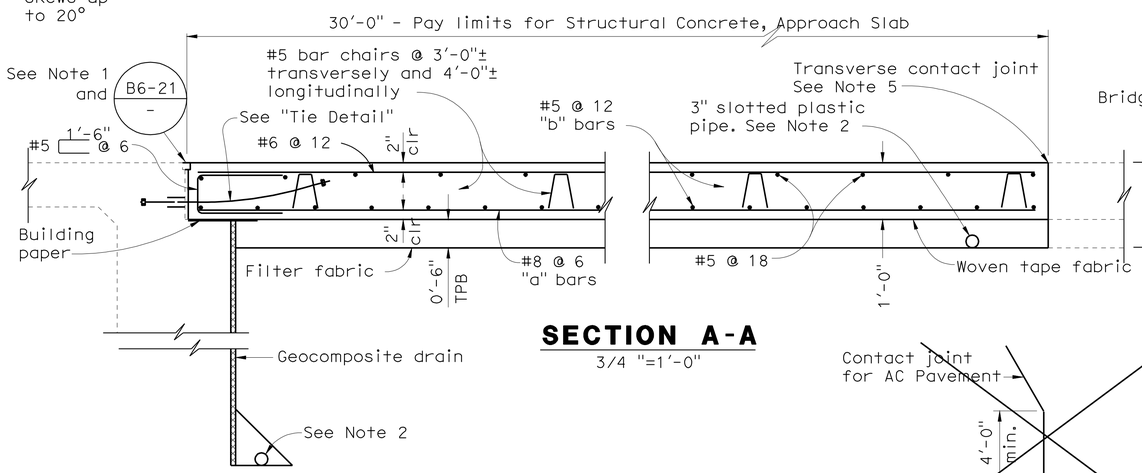

SECTION A-A
3/4 "=1'-0"

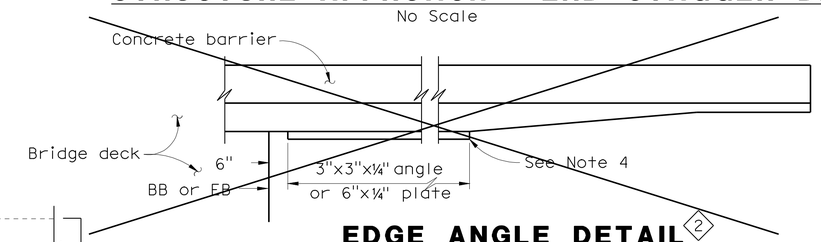

EDGE ANGLE DETAIL 2
1/2 "=1'-0"

APPROACH SLAB TRANSVERSE CONTACT JOINT 1		
APPROACH SKEW	WITH AC ROADWAY PAVEMENT	WITH PCC ROADWAY PAVEMENT
< 10°	Parallel to face of paving notch	Parallel to face of paving notch
10° - 45°	Parallel to face of P N use (Detail A)	Stagger lines 24' to 36' apart
> 45°	Parallel to face of P N use (Detail A)	Stagger at each lane line

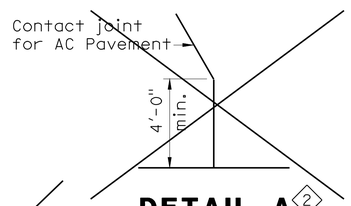

DETAIL A 2
No Scale

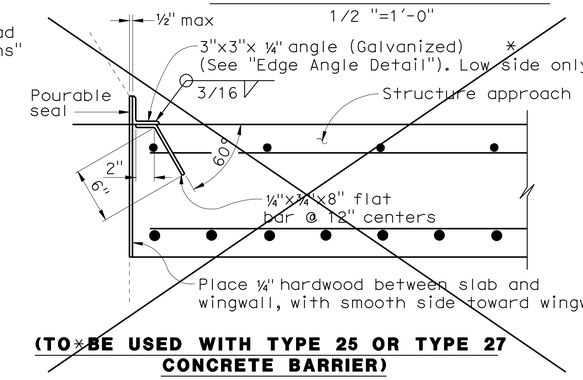

(TO BE USED WITH TYPE 25 OR TYPE 27 CONCRETE BARRIER)

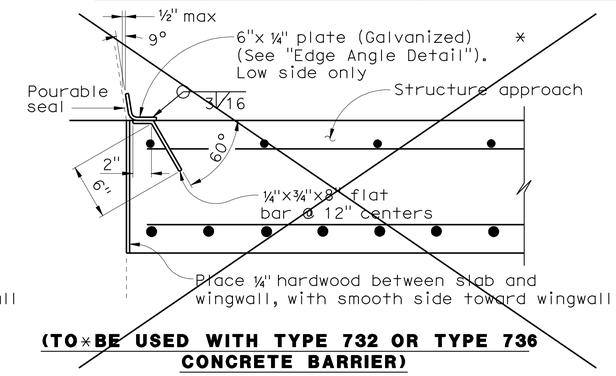

(TO BE USED WITH TYPE 732 OR TYPE 736 CONCRETE BARRIER)

DETAIL B 2
1 1/2 "=1'-0"

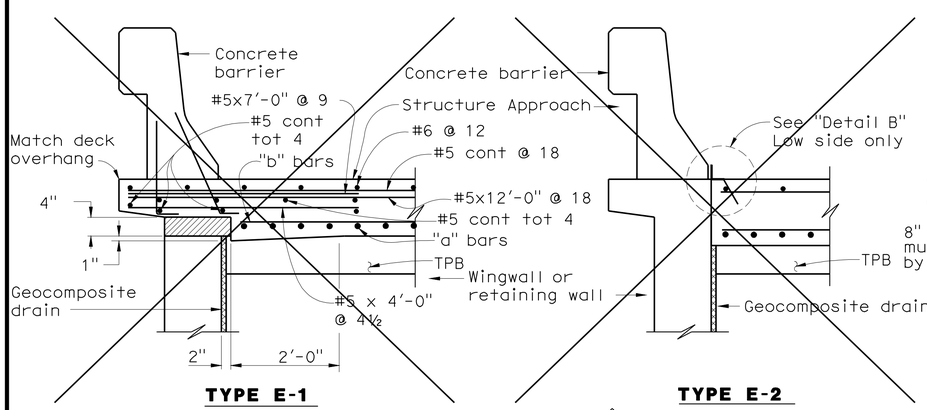

TYPE E-1 **TYPE E-2**

SECTION C-C 2
3/4"=1'-0"

(Type E-1 to be used,unless otherwise shown on plans)

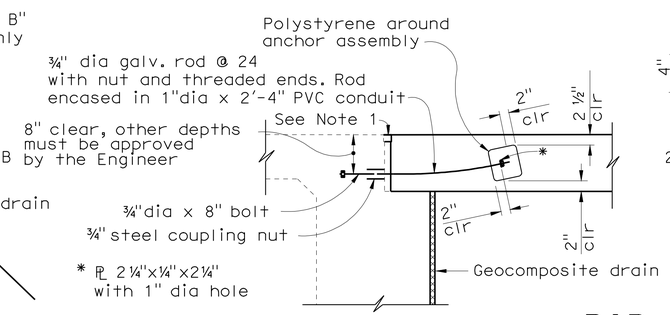

TIE DETAIL
3/4 "=1'-0"

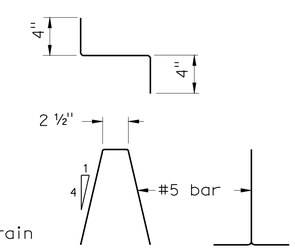

BAR CHAIR DETAIL
1 1/2 "=1'-0"

Polystyrene to be removed.

NOTES:

1. For details not noted or shown,see Structure Plans.
2. For drainage details,see "Structure Approach Drainage Details" sheet.
3. Longitudinal construction joints,when permitted by the Engineer,shall be located on lane lines.
4. End angle or plate at beginning of barrier transition, end of wingwall or end of structure approach, as applicable.
5. For transverse contact joint with new PCC paving, refer to Standard Plan P10.
6. At the contractor's option,approach slab transverse reinforcement may be placed parallel to paving notch. Spacing of transverse reinforcement is measured along ℄ roadway.

SPECIAL DETAILS

STANDARD DRAWING

FILE NO. xs3-180e

APPROVED BY M. Ha (RESPONSIBLE TECHNICAL SPECIALIST)
APPROVAL DATE REVISED

RELEASED BY O. Alcantara (RESPONSIBLE OFFICE CHIEF)
RELEASE DATE 8-12-08

1 Revised skew
2 Detail not used

STATE OF CALIFORNIA
DEPARTMENT OF TRANSPORTATION

DIVISION OF ENGINEERING SERVICES

BRIDGE NO. 29-0190
POST MILES 28.75

MICHIGAN AVE UC (WIDEN)
STRUCTURE APPROACH TYPE N(30D)

DS OSD 2147A (ENGLISH STANDARD DRAWING "XS" BORDER REV. 01/11/08)

ORIGINAL SCALE IN INCHES FOR REDUCED PLANS 0 1 2 3

CU 06240
EA 0G4701

DISREGARD PRINTS BEARING EARLIER REVISION DATES

REVISION DATES (PRELIMINARY STAGE ONLY) 10/16/09 12/4/09 1/15/10 4/23/10 6/11/10 7/28/10

SHEET 14 OF 24

USERNAME => trlenard

29-0190-t-sadd.dgn

20060418A (20060418S141) TIME PLOTTED => 12:55 DATE PLOTTED => 13-OCT-2010 USERNAME => trlenard

DIST	COUNTY	ROUTE	POST MILES TOTAL PROJECT	SHEET NO.	TOTAL SHEETS
10	SJ	5	25.0/32.7	946	1132

REGISTERED CIVIL ENGINEER 7/28/10

10-11-10
PLANS APPROVAL DATE

REGISTERED PROFESSIONAL ENGINEER RONALD L OEN No. 46945 Exp. 9/30/11 CIVIL STATE OF CALIFORNIA

The State of California or its officers or agents shall not be responsible for the accuracy or completeness of scanned copies of this plan sheet.

BIGGS CARDOSA ASSOCIATES INC.
865 THE ALAMEDA
SAN JOSE, CALIFORNIA 95126

ALAMEDA COUNTY CONGESTION MANAGEMENT AGENCY
1333 BROADWAY, SUITE 220
OAKLAND, CA 94612

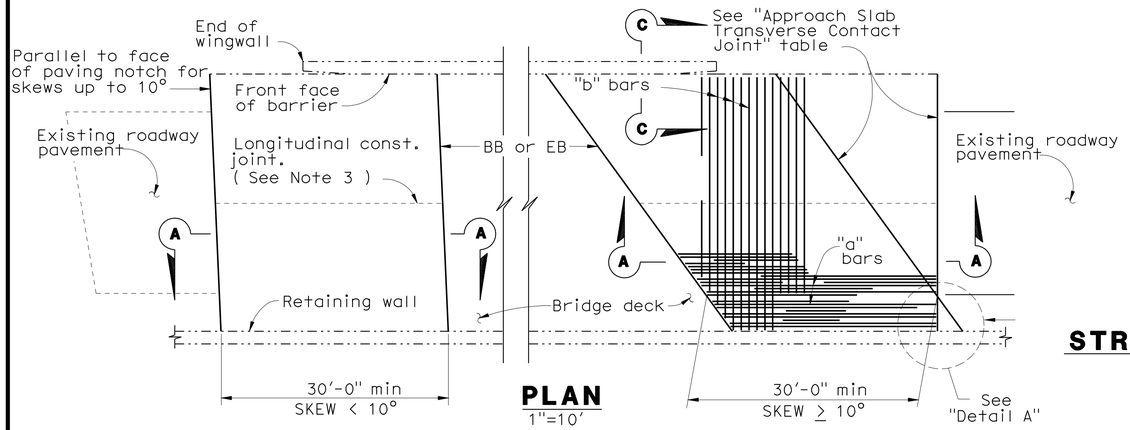

PLAN
1"=10'

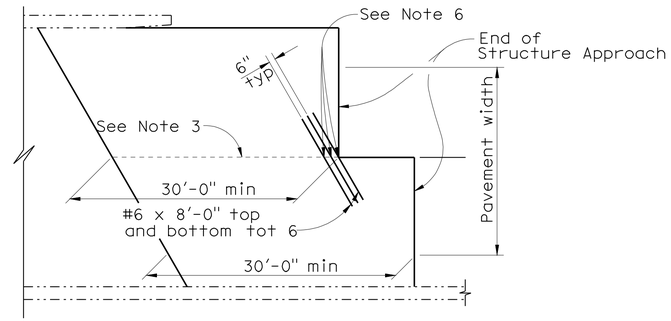

STRUCTURE APPROACH - END STAGGER DETAIL
No Scale

APPROACH SLAB TRANSVERSE CONTACT JOINT		
APPROACH SKEW	WITH AC ROADWAY PAVEMENT	WITH PCC ROADWAY PAVEMENT
< 10°	Parallel with face of paving notch	Parallel with face of paving notch
10° - 45°	Parallel with face of P N use (Detail A)	Stagger lines 24' to 36' apart
> 45°	Parallel with face of P N use (Detail A)	Stagger at each lane line

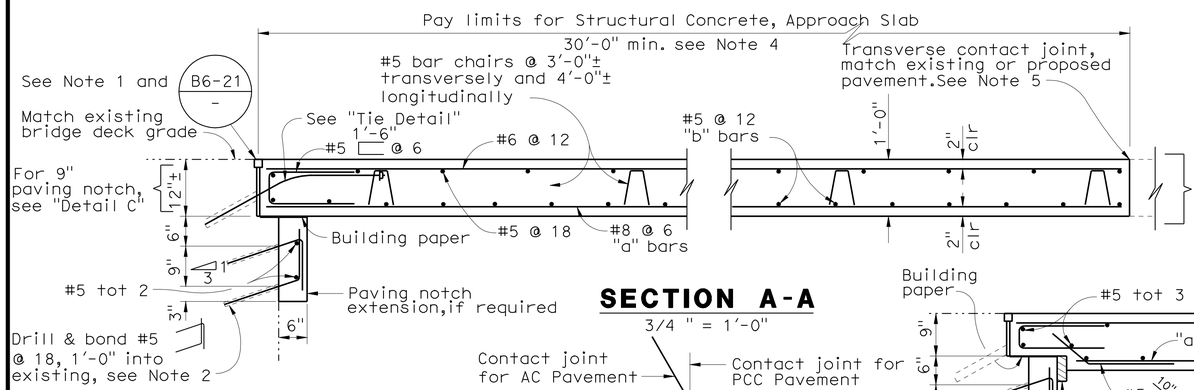

SECTION A-A
3/4 " = 1'-0"

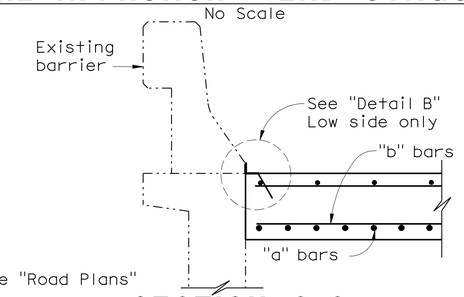

SECTION C-C
3/4 " = 1'-0"

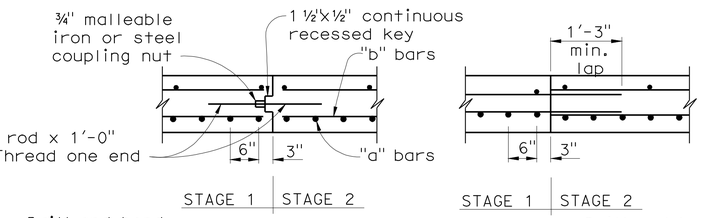

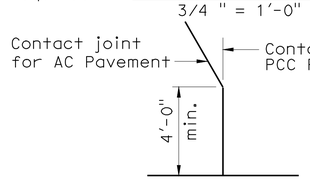

DETAIL A
No Scale

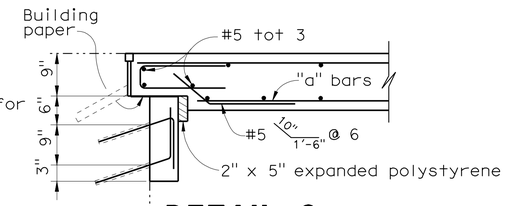

DETAIL C
3/4 " = 1'-0"

NOTE: For details not shown, see "Section A-A".

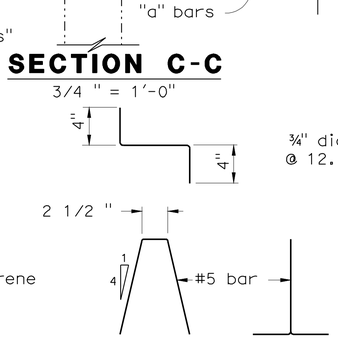

BAR CHAIR DETAIL
1 1/2 " = 1'-0"

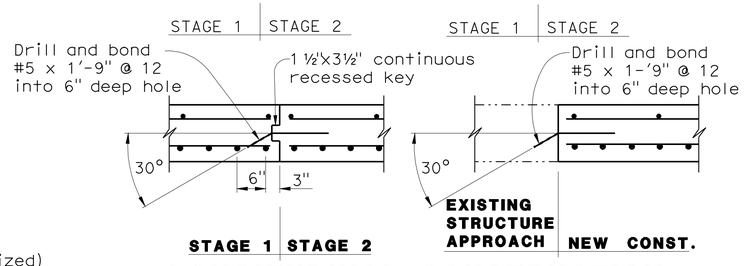

LONGITUDINAL CONSTRUCTION JOINT ALTERNATIVES
3/4 " = 1'-0"

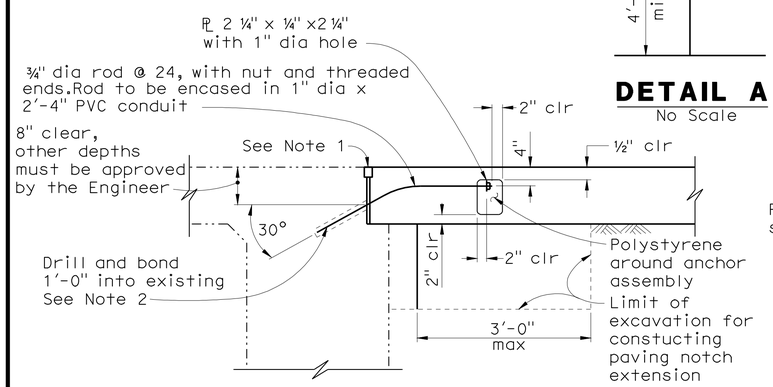

TIE DETAIL
3/4 " = 1'-0"

NOTE:
THE CONTRACTOR SHALL VERIFY ALL CONTROLLING FIELD DIMENSIONS BEFORE ORDERING OR FABRICATING ANY MATERIAL.

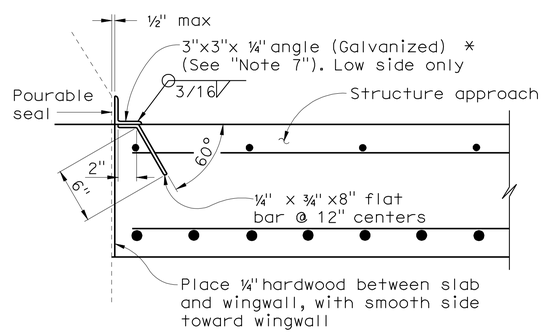

*(TO BE USED WITH TYPE 25 OR TYPE 27 CONCRETE BARRIER)

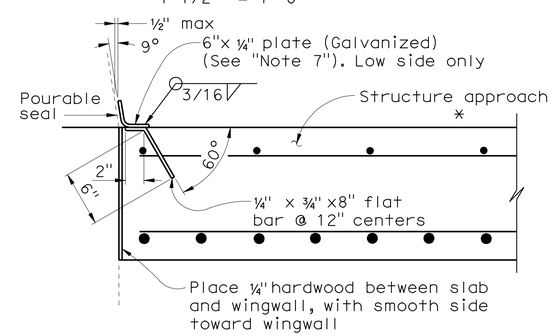

*(TO BE USED WITH TYPE 732 OR TYPE 736 CONCRETE BARRIER)

DETAIL B
1 1/2 " = 1'-0"

NOTES:

1. For details not shown or noted, see Structure Plans. Adjust bar reinforcement to clear a sawcut for sealed joint, when required.
2. Space to avoid existing prestress anchorages and main reinforcement.
3. Longitudinal construction joints, when permitted by the Engineer, shall be located on lane lines.
4. Transverse contact joint shall be a minimum of 5'-0" from an existing or constructed weakened plane joint.
5. For transverse contact joint with new PCC paving, refer to Standard Plan P10.
6. Couplers are required for stage construction.
7. End angle or plate at beginning of barrier transition, end of wingwall or end of structure approach as applicable.

STANDARD DRAWING				
RELEASE DATE 3/14/05	DESIGN BY R. OEN	CHECKED M. THOMAS	RELEASED BY	
FILE NO. xs3-140e	DETAILS BY R. YEE	CHECKED E. THORKILDSEN		
	SUBMITTED BY M. HA	DRAWING DATE 8/92	OFFICE CHIEF	

DS OSD 2147A (CADD) (REV. 4/07)

ORIGINAL SCALE IN INCHES FOR REDUCED PLANS 0 1 2 3

STATE OF CALIFORNIA
DEPARTMENT OF TRANSPORTATION

DIVISION OF ENGINEERING SERVICES

CU 06240
EA 0G4701

BRIDGE NO. 29-0190
POST MILE 28.75

MICHIGAN AVE UC (WIDEN)
STRUCTURE APPROACH TYPE R(30D)

DISREGARD PRINTS BEARING EARLIER REVISION DATES

REVISION DATES (PRELIMINARY STAGE ONLY): 10/16/09 12/4/09 1/15/10 4/23/10 6/11/10 7/28/10

SHEET 15 OF 24

USERNAME => trlenard

29-0190-t-sadet1.d

USERNAME => trlenard DATE PLOTTED => 13-OCT-2010 TIME PLOTTED => 12:55 20060348A (20060348 1561)

DIST	COUNTY	ROUTE	POST MILES TOTAL PROJECT	SHEET NO.	TOTAL SHEETS
10	SJ	5	25.0/32.7	947	1132

REGISTERED CIVIL ENGINEER 7/28/10

PLANS APPROVAL DATE 10-11-10

REGISTERED PROFESSIONAL ENGINEER RONALD L OEN No. 46945 Exp. 9/30/11 CIVIL STATE OF CALIFORNIA

The State of California or its officers or agents shall not be responsible for the accuracy or completeness of scanned copies of this plan sheet.

BIGGS CARDOSA ASSOCIATES INC.
865 THE ALAMEDA
SAN JOSE, CALIFORNIA 95126

ALAMEDA COUNTY CONGESTION MANAGEMENT AGENCY
1333 BROADWAY, SUITE 220
OAKLAND, CA 94612

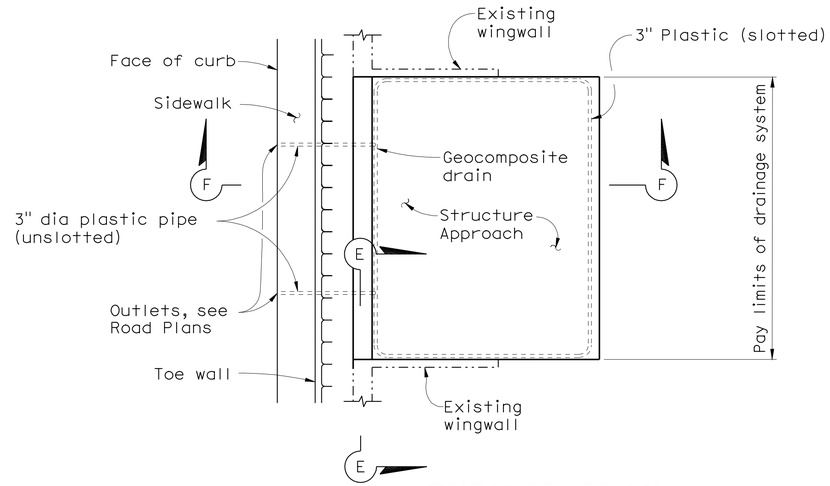

TYPICAL PLAN (1)

1" = 10' ✳

✳ For pipe layout at staggered end, see "Detail B".

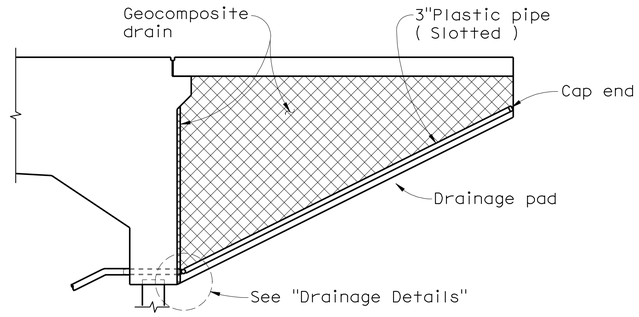

CANTILEVER WINGWALL SECTION F-F (1)

1/4" = 1'-0"

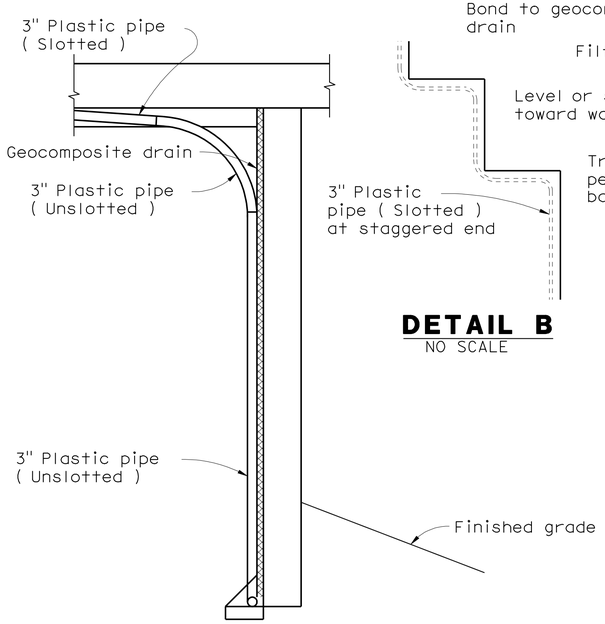

SECTION E-E (1)

1/2" = 1'-0"

NOTE: Bends and junctions in 3" plastic pipe are 30" radius min.

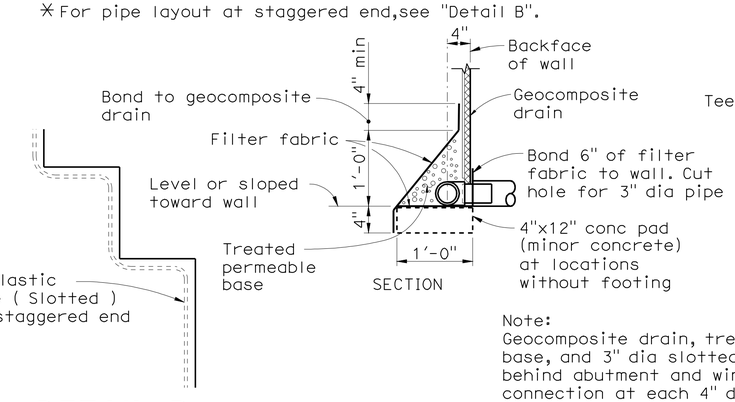

DETAIL B

NO SCALE

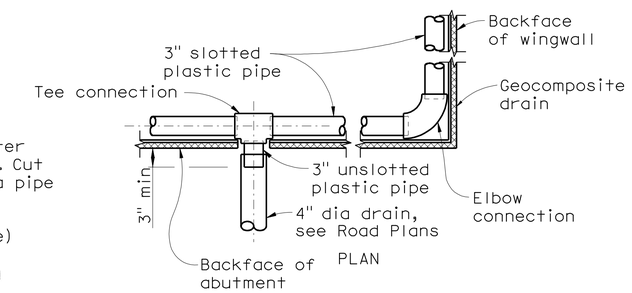

Note:
Geocomposite drain, treated permeable base, and 3" dia slotted plastic pipe continuous behind abutment and wingwalls. Provide 'tee' connection at each 4" dia drain.

ABUTMENT DRAINAGE DETAILS (2)

NO SCALE

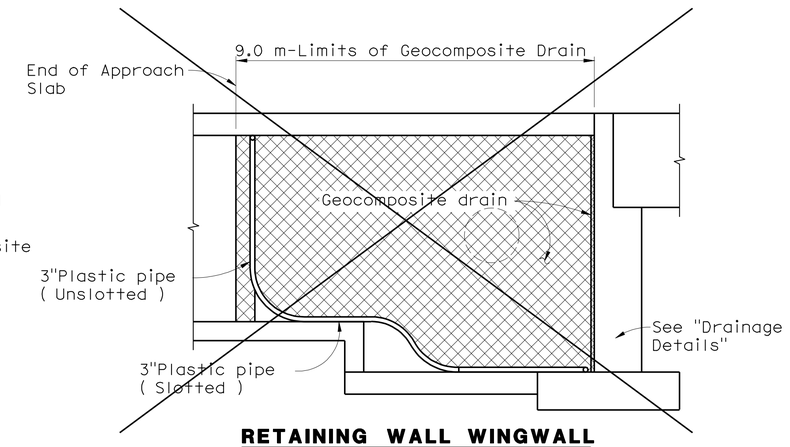

RETAINING WALL WINGWALL SECTION G-G (3)

1/4" = 1'-0"

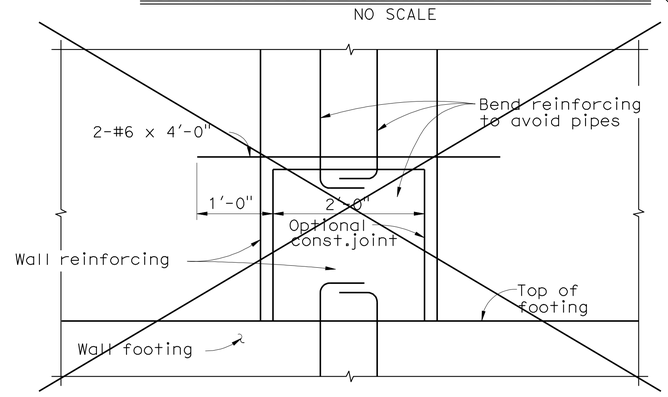

SECTION H-H (3)

1" = 1'-0"

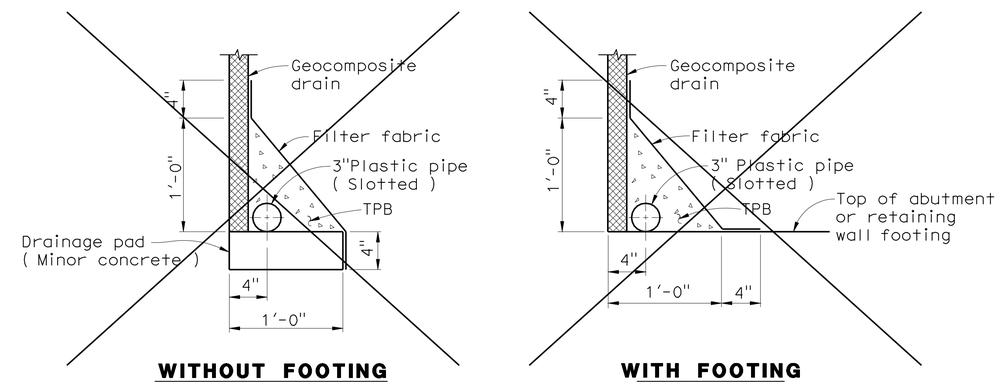

WITHOUT FOOTING

WITH FOOTING

DRAINAGE DETAILS (3)

1 1/2" = 1'-0"

SPECIAL DETAILS

STANDARD DRAWING

RELEASE DATE 4/23/98	DESIGN BY R. OEN	CHECKED M. THOMAS	RELEASED BY	
FILE NO. xs3-110e	DETAILS BY R. YEE	CHECKED E. THORKILDSEN		
	SUBMITTED BY M. HA	DRAWING DATE REVISED	OFFICE CHIEF	

DS OSD 2147A (CADD) (REV. 4/07)

(1) Revised Detail (2) Added Detail (3) Details not used

ORIGINAL SCALE IN INCHES FOR REDUCED PLANS 0 1 2 3

STATE OF CALIFORNIA DEPARTMENT OF TRANSPORTATION

DIVISION OF ENGINEERING SERVICES

CU 06240
EA 0G4701

BRIDGE NO. 29-0190
POST MILE 28.75

MICHIGAN AVENUE UC (WIDEN)

STRUCTURE APPROACH DRAINAGE DETAILS

DISREGARD PRINTS BEARING EARLIER REVISION DATES

REVISION DATES (PRELIMINARY STAGE ONLY) 10/16/09 12/4/09 1/15/10 4/23/10 6/11/10 7/28/10

SHEET 16 OF 24

USERNAME => trienard

29-0190-t-sadet2.d

USERNAME => trienard DATE PLOTTED => 18-OCT-2010 TIME PLOTTED => 08:59 20060048 [20060485160]

DIST	COUNTY	ROUTE	POST MILES TOTAL PROJECT	SHEET No	TOTAL SHEETS
10	SJ	5	25.0/32.7	948	1132

REGISTERED CIVIL ENGINEER 7/28/10 DATE

10-11-10
PLANS APPROVAL DATE

REGISTERED PROFESSIONAL ENGINEER RONALD L OEN No. 46945 Exp. 9/30/11 CIVIL STATE OF CALIFORNIA

The State of California or its officers or agents shall not be responsible for the accuracy or completeness of scanned copies of this plan sheet.

SAN JOAQUIN COUNCIL OF GOVERNMENTS
555 E. WEBER AVENUE
STOCKTON, CA 95202

BIGGS CARDOSA ASSOCIATES INC.
865 THE ALAMEDA
SAN JOSE, CALIFORNIA 95126

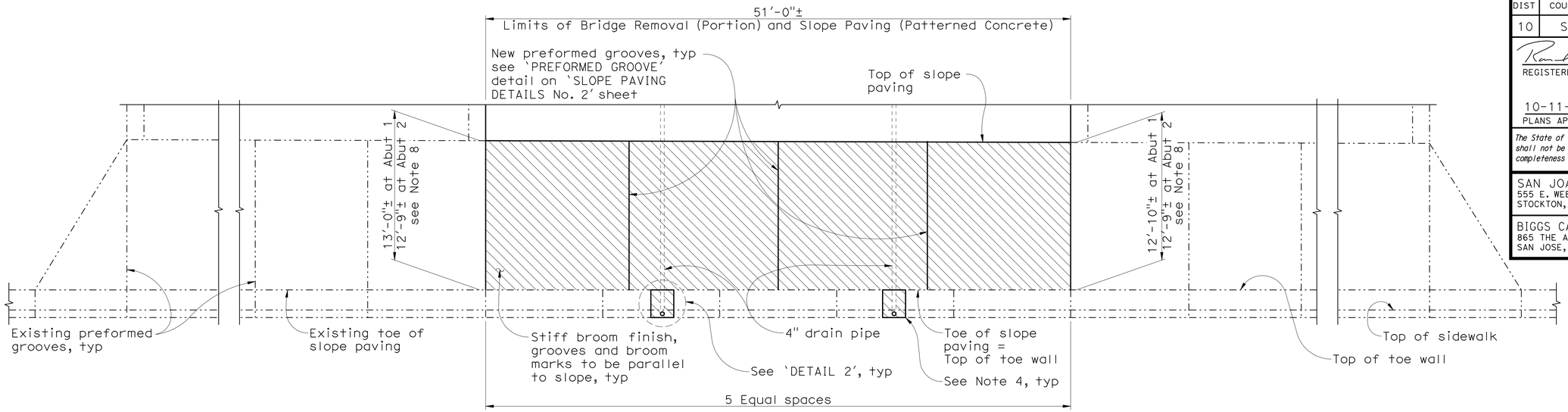

SLOPE PAVING ELEVATION-INTERIOR WIDENING

1" = 5'

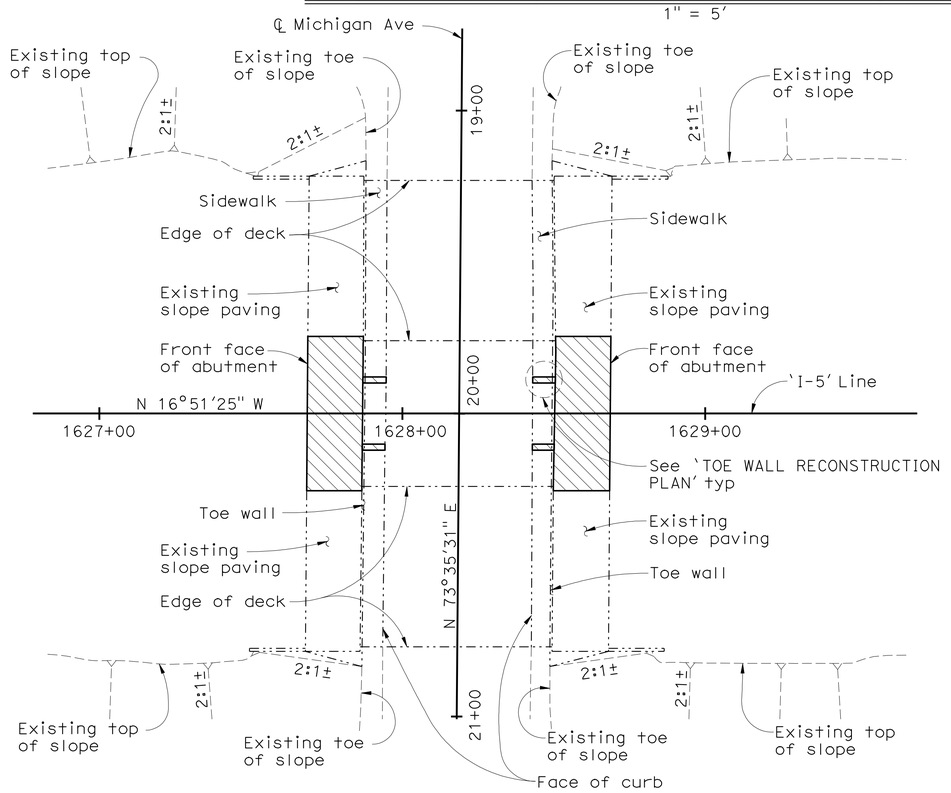

LIMITS OF SLOPE PAVING

NO SCALE

Note:
The Contractor shall verify all controlling field dimensions before ordering or fabricating any material

Notes:

1. New slope paving shall match height of existing slope paving.
2. New preformed grooves on the outsides of interior slope to coincide with the existing preformed groove near the outside face of existing exterior girder.
3. Abutment 1 shown, Abutment 2 similar.
4. Remove a 2'-0' strip of toe wall and sidewalk and place a 3' dia plastic pipe (unslotted) to discharge through curb face.
5. Reconstruct toe wall and sidewalk. Connect new toe wall to existing toe wall per 'TOE WALL - DETAIL 2' on 'SLOPE PAVING DETAILS No. 2' sheet.
6. For 'TOE WALL RECONSTRUCTION PLAN', see 'SLOPE PAVING DETAILS No. 2' sheet.
7. See 'SLOPE PAVING DETAILS No. 2' sheet for details not shown.
8. The length of the slope provided is measured along the slope.
9. For asthetic details of slope paving, see 'SLOPE PAVING DETIALS No. 3' and 'SLOPE PAVING DETAILS No. 4' sheet.

Legend:

Indicates limits of Bridge Removal (Portion) and Slope Paving (Patterned Concrete)

DESIGN OVERSIGHT John Fujimoto
8-2-10
SIGN OFF DATE

	BY	CHECKED
DESIGN	R. OEN	M. THOMAS
DETAILS	D. UPADHYAY	R. CASTRO
QUANTITIES	D. UPADHYAY	R. CASTRO

PREPARED FOR THE STATE OF CALIFORNIA DEPARTMENT OF TRANSPORTATION

JOHN A. ALCIATI
PROJECT ENGINEER

BRIDGE NO. 29-0190
POST MILES 28.75

MICHIGAN AVENUE UC (WIDEN)
SLOPE PAVING DETAILS No. 1

DESIGN DETAIL SHEET (ENGLISH) (REV. 6-01-09)

ORIGINAL SCALE IN INCHES FOR REDUCED PLANS 0 1 2 3

CU 06240
EA 0G4701

DISREGARD PRINTS BEARING EARLIER REVISION DATES

REVISION DATES (PRELIMINARY STAGE ONLY) 10/16/09 12/4/09 1/15/10 4/23/10 6/11/10 7/28/10

SHEET 17 OF 24

FILE => 29-0190-u-slpdet01.dgn

USERNAME => friehard DATE PLOTTED => 13-OCT-2010 TIME PLOTTED => 12:56

(20060485 17A) 20060485

DIST	COUNTY	ROUTE	POST MILES TOTAL PROJECT	SHEET No	TOTAL SHEETS
10	SJ	5	25.0/32.7	949	1132

REGISTERED CIVIL ENGINEER 7/28/10 DATE

10-11-10
PLANS APPROVAL DATE

REGISTERED PROFESSIONAL ENGINEER RONALD L OEN No. 46945 Exp. 9/30/11 CIVIL STATE OF CALIFORNIA

The State of California or its officers or agents shall not be responsible for the accuracy or completeness of scanned copies of this plan sheet.

SAN JOAQUIN COUNCIL OF GOVERNMENTS
555 E. WEBER AVENUE
STOCKTON, CA 95202

BIGGS CARDOSA ASSOCIATES INC.
865 THE ALAMEDA
SAN JOSE, CALIFORNIA 95126

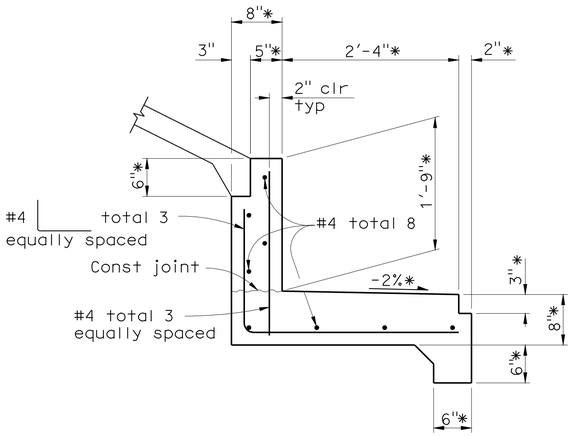

TOE WALL - DETAIL 1
1" = 1'-0"

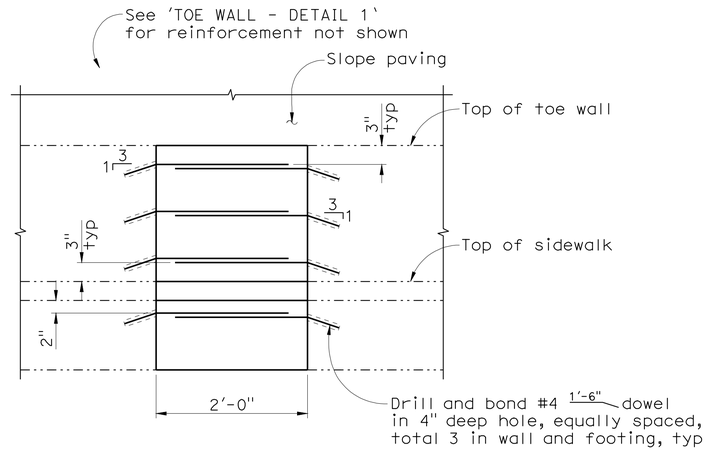

TOE WALL - DETAIL 2
1" = 1'-0"

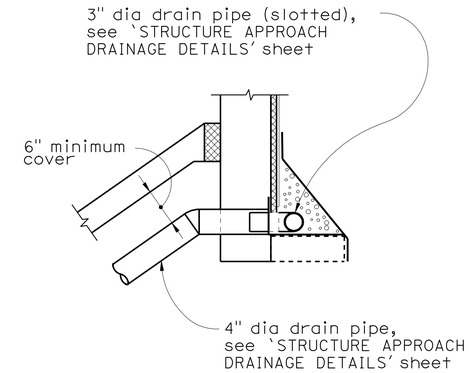

TYPICAL - DRAIN CONNECTION
NO SCALE

Note:
* Match existing condition

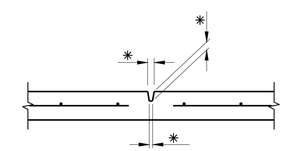

PREFORMED GROOVE
NO SCALE

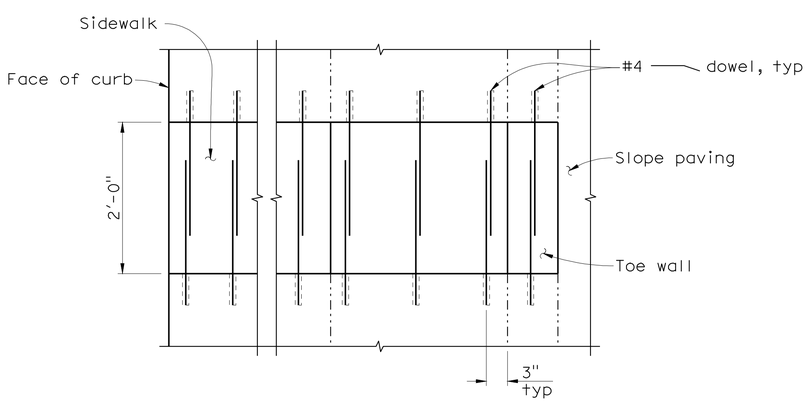

TOE WALL RECONSTRUCTION PLAN
1" = 1'-0"

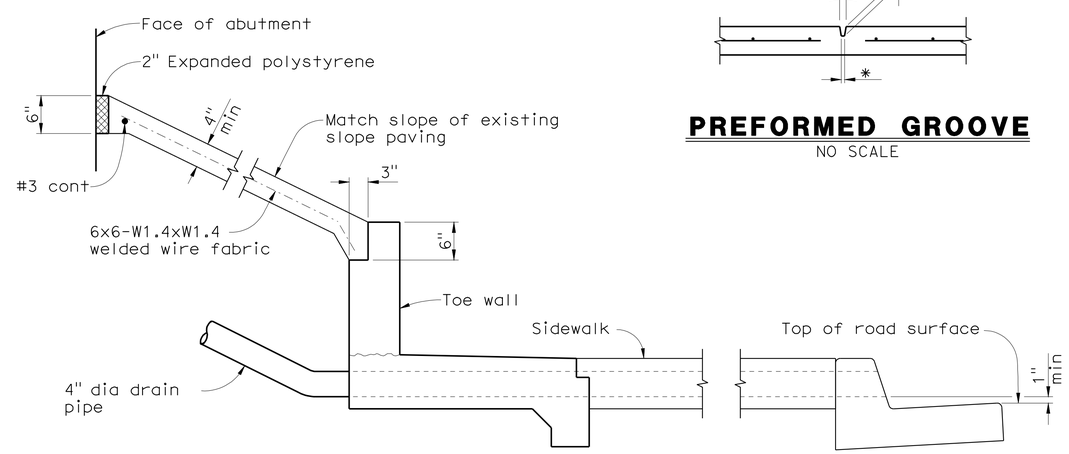

TYPICAL SECTION - CONCRETE PAVING
1" = 1'-0"

Note:
The Contractor shall verify all controlling field dimensions before ordering or fabricating any material

DESIGN OVERSIGHT John Fujimoto
8-2-10
SIGN OFF DATE

	BY	CHECKED
DESIGN	R. OEN	M. THOMAS
DETAILS	D. UPADHYAY	R. CASTRO
QUANTITIES	D. UPADHYAY	R. CASTRO

PREPARED FOR THE STATE OF CALIFORNIA DEPARTMENT OF TRANSPORTATION

JOHN A. ALCIATI
PROJECT ENGINEER

BRIDGE NO. 29-0190
POST MILES 28.75

MICHIGAN AVENUE UC (WIDEN)
SLOPE PAVING DETAILS No. 2

DESIGN DETAIL SHEET (ENGLISH) (REV. 6-01-09)

ORIGINAL SCALE IN INCHES FOR REDUCED PLANS 0 1 2 3

CU 06240
EA 0G4701

DISREGARD PRINTS BEARING EARLIER REVISION DATES

REVISION DATES (PRELIMINARY STAGE ONLY) 10/16/09 12/4/09 1/15/10 4/23/10 6/11/10 7/28/10

SHEET 18 OF 24

FILE => 29-0190-u-slpdet02.dgn

USERNAME => trlenard DATE PLOTTED => 13-OCT-2010 TIME PLOTTED => 15:32

20060048 (20060485 18A)

DIST	COUNTY	ROUTE	POST MILES TOTAL PROJECT	SHEET No	TOTAL SHEETS
10	SJ	5	25.0/32.7	950	1132

REGISTERED CIVIL ENGINEER 7/28/10 DATE

10-11-10
PLANS APPROVAL DATE

REGISTERED PROFESSIONAL ENGINEER RONALD L OEN No. 46945 Exp. 9/30/11 CIVIL STATE OF CALIFORNIA

The State of California or its officers or agents shall not be responsible for the accuracy or completeness of scanned copies of this plan sheet.

SAN JOAQUIN COUNCIL OF GOVERNMENTS
555 E. WEBER AVENUE
STOCKTON, CA 95202

BIGGS CARDOSA ASSOCIATES INC.
865 THE ALAMEDA
SAN JOSE, CALIFORNIA 95126

DERIVI CONSTRUCTION AND ARCHITEXTURE
924 N. YOSEMITE STREET
STOCKTON, CA 95203

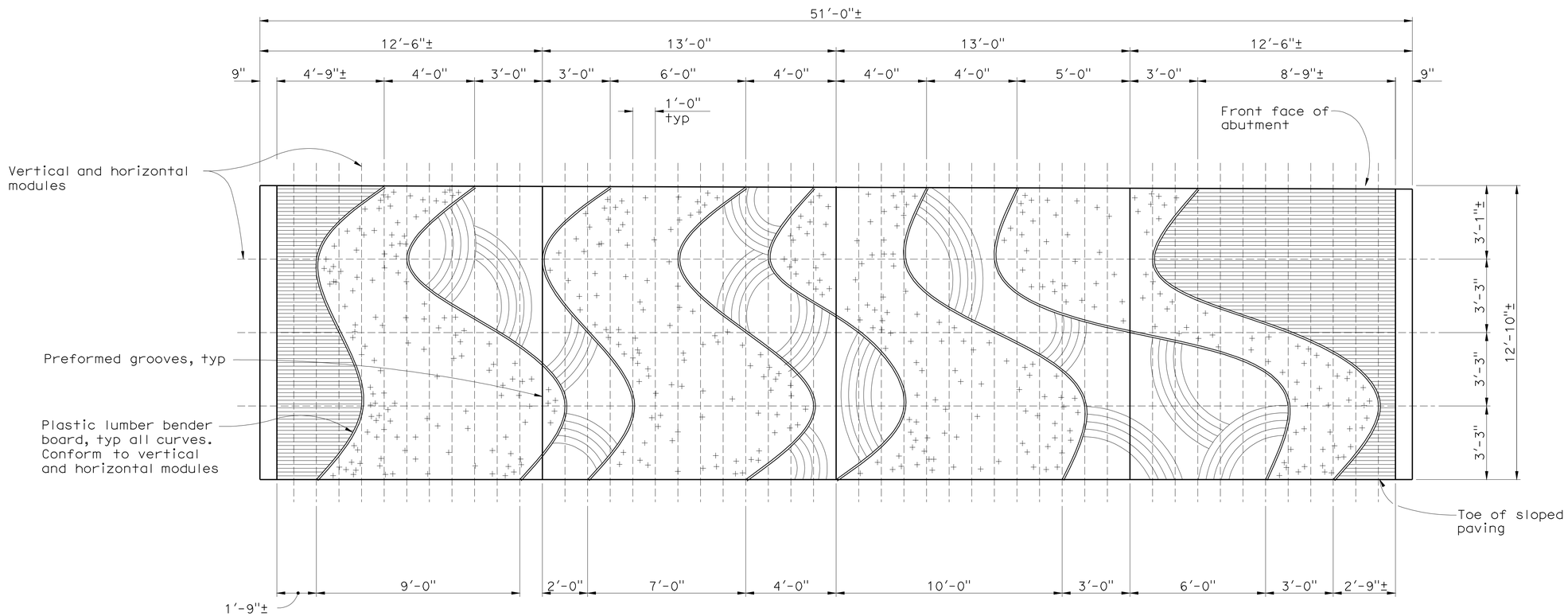

NORTH ELEVATION

3/8" = 1'-0"

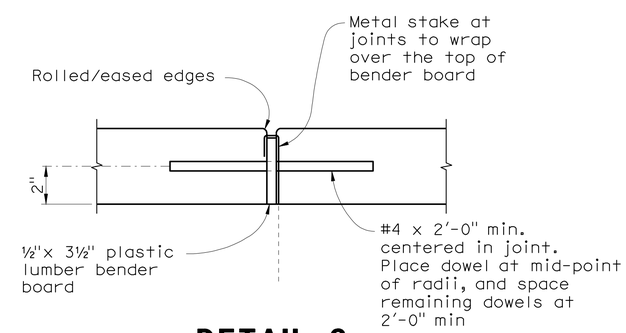

DETAIL 3

3" = 1'-0"

Pattern Legend

- Curved Plastic Lumber Bender Board (½" width x 3½" depth) between Concrete Patterns
- Concrete Pattern A Vertical rough broom finish
- Concrete Pattern B Horizontal scored metal rake tooling (1" on center ± x ½" depth max) horizontal rough broom finish
- Concrete Pattern C Randomly seeded aggregate (40% of surface covered) with 1½"-2" aggregate
- Concrete Pattern D 5-prong rake tooling (4" on center x ½"depth max) in arcs over vertical rough broom finish -start and end points shall not overlap other patterns -pattern shown is schematic

Note:
The Contractor shall verify all controlling field dimensions before ordering or fabricating any material

DESIGN OVERSIGHT John Fujimoto
8-2-10
SIGN OFF DATE

	BY	CHECKED
DESIGN	R. OEN	M. THOMAS
DETAILS	C.D.B. FRANKEL	R. CASTRO
QUANTITIES	D. UPADHYAY	R. CASTRO

PREPARED FOR THE STATE OF CALIFORNIA DEPARTMENT OF TRANSPORTATION

JOHN A. ALCIATI
PROJECT ENGINEER

BRIDGE NO. 29-0190
POST MILES 28.75

MICHIGAN AVENUE UC (WIDEN)
SLOPE PAVING DETAILS No. 3

DESIGN DETAIL SHEET (ENGLISH) (REV. 6-01-09)

ORIGINAL SCALE IN INCHES FOR REDUCED PLANS 0 1 2 3

CU 06240
EA 0G4701

DISREGARD PRINTS BEARING EARLIER REVISION DATES → 12/4/09 1/15/10 4/23/10 6/11/10 7/28/10

REVISION DATES (PRELIMINARY STAGE ONLY)

SHEET 19 OF 24

FILE => 29-0190-u-slpdet03.dgn

USERNAME => trlenard DATE PLOTTED => 13-OCT-2010 TIME PLOTTED => 12:56

20060485 19A) 20060485

DIST	COUNTY	ROUTE	POST MILES TOTAL PROJECT	SHEET No	TOTAL SHEETS
10	SJ	5	25.0/32.7	951	1132

REGISTERED CIVIL ENGINEER 7/28/10 DATE

10-11-10
PLANS APPROVAL DATE

REGISTERED PROFESSIONAL ENGINEER RONALD L OEN No. 46945 Exp. 9/30/11 CIVIL STATE OF CALIFORNIA

The State of California or its officers or agents shall not be responsible for the accuracy or completeness of scanned copies of this plan sheet.

SAN JOAQUIN COUNCIL OF GOVERNMENTS
555 E. WEBER AVENUE
STOCKTON, CA 95202

BIGGS CARDOSA ASSOCIATES INC.
865 THE ALAMEDA
SAN JOSE, CALIFORNIA 95126

DERIVI CONSTRUCTION AND ARCHITEXTURE
924 N. YOSEMITE STREET
STOCKTON, CA 95203

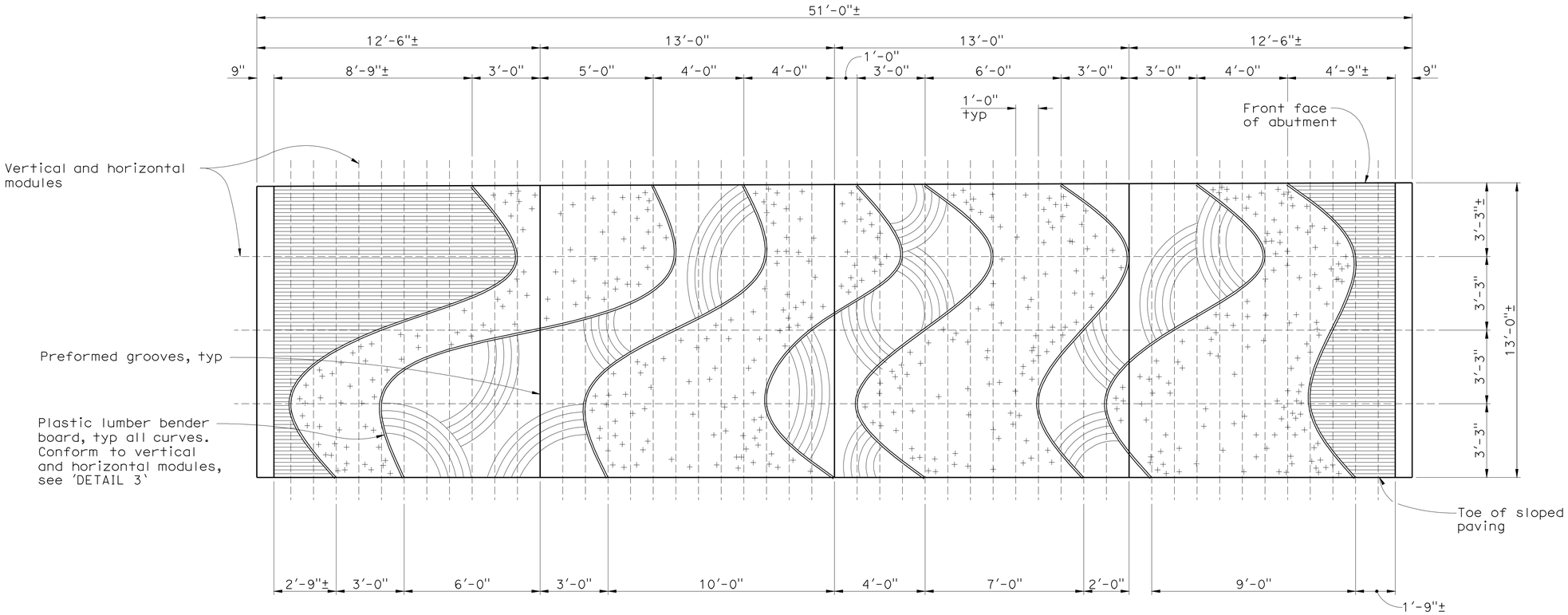

SOUTH ELEVATION

3/8" = 1'-0"

Note:
1. See 'SLOPE PAVING DETAILS No. 3' sheet for 'DETAIL 3'

Pattern Legend

- Curved Plastic Lumber Bender Board (½" width x 3½" depth) between Concrete Patterns
- Concrete Pattern A Vertical rough broom finish
- Concrete Pattern B Horizontal scored metal rake tooling (1" on center ± x ½" depth max) horizontal rough broom finish
- Concrete Pattern C Randomly seeded aggregate (40% of surface covered) with 1½"-2" aggregate
- Concrete Pattern D 5-prong rake tooling (4" on center x ½"depth max) in arcs over vertical rough broom finish -start and end points shall not overlap other patterns -pattern shown is schematic

Note:
The Contractor shall verify all controlling field dimensions before ordering or fabricating any material

DESIGN OVERSIGHT John Fujimoto
8-2-10
SIGN OFF DATE

	BY	CHECKED
DESIGN	R. OEN	M. THOMAS
DETAILS	C.D.B. FRANKEL	R. CASTRO
QUANTITIES	D. UPADHYAY	R. CASTRO

PREPARED FOR THE STATE OF CALIFORNIA DEPARTMENT OF TRANSPORTATION

JOHN A. ALCIATI
PROJECT ENGINEER

BRIDGE NO. 29-0190
POST MILES 28.75

MICHIGAN AVENUE UC (WIDEN)
SLOPE PAVING DETAILS No. 4

DESIGN DETAIL SHEET (ENGLISH) (REV. 6-01-09)

ORIGINAL SCALE IN INCHES FOR REDUCED PLANS 0 1 2 3

CU 06240
EA 0G4701

DISREGARD PRINTS BEARING EARLIER REVISION DATES → 12/4/09 1/15/10 4/23/10 6/11/10 7/28/10

REVISION DATES (PRELIMINARY STAGE ONLY)

SHEET 20 OF 24

FILE => 29-0190-u-slpdet04.dgn

USERNAME => trlenard DATE PLOTTED => 13-OCT-2010 TIME PLOTTED => 12:56

20060048 (20060485204)

REFERENCE: CALTRANS SOIL & ROCK LOGGING, CLASSIFICATION, AND PRESENTATION MANUAL (JUNE 2007)

DIST	COUNTY	ROUTE	POST MILES TOTAL PROJECT	SHEET No	TOTAL SHEETS
10	SJ	5	25.0/32.7	952	1132

GEOTECHNICAL PROFESSIONAL — 7/28/10 DATE

10-11-10
PLANS APPROVAL DATE

REGISTERED PROFESSIONAL ENGINEER — GARY PARIKH — No. G.E. 666 — Exp. 12/31/11 — GEOTECHNICAL — STATE OF CALIFORNIA

The State of California or its officers or agents shall not be responsible for the accuracy or completeness of scanned copies of this plan sheet.

SAN JOAQUIN COUNCIL OF GOVERNMENTS
555 EAST WEBER AVENUE
STOCKTON, CALIFORNIA 95202

PARIKH CONSULTANTS, INC.
2360 QUME DRIVE, SUITE A
SAN JOSE, CA 95131

CEMENTATION

Description	Criteria
Weak	Crumbles or breaks with handling or little finger pressure.
Moderate	Crumbles or breaks with considerable finger pressure.
Strong	Will not crumble or break with finger pressure.

CONSISTENCY OF COHESIVE SOILS

Description	Unconfined Compressive Strength (tsf)	Pocket Penetrometer Measurement (tsf)	Torvane Measurement (tsf)	Field Approximation
Very Soft	< 0.25	< 0.25	< 0.12	Easily penetrated several inches by fist
Soft	0.25 to 0.50	0.25 to 0.50	0.12 to 0.25	Easily penetrated several inches by thumb
Medium Stiff	0.50 to 1.0	0.50 to 1.0	0.25 to 0.50	Penetrated several inches by thumb with moderate effort
Stiff	1 to 2	1 to 2	0.50 to 1.0	Readily indented by thumb but penetrated only with great effort
Very Stiff	2 to 4	2 to 4	1.0 to 2.0	Readily indented by thumbnail
Hard	> 4.0	> 4.0	> 2.0	Indented by thumbnail with difficulty

BOREHOLE IDENTIFICATION

Symbol	Hole Type	Description
Size	A	Auger Boring
Size	R P	Rotary drilled boring Rotary percussion boring (air)
Size	R	Rotary drilled diamond core
Size	HD HA	Hand driven (1-inch soil tube) Hand Auger
●	D	Dynamic Cone Penetration Boring
▲	CPT	Cone Penetration Test (ASTM D 5778-95)
⬚	O	Other

Note: Size in inches.

PLASTICITY OF FINE-GRAINED SOILS

Description	Criteria
Nonplastic	A 1/8-inch thread cannot be rolled at any water content.
Low	The thread can barely be rolled and the lump cannot be formed when drier than the plastic limit.
Medium	The thread is easy to roll and not much time is required to reach the plastic limit. The thread cannot be rerolled after reaching the plastic limit. The lump crumbles when drier than the plastic limit.
High	It takes considerable time rolling and kneading to reach the plastic limit. The thread can be rerolled several times after reaching the plastic limit. The lump can be formed without crumbling when drier than the plastic limit.

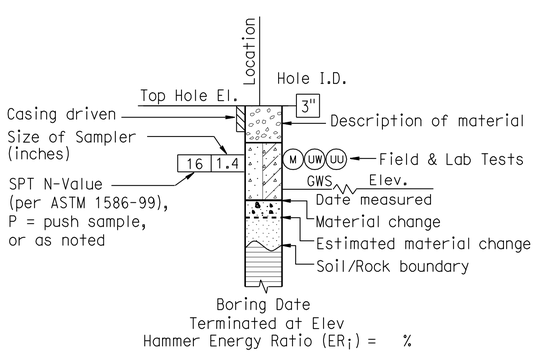

ROTARY BORING

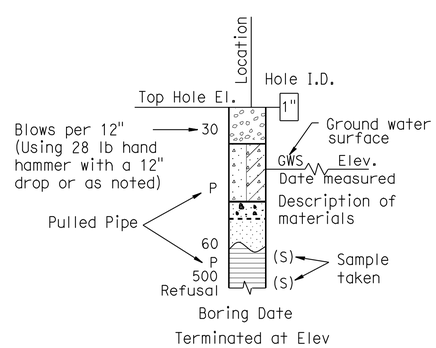

HAND BORING

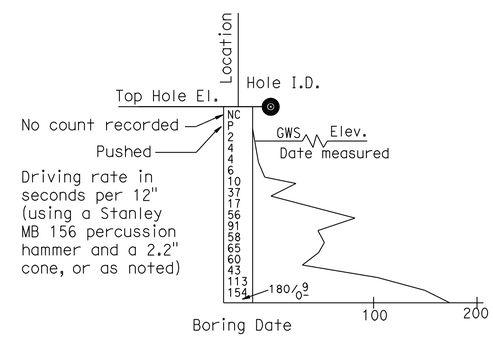

DYNAMIC CONE PENETRATION BORING

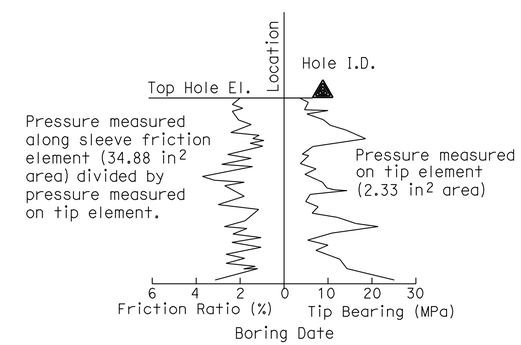

CONE PENETRATION TEST (CPT) SOUNDING

DESIGN OVERSIGHT John Fujimoto 8-2-10 SIGN OFF DATE	DRAWN BY O. GOUTHIER CHECKED BY D. WANG	S. DUDDU - A. R. BHARADWAJ FIELD INVESTIGATION BY: DATE: MARCH 2009 - APRIL 2009	PREPARED FOR THE STATE OF CALIFORNIA DEPARTMENT OF TRANSPORTATION	A. LAM PROJECT ENGINEER	BRIDGE NO. 29-0190 POST MILES 28.75

MICHIGAN AVENUE UC (WIDEN)
SOIL LEGEND 1 OF 2

OGS CIVIL LOG OF TEST BORINGS SHEET (ENGLISH) (REV. 06-01-09)

ORIGINAL SCALE IN INCHES FOR REDUCED PLANS 0 1 2 3

CU 06240
EA 0G4701

DISREGARD PRINTS BEARING EARLIER REVISION DATES → REVISION DATES: 10/18/09 12/04/09 01/18/10 04/28/10 06/11/10 7/28/10

SHEET 21 OF 24

FILE => 29-0190-z-1tb01.dgn

USERNAME => friehard DATE PLOTTED => 13-OCT-2010 TIME PLOTTED => 12:56

REFERENCE: CALTRANS SOIL & ROCK LOGGING, CLASSIFICATION, AND PRESENTATION MANUAL (JUNE 2007)

DIST	COUNTY	ROUTE	POST MILES TOTAL PROJECT	SHEET No	TOTAL SHEETS
10	SJ	5	25.0/32.7	953	1132

GEOTECHNICAL PROFESSIONAL — DATE 7/28/10

10-11-10
PLANS APPROVAL DATE

REGISTERED PROFESSIONAL ENGINEER — GARY PARIKH — No. G.E. 666 — Exp. 12/31/11 — GEOTECHNICAL — STATE OF CALIFORNIA

The State of California or its officers or agents shall not be responsible for the accuracy or completeness of scanned copies of this plan sheet.

SAN JOAQUIN COUNCIL OF GOVERNMENTS
555 EAST WEBER AVENUE
STOCKTON, CALIFORNIA 95202

PARIKH CONSULTANTS, INC.
2360 QUME DRIVE, SUITE A
SAN JOSE, CA 95131

GROUP SYMBOLS AND NAMES

Graphic/Symbol	Group Names	Graphic/Symbol	Group Names
GW	Well-graded GRAVEL Well-graded GRAVEL with SAND	CL	Lean CLAY Lean CLAY with SAND Lean CLAY with GRAVEL SANDY lean CLAY SANDY lean CLAY with GRAVEL GRAVELLY lean CLAY GRAVELLY lean CLAY with SAND
GP	Poorly graded GRAVEL Poorly graded GRAVEL with SAND		
GW-GM	Well-graded GRAVEL with SILT Well-graded GRAVEL with SILT and SAND	CL-ML	SILTY CLAY SILTY CLAY with SAND SILTY CLAY with GRAVEL SANDY SILTY CLAY SANDY SILTY CLAY with GRAVEL GRAVELLY SILTY CLAY GRAVELLY SILTY CLAY with SAND
GW-GC	Well-graded GRAVEL with CLAY (or SILTY CLAY) Well-graded GRAVEL with CLAY and SAND (or SILTY CLAY and SAND)		
GP-GM	Poorly graded GRAVEL with SILT Poorly graded GRAVEL with SILT and SAND	ML	SILT SILT with SAND SILT with GRAVEL SANDY SILT SANDY SILT with GRAVEL GRAVELLY SILT GRAVELLY SILT with SAND
GP-GC	Poorly graded GRAVEL with CLAY (or SILTY CLAY) Poorly graded GRAVEL with CLAY and SAND (or SILTY CLAY and SAND)		
GM	SILTY GRAVEL SILTY GRAVEL with SAND	OL	ORGANIC lean CLAY ORGANIC lean CLAY with SAND ORGANIC lean CLAY with GRAVEL SANDY ORGANIC lean CLAY SANDY ORGANIC lean CLAY with GRAVEL GRAVELLY ORGANIC lean CLAY GRAVELLY ORGANIC lean CLAY with SAND
GC	CLAYEY GRAVEL CLAYEY GRAVEL with SAND		
GC-GM	SILTY, CLAYEY GRAVEL SILTY, CLAYEY GRAVEL with SAND	OL	ORGANIC SILT ORGANIC SILT with SAND ORGANIC SILT with GRAVEL SANDY ORGANIC SILT SANDY ORGANIC SILT with GRAVEL GRAVELLY ORGANIC SILT GRAVELLY ORGANIC SILT with SAND
SW	Well-graded SAND Well-graded SAND with GRAVEL		
SP	Poorly graded SAND Poorly graded SAND with GRAVEL	CH	Fat CLAY Fat CLAY with SAND Fat CLAY with GRAVEL SANDY fat CLAY SANDY fat CLAY with GRAVEL GRAVELLY fat CLAY GRAVELLY fat CLAY with SAND
SW-SM	Well-graded SAND with SILT Well-graded SAND with SILT and GRAVEL		
SW-SC	Well-graded SAND with CLAY (or SILTY CLAY) Well-graded SAND with CLAY and GRAVEL (or SILTY CLAY and GRAVEL)	MH	Elastic SILT Elastic SILT with SAND Elastic SILT with GRAVEL SANDY elastic SILT SANDY elastic SILT with GRAVEL GRAVELLY elastic SILT GRAVELLY elastic SILT with SAND
SP-SM	Poorly graded SAND with SILT Poorly graded SAND with SILT and GRAVEL		
SP-SC	Poorly graded SAND with CLAY (or SILTY CLAY) Poorly graded SAND with CLAY and GRAVEL (or SILTY CLAY and GRAVEL)	OH	ORGANIC fat CLAY ORGANIC fat CLAY with SAND ORGANIC fat CLAY with GRAVEL SANDY ORGANIC fat CLAY SANDY ORGANIC fat CLAY with GRAVEL GRAVELLY ORGANIC fat CLAY GRAVELLY ORGANIC fat CLAY with SAND
SM	SILTY SAND SILTY SAND with GRAVEL		
SC	CLAYEY SAND CLAYEY SAND with GRAVEL	OH	ORGANIC elastic SILT ORGANIC elastic SILT with SAND ORGANIC elastic SILT with GRAVEL SANDY ORGANIC elastic SILT SANDY ORGANIC elastic SILT with GRAVEL GRAVELLY ORGANIC elastic SILT GRAVELLY ORGANIC elastic SILT with SAND
SC-SM	SILTY, CLAYEY SAND SILTY, CLAYEY SAND with GRAVEL		
PT	PEAT	OL/OH	ORGANIC SOIL ORGANIC SOIL with SAND ORGANIC SOIL with GRAVEL SANDY ORGANIC SOIL SANDY ORGANIC SOIL with GRAVEL GRAVELLY ORGANIC SOIL GRAVELLY ORGANIC SOIL with SAND
	COBBLES COBBLES and BOULDERS BOULDERS		

FIELD AND LABORATORY TESTING

- (C) Consolidation (ASTM D 2435)
- (CL) Collapse Potential (ASTM D 5333)
- (CP) Compaction Curve (CTM 216)
- (CR) Corrosivity Testing (CTM 643, CTM 422, CTM 417)
- (CU) Consolidated Undrained Triaxial (ASTM D 4767)
- (DS) Direct Shear (ASTM D 3080)
- (EI) Expansion Index (ASTM D 4829)
- (M) Moisture Content (ASTM D 2216)
- (OC) Organic Content-% (ASTM D 2974)
- (P) Permeability (CTM 220)
- (PA) Particle Size Analysis (ASTM D 422)
- (PI) Plasticity Index (AASHTO T 90) Liquid Limit (AASHTO T 89)
- (PL) Point Load Index (ASTM D 5731)
- (PM) Pressure Meter
- (PP) Pocket Penetrometer
- (R) R-Value (CTM 301)
- (SE) Sand Equivalent (CTM 217)
- (SG) Specific Gravity (AASHTO T 100)
- (SL) Shrinkage Limit (ASTM D 427)
- (SW) Swell Potential (ASTM D 4546)
- (TV) Pocket Torvane
- (UC) Unconfined Compression-Soil (ASTM D 2166) Unconfined Compression-Rock (ASTM D 2938)
- (UU) Unconsolidated Undrained Triaxial (ASTM D 2850)
- (UW) Unit Weight (ASTM D 4767)
- (VS) Vane Shear (AASHTO T 223)

APPARENT DENSITY OF COHESIONLESS SOILS

Description	SPT N_{60} (Blows / 12 inches)
Very loose	0 - 4
Loose	5 - 10
Medium Dense	11 - 30
Dense	31 - 50
Very Dense	> 50

MOISTURE

Description	Criteria
Dry	Absence of moisture, dusty, dry to the touch
Moist	Damp but no visible water
Wet	Visible free water, usually soil is below water table

PERCENT OR PROPORTION OF SOILS

Description	Criteria
Trace	Particles are present but estimated to be less than 5%
Few	5 to 10%
Little	15 to 25%
Some	30 to 45%
Mostly	50 to 100%

PARTICLE SIZE

Description		Size
Boulder		> 12"
Cobble		3" to 12"
Gravel	Coarse	3/4" to 3"
	Fine	No. 4 to 3/4"
Sand	Coarse	No. 10 to No. 4
	Medium	No. 40 to No. 10
	Fine	No. 200 to No. 40

DESIGN OVERSIGHT — John Fujimoto
8-2-10
SIGN OFF DATE

DRAWN BY: O. GOUTHIER
CHECKED BY: D. WANG

S. DUDDU - A. R. BHARADWAJ
FIELD INVESTIGATION BY:
DATE: MARCH 2009 - APRIL 2009

PREPARED FOR THE STATE OF CALIFORNIA DEPARTMENT OF TRANSPORTATION

A. LAM
PROJECT ENGINEER

BRIDGE NO. 29-0190
POST MILES 28.75

MICHIGAN AVENUE UC (WIDEN)
SOIL LEGEND 2 OF 2

OGS CIVIL LOG OF TEST BORINGS SHEET (ENGLISH) (REV. 06-01-09)

ORIGINAL SCALE IN INCHES FOR REDUCED PLANS 0 1 2 3

CU 06240
EA 0G4701

DISREGARD PRINTS BEARING EARLIER REVISION DATES — REVISION DATES: 10/15/09 12/04/09 01/15/10 04/23/10 06/11/10 7/28/10

SHEET 22 OF 24

FILE => 29-0190-z-ltb02.dgn

USERNAME => rtrenard DATE PLOTTED => 13-OCT-2010 TIME PLOTTED => 12:56

DIST	COUNTY	ROUTE	POST MILES TOTAL PROJECT	SHEET No	TOTAL SHEETS
10	SJ	5	25.0/32.7	954	1132

GEOTECHNICAL PROFESSIONAL — DATE 7/28/10

10-11-10
PLANS APPROVAL DATE

REGISTERED PROFESSIONAL ENGINEER — GARY PARIKH — No. G.E. 666 — Exp. 12/31/11 — GEOTECHNICAL — STATE OF CALIFORNIA

The State of California or its officers or agents shall not be responsible for the accuracy or completeness of scanned copies of this plan sheet.

SAN JOAQUIN COUNCIL OF GOVERNMENTS
555 EAST WEBER AVENUE
STOCKTON, CALIFORNIA 95202

PARIKH CONSULTANTS, INC.
2360 QUME DRIVE, SUITE A
SAN JOSE, CA 95131

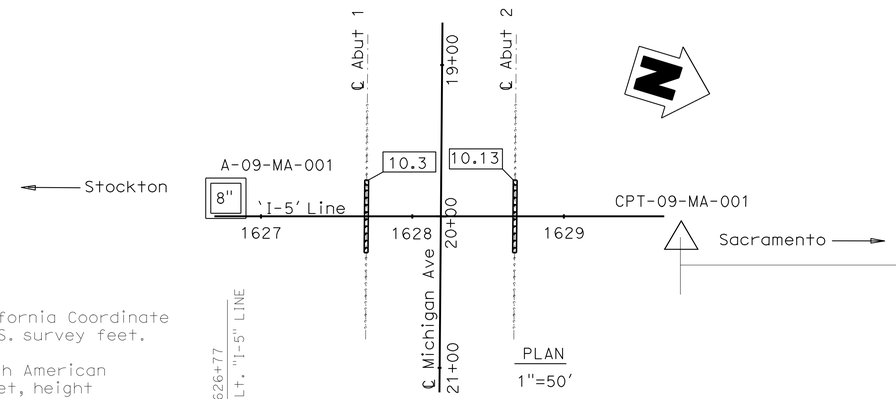

BENCHMARK:
The horizontal coordinates values are in the California Coordinate System (CCS 83) Zone 3, Epoch Date 2007.00, in U.S. survey feet.

The vertical control values are based on the North American Vertical Datum of 1988 (NAVD88) in U.S. survey feet, height modernization survey station, (2007.00) and GEOID03 was used for the adjustment.

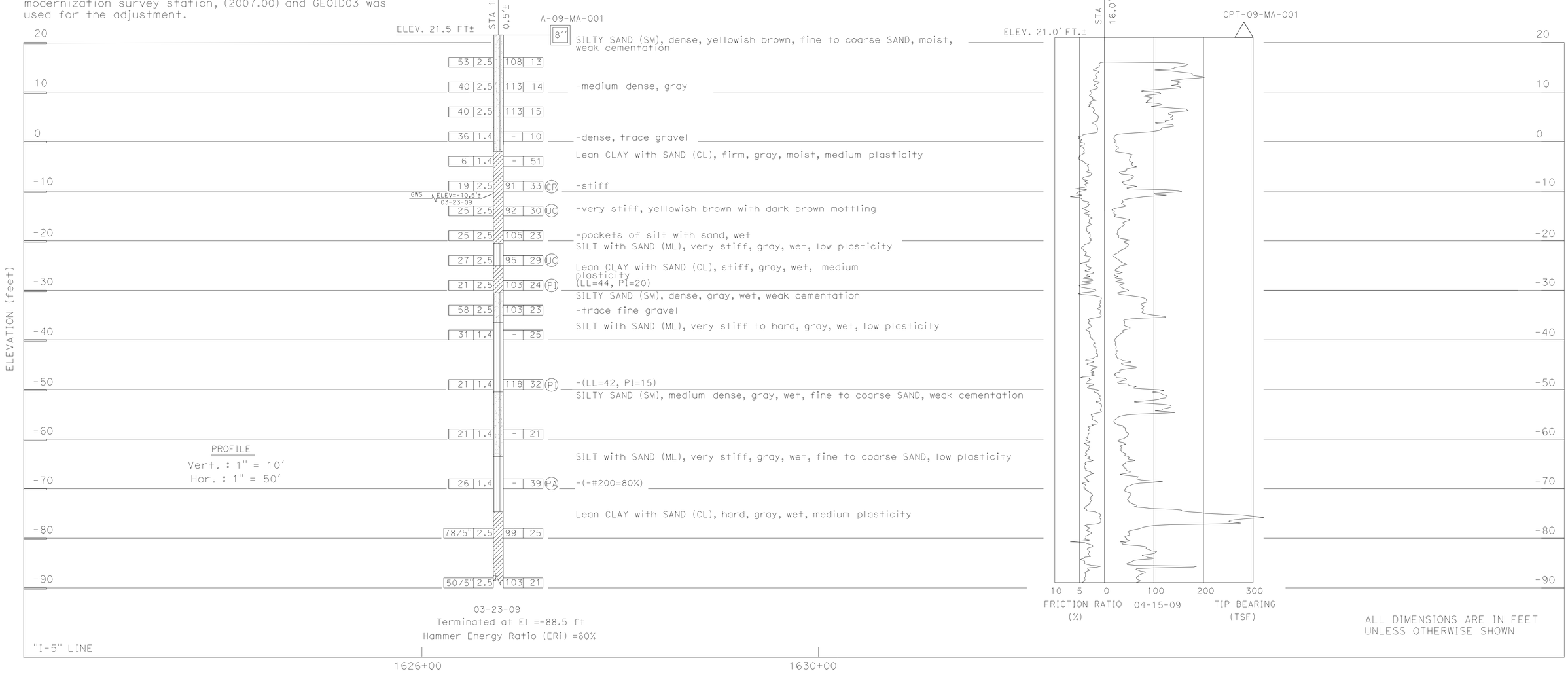

ALL DIMENSIONS ARE IN FEET UNLESS OTHERWISE SHOWN

John Fujimoto — DESIGN OVERSIGHT John Fujimoto; 8-2-10 SIGN OFF DATE	DRAWN BY O. GOUTHIER	S. DUDDU - A. R. BHARADWAJ FIELD INVESTIGATION BY:	PREPARED FOR THE STATE OF CALIFORNIA DEPARTMENT OF TRANSPORTATION	A. LAM PROJECT ENGINEER	BRIDGE NO. 29-0190
	CHECKED BY D. WANG	DATE: MARCH 2009 - APRIL 2009			POST MILES 28.75

MICHIGAN AVENUE UC (WIDEN)
LOG OF TEST BORINGS 1 OF 2

OGS GEOTECHNICAL LOG OF TEST BORINGS SHEET (ENGLISH) (REV. 06-01-09)

ORIGINAL SCALE IN INCHES FOR REDUCED PLANS 0 1 2 3

CU 06240
EA 0G4701

DISREGARD PRINTS BEARING EARLIER REVISION DATES → 10/16/09 12/04/09 01/15/10 04/28/10 06/29/10 7/28/10

REVISION DATES — SHEET 23 OF 24

FILE => 29-0190-z-1tb03.dgn

USERNAME => trlenard DATE PLOTTED => 13-OCT-2010 TIME PLOTTED => 12:56

DIST.	COUNTY	ROUTE	SECTION	SHEET NO.	TOTAL SHEETS
10	SJ	5	25/31.5	305	372

DATE APPROVED September 5, 1967

TO ACCOMPANY PLANS DATED 10-11-10

DIVISION OF ENGINEERING SERVICES – GEOTECHNICAL SERVICES

As-Built Log of Test Borings sheet is considered an informational document only. As such, the State of California registration seal with signature, license number and registration certificate expiration date confirm that this is a true and accurate copy of the original document. This drawing is available and presented only for the convenience of any bidder, contractor or other interested party.

DIST.	COUNTY	ROUTE	POST MILES–TOTAL PROJECT	Sheet No.	Total Sheets
10	SJ	5	25.0/32.7	955	1132

REGISTERED CIVIL ENGINEER — DATE 7/28/10

REGISTERED PROFESSIONAL ENGINEER — GARY PARIKH — No. G.E. 666 — Exp. 12/31/11 — GEOTECHNICAL — STATE OF CALIFORNIA

MICHIGAN AVENUE UC (WIDEN)

LOG OF TEST BORINGS 2 OF 2

NOTE: A COPY OF THIS LOG OF TEST BORINGS IS AVAILABLE AT OFFICE OF STRUCTURE MAINTENANCE AND INVESTIGATIONS, SACRAMENTO, CALIFORNIA

CU: 06240
EA: 0G4701

BRIDGE No. 29-0190

Sheet 24 of 24

AS BUILT PLANS
Contract No. 10-080924
Date Completed
Document No. 00000689

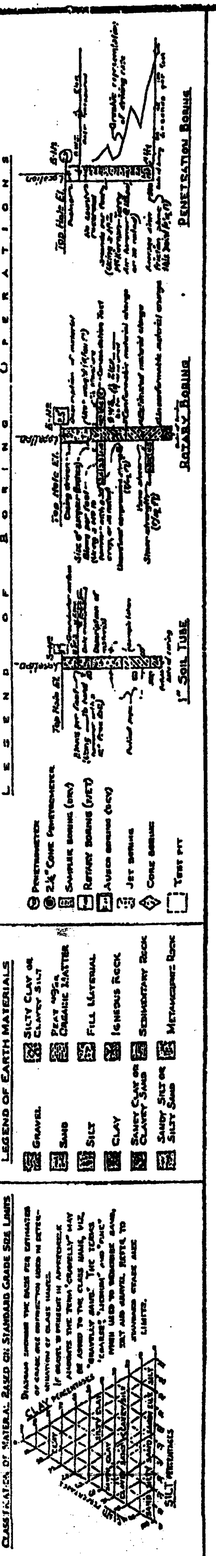

NOTE: Classification of earth material as shown on this sheet is based upon field inspection and is not to be construed to imply mechanical analysis.

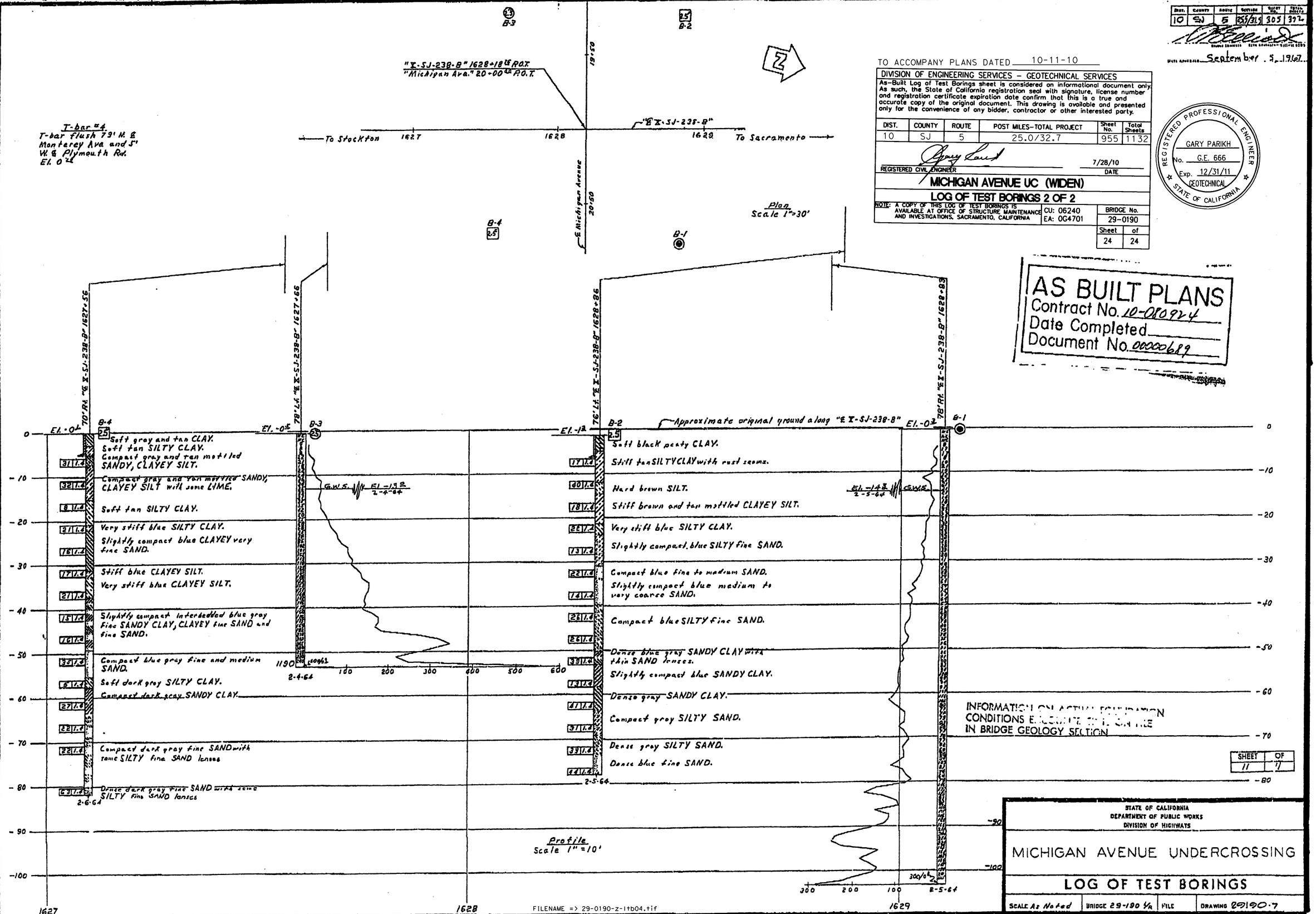

INFORMATION ON ACTUAL FOUNDATION CONDITIONS EXCEPT AT BORING SITES MAY BE IN BRIDGE GEOLOGY SECTION

SHEET	OF
11	11

STATE OF CALIFORNIA
DEPARTMENT OF PUBLIC WORKS
DIVISION OF HIGHWAYS

MICHIGAN AVENUE UNDERCROSSING

LOG OF TEST BORINGS

SCALE As Noted | BRIDGE 29-190 1/2 | FILE | DRAWING 29190-7

DIST	COUNTY	ROUTE	POST MILES TOTAL PROJECT	SHEET No	TOTAL SHEETS
10	SJ	5	25.0/32.7	956	1132

REGISTERED CIVIL ENGINEER — DATE 7/28/10

10-11-10
PLANS APPROVAL DATE

The State of California or its officers or agents shall not be responsible for the accuracy or completeness of scanned copies of this plan sheet.

REGISTERED PROFESSIONAL ENGINEER — ALLEN WANG — No. C 66503 — Exp. 06/30/12 — CIVIL — STATE OF CALIFORNIA

SAN JOAQUIN COUNCIL OF GOVERNMENTS
555 E. WEBER AVENUE
STOCKTON, CA 95202

RAJAPPAN & MEYER
CONSULTING ENGINEERS, INC.
1038 LEIGH AVE, SUITE 100
SAN JOSE, CA 95126

"I-5" Line 1639+03.56
Elev 22.61

See 'DECK GRADES' sheets

"I-5" Line 1640+80.56
Elev 22.94

PROFILE GRADE

1" = 20'

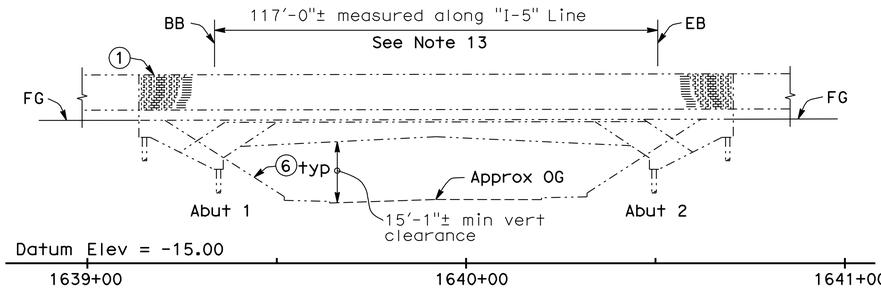

ELEVATION

1" = 20'

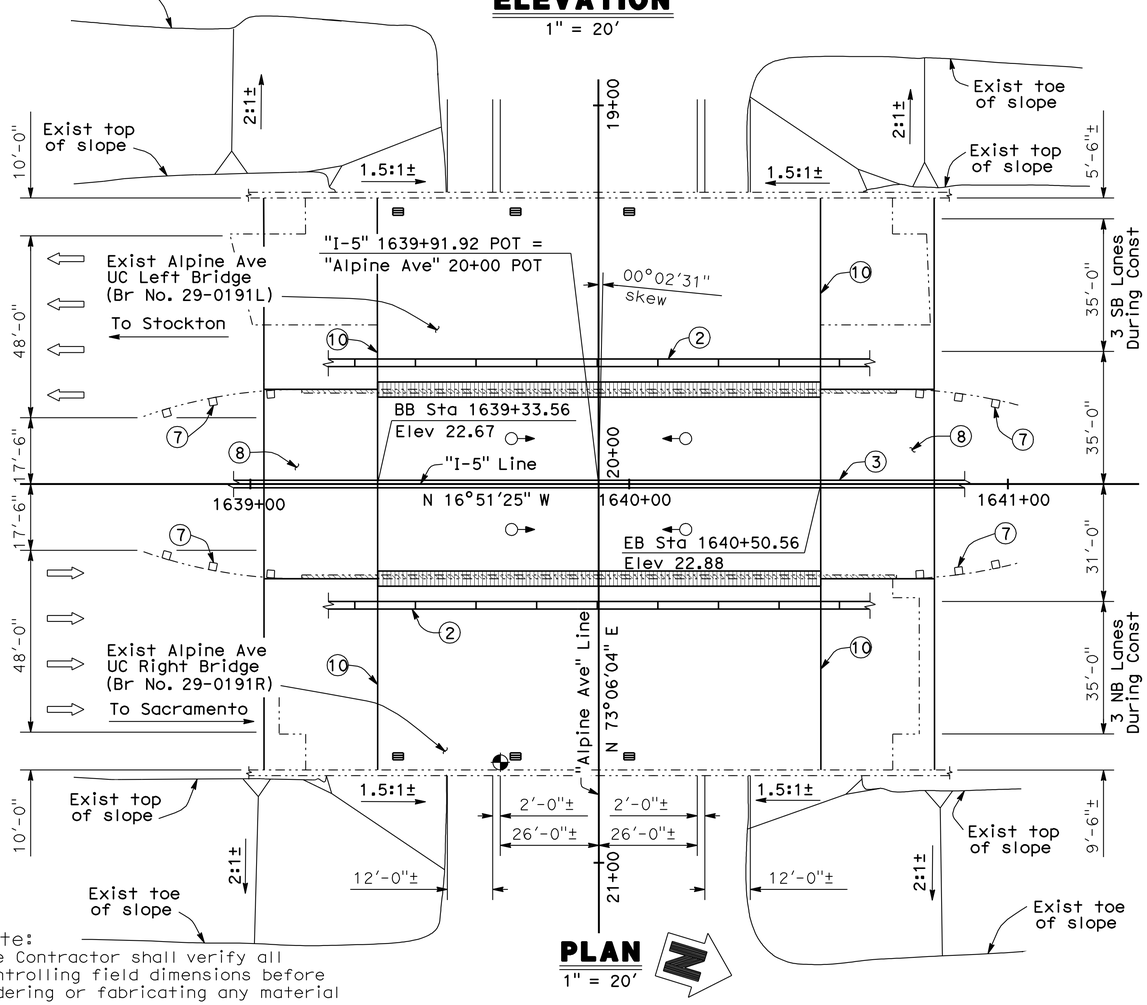

PLAN

1" = 20'

Note:
The Contractor shall verify all controlling field dimensions before ordering or fabricating any material

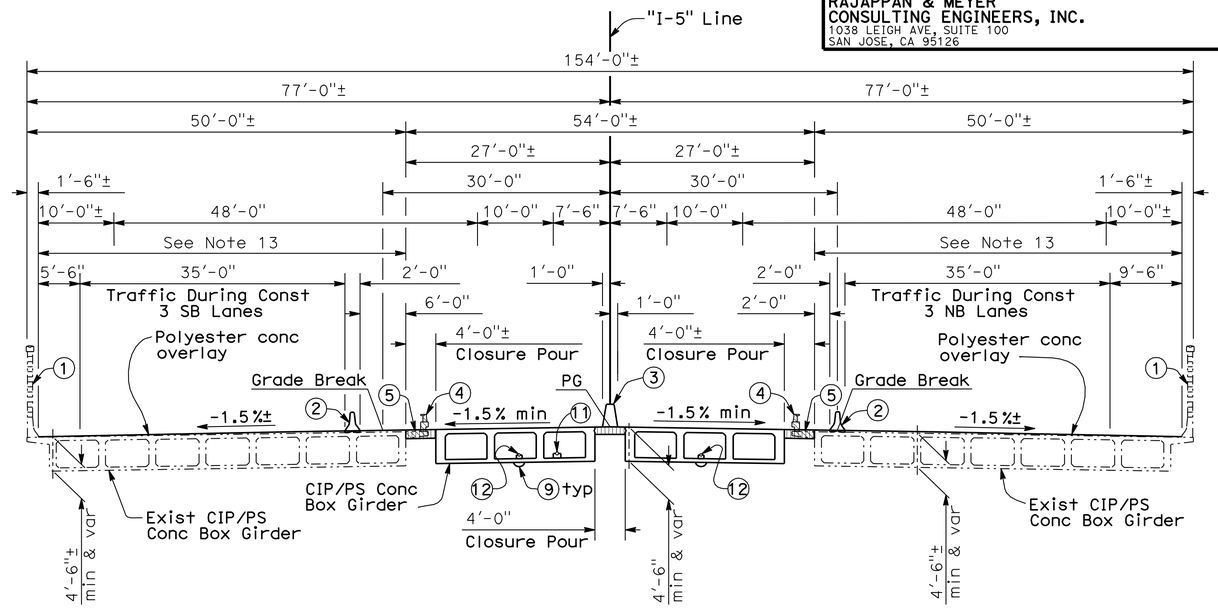

TYPICAL SECTION

1" = 10'

Notes:

1. Exist Concrete Barrier Type 27R with Masonry Block Soundwall
2. Temporary Railing Type K for Stage 1A Construction, See Road Plans
3. Concrete Barrier Type 60A (Mod)
4. Remove and Salvage existing Type 9 Barrier Railing
5. Remove existing Overhang
6. Remove existing Slope Paving (Portion) between Bridges and Reconstruct
7. Remove existing Bridge Approach Guard Railing at Median, see Road Plans
8. Structure Approach Type N(30D) and Type R(30D), see 'LIMITS OF STRUCTURE APPROACH' sheet
9. Soffit Lighting, see Electrical Plans
10. Remove and replace existing joint seal, full width
11. 4" dia Fiber Optic (future), see Electrical Plans
12. 1½" Conduit, see Electrical Plans
13. Indicates limits of Prepare Concrete Bridge Deck Surface and Furnish and Place Polyester Concrete Overlay with Longitudinal Grooving
14. For Pile Data Table, see 'FOUNDATION PLAN' sheet
15. For 'GENERAL NOTES', 'QUANTITY', and 'INDEX TO BRIDGE PLANS', see 'GENERAL NOTES' sheet

Legend:

- Bridge Removal (Portion)
- Closure Pour
- Indicates point of minimum vertical clearance
- Indicates Deck Drain Type D-1 (Mod)
- Indicates existing structure
- Indicates existing Bridge Approach Guard Railing Type 8
- Indicates direction of traffic
- Soffit lighting, see Electrical Plans

DESIGN OVERSIGHT — John Fujimoto
8-2-10
SIGN OFF DATE

	BY	CHECKED
DESIGN	A. WANG	P. SHINN
DETAILS	W. Y. TAN	P. SHINN
QUANTITIES	W. Y. TAN	G. WOLDETSADIK

LOAD & RESISTANCE FACTOR DESIGN — LIVE LOADING: HL93 W/"LOW-BOY" AND PERMIT DESIGN VEHICLE

	BY	CHECKED
LAYOUT	W. Y. TAN	P. SHINN
SPECIFICATIONS	K. HARIRSAZ	PLANS AND SPECS COMPARED K. HARIRSAZ

PREPARED FOR THE STATE OF CALIFORNIA DEPARTMENT OF TRANSPORTATION

A. WANG
PROJECT ENGINEER

BRIDGE NO. 29-0191
POST MILES 28.97

ALPINE AVENUE UC (WIDEN)
GENERAL PLAN

DESIGN GENERAL PLAN SHEET (ENGLISH) (REV. 06-01-09)

ORIGINAL SCALE IN INCHES FOR REDUCED PLANS 0 1 2 3

CU 06240
EA 0G4701

DISREGARD PRINTS BEARING EARLIER REVISION DATES

REVISION DATES (PRELIMINARY STAGE ONLY): 6/2/09 9/4/09 10/16/09 12/4/09 1/15/10 5/3/10 6/17/10 7/28/10

SHEET 1 OF 29

FILE => 29-0191-a-gp01.dgn

USERNAME => trlenard DATE PLOTTED => 13-OCT-2010 TIME PLOTTED => 12:57

DIST	COUNTY	ROUTE	POST MILES TOTAL PROJECT	SHEET No	TOTAL SHEETS
10	SJ	5	25.0/32.7	957	1132

REGISTERED CIVIL ENGINEER 7/28/10 DATE

10-11-10
PLANS APPROVAL DATE

The State of California or its officers or agents shall not be responsible for the accuracy or completeness of scanned copies of this plan sheet.

REGISTERED PROFESSIONAL ENGINEER ALLEN WANG No. C 66503 Exp. 06/30/12 CIVIL STATE OF CALIFORNIA

SAN JOAQUIN COUNCIL OF GOVERNMENTS
555 E. WEBER AVENUE
STOCKTON, CA 95202

RAJAPPAN & MEYER
CONSULTING ENGINEERS, INC.
1038 LEIGH AVE, SUITE 100
SAN JOSE, CA 95126

GENERAL NOTES
LOAD AND RESISTANCE FACTOR DESIGN

DESIGN: AASHTO LRFD Bridge Design Specifications, 4th Edition, and Caltrans Amendments Preface dated December 2008; except that geotechnical design of deep foundations, bridge (incl. barrier and railing) details taken from Standard Plans May 2006, Standard Bridge Details XS sheets, etc. are designed using Bridge Design Specifications (1996 AASHTO with Revisions by Caltrans)

SEISMIC LOADING: Caltrans Seismic Design Criteria (SDC), Version 1.4 dated June, 2006

DEAD LOAD: Includes 35 psf for future wearing surface.

LIVE LOADING: HL93 with "Low-Boy" and Permit Design Vehicle.

SEISMIC LOAD: SDC 1.4 ARS Curve Figure B.8
Soil Profile Type D
Magnitude Group 7.25 ± 0.25
Peak Rock Acceleration 0.2g

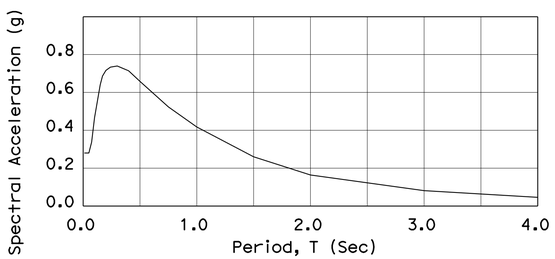

CONCRETE: fy = 60 ksi
f'c = 3.6 ksi (Except as shown on 'CONCRETE STRENGTH AND TYPE LIMITS' diagram
n = 8
See 'Prestressing Notes' on 'GIRDER LAYOUT' sheet.

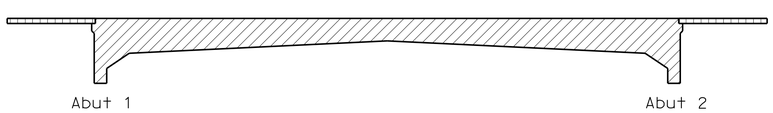

Structural Concrete, Bridge (f'c = 5.0 ksi @ 28 days)

Structural Concrete, Approach Slab

CONCRETE STRENGTH AND TYPE LIMITS
No Scale

Note:
The Contractor shall verify all controlling field dimensions before ordering or fabricating any material

STANDARD PLANS DATED MAY, 2006

A10A	Acronyms and Abbreviations (A - L)
A10B	Acronyms and Abbreviations (M - Z)
A10C	Symbols (Sheet 1 of 2)
A10D	Symbols (Sheet 2 of 2)
A62B	Limits of Payment for Excavation and Backfill - Bridge Surcharge and Wall
A62C	Limits of Payment for Excavation and Backfill - Bridge
RSP A76A	Concrete Barrier Type 60
B0-1	Bridge Details
B0-3	Bridge Details
B0-5	Bridge Details
B2-5	Pile Details - Class 90 and Class 140
RSP B6-21	Joint Seals (Maximum Movement Rating = 2")
B7-1	Box Girder Details
B7-6	Deck Drains Types D-1 and D-2
B7-8	Deck Drainage Details
B8-5	Cast-in-place Prestressed Girder Details
B14-3	Communication and Sprinkler Control Conduits (Conduit Less Than 4")
B14-5	Water Supply Line (Details) (Pipe Sizes Less than 4")
ES-9B	Electrical Systems (Electrical Details, Structure Installations)
ES-9E	Electrical Systems (Electrical Details, Structure Installations)

Standard Plan sheets No.

Detail No.

INDEX TO BRIDGE PLANS

SHEET No.	TITLE
1	GENERAL PLAN
2	GENERAL NOTES
3	DECK GRADES No. 1
4	DECK GRADES No. 2
5	DECK GRADES No. 3
6	FOUNDATION PLAN
7	ABUTMENT LAYOUT
8	ABUTMENT DETAILS No. 1
9	ABUTMENT DETAILS No. 2
10	ABUTMENT DETAILS No. 3
11	ABUTMENT DETAILS No. 4
12	TYPICAL SECTION
13	GIRDER LAYOUT
14	GIRDER DETAILS
15	DECK DRAIN PLAN
16	DECK DRAIN DETAILS
17	LIMITS OF STRUCTURE APPROACH
18	STRUCTURE APPROACH TYPE N(30D)
19	STRUCTURE APPROACH TYPE R(30D)
20	STRUCTURE APPROACH DRAINAGE DETAILS
21	SLOPE PAVING DETAILS No. 1
22	SLOPE PAVING DETAILS No. 2
23	SLOPE PAVING DETAILS No. 3
24	SLOPE PAVING DETAILS No. 4
25	SOFFIT OPENINGS
26	SOIL LEGEND 1 OF 2
27	SOIL LEGEND 2 OF 2
28	LOG OF TEST BORINGS 1 OF 2
29	LOG OF TEST BORINGS 2 OF 2

ALPINE AVE UC #29-0191
QUANTITIES

PUBLIC SAFETY PLAN	LUMP	SUM
REMOVE CONCRETE DECK SURFACE	61	SQFT
SALVAGE METAL BRIDGE RAILING	314	LF
PREPARE CONCRETE BRIDGE DECK SURFACE	11,350	SQFT
ACCESS OPENING, SOFFIT	4	EA
BRIDGE REMOVAL (PORTION), LOCATION C	LUMP	SUM
STRUCTURE EXCAVATION (BRIDGE)	66	CY
STRUCTURE BACKFILL (BRIDGE)	56	CY
AGGREGATE BASE (APPROACH SLAB)	24	CY
GROOVE POLYESTER CONCRETE OVERLAY	1,260	SQYD
FURNISH PILING (CLASS 140) (ALTERNATIVE X)(MODIFIED)	1,683	LF
DRIVE PILE (CLASS 140)(ALTERNATIVE X)(MODIFIED)	28	EA
PRESTRESSING CAST-IN-PLACE CONCRETE	LUMP	SUM
STRUCTURAL CONCRETE, BRIDGE	640	CY
STRUCTURAL CONCRETE, APPROACH SLAB (TYPE N)	107	CY
STRUCTURAL CONCRETE, APPROACH SLAB (TYPE R)	236	CY
PAVING NOTCH EXTENSION	25	CF
DRILL AND BOND DOWEL	190	LF
FURNISH POLYESTER CONCRETE OVERLAY	950	CF
PLACE POLYESTER CONCRETE OVERLAY	11,350	SQFT
CORE CONCRETE (10")	2	LF
CORE CONCRETE (14")	5	LF
JOINT SEAL (MR 1")	308	LF
BAR REINFORCING STEEL (BRIDGE)	138,000	LB
SLOPE PAVING (PATTERNED CONCRETE)	30	CY
BRIDGE DECK DRAINAGE SYSTEM	6,500	LB
CONCRETE BARRIER (TYPE 60A MODIFIED)	177	LF

DESIGN OVERSIGHT John Fujimoto
8-2-10
SIGN OFF DATE

DESIGN	BY A. WANG	CHECKED P. SHINN	
DETAILS	BY W. Y. TAN	CHECKED P. SHINN	
QUANTITIES	BY W. Y. TAN	CHECKED G. WOLDETSADIK	

PREPARED FOR THE STATE OF CALIFORNIA DEPARTMENT OF TRANSPORTATION

A. WANG
PROJECT ENGINEER

BRIDGE NO. 29-0191
POST MILE 28.97

ALPINE AVENUE UC (WIDEN)
GENERAL NOTES

DESIGN DETAIL SHEET (ENGLISH) (REV. 06-01-09)

ORIGINAL SCALE IN INCHES FOR REDUCED PLANS 0 1 2 3

CU 06240
EA 0G4701

DISREGARD PRINTS BEARING EARLIER REVISION DATES

REVISION DATES (PRELIMINARY STAGE ONLY) 10/16/09 12/21/09 1/18/10 5/3/10 6/11/10 7/28/10

SHEET 2 OF 29

FILE => 29-0191-b-gnotes.dgn

USERNAME => rfriendord DATE PLOTTED => 13-OCT-2010 TIME PLOTTED => 12:57

DIST	COUNTY	ROUTE	POST MILES TOTAL PROJECT	SHEET No	TOTAL SHEETS
10	SJ	5	25.0/32.7	958	1132

REGISTERED CIVIL ENGINEER — DATE 7/28/10

10-11-10
PLANS APPROVAL DATE

REGISTERED PROFESSIONAL ENGINEER — ALLEN WANG — No. C 66503 — Exp. 06/30/12 — CIVIL — STATE OF CALIFORNIA

The State of California or its officers or agents shall not be responsible for the accuracy or completeness of scanned copies of this plan sheet.

SAN JOAQUIN COUNCIL OF GOVERNMENTS
555 E. WEBER AVENUE
STOCKTON, CA 95202

RAJAPPAN & MEYER
CONSULTING ENGINEERS, INC.
1038 LEIGH AVE, SUITE 100
SAN JOSE, CA 95126

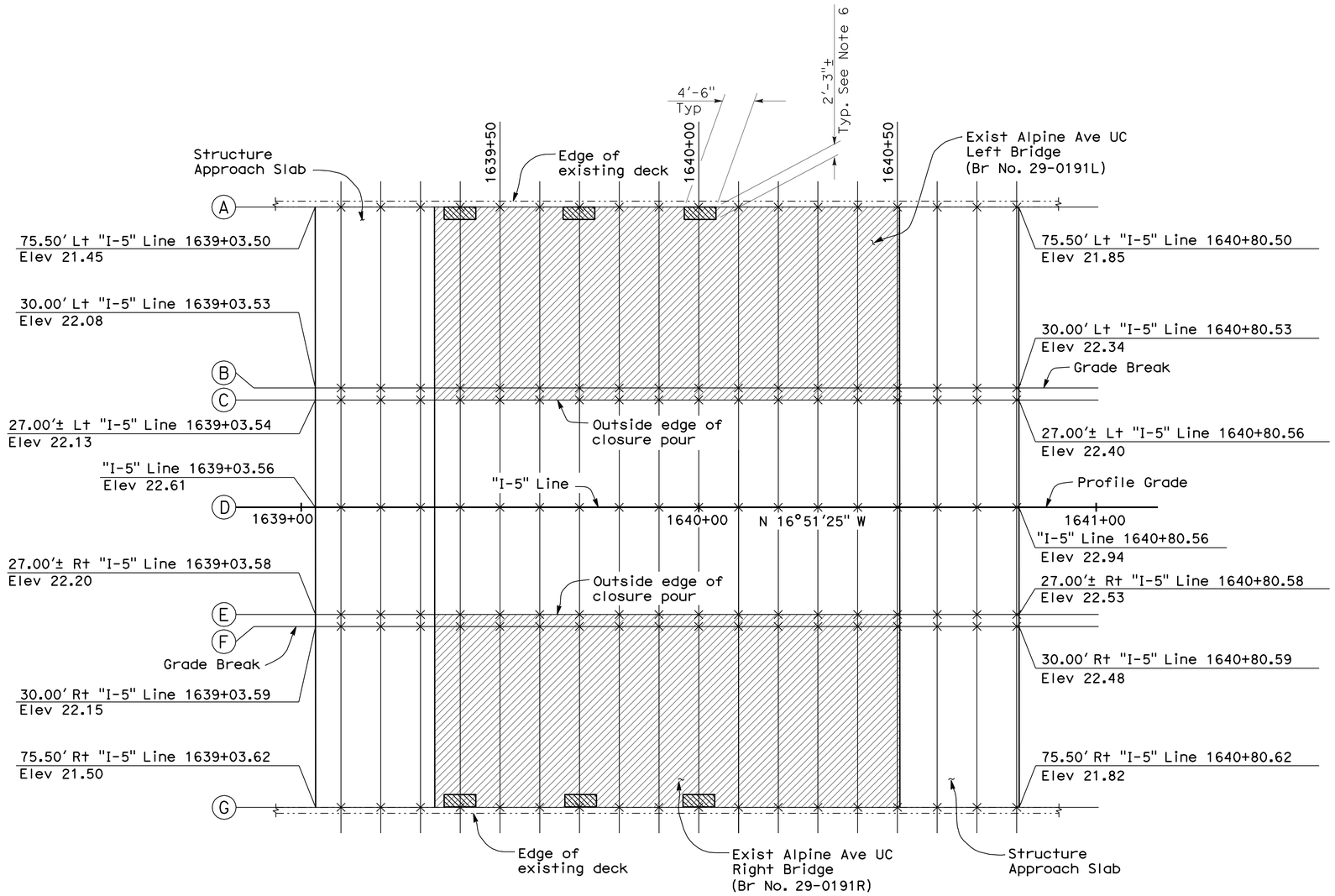

ALPINE AVE UC PLAN

1/16" = 1'-0"

Notes:

1. Deck grades shown do not include camber and falsework settlement.
2. Approach slabs shown are for illustration only.
3. See Road Plans for finished grade beyond approach slabs.
4. Finished deck grade shown at existing bridge indicates top of overlay.
5. Minimum polyester concrete overlay thickness shall be ¾". For details at deck drains, see "Deck Drain Details" sheet
6. For limits of payment for Remove Concrete Deck Surface, see "Deck Drain Details" sheet.

Legend:

- Indicates existing structure
- Indicates limits of Prepare Concrete Bridge Deck Surface and Furnish and Place Polyester Concrete Overlay with Longitudinal Grooving
- Indicates limits of Remove Concrete Deck Surface
- × Indicates 10 ft intervals measured along "I-5" Line

Note:
The Contractor shall verify all controlling field dimensions before ordering or fabricating any material

DESIGN OVERSIGHT — John Fujimoto
8-2-10
SIGN OFF DATE

	BY	CHECKED
DESIGN	A. WANG	P. SHINN
DETAILS	W. Y. TAN	P. SHINN
QUANTITIES	W. Y. TAN	G. WOLDETSADIK

PREPARED FOR THE STATE OF CALIFORNIA DEPARTMENT OF TRANSPORTATION

A. WANG
PROJECT ENGINEER

BRIDGE NO. 29-0191
POST MILE 28.97

ALPINE AVENUE UC (WIDEN)
DECK GRADES No. 1

DESIGN DETAIL SHEET (ENGLISH) (REV. 06-01-09)

ORIGINAL SCALE IN INCHES FOR REDUCED PLANS 0 1 2 3

CU 06240
EA 0G4701

DISREGARD PRINTS BEARING EARLIER REVISION DATES

REVISION DATES (PRELIMINARY STAGE ONLY): 10/16/09 12/4/09 1/18/10 5/3/10 6/17/10 7/28/10

SHEET 3 OF 29

FILE => 29-0191-d-dg01.dgn

USERNAME => trlemard DATE PLOTTED => 18-OCT-2010 TIME PLOTTED => 08:59

DIST	COUNTY	ROUTE	POST MILES TOTAL PROJECT	SHEET No	TOTAL SHEETS
10	SJ	5	25.0/32.7	959	1132

REGISTERED CIVIL ENGINEER 7/28/10 DATE

10-11-10
PLANS APPROVAL DATE

REGISTERED PROFESSIONAL ENGINEER ALLEN WANG No. C 66503 Exp. 06/30/12 CIVIL STATE OF CALIFORNIA

The State of California or its officers or agents shall not be responsible for the accuracy or completeness of scanned copies of this plan sheet.

SAN JOAQUIN COUNCIL OF GOVERNMENTS
555 E. WEBER AVENUE
STOCKTON, CA 95202

RAJAPPAN & MEYER
CONSULTING ENGINEERS, INC.
1038 LEIGH AVE, SUITE 100
SAN JOSE, CA 95126

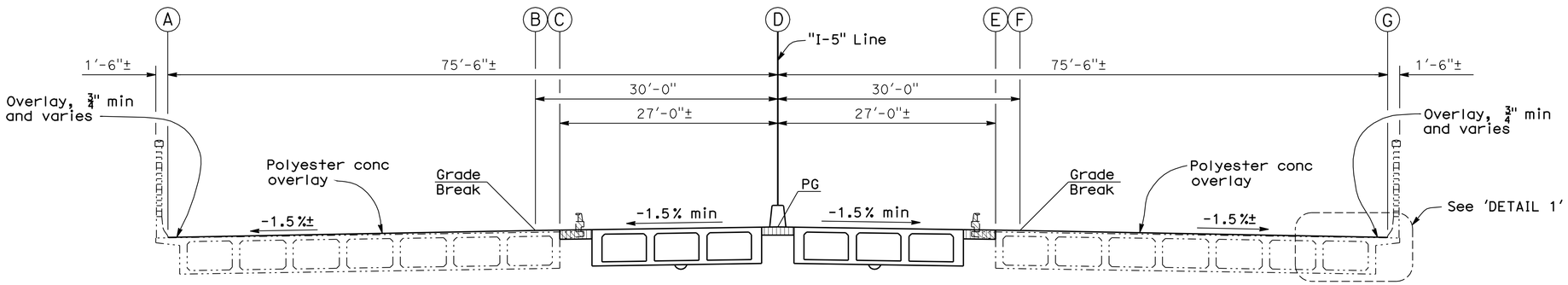

ALPINE AVENUE TYPICAL SECTION

1/8" = 1'-0"

Legend:

- Bridge Removal (Portion)
- Closure Pour
- Indicates existing structure

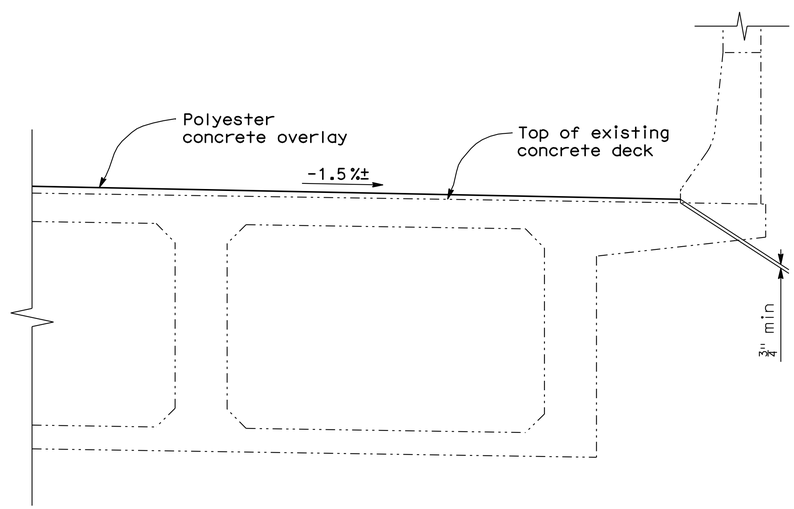

DETAIL 1

3/4" = 1'-0"

Note:
For details of Polyester Concrete Overlay and Deck Grades at Deck Drains, see "Deck Drain Details" sheet

Note:
The Contractor shall verify all controlling field dimensions before ordering or fabricating any material

DESIGN OVERSIGHT John Fujimoto
8-2-10
SIGN OFF DATE

	BY	CHECKED
DESIGN	A. WANG	P. SHINN
DETAILS	W. Y. TAN	P. SHINN
QUANTITIES	W. Y. TAN	G. WOLDETSADIK

PREPARED FOR THE STATE OF CALIFORNIA DEPARTMENT OF TRANSPORTATION

A. WANG
PROJECT ENGINEER

BRIDGE NO. 29-0191
POST MILE 28.97

ALPINE AVENUE UC (WIDEN)
DECK GRADES No. 2

DESIGN DETAIL SHEET (ENGLISH) (REV. 06-01-09)

ORIGINAL SCALE IN INCHES FOR REDUCED PLANS 0 1 2 3

CU 06240
EA 0G4701

DISREGARD PRINTS BEARING EARLIER REVISION DATES

REVISION DATES (PRELIMINARY STAGE ONLY) 10/16/09 12/17/09 1/15/10 5/21/10 6/17/10 7/28/10

SHEET 4 OF 29

FILE => 29-0191-d-dg02.dgn

USERNAME => rriehard DATE PLOTTED => 13-OCT-2010 TIME PLOTTED => 12:57

DIST	COUNTY	ROUTE	POST MILES TOTAL PROJECT	SHEET No	TOTAL SHEETS
10	SJ	5	25.0/32.7	960	1132

REGISTERED CIVIL ENGINEER 7/28/10 DATE

10-11-10
PLANS APPROVAL DATE

REGISTERED PROFESSIONAL ENGINEER ALLEN WANG No. C 66503 Exp. 06/30/12 CIVIL STATE OF CALIFORNIA

The State of California or its officers or agents shall not be responsible for the accuracy or completeness of scanned copies of this plan sheet.

SAN JOAQUIN COUNCIL OF GOVERNMENTS
555 E. WEBER AVENUE
STOCKTON, CA 95202

RAJAPPAN & MEYER CONSULTING ENGINEERS, INC.
1038 LEIGH AVE, SUITE 100
SAN JOSE, CA 95126

"I-5" Line Station	Line	Offset from "I-5" Line (ft)	Proposed Top of Deck/Overlay Elev (ft)	Existing Top of Deck Elev (ft)
1639+10	A	75.50 L†	21.46	N/A
	B	30.00 L†	22.09	N/A
	C	27.00 L†	22.14	N/A
	D	0.00	22.63	N/A
	E	27.00 R†	22.21	N/A
	F	30.00 R†	22.17	N/A
	G	75.50 R†	21.51	N/A
1639+20	A	75.50 L†	21.49	N/A
	B	30.00 L†	22.11	N/A
	C	27.00 L†	22.16	N/A
	D	0.00	22.64	N/A
	E	27.00 R†	22.23	N/A
	F	30.00 R†	22.18	N/A
	G	75.50 R†	21.53	N/A
1639+30	A	75.50 L†	21.51	N/A
	B	30.00 L†	22.12	N/A
	C	27.00 L†	22.17	N/A
	D	0.00	22.66	N/A
	E	27.00 R†	22.25	N/A
	F	30.00 R†	22.20	N/A
	G	75.50 R†	21.55	N/A
1639+40	A	75.50 L†	21.52	21.46±
	B	30.00 L†	22.13	22.06±
	C	27.00 L†	22.18	22.12±
	D	0.00	22.68	N/A
	E	27.00 R†	22.26	22.20±
	F	30.00 R†	22.22	22.15±
	G	75.50 R†	21.59	21.52±
1639+50	A	75.50 L†	21.53	21.47±
	B	30.00 L†	22.11	22.05±
	C	27.00 L†	22.17	22.09±
	D	0.00	22.70	N/A
	E	27.00 R†	22.28	22.22±
	F	30.00 R†	22.23	22.17±
	G	75.50 R†	21.60	21.54±
1639+60	A	75.50 L†	21.51	21.45±
	B	30.00 L†	22.10	22.03±
	C	27.00 L†	22.16	22.08±
	D	0.00	22.72	N/A
	E	27.00 R†	22.27	22.21±
	F	30.00 R†	22.22	22.16±
	G	75.50 R†	21.59	21.53±
1639+70	A	75.50 L†	21.52	21.46±
	B	30.00 L†	22.09	22.03±
	C	27.00 L†	22.15	22.07±
	D	0.00	22.74	N/A
	E	27.00 R†	22.28	22.21±
	F	30.00 R†	22.22	22.16±
	G	75.50 R†	21.60	21.54±
1639+80	A	75.50 L†	21.53	21.47±
	B	30.00 L†	22.08	22.02±
	C	27.00 L†	22.15	22.06±
	D	0.00	22.75	N/A
	E	27.00 R†	22.28	22.21±
	F	30.00 R†	22.23	22.17±
	G	75.50 R†	21.60	21.54±

"I-5" Line Station	Line	Offset from "I-5" Line (ft)	Proposed Top of Deck/Overlay Elev (ft)	Existing Top of Deck Elev (ft)
1639+90	A	75.50 L†	21.56	21.50±
	B	30.00 L†	22.10	22.04±
	C	27.00 L†	22.17	22.08±
	D	0.00	22.77	N/A
	E	27.00 R†	22.30	22.23±
	F	30.00 R†	22.24	22.18±
	G	75.50 R†	21.59	21.53±
1640+00	A	75.50 L†	21.58	21.52±
	B	30.00 L†	22.13	22.07±
	C	27.00 L†	22.20	22.11±
	D	0.00	22.79	N/A
	E	27.00 R†	22.32	22.25±
	F	30.00 R†	22.27	22.20±
	G	75.50 R†	21.61	21.55±
1640+10	A	75.50 L†	21.61	21.55±
	B	30.00 L†	22.16	22.10±
	C	27.00 L†	22.23	22.14±
	D	0.00	22.81	N/A
	E	27.00 R†	22.34	22.27±
	F	30.00 R†	22.29	22.22±
	G	75.50 R†	21.64	21.58±
1640+20	A	75.50 L†	21.66	21.60±
	B	30.00 L†	22.21	22.15±
	C	27.00 L†	22.27	22.19±
	D	0.00	22.83	N/A
	E	27.00 R†	22.38	22.31±
	F	30.00 R†	22.33	22.26±
	G	75.50 R†	21.69	21.63±
1640+30	A	75.50 L†	21.71	21.65±
	B	30.00 L†	22.24	22.18±
	C	27.00 L†	22.30	22.22±
	D	0.00	22.85	N/A
	E	27.00 R†	22.42	22.36±
	F	30.00 R†	22.37	22.31±
	G	75.50 R†	21.74	21.68±
1640+40	A	75.50 L†	21.73	21.67±
	B	30.00 L†	22.27	22.21±
	C	27.00 L†	22.33	22.26±
	D	0.00	22.87	N/A
	E	27.00 R†	22.45	22.39±
	F	30.00 R†	22.41	22.35±
	G	75.50 R†	21.77	21.71±
1640+50	A	75.50 L†	21.78	21.71±
	B	30.00 L†	22.30	22.23±
	C	27.00 L†	22.35	22.28±
	D	0.00	22.88	N/A
	E	27.00 R†	22.47	22.39±
	F	30.00 R†	22.42	22.36±
	G	75.50 R†	21.77	21.70±
1640+60	A	75.50 L†	21.80	N/A
	B	30.00 L†	22.31	N/A
	C	27.00 L†	22.37	N/A
	D	0.00	22.90	N/A
	E	27.00 R†	22.49	N/A
	F	30.00 R†	22.44	N/A
	G	75.50 R†	21.78	N/A

"I-5" Line Station	Line	Offset from "I-5" Line (ft)	Proposed Top of Deck/Overlay Elev (ft)	Existing Top of Deck Elev (ft)
1640+70	A	75.50 L†	21.82	N/A
	B	30.00 L†	22.32	N/A
	C	27.00 L†	22.38	N/A
	D	0.00	22.92	N/A
	E	27.00 R†	22.51	N/A
	F	30.00 R†	22.46	N/A
	G	75.50 R†	21.80	N/A
1640+80	A	75.50 L†	21.85	N/A
	B	30.00 L†	22.34	N/A
	C	27.00 L†	22.40	N/A
	D	0.00	22.94	N/A
	E	27.00 R†	22.53	N/A
	F	30.00 R†	22.48	N/A
	G	75.50 R†	21.82	N/A

Note:
The Contractor shall verify all controlling field dimensions before ordering or fabricating any material

DESIGN OVERSIGHT John Fujimoto
8-2-10
SIGN OFF DATE

	BY	CHECKED
DESIGN	A. WANG	P. SHINN
DETAILS	W. Y. TAN	P. SHINN
QUANTITIES	W. Y. TAN	G. WOLDETSADIK

PREPARED FOR THE STATE OF CALIFORNIA DEPARTMENT OF TRANSPORTATION

A. WANG
PROJECT ENGINEER

BRIDGE NO. 29-0191
POST MILE 28.97

ALPINE AVENUE UC (WIDEN)
DECK GRADES No. 3

DESIGN DETAIL SHEET (ENGLISH) (REV. 06-01-09)

ORIGINAL SCALE IN INCHES FOR REDUCED PLANS 0 1 2 3

CU 06240
EA 0G4701

DISREGARD PRINTS BEARING EARLIER REVISION DATES
REVISION DATES (PRELIMINARY STAGE ONLY) 10/16/09 12/17/09 1/18/10 5/21/10 6/17/10 7/28/10

SHEET 5 OF 29

FILE => 29-0191-d-dg03.dgn

USERNAME => trlenard DATE PLOTTED => 13-OCT-2010 TIME PLOTTED => 12:57

DIST	COUNTY	ROUTE	POST MILES TOTAL PROJECT	SHEET No	TOTAL SHEETS
10	SJ	5	25.0/32.7	961	1132

REGISTERED CIVIL ENGINEER — DATE 7/28/10

10-11-10
PLANS APPROVAL DATE

REGISTERED PROFESSIONAL ENGINEER — ALLEN WANG — No. C 66503 — Exp. 06/30/12 — CIVIL — STATE OF CALIFORNIA

The State of California or its officers or agents shall not be responsible for the accuracy or completeness of scanned copies of this plan sheet.

SAN JOAQUIN COUNCIL OF GOVERNMENTS
555 E. WEBER AVENUE
STOCKTON, CA 95202

RAJAPPAN & MEYER
CONSULTING ENGINEERS, INC.
1038 LEIGH AVE, SUITE 100
SAN JOSE, CA 95126

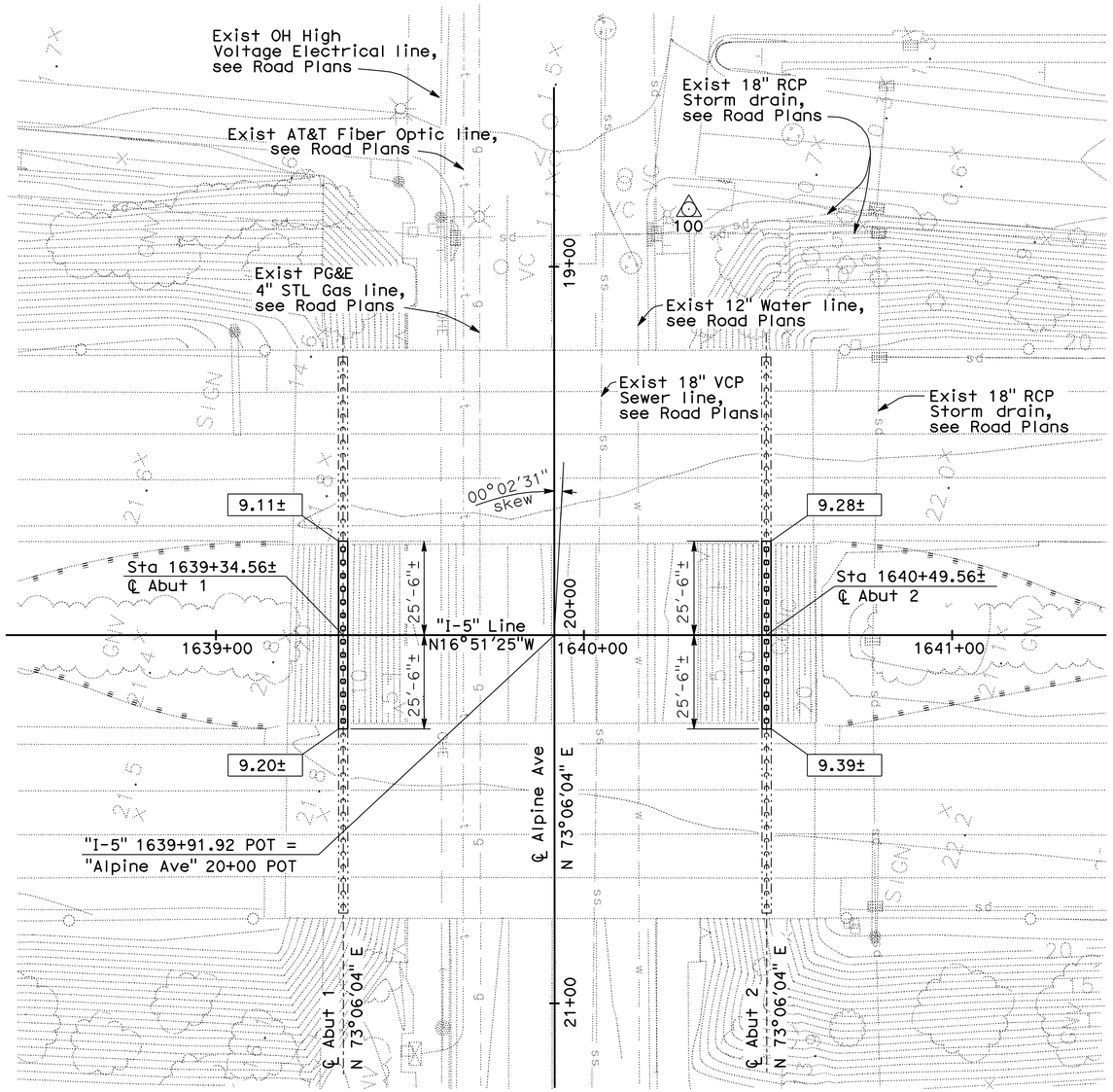

PLAN
1" = 20'

BENCH MARK AND DATUM

Monument	Coordinates		Elev	Description/Location
	Northing	Easting		
100	2176883.13	6320042.18	0.91	PK Nail
101	2176892.06	6320304.95	1.21	PK Nail

Note:
There is a vertical datum difference between the project datum (NAVD 88) and the as-built datum (NGVD 29). The following conversion was used in design:
Datum Conversion: Elev (NAVD 88) = Elev (NGVD 29) + 1.84'±

PILE DATA TABLE

Location	Type	Nominal Resistance (kips)		Design Tip Elev (ft)	Specified Tip Elev (ft)	Nominal Driving Resistance (kips)
		Compression	Tension			
Abut 1	Class 140 Alt 'X' (Mod)	280	0	-44.0(a), -9.0(b)	-50.7	280
Abut 2	Class 140 Alt 'X' (Mod)	280	0	-50.5(a), -6.0(b)	-50.5	280

Notes:
1. Design tip elevations are controlled by (a) Compression (b) Lateral Load.
2. The specified tip elevation shall not be raised above the design tip elevations for lateral load.
3. The specified tip elevation has been selected to keep the same pile length for "ease of pile fabrication".

Notes:
1. Indicates existing pile
2. Indicates pile
3. Indicates existing abutment
4. Indicates new abutment
5. X 22.3 Indicates spot elevation
6. Indicates control point
7. X.XX± Indicates bottom of abutment elevation
8. All abutments centerlines are parallel and are on centerlines of existing abutment.
9. Utilities shown are for illustrative purposes only, verify with Road Plans
10. Bottom of proposed abutment elevation may be adjusted slightly, such that bottom of abutment matches bottom of existing abutments

GEOTECHNICAL PROFESSIONAL — APPROVAL DATE 1/15/10

Note:
The Contractor shall verify all controlling field dimensions before ordering or fabricating any material

DESIGN OVERSIGHT — John Fujimoto — SIGN OFF DATE 8-2-10

SCALE: AS SHOWN	VERT.DATUM NAVD88	HORZ.DATUM CCS83, (2007.00), ZONE 3	
PHOTOGRAMMETRY AS OF: (N/A) FIELD SURVEYS	ALIGNMENT TIES APPROVED GPS REPORT DATED 7-6-09		
SURVEYED BY RYAN VANCE	DRAFTED BY MIKE KORDAZAKIS		
FIELD CHECKED BY JEFF CISSELL	CHECKED BY KEVIN LANG		

	BY	CHECKED
DESIGN	A. WANG	P. SHINN
DETAILS	W. Y. TAN	P. SHINN
QUANTITIES	W. Y. TAN	G. WOLDETSADIK

PREPARED FOR THE STATE OF CALIFORNIA DEPARTMENT OF TRANSPORTATION

A. WANG
PROJECT ENGINEER

CU 06240
EA 0G4701

BRIDGE NO. 29-0191
POST MILE 28.97

ALPINE AVENUE UC (WIDEN)
FOUNDATION PLAN

FOUNDATION PLAN SHEET (ENGLISH) (REV. 06-01-09)

ORIGINAL SCALE IN INCHES FOR REDUCED PLANS 0 1 2 3

DISREGARD PRINTS BEARING EARLIER REVISION DATES — REVISION DATES (PRELIMINARY STAGE ONLY): 6/2/09 9/14/09 10/16/09 12/14/09 1/15/10 5/21/10 6/17/10 7/28/10

SHEET 6 OF 29

FILE => 29-0191-e-fp101.dgn

USERNAME => rtrenord DATE PLOTTED => 13-OCT-2010 TIME PLOTTED => 12:57

DIST	COUNTY	ROUTE	POST MILES TOTAL PROJECT	SHEET No	TOTAL SHEETS
10	SJ	5	25.0/32.7	962	1132

REGISTERED CIVIL ENGINEER — DATE 7/28/10

10-11-10
PLANS APPROVAL DATE

REGISTERED PROFESSIONAL ENGINEER — ALLEN WANG — No. C 66503 — Exp. 06/30/12 — CIVIL — STATE OF CALIFORNIA

The State of California or its officers or agents shall not be responsible for the accuracy or completeness of scanned copies of this plan sheet.

SAN JOAQUIN COUNCIL OF GOVERNMENTS
555 E. WEBER AVENUE
STOCKTON, CA 95202

RAJAPPAN & MEYER
CONSULTING ENGINEERS, INC.
1038 LEIGH AVE, SUITE 100
SAN JOSE, CA 95126

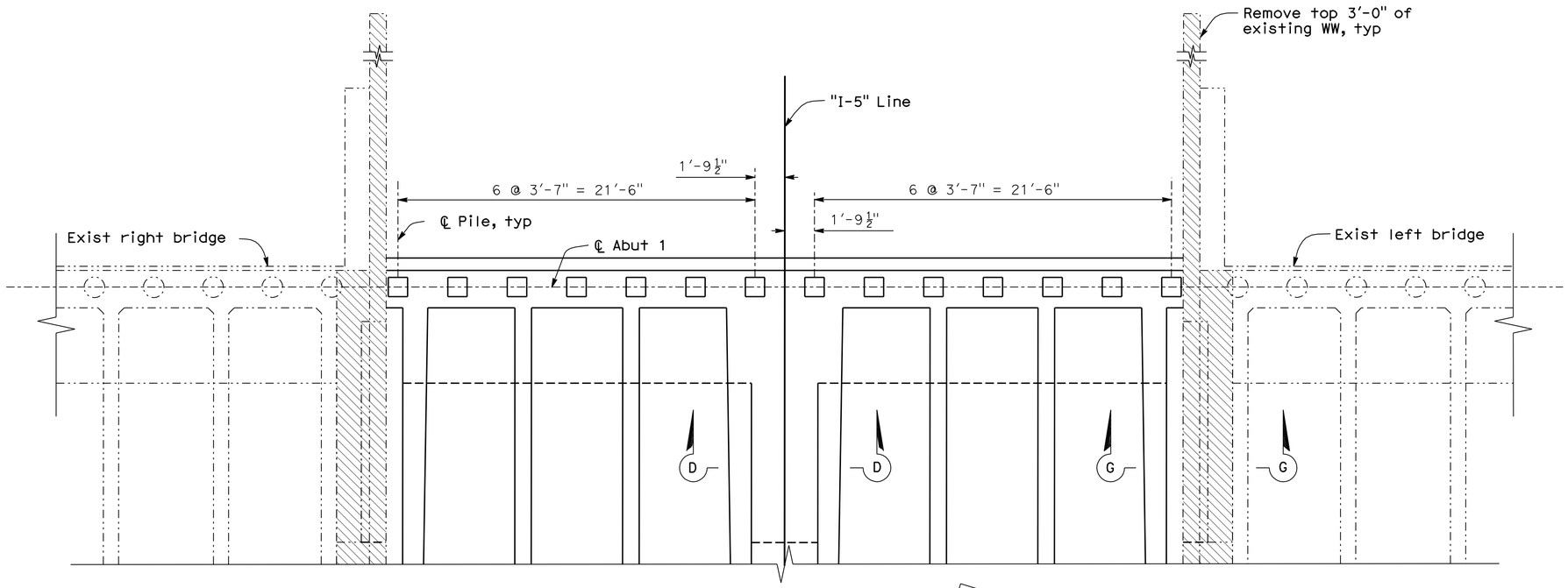

PLAN
1/4" = 1'-0"
(Abut 1 shown, Abut 2 similar)

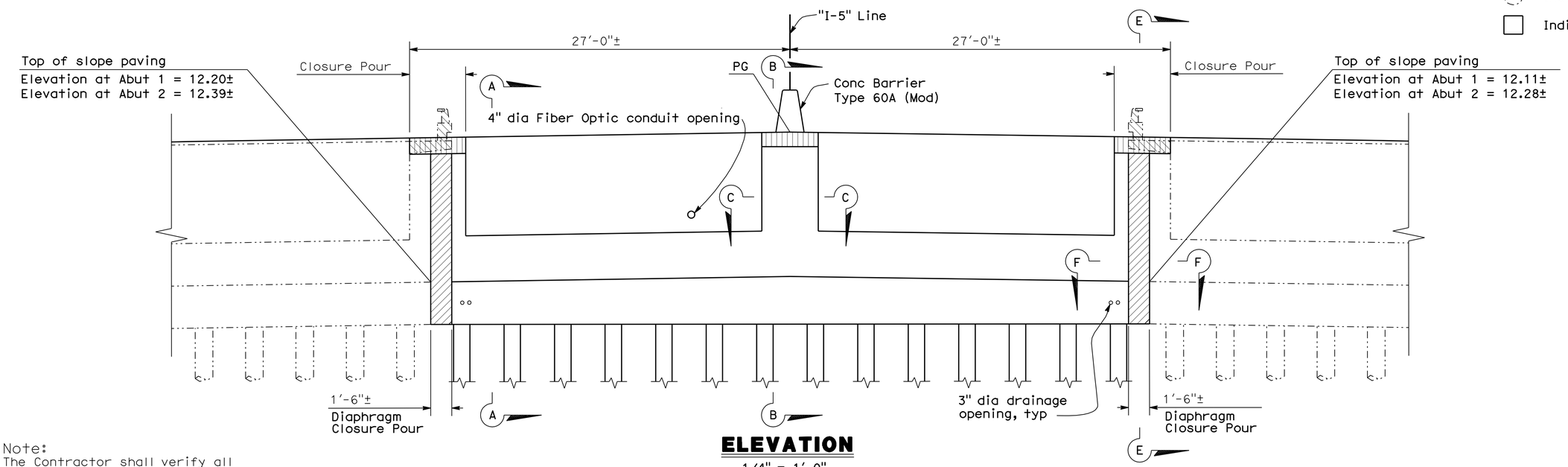

ELEVATION
1/4" = 1'-0"
(Abut 1 shown, Abut 2 similar)

Note:
The Contractor shall verify all controlling field dimensions before ordering or fabricating any material

Notes:

1. For 'SECTION A-A', see 'ABUTMENT DETAILS No. 1' sheet
2. For 'SECTION B-B', 'SECTION C-C, and 'SECTION D-D', see 'ABUTMENT DETAILS No. 2' sheet
3. For 'SECTION E-E', 'SECTION F-F', and 'SECTION G-G', see 'ABUTMENT DETAILS No. 3' sheet

Legend:

- Indicates existing structure
- Closure Pour
- Diaphragm Closure Pour
- Bridge Removal (Portion), see 'ABUTMENT DETAILS No. 4' sheet
- Indicates existing piles
- Indicates new piles

DESIGN OVERSIGHT — John Fujimoto
8-2-10
SIGN OFF DATE

	BY	CHECKED
DESIGN	A. WANG	P. SHINN
DETAILS	W. Y. TAN	P. SHINN
QUANTITIES	W. Y. TAN	G. WOLDETSADIK

PREPARED FOR THE STATE OF CALIFORNIA DEPARTMENT OF TRANSPORTATION

A. WANG
PROJECT ENGINEER

BRIDGE NO. 29-0191
POST MILE 28.97

ALPINE AVENUE UC (WIDEN)
ABUTMENT LAYOUT

DESIGN DETAIL SHEET (ENGLISH) (REV. 06-01-09)

ORIGINAL SCALE IN INCHES FOR REDUCED PLANS 0 1 2 3

CU 06240
EA 0G4701

DISREGARD PRINTS BEARING EARLIER REVISION DATES → REVISION DATES (PRELIMINARY STAGE ONLY) 10/16/09 12/4/09 1/15/10 5/3/10 6/17/10 7/28/10

SHEET 7 OF 29

FILE => 29-0191-f-a01_lo1.dgn

USERNAME => friehard DATE PLOTTED => 18-OCT-2010 TIME PLOTTED => 08:59

DIST	COUNTY	ROUTE	POST MILES TOTAL PROJECT	SHEET No	TOTAL SHEETS
10	SJ	5	25.0/32.7	963	1132

REGISTERED CIVIL ENGINEER — DATE 7/28/10

10-11-10
PLANS APPROVAL DATE

The State of California or its officers or agents shall not be responsible for the accuracy or completeness of scanned copies of this plan sheet.

REGISTERED PROFESSIONAL ENGINEER — ALLEN WANG — No. C 66503 — Exp. 06/30/12 — CIVIL — STATE OF CALIFORNIA

SAN JOAQUIN COUNCIL OF GOVERNMENTS
555 E. WEBER AVENUE
STOCKTON, CA 95202

RAJAPPAN & MEYER
CONSULTING ENGINEERS, INC.
1038 LEIGH AVE, SUITE 100
SAN JOSE, CA 95126

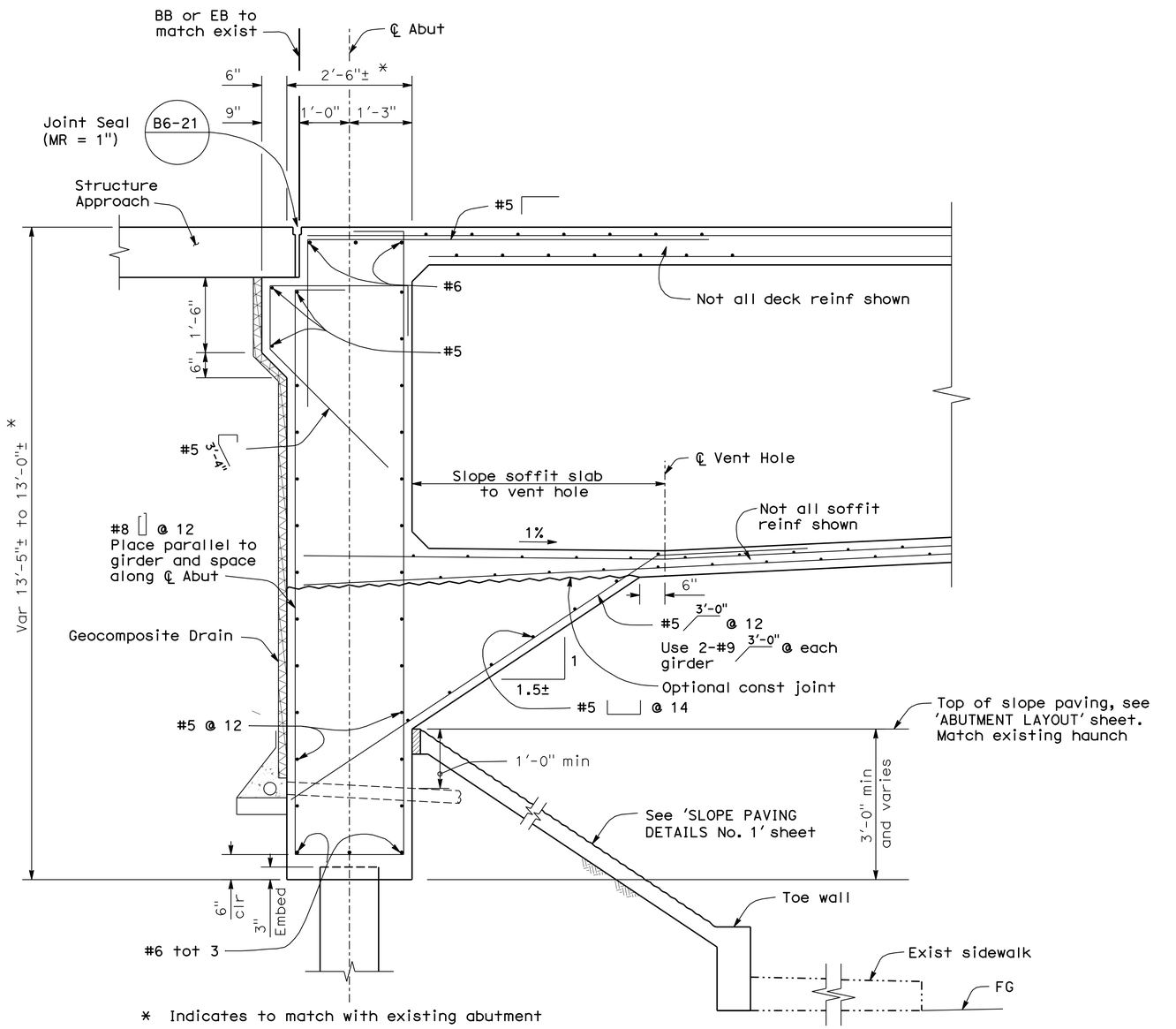

* Indicates to match with existing abutment

SECTION A-A

3/4" = 1'-0"

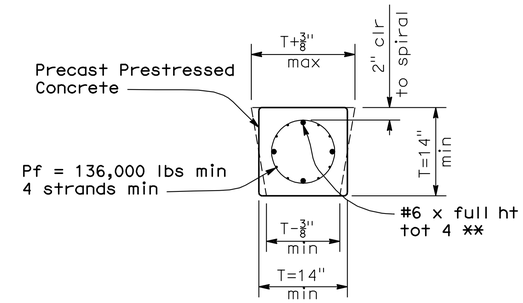

** To be in place when pile is cast

SECTION X-X

No Scale

Note:
For notes and additional details not shown, see B2-5 / -

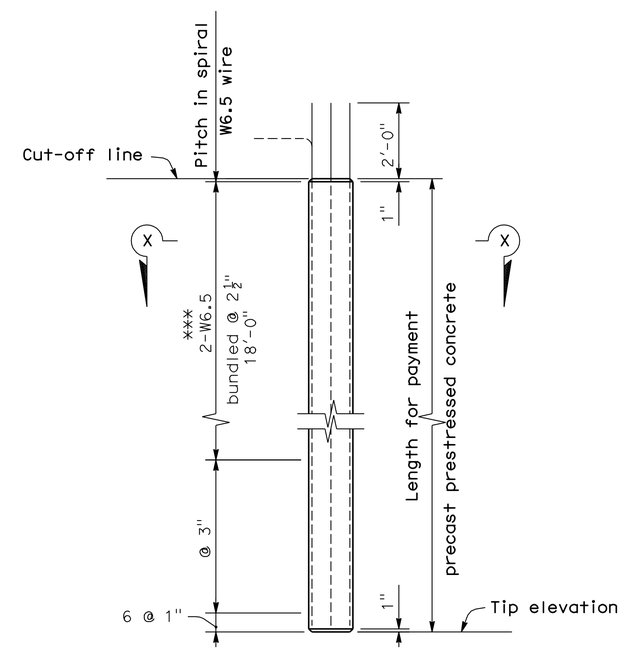

ALTERNATIVE "X"

*** W11 at 2" may be substituted

CLASS 140 MODIFIED PILE

No Scale

Note:
The Contractor shall verify all controlling field dimensions before ordering or fabricating any material

John Fujimoto
DESIGN OVERSIGHT — John Fujimoto
8-2-10
SIGN OFF DATE

	BY	CHECKED
DESIGN	A. WANG	P. SHINN
DETAILS	W. Y. TAN	P. SHINN
QUANTITIES	W. Y. TAN	G. WOLDETSADIK

PREPARED FOR THE STATE OF CALIFORNIA DEPARTMENT OF TRANSPORTATION

A. WANG
PROJECT ENGINEER

BRIDGE NO. 29-0191
POST MILE 28.97

ALPINE AVENUE UC (WIDEN)
ABUTMENT DETAILS No. 1

DESIGN DETAIL SHEET (ENGLISH) (REV. 06-01-09)

ORIGINAL SCALE IN INCHES FOR REDUCED PLANS 0 1 2 3

CU 06240
EA 0G4701

DISREGARD PRINTS BEARING EARLIER REVISION DATES

REVISION DATES (PRELIMINARY STAGE ONLY): 10/16/09 12/4/09 1/18/10 5/3/10 6/17/10 7/28/10

SHEET 8 OF 29

FILE => 29-0191-f-a01dt01.dgn

USERNAME => rfriehard DATE PLOTTED => 13-OCT-2010 TIME PLOTTED => 12:57

DIST	COUNTY	ROUTE	POST MILES TOTAL PROJECT	SHEET No	TOTAL SHEETS
10	SJ	5	25.0/32.7	964	1132

REGISTERED CIVIL ENGINEER 7/28/10 DATE

10-11-10
PLANS APPROVAL DATE

The State of California or its officers or agents shall not be responsible for the accuracy or completeness of scanned copies of this plan sheet.

REGISTERED PROFESSIONAL ENGINEER ALLEN WANG No. C 66503 Exp. 06/30/12 CIVIL STATE OF CALIFORNIA

SAN JOAQUIN COUNCIL OF GOVERNMENTS
555 E. WEBER AVENUE
STOCKTON, CA 95202

RAJAPPAN & MEYER
CONSULTING ENGINEERS, INC.
1038 LEIGH AVE, SUITE 100
SAN JOSE, CA 95126

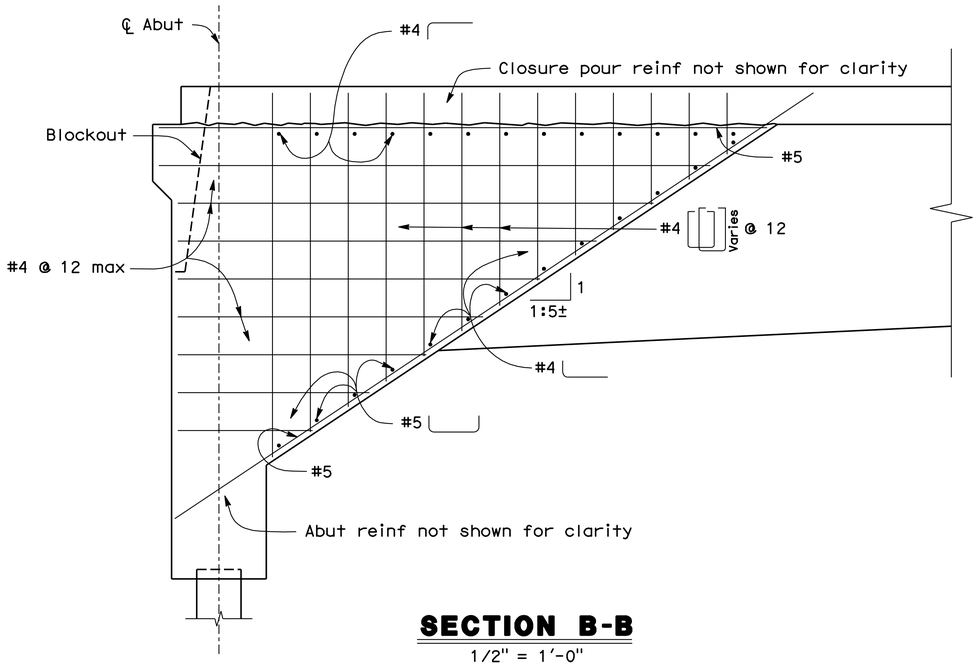

SECTION B-B

1/2" = 1'-0"
(Abut 1 shown, Abut 2 similar)

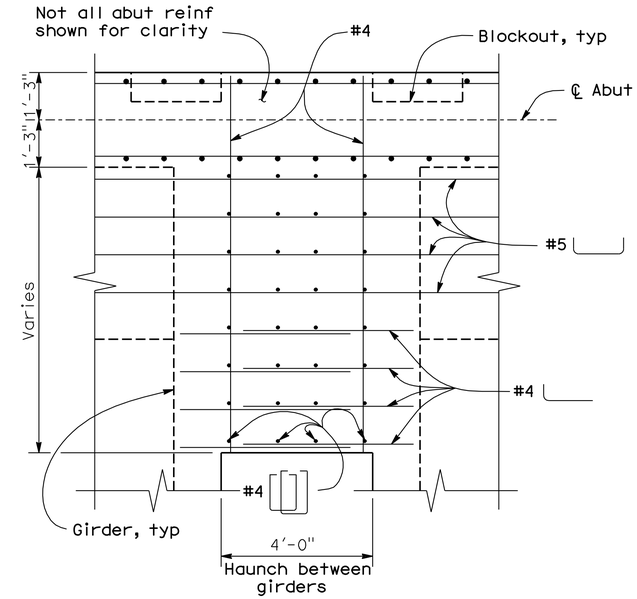

SECTION C-C

1/2" = 1'-0"

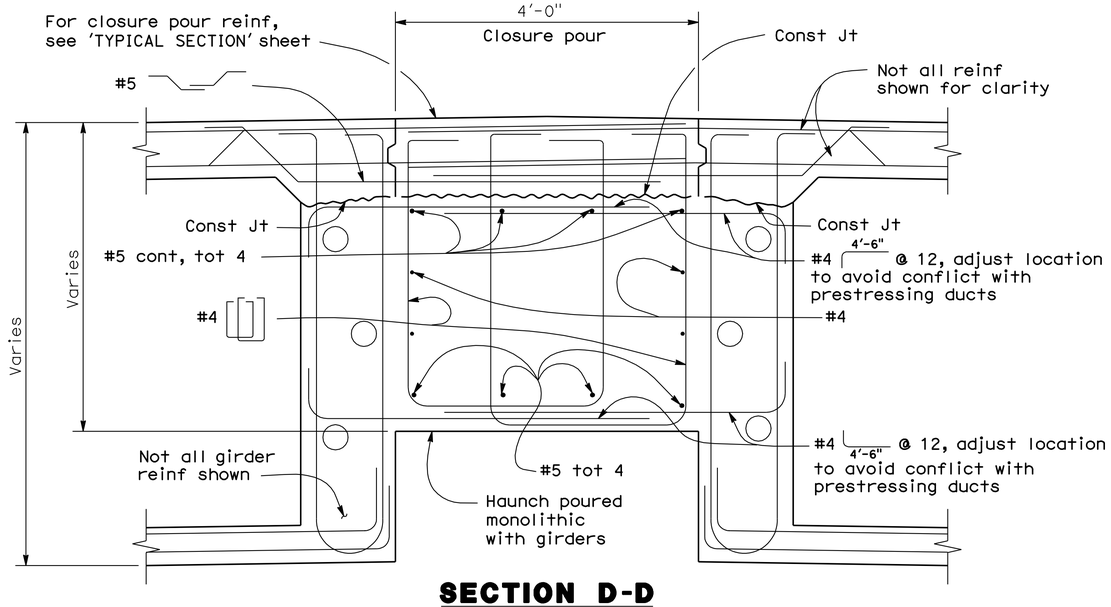

SECTION D-D

1" = 1'-0"

Note:
The Contractor shall verify all controlling field dimensions before ordering or fabricating any material

John Fujimoto
DESIGN OVERSIGHT John Fujimoto
8-2-10
SIGN OFF DATE

	BY	CHECKED
DESIGN	A. WANG	P. SHINN
DETAILS	W. Y. TAN	P. SHINN
QUANTITIES	W. Y. TAN	G. WOLDETSADIK

PREPARED FOR THE
STATE OF CALIFORNIA
DEPARTMENT OF TRANSPORTATION

A. WANG
PROJECT ENGINEER

BRIDGE NO. 29-0191
POST MILE 28.97

ALPINE AVENUE UC (WIDEN)
ABUTMENT DETAILS No. 2

DESIGN DETAIL SHEET (ENGLISH) (REV. 06-01-09)

ORIGINAL SCALE IN INCHES FOR REDUCED PLANS 0 1 2 3

CU 06240
EA 0G4701

DISREGARD PRINTS BEARING EARLIER REVISION DATES

REVISION DATES (PRELIMINARY STAGE ONLY) 10/16/09 12/17/09 1/18/10 5/3/10 6/11/10 7/28/10

SHEET 9 OF 29

FILE => 29-0191-f-a01dt02.dgn

USERNAME => trlenard DATE PLOTTED => 13-OCT-2010 TIME PLOTTED => 12:57

DIST	COUNTY	ROUTE	POST MILES TOTAL PROJECT	SHEET No	TOTAL SHEETS
10	SJ	5	25.0/32.7	965	1132

REGISTERED CIVIL ENGINEER 7/28/10 DATE

10-11-10
PLANS APPROVAL DATE

The State of California or its officers or agents shall not be responsible for the accuracy or completeness of scanned copies of this plan sheet.

REGISTERED PROFESSIONAL ENGINEER ALLEN WANG No. C 66503 Exp. 06/30/10 CIVIL STATE OF CALIFORNIA

SAN JOAQUIN COUNCIL OF GOVERNMENTS
555 E. WEBER AVENUE
STOCKTON, CA 95202

RAJAPPAN & MEYER
CONSULTING ENGINEERS, INC.
1038 LEIGH AVE, SUITE 100
SAN JOSE, CA 95126

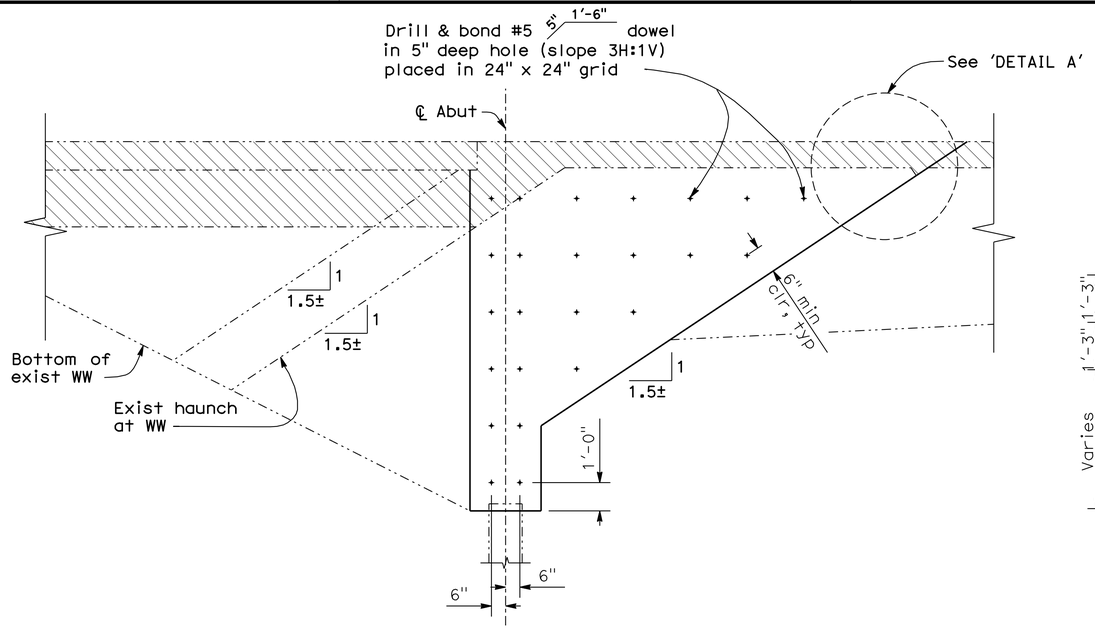

SECTION E-E

3/8" = 1'-0"
(Abut 1 shown, Abut 2 similar)

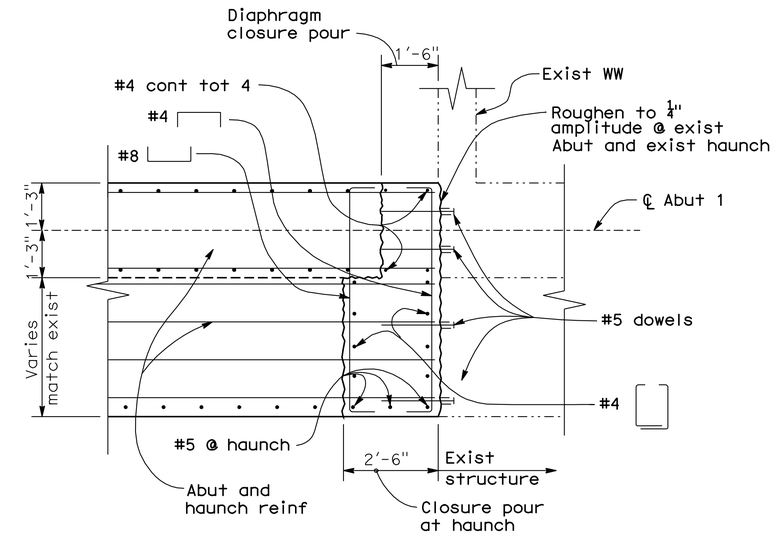

SECTION F-F

1/2" = 1'-0"

Note:
Place diaphragm closure pour after falsework has been released and prior to closure pour

Legend:
Bridge Removal (Portion)
Indicates existing structure

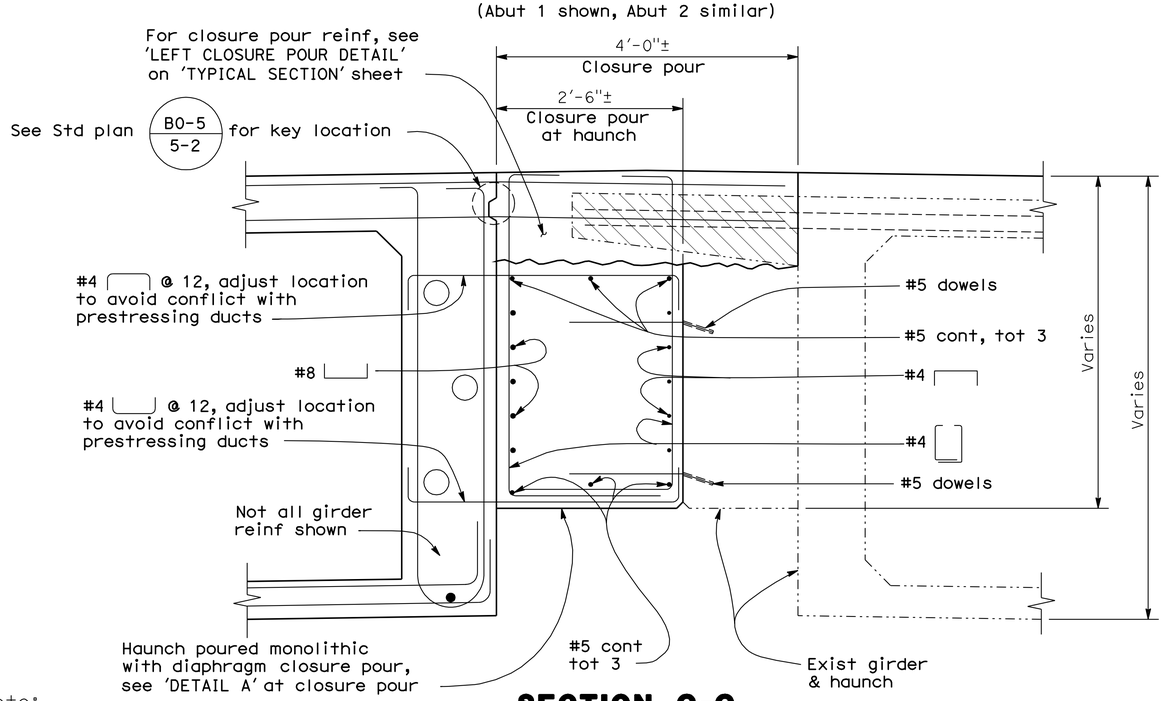

SECTION G-G

1" = 1'-0"

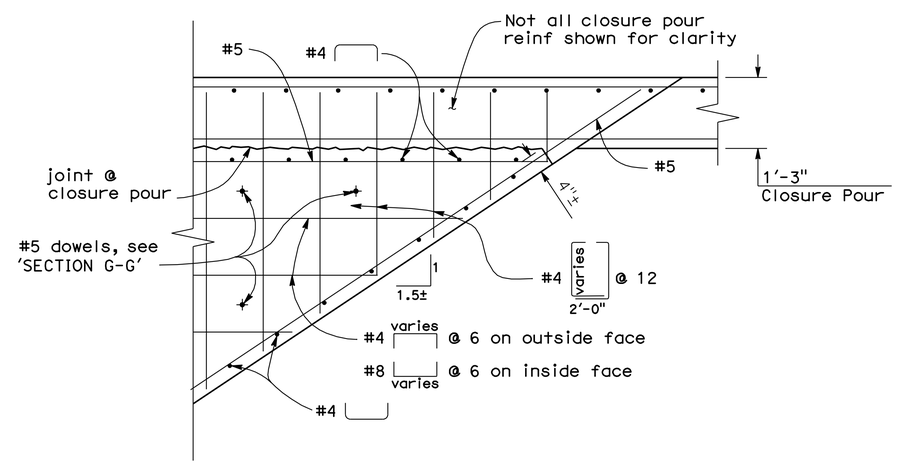

DETAIL A

3/4" = 1'-0"

Note:
The Contractor shall verify all controlling field dimensions before ordering or fabricating any material

DESIGN OVERSIGHT John Fujimoto
8-2-10
SIGN OFF DATE

	BY	CHECKED
DESIGN	A. WANG	P. SHINN
DETAILS	W. Y. TAN	P. SHINN
QUANTITIES	W. Y. TAN	G. WOLDETSADIK

PREPARED FOR THE STATE OF CALIFORNIA DEPARTMENT OF TRANSPORTATION

A. WANG
PROJECT ENGINEER

BRIDGE NO. 29-0191
POST MILE 28.97

ALPINE AVENUE UC (WIDEN)
ABUTMENT DETAILS No. 3

DESIGN DETAIL SHEET (ENGLISH) (REV. 06-01-09)

ORIGINAL SCALE IN INCHES FOR REDUCED PLANS 0 1 2 3

CU 06240
EA 0G4701

DISREGARD PRINTS BEARING EARLIER REVISION DATES
REVISION DATES (PRELIMINARY STAGE ONLY) 10/16/09 12/18/09 1/18/10 5/3/10 6/11/10 7/28/10

SHEET 10 OF 29

FILE => 29-0191-f-a01dt03.dgn

USERNAME => friehard DATE PLOTTED => 13-OCT-2010 TIME PLOTTED => 12:57

DIST	COUNTY	ROUTE	POST MILES TOTAL PROJECT	SHEET No	TOTAL SHEETS
10	SJ	5	25.0/32.7	966	1132

REGISTERED CIVIL ENGINEER — DATE 7/28/10

10-11-10
PLANS APPROVAL DATE

REGISTERED PROFESSIONAL ENGINEER — ALLEN WANG — No. C 66503 — Exp. 06/30/12 — CIVIL — STATE OF CALIFORNIA

The State of California or its officers or agents shall not be responsible for the accuracy or completeness of scanned copies of this plan sheet.

SAN JOAQUIN COUNCIL OF GOVERNMENTS
555 E. WEBER AVENUE
STOCKTON, CA 95202

RAJAPPAN & MEYER
CONSULTING ENGINEERS, INC.
1038 LEIGH AVE, SUITE 100
SAN JOSE, CA 95126

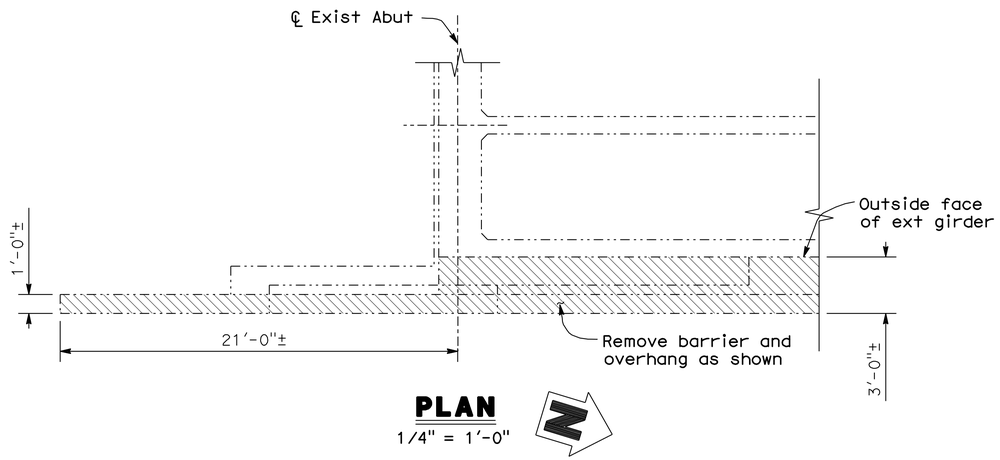

PLAN
1/4" = 1'-0"

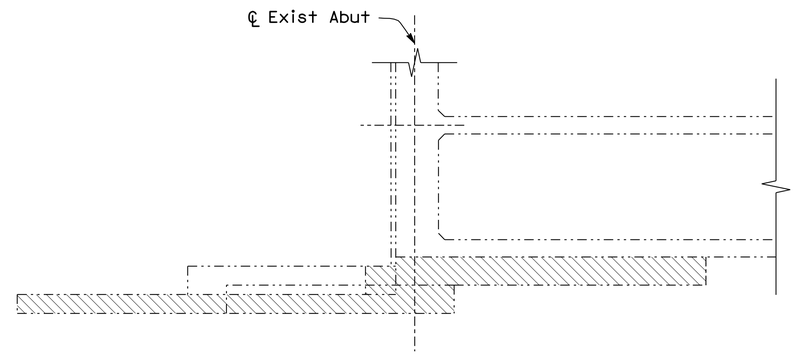

SECTION A-A
1/4" = 1'-0"

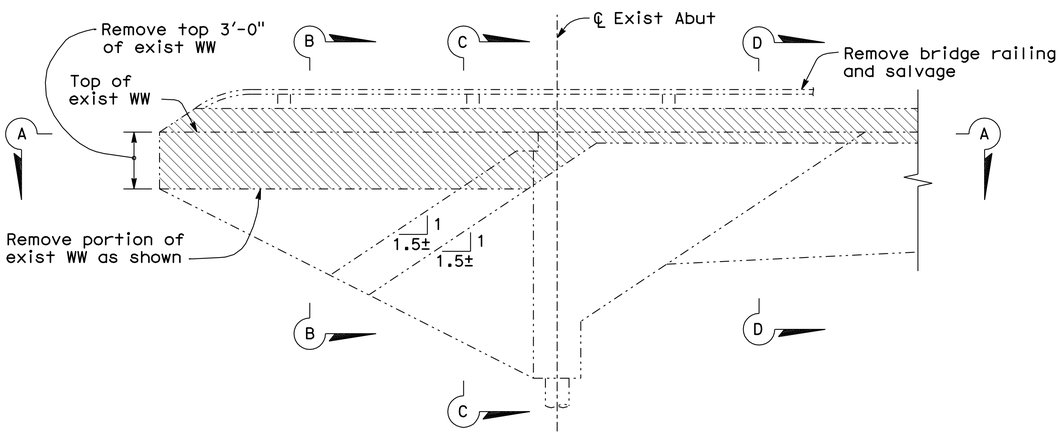

ELEVATION
1/4" = 1'-0"

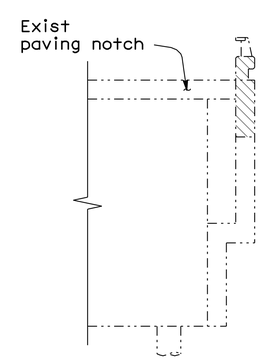

SECTION B-B
1/4" = 1'-0"

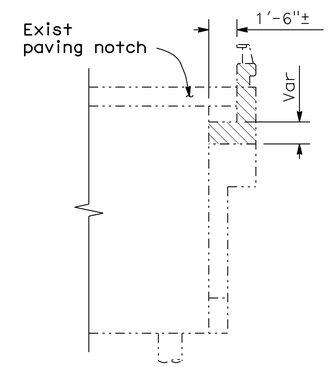

SECTION C-C
1/4" = 1'-0"

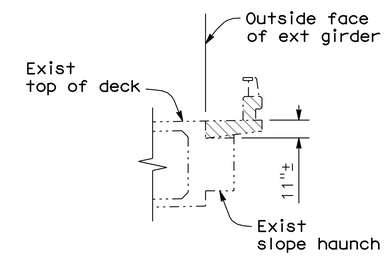

SECTION D-D
1/4" = 1'-0"

Notes:

1. For location of bridge removal, see 'GENERAL PLAN' sheet
2. Structure approach not shown
3. West side of Abutment 1 shown, other locations similar

Legend:

-·-·-·- Indicates existing structure

Bridge Removal (Portion)

Note:
The Contractor shall verify all controlling field dimensions before ordering or fabricating any material

DESIGN OVERSIGHT — John Fujimoto
8-2-10
SIGN OFF DATE

	BY	CHECKED
DESIGN	A. WANG	P. SHINN
DETAILS	W. Y. TAN	P. SHINN
QUANTITIES	W. Y. TAN	G. WOLDETSADIK

PREPARED FOR THE STATE OF CALIFORNIA DEPARTMENT OF TRANSPORTATION

A. WANG
PROJECT ENGINEER

BRIDGE NO. 29-0191
POST MILE 28.97

ALPINE AVENUE UC (WIDEN)
ABUTMENT DETAILS No. 4

DESIGN DETAIL SHEET (ENGLISH) (REV. 06-01-09)

ORIGINAL SCALE IN INCHES FOR REDUCED PLANS 0 1 2 3

CU 06240
EA 0G4701

DISREGARD PRINTS BEARING EARLIER REVISION DATES

REVISION DATES (PRELIMINARY STAGE ONLY): 10/16/09 12/14/09 1/18/10 5/3/10 6/11/10 7/28/10

SHEET 11 OF 29

FILE => 29-0191-f-a01dt04.dgn

USERNAME => rfleonard DATE PLOTTED => 13-OCT-2010 TIME PLOTTED => 12:57

DIST	COUNTY	ROUTE	POST MILES TOTAL PROJECT	SHEET No	TOTAL SHEETS
10	SJ	5	25.0/32.7	967	1132

REGISTERED CIVIL ENGINEER — DATE 7/28/10

10-11-10
PLANS APPROVAL DATE

REGISTERED PROFESSIONAL ENGINEER — ALLEN WANG — No. C 66503 — Exp. 06/30/12 — CIVIL — STATE OF CALIFORNIA

The State of California or its officers or agents shall not be responsible for the accuracy or completeness of scanned copies of this plan sheet.

SAN JOAQUIN COUNCIL OF GOVERNMENTS
555 E. WEBER AVENUE
STOCKTON, CA 95202

RAJAPPAN & MEYER
CONSULTING ENGINEERS, INC.
1038 LEIGH AVE, SUITE 100
SAN JOSE, CA 95126

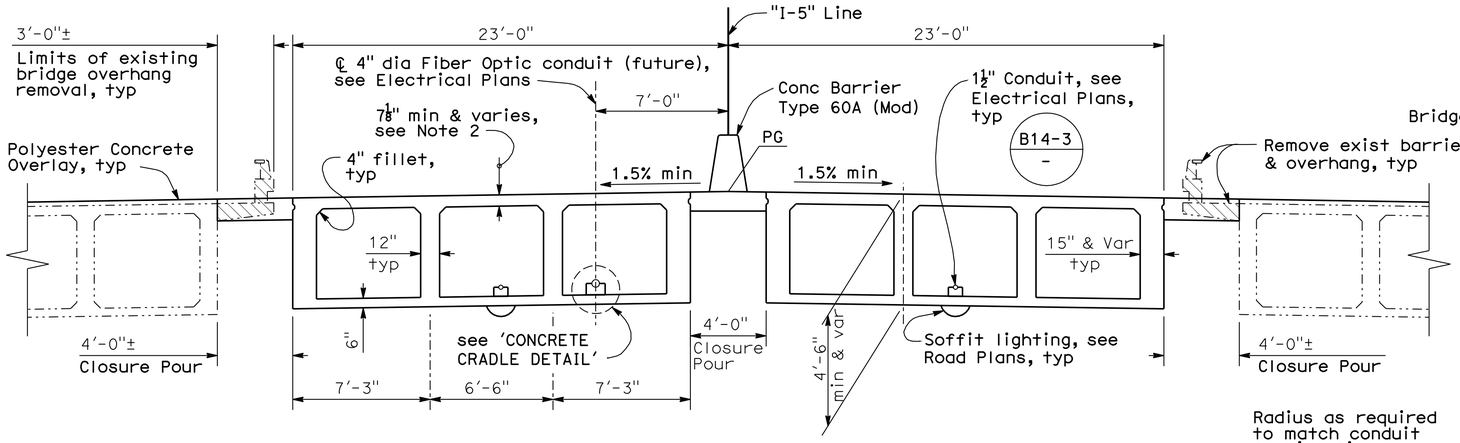

TYPICAL SECTION

1/4" = 1'-0"

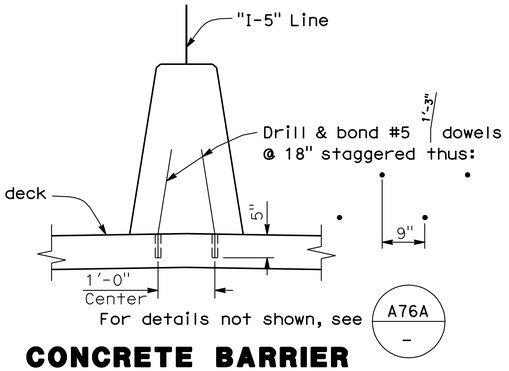

CONCRETE BARRIER TYPE 60A (MOD)

3/4" = 1'-0"

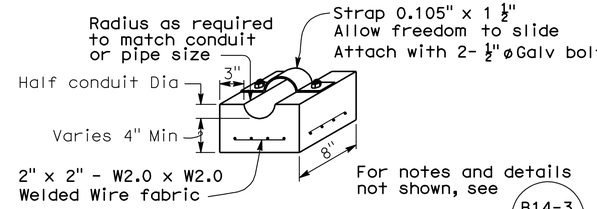

CONCRETE CRADLE DETAIL

No Scale

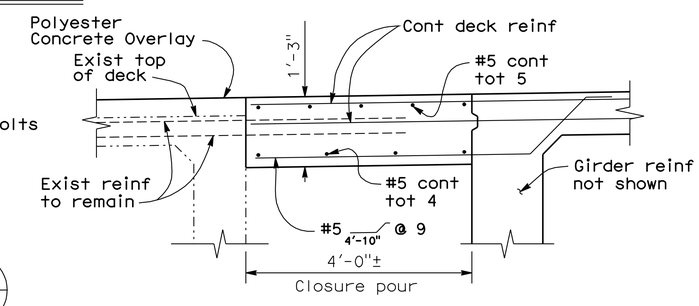

LEFT CLOSURE POUR DETAIL

3/4" = 1'-0"
(Left closure pour shown, right closure pour similar)

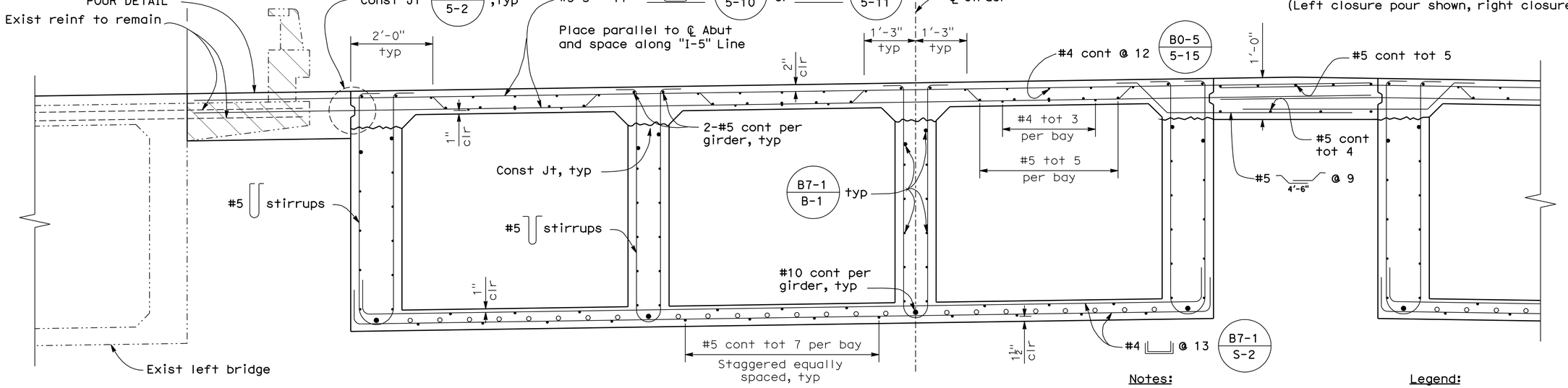

PARTIAL TYPICAL SECTION

3/4" = 1'-0"

A76A - B0-5 - B7-1 - B8-5 -

Note:
The Contractor shall verify all controlling field dimensions before ordering or fabricating any material

Notes:

1. All dimensions are measured normal to "I-5" Line
2. For thickness of deck slab, see 'GIRDER LAYOUT' sheet
3. Transverse deck reinf shall not be bent within the closure pour

Legend:

- Indicates existing structure
- Bridge Removal (Portion)
- ○ Indicates additional rebar, see 'GIRDER DETAILS' sheet

DESIGN OVERSIGHT — John Fujimoto
8-2-10
SIGN OFF DATE

	BY	CHECKED
DESIGN	A. WANG	P. SHINN
DETAILS	W. Y. TAN	P. SHINN
QUANTITIES	W. Y. TAN	G. WOLDETSADIK

PREPARED FOR THE STATE OF CALIFORNIA DEPARTMENT OF TRANSPORTATION

A. WANG
PROJECT ENGINEER

BRIDGE NO. 29-0191
POST MILE 28.97

ALPINE AVENUE UC (WIDEN)
TYPICAL SECTION

DESIGN DETAIL SHEET (ENGLISH) (REV. 06-01-09)

ORIGINAL SCALE IN INCHES FOR REDUCED PLANS 0 1 2 3

CU 06240
EA 0G4701

DISREGARD PRINTS BEARING EARLIER REVISION DATES

REVISION DATES (PRELIMINARY STAGE ONLY) 10/16/09 12/4/09 1/18/10 5/3/10 6/11/10 7/28/10

SHEET 12 OF 29

FILE => 29-0191-k-ts01.dgn

USERNAME => trlenard DATE PLOTTED => 18-OCT-2010 TIME PLOTTED => 08:59

DIST	COUNTY	ROUTE	POST MILES TOTAL PROJECT	SHEET No	TOTAL SHEETS
10	SJ	5	25.0/32.7	968	1132

REGISTERED CIVIL ENGINEER 7/28/10 DATE

10-11-10
PLANS APPROVAL DATE

REGISTERED PROFESSIONAL ENGINEER ALLEN WANG No. C 66503 Exp. 06/30/12 CIVIL STATE OF CALIFORNIA

The State of California or its officers or agents shall not be responsible for the accuracy or completeness of scanned copies of this plan sheet.

SAN JOAQUIN COUNCIL OF GOVERNMENTS
555 E. WEBER AVENUE
STOCKTON, CA 95202

RAJAPPAN & MEYER
CONSULTING ENGINEERS, INC.
1038 LEIGH AVE, SUITE 100
SAN JOSE, CA 95126

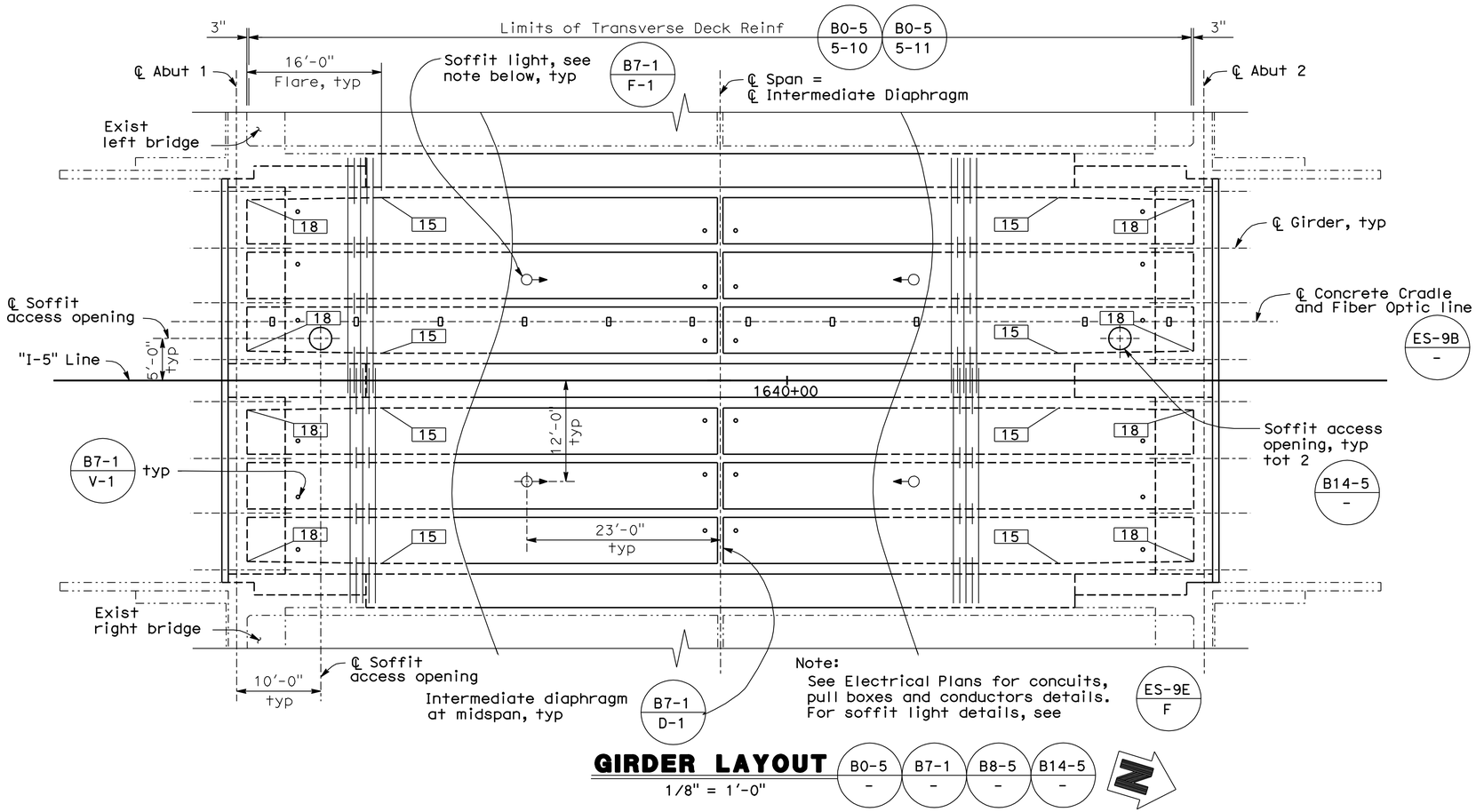

GIRDER LAYOUT

1/8" = 1'-0"

B0-5 - | B7-1 - | B8-5 - | B14-5 -

Notes:

1. Indicates girder width in inches
   Girder stem width = 12" unless otherwise noted
2. For 'CONCRETE STRENGTH AND TYPE LIMITS', see 'GENERAL NOTES' sheet
3. L is measured along the ℄ of each girder

Prestressing Notes:

270 ksi Low Relaxation Strand :
Pjack = 17800 kips
Anchor Set = 3/8"
Total Number of Girders = 8

Distribution of prestress force (Pjack) between girders shall not exceed the ratio of 3:2. Maximum final force variation between girders shall not exceed 725 kips

Concrete: f'c = 5.0 ksi @ 28 days
f'ci = 3.6 ksi @ time of stressing

Contractor shall submit elongation calculations based on initial stress at ⊠ = 0.962 times jacking stress.

⊠ Denotes theoretical point of no movement

Stressing shall be performed from Abutment 1 end only

Prestress force design is based on friction coefficient μ = 0.15 and friction wobble coefficient k = 0.0002/ft and modified for curvature

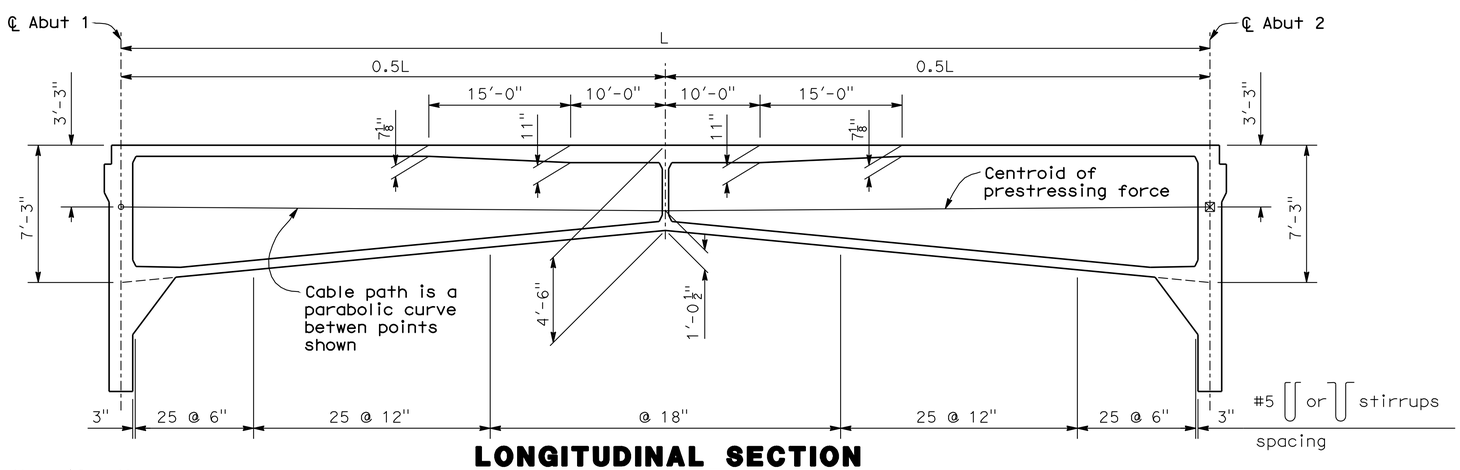

LONGITUDINAL SECTION

No Scale

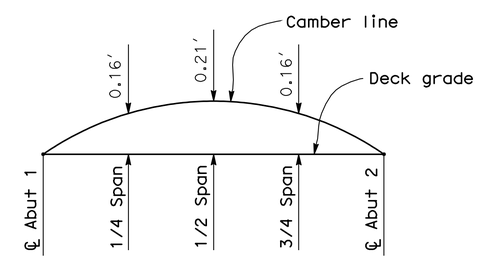

CAMBER DIAGRAM

No Scale
(Does not include allowance for falsework settlement)

Falsework Release Note:

Falsework shall be released as soon as permitted by the specifications. Closure pour shall not be placed sooner than 60 days after the falsework has been released.

Note:
The Contractor shall verify all controlling field dimensions before ordering or fabricating any material

DESIGN OVERSIGHT John Fujimoto
8-2-10
SIGN OFF DATE

	BY	CHECKED
DESIGN	A. WANG	P. SHINN
DETAILS	W. Y. TAN	P. SHINN
QUANTITIES	W. Y. TAN	G. WOLDETSADIK

PREPARED FOR THE STATE OF CALIFORNIA DEPARTMENT OF TRANSPORTATION

A. WANG
PROJECT ENGINEER

BRIDGE NO. 29-0191
POST MILE 28.97

ALPINE AVENUE UC (WIDEN)
GIRDER LAYOUT

DESIGN DETAIL SHEET (ENGLISH) (REV. 06-01-09)

ORIGINAL SCALE IN INCHES FOR REDUCED PLANS 0 1 2 3

CU 06240
EA 0G4701

DISREGARD PRINTS BEARING EARLIER REVISION DATES

REVISION DATES (PRELIMINARY STAGE ONLY) 10/16/09 12/4/09 1/15/10 5/3/10 6/11/10 7/28/10

SHEET 13 OF 29

FILE => 29-0191-1-g_1o01.dgn

USERNAME => friehard DATE PLOTTED => 13-OCT-2010 TIME PLOTTED => 12:58

DIST	COUNTY	ROUTE	POST MILES TOTAL PROJECT	SHEET No	TOTAL SHEETS
10	SJ	5	25.0/32.7	969	1132

REGISTERED CIVIL ENGINEER 7/28/10 DATE

10-11-10
PLANS APPROVAL DATE

REGISTERED PROFESSIONAL ENGINEER ALLEN WANG No. C 66503 Exp. 06/30/12 CIVIL STATE OF CALIFORNIA

The State of California or its officers or agents shall not be responsible for the accuracy or completeness of scanned copies of this plan sheet.

SAN JOAQUIN COUNCIL OF GOVERNMENTS
555 E. WEBER AVENUE
STOCKTON, CA 95202

RAJAPPAN & MEYER
CONSULTING ENGINEERS, INC.
1038 LEIGH AVE, SUITE 100
SAN JOSE, CA 95126

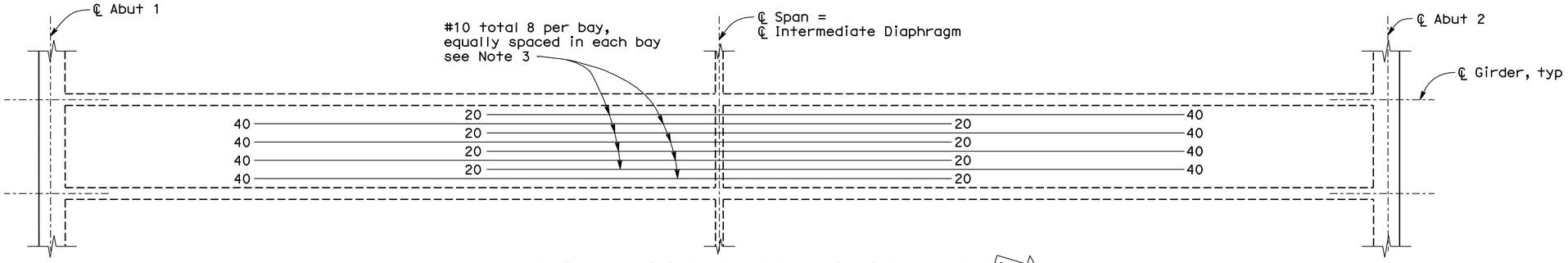

ADDITIONAL SOFFIT REINFORCEMENT

No Scale

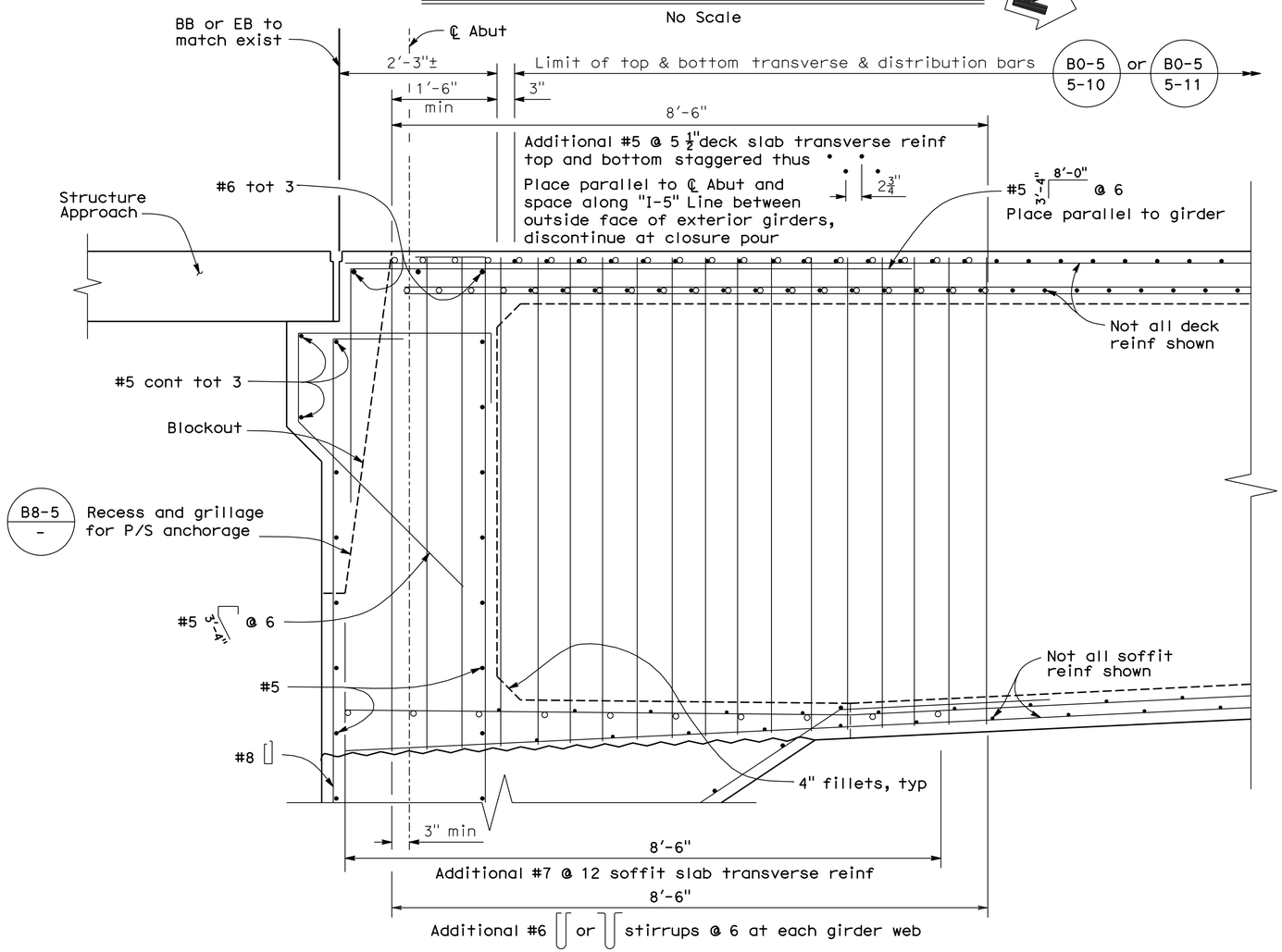

Note:
The Contractor shall verify all controlling field dimensions before ordering or fabricating any material

END DIAPHRAGM

1" = 1'-0"

Notes:

1. Space bars approximately equal within limits shown.
2. Reinforcement shall be placed parallel to ℄ bridge
3. No lap splices permitted
4. Numbers at ends of bars indicate distance in feet from ℄ Span.

DESIGN OVERSIGHT John Fujimoto
8-2-10
SIGN OFF DATE

	BY	CHECKED
DESIGN	A. WANG	P. SHINN
DETAILS	W. Y. TAN	P. SHINN
QUANTITIES	W. Y. TAN	G. WOLDETSADIK

PREPARED FOR THE STATE OF CALIFORNIA DEPARTMENT OF TRANSPORTATION

A. WANG
PROJECT ENGINEER

BRIDGE NO. 29-0191
POST MILE 28.97

ALPINE AVENUE UC (WIDEN)
GIRDER DETAILS

DESIGN DETAIL SHEET (ENGLISH) (REV. 06-01-09)

ORIGINAL SCALE IN INCHES FOR REDUCED PLANS 0 1 2 3

CU 06240
EA 0G4701

DISREGARD PRINTS BEARING EARLIER REVISION DATES

REVISION DATES (PRELIMINARY STAGE ONLY) 10/16/09 12/17/09 1/15/10 5/21/10 6/11/10 7/28/10

SHEET 14 OF 29

FILE => 29-0191-I-gdt01.dgn

USERNAME => trlenard DATE PLOTTED => 13-OCT-2010 TIME PLOTTED => 12:58

DIST	COUNTY	ROUTE	POST MILES TOTAL PROJECT	SHEET No	TOTAL SHEETS
10	SJ	5	25.0/32.7	970	1132

REGISTERED CIVIL ENGINEER — DATE 7/28/10

10-11-10
PLANS APPROVAL DATE

REGISTERED PROFESSIONAL ENGINEER — ALLEN WANG — No. C 66503 — Exp. 06/30/12 — CIVIL — STATE OF CALIFORNIA

The State of California or its officers or agents shall not be responsible for the accuracy or completeness of scanned copies of this plan sheet.

SAN JOAQUIN COUNCIL OF GOVERNMENTS
555 E. WEBER AVENUE
STOCKTON, CA 95202

RAJAPPAN & MEYER
CONSULTING ENGINEERS, INC.
1038 LEIGH AVE, SUITE 100
SAN JOSE, CA 95126

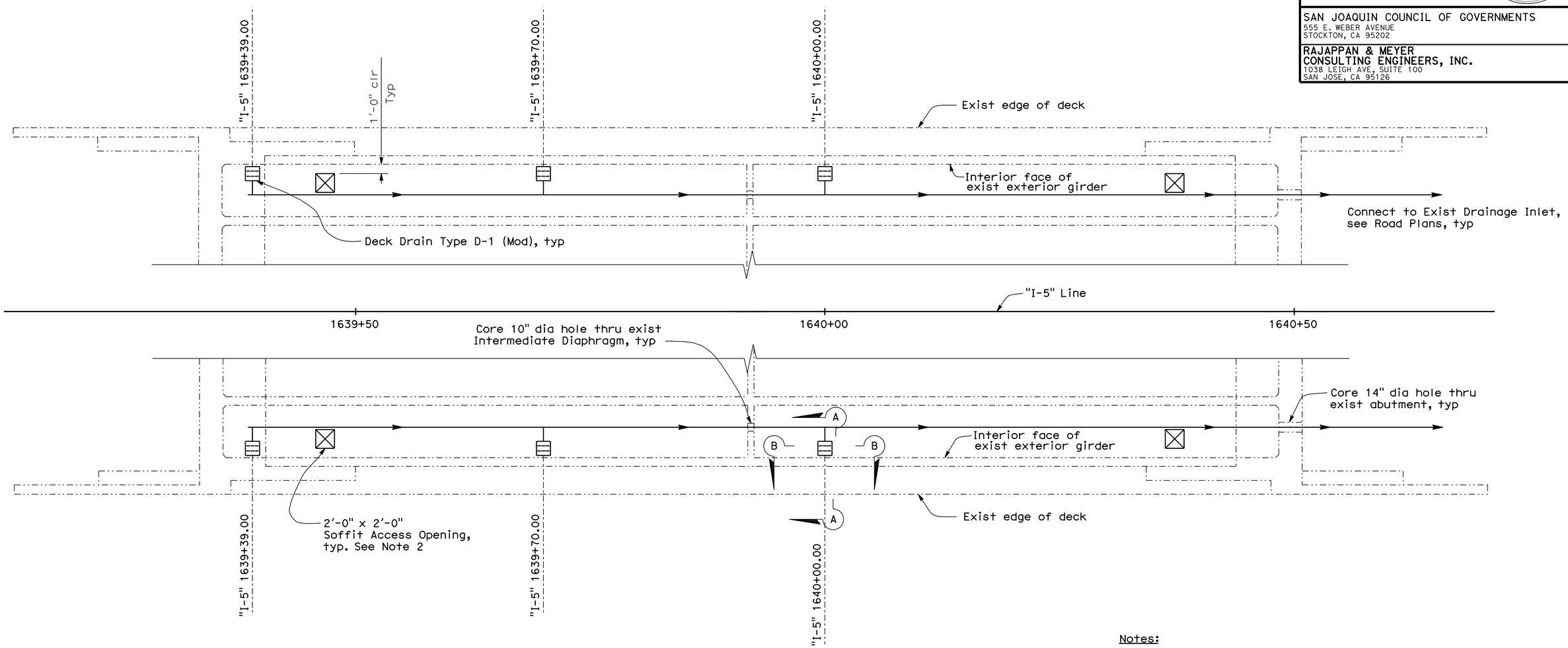

PLAN
3/16" = 1'-0"

Notes:
1. For deck drain details, see 'DECK DRAIN DETAILS' sheet.
2. For soffit access details, see 'SOFFIT OPENINGS' sheet.
3. For "Section A-A" and Section B-B" see "Deck Drain Details" sheet

Legend:
Indicates existing structure

Note:
The Contractor shall verify all controlling field dimensions before ordering or fabricating any material

DESIGN OVERSIGHT John Fujimoto
8-2-10
SIGN OFF DATE

	BY	CHECKED
DESIGN	A. WANG	P. SHINN
DETAILS	W. Y. TAN	P. SHINN
QUANTITIES	W. Y. TAN	G. WOLDETSADIK

PREPARED FOR THE
STATE OF CALIFORNIA
DEPARTMENT OF TRANSPORTATION

A. WANG
PROJECT ENGINEER

BRIDGE NO. 29-0191
POST MILE 28.97

ALPINE AVENUE UC (WIDEN)
DECK DRAIN PLAN

DESIGN DETAIL SHEET (ENGLISH) (REV. 06-01-09)

ORIGINAL SCALE IN INCHES FOR REDUCED PLANS 0 1 2 3

CU 06240
EA 0G4701

DISREGARD PRINTS BEARING EARLIER REVISION DATES

REVISION DATES (PRELIMINARY STAGE ONLY): 10/14/09 12/14/09 1/18/10 5/3/10 6/17/10 7/28/10

SHEET 15 OF 29

FILE => 29-0191-r-dd01.dgn

USERNAME => trlenard DATE PLOTTED => 13-OCT-2010 TIME PLOTTED => 12:58

DIST	COUNTY	ROUTE	POST MILES TOTAL PROJECT	SHEET No	TOTAL SHEETS
10	SJ	5	25.0/32.7	971	1132

REGISTERED CIVIL ENGINEER — DATE 7/28/10

10-11-10
PLANS APPROVAL DATE

The State of California or its officers or agents shall not be responsible for the accuracy or completeness of scanned copies of this plan sheet.

REGISTERED PROFESSIONAL ENGINEER — ALLEN WANG — No. C 66503 — Exp. 06/30/12 — CIVIL — STATE OF CALIFORNIA

SAN JOAQUIN COUNCIL OF GOVERNMENTS
555 E. WEBER AVENUE
STOCKTON, CA 95202

RAJAPPAN & MEYER
CONSULTING ENGINEERS, INC.
1038 LEIGH AVE, SUITE 100
SAN JOSE, CA 95126

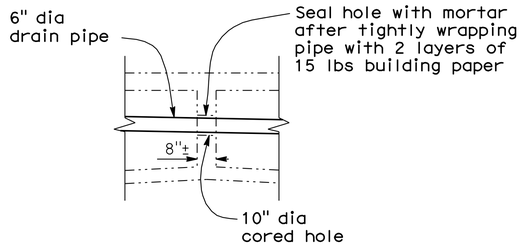

DECK DRAIN AT INTERMEDIATE DIAPH

3/8" = 1'-0"

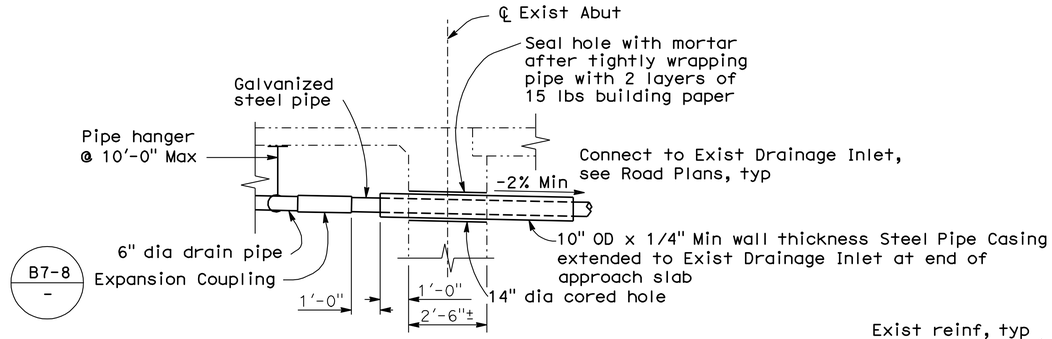

DECK DRAIN AT ABUT

3/8" = 1'-0"

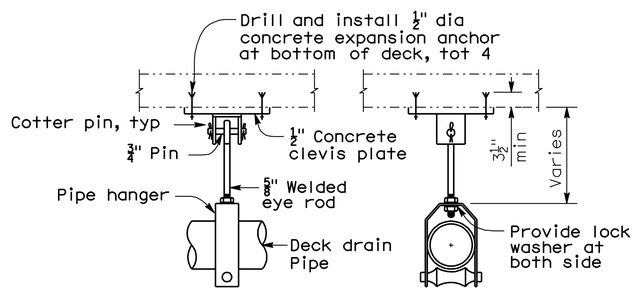

PIPE HANGER

No Scale

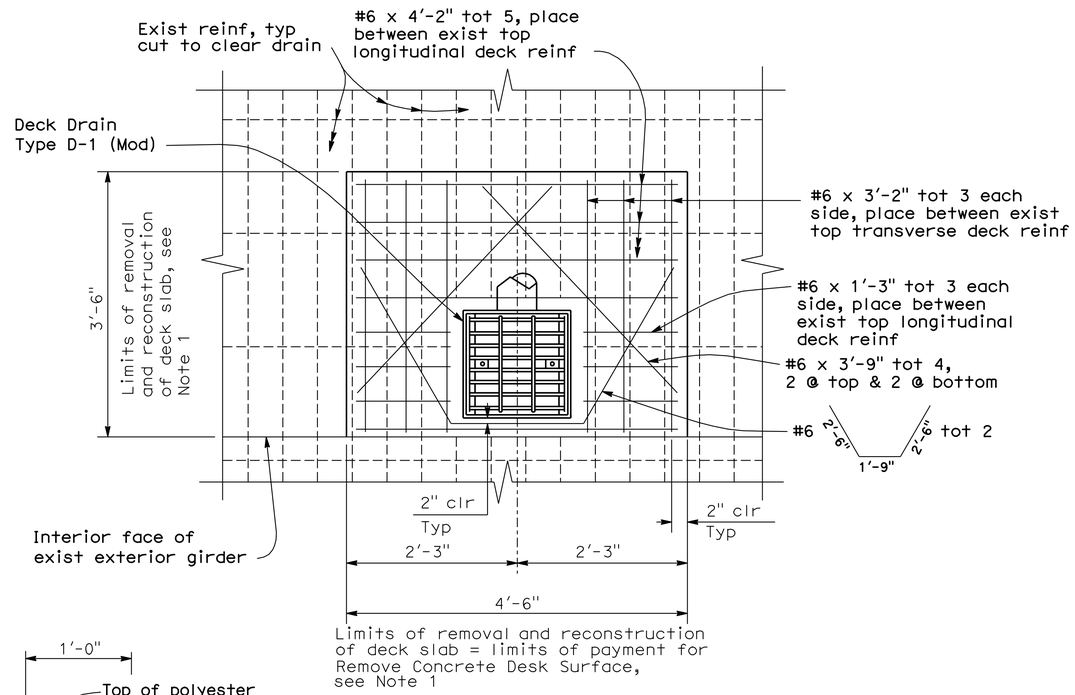

PARTIAL PLAN

1" = 1'-0"

Notes:

1. For the deck removal; any existing reinforcement that is damaged shall be removed and equal size reinforcement shall be butt welded to it.
2. All pipes in the deck shall be installed with a down slope greater than 2%.
3. All drains and drainage assemblies to be galvanized.
4. For all general notes, pipe alignment, sleeve connection and other details not shown, see B7-6 / -

Legend:

Indicates existing structure

Indicates limits of Remove Concrete Deck Surface

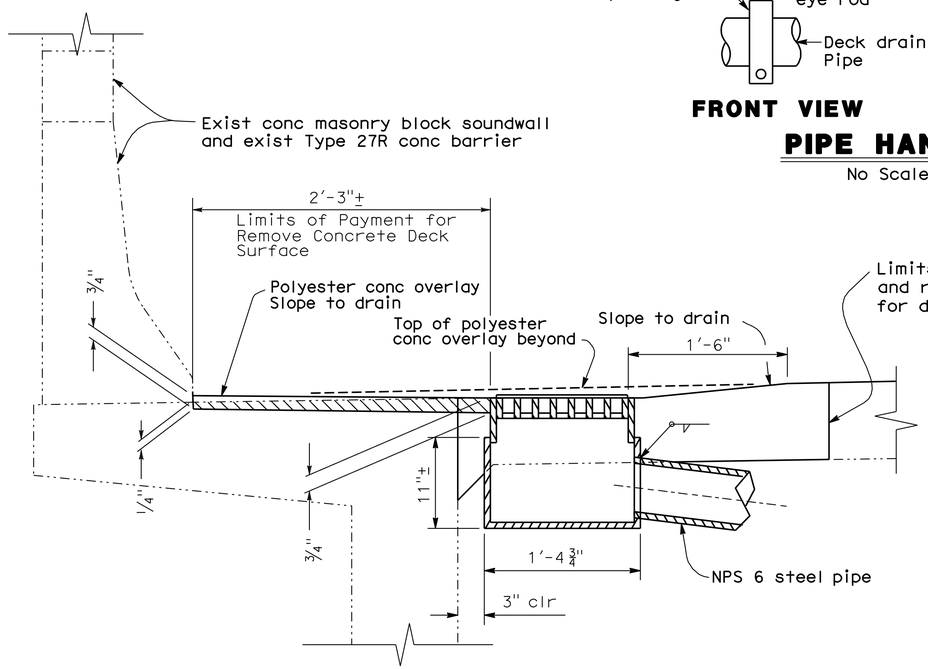

SECTION A-A

No Scale

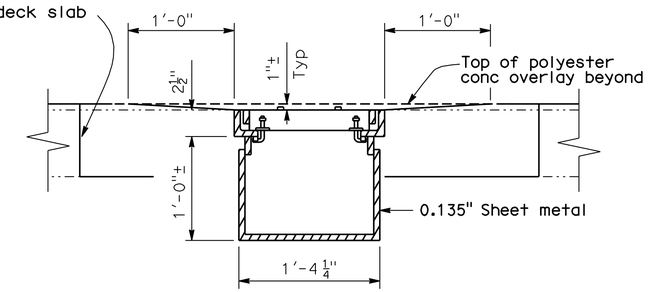

SECTION B-B

No Scale

Note:
The Contractor shall verify all controlling field dimensions before ordering or fabricating any material

DESIGN	BY A. WANG	CHECKED P. SHINN	
DETAILS	BY W. Y. TAN	CHECKED P. SHINN	
QUANTITIES	BY W. Y. TAN	CHECKED G. WOLDETSADIK	

DESIGN OVERSIGHT John Fujimoto
8-2-10
SIGN OFF DATE

PREPARED FOR THE STATE OF CALIFORNIA DEPARTMENT OF TRANSPORTATION

A. WANG
PROJECT ENGINEER

BRIDGE NO. 29-0191
POST MILE 28.97

ALPINE AVENUE UC (WIDEN)
DECK DRAIN DETAILS

DESIGN DETAIL SHEET (ENGLISH) (REV. 06-01-09)

ORIGINAL SCALE IN INCHES FOR REDUCED PLANS 0 1 2 3

CU 06240
EA 0G4701

DISREGARD PRINTS BEARING EARLIER REVISION DATES

REVISION DATES (PRELIMINARY STAGE ONLY): 10/16/09 12/14/09 1/18/10 5/3/10 6/17/10 7/28/10

SHEET 16 OF 29

FILE => 29-0191-r-ddet01.dgn

USERNAME => rfriehard DATE PLOTTED => 18-OCT-2010 TIME PLOTTED => 08:59

DIST	COUNTY	ROUTE	POST MILES TOTAL PROJECT	SHEET No	TOTAL SHEETS
10	SJ	5	25.0/32.7	972	1132

REGISTERED CIVIL ENGINEER — DATE 7/28/10

10-11-10
PLANS APPROVAL DATE

REGISTERED PROFESSIONAL ENGINEER — ALLEN WANG — No. C 66503 — Exp. 06/30/12 — CIVIL — STATE OF CALIFORNIA

The State of California or its officers or agents shall not be responsible for the accuracy or completeness of scanned copies of this plan sheet.

SAN JOAQUIN COUNCIL OF GOVERNMENTS
555 E. WEBER AVENUE
STOCKTON, CA 95202

RAJAPPAN & MEYER
CONSULTING ENGINEERS, INC.
1038 LEIGH AVE, SUITE 100
SAN JOSE, CA 95126

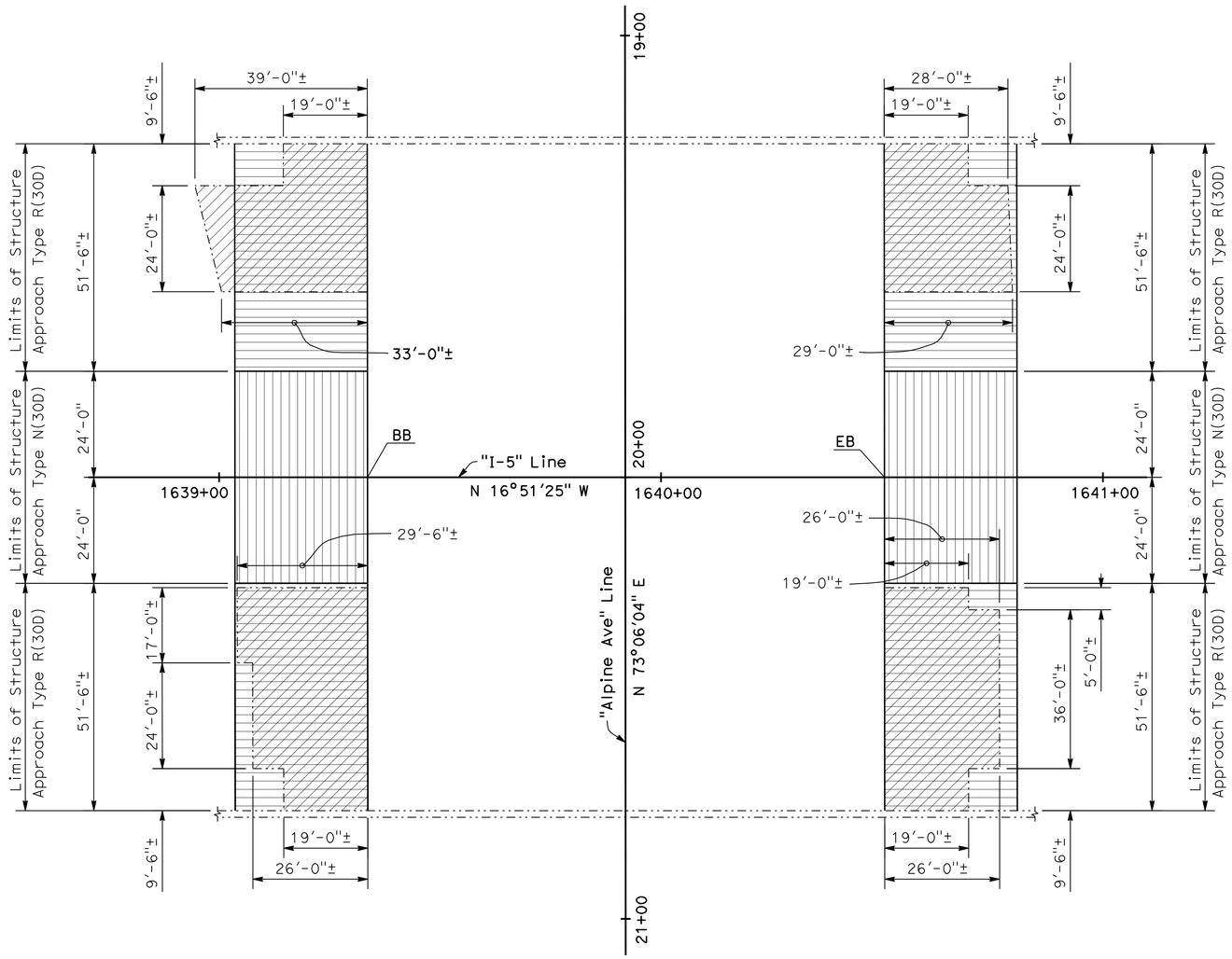

STRUCTURE APPROACH PLAN

1/16" = 1'-0"

Notes:

1. For details not shown, see 'STRUCTURE APPROACH TYPE R(30D)' and 'STRUCTURE APPROACH TYPE N(30D)' sheets
2. Longitudinal construction joints shall be at lane lines as required for roadway staging, see Road Plans. See 'STRUCTURE APPROACH' sheets for details.

Legend:

- Indicates limits of remove existing approach slab. Depth varies from 1'-3"± to 1'-6"±
- Indicates pay limits of Structure Approach Type N(30D)
- Indicates pay limits of Structure Approach Type R(30D)

Note:
The Contractor shall verify all controlling field dimensions before ordering or fabricating any material

DESIGN OVERSIGHT — John Fujimoto
8-2-10
SIGN OFF DATE

	BY	CHECKED
DESIGN	A. WANG	P. SHINN
DETAILS	W. Y. TAN	P. SHINN
QUANTITIES	W. Y. TAN	G. WOLDETSADIK

PREPARED FOR THE STATE OF CALIFORNIA DEPARTMENT OF TRANSPORTATION

A. WANG
PROJECT ENGINEER

BRIDGE NO. 29-0191
POST MILE 28.97

ALPINE AVENUE UC (WIDEN)
LIMITS OF STRUCTURE APPROACH

DESIGN DETAIL SHEET (ENGLISH) (REV. 06-01-09)

ORIGINAL SCALE IN INCHES FOR REDUCED PLANS 0 1 2 3

CU 06240
EA 0G4701

DISREGARD PRINTS BEARING EARLIER REVISION DATES

REVISION DATES (PRELIMINARY STAGE ONLY): 10/16/09 12/14/09 1/18/10 5/21/10 6/11/10 7/28/10

SHEET 17 OF 29

FILE => 29-0191-s-lsa.dgn

USERNAME => rtrenord DATE PLOTTED => 13-OCT-2010 TIME PLOTTED => 12:58

DIST.	COUNTY	ROUTE	POST MILES TOTAL PROJECT	SHEET NO.	TOTAL SHEETS
10	SJ	5	25.0/32.7	973	1132

REGISTERED ENGINEER - CIVIL 7/28/10

10-11-10
PLANS APPROVAL DATE

REGISTERED PROFESSIONAL ENGINEER ALLEN WANG No. C 66503 Exp. 06/30/12 CIVIL STATE OF CALIFORNIA

The State of California or its officers or agents shall not be responsible for the accuracy or completeness of electronic copies of this plan sheet.

SAN JOAQUIN COUNCIL OF GOVERNMENTS
555 E. WEBER AVENUE
STOCKTON, CA 95202

RAJAPPAN & MEYER
CONSULTING ENGINEERS, INC.
1038 LEIGH AVE, SUITE 100
SAN JOSE, CA 95126

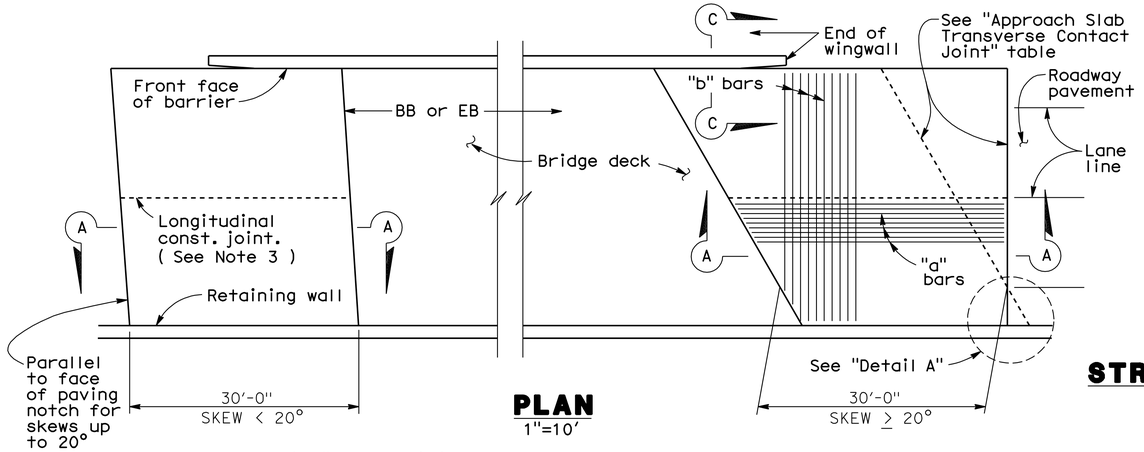

PLAN
1"=10'

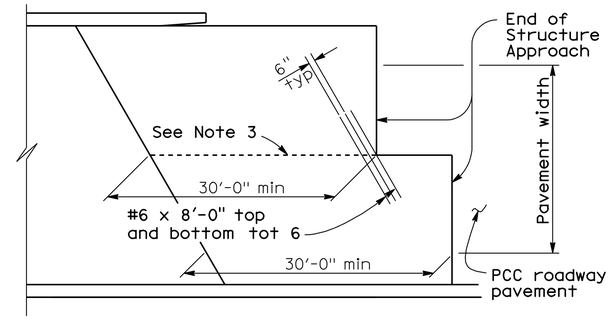

STRUCTURE APPROACH - END STAGGER DETAIL
No Scale

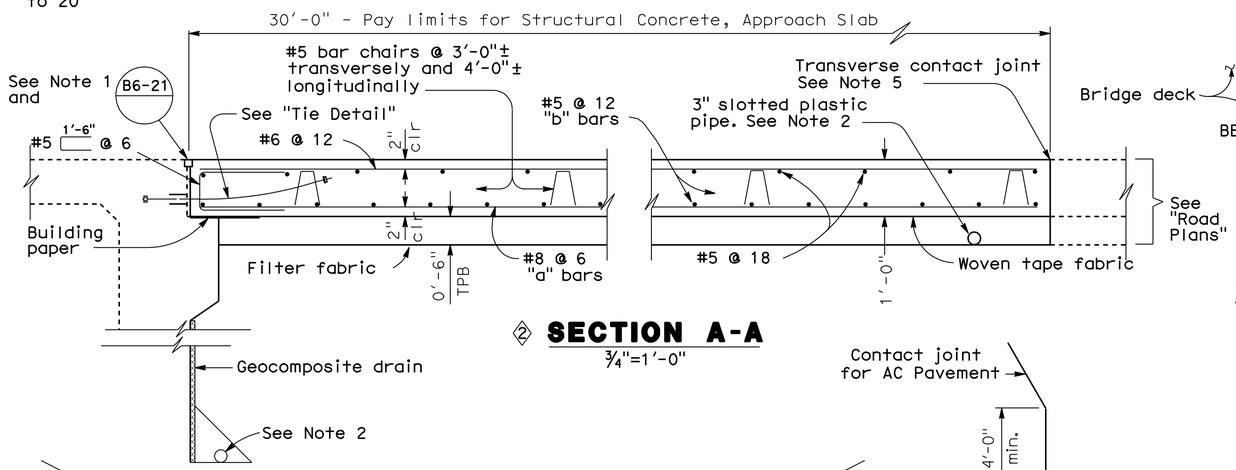

② SECTION A-A
¾"=1'-0"

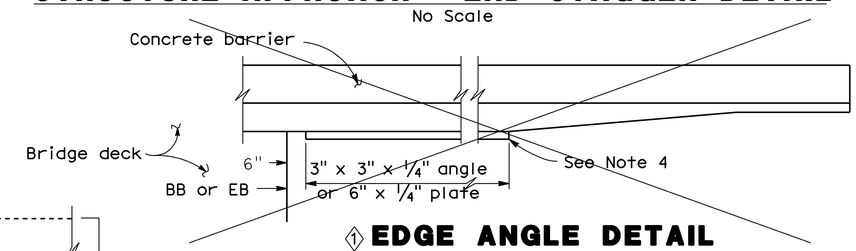

① EDGE ANGLE DETAIL
½"=1'-0"

APPROACH SLAB TRANSVERSE CONTACT JOINT		
APPROACH SKEW	WITH AC ROADWAY PAVEMENT	WITH PCC ROADWAY PAVEMENT
< 20°	Parallel to face of paving notch	Parallel to face of paving notch
20° - 45 °	Parallel to face of P N use (Detail A)	Stagger lines 24' to 36' apart
> 45°	Parallel to face of P N use (Detail A)	Stagger at each lane line

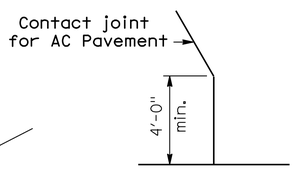

DETAIL A
No Scale

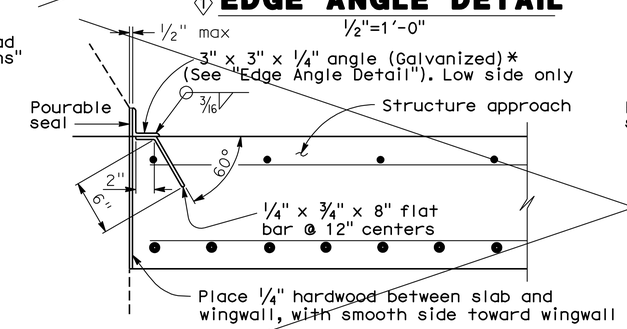

*(TO BE USED WITH TYPE 25 OR TYPE 27 CONCRETE BARRIER)

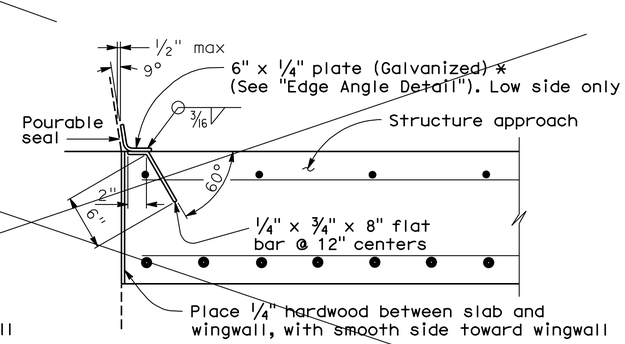

*(TO BE USED WITH TYPE 732 OR TYPE 736 CONCRETE BARRIER)

① DETAIL B
1½"=1'-0"

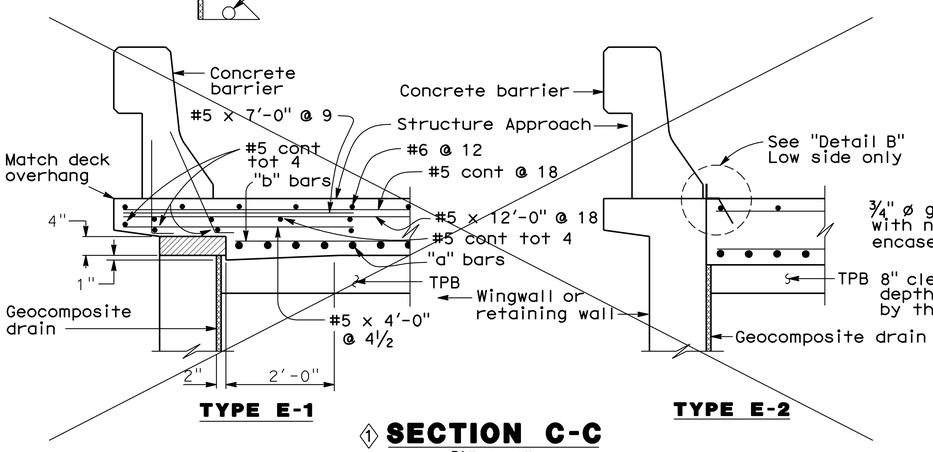

TYPE E-1 TYPE E-2

① SECTION C-C
¾"=1'-0"

(Type E-1 to be used,unless otherwise shown on plans)

Note:
The Contractor shall verify all controlling field dimensions before ordering or fabricating any material

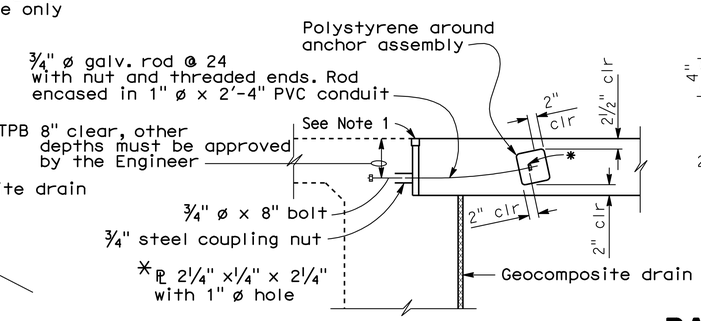

TIE DETAIL
¾"=1'-0"

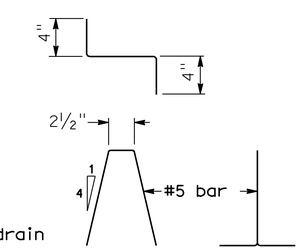

BAR CHAIR DETAIL
1½"=1'-0"

NOTES:

1. For details not noted or shown,see Structure Plans.
2. For drainage details,see "Structure Approach Drainage Details" sheet.
3. Longitudinal construction joints,when permitted by the Engineer,shall be located on lane lines.
4. End angle or plate at beginning of barrier transition, end of wingwall or end of structure approach, as applicable.
5. For transverse contact joint with new PCC paving, refer to Standard Plan P10.
6. At the contractor's option,approach slab transverse reinforcement may be placed parallel to paving notch. Spacing of transverse reinforcement is measured along ℄ roadway.

Polystyrene to be removed.

SPECIAL DETAILS

STANDARD DRAWING

FILE NO. xs3-180e

APPROVED BY M. Ha — RESPONSIBLE TECHNICAL SPECIALIST
APPROVAL DATE 8-12-08

RELEASED BY O. Alcantara — RESPONSIBLE OFFICE CHIEF
RELEASE DATE Revised

① Detail Deleted
② Detail Modified

STATE OF CALIFORNIA
DEPARTMENT OF TRANSPORTATION

DIVISION OF ENGINEERING SERVICES

BRIDGE NO. 29-0191
POST MILE 28.97

ALPINE AVENUE UC (WIDEN)
STRUCTURE APPROACH TYPE N(30D)

DS OSD 2147A (ENGLISH STANDARD DRAWING "XS" BORDER REV. 01/11/08)

ORIGINAL SCALE IN INCHES FOR REDUCED PLANS 0 1 2 3

CU 06240
EA 0G4701

DISREGARD PRINTS BEARING EARLIER REVISION DATES

REVISION DATES (PRELIMINARY STAGE ONLY) 10/16/09 12/4/09 1/18/10 5/7/10 6/11/10 7/28/10

SHEET 18 OF 29

USERNAME => trlenard

29-0191-s-sa_n30d.dgn

DATE PLOTTED => 13-OCT-2010 TIME PLOTTED => 12:58

DIST.	COUNTY	ROUTE	POST MILES TOTAL PROJECT	SHEET NO.	TOTAL SHEETS
10	SJ	5	25.0/32.7	974	1132

REGISTERED ENGINEER - CIVIL 7/28/10

10-11-10
PLANS APPROVAL DATE

REGISTERED PROFESSIONAL ENGINEER ALLEN WANG No. C 66503 Exp. 06/30/12 CIVIL STATE OF CALIFORNIA

The State of California or its officers or agents shall not be responsible for the accuracy or completeness of electronic copies of this plan sheet.

SAN JOAQUIN COUNCIL OF GOVERNMENTS
555 E. WEBER AVENUE
STOCKTON, CA 95202

RAJAPPAN & MEYER
CONSULTING ENGINEERS, INC.
1038 LEIGH AVE, SUITE 100
SAN JOSE, CA 95126

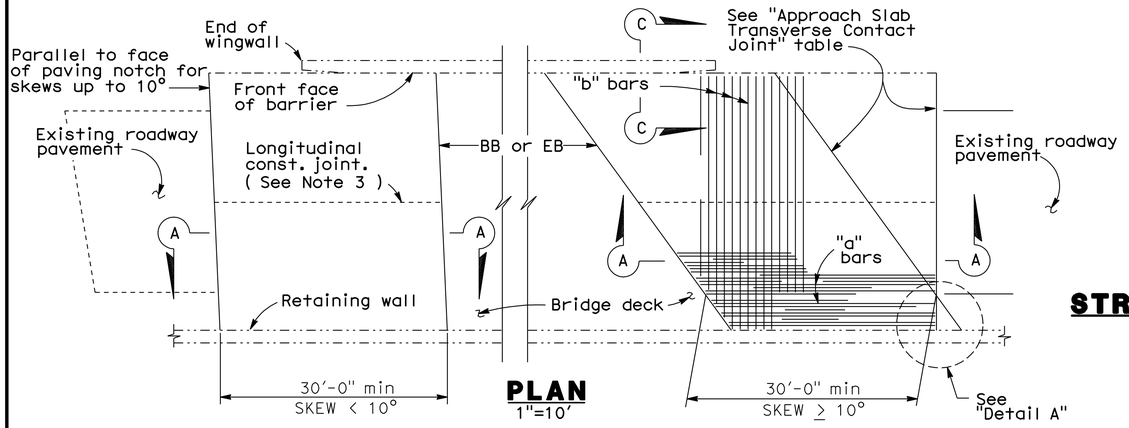

PLAN
1"=10'

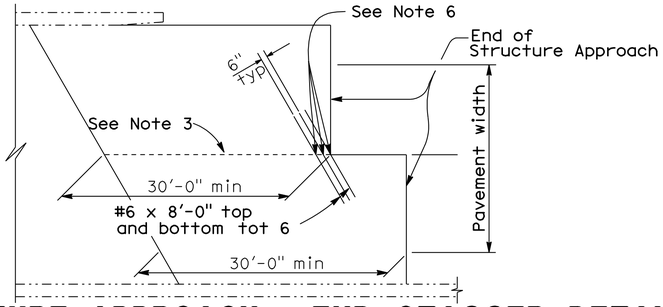

STRUCTURE APPROACH - END STAGGER DETAIL
No Scale

APPROACH SLAB TRANSVERSE CONTACT JOINT		
APPROACH SKEW	WITH AC ROADWAY PAVEMENT	WITH PCC ROADWAY PAVEMENT
< 10°	Parallel to face of paving notch	Parallel to face of paving notch
10° - 45°	Parallel to face of P N use (Detail A)	Stagger lines 24' to 36' apart
> 45°	Parallel to face of P N use (Detail A)	Stagger at each lane line

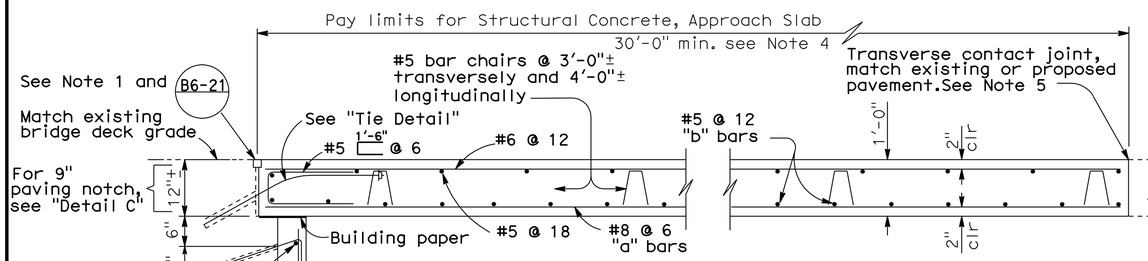

SECTION A-A
¾" = 1'-0"

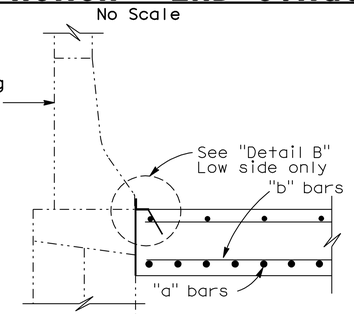

SECTION C-C
1 ¾" = 1'-0"

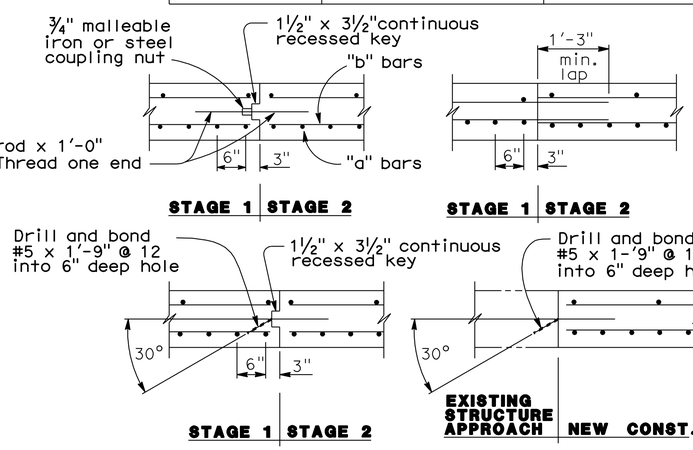

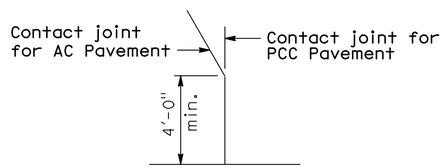

DETAIL A
No Scale

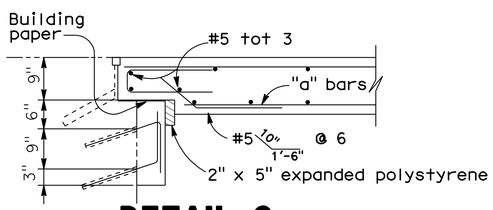

DETAIL C
¾" = 1'-0"

NOTE: For details not shown,see "Section A-A".

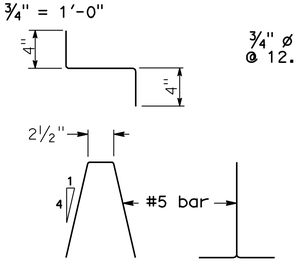

BAR CHAIR DETAIL
1½" = 1'-0"

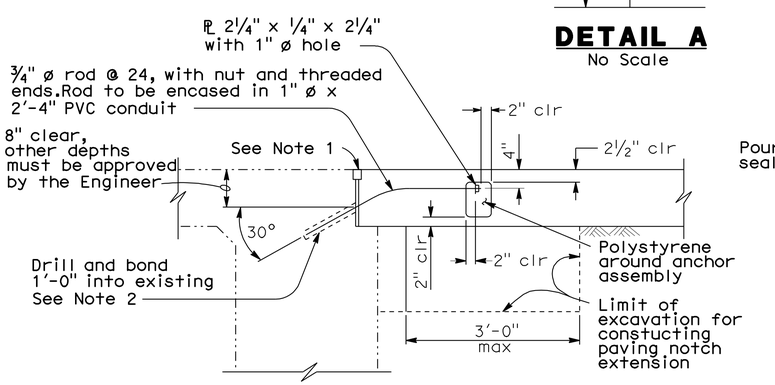

TIE DETAIL
¾" = 1'-0"

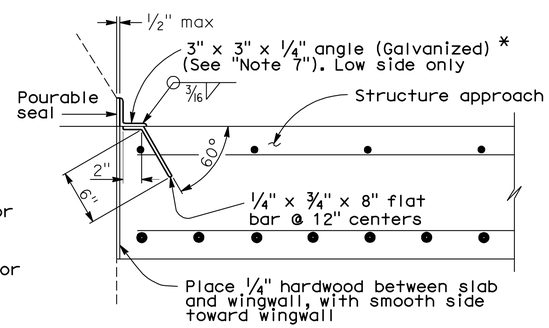

* (TO BE USED WITH TYPE 25 OR TYPE 27 CONCRETE BARRIER)

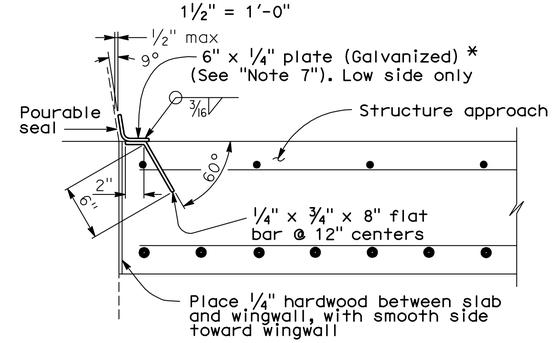

* (TO BE USED WITH TYPE 732 OR TYPE 736 CONCRETE BARRIER)

DETAIL B
1½" = 1'-0"

LONGITUDINAL CONSTRUCTION JOINT ALTERNATIVES
¾" = 1'-0"

NOTES:

1. For details not shown or noted, see Structure Plans. Adjust bar reinforcement to clear a sawcut for sealed joint,when required.
2. Space to avoid existing prestress anchorages and main reinforcement.
3. Longitudinal construction joints,when permitted by the Engineer,shall be located on lane lines.
4. Transverse contact joint shall be a minimum of 5'-0" from an existing or constructed weakened plane joint.
5. For transverse contact joint with new PCC paving. refer to Standard Plan P10.
6. Couplers are required for stage construction.
7. End angle or plate at beginning of barrier transition, end of wingwall or end of structure approach as applicable.

Note:
The Contractor shall verify all controlling field dimensions before ordering or fabricating any material

SPECIAL DETAILS

STANDARD DRAWING				
RELEASE DATE Revised	DESIGN	BY M. TRAFFALIS	CHECKED E. THORKILDSEN	RELEASED BY
FILE NO. xs3-140e	DETAILS	BY R. YEE	CHECKED E. THORKILDSEN	
	SUBMITTED	BY M. HA	DRAWING DATE 8/92	OFFICE CHIEF

1 Detail Modified

STATE OF CALIFORNIA
DEPARTMENT OF TRANSPORTATION

DIVISION OF ENGINEERING SERVICES

BRIDGE NO. 29-0191
POST MILE 28.97

ALPINE AVENUE UC (WIDEN)
STRUCTURE APPROACH TYPE R(30D)

DS OSD 2147A (ENGLISH) (REV. X/XX/XX)

ORIGINAL SCALE IN INCHES FOR REDUCED PLANS 0 1 2 3

CU 06240
EA 0G4701

DISREGARD PRINTS BEARING EARLIER REVISION DATES

REVISION DATES (PRELIMINARY STAGE ONLY) 10/16/09 12/4/09 1/18/10 5/27/10 6/17/10 7/28/10

SHEET 19 OF 29

USERNAME => trlenard

29-0191-s-sa_r30d.dgn

DATE PLOTTED => 13-OCT-2010 TIME PLOTTED => 12:58

DIST.	COUNTY	ROUTE	POST MILES TOTAL PROJECT	SHEET NO.	TOTAL SHEETS
10	SJ	5	25.0/32.7	975	1132

Allen Wang 7/28/10
REGISTERED ENGINEER - CIVIL

10-11-10
PLANS APPROVAL DATE

REGISTERED PROFESSIONAL ENGINEER
ALLEN WANG
No. C 66503
Exp. 06/30/12
CIVIL
STATE OF CALIFORNIA

The State of California or its officers or agents shall not be responsible for the accuracy or completeness of electronic copies of this plan sheet.

SAN JOAQUIN COUNCIL OF GOVERNMENTS
555 E. WEBER AVENUE
STOCKTON, CA 95202

RAJAPPAN & MEYER
CONSULTING ENGINEERS, INC.
1038 LEIGH AVE, SUITE 100
SAN JOSE, CA 95126

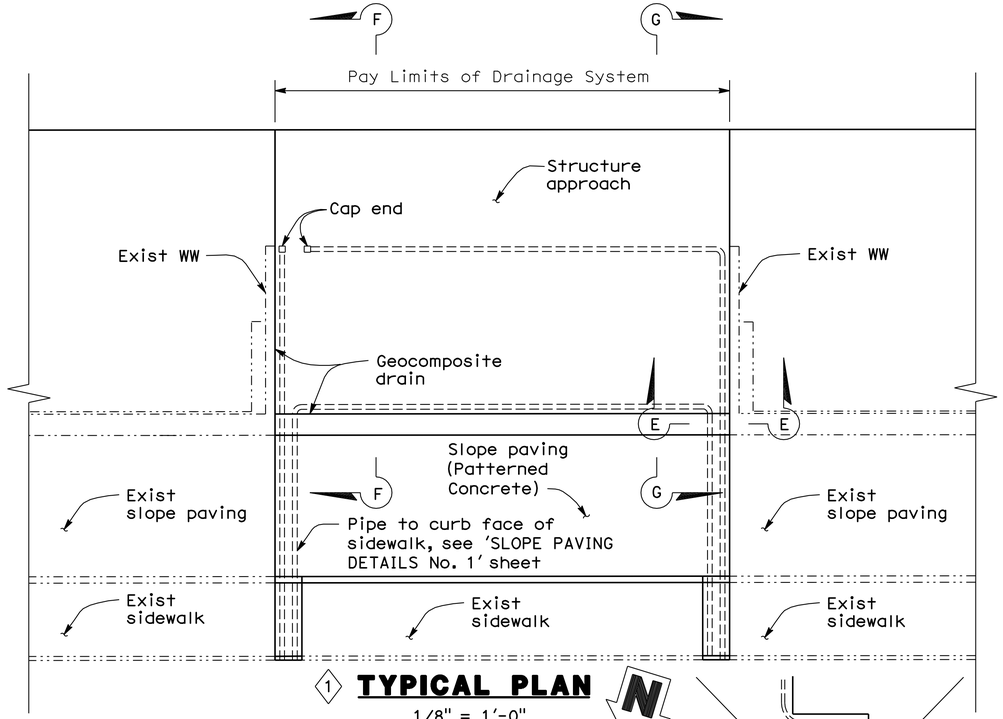

1 **TYPICAL PLAN**
1/8" = 1'-0"
(Abut 1 shown, Abut 2 similar)

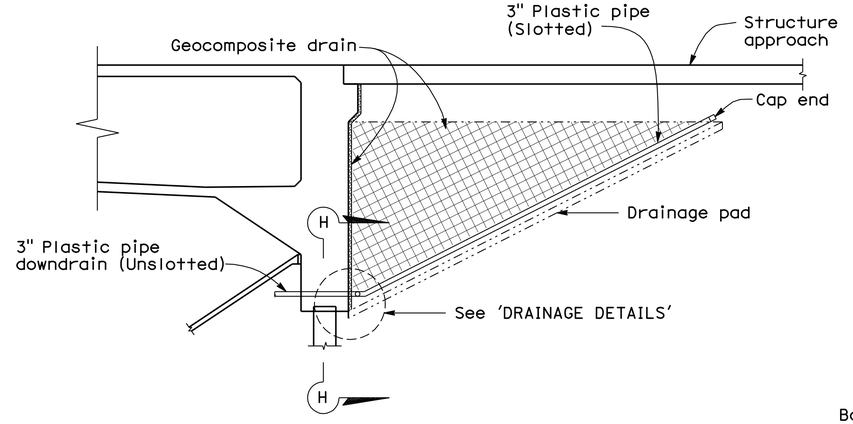

1 **SECTION F-F**
1/4" = 1'-0"

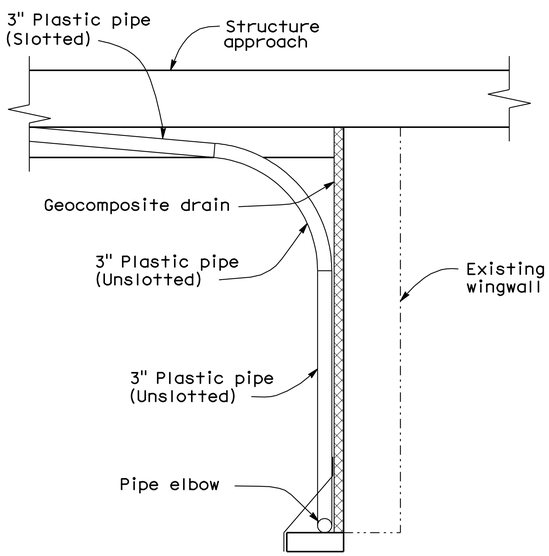

NOTE: Bends and junctions in 3" plastic pipe are 30" radius min.

1 **SECTION E-E**
3/4" = 1'-0"

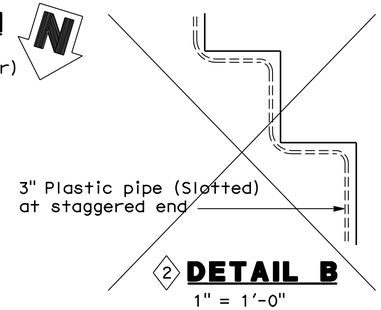

2 **DETAIL B**
1" = 1'-0"

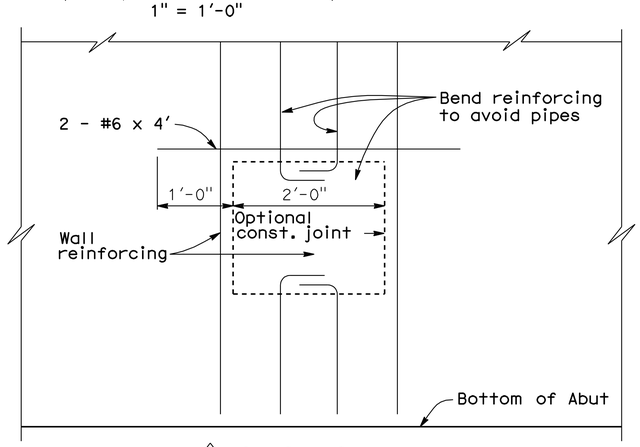

1 **SECTION H-H**
1" = 1'-0"

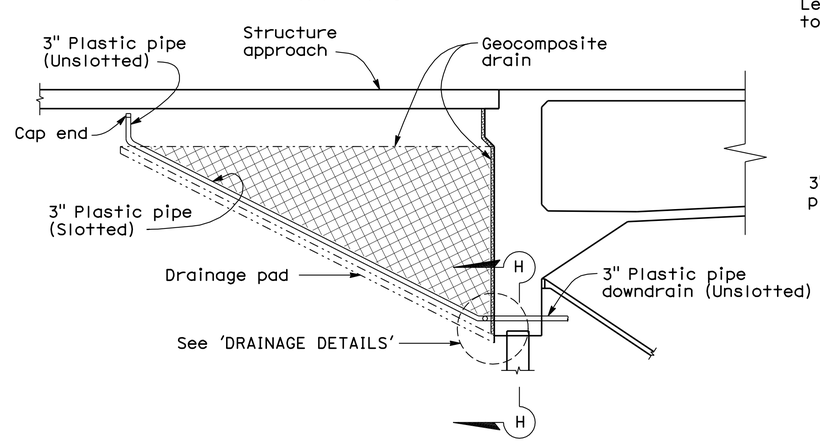

1 **SECTION G-G**
1/4" = 1'-0"

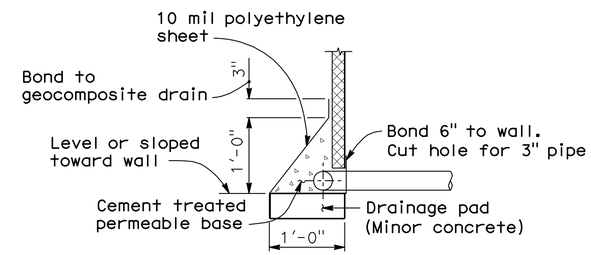

SECTION

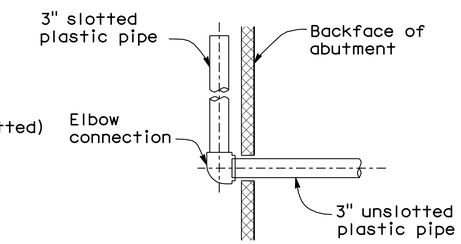

PLAN

3 **ABUTMENT DRAINAGE DETAILS**
1" = 1'-0"

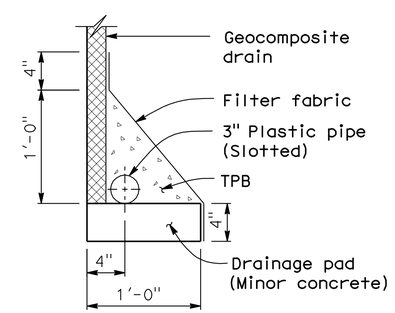

WITHOUT FOOTING

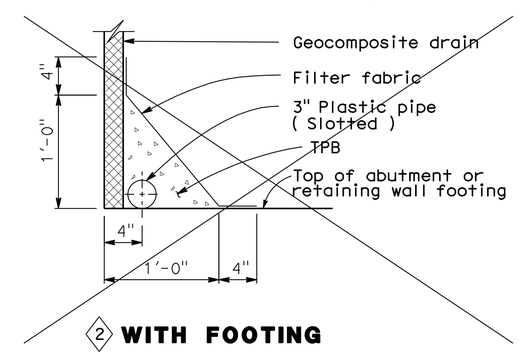

2 **WITH FOOTING**

DRAINAGE DETAILS
1 1/2" = 1'-0"

Note:
The Contractor shall verify all controlling field dimensions before ordering or fabricating any material

SPECIAL DETAILS

STANDARD DRAWING				
RELEASE DATE Revised	DESIGN	BY M. TRAFFALIS	CHECKED E. THORKILDSEN	RELEASED BY
	DETAILS	BY R. YEE	CHECKED E. THORKILDSEN	
FILE NO. xs3-110e	SUBMITTED	BY M. HA	DRAWING DATE 4/98	OFFICE CHIEF

1 Detail Modified
2 Detail Deleted
3 Detail Added

STATE OF CALIFORNIA
DEPARTMENT OF TRANSPORTATION

DIVISION OF ENGINEERING SERVICES

BRIDGE NO. 29-0191
POST MILE 28.97

ALPINE AVENUE UC (WIDEN)
STRUCTURE APPROACH DRAINAGE DETAILS

DS OSD 2147A (ENGLISH) (REV. X/XX/XX)

ORIGINAL SCALE IN INCHES FOR REDUCED PLANS 0 1 2 3

CU 06240
EA 0G4701

DISREGARD PRINTS BEARING EARLIER REVISION DATES

REVISION DATES (PRELIMINARY STAGE ONLY) 10/16/09 12/4/09 1/18/10 5/7/10 6/11/10 7/28/10

SHEET 20 OF 29

USERNAME => trlenard

29-0191-s-sadd.dgn

DATE PLOTTED => 13-OCT-2010 TIME PLOTTED => 12:58

DIST	COUNTY	ROUTE	POST MILES TOTAL PROJECT	SHEET No	TOTAL SHEETS
10	SJ	5	25.0/32.7	976	1132

REGISTERED CIVIL ENGINEER 7/28/10 DATE

10-11-10
PLANS APPROVAL DATE

REGISTERED PROFESSIONAL ENGINEER ALLEN WANG No. C 66503 Exp. 06/30/12 CIVIL STATE OF CALIFORNIA

The State of California or its officers or agents shall not be responsible for the accuracy or completeness of scanned copies of this plan sheet.

SAN JOAQUIN COUNCIL OF GOVERNMENTS
555 E. WEBER AVENUE
STOCKTON, CA 95202

RAJAPPAN & MEYER
CONSULTING ENGINEERS, INC.
1038 LEIGH AVE, SUITE 100
SAN JOSE, CA 95126

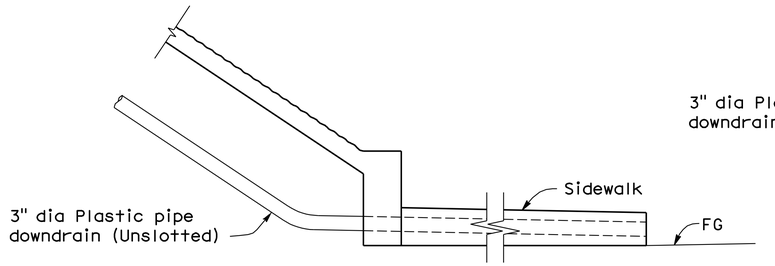

TYPICAL - WITH SIDEWALK

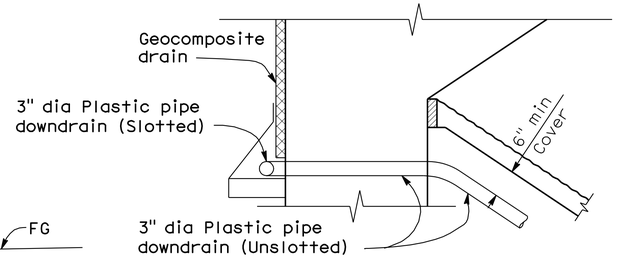

TYPICAL - DRAIN CONNECTION

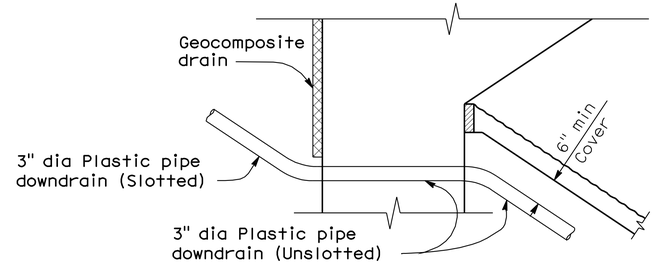

TYPICAL - DRAIN CONNECTION

DRAINAGE DETAILS

3/4" = 1'-0"

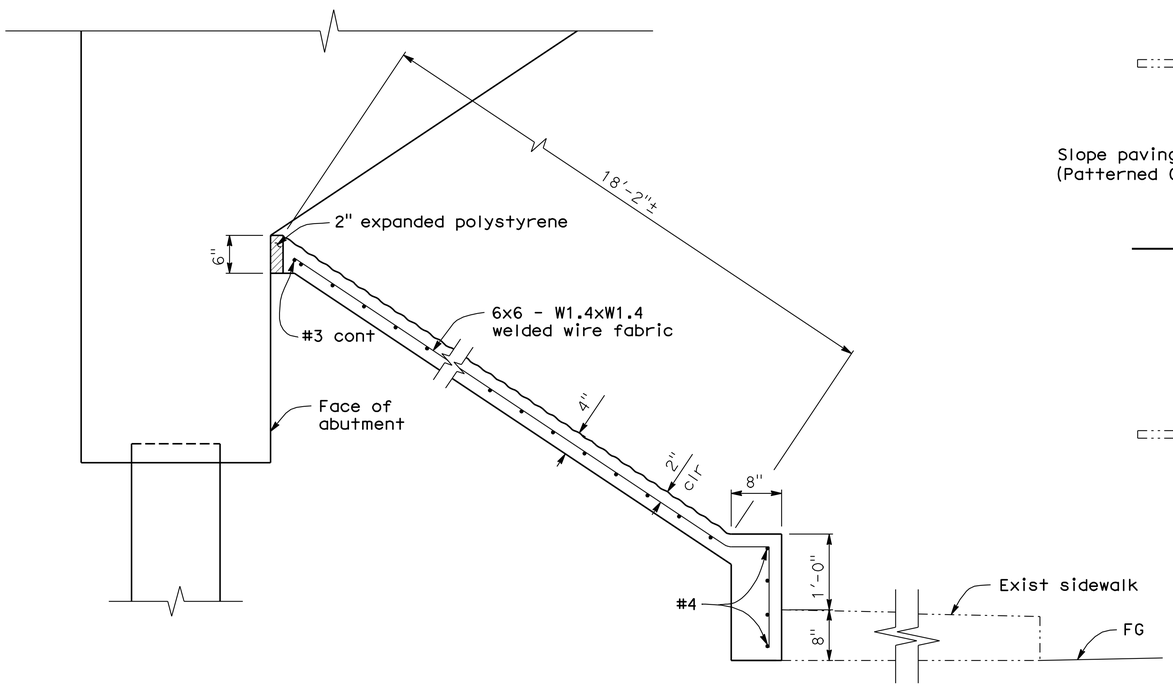

TYPICAL SECTION - CONCRETE PAVING

1" = 1'-0"

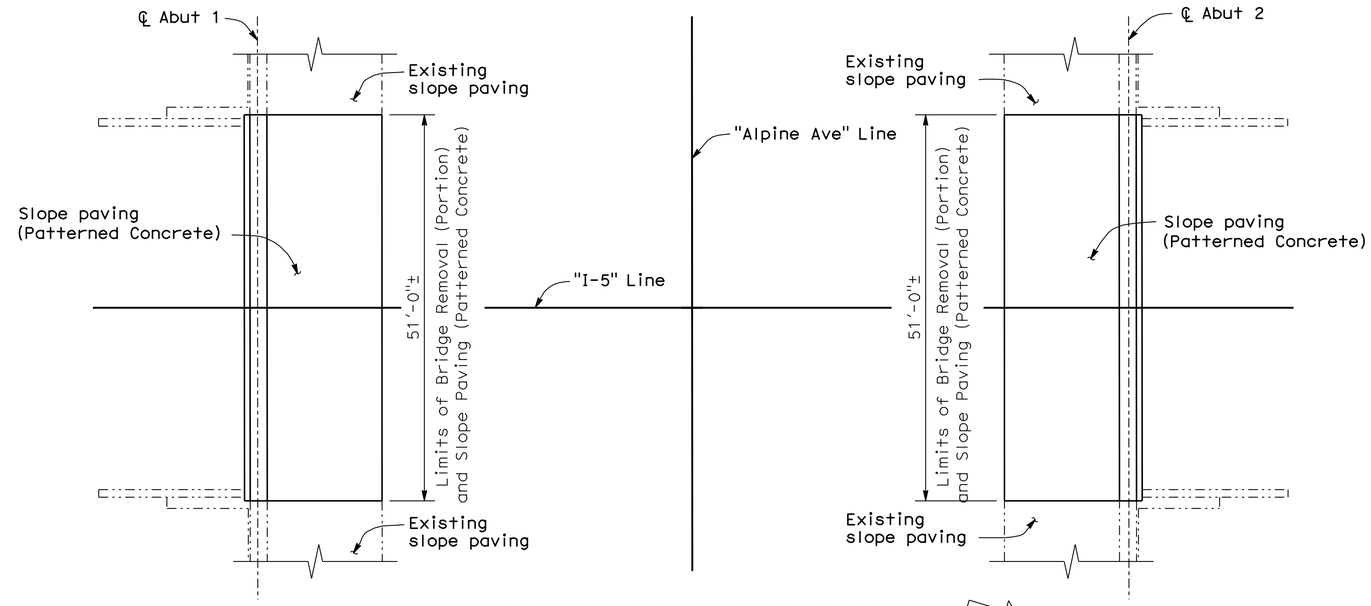

LIMITS OF SLOPE PAVING

No Scale

Notes:

1. New slope paving shall match height of existing slope paving.
2. New preformed grooves on the outsides of interior slope to coincide with the existing preformed groove near the outside face of existing exterior girder.
3. Abutment 1 shown, Abutment 2 similar.
4. Remove a 2'-0" strip of toe wall and sidewalk and place a 3" dia plastic pipe (unslotted) to discharge through curb face.
5. Reconstruct toe wall and sidewalk. Connect new toe wall to existing toe wall per 'SECTION B-B' on 'SLOPE PAVING DETAILS No. 2' sheet.
6. For 'TOE WALL RECONSTRUCTION PLAN', see 'SLOPE PAVING DETAILS No. 2' sheet.

Note:
The Contractor shall verify all controlling field dimensions before ordering or fabricating any material

DESIGN OVERSIGHT John Fujimoto
8-2-10
SIGN OFF DATE

	BY	CHECKED
DESIGN	A. WANG	P. SHINN
DETAILS	W. Y. TAN	P. SHINN
QUANTITIES	W. Y. TAN	G. WOLDETSADIK

PREPARED FOR THE STATE OF CALIFORNIA DEPARTMENT OF TRANSPORTATION

A. WANG
PROJECT ENGINEER

BRIDGE NO. 29-0191
POST MILE 28.97

ALPINE AVENUE UC (WIDEN)
SLOPE PAVING DETAILS No. 1

DESIGN DETAIL SHEET (ENGLISH) (REV. 06-01-09)

ORIGINAL SCALE IN INCHES FOR REDUCED PLANS 0 1 2 3

CU 06240
EA 0G4701

DISREGARD PRINTS BEARING EARLIER REVISION DATES

REVISION DATES (PRELIMINARY STAGE ONLY) 10/16/09 12/14/09 1/18/10 5/3/10 6/11/10 7/28/10

SHEET 21 OF 29

FILE => 29-0191-t-slpdet01.dgn

USERNAME => trlenord DATE PLOTTED => 13-OCT-2010 TIME PLOTTED => 12:58

DIST	COUNTY	ROUTE	POST MILES TOTAL PROJECT	SHEET No	TOTAL SHEETS
10	SJ	5	25.0/32.7	977	1132

REGISTERED CIVIL ENGINEER 7/28/10 DATE

10-11-10
PLANS APPROVAL DATE

REGISTERED PROFESSIONAL ENGINEER ALLEN WANG No. C 66503 Exp. 06/30/12 CIVIL STATE OF CALIFORNIA

The State of California or its officers or agents shall not be responsible for the accuracy or completeness of scanned copies of this plan sheet.

SAN JOAQUIN COUNCIL OF GOVERNMENTS
555 E. WEBER AVENUE
STOCKTON, CA 95202

RAJAPPAN & MEYER
CONSULTING ENGINEERS, INC.
1038 LEIGH AVE, SUITE 100
SAN JOSE, CA 95126

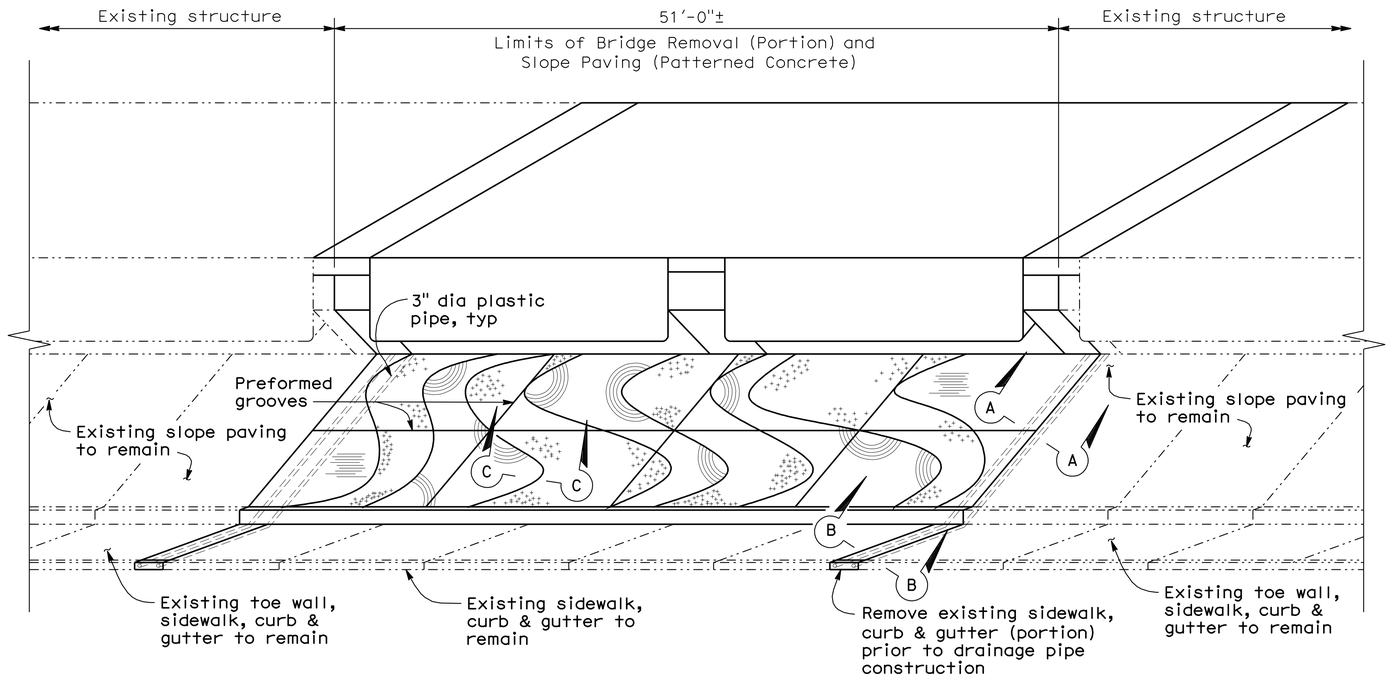

PICTORIAL VIEW OF TYPICAL INSTALLATION

No Scale

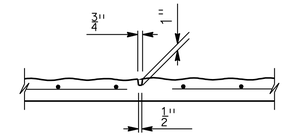

PREFORMED GROOVE

1" = 1'-0"

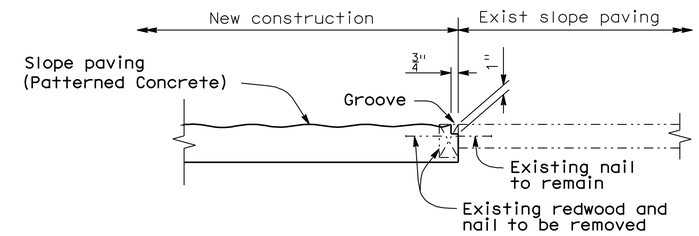

SECTION A-A

No Scale

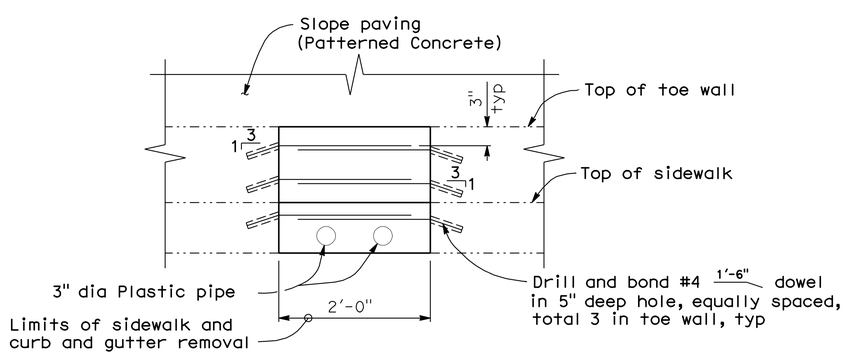

SECTION B-B

1" = 1'-0"

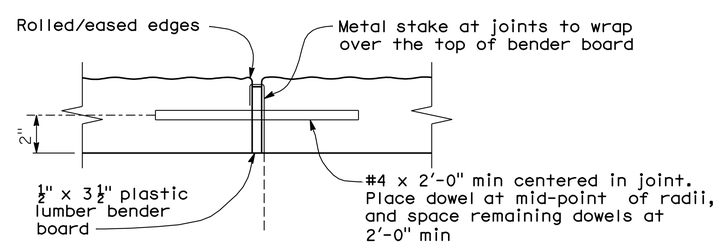

SECTION C-C

3" = 1'-0"

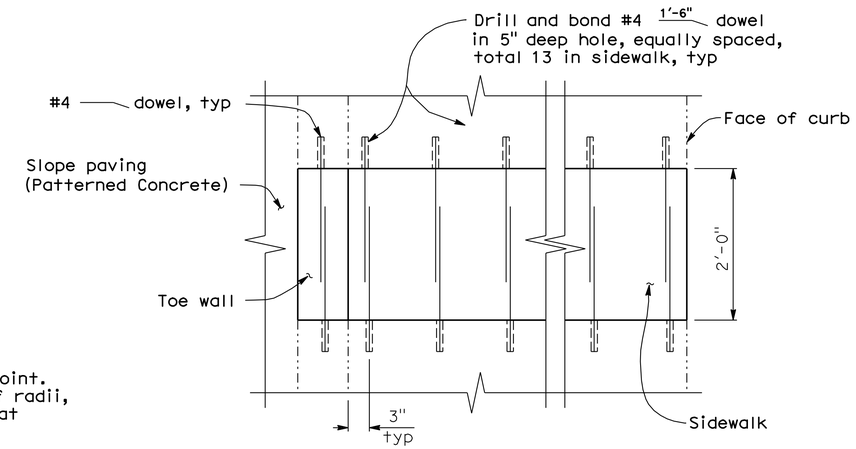

TOE WALL RECONSTRUCTION PLAN

1" = 1'-0"

Notes:

1. For slope paving aesthetics at Abut 2, see 'SLOPE PAVING DETAILS No. 3' sheet.
2. For slope paving aesthetics at Abut 1, see 'SLOPE PAVING DETAILS No. 4' sheet.

Legend:

-·-·-·- Indicates existing structure

Note:
The Contractor shall verify all controlling field dimensions before ordering or fabricating any material

DESIGN OVERSIGHT John Fujimoto
8-2-10
SIGN OFF DATE

	BY	CHECKED
DESIGN	A. WANG	P. SHINN
DETAILS	W. Y. TAN	P. SHINN
QUANTITIES	W. Y. TAN	G. WOLDETSADIK

PREPARED FOR THE STATE OF CALIFORNIA DEPARTMENT OF TRANSPORTATION

A. WANG
PROJECT ENGINEER

BRIDGE NO. 29-0191
POST MILE 28.97

ALPINE AVENUE UC (WIDEN)
SLOPE PAVING DETAILS No. 2

DESIGN DETAIL SHEET (ENGLISH) (REV. 06-01-09)

ORIGINAL SCALE IN INCHES FOR REDUCED PLANS 0 1 2 3

CU 06240
EA 0G4701

DISREGARD PRINTS BEARING EARLIER REVISION DATES

REVISION DATES (PRELIMINARY STAGE ONLY) 10/16/09 12/17/09 1/18/10 5/3/10 6/17/10 7/28/10

SHEET 22 OF 29

FILE => 29-0191-t-slpdet02.dgn

USERNAME => trlenard DATE PLOTTED => 13-OCT-2010 TIME PLOTTED => 12:59

DIST	COUNTY	ROUTE	POST MILES TOTAL PROJECT	SHEET No	TOTAL SHEETS
10	SJ	5	25.0/32.7	978	1132

REGISTERED CIVIL ENGINEER — DATE 7/28/10

10-11-10
PLANS APPROVAL DATE

REGISTERED PROFESSIONAL ENGINEER — ALLEN WANG — No. C 66503 — Exp. 06/30/12 — CIVIL — STATE OF CALIFORNIA

The State of California or its officers or agents shall not be responsible for the accuracy or completeness of scanned copies of this plan sheet.

SAN JOAQUIN COUNCIL OF GOVERNMENTS
555 E. WEBER AVENUE
STOCKTON, CA 95202

RAJAPPAN & MEYER
CONSULTING ENGINEERS, INC.
1038 LEIGH AVE, SUITE 100
SAN JOSE, CA 95126

DERIVI CONSTRUCTION & ARCHITECTURE, INC.
924 N. YOSEMITE STREET
STOCKTON, CA 95203

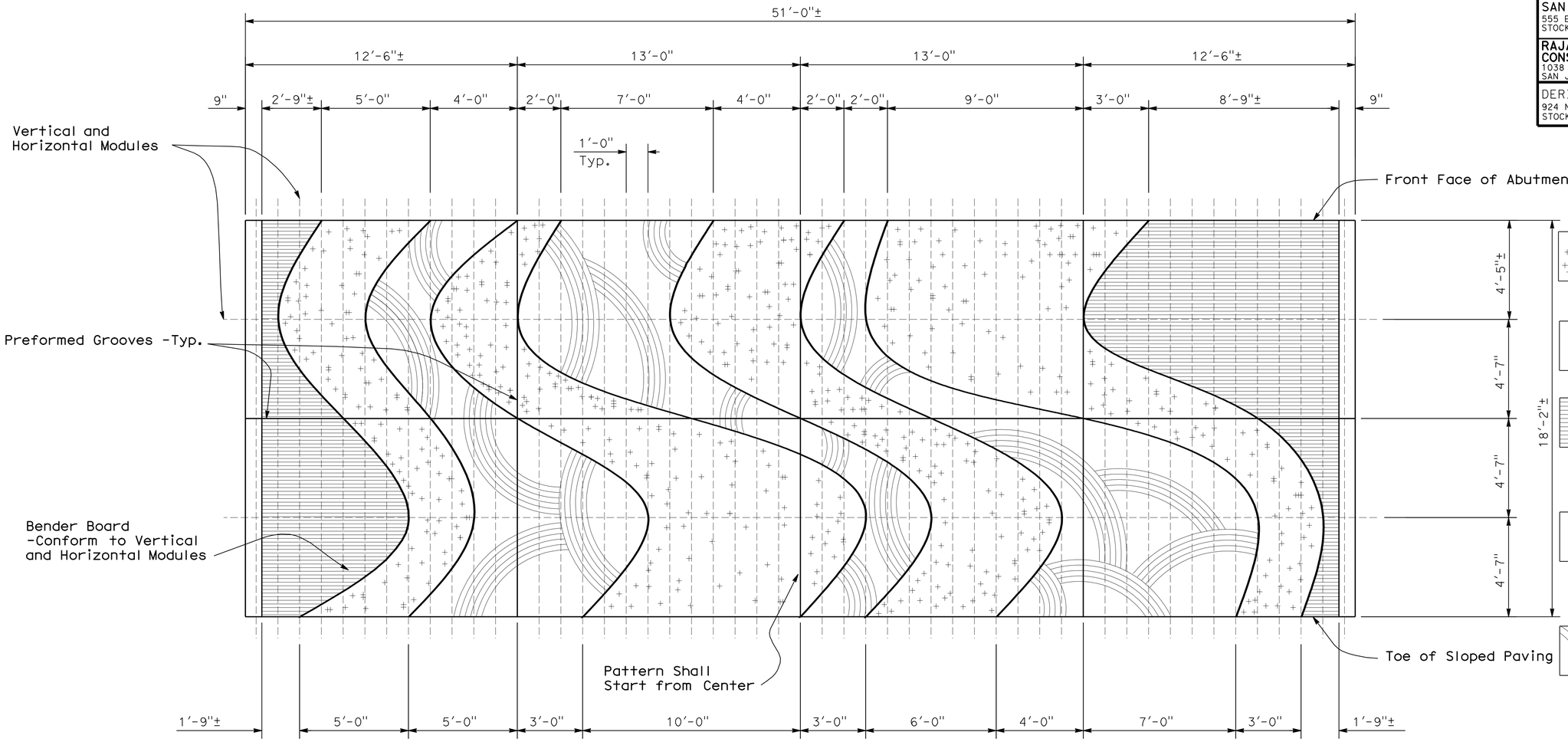

NORTH ELEVATION

3/8" = 1'-0"

Pattern Legend

- Curved Plastic Lumber Bender Board (1/2 " width x 3½" depth) between Concrete Patterns
- Concrete Pattern A Vertical Rough Broom Finish
- Concrete Pattern B Horizontal Scored Metal Rake Tooling (1" on center +/- x ½"Depth Max) over Horizontal Rough Broom Finish
- Concrete Pattern C Randomly Seeded Aggregate (40% of Surface Covered) with 1 ½"-2" Aggregate
- Concrete Pattern D 5-Prong Rake Tooling (4" on center x ½" Depth Max) Score in Arcs over Vertical Rough Broom Finish -Start and End Points

Shall Not Overlap Other Patterns -Pattern Shown is Schematic

Note:
The Contractor shall verify all controlling field dimensions before ordering or fabricating any material

DESIGN OVERSIGHT — John Fujimoto
8-2-10
SIGN OFF DATE

	BY	CHECKED
DESIGN	C. D. B. FRANKEL	W. Y. TAN
DETAILS	C. D. B. FRANKEL	W. Y. TAN
QUANTITIES	W. Y. TAN	G. WOLDETSADIK

PREPARED FOR THE STATE OF CALIFORNIA DEPARTMENT OF TRANSPORTATION

A. WANG
PROJECT ENGINEER

BRIDGE NO. 29-0191
POST MILE 28.97

ALPINE AVENUE UC (WIDEN)
SLOPE PAVING DETAILS No. 3

DESIGN DETAIL SHEET (ENGLISH) (REV. 06-01-09)

ORIGINAL SCALE IN INCHES FOR REDUCED PLANS 0 1 2 3

CU 06240
EA 0G4701

DISREGARD PRINTS BEARING EARLIER REVISION DATES → REVISION DATES (PRELIMINARY STAGE ONLY) 10/16/09 12/17/09 1/18/10 5/3/10 6/17/10 7/28/10

SHEET 23 OF 29

FILE => 29-0191-t-slpdet03.dgn

USERNAME => trlenard DATE PLOTTED => 13-OCT-2010 TIME PLOTTED => 12:59

DIST	COUNTY	ROUTE	POST MILES TOTAL PROJECT	SHEET No	TOTAL SHEETS
10	SJ	5	25.0/32.7	979	1132

REGISTERED CIVIL ENGINEER — DATE 7/28/10

10-11-10
PLANS APPROVAL DATE

REGISTERED PROFESSIONAL ENGINEER — ALLEN WANG — No. C 66503 — Exp. 06/30/12 — CIVIL — STATE OF CALIFORNIA

The State of California or its officers or agents shall not be responsible for the accuracy or completeness of scanned copies of this plan sheet.

SAN JOAQUIN COUNCIL OF GOVERNMENTS
555 E. WEBER AVENUE
STOCKTON, CA 95202

RAJAPPAN & MEYER
CONSULTING ENGINEERS, INC.
1038 LEIGH AVE, SUITE 100
SAN JOSE, CA 95126

DERIVI CONSTRUCTION & ARCHITECTURE, INC.
924 N. YOSEMITE STREET
STOCKTON, CA 95203

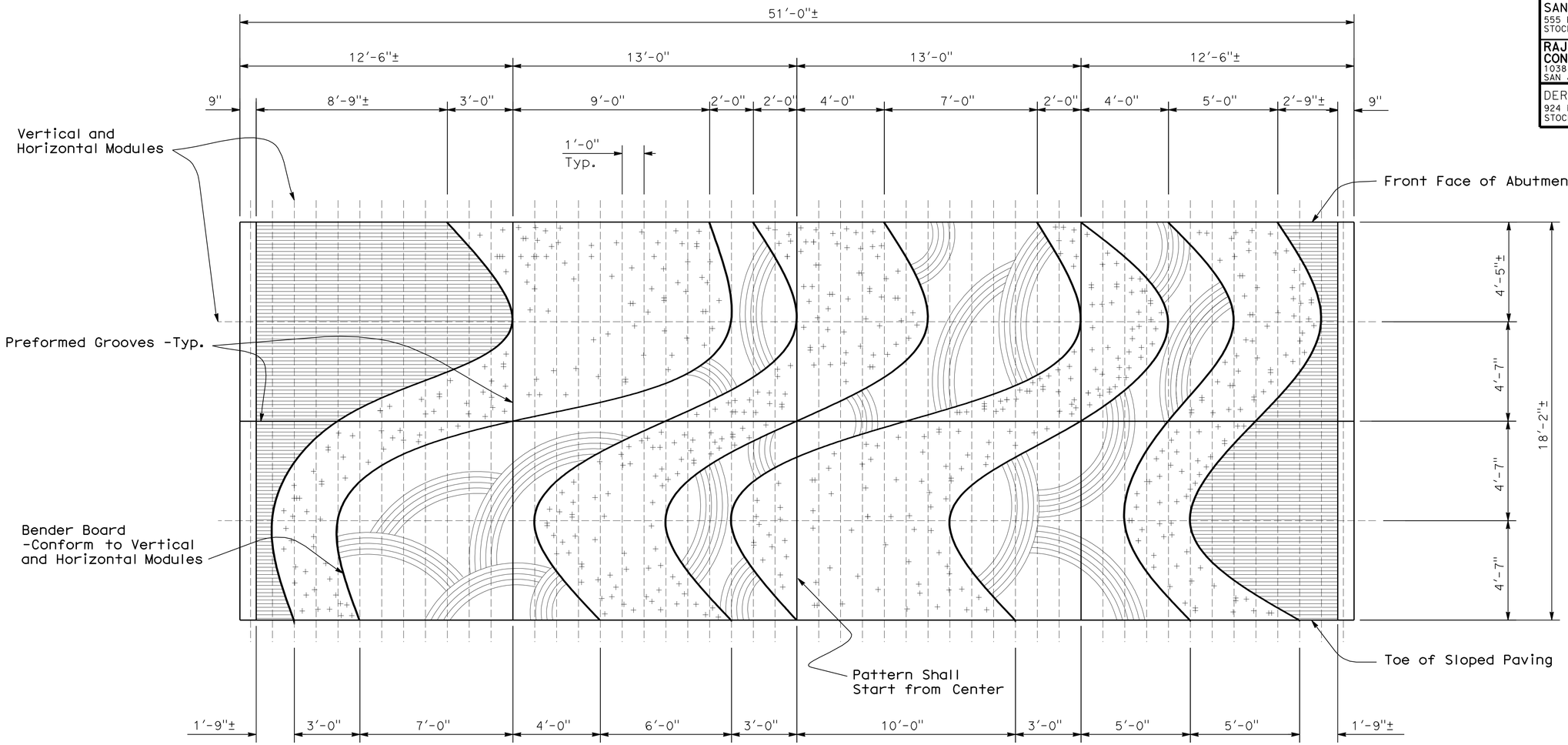

SOUTH ELEVATION

3/8" = 1'-0"

Pattern Legend

- Curved Plastic Lumber Bender Board (½" width x 3½" depth) between Concrete Patterns
- Concrete Pattern A Vertical Rough Broom Finish
- Concrete Pattern B Horizontal Scored Metal Rake Tooling (1" on center +/- x ½"Depth Max) over Horizontal Rough Broom Finish
- Concrete Pattern C Randomly Seeded Aggregate (40% of Surface Covered) with 1 ½"-2" Aggregate
- Concrete Pattern D 5-Prong Rake Tooling (4" on center x ½" Depth Max) Score in Arcs over Vertical Rough Broom Finish -Start and End Points Shall Not Overlap Other Patterns -Pattern Shown is Schematic

Note:
The Contractor shall verify all controlling field dimensions before ordering or fabricating any material

DESIGN OVERSIGHT John Fujimoto
8-2-10
SIGN OFF DATE

	BY	CHECKED
DESIGN	C. D. B. FRANKEL	W. Y. TAN
DETAILS	C. D. B. FRANKEL	W. Y. TAN
QUANTITIES	W. Y. TAN	G. WOLDETSADIK

PREPARED FOR THE STATE OF CALIFORNIA DEPARTMENT OF TRANSPORTATION

A. WANG
PROJECT ENGINEER

BRIDGE NO. 29-0191
POST MILE 28.97

ALPINE AVENUE UC (WIDEN)
SLOPE PAVING DETAILS No. 4

DESIGN DETAIL SHEET (ENGLISH) (REV. 06-01-09)

ORIGINAL SCALE IN INCHES FOR REDUCED PLANS 0 1 2 3

CU 06240
EA 0G4701

DISREGARD PRINTS BEARING EARLIER REVISION DATES

REVISION DATES (PRELIMINARY STAGE ONLY) 10/16/09 12/4/09 1/18/10 5/3/10 6/11/10 7/28/10

SHEET 24 OF 29

FILE => 29-0191-t-slpdet04.dgn

USERNAME => trlenard DATE PLOTTED => 13-OCT-2010 TIME PLOTTED => 12:59

DIST.	COUNTY	ROUTE	POST MILES TOTAL PROJECT	SHEET NO.	TOTAL SHEETS
10	SJ	5	25.0/32.7	980	1132

Allen Wang 7/28/10
REGISTERED ENGINEER - CIVIL

10-11-10
PLANS APPROVAL DATE

REGISTERED PROFESSIONAL ENGINEER
ALLEN WANG
No. C 66503
Exp. 06/30/12
CIVIL
STATE OF CALIFORNIA

The State of California or its officers or agents shall not be responsible for the accuracy or completeness of electronic copies of this plan sheet.

SAN JOAQUIN COUNCIL OF GOVERNMENTS
555 E. WEBER AVENUE
STOCKTON, CA 95202

RAJAPPAN & MEYER
CONSULTING ENGINEERS, INC.
1038 LEIGH AVE, SUITE 100
SAN JOSE, CA 95126

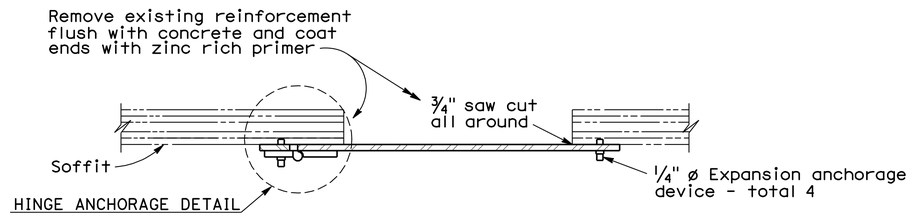

SECTION A-A

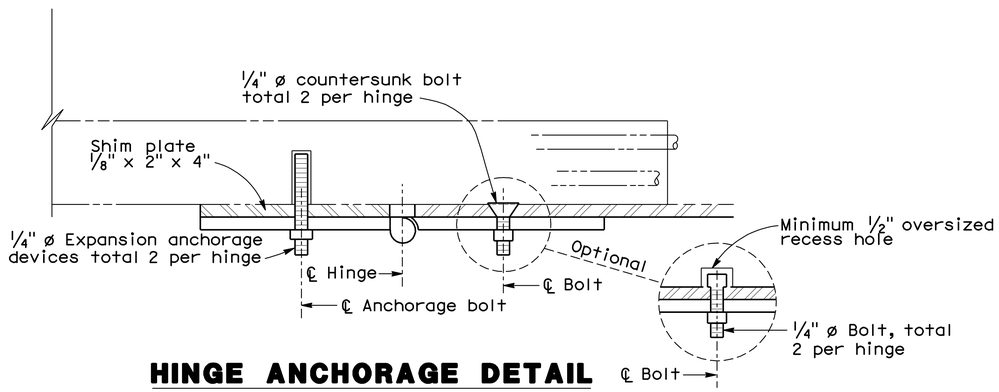

HINGE ANCHORAGE DETAIL

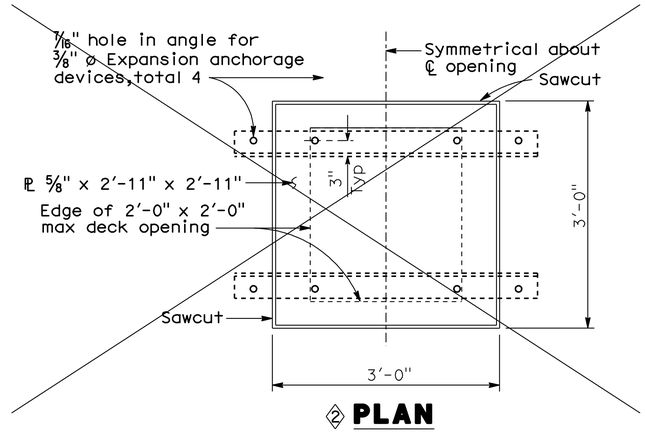

② PLAN

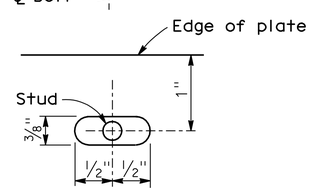

DETAIL A

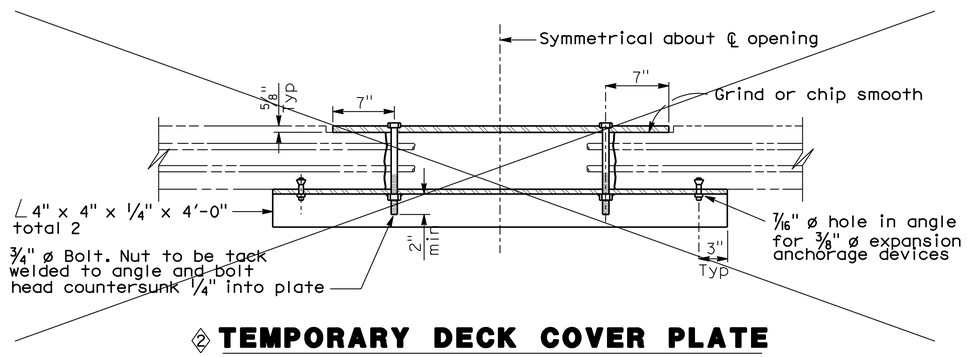

② TEMPORARY DECK COVER PLATE

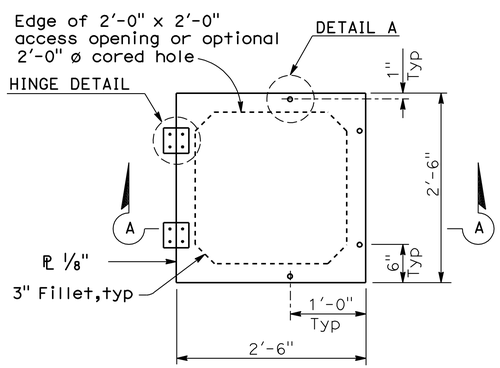

PLAN

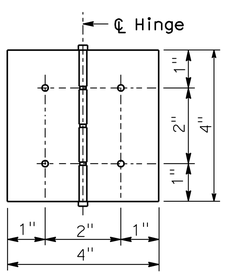

HINGE DETAIL

SOFFIT ACCESS DOOR ASSEMBLY

Note: Soffit access door opening direction to be determined by the Engineer

NOTES:

1. Non-removable pin in hinge.
2. Hinge assembly to be galvanized, brass or stainless steel.
3. Use thread locking system for all hinge nuts.
4. Hinge assembly to be minimum 1/8" thick.

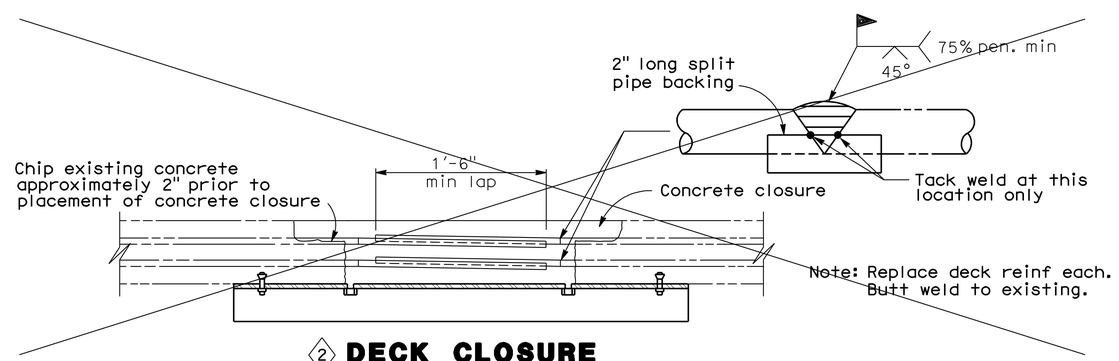

② DECK CLOSURE

Note:
The Contractor shall verify all controlling field dimensions before ordering or fabricating any material

NO SCALE
SPECIAL DETAILS ①

STANDARD DRAWING				
RELEASE DATE Revised	DESIGN	BY PAT HIPLEY	CHECKED ROBIN ROGERSON	RELEASED BY
FILE NO. xs1-310	DETAILS	BY R. YEE	CHECKED PAT HIPLEY	
	SUBMITTED	BY RAY ZELINSKI	DRAWING DATE 10/92	OFFICE CHIEF

① Sheet Title Revised
② Detail Deleted

STATE OF CALIFORNIA
DEPARTMENT OF TRANSPORTATION

DIVISION OF ENGINEERING SERVICES

BRIDGE NO. 29-0191
POST MILE 28.97

ALPINE AVENUE UC (WIDEN)
SOFFIT OPENINGS

DS OSD 2147A (ENGLISH) (REV. X/XX/XX)

ORIGINAL SCALE IN INCHES FOR REDUCED PLANS 0 1 2 3

CU 06240
EA 0G4701

DISREGARD PRINTS BEARING EARLIER REVISION DATES

REVISION DATES (PRELIMINARY STAGE ONLY): 10/16/09 12/4/09 1/18/10 5/7/10 6/11/10 7/28/10

SHEET 25 OF 29

USERNAME => trlenard

29-0191-y-so.dgn

DATE PLOTTED => 13-OCT-2010 TIME PLOTTED => 12:59

DIST	COUNTY	ROUTE	POST MILES TOTAL PROJECT	SHEET No	TOTAL SHEETS
10	SJ	5	25.0/32.7	981	1132

GEOTECHNICAL PROFESSIONAL — DATE 7/28/10

10-11-10
PLANS APPROVAL DATE

REGISTERED PROFESSIONAL ENGINEER — GARY PARIKH — No. G.E. 666 — Exp. 12/31/11 — GEOTECHNICAL — STATE OF CALIFORNIA

The State of California or its officers or agents shall not be responsible for the accuracy or completeness of scanned copies of this plan sheet.

SAN JOAQUIN COUNCIL OF GOVERNMENTS
555 EAST WEBER AVENUE
STOCKTON, CALIFORNIA 95202

PARIKH CONSULTANTS, INC.
2360 QUME DRIVE, SUITE A
SAN JOSE, CA 95131

REFERENCE: CALTRANS SOIL & ROCK LOGGING, CLASSIFICATION, AND PRESENTATION MANUAL (JUNE 2007)

CEMENTATION

Description	Criteria
Weak	Crumbles or breaks with handling or little finger pressure.
Moderate	Crumbles or breaks with considerable finger pressure.
Strong	Will not crumble or break with finger pressure.

CONSISTENCY OF COHESIVE SOILS

Description	Unconfined Compressive Strength (tsf)	Pocket Penetrometer Measurement (tsf)	Torvane Measurement (tsf)	Field Approximation
Very Soft	< 0.25	< 0.25	< 0.12	Easily penetrated several inches by fist
Soft	0.25 to 0.50	0.25 to 0.50	0.12 to 0.25	Easily penetrated several inches by thumb
Medium Stiff	0.50 to 1.0	0.50 to 1.0	0.25 to 0.50	Penetrated several inches by thumb with moderate effort
Stiff	1 to 2	1 to 2	0.50 to 1.0	Readily indented by thumb but penetrated only with great effort
Very Stiff	2 to 4	2 to 4	1.0 to 2.0	Readily indented by thumbnail
Hard	> 4.0	> 4.0	> 2.0	Indented by thumbnail with difficulty

BOREHOLE IDENTIFICATION

Symbol	Hole Type	Description
Size	A	Auger Boring
Size	R P	Rotary drilled boring Rotary percussion boring (air)
Size	R	Rotary drilled diamond core
Size	HD HA	Hand driven (1-inch soil tube) Hand Auger
●	D	Dynamic Cone Penetration Boring
▲	CPT	Cone Penetration Test (ASTM D 5778-95)
⬚	O	Other

Note: Size in inches.

PLASTICITY OF FINE-GRAINED SOILS

Description	Criteria
Nonplastic	A 1/8-inch thread cannot be rolled at any water content.
Low	The thread can barely be rolled and the lump cannot be formed when drier than the plastic limit.
Medium	The thread is easy to roll and not much time is required to reach the plastic limit. The thread cannot be rerolled after reaching the plastic limit. The lump crumbles when drier than the plastic limit.
High	It takes considerable time rolling and kneading to reach the plastic limit. The thread can be rerolled several times after reaching the plastic limit. The lump can be formed without crumbling when drier than the plastic limit.

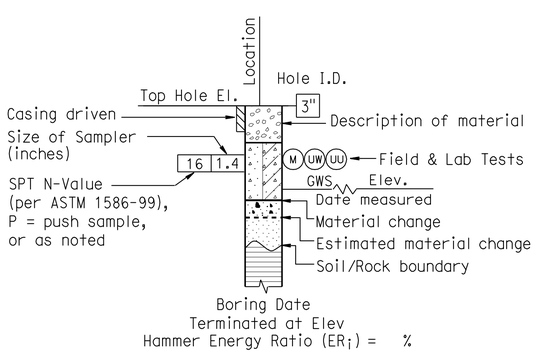

ROTARY BORING

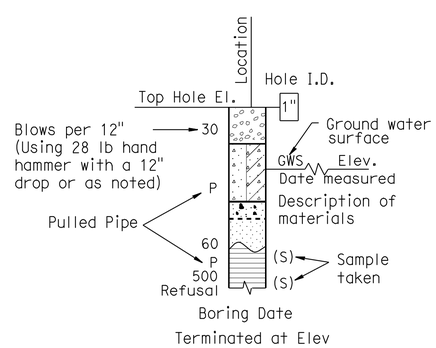

HAND BORING

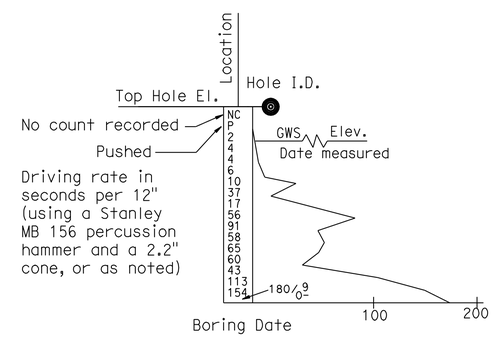

DYNAMIC CONE PENETRATION BORING

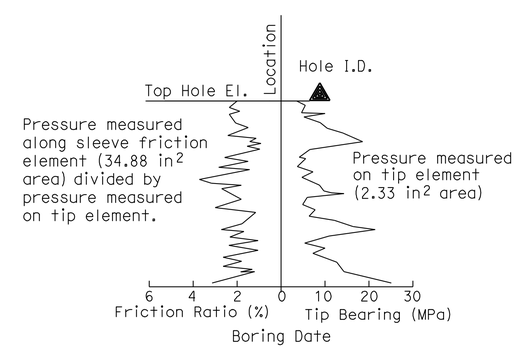

CONE PENETRATION TEST (CPT) SOUNDING

DESIGN OVERSIGHT John Fujimoto 8-2-10 SIGN OFF DATE	DRAWN BY O. GOUTHIER CHECKED BY D. WANG	S. DUDDU - A. R. BHARADWAJ FIELD INVESTIGATION BY: DATE: MARCH 2009 - APRIL 2009	PREPARED FOR THE STATE OF CALIFORNIA DEPARTMENT OF TRANSPORTATION	A. LAM PROJECT ENGINEER	BRIDGE NO. 29-0191 POST MILES 28.97

ALPINE AVENUE UC (WIDEN)
SOIL LEGEND 1 OF 2

OGS CIVIL LOG OF TEST BORINGS SHEET (ENGLISH) (REV. 06-01-09)

ORIGINAL SCALE IN INCHES FOR REDUCED PLANS 0 1 2 3

CU 06240
EA 0G4701

DISREGARD PRINTS BEARING EARLIER REVISION DATES — REVISION DATES: 10/18/09 12/04/09 01/18/10 04/28/10 06/11/10 7/28/10

SHEET 26 OF 29

FILE => 29-0191-z-lttb01.dgn

USERNAME => friehard DATE PLOTTED => 13-OCT-2010 TIME PLOTTED => 12:59

REFERENCE: CALTRANS SOIL & ROCK LOGGING, CLASSIFICATION, AND PRESENTATION MANUAL (JUNE 2007)

DIST	COUNTY	ROUTE	POST MILES TOTAL PROJECT	SHEET No	TOTAL SHEETS
10	SJ	5	25.0/32.7	982	1132

GEOTECHNICAL PROFESSIONAL — DATE 7/28/10

PLANS APPROVAL DATE 10-11-10

REGISTERED PROFESSIONAL ENGINEER — GARY PARIKH — No. G.E. 666 — Exp. 12/31/11 — GEOTECHNICAL — STATE OF CALIFORNIA

The State of California or its officers or agents shall not be responsible for the accuracy or completeness of scanned copies of this plan sheet.

SAN JOAQUIN COUNCIL OF GOVERNMENTS
555 EAST WEBER AVENUE
STOCKTON, CALIFORNIA 95202

PARIKH CONSULTANTS, INC.
2360 QUME DRIVE, SUITE A
SAN JOSE, CA 95131

GROUP SYMBOLS AND NAMES

Graphic/Symbol	Group Names	Graphic/Symbol	Group Names
GW	Well-graded GRAVEL Well-graded GRAVEL with SAND	CL	Lean CLAY Lean CLAY with SAND Lean CLAY with GRAVEL SANDY lean CLAY SANDY lean CLAY with GRAVEL GRAVELLY lean CLAY GRAVELLY lean CLAY with SAND
GP	Poorly graded GRAVEL Poorly graded GRAVEL with SAND		
GW-GM	Well-graded GRAVEL with SILT Well-graded GRAVEL with SILT and SAND	CL-ML	SILTY CLAY SILTY CLAY with SAND SILTY CLAY with GRAVEL SANDY SILTY CLAY SANDY SILTY CLAY with GRAVEL GRAVELLY SILTY CLAY GRAVELLY SILTY CLAY with SAND
GW-GC	Well-graded GRAVEL with CLAY (or SILTY CLAY) Well-graded GRAVEL with CLAY and SAND (or SILTY CLAY and SAND)		
GP-GM	Poorly graded GRAVEL with SILT Poorly graded GRAVEL with SILT and SAND	ML	SILT SILT with SAND SILT with GRAVEL SANDY SILT SANDY SILT with GRAVEL GRAVELLY SILT GRAVELLY SILT with SAND
GP-GC	Poorly graded GRAVEL with CLAY (or SILTY CLAY) Poorly graded GRAVEL with CLAY and SAND (or SILTY CLAY and SAND)		
GM	SILTY GRAVEL SILTY GRAVEL with SAND	OL	ORGANIC lean CLAY ORGANIC lean CLAY with SAND ORGANIC lean CLAY with GRAVEL SANDY ORGANIC lean CLAY SANDY ORGANIC lean CLAY with GRAVEL GRAVELLY ORGANIC lean CLAY GRAVELLY ORGANIC lean CLAY with SAND
GC	CLAYEY GRAVEL CLAYEY GRAVEL with SAND		
GC-GM	SILTY, CLAYEY GRAVEL SILTY, CLAYEY GRAVEL with SAND	OL	ORGANIC SILT ORGANIC SILT with SAND ORGANIC SILT with GRAVEL SANDY ORGANIC SILT SANDY ORGANIC SILT with GRAVEL GRAVELLY ORGANIC SILT GRAVELLY ORGANIC SILT with SAND
SW	Well-graded SAND Well-graded SAND with GRAVEL		
SP	Poorly graded SAND Poorly graded SAND with GRAVEL	CH	Fat CLAY Fat CLAY with SAND Fat CLAY with GRAVEL SANDY fat CLAY SANDY fat CLAY with GRAVEL GRAVELLY fat CLAY GRAVELLY fat CLAY with SAND
SW-SM	Well-graded SAND with SILT Well-graded SAND with SILT and GRAVEL		
SW-SC	Well-graded SAND with CLAY (or SILTY CLAY) Well-graded SAND with CLAY and GRAVEL (or SILTY CLAY and GRAVEL)	MH	Elastic SILT Elastic SILT with SAND Elastic SILT with GRAVEL SANDY elastic SILT SANDY elastic SILT with GRAVEL GRAVELLY elastic SILT GRAVELLY elastic SILT with SAND
SP-SM	Poorly graded SAND with SILT Poorly graded SAND with SILT and GRAVEL		
SP-SC	Poorly graded SAND with CLAY (or SILTY CLAY) Poorly graded SAND with CLAY and GRAVEL (or SILTY CLAY and GRAVEL)	OH	ORGANIC fat CLAY ORGANIC fat CLAY with SAND ORGANIC fat CLAY with GRAVEL SANDY ORGANIC fat CLAY SANDY ORGANIC fat CLAY with GRAVEL GRAVELLY ORGANIC fat CLAY GRAVELLY ORGANIC fat CLAY with SAND
SM	SILTY SAND SILTY SAND with GRAVEL		
SC	CLAYEY SAND CLAYEY SAND with GRAVEL	OH	ORGANIC elastic SILT ORGANIC elastic SILT with SAND ORGANIC elastic SILT with GRAVEL SANDY ORGANIC elastic SILT SANDY ORGANIC elastic SILT with GRAVEL GRAVELLY ORGANIC elastic SILT GRAVELLY ORGANIC elastic SILT with SAND
SC-SM	SILTY, CLAYEY SAND SILTY, CLAYEY SAND with GRAVEL		
PT	PEAT	OL/OH	ORGANIC SOIL ORGANIC SOIL with SAND ORGANIC SOIL with GRAVEL SANDY ORGANIC SOIL SANDY ORGANIC SOIL with GRAVEL GRAVELLY ORGANIC SOIL GRAVELLY ORGANIC SOIL with SAND
	COBBLES COBBLES and BOULDERS BOULDERS		

FIELD AND LABORATORY TESTING

- (C) Consolidation (ASTM D 2435)
- (CL) Collapse Potential (ASTM D 5333)
- (CP) Compaction Curve (CTM 216)
- (CR) Corrosivity Testing (CTM 643, CTM 422, CTM 417)
- (CU) Consolidated Undrained Triaxial (ASTM D 4767)
- (DS) Direct Shear (ASTM D 3080)
- (EI) Expansion Index (ASTM D 4829)
- (M) Moisture Content (ASTM D 2216)
- (OC) Organic Content-% (ASTM D 2974)
- (P) Permeability (CTM 220)
- (PA) Particle Size Analysis (ASTM D 422)
- (PI) Plasticity Index (AASHTO T 90) Liquid Limit (AASHTO T 89)
- (PL) Point Load Index (ASTM D 5731)
- (PM) Pressure Meter
- (PP) Pocket Penetrometer
- (R) R-Value (CTM 301)
- (SE) Sand Equivalent (CTM 217)
- (SG) Specific Gravity (AASHTO T 100)
- (SL) Shrinkage Limit (ASTM D 427)
- (SW) Swell Potential (ASTM D 4546)
- (TV) Pocket Torvane
- (UC) Unconfined Compression-Soil (ASTM D 2166) Unconfined Compression-Rock (ASTM D 2938)
- (UU) Unconsolidated Undrained Triaxial (ASTM D 2850)
- (UW) Unit Weight (ASTM D 4767)
- (VS) Vane Shear (AASHTO T 223)

APPARENT DENSITY OF COHESIONLESS SOILS

Description	SPT N_{60} (Blows / 12 inches)
Very loose	0 - 4
Loose	5 - 10
Medium Dense	11 - 30
Dense	31 - 50
Very Dense	> 50

MOISTURE

Description	Criteria
Dry	Absence of moisture, dusty, dry to the touch
Moist	Damp but no visible water
Wet	Visible free water, usually soil is below water table

PERCENT OR PROPORTION OF SOILS

Description	Criteria
Trace	Particles are present but estimated to be less than 5%
Few	5 to 10%
Little	15 to 25%
Some	30 to 45%
Mostly	50 to 100%

PARTICLE SIZE

Description		Size
Boulder		> 12"
Cobble		3" to 12"
Gravel	Coarse	3/4" to 3"
	Fine	No. 4 to 3/4"
Sand	Coarse	No. 10 to No. 4
	Medium	No. 40 to No. 10
	Fine	No. 200 to No. 40

DESIGN OVERSIGHT — John Fujimoto — 8-2-10 SIGN OFF DATE

DRAWN BY: O. GOUTHIER
CHECKED BY: D. WANG

S. DUDDU - A. R. BHARADWAJ
FIELD INVESTIGATION BY:
DATE: MARCH 2009 - APRIL 2009

PREPARED FOR THE STATE OF CALIFORNIA DEPARTMENT OF TRANSPORTATION

A. LAM
PROJECT ENGINEER

BRIDGE NO. 29-0191
POST MILES 28.97

ALPINE AVENUE UC (WIDEN)
SOIL LEGEND 2 OF 2

OGS CIVIL LOG OF TEST BORINGS SHEET (ENGLISH) (REV. 06-01-09)

ORIGINAL SCALE IN INCHES FOR REDUCED PLANS 0 1 2 3

CU 06240
EA 0G4701

DISREGARD PRINTS BEARING EARLIER REVISION DATES — REVISION DATES: 10/15/09, 12/04/09, 01/15/10, 04/23/10, 06/11/10, 7/28/10

SHEET 27 OF 29

FILE => 29-0191-z-ltb02.dgn

USERNAME => rtrenard DATE PLOTTED => 13-OCT-2010 TIME PLOTTED => 12:59

DIST	COUNTY	ROUTE	POST MILES TOTAL PROJECT	SHEET No	TOTAL SHEETS
10	SJ	5	25.0/32.7	983	1132

GEOTECHNICAL PROFESSIONAL — DATE 7/28/10

10-11-10
PLANS APPROVAL DATE

REGISTERED PROFESSIONAL ENGINEER — GARY PARIKH — No. G.E. 666 — Exp. 12/31/11 — GEOTECHNICAL — STATE OF CALIFORNIA

The State of California or its officers or agents shall not be responsible for the accuracy or completeness of scanned copies of this plan sheet.

SAN JOAQUIN COUNCIL OF GOVERNMENTS
555 EAST WEBER AVENUE
STOCKTON, CALIFORNIA 95202

PARIKH CONSULTANTS, INC.
2360 QUME DRIVE, SUITE A
SAN JOSE, CA 95131

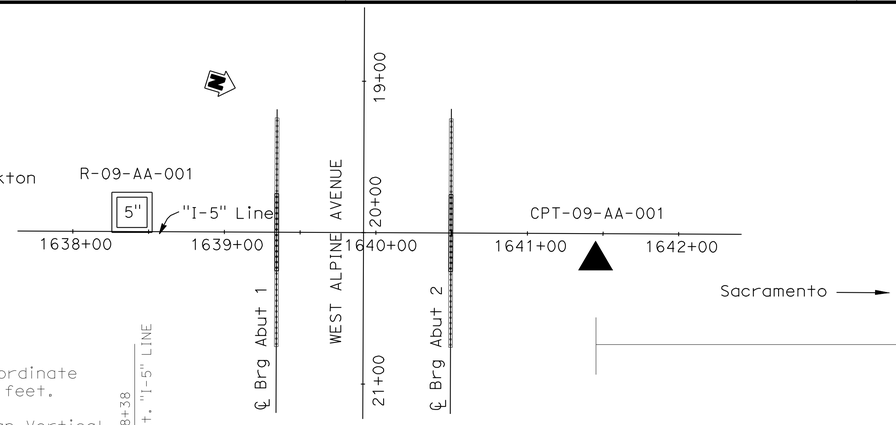

PLAN
1"=50'

BENCHMARK:
The horizontal coordinates values are in the California Coordinate System (CCS 83) Zone 3, Epoch Date 2007.00, in U.S. survey feet.

The vertical control values are based on the North American Vertical Datum of 1988 (NAVD88) in U.S. survey feet, height modernization survey station, (2007.00) and GEOID03 was used for the adjustment.

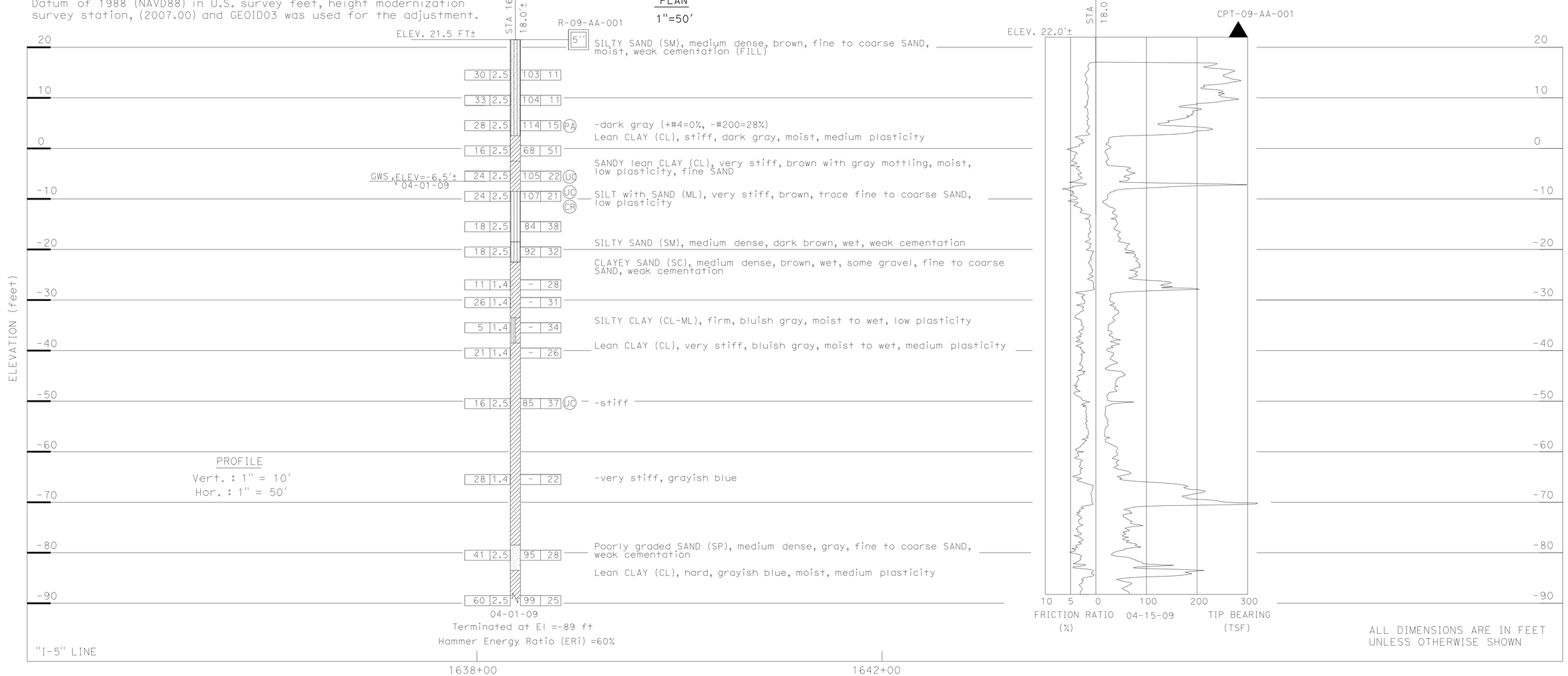

ALL DIMENSIONS ARE IN FEET UNLESS OTHERWISE SHOWN

DESIGN OVERSIGHT John Fujimoto — 8-2-10 SIGN OFF DATE	DRAWN BY O. GOUTHIER	S. DUDDU - A. R. BHARADWAJ FIELD INVESTIGATION BY: DATE: MARCH 2009 - APRIL 2009	PREPARED FOR THE STATE OF CALIFORNIA DEPARTMENT OF TRANSPORTATION	A. LAM PROJECT ENGINEER	BRIDGE NO. 29-0191 POST MILES 28.97
	CHECKED BY D. WANG				

ALPINE AVENUE UC (WIDEN)
LOG OF TEST BORINGS 1 OF 2

OGS GEOTECHNICAL LOG OF TEST BORINGS SHEET (ENGLISH) (REV. 06-01-09)

ORIGINAL SCALE IN INCHES FOR REDUCED PLANS 0 1 2 3

CU 06240
EA 0G4701

DISREGARD PRINTS BEARING EARLIER REVISION DATES → REVISION DATES 10/18/09 12/04/09 01/18/10 04/23/10 06/11/10 7/28/10

SHEET 28 OF 29

FILE => 29-0191-z-1tb03.dgn

USERNAME => friehard DATE PLOTTED => 13-OCT-2010 TIME PLOTTED => 12:59

Dist.	County	Route	Postmile	Sheet No.	Total Sheets
10	SJ	5	25.5/31.9	316	352

Date Approved: September 5, 1962

TO ACCOMPANY PLANS DATED 10-11-10

DIVISION OF ENGINEERING SERVICES – GEOTECHNICAL SERVICES

As-Built Log of Test Borings sheet is considered an informational document only. As such, the State of California registration seal with signature, license number and registration certificate expiration date confirm that this is a true and accurate copy of the original document. This drawing is available and presented only for the convenience of any bidder, contractor or other interested party.

DIST.	COUNTY	ROUTE	POST MILES–TOTAL PROJECT	Sheet No.	Total Sheets
10	SJ	5	25.0/32.7	984	1132

REGISTERED CIVIL ENGINEER — DATE 7/28/10

REGISTERED PROFESSIONAL ENGINEER — GARY PARIKH — No. G.E. 666 — Exp. 12/31/11 — GEOTECHNICAL — STATE OF CALIFORNIA

ALPINE AVENUE UC (WIDEN)

LOG OF TEST BORINGS 2 OF 2

NOTE: A COPY OF THIS LOG OF TEST BORINGS IS AVAILABLE AT OFFICE OF STRUCTURE MAINTENANCE AND INVESTIGATIONS, SACRAMENTO, CALIFORNIA

CU: 06240
EA: 0G4701

BRIDGE No. 29-0191

Sheet 29 of 29

AS BUILT PLANS
Contract No. 10-080924
Date Completed
Document No. 00006619

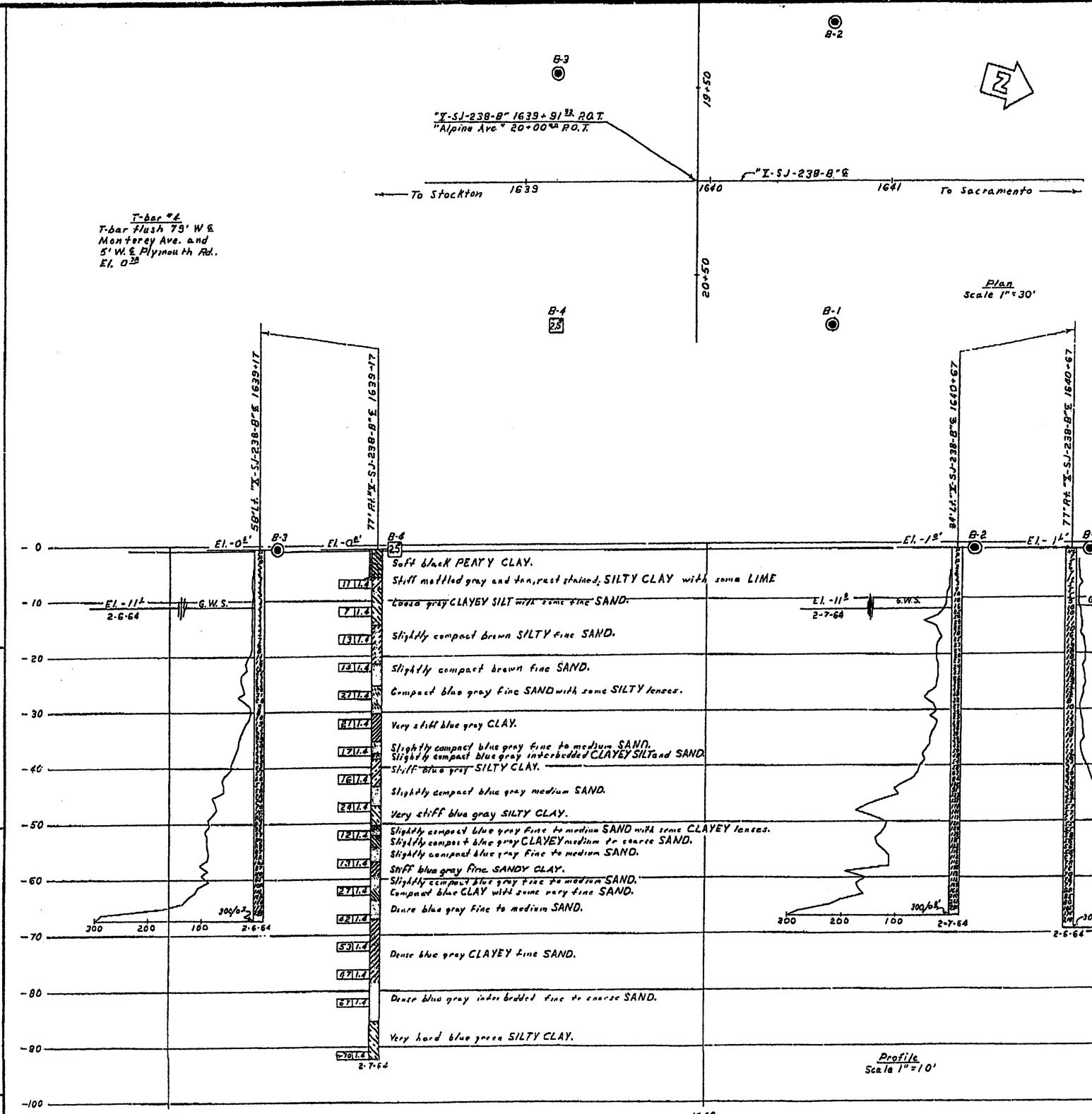

INFORMATION ON SHALLOW FOUNDATION CONDITIONS PRESENT IS ON FILE IN BRIDGE GEOLOGY SECTION

SHEET 11 OF 11

LEGEND OF BORING OPERATIONS

- Penetrometer
- 2½" Conic Penetrometer
- Sampler Boring (Dry)
- Rotary Boring (Wet)
- Auger Boring (Dry)
- Jet Boring
- Core Boring
- Test Pit

LEGEND OF EARTH MATERIALS

- Gravel
- Sand
- Silt
- Clay
- Sandy Clay or Clayey Sand
- Sandy Silt or Silty Sand
- Silty Clay or Clayey Silt
- Peat and Organic Matter
- Fill Material
- Igneous Rock
- Sedimentary Rock
- Metamorphic Rock

CLASSIFICATION OF MATERIAL BASED ON STANDARD GRADE SIZE LIMITS

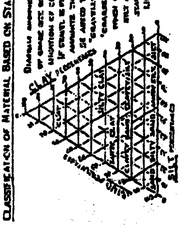

NOTE: Classification of earth material as shown on this sheet is based upon field inspection and is not to be construed to imply mechanical analysis.

STATE OF CALIFORNIA
DEPARTMENT OF PUBLIC WORKS
DIVISION OF HIGHWAYS

ALPINE AVENUE UNDERCROSSING

LOG OF TEST BORINGS

SCALE As Noted	BRIDGE 29-191 1/2	FILE	DRAWING 29191-8

FILENAME => 29-0191-z-ltb04.tif

Disregard prints bearing earlier numbers → PREL. DRAWING NO. PR-29191-2

DIST	COUNTY	ROUTE	POST MILES TOTAL PROJECT	SHEET No	TOTAL SHEETS
10	SJ	5	25.0/32.7	985	1132

REGISTERED CIVIL ENGINEER — DATE 7/28/10

10-11-10
PLANS APPROVAL DATE

The State of California or its officers or agents shall not be responsible for the accuracy or completeness of scanned copies of this plan sheet.

REGISTERED PROFESSIONAL ENGINEER — ALLEN WANG — No. C 66503 — Exp. 06/30/12 — CIVIL — STATE OF CALIFORNIA

SAN JOAQUIN COUNCIL OF GOVERNMENTS
555 E. WEBER AVENUE
STOCKTON, CA 95202

RAJAPPAN & MEYER
CONSULTING ENGINEERS, INC.
1038 LEIGH AVE, SUITE 100
SAN JOSE, CA 95126

"I-5" Line 1650+81.11
Elev 23.39

See 'DECK GRADES' sheets

"I-5" Line 1652+41.11
Elev 23.09

PROFILE GRADE

1" = 20'

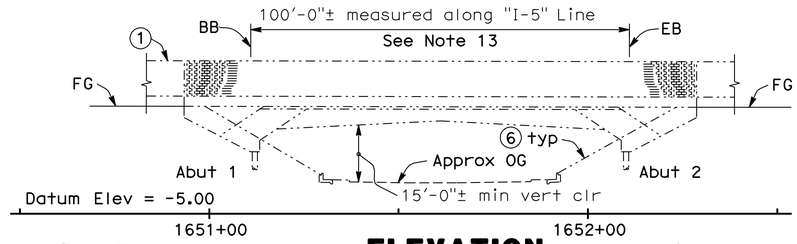

ELEVATION

1" = 20'

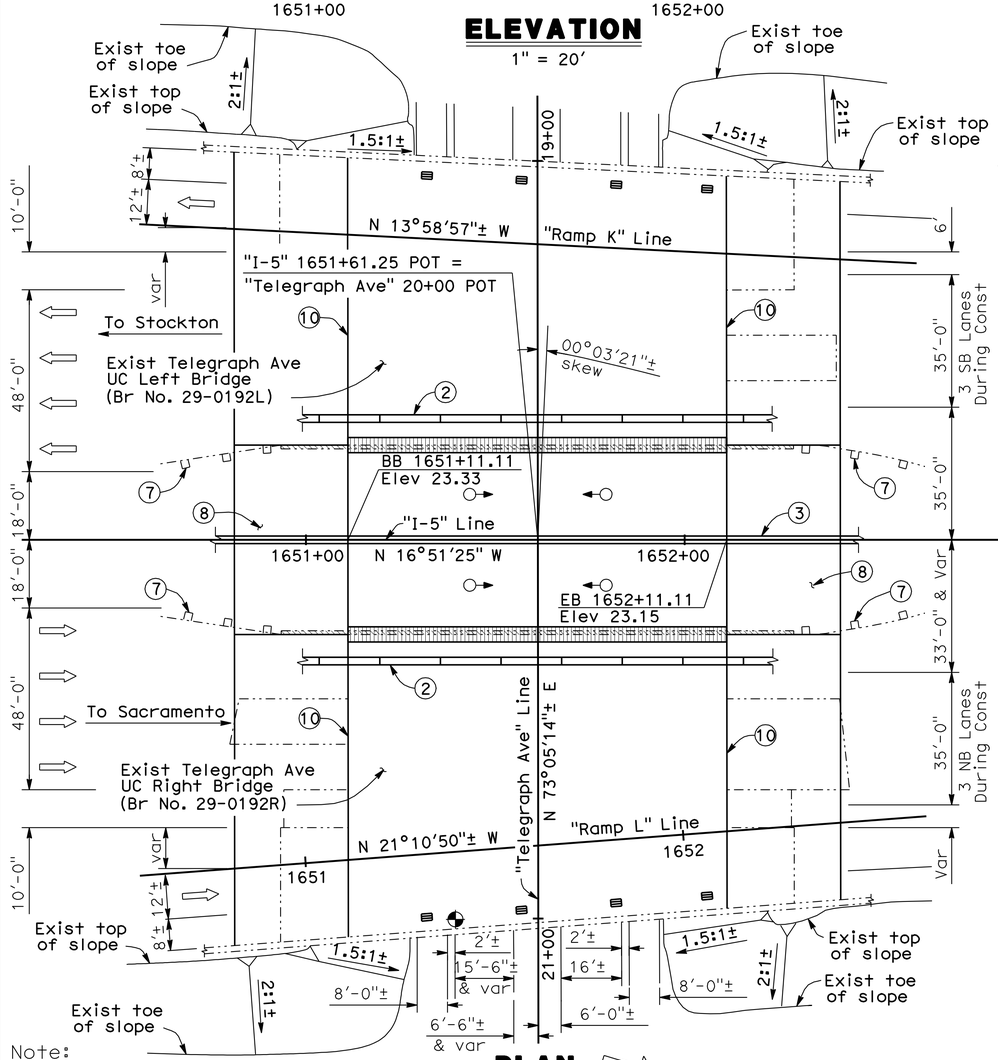

Note:
The Contractor shall verify all controlling field dimensions before ordering or fabricating any material

PLAN

1" = 20'

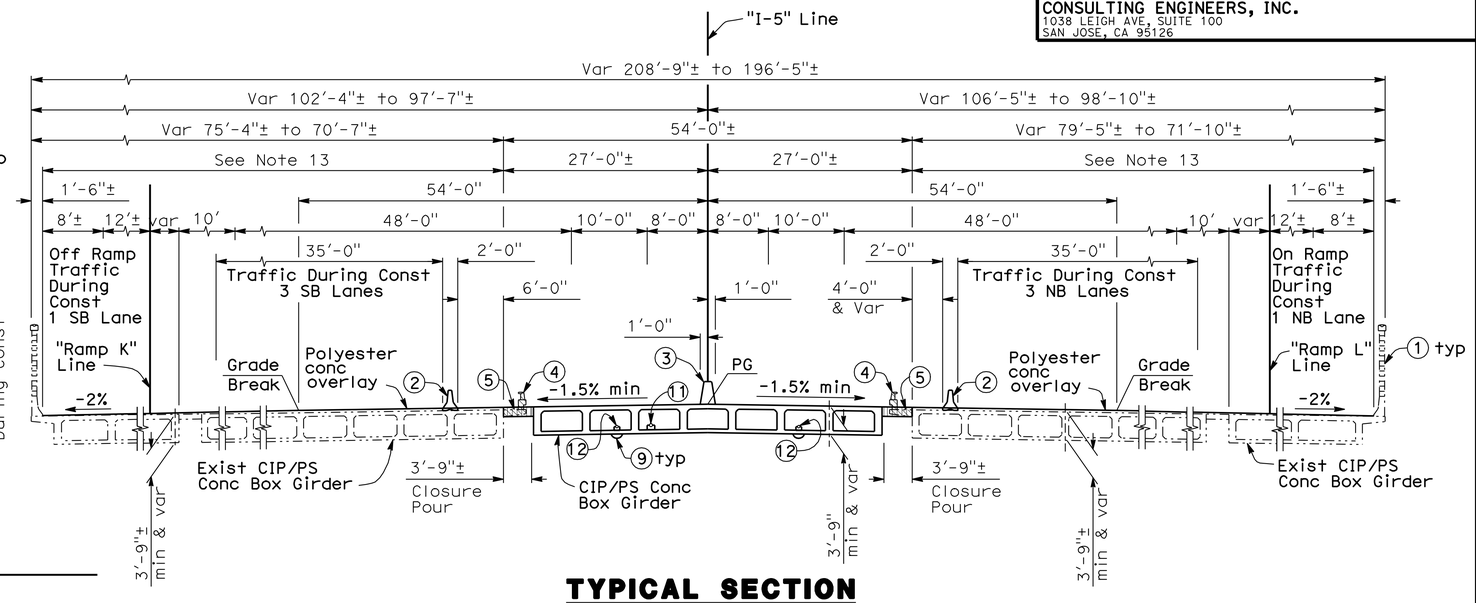

TYPICAL SECTION

1" = 10'

Notes:

1. Exist Concrete Barrier Type 27A with Masonry Block Soundwall
2. Temporary Railing Type K for Stage 1A Construction, See Road Plans
3. Concrete Barrier Type 60A (Mod)
4. Remove and Salvage existing Type 9 Barrier Railing
5. Remove existing overhang
6. Remove existing Slope Paving (Portion) between Bridges and Reconstruct
7. Remove existing Bridge Approach Guard Railing at Median, see Road Plans
8. Structure Approach Type N(30D) and Type R(30D), see 'LIMITS OF STRUCTURE APPROACH' sheet
9. Soffit Lighting, see Electrical Plans
10. Remove and replace existing joint seal, full width
11. 4" dia Fiber Optic conduit (future), see Electrical Plans
12. 1½" Conduit, see Electrical Plans
13. Indicates limits of Prepare Concrete Bridge Deck Surface and Furnish and Place Polyester Concrete Overlay
14. For Pile Data Table, see 'FOUNDATION PLAN' sheet
15. For 'GENERAL NOTES', 'QUANTITY' and 'INDEX TO BRIDGE PLANS', see 'GENERAL NOTES' sheet

Legend:

- Bridge Removal (Portion)
- Closure Pour
- Indicates point of minimum vertical clearance
- Indicates Deck Drain Type D-1 (Mod)
- Indicates existing structure
- Indicates existing bridge approach guard railing type 8
- Indicates direction of traffic
- Soffit lighting, see Electrical Plans

DESIGN OVERSIGHT John Fujimoto	DESIGN	BY A. WANG	CHECKED P. SHINN	LOAD & RESISTANCE FACTOR DESIGN	LIVE LOADING: HL93 W/"LOW-BOY" AND PERMIT DESIGN VEHICLE
8-2-10 SIGN OFF DATE	DETAILS	BY W. Y. TAN	CHECKED P. SHINN	LAYOUT BY W. Y. TAN	CHECKED P. SHINN
	QUANTITIES	BY W. Y. TAN	CHECKED G. WOLDETSADIK	SPECIFICATIONS BY K. HARIRSAZ	PLANS AND SPECS COMPARED K. HARIRSAZ

PREPARED FOR THE STATE OF CALIFORNIA DEPARTMENT OF TRANSPORTATION

A. WANG
PROJECT ENGINEER

BRIDGE NO. 29-0192
POST MILES 29.19

TELEGRAPH AVENUE UC (WIDEN)
GENERAL PLAN

DESIGN GENERAL PLAN SHEET (ENGLISH) (REV. 06-01-09)

ORIGINAL SCALE IN INCHES FOR REDUCED PLANS 0 1 2 3

CU 06240
EA 0G4701

DISREGARD PRINTS BEARING EARLIER REVISION DATES

REVISION DATES (PRELIMINARY STAGE ONLY): 6/2/09 9/14/09 10/16/09 12/4/09 1/15/10 4/23/10 6/11/10 7/28/10

SHEET 1 OF 28

FILE => 29-0192-a-gp01.dgn

USERNAME => trlenard DATE PLOTTED => 18-OCT-2010 TIME PLOTTED => 09:00

DIST	COUNTY	ROUTE	POST MILES TOTAL PROJECT	SHEET No	TOTAL SHEETS
10	SJ	5	25.0/32.7	986	1132

REGISTERED CIVIL ENGINEER 7/28/10 DATE

10-11-10
PLANS APPROVAL DATE

REGISTERED PROFESSIONAL ENGINEER ALLEN WANG No. C 66503 Exp. 06/30/12 CIVIL STATE OF CALIFORNIA

The State of California or its officers or agents shall not be responsible for the accuracy or completeness of scanned copies of this plan sheet.

SAN JOAQUIN COUNCIL OF GOVERNMENTS
555 E. WEBER AVENUE
STOCKTON, CA 95202

RAJAPPAN & MEYER
CONSULTING ENGINEERS, INC.
1038 LEIGH AVE, SUITE 100
SAN JOSE, CA 95126

GENERAL NOTES
LOAD AND RESISTANCE FACTOR DESIGN

DESIGN: AASHTO LRFD Bridge Design Specifications, 4th Edition, and Caltrans Amendments Preface dated December 2008; except that geotechnical design of deep foundations, bridge (incl. barrier and railing) details taken from Standard Plans May 2006, Standard Bridge Details XS sheets, etc. are designed using Bridge Design Specifications (1996 AASHTO with Revisions by Caltrans)

SEISMIC LOADING: Caltrans Seismic Design Criteria (SDC), Version 1.4 dated June, 2006

DEAD LOAD: Includes 35 psf for future wearing surface.

LIVE LOADING: HL93 with "Low-Boy" and Permit Design Vehicle.

SEISMIC LOAD: SDC 1.4 ARS Curve Figure B.8
Soil Profile Type D
Magnitude Group 7.25 ± 0.25
Peak Rock Acceleration 0.2g

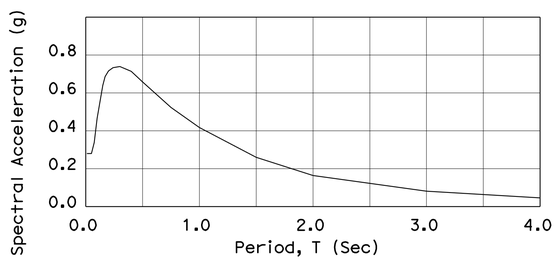

CONCRETE:
fy = 60 ksi
f'c = 3.6 ksi (Except as shown on 'CONCRETE STRENGTH AND TYPE LIMITS' diagram)
n = 8
See prestressing notes
See 'Prestressing Notes' on 'GIRDER LAYOUT' sheet

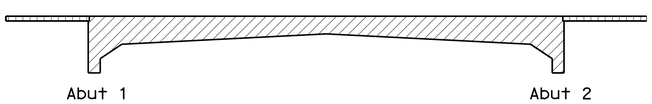

Structural Concrete, Bridge (f'c = 5.0 ksi @ 28 days)

Structural Concrete, Approach Slab

CONCRETE STRENGTH AND TYPE LIMITS

No Scale

Note:
The Contractor shall verify all controlling field dimensions before ordering or fabricating any material

STANDARD PLANS DATED MAY, 2006

A10A	Acronyms and Abbreviations (A - L)
A10B	Acronyms and Abbreviations (M - Z)
A10C	Symbols (Sheet 1 of 2)
A10D	Symbols (Sheet 2 of 2)
A62B	Limits of Payment for Excavation and Backfill - Bridge Surcharge and Wall
A62C	Limits of Payment for Excavation and Backfill - Bridge
RSP A76A	Concrete Barrier Type 60
B0-1	Bridge Details
B0-3	Bridge Details
B0-5	Bridge Details
B2-5	Pile Details - Class 90 and Class 140
RSP B6-21	Joint Seals (Maximum Movement Rating = 2")
B7-1	Box Girder Details
B7-6	Deck Drains Types D-1 and D-2
B7-8	Deck Drainage Details
B8-5	Cast-in-place Prestressed Girder Details
B14-3	Communication and Sprinkler Control Conduits (Conduit Less Than 4")
B14-5	Water Supply Line (Details) (Pipe Sizes Less Than 4")
ES-9B	Electrical Systems (Electrical Details, Structure Installations)
ES-9E	Electrical Systems (Electrical Details, Structure Installations)

Standard Plan sheets No.

Detail No.

INDEX TO BRIDGE PLANS

SHEET No.	TITLE
1	GENERAL PLAN
2	GENERAL NOTES
3	DECK GRADES No. 1
4	DECK GRADES No. 2
5	DECK GRADES No. 3
6	FOUNDATION PLAN
7	ABUTMENT LAYOUT
8	ABUTMENT DETAILS No. 1
9	ABUTMENT DETAILS No. 2
10	ABUTMENT DETAILS No. 3
11	TYPICAL SECTION
12	GIRDER LAYOUT
13	GIRDER DETAILS
14	DECK DRAIN PLAN
15	DECK DRAIN DETAILS
16	LIMITS OF STRUCTURE APPROACH
17	STRUCTURE APPROACH TYPE N(30D)
18	STRUCTURE APPROACH TYPE R(30D)
19	STRUCTURE APPROACH DRAINAGE DETAILS
20	SLOPE PAVING DETAILS No. 1
21	SLOPE PAVING DETAILS No. 2
22	SLOPE PAVING DETAILS No. 3
23	SLOPE PAVING DETAILS No. 4
24	SOFFIT OPENINGS
25	SOIL LEGEND 1 OF 2
26	SOIL LEGEND 2 OF 2
27	LOG OF TEST BORINGS 1 OF 2
28	LOG OF TEST BORINGS 2 OF 2

TELEGRAPH AVE UC #29-0192
QUANTITIES

PUBLIC SAFETY PLAN	LUMP	SUM
REMOVE CONCRETE DECK SURFACE	89	SQFT
SALVAGE METAL BRIDGE RAILING	271	LF
PREPARE CONCRETE BRIDGE DECK SURFACE	14,560	SQFT
ACCESS OPENING, SOFFIT	4	EA
BRIDGE REMOVAL (PORTION), LOCATION D	LUMP	SUM
STRUCTURE EXCAVATION (BRIDGE)	66	CY
STRUCTURE BACKFILL (BRIDGE)	52	CY
AGGREGATE BASE (APPROACH SLAB)	34	CY
FURNISH PILING (CLASS 140) (ALTERNATIVE X)(MODIFIED)	1,433	LF
DRIVE PILE (CLASS 140)(ALTERNATIVE X)(MODIFIED)	24	EA
PRESTRESSING CAST-IN-PLACE CONCRETE	LUMP	SUM
STRUCTURAL CONCRETE, BRIDGE	490	CY
STRUCTURAL CONCRETE, APPROACH SLAB (TYPE N)	107	CY
STRUCTURAL CONCRETE, APPROACH SLAB (TYPE R)	337	CY
PAVING NOTCH EXTENSION	90	CF
DRILL AND BOND DOWEL	170	LF
FURNISH POLYESTER CONCRETE OVERLAY	4,520	CF
PLACE POLYESTER CONCRETE OVERLAY	14,560	SQFT
CORE CONCRETE (12")	2	LF
CORE CONCRETE (16")	5	LF
JOINT SEAL (MR 1")	406	LF
BAR REINFORCING STEEL (BRIDGE)	112,000	LB
SLOPE PAVING (PATTERNED CONCRETE)	27	CY
BRIDGE DECK DRAINAGE SYSTEM	13,100	LB
CONCRETE BARRIER (TYPE 60A MODIFIED)	160	LF

John Fujimoto
DESIGN OVERSIGHT John Fujimoto
8-2-10
SIGN OFF DATE

	BY	CHECKED
DESIGN	A. WANG	P. SHINN
DETAILS	W. Y. TAN	P. SHINN
QUANTITIES	W. Y. TAN	G. WOLDETSADIK

PREPARED FOR THE STATE OF CALIFORNIA DEPARTMENT OF TRANSPORTATION

A. WANG
PROJECT ENGINEER

BRIDGE NO. 29-0192
POST MILE 29.19

TELEGRAPH AVENUE UC (WIDEN)
GENERAL NOTES

DESIGN DETAIL SHEET (ENGLISH) (REV. 06-01-09)

ORIGINAL SCALE IN INCHES FOR REDUCED PLANS 0 1 2 3

CU 06240
EA 0G4701

DISREGARD PRINTS BEARING EARLIER REVISION DATES

REVISION DATES (PRELIMINARY STAGE ONLY) 10/16/09 12/18/09 1/18/10 4/23/10 6/11/10 7/28/10

SHEET 2 OF 28

FILE => 29-0192-b-gnotes.dgn

USERNAME => trlenard DATE PLOTTED => 13-OCT-2010 TIME PLOTTED => 12:59

DIST	COUNTY	ROUTE	POST MILES TOTAL PROJECT	SHEET No	TOTAL SHEETS
10	SJ	5	25.0/32.7	987	1132

REGISTERED CIVIL ENGINEER — DATE 7/28/10

10-11-10
PLANS APPROVAL DATE

REGISTERED PROFESSIONAL ENGINEER — ALLEN WANG — No. C 66503 — Exp. 06/30/12 — CIVIL — STATE OF CALIFORNIA

The State of California or its officers or agents shall not be responsible for the accuracy or completeness of scanned copies of this plan sheet.

SAN JOAQUIN COUNCIL OF GOVERNMENTS
555 E. WEBER AVENUE
STOCKTON, CA 95202

RAJAPPAN & MEYER
CONSULTING ENGINEERS, INC.
1038 LEIGH AVE, SUITE 100
SAN JOSE, CA 95126

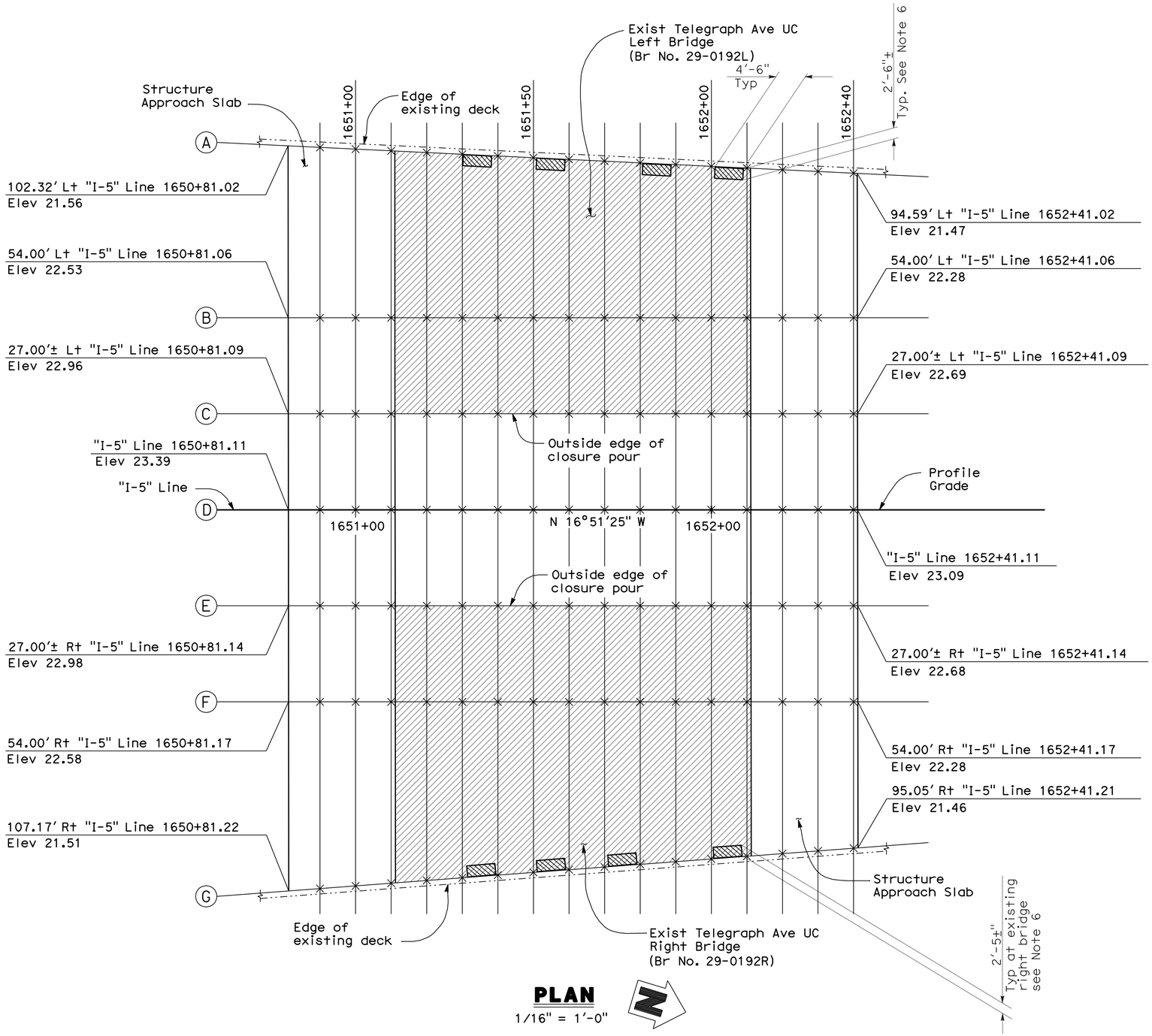

PLAN
1/16" = 1'-0"

Note:
The Contractor shall verify all controlling field dimensions before ordering or fabricating any material

Notes:

1. Deck grades shown do not include camber and falsework settlement.
2. Approach slabs shown are for illustration only.
3. See Road Plans for finished grade beyond approach slabs.
4. Finished deck grade shown at existing bridge indicates top of overlay.
5. Minimum polyester concrete overlay thickness shall be ¾". For details at deck drains, see "Deck Drain Details" sheet
6. For limits of payment for Remove Concrete Deck Surface, see "Deck Drain Details" sheet.

Legend:

- Indicates existing structure
- Indicates limits of Prepare Concrete Bridge Deck Surface and Furnish and Place Polyester Concrete Overlay with Longitudinal Grooving
- Indicates limits of Remove Concrete Deck Surface
- × Indicates 10 ft intervals measured along "I-5" Line

DESIGN OVERSIGHT — John Fujimoto
8-2-10
SIGN OFF DATE

	BY	CHECKED
DESIGN	A. WANG	P. SHINN
DETAILS	W. Y. TAN	P. SHINN
QUANTITIES	W. Y. TAN	G. WOLDETSADIK

PREPARED FOR THE STATE OF CALIFORNIA DEPARTMENT OF TRANSPORTATION

A. WANG
PROJECT ENGINEER

BRIDGE NO. 29-0192
POST MILE 29.19

TELEGRAPH AVENUE UC (WIDEN)
DECK GRADES No. 1

DESIGN DETAIL SHEET (ENGLISH) (REV. 06-01-09)

ORIGINAL SCALE IN INCHES FOR REDUCED PLANS 0 1 2 3

CU 06240
EA 0G4701

DISREGARD PRINTS BEARING EARLIER REVISION DATES

REVISION DATES (PRELIMINARY STAGE ONLY): 10/16/09 12/17/09 1/15/10 4/23/10 6/17/10 7/28/10

SHEET 3 OF 28

FILE => 29-0192-d-dg01.dgn

USERNAME => rtrenford DATE PLOTTED => 18-OCT-2010 TIME PLOTTED => 09:00

DIST	COUNTY	ROUTE	POST MILES TOTAL PROJECT	SHEET No	TOTAL SHEETS
10	SJ	5	25.0/32.7	988	1132

REGISTERED CIVIL ENGINEER 7/28/10 DATE

10-11-10
PLANS APPROVAL DATE

REGISTERED PROFESSIONAL ENGINEER ALLEN WANG No. C 66503 Exp. 06/30/12 CIVIL STATE OF CALIFORNIA

The State of California or its officers or agents shall not be responsible for the accuracy or completeness of scanned copies of this plan sheet.

SAN JOAQUIN COUNCIL OF GOVERNMENTS
555 E. WEBER AVENUE
STOCKTON, CA 95202

RAJAPPAN & MEYER
CONSULTING ENGINEERS, INC.
1038 LEIGH AVE, SUITE 100
SAN JOSE, CA 95126

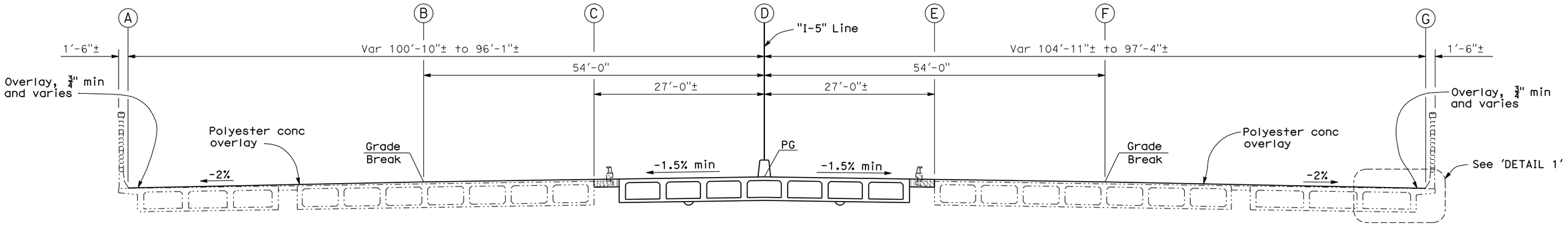

TYPICAL SECTION

1/8" = 1'-0"

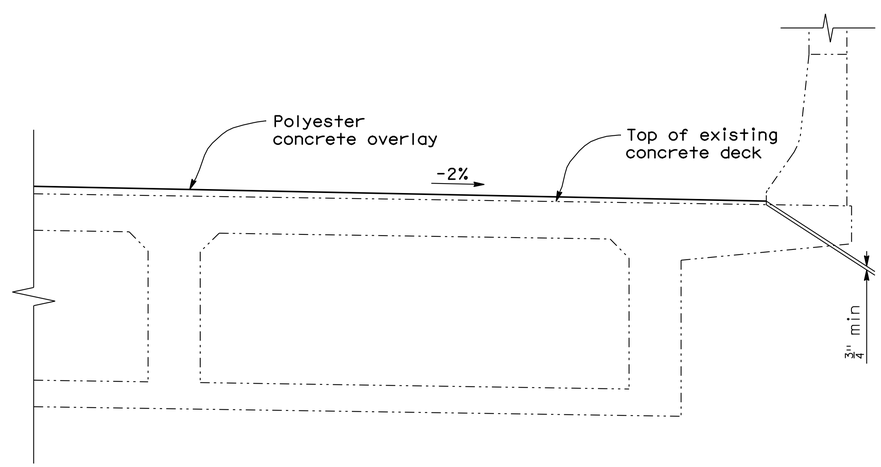

DETAIL 1

3/4" = 1'-0"

Legend:

- Bridge Removal (Portion)
- Closure Pour
- Indicates existing structure

Note:
The Contractor shall verify all controlling field dimensions before ordering or fabricating any material

Note:
For detail of Polyester Concrete Overlay and deck Grades at deck Drains, see "Deck Drain Details" sheet

DESIGN OVERSIGHT John Fujimoto
8-2-10
SIGN OFF DATE

	BY	CHECKED
DESIGN	A. WANG	P. SHINN
DETAILS	W. Y. TAN	P. SHINN
QUANTITIES	W. Y. TAN	G. WOLDETSADIK

PREPARED FOR THE STATE OF CALIFORNIA DEPARTMENT OF TRANSPORTATION

A. WANG
PROJECT ENGINEER

BRIDGE NO. 29-0192
POST MILE 29.19

TELEGRAPH AVENUE UC (WIDEN)
DECK GRADES No. 2

DESIGN DETAIL SHEET (ENGLISH) (REV. 06-01-09)

ORIGINAL SCALE IN INCHES FOR REDUCED PLANS 0 1 2 3

CU 06240
EA 0G4701

DISREGARD PRINTS BEARING EARLIER REVISION DATES

REVISION DATES (PRELIMINARY STAGE ONLY) 10/16/09 12/14/09 1/18/10 4/22/10 6/11/10 7/28/10

SHEET 4 OF 28

FILE => 29-0192-d-dg02.dgn

USERNAME => trlenard DATE PLOTTED => 18-OCT-2010 TIME PLOTTED => 09:00

DIST	COUNTY	ROUTE	POST MILES TOTAL PROJECT	SHEET No	TOTAL SHEETS
10	SJ	5	25.0/32.7	989	1132

REGISTERED CIVIL ENGINEER 7/28/10 DATE

10-11-10
PLANS APPROVAL DATE

REGISTERED PROFESSIONAL ENGINEER ALLEN WANG No. C 66503 Exp. 06/30/12 CIVIL STATE OF CALIFORNIA

The State of California or its officers or agents shall not be responsible for the accuracy or completeness of scanned copies of this plan sheet.

SAN JOAQUIN COUNCIL OF GOVERNMENTS
555 E. WEBER AVENUE
STOCKTON, CA 95202

RAJAPPAN & MEYER
CONSULTING ENGINEERS, INC.
1038 LEIGH AVE, SUITE 100
SAN JOSE, CA 95126

"I-5" Line Station	Line	Offset from "I-5" Line (ft)	Proposed Top of Deck/Overlay Elev (ft)	Existing Top of Deck Elev (ft)
1650+90	A	101.89 Lt	21.56	N/A
	B	54.00 Lt	22.52	N/A
	C	27.00 Lt	22.94	N/A
	D	0.00	23.37	N/A
	E	27.00 Rt	22.97	N/A
	F	54.00 Rt	22.56	N/A
	G	106.50 Rt	21.51	N/A
1651+00	A	101.41 Lt	21.55	N/A
	B	54.00 Lt	22.50	N/A
	C	27.00 Lt	22.93	N/A
	D	0.00	23.35	N/A
	E	27.00 Rt	22.95	N/A
	F	54.00 Rt	22.54	N/A
	G	105.74 Rt	21.51	N/A
1651+10	A	100.92 Lt	21.55	N/A
	B	54.00 Lt	22.49	N/A
	C	27.00 Lt	22.92	N/A
	D	0.00	23.35	N/A
	E	27.00 Rt	22.94	N/A
	F	54.00 Rt	22.52	N/A
	G	104.99 Rt	21.50	N/A
1651+20	A	100.44 Lt	21.54	21.46±
	B	54.00 Lt	22.47	22.12±
	C	27.00 Lt	22.89	22.54±
	D	0.00	23.32	N/A
	E	27.00 Rt	22.91	22.54±
	F	54.00 Rt	22.51	22.14±
	G	104.23 Rt	21.50	21.38±
1651+30	A	99.96 Lt	21.53	21.43±
	B	54.00 Lt	22.45	22.07±
	C	27.00 Lt	22.88	22.47±
	D	0.00	23.30	N/A
	E	27.00 Rt	22.89	22.51±
	F	54.00 Rt	22.49	22.11±
	G	103.47 Rt	21.50	21.33±
1651+40	A	99.47 Lt	21.53	21.41±
	B	54.00 Lt	22.44	22.04±
	C	27.00 Lt	22.86	22.46±
	D	0.00	23.28	N/A
	E	27.00 Rt	22.87	22.48±
	F	54.00 Rt	22.47	22.04±
	G	102.72 Rt	21.49	21.37±
1651+50	A	98.99 Lt	21.52	21.36±
	B	54.00 Lt	22.42	22.01±
	C	27.00 Lt	22.84	22.44±
	D	0.00	23.26	N/A
	E	27.00 Rt	22.85	22.48±
	F	54.00 Rt	22.45	22.03±
	G	101.96 Rt	21.49	21.36±
1651+60	A	98.51 Lt	21.52	21.35±
	B	54.00 Lt	22.41	22.03±
	C	27.00 Lt	22.82	22.40±
	D	0.00	23.24	N/A
	E	27.00 Rt	22.84	22.42±
	F	54.00 Rt	22.43	22.00±
	G	101.20 Rt	21.49	21.35±

"I-5" Line Station	Line	Offset from "I-5" Line (ft)	Proposed Top of Deck/Overlay Elev (ft)	Existing Top of Deck Elev (ft)
1651+70	A	98.02 Lt	21.51	21.37±
	B	54.00 Lt	22.39	22.03±
	C	27.00 Lt	22.81	22.41±
	D	0.00	23.22	N/A
	E	27.00 Rt	22.82	22.38±
	F	54.00 Rt	22.41	21.98±
	G	100.45 Rt	21.48	21.32±
1651+80	A	97.54 Lt	21.51	21.38±
	B	54.00 Lt	22.38	22.02±
	C	27.00 Lt	22.79	22.42±
	D	0.00	23.20	N/A
	E	27.00 Rt	22.80	22.34±
	F	54.00 Rt	22.39	21.93±
	G	99.69 Rt	21.48	21.36±
1651+90	A	97.06 Lt	21.50	21.40±
	B	54.00 Lt	22.36	22.03±
	C	27.00 Lt	22.77	22.43±
	D	0.00	23.18	N/A
	E	27.00 Rt	22.78	22.39±
	F	54.00 Rt	22.37	21.95±
	G	98.93 Rt	21.48	21.38±
1652+00	A	96.57 Lt	21.49	21.41±
	B	54.00 Lt	22.35	22.05±
	C	27.00 Lt	22.76	22.43±
	D	0.00	23.17	N/A
	E	27.00 Rt	22.76	22.38±
	F	54.00 Rt	22.36	21.96±
	G	98.17 Rt	21.47	21.39±
1652+10	A	96.09 Lt	21.49	21.42±
	B	54.00 Lt	22.33	22.07±
	C	27.00 Lt	22.74	22.41±
	D	0.00	23.15	N/A
	E	27.00 Rt	22.74	22.36±
	F	54.00 Rt	22.34	21.97±
	G	97.42 Rt	21.47	21.40±
1652+20	A	95.61 Lt	21.48	N/A
	B	54.00 Lt	22.31	N/A
	C	27.00 Lt	22.72	N/A
	D	0.00	23.13	N/A
	E	27.00 Rt	22.72	N/A
	F	54.00 Rt	22.32	N/A
	G	96.66 Rt	21.47	N/A
1652+30	A	95.12 Lt	21.48	N/A
	B	54.00 Lt	22.30	N/A
	C	27.00 Lt	22.70	N/A
	D	0.00	23.11	N/A
	E	27.00 Rt	22.71	N/A
	F	54.00 Rt	22.30	N/A
	G	95.90 Rt	21.46	N/A
1652+40	A	94.64 Lt	21.47	N/A
	B	54.00 Lt	22.28	N/A
	C	27.00 Lt	22.69	N/A
	D	0.00	23.09	N/A
	E	27.00 Rt	22.69	N/A
	F	54.00 Rt	22.28	N/A
	G	95.15 Rt	21.46	N/A

Note:
The Contractor shall verify all controlling field dimensions before ordering or fabricating any material

DESIGN OVERSIGHT John Fujimoto
8-2-10
SIGN OFF DATE

	BY	CHECKED
DESIGN	A. WANG	P. SHINN
DETAILS	W. Y. TAN	P. SHINN
QUANTITIES	W. Y. TAN	G. WOLDETSADIK

PREPARED FOR THE STATE OF CALIFORNIA DEPARTMENT OF TRANSPORTATION

A. WANG
PROJECT ENGINEER

BRIDGE NO. 29-0192
POST MILE 29.19

TELEGRAPH AVENUE UC (WIDEN)
DECK GRADES No. 3

DESIGN DETAIL SHEET (ENGLISH) (REV. 06-01-09)

ORIGINAL SCALE IN INCHES FOR REDUCED PLANS 0 1 2 3

CU 06240
EA 0G4701

DISREGARD PRINTS BEARING EARLIER REVISION DATES

REVISION DATES (PRELIMINARY STAGE ONLY) 10/15/09 12/17/09 1/18/10 4/23/10 6/17/10 7/28/10

SHEET 5 OF 28

FILE => 29-0192-d-dg03.dgn

USERNAME => rrenford DATE PLOTTED => 13-OCT-2010 TIME PLOTTED => 13:00

DIST	COUNTY	ROUTE	POST MILES TOTAL PROJECT	SHEET No	TOTAL SHEETS
10	SJ	5	25.0/32.7	990	1132

REGISTERED CIVIL ENGINEER — DATE 7/28/10

10-11-10
PLANS APPROVAL DATE

REGISTERED PROFESSIONAL ENGINEER — ALLEN WANG — No. C 66503 — Exp. 06/30/12 — CIVIL — STATE OF CALIFORNIA

The State of California or its officers or agents shall not be responsible for the accuracy or completeness of scanned copies of this plan sheet.

SAN JOAQUIN COUNCIL OF GOVERNMENTS
555 E. WEBER AVENUE
STOCKTON, CA 95202

RAJAPPAN & MEYER
CONSULTING ENGINEERS, INC.
1038 LEIGH AVE, SUITE 100
SAN JOSE, CA 95126

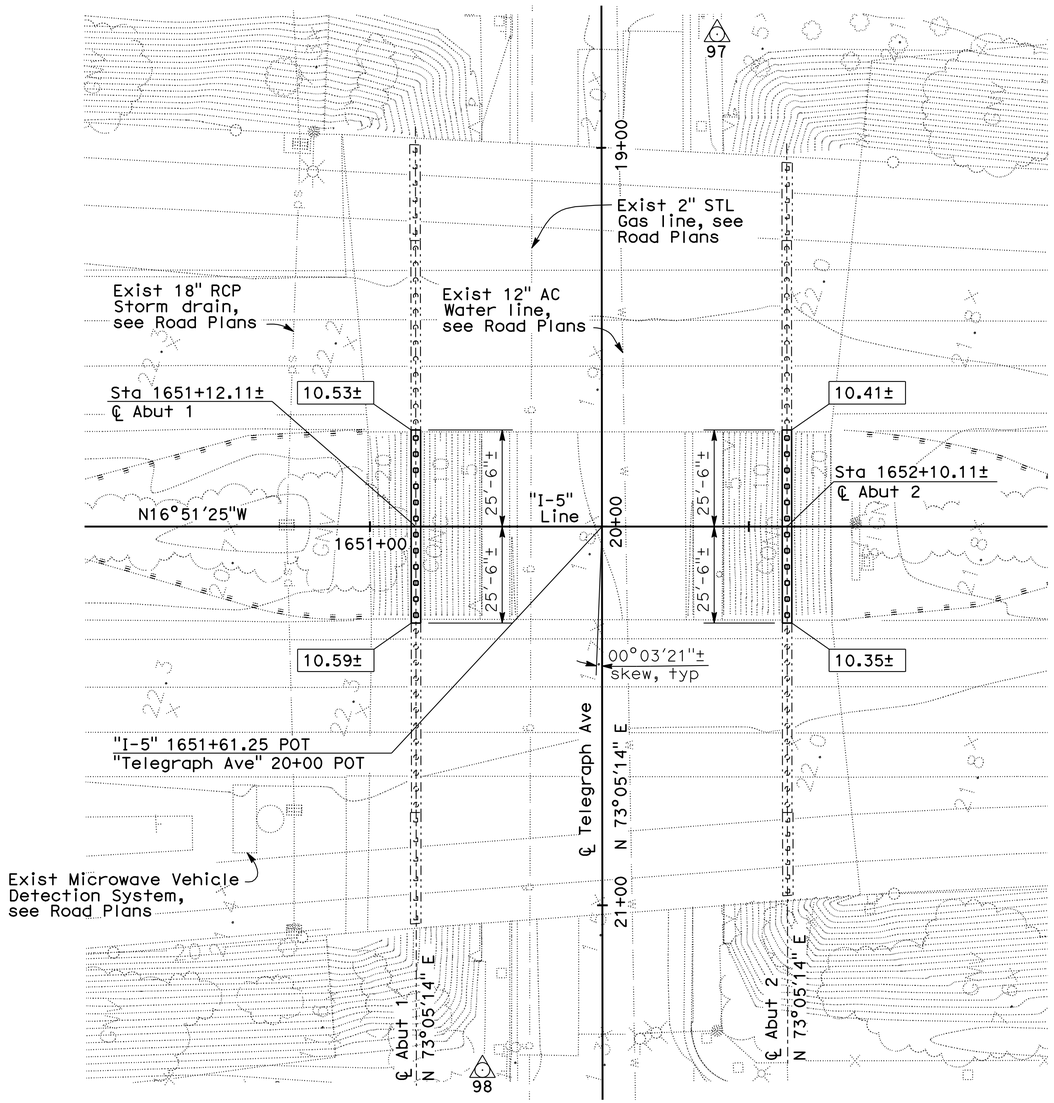

PLAN
1" = 20'

BENCH MARK AND DATUM

Monument	Coordinates		Elev	Description/Location
	Northing	Easting		
97	2177992.12	6319691.15	2.18	PK Nail
98	2178012.14	6319970.85	1.35	PK Nail

Note:
There is a vertical datum difference between the project datum (NAVD 88) and the as-built datum (NGVD 29). The following conversion was used in design:
Datum Conversion: Elev (NAVD 88) = Elev (NGVD 29) + 2.01'±

PILE DATA TABLE

Location	Type	Nominal Resistance (kips)		Design Tip Elev (ft)	Specified Tip Elev (ft)	Nominal Driving Resistance (kips)
		Compression	Tension			
Abut 1	Class 140 Alt 'X' (Mod)	280	0	-44.5(a), -7.0(b)	-49.3	280
Abut 2	Class 140 Alt 'X' (Mod)	280	0	-49.5(a), -4.5(b)	-49.5	280

Notes:
1. Design tip elevations are controlled by (a) Compression (b) Lateral Load.
2. The specified tip elevation shall not be raised above the design tip elevations for lateral load.
3. The specified tip elevation has been selected to keep the same pile length for "ease of pile fabrication".

Notes:
1. ○ & ○ Indicates existing pile
2. ▫ Indicates pile
3. —··—··— Indicates existing abutment
4. ——— Indicates new abutment
5. X 22.3 Indicates spot elevation
6. △ Indicates control point
7. X.XX± Indicates bottom of abutment elevation
8. All abutments centerlines are parallel and are on centerlines of existing abutment.
9. Utilities shown are for illustrative purposes only, verify with Road Plans
10. Bottom of proposed abutment elevation may be adjusted slightly, such that bottom of abutment matches bottom of existing abutments

GEOTECHNICAL PROFESSIONAL — APPROVAL DATE 1/15/10

Note:
The Contractor shall verify all controlling field dimensions before ordering or fabricating any material

DESIGN OVERSIGHT — John Fujimoto — 8-2-10 — SIGN OFF DATE

SCALE: AS SHOWN	VERT.DATUM NAVD88	HORZ.DATUM CCS83, (2007.00), ZONE 3	
PHOTOGRAMMETRY AS OF: (N/A) FIELD SURVEYS	ALIGNMENT TIES APPROVED GPS REPORT DATED 7-6-09		
SURVEYED	BY RYAN VANCE	DRAFTED	BY MIKE KORDAZAKIS
FIELD CHECKED	BY JEFF CISSELL	CHECKED	BY KEVIN LANG

DESIGN	BY A. WANG	CHECKED P. SHINN
DETAILS	BY W. Y. TAN	CHECKED P. SHINN
QUANTITIES	BY W. Y. TAN	CHECKED G. WOLDETSADIK

PREPARED FOR THE STATE OF CALIFORNIA DEPARTMENT OF TRANSPORTATION

A. WANG
PROJECT ENGINEER

CU 06240
EA 0G4701

BRIDGE NO. 29-0192
POST MILE 29.19

TELEGRAPH AVENUE UC (WIDEN)
FOUNDATION PLAN

FOUNDATION PLAN SHEET (ENGLISH) (REV. 06-01-09)

ORIGINAL SCALE IN INCHES FOR REDUCED PLANS 0 1 2 3

DISREGARD PRINTS BEARING EARLIER REVISION DATES

REVISION DATES (PRELIMINARY STAGE ONLY): 6/2/09 9/24/09 10/26/09 12/4/09 1/28/10 4/22/10 6/11/10 7/28/10

SHEET 6 OF 28

FILE => 29-0192-e-fp101.dgn

USERNAME => trrenord DATE PLOTTED => 13-OCT-2010 TIME PLOTTED => 13:00

DIST	COUNTY	ROUTE	POST MILES TOTAL PROJECT	SHEET No	TOTAL SHEETS
10	SJ	5	25.0/32.7	991	1132

REGISTERED CIVIL ENGINEER — DATE 7/28/10

10-11-10
PLANS APPROVAL DATE

The State of California or its officers or agents shall not be responsible for the accuracy or completeness of scanned copies of this plan sheet.

REGISTERED PROFESSIONAL ENGINEER — ALLEN WANG — No. C 66503 — Exp. 06/30/12 — CIVIL — STATE OF CALIFORNIA

SAN JOAQUIN COUNCIL OF GOVERNMENTS
555 E. WEBER AVENUE
STOCKTON, CA 95202

RAJAPPAN & MEYER
CONSULTING ENGINEERS, INC.
1038 LEIGH AVE, SUITE 100
SAN JOSE, CA 95126

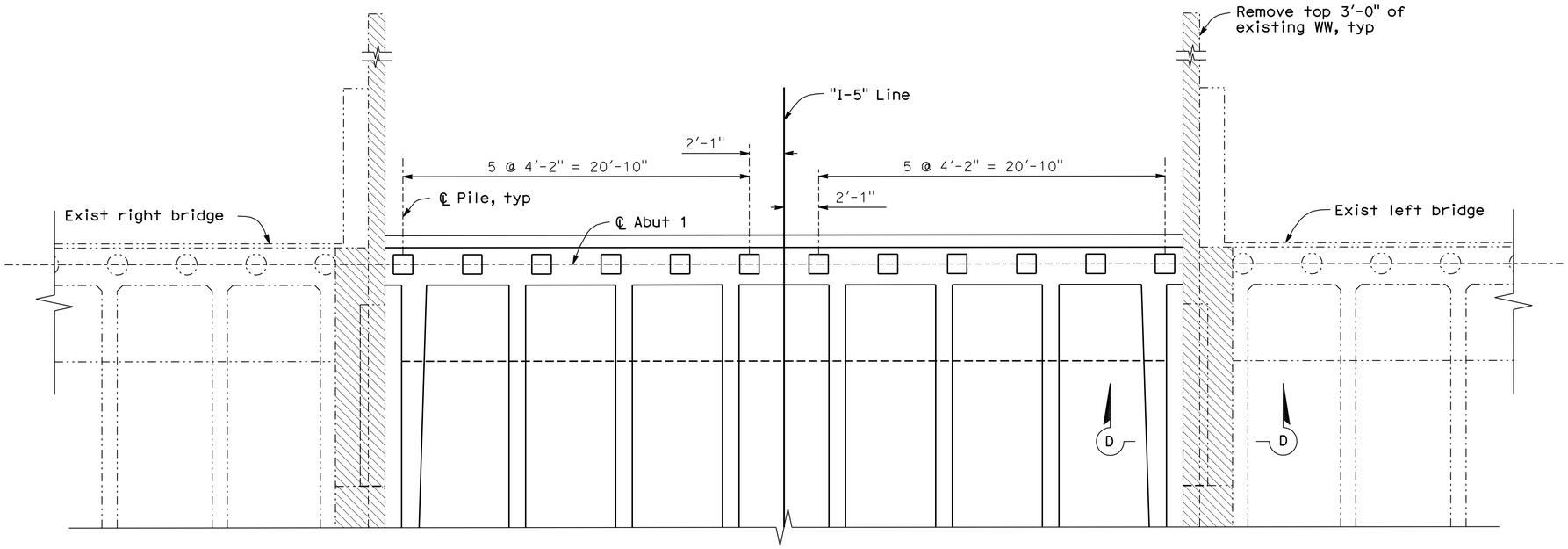

PLAN
1/4" = 1'-0"
(Abut 1 shown, Abut 2 similar)

Notes:

1. For 'SECTION A-A', see 'ABUTMENT DETAILS No. 1' sheet
2. For 'SECTION B-B', 'SECTION C-C', and 'SECTION D-D',see 'ABUTMENT DETAILS No. 2' sheet

Legend:

- Indicates existing structure
- Closure Pour
- Diaphragm Closure Pour
- Bridge Removal (Portion), see 'ABUTMENT DETAILS No. 4" sheet
- Indicates existing piles
- Indicates new piles

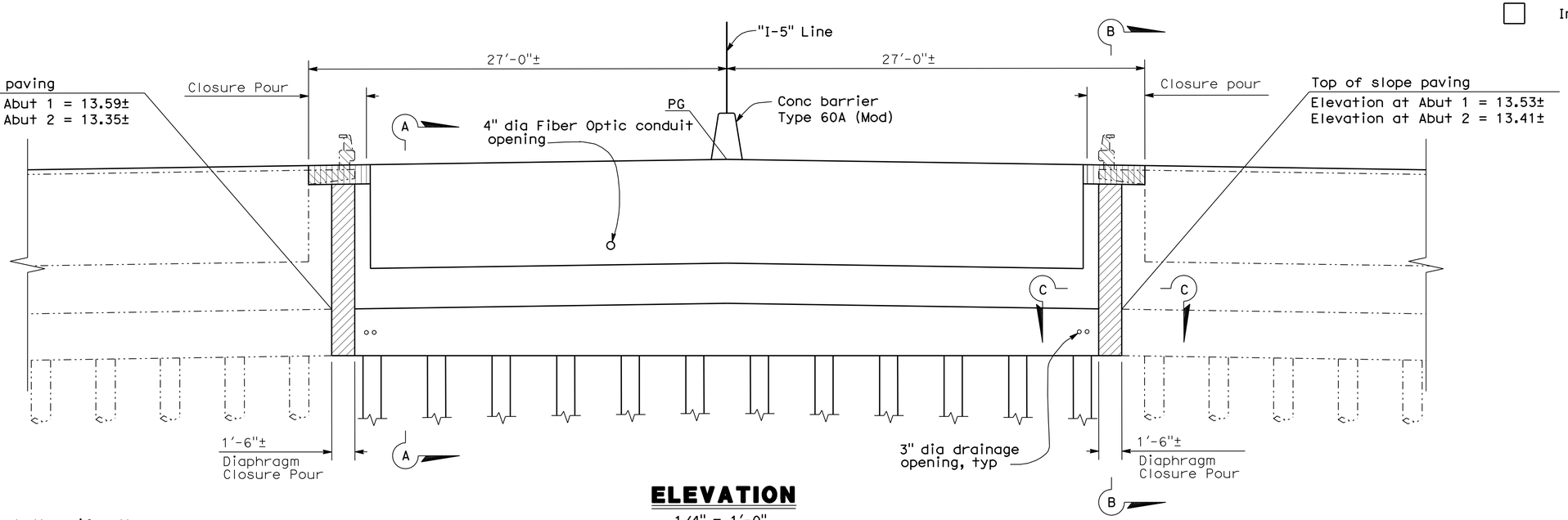

ELEVATION
1/4" = 1'-0"
(Abut 1 shown, Abut 2 similar)

Note:
The Contractor shall verify all controlling field dimensions before ordering or fabricating any material

DESIGN OVERSIGHT — John Fujimoto
8-2-10
SIGN OFF DATE

	BY	CHECKED
DESIGN	A. WANG	P. SHINN
DETAILS	W. Y. TAN	P. SHINN
QUANTITIES	W. Y. TAN	G. WOLDETSADIK

PREPARED FOR THE STATE OF CALIFORNIA DEPARTMENT OF TRANSPORTATION

A. WANG
PROJECT ENGINEER

BRIDGE NO. 29-0192
POST MILE 29.19

TELEGRAPH AVENUE UC (WIDEN)
ABUTMENT LAYOUT

DESIGN DETAIL SHEET (ENGLISH) (REV. 06-01-09)

ORIGINAL SCALE IN INCHES FOR REDUCED PLANS 0 1 2 3

CU 06240
EA 0G4701

DISREGARD PRINTS BEARING EARLIER REVISION DATES

REVISION DATES (PRELIMINARY STAGE ONLY): 10/16/09 12/14/09 1/18/10 4/23/10 6/17/10 7/28/10

SHEET 7 OF 28

FILE => 29-0192-f-a01_lo1.dgn

USERNAME => trlenard DATE PLOTTED => 18-OCT-2010 TIME PLOTTED => 09:00

DIST	COUNTY	ROUTE	POST MILES TOTAL PROJECT	SHEET No	TOTAL SHEETS
10	SJ	5	25.0/32.7	992	1132

REGISTERED CIVIL ENGINEER — DATE 7/28/10

10-11-10
PLANS APPROVAL DATE

The State of California or its officers or agents shall not be responsible for the accuracy or completeness of scanned copies of this plan sheet.

REGISTERED PROFESSIONAL ENGINEER — ALLEN WANG — No. C 66503 — Exp. 06/30/12 — CIVIL — STATE OF CALIFORNIA

SAN JOAQUIN COUNCIL OF GOVERNMENTS
555 E. WEBER AVENUE
STOCKTON, CA 95202

RAJAPPAN & MEYER
CONSULTING ENGINEERS, INC.
1038 LEIGH AVE, SUITE 100
SAN JOSE, CA 95126

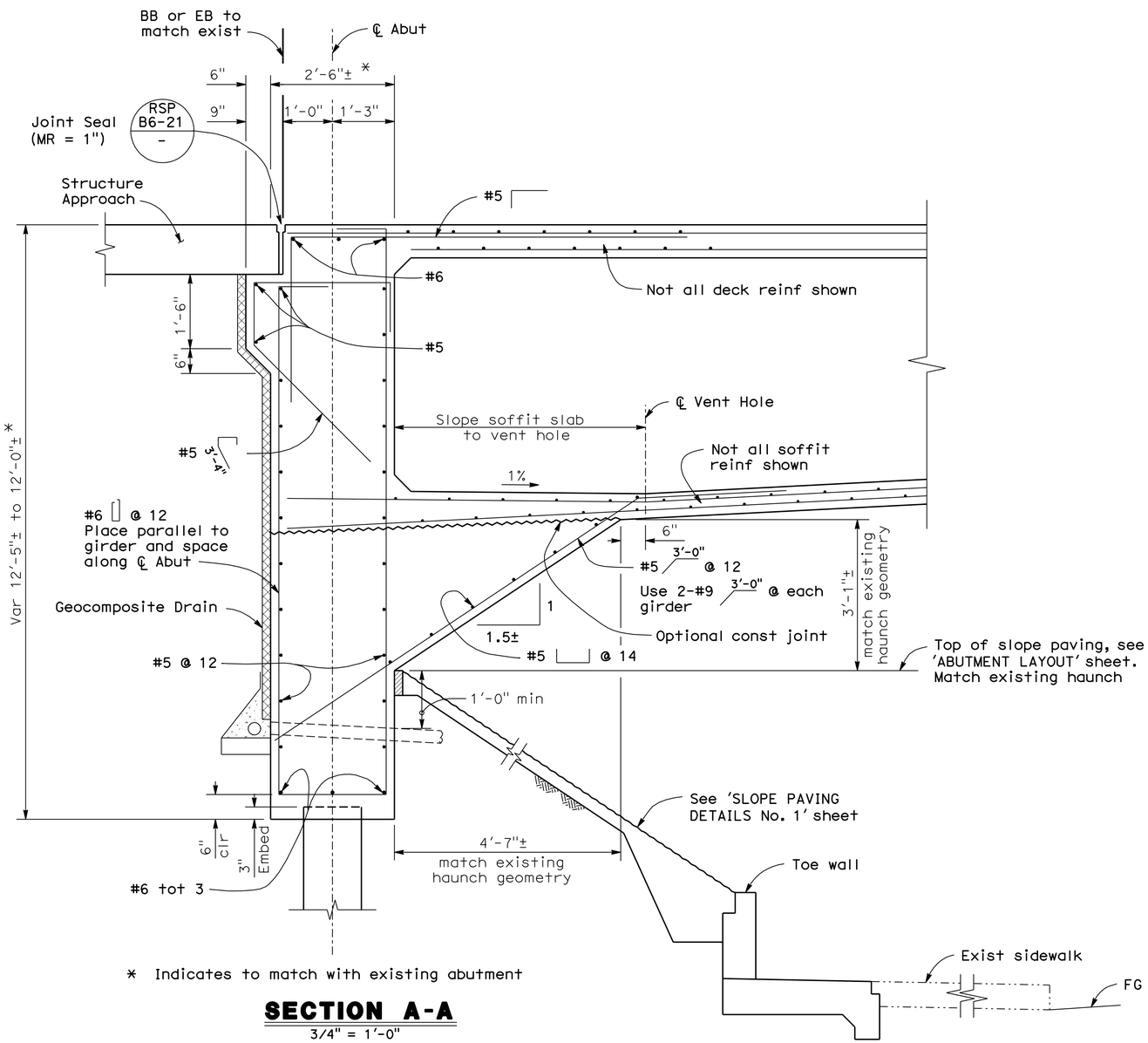

* Indicates to match with existing abutment

SECTION A-A

3/4" = 1'-0"

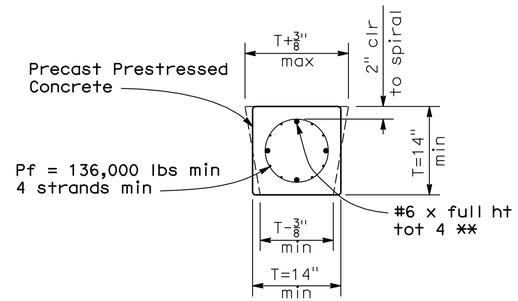

** To be in place when pile is cast

SECTION X-X

No Scale

Note:
For notes and additional details not shown, see B2-5 / -

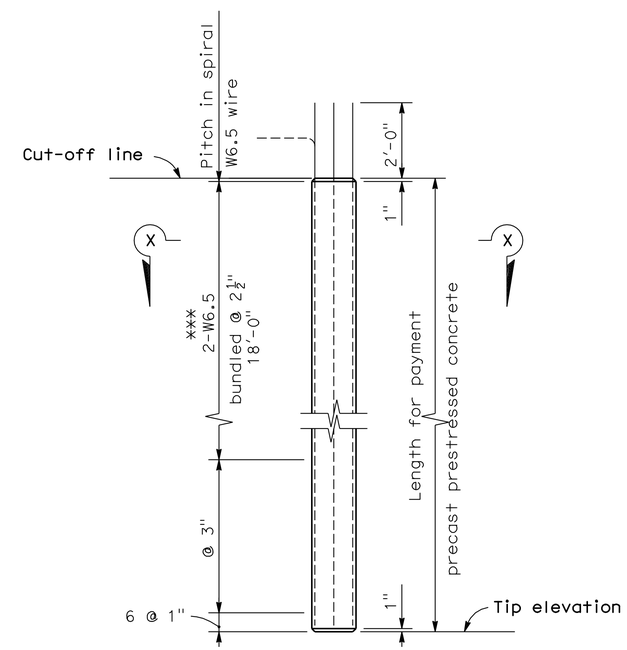

ALTERNATIVE "X"

*** W11 at 2" may be substituted

CLASS 140 MODIFIED PILE

No Scale

Note:
The Contractor shall verify all controlling field dimensions before ordering or fabricating any material

DESIGN OVERSIGHT John Fujimoto
8-2-10
SIGN OFF DATE

	BY	CHECKED
DESIGN	A. WANG	P. SHINN
DETAILS	W. Y. TAN	P. SHINN
QUANTITIES	W. Y. TAN	G. WOLDETSADIK

PREPARED FOR THE STATE OF CALIFORNIA DEPARTMENT OF TRANSPORTATION

A. WANG
PROJECT ENGINEER

BRIDGE NO. 29-0192
POST MILE 29.19

TELEGRAPH AVENUE UC (WIDEN)
ABUTMENT DETAILS No. 1

DESIGN DETAIL SHEET (ENGLISH) (REV. 06-01-09)

ORIGINAL SCALE IN INCHES FOR REDUCED PLANS 0 1 2 3

CU 06240
EA 0G4701

DISREGARD PRINTS BEARING EARLIER REVISION DATES

REVISION DATES (PRELIMINARY STAGE ONLY): 10/16/09 12/4/09 1/18/10 4/22/10 6/11/10 7/28/10

SHEET 8 OF 28

FILE => 29-0192-f-a01dt01.dgn

USERNAME => trlenard DATE PLOTTED => 13-OCT-2010 TIME PLOTTED => 13:00

DIST	COUNTY	ROUTE	POST MILES TOTAL PROJECT	SHEET No	TOTAL SHEETS
10	SJ	5	25.0/32.7	993	1132

REGISTERED CIVIL ENGINEER 7/28/10 DATE

10-11-10
PLANS APPROVAL DATE

The State of California or its officers or agents shall not be responsible for the accuracy or completeness of scanned copies of this plan sheet.

REGISTERED PROFESSIONAL ENGINEER ALLEN WANG No. C 66503 Exp. 06/30/12 CIVIL STATE OF CALIFORNIA

SAN JOAQUIN COUNCIL OF GOVERNMENTS
555 E. WEBER AVENUE
STOCKTON, CA 95202

RAJAPPAN & MEYER
CONSULTING ENGINEERS, INC.
1038 LEIGH AVE, SUITE 100
SAN JOSE, CA 95126

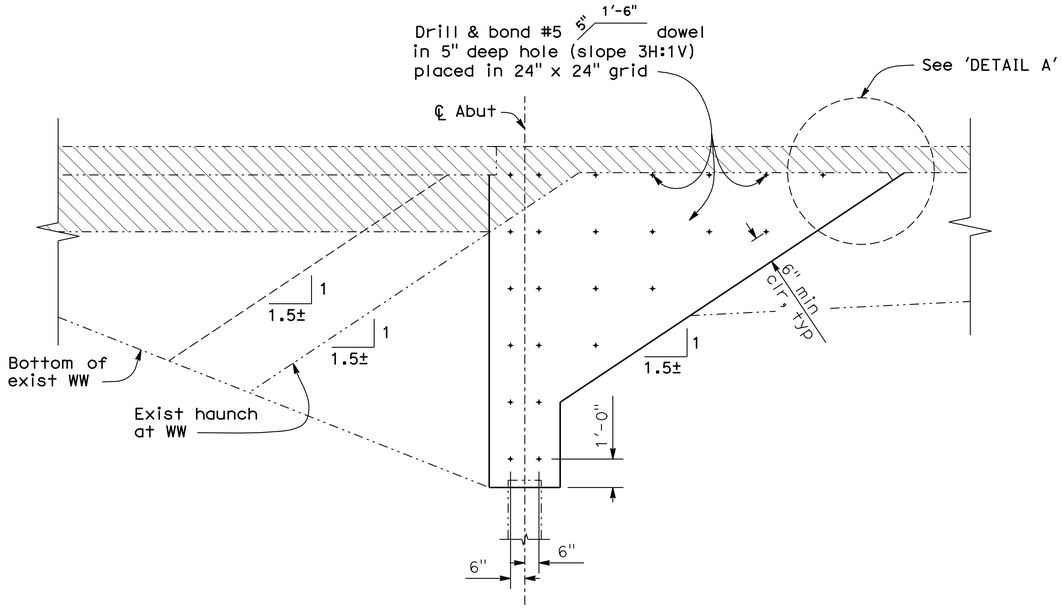

SECTION B-B

3/8" = 1'-0"
(Abut 1 shown, Abut 2 similar)

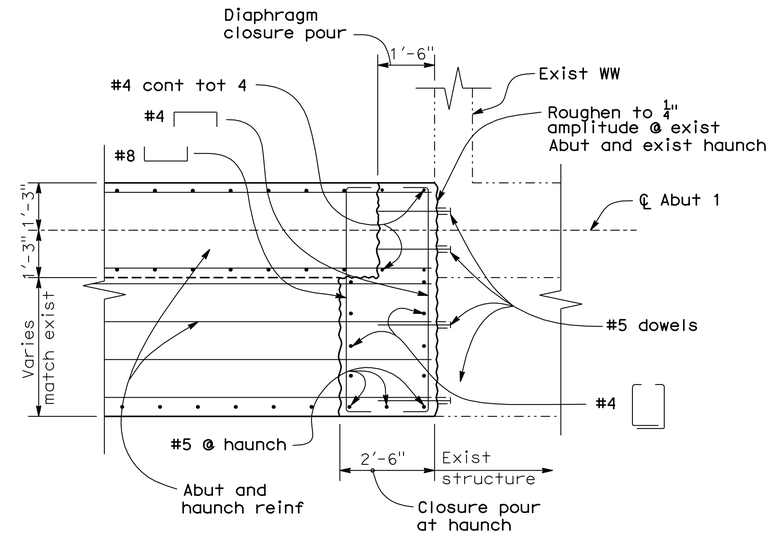

SECTION C-C

1/2" = 1'-0"

Note:
Place diaphragm closure pour after falsework has been released and prior to closure pour

Legend:
Bridge Removal (Portion)
Indicates existing structure

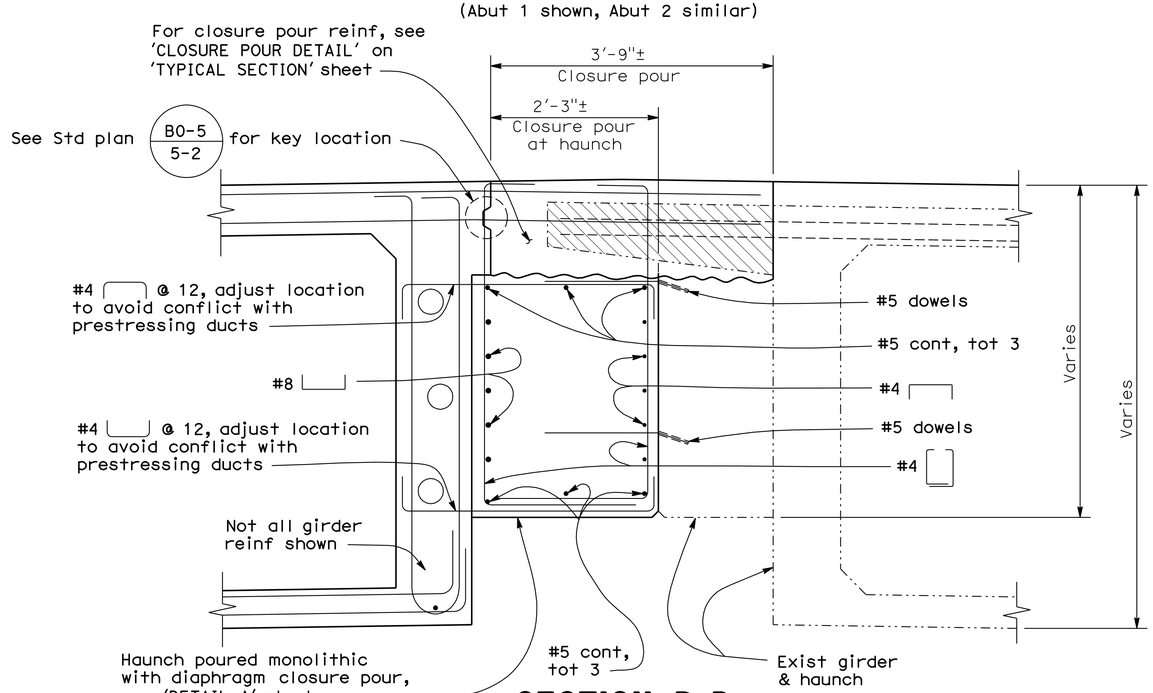

SECTION D-D

1" = 1'-0"

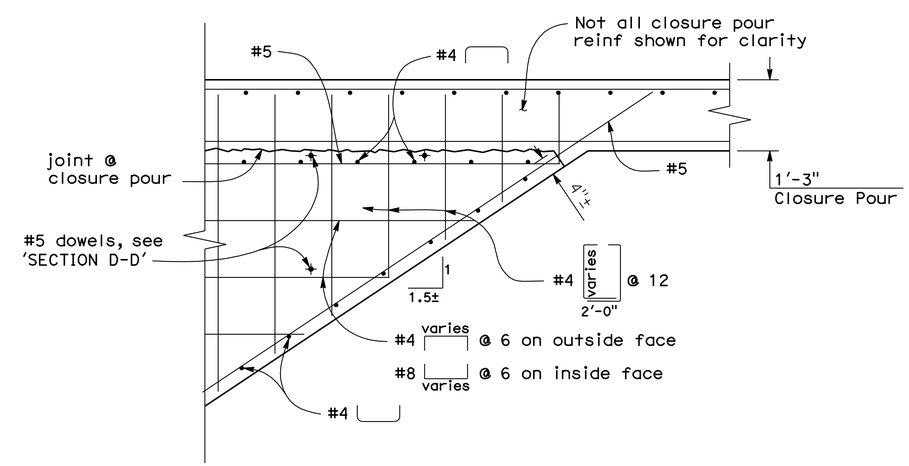

DETAIL A

3/4" = 1'-0"

Note:
The Contractor shall verify all controlling field dimensions before ordering or fabricating any material

DESIGN OVERSIGHT John Fujimoto
8-2-10
SIGN OFF DATE

	BY	CHECKED
DESIGN	A. WANG	P. SHINN
DETAILS	W. Y. TAN	P. SHINN
QUANTITIES	W. Y. TAN	G. WOLDETSADIK

PREPARED FOR THE STATE OF CALIFORNIA DEPARTMENT OF TRANSPORTATION

A. WANG
PROJECT ENGINEER

BRIDGE NO. 29-0192
POST MILE 29.19

TELEGRAPH AVENUE UC (WIDEN)
ABUTMENT DETAILS No. 2

DESIGN DETAIL SHEET (ENGLISH) (REV. 06-01-09)

ORIGINAL SCALE IN INCHES FOR REDUCED PLANS 0 1 2 3

CU 06240
EA 0G4701

DISREGARD PRINTS BEARING EARLIER REVISION DATES
REVISION DATES (PRELIMINARY STAGE ONLY) 10/16/09 12/17/09 1/18/10 4/23/10 6/17/10 7/28/10

SHEET 9 OF 28

FILE => 29-0192-f-a01dt02.dgn

USERNAME => trlenard DATE PLOTTED => 13-OCT-2010 TIME PLOTTED => 13:00

DIST	COUNTY	ROUTE	POST MILES TOTAL PROJECT	SHEET No	TOTAL SHEETS
10	SJ	5	25.0/32.7	994	1132

REGISTERED CIVIL ENGINEER — DATE 7/28/10

10-11-10
PLANS APPROVAL DATE

REGISTERED PROFESSIONAL ENGINEER — ALLEN WANG — No. C 66503 — Exp. 06/30/12 — CIVIL — STATE OF CALIFORNIA

The State of California or its officers or agents shall not be responsible for the accuracy or completeness of scanned copies of this plan sheet.

SAN JOAQUIN COUNCIL OF GOVERNMENTS
555 E. WEBER AVENUE
STOCKTON, CA 95202

RAJAPPAN & MEYER
CONSULTING ENGINEERS, INC.
1038 LEIGH AVE, SUITE 100
SAN JOSE, CA 95126

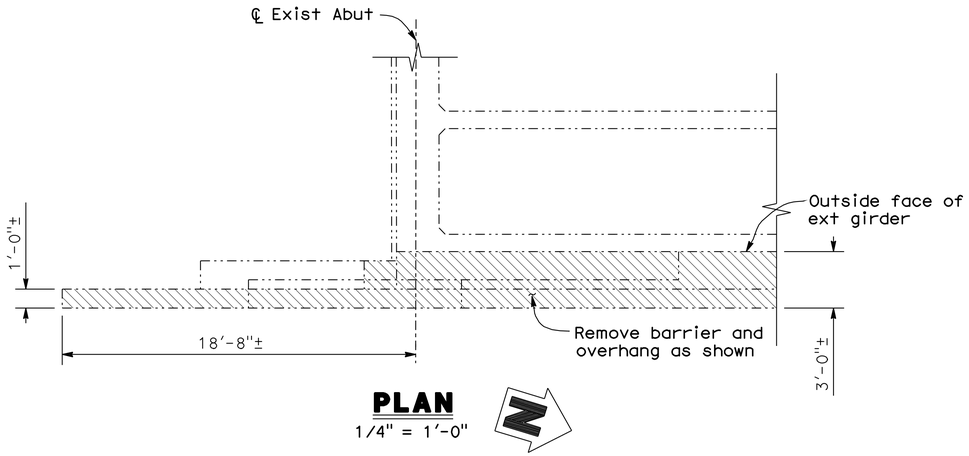

PLAN
1/4" = 1'-0"

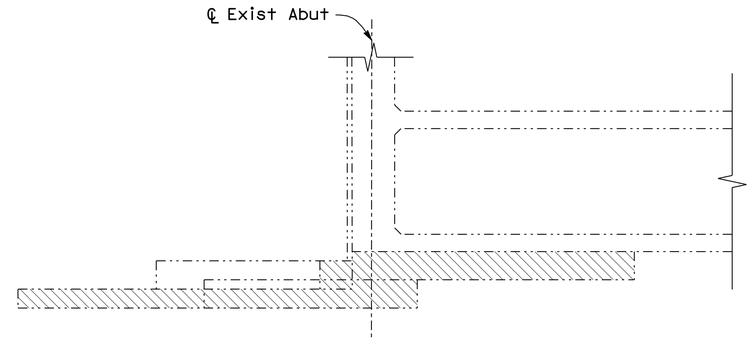

SECTION A-A
1/4" = 1'-0"

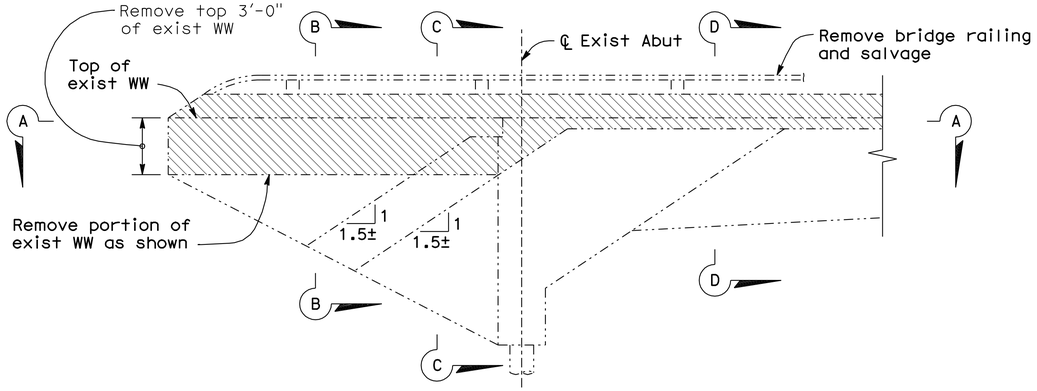

ELEVATION
1/4" = 1'-0"

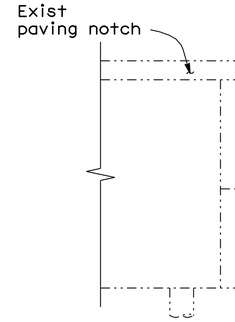

SECTION B-B
1/4" = 1'-0"

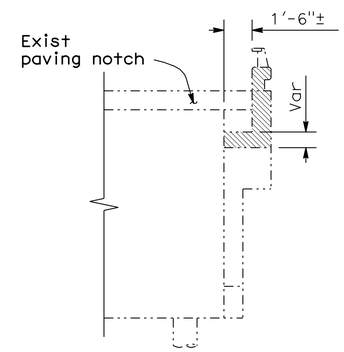

SECTION C-C
1/4" = 1'-0"

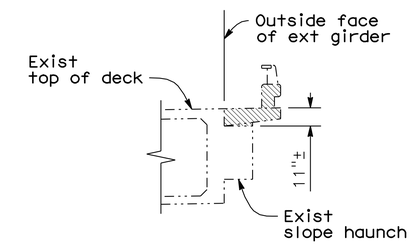

SECTION D-D
1/4" = 1'-0"

Notes:

1. For location of bridge removal, see 'GENERAL PLAN' sheet
2. Structure approach not shown
3. West side of Abutment 1 shown, other location similar

Legend:

-·-·-·- Indicates existing structure

▨ Bridge Removal (Portion)

Note:
The Contractor shall verify all controlling field dimensions before ordering or fabricating any material

DESIGN OVERSIGHT John Fujimoto
8-2-10
SIGN OFF DATE

	BY	CHECKED
DESIGN	A. WANG	P. SHINN
DETAILS	W. Y. TAN	P. SHINN
QUANTITIES	W. Y. TAN	G. WOLDETSADIK

PREPARED FOR THE STATE OF CALIFORNIA DEPARTMENT OF TRANSPORTATION

A. WANG
PROJECT ENGINEER

BRIDGE NO. 29-0192
POST MILE 29.19

TELEGRAPH AVENUE UC (WIDEN)
ABUTMENT DETAILS No. 3

DESIGN DETAIL SHEET (ENGLISH) (REV. 06-01-09)

ORIGINAL SCALE IN INCHES FOR REDUCED PLANS 0 1 2 3

CU 06240
EA 0G4701

DISREGARD PRINTS BEARING EARLIER REVISION DATES

REVISION DATES (PRELIMINARY STAGE ONLY): 10/16/09 12/4/09 1/18/10 4/23/10 6/17/10 7/28/10

SHEET 10 OF 28

FILE => 29-0192-f-a01dt03.dgn

USERNAME => friehard DATE PLOTTED => 13-OCT-2010 TIME PLOTTED => 13:00

DIST	COUNTY	ROUTE	POST MILES TOTAL PROJECT	SHEET No	TOTAL SHEETS
10	SJ	5	25.0/32.7	995	1132

REGISTERED CIVIL ENGINEER — DATE 7/28/10

10-11-10
PLANS APPROVAL DATE

REGISTERED PROFESSIONAL ENGINEER — ALLEN WANG — No. C 66503 — Exp. 06/30/12 — CIVIL — STATE OF CALIFORNIA

The State of California or its officers or agents shall not be responsible for the accuracy or completeness of scanned copies of this plan sheet.

SAN JOAQUIN COUNCIL OF GOVERNMENTS
555 E. WEBER AVENUE
STOCKTON, CA 95202

RAJAPPAN & MEYER
CONSULTING ENGINEERS, INC.
1038 LEIGH AVE, SUITE 100
SAN JOSE, CA 95126

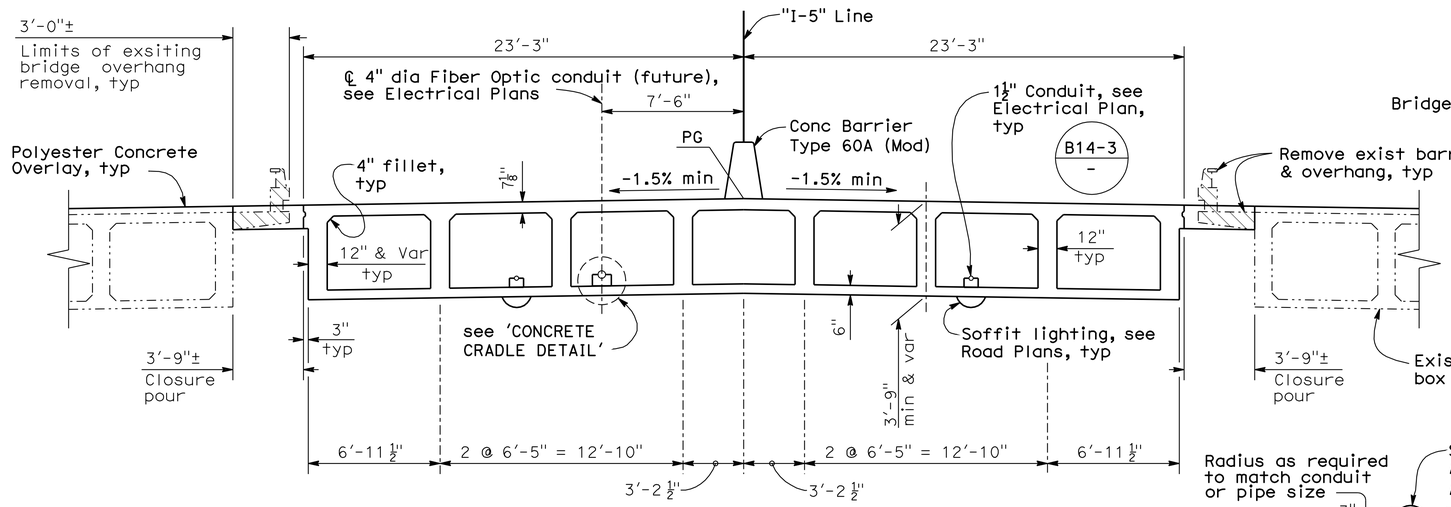

TYPICAL SECTION

1/4" = 1'-0"

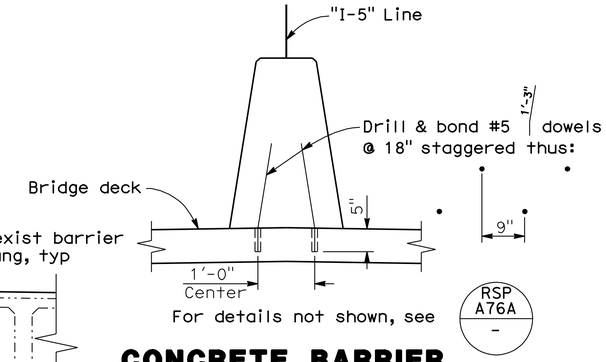

CONCRETE BARRIER TYPE 60A (MOD)

3/4" = 1'-0"

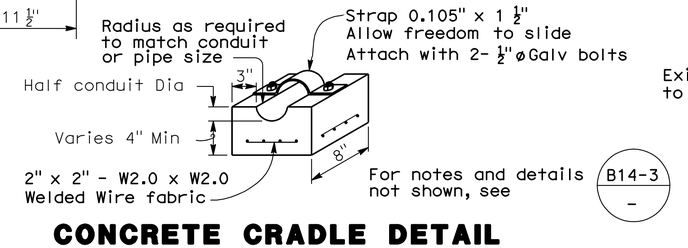

CONCRETE CRADLE DETAIL

No Scale

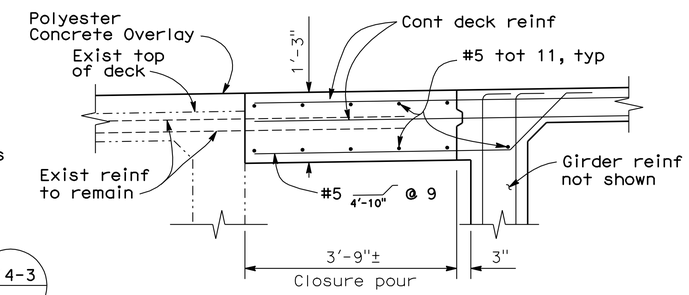

CLOSURE POUR DETAIL

3/4" = 1'-0"
(Left closure pour shown, right closure pour similar)

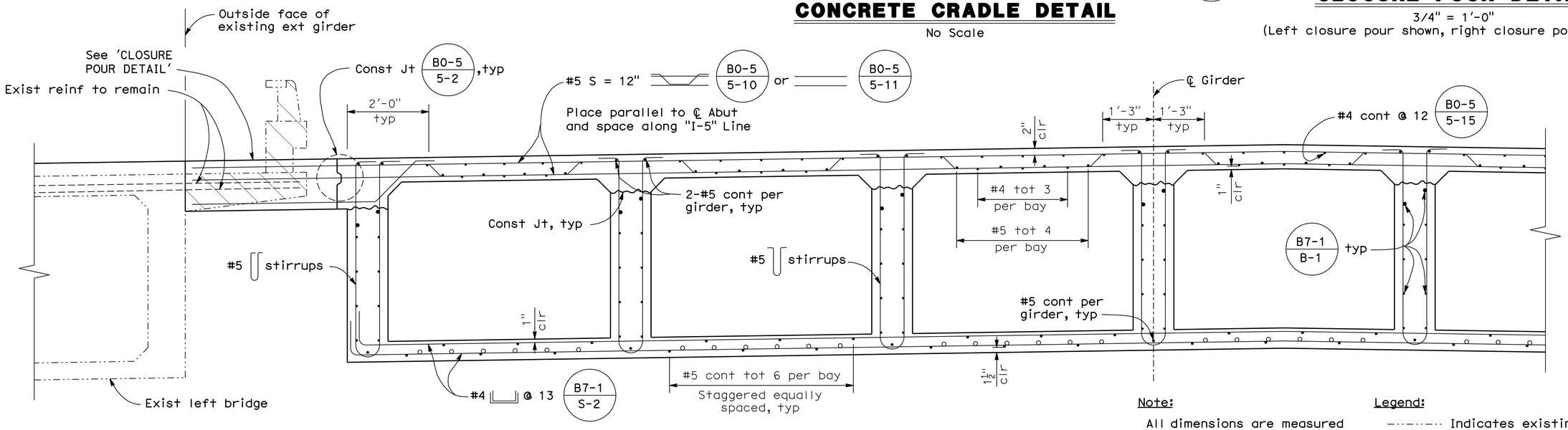

PARTIAL TYPICAL SECTION

3/4" = 1'-0"

A76A - B0-5 - B7-1 - B8-5 -

Note:
All dimensions are measured normal to "I-5" Line

Legend:
- Indicates existing structure
- Bridge Removal (Portion)
- ○ Indicates additional rebar, see 'GIRDER DETAILS' sheet

Note:
The Contractor shall verify all controlling field dimensions before ordering or fabricating any material

DESIGN OVERSIGHT — John Fujimoto
8-2-10
SIGN OFF DATE

	BY	CHECKED
DESIGN	A. WANG	P. SHINN
DETAILS	W. Y. TAN	P. SHINN
QUANTITIES	W. Y. TAN	G. WOLDETSADIK

PREPARED FOR THE STATE OF CALIFORNIA DEPARTMENT OF TRANSPORTATION

A. WANG
PROJECT ENGINEER

BRIDGE NO. 29-0192
POST MILE 29.19

TELEGRAPH AVENUE UC (WIDEN)
TYPICAL SECTION

DESIGN DETAIL SHEET (ENGLISH) (REV. 06-01-09)

ORIGINAL SCALE IN INCHES FOR REDUCED PLANS 0 1 2 3

CU 06240
EA 0G4701

DISREGARD PRINTS BEARING EARLIER REVISION DATES

REVISION DATES (PRELIMINARY STAGE ONLY): 10/16/09 12/4/09 1/18/10 4/23/10 6/11/10 7/28/10

SHEET 11 OF 28

FILE => 29-0192-k-ts01.dgn

USERNAME => friehard DATE PLOTTED => 18-OCT-2010 TIME PLOTTED => 09:00

DIST	COUNTY	ROUTE	POST MILES TOTAL PROJECT	SHEET No	TOTAL SHEETS
10	SJ	5	25.0/32.7	996	1132

REGISTERED CIVIL ENGINEER — DATE 7/28/10

10-11-10
PLANS APPROVAL DATE

REGISTERED PROFESSIONAL ENGINEER — ALLEN WANG — No. C 66503 — Exp. 06/30/12 — CIVIL — STATE OF CALIFORNIA

The State of California or its officers or agents shall not be responsible for the accuracy or completeness of scanned copies of this plan sheet.

SAN JOAQUIN COUNCIL OF GOVERNMENTS
555 E. WEBER AVENUE
STOCKTON, CA 95202

RAJAPPAN & MEYER
CONSULTING ENGINEERS, INC.
1038 LEIGH AVE, SUITE 100
SAN JOSE, CA 95126

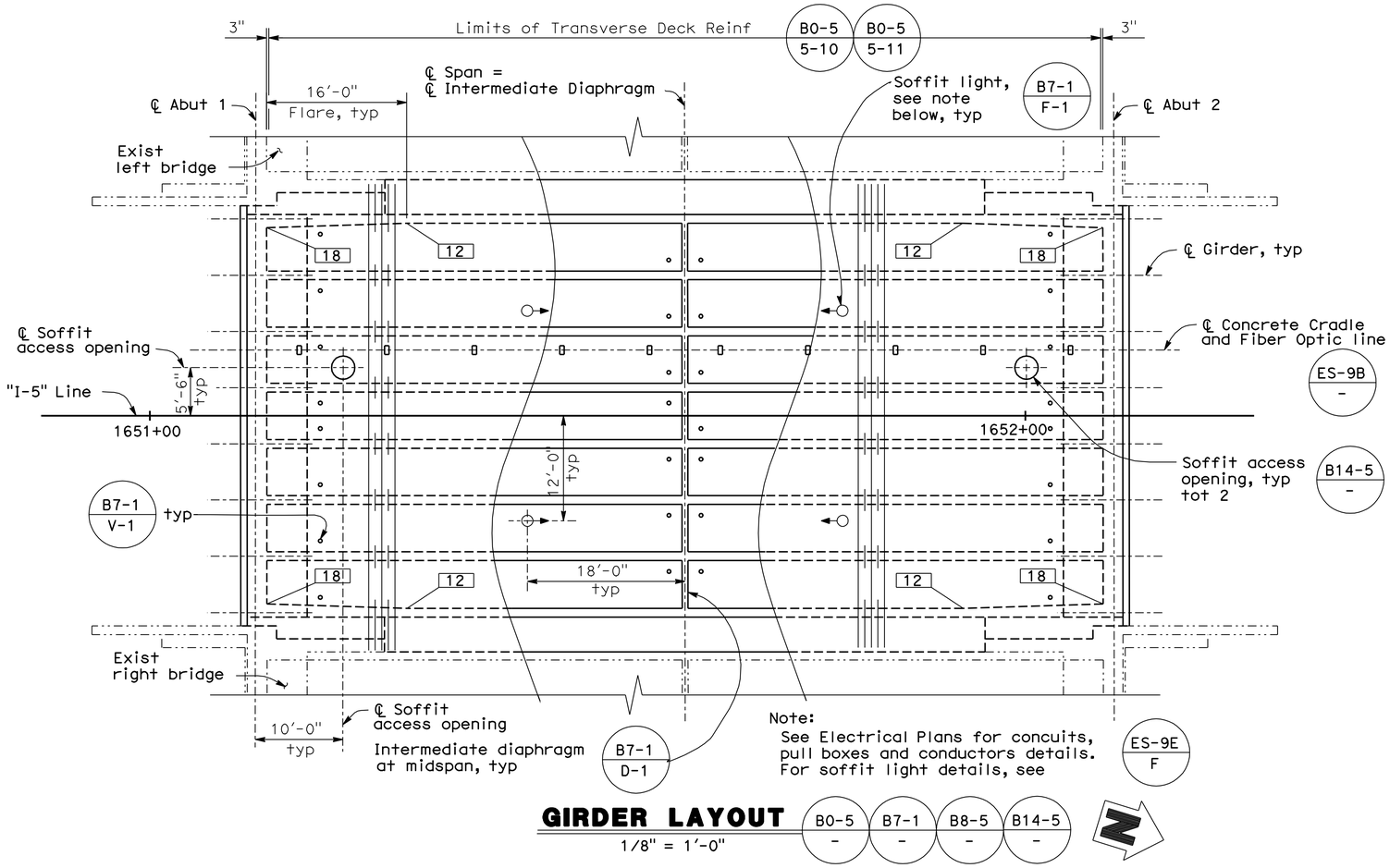

GIRDER LAYOUT

1/8" = 1'-0"

B0-5 / - B7-1 / - B8-5 / - B14-5 / -

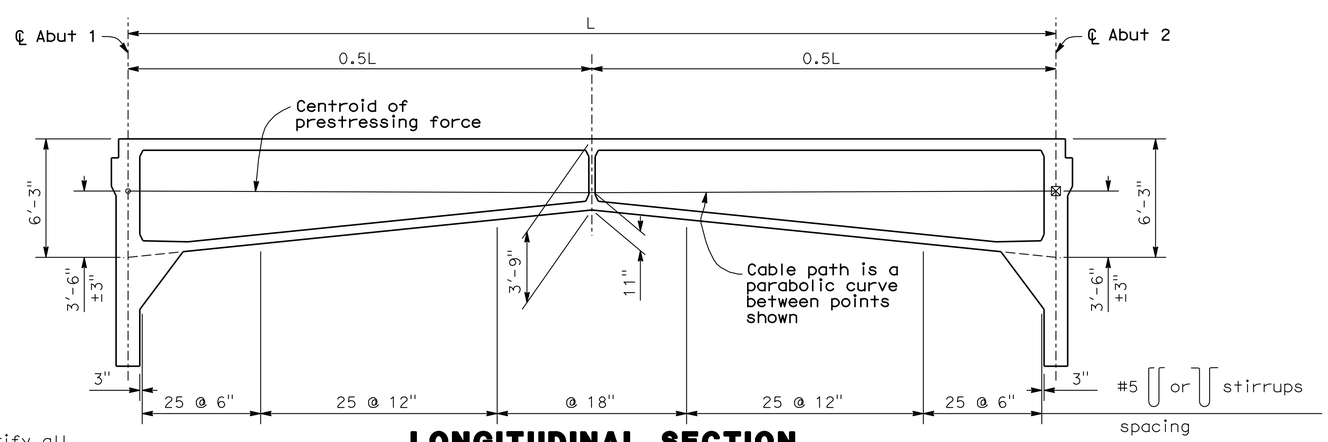

LONGITUDINAL SECTION

No Scale

Note:
The Contractor shall verify all controlling field dimensions before ordering or fabricating any material

Notes:

1. Indicates girder width in inches
   Girder stem width = 12" unless otherwise noted
2. For 'CONCRETE STRENGTH AND TYPE LIMITS', see 'GENERAL NOTES' sheet
3. L is measured along the ℄ of each girder

Prestressing Notes:

270 ksi Low Relaxation Strand :
Pjack = 13200 kips
Anchor Set = 3/8"
Total Number of Girders = 8

Distribution of prestress force (Pjack) between girders shall not exceed the ratio of 3:2. Maximum final force variation between girders shall not exceed 725 kips

Concrete: f'c = 5.0 ksi @ 28 days
f'ci = 3.6 ksi @ time of stressing

Contractor shall submit elongation calculations based on initial stress at ⊠ = 0.955 times jacking stress.

The maximum temporary tensile stress (jacking stress) in prestressing steel = 197.895 ksi

⊠ Denotes theoretical point of no movement

Stressing shall be performed from Abutment 1 end only

Prestress force design is based on friction coefficient μ = 0.15 and friction wobble coefficient k = 0.0002/ft and modified for curvature

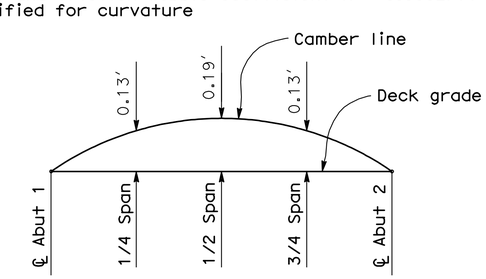

CAMBER DIAGRAM

No Scale
(Does not include allowance for falsework settlement)

Falsework Release Note:

Falsework shall be released as soon as permitted by the specifications. Closure pour shall not be placed sooner than 60 days after the falsework has been released.

John Fujimoto
DESIGN OVERSIGHT — John Fujimoto
8-2-10
SIGN OFF DATE

	BY	CHECKED
DESIGN	A. WANG	P. SHINN
DETAILS	W. Y. TAN	P. SHINN
QUANTITIES	W. Y. TAN	G. WOLDETSADIK

PREPARED FOR THE STATE OF CALIFORNIA DEPARTMENT OF TRANSPORTATION

A. WANG
PROJECT ENGINEER

BRIDGE NO. 29-0192
POST MILE 29.19

TELEGRAPH AVENUE UC (WIDEN)
GIRDER LAYOUT

DESIGN DETAIL SHEET (ENGLISH) (REV. 06-01-09)

ORIGINAL SCALE IN INCHES FOR REDUCED PLANS 0 1 2 3

CU 06240
EA 0G4701

DISREGARD PRINTS BEARING EARLIER REVISION DATES

REVISION DATES (PRELIMINARY STAGE ONLY): 10/16/09 12/17/09 1/18/10 4/23/10 6/17/10 7/28/10

SHEET 12 OF 28

FILE => 29-0192-1-g_1o01.dgn

USERNAME => trlenard DATE PLOTTED => 13-OCT-2010 TIME PLOTTED => 13:00

DIST	COUNTY	ROUTE	POST MILES TOTAL PROJECT	SHEET No	TOTAL SHEETS
10	SJ	5	25.0/32.7	997	1132

REGISTERED CIVIL ENGINEER — DATE 7/28/10

10-11-10
PLANS APPROVAL DATE

REGISTERED PROFESSIONAL ENGINEER — ALLEN WANG — No. C 66503 — Exp. 06/30/12 — CIVIL — STATE OF CALIFORNIA

The State of California or its officers or agents shall not be responsible for the accuracy or completeness of scanned copies of this plan sheet.

SAN JOAQUIN COUNCIL OF GOVERNMENTS
555 E. WEBER AVENUE
STOCKTON, CA 95202

RAJAPPAN & MEYER
CONSULTING ENGINEERS, INC.
1038 LEIGH AVE, SUITE 100
SAN JOSE, CA 95126

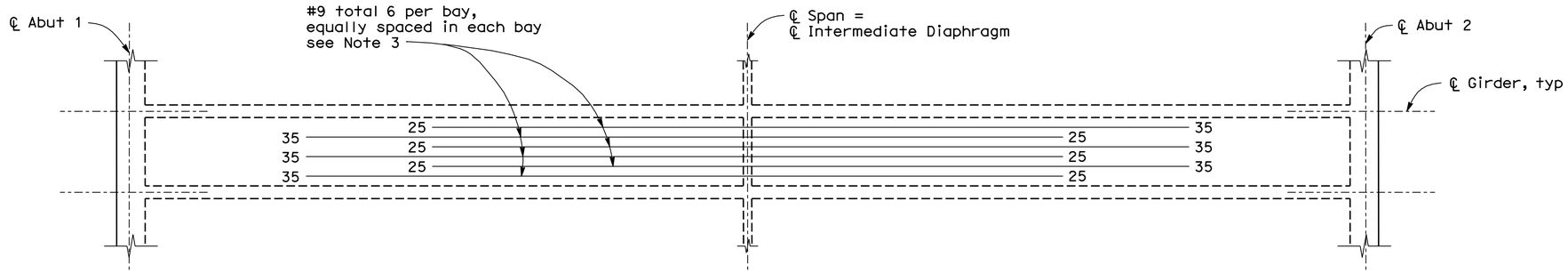

ADDITIONAL SOFFIT REINFORCEMENT

3/16" = 1'-0"

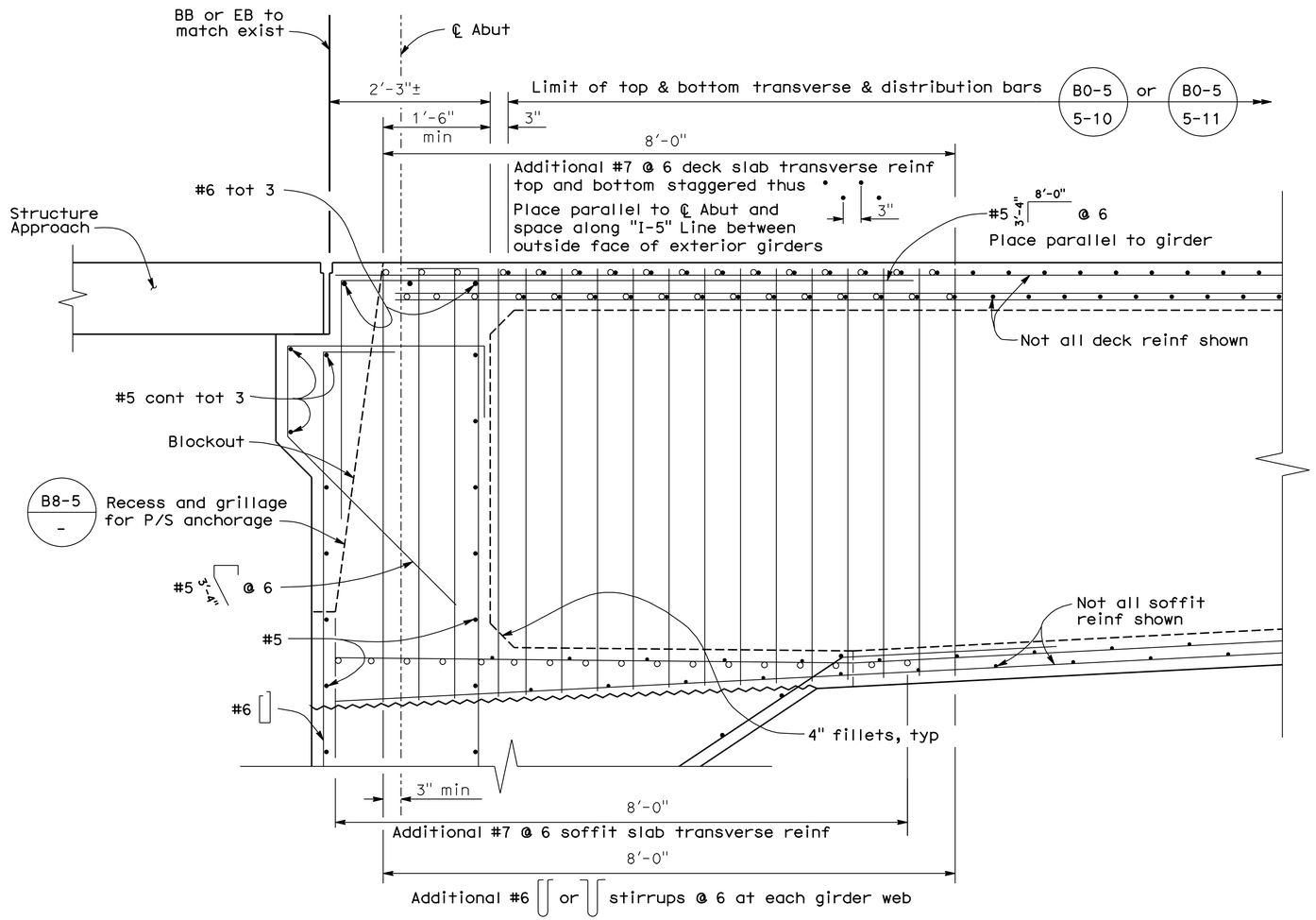

END DIAPHRAGM

1" = 1'-0"

Notes:

1. Spaced bars approximately equal within limits shown
2. Reinforcement shall be placed parallel to ℄ bridge
3. No lap splices permitted
4. Number at end of bar indicates distance in feet from ℄ Span.

Note:
The Contractor shall verify all controlling field dimensions before ordering or fabricating any material

DESIGN OVERSIGHT — John Fujimoto
8-2-10
SIGN OFF DATE

	BY	CHECKED
DESIGN	A. WANG	P. SHINN
DETAILS	W. Y. TAN	P. SHINN
QUANTITIES	W. Y. TAN	G. WOLDETSADIK

PREPARED FOR THE STATE OF CALIFORNIA DEPARTMENT OF TRANSPORTATION

A. WANG
PROJECT ENGINEER

BRIDGE NO. 29-0192
POST MILE 29.19

TELEGRAPH AVENUE UC (WIDEN)
GIRDER DETAILS

DESIGN DETAIL SHEET (ENGLISH) (REV. 06-01-09)

ORIGINAL SCALE IN INCHES FOR REDUCED PLANS 0 1 2 3

CU 06240
EA 0G4701

DISREGARD PRINTS BEARING EARLIER REVISION DATES

REVISION DATES (PRELIMINARY STAGE ONLY): 10/16/09 12/17/09 1/15/10 4/23/10 6/17/10 7/28/10

SHEET 13 OF 28

FILE => 29-0192-I-gdt01.dgn

USERNAME => rfriehard DATE PLOTTED => 13-OCT-2010 TIME PLOTTED => 13:00

DIST	COUNTY	ROUTE	POST MILES TOTAL PROJECT	SHEET No	TOTAL SHEETS
10	SJ	5	25.0/32.7	998	1132

REGISTERED CIVIL ENGINEER — DATE 7/28/10

10-11-10
PLANS APPROVAL DATE

REGISTERED PROFESSIONAL ENGINEER — ALLEN WANG — No. C 66503 — Exp. 06/30/12 — CIVIL — STATE OF CALIFORNIA

The State of California or its officers or agents shall not be responsible for the accuracy or completeness of scanned copies of this plan sheet.

SAN JOAQUIN COUNCIL OF GOVERNMENTS
555 E. WEBER AVENUE
STOCKTON, CA 95202

RAJAPPAN & MEYER
CONSULTING ENGINEERS, INC.
1038 LEIGH AVE, SUITE 100
SAN JOSE, CA 95126

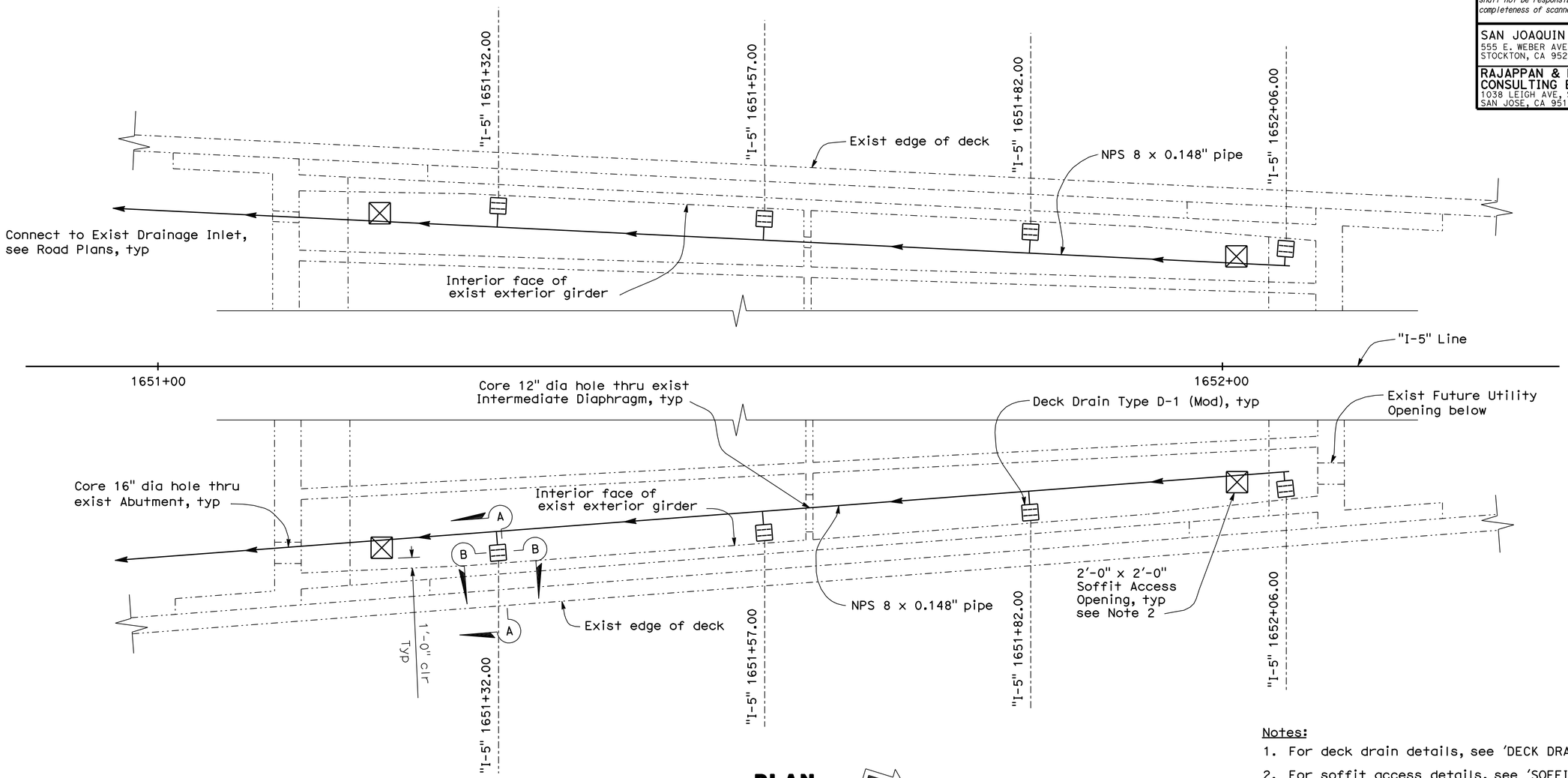

PLAN
3/16" = 1'-0"

Notes:
1. For deck drain details, see 'DECK DRAIN DETAILS' sheet.
2. For soffit access details, see 'SOFFIT OPENINGS' sheet.
3. For "Section A-A" and "Section B-B" see "Deck Drain Details" sheet

Legend:
-·-·-·- Indicates existing structure

Note:
The Contractor shall verify all controlling field dimensions before ordering or fabricating any material

DESIGN	BY A. WANG	CHECKED P. SHINN	
DETAILS	BY W. Y. TAN	CHECKED P. SHINN	
QUANTITIES	BY W. Y. TAN	CHECKED G. WOLDETSADIK	

DESIGN OVERSIGHT John Fujimoto
8-2-10
SIGN OFF DATE

PREPARED FOR THE STATE OF CALIFORNIA DEPARTMENT OF TRANSPORTATION

A. WANG
PROJECT ENGINEER

BRIDGE NO. 29-0192
POST MILE 29.19

TELEGRAPH AVENUE UC (WIDEN)
DECK DRAIN PLAN

DESIGN DETAIL SHEET (ENGLISH) (REV. 06-01-09)

ORIGINAL SCALE IN INCHES FOR REDUCED PLANS 0 1 2 3

CU 06240
EA 0G4701

DISREGARD PRINTS BEARING EARLIER REVISION DATES

REVISION DATES (PRELIMINARY STAGE ONLY): 10/16/09 12/14/09 1/18/10 4/23/10 6/17/10 7/28/10

SHEET 14 OF 28

FILE => 29-0192-r-dd01.dgn

USERNAME => friehard DATE PLOTTED => 13-OCT-2010 TIME PLOTTED => 13:00

DIST	COUNTY	ROUTE	POST MILES TOTAL PROJECT	SHEET No	TOTAL SHEETS
10	SJ	5	25.0/32.7	999	1132

REGISTERED CIVIL ENGINEER — DATE 7/28/10

10-11-10
PLANS APPROVAL DATE

The State of California or its officers or agents shall not be responsible for the accuracy or completeness of scanned copies of this plan sheet.

REGISTERED PROFESSIONAL ENGINEER — ALLEN WANG — No. C 66503 — Exp. 06/30/12 — CIVIL — STATE OF CALIFORNIA

SAN JOAQUIN COUNCIL OF GOVERNMENTS
555 E. WEBER AVENUE
STOCKTON, CA 95202

RAJAPPAN & MEYER
CONSULTING ENGINEERS, INC.
1038 LEIGH AVE, SUITE 100
SAN JOSE, CA 95126

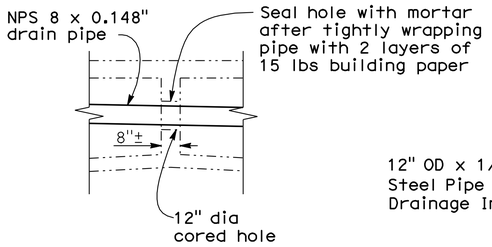

DECK DRAIN AT INTERMEDIATE DIAPH

3/8" = 1'-0"

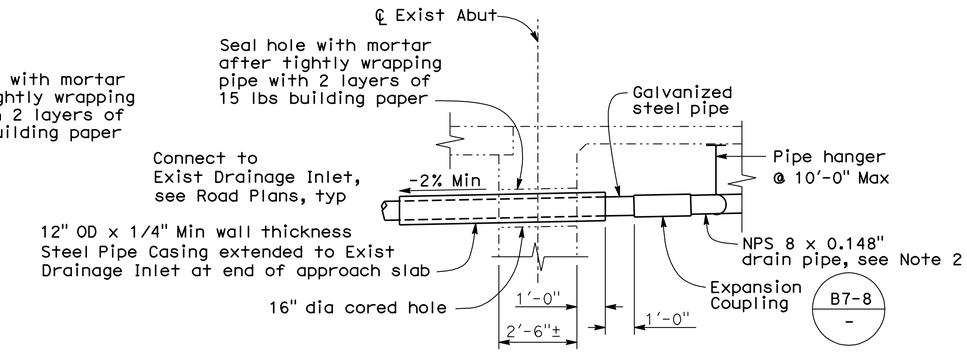

DECK DRAIN AT ABUT

3/8" = 1'-0"

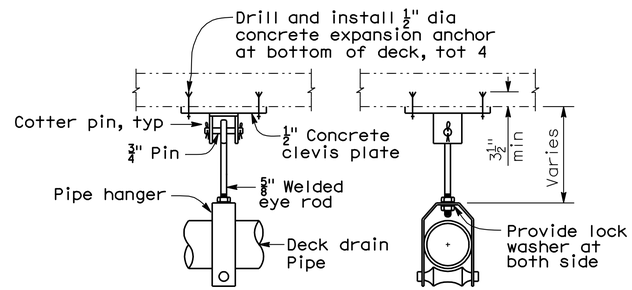

PIPE HANGER

No Scale

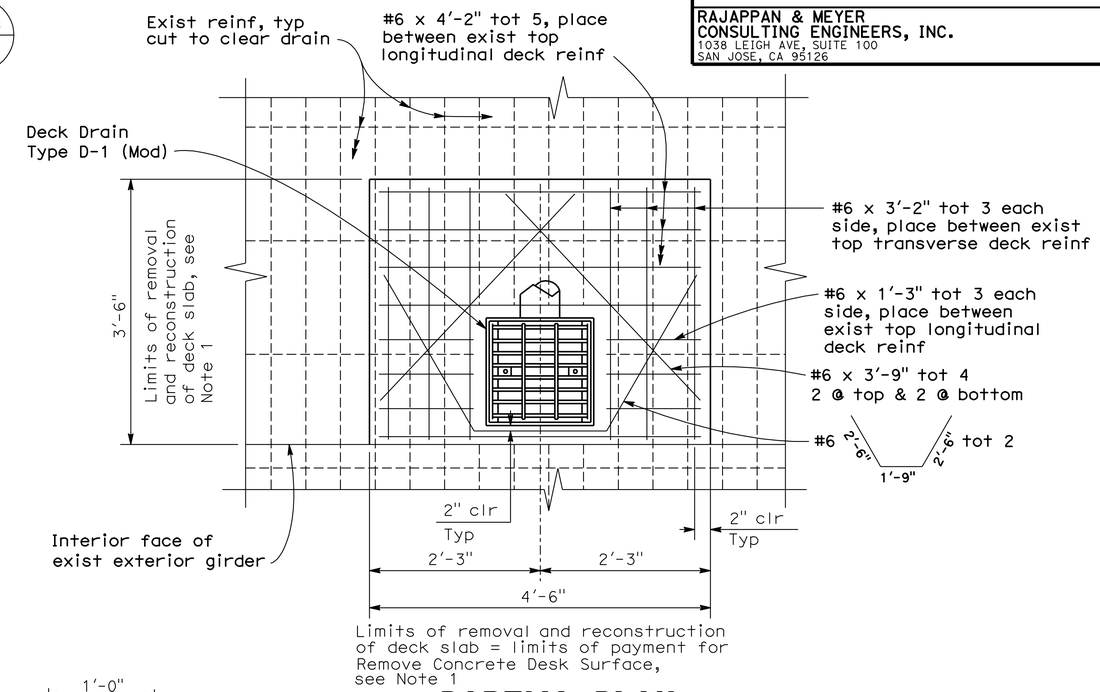

PARTIAL PLAN

1" = 1'-0"

Notes:

1. For the deck removal; any existing reinforcement that is damaged shall be removed and equal size reinforcement shall be butt welded to it.
2. Longitudinal deck drain pipe to be galvanized NPS 8 x 0.148" welded steel pipe. Fittings and bends shall have a minimum wall thickness of 1/8". All joints or conections to be butt welded or connected by a steel pipe sleeve and to be smooth throughout inside of pipe except as noted. All bends to be on 2'-0" minimum radius measured along ℄ pipe.
3. All pipes in the deck shall be installed with a down slope greater than 2%.
4. All drains and drainage assemblies to be galvanized.
5. For other general notes, pipe alignment, sleeve connection and other details not shown, see B7-6 / -

Legend:

Indicates existing structure

Indicates limits of Remove Concrete Deck Surface

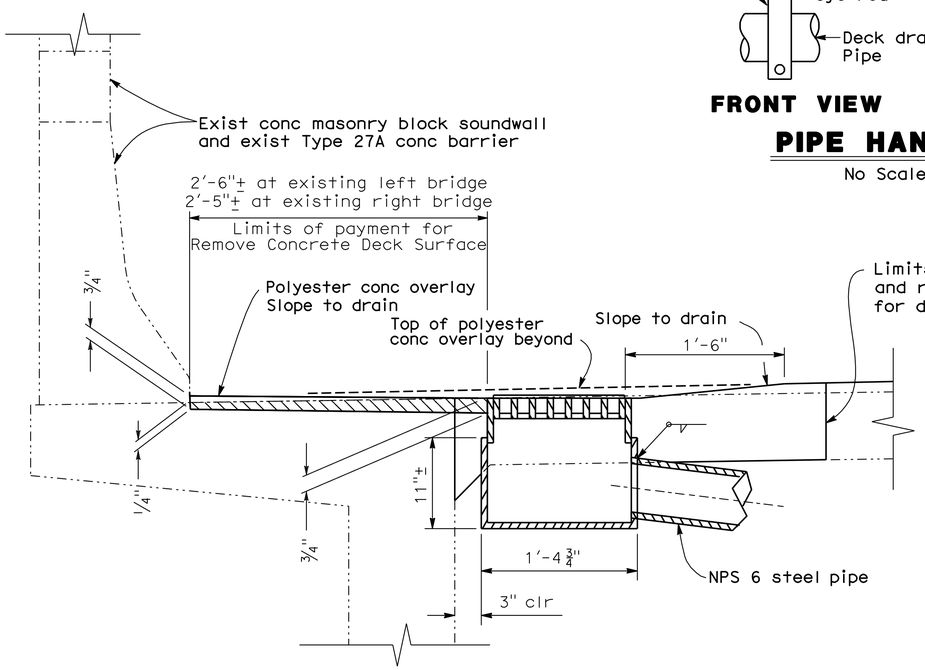

SECTION A-A

No Scale

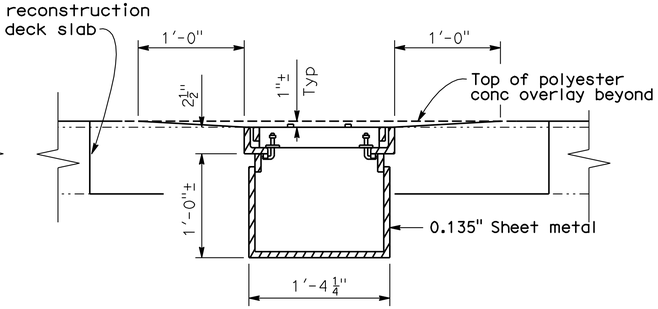

SECTION B-B

No Scale

Note:
The Contractor shall verify all controlling field dimensions before ordering or fabricating any material

DESIGN	BY A. WANG	CHECKED P. SHINN	
DETAILS	BY W. Y. TAN	CHECKED P. SHINN	
QUANTITIES	BY W. Y. TAN	CHECKED G. WOLDETSADIK	

DESIGN OVERSIGHT John Fujimoto
8-2-10
SIGN OFF DATE

PREPARED FOR THE STATE OF CALIFORNIA DEPARTMENT OF TRANSPORTATION

A. WANG
PROJECT ENGINEER

BRIDGE NO. 29-0192
POST MILE 29.19

TELEGRAPH AVENUE UC (WIDEN)
DECK DRAIN DETAILS

CU 06240
EA 0G4701

DISREGARD PRINTS BEARING EARLIER REVISION DATES

REVISION DATES (PRELIMINARY STAGE ONLY): 10/16/09 12/17/09 1/18/10 4/23/10 6/11/10 7/28/10

SHEET 15 OF 28

DESIGN DETAIL SHEET (ENGLISH) (REV. 06-01-09)

ORIGINAL SCALE IN INCHES FOR REDUCED PLANS 0 1 2 3

FILE => 29-0192-r-ddet01.dgn

USERNAME => rrlenord DATE PLOTTED => 18-OCT-2010 TIME PLOTTED => 09:00

DIST	COUNTY	ROUTE	POST MILES TOTAL PROJECT	SHEET No	TOTAL SHEETS
10	SJ	5	25.0/32.7	1000	1132

REGISTERED CIVIL ENGINEER 7/28/10 DATE

10-11-10
PLANS APPROVAL DATE

REGISTERED PROFESSIONAL ENGINEER ALLEN WANG No. C 66503 Exp. 06/30/12 CIVIL STATE OF CALIFORNIA

The State of California or its officers or agents shall not be responsible for the accuracy or completeness of scanned copies of this plan sheet.

SAN JOAQUIN COUNCIL OF GOVERNMENTS
555 E. WEBER AVENUE
STOCKTON, CA 95202

RAJAPPAN & MEYER
CONSULTING ENGINEERS, INC.
1038 LEIGH AVE, SUITE 100
SAN JOSE, CA 95126

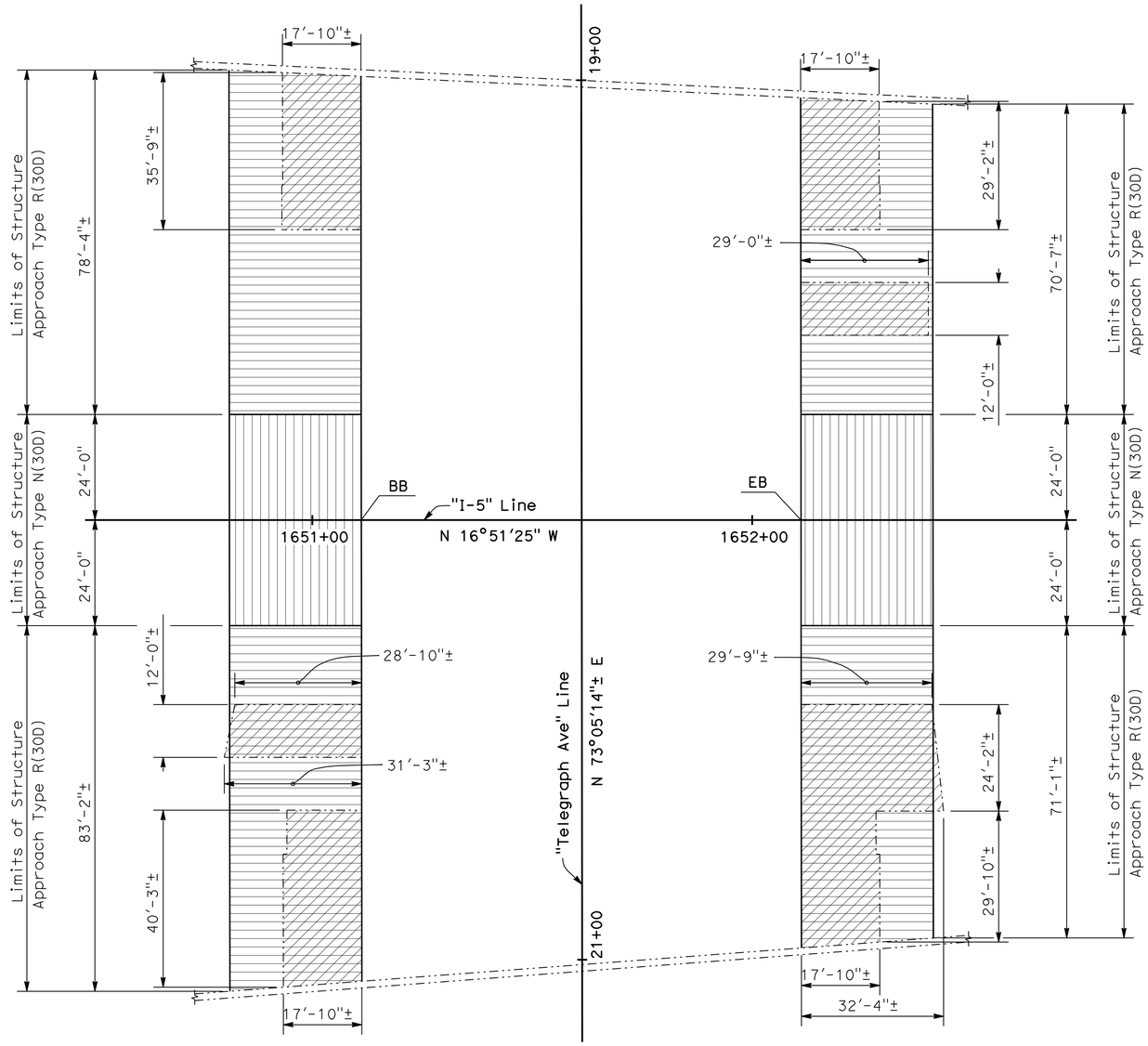

STRUCTURE APPROACH PLAN

1/16" = 1'-0"

Notes:

1. For details not shown, see 'STRUCTURE APPROACH TYPE R(30D)' and 'STRUCTURE APPROACH TYPE N(30D)' sheets
2. Longitudinal construction joints shall be at lane lines as required for roadway staging, see Road Plans. See 'STRUCTURE APPROACH' sheets for details.

Legend:

- Indicates limits of remove existing approach slab Depth varies from 1'-3"± to 1'-6"±
- Indicates pay limits of Structure Approach Type N(30D)
- Indicates pay limits of Structure Approach Type R(30D)

Note:
The Contractor shall verify all controlling field dimensions before ordering or fabricating any material

DESIGN OVERSIGHT John Fujimoto
8-2-10
SIGN OFF DATE

	BY	CHECKED
DESIGN	A. WANG	P. SHINN
DETAILS	W. Y. TAN	P. SHINN
QUANTITIES	W. Y. TAN	G. WOLDETSADIK

PREPARED FOR THE STATE OF CALIFORNIA DEPARTMENT OF TRANSPORTATION

A. WANG
PROJECT ENGINEER

BRIDGE NO. 29-0192
POST MILE 29.19

TELEGRAPH AVENUE UC (WIDEN)
LIMITS OF STRUCTURE APPROACH

DESIGN DETAIL SHEET (ENGLISH) (REV. 06-01-09)

ORIGINAL SCALE IN INCHES FOR REDUCED PLANS 0 1 2 3

CU 06240
EA 0G4701

DISREGARD PRINTS BEARING EARLIER REVISION DATES

REVISION DATES (PRELIMINARY STAGE ONLY) 10/15/09 12/14/09 1/15/10 4/23/10 6/17/10 7/28/10

SHEET 16 OF 28

FILE => 29-0192-s-lsa.dgn

USERNAME => friehard DATE PLOTTED => 13-OCT-2010 TIME PLOTTED => 13:01