Dist	COUNTY	ROUTE	POST MILES TOTAL PROJECT	SHEET No.	TOTAL SHEETS
10	SJ	5	25.0/32.7	501	1132

REGISTERED CIVIL ENGINEER 04/21/10 DATE

10-11-10
PLANS APPROVAL DATE

REGISTERED PROFESSIONAL ENGINEER CHUONG NGUYEN No. C46770 Exp. 06/30/11 CIVIL STATE OF CALIFORNIA

THE STATE OF CALIFORNIA OR ITS OFFICERS OR AGENTS SHALL NOT BE RESPONSIBLE FOR THE ACCURACY OR COMPLETENESS OF SCANNED COPIES OF THIS PLAN SHEET.

RAJAPPAN & MEYER
CONSULTING ENGINEERS INC.
1038 LEIGH AVE, SUITE 100
SAN JOSE, CA 95126

SJCOG
555 E. WEBER AVE.
STOCKTON, CA 95202-2804

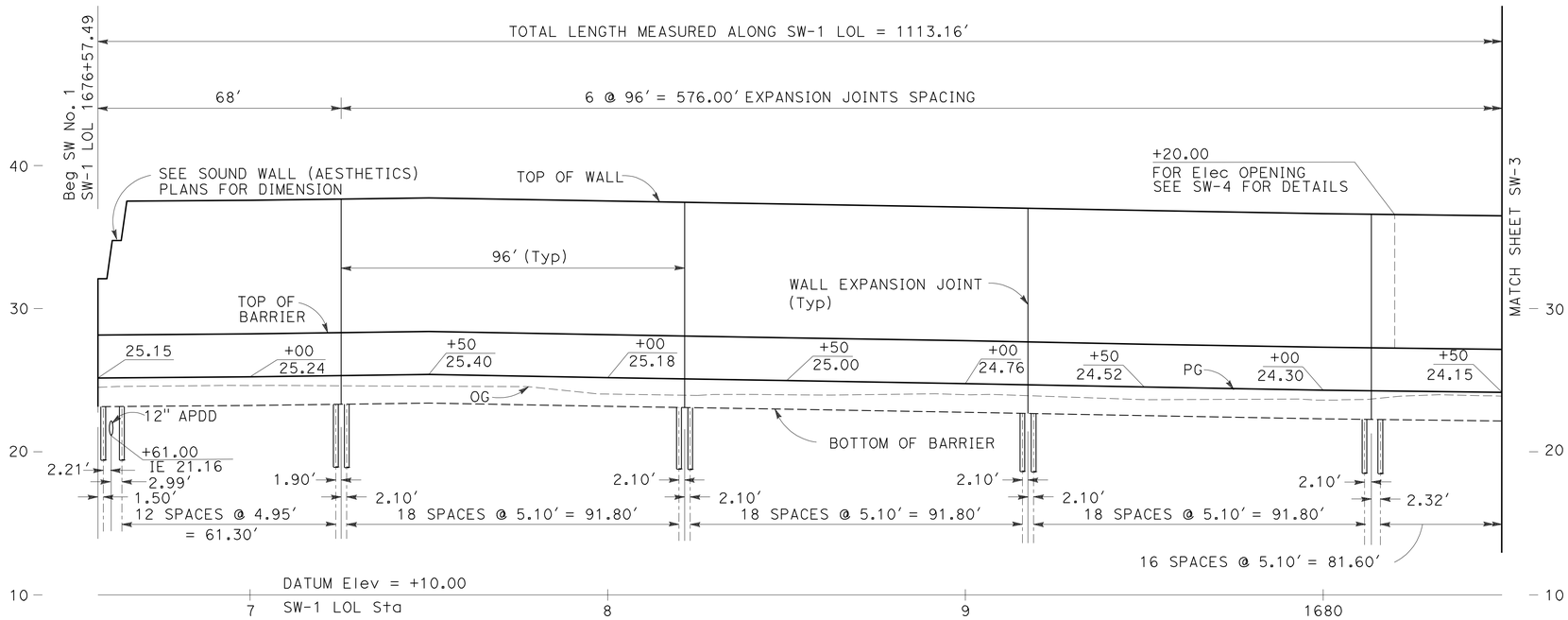

ELEVATION

SCALE: Horiz 1" = 20'
Vert 1" = 5'

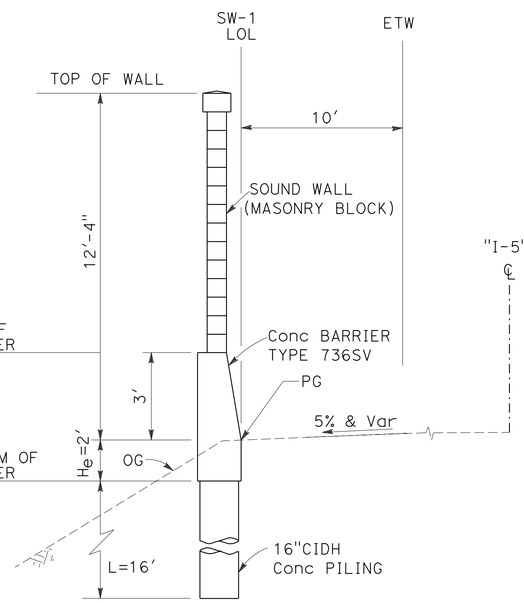

TYPICAL SECTION

SW-1 Sta 1676+57.49 TO Sta 1684+82.59
NO SCALE

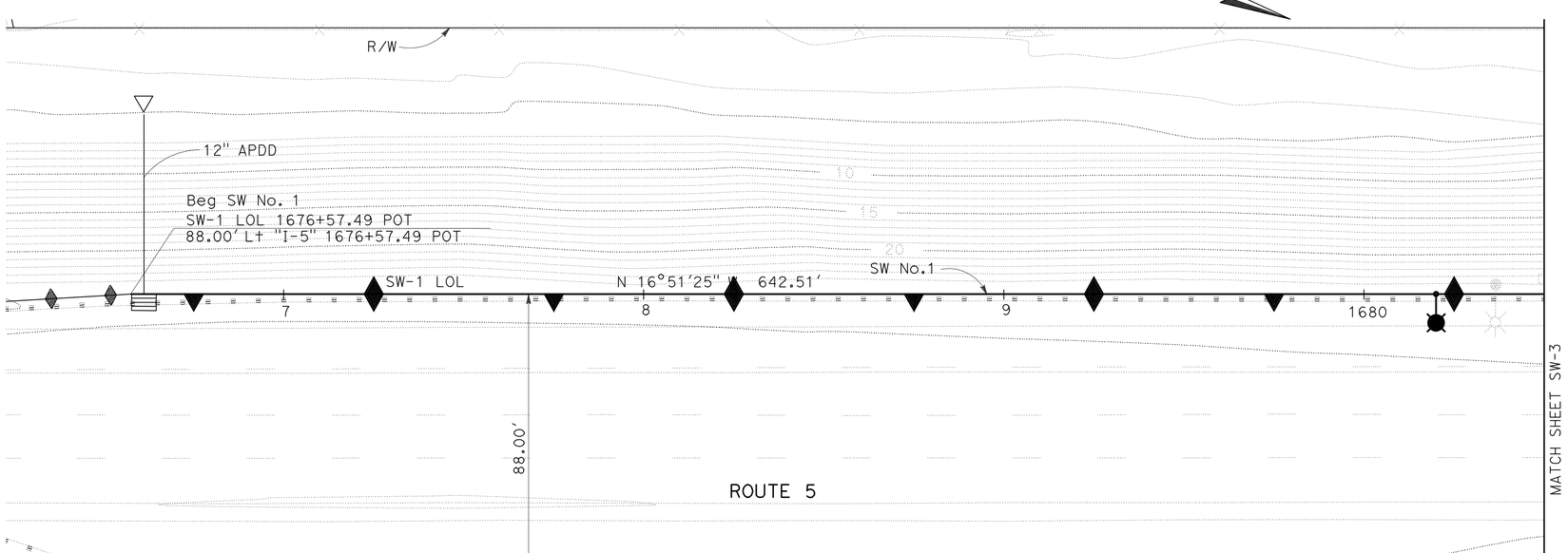

PLAN

SCALE: 1" = 20'

THIS PLAN ACCURATE FOR SOUND WALL WORK ONLY

NOTE:

FOR DETAILS OF SW ON BARRIER, SEE Std PLAN B15-6 B15-7 B15-8

SOUND WALL PLAN

SOUND WALL No.1

SCALE AS SHOWN

SW-2

REVISED BY | DATE REVISED
SRILAKSHMI SAKHAMURI | CHUONG NGUYEN
CALCULATED-DESIGNED BY | CHECKED BY
CONSULTANT FUNCTIONAL SUPERVISOR
KEITH G. MEYER

STATE OF CALIFORNIA - DEPARTMENT OF TRANSPORTATION
Caltrans

LAST REVISION | DATE PLOTTED => 12-OCT-2010 | TIME PLOTTED => 12:35
07-30-10

Dist	COUNTY	ROUTE	POST MILES TOTAL PROJECT	SHEET No.	TOTAL SHEETS
10	SJ	5	25.0/32.7	502	1132

REGISTERED CIVIL ENGINEER 04/21/10 DATE

10-11-10
PLANS APPROVAL DATE

REGISTERED PROFESSIONAL ENGINEER CHUONG NGUYEN No. C46770 Exp. 06/30/11 CIVIL STATE OF CALIFORNIA

THE STATE OF CALIFORNIA OR ITS OFFICERS OR AGENTS SHALL NOT BE RESPONSIBLE FOR THE ACCURACY OR COMPLETENESS OF SCANNED COPIES OF THIS PLAN SHEET.

RAJAPPAN & MEYER
CONSULTING ENGINEERS INC.
1038 LEIGH AVE, SUITE 100
SAN JOSE, CA 95126

SJCOG
555 E. WEBER AVE.
STOCKTON, CA 95202-2804

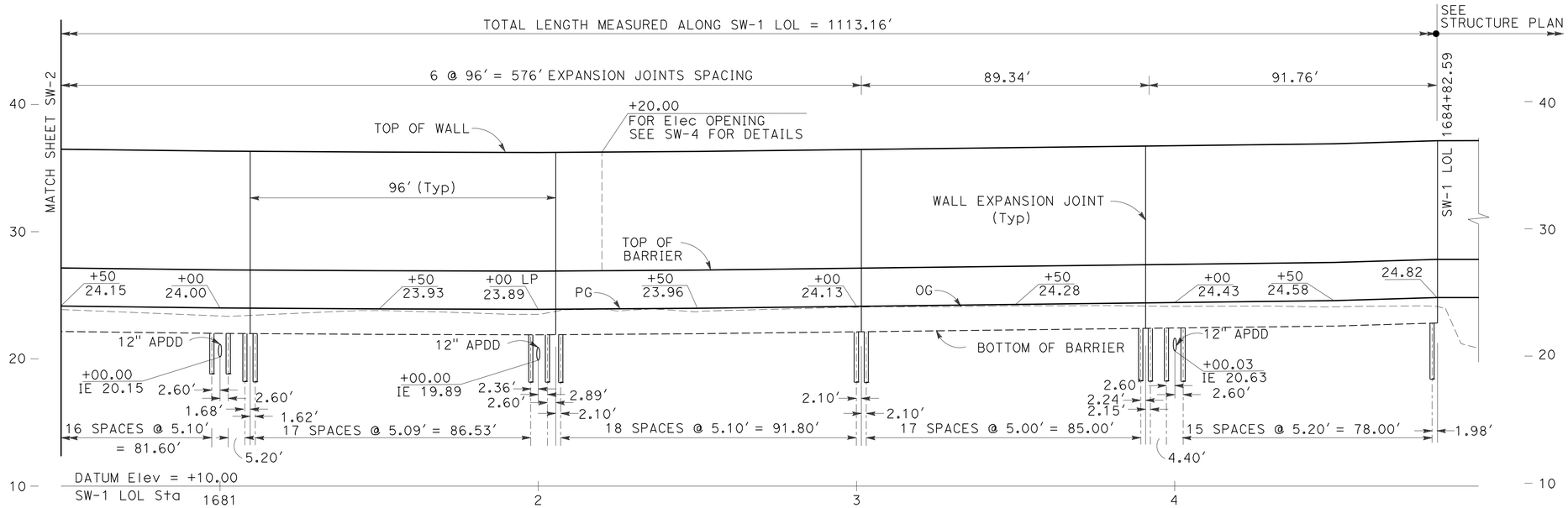

ELEVATION

SCALE: Horiz 1" = 20'
Vert 1" = 5'

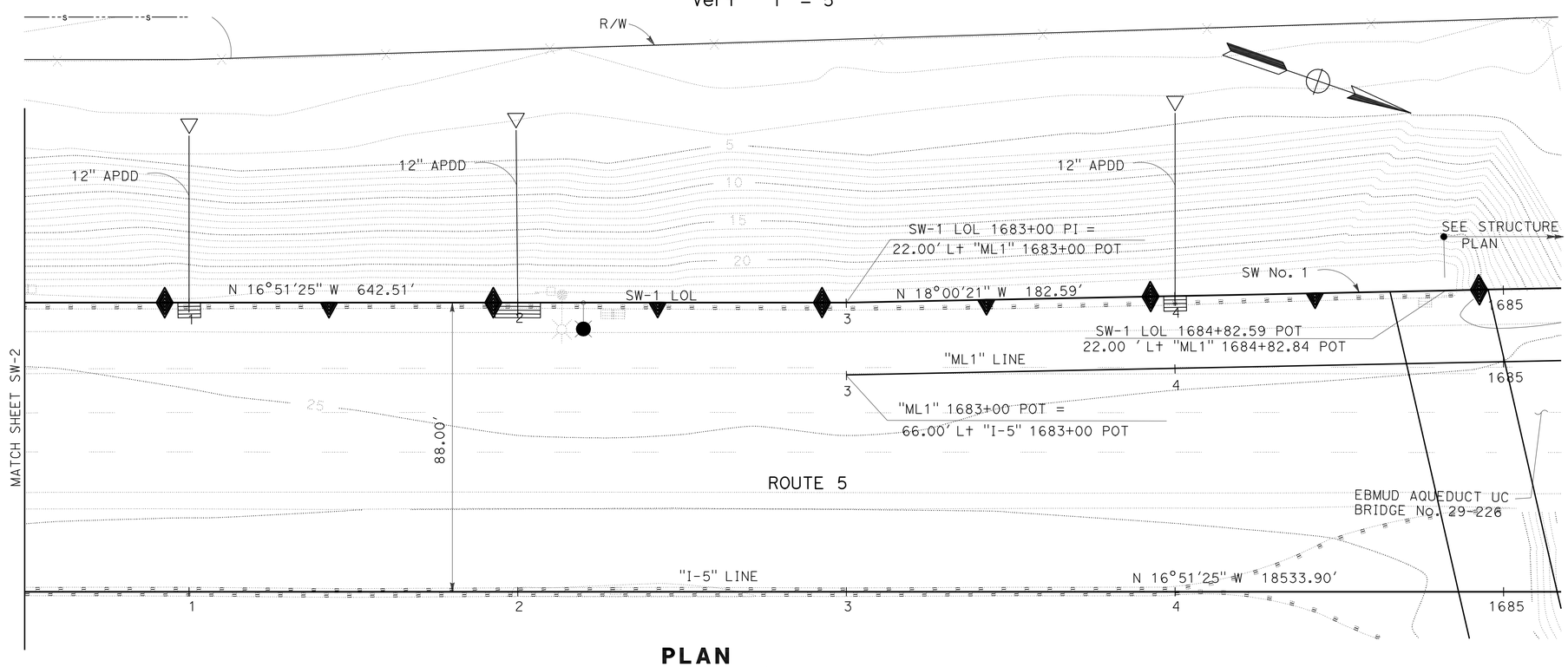

PLAN

SCALE: 1" = 20'

THIS PLAN ACCURATE FOR SOUND WALL WORK ONLY

SOUND WALL PLAN

SOUND WALL No.1

SCALE AS SHOWN

SW-3

STATE OF CALIFORNIA - DEPARTMENT OF TRANSPORTATION
Caltrans

CONSULTANT FUNCTIONAL SUPERVISOR: KEITH G. MEYER
CALCULATED-DESIGNED BY: SRILAKSHMI SAKHAMURI
CHECKED BY: CHUONG NGUYEN
REVISED BY / DATE REVISED

LAST REVISION 08-10-10 | DATE PLOTTED => 12-OCT-2010 | TIME PLOTTED => 12:35

Dist	COUNTY	ROUTE	POST MILES TOTAL PROJECT	SHEET No.	TOTAL SHEETS
10	SJ	5	25.0/32.7	503	1132

REGISTERED CIVIL ENGINEER 04/21/10 DATE

10-11-10
PLANS APPROVAL DATE

REGISTERED PROFESSIONAL ENGINEER CHUONG NGUYEN No. C46770 Exp. 06/30/11 CIVIL STATE OF CALIFORNIA

THE STATE OF CALIFORNIA OR ITS OFFICERS OR AGENTS SHALL NOT BE RESPONSIBLE FOR THE ACCURACY OR COMPLETENESS OF SCANNED COPIES OF THIS PLAN SHEET.

RAJAPPAN & MEYER
CONSULTING ENGINEERS INC.
1038 LEIGH AVE, SUITE 100
SAN JOSE, CA 95126

SJCOG
555 E. WEBER AVE.
STOCKTON, CA 95202-2804

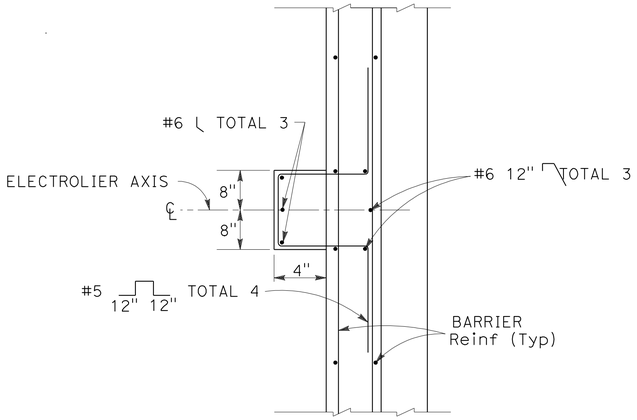

SECTION B-B

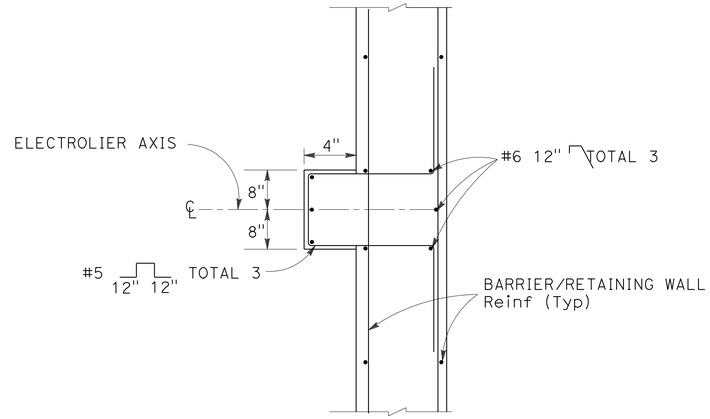

SECTION C-C

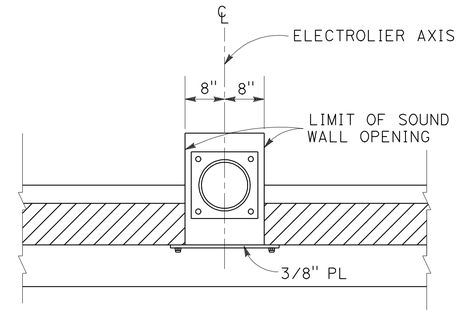

SECTION D-D

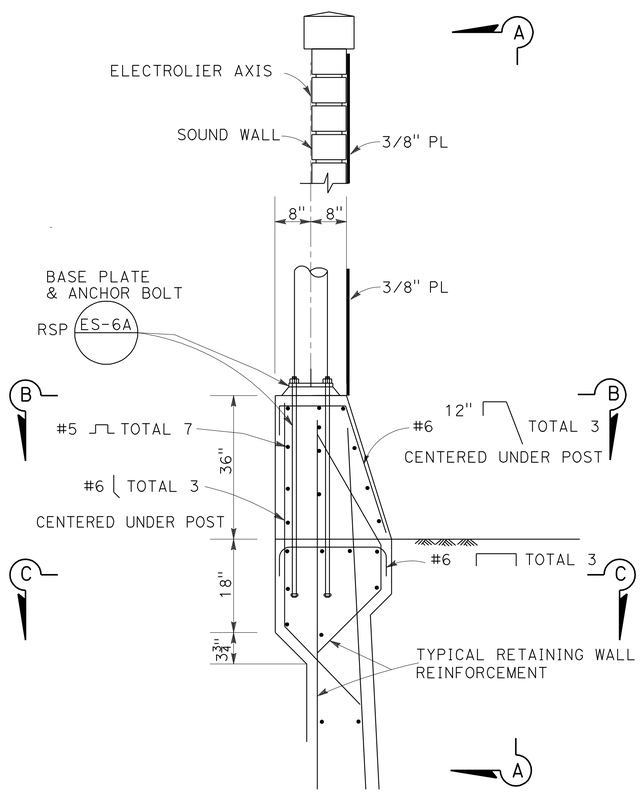

ELECTROLIER ON BARRIER AT RETAINING WALL

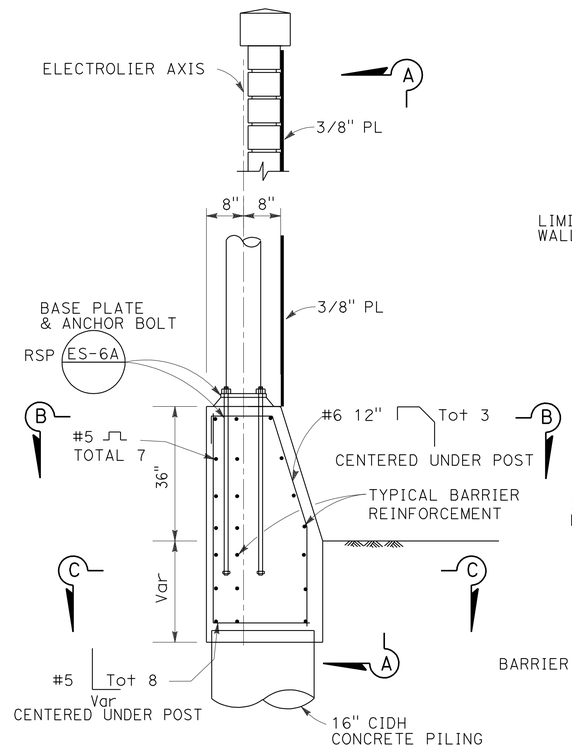

ELECTROLIER ON BARRIER AT PILE FOOTING

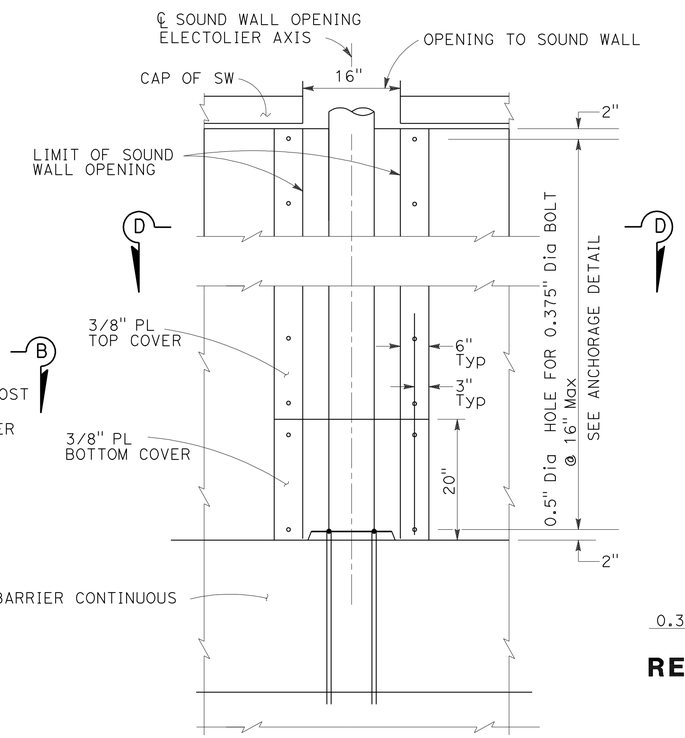

SECTION A-A ELEVATION

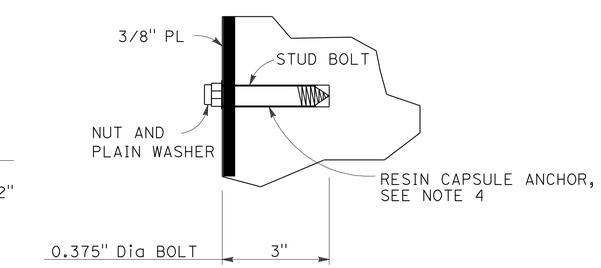

RESIN CAPSULE TYPE BOLT ANCHORAGE DETAIL

NOTES:

1. FOR LOCATION OF OPENING, SEE OTHER SW PLANS.
2. ALL STEEL TO BE FINISH GALVANIZED AFTER FABRICATION.
3. RESIN CAPSULE ANCHORAGE IS SUBJECT TO APPROVAL OF ENGINEER. INSTALLATION PROCEDURES SHALL COMPLY WITH MANUFACTURER'S INSTRUCTIONS.

SOUND WALL DETAIL

NO SCALE

SW-4

STATE OF CALIFORNIA - DEPARTMENT OF TRANSPORTATION

Caltrans

CONSULTANT FUNCTIONAL SUPERVISOR: KEITH G. MEYER

CALCULATED-DESIGNED BY: SRILAKSHMI SAKHAMURI

CHECKED BY: CHUONG NGUYEN

REVISED BY

DATE REVISED

LAST REVISION 07-07-10

DATE PLOTTED => 12-OCT-2010
TIME PLOTTED => 12:35

Dist	COUNTY	ROUTE	POST MILES TOTAL PROJECT	SHEET No.	TOTAL SHEETS
10	SJ	5	25.0/32.7	504	1132

REGISTERED CIVIL ENGINEER 04/21/10 DATE

10-11-10
PLANS APPROVAL DATE

REGISTERED PROFESSIONAL ENGINEER CHRISTINA D.B.FRANKEL No.C-25730 Exp. 05/31/11 CIVIL STATE OF CALIFORNIA

THE STATE OF CALIFORNIA OR ITS OFFICERS OR AGENTS SHALL NOT BE RESPONSIBLE FOR THE ACCURACY OR COMPLETENESS OF SCANNED COPIES OF THIS PLAN SHEET.

DERIVI CONSTRUCTION & ARCHITECTURE, INC.
924 N. YOSEMITE STREET
STOCKTON, CA 95203

SJCOG
555 E. WEBER AVE.
STOCKTON, CA 95202-2804

BLOCK LEGEND:

Medium Wt / Light Wt — BLOCK A: 'CAP'
8(H)x10(D)*x16(L)
*PROJECT BLOCK 1" EA SIDE
SPLIT FACE BOTH FACES
DARK TAN WITH MEDIUM-SIZED BLACK, DARK BROWN & WHITE AGGREGATE

Medium Wt / Light Wt — BLOCK B: 'WATER'
8(H)x8(D)x16(L)
SPLIT FACE BOTH FACES
DARK TAN WITH MEDIUM-SIZED BLACK, DARK BROWN & WHITE AGGREGATE

Medium Wt — BLOCK C: 'FIELDS'
8(H)x8(D)x16(L)
SPLIT FACE BOTH FACES
3 SCORE ($\frac{3}{8}$") BOTH FACES
DARK TAN WITH MEDIUM-SIZED BLACK, DARK BROWN & WHITE AGGREGATE

Medium Wt — BLOCK D: 'LEVEE'
8(H)x10(D)*x16(L)
*PROJECT BLOCK 1" EA SIDE
PRECISION BLOCK
MEDIUM-LIGHT TAN WITH MEDIUM-SIZED BLACK, RED & WHITE AGGREGATE

Medium Wt / Light Wt — BLOCK G: 'LEVEE 2'
8(H)x8(D)x16(L)
PRECISION BLOCK
MEDIUM-LIGHT TAN WITH MEDIUM-SIZED BLACK, RED & WHITE AGGREGATE

Medium Wt / Light Wt — BLOCK F: 'CITY'
8(H)x8(D)x16(L)
SPLIT FACE BOTH FACES
LIGHT TAN WITH SMALL-SIZED WHITE, GREY & BLACK AGGREGATE

Medium Wt / Light Wt — BLOCK H: 'STREET'
8(H)x8(D)x16(L)
PRECISION BLOCK
1 SCORE ($\frac{3}{8}$") BOTH FACES
DARK GREY

GENERAL NOTES:

1. EACH SOUNDWALL ELEVATION IS ELEVATED INDEPENDENTLY. SEE SOUNDWALL GENERAL PLANS FOR MORE INFORMATION.
2. WHERE CUT BLOCKS ARE REQUIRED, CUT BLOCK SHALL BE NO SMALLER THAN ONE HALF OF A BLOCK, OTHERWISE CUT ADJACENT BLOCK AS WELL.
3. PLACE CORE HOLES (NOT SHOWN) FOR VINE PLANTINGS AT 16' ON CENTER.
4. THE CONTRACTOR SHALL SUBMIT COLOR SAMPLE OF BLOCK TO THE ENGINEER FOR APPROVAL.

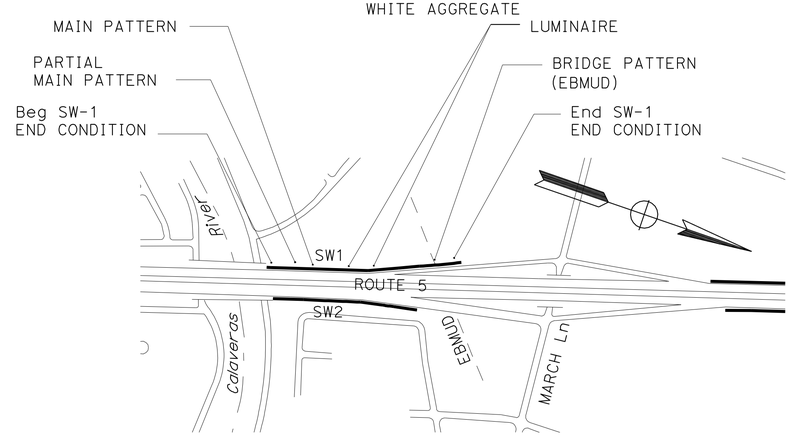

SOUND WALL 1 KEY PLAN

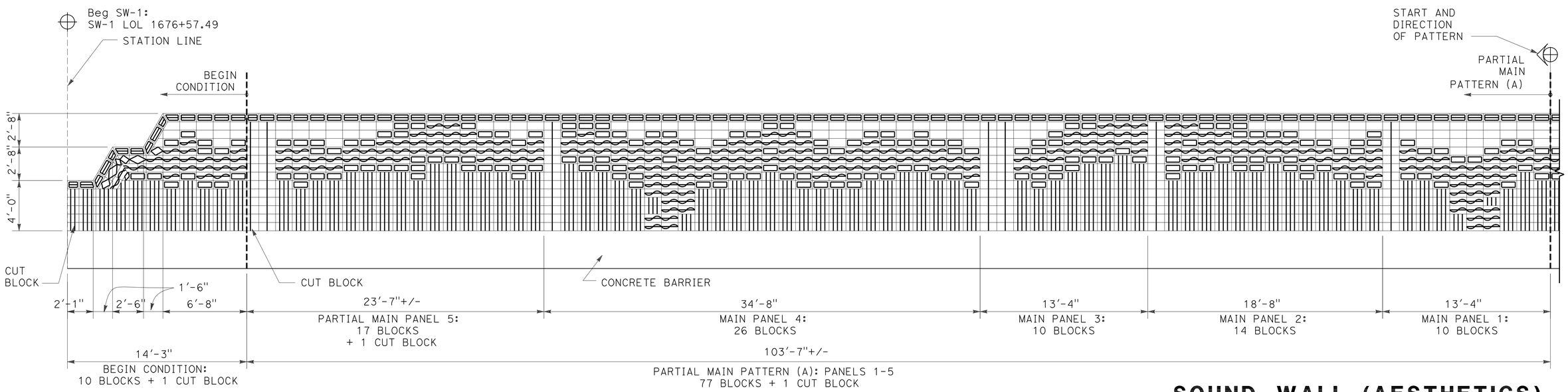

SOUND WALL 1 BEGIN CONDITION AND PARTIAL MAIN PATTERN (A)

SOUND WALL (AESTHETICS)

SOUND WALL No. 1

NO SCALE

SW-5

THIS PLAN ACCURATE FOR SOUND WALL AESTHETIC TREATMENTS ONLY

STATE OF CALIFORNIA - DEPARTMENT OF TRANSPORTATION
Caltrans
CONSULTANT FUNCTIONAL SUPERVISOR: LINDA M. DEVIVI
CALCULATED-DESIGNED BY: CHRISTINA D. B. FRANKEL
CHECKED BY: LINDA M. DEVIVI
REVISED BY
DATE REVISED

LAST REVISION 07-07-10
DATE PLOTTED => 12-OCT-2010
TIME PLOTTED => 12:35

Dist	COUNTY	ROUTE	POST MILES TOTAL PROJECT	SHEET No.	TOTAL SHEETS
10	SJ	5	25.0/32.7	505	1132

REGISTERED CIVIL ENGINEER 04/21/10 DATE

10-11-10
PLANS APPROVAL DATE

REGISTERED PROFESSIONAL ENGINEER CHRISTINA D.B.FRANKEL No. C-25730 Exp. 05/31/11 CIVIL STATE OF CALIFORNIA

THE STATE OF CALIFORNIA OR ITS OFFICERS OR AGENTS SHALL NOT BE RESPONSIBLE FOR THE ACCURACY OR COMPLETENESS OF SCANNED COPIES OF THIS PLAN SHEET.

DERIVI CONSTRUCTION & ARCHITECTURE, INC.
924 N. YOSEMITE STREET
STOCKTON, CA 95203

SJCOG
555 E. WEBER AVE.
STOCKTON, CA 95202-2804

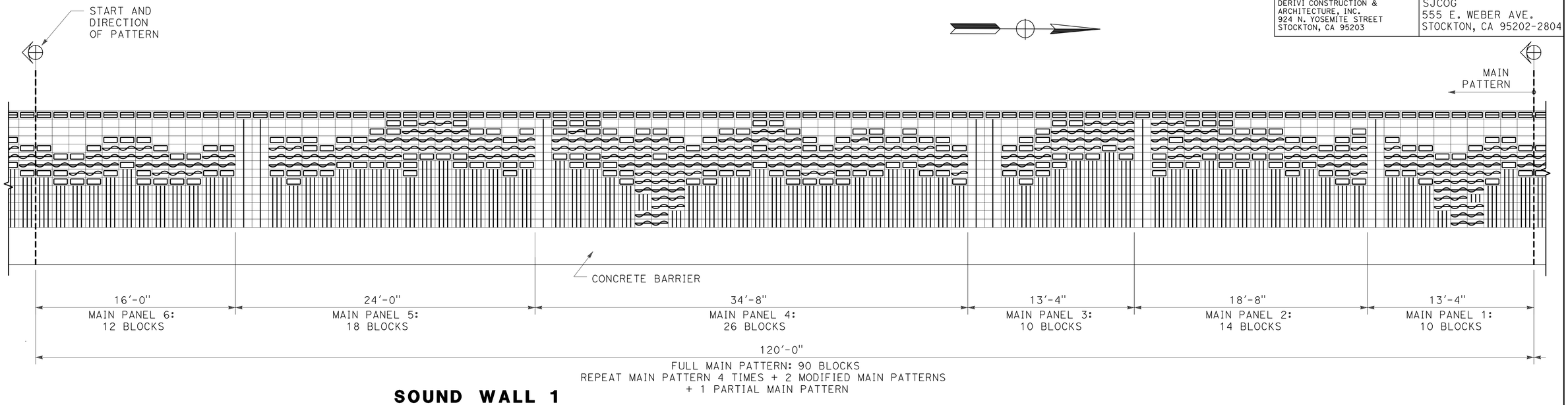

SOUND WALL 1
MAIN PATTERN - TYP

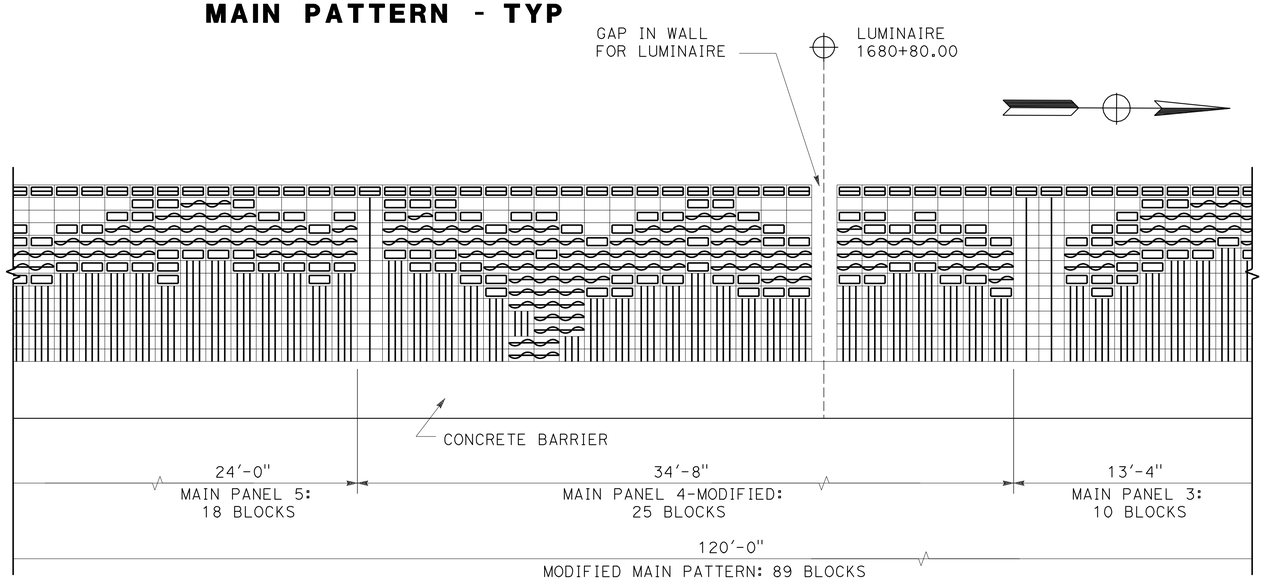

SOUND WALL 1
MAIN PATTERN AT LUMINAIRE

THIS PLAN ACCURATE FOR SOUND WALL AESTHETIC TREATMENTS ONLY

SOUND WALL (AESTHETICS)

SOUND WALL No. 1

NO SCALE

SW-6

REVISED BY	DATE REVISED

CHRISTINA D. B. FRANKEL — LINDA M. DEVIVI

CALCULATED-DESIGNED BY / CHECKED BY

CONSULTANT FUNCTIONAL SUPERVISOR — LINDA M. DEVIVI

STATE OF CALIFORNIA - DEPARTMENT OF TRANSPORTATION — Caltrans

LAST REVISION 07-07-10 | DATE PLOTTED => 12-OCT-2010 | TIME PLOTTED => 12:35

Dist	COUNTY	ROUTE	POST MILES TOTAL PROJECT	SHEET No.	TOTAL SHEETS
10	SJ	5	25.0/32.7	506	1132

REGISTERED CIVIL ENGINEER 04/21/10 DATE

10-11-10
PLANS APPROVAL DATE

REGISTERED PROFESSIONAL ENGINEER CHRISTINA D.B.FRANKEL No. C-25730 Exp. 05/31/11 CIVIL STATE OF CALIFORNIA

THE STATE OF CALIFORNIA OR ITS OFFICERS OR AGENTS SHALL NOT BE RESPONSIBLE FOR THE ACCURACY OR COMPLETENESS OF SCANNED COPIES OF THIS PLAN SHEET.

DERIVI CONSTRUCTION & ARCHITECTURE, INC.
924 N. YOSEMITE STREET
STOCKTON, CA 95203

SJCOG
555 E. WEBER AVE.
STOCKTON, CA 95202-2804

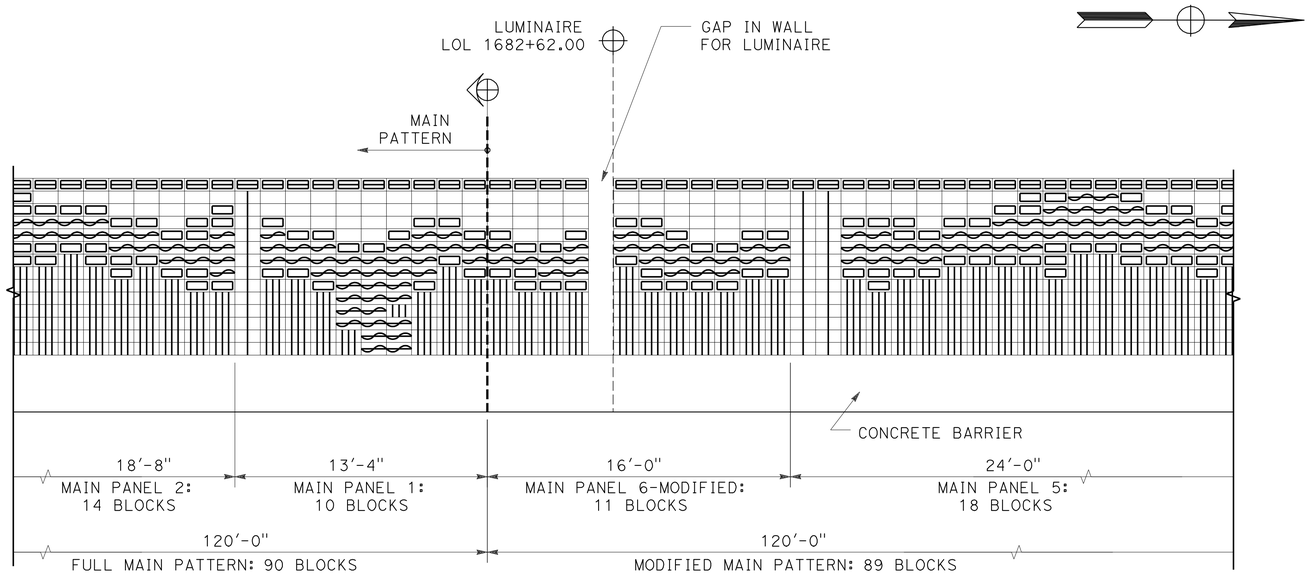

SOUND WALL 1
MAIN PATTERN AT LUMINAIRE

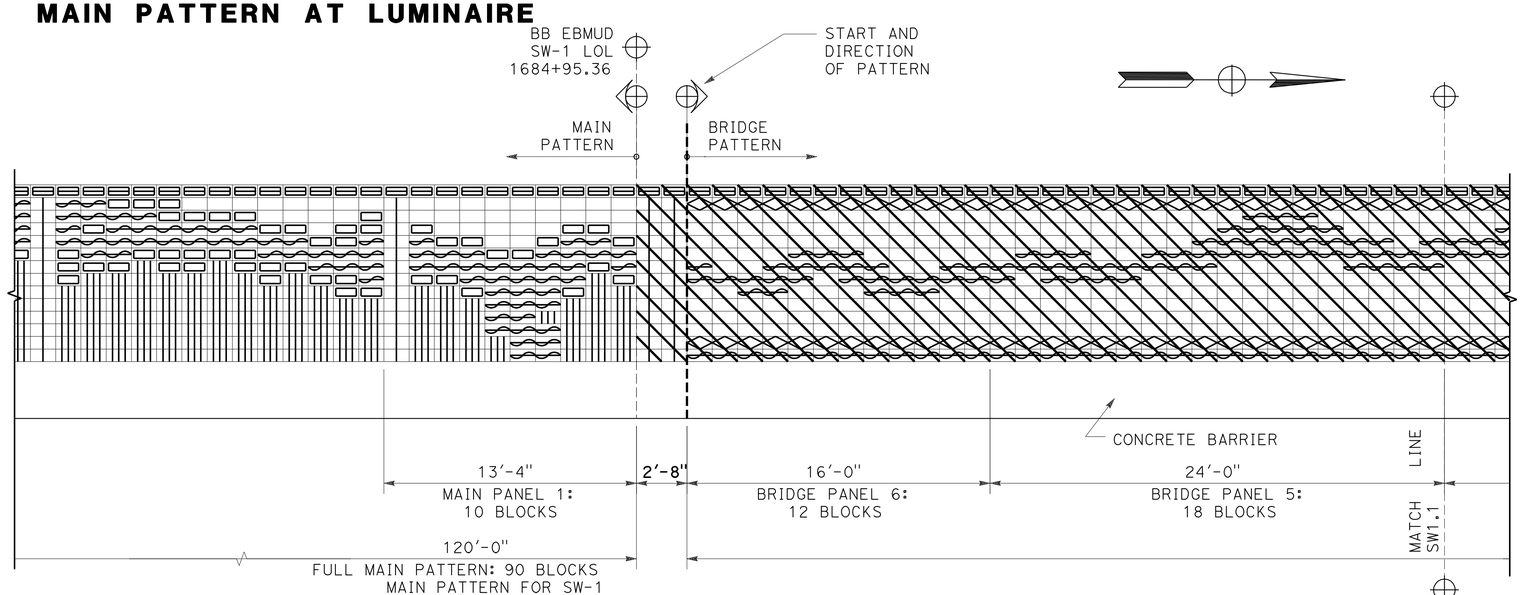

SOUND WALL 1
MAIN PATTERN TO BRIDGE PATTERN (EBMUD)

SOUND WALL (AESTHETICS)

SOUND WALL No. 1
NO SCALE

SW-7

THIS PLAN ACCURATE FOR SOUND WALL AESTHETIC TREATMENTS ONLY

STATE OF CALIFORNIA - DEPARTMENT OF TRANSPORTATION
Caltrans

CONSULTANT FUNCTIONAL SUPERVISOR: LINDA M. DEVIVI
CALCULATED-DESIGNED BY: CHRISTINA D. B. FRANKEL
CHECKED BY: LINDA M. DEVIVI
REVISED BY
DATE REVISED

LAST REVISION 07-07-10
DATE PLOTTED => 12-OCT-2010
TIME PLOTTED => 12:36

Dist	COUNTY	ROUTE	POST MILES TOTAL PROJECT	SHEET No.	TOTAL SHEETS
10	SJ	5	25.0/32.7	507	1132

REGISTERED CIVIL ENGINEER 04/21/10 DATE

10-11-10
PLANS APPROVAL DATE

REGISTERED PROFESSIONAL ENGINEER CHRISTINA D.B.FRANKEL No. C-25730 Exp. 05/31/11 CIVIL STATE OF CALIFORNIA

THE STATE OF CALIFORNIA OR ITS OFFICERS OR AGENTS SHALL NOT BE RESPONSIBLE FOR THE ACCURACY OR COMPLETENESS OF SCANNED COPIES OF THIS PLAN SHEET.

DERIVI CONSTRUCTION & ARCHITECTURE, INC.
924 N. YOSEMITE STREET
STOCKTON, CA 95203

SJCOG
555 E. WEBER AVE.
STOCKTON, CA 95202-2804

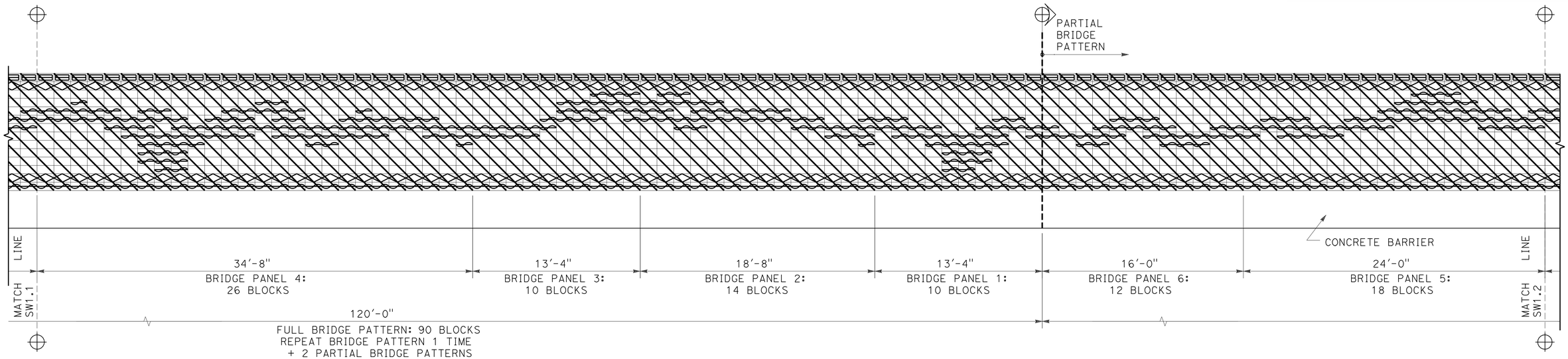

SOUND WALL 1
BRIDGE PATTERN CONT (EBMUD)

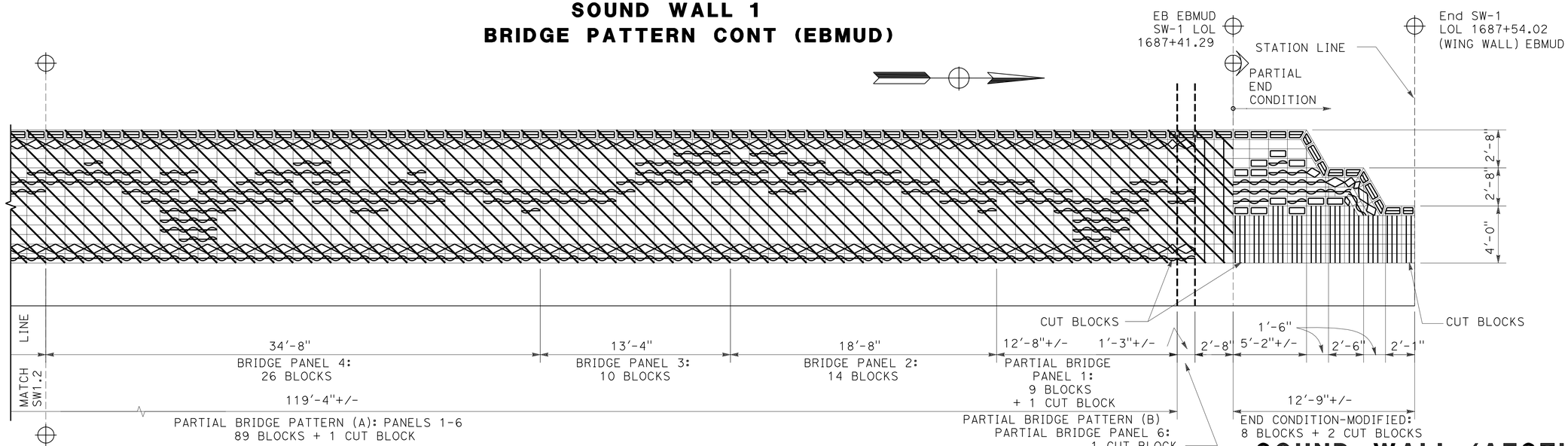

SOUND WALL 1
PARTIAL BRIDGE PATTERN TO END CONDITION

SOUND WALL (AESTHETICS)

SOUND WALL No. 1

NO SCALE

SW-8

THIS PLAN ACCURATE FOR SOUND WALL AESTHETIC TREATMENTS ONLY

REVISED BY	DATE REVISED

CALCULATED-DESIGNED BY: CHRISTINA D. B. FRANKEL
CHECKED BY: LINDA M. DEVIVI
CONSULTANT FUNCTIONAL SUPERVISOR: LINDA M. DEVIVI

STATE OF CALIFORNIA - DEPARTMENT OF TRANSPORTATION
Caltrans

LAST REVISION DATE PLOTTED => 12-OCT-2010
07-07-10 TIME PLOTTED => 12:36

DIST	COUNTY	ROUTE	POST MILES TOTAL PROJECT	SHEET No	TOTAL SHEETS
10	SJ	5	25.0/32.7	508	1132

GEOTECHNICAL PROFESSIONAL — DATE 04/21/10

10-11-10
PLANS APPROVAL DATE

REGISTERED GEOLOGIST — GARY PARIKH — No. G.E. 666 — Exp. 12/31/11 — CERTIFIED ENGINEERING GEOLOGIST — STATE OF CALIFORNIA

The State of California or its officers or agents shall not be responsible for the accuracy or completeness of scanned copies of this plan sheet.

SJCOG
555 WEBER AVE.
STOCKTON, CA 95202-2804

PARIKH CONSULTANTS, INC.
2360 QUME DRIVE, SUITE A
SAN JOSE, CA 95131

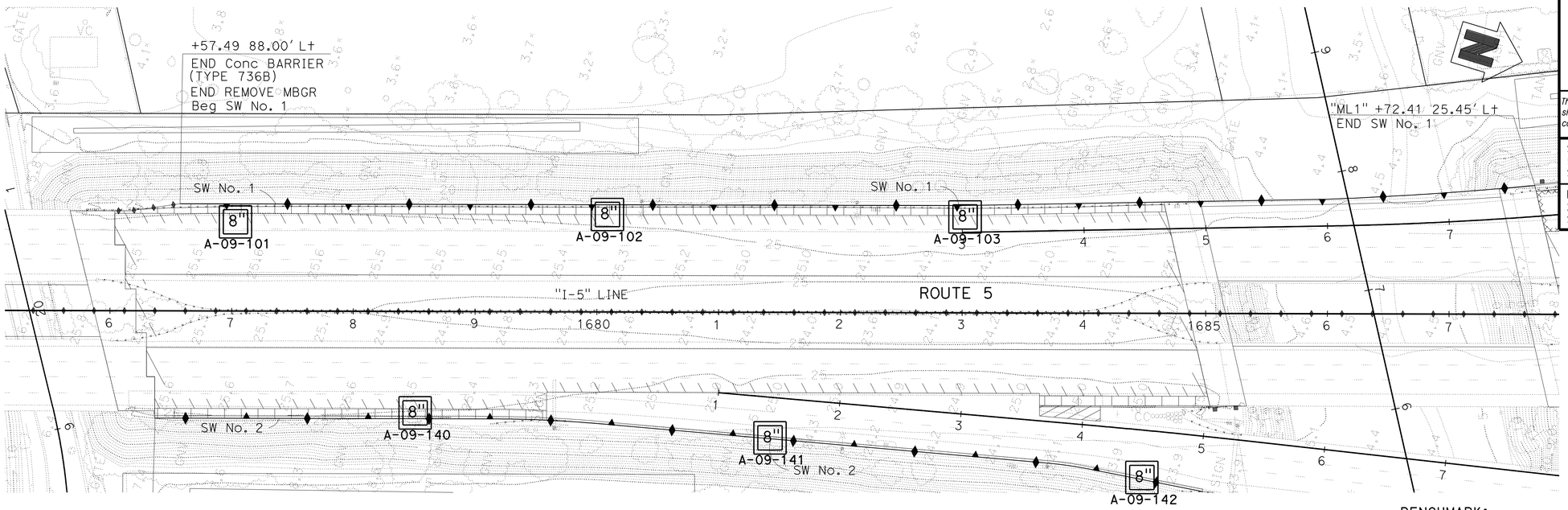

PLAN
1"=50'

BENCHMARK:
THE HORIZONTAL COORDINATES VALUES ARE IN THE CALIFORNIA COORDINATE SYSTEM (CCS 83) ZONE 3, EPOCH DATE 2007.00, IN U.S. SURVEY FEET.
THE VERTICAL CONTROL VALUES ARE BASED ON THE NORTH AMERICAN U.S. SURVEY FEET, HEIGHT MODERNIZATION SURVEY STATION, (2007.00) AND GEOID03 WAS USED FOR THE ADJUSTMENT.

THIS LOTB SHEET WAS PREPARED IN ACCORDANCE WITH CALTRANS SOIL & ROCK LOGGING, CLASSIFICATION, AND PRESENTATION MANUAL (2007)

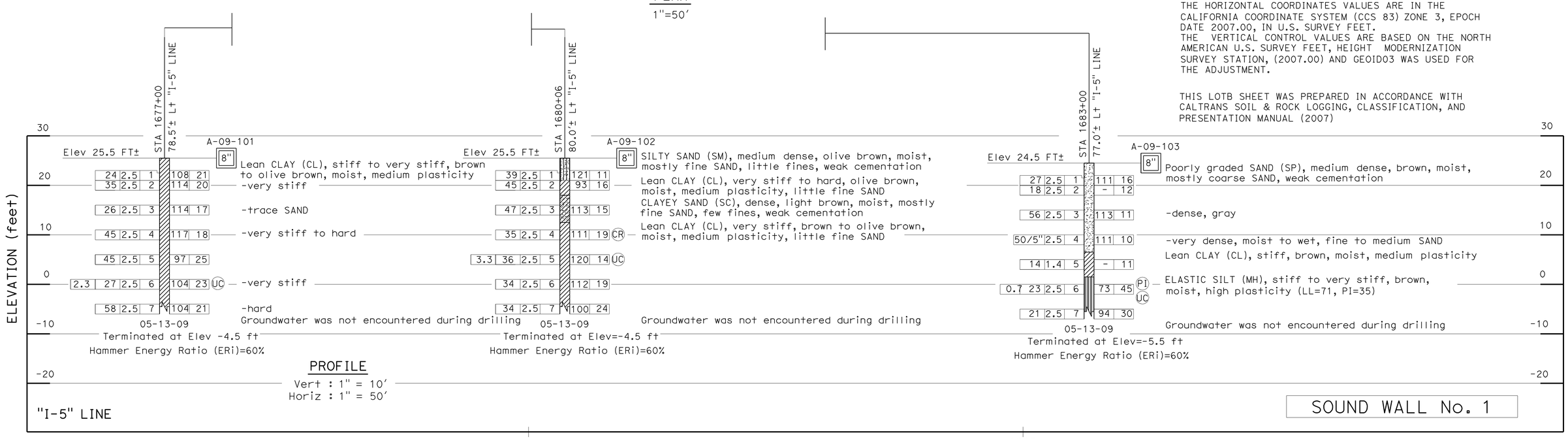

SCALE AS SHOWN **SW-9**

DESIGN OVERSIGHT	DRAWN BY	O. GOUTHIER	S. DUDDU- A.R. BHARADWAJ	PREPARED FOR THE STATE OF CALIFORNIA DEPARTMENT OF TRANSPORTATION	A. LAM
SIGN OFF DATE	CHECKED BY	D. WANG	FIELD INVESTIGATION BY: DATE: MARCH 2009 TO MAY 2009		PROJECT ENGINEER

BRIDGE NO. --
POST MILES --

I-5 NORTH STOCKTON CORRIDOR IMPROVEMENT
LOG OF TEST BORINGS

OGS GEOTECHNICAL LOG OF TEST BORINGS SHEET (ENGLISH) (REV. 06-01-09)

ORIGINAL SCALE IN INCHES FOR REDUCED PLANS 0 1 2 3

CU 06240
EA 0G4701

DISREGARD PRINTS BEARING EARLIER REVISION DATES → 09/28/09 03/15/10

REVISION DATES — SHEET — OF

FILE => a0g470ra009.dgn
USERNAME => trmnguye

USERNAME => trmnguye DATE PLOTTED => 12-OCT-2010 TIME PLOTTED => 12:36

Dist	COUNTY	ROUTE	POST MILES TOTAL PROJECT	SHEET No.	TOTAL SHEETS
10	SJ	5	25.0/32.7	509	1132

REGISTERED CIVIL ENGINEER 04/21/10 DATE

10-11-10
PLANS APPROVAL DATE

REGISTERED PROFESSIONAL ENGINEER CHUONG NGUYEN No. C46770 Exp. 06/30/11 CIVIL STATE OF CALIFORNIA

THE STATE OF CALIFORNIA OR ITS OFFICERS OR AGENTS SHALL NOT BE RESPONSIBLE FOR THE ACCURACY OR COMPLETENESS OF SCANNED COPIES OF THIS PLAN SHEET.

RAJAPPAN & MEYER
CONSULTING ENGINEERS INC.
1038 LEIGH AVE, SUITE 100
SAN JOSE, CA 95126

SJCOG
555 E. WEBER AVE.
STOCKTON, CA 95202-2804

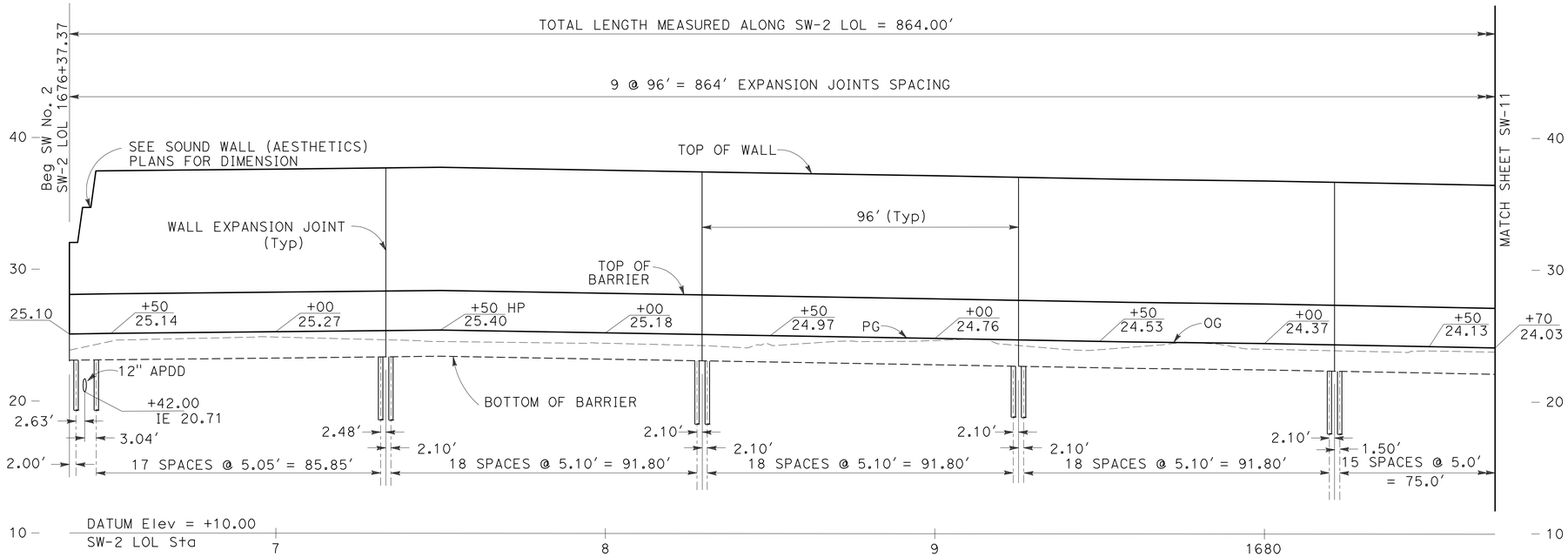

ELEVATION

SCALE: Horiz 1"=20'
Vert 1"=5'

CURVE DATA

No.	R	Δ	T	L
21	990.00'	4°52'29"	42.14'	84.23'

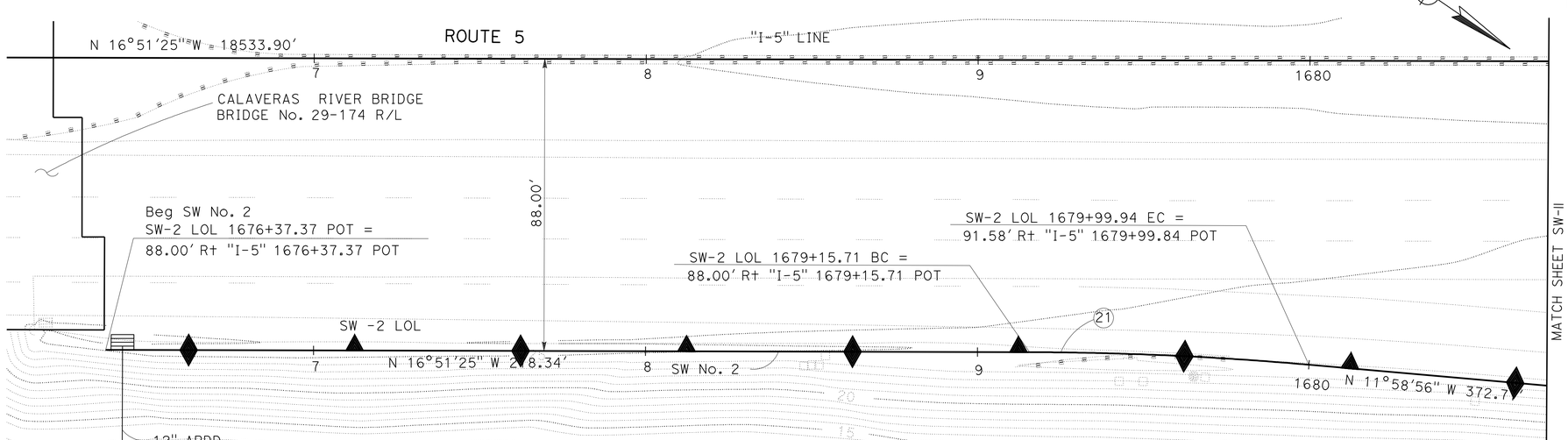

PLAN

SCALE: 1"=20'

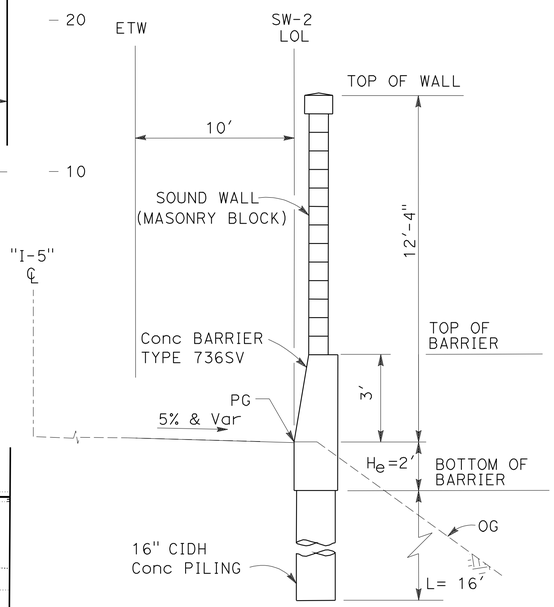

TYPICAL SECTION

SW-2 Sta 1676+37.37 TO Sta 1685+01.37
NO SCALE

NOTE:

FOR REINFORCEMENT AND OTHER DETAILS NOT SHOWN, SEE Std PLANS B15-6 B15-7 B15-8

THIS PLAN ACCURATE FOR SOUND WALL WORK ONLY

SOUND WALL PLAN
SOUND WALL No.2

SCALE AS SHOWN

SW-10

STATE OF CALIFORNIA - DEPARTMENT OF TRANSPORTATION
Caltrans

CONSULTANT FUNCTIONAL SUPERVISOR: KEITH G. MEYER
CALCULATED-DESIGNED BY: SRILAKSHMI SAKHAMURI
CHECKED BY: CHUONG NGUYEN
REVISED BY
DATE REVISED

LAST REVISION 07-07-10
DATE PLOTTED => 12-OCT-2010
TIME PLOTTED => 12:36

Dist	COUNTY	ROUTE	POST MILES TOTAL PROJECT	SHEET No.	TOTAL SHEETS
10	SJ	5	25.0/32.7	510	1132

REGISTERED CIVIL ENGINEER 04/21/10 DATE

10-11-10
PLANS APPROVAL DATE

REGISTERED PROFESSIONAL ENGINEER CHUONG NGUYEN No. C46770 Exp. 06/30/11 CIVIL STATE OF CALIFORNIA

THE STATE OF CALIFORNIA OR ITS OFFICERS OR AGENTS SHALL NOT BE RESPONSIBLE FOR THE ACCURACY OR COMPLETENESS OF SCANNED COPIES OF THIS PLAN SHEET.

RAJAPPAN & MEYER
CONSULTING ENGINEERS INC.
1038 LEIGH AVE, SUITE 100
SAN JOSE, CA 95126

SJCOG
555 E. WEBER AVE.
STOCKTON, CA 95202-2804

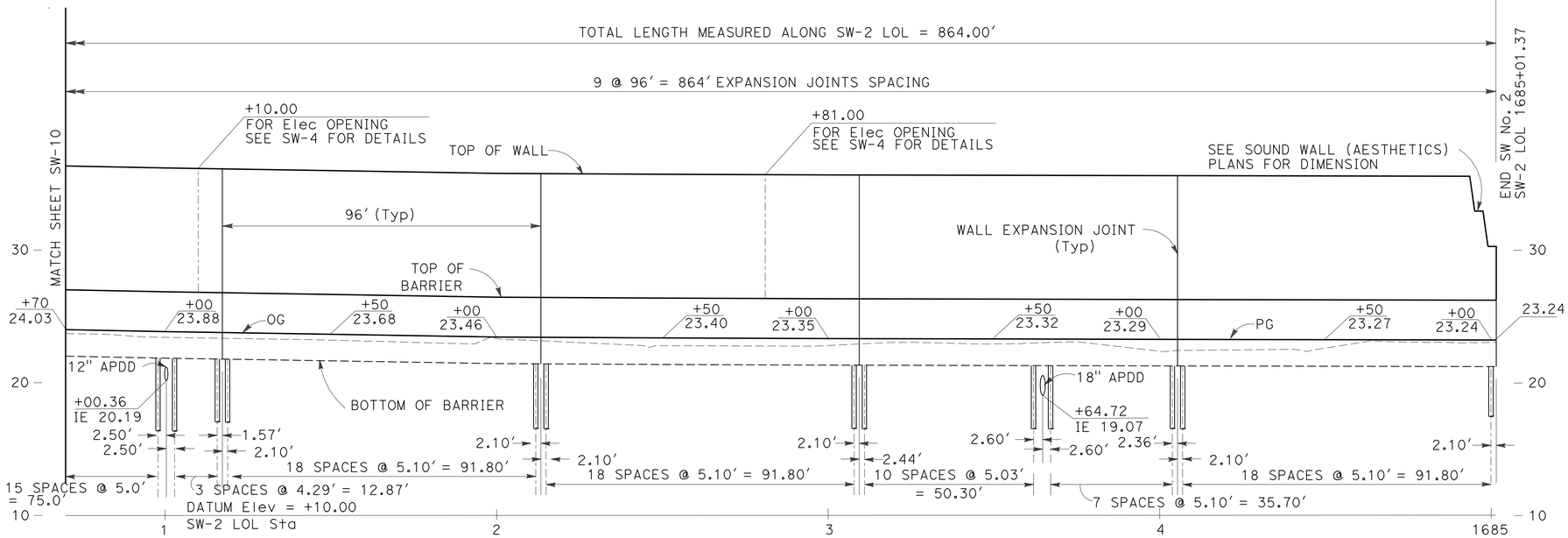

ELEVATION

SCALE: Horiz 1"=20'
Vert 1"=5'

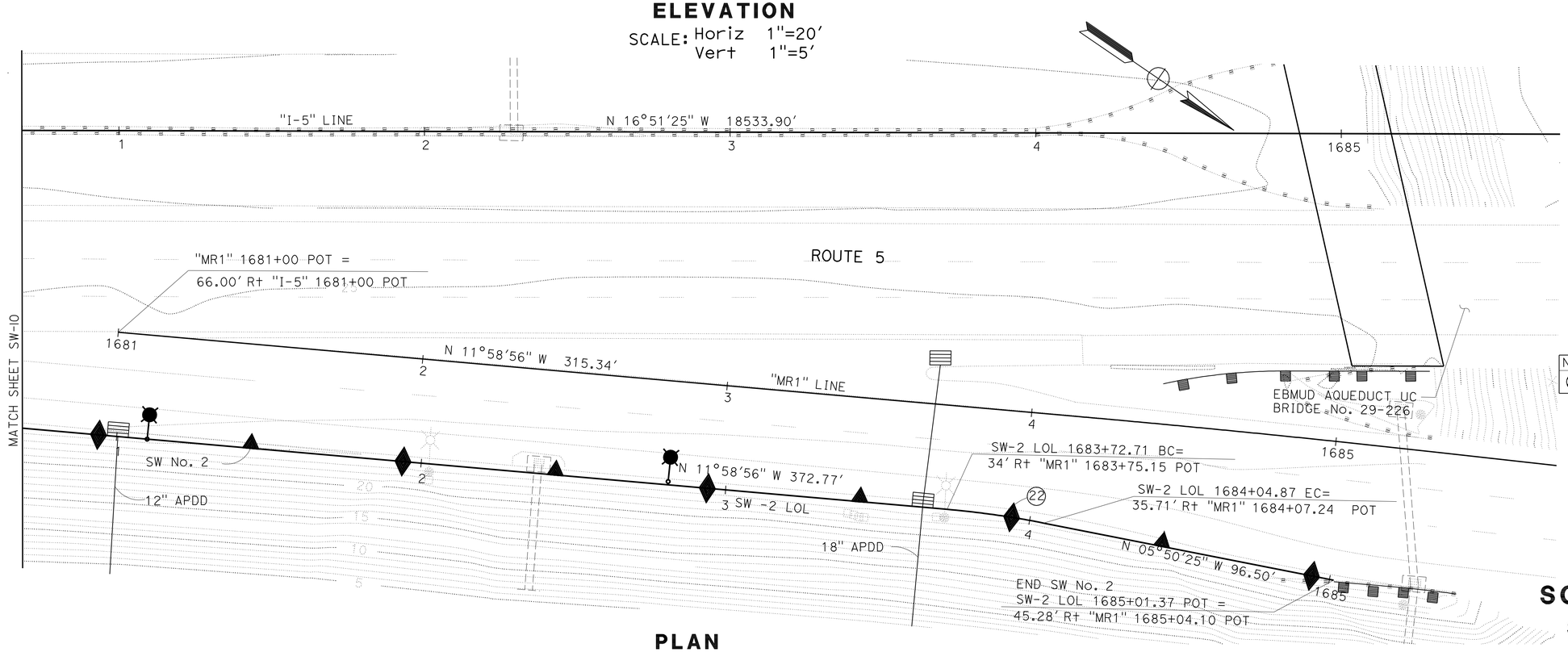

PLAN

SCALE: 1"=20'

CURVE DATA

No.	R	Δ	T	L
22	300.00'	6°8'31"	16.09'	32.16'

SOUND WALL PLAN

SOUND WALL No.2

SCALE AS SHOWN

SW-11

THIS PLAN ACCURATE FOR SOUND WALL WORK ONLY

STATE OF CALIFORNIA - DEPARTMENT OF TRANSPORTATION
Caltrans

CONSULTANT FUNCTIONAL SUPERVISOR: KEITH G. MEYER
CALCULATED-DESIGNED BY: SRILAKSHMI SAKHAMURI
CHECKED BY: CHUONG NGUYEN
REVISED BY
DATE REVISED

LAST REVISION 07-07-10
DATE PLOTTED => 12-OCT-2010
TIME PLOTTED => 12:36

Dist	COUNTY	ROUTE	POST MILES TOTAL PROJECT	SHEET No.	TOTAL SHEETS
10	SJ	5	25.0/32.7	511	1132

REGISTERED CIVIL ENGINEER 04/21/10 DATE

10-11-10
PLANS APPROVAL DATE

REGISTERED PROFESSIONAL ENGINEER CHRISTINA D.B.FRANKEL No.C-25730 Exp. 05/31/11 CIVIL STATE OF CALIFORNIA

THE STATE OF CALIFORNIA OR ITS OFFICERS OR AGENTS SHALL NOT BE RESPONSIBLE FOR THE ACCURACY OR COMPLETENESS OF SCANNED COPIES OF THIS PLAN SHEET.

DERIVI CONSTRUCTION & ARCHITECTURE, INC.
924 N. YOSEMITE STREET
STOCKTON, CA 95203

SJCOG
555 E. WEBER AVE.
STOCKTON, CA 95202-2804

BLOCK LEGEND:

Medium W+ / Light W+ — BLOCK A: 'CAP'
8(H)x10(D)*x16(L)
*PROJECT BLOCK 1" EA SIDE
SPLIT FACE BOTH FACES
DARK TAN WITH MEDIUM-SIZED BLACK, DARK BROWN & WHITE AGGREGATE

Medium W+ / Light W+ — BLOCK B: 'WATER'
8(H)x8(D)x16(L)
SPLIT FACE BOTH FACES
DARK TAN WITH MEDIUM-SIZED BLACK, DARK BROWN & WHITE AGGREGATE

Medium W+ — BLOCK C: 'FIELDS'
8(H)x8(D)x16(L)
SPLIT FACE BOTH FACES
3 SCORE (3/8") BOTH FACES
DARK TAN WITH MEDIUM-SIZED BLACK, DARK BROWN & WHITE AGGREGATE

Medium W+ — BLOCK D: 'LEVEE'
8(H)x10(D)*x16(L)
*PROJECT BLOCK 1" EA SIDE
PRECISION BLOCK
MEDIUM-LIGHT TAN WITH MEDIUM-SIZED BLACK, RED & WHITE AGGREGATE

Medium W+ / Light W+ — BLOCK G: 'LEVEE 2'
8(H)x8(D)x16(L)
PRECISION BLOCK
MEDIUM-LIGHT TAN WITH MEDIUM-SIZED BLACK, RED & WHITE AGGREGATE

Medium W+ / Light W+ — BLOCK F: 'CITY'
8(H)x8(D)x16(L)
SPLIT FACE BOTH FACES
LIGHT TAN WITH SMALL-SIZED WHITE, GREY & BLACK AGGREGATE

Medium W+ / Light W+ — BLOCK H: 'STREET'
8(H)x8(D)x16(L)
PRECISION BLOCK
1 SCORE (3/8") BOTH FACES
DARK GREY

GENERAL NOTES:

1. EACH SOUNDWALL ELEVATION IS ELEVATED INDEPENDENTLY. SEE SOUNDWALL GENERAL PLANS FOR MORE INFORMATION.
2. WHERE CUT BLOCKS ARE REQUIRED, CUT BLOCK SHALL BE NO SMALLER THAN ONE HALF OF A BLOCK, OTHERWISE CUT ADJACENT BLOCK AS WELL.
3. PLACE CORE HOLES (NOT SHOWN) FOR VINE PLANTINGS AT 16' ON CENTER.
4. THE CONTRACTOR SHALL SUBMIT COLOR SAMPLE OF BLOCK TO THE ENGINEER FOR APPROVAL.

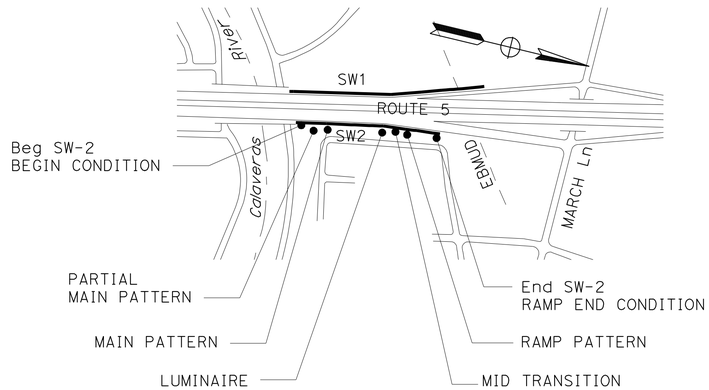

SOUND WALL 2
KEY PLAN

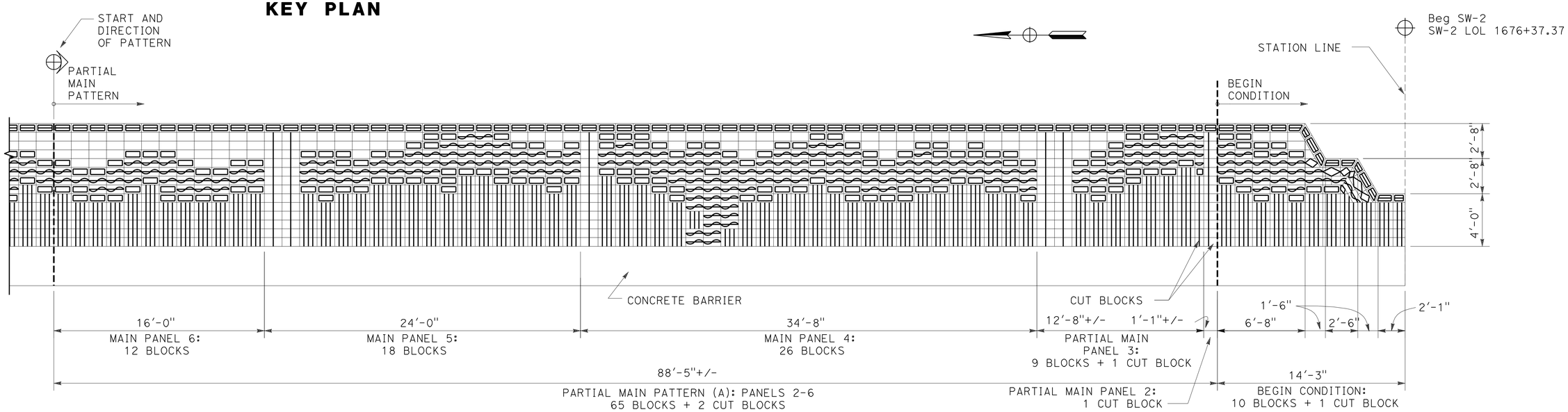

SOUND WALL 2
BEGIN CONDITION AND PARTIAL MAIN PATTERN (A)

SOUND WALL (AESTHETICS)

SOUND WALL No. 2

NO SCALE

SW-12

THIS PLAN ACCURATE FOR SOUND WALL AESTHETIC TREATMENTS ONLY

REVISED BY | DATE REVISED
CHRISTINA D. B. FRANKEL | LINDA M. DEVIVI
CALCULATED-DESIGNED BY | CHECKED BY
CONSULTANT FUNCTIONAL SUPERVISOR: LINDA M. DEVIVI
STATE OF CALIFORNIA - DEPARTMENT OF TRANSPORTATION
Caltrans

LAST REVISION 07-07-10 | DATE PLOTTED => 12-OCT-2010 | TIME PLOTTED => 12:37

Dist	COUNTY	ROUTE	POST MILES TOTAL PROJECT	SHEET No.	TOTAL SHEETS
10	SJ	5	25.0/32.7	512	1132

REGISTERED CIVIL ENGINEER DATE 04/21/10

10-11-10
PLANS APPROVAL DATE

REGISTERED PROFESSIONAL ENGINEER CHRISTINA D.B.FRANKEL No. C-25730 Exp. 05/31/11 CIVIL STATE OF CALIFORNIA

THE STATE OF CALIFORNIA OR ITS OFFICERS OR AGENTS SHALL NOT BE RESPONSIBLE FOR THE ACCURACY OR COMPLETENESS OF SCANNED COPIES OF THIS PLAN SHEET.

DERIVI CONSTRUCTION & ARCHITECTURE, INC.
924 N. YOSEMITE STREET
STOCKTON, CA 95203

SJCOG
555 E. WEBER AVE.
STOCKTON, CA 95202-2804

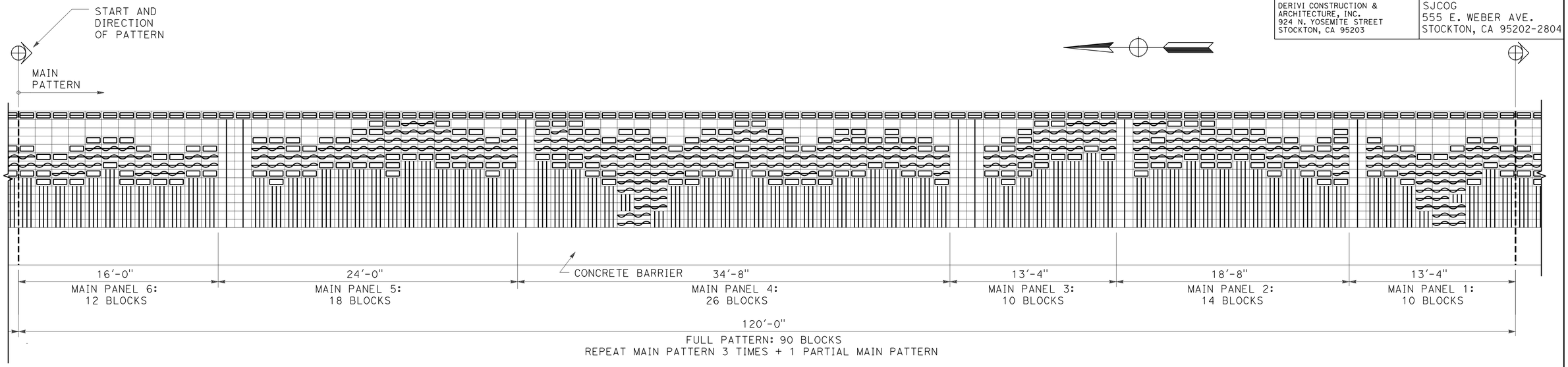

SOUND WALL 2
MAIN PATTERN - TYP

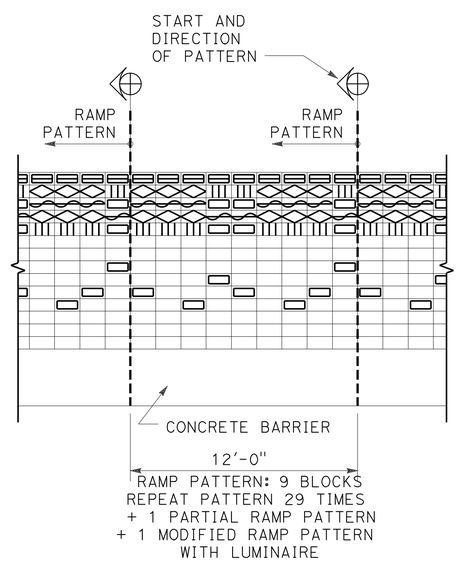

SOUND WALL 2
RAMP PATTERN

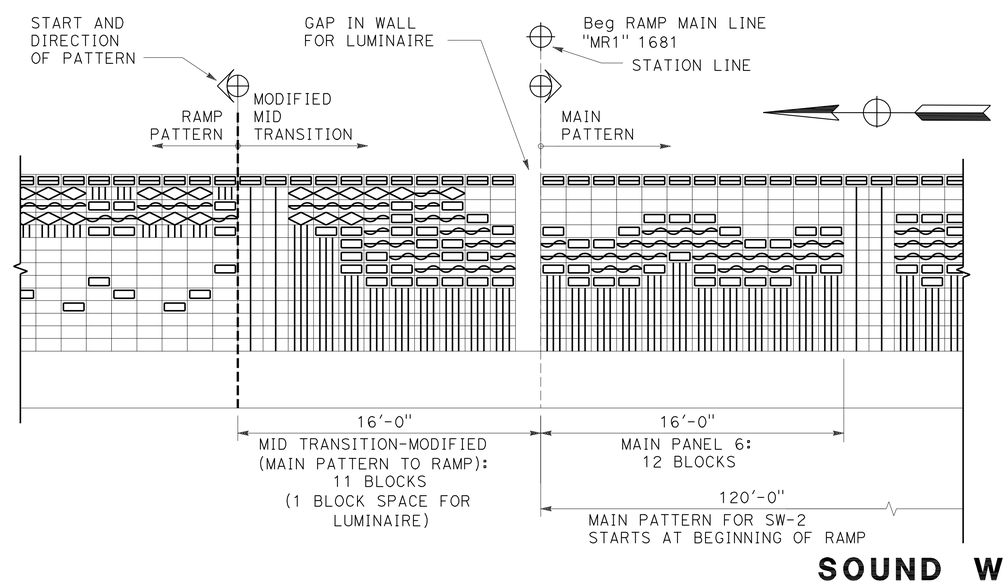

SOUND WALL 2
LUMINAIRE AND MID-TRANSITION PATTERN TO RAMP

SOUND WALL (AESTHETICS)

SOUND WALL No. 2

NO SCALE

THIS PLAN ACCURATE FOR SOUND WALL AESTHETIC TREATMENTS ONLY

SW-13

REVISED BY	DATE REVISED
CHRISTINA D. B. FRANKEL	LINDA M. DEVIVI
CALCULATED-DESIGNED BY	CHECKED BY
LINDA M. DEVIVI	

CONSULTANT FUNCTIONAL SUPERVISOR

STATE OF CALIFORNIA - DEPARTMENT OF TRANSPORTATION

Caltrans

LAST REVISION 07-07-10 | DATE PLOTTED => 12-OCT-2010 | TIME PLOTTED => 12:37

Dist	COUNTY	ROUTE	POST MILES TOTAL PROJECT	SHEET No.	TOTAL SHEETS
10	SJ	5	25.0/32.7	513	1132

REGISTERED CIVIL ENGINEER 04/21/10 DATE

10-11-10
PLANS APPROVAL DATE

REGISTERED PROFESSIONAL ENGINEER CHRISTINA D.B.FRANKEL No. C-25730 Exp. 05/31/11 CIVIL STATE OF CALIFORNIA

THE STATE OF CALIFORNIA OR ITS OFFICERS OR AGENTS SHALL NOT BE RESPONSIBLE FOR THE ACCURACY OR COMPLETENESS OF SCANNED COPIES OF THIS PLAN SHEET.

DERIVI CONSTRUCTION & ARCHITECTURE, INC.
924 N. YOSEMITE STREET
STOCKTON, CA 95203

SJCOG
555 E. WEBER AVE.
STOCKTON, CA 95202-2804

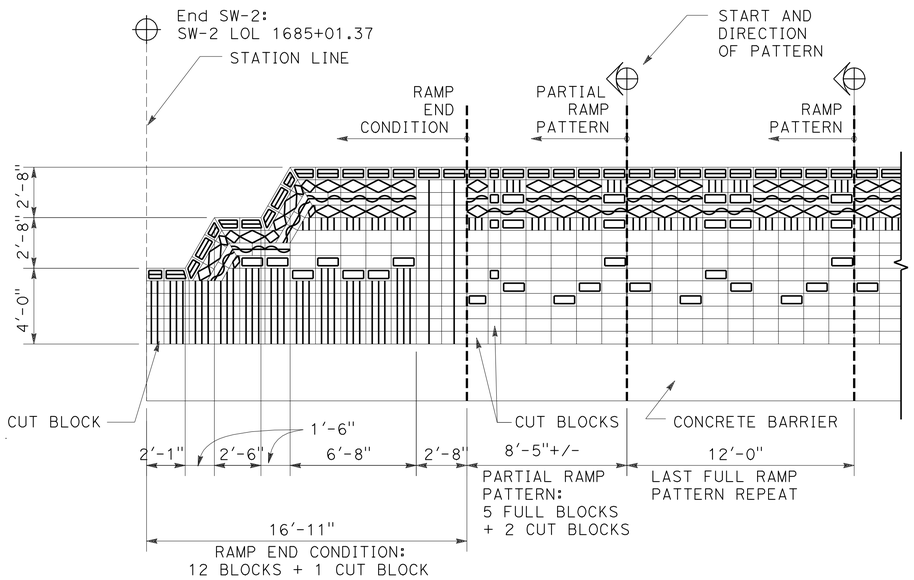

SOUND WALL 2
RAMP END CONDITION

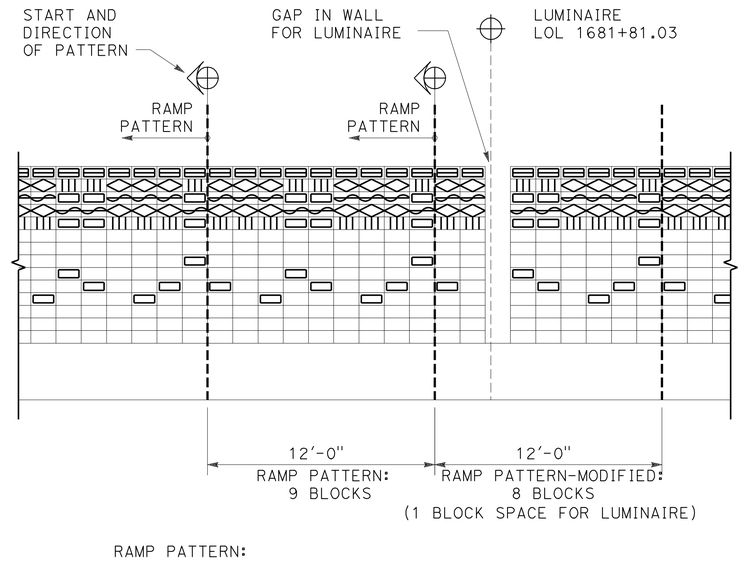

SOUND WALL 2
LUMINAIRE AT RAMP PATTERN

SOUND WALL (AESTHETICS)

SOUND WALL No. 2

NO SCALE

SW-14

THIS PLAN ACCURATE FOR SOUND WALL AESTHETIC TREATMENTS ONLY

STATE OF CALIFORNIA - DEPARTMENT OF TRANSPORTATION
Caltrans

CONSULTANT FUNCTIONAL SUPERVISOR: LINDA M. DEVIVI
CALCULATED-DESIGNED BY: CHRISTINA D. B. FRANKEL
CHECKED BY: LINDA M. DEVIVI
REVISED BY
DATE REVISED

LAST REVISION 07-07-10
DATE PLOTTED => 12-OCT-2010
TIME PLOTTED => 12:37

DIST	COUNTY	ROUTE	POST MILES TOTAL PROJECT	SHEET No	TOTAL SHEETS
10	SJ	5	25.0/32.7	514	1132

GEOTECHNICAL PROFESSIONAL — DATE 04/21/10

10-11-10
PLANS APPROVAL DATE

REGISTERED GEOLOGIST — GARY PARIKH — No. G.E. 666 — Exp. 12/31/11 — CERTIFIED ENGINEERING GEOLOGIST — STATE OF CALIFORNIA

The State of California or its officers or agents shall not be responsible for the accuracy or completeness of scanned copies of this plan sheet.

SJCOG
555 WEBER AVE.
STOCKTON, CA 95202-2804

PARIKH CONSULTANTS, INC.
2360 QUME DRIVE, SUITE A
SAN JOSE, CA 95131

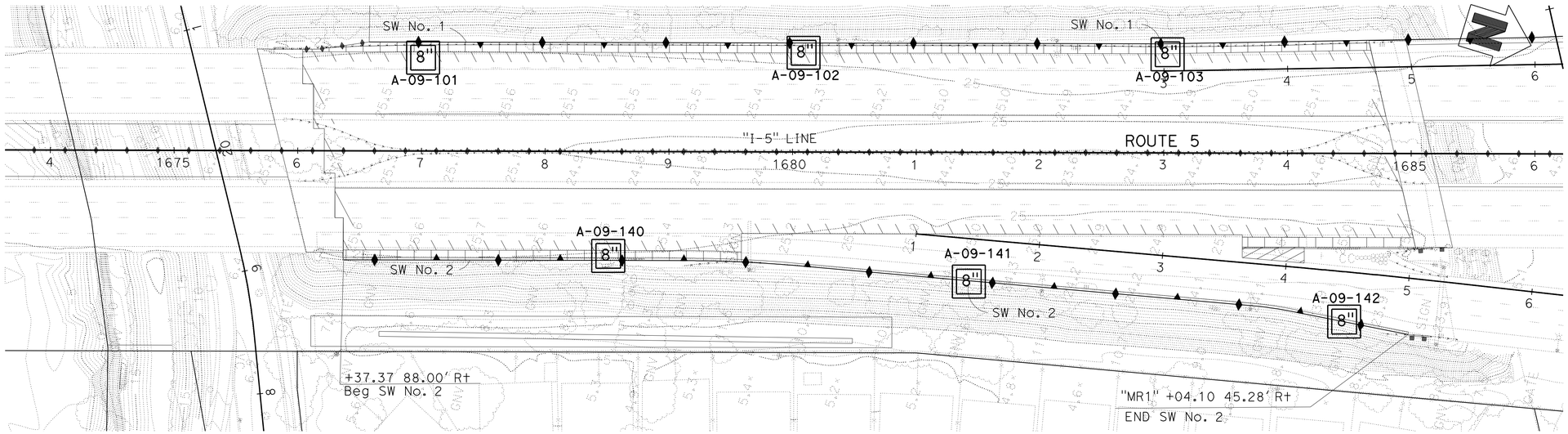

PLAN
1" = 50'

BENCHMARK:
THE HORIZONTAL COORDINATES VALUES ARE IN THE CALIFORNIA COORDINATE SYSTEM (CCS 83) ZONE 3, EPOCH DATE 2007.00, IN U.S. SURVEY FEET. THE VERTICAL CONTROL VALUES ARE BASED ON THE NORTH AMERICAN U.S. SURVEY FEET, HEIGHT MODERNIZATION SURVEY STATION, (2007.00) AND GEOID03 WAS USED FOR THE ADJUSTMENT.

THIS LOTB SHEET WAS PREPARED IN ACCORDANCE WITH CALTRANS SOIL & ROCK LOGGING, CLASSIFICATION, AND PRESENTATION MANUAL (2007)

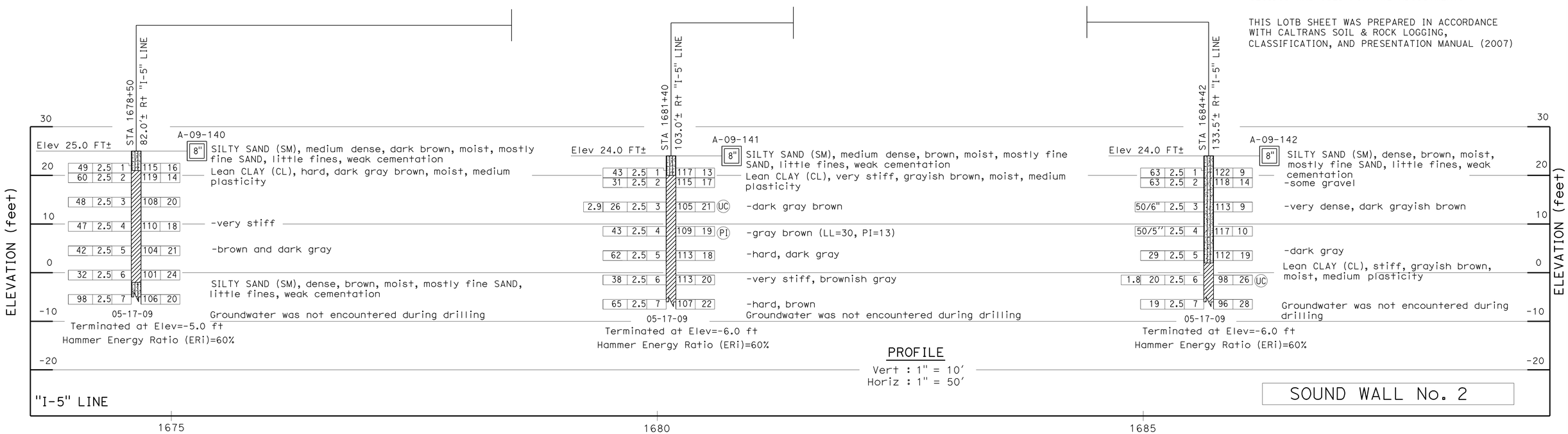

PROFILE
Vert : 1" = 10'
Horiz : 1" = 50'

SOUND WALL No. 2

SCALE AS SHOWN **SW-15**

DESIGN OVERSIGHT	DRAWN BY O. GOUTHIER	S. DUDDU- A.R. BHARADWAJ	PREPARED FOR THE STATE OF CALIFORNIA DEPARTMENT OF TRANSPORTATION	A. LAM	BRIDGE NO. --
SIGN OFF DATE	CHECKED BY D. WANG	FIELD INVESTIGATION BY: DATE: MARCH 2009 TO MAY 2009		PROJECT ENGINEER	POST MILES --

I-5 NORTH STOCKTON CORRIDOR IMPROVEMENT
LOG OF TEST BORINGS

OGS GEOTECHNICAL LOG OF TEST BORINGS SHEET (ENGLISH) (REV. 06-01-09)

ORIGINAL SCALE IN INCHES FOR REDUCED PLANS 0 1 2 3

CU 06240
EA 0G4701

DISREGARD PRINTS BEARING EARLIER REVISION DATES 09/24/09 03/15/10

REVISION DATES — SHEET — OF

FILE => a0g470rb006.dgn
USERNAME => trmnguye

USERNAME => trmnguye DATE PLOTTED => 12-OCT-2010 TIME PLOTTED => 12:37

Dist	COUNTY	ROUTE	POST MILES TOTAL PROJECT	SHEET No.	TOTAL SHEETS
10	SJ	5	25.0/32.7	515	1132

REGISTERED CIVIL ENGINEER 04/21/10 DATE

10-11-10
PLANS APPROVAL DATE

REGISTERED PROFESSIONAL ENGINEER CHUONG NGUYEN No. C46770 Exp. 06/30/11 CIVIL STATE OF CALIFORNIA

THE STATE OF CALIFORNIA OR ITS OFFICERS OR AGENTS SHALL NOT BE RESPONSIBLE FOR THE ACCURACY OR COMPLETENESS OF SCANNED COPIES OF THIS PLAN SHEET.

RAJAPPAN & MEYER
CONSULTING ENGINEERS INC.
1038 LEIGH AVE, SUITE 100
SAN JOSE, CA 95126

SJCOG
555 E. WEBER AVE.
STOCKTON, CA 95202-2804

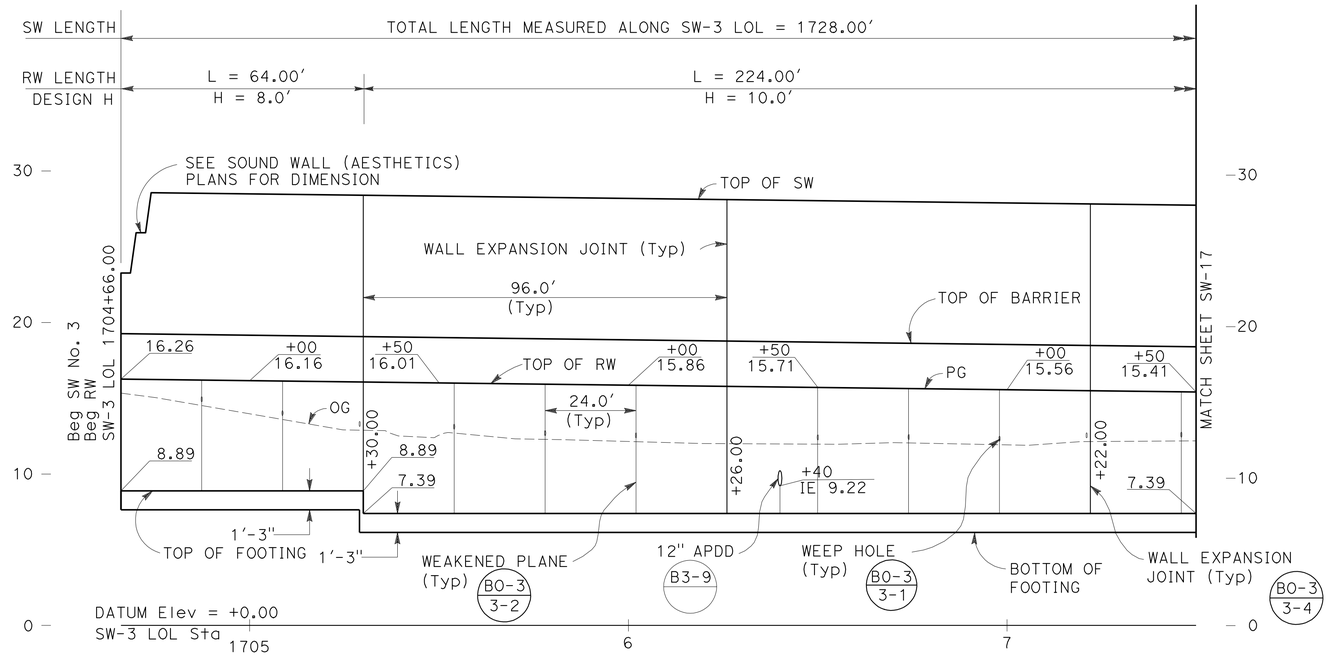

ELEVATION

SCALE: Horiz 1" = 20'
Vert 1" = 5'

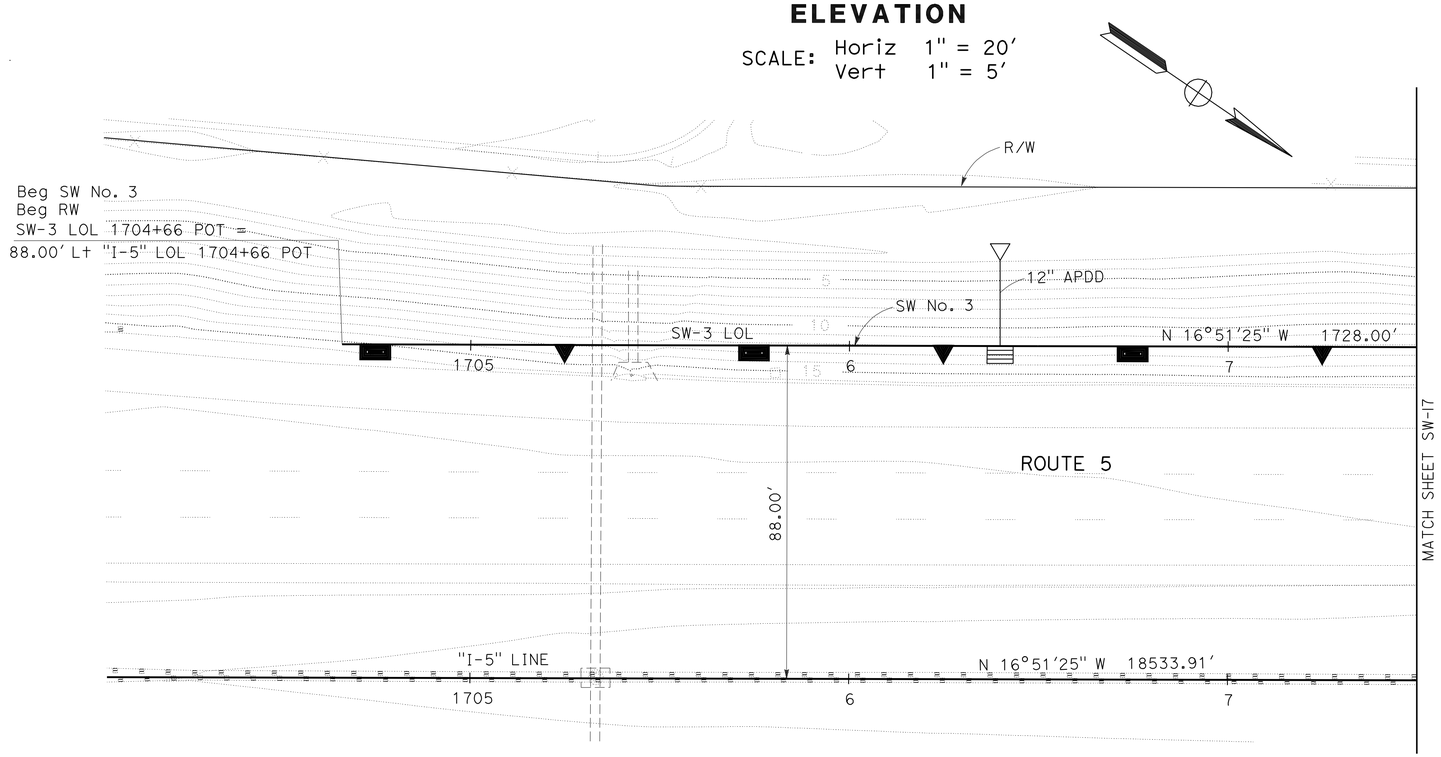

PLAN

SCALE: 1" = 20'

THIS PLAN ACCURATE FOR SOUND WALL WORK ONLY

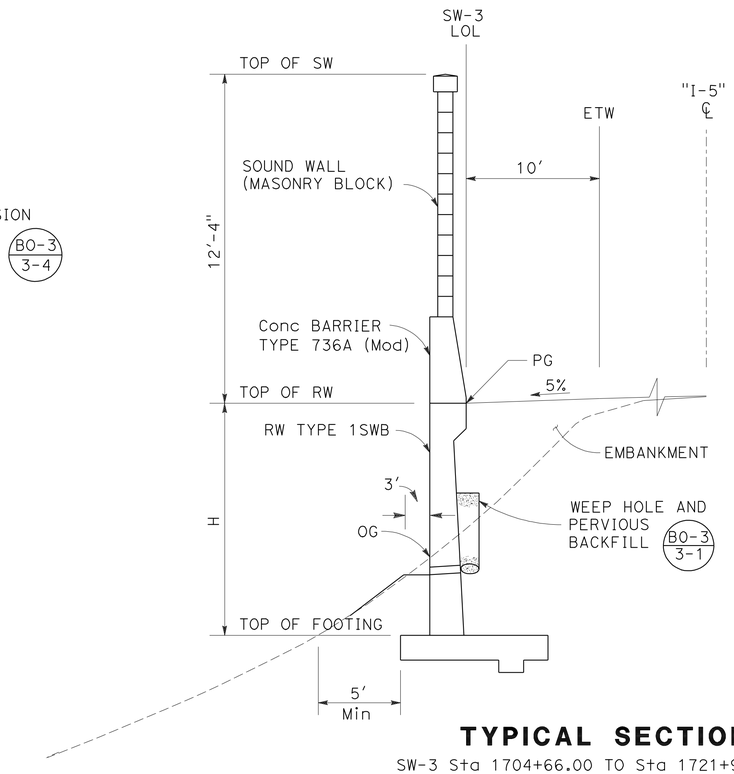

TYPICAL SECTION

SW-3 Sta 1704+66.00 TO Sta 1721+94.00

NO SCALE

NOTE:

FOR DETAILS OF RW TYPE 1SWB,
SEE RETAINING WALL DETAIL SHEET SW-116.

SOUND WALL PLAN

SOUND WALL No.3

SCALE AS SHOWN

SW-16

STATE OF CALIFORNIA - DEPARTMENT OF TRANSPORTATION

Caltrans

CONSULTANT FUNCTIONAL SUPERVISOR: KEITH G. MEYER

CALCULATED-DESIGNED BY: SRILAKSHMI SAKHAMURI

CHECKED BY: CHUONG NGUYEN

REVISED BY

DATE REVISED

LAST REVISION 08-10-10 | DATE PLOTTED => 12-OCT-2010 | TIME PLOTTED => 12:37

Dist	COUNTY	ROUTE	POST MILES TOTAL PROJECT	SHEET No.	TOTAL SHEETS
10	SJ	5	25.0/32.7	516	1132

REGISTERED CIVIL ENGINEER 04/21/10 DATE

10-11-10
PLANS APPROVAL DATE

REGISTERED PROFESSIONAL ENGINEER CHUONG NGUYEN No. C46770 Exp. 06/30/11 CIVIL STATE OF CALIFORNIA

THE STATE OF CALIFORNIA OR ITS OFFICERS OR AGENTS SHALL NOT BE RESPONSIBLE FOR THE ACCURACY OR COMPLETENESS OF SCANNED COPIES OF THIS PLAN SHEET.

RAJAPPAN & MEYER
CONSULTING ENGINEERS INC.
1038 LEIGH AVE, SUITE 100
SAN JOSE, CA 95126

SJCOG
555 E. WEBER AVE.
STOCKTON, CA 95202-2804

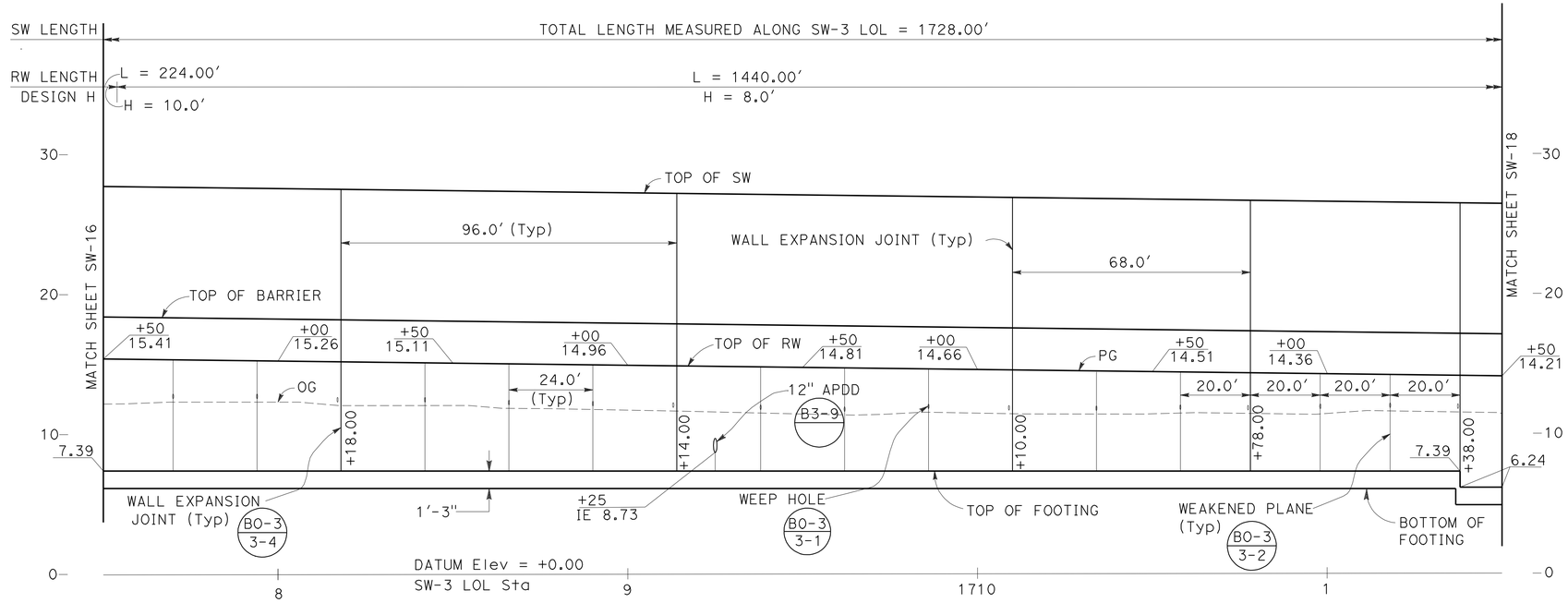

ELEVATION

SCALE: Horiz 1" = 20'
Vert 1" = 5'

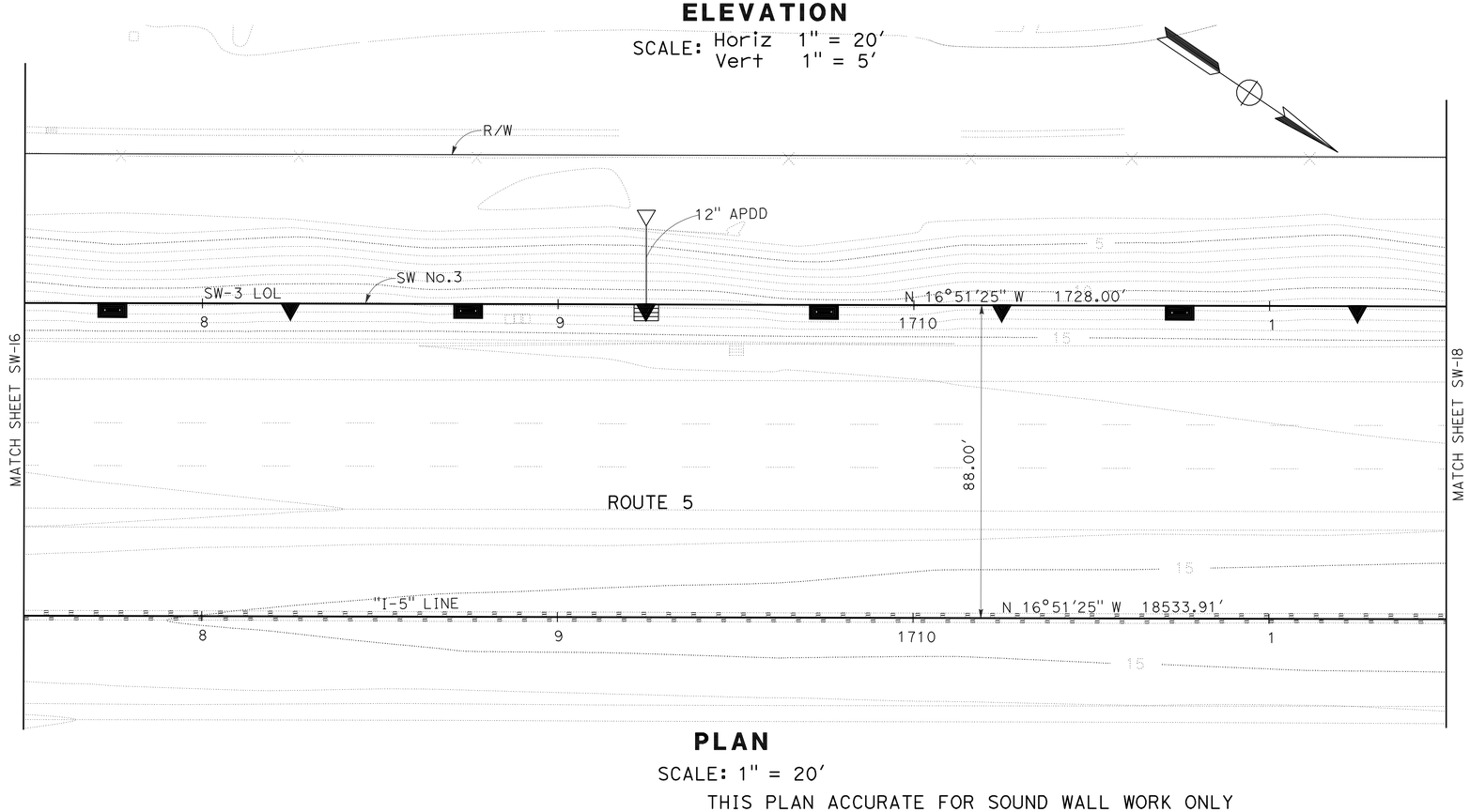

PLAN

SCALE: 1" = 20'

THIS PLAN ACCURATE FOR SOUND WALL WORK ONLY

SOUND WALL PLAN

SOUND WALL No.3

SCALE AS SHOWN

SW-17

STATE OF CALIFORNIA - DEPARTMENT OF TRANSPORTATION
Caltrans

CONSULTANT FUNCTIONAL SUPERVISOR: KEITH G. MEYER

CALCULATED-DESIGNED BY: SRILAKSHMI SAKHAMURI
CHECKED BY: CHUONG NGUYEN

REVISED BY
DATE REVISED

LAST REVISION 07-07-10
DATE PLOTTED => 12-OCT-2010
TIME PLOTTED => 12:38

Dist	COUNTY	ROUTE	POST MILES TOTAL PROJECT	SHEET No.	TOTAL SHEETS
10	SJ	5	25.0/32.7	517	1132

REGISTERED CIVIL ENGINEER 04/21/10 DATE

10-11-10
PLANS APPROVAL DATE

REGISTERED PROFESSIONAL ENGINEER CHUONG NGUYEN No. C46770 Exp. 06/30/11 CIVIL STATE OF CALIFORNIA

THE STATE OF CALIFORNIA OR ITS OFFICERS OR AGENTS SHALL NOT BE RESPONSIBLE FOR THE ACCURACY OR COMPLETENESS OF SCANNED COPIES OF THIS PLAN SHEET.

RAJAPPAN & MEYER
CONSULTING ENGINEERS INC.
1038 LEIGH AVE, SUITE 100
SAN JOSE, CA 95126

SJCOG
555 E. WEBER AVE.
STOCKTON, CA 95202-2804

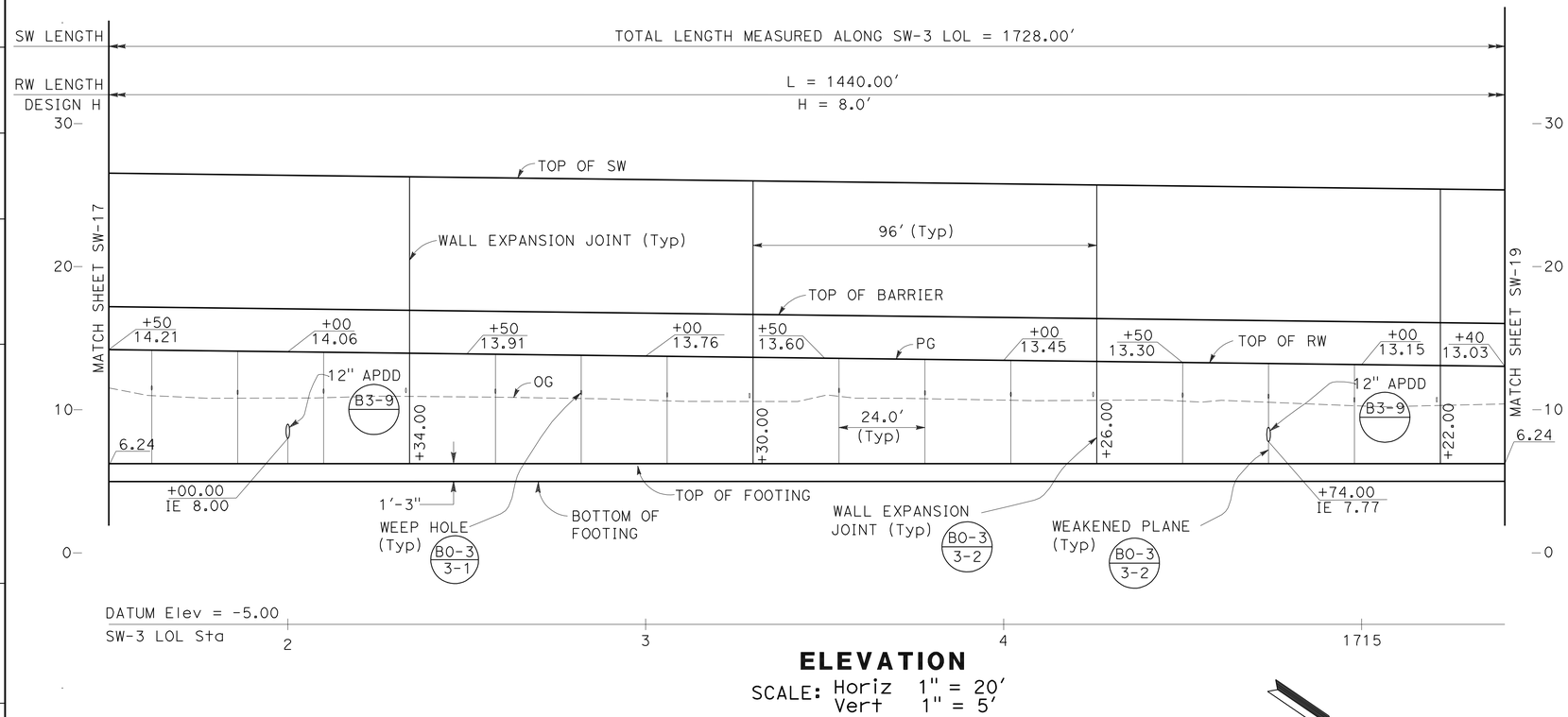

ELEVATION

SCALE: Horiz 1" = 20'
Vert 1" = 5'

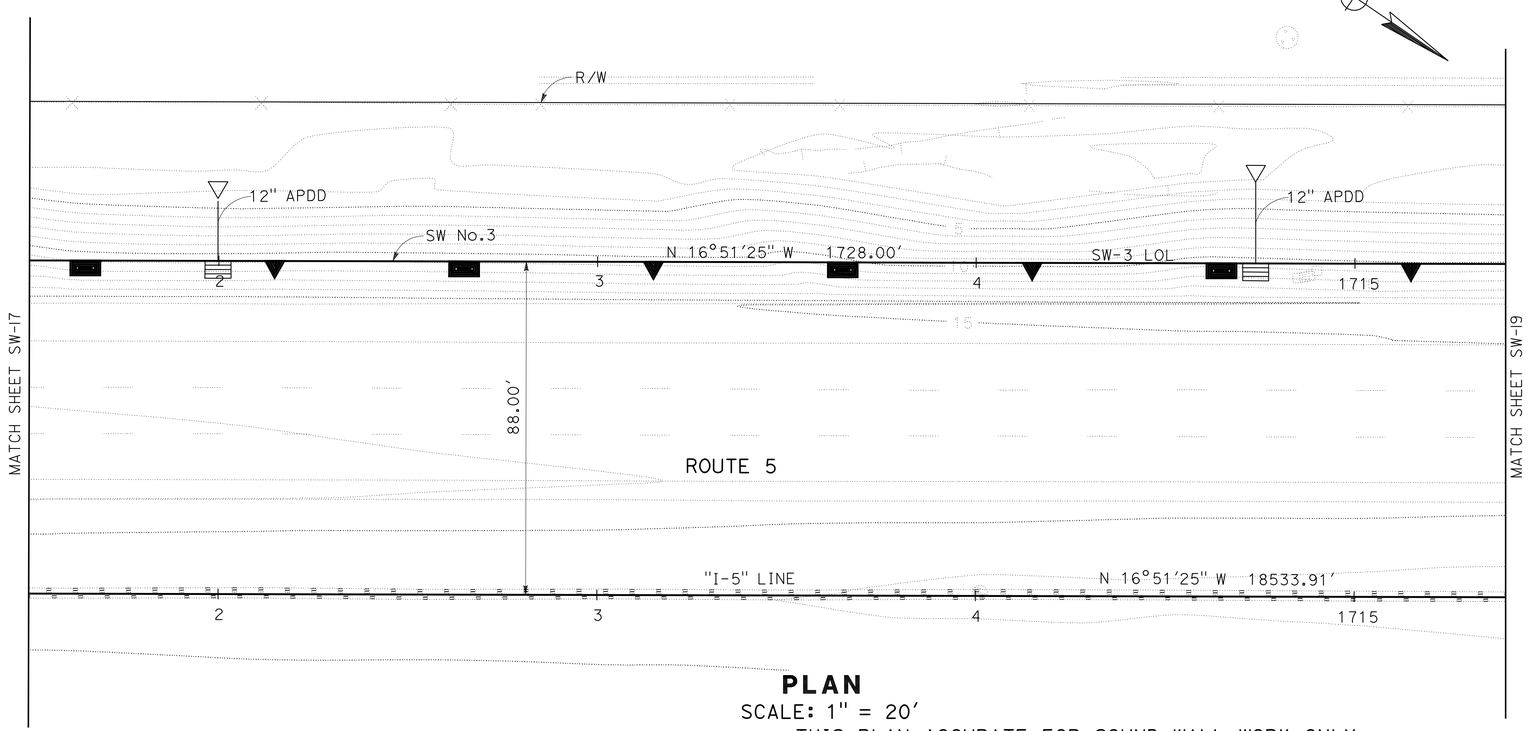

PLAN

SCALE: 1" = 20'

THIS PLAN ACCURATE FOR SOUND WALL WORK ONLY

SOUND WALL PLAN

SOUND WALL No.3

SCALE AS SHOWN

SW-18

STATE OF CALIFORNIA - DEPARTMENT OF TRANSPORTATION

Caltrans

CONSULTANT FUNCTIONAL SUPERVISOR: KEITH G. MEYER

CALCULATED-DESIGNED BY: CHUONG NGUYEN

CHECKED BY

REVISED BY

DATE REVISED

SRILAKSHMI SAKHAMURI

LAST REVISION DATE PLOTTED => 12-OCT-2010
07-07-10 TIME PLOTTED => 12:38

Dist	COUNTY	ROUTE	POST MILES TOTAL PROJECT	SHEET No.	TOTAL SHEETS
10	SJ	5	25.0/32.7	518	1132

REGISTERED CIVIL ENGINEER 04/21/10 DATE

10-11-10
PLANS APPROVAL DATE

REGISTERED PROFESSIONAL ENGINEER CHUONG NGUYEN No. C46770 Exp. 06/30/11 CIVIL STATE OF CALIFORNIA

THE STATE OF CALIFORNIA OR ITS OFFICERS OR AGENTS SHALL NOT BE RESPONSIBLE FOR THE ACCURACY OR COMPLETENESS OF SCANNED COPIES OF THIS PLAN SHEET.

RAJAPPAN & MEYER
CONSULTING ENGINEERS INC.
1038 LEIGH AVE, SUITE 100
SAN JOSE, CA 95126

SJCOG
555 E. WEBER AVE.
STOCKTON, CA 95202-2804

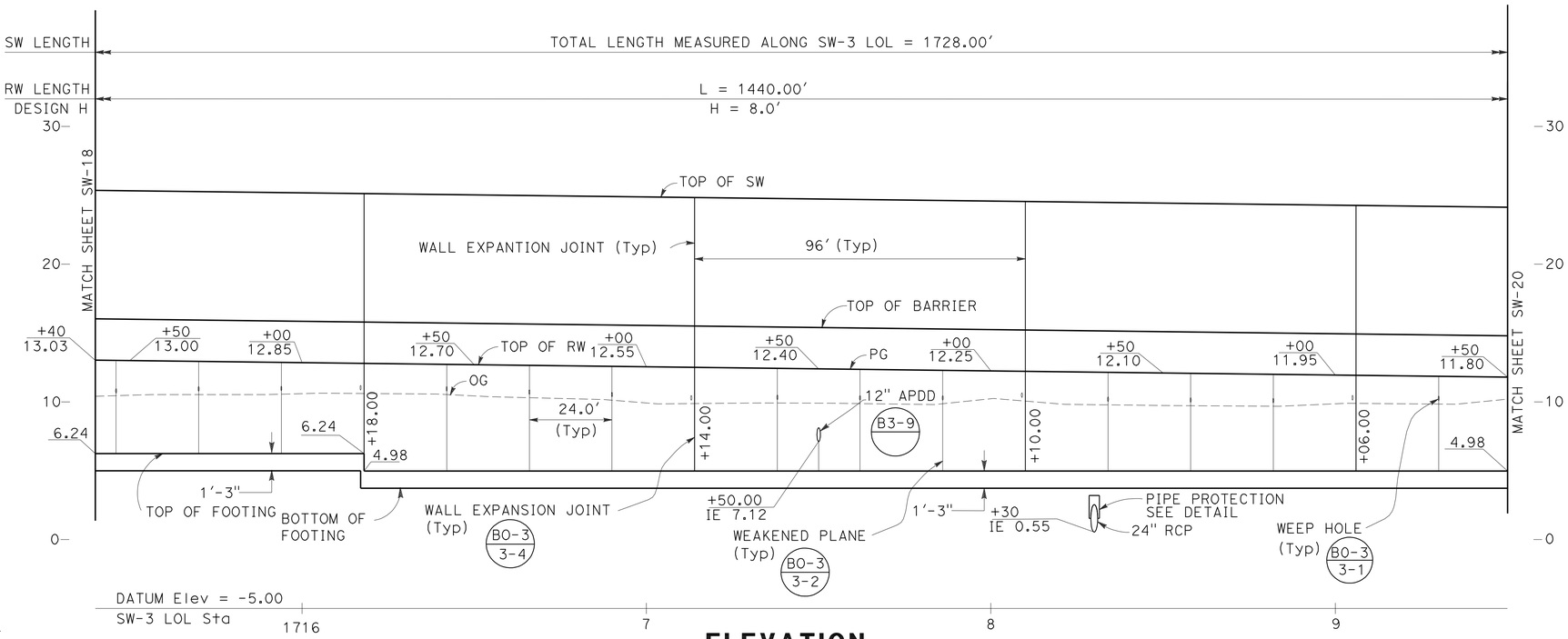

ELEVATION

SCALE: Horiz 1" = 20'
Vert 1" = 5'

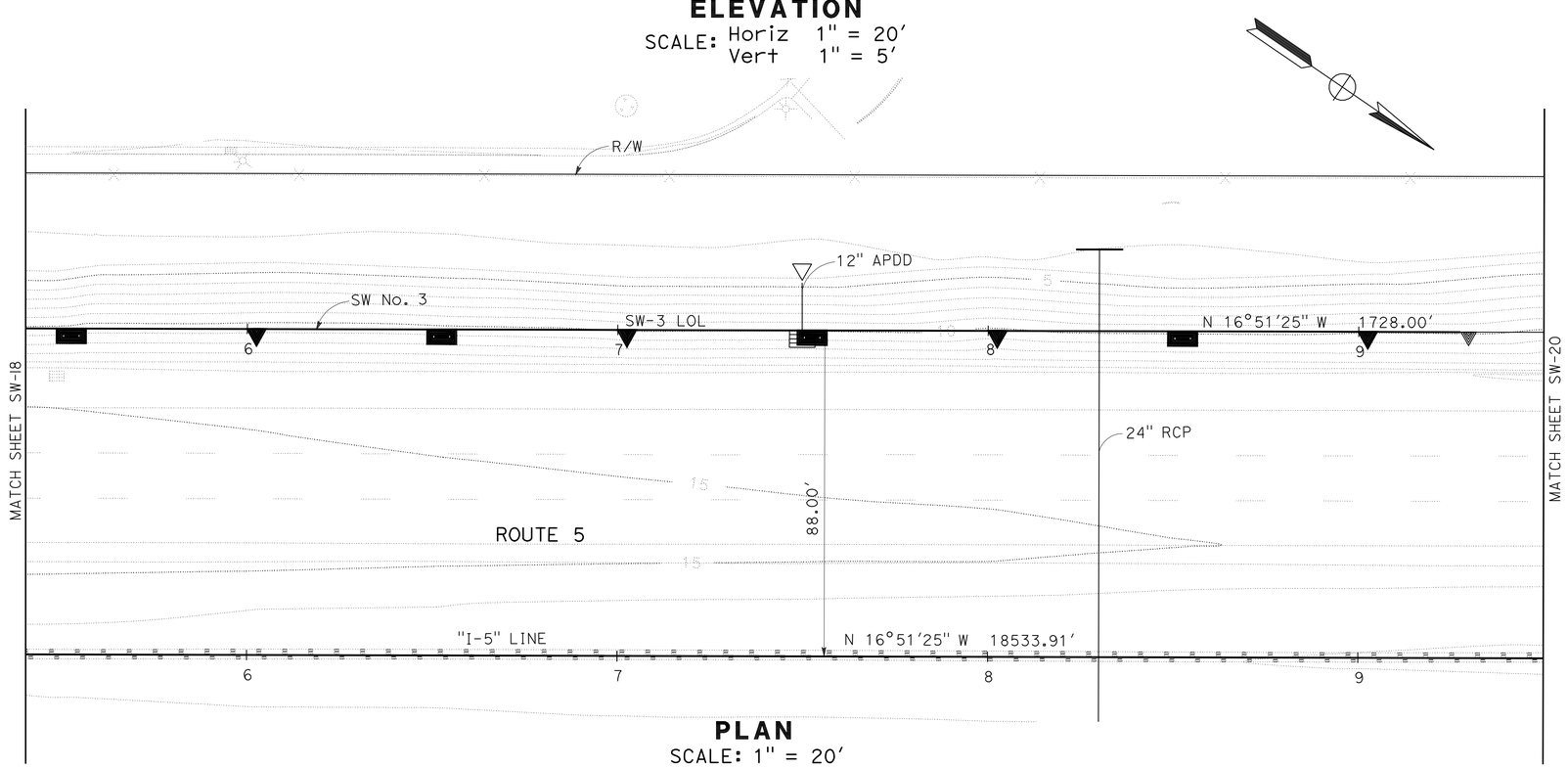

PLAN

SCALE: 1" = 20'

THIS PLAN ACCURATE FOR SOUND WALL WORK ONLY

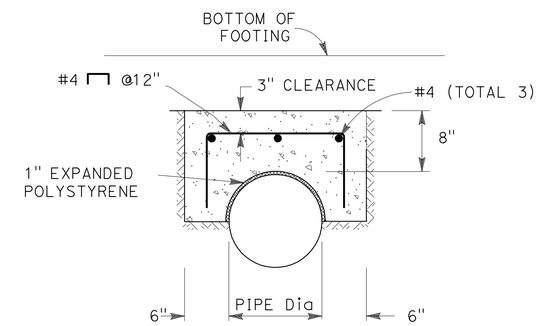

NOTE: PROVIDE PIPE PROTECTION FOR WHOLE WIDTH OF FOOTING

PIPE PROTECTION DETAIL

NO SCALE

SOUND WALL PLAN

SOUND WALL No.3

SCALE AS SHOWN

SW-19

STATE OF CALIFORNIA - DEPARTMENT OF TRANSPORTATION
Caltrans

CONSULTANT FUNCTIONAL SUPERVISOR: KEITH G. MEYER
CALCULATED-DESIGNED BY: SRILAKSHMI SAKHAMURI
CHECKED BY: CHUONG NGUYEN
REVISED BY
DATE REVISED

LAST REVISION DATE PLOTTED => 12-OCT-2010
07-07-10 TIME PLOTTED => 12:38

Dist	COUNTY	ROUTE	POST MILES TOTAL PROJECT	SHEET No.	TOTAL SHEETS
10	SJ	5	25.0/32.7	519	1132

REGISTERED CIVIL ENGINEER 04/21/10 DATE

10-11-10
PLANS APPROVAL DATE

REGISTERED PROFESSIONAL ENGINEER CHUONG NGUYEN No. C46770 Exp. 06/30/11 CIVIL STATE OF CALIFORNIA

THE STATE OF CALIFORNIA OR ITS OFFICERS OR AGENTS SHALL NOT BE RESPONSIBLE FOR THE ACCURACY OR COMPLETENESS OF SCANNED COPIES OF THIS PLAN SHEET.

RAJAPPAN & MEYER
CONSULTING ENGINEERS INC.
1038 LEIGH AVE, SUITE 100
SAN JOSE, CA 95126

SJCOG
555 E. WEBER AVE.
STOCKTON, CA 95202-2804

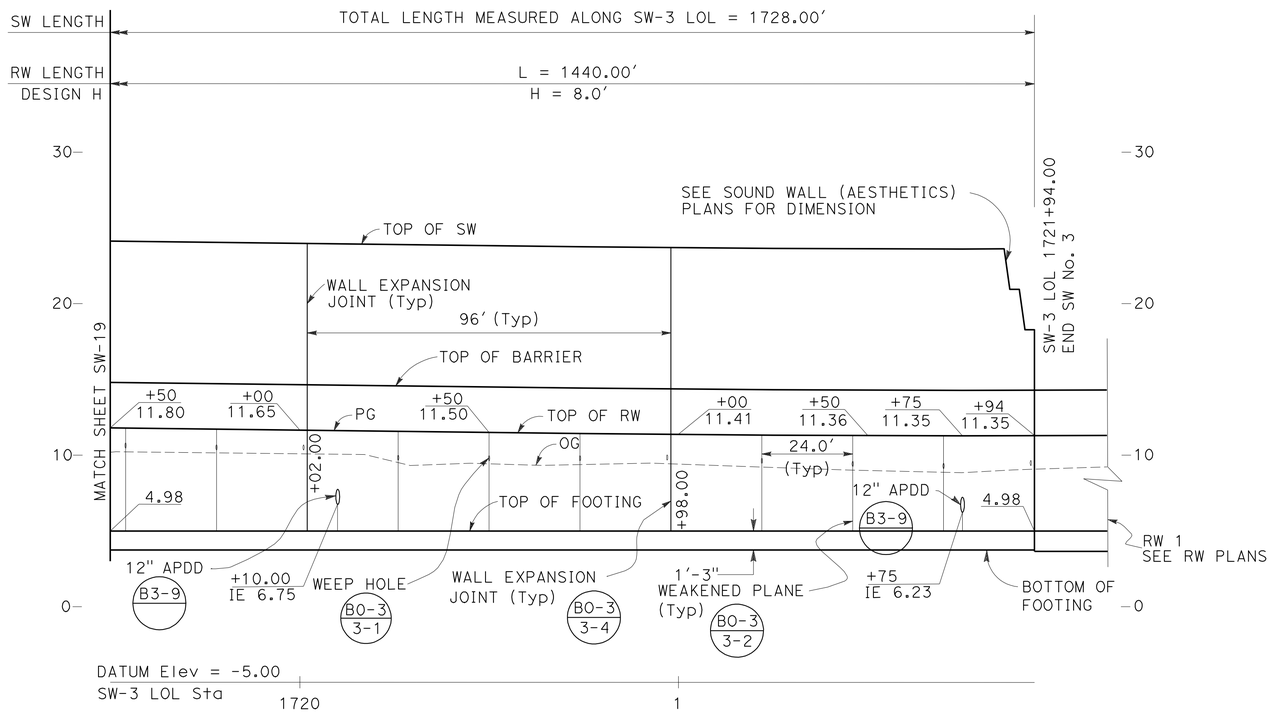

ELEVATION

SCALE: Horiz 1" = 20'
Vert 1" = 5'

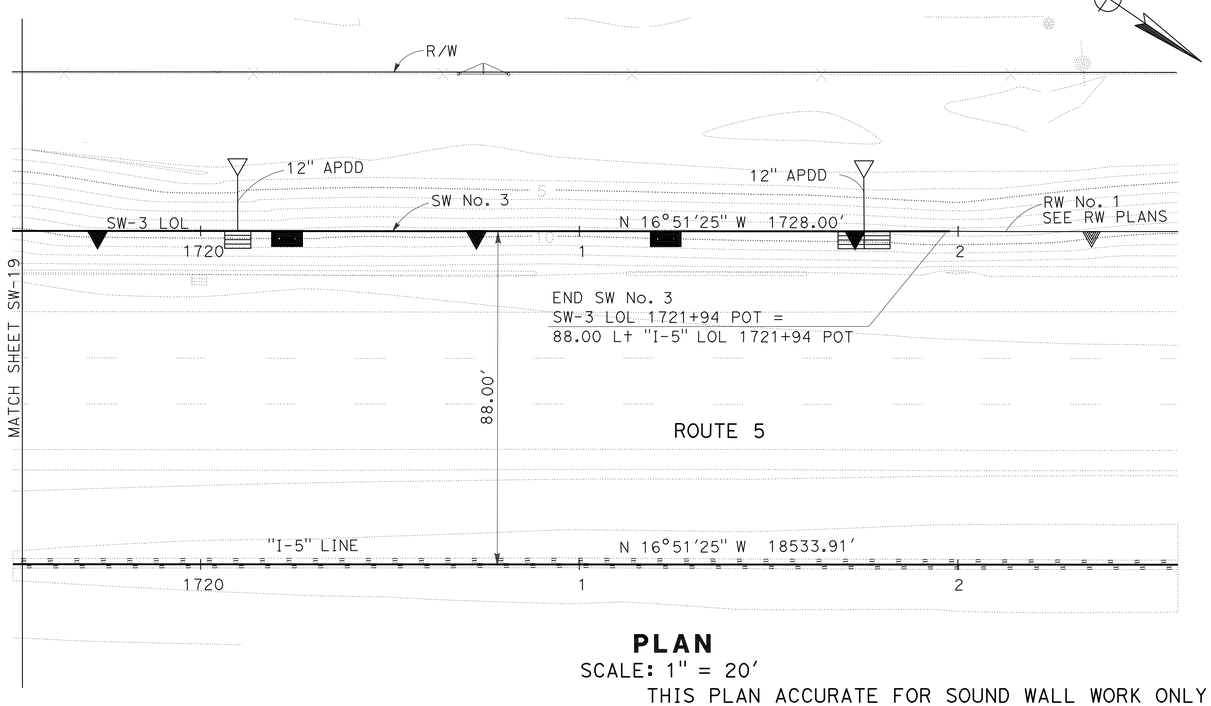

PLAN

SCALE: 1" = 20'

THIS PLAN ACCURATE FOR SOUND WALL WORK ONLY

SOUND WALL PLAN

SOUND WALL No.3

SCALE AS SHOWN

SW-20

STATE OF CALIFORNIA - DEPARTMENT OF TRANSPORTATION
Caltrans

CONSULTANT FUNCTIONAL SUPERVISOR: KEITH G. MEYER

CALCULATED-DESIGNED BY: SRILAKSHMI SAKHAMURI
CHECKED BY: CHUONG NGUYEN

REVISED BY
DATE REVISED

LAST REVISION 07-07-10
DATE PLOTTED => 12-OCT-2010
TIME PLOTTED => 12:38

Dist	COUNTY	ROUTE	POST MILES TOTAL PROJECT	SHEET No.	TOTAL SHEETS
10	SJ	5	25.0/32.7	520	1132

REGISTERED CIVIL ENGINEER 04/21/10 DATE

10-11-10
PLANS APPROVAL DATE

REGISTERED PROFESSIONAL ENGINEER CHRISTINA D.B.FRANKEL No. C-25730 Exp. 05/31/11 CIVIL STATE OF CALIFORNIA

THE STATE OF CALIFORNIA OR ITS OFFICERS OR AGENTS SHALL NOT BE RESPONSIBLE FOR THE ACCURACY OR COMPLETENESS OF SCANNED COPIES OF THIS PLAN SHEET.

DERIVI CONSTRUCTION & ARCHITECTURE, INC.
924 N. YOSEMITE STREET
STOCKTON, CA 95203

SJCOG
555 E. WEBER AVE.
STOCKTON, CA 95202-2804

BLOCK LEGEND:

Medium Wt / Light Wt — BLOCK A: 'CAP'
8(H)×10(D)*×16(L)
*PROJECT BLOCK 1" EA SIDE
SPLIT FACE BOTH FACES
DARK TAN WITH MEDIUM-SIZED BLACK, DARK BROWN & WHITE AGGREGATE

Medium Wt / Light Wt — BLOCK B: 'WATER'
8(H)×8(D)×16(L)
SPLIT FACE BOTH FACES
DARK TAN WITH MEDIUM-SIZED BLACK, DARK BROWN & WHITE AGGREGATE

Medium Wt — BLOCK C: 'FIELDS'
8(H)×8(D)×16(L)
SPLIT FACE BOTH FACES
3 SCORE ($\frac{3}{8}$") BOTH FACES
DARK TAN WITH MEDIUM-SIZED BLACK, DARK BROWN & WHITE AGGREGATE

Medium Wt — BLOCK D: 'LEVEE'
8(H)×10(D)*×16(L)
*PROJECT BLOCK 1" EA SIDE
PRECISION BLOCK
MEDIUM-LIGHT TAN WITH MEDIUM-SIZED BLACK, RED & WHITE AGGREGATE

Medium Wt / Light Wt — BLOCK G: 'LEVEE 2'
8(H)×8(D)×16(L)
PRECISION BLOCK
MEDIUM-LIGHT TAN WITH MEDIUM-SIZED BLACK, RED & WHITE AGGREGATE

Medium Wt / Light Wt — BLOCK F: 'CITY'
8(H)×8(D)×16(L)
SPLIT FACE BOTH FACES
LIGHT TAN WITH SMALL-SIZED WHITE, GREY & BLACK AGGREGATE

Medium Wt / Light Wt — BLOCK H: 'STREET'
8(H)×8(D)×16(L)
PRECISION BLOCK
1 SCORE ($\frac{3}{8}$") BOTH FACES
DARK GREY

GENERAL NOTES:

1. EACH SOUNDWALL ELEVATION IS ELEVATED INDEPENDENTLY. SEE SOUNDWALL GENERAL PLANS FOR MORE INFORMATION.
2. WHERE CUT BLOCKS ARE REQUIRED, CUT BLOCK SHALL BE NO SMALLER THAN ONE HALF OF A BLOCK, OTHERWISE CUT ADJACENT BLOCK AS WELL.
3. PLACE CORE HOLES (NOT SHOWN) FOR VINE PLANTINGS AT 16' ON CENTER.
4. THE CONTRACTOR SHALL SUBMIT COLOR SAMPLE OF BLOCK TO THE ENGINEER FOR APPROVAL.

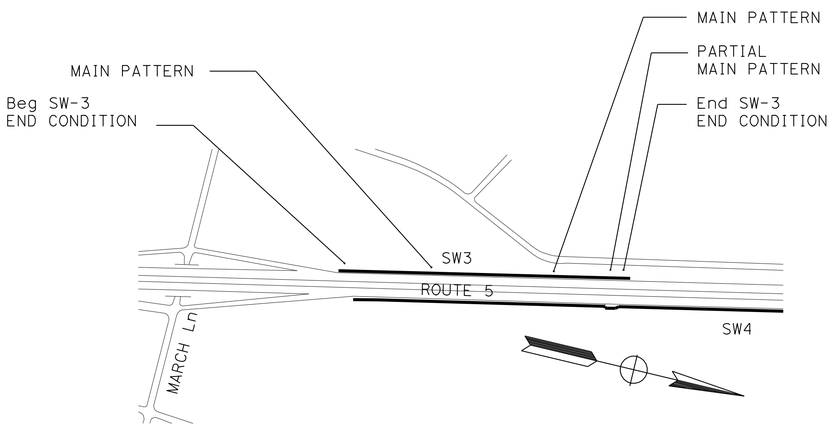

SOUND WALL 3
KEY PLAN

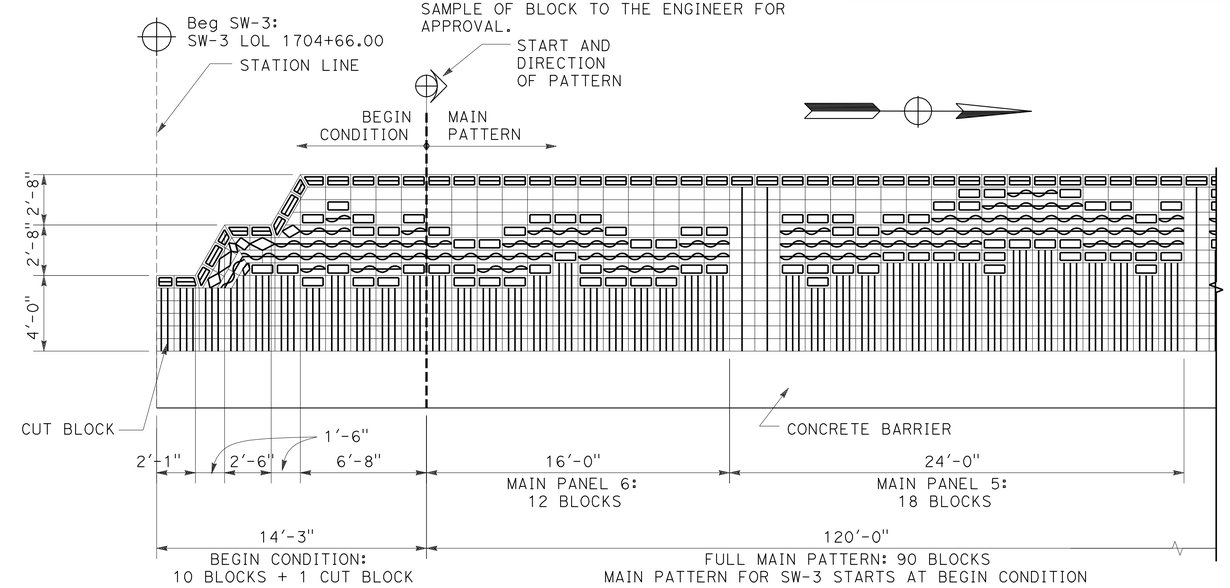

SOUND WALL 3
BEGIN CONDITION TO MAIN PATTERN

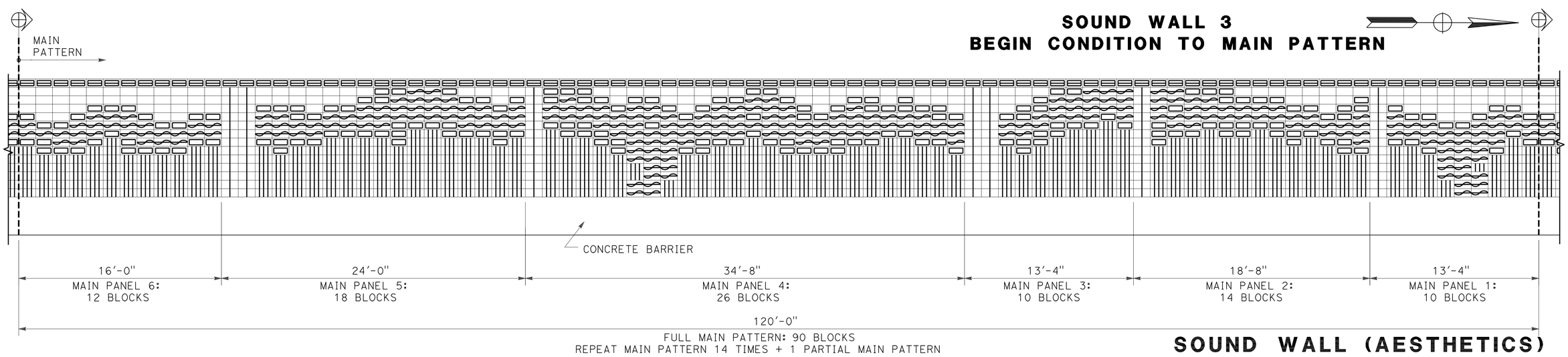

SOUND WALL 3
MAIN PATTERN - Typ

SOUND WALL (AESTHETICS)

SOUND WALL No. 3

NO SCALE

SW-21

THIS PLAN ACCURATE FOR SOUND WALL AESTHETIC TREATMENTS ONLY

REVISED BY | DATE REVISED
CHRISTINA D. B. FRANKEL | LINDA M. DEVIVI
CALCULATED-DESIGNED BY | CHECKED BY
CONSULTANT FUNCTIONAL SUPERVISOR: LINDA M. DEVIVI
STATE OF CALIFORNIA - DEPARTMENT OF TRANSPORTATION
Caltrans

LAST REVISION 07-07-10 | DATE PLOTTED => 12-OCT-2010 | TIME PLOTTED => 12:38

Dist	COUNTY	ROUTE	POST MILES TOTAL PROJECT	SHEET No.	TOTAL SHEETS
10	SJ	5	25.0/32.7	521	1132

REGISTERED CIVIL ENGINEER 04/21/10 DATE

10-11-10
PLANS APPROVAL DATE

REGISTERED PROFESSIONAL ENGINEER CHRISTINA D.B.FRANKEL No. C-25730 Exp. 05/31/11 CIVIL STATE OF CALIFORNIA

THE STATE OF CALIFORNIA OR ITS OFFICERS OR AGENTS SHALL NOT BE RESPONSIBLE FOR THE ACCURACY OR COMPLETENESS OF SCANNED COPIES OF THIS PLAN SHEET.

DERIVI CONSTRUCTION & ARCHITECTURE, INC.
924 N. YOSEMITE STREET
STOCKTON, CA 95203

SJCOG
555 E. WEBER AVE.
STOCKTON, CA 95202-2804

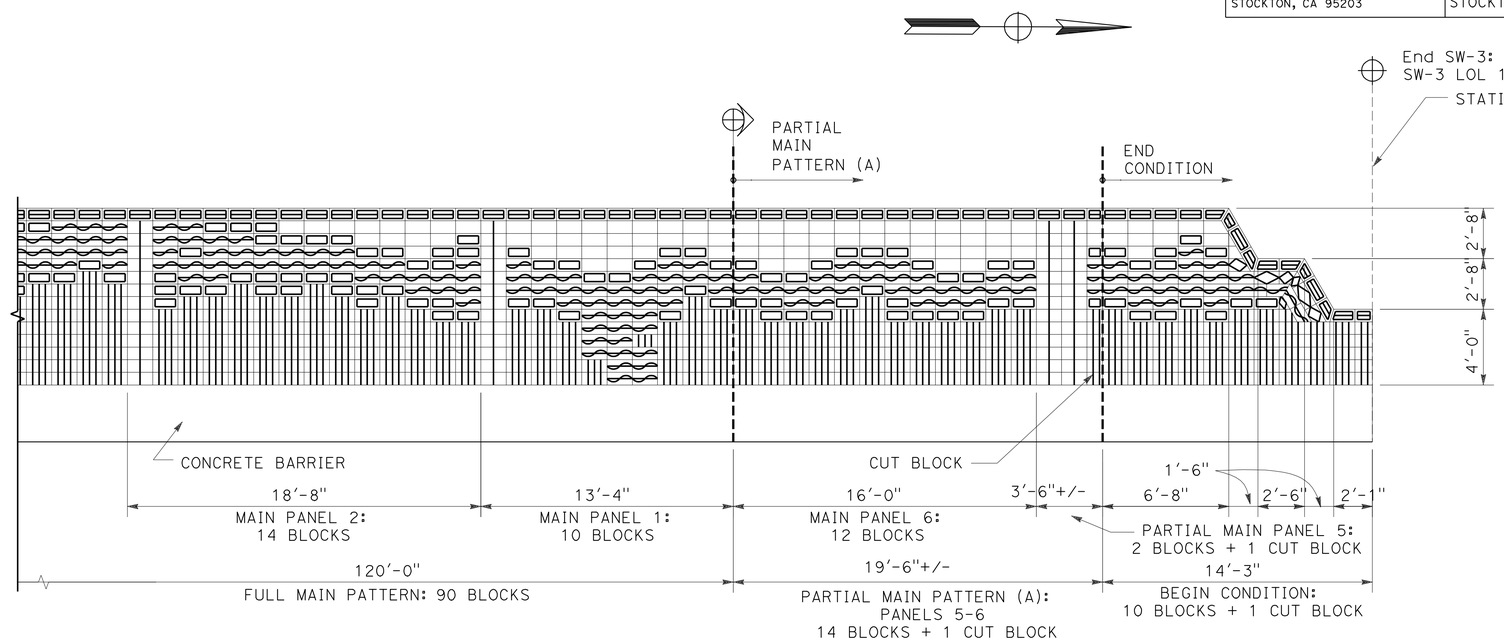

SOUND WALL 3
END CONDITION

SOUND WALL (AESTHETICS)

SOUND WALL No. 3

NO SCALE

SW-22

THIS PLAN ACCURATE FOR SOUND WALL AESTHETIC TREATMENTS ONLY

REVISED BY	DATE REVISED

CALCULATED-DESIGNED BY: CHRISTINA D. B. FRANKEL
CHECKED BY: LINDA M. DEVIVI
CONSULTANT FUNCTIONAL SUPERVISOR: LINDA M. DEVIVI

STATE OF CALIFORNIA - DEPARTMENT OF TRANSPORTATION
Caltrans

LAST REVISION 07-07-10
DATE PLOTTED => 12-OCT-2010
TIME PLOTTED => 12:38

DIST	COUNTY	ROUTE	POST MILES TOTAL PROJECT	SHEET No	TOTAL SHEETS
10	SJ	5	25.0/32.7	522	1132

GEOTECHNICAL PROFESSIONAL — DATE 04/21/10

10-11-10
PLANS APPROVAL DATE

REGISTERED GEOLOGIST — GARY PARIKH — No. G.E. 666 — Exp. 12/31/11 — CERTIFIED ENGINEERING GEOLOGIST — STATE OF CALIFORNIA

The State of California or its officers or agents shall not be responsible for the accuracy or completeness of scanned copies of this plan sheet.

SJCOG
555 WEBER AVE.
STOCKTON, CA 95202-2804

PARIKH CONSULTANTS, INC.
2360 QUME DRIVE, SUITE A
SAN JOSE, CA 95131

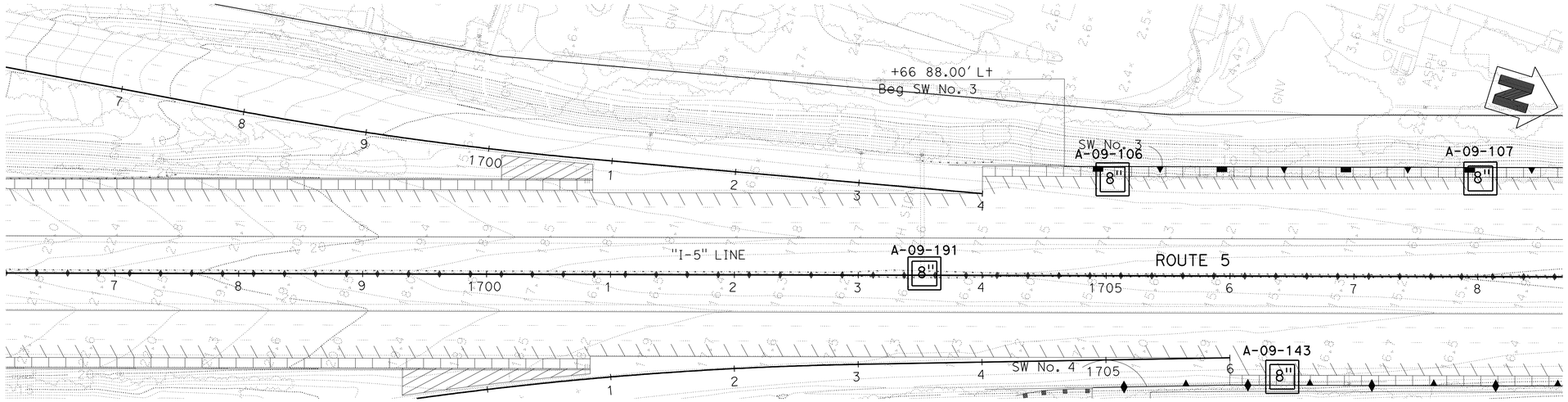

PLAN
1" = 50'

BENCHMARK:
THE HORIZONTAL COORDINATES VALUES ARE IN THE CALIFORNIA COORDINATE SYSTEM (CCS 83) ZONE 3, EPOCH DATE 2007.00, IN U.S. SURVEY FEET.
THE VERTICAL CONTROL VALUES ARE BASED ON THE NORTH AMERICAN U.S. SURVEY FEET, HEIGHT MODERNIZATION SURVEY STATION, (2007.00) AND GEOID03 WAS USED FOR THE ADJUSTMENT.

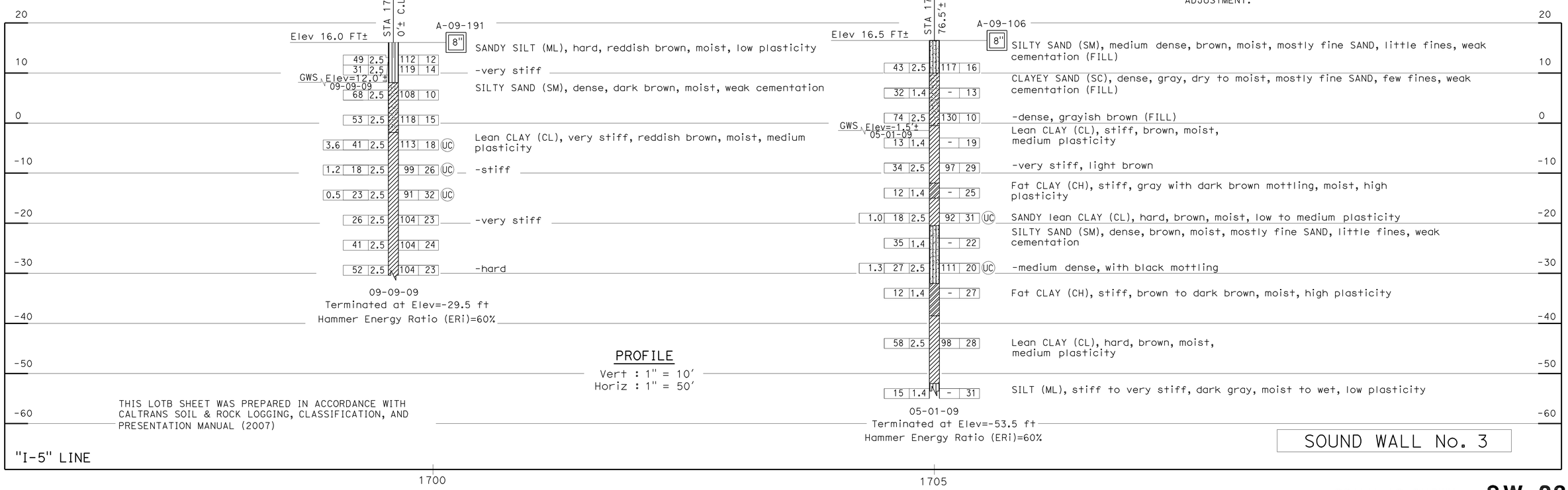

SCALE AS SHOWN **SW-23**

DESIGN OVERSIGHT	DRAWN BY	O. GOUTHIER	S. DUDDU- A.R. BHARADWAJ	PREPARED FOR THE STATE OF CALIFORNIA DEPARTMENT OF TRANSPORTATION	A. LAM
SIGN OFF DATE	CHECKED BY	D. WANG	FIELD INVESTIGATION BY: DATE: MARCH 2009 TO MAY 2009		PROJECT ENGINEER

BRIDGE NO. --
POST MILES --

I-5 NORTH STOCKTON CORRIDOR IMPROVEMENT

LOG OF TEST BORINGS

OGS GEOTECHNICAL LOG OF TEST BORINGS SHEET (ENGLISH) (REV. 06-01-09)

ORIGINAL SCALE IN INCHES FOR REDUCED PLANS 0 1 2 3

CU 06240
EA 0G4701

DISREGARD PRINTS BEARING EARLIER REVISION DATES — REVISION DATES 09/28/09 03/15/10 — SHEET — OF

FILE => a0g470rc008.dgn
USERNAME => trmnguye

USERNAME => trmnguye DATE PLOTTED => 12-OCT-2010 TIME PLOTTED => 12:38

DIST	COUNTY	ROUTE	POST MILES TOTAL PROJECT	SHEET No	TOTAL SHEETS
10	SJ	5	25.0/32.7	523	1132

GEOTECHNICAL PROFESSIONAL — DATE 04/21/10

10-11-10
PLANS APPROVAL DATE

REGISTERED GEOLOGIST — GARY PARIKH — No. G.E. 666 — Exp. 12/31/11 — CERTIFIED ENGINEERING GEOLOGIST — STATE OF CALIFORNIA

The State of California or its officers or agents shall not be responsible for the accuracy or completeness of scanned copies of this plan sheet.

SJCOG
555 WEBER AVE.
STOCKTON, CA 95202-2804

PARIKH CONSULTANTS, INC.
2360 QUME DRIVE, SUITE A
SAN JOSE, CA 95131

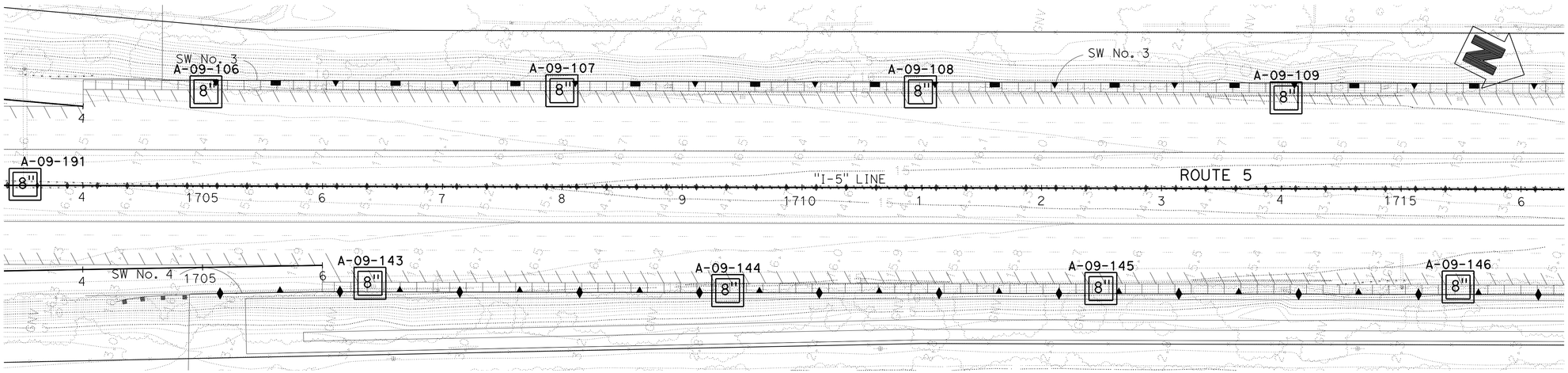

PLAN
SCALE: 1" = 50'

BENCHMARK:
THE HORIZONTAL COORDINATES VALUES ARE IN THE CALIFORNIA COORDINATE SYSTEM (CCS 83) ZONE 3, EPOCH DATE 2007.00, IN U.S. SURVEY FEET.
THE VERTICAL CONTROL VALUES ARE BASED ON THE NORTH AMERICAN U.S. SURVEY FEET, HEIGHT MODERNIZATION SURVEY STATION, (2007.00) AND GEOID03 WAS USED FOR THE ADJUSTMENT.

THIS LOTB SHEET WAS PREPARED IN ACCORDANCE WITH CALTRANS SOIL & ROCK LOGGING, CLASSIFICATION, AND PRESENTATION MANUAL (2007)

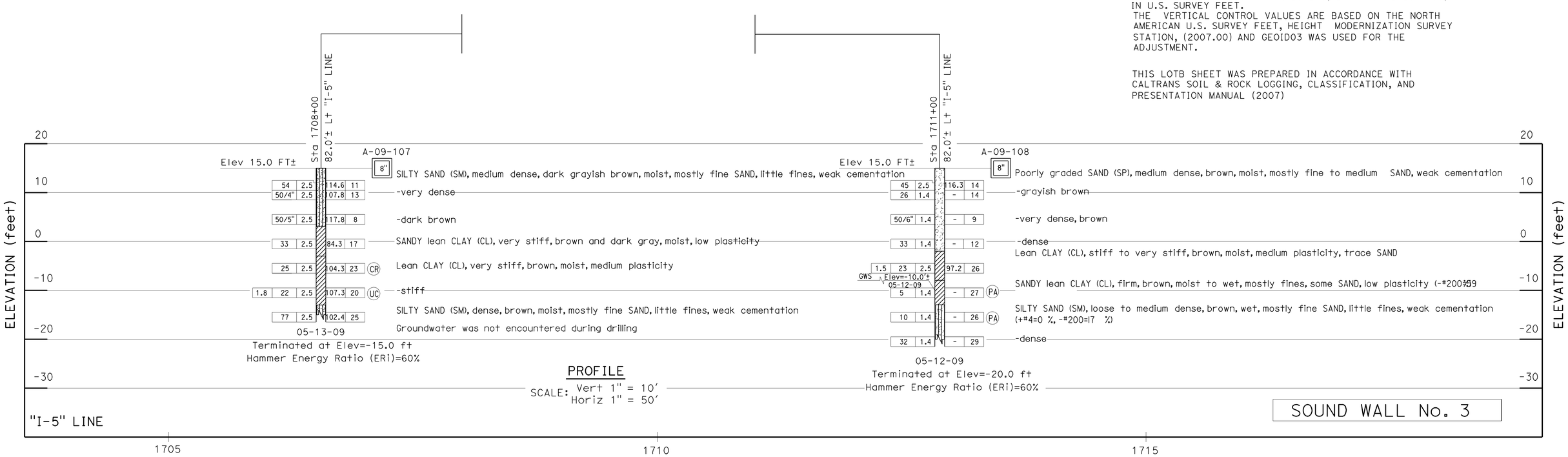

PROFILE
SCALE: Vert 1" = 10'
Horiz 1" = 50'

SOUND WALL No. 3

SCALE AS SHOWN **SW-24**

DESIGN OVERSIGHT	DRAWN BY	O. GOUTHIER	S. DUDDU- A.R. BHARADWAJ	PREPARED FOR THE STATE OF CALIFORNIA DEPARTMENT OF TRANSPORTATION	A. LAM
SIGN OFF DATE	CHECKED BY	D. WANG	FIELD INVESTIGATION BY: DATE: MARCH 2009 TO MAY 2009		PROJECT ENGINEER

BRIDGE NO. --
POST MILES --

I-5 NORTH STOCKTON CORRIDOR IMPROVEMENT
LOG OF TEST BORINGS

OGS GEOTECHNICAL LOG OF TEST BORINGS SHEET (ENGLISH) (REV. 06-01-09)

ORIGINAL SCALE IN INCHES FOR REDUCED PLANS 0 1 2 3

CU 06240
EA 0G4701

DISREGARD PRINTS BEARING EARLIER REVISION DATES 09/24/09 03/15/10

REVISION DATES — SHEET — OF

FILE => a0g470rc009.dgn
USERNAME => trmartin

USERNAME => trmartin DATE PLOTTED => 12-OCT-2010 TIME PLOTTED => 11:25

DIST	COUNTY	ROUTE	POST MILES TOTAL PROJECT	SHEET No	TOTAL SHEETS
10	SJ	5	25.0/32.7	524	1132

GEOTECHNICAL PROFESSIONAL — DATE 04/21/10

10-11-10
PLANS APPROVAL DATE

REGISTERED GEOLOGIST — GARY PARIKH — No. G.E. 666 — Exp. 12/31/11 — CERTIFIED ENGINEERING GEOLOGIST — STATE OF CALIFORNIA

The State of California or its officers or agents shall not be responsible for the accuracy or completeness of scanned copies of this plan sheet.

SJCOG
555 WEBER AVE.
STOCKTON, CA 95202-2804

PARIKH CONSULTANTS, INC.
2360 QUME DRIVE, SUITE A
SAN JOSE, CA 95131

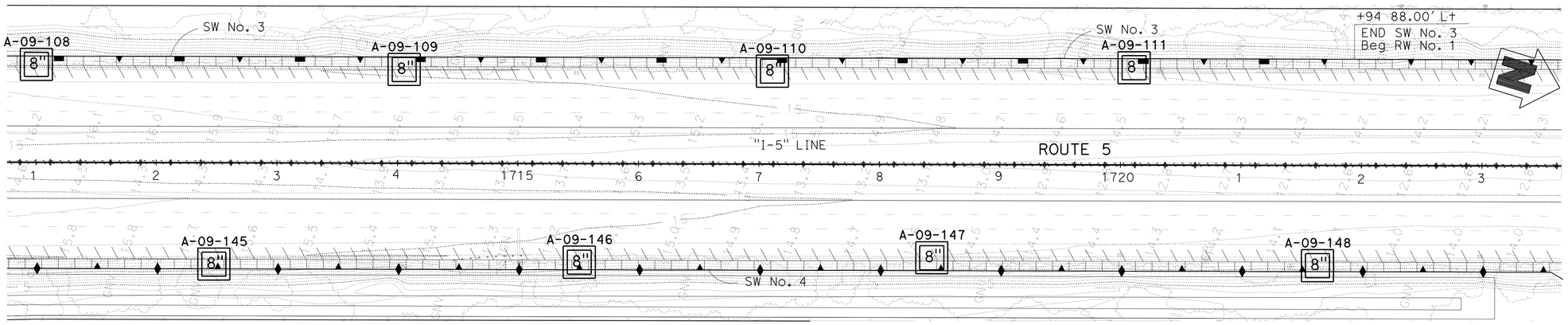

PLAN

SCALE: 1" = 50'

BENCHMARK:
THE HORIZONTAL COORDINATES VALUES ARE IN THE CALIFORNIA COORDINATE SYSTEM (CCS 83) ZONE 3, EPOCH DATE 2007.00, IN U.S. SURVEY FEET.
THE VERTICAL CONTROL VALUES ARE BASED ON THE NORTH AMERICAN U.S. SURVEY FEET, HEIGHT MODERNIZATION SURVEY STATION, (2007.00) AND GEOID03 WAS USED FOR THE ADJUSTMENT.

THIS LOTB SHEET WAS PREPARED IN ACCORDANCE WITH CALTRANS SOIL & ROCK LOGGING, CLASSIFICATION, AND PRESENTATION MANUAL (2007)

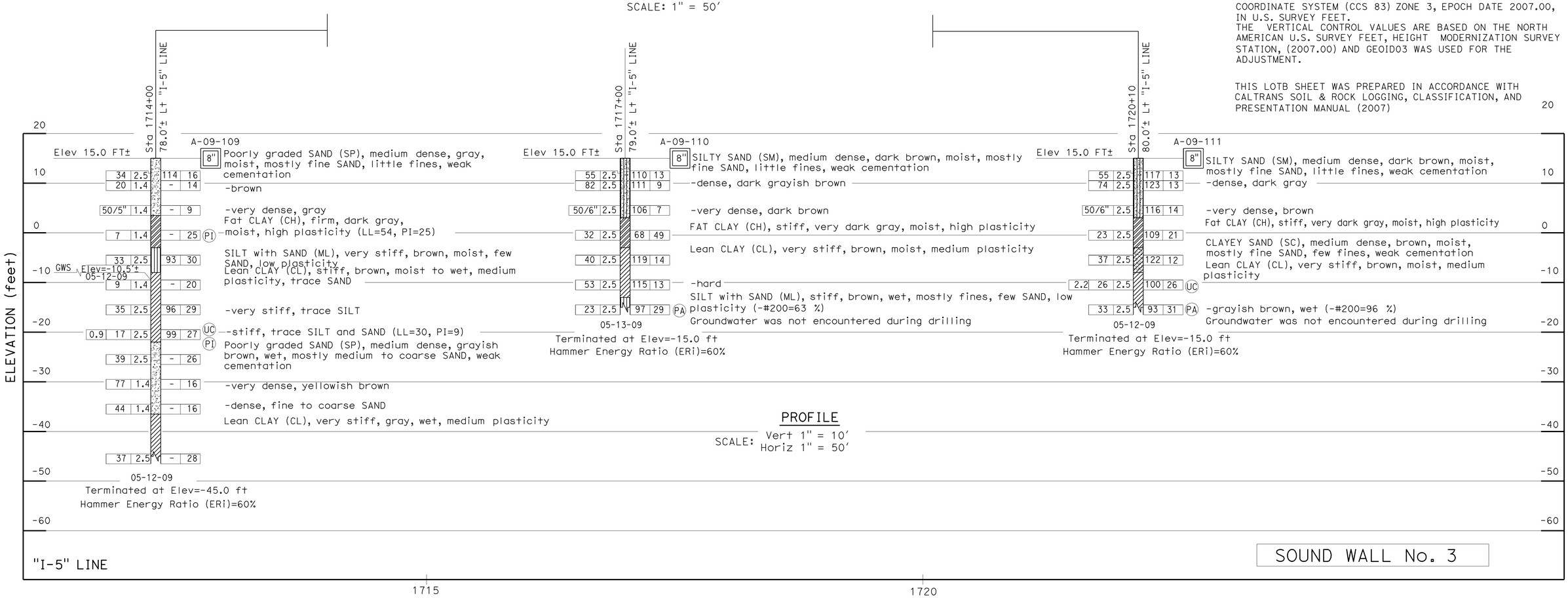

PROFILE

SCALE: Vert 1" = 10'
Horiz 1" = 50'

SOUND WALL No. 3

SCALE AS SHOWN **SW-25**

DESIGN OVERSIGHT	DRAWN BY	O. GOUTHIER	S. DUDDU- A.R. BHARADWAJ	PREPARED FOR THE STATE OF CALIFORNIA DEPARTMENT OF TRANSPORTATION	A. LAM
SIGN OFF DATE	CHECKED BY	D. WANG	FIELD INVESTIGATION BY: DATE: MARCH 2009 TO MAY 2009		PROJECT ENGINEER

BRIDGE NO. --
POST MILES --

I-5 NORTH STOCKTON CORRIDOR IMPROVEMENT
LOG OF TEST BORINGS

OGS GEOTECHNICAL LOG OF TEST BORINGS SHEET (ENGLISH) (REV. 06-01-09)

ORIGINAL SCALE IN INCHES FOR REDUCED PLANS 0 1 2 3

CU 06240
EA 0G4701

DISREGARD PRINTS BEARING EARLIER REVISION DATES → 09/28/09 03/15/10

REVISION DATES — SHEET — OF

FILE => a0g470rc010.dgn
USERNAME => trmartin

USERNAME => trmartin DATE PLOTTED => 12-OCT-2010 TIME PLOTTED => 11:25

Dist	COUNTY	ROUTE	POST MILES TOTAL PROJECT	SHEET No.	TOTAL SHEETS
10	SJ	5	25.0/32.7	525	1132

REGISTERED CIVIL ENGINEER — DATE: 04/21/10

10-11-10
PLANS APPROVAL DATE

REGISTERED PROFESSIONAL ENGINEER — CHUONG NGUYEN — No. C46770 — Exp. 06/30/11 — CIVIL — STATE OF CALIFORNIA

THE STATE OF CALIFORNIA OR ITS OFFICERS OR AGENTS SHALL NOT BE RESPONSIBLE FOR THE ACCURACY OR COMPLETENESS OF SCANNED COPIES OF THIS PLAN SHEET.

RAJAPPAN & MEYER
CONSULTING ENGINEERS INC.
1038 LEIGH AVE, SUITE 100
SAN JOSE, CA 95126

SJCOG
555 E. WEBER AVE.
STOCKTON, CA 95202-2804

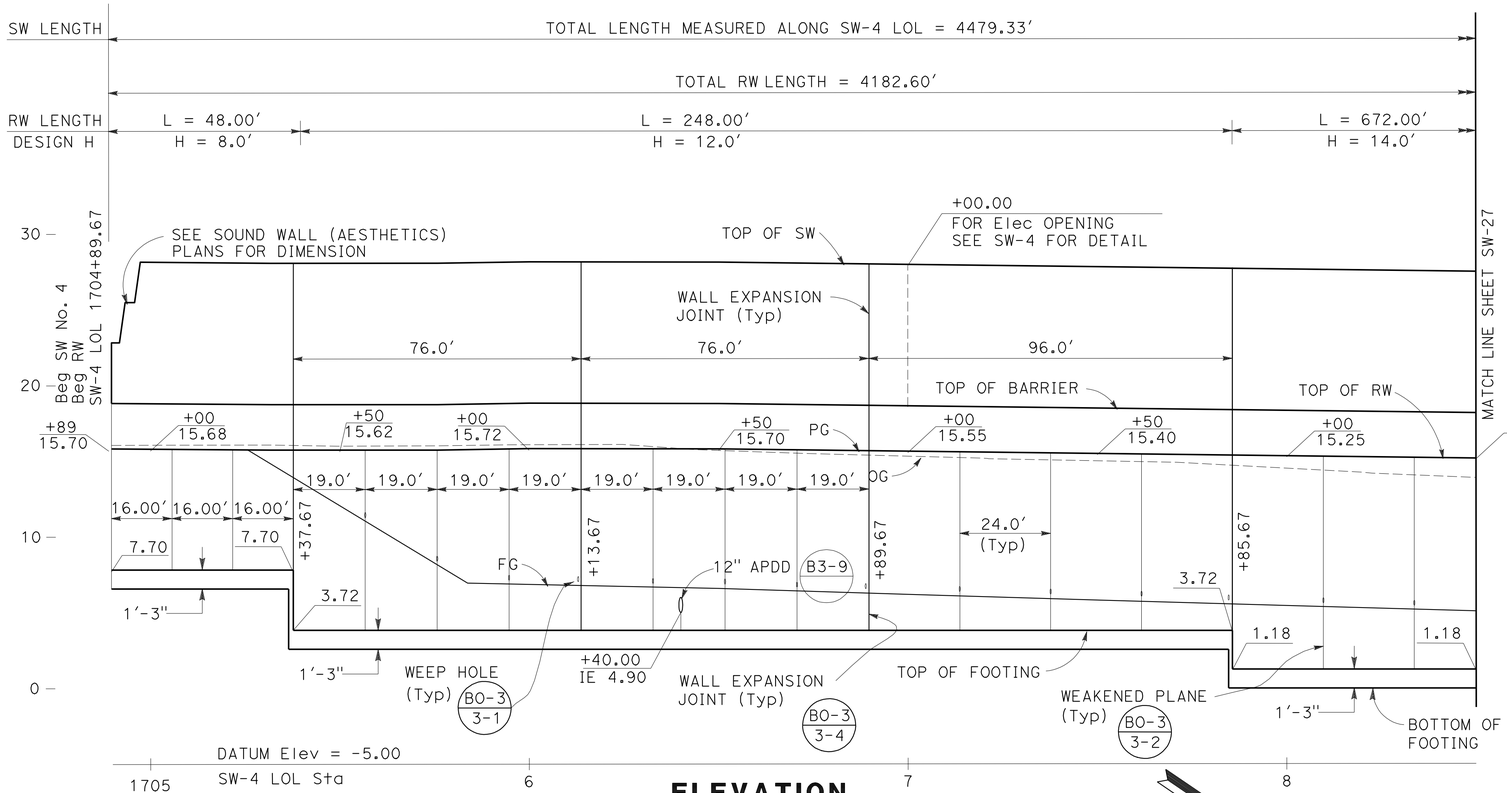

ELEVATION

SCALE: Horiz 1" = 20'
Vert 1" = 5'

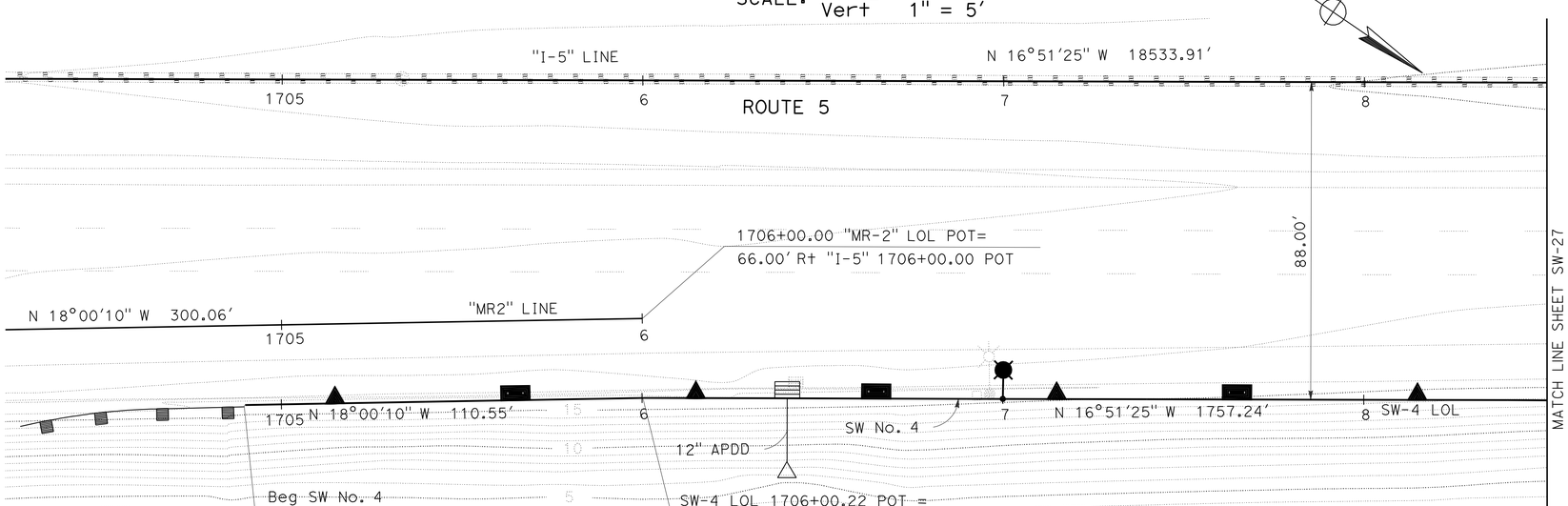

PLAN

SCALE: 1" = 20'

THIS PLAN ACCURATE FOR SOUND WALL WORK ONLY

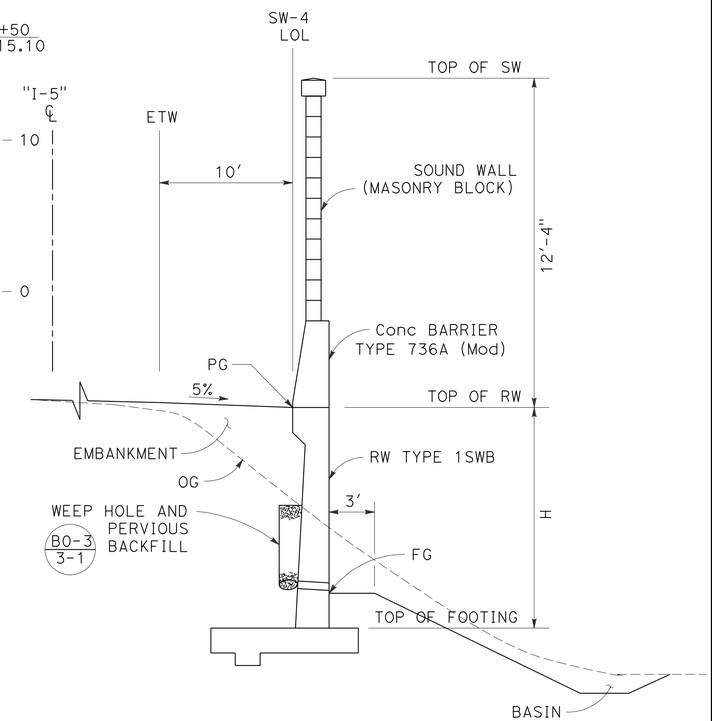

TYPICAL SECTION

SW-4 Sta 1704+89.67 TO Sta 1746+72.27
SW-4 Sta 1748+94.15 TO Sta 1749+33.00
NO SCALE

NOTE:

FOR DETAILS OF RW TYPE 1SWB,
SEE RETAINING WALL DEATIL SHEET SW-116.

SOUND WALL PLAN

SOUND WALL No.4

SCALE AS SHOWN

SW-26

STATE OF CALIFORNIA - DEPARTMENT OF TRANSPORTATION — Caltrans

CONSULTANT FUNCTIONAL SUPERVISOR: KEITH G. MEYER

CALCULATED-DESIGNED BY: SRILAKSHMI SAKHAMURI
CHECKED BY: CHUONG NGUYEN

REVISED BY
DATE REVISED

LAST REVISION: DATE PLOTTED => 12-OCT-2010
08-10-10 TIME PLOTTED => 11:25

Dist	COUNTY	ROUTE	POST MILES TOTAL PROJECT	SHEET No.	TOTAL SHEETS
10	SJ	5	25.0/32.7	526	1132

REGISTERED CIVIL ENGINEER 04/21/10 DATE

10-11-10
PLANS APPROVAL DATE

REGISTERED PROFESSIONAL ENGINEER CHUONG NGUYEN No. C46770 Exp. 06/30/11 CIVIL STATE OF CALIFORNIA

THE STATE OF CALIFORNIA OR ITS OFFICERS OR AGENTS SHALL NOT BE RESPONSIBLE FOR THE ACCURACY OR COMPLETENESS OF SCANNED COPIES OF THIS PLAN SHEET.

RAJAPPAN & MEYER
CONSULTING ENGINEERS INC.
1038 LEIGH AVE, SUITE 100
SAN JOSE, CA 95126

SJCOG
555 E. WEBER AVE.
STOCKTON, CA 95202-2804

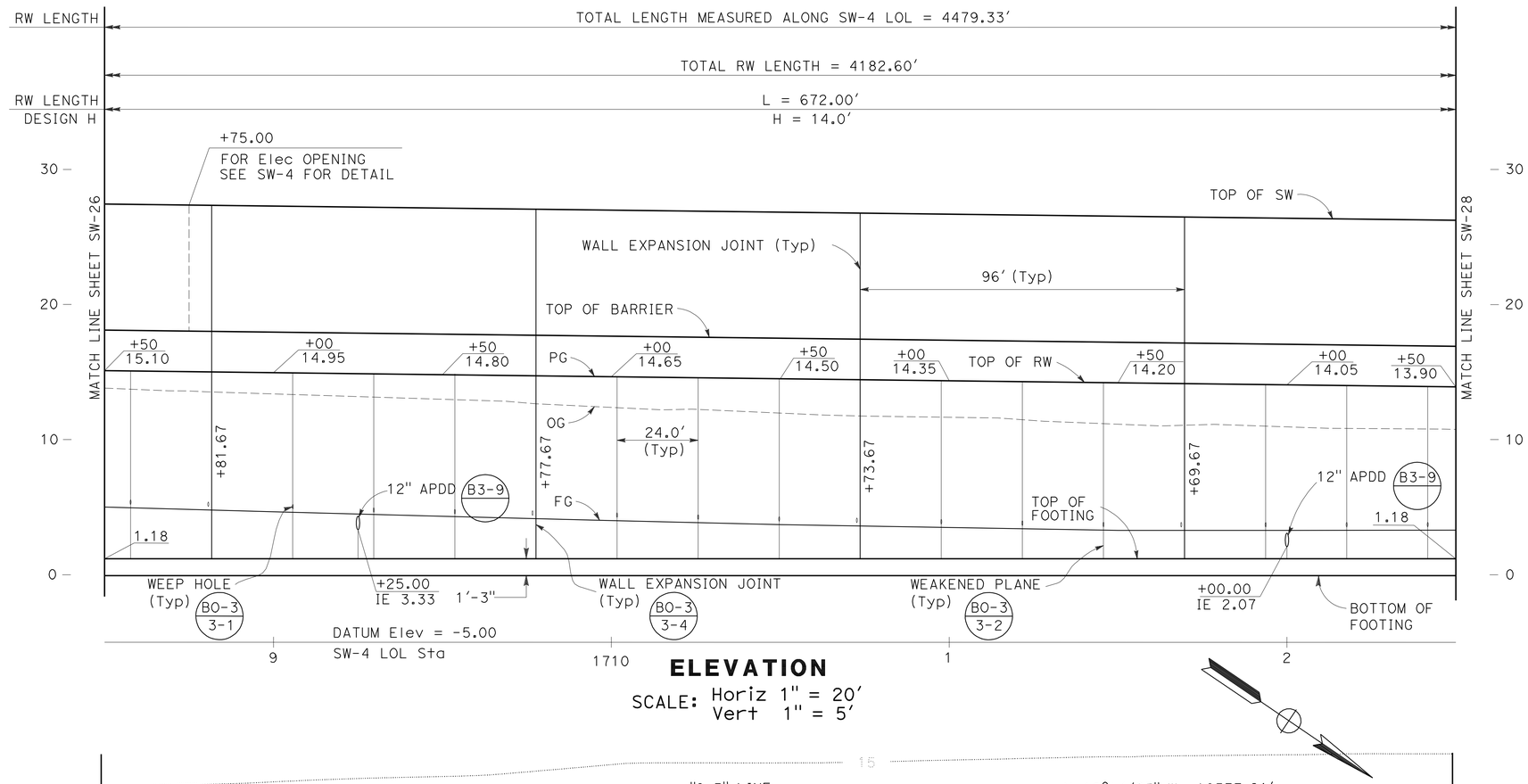

ELEVATION

SCALE: Horiz 1" = 20'
Vert 1" = 5'

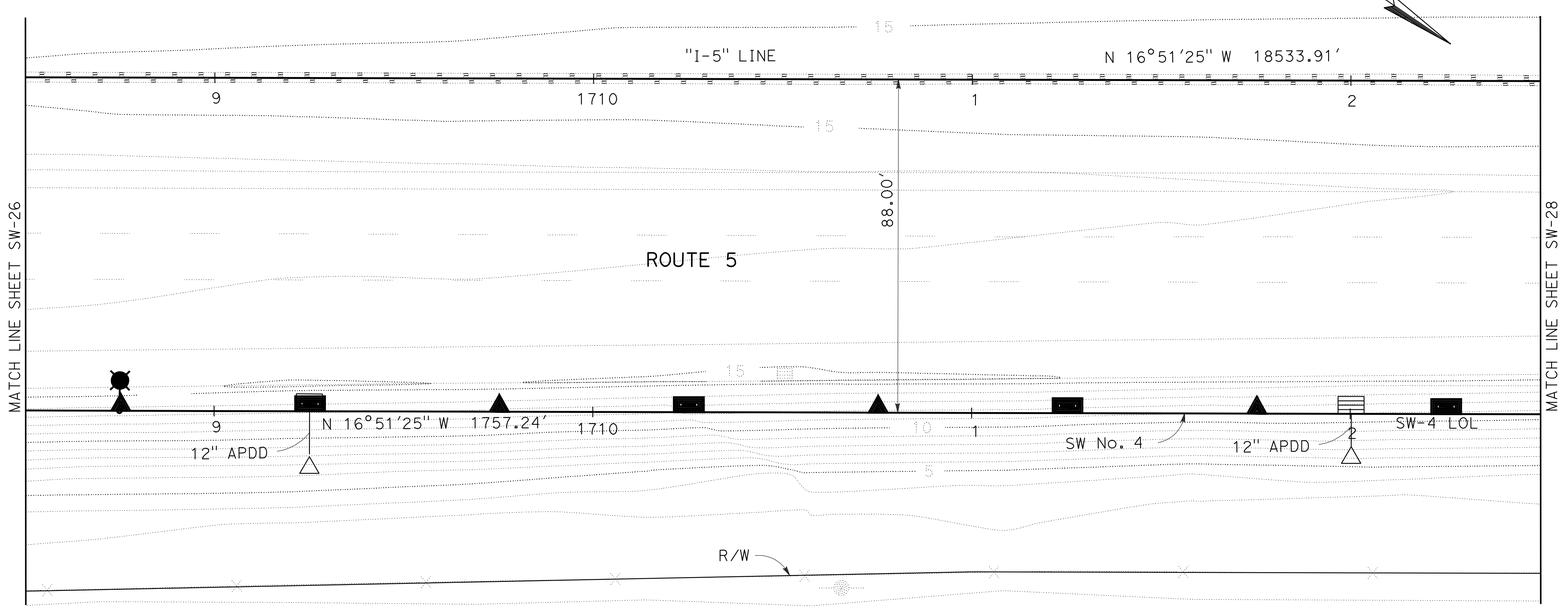

PLAN

SCALE: 1" = 20'

THIS PLAN ACCURATE FOR SOUND WALL WORK ONLY

SOUND WALL PLAN

SOUND WALL No.4

SCALE AS SHOWN

SW-27

STATE OF CALIFORNIA - DEPARTMENT OF TRANSPORTATION

Caltrans

CONSULTANT FUNCTIONAL SUPERVISOR: KEITH G. MEYER

CALCULATED-DESIGNED BY: SRILAKSHMI SAKHAMURI

CHECKED BY: CHUONG NGUYEN

REVISED BY

DATE REVISED

LAST REVISION 07-07-10

DATE PLOTTED => 12-OCT-2010
TIME PLOTTED => 11:26

Dist	COUNTY	ROUTE	POST MILES TOTAL PROJECT	SHEET No.	TOTAL SHEETS
10	SJ	5	25.0/32.7	527	1132

REGISTERED CIVIL ENGINEER 04/21/10 DATE

10-11-10
PLANS APPROVAL DATE

REGISTERED PROFESSIONAL ENGINEER CHUONG NGUYEN No. C46770 Exp. 06/30/11 CIVIL STATE OF CALIFORNIA

THE STATE OF CALIFORNIA OR ITS OFFICERS OR AGENTS SHALL NOT BE RESPONSIBLE FOR THE ACCURACY OR COMPLETENESS OF SCANNED COPIES OF THIS PLAN SHEET.

RAJAPPAN & MEYER
CONSULTING ENGINEERS INC.
1038 LEIGH AVE, SUITE 100
SAN JOSE, CA 95126

SJCOG
555 E. WEBER AVE.
STOCKTON, CA 95202-2804

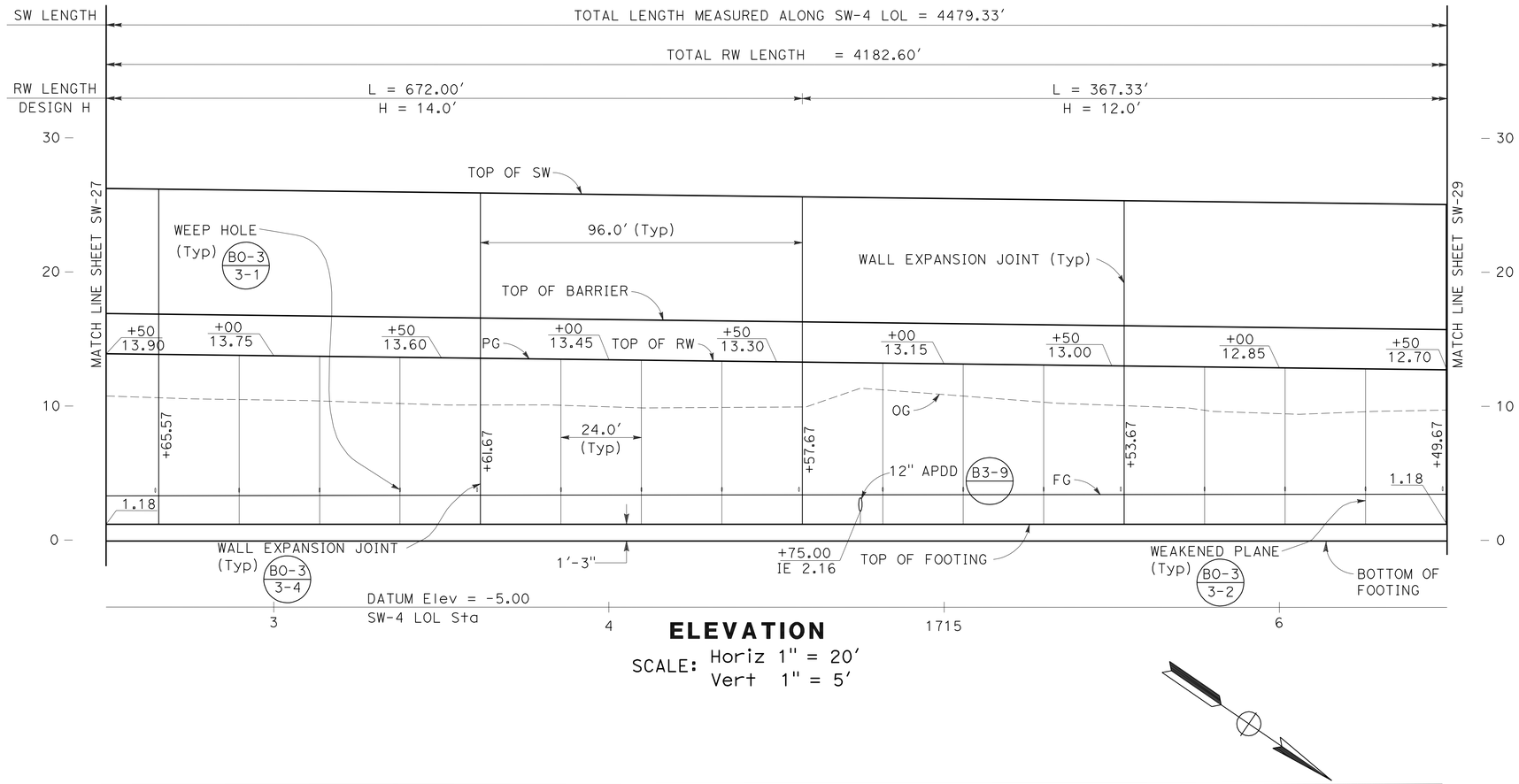

ELEVATION

SCALE: Horiz 1" = 20'
Vert 1" = 5'

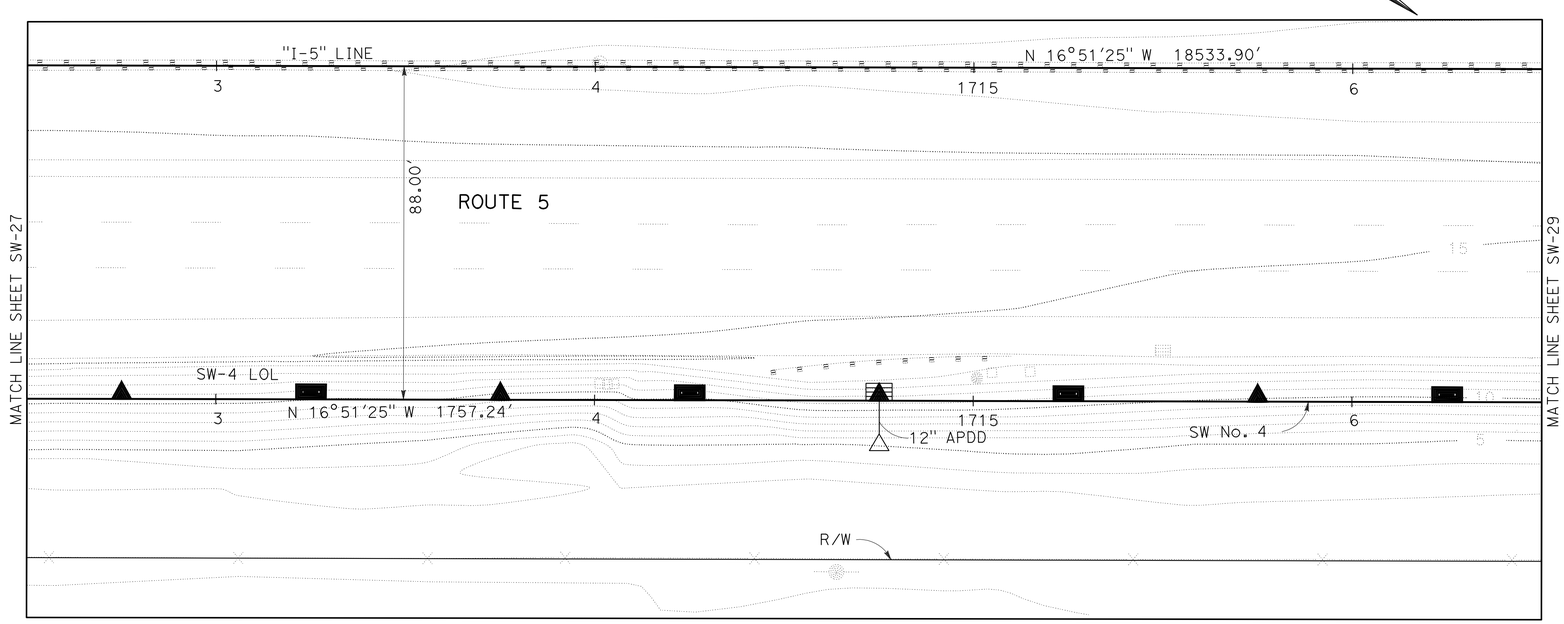

PLAN

SCALE: 1" = 20'

THIS PLAN ACCURATE FOR SOUND WALL WORK ONLY

SOUND WALL PLAN

SOUND WALL No.4

SCALE AS SHOWN

SW-28

STATE OF CALIFORNIA - DEPARTMENT OF TRANSPORTATION
Caltrans

CONSULTANT FUNCTIONAL SUPERVISOR: KEITH G. MEYER

CALCULATED-DESIGNED BY: CHUONG NGUYEN
CHECKED BY

REVISED BY: SRILAKSHMI SAKHAMURI
DATE REVISED

LAST REVISION 07-07-10
DATE PLOTTED => 12-OCT-2010
TIME PLOTTED => 11:26

Dist	COUNTY	ROUTE	POST MILES TOTAL PROJECT	SHEET No.	TOTAL SHEETS
10	SJ	5	25.0/32.7	528	1132

REGISTERED CIVIL ENGINEER 04/21/10 DATE

10-11-10
PLANS APPROVAL DATE

REGISTERED PROFESSIONAL ENGINEER CHUONG NGUYEN No. C46770 Exp. 06/30/11 CIVIL STATE OF CALIFORNIA

THE STATE OF CALIFORNIA OR ITS OFFICERS OR AGENTS SHALL NOT BE RESPONSIBLE FOR THE ACCURACY OR COMPLETENESS OF SCANNED COPIES OF THIS PLAN SHEET.

RAJAPPAN & MEYER
CONSULTING ENGINEERS INC.
1038 LEIGH AVE, SUITE 100
SAN JOSE, CA 95126

SJCOG
555 E. WEBER AVE.
STOCKTON, CA 95202-2804

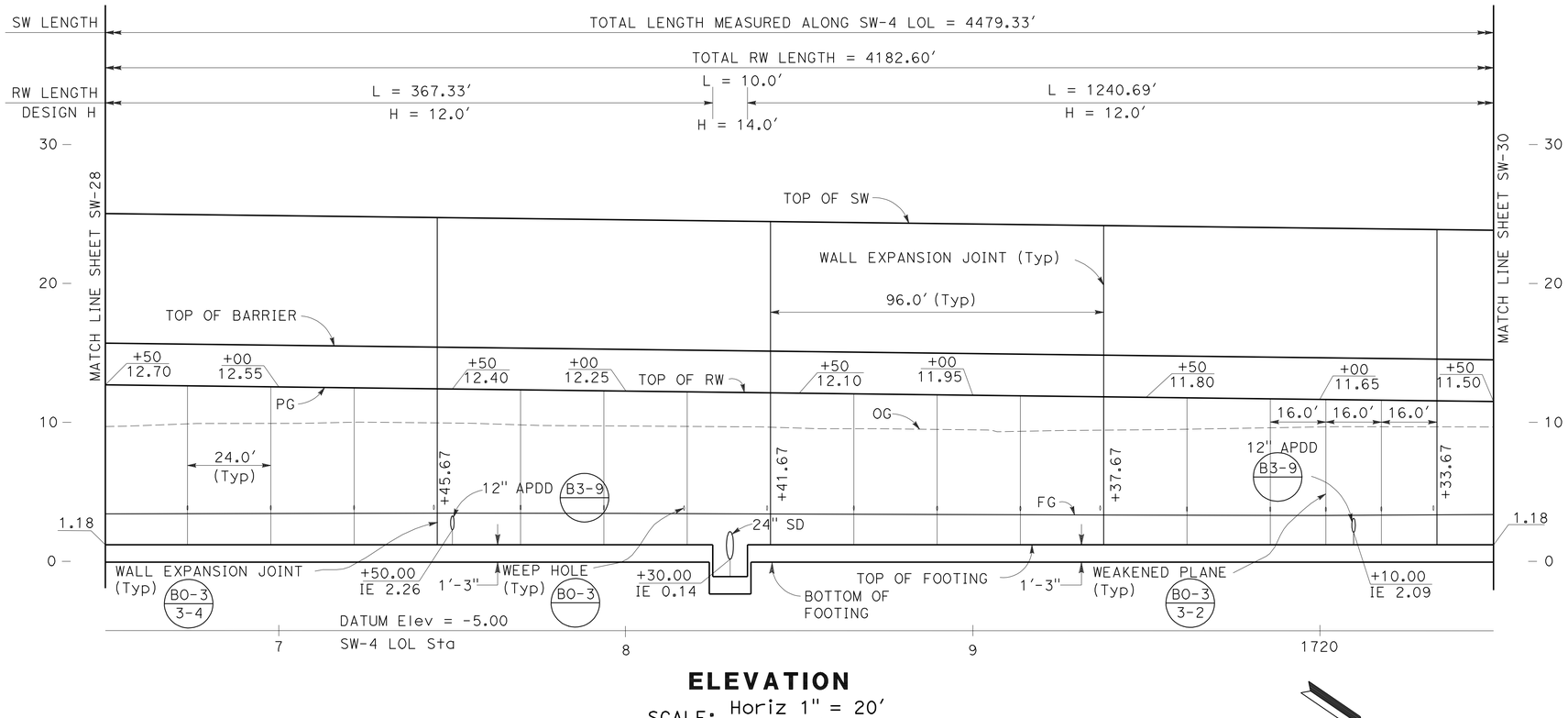

ELEVATION

SCALE: Horiz 1" = 20'
Vert 1" = 5'

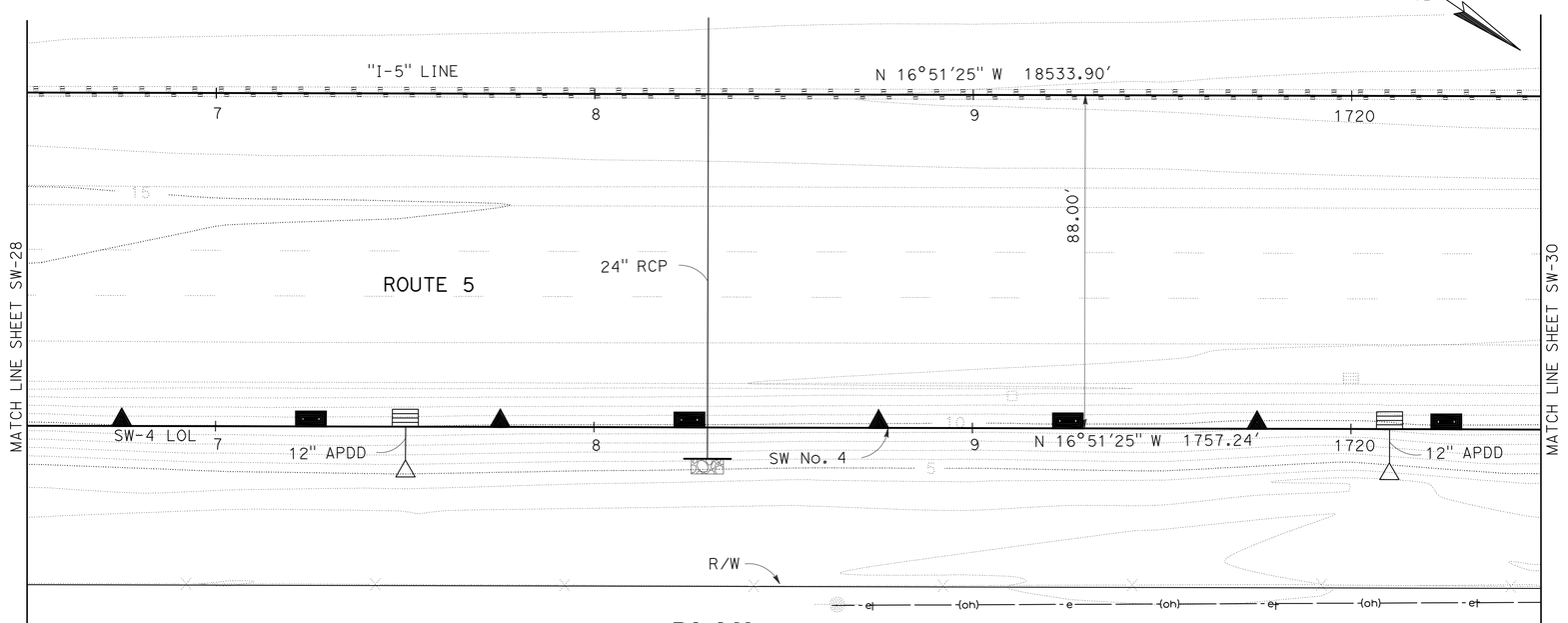

PLAN

SCALE: 1" = 20'

THIS PLAN ACCURATE FOR SOUND WALL WORK ONLY

SOUND WALL PLAN

SOUND WALL No.4

SCALE AS SHOWN

SW-29

STATE OF CALIFORNIA - DEPARTMENT OF TRANSPORTATION

Caltrans

CONSULTANT FUNCTIONAL SUPERVISOR: KEITH G. MEYER

CALCULATED-DESIGNED BY: SRILAKSHMI SAKHAMURI

CHECKED BY: CHUONG NGUYEN

REVISED BY / DATE REVISED

LAST REVISION 07-07-10 | DATE PLOTTED => 12-OCT-2010 | TIME PLOTTED => 11:26

Dist	COUNTY	ROUTE	POST MILES TOTAL PROJECT	SHEET No.	TOTAL SHEETS
10	SJ	5	25.0/32.7	529	1132

REGISTERED CIVIL ENGINEER 04/21/10 DATE

10-11-10
PLANS APPROVAL DATE

REGISTERED PROFESSIONAL ENGINEER CHUONG NGUYEN No. C46770 Exp. 06/30/11 CIVIL STATE OF CALIFORNIA

THE STATE OF CALIFORNIA OR ITS OFFICERS OR AGENTS SHALL NOT BE RESPONSIBLE FOR THE ACCURACY OR COMPLETENESS OF SCANNED COPIES OF THIS PLAN SHEET.

RAJAPPAN & MEYER
CONSULTING ENGINEERS INC.
1038 LEIGH AVE, SUITE 100
SAN JOSE, CA 95126

SJCOG
555 E. WEBER AVE.
STOCKTON, CA 95202-2804

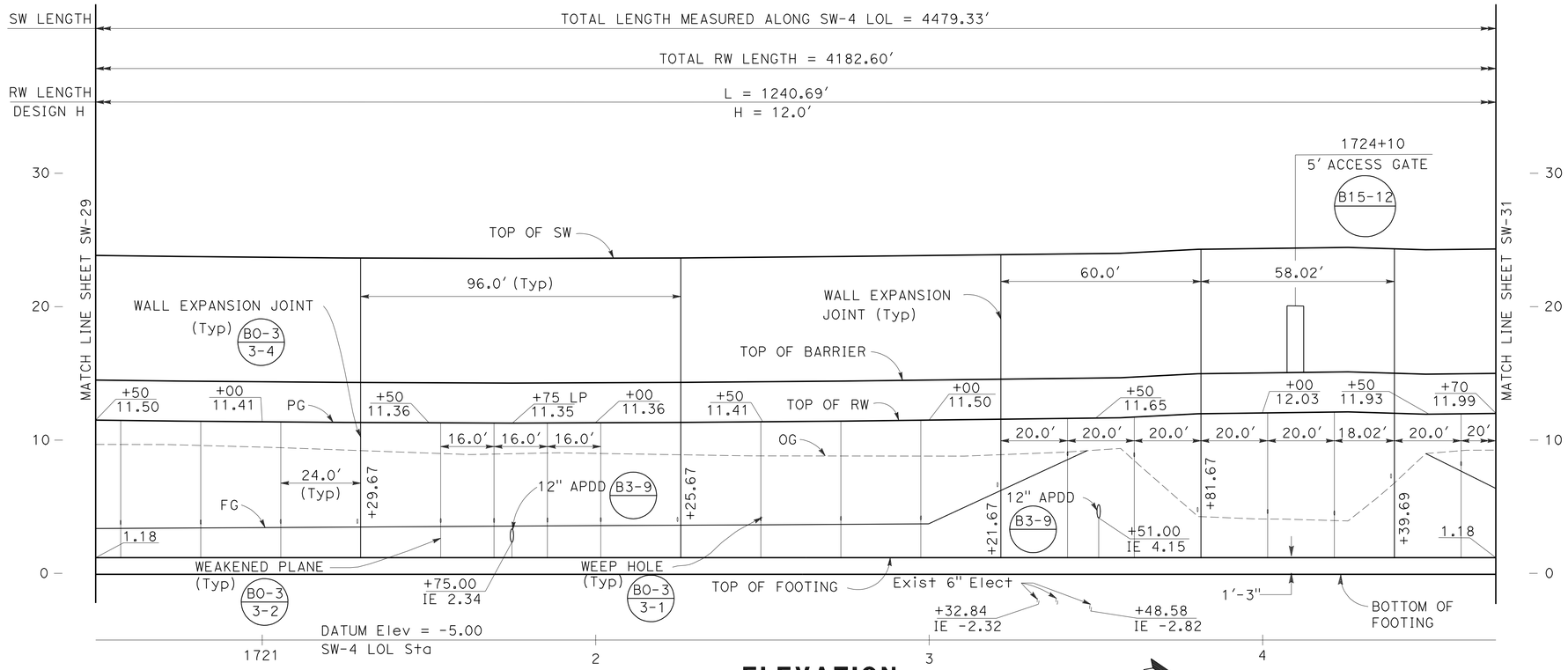

ELEVATION

SCALE: Horiz 1" = 20'
Vert 1" = 5'

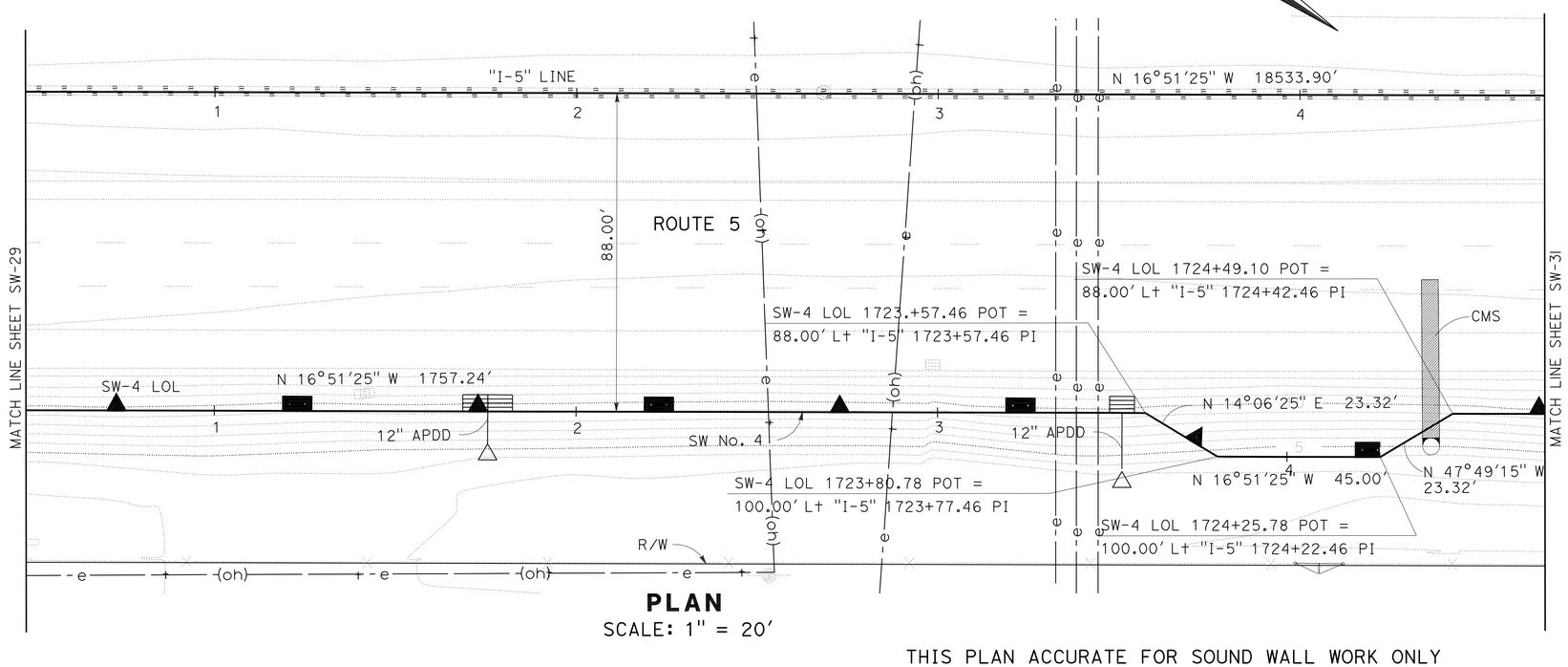

PLAN

SCALE: 1" = 20'

THIS PLAN ACCURATE FOR SOUND WALL WORK ONLY

SOUND WALL PLAN

SOUND WALL No.4

SCALE AS SHOWN

SW-30

STATE OF CALIFORNIA - DEPARTMENT OF TRANSPORTATION
Caltrans

CONSULTANT FUNCTIONAL SUPERVISOR: KEITH G. MEYER

CALCULATED-DESIGNED BY: SRILAKSHMI SAKHAMURI
CHECKED BY: CHUONG NGUYEN

REVISED BY
DATE REVISED

LAST REVISION 08-10-10
DATE PLOTTED => 12-OCT-2010
TIME PLOTTED => 12:39

Dist	COUNTY	ROUTE	POST MILES TOTAL PROJECT	SHEET No.	TOTAL SHEETS
10	SJ	5	25.0/32.7	530	1132

REGISTERED CIVIL ENGINEER 04/21/10 DATE

10-11-10
PLANS APPROVAL DATE

REGISTERED PROFESSIONAL ENGINEER CHUONG NGUYEN No. C46770 Exp. 06/30/11 CIVIL STATE OF CALIFORNIA

THE STATE OF CALIFORNIA OR ITS OFFICERS OR AGENTS SHALL NOT BE RESPONSIBLE FOR THE ACCURACY OR COMPLETENESS OF SCANNED COPIES OF THIS PLAN SHEET.

RAJAPPAN & MEYER
CONSULTING ENGINEERS INC.
1038 LEIGH AVE, SUITE 100
SAN JOSE, CA 95126

SJCOG
555 E. WEBER AVE.
STOCKTON, CA 95202-2804

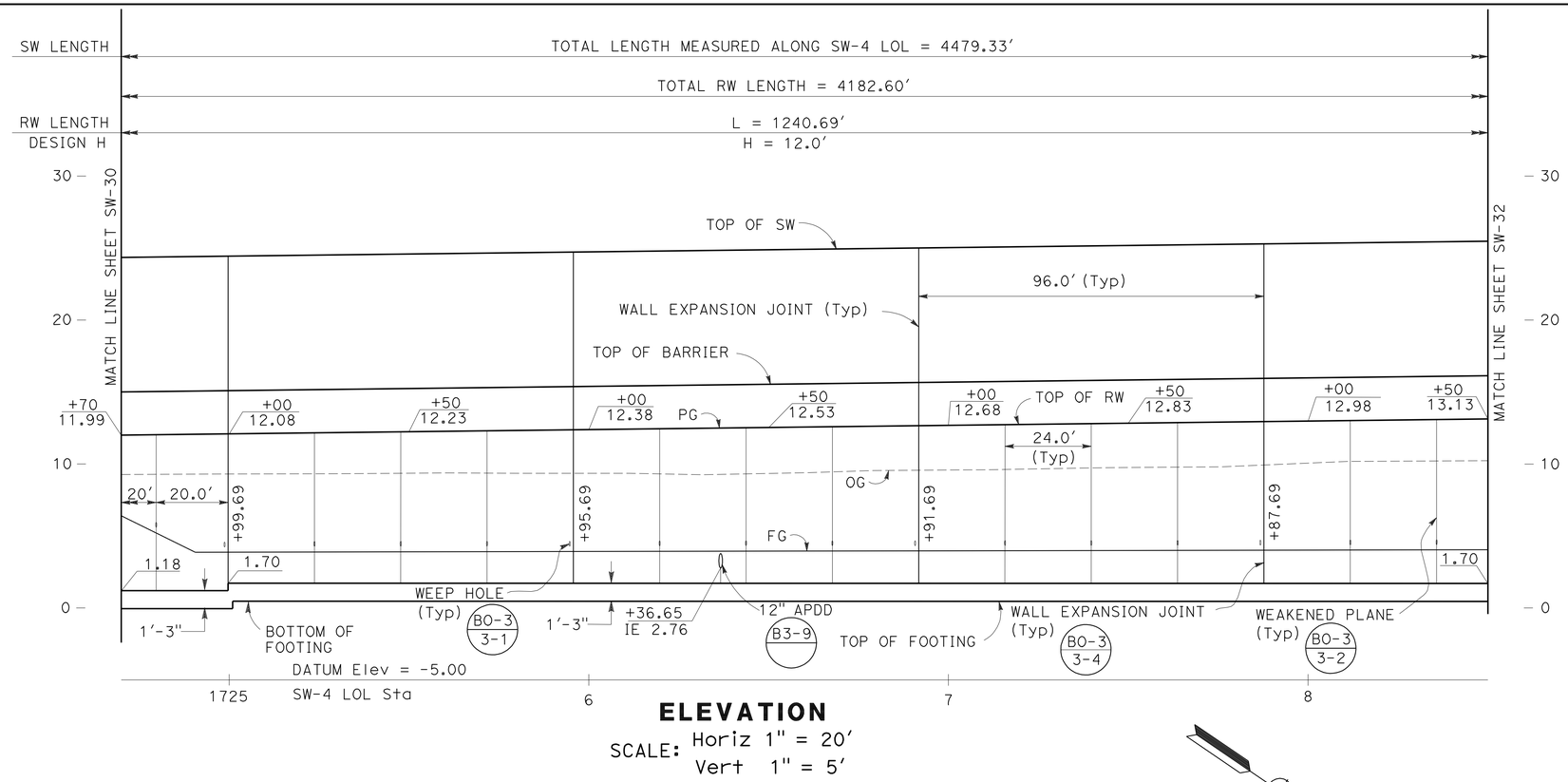

ELEVATION

SCALE: Horiz 1" = 20'
Vert 1" = 5'

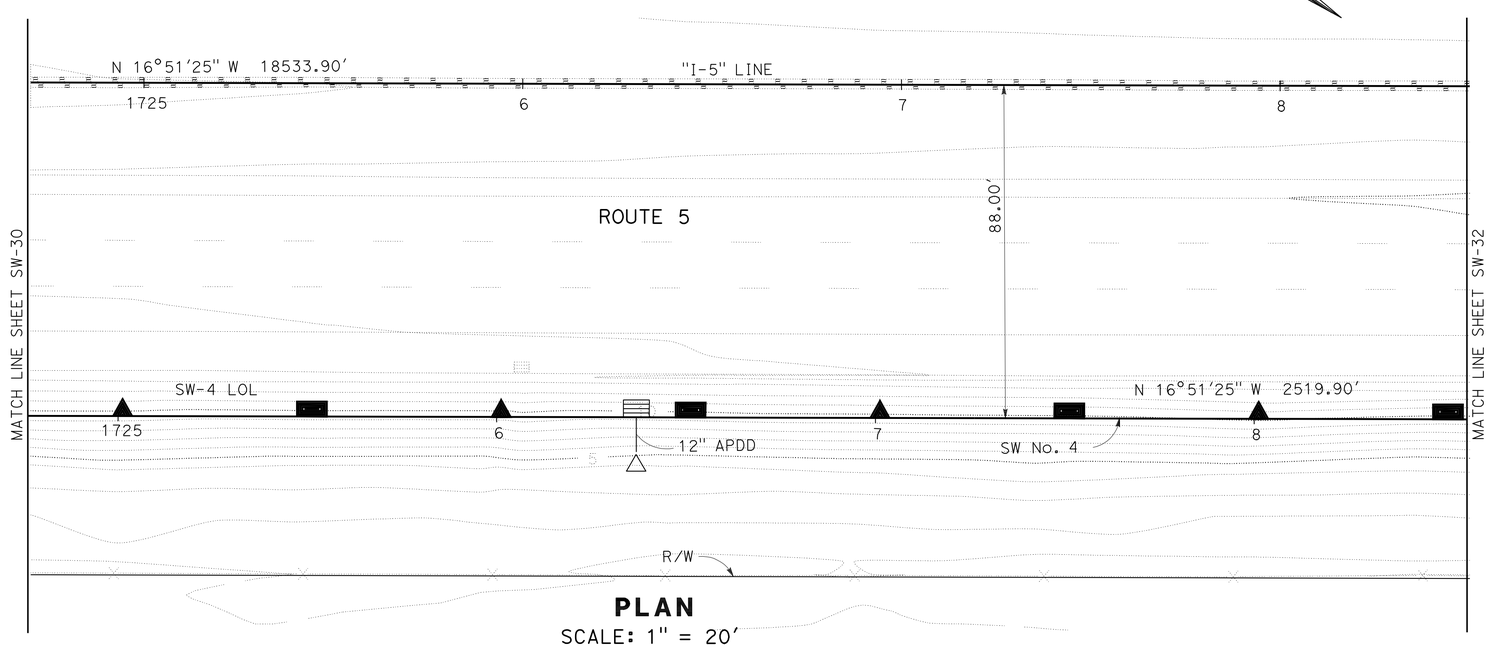

PLAN

SCALE: 1" = 20'

THIS PLAN ACCURATE FOR SOUND WALL WORK ONLY

SOUND WALL PLAN

SOUND WALL No.4

SCALE AS SHOWN

SW-31

STATE OF CALIFORNIA - DEPARTMENT OF TRANSPORTATION
Caltrans

CONSULTANT FUNCTIONAL SUPERVISOR: KEITH G. MEYER

CALCULATED-DESIGNED BY: SRILAKSHMI SAKHAMURI
CHECKED BY: CHUONG NGUYEN

REVISED BY
DATE REVISED

LAST REVISION 07-07-10
DATE PLOTTED => 12-OCT-2010
TIME PLOTTED => 12:39

Dist	COUNTY	ROUTE	POST MILES TOTAL PROJECT	SHEET No.	TOTAL SHEETS
10	SJ	5	25.0/32.7	531	1132

REGISTERED CIVIL ENGINEER 04/21/10 DATE

10-11-10
PLANS APPROVAL DATE

REGISTERED PROFESSIONAL ENGINEER CHUONG NGUYEN No. C46770 Exp. 06/30/11 CIVIL STATE OF CALIFORNIA

THE STATE OF CALIFORNIA OR ITS OFFICERS OR AGENTS SHALL NOT BE RESPONSIBLE FOR THE ACCURACY OR COMPLETENESS OF SCANNED COPIES OF THIS PLAN SHEET.

RAJAPPAN & MEYER
CONSULTING ENGINEERS INC.
1038 LEIGH AVE, SUITE 100
SAN JOSE, CA 95126

SJCOG
555 E. WEBER AVE.
STOCKTON, CA 95202-2804

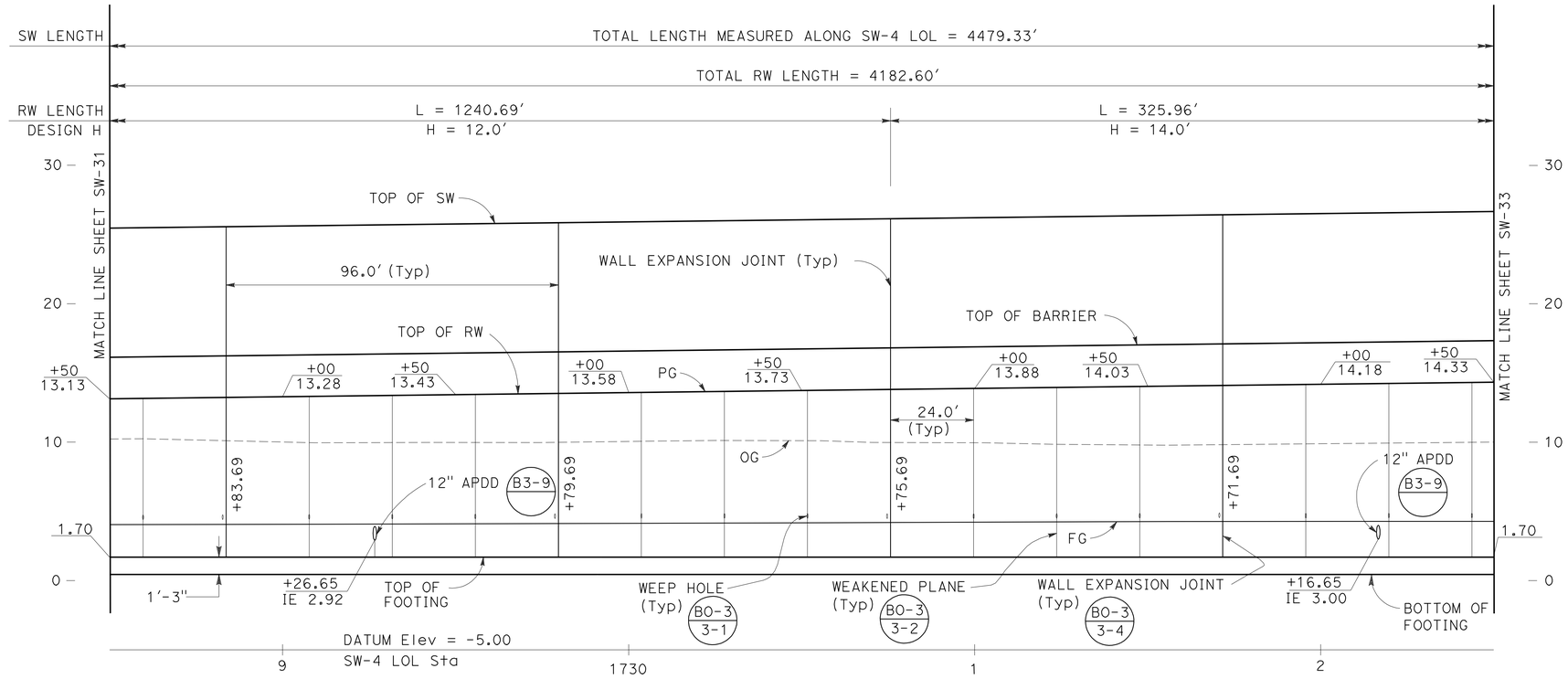

ELEVATION

SCALE: Horiz 1" = 20'
Vert 1" = 5'

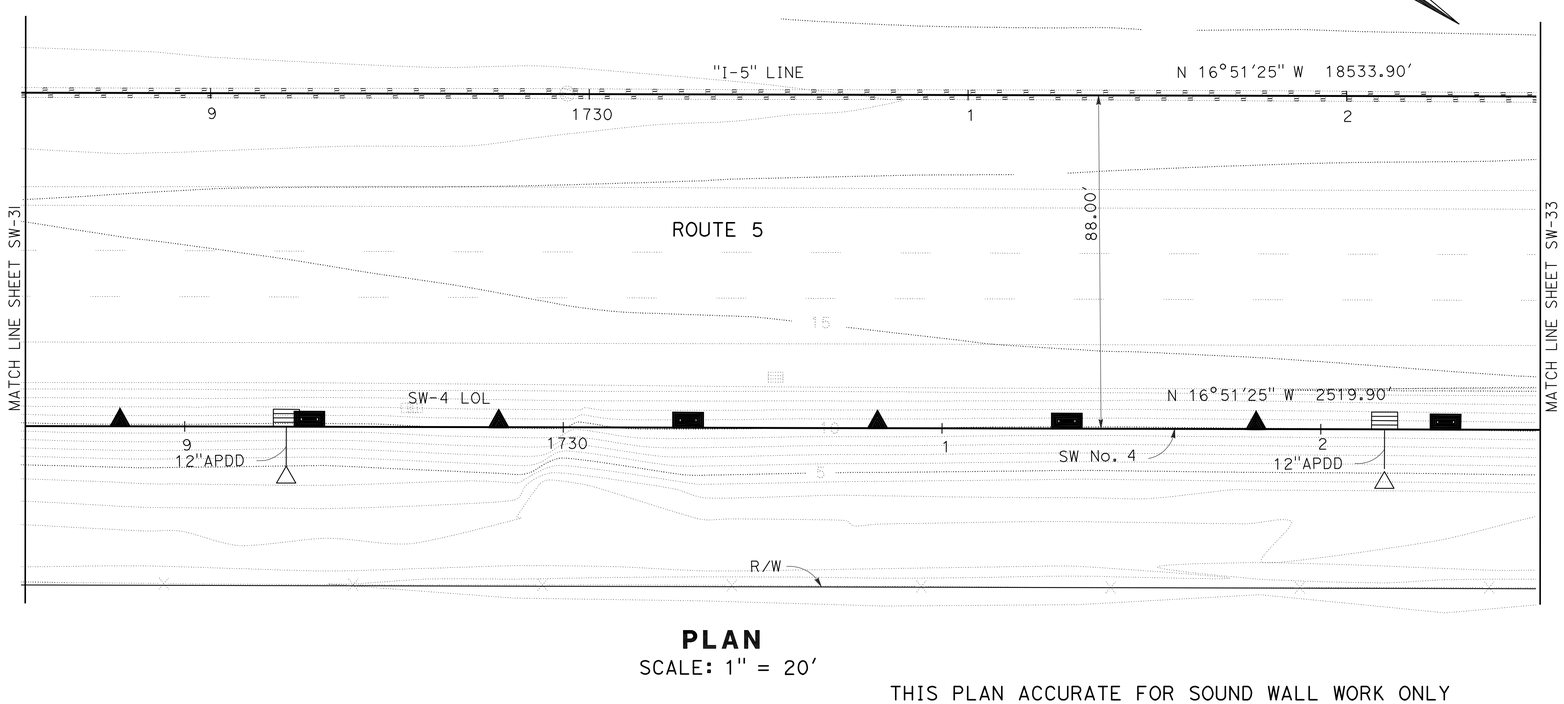

PLAN

SCALE: 1" = 20'

THIS PLAN ACCURATE FOR SOUND WALL WORK ONLY

SOUND WALL PLAN

SOUND WALL No.4

SCALE AS SHOWN

SW-32

STATE OF CALIFORNIA - DEPARTMENT OF TRANSPORTATION

Caltrans

CONSULTANT FUNCTIONAL SUPERVISOR: KEITH G. MEYER

CALCULATED-DESIGNED BY: SRILAKSHMI SAKHAMURI

CHECKED BY: CHUONG NGUYEN

REVISED BY

DATE REVISED

LAST REVISION 07-07-10

DATE PLOTTED => 12-OCT-2010
TIME PLOTTED => 11:26

Dist	COUNTY	ROUTE	POST MILES TOTAL PROJECT	SHEET No.	TOTAL SHEETS
10	SJ	5	25.0/32.7	532	1132

REGISTERED CIVIL ENGINEER 04/21/10 DATE

10-11-10
PLANS APPROVAL DATE

REGISTERED PROFESSIONAL ENGINEER CHUONG NGUYEN No. C46770 Exp. 06/30/11 CIVIL STATE OF CALIFORNIA

THE STATE OF CALIFORNIA OR ITS OFFICERS OR AGENTS SHALL NOT BE RESPONSIBLE FOR THE ACCURACY OR COMPLETENESS OF SCANNED COPIES OF THIS PLAN SHEET.

RAJAPPAN & MEYER
CONSULTING ENGINEERS INC.
1038 LEIGH AVE, SUITE 100
SAN JOSE, CA 95126

SJCOG
555 E. WEBER AVE.
STOCKTON, CA 95202-2804

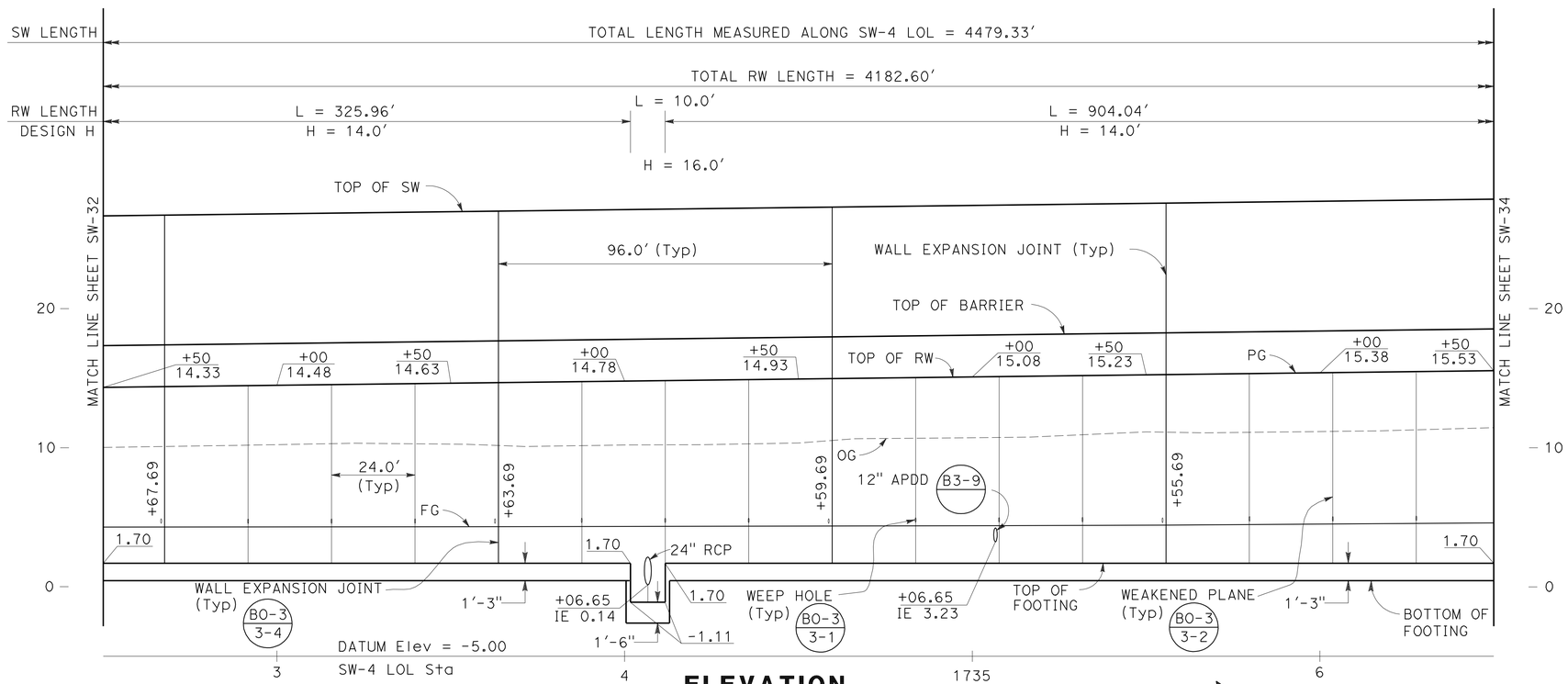

ELEVATION

SCALE: Horiz 1" = 20'
Vert 1" = 5'

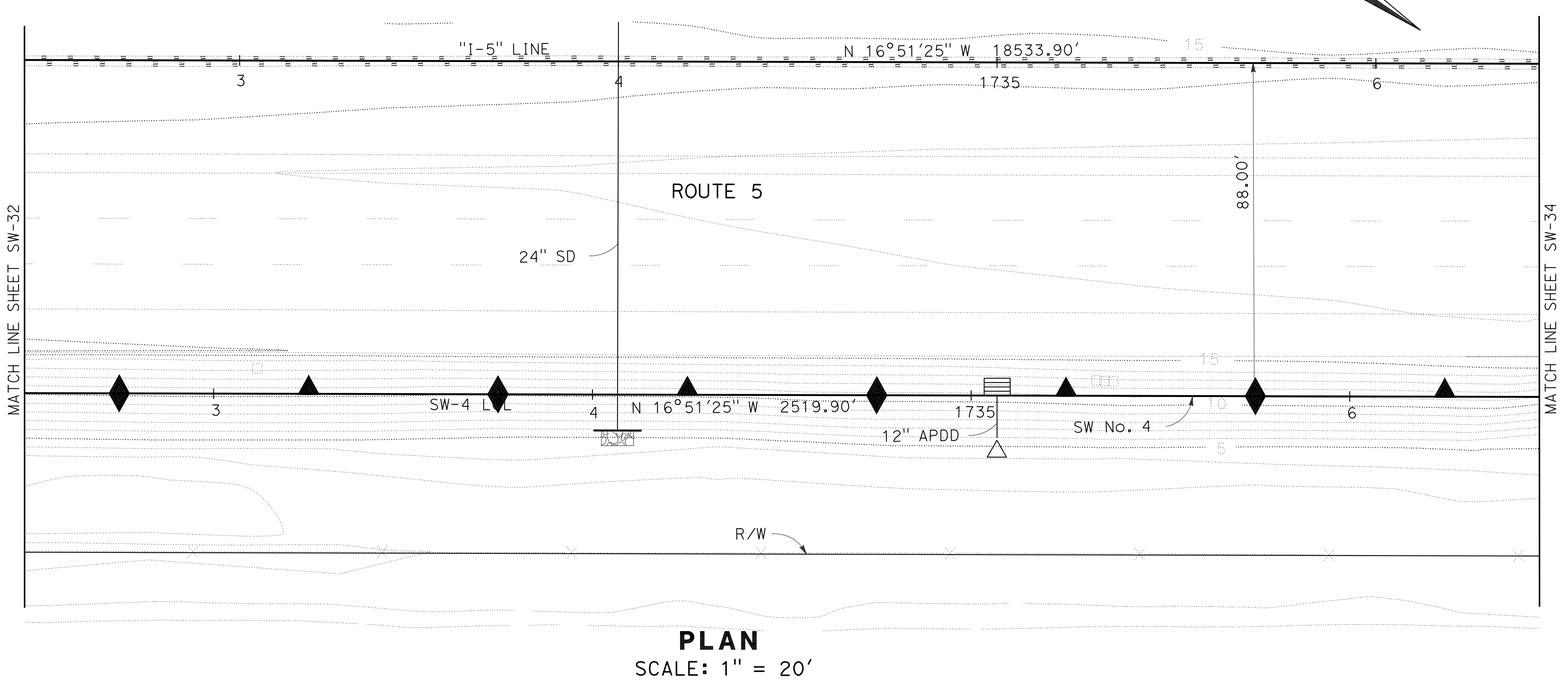

PLAN

SCALE: 1" = 20'

THIS PLAN ACCURATE FOR SOUND WALL WORK ONLY

SOUND WALL PLAN

SOUND WALL No.4

SCALE AS SHOWN

SW-33

STATE OF CALIFORNIA - DEPARTMENT OF TRANSPORTATION
Caltrans

CONSULTANT FUNCTIONAL SUPERVISOR: KEITH G. MEYER

CALCULATED-DESIGNED BY: SRILAKSHMI SAKHAMURI
CHECKED BY: CHUONG NGUYEN

REVISED BY
DATE REVISED

LAST REVISION DATE PLOTTED => 12-OCT-2010
TIME PLOTTED => 11:26
07-07-10

Dist	COUNTY	ROUTE	POST MILES TOTAL PROJECT	SHEET No.	TOTAL SHEETS
10	SJ	5	25.0/32.7	533	1132

REGISTERED CIVIL ENGINEER 04/21/10 DATE

10-11-10
PLANS APPROVAL DATE

REGISTERED PROFESSIONAL ENGINEER CHUONG NGUYEN No. C46770 Exp. 06/30/11 CIVIL STATE OF CALIFORNIA

THE STATE OF CALIFORNIA OR ITS OFFICERS OR AGENTS SHALL NOT BE RESPONSIBLE FOR THE ACCURACY OR COMPLETENESS OF SCANNED COPIES OF THIS PLAN SHEET.

RAJAPPAN & MEYER
CONSULTING ENGINEERS INC.
1038 LEIGH AVE, SUITE 100
SAN JOSE, CA 95126

SJCOG
555 E. WEBER AVE.
STOCKTON, CA 95202-2804

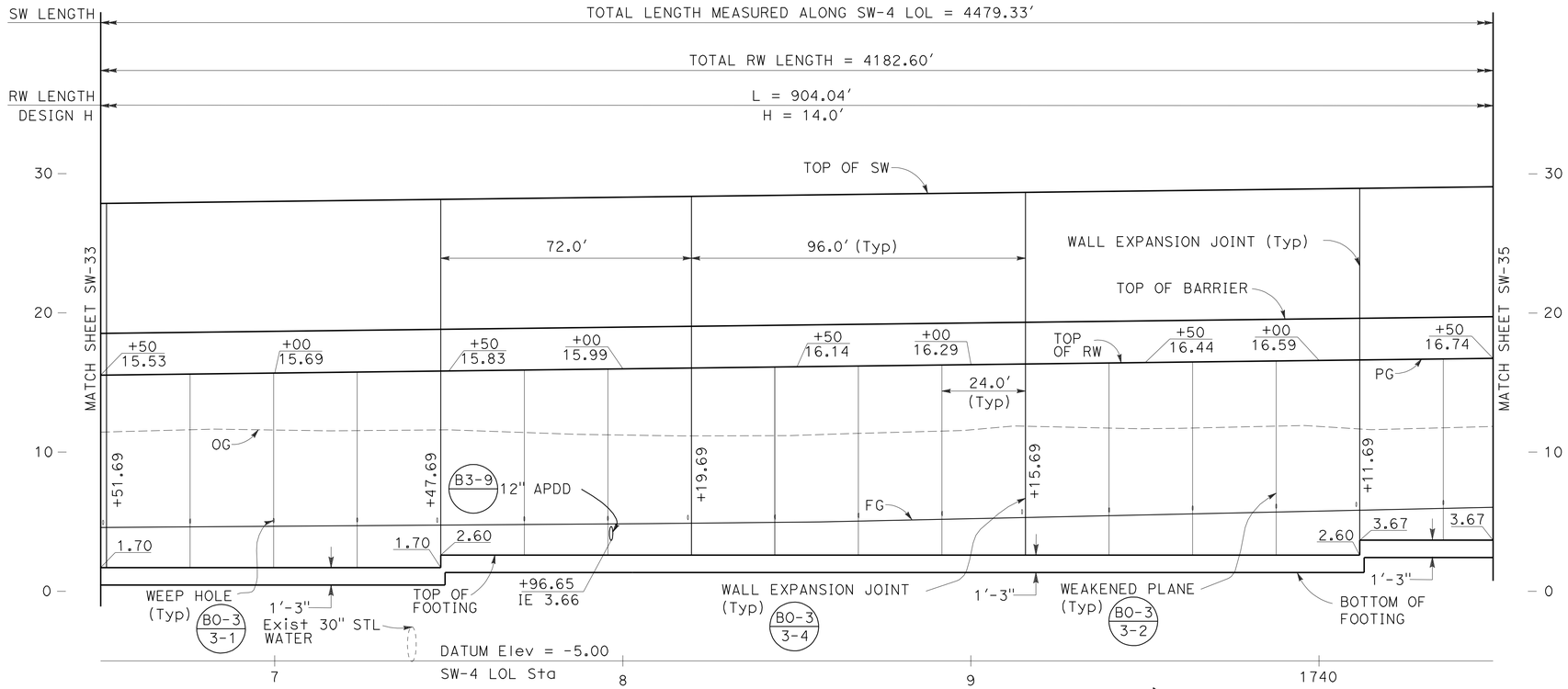

ELEVATION

SCALE: Horiz 1"=20'
Vert 1"=5'

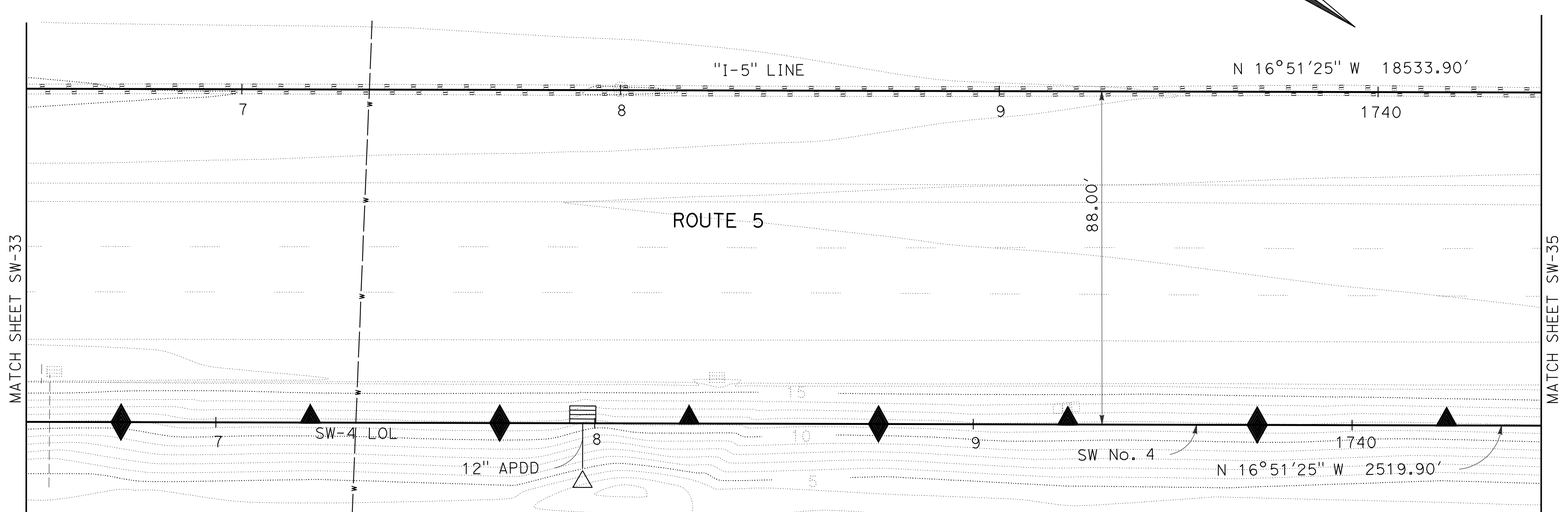

PLAN

SCALE: 1"=20'
THIS PLAN ACCURATE FOR SOUND WALL WORK ONLY

NOTE:

Exist 30" STL WATER COULD NOT BE LOCATED. CONTRACTOR TO VERIFY.

SOUND WALL PLAN
SOUND WALL No.4

SCALE AS SHOWN

SW-34

STATE OF CALIFORNIA - DEPARTMENT OF TRANSPORTATION
Caltrans

CONSULTANT FUNCTIONAL SUPERVISOR: KEITH G. MEYER
CALCULATED-DESIGNED BY: CHUONG NGUYEN
CHECKED BY
REVISED BY: SRILAKSHMI SAKHAMURI
DATE REVISED

LAST REVISION 07-07-10
DATE PLOTTED => 12-OCT-2010
TIME PLOTTED => 11:19

Dist	COUNTY	ROUTE	POST MILES TOTAL PROJECT	SHEET No.	TOTAL SHEETS
10	SJ	5	25.0/32.7	534	1132

REGISTERED CIVIL ENGINEER 04/21/10 DATE

10-11-10
PLANS APPROVAL DATE

REGISTERED PROFESSIONAL ENGINEER CHUONG NGUYEN No. C46770 Exp. 06/30/11 CIVIL STATE OF CALIFORNIA

THE STATE OF CALIFORNIA OR ITS OFFICERS OR AGENTS SHALL NOT BE RESPONSIBLE FOR THE ACCURACY OR COMPLETENESS OF SCANNED COPIES OF THIS PLAN SHEET.

RAJAPPAN & MEYER
CONSULTING ENGINEERS INC.
1038 LEIGH AVE, SUITE 100
SAN JOSE, CA 95126

SJCOG
555 E. WEBER AVE.
STOCKTON, CA 95202-2804

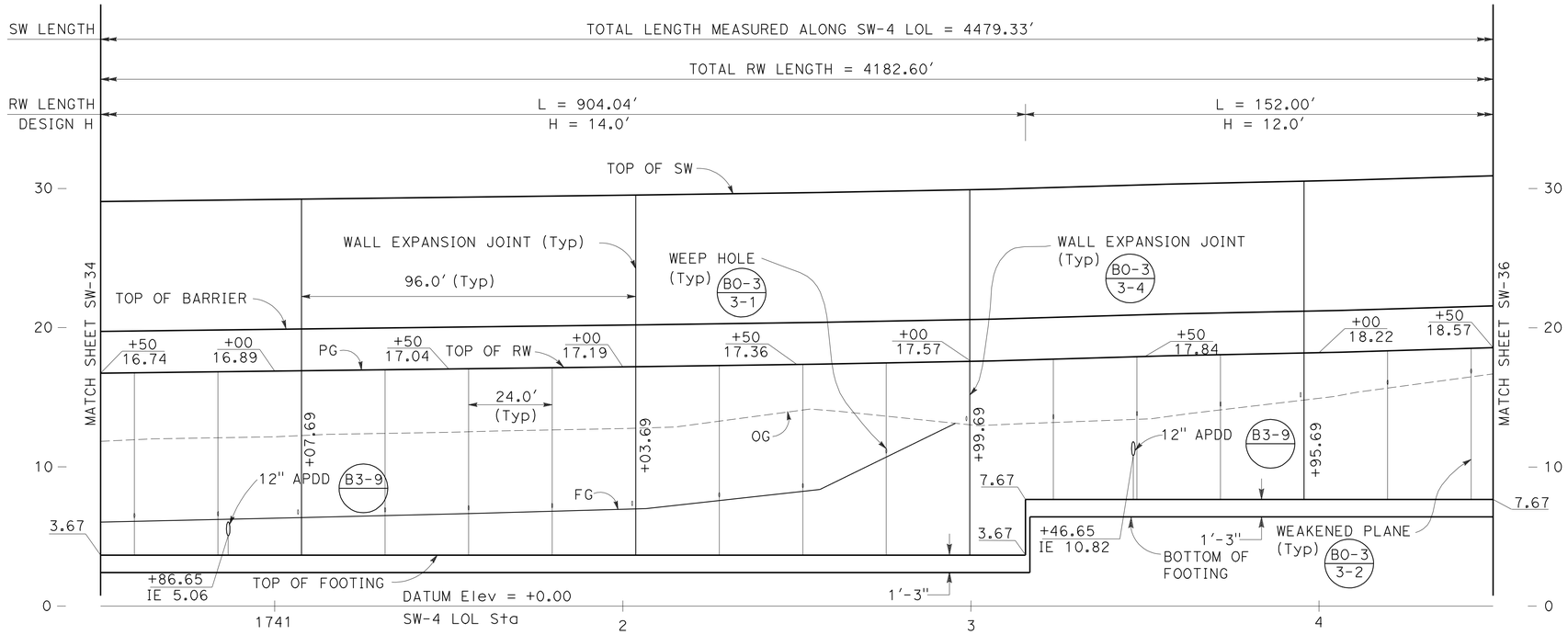

ELEVATION

SCALE: Horiz 1"=20'
Vert 1"=5'

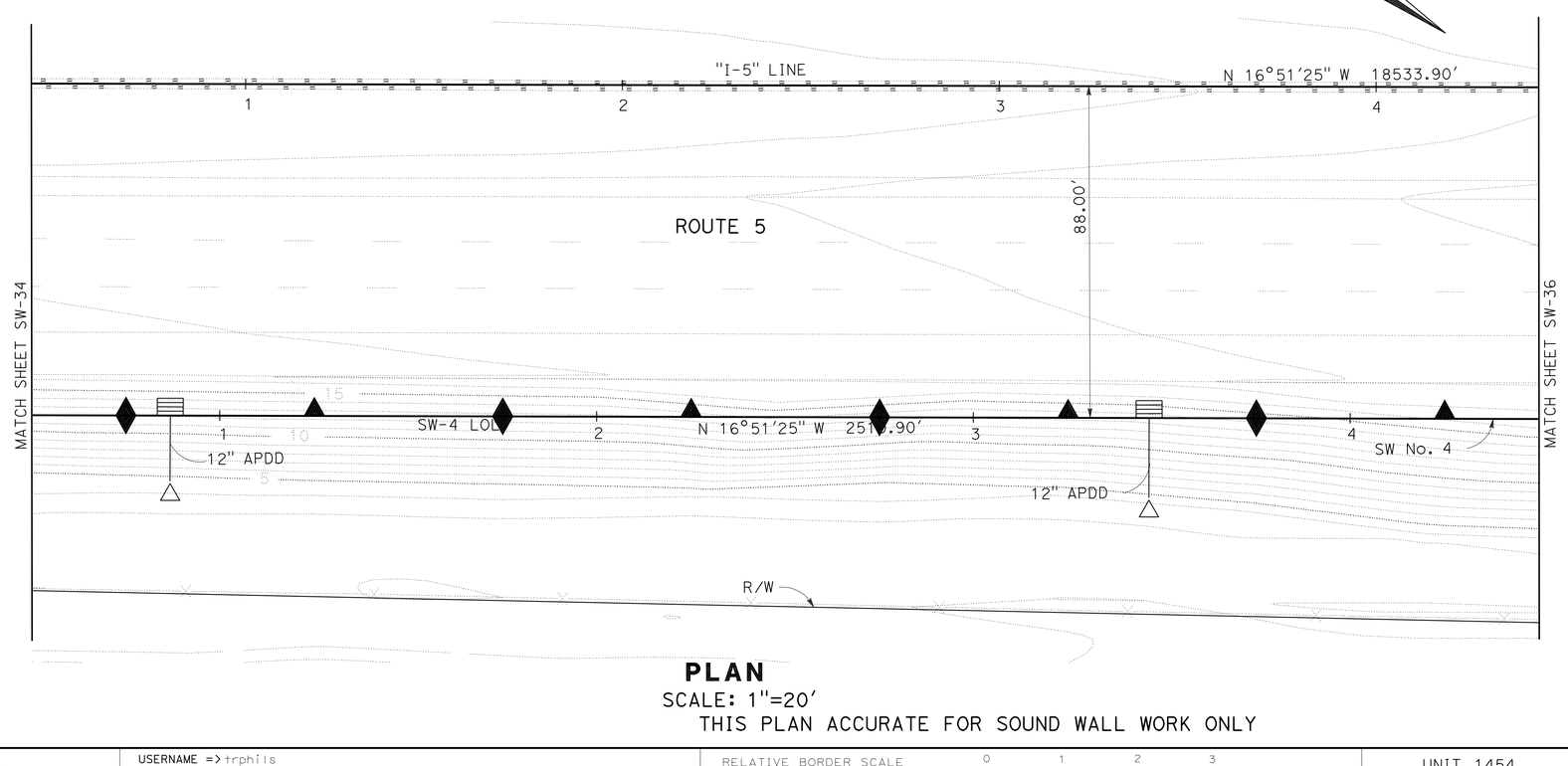

PLAN

SCALE: 1"=20'
THIS PLAN ACCURATE FOR SOUND WALL WORK ONLY

SOUND WALL PLAN

SOUND WALL No.4

SCALE AS SHOWN

SW-35

STATE OF CALIFORNIA - DEPARTMENT OF TRANSPORTATION
Caltrans

CONSULTANT FUNCTIONAL SUPERVISOR: KEITH G. MEYER
CALCULATED-DESIGNED BY: SRILAKSHMI SAKHAMURI
CHECKED BY: CHUONG NGUYEN
REVISED BY
DATE REVISED

LAST REVISION 07-07-10
DATE PLOTTED => 12-OCT-2010
TIME PLOTTED => 11:19

Dist	COUNTY	ROUTE	POST MILES TOTAL PROJECT	SHEET No.	TOTAL SHEETS
10	SJ	5	25.0/32.7	535	1132

REGISTERED CIVIL ENGINEER 04/21/10 DATE

10-11-10
PLANS APPROVAL DATE

REGISTERED PROFESSIONAL ENGINEER CHUONG NGUYEN No. C46770 Exp. 06/30/11 CIVIL STATE OF CALIFORNIA

THE STATE OF CALIFORNIA OR ITS OFFICERS OR AGENTS SHALL NOT BE RESPONSIBLE FOR THE ACCURACY OR COMPLETENESS OF SCANNED COPIES OF THIS PLAN SHEET.

RAJAPPAN & MEYER
CONSULTING ENGINEERS INC.
1038 LEIGH AVE, SUITE 100
SAN JOSE, CA 95126

SJCOG
555 E. WEBER AVE.
STOCKTON, CA 95202-2804

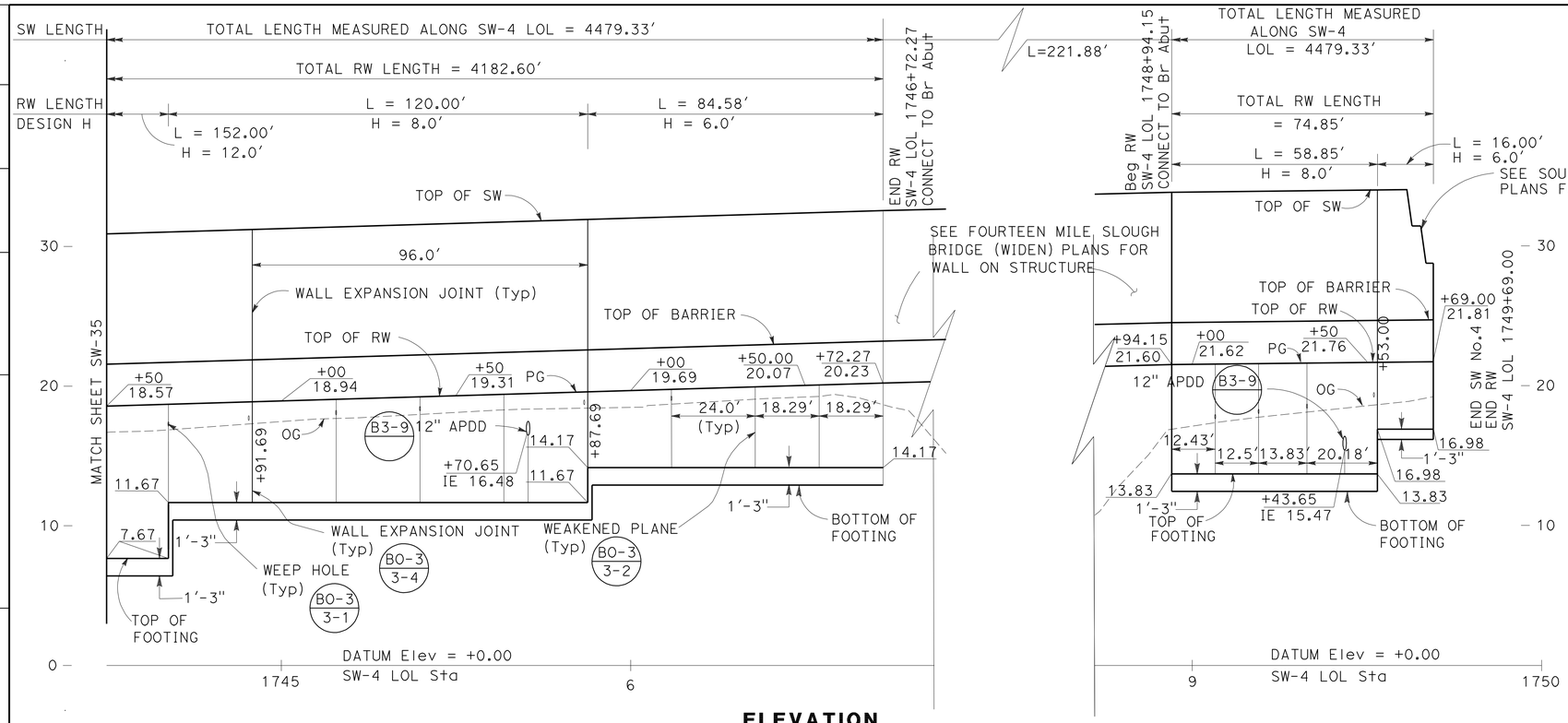

ELEVATION
Horiz 1"=20'
Vert 1"=5'

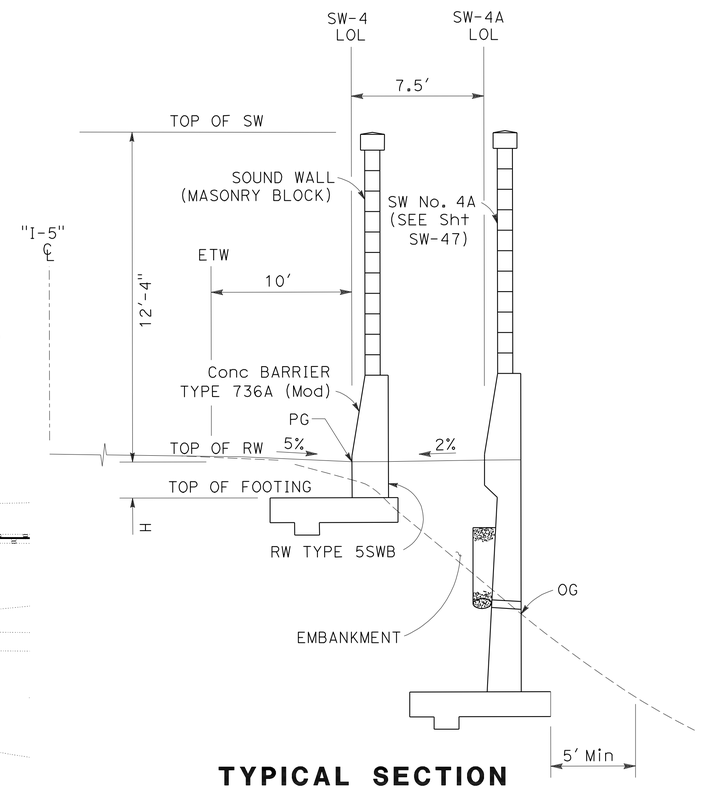

TYPICAL SECTION
SW-4 Sta 1749+33.00 TO Sta 1749+69.00
NO SCALE

NOTE:

FOR DETAILS OF RW TYPE 5SWB,
SEE RETAINING WALL DETAIL SHEET SW-117.

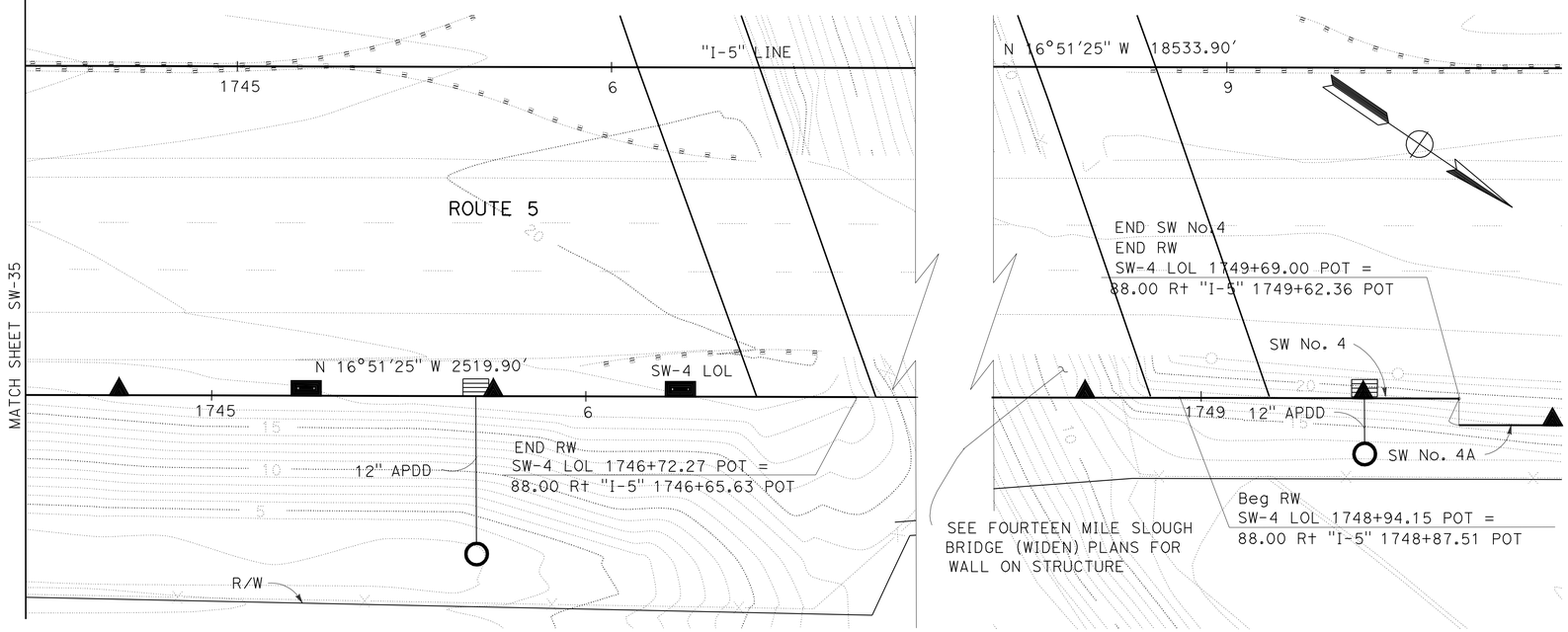

PLAN
SCALE: 1"=20'
THIS PLAN ACCURATE FOR SOUND WALL WORK ONLY

SOUND WALL PLAN
SOUND WALL No.4
SCALE AS SHOWN

SW-36

STATE OF CALIFORNIA - DEPARTMENT OF TRANSPORTATION
Caltrans
CONSULTANT FUNCTIONAL SUPERVISOR: KEITH G. MEYER
CALCULATED-DESIGNED BY: SRILAKSHMI SAKHAMURI
CHECKED BY: CHUONG NGUYEN
REVISED BY
DATE REVISED

LAST REVISION DATE PLOTTED => 12-OCT-2010
08-10-10 TIME PLOTTED => 11:19

Dist	COUNTY	ROUTE	POST MILES TOTAL PROJECT	SHEET No.	TOTAL SHEETS
10	SJ	5	25.0/32.7	536	1132

REGISTERED CIVIL ENGINEER 04/21/10 DATE

10-11-10
PLANS APPROVAL DATE

REGISTERED PROFESSIONAL ENGINEER CHRISTINA D.B.FRANKEL No. C-25730 Exp. 05/31/11 CIVIL STATE OF CALIFORNIA

THE STATE OF CALIFORNIA OR ITS OFFICERS OR AGENTS SHALL NOT BE RESPONSIBLE FOR THE ACCURACY OR COMPLETENESS OF SCANNED COPIES OF THIS PLAN SHEET.

DERIVI CONSTRUCTION & ARCHITECTURE, INC.
924 N. YOSEMITE STREET
STOCKTON, CA 95203

SJCOG
555 E. WEBER AVE.
STOCKTON, CA 95202-2804

BLOCK LEGEND:

Medium Wt / Light Wt — BLOCK A: 'CAP'
8(H)x10(D)*x16(L)
*PROJECT BLOCK 1" EA SIDE
SPLIT FACE BOTH FACES
DARK TAN WITH MEDIUM-SIZED BLACK, DARK BROWN & WHITE AGGREGATE

Medium Wt / Light Wt — BLOCK B: 'WATER'
8(H)x8(D)x16(L)
SPLIT FACE BOTH FACES
DARK TAN WITH MEDIUM-SIZED BLACK, DARK BROWN & WHITE AGGREGATE

Medium Wt — BLOCK C: 'FIELDS'
8(H)x8(D)x16(L)
SPLIT FACE BOTH FACES
3 SCORE ($\frac{3}{8}$") BOTH FACES
DARK TAN WITH MEDIUM-SIZED BLACK, DARK BROWN & WHITE AGGREGATE

Medium Wt — BLOCK D: 'LEVEE'
8(H)x10(D)*x16(L)
*PROJECT BLOCK 1" EA SIDE
PRECISION BLOCK
MEDIUM-LIGHT TAN WITH MEDIUM-SIZED BLACK, RED & WHITE AGGREGATE

Medium Wt / Light Wt — BLOCK G: 'LEVEE 2'
8(H)x8(D)x16(L)
PRECISION BLOCK
MEDIUM-LIGHT TAN WITH MEDIUM-SIZED BLACK, RED & WHITE AGGREGATE

Medium Wt / Light Wt — BLOCK F: 'CITY'
8(H)x8(D)x16(L)
SPLIT FACE BOTH FACES
LIGHT TAN WITH SMALL-SIZED WHITE, GREY & BLACK AGGREGATE

Medium Wt / Light Wt — BLOCK H: 'STREET'
8(H)x8(D)x16(L)
PRECISION BLOCK
1 SCORE ($\frac{3}{8}$") BOTH FACES
DARK GREY

GENERAL NOTES:

1. EACH SOUNDWALL ELEVATION IS ELEVATED INDEPENDENTLY. SEE SOUNDWALL GENERAL PLANS FOR MORE INFORMATION.
2. WHERE CUT BLOCKS ARE REQUIRED, CUT BLOCK SHALL BE NO SMALLER THAN ONE HALF OF A BLOCK, OTHERWISE CUT ADJACENT BLOCK AS WELL.
3. PLACE CORE HOLES (NOT SHOWN) FOR VINE PLANTINGS AT 16' ON CENTER.
4. THE CONTRACTOR SHALL SUBMIT COLOR SAMPLE OF BLOCK TO THE ENGINEER FOR APPROVAL.

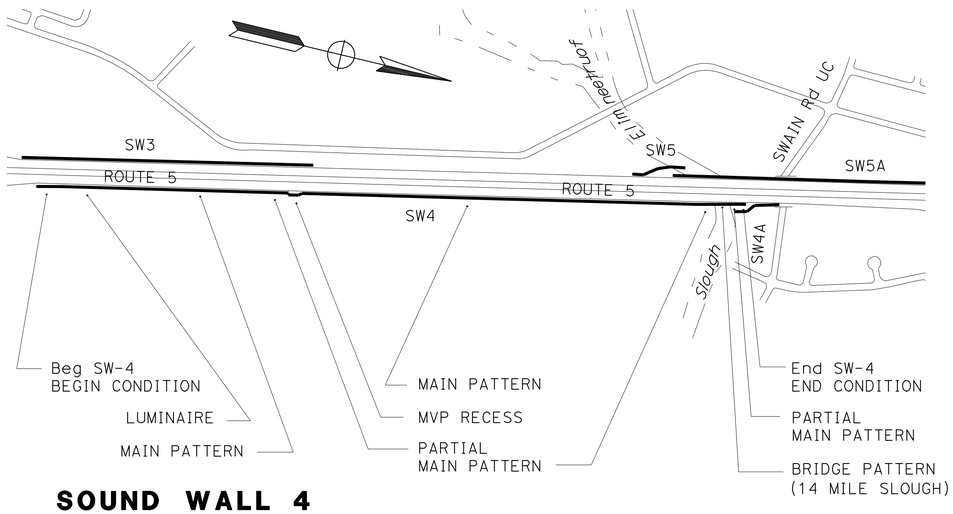

SOUND WALL 4
KEY PLAN

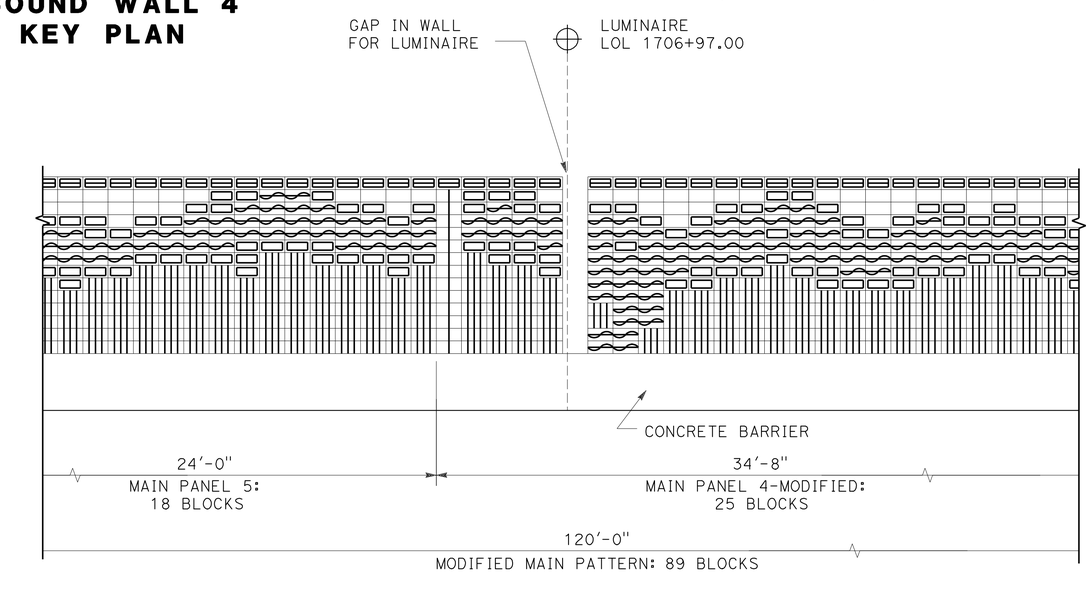

SOUND WALL 4
MODIFIED MAIN PATTERN AT LUMINAIRE

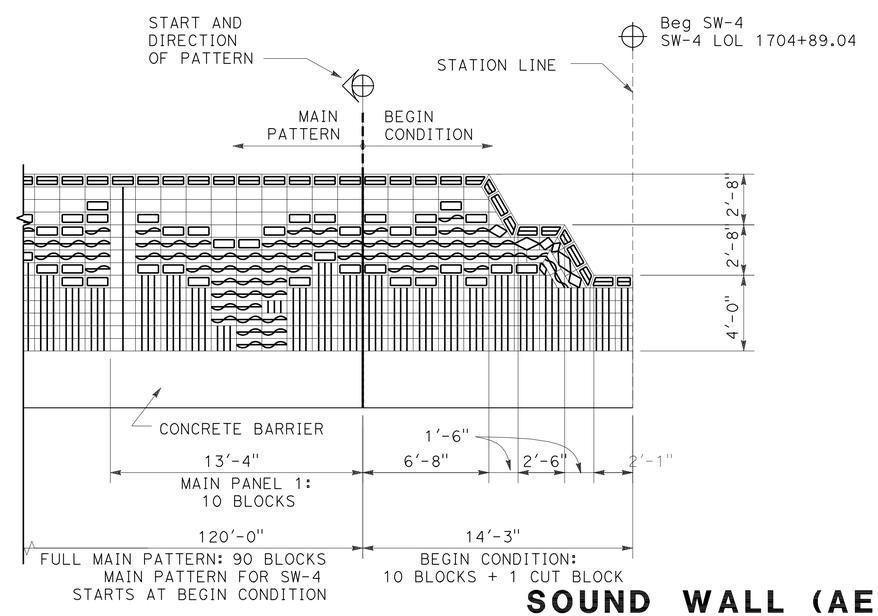

SOUND WALL 4
BEGIN CONDITION

SOUND WALL (AESTHETICS)

SOUND WALL No. 4

NO SCALE

SW-37

THIS PLAN ACCURATE FOR SOUND WALL AESTHETIC TREATMENTS ONLY

STATE OF CALIFORNIA - DEPARTMENT OF TRANSPORTATION
Caltrans
CONSULTANT FUNCTIONAL SUPERVISOR: LINDA M. DEVIVI
CALCULATED-DESIGNED BY: CHRISTINA D. B. FRANKEL
CHECKED BY: LINDA M. DEVIVI
REVISED BY
DATE REVISED

LAST REVISION DATE PLOTTED => 12-OCT-2010
07-07-10 TIME PLOTTED => 11:19

Dist	COUNTY	ROUTE	POST MILES TOTAL PROJECT	SHEET No.	TOTAL SHEETS
10	SJ	5	25.0/32.7	537	1132

REGISTERED CIVIL ENGINEER 04/21/10 DATE

10-11-10
PLANS APPROVAL DATE

REGISTERED PROFESSIONAL ENGINEER CHRISTINA D.B.FRANKEL No. C-25730 Exp. 05/31/11 CIVIL STATE OF CALIFORNIA

THE STATE OF CALIFORNIA OR ITS OFFICERS OR AGENTS SHALL NOT BE RESPONSIBLE FOR THE ACCURACY OR COMPLETENESS OF SCANNED COPIES OF THIS PLAN SHEET.

DERIVI CONSTRUCTION & ARCHITECTURE, INC.
924 N. YOSEMITE STREET
STOCKTON, CA 95203

SJCOG
555 E. WEBER AVE.
STOCKTON, CA 95202-2804

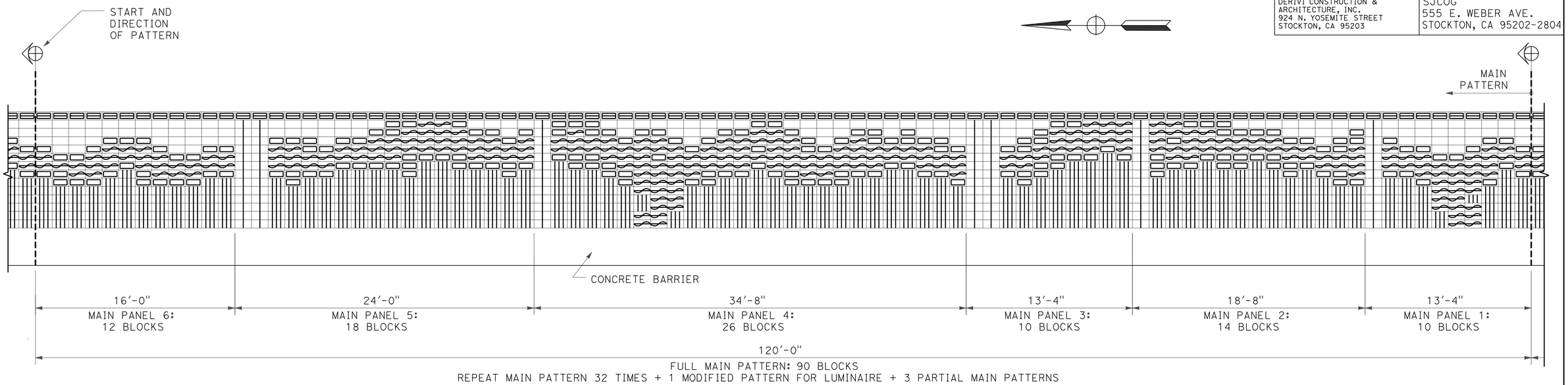

SOUND WALL 4
MAIN PATTERN - TYP

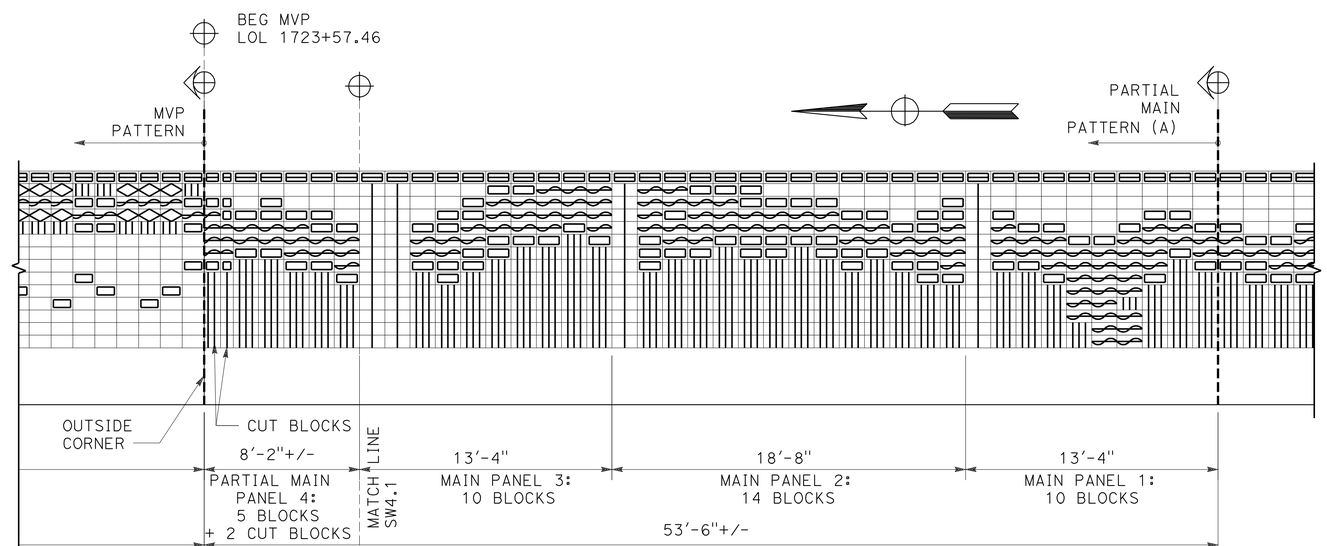

SOUND WALL 4
PARTIAL MAIN PATTERN (A)

SOUND WALL (AESTHETICS)

SOUND WALL No. 4

NO SCALE

SW-38

THIS PLAN ACCURATE FOR SOUND WALL AESTHETIC TREATMENTS ONLY

REVISED BY	
DATE REVISED	
CALCULATED-DESIGNED BY	CHRISTINA D. B. FRANKEL
CHECKED BY	LINDA M. DEVIVI
CONSULTANT FUNCTIONAL SUPERVISOR	LINDA M. DEVIVI

STATE OF CALIFORNIA - DEPARTMENT OF TRANSPORTATION
Caltrans

LAST REVISION 07-07-10 | DATE PLOTTED => 12-OCT-2010 | TIME PLOTTED => 11:19

Dist	COUNTY	ROUTE	POST MILES TOTAL PROJECT	SHEET No.	TOTAL SHEETS
10	SJ	5	25.0/32.7	538	1132

REGISTERED CIVIL ENGINEER 04/21/10 DATE

10-11-10
PLANS APPROVAL DATE

REGISTERED PROFESSIONAL ENGINEER CHRISTINA D.B.FRANKEL No. C-25730 Exp. 05/31/11 CIVIL STATE OF CALIFORNIA

THE STATE OF CALIFORNIA OR ITS OFFICERS OR AGENTS SHALL NOT BE RESPONSIBLE FOR THE ACCURACY OR COMPLETENESS OF SCANNED COPIES OF THIS PLAN SHEET.

DERIVI CONSTRUCTION & ARCHITECTURE, INC.
924 N. YOSEMITE STREET
STOCKTON, CA 95203

SJCOG
555 E. WEBER AVE.
STOCKTON, CA 95202-2804

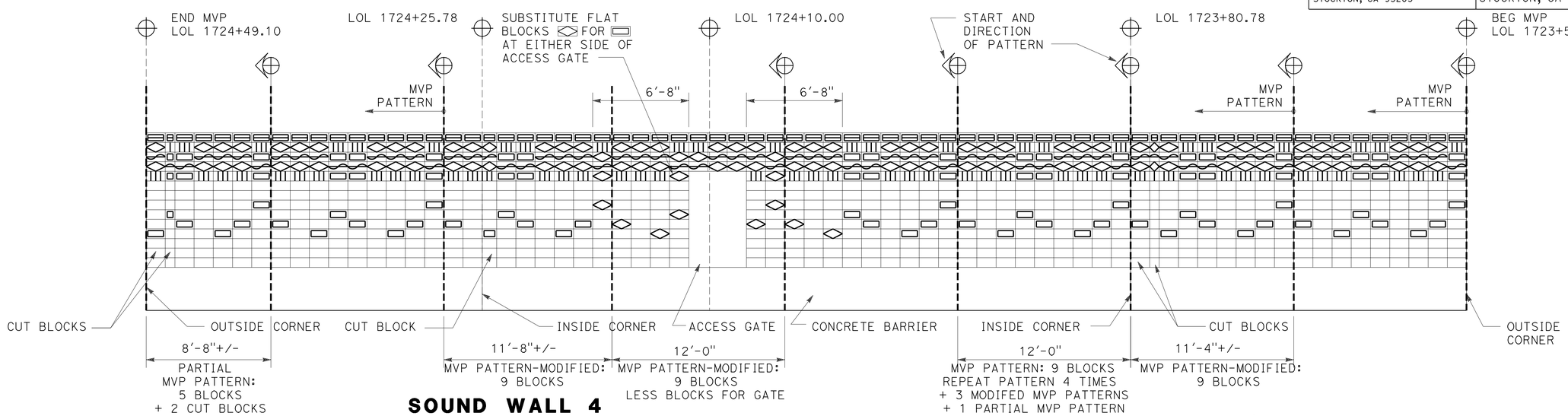

SOUND WALL 4
AT MVP RECESS - EXPANDED ELEVATION

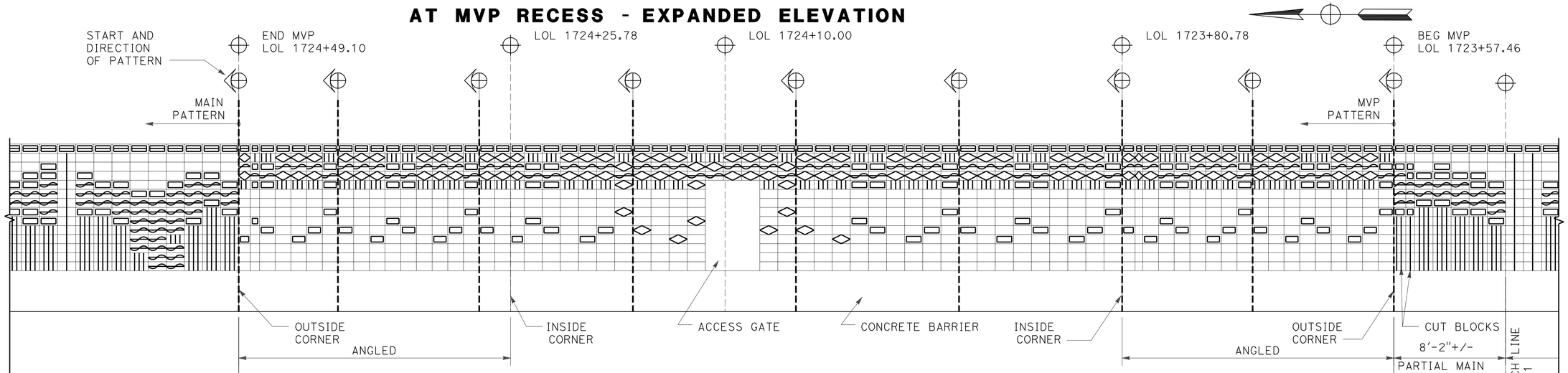

SOUND WALL 4
AT MVP RECESS - FOLDED ELEVATION

THIS PLAN ACCURATE FOR SOUND WALL AESTHETIC TREATMENTS ONLY

SOUND WALL (AESTHETICS)

SOUND WALL No. 4

NO SCALE

SW-39

STATE OF CALIFORNIA - DEPARTMENT OF TRANSPORTATION
Caltrans

CONSULTANT FUNCTIONAL SUPERVISOR: LINDA M. DEVIVI
CALCULATED-DESIGNED BY: CHRISTINA D. B. FRANKEL
CHECKED BY: LINDA M. DEVIVI
REVISED BY
DATE REVISED

LAST REVISION DATE PLOTTED => 12-OCT-2010
07-07-10 TIME PLOTTED => 11:20

Dist	COUNTY	ROUTE	POST MILES TOTAL PROJECT	SHEET No.	TOTAL SHEETS
10	SJ	5	25.0/32.7	539	1132

REGISTERED CIVIL ENGINEER 04/21/10 DATE

10-11-10
PLANS APPROVAL DATE

REGISTERED PROFESSIONAL ENGINEER CHRISTINA D.B.FRANKEL No. C-25730 Exp. 05/31/11 CIVIL STATE OF CALIFORNIA

THE STATE OF CALIFORNIA OR ITS OFFICERS OR AGENTS SHALL NOT BE RESPONSIBLE FOR THE ACCURACY OR COMPLETENESS OF SCANNED COPIES OF THIS PLAN SHEET.

DERIVI CONSTRUCTION & ARCHITECTURE, INC.
924 N. YOSEMITE STREET
STOCKTON, CA 95203

SJCOG
555 E. WEBER AVE.
STOCKTON, CA 95202-2804

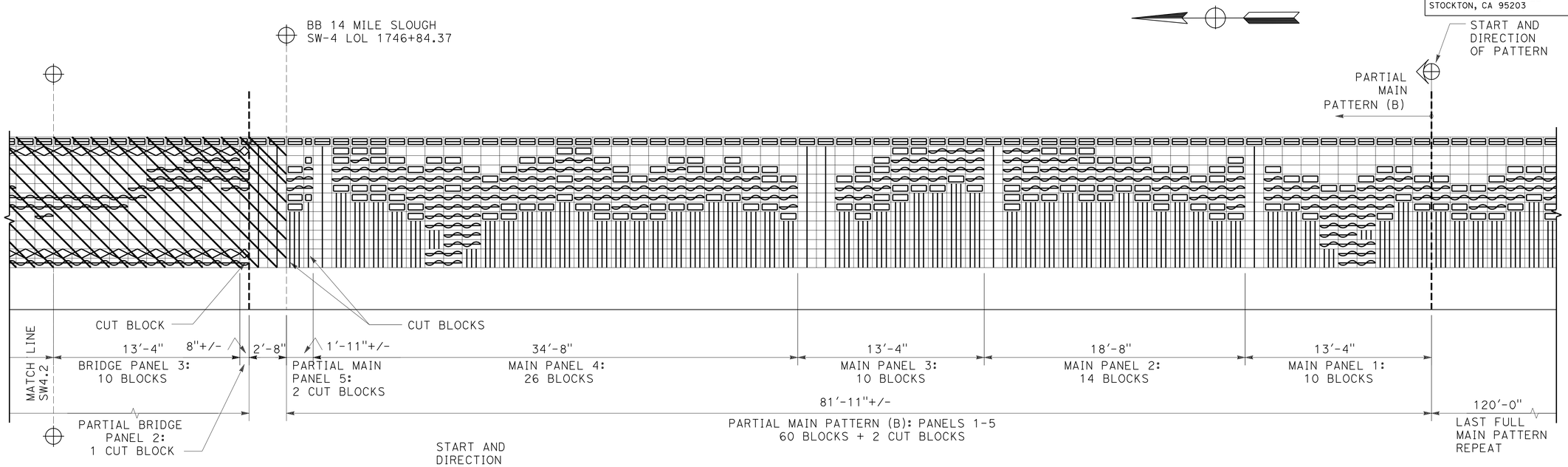

SOUND WALL 4
PARTIAL MAIN PATTERN (B) TO PARTIAL BRIDGE PATTERN

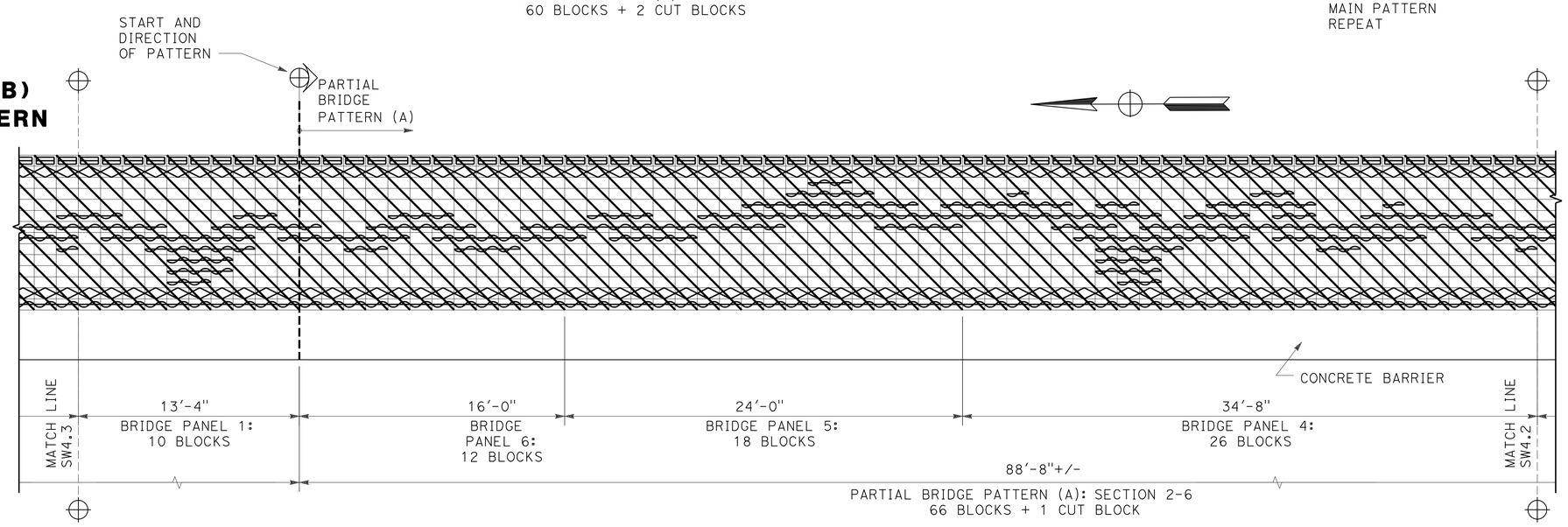

SOUND WALL 4
PARTIAL BRIDGE PATTERN (14 MILE SLOUGH) CONT

THIS PLAN ACCURATE FOR SOUND WALL AESTHETIC TREATMENTS ONLY

SOUND WALL (AESTHETICS)
SOUND WALL No. 4

NO SCALE

SW-40

REVISED BY	DATE REVISED

CALCULATED-DESIGNED BY: CHRISTINA D. B. FRANKEL
CHECKED BY: LINDA M. DEVIVI
CONSULTANT FUNCTIONAL SUPERVISOR: LINDA M. DEVIVI

STATE OF CALIFORNIA - DEPARTMENT OF TRANSPORTATION
Caltrans

LAST REVISION | DATE PLOTTED => 12-OCT-2010 | TIME PLOTTED => 11:20
07-07-10

Dist	COUNTY	ROUTE	POST MILES TOTAL PROJECT	SHEET No.	TOTAL SHEETS
10	SJ	5	25.0/32.7	540	1132

REGISTERED CIVIL ENGINEER DATE 04/21/10

10-11-10
PLANS APPROVAL DATE

REGISTERED PROFESSIONAL ENGINEER CHRISTINA D.B.FRANKEL No. C-25730 Exp. 05/31/11 CIVIL STATE OF CALIFORNIA

THE STATE OF CALIFORNIA OR ITS OFFICERS OR AGENTS SHALL NOT BE RESPONSIBLE FOR THE ACCURACY OR COMPLETENESS OF SCANNED COPIES OF THIS PLAN SHEET.

DERIVI CONSTRUCTION & ARCHITECTURE, INC.
924 N. YOSEMITE STREET
STOCKTON, CA 95203

SJCOG
555 E. WEBER AVE.
STOCKTON, CA 95202-2804

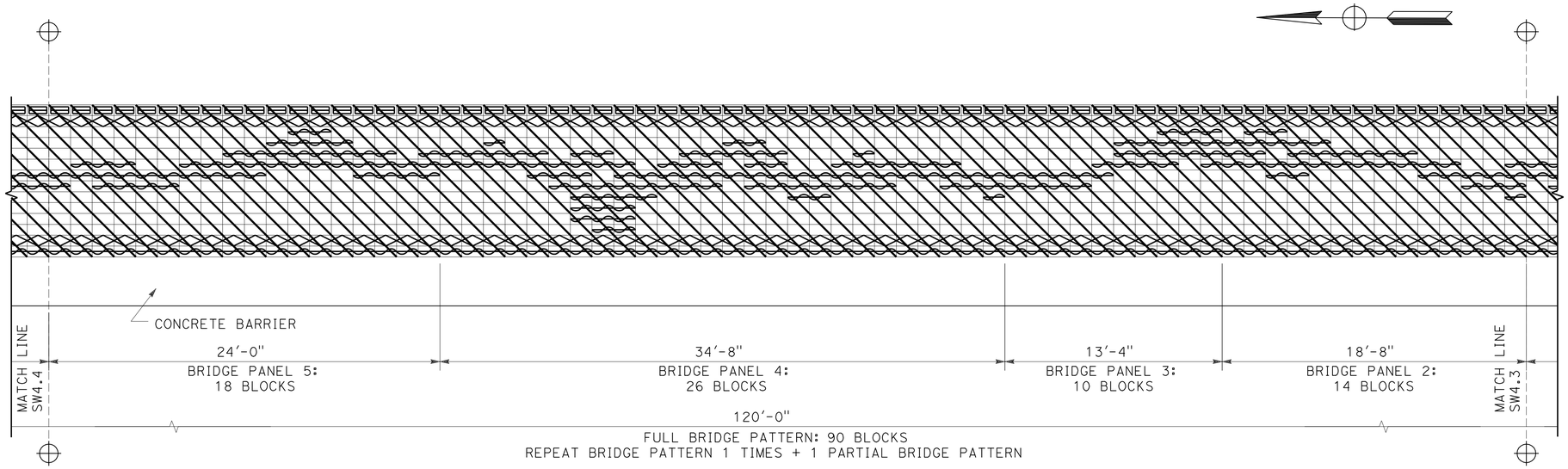

SOUND WALL 4
BRIDGE PATTERN (14 MILE SLOUGH) CONT

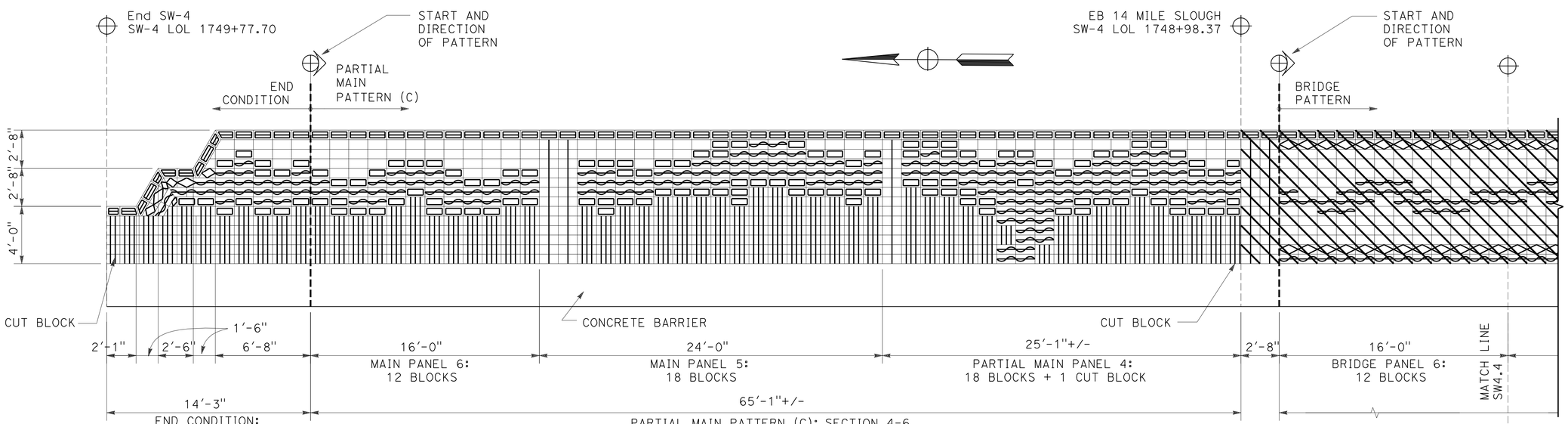

SOUND WALL 4
BRIDGE PATTERN CONT AND END CONDITION

SOUND WALL (AESTHETICS)

SOUND WALL No. 4

NO SCALE

SW-41

THIS PLAN ACCURATE FOR SOUND WALL AESTHETIC TREATMENTS ONLY

STATE OF CALIFORNIA - DEPARTMENT OF TRANSPORTATION

Caltrans

CONSULTANT FUNCTIONAL SUPERVISOR: LINDA M. DEVIVI

CALCULATED-DESIGNED BY: CHRISTINA D. B. FRANKEL

CHECKED BY: LINDA M. DEVIVI

REVISED BY

DATE REVISED

LAST REVISION DATE PLOTTED => 12-OCT-2010
07-07-10 TIME PLOTTED => 11:20

DIST	COUNTY	ROUTE	POST MILES TOTAL PROJECT	SHEET No	TOTAL SHEETS
10	SJ	5	25.0/32.7	541	1132

GEOTECHNICAL PROFESSIONAL — DATE 04/21/10

10-11-10
PLANS APPROVAL DATE

REGISTERED GEOLOGIST — GARY PARIKH — No. G.E. 666 — Exp. 12/31/11 — CERTIFIED ENGINEERING GEOLOGIST — STATE OF CALIFORNIA

The State of California or its officers or agents shall not be responsible for the accuracy or completeness of scanned copies of this plan sheet.

SJCOG
555 WEBER AVE.
STOCKTON, CA 95202-2804

PARIKH CONSULTANTS, INC.
2360 QUME DRIVE, SUITE A
SAN JOSE, CA 95131

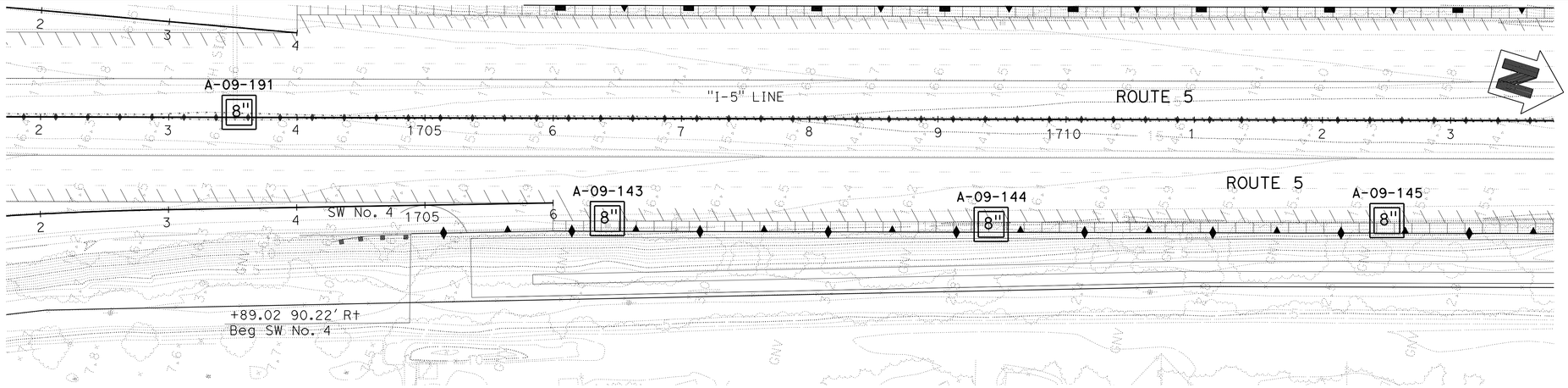

PLAN
1"=50'

BENCHMARK:
THE HORIZONTAL COORDINATES VALUES ARE IN THE CALIFORNIA COORDINATE SYSTEM (CCS 83) ZONE 3, EPOCH DATE 2007.00, IN U.S. SURVEY FEET.
THE VERTICAL CONTROL VALUES ARE BASED ON THE NORTH AMERICAN U.S. SURVEY FEET, HEIGHT MODERNIZATION SURVEY STATION, (2007.00) AND GEOID03 WAS USED FOR THE ADJUSTMENT.

THIS LOTB SHEET WAS PREPARED IN ACCORDANCE WITH CALTRANS SOIL & ROCK LOGGING, CLASSIFICATION, AND PRESENTATION MANUAL (2007)

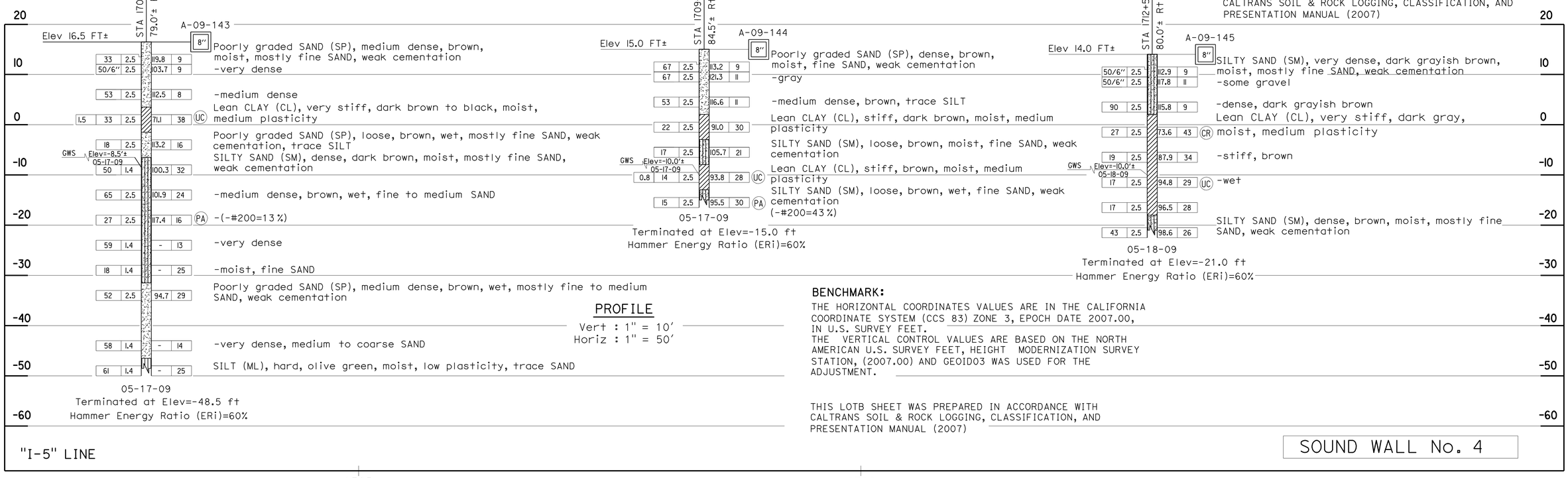

PROFILE
Vert : 1" = 10'
Horiz : 1" = 50'

BENCHMARK:
THE HORIZONTAL COORDINATES VALUES ARE IN THE CALIFORNIA COORDINATE SYSTEM (CCS 83) ZONE 3, EPOCH DATE 2007.00, IN U.S. SURVEY FEET.
THE VERTICAL CONTROL VALUES ARE BASED ON THE NORTH AMERICAN U.S. SURVEY FEET, HEIGHT MODERNIZATION SURVEY STATION, (2007.00) AND GEOID03 WAS USED FOR THE ADJUSTMENT.

THIS LOTB SHEET WAS PREPARED IN ACCORDANCE WITH CALTRANS SOIL & ROCK LOGGING, CLASSIFICATION, AND PRESENTATION MANUAL (2007)

SOUND WALL No. 4

SCALE AS SHOWN **SW-42**

DESIGN OVERSIGHT	DRAWN BY O. GOUTHIER	S. DUDDU- A.R. BHARADWAJ FIELD INVESTIGATION BY:	PREPARED FOR THE STATE OF CALIFORNIA DEPARTMENT OF TRANSPORTATION	A. LAM PROJECT ENGINEER	BRIDGE NO. -- / POST MILES --	I-5 NORTH STOCKTON CORRIDOR IMPROVEMENT
SIGN OFF DATE	CHECKED BY D. WANG	DATE: MARCH 2009 TO MAY 2009				LOG OF TEST BORINGS

OGS GEOTECHNICAL LOG OF TEST BORINGS SHEET (ENGLISH) (REV. 06-01-09)

ORIGINAL SCALE IN INCHES FOR REDUCED PLANS 0 1 2 3

CU 06240
EA 0G4701

DISREGARD PRINTS BEARING EARLIER REVISION DATES — REVISION DATES 09/28/09 03/15/10 — SHEET OF

USERNAME => trphils
FILE => a0g470rd017.dgn

USERNAME => trphils DATE PLOTTED => 12-OCT-2010 TIME PLOTTED => 11:20

DIST	COUNTY	ROUTE	POST MILES TOTAL PROJECT	SHEET No	TOTAL SHEETS
10	SJ	5	25.0/32.7	542	1132

GEOTECHNICAL PROFESSIONAL — DATE 04/21/10

REGISTERED GEOLOGIST — GARY PARIKH — No. G.E. 666 — Exp. 12/31/11 — CERTIFIED ENGINEERING GEOLOGIST — STATE OF CALIFORNIA

10-11-10
PLANS APPROVAL DATE

The State of California or its officers or agents shall not be responsible for the accuracy or completeness of scanned copies of this plan sheet.

SJCOG
555 WEBER AVE.
STOCKTON, CA 95202-2804

PARIKH CONSULTANTS, INC.
2360 QUME DRIVE, SUITE A
SAN JOSE, CA 95131

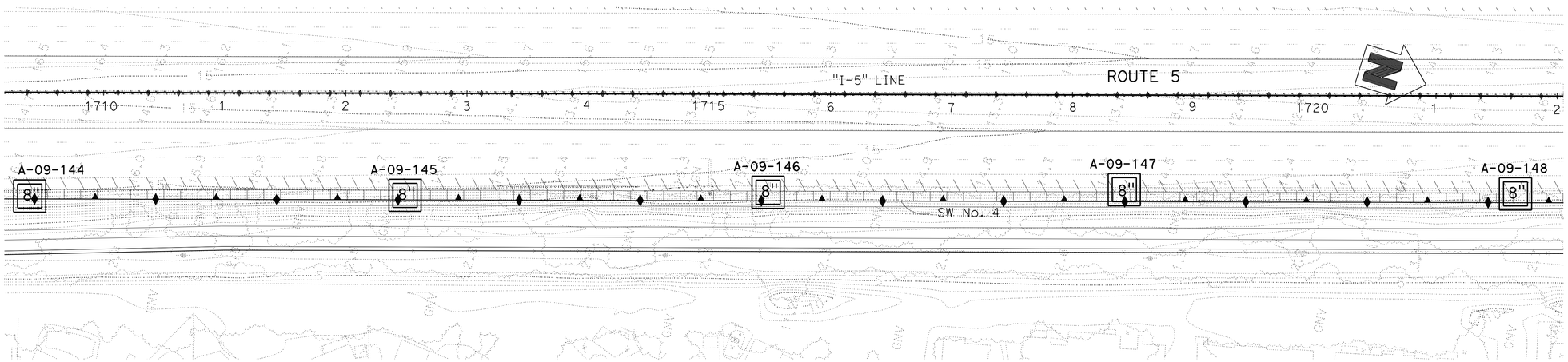

PLAN
1"=50'

BENCHMARK:
THE HORIZONTAL COORDINATES VALUES ARE IN THE CALIFORNIA COORDINATE SYSTEM (CCS 83) ZONE 3, EPOCH DATE 2007.00, IN U.S. SURVEY FEET.
THE VERTICAL CONTROL VALUES ARE BASED ON THE NORTH AMERICAN U.S. SURVEY FEET, HEIGHT MODERNIZATION SURVEY STATION, (2007.00) AND GEOID03 WAS USED FOR THE ADJUSTMENT.

THIS LOTB SHEET WAS PREPARED IN ACCORDANCE WITH CALTRANS SOIL & ROCK LOGGING, CLASSIFICATION, AND PRESENTATION MANUAL (2007)

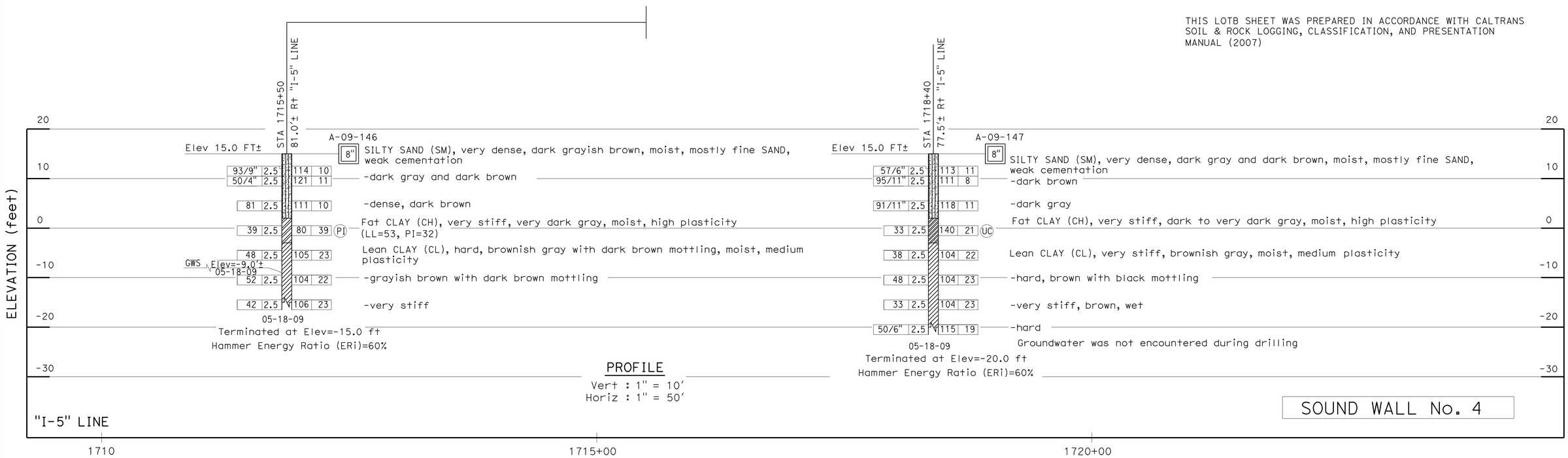

SCALE AS SHOWN **SW-43**

DESIGN OVERSIGHT	DRAWN BY	O. GOUTHIER	S. DUDDU- A.R. BHARADWAJ	PREPARED FOR THE STATE OF CALIFORNIA DEPARTMENT OF TRANSPORTATION	A. LAM
SIGN OFF DATE	CHECKED BY	D. WANG	FIELD INVESTIGATION BY: DATE: MARCH 2009 TO MAY 2009		PROJECT ENGINEER

BRIDGE NO. --
POST MILES --

I-5 NORTH STOCKTON CORRIDOR IMPROVEMENT
LOG OF TEST BORINGS

OGS GEOTECHNICAL LOG OF TEST BORINGS SHEET (ENGLISH) (REV. 06-01-09)

ORIGINAL SCALE IN INCHES FOR REDUCED PLANS 0 1 2 3

CU 06240
EA 0G4701

DISREGARD PRINTS BEARING EARLIER REVISION DATES → 09/26/09 03/15/10

REVISION DATES — SHEET — OF

USERNAME => trphills
FILE => a0g470rd018.dgn

USERNAME => trphills DATE PLOTTED => 12-OCT-2010 TIME PLOTTED => 11:20

DIST	COUNTY	ROUTE	POST MILES TOTAL PROJECT	SHEET No	TOTAL SHEETS
10	SJ	5	25.0/32.7	543	1132

GEOTECHNICAL PROFESSIONAL — DATE 04/21/10

10-11-10
PLANS APPROVAL DATE

REGISTERED GEOLOGIST — GARY PARIKH — No. G.E. 666 — Exp. 12/31/11 — CERTIFIED ENGINEERING GEOLOGIST — STATE OF CALIFORNIA

The State of California or its officers or agents shall not be responsible for the accuracy or completeness of scanned copies of this plan sheet.

SJCOG
555 WEBER AVE.
STOCKTON, CA 95202-2804

PARIKH CONSULTANTS, INC.
2360 QUME DRIVE, SUITE A
SAN JOSE, CA 95131

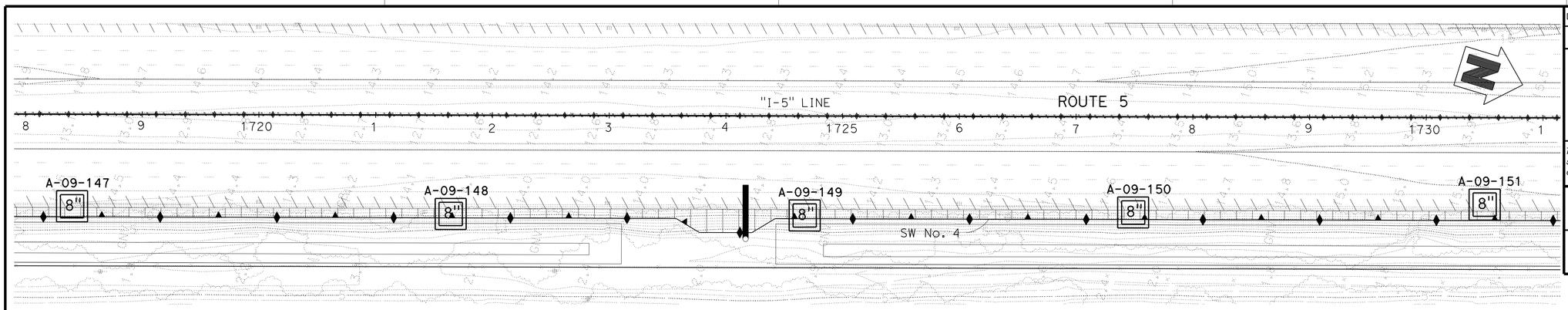

PLAN
1"=50'

BENCHMARK:
THE HORIZONTAL COORDINATES VALUES ARE IN THE CALIFORNIA COORDINATE SYSTEM (CCS 83) ZONE 3, EPOCH DATE 2007.00, IN U.S. SURVEY FEET.
THE VERTICAL CONTROL VALUES ARE BASED ON THE NORTH AMERICAN U.S. SURVEY FEET, HEIGHT MODERNIZATION SURVEY STATION, (2007.00) AND GEOID03 WAS USED FOR THE ADJUSTMENT.

THIS LOTB SHEET WAS PREPARED IN ACCORDANCE WITH CALTRANS SOIL & ROCK LOGGING, CLASSIFICATION, AND PRESENTATION MANUAL (2007)

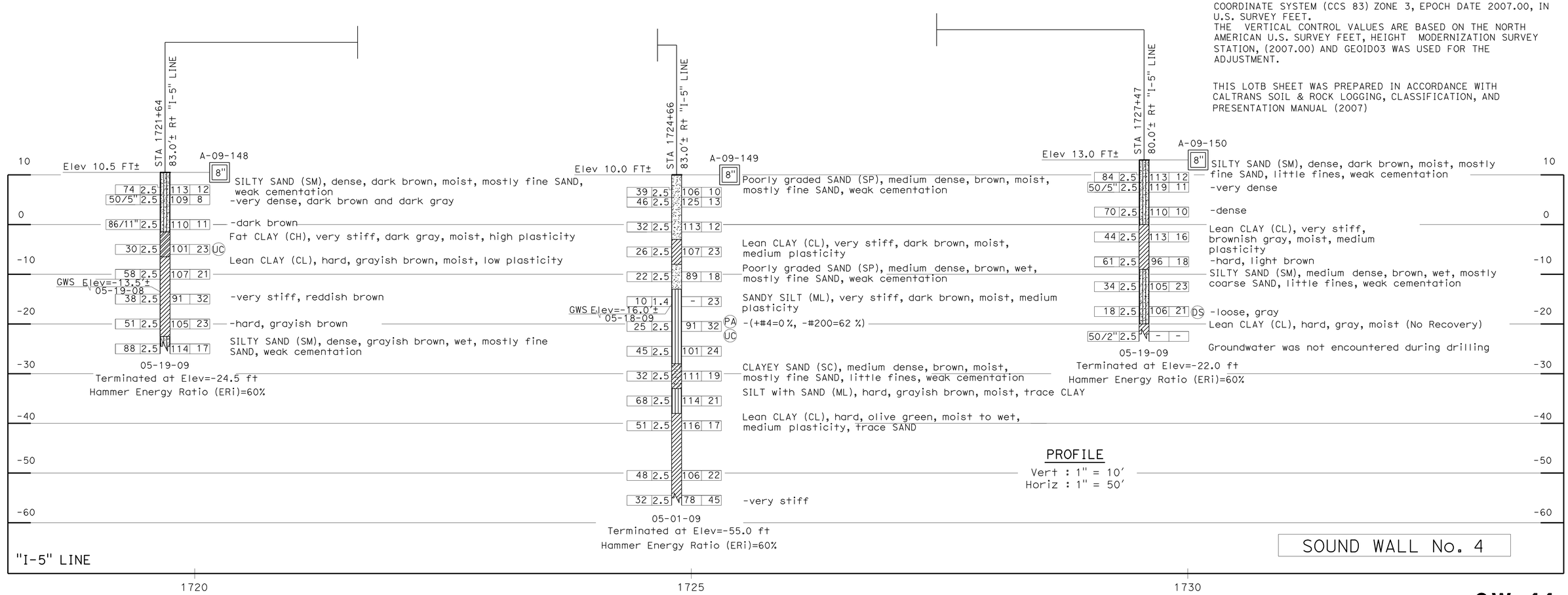

SOUND WALL No. 4

SCALE AS SHOWN **SW-44**

DESIGN OVERSIGHT	DRAWN BY O. GOUTHIER	S. DUDDU- A.R. BHARADWAJ FIELD INVESTIGATION BY:	PREPARED FOR THE STATE OF CALIFORNIA DEPARTMENT OF TRANSPORTATION	A. LAM PROJECT ENGINEER	BRIDGE NO. --
SIGN OFF DATE	CHECKED BY D. WANG	DATE: MARCH 2009 TO MAY 2009			POST MILES --

I-5 NORTH STOCKTON CORRIDOR IMPROVEMENT

LOG OF TEST BORINGS

OGS GEOTECHNICAL LOG OF TEST BORINGS SHEET (ENGLISH) (REV. 06-01-09)

ORIGINAL SCALE IN INCHES FOR REDUCED PLANS 0 1 2 3

CU 06240
EA 0G4701

DISREGARD PRINTS BEARING EARLIER REVISION DATES 09/28/09 03/15/10

REVISION DATES — SHEET — OF

USERNAME => trphils
FILE => a0g470rd019.dgn

USERNAME => trphils DATE PLOTTED => 12-OCT-2010 TIME PLOTTED => 11:21

DIST	COUNTY	ROUTE	POST MILES TOTAL PROJECT	SHEET No	TOTAL SHEETS
10	SJ	5	25.0/32.7	544	1132

GEOTECHNICAL PROFESSIONAL — 04/21/10 DATE

10-11-10
PLANS APPROVAL DATE

REGISTERED GEOLOGIST — GARY PARIKH — No. G.E. 666 — Exp. 12/31/11 — CERTIFIED ENGINEERING GEOLOGIST — STATE OF CALIFORNIA

The State of California or its officers or agents shall not be responsible for the accuracy or completeness of scanned copies of this plan sheet.

SJCOG
555 WEBER AVE.
STOCKTON, CA 95202-2804

PARIKH CONSULTANTS, INC.
2360 QUME DRIVE, SUITE A
SAN JOSE, CA 95131

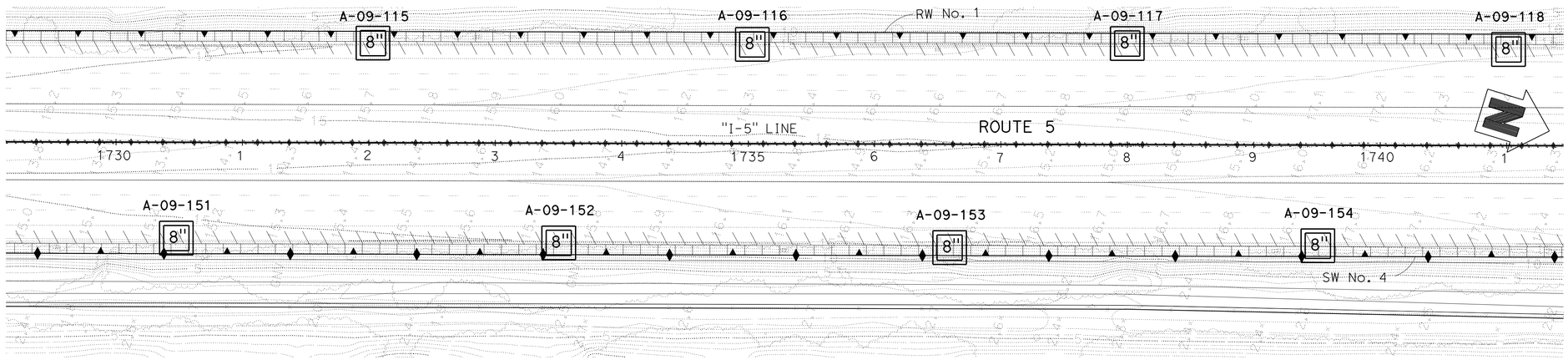

PLAN
1"=50'

BENCHMARK:
THE HORIZONTAL COORDINATES VALUES ARE IN THE CALIFORNIA COORDINATE SYSTEM (CCS 83) ZONE 3, EPOCH DATE 2007.00, IN U.S. SURVEY FEET.
THE VERTICAL CONTROL VALUES ARE BASED ON THE NORTH AMERICAN U.S. SURVEY FEET, HEIGHT MODERNIZATION SURVEY STATION, (2007.00) AND GEOID03 WAS USED FOR THE ADJUSTMENT.

THIS LOTB SHEET WAS PREPARED IN ACCORDANCE WITH CALTRANS SOIL & ROCK LOGGING, CLASSIFICATION, AND PRESENTATION MANUAL (2007)

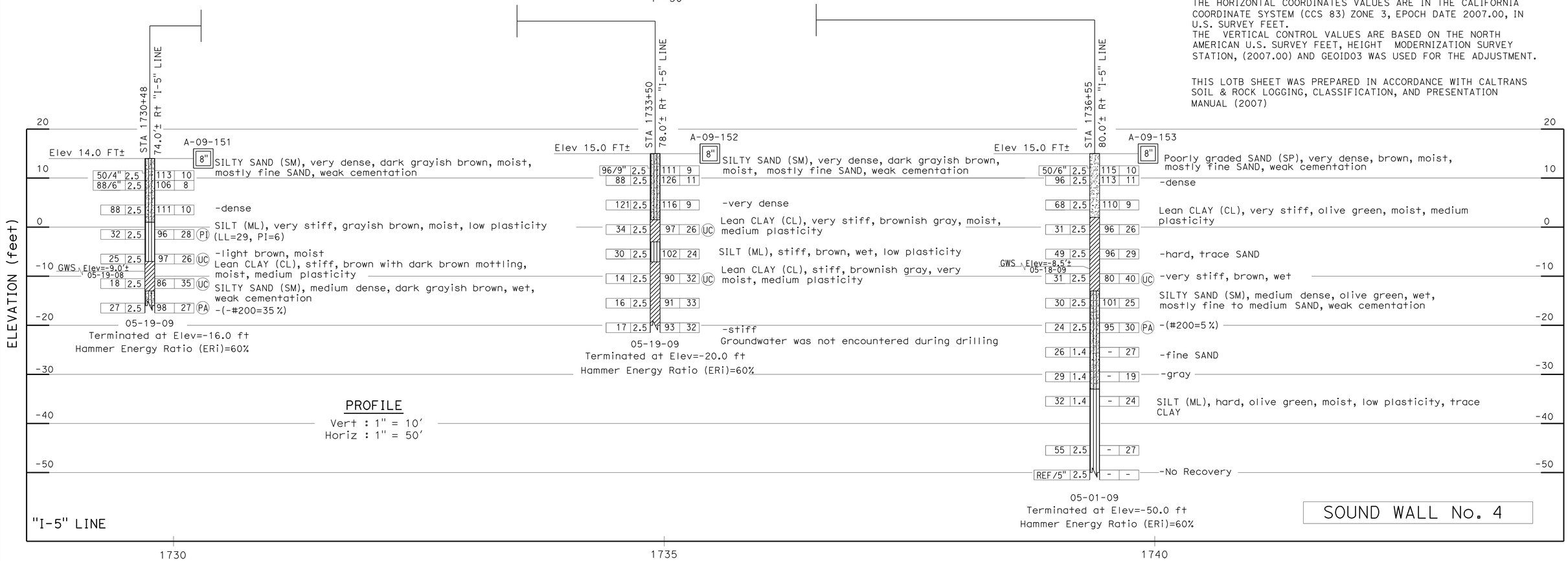

SCALE AS SHOWN **SW-45**

DESIGN OVERSIGHT	DRAWN BY O. GOUTHIER	S. DUDDU- A.R. BHARADWAJ FIELD INVESTIGATION BY:	PREPARED FOR THE STATE OF CALIFORNIA DEPARTMENT OF TRANSPORTATION	A. LAM PROJECT ENGINEER	BRIDGE NO. --
SIGN OFF DATE	CHECKED BY D. WANG	DATE: MARCH 2009 TO MAY 2009			POST MILES --

I-5 NORTH STOCKTON CORRIDOR IMPROVEMENT
LOG OF TEST BORINGS

OGS GEOTECHNICAL LOG OF TEST BORINGS SHEET (ENGLISH) (REV. 06-01-09)

ORIGINAL SCALE IN INCHES FOR REDUCED PLANS 0 1 2 3

CU 06240
EA 0G4701

DISREGARD PRINTS BEARING EARLIER REVISION DATES → 09/28/09 03/15/10

REVISION DATES — SHEET — OF

USERNAME => trphils
FILE => a0g470rd020.dgn

USERNAME => trphils DATE PLOTTED => 12-OCT-2010 TIME PLOTTED => 11:21

DIST	COUNTY	ROUTE	POST MILES TOTAL PROJECT	SHEET No	TOTAL SHEETS
10	SJ	5	25.0/32.7	545	1132

GEOTECHNICAL PROFESSIONAL — DATE 04/21/10

10-11-10
PLANS APPROVAL DATE

REGISTERED GEOLOGIST — GARY PARIKH — No. G.E. 666 — Exp. 12/31/11 — CERTIFIED ENGINEERING GEOLOGIST — STATE OF CALIFORNIA

The State of California or its officers or agents shall not be responsible for the accuracy or completeness of scanned copies of this plan sheet.

SJCOG
555 WEBER AVE.
STOCKTON, CA 95202-2804

PARIKH CONSULTANTS, INC.
2360 QUME DRIVE, SUITE A
SAN JOSE, CA 95131

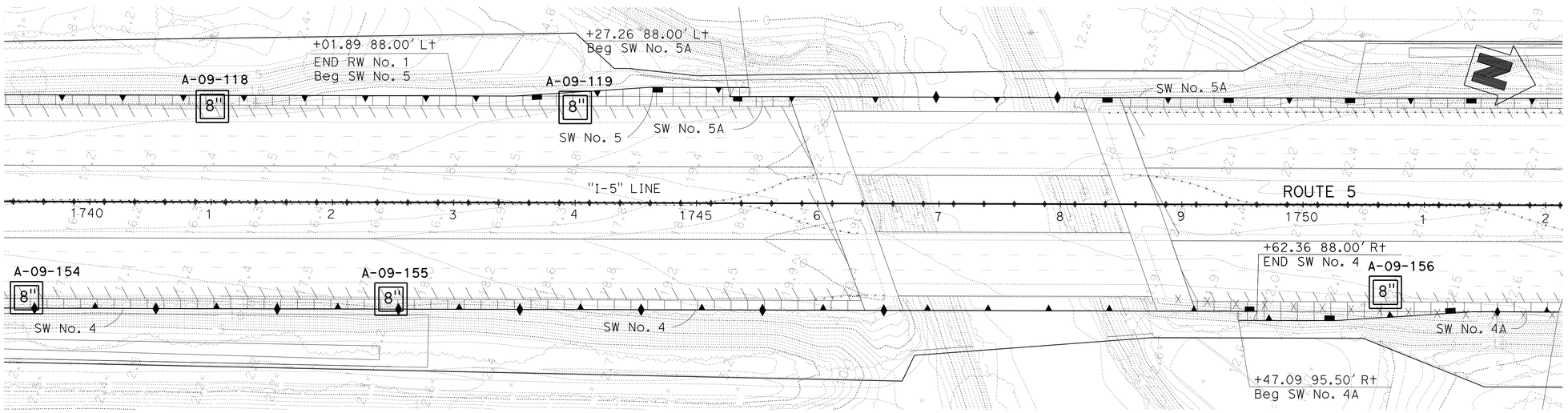

PLAN
1"=50'

BENCHMARK:

THE HORIZONTAL COORDINATES VALUES ARE IN THE CALIFORNIA COORDINATE SYSTEM (CCS 83) ZONE 3, EPOCH DATE 2007.00, IN U.S. SURVEY FEET.
THE VERTICAL CONTROL VALUES ARE BASED ON THE NORTH AMERICAN U.S. SURVEY FEET, HEIGHT MODERNIZATION SURVEY STATION, (2007.00) AND GEOID03 WAS USED FOR THE ADJUSTMENT.

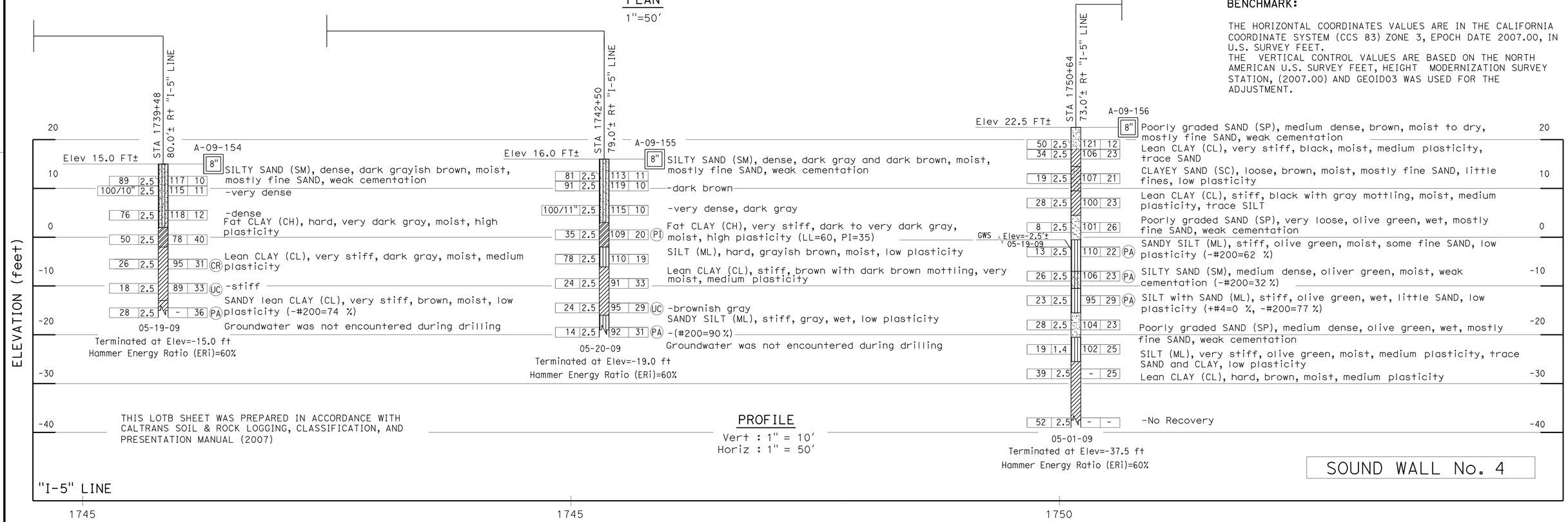

SCALE AS SHOWN **SW-46**

DESIGN OVERSIGHT	DRAWN BY	O. GOUTHIER	S. DUDDU- A.R. BHARADWAJ FIELD INVESTIGATION BY:	PREPARED FOR THE STATE OF CALIFORNIA DEPARTMENT OF TRANSPORTATION	A. LAM PROJECT ENGINEER
SIGN OFF DATE	CHECKED BY	D. WANG	DATE: MARCH 2009 TO MAY 2009		

BRIDGE NO. --
POST MILES --

I-5 NORTH STOCKTON CORRIDOR IMPROVEMENT
LOG OF TEST BORINGS

CU 06240
EA 0G4701

DISREGARD PRINTS BEARING EARLIER REVISION DATES — REVISION DATES 09/26/09 03/15/10 — SHEET OF

OGS GEOTECHNICAL LOG OF TEST BORINGS SHEET (ENGLISH) (REV. 06-01-09)

ORIGINAL SCALE IN INCHES FOR REDUCED PLANS 0 1 2 3

USERNAME => trphils
FILE => a0g470rd021.dgn

USERNAME => trphils DATE PLOTTED => 12-OCT-2010 TIME PLOTTED => 11:21

Dist	COUNTY	ROUTE	POST MILES TOTAL PROJECT	SHEET No.	TOTAL SHEETS
10	SJ	5	25.0/32.7	546	1132

REGISTERED CIVIL ENGINEER 04/21/10 DATE

10-11-10
PLANS APPROVAL DATE

REGISTERED PROFESSIONAL ENGINEER CHUONG NGUYEN No. C46770 Exp. 06/30/11 CIVIL STATE OF CALIFORNIA

THE STATE OF CALIFORNIA OR ITS OFFICERS OR AGENTS SHALL NOT BE RESPONSIBLE FOR THE ACCURACY OR COMPLETENESS OF SCANNED COPIES OF THIS PLAN SHEET.

RAJAPPAN & MEYER
CONSULTING ENGINEERS INC.
1038 LEIGH AVE, SUITE 100
SAN JOSE, CA 95126

SJCOG
555 E. WEBER AVE.
STOCKTON, CA 95202-2804

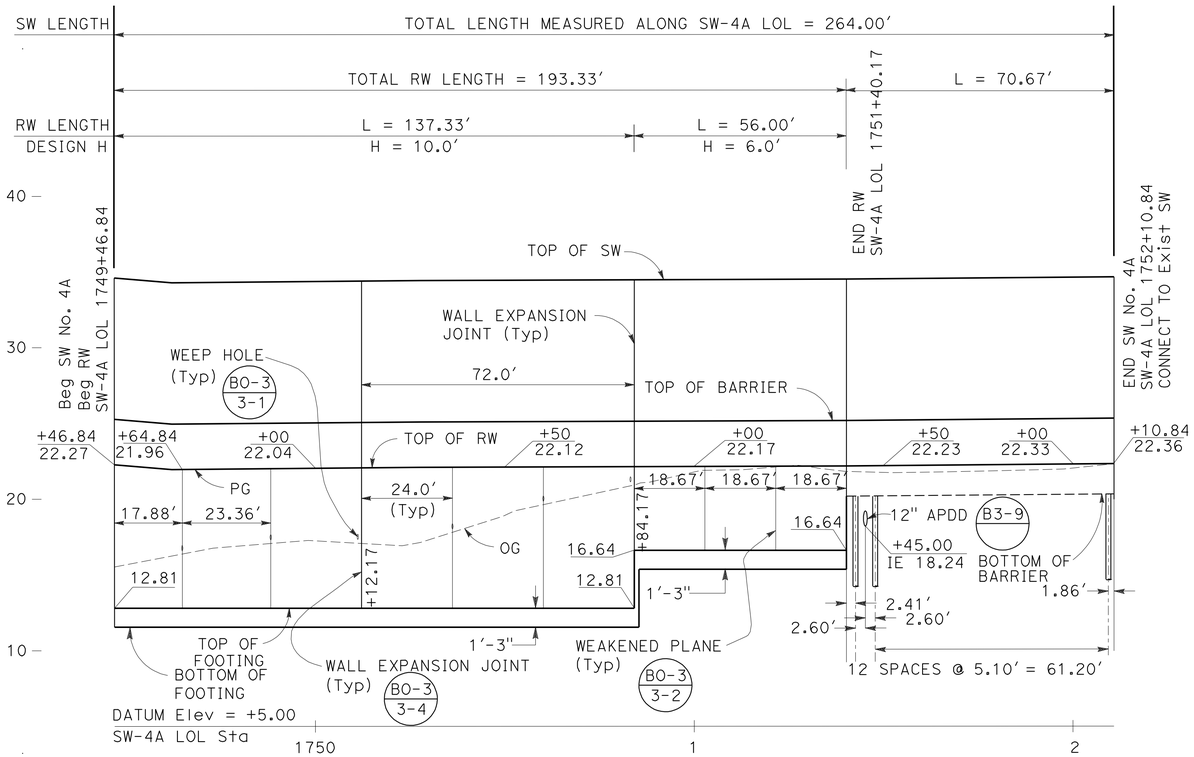

ELEVATION

SCALE: Horiz 1"=20'
Vert 1"=5'

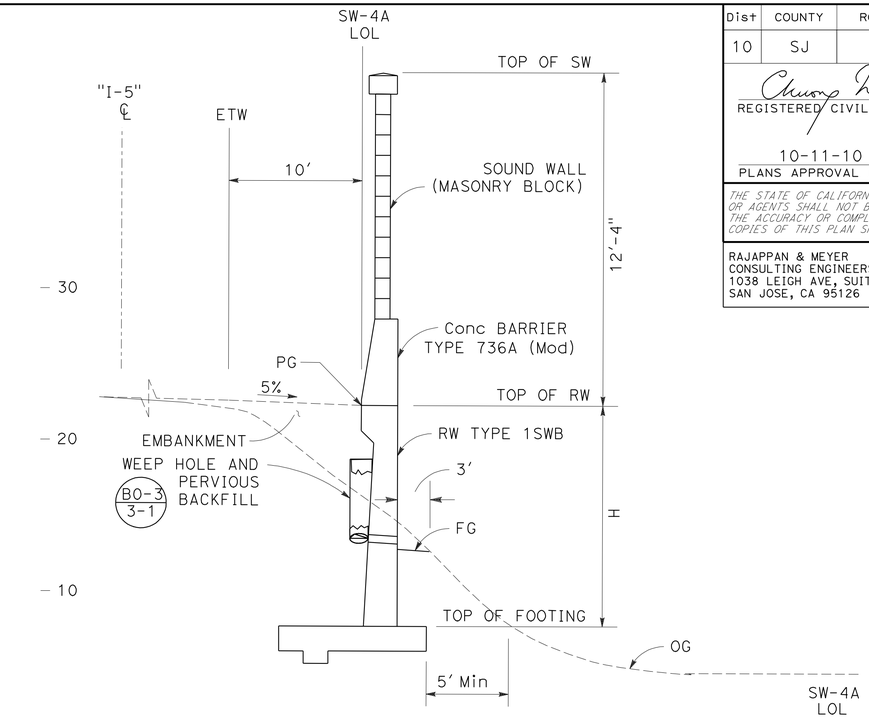

TYPICAL SECTION

SW-4A Sta 1749+46.84 TO Sta 1751+40.17
NO SCALE

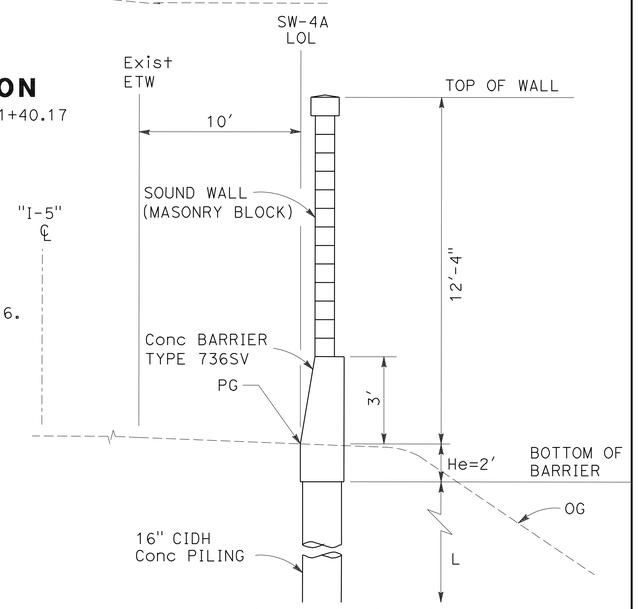

TYPICAL SECTION

SW-4A Sta 1751+40.17 TO Sta 1752+10.84
NO SCALE

NOTES:

1. FOR DETAILS OF RW TYPE 1SWB, SEE RETAINING WALL DEATIL SHEET SW-116.
2. FOR DETAILS OF SW ON BARRIER, SEE Std PLAN

B15-6 B15-7 B15-8

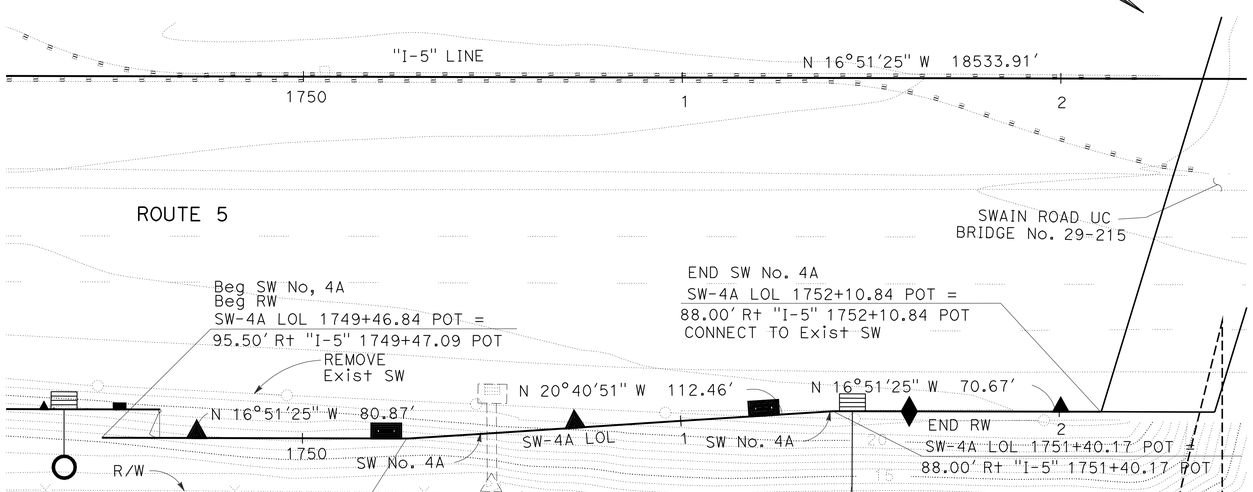

PLAN

SCALE: 1"=20'
THIS PLAN ACCURATE FOR SOUND WALL WORK ONLY

SOUND WALL PLANS

SOUND WALL No. 4A

SCALE AS SHOWN

SW-47

STATE OF CALIFORNIA - DEPARTMENT OF TRANSPORTATION
Caltrans®

CONSULTANT FUNCTIONAL SUPERVISOR: KEITH G. MEYER
CALCULATED-DESIGNED BY: SRILAKSHMI SAKHAMURI
CHECKED BY: CHUONG NGUYEN
REVISED BY
DATE REVISED

LAST REVISION DATE PLOTTED => 12-OCT-2010
08-10-10 TIME PLOTTED => 11:21

Dist	COUNTY	ROUTE	POST MILES TOTAL PROJECT	SHEET No.	TOTAL SHEETS
10	SJ	5	25.0/32.7	547	1132

REGISTERED CIVIL ENGINEER 04/21/10 DATE

10-11-10
PLANS APPROVAL DATE

REGISTERED PROFESSIONAL ENGINEER CHRISTINA D.B.FRANKEL No.C-25730 Exp. 05/31/11 CIVIL STATE OF CALIFORNIA

THE STATE OF CALIFORNIA OR ITS OFFICERS OR AGENTS SHALL NOT BE RESPONSIBLE FOR THE ACCURACY OR COMPLETENESS OF SCANNED COPIES OF THIS PLAN SHEET.

DERIVI CONSTRUCTION & ARCHITECTURE, INC.
924 N. YOSEMITE STREET
STOCKTON, CA 95203

SJCOG
555 E. WEBER AVE.
STOCKTON, CA 95202-2804

BLOCK LEGEND:

Medium Wt / Light Wt — BLOCK A: 'CAP'
8(H)x10(D)*x16(L)
*PROJECT BLOCK 1" EA SIDE
SPLIT FACE BOTH FACES
DARK TAN WITH MEDIUM-SIZED BLACK, DARK BROWN & WHITE AGGREGATE

Medium Wt / Light Wt — BLOCK B: 'WATER'
8(H)x8(D)x16(L)
SPLIT FACE BOTH FACES
DARK TAN WITH MEDIUM-SIZED BLACK, DARK BROWN & WHITE AGGREGATE

Medium Wt — BLOCK C: 'FIELDS'
8(H)x8(D)x16(L)
SPLIT FACE BOTH FACES
3 SCORE (3/8") BOTH FACES
DARK TAN WITH MEDIUM-SIZED BLACK, DARK BROWN & WHITE AGGREGATE

Medium Wt — BLOCK D: 'LEVEE'
8(H)x10(D)*x16(L)
*PROJECT BLOCK 1" EA SIDE
PRECISION BLOCK
MEDIUM-LIGHT TAN WITH MEDIUM-SIZED BLACK, RED & WHITE AGGREGATE

Medium Wt / Light Wt — BLOCK G: 'LEVEE 2'
8(H)x8(D)x16(L)
PRECISION BLOCK
MEDIUM-LIGHT TAN WITH MEDIUM-SIZED BLACK, RED & WHITE AGGREGATE

Medium Wt / Light Wt — BLOCK F: 'CITY'
8(H)x8(D)x16(L)
SPLIT FACE BOTH FACES
LIGHT TAN WITH SMALL-SIZED WHITE, GREY & BLACK AGGREGATE

Medium Wt / Light Wt — BLOCK H: 'STREET'
8(H)x8(D)x16(L)
PRECISION BLOCK
1 SCORE (3/8") BOTH FACES
DARK GREY

GENERAL NOTES:

1. EACH SOUNDWALL ELEVATION IS ELEVATED INDEPENDENTLY. SEE SOUNDWALL GENERAL PLANS FOR MORE INFORMATION.
2. WHERE CUT BLOCKS ARE REQUIRED, CUT BLOCK SHALL BE NO SMALLER THAN ONE HALF OF A BLOCK, OTHERWISE CUT ADJACENT BLOCK AS WELL.
3. PLACE CORE HOLES (NOT SHOWN) FOR VINE PLANTINGS AT 16' ON CENTER.
4. THE CONTRACTOR SHALL SUBMIT COLOR SAMPLE OF BLOCK TO THE ENGINEER FOR APPROVAL.

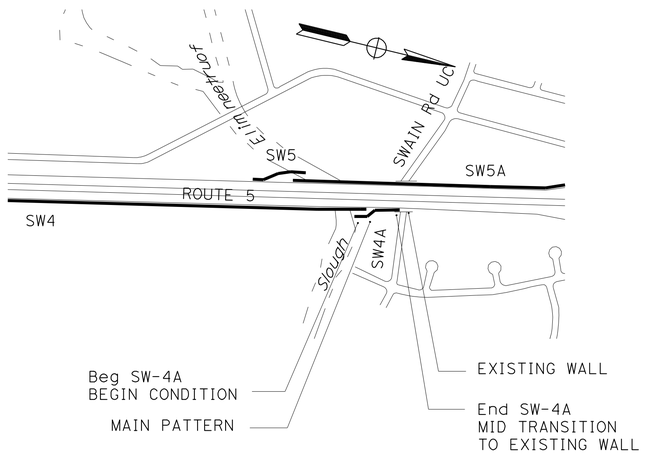

SOUND WALL 4A
KEY PLAN

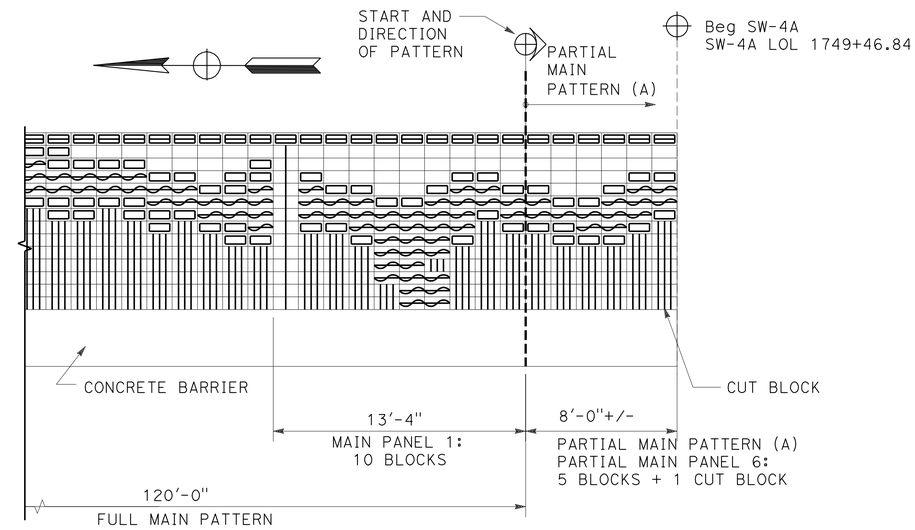

SOUND WALL 4A
BEGIN CONDITION /PARTIAL MAIN PATTERN (A)

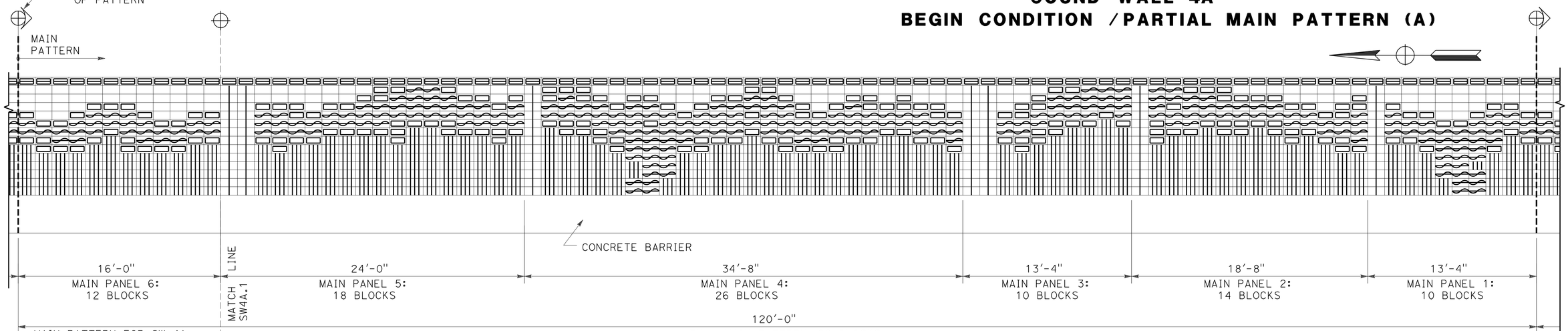

SOUND WALL 4A
MAIN PATTERN - TYP

SOUND WALL (AESTHETICS)

SOUND WALL No. 4A

NO SCALE

SW-48

THIS PLAN ACCURATE FOR SOUND WALL AESTHETIC TREATMENTS ONLY

STATE OF CALIFORNIA - DEPARTMENT OF TRANSPORTATION
Caltrans

CONSULTANT FUNCTIONAL SUPERVISOR: LINDA M. DEVIVI
CALCULATED-DESIGNED BY: CHRISTINA D. B. FRANKEL
CHECKED BY: LINDA M. DEVIVI
REVISED BY
DATE REVISED

LAST REVISION 07-07-10
DATE PLOTTED => 12-OCT-2010
TIME PLOTTED => 11:21

Dist	COUNTY	ROUTE	POST MILES TOTAL PROJECT	SHEET No.	TOTAL SHEETS
10	SJ	5	25.0/32.7	548	1132

REGISTERED CIVIL ENGINEER 04/21/10 DATE

10-11-10
PLANS APPROVAL DATE

REGISTERED PROFESSIONAL ENGINEER CHRISTINA D.B.FRANKEL No. C-25730 Exp. 05/31/11 CIVIL STATE OF CALIFORNIA

THE STATE OF CALIFORNIA OR ITS OFFICERS OR AGENTS SHALL NOT BE RESPONSIBLE FOR THE ACCURACY OR COMPLETENESS OF SCANNED COPIES OF THIS PLAN SHEET.

DERIVI CONSTRUCTION & ARCHITECTURE, INC.
924 N. YOSEMITE STREET
STOCKTON, CA 95203

SJCOG
555 E. WEBER AVE.
STOCKTON, CA 95202-2804

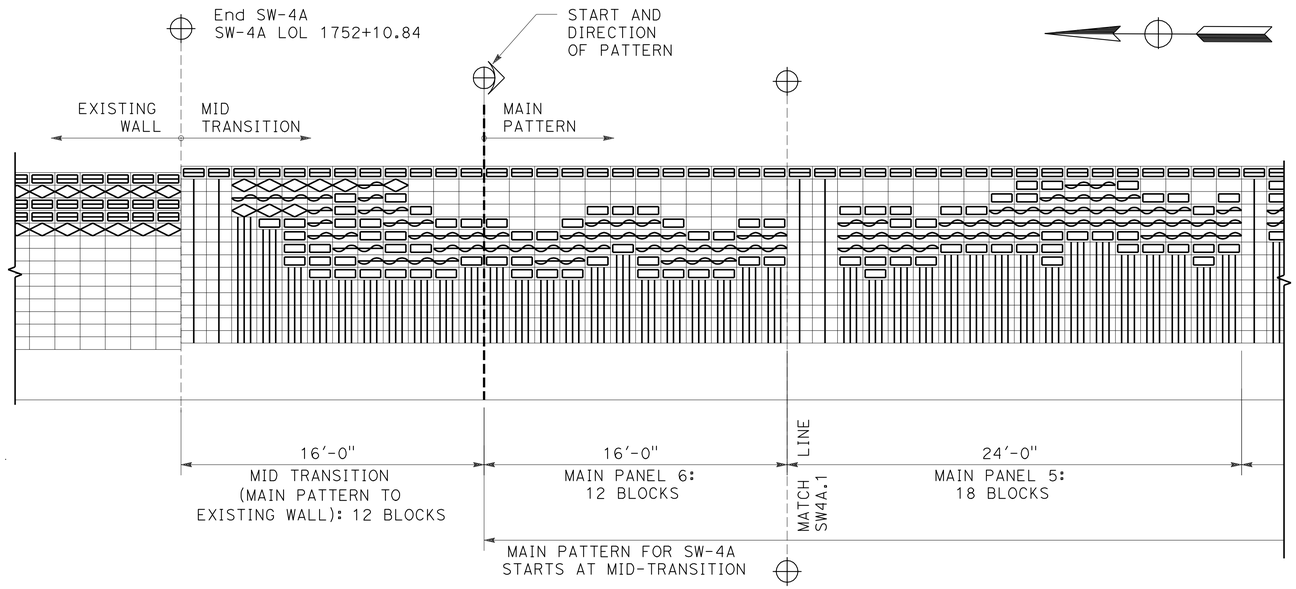

SOUND WALL 4A
MID TRANSITION TO EXISTING WALL

SOUND WALL (AESTHETICS)

SOUND WALL No. 4A

NO SCALE

SW-49

THIS PLAN ACCURATE FOR SOUND WALL AESTHETIC TREATMENTS ONLY

STATE OF CALIFORNIA - DEPARTMENT OF TRANSPORTATION
Caltrans

CONSULTANT FUNCTIONAL SUPERVISOR: LINDA M. DEVIVI
CALCULATED-DESIGNED BY: CHRISTINA D. B. FRANKEL
CHECKED BY: LINDA M. DEVIVI
REVISED BY
DATE REVISED

LAST REVISION 07-07-10 | DATE PLOTTED => 12-OCT-2010 | TIME PLOTTED => 11:22

DIST	COUNTY	ROUTE	POST MILES TOTAL PROJECT	SHEET No	TOTAL SHEETS
10	SJ	5	25.0/32.7	549	1132

GEOTECHNICAL PROFESSIONAL — DATE 04/21/10

PLANS APPROVAL DATE 10-11-10

REGISTERED GEOLOGIST — GARY PARIKH — No. G.E. 666 — Exp. 12/31/11 — CERTIFIED ENGINEERING GEOLOGIST — STATE OF CALIFORNIA

The State of California or its officers or agents shall not be responsible for the accuracy or completeness of scanned copies of this plan sheet.

SJCOG
555 WEBER AVE.
STOCKTON, CA 95202-2804

PARIKH CONSULTANTS, INC.
2360 QUME DRIVE, SUITE A
SAN JOSE, CA 95131

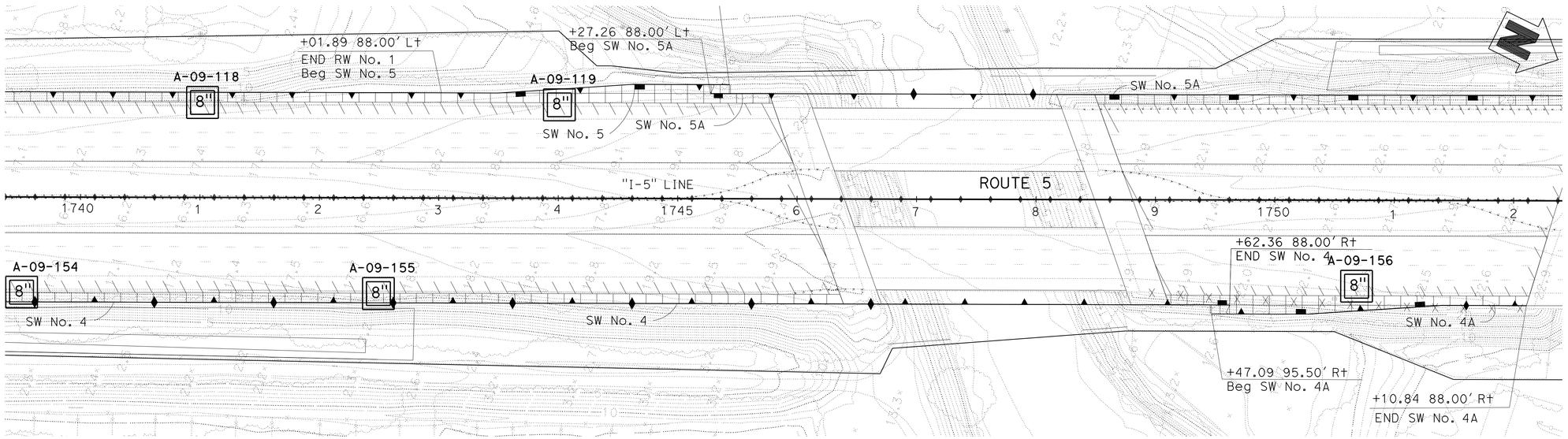

PLAN
1"=50'

BENCHMARK:
THE HORIZONTAL COORDINATES VALUES ARE IN THE CALIFORNIA COORDINATE SYSTEM (CCS 83) ZONE 3, EPOCH DATE 2007.00, IN U.S. SURVEY FEET.
THE VERTICAL CONTROL VALUES ARE BASED ON THE NORTH AMERICAN U.S. SURVEY FEET, HEIGHT MODERNIZATION SURVEY STATION, (2007.00) AND GEOID03 WAS USED FOR THE ADJUSTMENT.

THIS LOTB SHEET WAS PREPARED IN ACCORDANCE WITH CALTRANS SOIL & ROCK LOGGING, CLASSIFICATION, AND PRESENTATION MANUAL (2007)

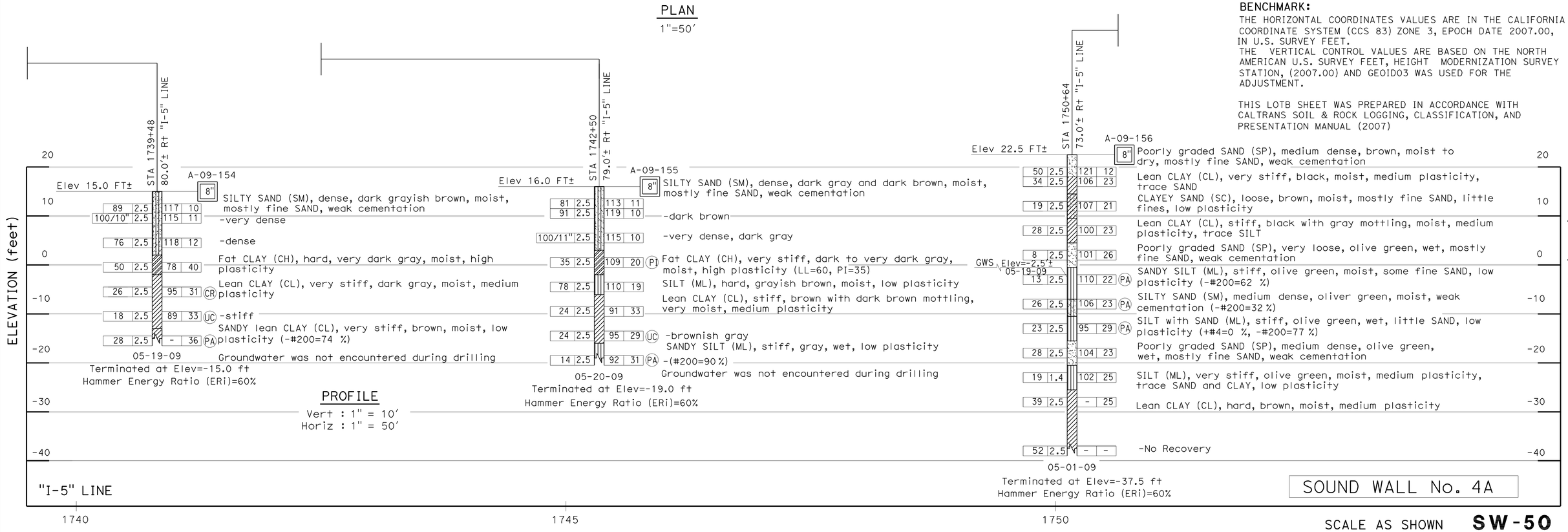

PROFILE
Vert : 1" = 10'
Horiz : 1" = 50'

SOUND WALL No. 4A

SCALE AS SHOWN **SW-50**

DESIGN OVERSIGHT	DRAWN BY O. GOUTHIER	S. DUDDU- A.R. BHARADWAJ FIELD INVESTIGATION BY:	PREPARED FOR THE STATE OF CALIFORNIA DEPARTMENT OF TRANSPORTATION	A. LAM PROJECT ENGINEER	BRIDGE NO. -- / POST MILES --
SIGN OFF DATE	CHECKED BY D. WANG	DATE: MARCH 2009 TO MAY 2009			

I-5 NORTH STOCKTON CORRIDOR IMPROVEMENT

LOG OF TEST BORINGS

OGS GEOTECHNICAL LOG OF TEST BORINGS SHEET (ENGLISH) (REV. 06-01-09)

ORIGINAL SCALE IN INCHES FOR REDUCED PLANS 0 1 2 3

CU 06240
EA 0G4701

DISREGARD PRINTS BEARING EARLIER REVISION DATES 09/28/09 03/15/10

REVISION DATES — SHEET — OF

FILE => a0g470re004.dgn
USERNAME => trphills

USERNAME => trphills DATE PLOTTED => 12-OCT-2010 TIME PLOTTED => 11:22

Dist	COUNTY	ROUTE	POST MILES TOTAL PROJECT	SHEET No.	TOTAL SHEETS
10	SJ	5	25.0/32.7	550	1132

REGISTERED CIVIL ENGINEER 04/21/10 DATE

10-11-10
PLANS APPROVAL DATE

REGISTERED PROFESSIONAL ENGINEER CHUONG NGUYEN No. C46770 Exp. 06/30/11 CIVIL STATE OF CALIFORNIA

THE STATE OF CALIFORNIA OR ITS OFFICERS OR AGENTS SHALL NOT BE RESPONSIBLE FOR THE ACCURACY OR COMPLETENESS OF SCANNED COPIES OF THIS PLAN SHEET.

RAJAPPAN & MEYER
CONSULTING ENGINEERS INC.
1038 LEIGH AVE, SUITE 100
SAN JOSE, CA 95126

SJCOG
555 E. WEBER AVE.
STOCKTON, CA 95202-2804

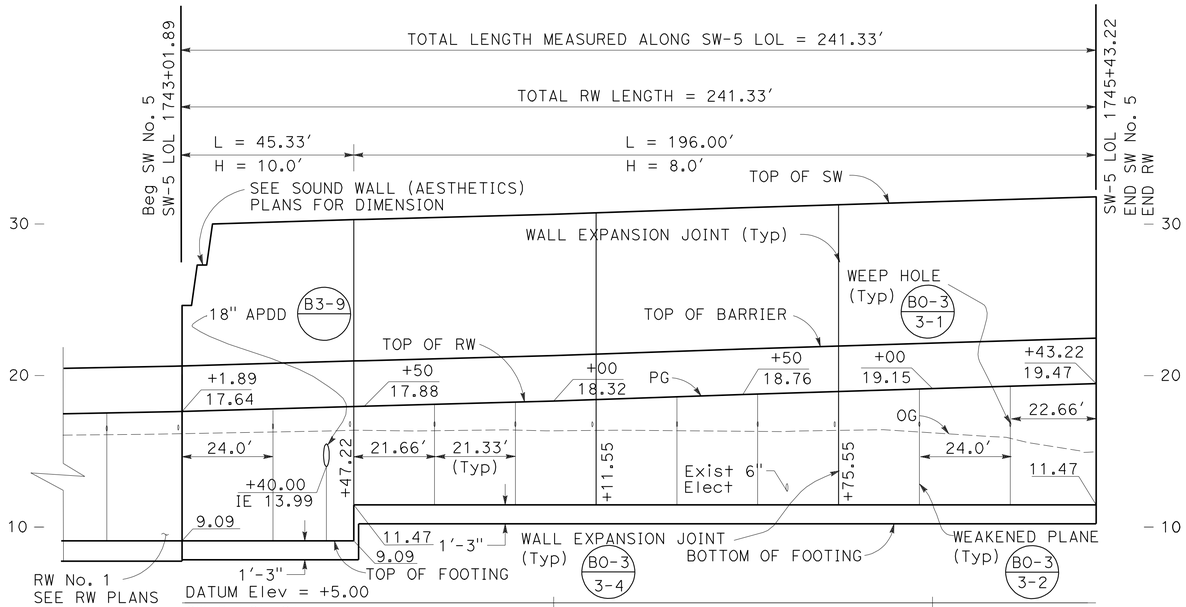

ELEVATION

SCALE: Horiz 1"=20'
Vert 1"=5'

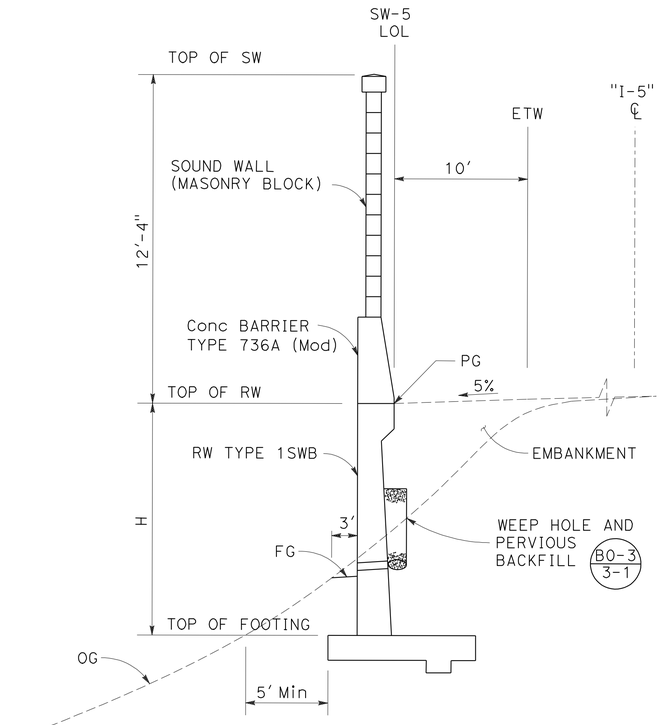

TYPICAL SECTION

SW-5 Sta 1743+01.89 TO Sta 1745+43.22
NO SCALE

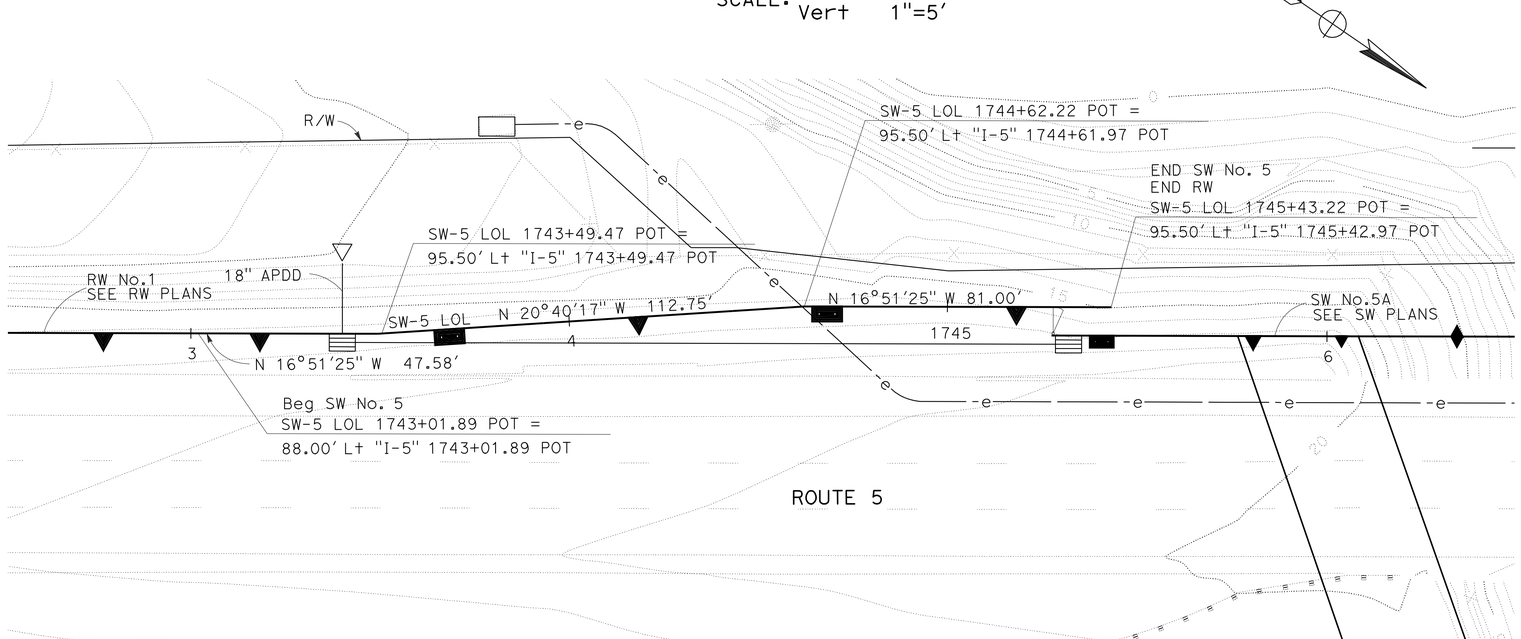

PLAN

SCALE: 1"=20'
THIS PLAN ACCURATE FOR SOUND WALL WORK ONLY

NOTE:

FOR DETAILS OF RW TYPE 1SWB,
SEE RETAINING WALL DEATIL SHEET SW-116.

SOUND WALL PLAN

SOUND WALL No. 5

SCALE AS SHOWN

SW-51

REVISED BY	DATE REVISED
SRILAKSHMI SAKHAMURI	CHUONG NGUYEN
CALCULATED-DESIGNED BY	CHECKED BY
KEITH G. MEYER	

CONSULTANT FUNCTIONAL SUPERVISOR

STATE OF CALIFORNIA - DEPARTMENT OF TRANSPORTATION

Caltrans

LAST REVISION 08-10-10 | DATE PLOTTED => 12-OCT-2010 | TIME PLOTTED => 11:22

Dist	COUNTY	ROUTE	POST MILES TOTAL PROJECT	SHEET No.	TOTAL SHEETS
10	SJ	5	25.0/32.7	551	1132

REGISTERED CIVIL ENGINEER 04/21/10 DATE

10-11-10
PLANS APPROVAL DATE

REGISTERED PROFESSIONAL ENGINEER CHRISTINA D.B.FRANKEL No. C-25730 Exp. 05/31/11 CIVIL STATE OF CALIFORNIA

THE STATE OF CALIFORNIA OR ITS OFFICERS OR AGENTS SHALL NOT BE RESPONSIBLE FOR THE ACCURACY OR COMPLETENESS OF SCANNED COPIES OF THIS PLAN SHEET.

DERIVI CONSTRUCTION & ARCHITECTURE, INC.
924 N. YOSEMITE STREET
STOCKTON, CA 95203

SJCOG
555 E. WEBER AVE.
STOCKTON, CA 95202-2804

BLOCK LEGEND:

Medium Wt / Light Wt — BLOCK A: 'CAP'
8(H)x10(D)*x16(L)
*PROJECT BLOCK 1" EA SIDE
SPLIT FACE BOTH FACES
DARK TAN WITH MEDIUM-SIZED BLACK, DARK BROWN & WHITE AGGREGATE

Medium Wt / Light Wt — BLOCK B: 'WATER'
8(H)x8(D)x16(L)
SPLIT FACE BOTH FACES
DARK TAN WITH MEDIUM-SIZED BLACK, DARK BROWN & WHITE AGGREGATE

Medium Wt — BLOCK C: 'FIELDS'
8(H)x8(D)x16(L)
SPLIT FACE BOTH FACES
3 SCORE ($\frac{3}{8}$") BOTH FACES
DARK TAN WITH MEDIUM-SIZED BLACK, DARK BROWN & WHITE AGGREGATE

Medium Wt — BLOCK D: 'LEVEE'
8(H)x10(D)*x16(L)
*PROJECT BLOCK 1" EA SIDE
PRECISION BLOCK
MEDIUM-LIGHT TAN WITH MEDIUM-SIZED BLACK, RED & WHITE AGGREGATE

Medium Wt / Light Wt — BLOCK G: 'LEVEE 2'
8(H)x8(D)x16(L)
PRECISION BLOCK
MEDIUM-LIGHT TAN WITH MEDIUM-SIZED BLACK, RED & WHITE AGGREGATE

Medium Wt / Light Wt — BLOCK F: 'CITY'
8(H)x8(D)x16(L)
SPLIT FACE BOTH FACES
LIGHT TAN WITH SMALL-SIZED WHITE, GREY & BLACK AGGREGATE

Medium Wt / Light Wt — BLOCK H: 'STREET'
8(H)x8(D)x16(L)
PRECISION BLOCK
1 SCORE ($\frac{3}{8}$") BOTH FACES
DARK GREY

GENERAL NOTES:

1. EACH SOUNDWALL ELEVATION IS ELEVATED INDEPENDENTLY. SEE SOUNDWALL GENERAL PLANS FOR MORE INFORMATION.
2. WHERE CUT BLOCKS ARE REQUIRED, CUT BLOCK SHALL BE NO SMALLER THAN ONE HALF OF A BLOCK, OTHERWISE CUT ADJACENT BLOCK AS WELL.
3. PLACE CORE HOLES (NOT SHOWN) FOR VINE PLANTINGS AT 16' ON CENTER.
4. THE CONTRACTOR SHALL SUBMIT COLOR SAMPLE OF BLOCK TO THE ENGINEER FOR APPROVAL.

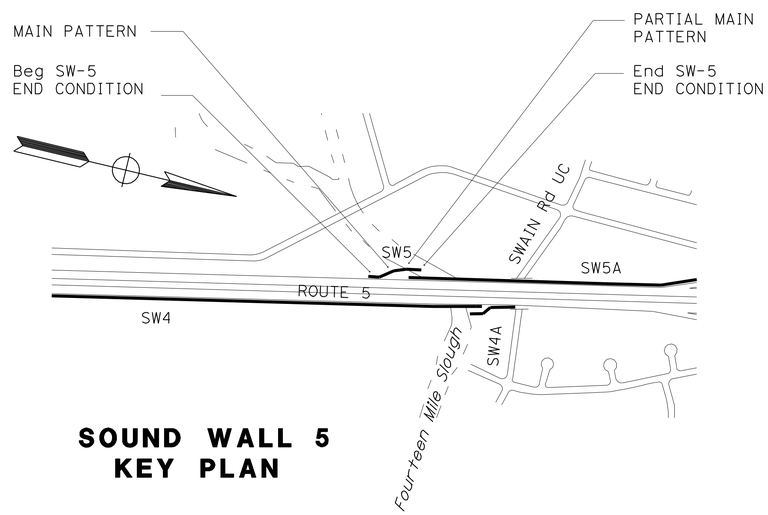

SOUND WALL 5
KEY PLAN

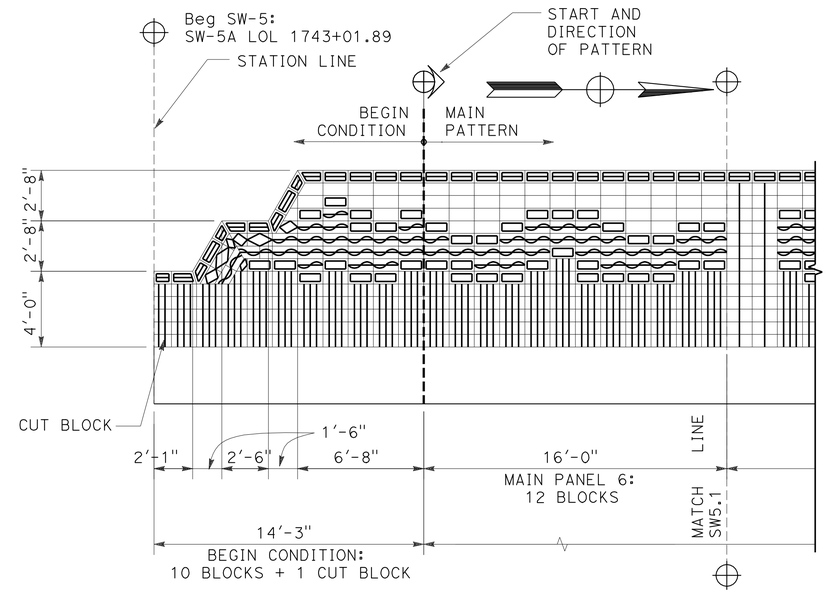

SOUND WALL 5
BEGIN CONDITION

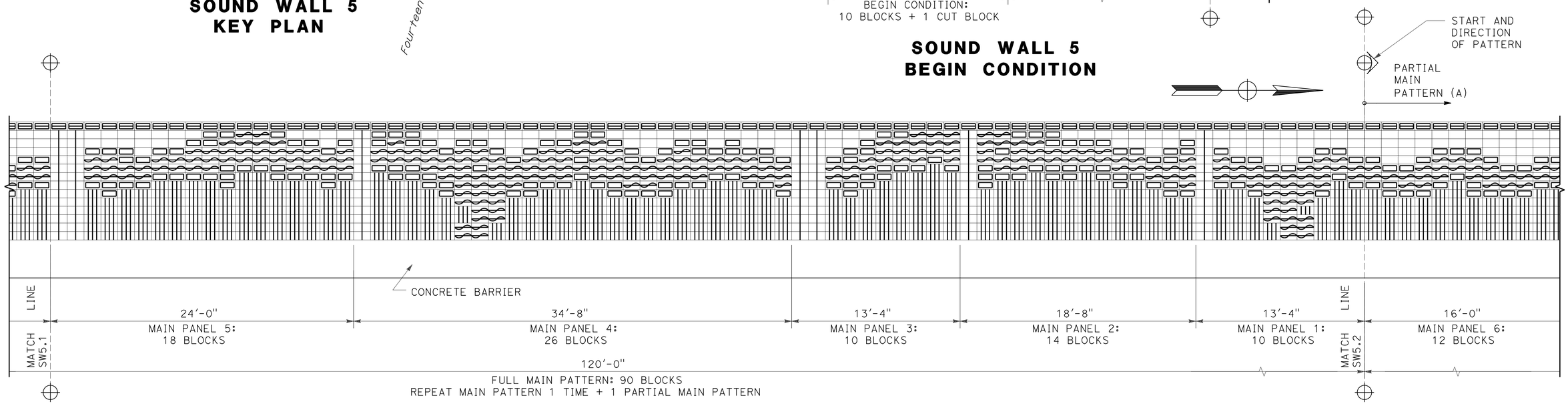

SOUND WALL 5
MAIN PATTERN - TYPICAL

SOUND WALL (AESTHETICS)

SOUND WALL No. 5

NO SCALE

SW-52

THIS PLAN ACCURATE FOR SOUND WALL AESTHETIC TREATMENTS ONLY

STATE OF CALIFORNIA - DEPARTMENT OF TRANSPORTATION
Caltrans

CONSULTANT FUNCTIONAL SUPERVISOR: LINDA M. DEVIVI
CALCULATED-DESIGNED BY: CHRISTINA D. B. FRANKEL
CHECKED BY: LINDA M. DEVIVI
REVISED BY
DATE REVISED

LAST REVISION 07-07-10
DATE PLOTTED => 12-OCT-2010
TIME PLOTTED => 11:22

Dist	COUNTY	ROUTE	POST MILES TOTAL PROJECT	SHEET No.	TOTAL SHEETS
10	SJ	5	25.0/32.7	552	1132

REGISTERED CIVIL ENGINEER DATE 04/21/10

10-11-10
PLANS APPROVAL DATE

REGISTERED PROFESSIONAL ENGINEER
CHRISTINA D.B.FRANKEL
No. C-25730
Exp. 05/31/11
CIVIL
STATE OF CALIFORNIA

THE STATE OF CALIFORNIA OR ITS OFFICERS OR AGENTS SHALL NOT BE RESPONSIBLE FOR THE ACCURACY OR COMPLETENESS OF SCANNED COPIES OF THIS PLAN SHEET.

DERIVI CONSTRUCTION & ARCHITECTURE, INC.
924 N. YOSEMITE STREET
STOCKTON, CA 95203

SJCOG
555 E. WEBER AVE.
STOCKTON, CA 95202-2804

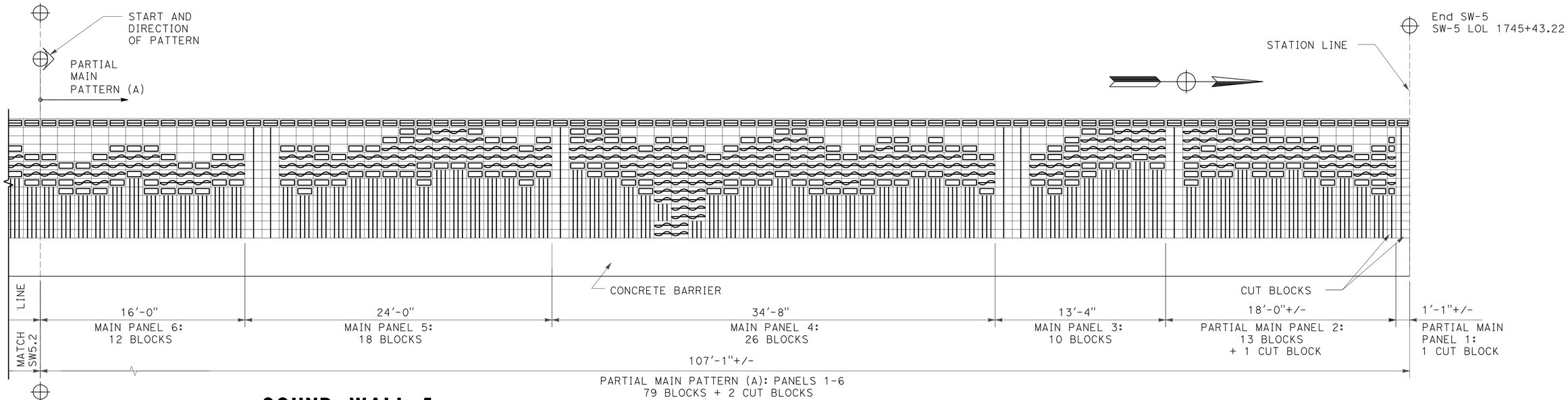

SOUND WALL 5
PARTIAL MAIN PATTERN (A) TO END CONDITION

SOUND WALL (AESTHETICS)

SOUND WALL No. 5

NO SCALE

SW-53

THIS PLAN ACCURATE FOR SOUND WALL AESTHETIC TREATMENTS ONLY

REVISED BY | DATE REVISED
CHRISTINA D. B. FRANKEL | LINDA M. DEVIVI
CALCULATED-DESIGNED BY | CHECKED BY
CONSULTANT FUNCTIONAL SUPERVISOR: LINDA M. DEVIVI
STATE OF CALIFORNIA - DEPARTMENT OF TRANSPORTATION
Caltrans

LAST REVISION 07-07-10 | DATE PLOTTED => 12-OCT-2010 | TIME PLOTTED => 11:22

DIST	COUNTY	ROUTE	POST MILES TOTAL PROJECT	SHEET No	TOTAL SHEETS
10	SJ	5	25.0/32.7	553	1132

GEOTECHNICAL PROFESSIONAL — DATE 04/21/10

10-11-10
PLANS APPROVAL DATE

REGISTERED GEOLOGIST — GARY PARIKH — No. G.E. 666 — Exp. 12/31/11 — CERTIFIED ENGINEERING GEOLOGIST — STATE OF CALIFORNIA

The State of California or its officers or agents shall not be responsible for the accuracy or completeness of scanned copies of this plan sheet.

SJCOG
555 WEBER AVE.
STOCKTON, CA 95202-2804

PARIKH CONSULTANTS, INC.
2360 QUME DRIVE, SUITE A
SAN JOSE, CA 95131

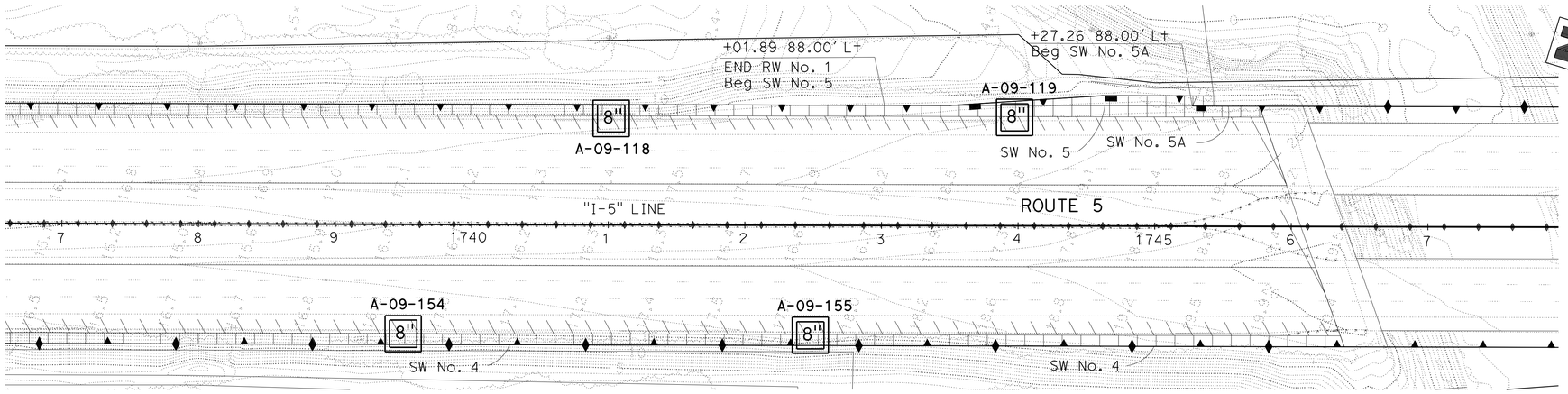

PLAN
1"=50'

BENCHMARK:
THE HORIZONTAL COORDINATES VALUES ARE IN THE CALIFORNIA COORDINATE SYSTEM (CCS 83) ZONE 3, EPOCH DATE 2007.00, IN U.S. SURVEY FEET.
THE VERTICAL CONTROL VALUES ARE BASED ON THE NORTH AMERICAN U.S. SURVEY FEET, HEIGHT MODERNIZATION SURVEY STATION, (2007.00) AND GEOID03 WAS USED FOR THE ADJUSTMENT.

THIS LOTB SHEET WAS PREPARED IN ACCORDANCE WITH CALTRANS SOIL & ROCK LOGGING, CLASSIFICATION, AND PRESENTATION MANUAL (2007)

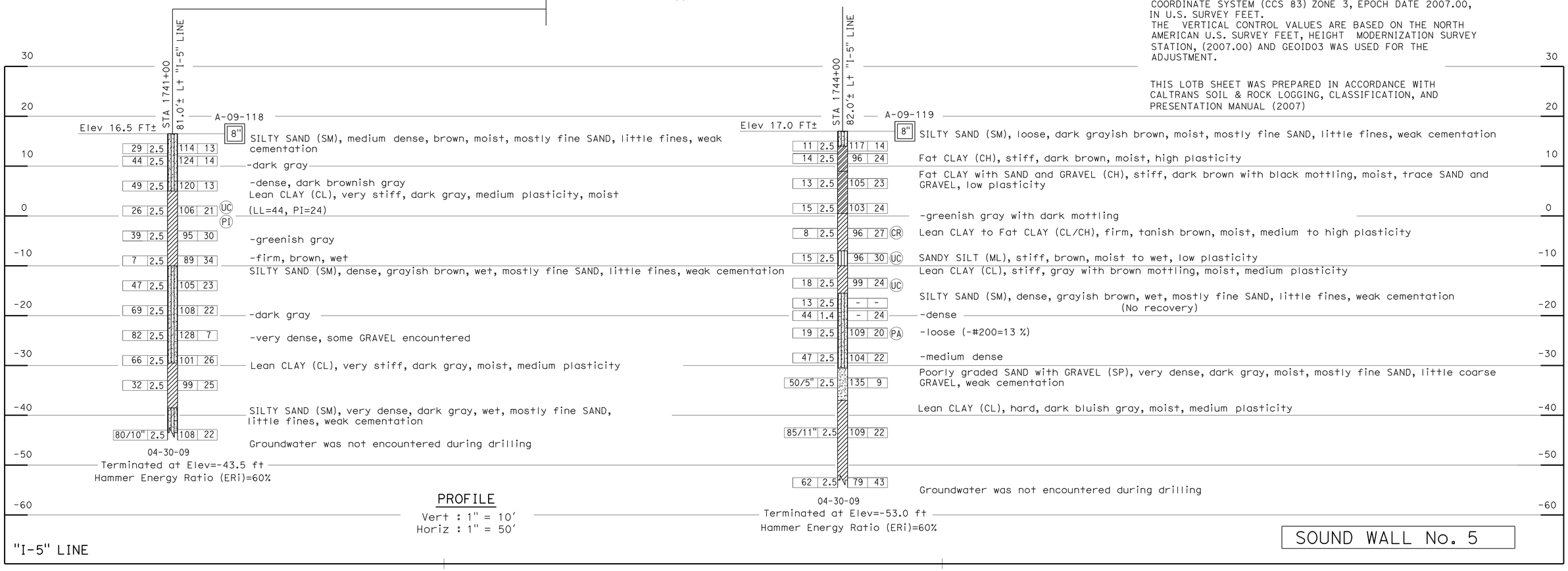

PROFILE
Vert : 1" = 10'
Horiz : 1" = 50'

SOUND WALL No. 5

SCALE AS SHOWN **SW-54**

DESIGN OVERSIGHT	DRAWN BY O. GOUTHIER	S. DUDDU- A.R. BHARADWAJ	PREPARED FOR THE STATE OF CALIFORNIA DEPARTMENT OF TRANSPORTATION	A. LAM	BRIDGE NO. --
SIGN OFF DATE	CHECKED BY D. WANG	FIELD INVESTIGATION BY: DATE: MARCH 2009 TO MAY 2009		PROJECT ENGINEER	POST MILES --

I-5 NORTH STOCKTON CORRIDOR IMPROVEMENT
LOG OF TEST BORINGS

OGS GEOTECHNICAL LOG OF TEST BORINGS SHEET (ENGLISH) (REV. 06-01-09)

ORIGINAL SCALE IN INCHES FOR REDUCED PLANS 0 1 2 3

CU 06240
EA 0G4701

DISREGARD PRINTS BEARING EARLIER REVISION DATES 09/26/09 03/15/10

REVISION DATES — SHEET — OF

FILE => a0g470rf004.dgn
USERNAME => s135318

USERNAME => s135318 DATE PLOTTED => 12-OCT-2010 TIME PLOTTED => 13:13

Dist	COUNTY	ROUTE	POST MILES TOTAL PROJECT	SHEET No.	TOTAL SHEETS
10	SJ	5	25.0/32.7	554	1132

REGISTERED CIVIL ENGINEER 04/21/10 DATE

10-11-10
PLANS APPROVAL DATE

REGISTERED PROFESSIONAL ENGINEER CHUONG NGUYEN No. C46770 Exp. 06/30/11 CIVIL STATE OF CALIFORNIA

THE STATE OF CALIFORNIA OR ITS OFFICERS OR AGENTS SHALL NOT BE RESPONSIBLE FOR THE ACCURACY OR COMPLETENESS OF SCANNED COPIES OF THIS PLAN SHEET.

RAJAPPAN & MEYER
CONSULTING ENGINEERS INC.
1038 LEIGH AVE, SUITE 100
SAN JOSE, CA 95126

SJCOG
555 E. WEBER AVE.
STOCKTON, CA 95202-2804

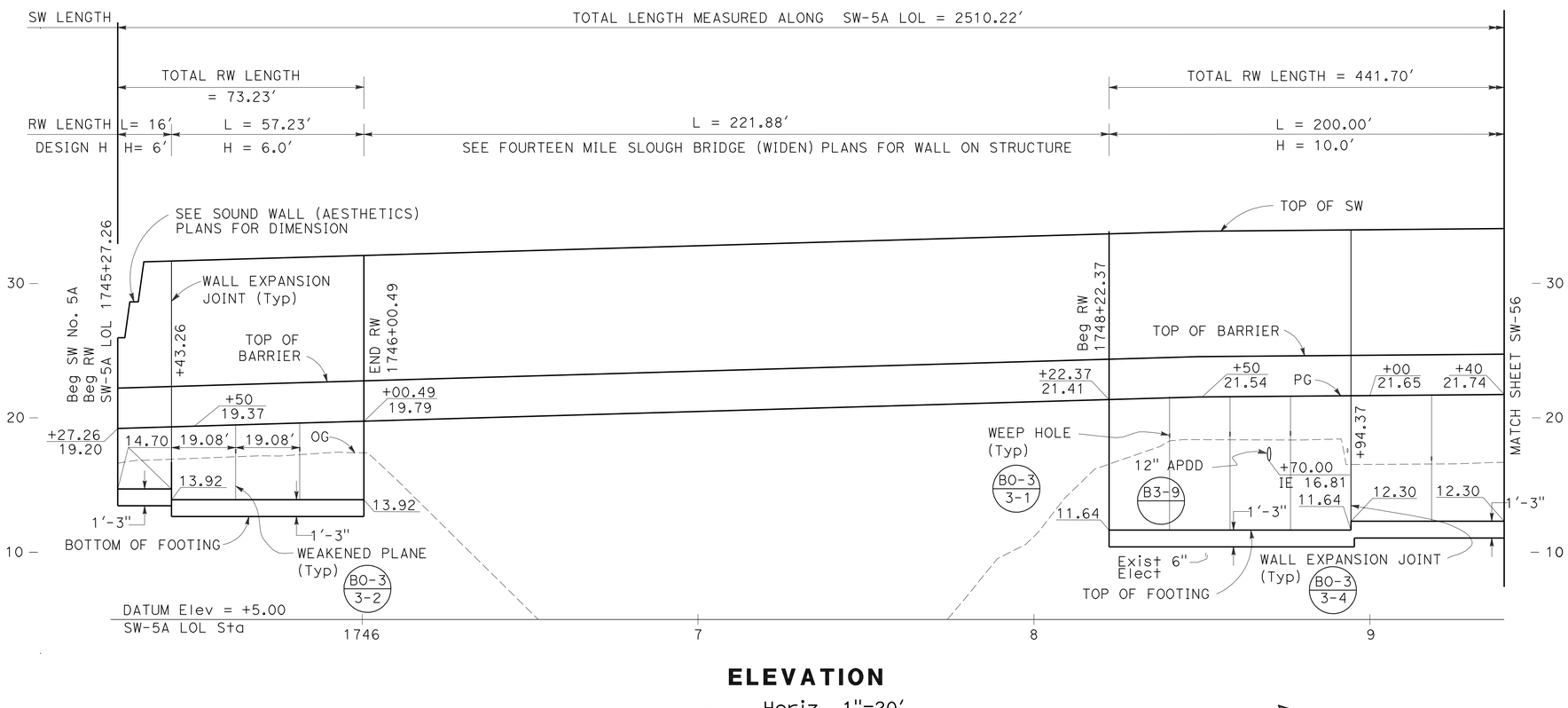

ELEVATION

SCALE: Horiz 1"=20′
Vert 1"=5′

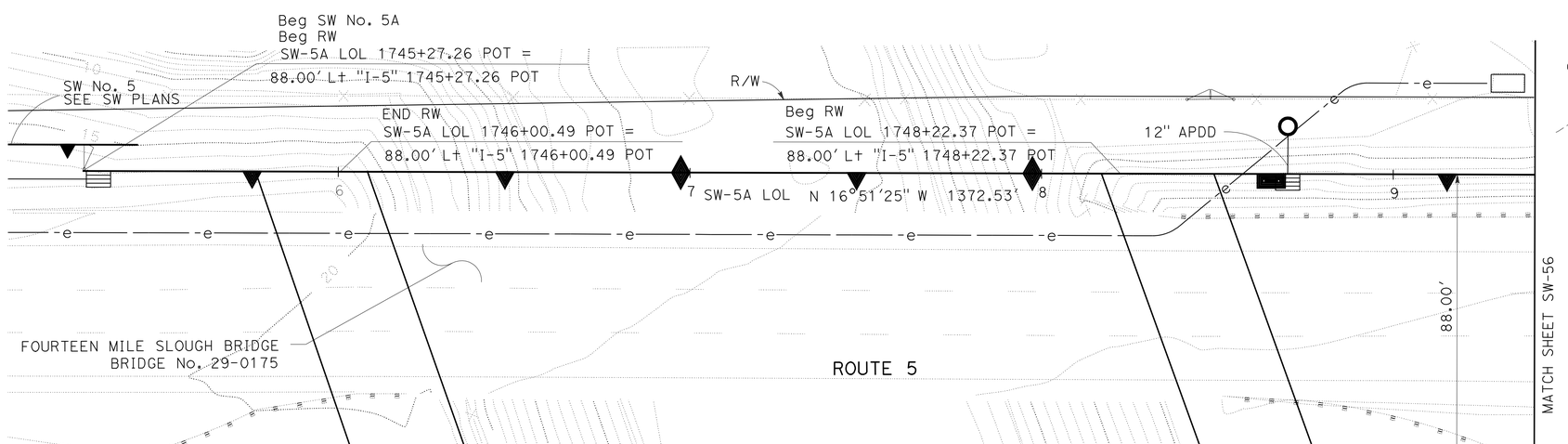

PLAN

SCALE: 1"=20′

THIS PLAN ACCURATE FOR SOUND WALL WORK ONLY

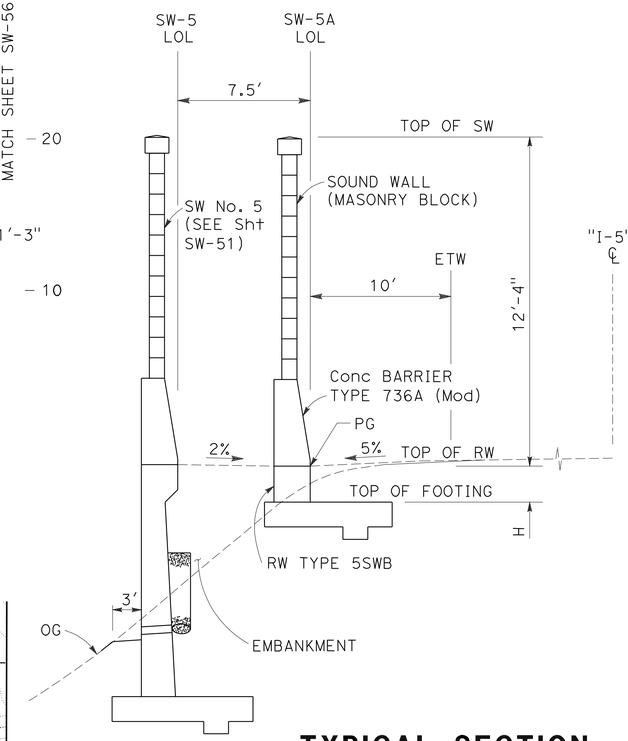

TYPICAL SECTION

SW-5A Sta 1745+27.26 TO Sta 1745+43.26

NO SCALE

NOTE:

FOR DETAILS OF RW TYPE 5SWB, SEE RETAINING WALL DETAIL SHEET SW-117.

SOUND WALL PLAN

SOUND WALL No. 5A

SCALE AS SHOWN

SW-55

STATE OF CALIFORNIA - DEPARTMENT OF TRANSPORTATION
Caltrans

CONSULTANT FUNCTIONAL SUPERVISOR: KEITH G. MEYER
CALCULATED-DESIGNED BY: SRILAKSHMI SAKHAMURI
CHECKED BY: CHUONG NGUYEN
REVISED BY / DATE REVISED

LAST REVISION 08-10-10 | DATE PLOTTED => 12-OCT-2010 | TIME PLOTTED => 13:13

Dist	COUNTY	ROUTE	POST MILES TOTAL PROJECT	SHEET No.	TOTAL SHEETS
10	SJ	5	25.0/32.7	555	1132

REGISTERED CIVIL ENGINEER 04/21/10 DATE

10-11-10
PLANS APPROVAL DATE

REGISTERED PROFESSIONAL ENGINEER CHUONG NGUYEN No. C46770 Exp. 06/30/11 CIVIL STATE OF CALIFORNIA

THE STATE OF CALIFORNIA OR ITS OFFICERS OR AGENTS SHALL NOT BE RESPONSIBLE FOR THE ACCURACY OR COMPLETENESS OF SCANNED COPIES OF THIS PLAN SHEET.

RAJAPPAN & MEYER
CONSULTING ENGINEERS INC.
1038 LEIGH AVE, SUITE 100
SAN JOSE, CA 95126

SJCOG
555 E. WEBER AVE.
STOCKTON, CA 95202-2804

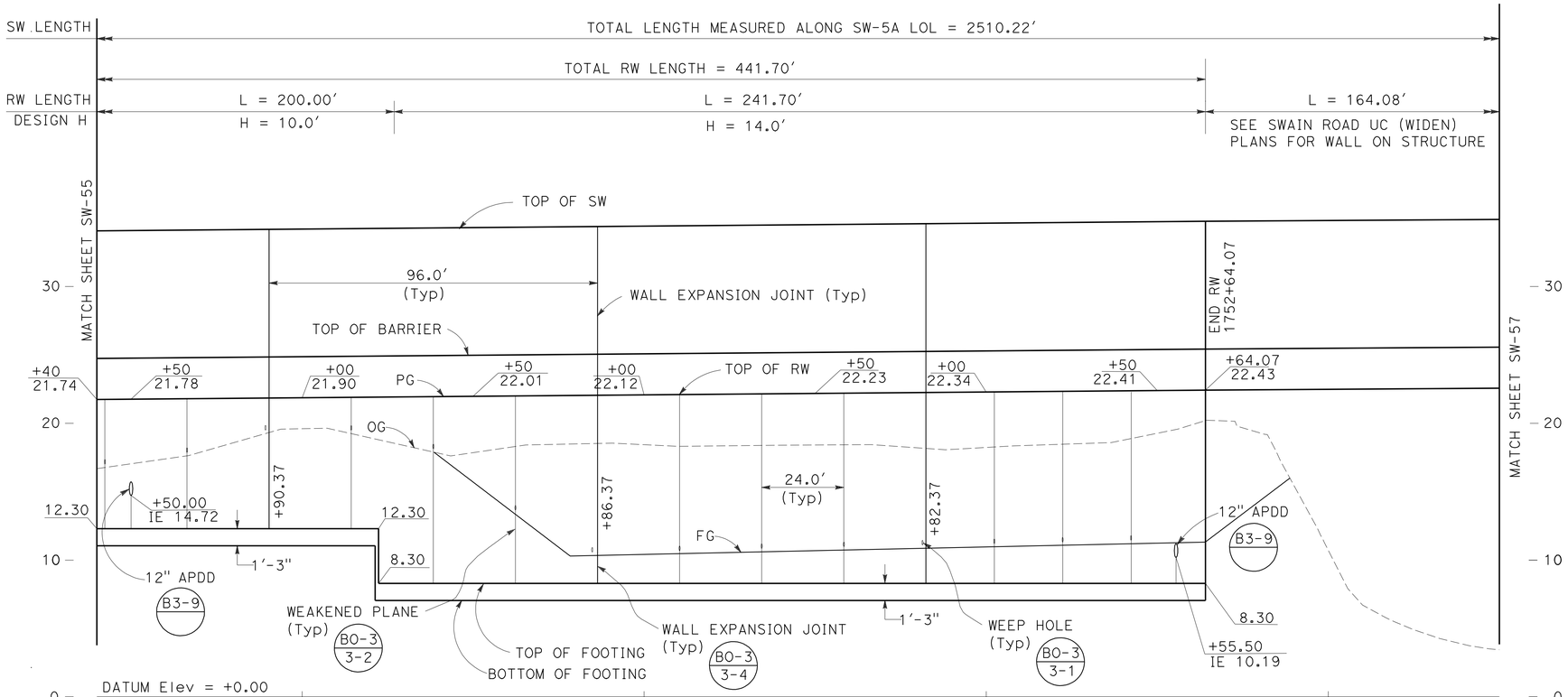

ELEVATION

SCALE: Horiz 1"=20'
Vert 1"=5'

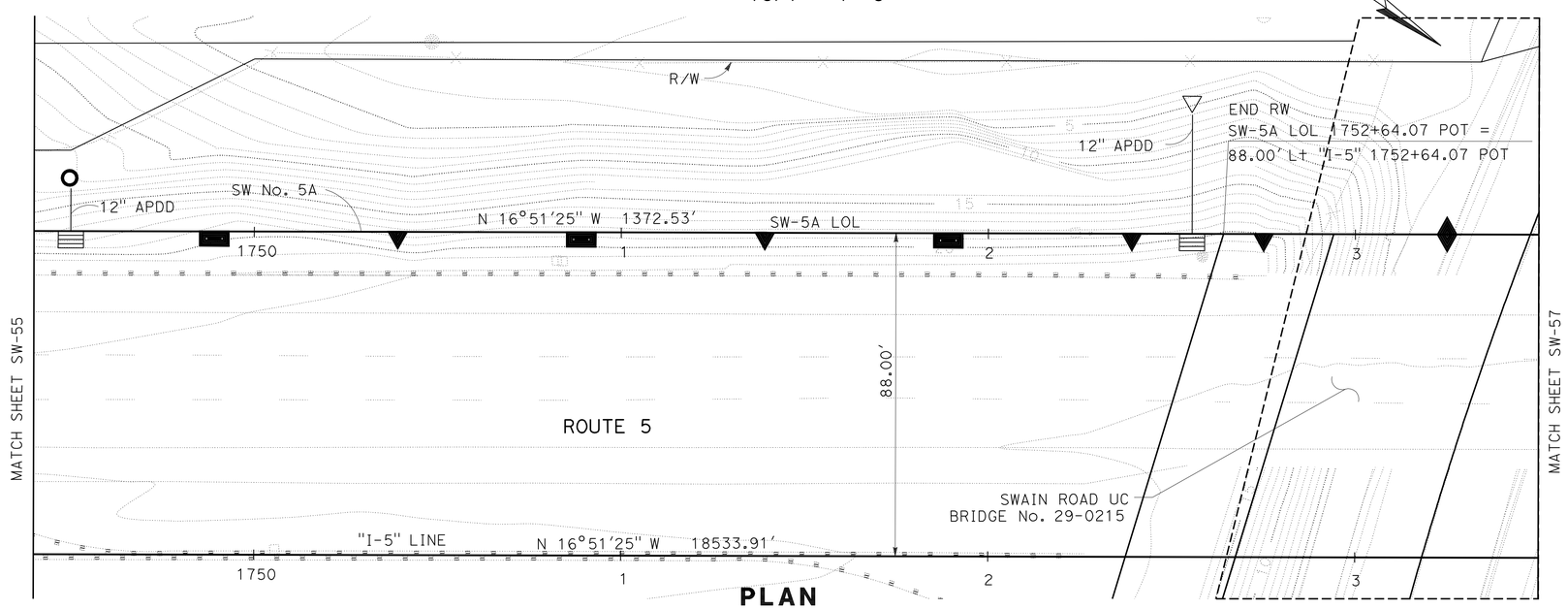

PLAN

SCALE: 1"=20'

THIS PLAN ACCURATE FOR SOUND WALL WORK ONLY

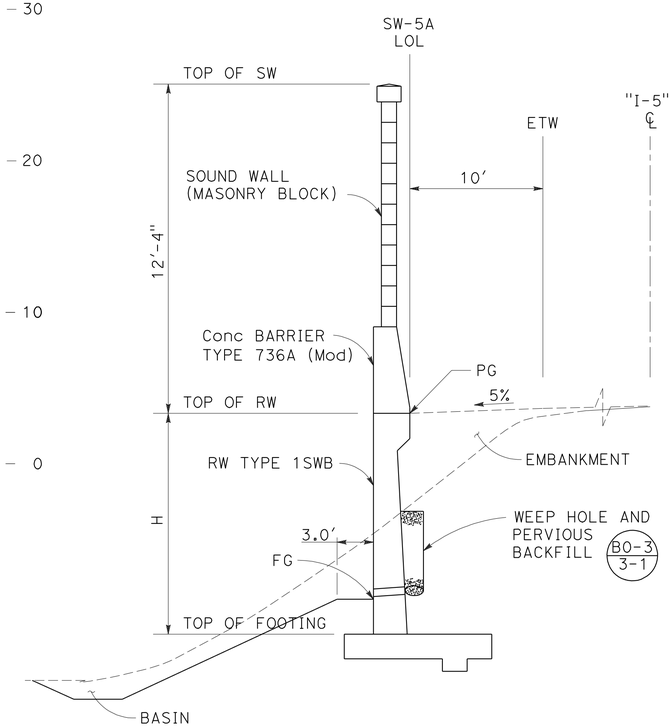

TYPICAL SECTION

SW-5A Sta 1750+38.53 TO Sta 1752+64.07
SW-5A sta 1754+28.15 TO Sta 1756+85.84

NO SCALE

NOTE:

FOR DETAILS OF RW TYPE 1SWB,
SEE RETAINING WALL DETAIL SHEET SW-116.

SOUND WALL PLAN
SOUND WALL No. 5A

SCALE AS SHOWN

SW-56

STATE OF CALIFORNIA - DEPARTMENT OF TRANSPORTATION
Caltrans

CONSULTANT FUNCTIONAL SUPERVISOR: KEITH G. MEYER
CALCULATED-DESIGNED BY: SRILAKSHMI SAKHAMURI
CHECKED BY: CHUONG NGUYEN
REVISED BY
DATE REVISED

LAST REVISION 08-10-10
DATE PLOTTED => 12-OCT-2010
TIME PLOTTED => 13:13

Dist	COUNTY	ROUTE	POST MILES TOTAL PROJECT	SHEET No.	TOTAL SHEETS
10	SJ	5	25.0/32.7	556	1132

REGISTERED CIVIL ENGINEER 04/21/10 DATE

10-11-10
PLANS APPROVAL DATE

REGISTERED PROFESSIONAL ENGINEER CHUONG NGUYEN No. C46770 Exp. 06/30/11 CIVIL STATE OF CALIFORNIA

THE STATE OF CALIFORNIA OR ITS OFFICERS OR AGENTS SHALL NOT BE RESPONSIBLE FOR THE ACCURACY OR COMPLETENESS OF SCANNED COPIES OF THIS PLAN SHEET.

RAJAPPAN & MEYER
CONSULTING ENGINEERS INC.
1038 LEIGH AVE, SUITE 100
SAN JOSE, CA 95126

SJCOG
555 E. WEBER AVE.
STOCKTON, CA 95202-2804

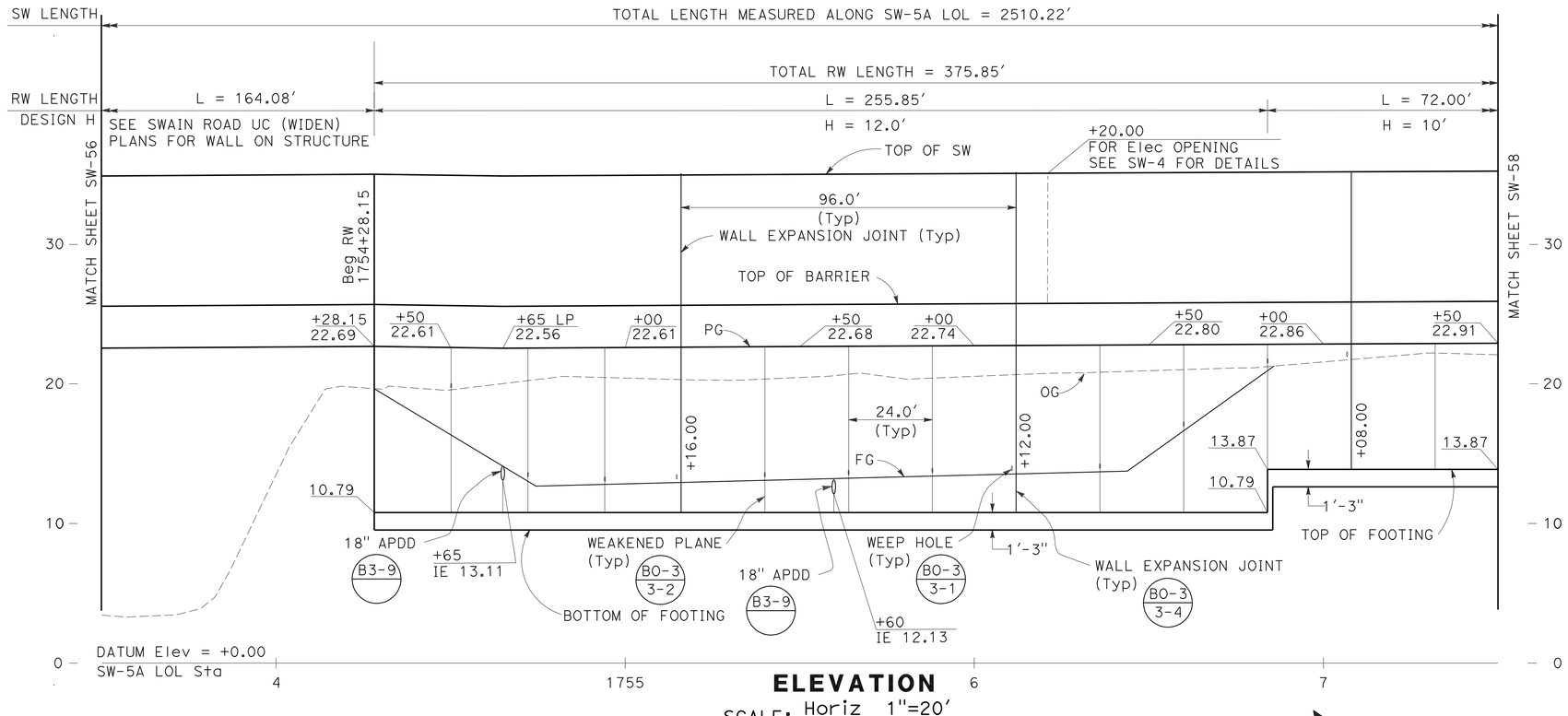

ELEVATION

SCALE: Horiz 1"=20'
Vert 1"=5'

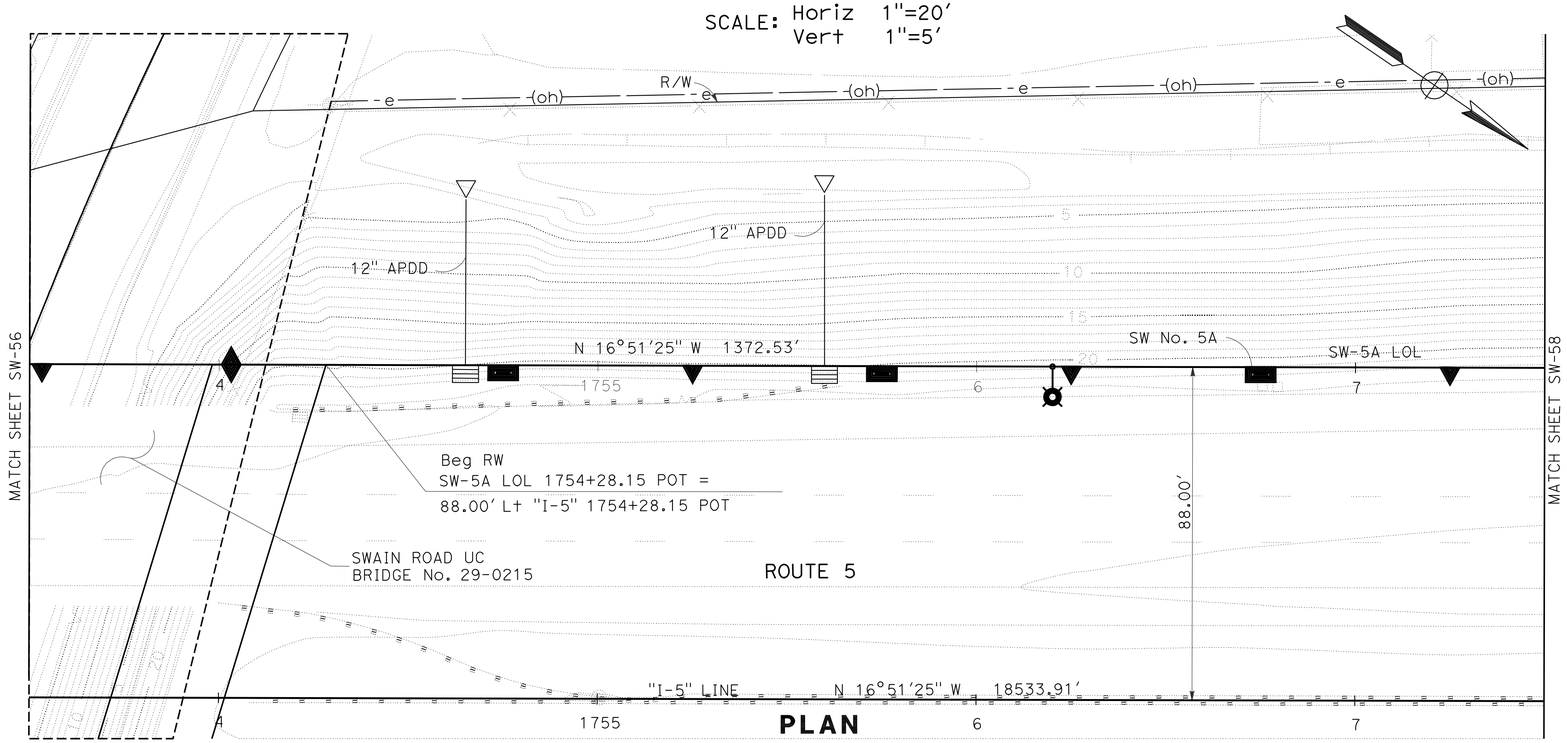

PLAN

SCALE: 1"=20'

THIS PLAN ACCURATE FOR SOUND WALL WORK ONLY

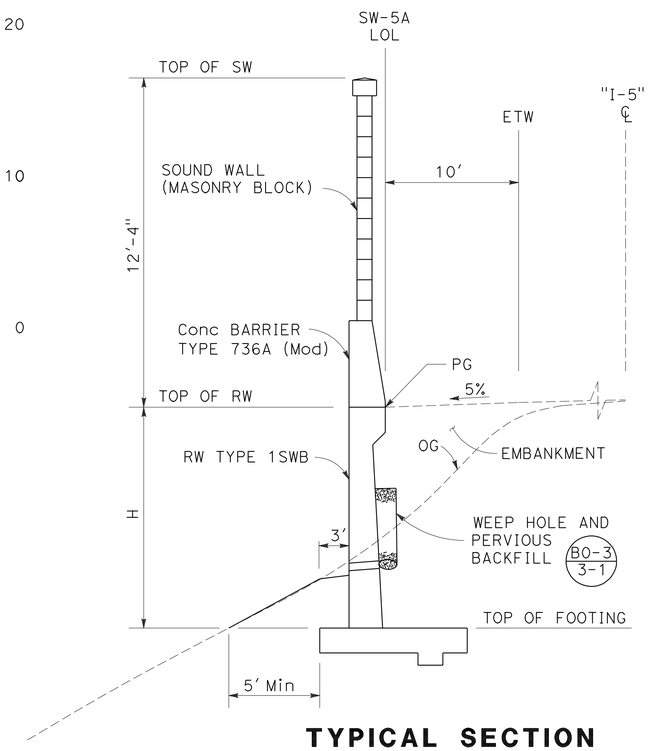

TYPICAL SECTION

SW-5A Sta 1745+43.26 TO Sta 1746+00.49
SW-5A Sta 1748+22.37 TO Sta 1750+38.53
SW-5A Sta 1756+85.84 TO Sta 1758+04.00

NO SCALE

NOTE:

FOR DETAILS OF RW TYPE 1SWB,
SEE RETAINING WALL DETAIL SHEET SW-116.

SOUND WALL PLAN
SOUND WALL No. 5A

SCALE AS SHOWN

SW-57

STATE OF CALIFORNIA - DEPARTMENT OF TRANSPORTATION
Caltrans

CONSULTANT FUNCTIONAL SUPERVISOR: KEITH G. MEYER
CALCULATED-DESIGNED BY: SRILAKSHMI SAKHAMURI
CHECKED BY: CHUONG NGUYEN
REVISED BY
DATE REVISED

LAST REVISION 08-10-10
DATE PLOTTED => 12-OCT-2010
TIME PLOTTED => 13:13

Dist	COUNTY	ROUTE	POST MILES TOTAL PROJECT	SHEET No.	TOTAL SHEETS
10	SJ	5	25.0/32.7	557	1132

REGISTERED CIVIL ENGINEER 04/21/10 DATE

10-11-10
PLANS APPROVAL DATE

REGISTERED PROFESSIONAL ENGINEER CHUONG NGUYEN No. C46770 Exp. 06/30/11 CIVIL STATE OF CALIFORNIA

THE STATE OF CALIFORNIA OR ITS OFFICERS OR AGENTS SHALL NOT BE RESPONSIBLE FOR THE ACCURACY OR COMPLETENESS OF SCANNED COPIES OF THIS PLAN SHEET.

RAJAPPAN & MEYER
CONSULTING ENGINEERS INC.
1038 LEIGH AVE, SUITE 100
SAN JOSE, CA 95126

SJCOG
555 E. WEBER AVE.
STOCKTON, CA 95202-2804

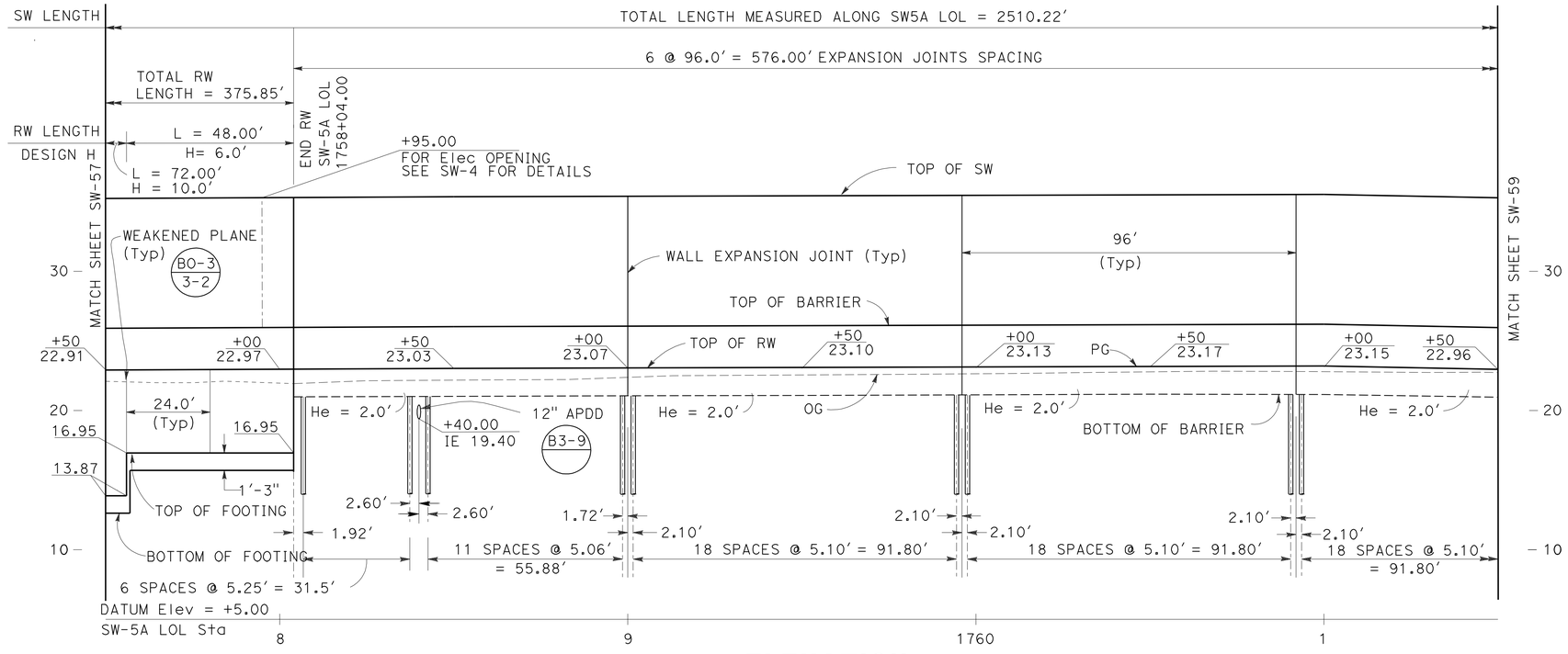

ELEVATION

SCALE: Horiz 1"=20'
Vert 1"=5'

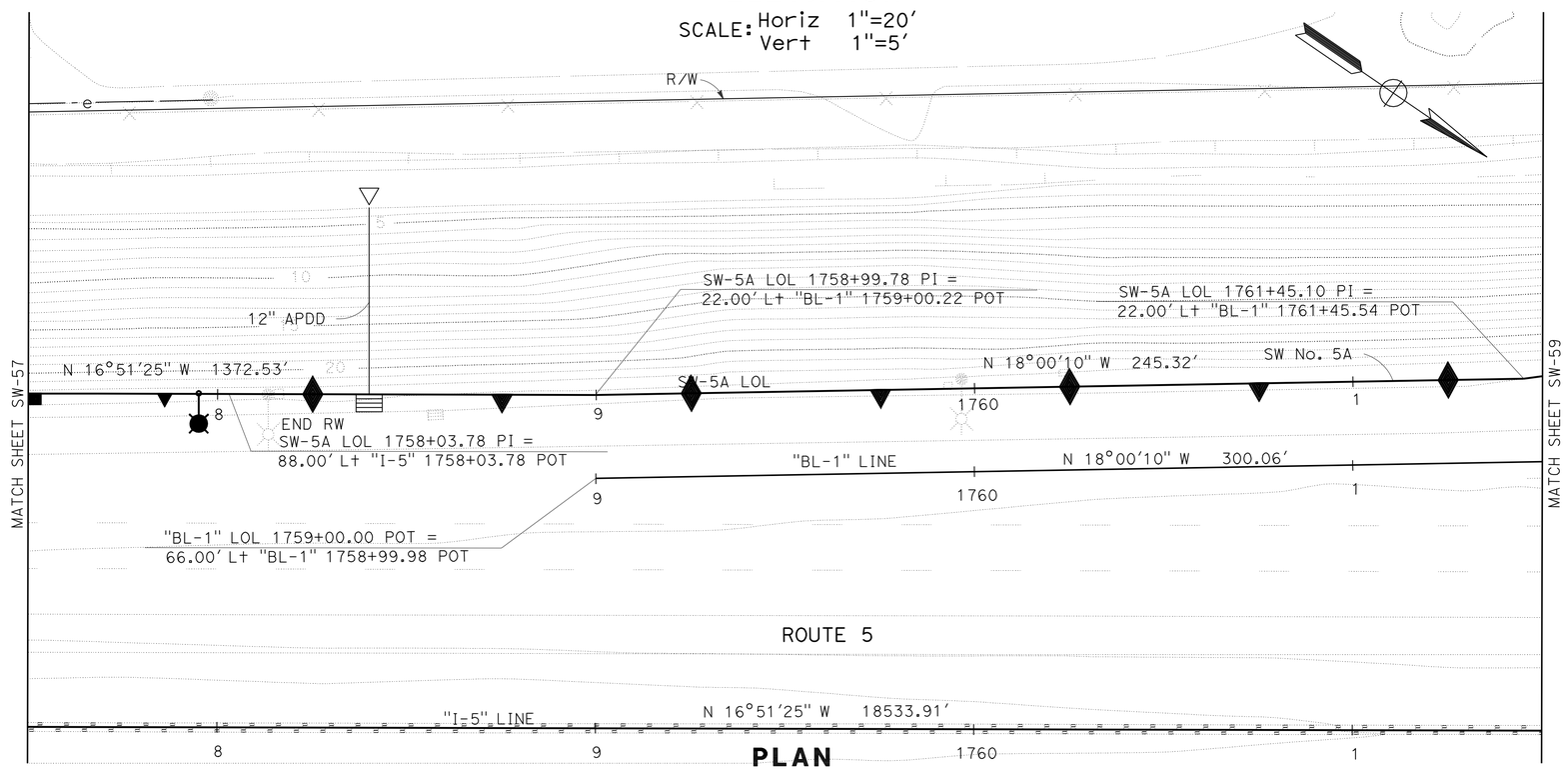

PLAN

SCALE: 1"=20'
THIS PLAN ACCURATE FOR SOUND WALL WORK ONLY

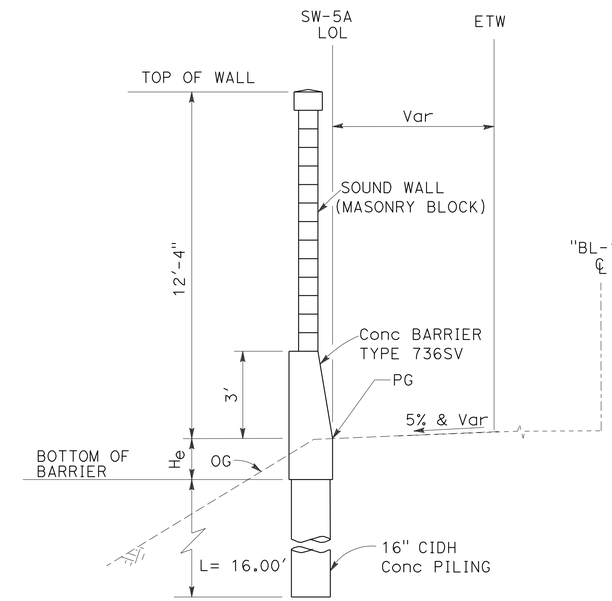

TYPICAL SECTION

SW No.5A
SW-5A Sta 1758+03.78 TO Sta 1770+37.48
NO SCALE

NOTE:

FOR REINFORCEMENT AND OTHER DETAILS NOT SHOWN, SEE Std PLAN

B15-6 B15-7 B15-8

SOUND WALL PLAN

SOUND WALL No. 5A

SCALE AS SHOWN

SW-58

STATE OF CALIFORNIA - DEPARTMENT OF TRANSPORTATION
Caltrans

CONSULTANT FUNCTIONAL SUPERVISOR: KEITH G. MEYER
CALCULATED-DESIGNED BY: SRILAKSHMI SAKHAMURI
CHECKED BY: CHUONG NGUYEN
REVISED BY / DATE REVISED

LAST REVISION 07-07-10
DATE PLOTTED => 12-OCT-2010
TIME PLOTTED => 13:13

Dist	COUNTY	ROUTE	POST MILES TOTAL PROJECT	SHEET No.	TOTAL SHEETS
10	SJ	5	25.0/32.7	558	1132

REGISTERED CIVIL ENGINEER 04/21/10 DATE

10-11-10
PLANS APPROVAL DATE

REGISTERED PROFESSIONAL ENGINEER CHUONG NGUYEN No. C46770 Exp. 06/30/11 CIVIL STATE OF CALIFORNIA

THE STATE OF CALIFORNIA OR ITS OFFICERS OR AGENTS SHALL NOT BE RESPONSIBLE FOR THE ACCURACY OR COMPLETENESS OF SCANNED COPIES OF THIS PLAN SHEET.

RAJAPPAN & MEYER
CONSULTING ENGINEERS INC.
1038 LEIGH AVE, SUITE 100
SAN JOSE, CA 95126

SJCOG
555 E. WEBER AVE.
STOCKTON, CA 95202-2804

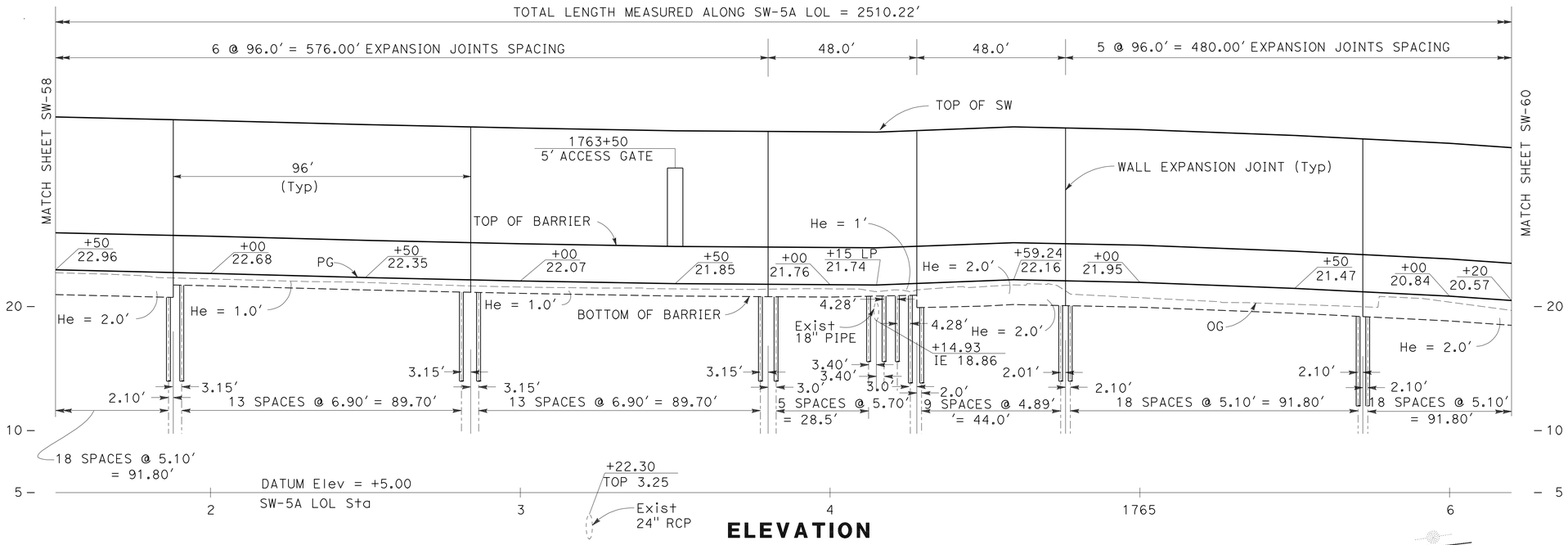

ELEVATION

SCALE: Horiz 1"=20'
Vert 1"=5'

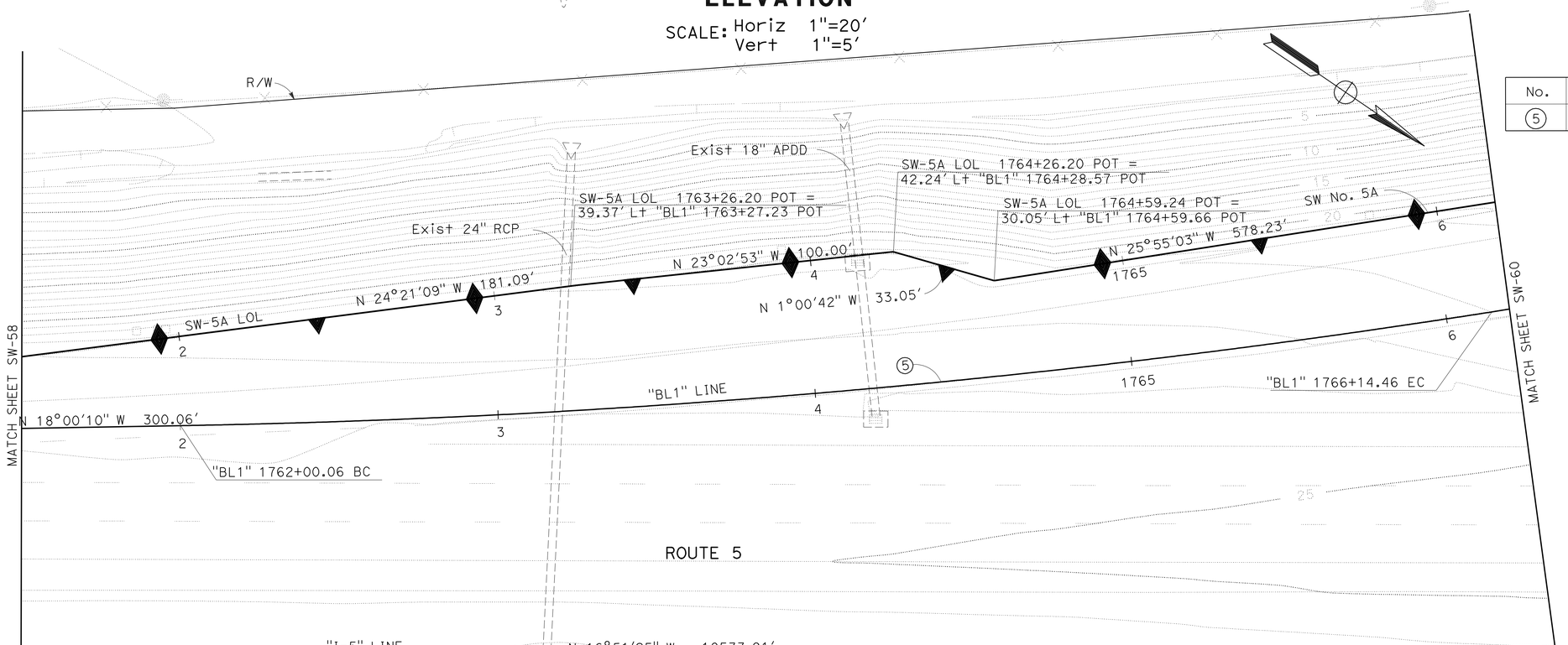

PLAN

SCALE: 1"=20'

THIS PLAN ACCURATE FOR SOUND WALL WORK ONLY

CURVE DATA

No.	RADIUS	DELTA	TANGENT	LENGTH
5	3000.00'	7°54'51.8"	207.53'	414.40'

SOUND WALL PLAN
SOUND WALL No. 5A

SCALE AS SHOWN

SW-59

STATE OF CALIFORNIA - DEPARTMENT OF TRANSPORTATION
Caltrans

CONSULTANT FUNCTIONAL SUPERVISOR: KEITH G. MEYER
CALCULATED-DESIGNED BY: SRILAKSHMI SAKHAMURI
CHECKED BY: CHUONG NGUYEN
REVISED BY
DATE REVISED

LAST REVISION DATE PLOTTED => 12-OCT-2010
TIME PLOTTED => 13:13
07-07-10

Dist	COUNTY	ROUTE	POST MILES TOTAL PROJECT	SHEET No.	TOTAL SHEETS
10	SJ	5	25.0/32.7	559	1132

REGISTERED CIVIL ENGINEER 04/21/10 DATE

10-11-10
PLANS APPROVAL DATE

REGISTERED PROFESSIONAL ENGINEER CHUONG NGUYEN No. C46770 Exp. 06/30/11 CIVIL STATE OF CALIFORNIA

THE STATE OF CALIFORNIA OR ITS OFFICERS OR AGENTS SHALL NOT BE RESPONSIBLE FOR THE ACCURACY OR COMPLETENESS OF SCANNED COPIES OF THIS PLAN SHEET.

RAJAPPAN & MEYER
CONSULTING ENGINEERS INC.
1038 LEIGH AVE, SUITE 100
SAN JOSE, CA 95126

SJCOG
555 E. WEBER AVE.
STOCKTON, CA 95202-2804

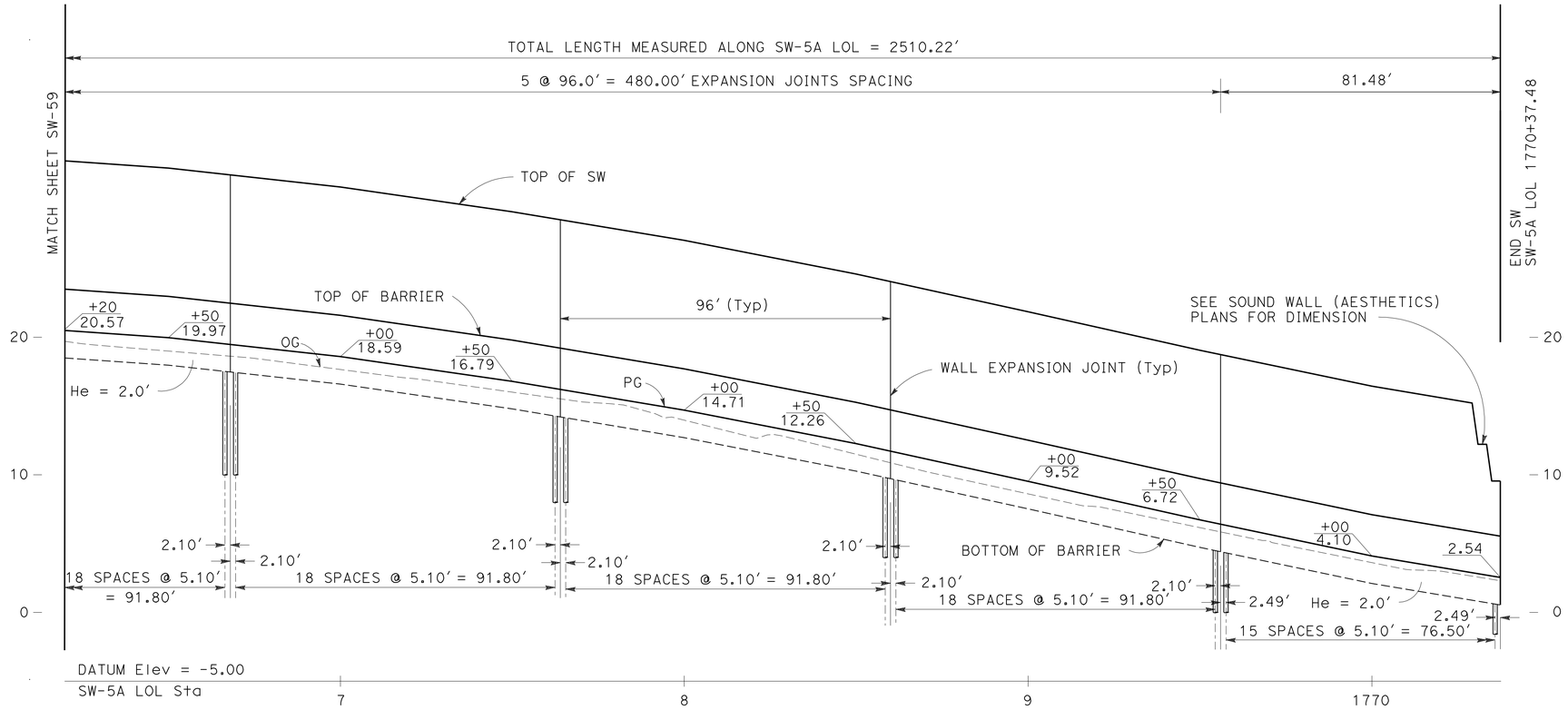

ELEVATION

SCALE: Horiz 1"=20'
Vert 1"=5'

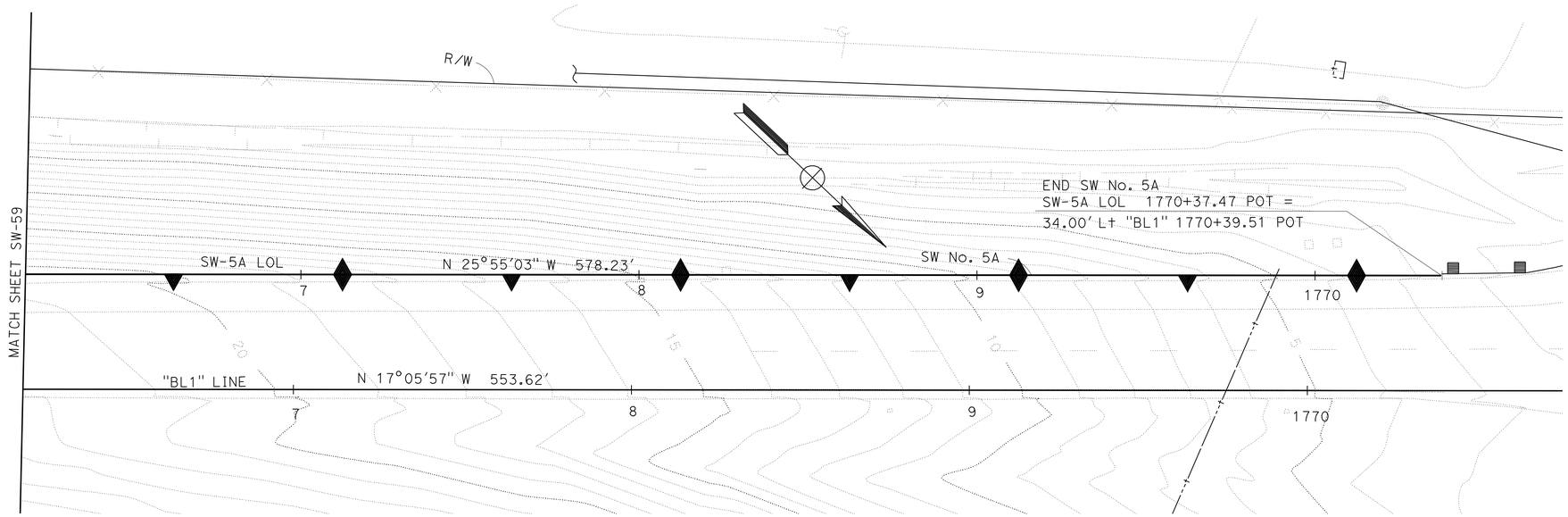

PLAN

SCALE: 1"=20'

THIS PLAN ACCURATE FOR SOUND WALL WORK ONLY

SOUND WALL PLAN

SOUND WALL No. 5A

SCALE AS SHOWN

SW-60

STATE OF CALIFORNIA - DEPARTMENT OF TRANSPORTATION
Caltrans

CONSULTANT FUNCTIONAL SUPERVISOR: KEITH G. MEYER
CALCULATED-DESIGNED BY: SRILAKSHMI SAKHAMURI
CHECKED BY: CHUONG NGUYEN
REVISED BY
DATE REVISED

LAST REVISION 07-07-10
DATE PLOTTED => 12-OCT-2010
TIME PLOTTED => 13:13

Dist	COUNTY	ROUTE	POST MILES TOTAL PROJECT	SHEET No.	TOTAL SHEETS
10	SJ	5	25.0/32.7	560	1132

REGISTERED CIVIL ENGINEER 04/21/10 DATE

10-11-10
PLANS APPROVAL DATE

REGISTERED PROFESSIONAL ENGINEER CHRISTINA D.B.FRANKEL No. C-25730 Exp. 05/31/11 CIVIL STATE OF CALIFORNIA

THE STATE OF CALIFORNIA OR ITS OFFICERS OR AGENTS SHALL NOT BE RESPONSIBLE FOR THE ACCURACY OR COMPLETENESS OF SCANNED COPIES OF THIS PLAN SHEET.

DERIVI CONSTRUCTION & ARCHITECTURE, INC.
924 N. YOSEMITE STREET
STOCKTON, CA 95203

SJCOG
555 E. WEBER AVE.
STOCKTON, CA 95202-2804

BLOCK LEGEND:

Medium W† / Light W† — BLOCK A: 'CAP'
8(H)x10(D)*x16(L)
*PROJECT BLOCK 1" EA SIDE
SPLIT FACE BOTH FACES
DARK TAN WITH MEDIUM-SIZED BLACK, DARK BROWN & WHITE AGGREGATE

Medium W† / Light W† — BLOCK B: 'WATER'
8(H)x8(D)x16(L)
SPLIT FACE BOTH FACES
DARK TAN WITH MEDIUM-SIZED BLACK, DARK BROWN & WHITE AGGREGATE

Medium W† — BLOCK C: 'FIELDS'
8(H)x8(D)x16(L)
SPLIT FACE BOTH FACES
3 SCORE (3/8") BOTH FACES
DARK TAN WITH MEDIUM-SIZED BLACK, DARK BROWN & WHITE AGGREGATE

Medium W† — BLOCK D: 'LEVEE'
8(H)x10(D)*x16(L)
*PROJECT BLOCK 1" EA SIDE
PRECISION BLOCK
MEDIUM-LIGHT TAN WITH MEDIUM-SIZED BLACK, RED & WHITE AGGREGATE

Medium W† / Light W† — BLOCK G: 'LEVEE 2'
8(H)x8(D)x16(L)
PRECISION BLOCK
MEDIUM-LIGHT TAN WITH MEDIUM-SIZED BLACK, RED & WHITE AGGREGATE

Medium W† / Light W† — BLOCK F: 'CITY'
8(H)x8(D)x16(L)
SPLIT FACE BOTH FACES
LIGHT TAN WITH SMALL-SIZED WHITE, GREY & BLACK AGGREGATE

Medium W† / Light W† — BLOCK H: 'STREET'
8(H)x8(D)x16(L)
PRECISION BLOCK
1 SCORE (3/8") BOTH FACES
DARK GREY

GENERAL NOTES:

1. EACH SOUNDWALL ELEVATION IS ELEVATED INDEPENDENTLY. SEE SOUNDWALL GENERAL PLANS FOR MORE INFORMATION.
2. WHERE CUT BLOCKS ARE REQUIRED, CUT BLOCK SHALL BE NO SMALLER THAN ONE HALF OF A BLOCK, OTHERWISE CUT ADJACENT BLOCK AS WELL.
3. PLACE CORE HOLES (NOT SHOWN) FOR VINE PLANTINGS AT 16' ON CENTER.
4. THE CONTRACTOR SHALL SUBMIT COLOR SAMPLE OF BLOCK TO THE ENGINEER FOR APPROVAL.

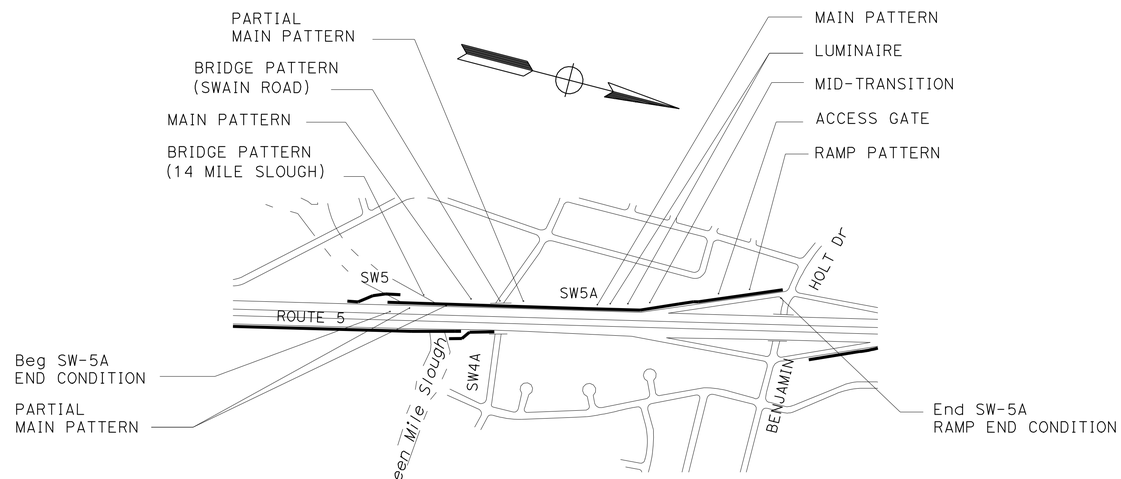

SOUND WALL 5A KEY PLAN

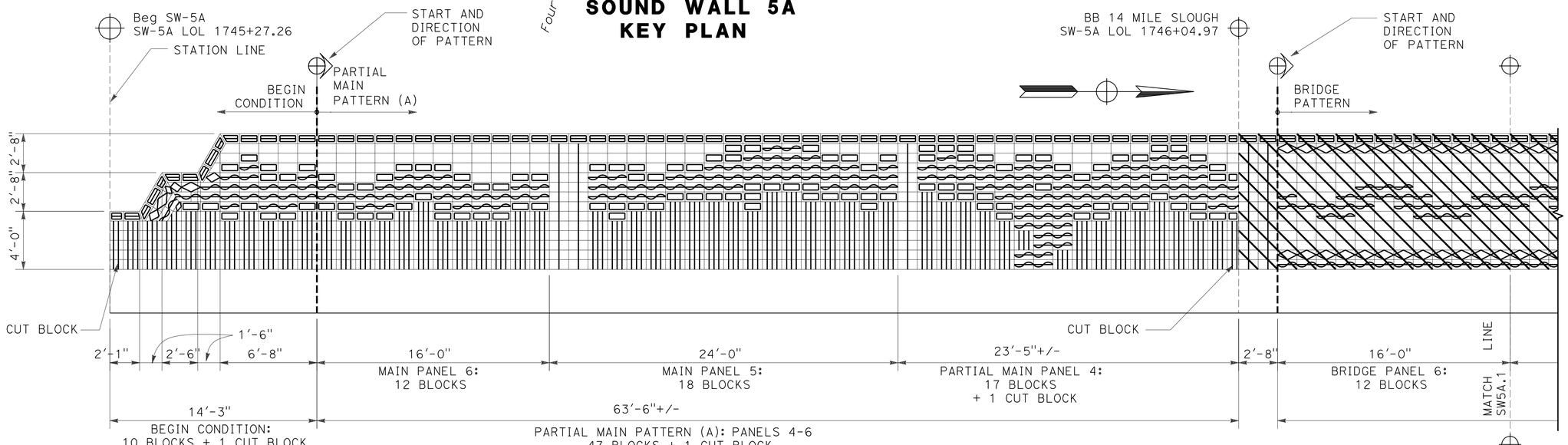

SOUND WALL 5A
BEGIN CONDITION TO PARTIAL MAIN PATTERN (A)

SOUND WALL (AESTHETICS)
SOUND WALL No. 5A
NO SCALE

THIS PLAN ACCURATE FOR SOUND WALL AESTHETIC TREATMENTS ONLY

SW-61

STATE OF CALIFORNIA - DEPARTMENT OF TRANSPORTATION
Caltrans
CONSULTANT FUNCTIONAL SUPERVISOR: LINDA M. DEVIVI
CALCULATED-DESIGNED BY: CHRISTINA D. B. FRANKEL
CHECKED BY: LINDA M. DEVIVI
REVISED BY
DATE REVISED

LAST REVISION DATE PLOTTED => 12-OCT-2010
TIME PLOTTED => 13:14
07-07-10

Dist	COUNTY	ROUTE	POST MILES TOTAL PROJECT	SHEET No.	TOTAL SHEETS
10	SJ	5	25.0/32.7	561	1132

REGISTERED CIVIL ENGINEER DATE 04/21/10

10-11-10
PLANS APPROVAL DATE

REGISTERED PROFESSIONAL ENGINEER CHRISTINA D.B.FRANKEL No. C-25730 Exp. 05/31/11 CIVIL STATE OF CALIFORNIA

THE STATE OF CALIFORNIA OR ITS OFFICERS OR AGENTS SHALL NOT BE RESPONSIBLE FOR THE ACCURACY OR COMPLETENESS OF SCANNED COPIES OF THIS PLAN SHEET.

DERIVI CONSTRUCTION & ARCHITECTURE, INC.
924 N. YOSEMITE STREET
STOCKTON, CA 95203

SJCOG
555 E. WEBER AVE.
STOCKTON, CA 95202-2804

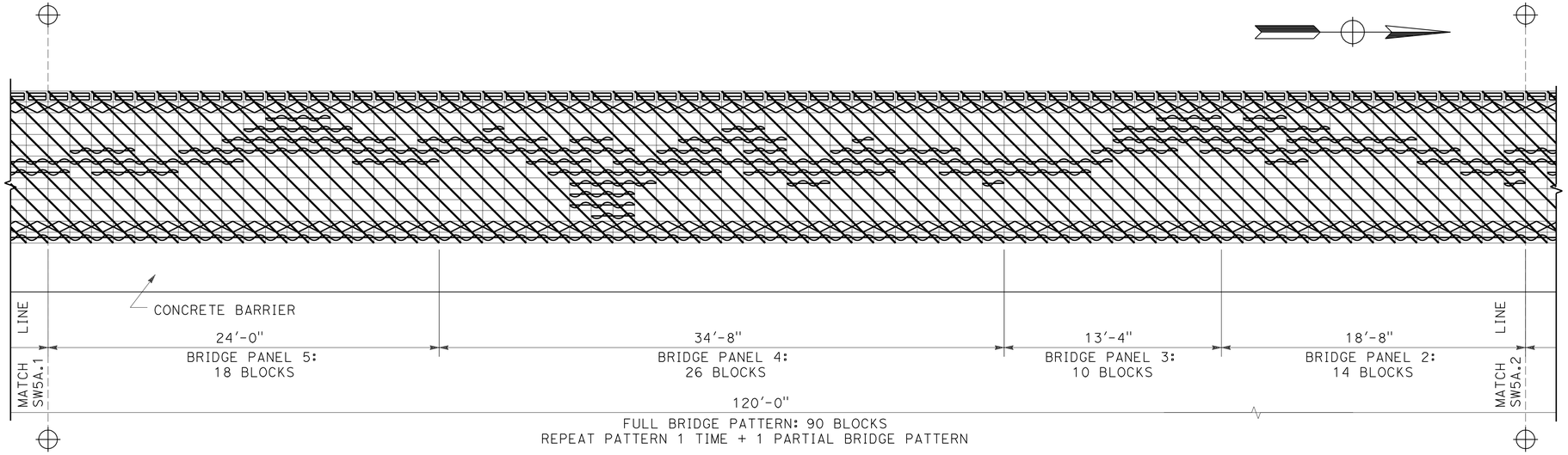

SOUND WALL 5A
BRIDGE PATTERN (14 MILE SLOUGH)

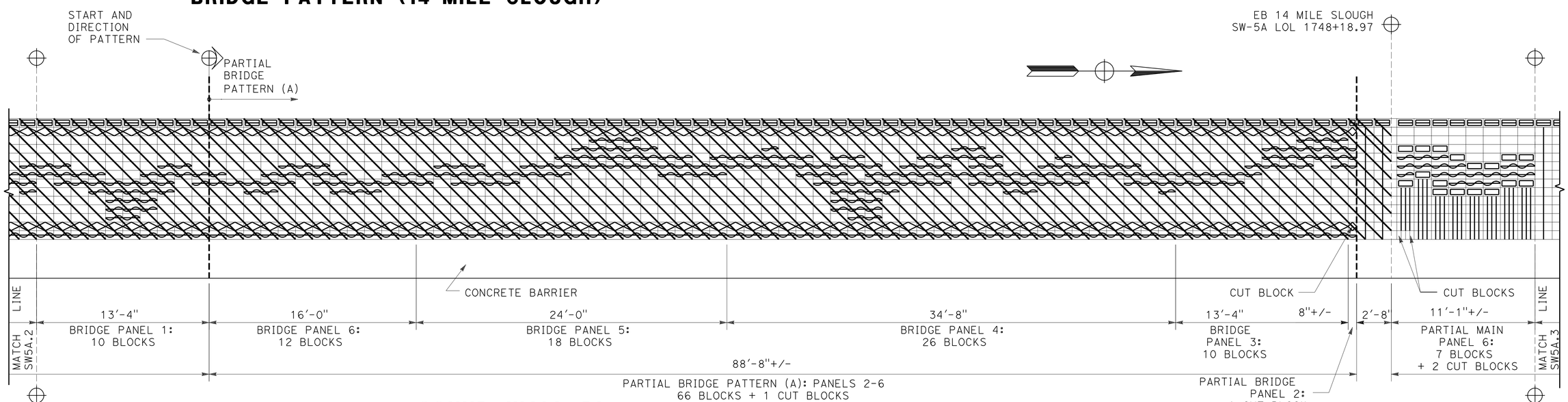

SOUND WALL 5A
PARTIAL BRIDGE PATTERN (14 MILE SLOUGH)

SOUND WALL (AESTHETICS)

SOUND WALL No. 5A
NO SCALE

SW-62

THIS PLAN ACCURATE FOR SOUND WALL AESTHETIC TREATMENTS ONLY

STATE OF CALIFORNIA - DEPARTMENT OF TRANSPORTATION
Caltrans

CONSULTANT FUNCTIONAL SUPERVISOR: LINDA M. DEVIVI
CALCULATED-DESIGNED BY: CHRISTINA D. B. FRANKEL
CHECKED BY: LINDA M. DEVIVI
REVISED BY
DATE REVISED

LAST REVISION 07-07-10
DATE PLOTTED => 12-OCT-2010
TIME PLOTTED => 13:14

Dist	COUNTY	ROUTE	POST MILES TOTAL PROJECT	SHEET No.	TOTAL SHEETS
10	SJ	5	25.0/32.7	562	1132

REGISTERED CIVIL ENGINEER DATE 04/21/10

10-11-10
PLANS APPROVAL DATE

REGISTERED PROFESSIONAL ENGINEER CHRISTINA D.B.FRANKEL No. C-25730 Exp. 05/31/11 CIVIL STATE OF CALIFORNIA

THE STATE OF CALIFORNIA OR ITS OFFICERS OR AGENTS SHALL NOT BE RESPONSIBLE FOR THE ACCURACY OR COMPLETENESS OF SCANNED COPIES OF THIS PLAN SHEET.

DERIVI CONSTRUCTION & ARCHITECTURE, INC.
924 N. YOSEMITE STREET
STOCKTON, CA 95203

SJCOG
555 E. WEBER AVE.
STOCKTON, CA 95202-2804

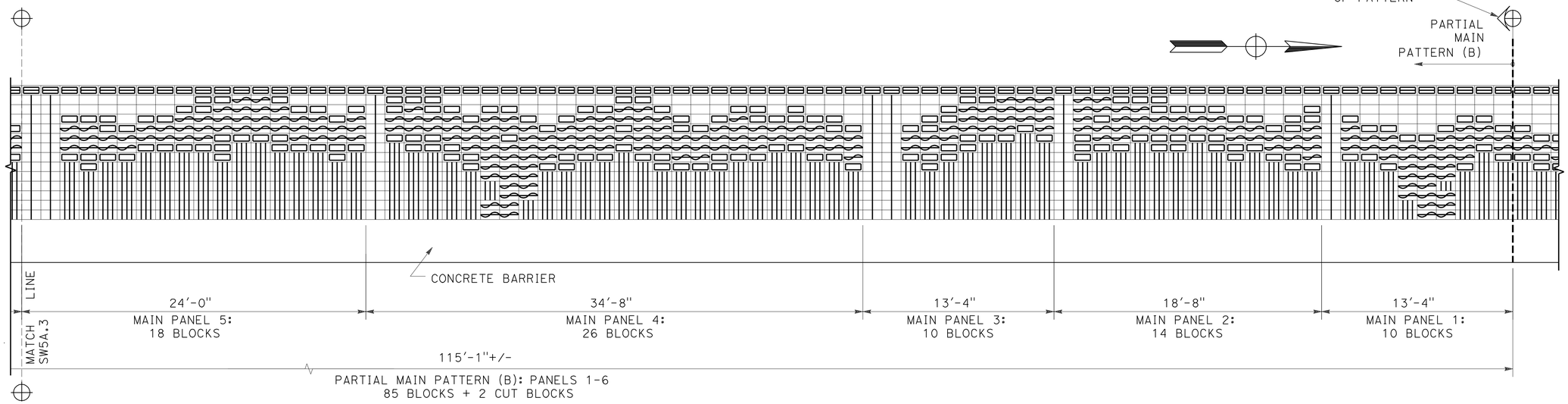

SOUND WALL 5A
PARTIAL MAIN PATTERN (B)

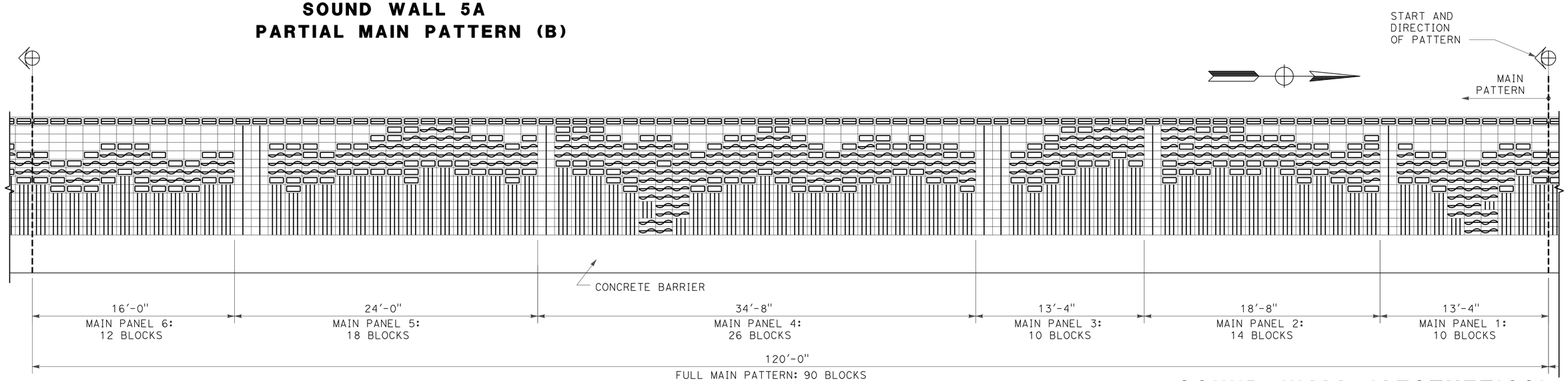

SOUND WALL 5A
MAIN PATTERN - Typ

SOUND WALL (AESTHETICS)
SOUND WALL No. 5A

NO SCALE

SW-63

THIS PLAN ACCURATE FOR SOUND WALL AESTHETIC TREATMENTS ONLY

STATE OF CALIFORNIA - DEPARTMENT OF TRANSPORTATION
Caltrans

CONSULTANT FUNCTIONAL SUPERVISOR: LINDA M. DEVIVI
CALCULATED-DESIGNED BY: CHRISTINA D. B. FRANKEL
CHECKED BY: LINDA M. DEVIVI
REVISED BY
DATE REVISED

LAST REVISION DATE PLOTTED => 12-OCT-2010
TIME PLOTTED => 13:14
07-07-10

Dist	COUNTY	ROUTE	POST MILES TOTAL PROJECT	SHEET No.	TOTAL SHEETS
10	SJ	5	25.0/32.7	563	1132

REGISTERED CIVIL ENGINEER DATE 04/21/10

10-11-10
PLANS APPROVAL DATE

REGISTERED PROFESSIONAL ENGINEER CHRISTINA D.B.FRANKEL No. C-25730 Exp. 05/31/11 CIVIL STATE OF CALIFORNIA

THE STATE OF CALIFORNIA OR ITS OFFICERS OR AGENTS SHALL NOT BE RESPONSIBLE FOR THE ACCURACY OR COMPLETENESS OF SCANNED COPIES OF THIS PLAN SHEET.

DERIVI CONSTRUCTION & ARCHITECTURE, INC.
924 N. YOSEMITE STREET
STOCKTON, CA 95203

SJCOG
555 E. WEBER AVE.
STOCKTON, CA 95202-2804

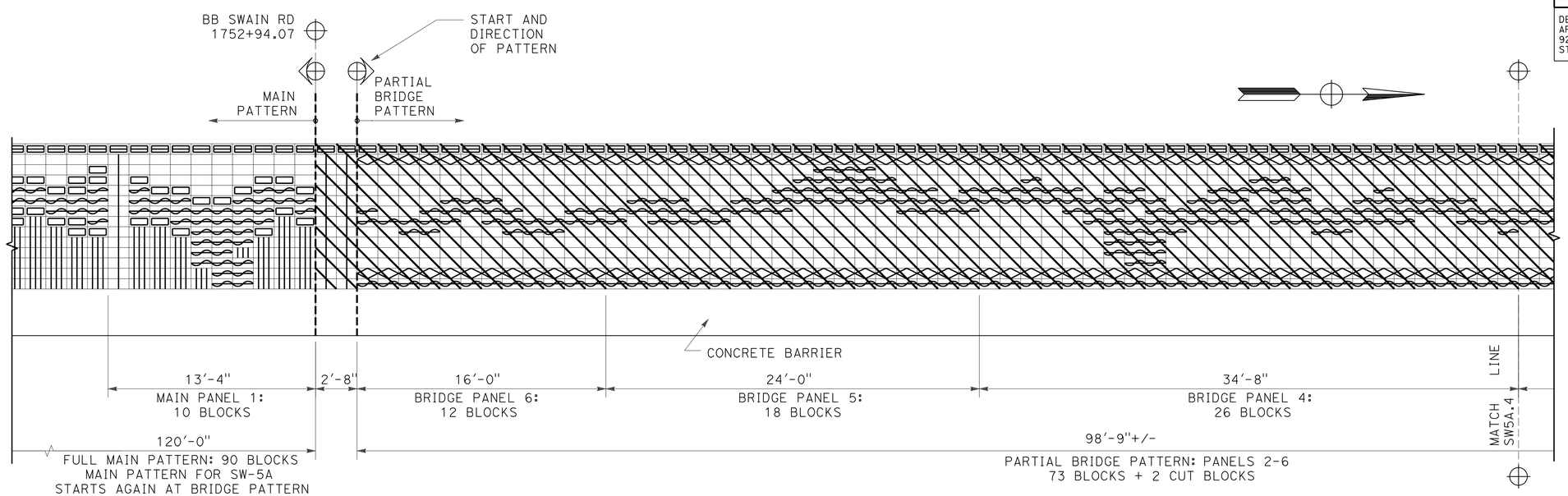

SOUND WALL 5A
PARTIAL BRIDGE PATTERN (SWAIN RD)

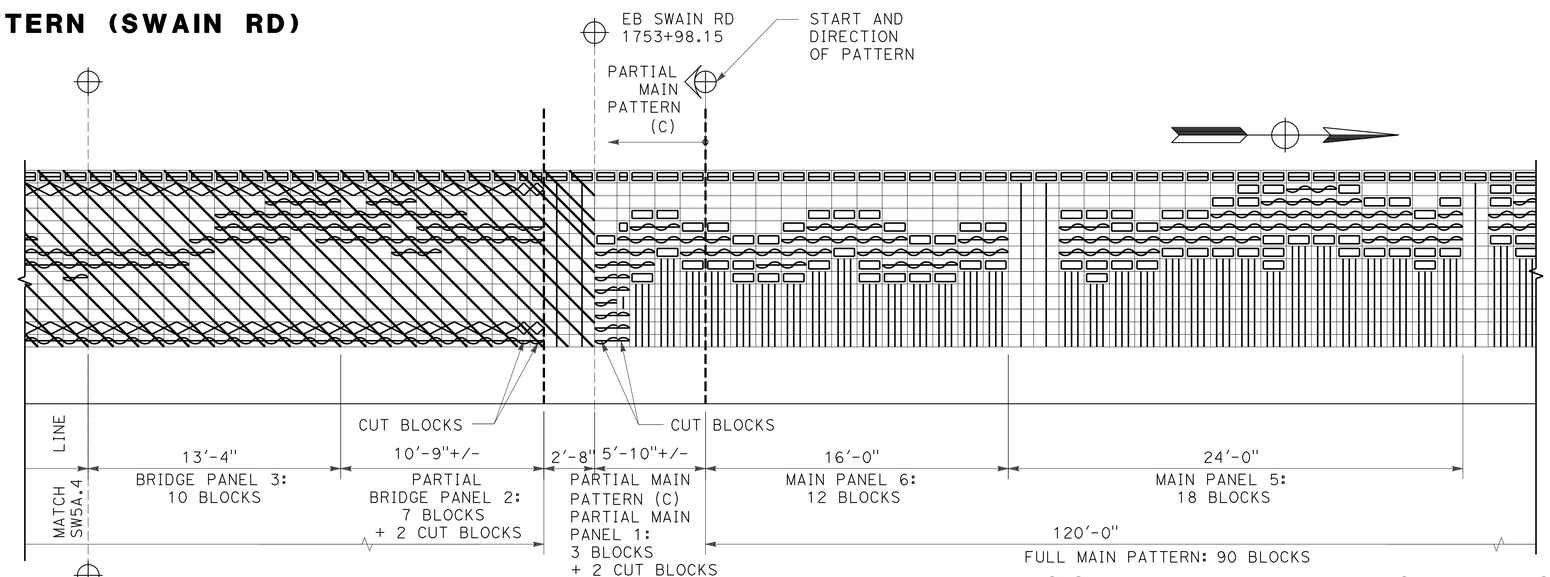

SOUND WALL 5A
PARTIAL BRIDGE PATTERN TO PARTIAL MAIN PATTERN (C)

SOUND WALL (AESTHETICS)
SOUND WALL No. 5A

NO SCALE

SW-64

THIS PLAN ACCURATE FOR SOUND WALL AESTHETIC TREATMENTS ONLY

REVISED BY	DATE REVISED

CALCULATED-DESIGNED BY: CHRISTINA D. B. FRANKEL
CHECKED BY: LINDA M. DEVIVI
CONSULTANT FUNCTIONAL SUPERVISOR: LINDA M. DEVIVI

STATE OF CALIFORNIA - DEPARTMENT OF TRANSPORTATION
Caltrans

LAST REVISION 07-07-10 | DATE PLOTTED => 12-OCT-2010 | TIME PLOTTED => 13:14

Dist	COUNTY	ROUTE	POST MILES TOTAL PROJECT	SHEET No.	TOTAL SHEETS
10	SJ	5	25.0/32.7	564	1132

REGISTERED CIVIL ENGINEER 04/21/10 DATE

10-11-10
PLANS APPROVAL DATE

REGISTERED PROFESSIONAL ENGINEER CHRISTINA D.B.FRANKEL No. C-25730 Exp. 05/31/11 CIVIL STATE OF CALIFORNIA

THE STATE OF CALIFORNIA OR ITS OFFICERS OR AGENTS SHALL NOT BE RESPONSIBLE FOR THE ACCURACY OR COMPLETENESS OF SCANNED COPIES OF THIS PLAN SHEET.

DERIVI CONSTRUCTION & ARCHITECTURE, INC.
924 N. YOSEMITE STREET
STOCKTON, CA 95203

SJCOG
555 E. WEBER AVE.
STOCKTON, CA 95202-2804

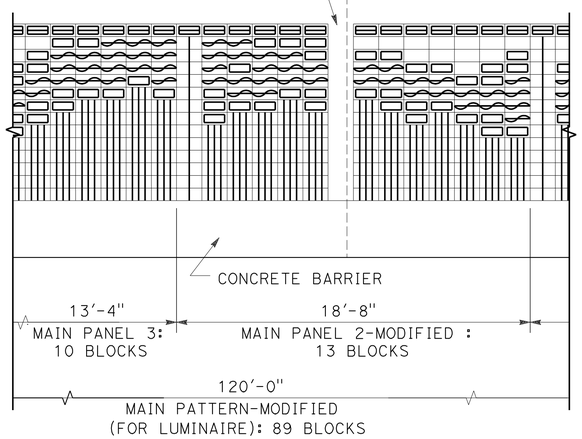

SOUND WALL 5A
MODIFIED MAIN PATTERN AT LUMINAIRE

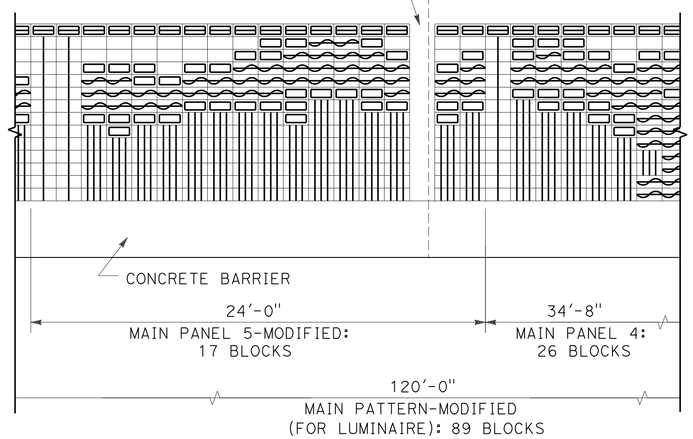

SOUND WALL 5A
MODIFIED MAIN PATTERN AT LUMINAIRE

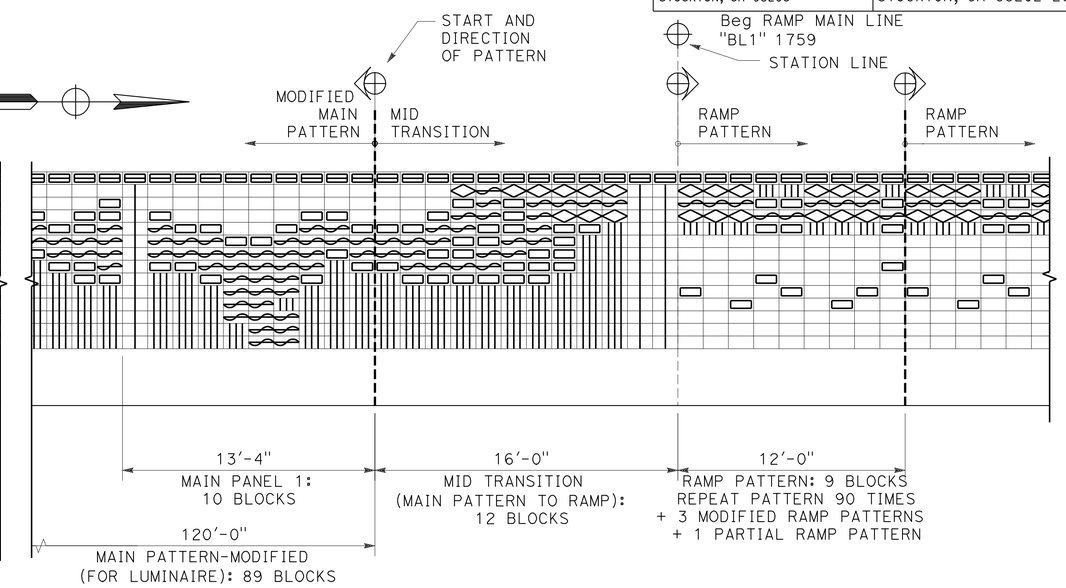

SOUND WALL 5A
MID TRANSITION TO RAMP PATTERN

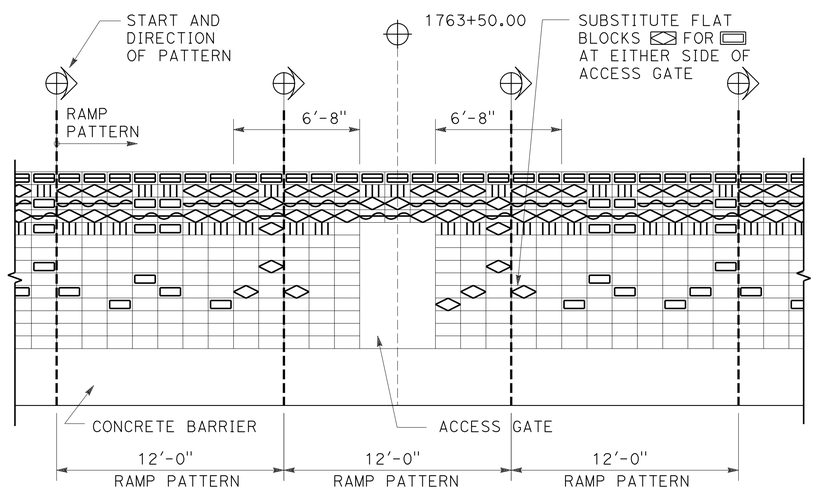

SOUND WALL 5A
ACCESS GATE AT RAMP PATTERN

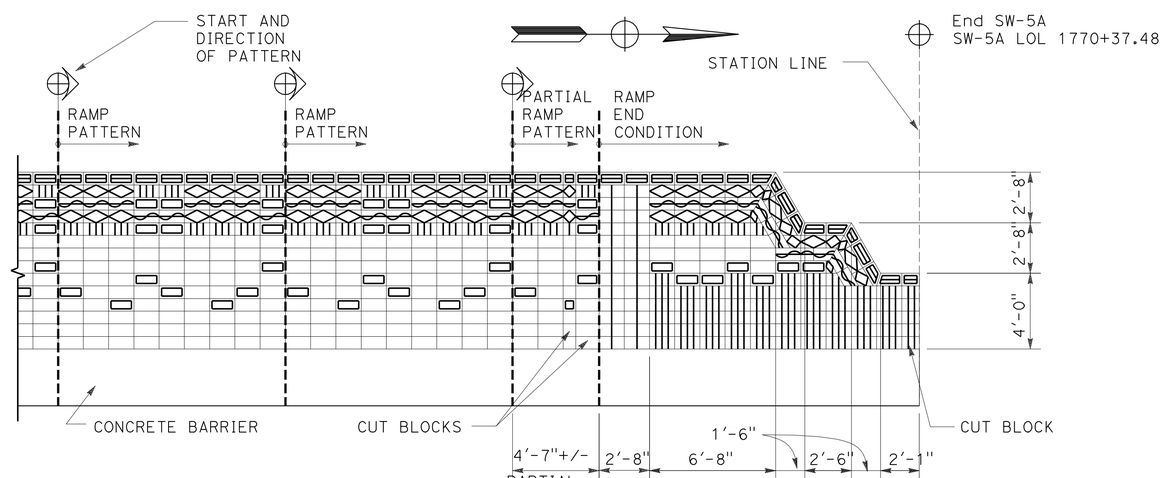

SOUND WALL 5A
RAMP END CONDITION

THIS PLAN ACCURATE FOR SOUND WALL AESTHETIC TREATMENTS ONLY

SOUND WALL (AESTHETICS)

SOUND WALL No. 5A

NO SCALE

SW-65

STATE OF CALIFORNIA - DEPARTMENT OF TRANSPORTATION
Caltrans

CONSULTANT FUNCTIONAL SUPERVISOR: LINDA M. DEVIVI
CALCULATED-DESIGNED BY: CHRISTINA D. B. FRANKEL
CHECKED BY: LINDA M. DEVIVI
REVISED BY
DATE REVISED

LAST REVISION DATE PLOTTED => 12-OCT-2010
TIME PLOTTED => 13:14
07-07-10

DIST	COUNTY	ROUTE	POST MILES TOTAL PROJECT	SHEET No	TOTAL SHEETS
10	SJ	5	25.0/32.7	565	1132

GEOTECHNICAL PROFESSIONAL — DATE 04/21/10

10-11-10
PLANS APPROVAL DATE

REGISTERED GEOLOGIST — GARY PARIKH — No. G.E. 666 — Exp. 12/31/11 — CERTIFIED ENGINEERING GEOLOGIST — STATE OF CALIFORNIA

The State of California or its officers or agents shall not be responsible for the accuracy or completeness of scanned copies of this plan sheet.

SJCOG
555 WEBER AVE.
STOCKTON, CA 95202-2804

PARIKH CONSULTANTS, INC.
2360 QUME DRIVE, SUITE A
SAN JOSE, CA 95131

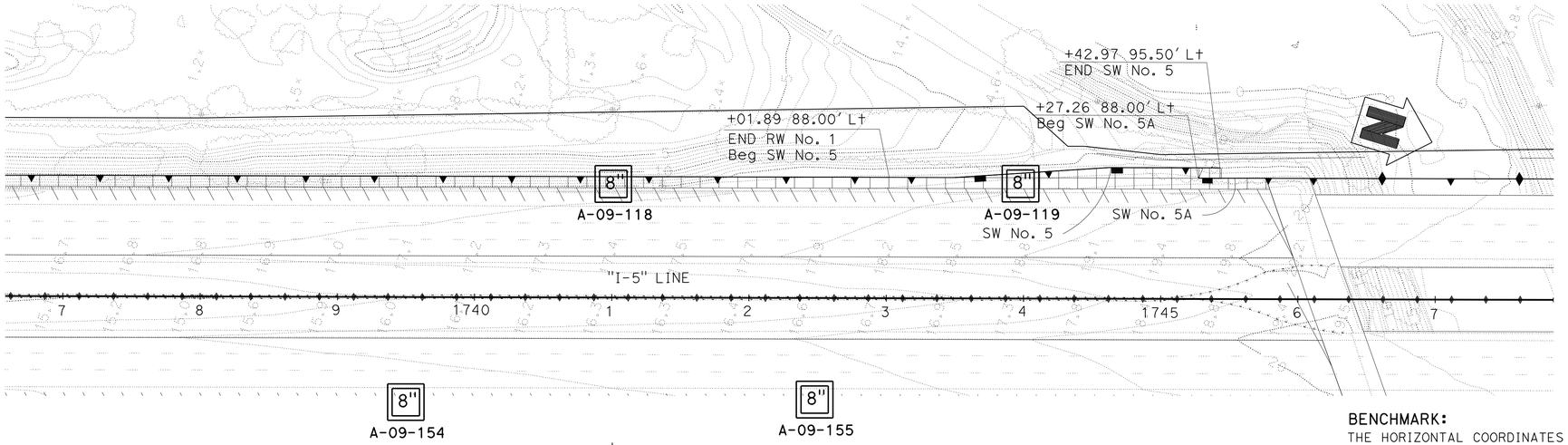

PLAN
1"=50'

BENCHMARK:
THE HORIZONTAL COORDINATES VALUES ARE IN THE CALIFORNIA COORDINATE SYSTEM (CCS 83) ZONE 3, EPOCH DATE 2007.00, IN U.S. SURVEY FEET. THE VERTICAL CONTROL VALUES ARE BASED ON THE NORTH AMERICAN U.S. SURVEY FEET, HEIGHT MODERNIZATION SURVEY STATION, (2007.00) AND GEOID03 WAS USED FOR THE ADJUSTMENT.

THIS LOTB SHEET WAS PREPARED IN ACCORDANCE WITH CALTRANS SOIL & ROCK LOGGING, CLASSIFICATION, AND PRESENTATION MANUAL (2007)

ELEVATION (feet)

STA 1741+00 — 81.0'± Lt "I-5" LINE — A-09-118 — Elev 16.5 FT±

Elev	Blows	Bpf	Moisture	Dry density	Notes	Description
	29	2.5	114	13	8"	SILTY SAND (SM), medium dense, brown, moist, mostly fine SAND, little fines, weak cementation
10	44	2.5	124	14		-dark gray
	49	2.5	120	13		-dense, dark brownish gray
0	26	2.5	106	21	UC, PI	Lean CLAY (CL), very stiff, dark gray, medium plasticity, moist (LL=44, PI=24)
	39	2.5	95	30		-greenish gray
-10	7	2.5	89	34		-firm, brown, wet
	47	2.5	105	23		SILTY SAND (SM), dense, grayish brown, wet, mostly fine SAND, little fines, weak cementation
-20	69	2.5	108	22		-dark gray
	82	2.5	128	7		-very dense, some GRAVEL encountered
-30	66	2.5	101	26		Lean CLAY (CL), very stiff, dark gray, moist, medium plasticity
	32	2.5	99	25		
-40						SILTY SAND (SM), very dense, dark gray, wet, mostly fine SAND, little fines, weak cementation
	80/10"	2.5	108	22		
-50						Groundwater was not encountered during drilling

04-30-09
Terminated at Elev=-43.5 ft
Hammer Energy Ratio (ERi)=60%

STA 1744+00 — 82.0'± Lt "I-5" LINE — A-09-119 — Elev 17.0 FT±

Elev	Blows	Bpf	Moisture	Dry density	Notes	Description
	11	2.5	117	14	8"	SILTY SAND (SM), loose, dark grayish brown, moist, mostly fine SAND, little fines, weak cementation
	14	2.5	96	24		Fat CLAY (CH), stiff, dark brown, moist, high plasticity
	13	2.5	105	23		Fat CLAY with SAND and GRAVEL (CH), stiff, dark brown with black mottling, moist, trace SAND and GRAVEL, low plasticity
0	15	2.5	103	24		-greenish gray with dark mottling
	8	2.5	96	27	CR	Lean CLAY to Fat CLAY (CL/CH), firm, tanish brown, moist, medium to high plasticity
-10	15	2.5	96	30	UC	SANDY SILT (ML), stiff, brown, moist to wet, low plasticity
	18	2.5	99	24	UC	Lean CLAY (CL), stiff, gray with brown mottling, moist, medium plasticity
-20	13	2.5	-	-		SILTY SAND (SM), dense, grayish brown, wet, mostly fine SAND, little fines, weak cementation (No recovery)
	44	1.4	-	24		-dense
	19	2.5	109	20	PA	-loose (-#200=13 %)
-30	47	2.5	104	22		-medium dense
	50/5"	2.5	135	9		Poorly graded SAND with GRAVEL (SP), very dense, dark gray, moist, mostly fine SAND, little coarse GRAVEL, weak cementation
-40						Lean CLAY (CL), hard, dark bluish gray, moist, medium plasticity
	85/11"	2.5	109	22		
-50						
	62	2.5	79	43		Groundwater was not encountered during drilling

04-30-09
Terminated at Elev=-53.0 ft
Hammer Energy Ratio (ERi)=60%

PROFILE
Vert : 1" = 10'
Horiz : 1" = 50'

"I-5" LINE

1740 — 1745

SOUND WALL No. 5A

SCALE AS SHOWN **SW-66**

DESIGN OVERSIGHT	DRAWN BY O. GOUTHIER	S. DUDDU- A.R. BHARADWAJ	PREPARED FOR THE STATE OF CALIFORNIA DEPARTMENT OF TRANSPORTATION	A. LAM	BRIDGE NO. --
SIGN OFF DATE	CHECKED BY D. WANG	FIELD INVESTIGATION BY: DATE: MARCH 2009 TO MAY 2009		PROJECT ENGINEER	POST MILES --

I-5 NORTH STOCKTON CORRIDOR IMPROVEMENT
LOG OF TEST BORINGS

OGS GEOTECHNICAL LOG OF TEST BORINGS SHEET (ENGLISH) (REV. 06-01-09)

ORIGINAL SCALE IN INCHES FOR REDUCED PLANS 0 1 2 3

CU 06240
EA 0G4701

DISREGARD PRINTS BEARING EARLIER REVISION DATES → 09/28/09 03/15/10

REVISION DATES — SHEET — OF

FILE => a0g470rg012.dgn
USERNAME => s135318

USERNAME => s135318 DATE PLOTTED => 12-OCT-2010 TIME PLOTTED => 13:14

DIST	COUNTY	ROUTE	POST MILES TOTAL PROJECT	SHEET No	TOTAL SHEETS
10	SJ	5	25.0/32.7	566	1132

GEOTECHNICAL PROFESSIONAL — DATE 04/21/10

10-11-10
PLANS APPROVAL DATE

REGISTERED GEOLOGIST — GARY PARIKH — No. G.E. 666 — Exp. 12/31/11 — CERTIFIED ENGINEERING GEOLOGIST — STATE OF CALIFORNIA

The State of California or its officers or agents shall not be responsible for the accuracy or completeness of scanned copies of this plan sheet.

SJCOG
555 WEBER AVE.
STOCKTON, CA 95202-2804

PARIKH CONSULTANTS, INC.
2360 QUME DRIVE, SUITE A
SAN JOSE, CA 95131

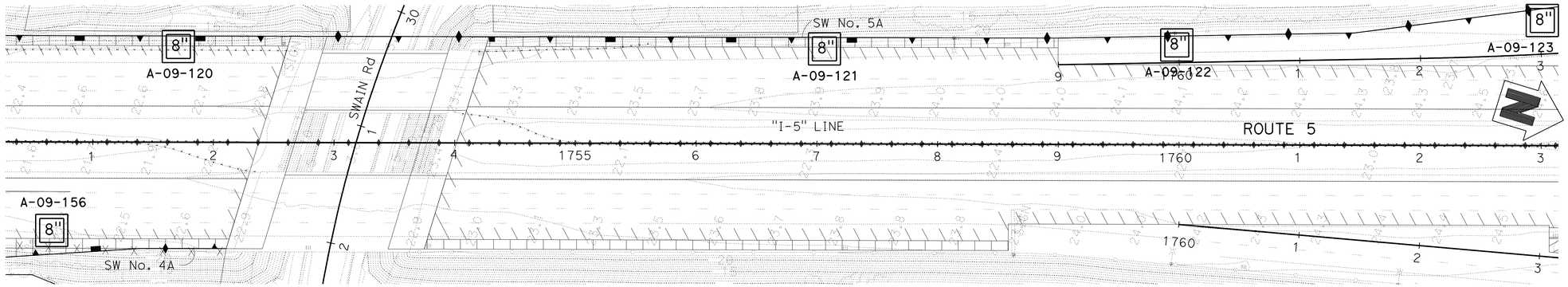

PLAN
1"=50'

BENCHMARK:

THE HORIZONTAL COORDINATES VALUES ARE IN THE CALIFORNIA COORDINATE SYSTEM (CCS 83) ZONE 3, EPOCH DATE 2007.00, IN U.S. SURVEY FEET.
THE VERTICAL CONTROL VALUES ARE BASED ON THE NORTH AMERICAN U.S. SURVEY FEET, HEIGHT MODERNIZATION SURVEY STATION, (2007.00) AND GEOID03 WAS USED FOR THE ADJUSTMENT.

THIS LOTB SHEET WAS PREPARED IN ACCORDANCE WITH CALTRANS SOIL & ROCK LOGGING, CLASSIFICATION, AND PRESENTATION MANUAL (2007)

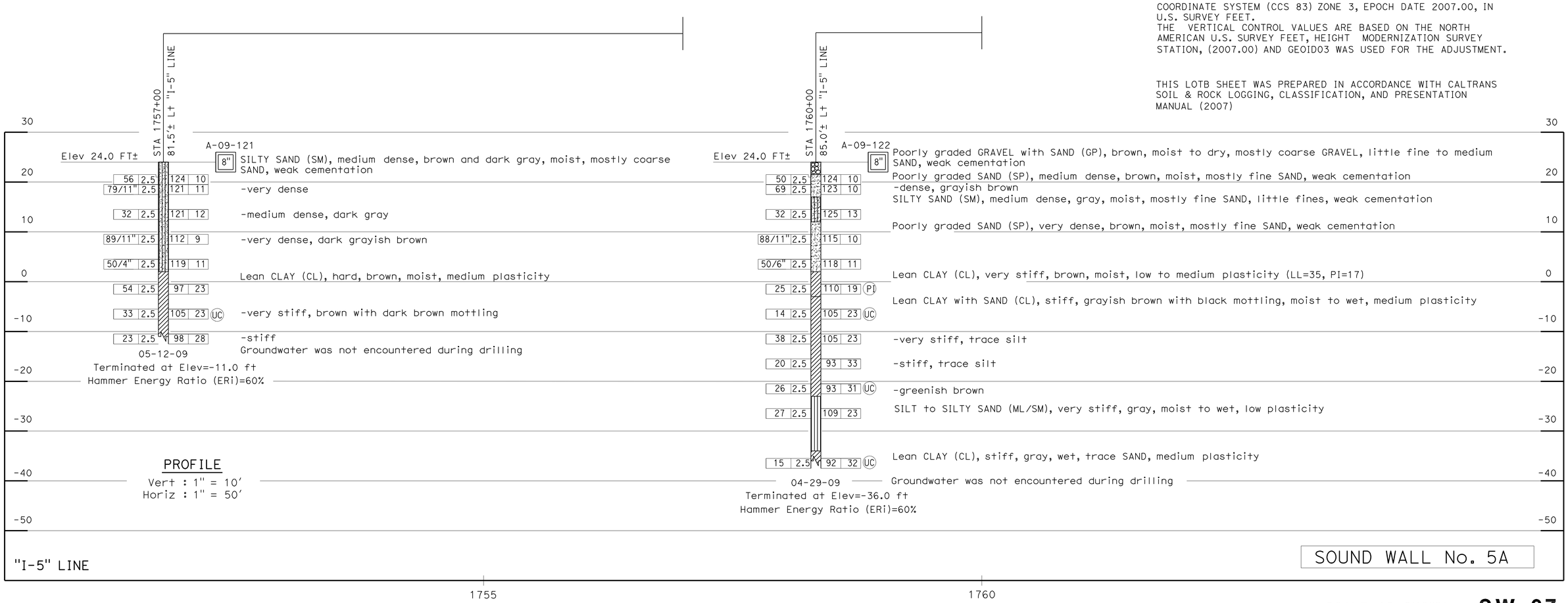

SCALE AS SHOWN **SW-67**

DESIGN OVERSIGHT / SIGN OFF DATE	DRAWN BY O. GOUTHIER	S. DUDDU- A.R. BHARADWAJ FIELD INVESTIGATION BY:	PREPARED FOR THE STATE OF CALIFORNIA DEPARTMENT OF TRANSPORTATION	A. LAM PROJECT ENGINEER	BRIDGE NO. -- / POST MILES --
	CHECKED BY D. WANG	DATE: MARCH 2009 TO MAY 2009			I-5 NORTH STOCKTON CORRIDOR IMPROVEMENT
					LOG OF TEST BORINGS

OGS GEOTECHNICAL LOG OF TEST BORINGS SHEET (ENGLISH) (REV. 06-01-09)

ORIGINAL SCALE IN INCHES FOR REDUCED PLANS 0 1 2 3

CU 06240
EA 0G4701

DISREGARD PRINTS BEARING EARLIER REVISION DATES — REVISION DATES 09/28/09 03/15/10 — SHEET OF

FILE => a0g470rg013.dgn
USERNAME => s135318

USERNAME => s135318 DATE PLOTTED => 12-OCT-2010 TIME PLOTTED => 13:14

DIST	COUNTY	ROUTE	POST MILES TOTAL PROJECT	SHEET No	TOTAL SHEETS
10	SJ	5	25.0/32.7	567	1132

GEOTECHNICAL PROFESSIONAL — DATE 04/21/10

10-11-10
PLANS APPROVAL DATE

REGISTERED GEOLOGIST — GARY PARIKH — No. G.E. 666 — Exp. 12/31/11 — CERTIFIED ENGINEERING GEOLOGIST — STATE OF CALIFORNIA

The State of California or its officers or agents shall not be responsible for the accuracy or completeness of scanned copies of this plan sheet.

SJCOG
555 WEBER AVE.
STOCKTON, CA 95202-2804

PARIKH CONSULTANTS, INC.
2360 QUME DRIVE, SUITE A
SAN JOSE, CA 95131

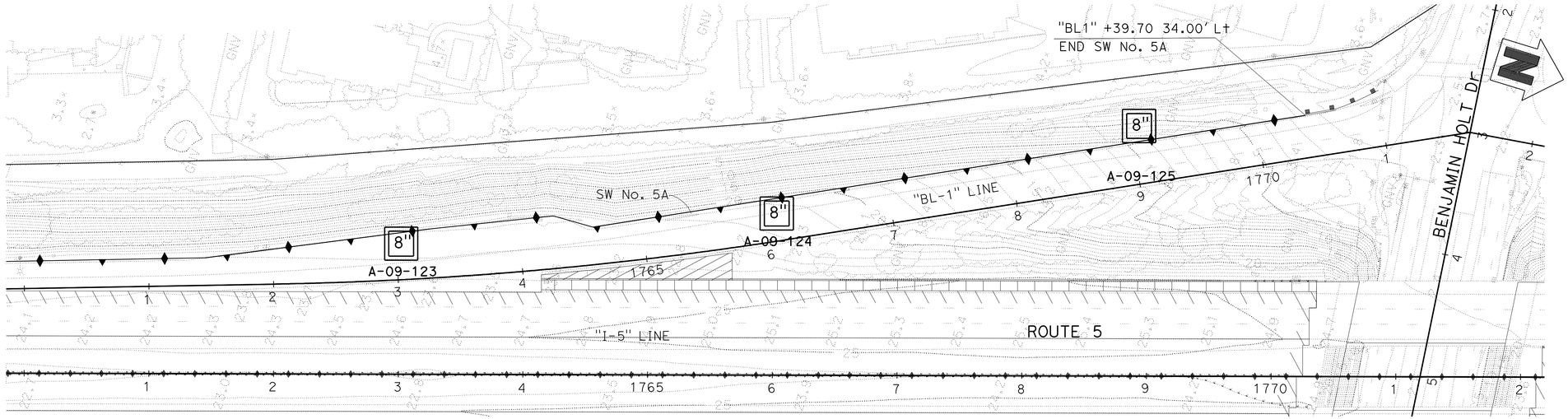

PLAN
1"=50'

BENCHMARK:
THE HORIZONTAL COORDINATES VALUES ARE IN THE CALIFORNIA COORDINATE SYSTEM (CCS 83) ZONE 3, EPOCH DATE 2007.00, IN U.S. SURVEY FEET.
THE VERTICAL CONTROL VALUES ARE BASED ON THE NORTH AMERICAN U.S. SURVEY FEET, HEIGHT MODERNIZATION SURVEY STATION, (2007.00) AND GEOID03 WAS USED FOR THE ADJUSTMENT.

THIS LOTB SHEET WAS PREPARED IN ACCORDANCE WITH CALTRANS SOIL & ROCK LOGGING, CLASSIFICATION, AND PRESENTATION MANUAL (2007)

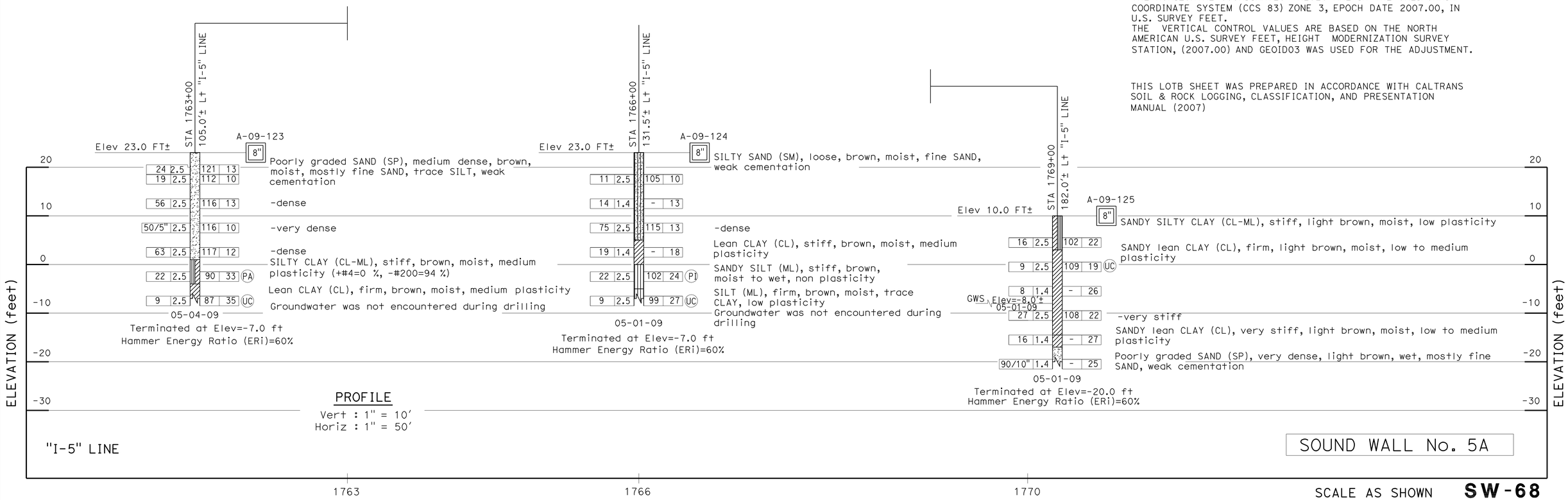

SOUND WALL No. 5A

SCALE AS SHOWN **SW-68**

DESIGN OVERSIGHT	DRAWN BY	O. GOUTHIER	S. DUDDU- A.R. BHARADWAJ	PREPARED FOR THE STATE OF CALIFORNIA DEPARTMENT OF TRANSPORTATION	A. LAM
SIGN OFF DATE	CHECKED BY	D. WANG	FIELD INVESTIGATION BY: DATE: MARCH 2009 TO MAY 2009		PROJECT ENGINEER

BRIDGE NO. --
POST MILES --

I-5 NORTH STOCKTON CORRIDOR IMPROVEMENT
LOG OF TEST BORINGS

OGS GEOTECHNICAL LOG OF TEST BORINGS SHEET (ENGLISH) (REV. 06-01-09)

ORIGINAL SCALE IN INCHES FOR REDUCED PLANS 0 1 2 3

CU 06240
EA 0G4701

DISREGARD PRINTS BEARING EARLIER REVISION DATES — REVISION DATES 09/28/09 03/15/10 — SHEET OF

FILE => a0g470rg014.dgn
USERNAME => s135318

USERNAME => s135318 DATE PLOTTED => 12-OCT-2010 TIME PLOTTED => 13:14

Dist	COUNTY	ROUTE	POST MILES TOTAL PROJECT	SHEET No.	TOTAL SHEETS
10	SJ	5	25.0/32.7	568	1132

REGISTERED CIVIL ENGINEER 04/21/10 DATE

10-11-10
PLANS APPROVAL DATE

REGISTERED PROFESSIONAL ENGINEER CHUONG NGUYEN No. C46770 Exp. 06/30/11 CIVIL STATE OF CALIFORNIA

THE STATE OF CALIFORNIA OR ITS OFFICERS OR AGENTS SHALL NOT BE RESPONSIBLE FOR THE ACCURACY OR COMPLETENESS OF SCANNED COPIES OF THIS PLAN SHEET.

RAJAPPAN & MEYER
CONSULTING ENGINEERS INC.
1038 LEIGH AVE, SUITE 100
SAN JOSE, CA 95126

SJCOG
555 E. WEBER AVE.
STOCKTON, CA 95202-2804

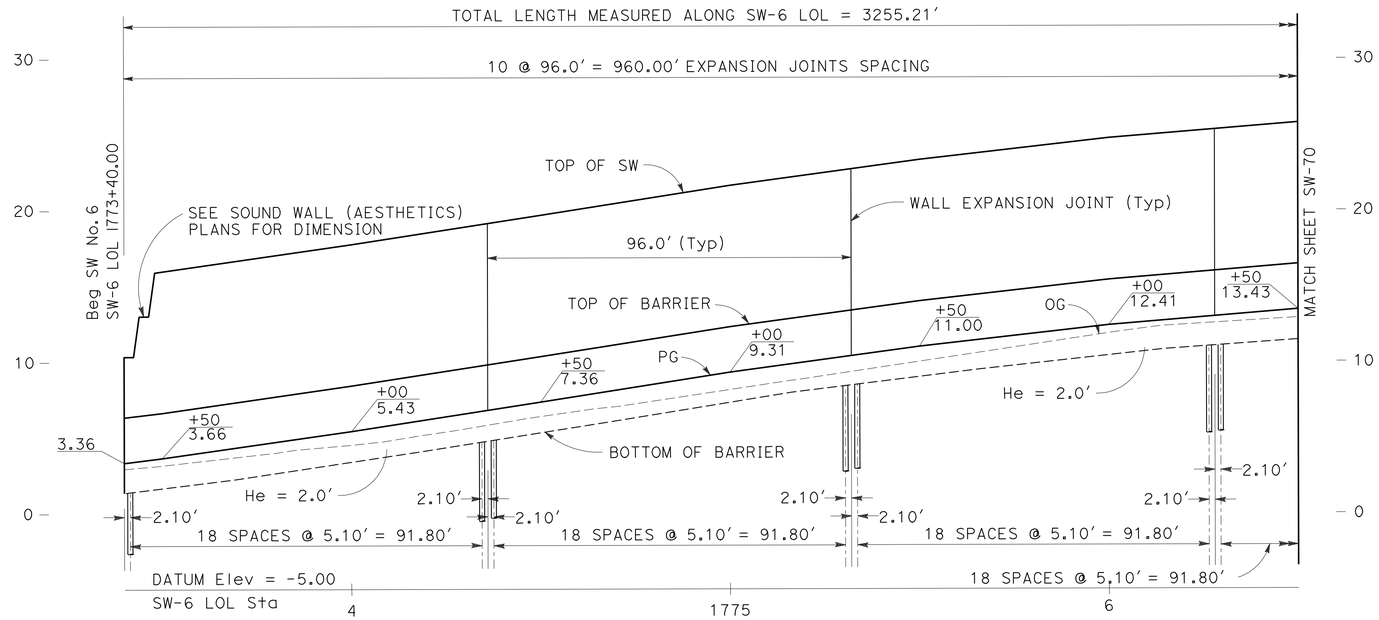

ELEVATION

SCALE: Horiz 1"=20'
Vert 1"=5'

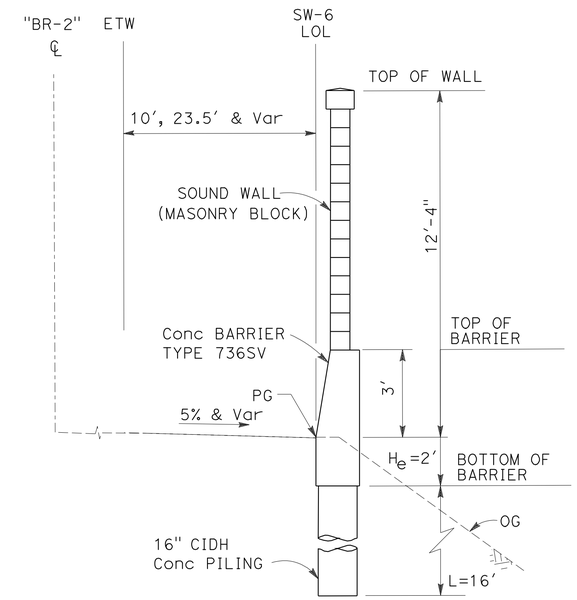

TYPICAL SECTION

SW-6 Sta 1773+40.00 TO Sta 1783+00.00

NO SCALE

CURVE DATA

No.	RADIUS	DELTA	TANGENT	LENGTH
6	3000.00'	8°37'15"	226.12'	451.39'
23	3410.58'	3°17'40"	98.08'	196.11'

NOTE:

FOR REINFORCEMENT AND OTHER DETAILS NOT SHOWN, SEE Std PLAN

B15-6 B15-7 B15-8

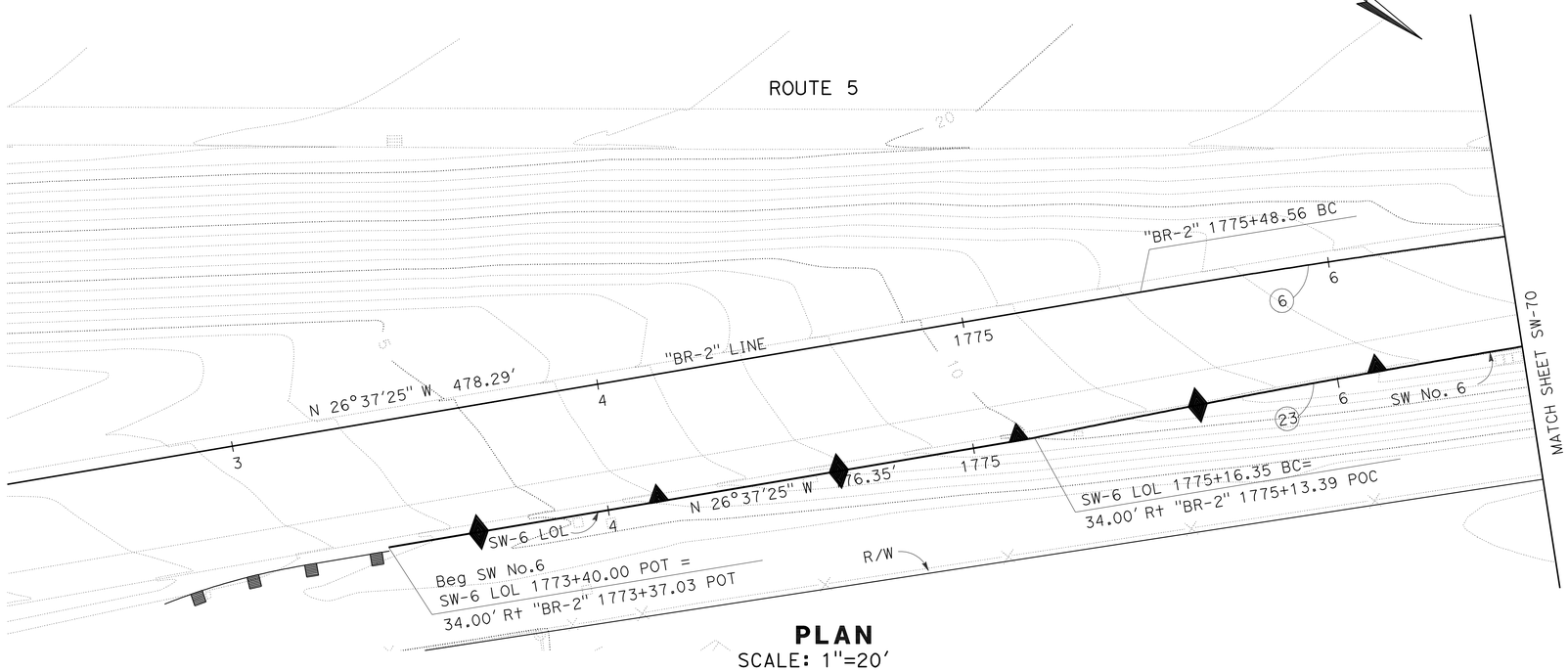

PLAN

SCALE: 1"=20'

THIS PLAN ACCURATE FOR SOUND WALL WORK ONLY

SOUND WALL PLAN

SOUND WALL No. 6

SCALE AS SHOWN

SW-69

STATE OF CALIFORNIA - DEPARTMENT OF TRANSPORTATION
Caltrans

CONSULTANT FUNCTIONAL SUPERVISOR: KEITH G. MEYER

CALCULATED-DESIGNED BY: SRILAKSHMI SAKHAMURI
CHECKED BY: CHUONG NGUYEN

REVISED BY
DATE REVISED

LAST REVISION 07-07-10
DATE PLOTTED => 12-OCT-2010
TIME PLOTTED => 13:14

Dist	COUNTY	ROUTE	POST MILES TOTAL PROJECT	SHEET No.	TOTAL SHEETS
10	SJ	5	25.0/32.7	569	1132

REGISTERED CIVIL ENGINEER 04/21/10 DATE

10-11-10
PLANS APPROVAL DATE

REGISTERED PROFESSIONAL ENGINEER CHUONG NGUYEN No. C46770 Exp. 06/30/11 CIVIL STATE OF CALIFORNIA

THE STATE OF CALIFORNIA OR ITS OFFICERS OR AGENTS SHALL NOT BE RESPONSIBLE FOR THE ACCURACY OR COMPLETENESS OF SCANNED COPIES OF THIS PLAN SHEET.

RAJAPPAN & MEYER
CONSULTING ENGINEERS INC.
1038 LEIGH AVE, SUITE 100
SAN JOSE, CA 95126

SJCOG
555 E. WEBER AVE.
STOCKTON, CA 95202-2804

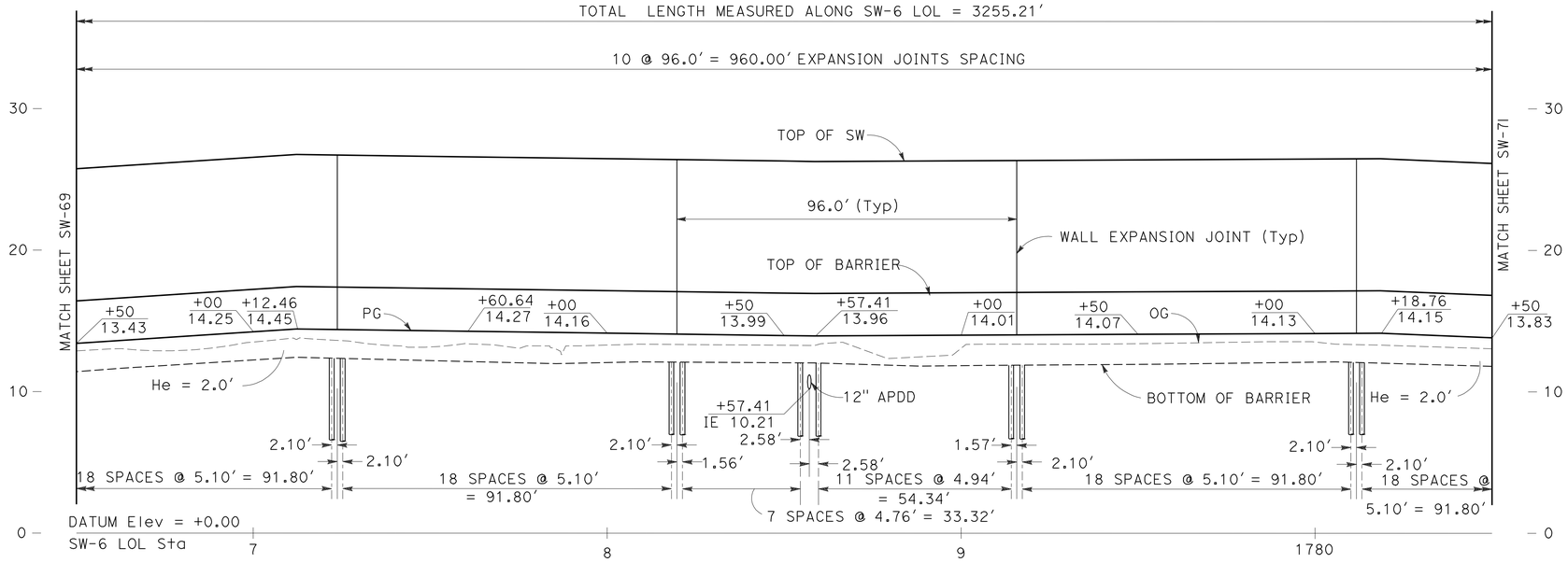

ELEVATION

SCALE: Horiz 1"=20'
Vert 1"=5'

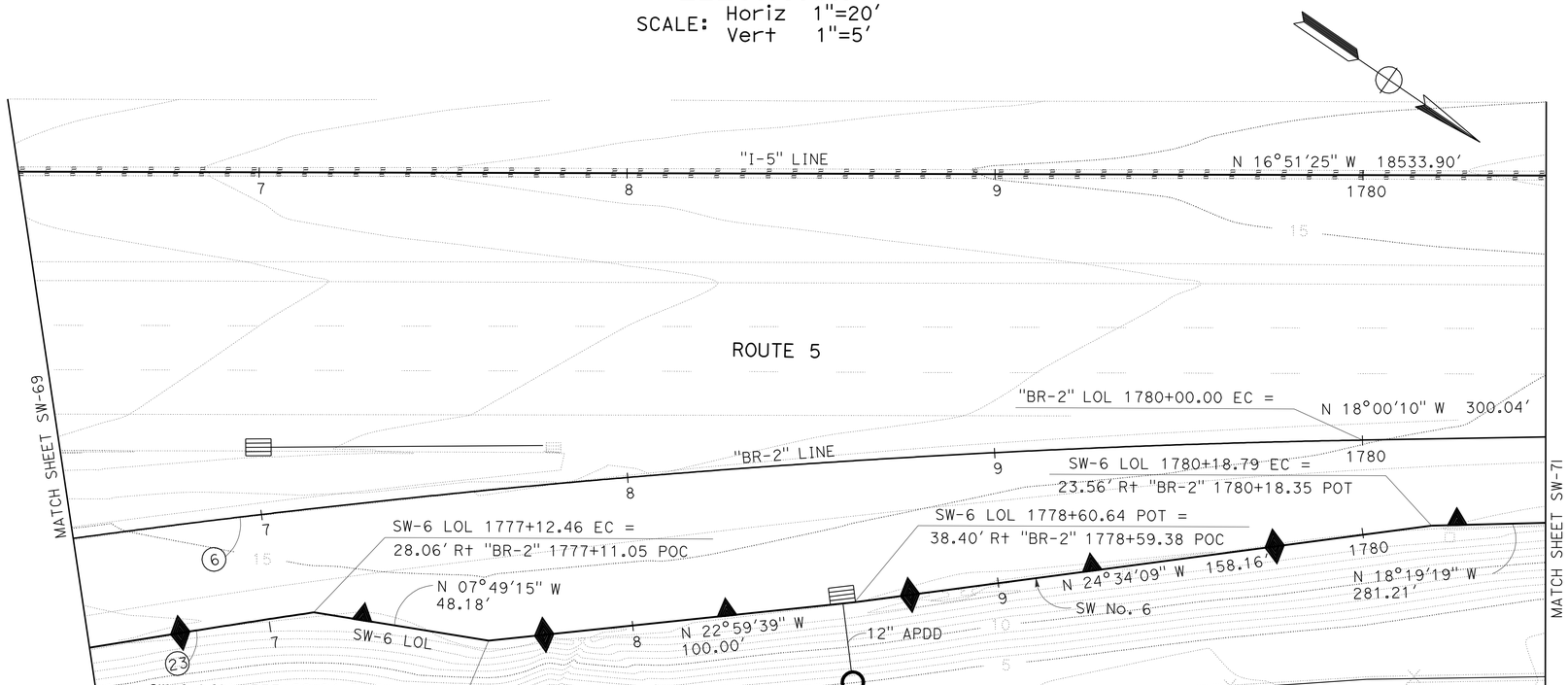

PLAN

SCALE: 1"=20'

THIS PLAN ACCURATE FOR SOUND WALL WORK ONLY

CURVE DATA

No.	RADIUS	DELTA	TANGENT	LENGTH
6	3000.00'	8°37'15"	226.12'	451.39'
23	3410.58'	3°17'40"	98.08'	196.11'

SOUND WALL PLAN
SOUND WALL No. 6

SCALE AS SHOWN

SW-70

STATE OF CALIFORNIA - DEPARTMENT OF TRANSPORTATION
Caltrans

CONSULTANT FUNCTIONAL SUPERVISOR: KEITH G. MEYER
CALCULATED-DESIGNED BY: SRILAKSHMI SAKHAMURI
CHECKED BY: CHUONG NGUYEN
REVISED BY
DATE REVISED

LAST REVISION 07-07-10 | DATE PLOTTED => 12-OCT-2010 | TIME PLOTTED => 13:14

Dist	COUNTY	ROUTE	POST MILES TOTAL PROJECT	SHEET No.	TOTAL SHEETS
10	SJ	5	25.0/32.7	570	1132

REGISTERED CIVIL ENGINEER 04/21/10 DATE

10-11-10
PLANS APPROVAL DATE

REGISTERED PROFESSIONAL ENGINEER CHUONG NGUYEN No. C46770 Exp. 06/30/11 CIVIL STATE OF CALIFORNIA

THE STATE OF CALIFORNIA OR ITS OFFICERS OR AGENTS SHALL NOT BE RESPONSIBLE FOR THE ACCURACY OR COMPLETENESS OF SCANNED COPIES OF THIS PLAN SHEET.

RAJAPPAN & MEYER
CONSULTING ENGINEERS INC.
1038 LEIGH AVE, SUITE 100
SAN JOSE, CA 95126

SJCOG
555 E. WEBER AVE.
STOCKTON, CA 95202-2804

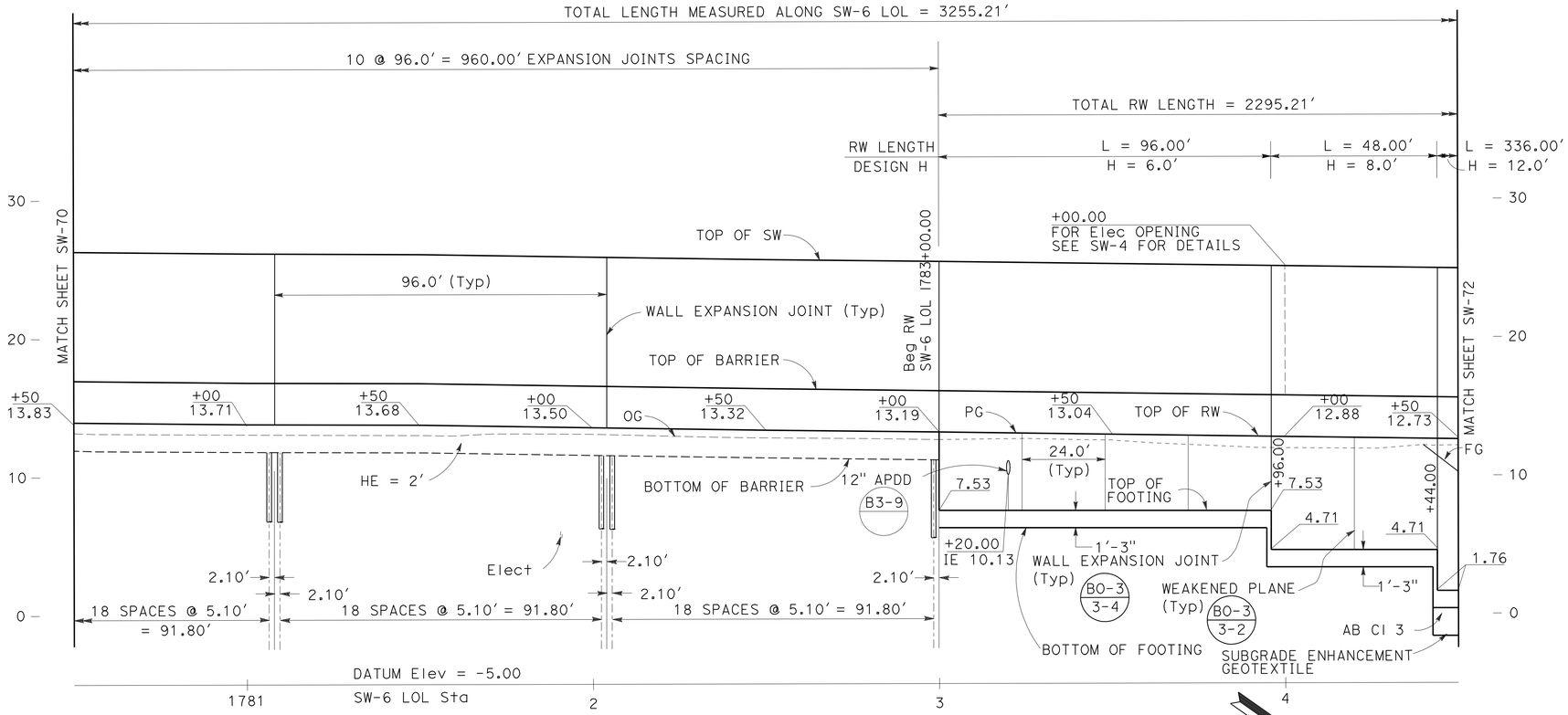

ELEVATION

SCALE: Horiz 1"=20'
Vert 1"=5'

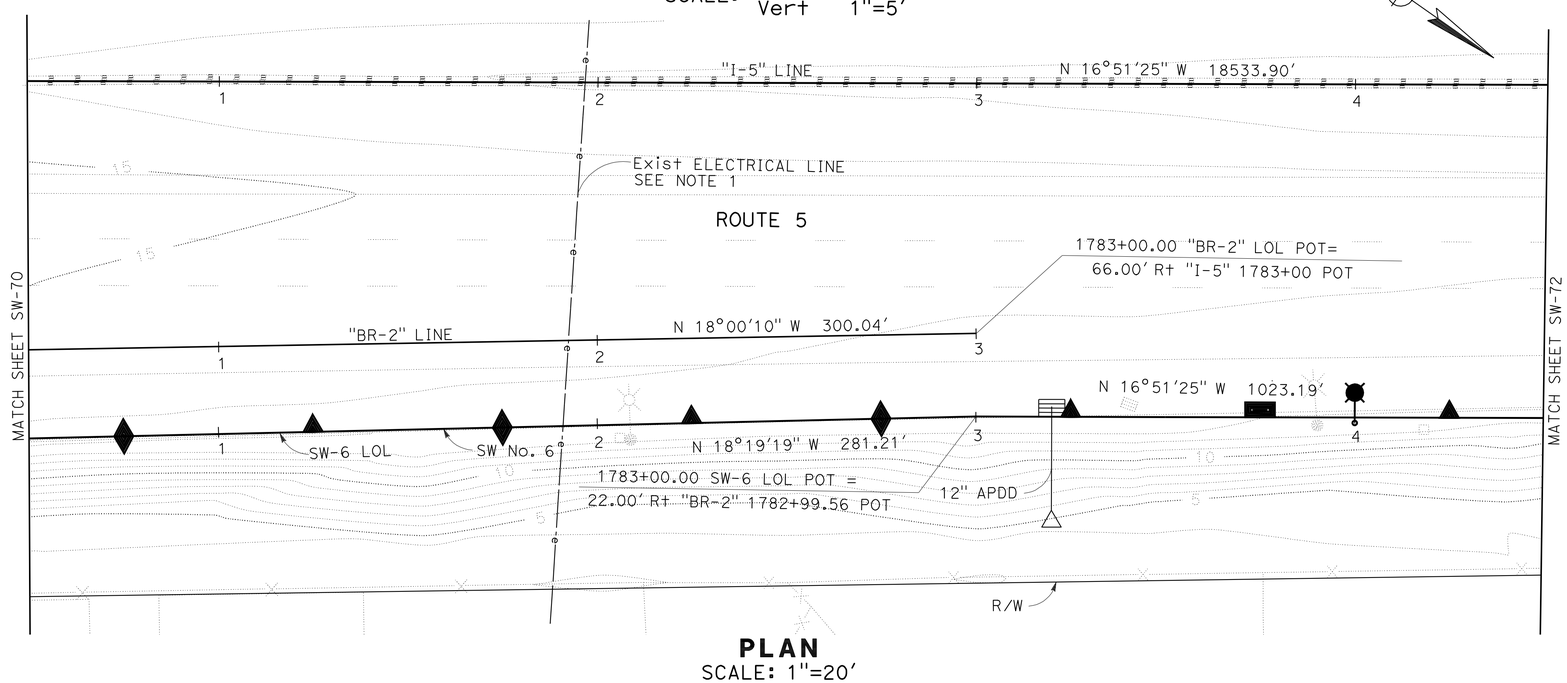

PLAN

SCALE: 1"=20'

THIS PLAN ACCURATE FOR SOUND WALL WORK ONLY

NOTE:

1. EXISTING ELECTRICAL LINE COULD NOT BE LOCATED. CONTRACTOR TO VERIFY.
2. FOR DETAILS OF RW TYPE 1SWB, SEE RETAINING WALL DEATIL SHEET SW-116.

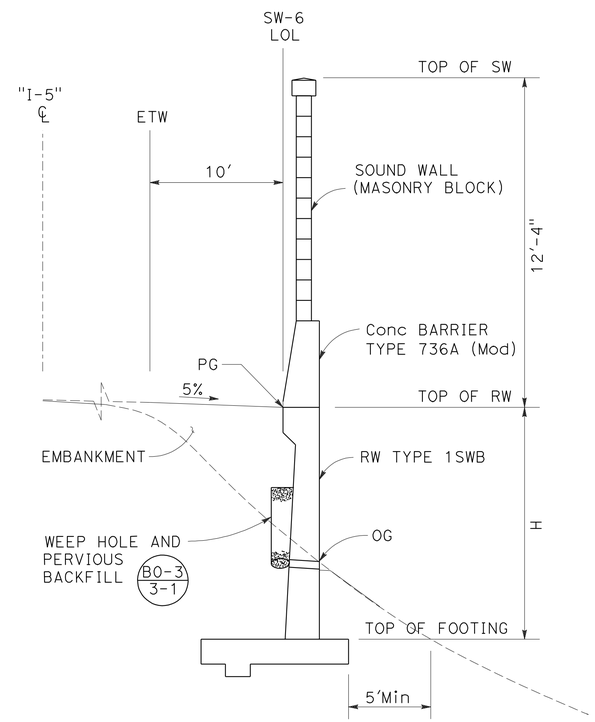

TYPICAL SECTION

SW-6 Sta 1783+00.00 To Sta 1784+44.00
SW-6 Sta 1796+00.00 TO Sta 1805+79.21
NO SCALE

SOUND WALL PLAN
SOUND WALL No. 6

SCALE AS SHOWN

SW-71

STATE OF CALIFORNIA - DEPARTMENT OF TRANSPORTATION
Caltrans
CONSULTANT FUNCTIONAL SUPERVISOR: KEITH G. MEYER
CALCULATED-DESIGNED BY: SRILAKSHMI SAKHAMURI
CHECKED BY: CHUONG NGUYEN
REVISED BY
DATE REVISED

LAST REVISION 08-10-10
DATE PLOTTED => 12-OCT-2010
TIME PLOTTED => 13:15

Dist	COUNTY	ROUTE	POST MILES TOTAL PROJECT	SHEET No.	TOTAL SHEETS
10	SJ	5	25.0/32.7	571	1132

REGISTERED CIVIL ENGINEER 04/21/10 DATE

10-11-10
PLANS APPROVAL DATE

REGISTERED PROFESSIONAL ENGINEER CHUONG NGUYEN No. C46770 Exp. 06/30/11 CIVIL STATE OF CALIFORNIA

THE STATE OF CALIFORNIA OR ITS OFFICERS OR AGENTS SHALL NOT BE RESPONSIBLE FOR THE ACCURACY OR COMPLETENESS OF SCANNED COPIES OF THIS PLAN SHEET.

RAJAPPAN & MEYER
CONSULTING ENGINEERS INC.
1038 LEIGH AVE, SUITE 100
SAN JOSE, CA 95126

SJCOG
555 E. WEBER AVE.
STOCKTON, CA 95202-2804

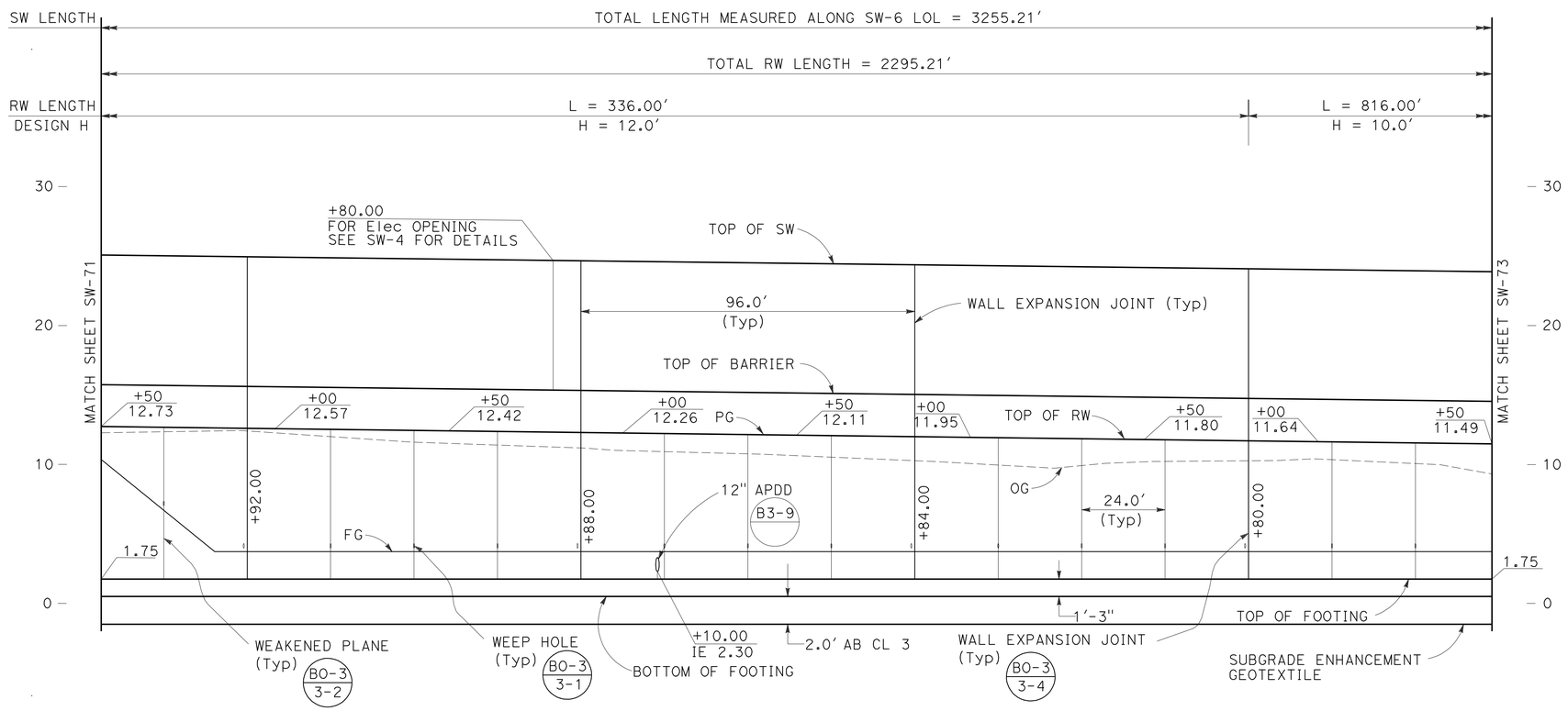

ELEVATION

SCALE: Horiz 1"=20'
Vert 1"=5'

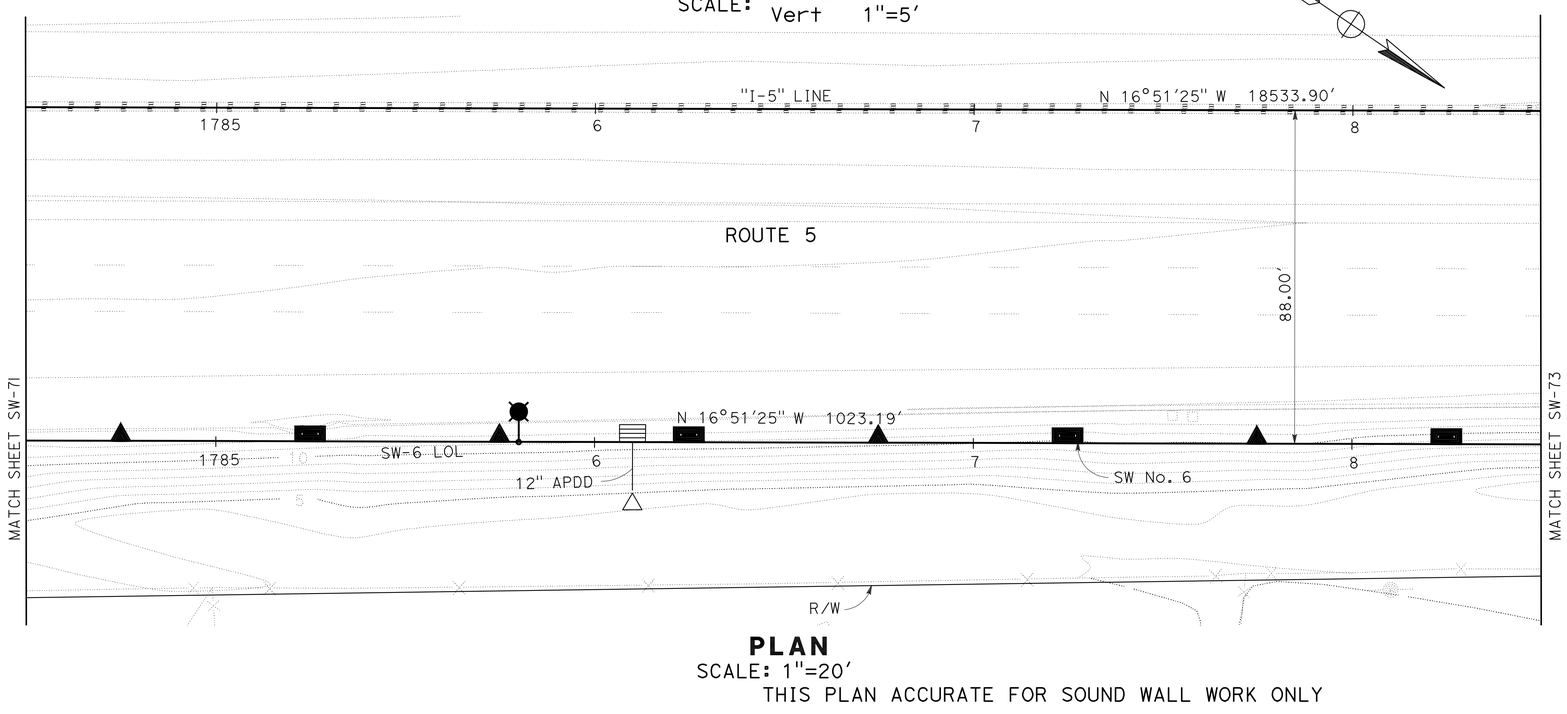

PLAN

SCALE: 1"=20'
THIS PLAN ACCURATE FOR SOUND WALL WORK ONLY

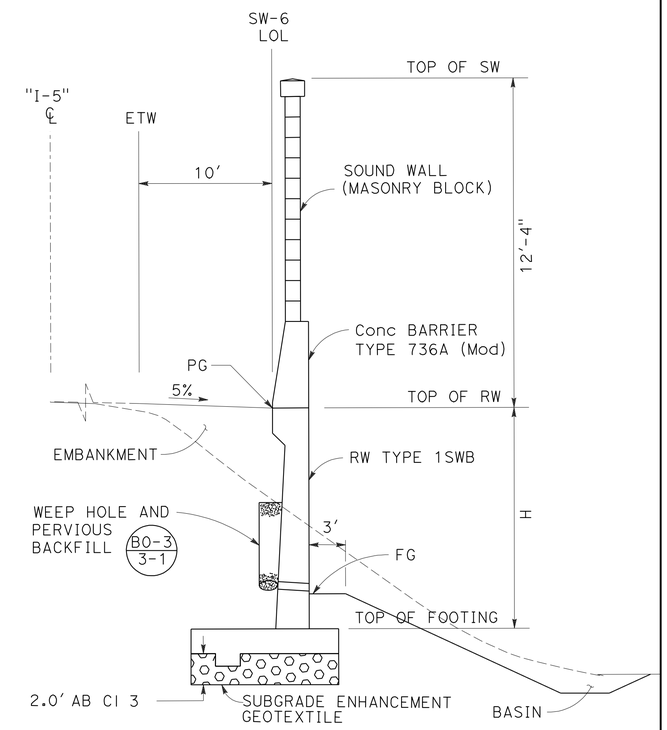

TYPICAL SECTION

SW-6 1784+44.00 To 1796+00.00
NO SCALE

NOTES:

1. FOR DETAILS OF RW TYPE 1 SWB, SEE RETAINING WALL DEATIL SHEET SW-116.

SOUND WALL PLAN

SOUND WALL No. 6

SCALE AS SHOWN

SW-72

STATE OF CALIFORNIA - DEPARTMENT OF TRANSPORTATION
Caltrans

CONSULTANT FUNCTIONAL SUPERVISOR: KEITH G. MEYER
CALCULATED-DESIGNED BY: SRILAKSHMI SAKHAMURI
CHECKED BY: CHUONG NGUYEN
REVISED BY
DATE REVISED

LAST REVISION 08-10-10
DATE PLOTTED => 12-OCT-2010
TIME PLOTTED => 11:22

Dist	COUNTY	ROUTE	POST MILES TOTAL PROJECT	SHEET No.	TOTAL SHEETS
10	SJ	5	25.0/32.7	572	1132

REGISTERED CIVIL ENGINEER 04/21/10 DATE

10-11-10
PLANS APPROVAL DATE

REGISTERED PROFESSIONAL ENGINEER CHUONG NGUYEN No. C46770 Exp. 06/30/11 CIVIL STATE OF CALIFORNIA

THE STATE OF CALIFORNIA OR ITS OFFICERS OR AGENTS SHALL NOT BE RESPONSIBLE FOR THE ACCURACY OR COMPLETENESS OF SCANNED COPIES OF THIS PLAN SHEET.

RAJAPPAN & MEYER
CONSULTING ENGINEERS INC.
1038 LEIGH AVE, SUITE 100
SAN JOSE, CA 95126

SJCOG
555 E. WEBER AVE.
STOCKTON, CA 95202-2804

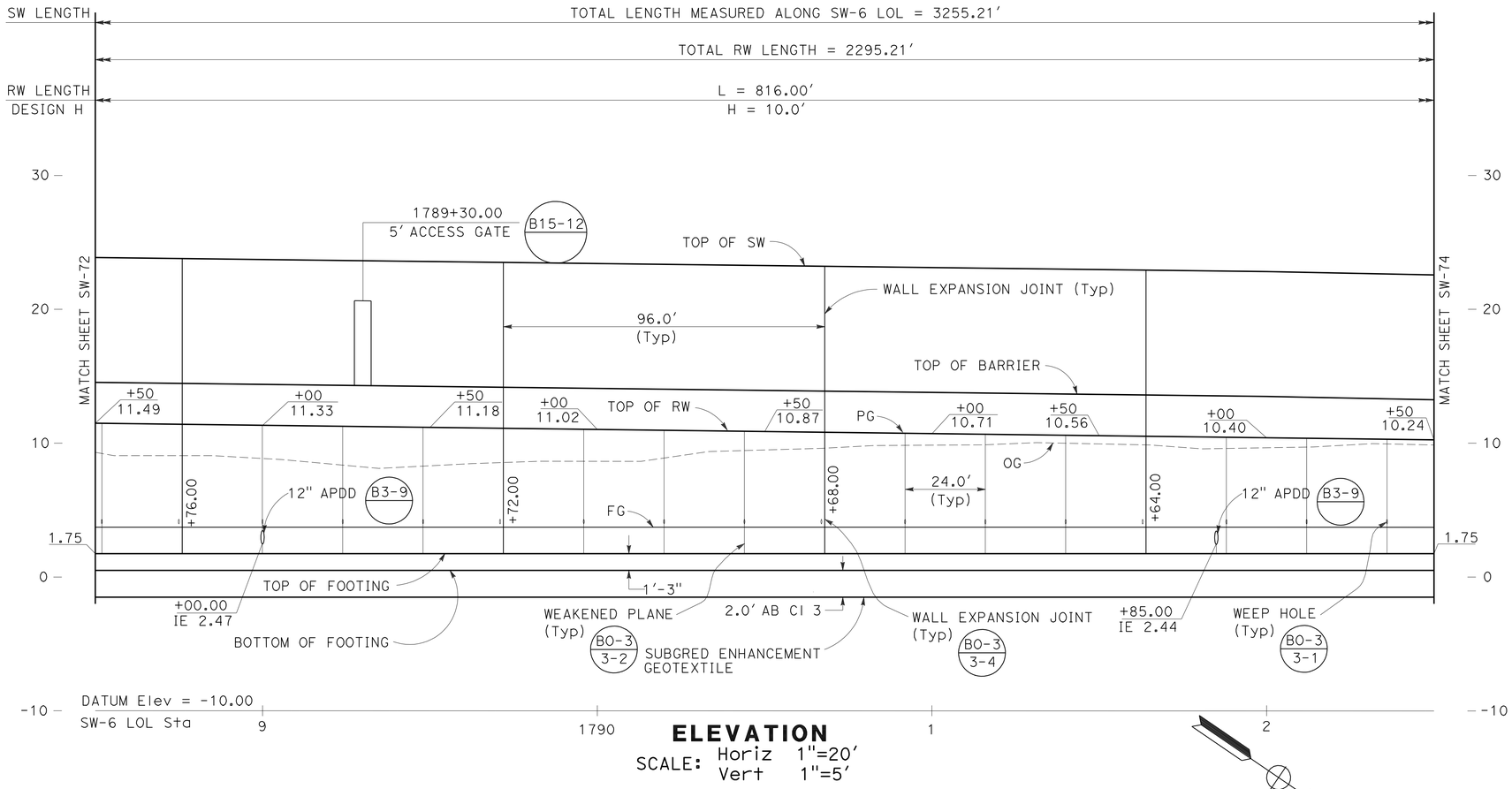

ELEVATION

SCALE: Horiz 1"=20'
Vert 1"=5'

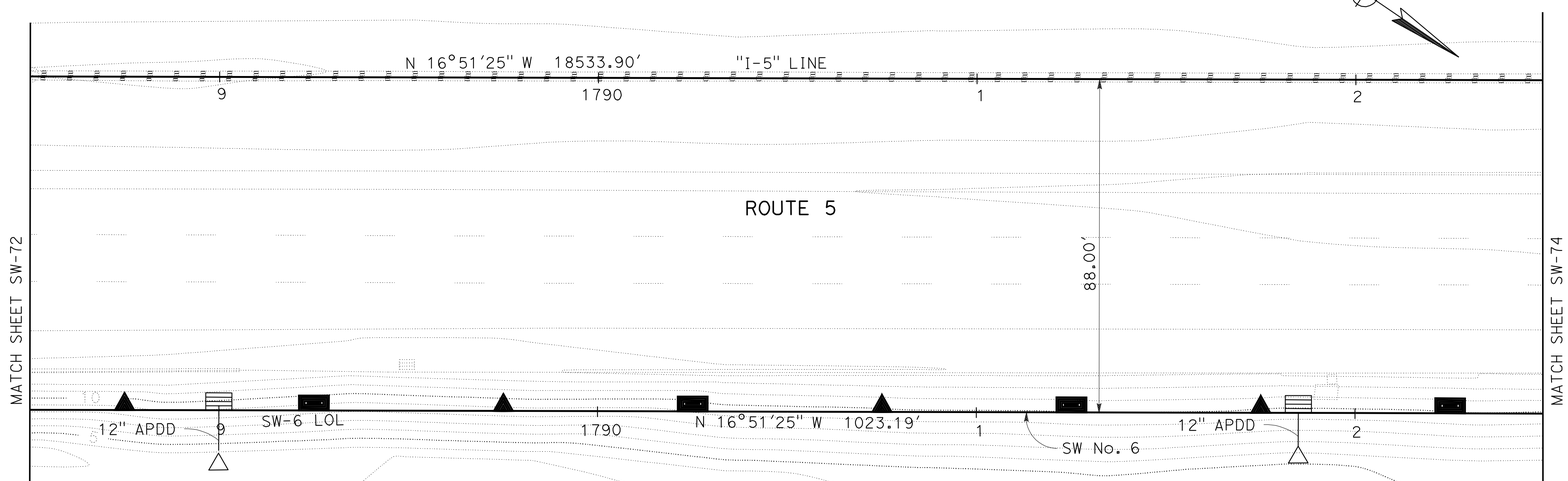

PLAN

SCALE: 1"=20'

THIS PLAN ACCURATE FOR SOUND WALL WORK ONLY

SOUND WALL PLAN

SOUND WALL No. 6

SCALE AS SHOWN

SW-73

STATE OF CALIFORNIA - DEPARTMENT OF TRANSPORTATION
Caltrans

CONSULTANT FUNCTIONAL SUPERVISOR: KEITH G. MEYER

CALCULATED-DESIGNED BY: SRILAKSHMI SAKHAMURI
CHECKED BY: CHUONG NGUYEN

REVISED BY
DATE REVISED

LAST REVISION DATE PLOTTED => 12-OCT-2010
07-07-10 TIME PLOTTED => 11:22

Dist	COUNTY	ROUTE	POST MILES TOTAL PROJECT	SHEET No.	TOTAL SHEETS
10	SJ	5	25.0/32.7	573	1132

REGISTERED CIVIL ENGINEER 04/21/10 DATE

10-11-10
PLANS APPROVAL DATE

REGISTERED PROFESSIONAL ENGINEER CHUONG NGUYEN No. C46770 Exp. 06/30/11 CIVIL STATE OF CALIFORNIA

THE STATE OF CALIFORNIA OR ITS OFFICERS OR AGENTS SHALL NOT BE RESPONSIBLE FOR THE ACCURACY OR COMPLETENESS OF SCANNED COPIES OF THIS PLAN SHEET.

RAJAPPAN & MEYER
CONSULTING ENGINEERS INC.
1038 LEIGH AVE, SUITE 100
SAN JOSE, CA 95126

SJCOG
555 E. WEBER AVE.
STOCKTON, CA 95202-2804

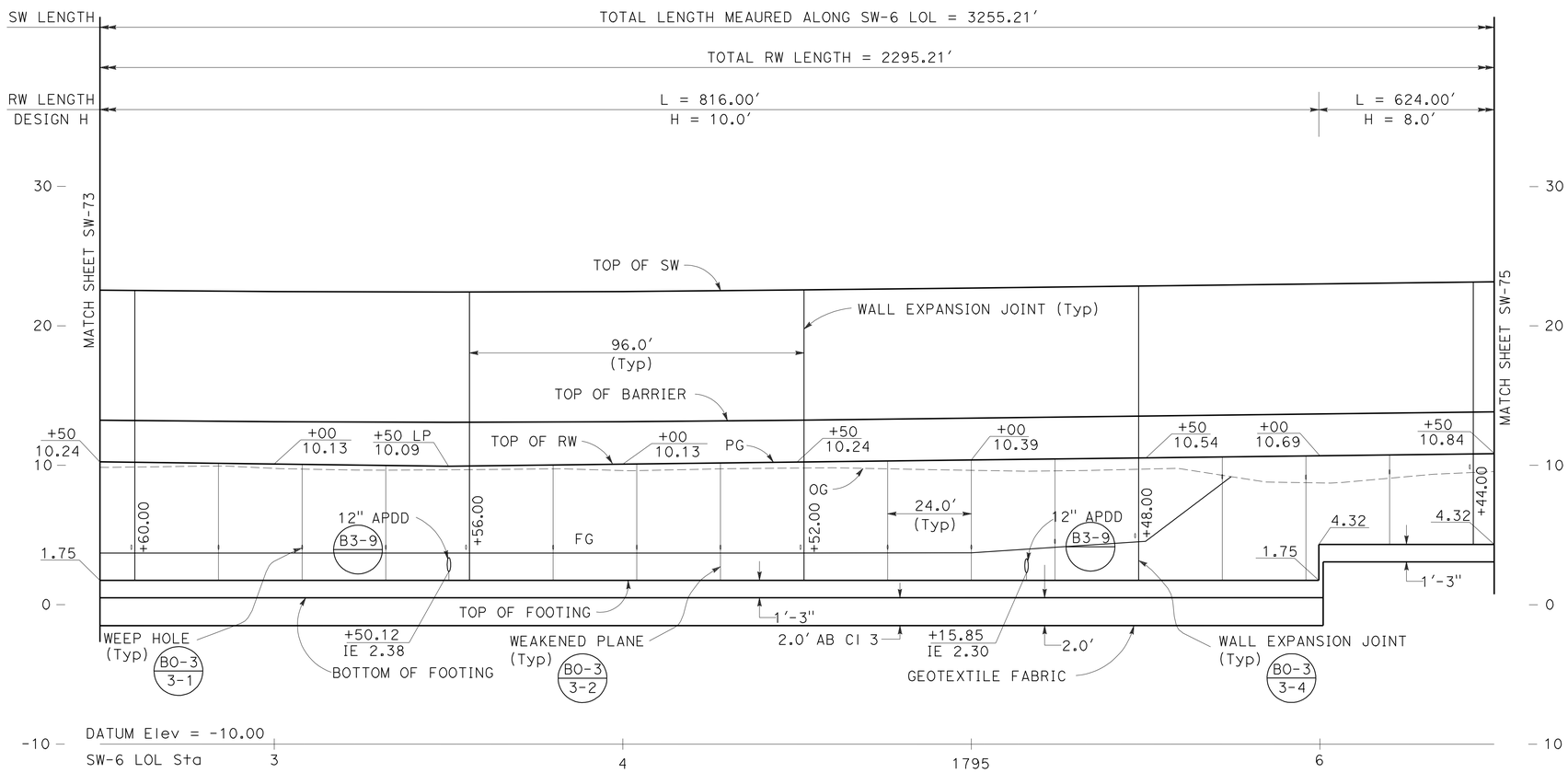

ELEVATION

SCALE: Horiz 1"=20'
Vert 1"=5'

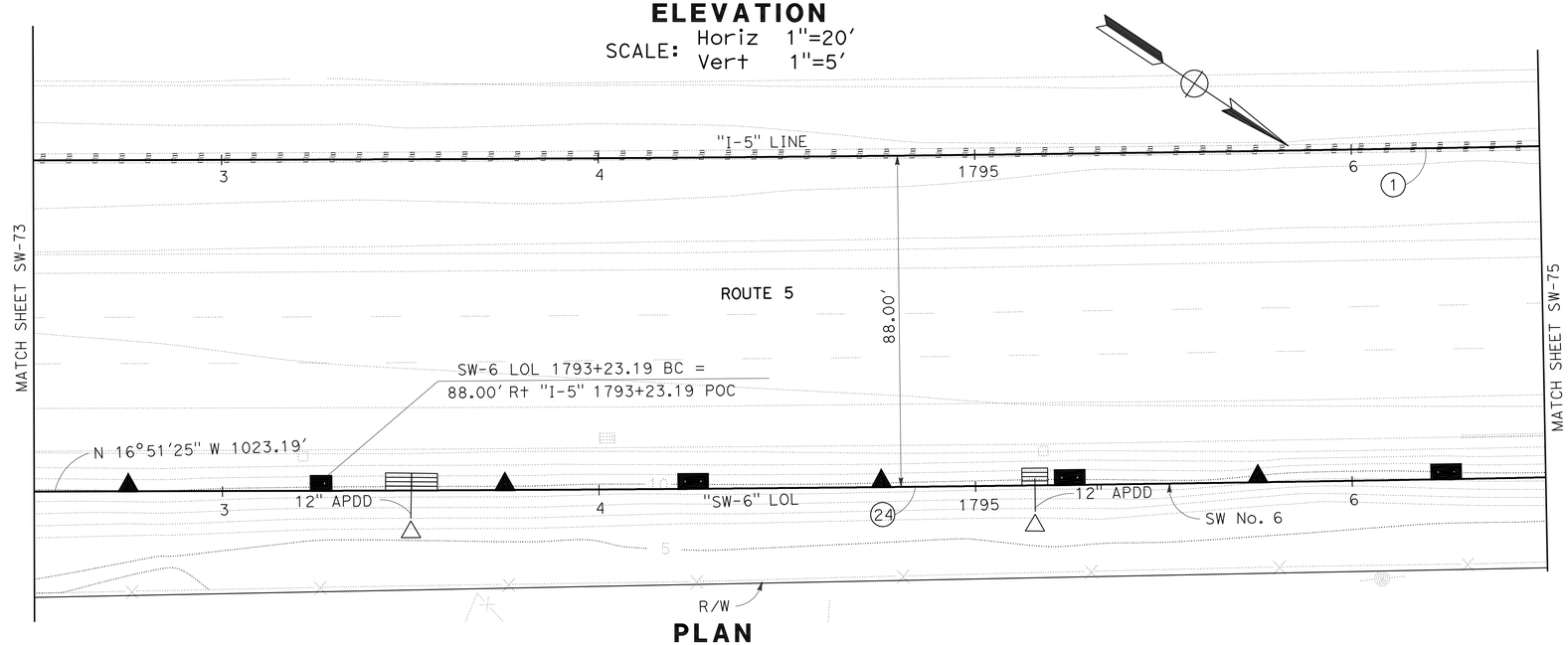

PLAN

SCALE: 1"=20'

THIS PLAN ACCURATE FOR SOUND WALL WORK ONLY

CURVE DATA

No.	RADIUS	DELTA	TANGENT	LENGTH
1	20000.00'	3°52'35"	676.82'	1353.12'
24	20088.00'	3°37'41"	636.22'	1272.01'

SOUND WALL PLAN

SOUND WALL No. 6

SCALE AS SHOWN

SW-74

STATE OF CALIFORNIA - DEPARTMENT OF TRANSPORTATION
Caltrans

CONSULTANT FUNCTIONAL SUPERVISOR: KEITH G. MEYER

CALCULATED-DESIGNED BY: SRILAKSHMI SAKHAMURI
CHECKED BY: CHUONG NGUYEN
REVISED BY
DATE REVISED

LAST REVISION 07-07-10
DATE PLOTTED => 12-OCT-2010
TIME PLOTTED => 11:22

Dist	COUNTY	ROUTE	POST MILES TOTAL PROJECT	SHEET No.	TOTAL SHEETS
10	SJ	5	25.0/32.7	574	1132

REGISTERED CIVIL ENGINEER 04/21/10 DATE

10-11-10
PLANS APPROVAL DATE

REGISTERED PROFESSIONAL ENGINEER CHUONG NGUYEN No. C46770 Exp. 06/30/11 CIVIL STATE OF CALIFORNIA

THE STATE OF CALIFORNIA OR ITS OFFICERS OR AGENTS SHALL NOT BE RESPONSIBLE FOR THE ACCURACY OR COMPLETENESS OF SCANNED COPIES OF THIS PLAN SHEET.

RAJAPPAN & MEYER
CONSULTING ENGINEERS INC.
1038 LEIGH AVE, SUITE 100
SAN JOSE, CA 95126

SJCOG
555 E. WEBER AVE.
STOCKTON, CA 95202-2804

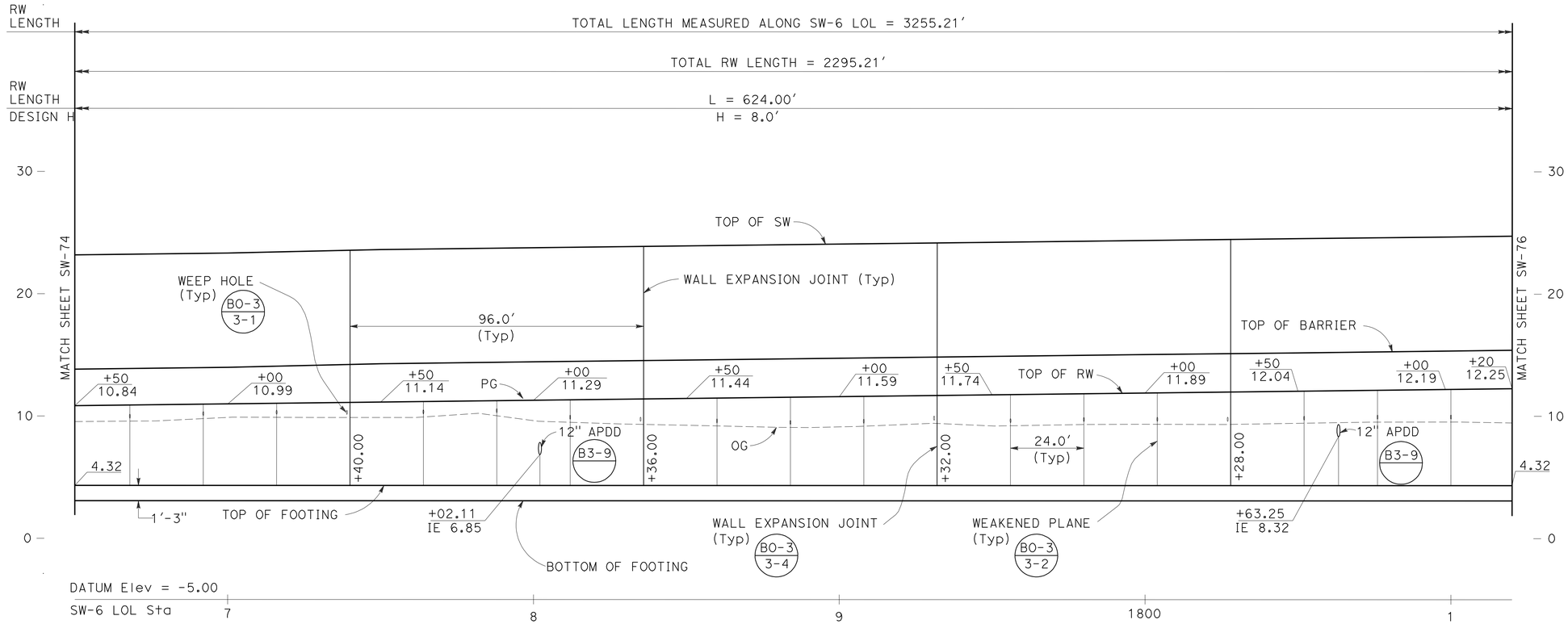

ELEVATION

SCALE: Horiz 1"=20'
Vert 1"=5'

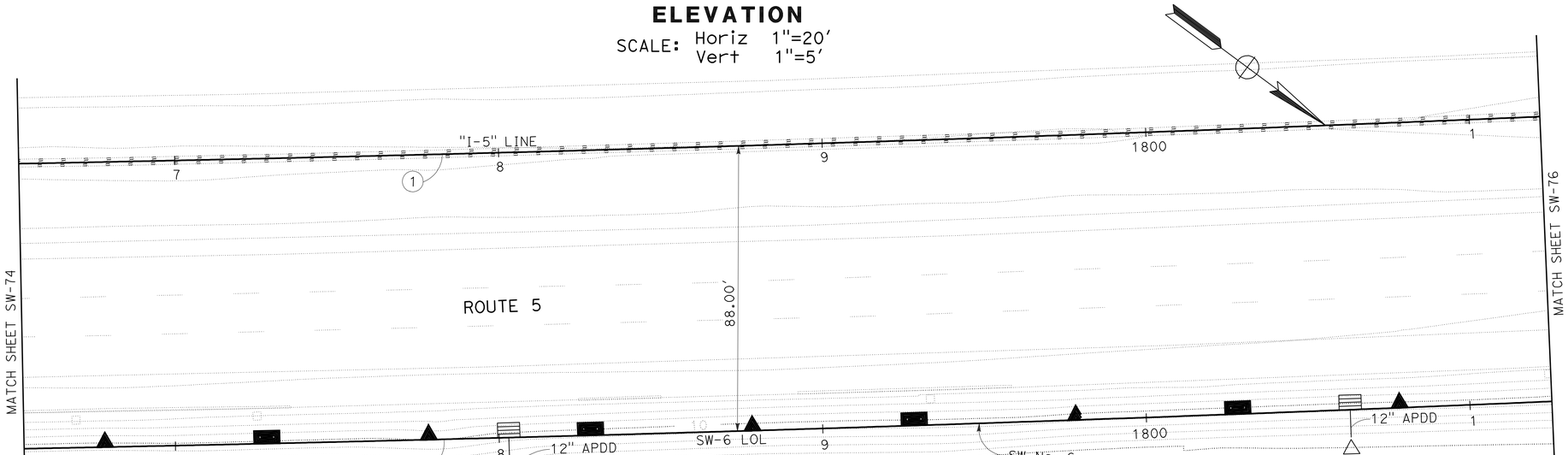

PLAN

SCALE: 1"=20'

THIS PLAN ACCURATE FOR SOUND WALL WORK ONLY

CURVE DATA

No.	RADIUS	DELTA	TANGENT	LENGTH
1	20000.00'	3°52'35"	676.82'	1353.12'
24	20088.00'	3°37'41"	636.22'	1272.01'

SOUND WALL PLAN

SOUND WALL No. 6

SCALE AS SHOWN

SW-75

STATE OF CALIFORNIA - DEPARTMENT OF TRANSPORTATION
Caltrans

CONSULTANT FUNCTIONAL SUPERVISOR: KEITH G. MEYER

CALCULATED-DESIGNED BY: SRILAKSHMI SAKHAMURI
CHECKED BY: CHUONG NGUYEN

REVISED BY
DATE REVISED

LAST REVISION 07-07-10
DATE PLOTTED => 12-OCT-2010
TIME PLOTTED => 11:23

Dist	COUNTY	ROUTE	POST MILES TOTAL PROJECT	SHEET No.	TOTAL SHEETS
10	SJ	5	25.0/32.7	575	1132

REGISTERED CIVIL ENGINEER — DATE 04/21/10

10-11-10
PLANS APPROVAL DATE

REGISTERED PROFESSIONAL ENGINEER — CHUONG NGUYEN — No. C46770 — Exp. 06/30/11 — CIVIL — STATE OF CALIFORNIA

THE STATE OF CALIFORNIA OR ITS OFFICERS OR AGENTS SHALL NOT BE RESPONSIBLE FOR THE ACCURACY OR COMPLETENESS OF SCANNED COPIES OF THIS PLAN SHEET.

RAJAPPAN & MEYER
CONSULTING ENGINEERS INC.
1038 LEIGH AVE, SUITE 100
SAN JOSE, CA 95126

SJCOG
555 E. WEBER AVE.
STOCKTON, CA 95202-2804

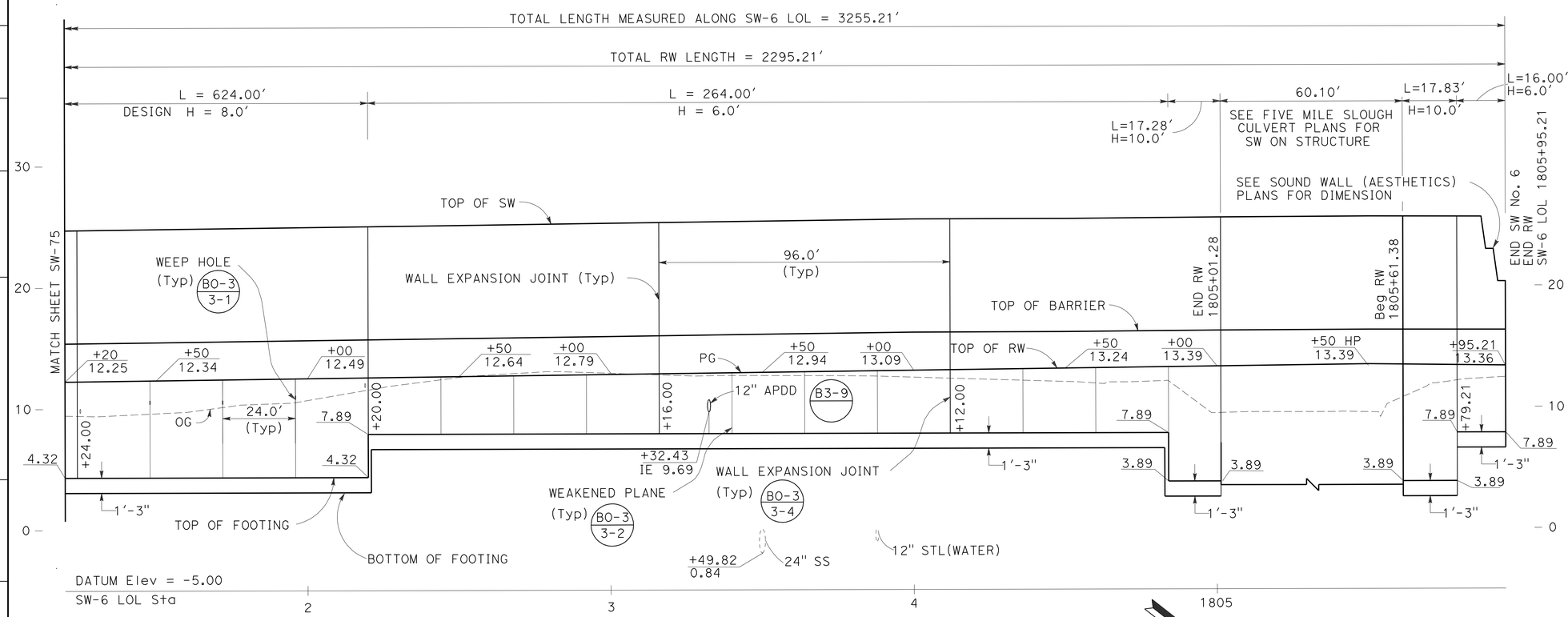

ELEVATION

SCALE: Horiz 1"=20'
Vert 1"=5'

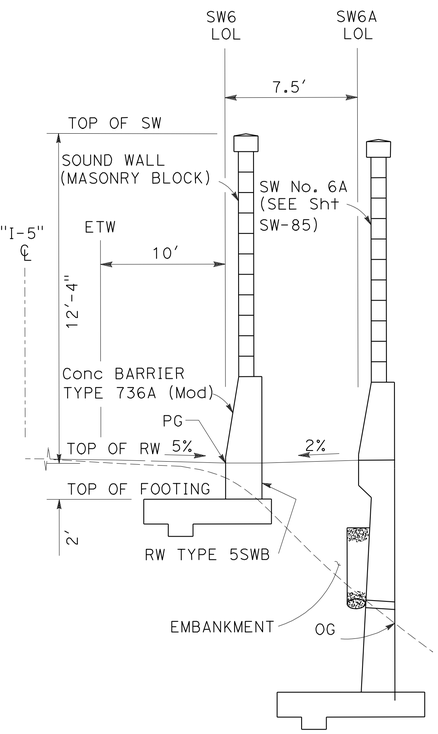

TYPICAL SECTION

SW-6 Sta 1805+79.21 TO Sta 1805+95.21
NO SCALE

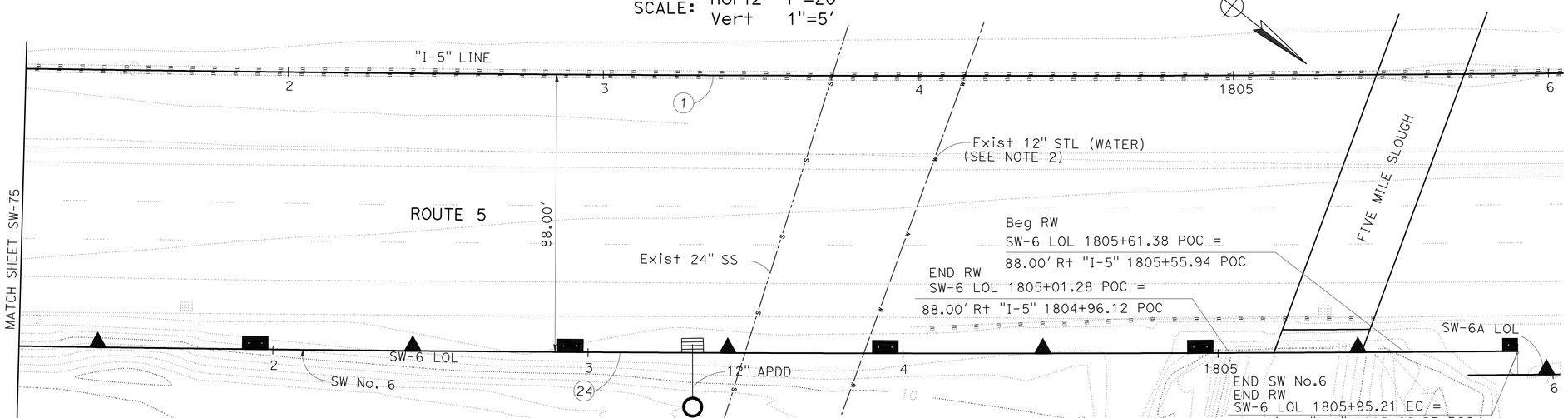

PLAN

SCALE: 1"=20'

THIS PLAN ACCURATE FOR SOUND WALL WORK ONLY

NOTES:

1. FOR DETAILS OF RW TYPE 5SWB, SEE RETAINING WALL DETAIL SHEET SW-117.
2. EXISTING 12" WATER LINE COULD NOT BE LOCATED. CONTRACTOR TO VERIFY.

SOUND WALL PLAN

SOUND WALL No. 6

SCALE AS SHOWN

SW-76

STATE OF CALIFORNIA - DEPARTMENT OF TRANSPORTATION
Caltrans
CONSULTANT FUNCTIONAL SUPERVISOR: KEITH G. MEYER
CALCULATED-DESIGNED BY: SRILAKSHMI SAKHAMURI
CHECKED BY: CHUONG NGUYEN
REVISED BY
DATE REVISED

LAST REVISION 08-10-10
DATE PLOTTED => 12-OCT-2010
TIME PLOTTED => 11:23

Dist	COUNTY	ROUTE	POST MILES TOTAL PROJECT	SHEET No.	TOTAL SHEETS
10	SJ	5	25.0/32.7	576	1132

REGISTERED CIVIL ENGINEER 04/21/10 DATE

10-11-10
PLANS APPROVAL DATE

REGISTERED PROFESSIONAL ENGINEER CHRISTINA D.B.FRANKEL No. C-25730 Exp. 05/31/11 CIVIL STATE OF CALIFORNIA

THE STATE OF CALIFORNIA OR ITS OFFICERS OR AGENTS SHALL NOT BE RESPONSIBLE FOR THE ACCURACY OR COMPLETENESS OF SCANNED COPIES OF THIS PLAN SHEET.

DERIVI CONSTRUCTION & ARCHITECTURE, INC.
924 N. YOSEMITE STREET
STOCKTON, CA 95203

SJCOG
555 E. WEBER AVE.
STOCKTON, CA 95202-2804

BLOCK LEGEND:

Medium Wt / Light Wt — BLOCK A: 'CAP'
8(H)x10(D)*x16(L)
*PROJECT BLOCK 1" EA SIDE
SPLIT FACE BOTH FACES
DARK TAN WITH MEDIUM-SIZED BLACK, DARK BROWN & WHITE AGGREGATE

Medium Wt / Light Wt — BLOCK B: 'WATER'
8(H)x8(D)x16(L)
SPLIT FACE BOTH FACES
DARK TAN WITH MEDIUM-SIZED BLACK, DARK BROWN & WHITE AGGREGATE

Medium Wt — BLOCK C: 'FIELDS'
8(H)x8(D)x16(L)
SPLIT FACE BOTH FACES
3 SCORE (3/8") BOTH FACES
DARK TAN WITH MEDIUM-SIZED BLACK, DARK BROWN & WHITE AGGREGATE

Medium Wt — BLOCK D: 'LEVEE'
8(H)x10(D)*x16(L)
*PROJECT BLOCK 1" EA SIDE
PRECISION BLOCK
MEDIUM-LIGHT TAN WITH MEDIUM-SIZED BLACK, RED & WHITE AGGREGATE

Medium Wt / Light Wt — BLOCK G: 'LEVEE 2'
8(H)x8(D)x16(L)
PRECISION BLOCK
MEDIUM-LIGHT TAN WITH MEDIUM-SIZED BLACK, RED & WHITE AGGREGATE

Medium Wt / Light Wt — BLOCK F: 'CITY'
8(H)x8(D)x16(L)
SPLIT FACE BOTH FACES
LIGHT TAN WITH SMALL-SIZED WHITE, GREY & BLACK AGGREGATE

Medium Wt / Light Wt — BLOCK H: 'STREET'
8(H)x8(D)x16(L)
PRECISION BLOCK
1 SCORE (3/8") BOTH FACES
DARK GREY

GENERAL NOTES:

1. EACH SOUNDWALL ELEVATION IS ELEVATED INDEPENDENTLY. SEE SOUNDWALL GENERAL PLANS FOR MORE INFORMATION.
2. WHERE CUT BLOCKS ARE REQUIRED, CUT BLOCK SHALL BE NO SMALLER THAN ONE HALF OF A BLOCK, OTHERWISE CUT ADJACENT BLOCK AS WELL.
3. PLACE CORE HOLES (NOT SHOWN) FOR VINE PLANTINGS AT 16' ON CENTER.
4. THE CONTRACTOR SHALL SUBMIT COLOR SAMPLE OF BLOCK TO THE ENGINEER FOR APPROVAL.

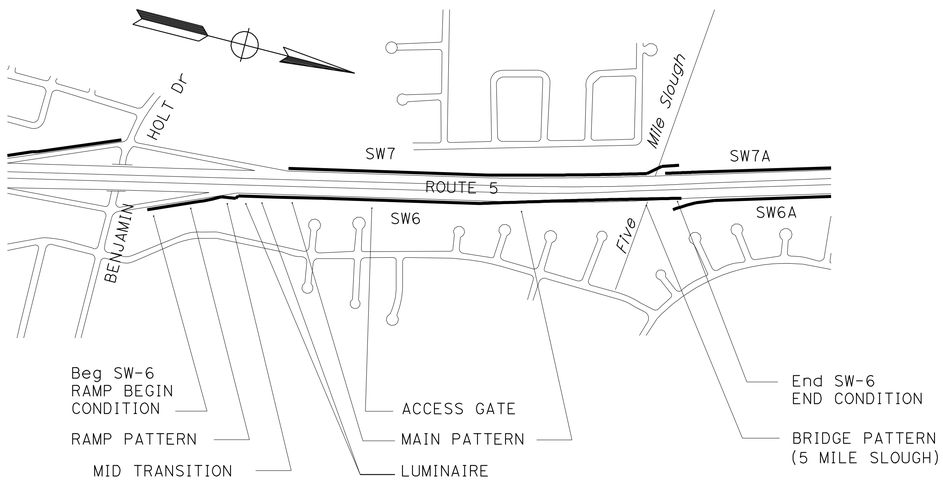

SOUND WALL 6 KEY PLAN

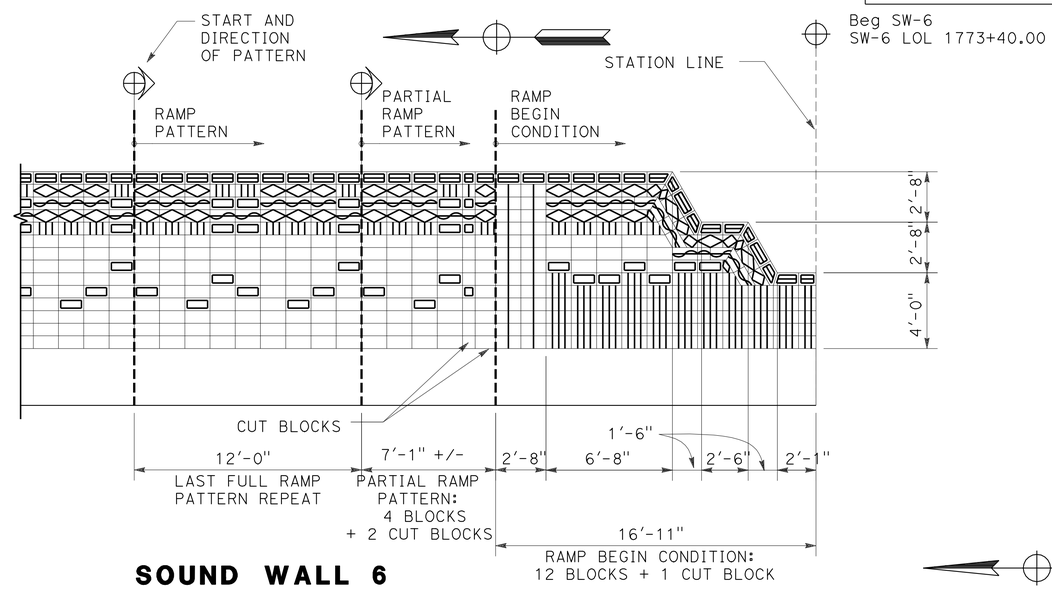

SOUND WALL 6 RAMP BEGIN CONDITION

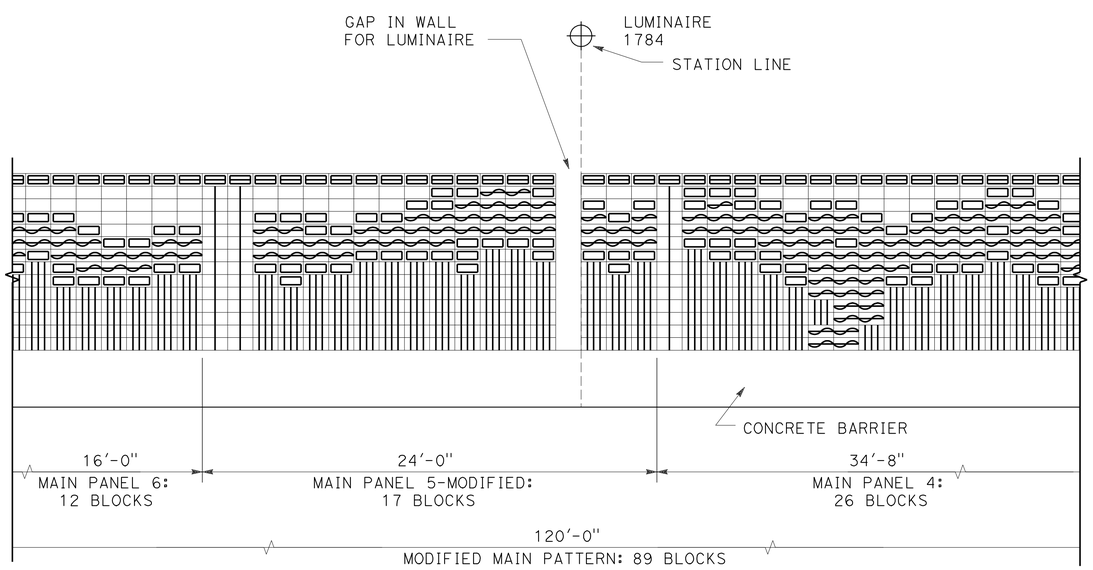

SOUND WALL 6 MODIFIED MAIN PATTERN AT LUMINAIRE

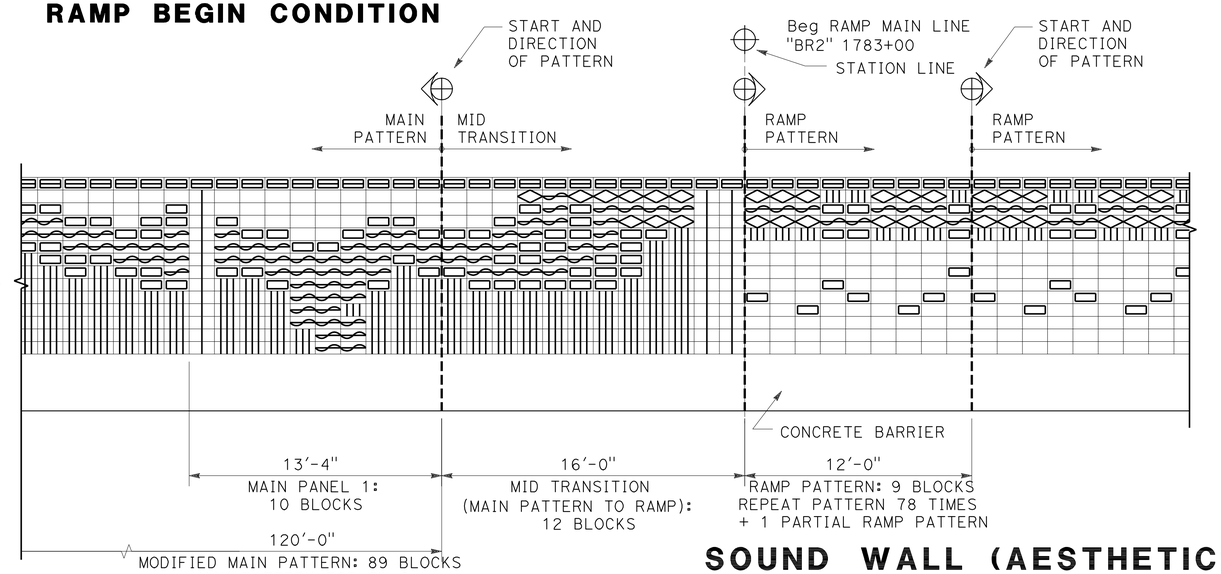

SOUND WALL 6 RAMP PATTERN TO MID TRANSITION TO MAIN PATTERN

SOUND WALL (AESTHETICS)

SOUND WALL No. 6

NO SCALE **SW-77**

THIS PLAN ACCURATE FOR SOUND WALL AESTHETIC TREATMENTS ONLY

REVISED BY | DATE REVISED
CHRISTINA D. B. FRANKEL | LINDA M. DEVIVI
CALCULATED-DESIGNED BY | CHECKED BY
CONSULTANT FUNCTIONAL SUPERVISOR: LINDA M. DEVIVI
STATE OF CALIFORNIA - DEPARTMENT OF TRANSPORTATION
Caltrans

LAST REVISION 07-07-10 | DATE PLOTTED => 12-OCT-2010 | TIME PLOTTED => 11:23

Dist	COUNTY	ROUTE	POST MILES TOTAL PROJECT	SHEET No.	TOTAL SHEETS
10	SJ	5	25.0/32.7	577	1132

Christina D.B. Frankel 04/21/10
REGISTERED CIVIL ENGINEER DATE

10-11-10
PLANS APPROVAL DATE

REGISTERED PROFESSIONAL ENGINEER
CHRISTINA D.B.FRANKEL
No. C-25730
Exp. 05/31/11
CIVIL
STATE OF CALIFORNIA

THE STATE OF CALIFORNIA OR ITS OFFICERS OR AGENTS SHALL NOT BE RESPONSIBLE FOR THE ACCURACY OR COMPLETENESS OF SCANNED COPIES OF THIS PLAN SHEET.

DERIVI CONSTRUCTION & ARCHITECTURE, INC.
924 N. YOSEMITE STREET
STOCKTON, CA 95203

SJCOG
555 E. WEBER AVE.
STOCKTON, CA 95202-2804

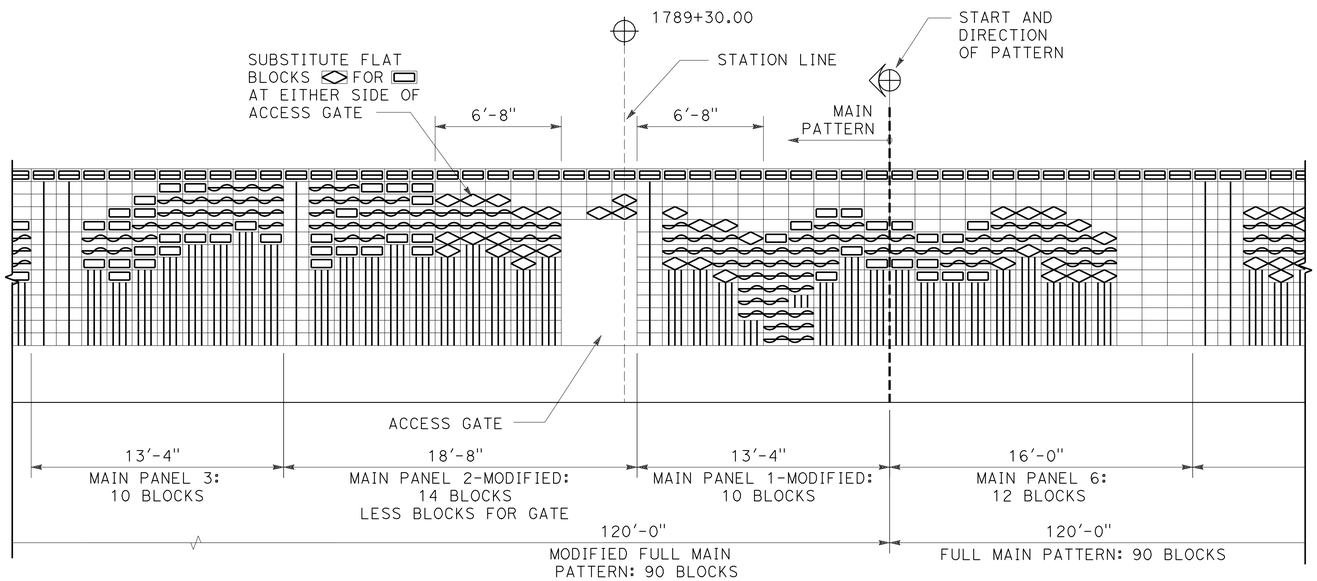

SOUND WALL 6
ACCESS GATE

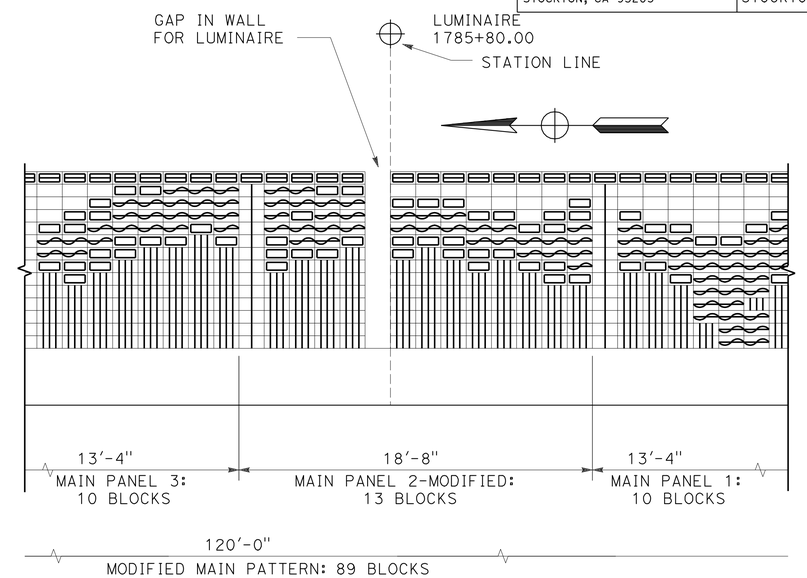

SOUND WALL 6
MODIFIED MAIN PATTERN AT LUMINARE

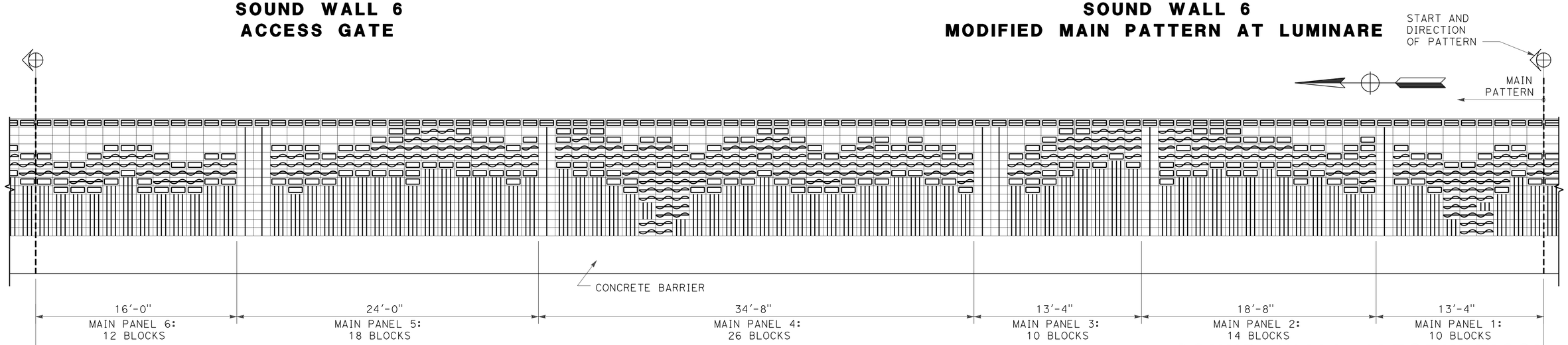

SOUND WALL (AESTHETICS)

SOUND WALL No. 6

NO SCALE

SOUND WALL 6
MAIN PATTERN - Typ

SW-78

THIS PLAN ACCURATE FOR SOUND WALL AESTHETIC TREATMENTS ONLY

REVISED BY	DATE REVISED

CALCULATED-DESIGNED BY: CHRISTINA D. B. FRANKEL
CHECKED BY: LINDA M. DEVIVI
CONSULTANT FUNCTIONAL SUPERVISOR: LINDA M. DEVIVI

STATE OF CALIFORNIA - DEPARTMENT OF TRANSPORTATION
Caltrans

LAST REVISION 07-07-10 | DATE PLOTTED => 12-OCT-2010 | TIME PLOTTED => 11:23

Dist	COUNTY	ROUTE	POST MILES TOTAL PROJECT	SHEET No.	TOTAL SHEETS
10	SJ	5	25.0/32.7	578	1132

REGISTERED CIVIL ENGINEER DATE 04/21/10

10-11-10
PLANS APPROVAL DATE

REGISTERED PROFESSIONAL ENGINEER
CHRISTINA D.B.FRANKEL
No. C-25730
Exp. 05/31/11
CIVIL
STATE OF CALIFORNIA

THE STATE OF CALIFORNIA OR ITS OFFICERS OR AGENTS SHALL NOT BE RESPONSIBLE FOR THE ACCURACY OR COMPLETENESS OF SCANNED COPIES OF THIS PLAN SHEET.

DERIVI CONSTRUCTION & ARCHITECTURE, INC.
924 N. YOSEMITE STREET
STOCKTON, CA 95203

SJCOG
555 E. WEBER AVE.
STOCKTON, CA 95202-2804

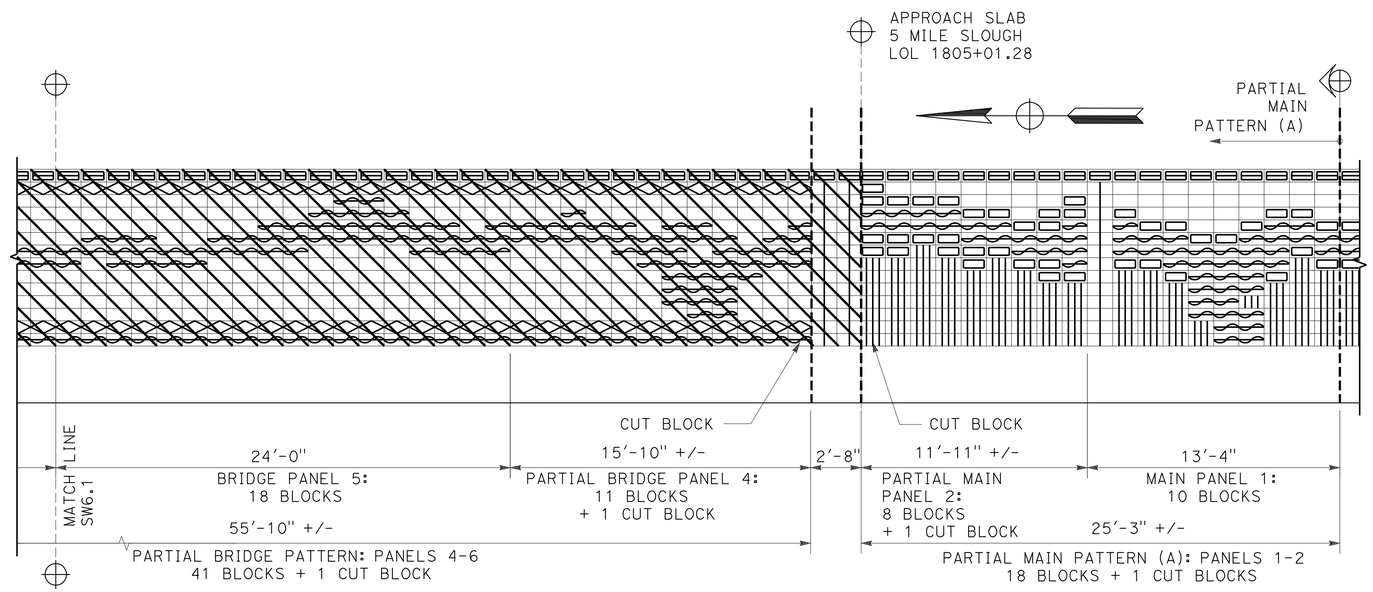

SOUND WALL 6
PARTIAL MAIN PATTERN (A) TO BRIDGE PATTERN (5 MILE SLOUGH)

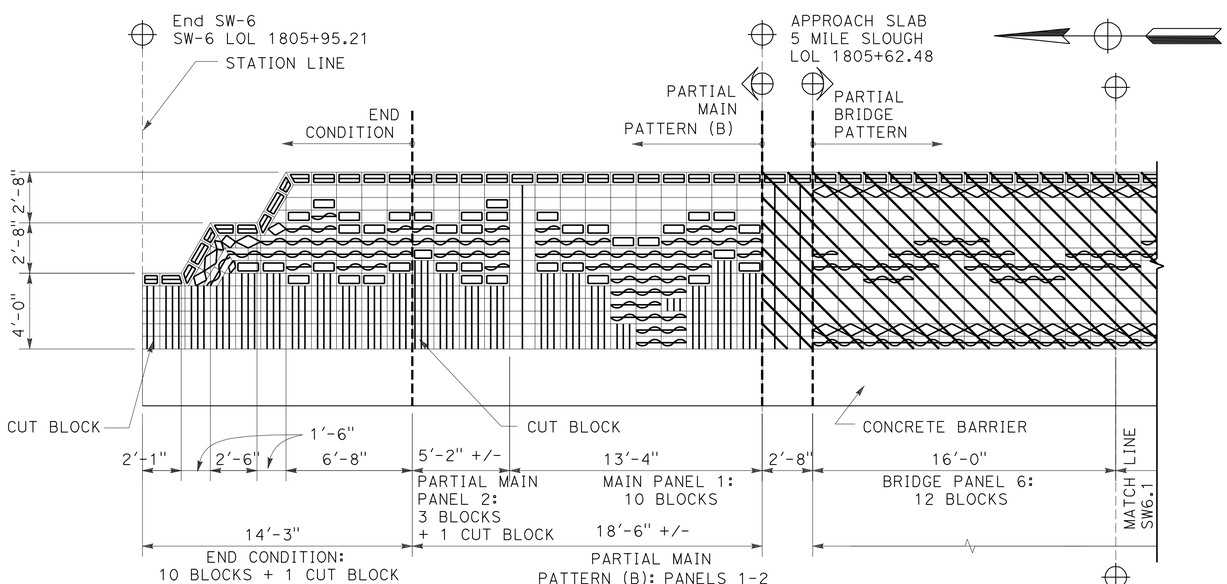

SOUND WALL 6
BRIDGE PATTERN (5 MILE SLOUGH) TO PARTIAL MAIN PATTERN (B) TO END CONDITION

THIS PLAN ACCURATE FOR SOUND WALL AESTHETIC TREATMENTS ONLY

SOUND WALL (AESTHETICS)

SOUND WALL No. 6

NO SCALE

SW-79

STATE OF CALIFORNIA - DEPARTMENT OF TRANSPORTATION
Caltrans

CONSULTANT FUNCTIONAL SUPERVISOR: LINDA M. DEVIVI
CALCULATED-DESIGNED BY: CHRISTINA D. B. FRANKEL
CHECKED BY: LINDA M. DEVIVI
REVISED BY
DATE REVISED

LAST REVISION 07-07-10
DATE PLOTTED => 12-OCT-2010
TIME PLOTTED => 11:23

DIST	COUNTY	ROUTE	POST MILES TOTAL PROJECT	SHEET No	TOTAL SHEETS
10	SJ	5	25.0/32.7	579	1132

GEOTECHNICAL PROFESSIONAL — DATE 04/21/10

10-11-10
PLANS APPROVAL DATE

REGISTERED GEOLOGIST — GARY PARIKH — No. G.E. 666 — Exp. 12/31/11 — CERTIFIED ENGINEERING GEOLOGIST — STATE OF CALIFORNIA

The State of California or its officers or agents shall not be responsible for the accuracy or completeness of scanned copies of this plan sheet.

SJCOG
555 WEBER AVE.
STOCKTON, CA 95202-2804

PARIKH CONSULTANTS, INC.
2360 QUME DRIVE, SUITE A
SAN JOSE, CA 95131

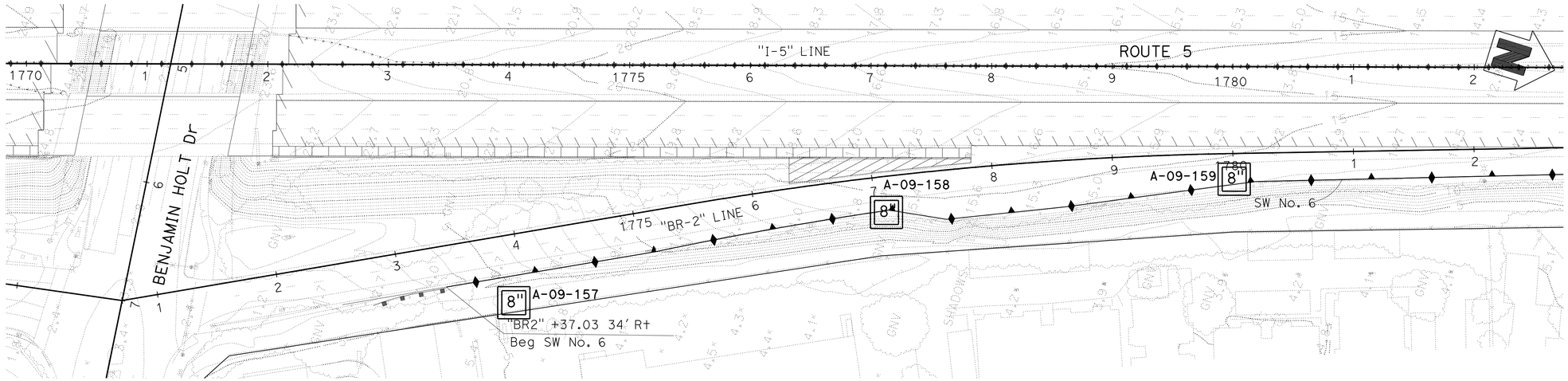

PLAN
1"=50'

BENCHMARK:
THE HORIZONTAL COORDINATES VALUES ARE IN THE CALIFORNIA COORDINATE SYSTEM (CCS 83) ZONE 3, EPOCH DATE 2007.00, IN U.S. SURVEY FEET.
THE VERTICAL CONTROL VALUES ARE BASED ON THE NORTH AMERICAN U.S. SURVEY FEET, HEIGHT MODERNIZATION SURVEY STATION, (2007.00) AND GEOID03 WAS USED FOR THE ADJUSTMENT.

THIS LOTB SHEET WAS PREPARED IN ACCORDANCE WITH CALTRANS SOIL & ROCK LOGGING, CLASSIFICATION, AND PRESENTATION MANUAL (2007)

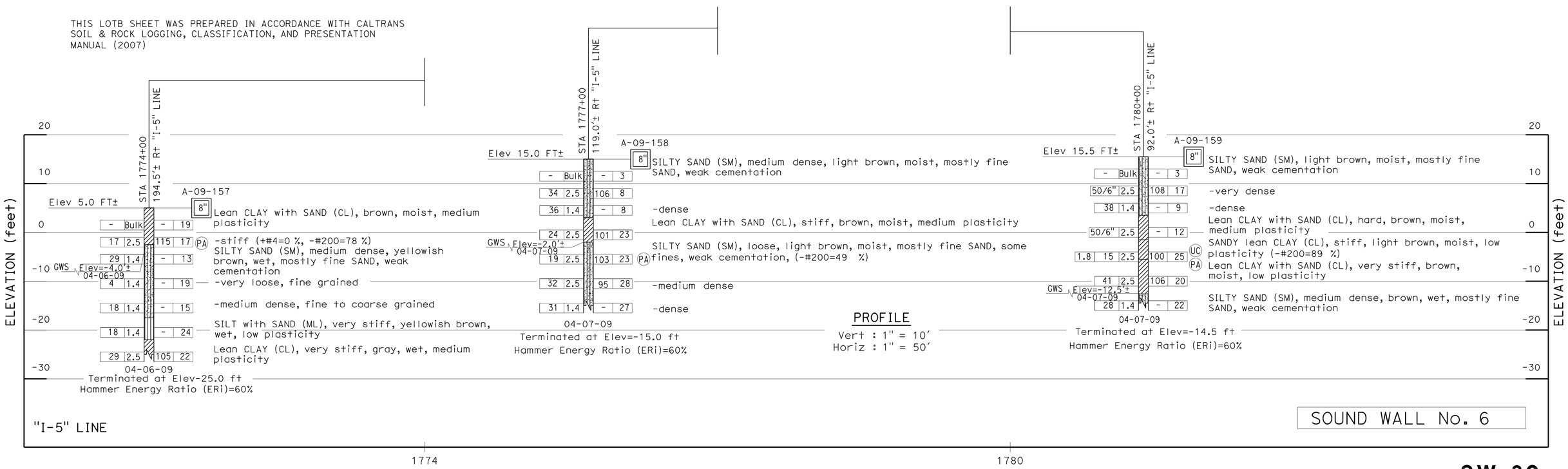

SCALE AS SHOWN **SW-80**

DESIGN OVERSIGHT	DRAWN BY O. GOUTHIER	S. DUDDU- A.R. BHARADWAJ FIELD INVESTIGATION BY:	PREPARED FOR THE STATE OF CALIFORNIA DEPARTMENT OF TRANSPORTATION	A. LAM PROJECT ENGINEER	BRIDGE NO. -- / POST MILES --	I-5 NORTH STOCKTON CORRIDOR IMPROVEMENT
SIGN OFF DATE	CHECKED BY D. WANG	DATE: MARCH 2009 TO MAY 2009				LOG OF TEST BORINGS

OGS GEOTECHNICAL LOG OF TEST BORINGS SHEET (ENGLISH) (REV. 06-01-09)

ORIGINAL SCALE IN INCHES FOR REDUCED PLANS 0 1 2 3

CU 06240
EA 0G4701

DISREGARD PRINTS BEARING EARLIER REVISION DATES — REVISION DATES 09/26/09 03/15/10 — SHEET OF

FILE => a0g470rh012.dgn
USERNAME => trienard

USERNAME => trienard DATE PLOTTED => 12-OCT-2010 TIME PLOTTED => 11:23

DIST	COUNTY	ROUTE	POST MILES TOTAL PROJECT	SHEET No	TOTAL SHEETS
10	SJ	5	25.0/32.7	580	1132

GEOTECHNICAL PROFESSIONAL — DATE 04/21/10

REGISTERED GEOLOGIST — GARY PARIKH — No. G.E. 666 — Exp. 12/31/11 — CERTIFIED ENGINEERING GEOLOGIST — STATE OF CALIFORNIA

10-11-10
PLANS APPROVAL DATE

The State of California or its officers or agents shall not be responsible for the accuracy or completeness of scanned copies of this plan sheet.

SJCOG
555 WEBER AVE.
STOCKTON, CA 95202-2804

PARIKH CONSULTANTS, INC.
2360 QUME DRIVE, SUITE A
SAN JOSE, CA 95131

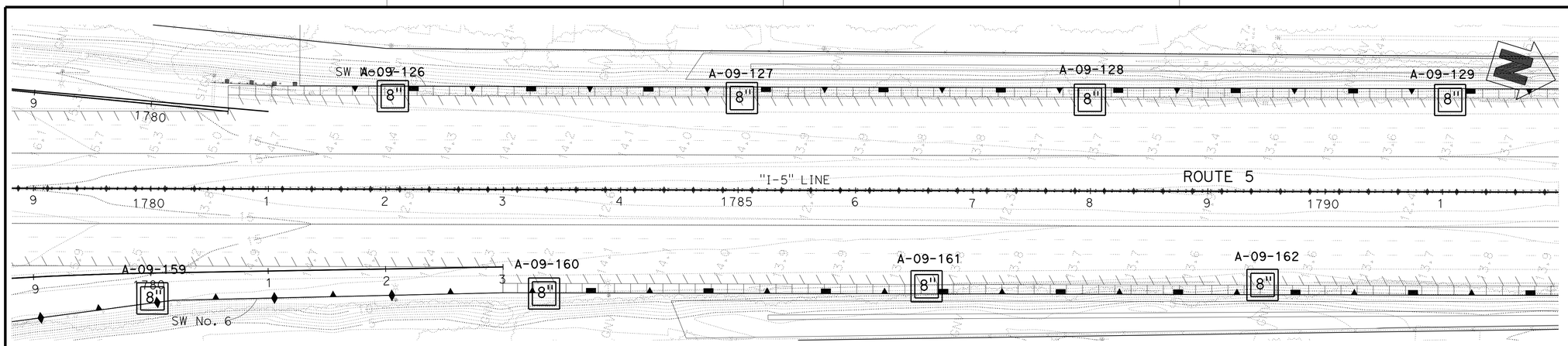

PLAN
1"=50'

BENCHMARK:
THE HORIZONTAL COORDINATES VALUES ARE IN THE CALIFORNIA COORDINATE SYSTEM (CCS 83) ZONE 3, EPOCH DATE 2007.00, IN U.S. SURVEY FEET.
THE VERTICAL CONTROL VALUES ARE BASED ON THE NORTH AMERICAN U.S. SURVEY FEET, HEIGHT MODERNIZATION SURVEY STATION, (2007.00) AND GEOID03 WAS USED FOR THE ADJUSTMENT.

THIS LOTB SHEET WAS PREPARED IN ACCORDANCE WITH CALTRANS SOIL & ROCK LOGGING, CLASSIFICATION, AND PRESENTATION MANUAL (2007)

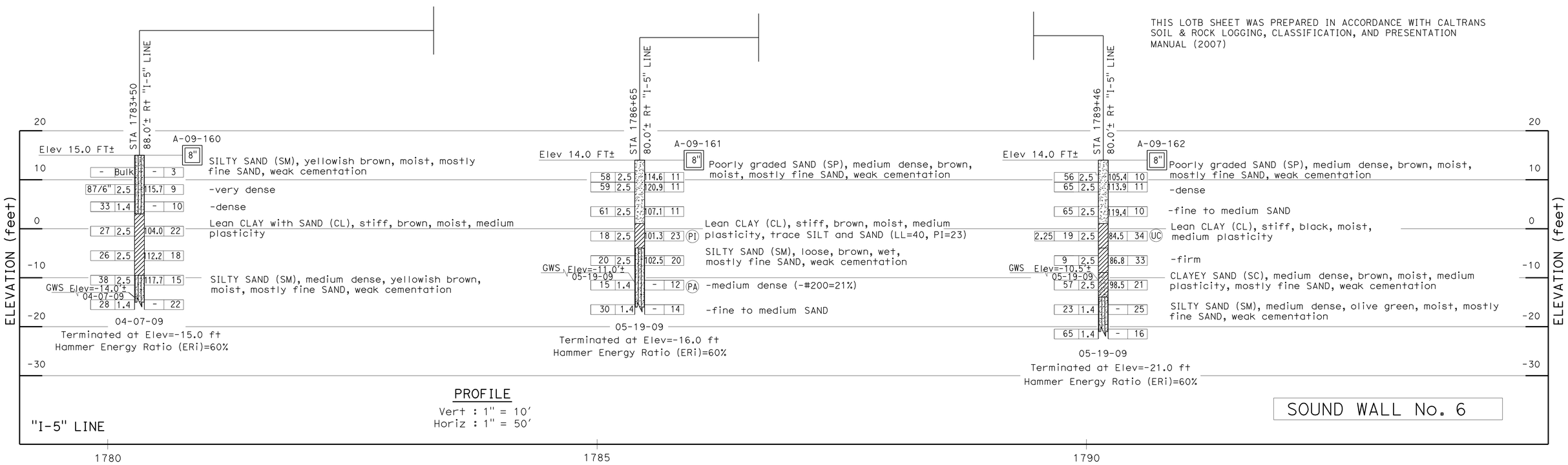

PROFILE
Vert : 1" = 10'
Horiz : 1" = 50'

SOUND WALL No. 6

SCALE AS SHOWN **SW-81**

DESIGN OVERSIGHT	DRAWN BY O. GOUTHIER	S. DUDDU- A.R. BHARADWAJ FIELD INVESTIGATION BY:	PREPARED FOR THE STATE OF CALIFORNIA DEPARTMENT OF TRANSPORTATION	A. LAM PROJECT ENGINEER	BRIDGE NO. --
SIGN OFF DATE	CHECKED BY D. WANG	DATE: MARCH 2009 TO MAY 2009			POST MILES --

I-5 NORTH STOCKTON CORRIDOR IMPROVEMENT
LOG OF TEST BORINGS

OGS GEOTECHNICAL LOG OF TEST BORINGS SHEET (ENGLISH) (REV. 06-01-09)

ORIGINAL SCALE IN INCHES FOR REDUCED PLANS 0 1 2 3

CU 06240
EA 0G4701

DISREGARD PRINTS BEARING EARLIER REVISION DATES → 09/28/09 03/15/10

REVISION DATES — SHEET — OF

FILE => a0g470rh013.dgn
USERNAME => trienard

USERNAME => trienard DATE PLOTTED => 12-OCT-2010 TIME PLOTTED => 11:23

DIST	COUNTY	ROUTE	POST MILES TOTAL PROJECT	SHEET No	TOTAL SHEETS
10	SJ	5	25.0/32.7	581	1132

GEOTECHNICAL PROFESSIONAL — DATE 04/21/10

REGISTERED GEOLOGIST — GARY PARIKH — No. G.E. 666 — Exp. 12/31/11 — CERTIFIED ENGINEERING GEOLOGIST — STATE OF CALIFORNIA

10-11-10
PLANS APPROVAL DATE

The State of California or its officers or agents shall not be responsible for the accuracy or completeness of scanned copies of this plan sheet.

SJCOG
555 WEBER AVE.
STOCKTON, CA 95202-2804

PARIKH CONSULTANTS, INC.
2360 QUME DRIVE, SUITE A
SAN JOSE, CA 95131

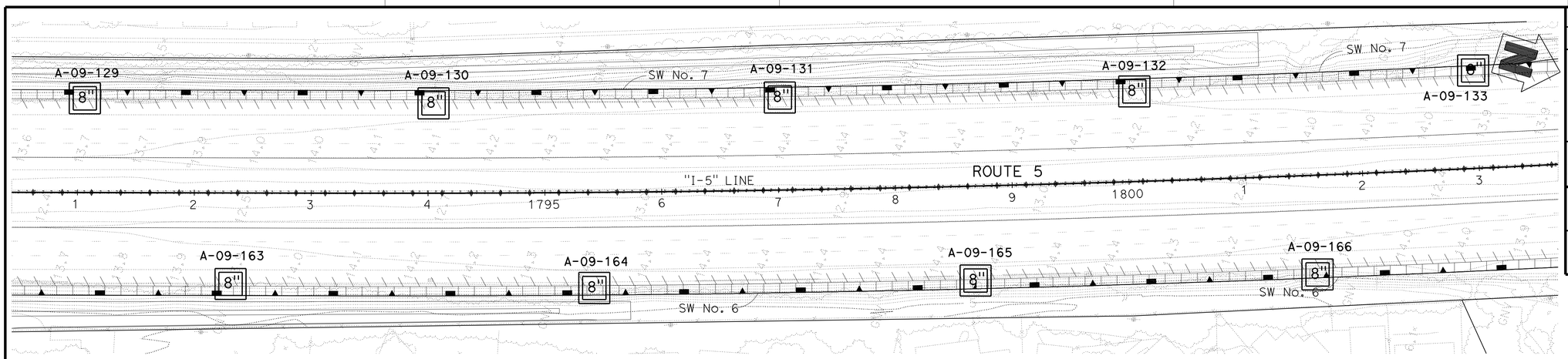

PLAN
1"=50'

BENCHMARK:
THE HORIZONTAL COORDINATES VALUES ARE IN THE CALIFORNIA COORDINATE SYSTEM (CCS 83) ZONE 3, EPOCH DATE 2007.00, IN U.S. SURVEY FEET.
THE VERTICAL CONTROL VALUES ARE BASED ON THE NORTH AMERICAN U.S. SURVEY FEET, HEIGHT MODERNIZATION SURVEY STATION, (2007.00) AND GEOID03 WAS USED FOR THE ADJUSTMENT.

THIS LOTB SHEET WAS PREPARED IN ACCORDANCE WITH CALTRANS SOIL & ROCK LOGGING, CLASSIFICATION, AND PRESENTATION MANUAL (2007)

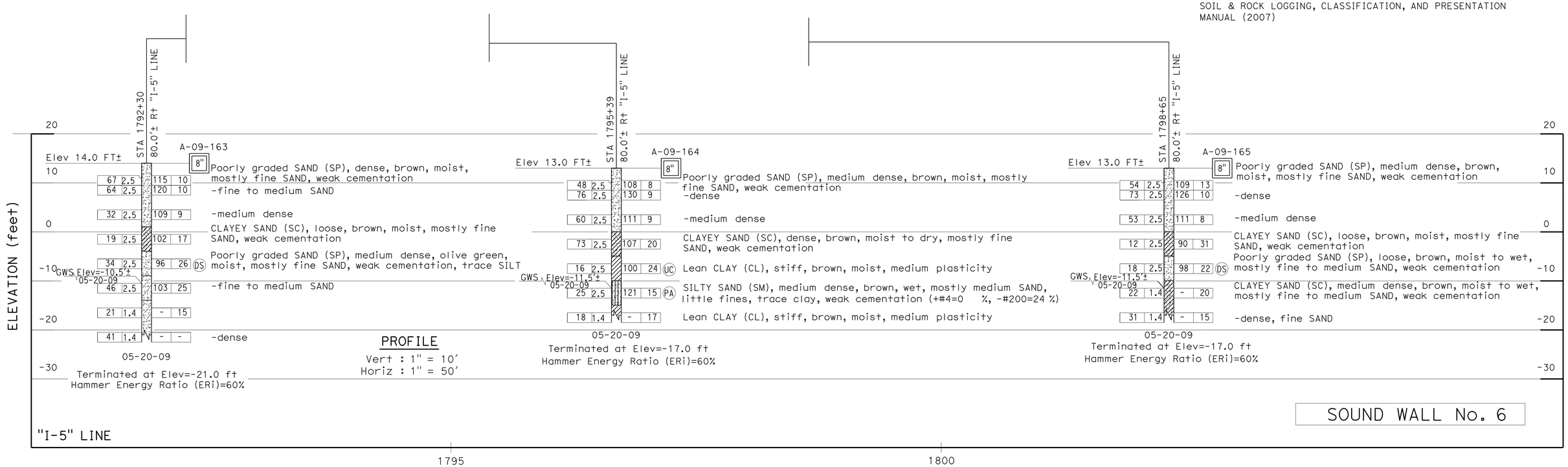

SCALE AS SHOWN **SW-82**

DESIGN OVERSIGHT SIGN OFF DATE	DRAWN BY O. GOUTHIER CHECKED BY D. WANG	S. DUDDU- A.R. BHARADWAJ FIELD INVESTIGATION BY: DATE: MARCH 2009 TO MAY 2009	**PREPARED FOR THE STATE OF CALIFORNIA DEPARTMENT OF TRANSPORTATION**	A. LAM PROJECT ENGINEER	BRIDGE NO. -- POST MILES --

I-5 NORTH STOCKTON CORRIDOR IMPROVEMENT
LOG OF TEST BORINGS

OGS GEOTECHNICAL LOG OF TEST BORINGS SHEET (ENGLISH) (REV. 06-01-09)
ORIGINAL SCALE IN INCHES FOR REDUCED PLANS 0 1 2 3
CU 06240
EA 0G4701
DISREGARD PRINTS BEARING EARLIER REVISION DATES → 09/26/09 03/15/10
REVISION DATES — SHEET — OF
FILE => a0g470rh014.dgn
USERNAME => trlenard
USERNAME => trlenard DATE PLOTTED => 12-OCT-2010 TIME PLOTTED => 11:23

DIST	COUNTY	ROUTE	POST MILES TOTAL PROJECT	SHEET No	TOTAL SHEETS
10	SJ	5	25.0/32.7	582	1132

GEOTECHNICAL PROFESSIONAL — DATE 04/21/10

10-11-10
PLANS APPROVAL DATE

REGISTERED GEOLOGIST — GARY PARIKH — No. G.E. 666 — Exp. 12/31/11 — CERTIFIED ENGINEERING GEOLOGIST — STATE OF CALIFORNIA

The State of California or its officers or agents shall not be responsible for the accuracy or completeness of scanned copies of this plan sheet.

SJCOG
555 WEBER AVE.
STOCKTON, CA 95202-2804

PARIKH CONSULTANTS, INC.
2360 QUME DRIVE, SUITE A
SAN JOSE, CA 95131

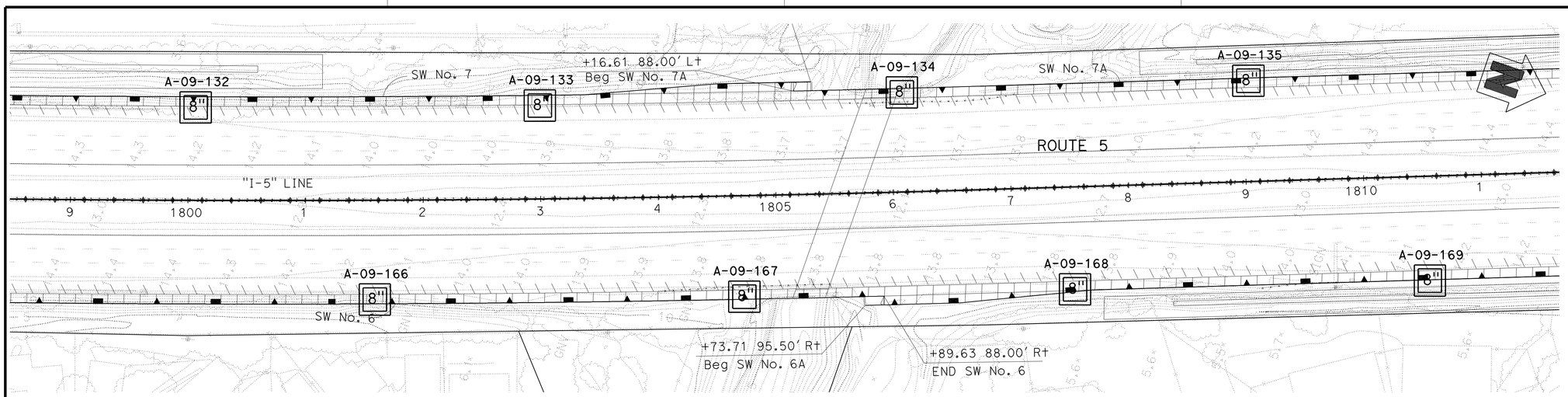

PLAN
1"=50'

BENCHMARK:
THE HORIZONTAL COORDINATES VALUES ARE IN THE CALIFORNIA COORDINATE SYSTEM (CCS 83) ZONE 3, EPOCH DATE 2007.00, IN U.S. SURVEY FEET.
THE VERTICAL CONTROL VALUES ARE BASED ON THE NORTH AMERICAN U.S. SURVEY FEET, HEIGHT MODERNIZATION SURVEY STATION, (2007.00) AND GEOID03 WAS USED FOR THE ADJUSTMENT.

THIS LOTB SHEET WAS PREPARED IN ACCORDANCE WITH CALTRANS SOIL & ROCK LOGGING, CLASSIFICATION, AND PRESENTATION MANUAL (2007)

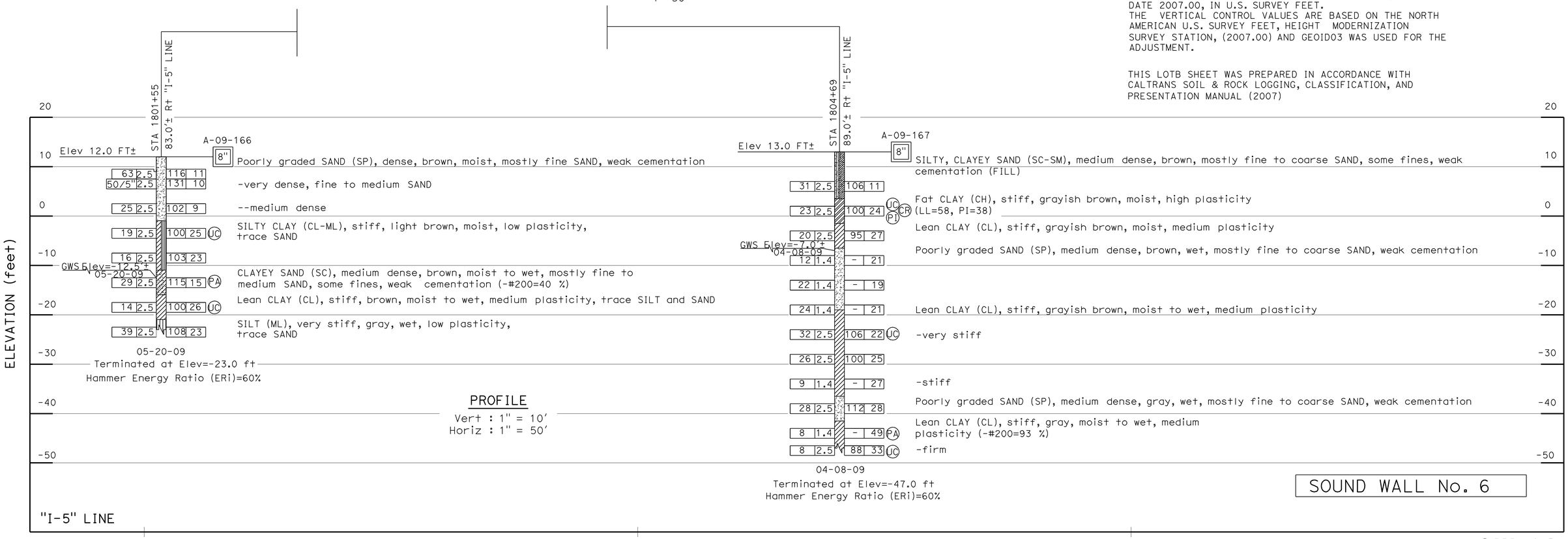

SOUND WALL No. 6

SCALE AS SHOWN **SW-83**

DESIGN OVERSIGHT	DRAWN BY O. GOUTHIER	S. DUDDU- A.R. BHARADWAJ FIELD INVESTIGATION BY:	PREPARED FOR THE STATE OF CALIFORNIA DEPARTMENT OF TRANSPORTATION	A. LAM PROJECT ENGINEER	BRIDGE NO. -- / POST MILES --
SIGN OFF DATE	CHECKED BY D. WANG	DATE: MARCH 2009 TO MAY 2009			I-5 NORTH STOCKTON CORRIDOR IMPROVEMENT
					LOG OF TEST BORINGS

OGS GEOTECHNICAL LOG OF TEST BORINGS SHEET (ENGLISH) (REV. 06-01-09)

ORIGINAL SCALE IN INCHES FOR REDUCED PLANS 0 1 2 3

CU 06240
EA 0G4701

DISREGARD PRINTS BEARING EARLIER REVISION DATES — REVISION DATES 09/26/09 03/15/10 — SHEET OF

FILE => a0g470rh015.dgn
USERNAME => trlenard

USERNAME => trlenard DATE PLOTTED => 12-OCT-2010 TIME PLOTTED => 11:23

DIST	COUNTY	ROUTE	POST MILES TOTAL PROJECT	SHEET No	TOTAL SHEETS
10	SJ	5	25.0/32.7	583	1132

GEOTECHNICAL PROFESSIONAL — DATE 04/21/10

10-11-10
PLANS APPROVAL DATE

REGISTERED GEOLOGIST — GARY PARIKH — No. G.E. 666 — Exp. 12/31/11 — CERTIFIED ENGINEERING GEOLOGIST — STATE OF CALIFORNIA

The State of California or its officers or agents shall not be responsible for the accuracy or completeness of scanned copies of this plan sheet.

SJCOG
555 WEBER AVE.
STOCKTON, CA 95202-2804

PARIKH CONSULTANTS, INC.
2360 QUME DRIVE, SUITE A
SAN JOSE, CA 95131

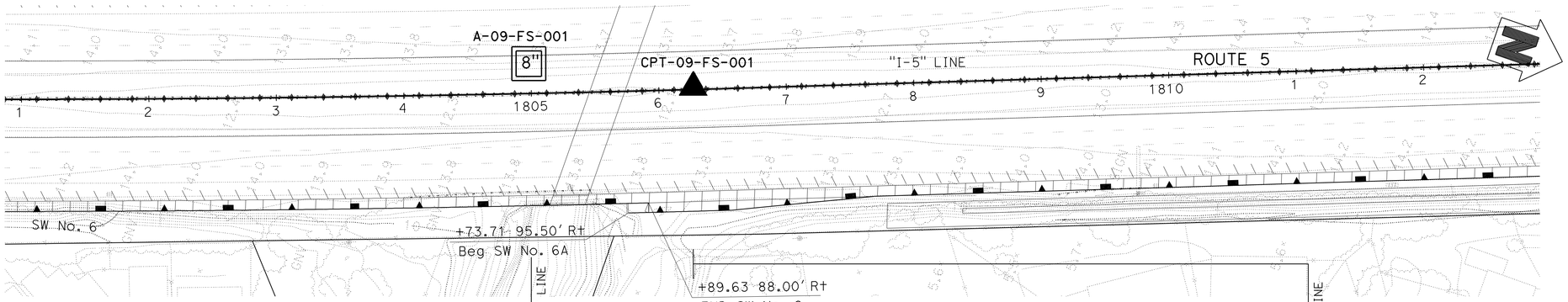

PLAN
1"=50'

BENCHMARK:

THIS LOTB SHEET WAS PREPARED IN ACCORDANCE WITH CALTRANS SOIL & ROCK LOGGING, CLASSIFICATION, AND PRESENTATION MANUAL (2007)

THE HORIZONTAL COORDINATES VALUES ARE IN THE CALIFORNIA COORDINATE SYSTEM (CCS 83) ZONE 3, EPOCH DATE 2007.00, IN U.S. SURVEY FEET.
THE VERTICAL CONTROL VALUES ARE BASED ON THE NORTH AMERICAN U.S. SURVEY FEET, HEIGHT MODERNIZATION SURVEY STATION, (2007.00) AND GEOID03 WAS USED FOR THE ADJUSTMENT.

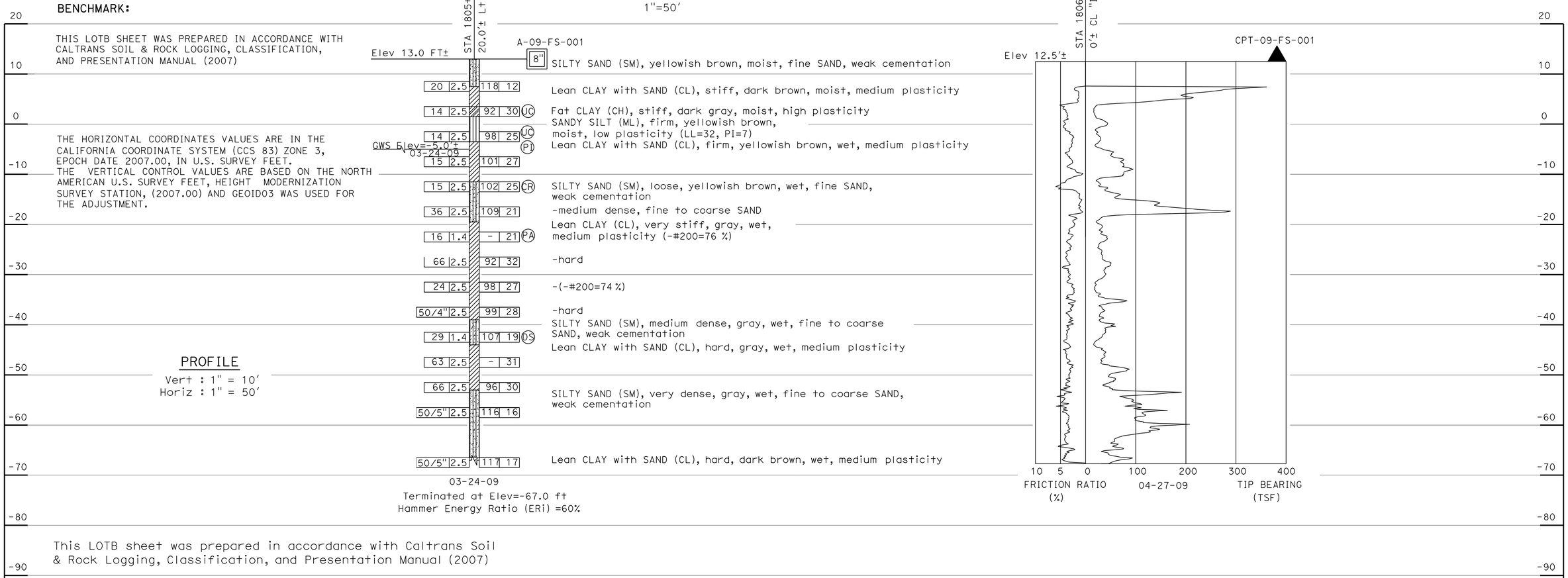

This LOTB sheet was prepared in accordance with Caltrans Soil & Rock Logging, Classification, and Presentation Manual (2007)

"I-5" LINE

1805 1808

SOUND WALL No. 6

SCALE AS SHOWN **SW-84**

DESIGN OVERSIGHT	DRAWN BY O. GOUTHIER	S. DUDDU- A.R. BHARADWAJ FIELD INVESTIGATION BY:	PREPARED FOR THE STATE OF CALIFORNIA DEPARTMENT OF TRANSPORTATION	A. LAM PROJECT ENGINEER	BRIDGE NO. -- POST MILES --
SIGN OFF DATE	CHECKED BY D. WANG	DATE: MARCH 2009 TO MAY 2009			I-5 NORTH STOCKTON CORRIDOR IMPROVEMENT LOG OF TEST BORINGS

OGS GEOTECHNICAL LOG OF TEST BORINGS SHEET (ENGLISH) (REV. 06-01-09)

ORIGINAL SCALE IN INCHES FOR REDUCED PLANS 0 1 2 3

CU 06240
EA 0G4701

DISREGARD PRINTS BEARING EARLIER REVISION DATES 09/26/09 03/15/10

REVISION DATES — SHEET — OF

FILE => a0g470rh016.dgn
USERNAME => trienard

USERNAME => trienard DATE PLOTTED => 12-OCT-2010 TIME PLOTTED => 11:24

Dist	COUNTY	ROUTE	POST MILES TOTAL PROJECT	SHEET No.	TOTAL SHEETS
10	SJ	5	25.0/32.7	584	1132

REGISTERED CIVIL ENGINEER 04/21/10 DATE

10-11-10
PLANS APPROVAL DATE

REGISTERED PROFESSIONAL ENGINEER CHUONG NGUYEN No. C46770 Exp. 06/30/11 CIVIL STATE OF CALIFORNIA

THE STATE OF CALIFORNIA OR ITS OFFICERS OR AGENTS SHALL NOT BE RESPONSIBLE FOR THE ACCURACY OR COMPLETENESS OF SCANNED COPIES OF THIS PLAN SHEET.

RAJAPPAN & MEYER
CONSULTING ENGINEERS INC.
1038 LEIGH AVE, SUITE 100
SAN JOSE, CA 95126

SJCOG
555 E. WEBER AVE.
STOCKTON, CA 95202-2804

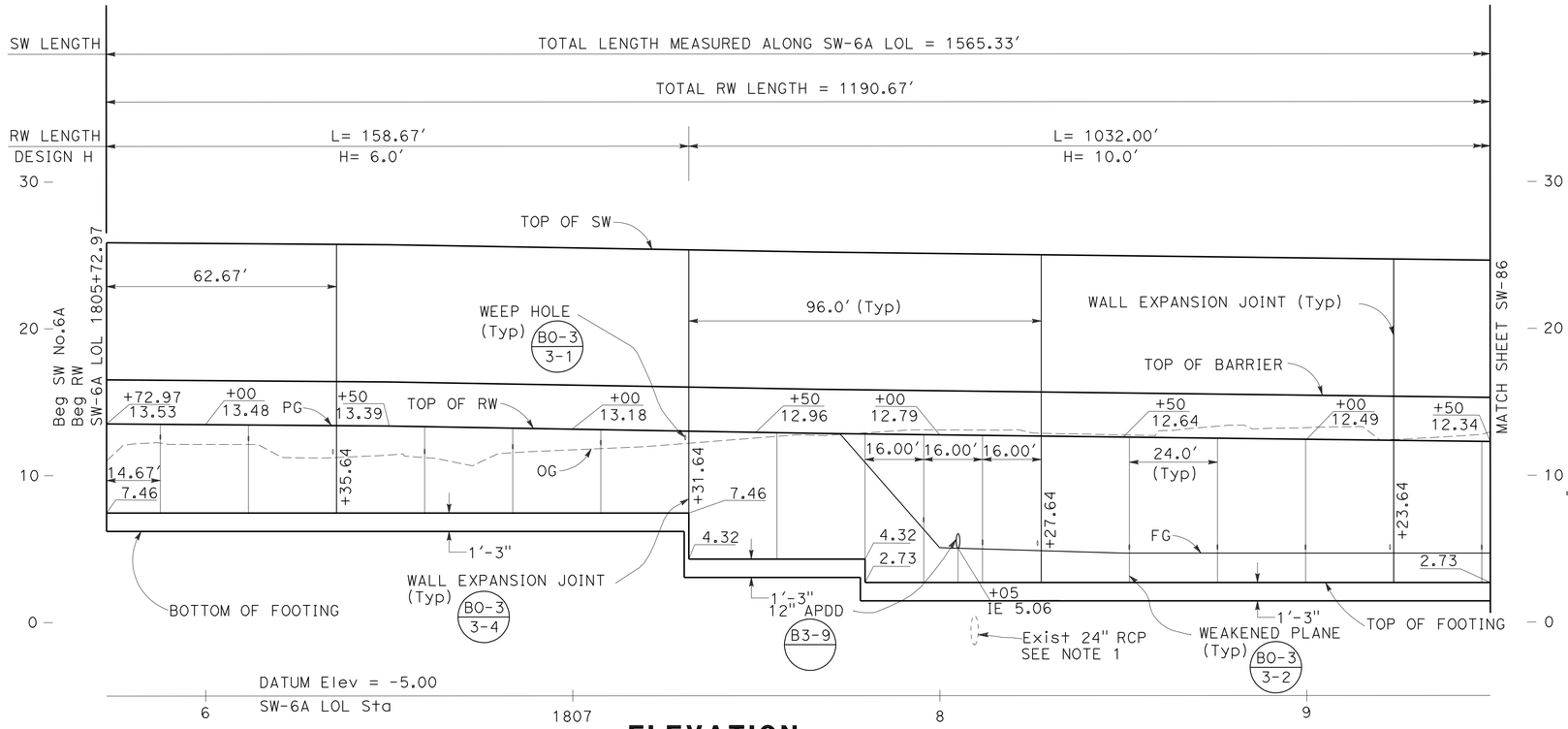

ELEVATION

SCALE: Horiz 1"=20'
Vert 1"=5'

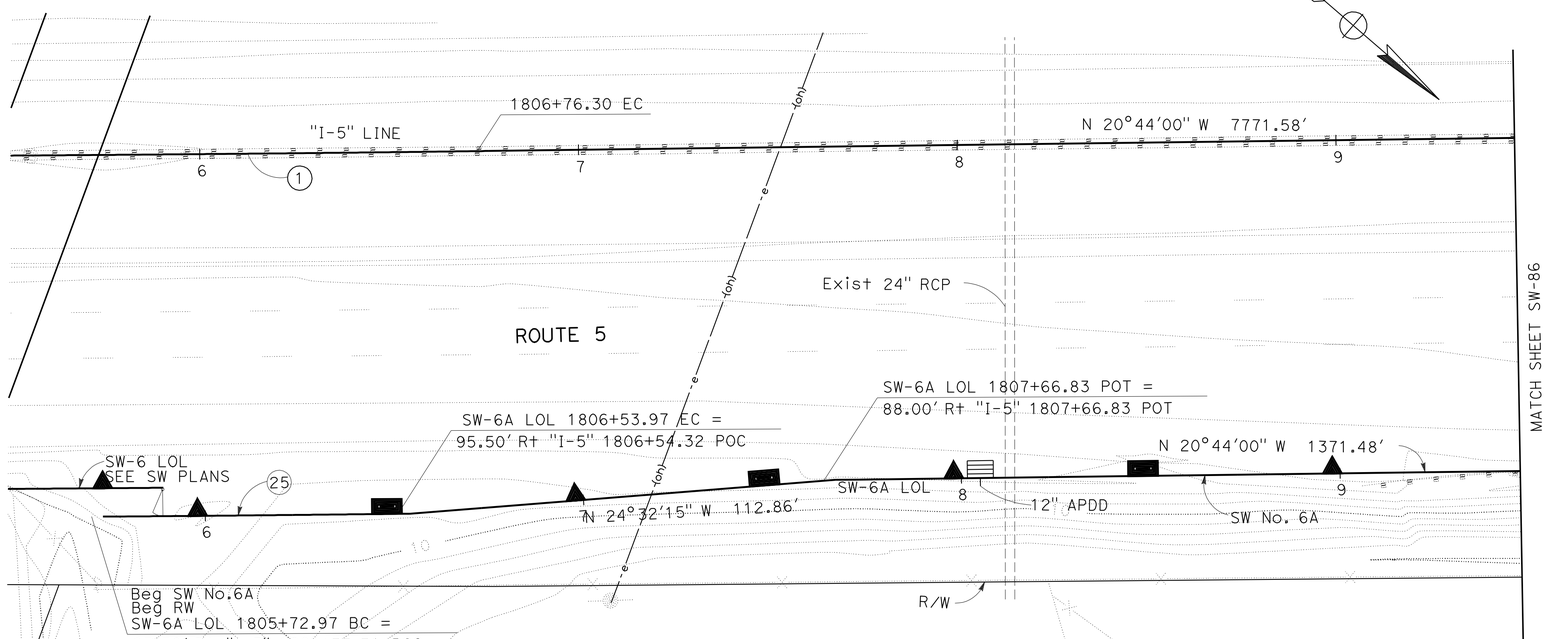

PLAN

SCALE: 1"=20'
THIS PLAN ACCURATE FOR SOUND WALL WORK ONLY

NOTES:

1. Exist 24" PIPE COULD NOT BE LOCATED, CONTRACTOR TO VERIFY.
2. FOR DETAILS OF RW TYPE 1SWB, SEE RETAINING WALL DETAIL SHEET SW-116.

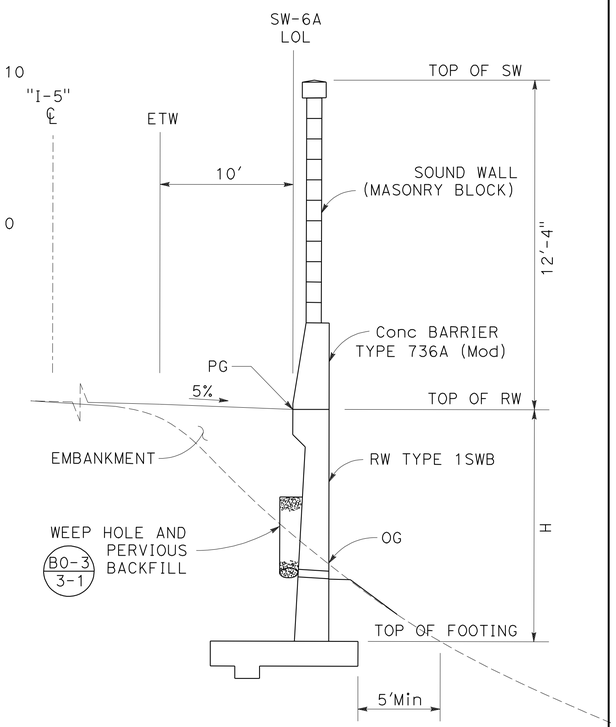

TYPICAL SECTION

SW-6A Sta 1805+72.97 TO Sta 1807+72.96
SW-6A Sta 1817+36.52 TO Sta 1817+63.64
NO SCALE

CURVE DATA

No.	RADIUS	DELTA	TANGENT	LENGTH
1	20000.00'	3°52'35"	676.82'	1353.12'
25	20095.50'	0°13'51"	40.50'	81.00'

SOUND WALL PLAN

SOUND WALL No. 6A

SCALE AS SHOWN

SW-85

STATE OF CALIFORNIA - DEPARTMENT OF TRANSPORTATION
Caltrans
CONSULTANT FUNCTIONAL SUPERVISOR: KEITH G. MEYER
CALCULATED-DESIGNED BY: SRILAKSHMI SAKHAMURI
CHECKED BY: CHUONG NGUYEN
REVISED BY
DATE REVISED

LAST REVISION 08-10-10 | DATE PLOTTED => 12-OCT-2010 | TIME PLOTTED => 11:24

Dist	COUNTY	ROUTE	POST MILES TOTAL PROJECT	SHEET No.	TOTAL SHEETS
10	SJ	5	25.0/32.7	585	1132

REGISTERED CIVIL ENGINEER 04/21/10 DATE

10-11-10
PLANS APPROVAL DATE

REGISTERED PROFESSIONAL ENGINEER CHUONG NGUYEN No. C46770 Exp. 06/30/11 CIVIL STATE OF CALIFORNIA

THE STATE OF CALIFORNIA OR ITS OFFICERS OR AGENTS SHALL NOT BE RESPONSIBLE FOR THE ACCURACY OR COMPLETENESS OF SCANNED COPIES OF THIS PLAN SHEET.

RAJAPPAN & MEYER
CONSULTING ENGINEERS INC.
1038 LEIGH AVE, SUITE 100
SAN JOSE, CA 95126

SJCOG
555 E. WEBER AVE.
STOCKTON, CA 95202-2804

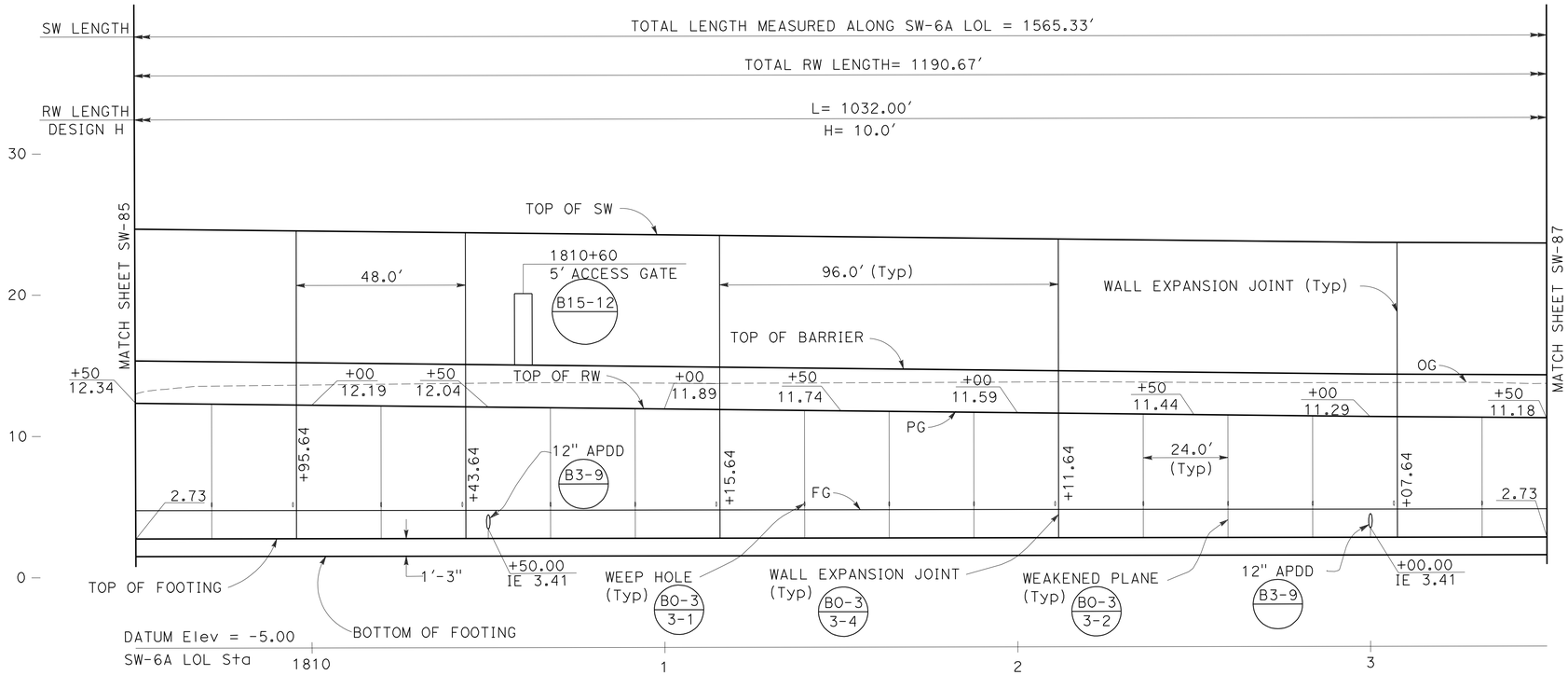

ELEVATION

SCALE: Horiz 1"=20'
Vert 1"=5'

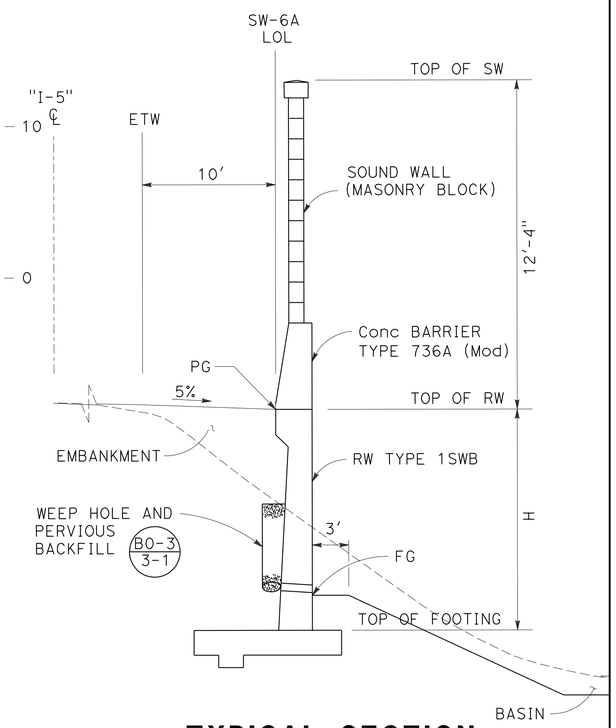

TYPICAL SECTION

SW-6A Sta 1807+72.96 TO Sta 1817+36.52
NO SCALE

NOTE:

FOR DETAILS OF RW TYPE 1SWB,
SEE RETAINING WALL DETAIL SHEET SW-116.

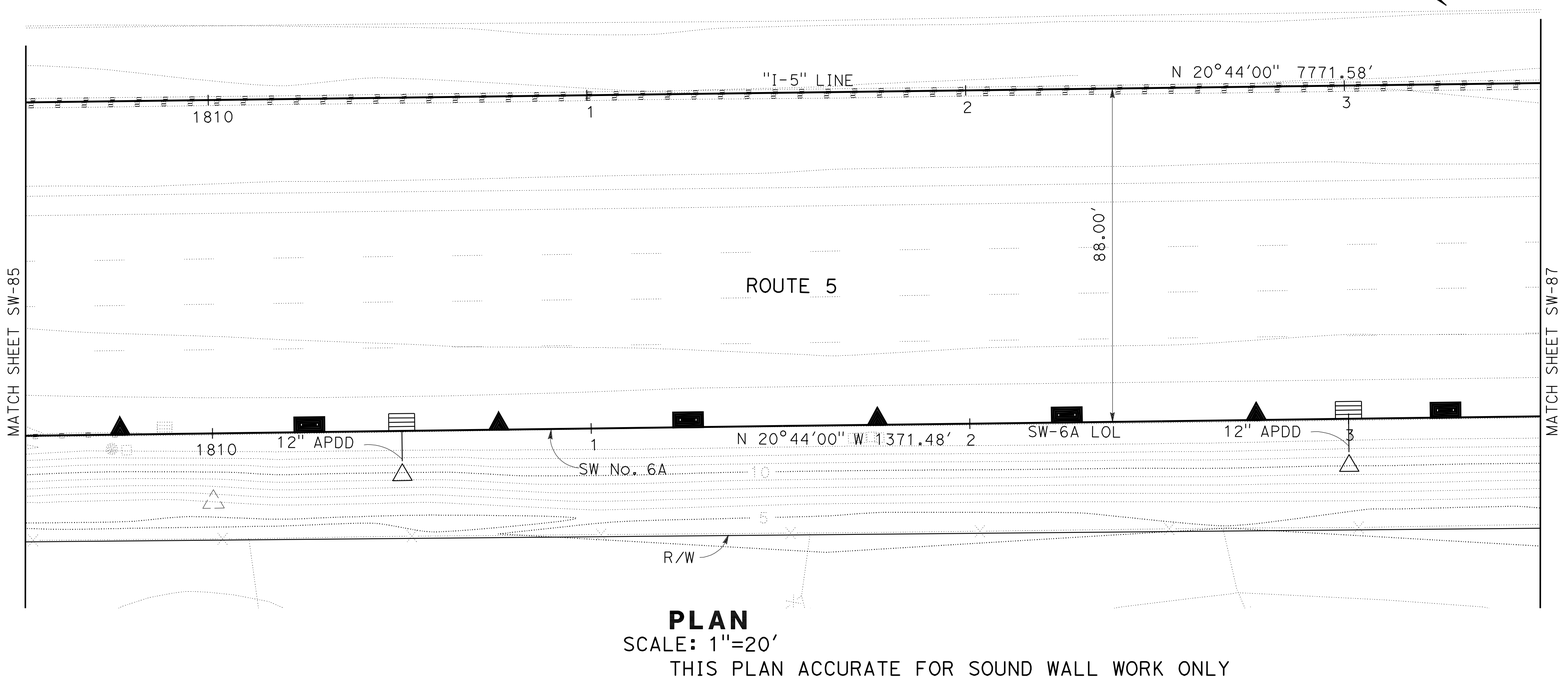

PLAN

SCALE: 1"=20'
THIS PLAN ACCURATE FOR SOUND WALL WORK ONLY

SOUND WALL PLAN
SOUND WALL No. 6A

SCALE AS SHOWN

SW-86

STATE OF CALIFORNIA - DEPARTMENT OF TRANSPORTATION
Caltrans

CONSULTANT FUNCTIONAL SUPERVISOR: KEITH G. MEYER
CALCULATED-DESIGNED BY: SRILAKSHMI SAKHAMURI
CHECKED BY: CHUONG NGUYEN
REVISED BY
DATE REVISED

LAST REVISION 08-10-10
DATE PLOTTED => 12-OCT-2010
TIME PLOTTED => 11:24

Dist	COUNTY	ROUTE	POST MILES TOTAL PROJECT	SHEET No.	TOTAL SHEETS
10	SJ	5	25.0/32.7	586	1132

REGISTERED CIVIL ENGINEER 04/21/10 DATE

10-11-10
PLANS APPROVAL DATE

REGISTERED PROFESSIONAL ENGINEER CHUONG NGUYEN No. C46770 Exp. 06/30/11 CIVIL STATE OF CALIFORNIA

THE STATE OF CALIFORNIA OR ITS OFFICERS OR AGENTS SHALL NOT BE RESPONSIBLE FOR THE ACCURACY OR COMPLETENESS OF SCANNED COPIES OF THIS PLAN SHEET.

RAJAPPAN & MEYER
CONSULTING ENGINEERS INC.
1038 LEIGH AVE, SUITE 100
SAN JOSE, CA 95126

SJCOG
555 E. WEBER AVE.
STOCKTON, CA 95202-2804

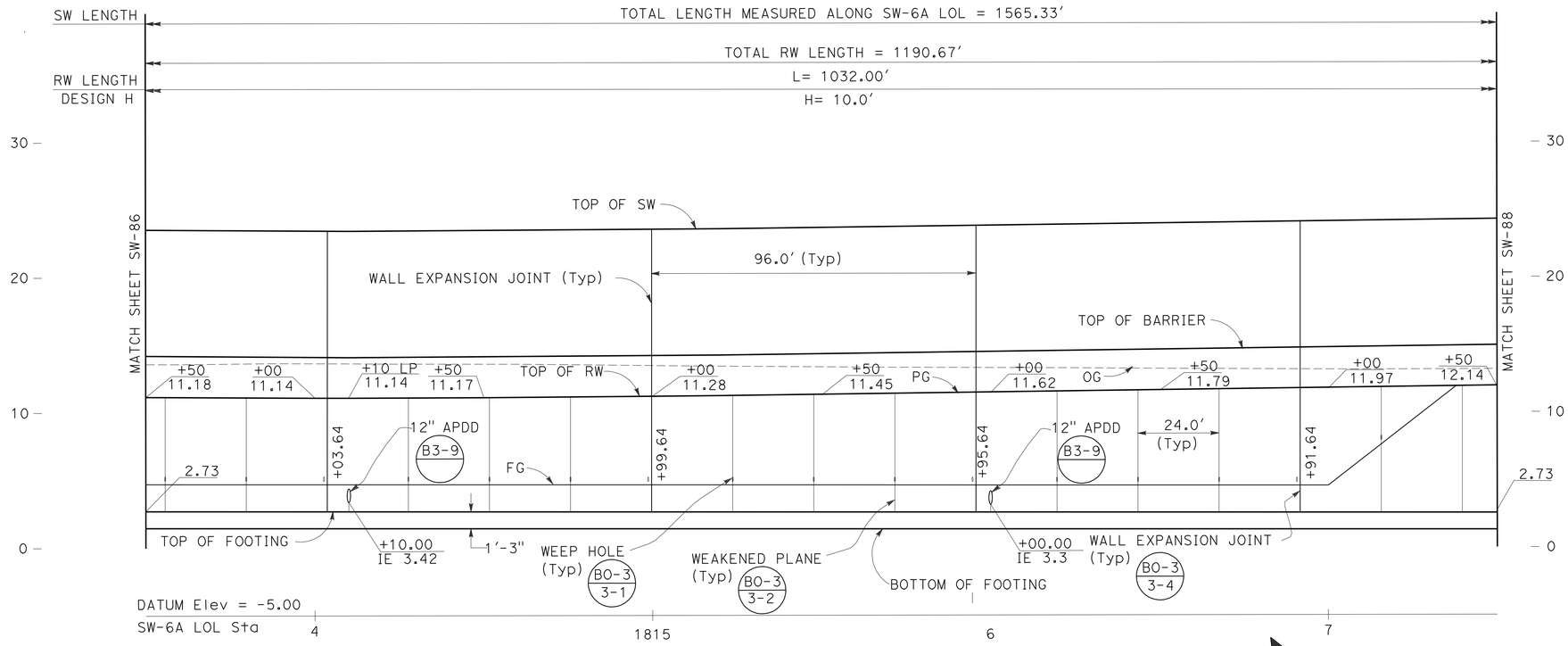

ELEVATION

SCALE: Horiz 1"=20'
Vert 1"=5'

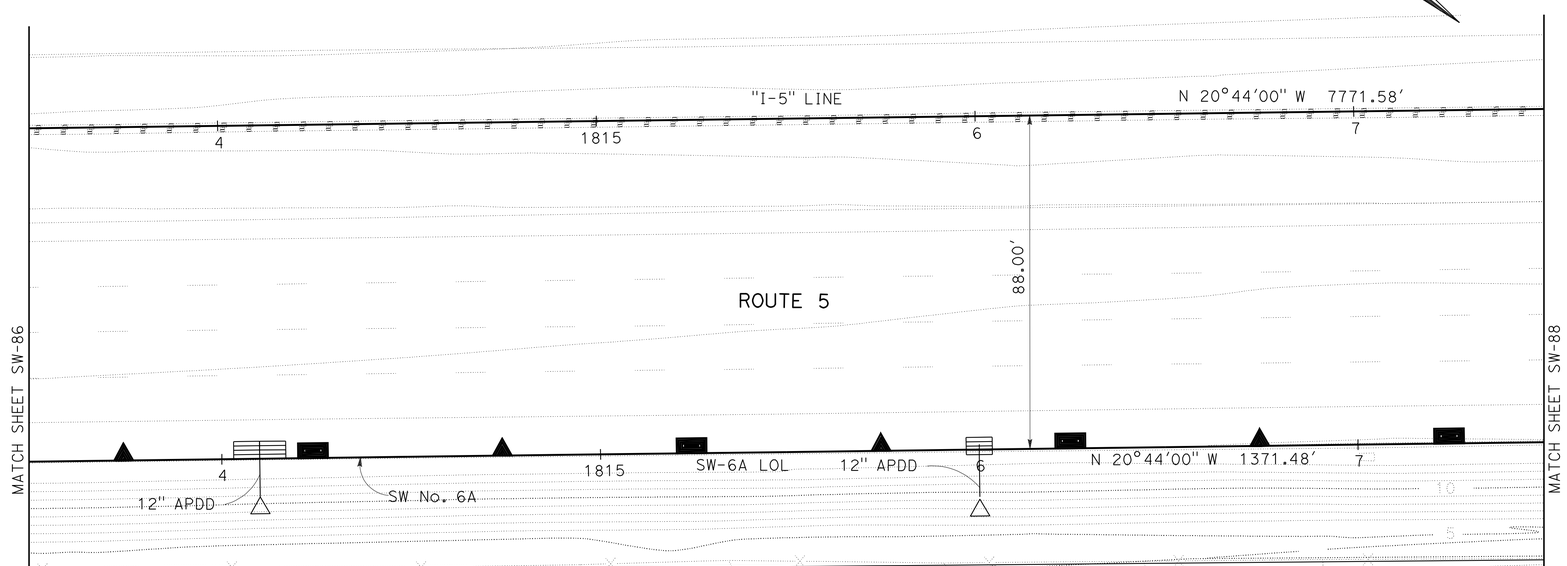

PLAN

SCALE: 1"=20'
THIS PLAN ACCURATE FOR SOUND WALL WORK ONLY

SOUND WALL PLAN

SOUND WALL No. 6A

SCALE AS SHOWN

SW-87

STATE OF CALIFORNIA - DEPARTMENT OF TRANSPORTATION
Caltrans

CONSULTANT FUNCTIONAL SUPERVISOR: KEITH G. MEYER

CALCULATED-DESIGNED BY: SRILAKSHMI SAKHAMURI
CHECKED BY: CHUONG NGUYEN

REVISED BY
DATE REVISED

LAST REVISION 07-07-10
DATE PLOTTED => 12-OCT-2010
TIME PLOTTED => 11:24

Dist	COUNTY	ROUTE	POST MILES TOTAL PROJECT	SHEET No.	TOTAL SHEETS
10	SJ	5	25.0/32.7	587	1132

REGISTERED CIVIL ENGINEER 04/21/10 DATE

10-11-10
PLANS APPROVAL DATE

REGISTERED PROFESSIONAL ENGINEER CHUONG NGUYEN No. C46770 Exp. 06/30/11 CIVIL STATE OF CALIFORNIA

THE STATE OF CALIFORNIA OR ITS OFFICERS OR AGENTS SHALL NOT BE RESPONSIBLE FOR THE ACCURACY OR COMPLETENESS OF SCANNED COPIES OF THIS PLAN SHEET.

RAJAPPAN & MEYER
CONSULTING ENGINEERS INC.
1038 LEIGH AVE, SUITE 100
SAN JOSE, CA 95126

SJCOG
555 E. WEBER AVE.
STOCKTON, CA 95202-2804

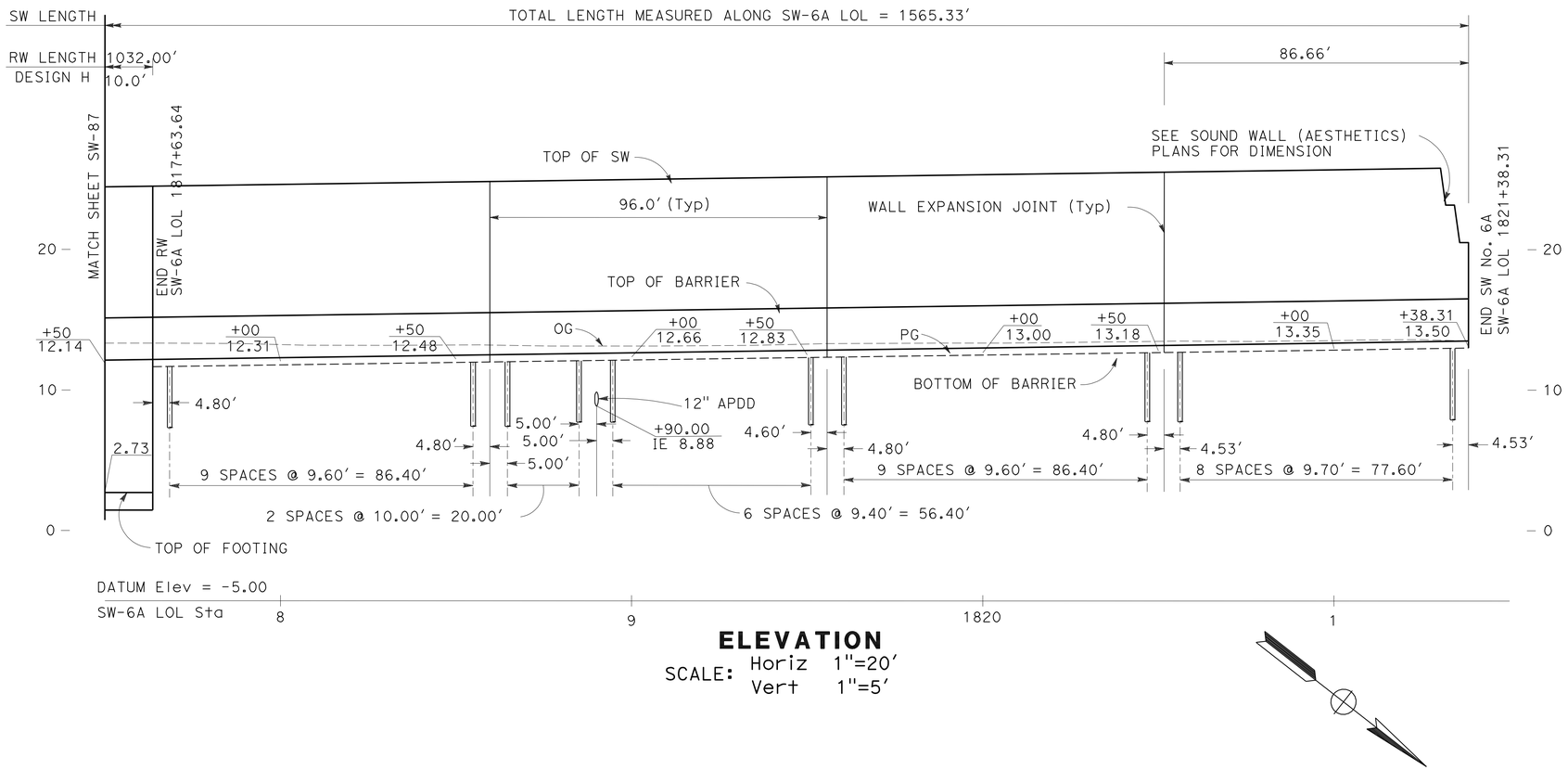

ELEVATION

SCALE: Horiz 1"=20'
Vert 1"=5'

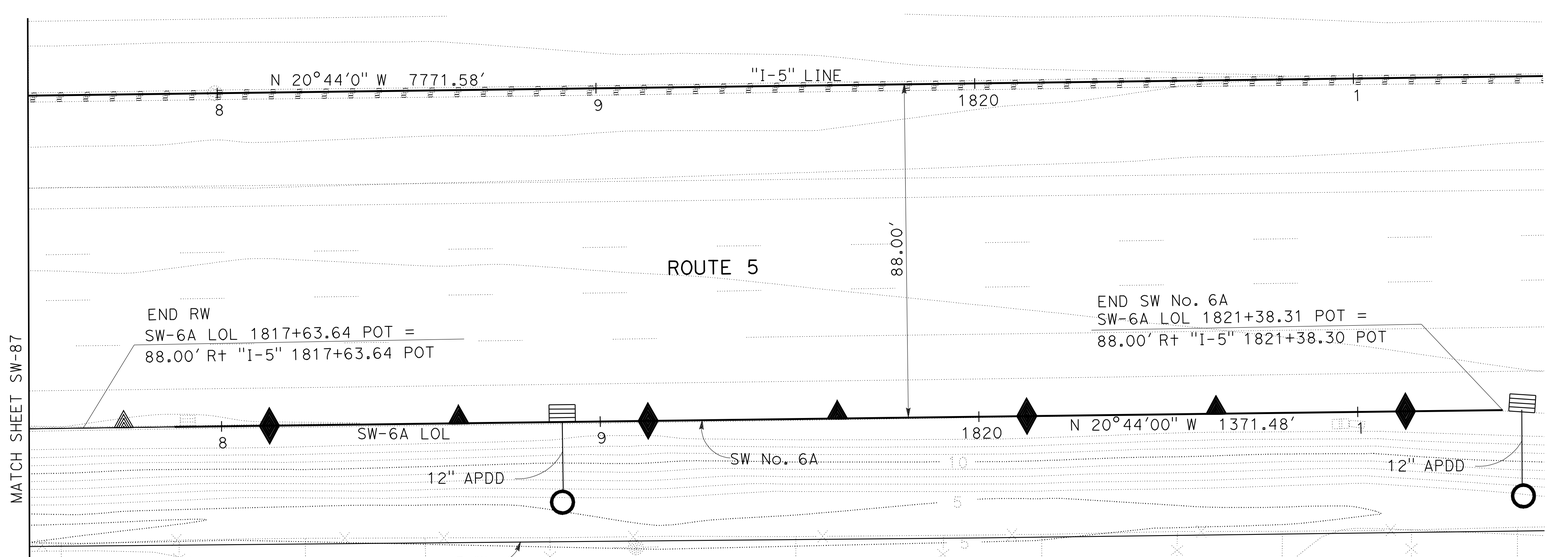

PLAN

SCALE: 1"=20'
THIS PLAN ACCURATE FOR SOUND WALL WORK ONLY

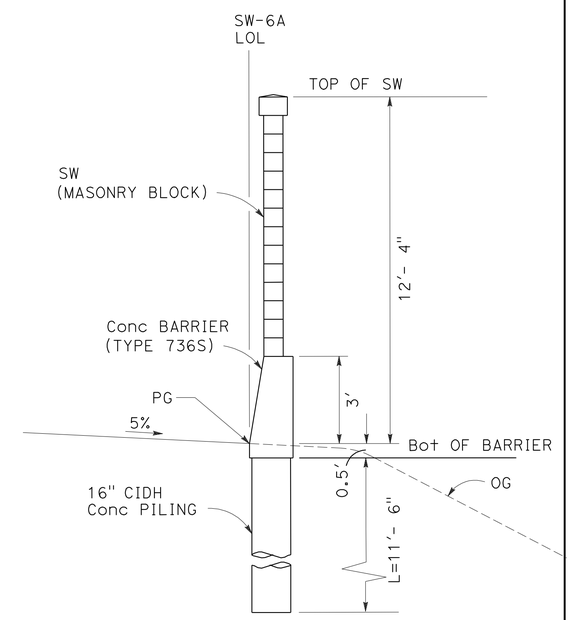

TYPICAL SECTION

SW-6A Sta 1817+63.64 TO Sta 1821+38.31
NO SCALE

NOTE:

FOR REINFORCEMENT AND OTHER DETAILS NOT SHOWN, SEE Std PLAN

B15-6 B15-7 B15-8

SOUND WALL PLAN
SOUND WALL No. 6A

SCALE AS SHOWN

SW-88

STATE OF CALIFORNIA - DEPARTMENT OF TRANSPORTATION
Caltrans

CONSULTANT FUNCTIONAL SUPERVISOR: KEITH G. MEYER
CALCULATED-DESIGNED BY: SRILAKSHMI SAKHAMURI
CHECKED BY: CHUONG NGUYEN
REVISED BY
DATE REVISED

LAST REVISION DATE PLOTTED => 12-OCT-2010
07-07-10 TIME PLOTTED => 11:24

Dist	COUNTY	ROUTE	POST MILES TOTAL PROJECT	SHEET No.	TOTAL SHEETS
10	SJ	5	25.0/32.7	588	1132

REGISTERED CIVIL ENGINEER 04/21/10 DATE

10-11-10
PLANS APPROVAL DATE

REGISTERED PROFESSIONAL ENGINEER CHRISTINA D.B.FRANKEL No. C-25730 Exp. 05/31/11 CIVIL STATE OF CALIFORNIA

THE STATE OF CALIFORNIA OR ITS OFFICERS OR AGENTS SHALL NOT BE RESPONSIBLE FOR THE ACCURACY OR COMPLETENESS OF SCANNED COPIES OF THIS PLAN SHEET.

DERIVI CONSTRUCTION & ARCHITECTURE, INC.
924 N. YOSEMITE STREET
STOCKTON, CA 95203

SJCOG
555 E. WEBER AVE.
STOCKTON, CA 95202-2804

BLOCK LEGEND:

Medium W+ / Light W+ — BLOCK A: 'CAP'
8(H)x10(D)*x16(L)
*PROJECT BLOCK 1" EA SIDE
SPLIT FACE BOTH FACES
DARK TAN WITH MEDIUM-SIZED BLACK, DARK BROWN & WHITE AGGREGATE

Medium W+ / Light W+ — BLOCK B: 'WATER'
8(H)x8(D)x16(L)
SPLIT FACE BOTH FACES
DARK TAN WITH MEDIUM-SIZED BLACK, DARK BROWN & WHITE AGGREGATE

Medium W+ — BLOCK C: 'FIELDS'
8(H)x8(D)x16(L)
SPLIT FACE BOTH FACES
3 SCORE (3/8") BOTH FACES
DARK TAN WITH MEDIUM-SIZED BLACK, DARK BROWN & WHITE AGGREGATE

Medium W+ — BLOCK D: 'LEVEE'
8(H)x10(D)*x16(L)
*PROJECT BLOCK 1" EA SIDE
PRECISION BLOCK
MEDIUM-LIGHT TAN WITH MEDIUM-SIZED BLACK, RED & WHITE AGGREGATE

Medium W+ / Light W+ — BLOCK G: 'LEVEE 2'
8(H)x8(D)x16(L)
PRECISION BLOCK
MEDIUM-LIGHT TAN WITH MEDIUM-SIZED BLACK, RED & WHITE AGGREGATE

Medium W+ / Light W+ — BLOCK F: 'CITY'
8(H)x8(D)x16(L)
SPLIT FACE BOTH FACES
LIGHT TAN WITH SMALL-SIZED WHITE, GREY & BLACK AGGREGATE

Medium W+ / Light W+ — BLOCK H: 'STREET'
8(H)x8(D)x16(L)
PRECISION BLOCK
1 SCORE (3/8") BOTH FACES
DARK GREY

GENERAL NOTES:

1. EACH SOUNDWALL ELEVATION IS ELEVATED INDEPENDENTLY. SEE SOUNDWALL GENERAL PLANS FOR MORE INFORMATION.
2. WHERE CUT BLOCKS ARE REQUIRED, CUT BLOCK SHALL BE NO SMALLER THAN ONE HALF OF A BLOCK, OTHERWISE CUT ADJACENT BLOCK AS WELL.
3. PLACE CORE HOLES (NOT SHOWN) FOR VINE PLANTINGS AT 16' ON CENTER.
4. THE CONTRACTOR SHALL SUBMIT COLOR SAMPLE OF BLOCK TO THE ENGINEER FOR APPROVAL.

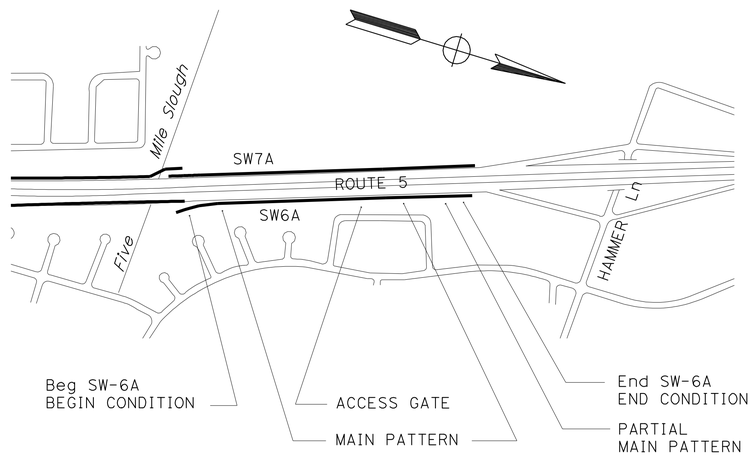

SOUND WALL 6A KEY PLAN

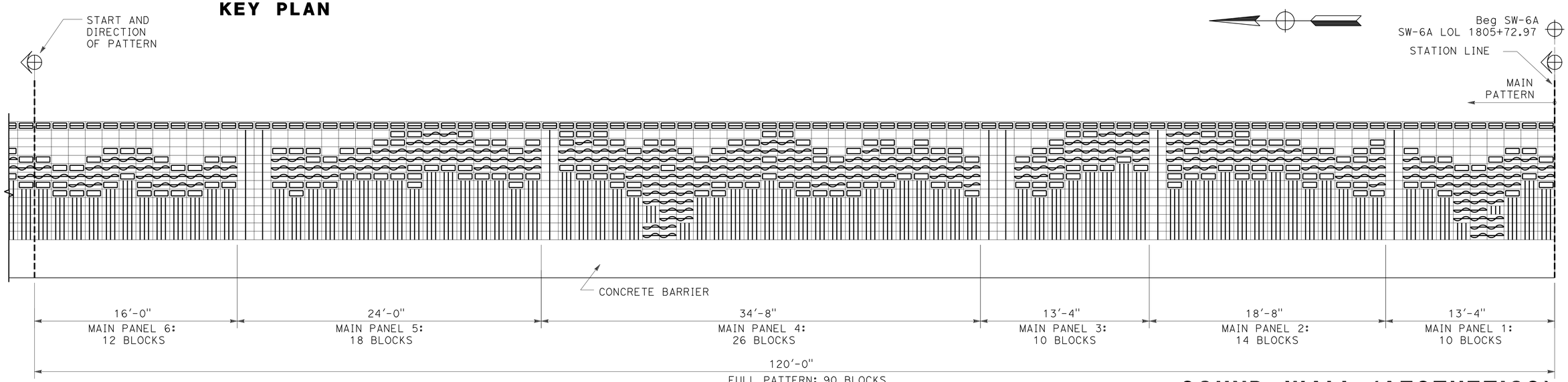

SOUND WALL 6A BEGIN CONDITION AND MAIN PATTERN

SOUND WALL (AESTHETICS)

SOUND WALL No. 6A

NO SCALE

SW-89

THIS PLAN ACCURATE FOR SOUND WALL AESTHETIC TREATMENTS ONLY

STATE OF CALIFORNIA - DEPARTMENT OF TRANSPORTATION
Caltrans
CONSULTANT FUNCTIONAL SUPERVISOR: LINDA M. DEVIVI
CALCULATED-DESIGNED BY: CHRISTINA D. B. FRANKEL
CHECKED BY: LINDA M. DEVIVI
REVISED BY
DATE REVISED

LAST REVISION 07-07-10
DATE PLOTTED => 12-OCT-2010
TIME PLOTTED => 11:24

Dist	COUNTY	ROUTE	POST MILES TOTAL PROJECT	SHEET No.	TOTAL SHEETS
10	SJ	5	25.0/32.7	589	1132

REGISTERED CIVIL ENGINEER DATE 04/21/10

10-11-10
PLANS APPROVAL DATE

REGISTERED PROFESSIONAL ENGINEER
CHRISTINA D.B.FRANKEL
No. C-25730
Exp. 05/31/11
CIVIL
STATE OF CALIFORNIA

THE STATE OF CALIFORNIA OR ITS OFFICERS OR AGENTS SHALL NOT BE RESPONSIBLE FOR THE ACCURACY OR COMPLETENESS OF SCANNED COPIES OF THIS PLAN SHEET.

DERIVI CONSTRUCTION & ARCHITECTURE, INC.
924 N. YOSEMITE STREET
STOCKTON, CA 95203

SJCOG
555 E. WEBER AVE.
STOCKTON, CA 95202-2804

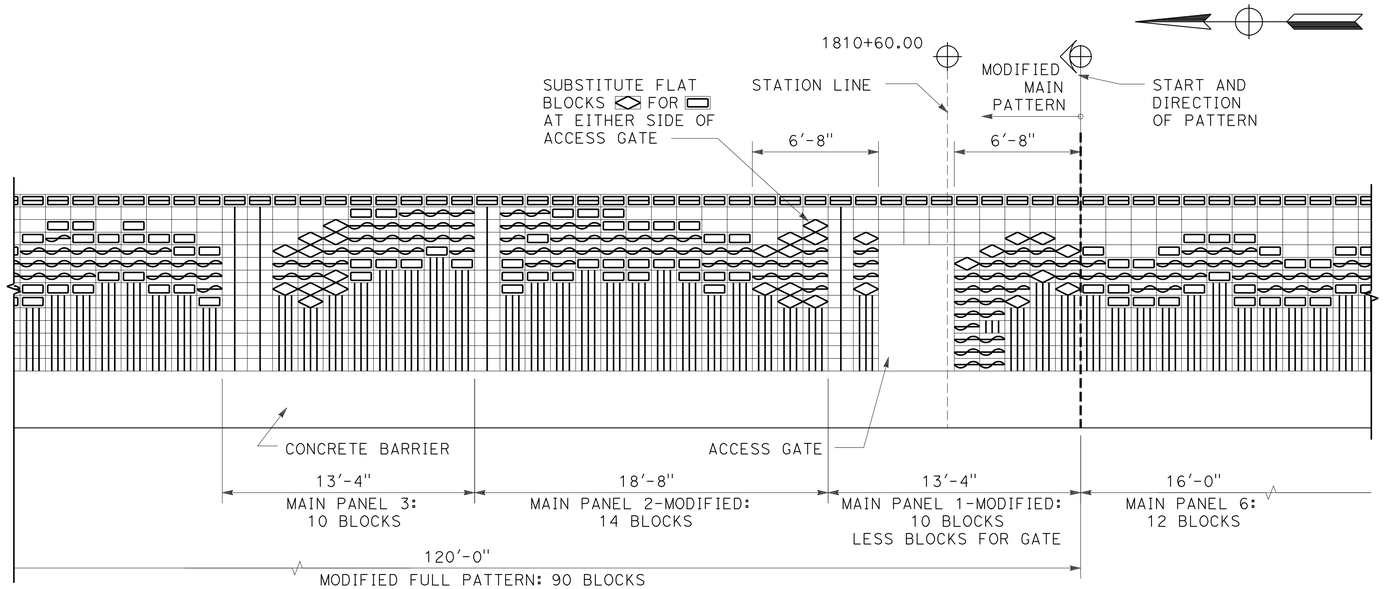

SOUND WALL 6A
AT ACCESS GATE

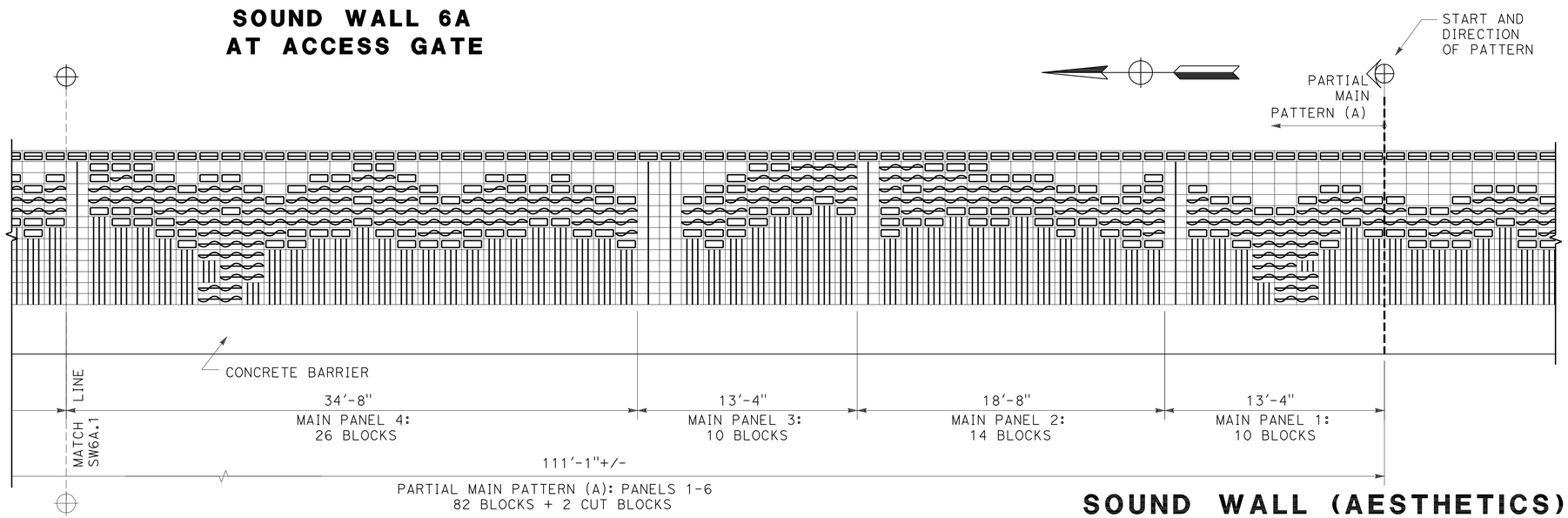

SOUND WALL 6A
PARTIAL MAIN PATTERN (A)

SOUND WALL (AESTHETICS)

SOUND WALL No. 6A

NO SCALE

SW-90

THIS PLAN ACCURATE FOR SOUND WALL AESTHETIC TREATMENTS ONLY

REVISED BY | DATE REVISED
CHRISTINA D. B. FRANKEL | LINDA M. DEVIVI
CALCULATED-DESIGNED BY | CHECKED BY
CONSULTANT FUNCTIONAL SUPERVISOR
LINDA M. DEVIVI

STATE OF CALIFORNIA - DEPARTMENT OF TRANSPORTATION
Caltrans

LAST REVISION 07-07-10 | DATE PLOTTED => 12-OCT-2010 | TIME PLOTTED => 11:24

Dist	COUNTY	ROUTE	POST MILES TOTAL PROJECT	SHEET No.	TOTAL SHEETS
10	SJ	5	25.0/32.7	590	1132

Christina D.B. Frankel 04/21/10
REGISTERED CIVIL ENGINEER DATE

10-11-10
PLANS APPROVAL DATE

REGISTERED PROFESSIONAL ENGINEER
CHRISTINA D.B.FRANKEL
No. C-25730
Exp. 05/31/11
CIVIL
STATE OF CALIFORNIA

THE STATE OF CALIFORNIA OR ITS OFFICERS OR AGENTS SHALL NOT BE RESPONSIBLE FOR THE ACCURACY OR COMPLETENESS OF SCANNED COPIES OF THIS PLAN SHEET.

DERIVI CONSTRUCTION & ARCHITECTURE, INC.
924 N. YOSEMITE STREET
STOCKTON, CA 95203

SJCOG
555 E. WEBER AVE.
STOCKTON, CA 95202-2804

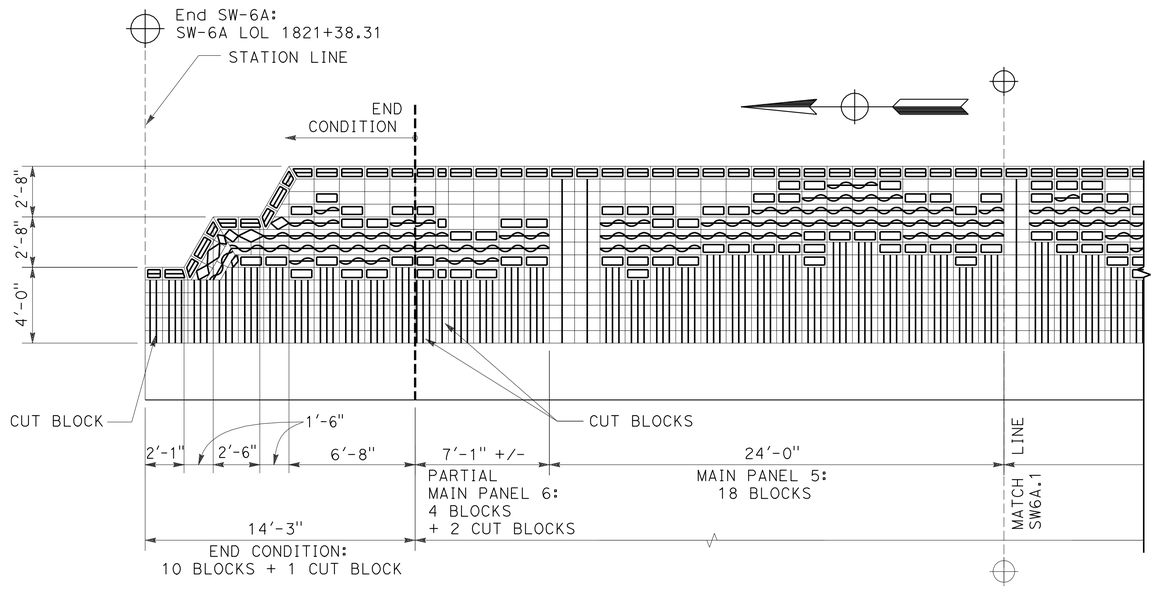

SOUND WALL 6A
PARTIAL PATTERN (CONT) TO END CONDITION

THIS PLAN ACCURATE FOR SOUND WALL AESTHETIC TREATMENTS ONLY

SOUND WALL (AESTHETICS)
SOUND WALL No. 6A
NO SCALE

SW-91

STATE OF CALIFORNIA - DEPARTMENT OF TRANSPORTATION
Caltrans

CONSULTANT FUNCTIONAL SUPERVISOR: LINDA M. DEVIVI
CALCULATED-DESIGNED BY: CHRISTINA D. B. FRANKEL
CHECKED BY: LINDA M. DEVIVI
REVISED BY
DATE REVISED

LAST REVISION 07-07-10
DATE PLOTTED => 12-OCT-2010
TIME PLOTTED => 14:24

DIST	COUNTY	ROUTE	POST MILES TOTAL PROJECT	SHEET No	TOTAL SHEETS
10	SJ	5	25.0/32.7	591	1132

GEOTECHNICAL PROFESSIONAL — DATE 04/21/10

10-11-10
PLANS APPROVAL DATE

REGISTERED GEOLOGIST — GARY PARIKH — No. G.E. 666 — Exp. 12/31/11 — CERTIFIED ENGINEERING GEOLOGIST — STATE OF CALIFORNIA

The State of California or its officers or agents shall not be responsible for the accuracy or completeness of scanned copies of this plan sheet.

SJCOG
555 WEBER AVE.
STOCKTON, CA 95202-2804

PARIKH CONSULTANTS, INC.
2360 QUME DRIVE, SUITE A
SAN JOSE, CA 95131

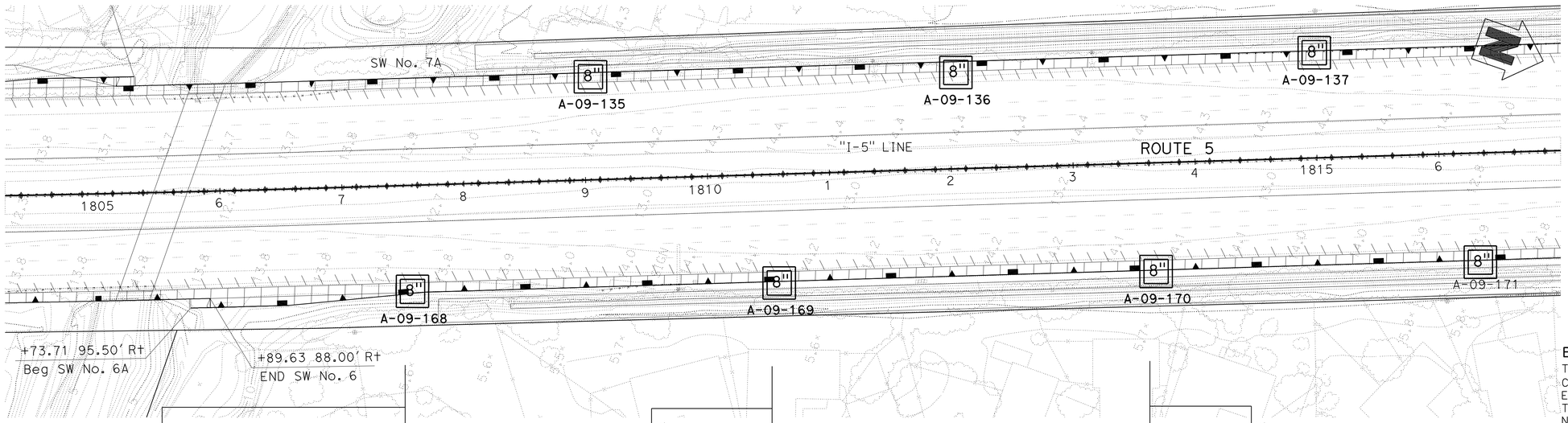

BENCHMARK:
THE HORIZONTAL COORDINATES VALUES ARE IN THE CALIFORNIA COORDINATE SYSTEM (CCS 83) ZONE 3, EPOCH DATE 2007.00, IN U.S. SURVEY FEET. THE VERTICAL CONTROL VALUES ARE BASED ON THE NORTH AMERICAN U.S. SURVEY FEET, HEIGHT MODERNIZATION SURVEY STATION, (2007.00) AND GEOID03 WAS USED FOR THE ADJUSTMENT.

THIS LOTB SHEET WAS PREPARED IN ACCORDANCE WITH CALTRANS SOIL & ROCK LOGGING, CLASSIFICATION, AND PRESENTATION MANUAL (2007)

PLAN
SCALE: 1" = 50'

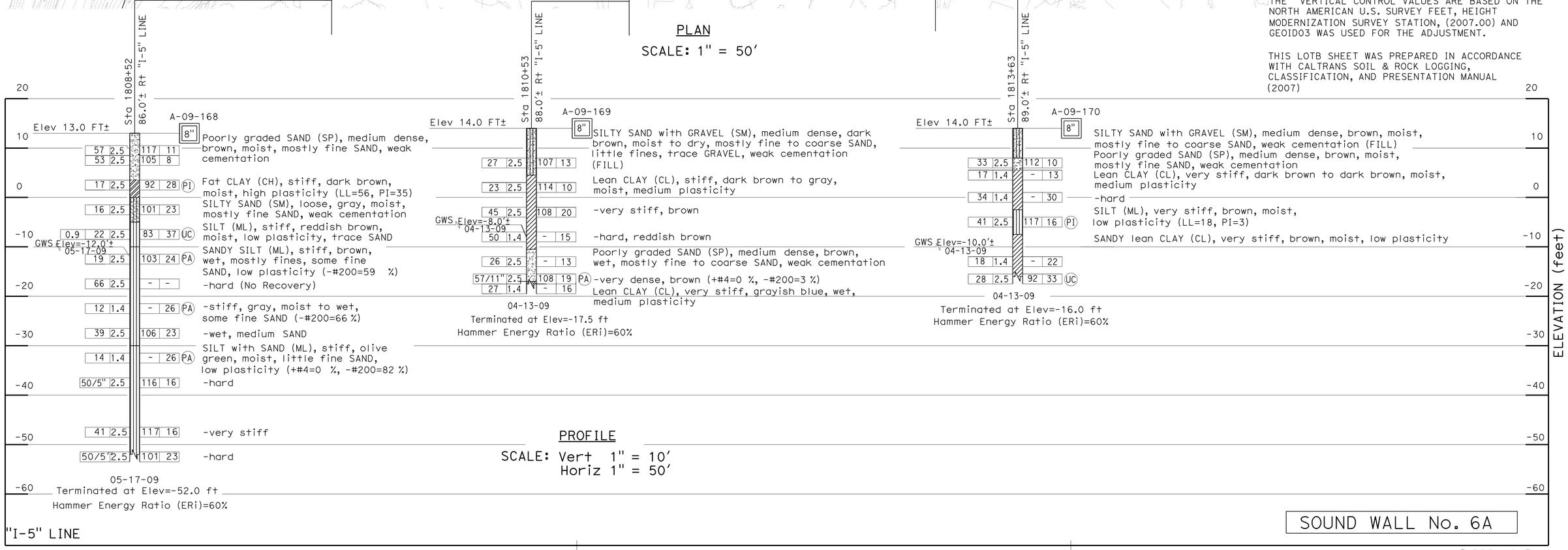

PROFILE
SCALE: Vert 1" = 10'
Horiz 1" = 50'

SOUND WALL No. 6A

SCALE AS SHOWN **SW-92**

DESIGN OVERSIGHT / SIGN OFF DATE	DRAWN BY O. GOUTHIER	S. DUDDU- A.R. BHARADWAJ FIELD INVESTIGATION BY:	PREPARED FOR THE STATE OF CALIFORNIA DEPARTMENT OF TRANSPORTATION	A. LAM PROJECT ENGINEER	BRIDGE NO. -- / POST MILES --
	CHECKED BY D. WANG	DATE: MARCH 2009 TO MAY 2009			I-5 NORTH STOCKTON CORRIDOR IMPROVEMENT
					LOG OF TEST BORINGS

OGS GEOTECHNICAL LOG OF TEST BORINGS SHEET (ENGLISH) (REV. 06-01-09)

ORIGINAL SCALE IN INCHES FOR REDUCED PLANS 0 1 2 3

CU 06240
EA 0G4701

DISREGARD PRINTS BEARING EARLIER REVISION DATES → 09/28/09 03/15/10

REVISION DATES — SHEET — OF

FILE => a0g470ri008.dgn
USERNAME => trstrk

DATE PLOTTED => 12-OCT-2010 TIME PLOTTED => 14:24

DIST	COUNTY	ROUTE	POST MILES TOTAL PROJECT	SHEET No	TOTAL SHEETS
10	SJ	5	25.0/32.7	592	1132

GEOTECHNICAL PROFESSIONAL — DATE 04/21/10

10-11-10
PLANS APPROVAL DATE

The State of California or its officers or agents shall not be responsible for the accuracy or completeness of scanned copies of this plan sheet.

REGISTERED GEOLOGIST — GARY PARIKH — No. G.E. 666 — Exp. 12/31/11 — CERTIFIED ENGINEERING GEOLOGIST — STATE OF CALIFORNIA

SJCOG
555 WEBER AVE.
STOCKTON, CA 95202-2804

PARIKH CONSULTANTS, INC.
2360 QUME DRIVE, SUITE A
SAN JOSE, CA 95131

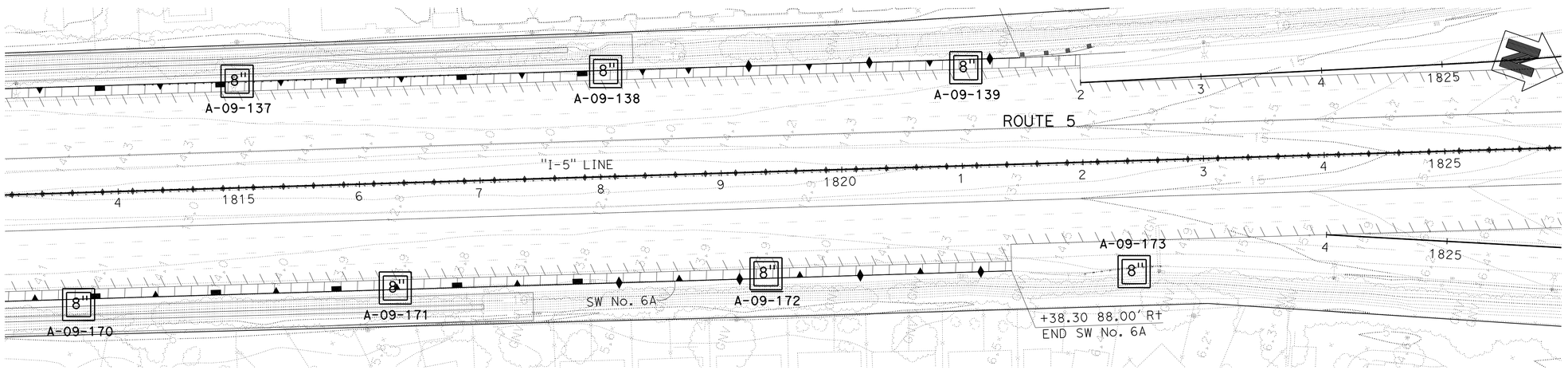

PLAN
SCALE: 1" = 50'

BENCHMARK:
THE HORIZONTAL COORDINATES VALUES ARE IN THE CALIFORNIA COORDINATE SYSTEM (CCS 83) ZONE 3, EPOCH DATE 2007.00, IN U.S. SURVEY FEET.
THE VERTICAL CONTROL VALUES ARE BASED ON THE NORTH AMERICAN U.S. SURVEY FEET, HEIGHT MODERNIZATION SURVEY STATION, (2007.00) AND GEOID03 WAS USED FOR THE ADJUSTMENT.

THIS LOTB SHEET WAS PREPARED IN ACCORDANCE WITH CALTRANS SOIL & ROCK LOGGING, CLASSIFICATION, AND PRESENTATION MANUAL (2007)

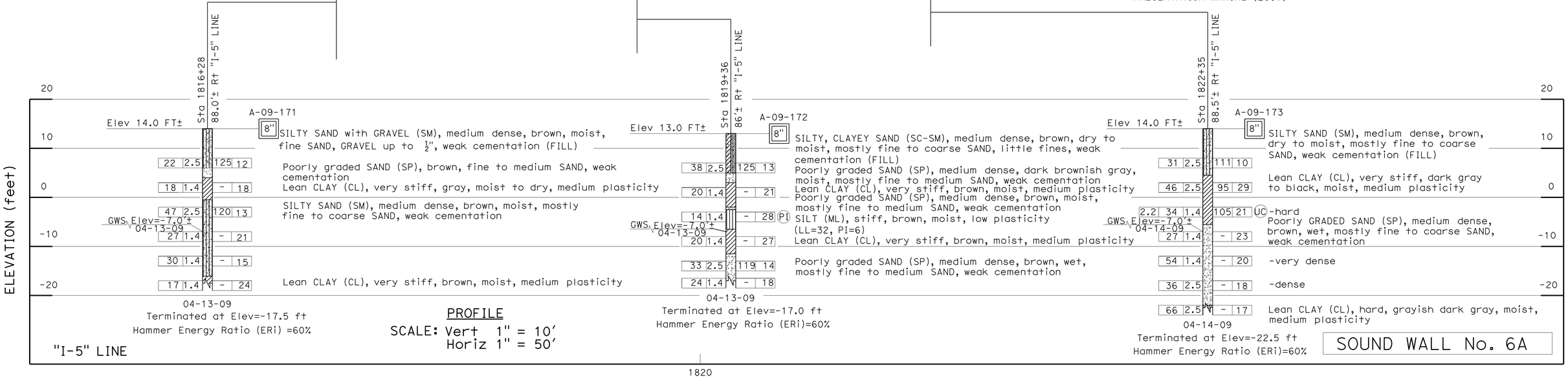

PROFILE
SCALE: Vert 1" = 10'
Horiz 1" = 50'

SCALE AS SHOWN **SW-93**

DESIGN OVERSIGHT	DRAWN BY O. GOUTHIER	S. DUDDU- A.R. BHARADWAJ FIELD INVESTIGATION BY:	PREPARED FOR THE STATE OF CALIFORNIA DEPARTMENT OF TRANSPORTATION	A. LAM PROJECT ENGINEER	BRIDGE NO. -- POST MILES --
SIGN OFF DATE	CHECKED BY D. WANG	DATE: MARCH 2009 TO MAY 2009			I-5 NORTH STOCKTON CORRIDOR IMPROVEMENT
					LOG OF TEST BORINGS

OGS GEOTECHNICAL LOG OF TEST BORINGS SHEET (ENGLISH) (REV. 06-01-09)

ORIGINAL SCALE IN INCHES FOR REDUCED PLANS 0 1 2 3

CU 06240
EA 0G4701

DISREGARD PRINTS BEARING EARLIER REVISION DATES 09/28/09 03/15/10

REVISION DATES — SHEET — OF

FILE => a0g470ri009.dgn
USERNAME => trstrk

USERNAME => trstrk DATE PLOTTED => 12-OCT-2010 TIME PLOTTED => 14:24

Dist	COUNTY	ROUTE	POST MILES TOTAL PROJECT	SHEET No.	TOTAL SHEETS
10	SJ	5	25.0/32.7	593	1132

REGISTERED CIVIL ENGINEER — DATE 04/21/10

10-11-10
PLANS APPROVAL DATE

REGISTERED PROFESSIONAL ENGINEER — CHUONG NGUYEN — No. C46770 — Exp. 06/30/11 — CIVIL — STATE OF CALIFORNIA

THE STATE OF CALIFORNIA OR ITS OFFICERS OR AGENTS SHALL NOT BE RESPONSIBLE FOR THE ACCURACY OR COMPLETENESS OF SCANNED COPIES OF THIS PLAN SHEET.

RAJAPPAN & MEYER
CONSULTING ENGINEERS INC.
1038 LEIGH AVE, SUITE 100
SAN JOSE, CA 95126

SJCOG
555 E. WEBER AVE.
STOCKTON, CA 95202-2804

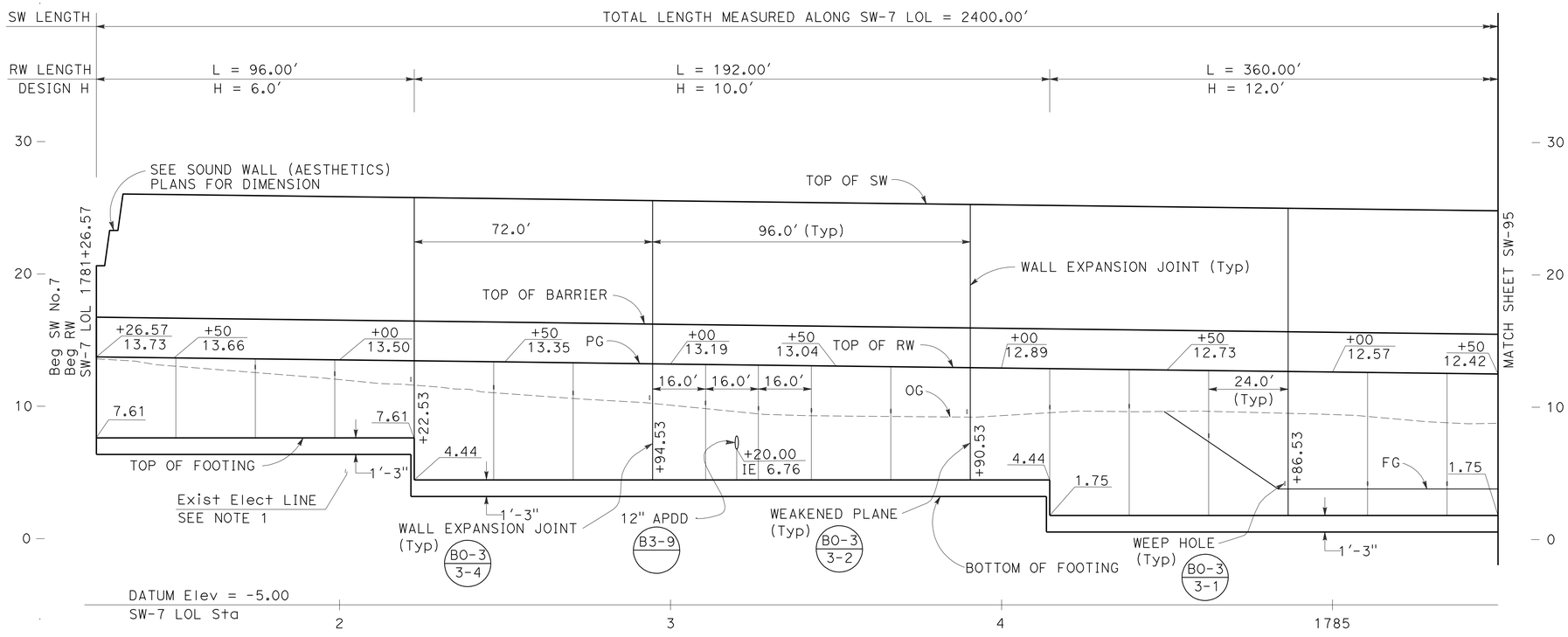

ELEVATION

SCALE: Horiz 1" = 20'
Vert 1" = 5'

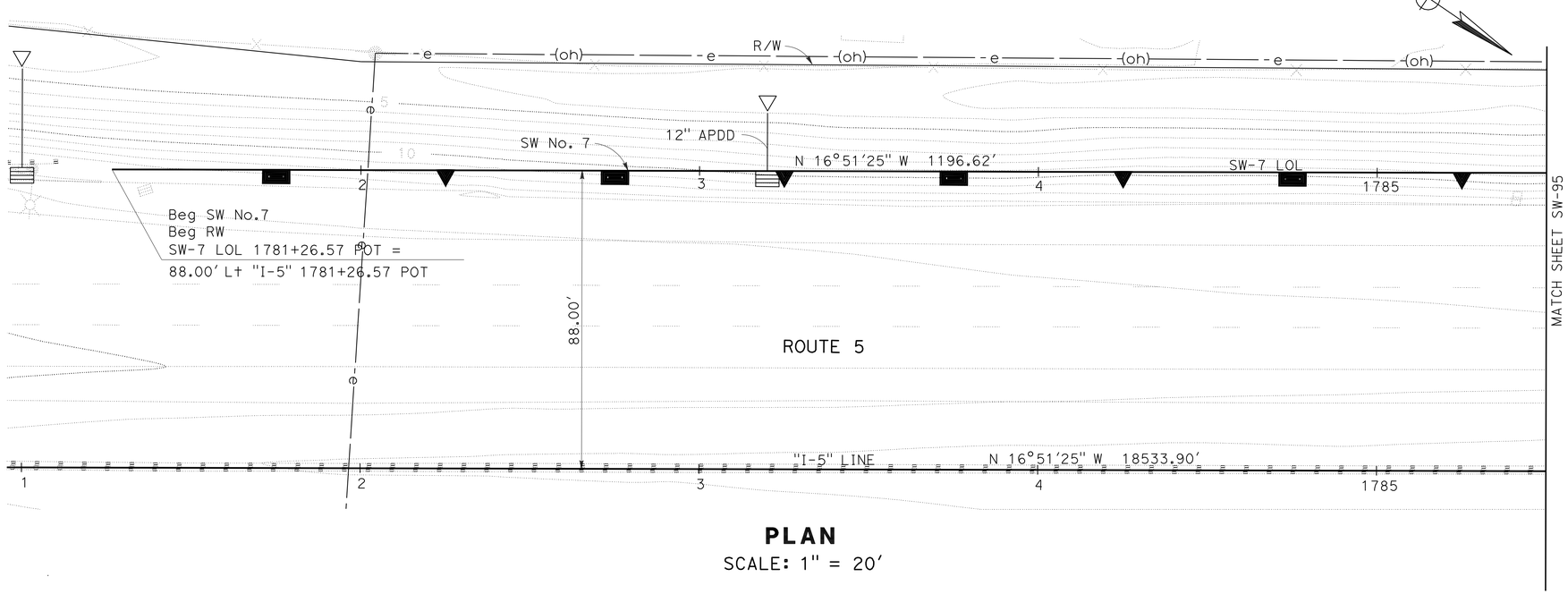

PLAN

SCALE: 1" = 20'

THIS PLAN ACCURATE FOR SOUND WALL WORK ONLY

NOTES:

1. EXISTING ELECTRICAL LINE COULD NOT BE LOCATED. CONTRACTOR TO VERIFY.
2. FOR DETAILS OF RW TYPE 1SWB, SEE RETAINING WALL DETAIL SHEET SW-116.

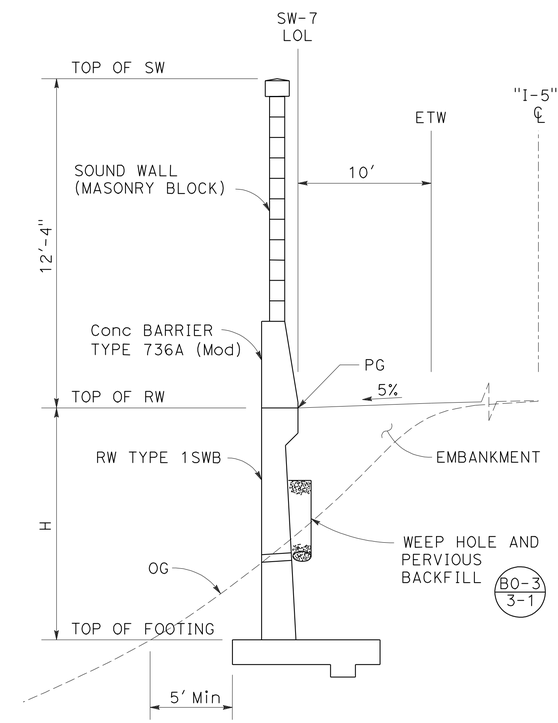

TYPICAL SECTION

SW-7 Sta 1781+26.57 TO Sta 1784+49.07
SW-7 Sta 1801+14.50 TO Sta 1805+26.57
NO SCALE

SOUND WALL PLAN
SOUND WALL No. 7

SCALE AS SHOWN

SW-94

STATE OF CALIFORNIA - DEPARTMENT OF TRANSPORTATION — Caltrans

CONSULTANT FUNCTIONAL SUPERVISOR: KEITH G. MEYER

CALCULATED-DESIGNED BY: SRILAKSHMI SAKHAMURI — CHECKED BY: CHUONG NGUYEN — REVISED BY — DATE REVISED

LAST REVISION — DATE PLOTTED => 12-OCT-2010 — TIME PLOTTED => 14:25 — 08-10-10

Dist	COUNTY	ROUTE	POST MILES TOTAL PROJECT	SHEET No.	TOTAL SHEETS
10	SJ	5	25.0/32.7	594	1132

REGISTERED CIVIL ENGINEER 04/21/10 DATE

10-11-10
PLANS APPROVAL DATE

REGISTERED PROFESSIONAL ENGINEER CHUONG NGUYEN No. C46770 Exp. 06/30/11 CIVIL STATE OF CALIFORNIA

THE STATE OF CALIFORNIA OR ITS OFFICERS OR AGENTS SHALL NOT BE RESPONSIBLE FOR THE ACCURACY OR COMPLETENESS OF SCANNED COPIES OF THIS PLAN SHEET.

RAJAPPAN & MEYER
CONSULTING ENGINEERS INC.
1038 LEIGH AVE, SUITE 100
SAN JOSE, CA 95126

SJCOG
555 E. WEBER AVE.
STOCKTON, CA 95202-2804

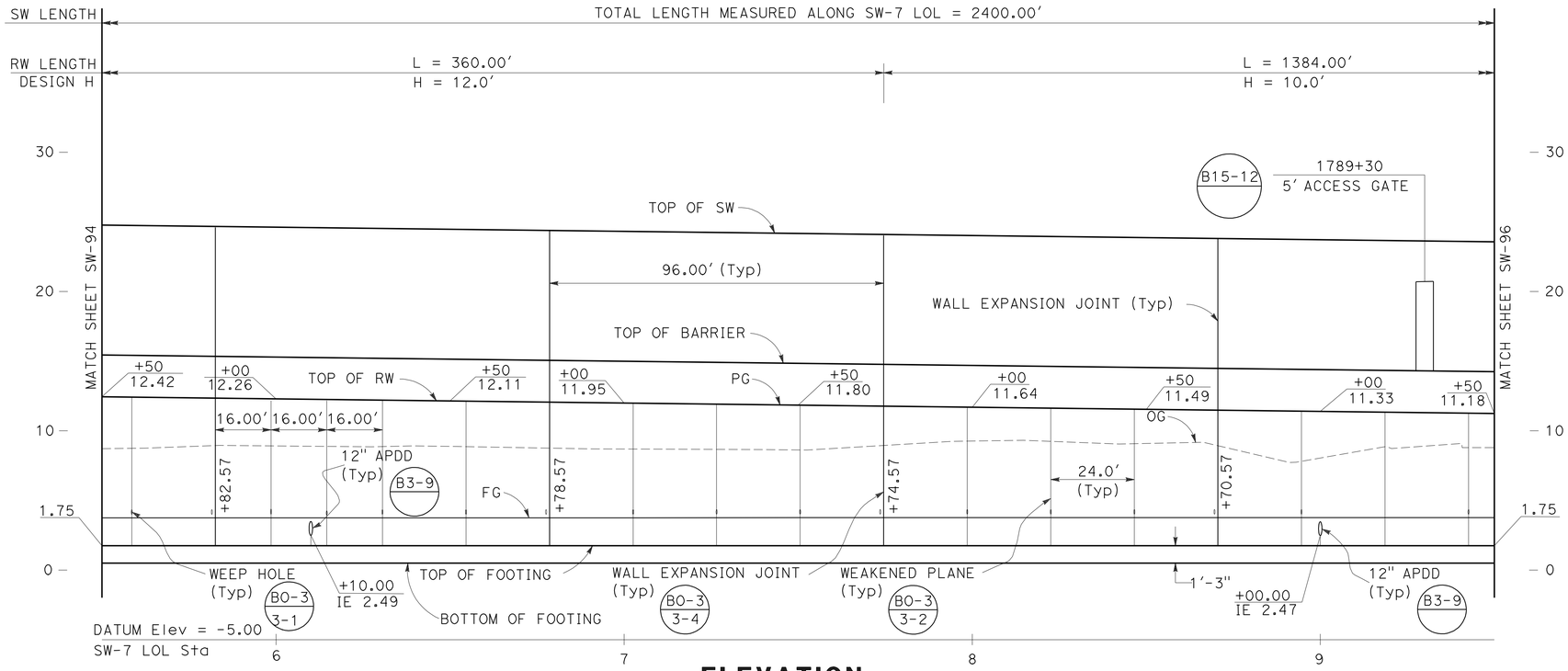

ELEVATION

SCALE: Horiz 1" = 20'
Vert 1" = 5'

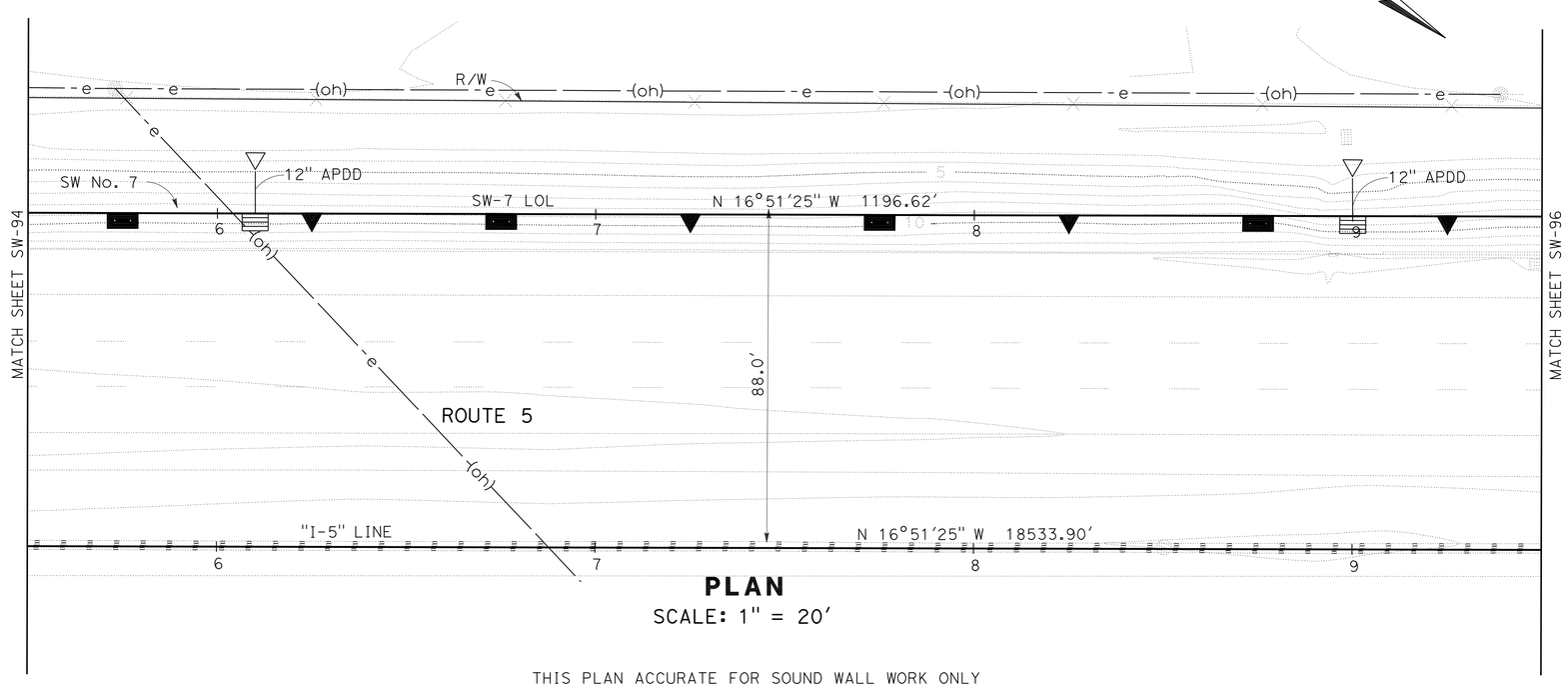

PLAN

SCALE: 1" = 20'

THIS PLAN ACCURATE FOR SOUND WALL WORK ONLY

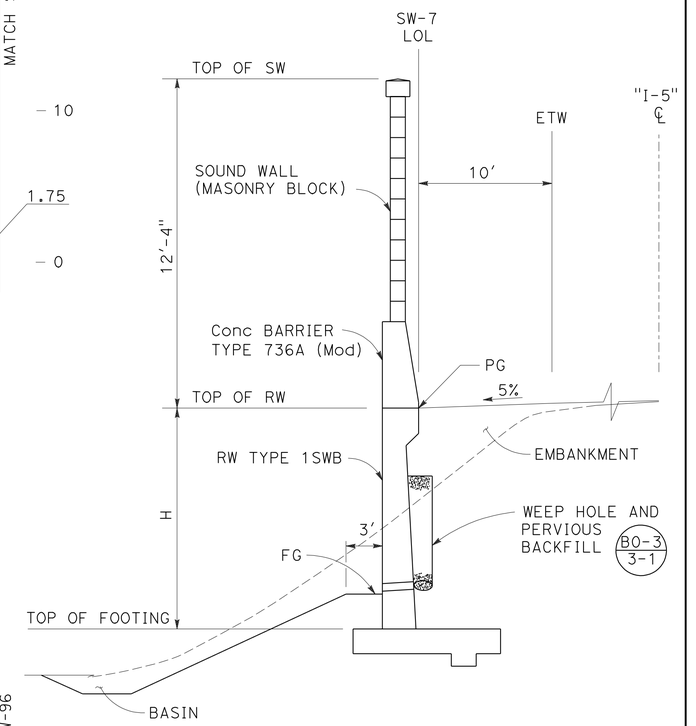

TYPICAL SECTION

SW-7 Sta 1784+49.07 TO Sta 1801+14.50
NO SCALE

NOTE:

FOR DETAILS OF SW 1SWB,
SEE RETAINING WALL DETAIL SHEET SW-116.

SOUND WALL PLAN
SOUND WALL No. 7

SCALE AS SHOWN

SW-95

STATE OF CALIFORNIA - DEPARTMENT OF TRANSPORTATION
Caltrans

CONSULTANT FUNCTIONAL SUPERVISOR: KEITH G. MEYER

CALCULATED-DESIGNED BY: SRILAKSHMI SAKHAMURI
CHECKED BY: CHUONG NGUYEN

REVISED BY
DATE REVISED

LAST REVISION 08-10-10
DATE PLOTTED => 12-OCT-2010
TIME PLOTTED => 14:25

Dist	COUNTY	ROUTE	POST MILES TOTAL PROJECT	SHEET No.	TOTAL SHEETS
10	SJ	5	25.0/32.7	595	1132

REGISTERED CIVIL ENGINEER 04/21/10 DATE

10-11-10
PLANS APPROVAL DATE

REGISTERED PROFESSIONAL ENGINEER CHUONG NGUYEN No. C46770 Exp. 06/30/11 CIVIL STATE OF CALIFORNIA

THE STATE OF CALIFORNIA OR ITS OFFICERS OR AGENTS SHALL NOT BE RESPONSIBLE FOR THE ACCURACY OR COMPLETENESS OF SCANNED COPIES OF THIS PLAN SHEET.

RAJAPPAN & MEYER
CONSULTING ENGINEERS INC.
1038 LEIGH AVE, SUITE 100
SAN JOSE, CA 95126

SJCOG
555 E. WEBER AVE.
STOCKTON, CA 95202-2804

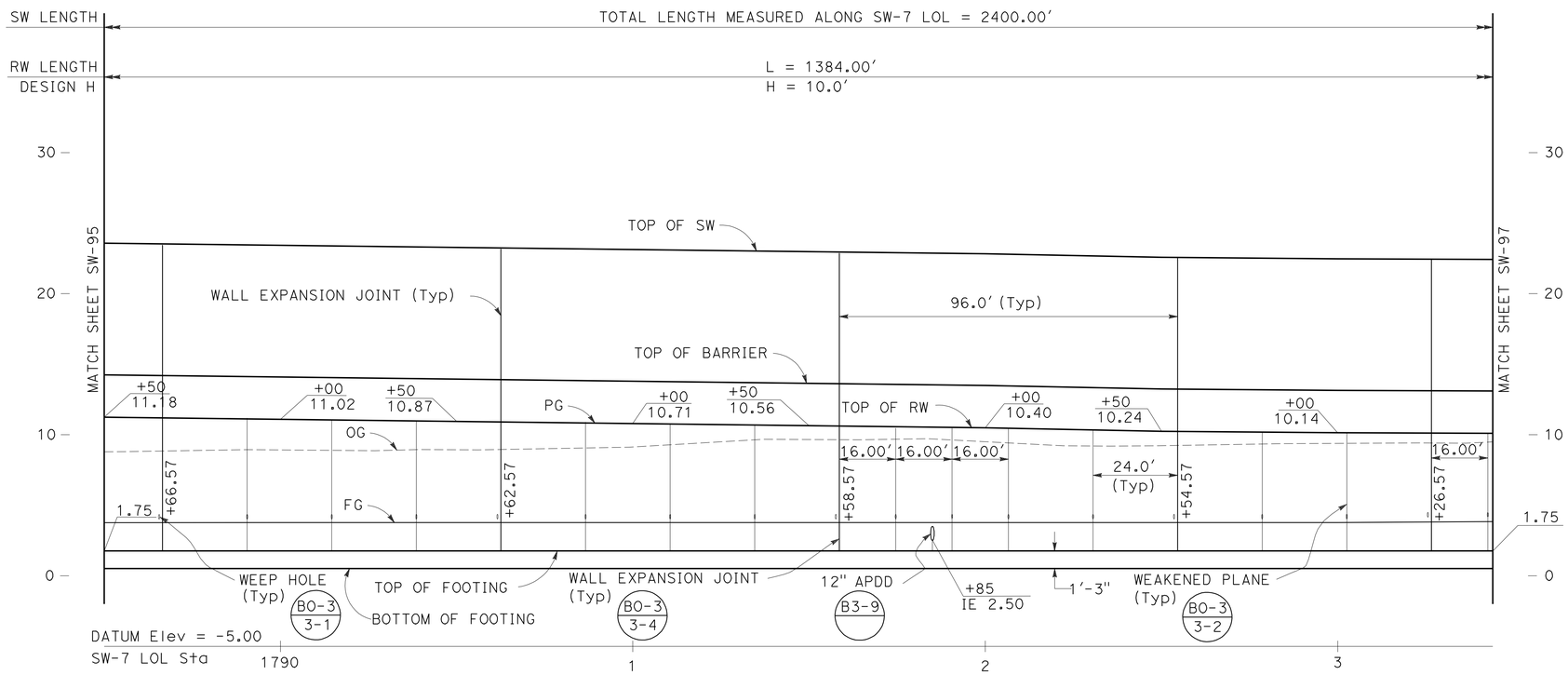

ELEVATION

SCALE: Horiz 1" = 20'
Vert 1" = 5'

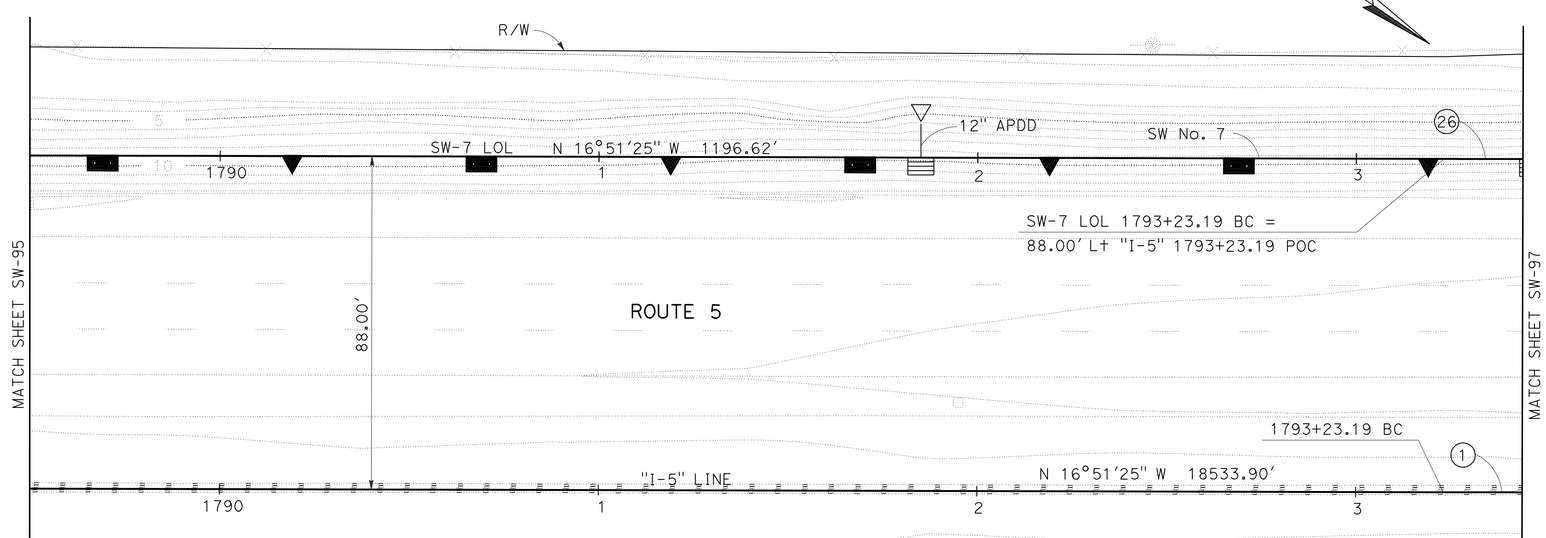

PLAN

SCALE: 1" = 20'

CURVE DATA

No.	RADIUS	DELTA	TANGENT	LENGTH
1	20000.00'	3°52'35"	676.82'	1353.12'
26	19912.00'	2°54'29"	505.41'	1010.61'

SOUND WALL PLAN

SOUND WALL No. 7

SCALE AS SHOWN

SW-96

THIS PLAN ACCURATE FOR SOUND WALL WORK ONLY

STATE OF CALIFORNIA - DEPARTMENT OF TRANSPORTATION
Caltrans

CONSULTANT FUNCTIONAL SUPERVISOR: KEITH G. MEYER

CALCULATED-DESIGNED BY: SRILAKSHMI SAKHAMURI
CHECKED BY: CHUONG NGUYEN

REVISED BY
DATE REVISED

LAST REVISION 07-07-10
DATE PLOTTED => 12-OCT-2010
TIME PLOTTED => 14:25

Dist	COUNTY	ROUTE	POST MILES TOTAL PROJECT	SHEET No.	TOTAL SHEETS
10	SJ	5	25.0/32.7	596	1132

REGISTERED CIVIL ENGINEER 04/21/10 DATE

10-11-10
PLANS APPROVAL DATE

REGISTERED PROFESSIONAL ENGINEER CHUONG NGUYEN No. C46770 Exp. 06/30/11 CIVIL STATE OF CALIFORNIA

THE STATE OF CALIFORNIA OR ITS OFFICERS OR AGENTS SHALL NOT BE RESPONSIBLE FOR THE ACCURACY OR COMPLETENESS OF SCANNED COPIES OF THIS PLAN SHEET.

RAJAPPAN & MEYER
CONSULTING ENGINEERS INC.
1038 LEIGH AVE, SUITE 100
SAN JOSE, CA 95126

SJCOG
555 E. WEBER AVE.
STOCKTON, CA 95202-2804

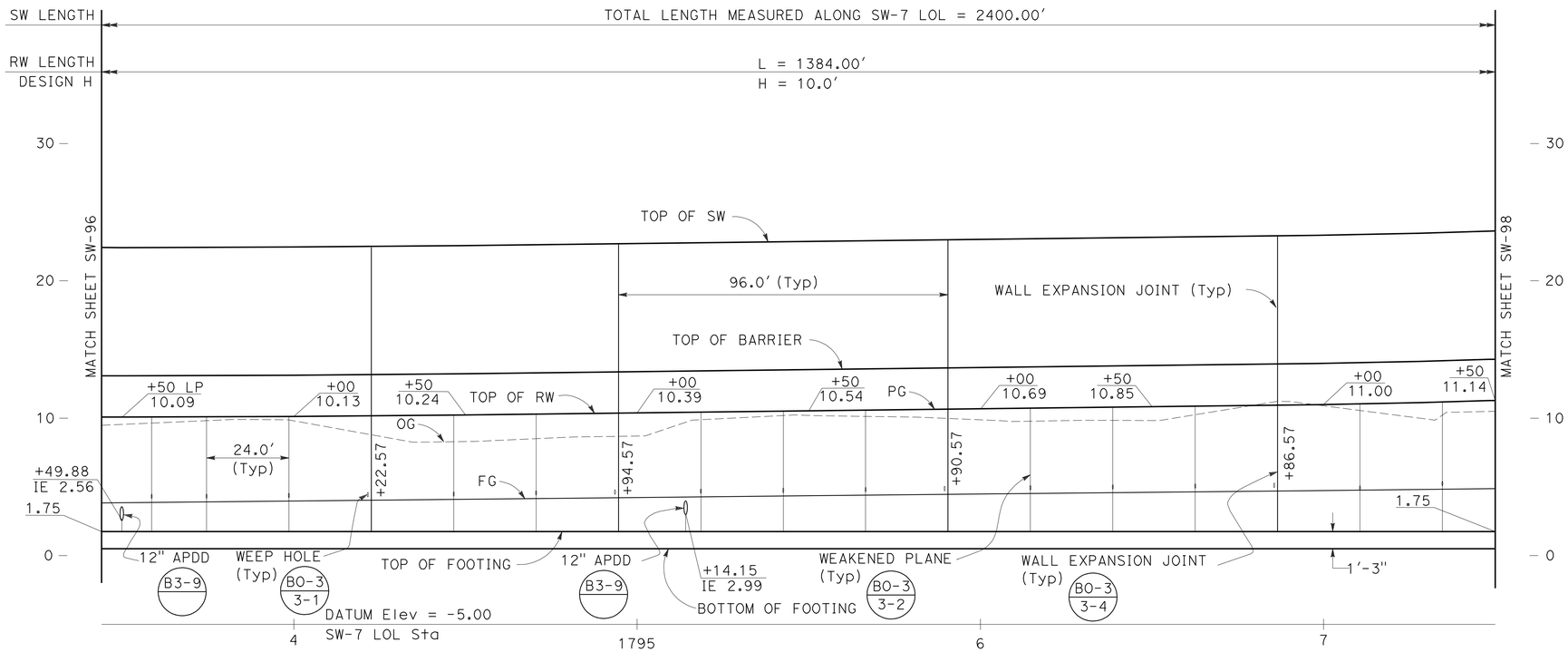

ELEVATION

SCALE: Horiz 1" = 20'
Vert 1" = 5'

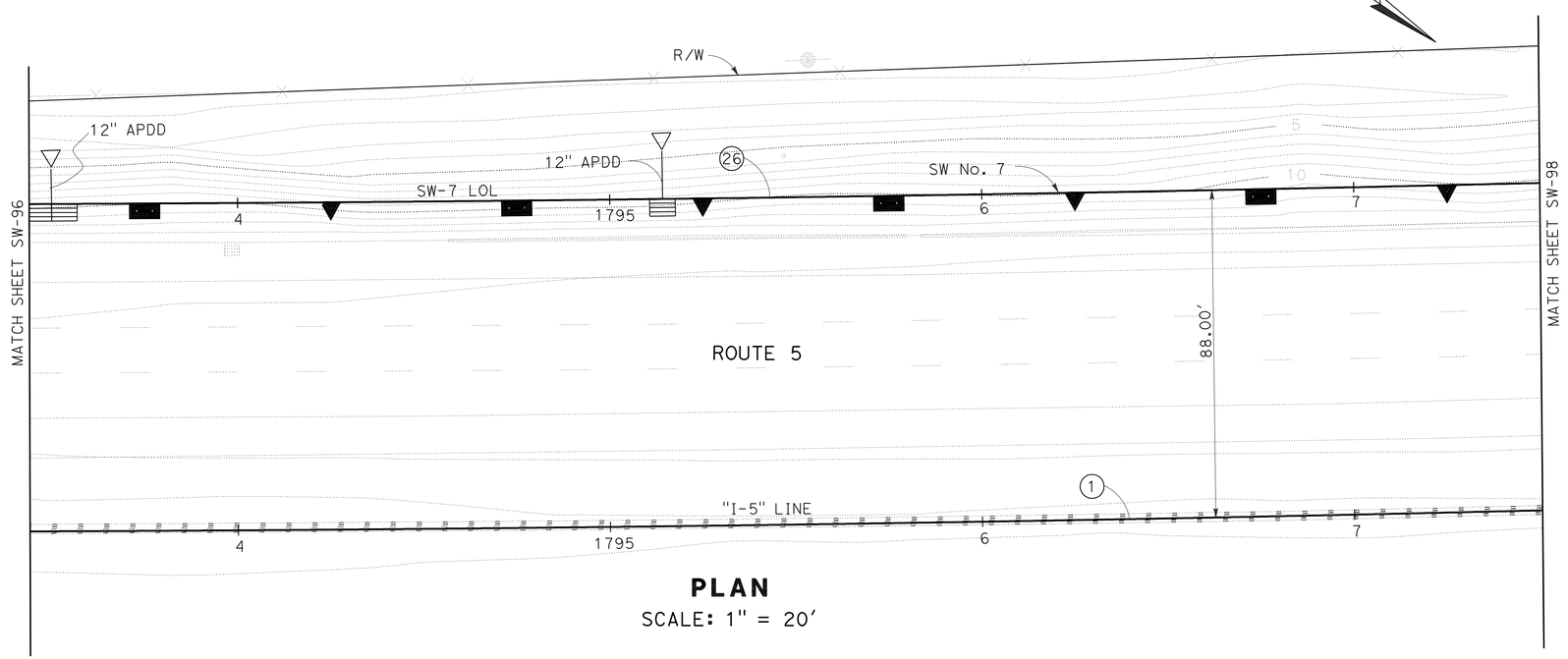

PLAN

SCALE: 1" = 20'

THIS PLAN ACCURATE FOR SOUND WALL WORK ONLY

CURVE DATA

No.	RADIUS	DELTA	TANGENT	LENGTH
1	20000.00'	3°52'35"	676.82'	1353.12'
26	19912.00'	2°54'29"	505.41'	1010.61'

SOUND WALL PLAN
SOUND WALL No. 7

SCALE AS SHOWN

SW-97

STATE OF CALIFORNIA - DEPARTMENT OF TRANSPORTATION
Caltrans

CONSULTANT FUNCTIONAL SUPERVISOR: KEITH G. MEYER
CALCULATED-DESIGNED BY: SRILAKSHMI SAKHAMURI
CHECKED BY: CHUONG NGUYEN
REVISED BY
DATE REVISED

LAST REVISION 07-07-10 | DATE PLOTTED => 12-OCT-2010 | TIME PLOTTED => 14:25

Dist	COUNTY	ROUTE	POST MILES TOTAL PROJECT	SHEET No.	TOTAL SHEETS
10	SJ	5	25.0/32.7	597	1132

REGISTERED CIVIL ENGINEER — DATE 04/21/10

10-11-10
PLANS APPROVAL DATE

REGISTERED PROFESSIONAL ENGINEER — CHUONG NGUYEN — No. C46770 — Exp. 06/30/11 — CIVIL — STATE OF CALIFORNIA

THE STATE OF CALIFORNIA OR ITS OFFICERS OR AGENTS SHALL NOT BE RESPONSIBLE FOR THE ACCURACY OR COMPLETENESS OF SCANNED COPIES OF THIS PLAN SHEET.

RAJAPPAN & MEYER
CONSULTING ENGINEERS INC.
1038 LEIGH AVE, SUITE 100
SAN JOSE, CA 95126

SJCOG
555 E. WEBER AVE.
STOCKTON, CA 95202-2804

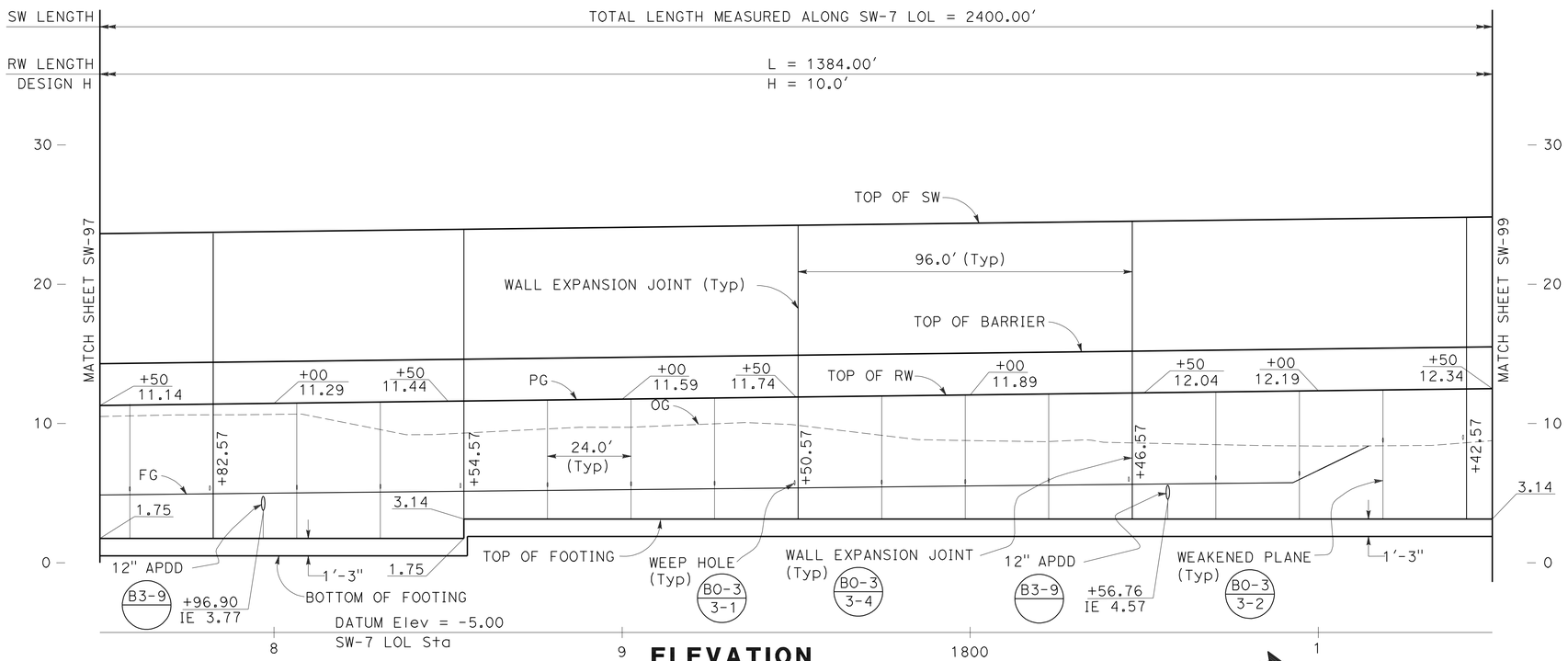

ELEVATION

SCALE: Horiz 1" = 20'
Vert 1" = 5'

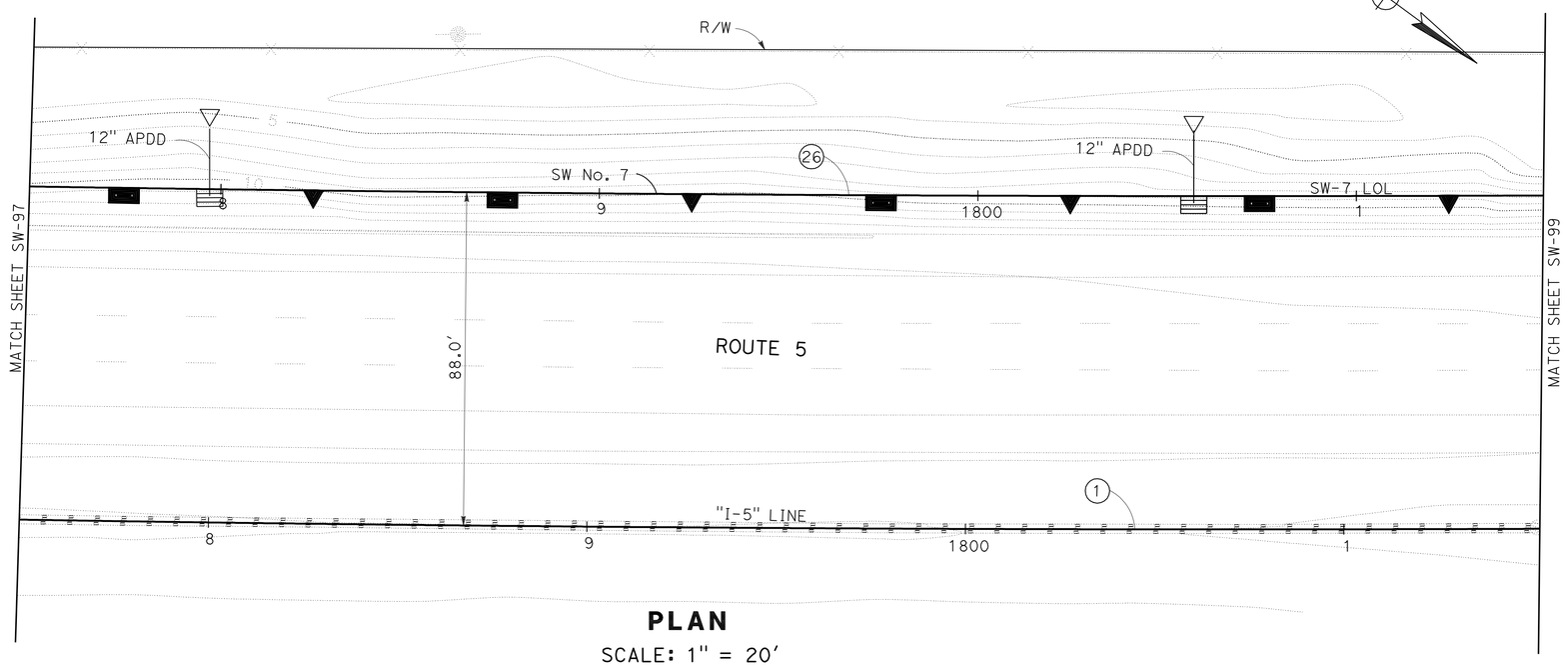

PLAN

SCALE: 1" = 20'

THIS PLAN ACCURATE FOR SOUND WALL WORK ONLY

CURVE DATA

No.	RADIUS	DELTA	TANGENT	LENGTH
1	20000.00'	3°52'35"	676.82'	1353.12'
26	19912.00'	2°54'29"	505.41'	1010.61'

SOUND WALL PLAN
SOUND WALL No. 7
SCALE AS SHOWN

SW-98

STATE OF CALIFORNIA - DEPARTMENT OF TRANSPORTATION
Caltrans

CONSULTANT FUNCTIONAL SUPERVISOR: KEITH G. MEYER
CALCULATED-DESIGNED BY: SRILAKSHMI SAKHAMURI
CHECKED BY: CHUONG NGUYEN
REVISED BY
DATE REVISED

LAST REVISION DATE PLOTTED => 12-OCT-2010
TIME PLOTTED => 14:25
07-07-10

Dist	COUNTY	ROUTE	POST MILES TOTAL PROJECT	SHEET No.	TOTAL SHEETS
10	SJ	5	25.0/32.7	598	1132

REGISTERED CIVIL ENGINEER 04/21/10 DATE

10-11-10
PLANS APPROVAL DATE

REGISTERED PROFESSIONAL ENGINEER CHUONG NGUYEN No. C46770 Exp. 06/30/11 CIVIL STATE OF CALIFORNIA

THE STATE OF CALIFORNIA OR ITS OFFICERS OR AGENTS SHALL NOT BE RESPONSIBLE FOR THE ACCURACY OR COMPLETENESS OF SCANNED COPIES OF THIS PLAN SHEET.

RAJAPPAN & MEYER
CONSULTING ENGINEERS INC.
1038 LEIGH AVE, SUITE 100
SAN JOSE, CA 95126

SJCOG
555 E. WEBER AVE.
STOCKTON, CA 95202-2804

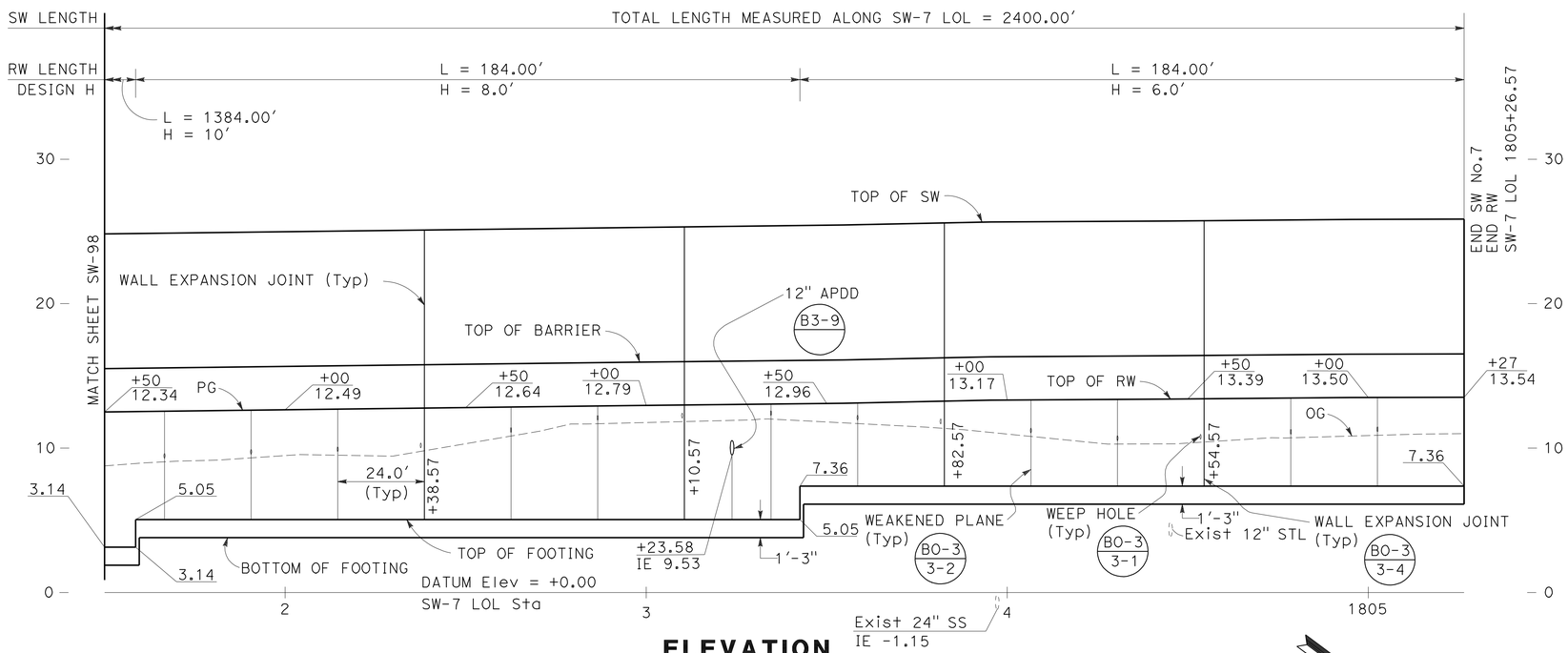

ELEVATION

SCALE: Horiz 1" = 20'
Vert 1" = 5'

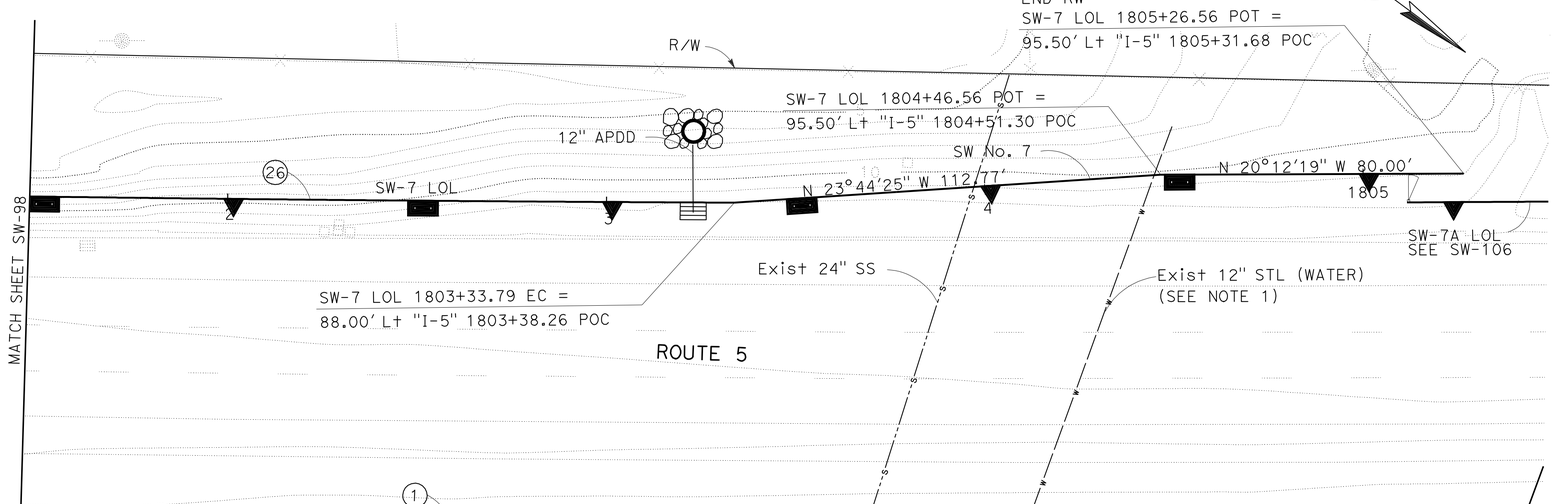

PLAN

SCALE: 1" = 20'

NOTE:

1. EXISTING 12" WATER LINE COULD NOT BE LOCATED. CONTRACTOR TO VERIFY.

CURVE DATA

No.	RADIUS	DELTA	TANGENT	LENGTH
1	20000.00'	3°52'35"	676.82'	1353.12'
26	19912.00'	2°54'29"	505.41'	1010.61'

SOUND WALL PLAN
SOUND WALL No. 7

SCALE AS SHOWN

SW-99

THIS PLAN ACCURATE FOR SOUND WALL WORK ONLY

STATE OF CALIFORNIA - DEPARTMENT OF TRANSPORTATION
Caltrans

CONSULTANT FUNCTIONAL SUPERVISOR: KEITH G. MEYER
CALCULATED-DESIGNED BY: SRILAKSHMI SAKHAMURI
CHECKED BY: CHUONG NGUYEN
REVISED BY
DATE REVISED

LAST REVISION 07-07-10
DATE PLOTTED => 12-OCT-2010
TIME PLOTTED => 14:25

Dist	COUNTY	ROUTE	POST MILES TOTAL PROJECT	SHEET No.	TOTAL SHEETS
10	SJ	5	25.0/32.7	599	1132

REGISTERED CIVIL ENGINEER 04/21/10 DATE

10-11-10
PLANS APPROVAL DATE

REGISTERED PROFESSIONAL ENGINEER CHRISTINA D.B.FRANKEL No. C-25730 Exp. 05/31/11 CIVIL STATE OF CALIFORNIA

THE STATE OF CALIFORNIA OR ITS OFFICERS OR AGENTS SHALL NOT BE RESPONSIBLE FOR THE ACCURACY OR COMPLETENESS OF SCANNED COPIES OF THIS PLAN SHEET.

DERIVI CONSTRUCTION & ARCHITECTURE, INC.
924 N. YOSEMITE STREET
STOCKTON, CA 95203

SJCOG
555 E. WEBER AVE.
STOCKTON, CA 95202-2804

BLOCK LEGEND:

Medium Wt / Light Wt — BLOCK A: 'CAP'
8(H)×10(D)*×16(L)
*PROJECT BLOCK 1" EA SIDE
SPLIT FACE BOTH FACES
DARK TAN WITH MEDIUM-SIZED BLACK, DARK BROWN & WHITE AGGREGATE

Medium Wt / Light Wt — BLOCK B: 'WATER'
8(H)×8(D)×16(L)
SPLIT FACE BOTH FACES
DARK TAN WITH MEDIUM-SIZED BLACK, DARK BROWN & WHITE AGGREGATE

Medium Wt — BLOCK C: 'FIELDS'
8(H)×8(D)×16(L)
SPLIT FACE BOTH FACES
3 SCORE ($\frac{3}{8}$") BOTH FACES
DARK TAN WITH MEDIUM-SIZED BLACK, DARK BROWN & WHITE AGGREGATE

Medium Wt — BLOCK D: 'LEVEE'
8(H)×10(D)*×16(L)
*PROJECT BLOCK 1" EA SIDE
PRECISION BLOCK
MEDIUM-LIGHT TAN WITH MEDIUM-SIZED BLACK, RED & WHITE AGGREGATE

Medium Wt / Light Wt — BLOCK G: 'LEVEE 2'
8(H)×8(D)×16(L)
PRECISION BLOCK
MEDIUM-LIGHT TAN WITH MEDIUM-SIZED BLACK, RED & WHITE AGGREGATE

Medium Wt / Light Wt — BLOCK F: 'CITY'
8(H)×8(D)×16(L)
SPLIT FACE BOTH FACES
LIGHT TAN WITH SMALL-SIZED WHITE, GREY & BLACK AGGREGATE

Medium Wt / Light Wt — BLOCK H: 'STREET'
8(H)×8(D)×16(L)
PRECISION BLOCK
1 SCORE ($\frac{3}{8}$") BOTH FACES
DARK GREY

GENERAL NOTES:

1. EACH SOUNDWALL ELEVATION IS ELEVATED INDEPENDENTLY. SEE SOUNDWALL GENERAL PLANS FOR MORE INFORMATION.
2. WHERE CUT BLOCKS ARE REQUIRED, CUT BLOCK SHALL BE NO SMALLER THAN ONE HALF OF A BLOCK, OTHERWISE CUT ADJACENT BLOCK AS WELL.
3. PLACE CORE HOLES (NOT SHOWN) FOR VINE PLANTINGS AT 16' ON CENTER.
4. THE CONTRACTOR SHALL SUBMIT COLOR SAMPLE OF BLOCK TO THE ENGINEER FOR APPROVAL.

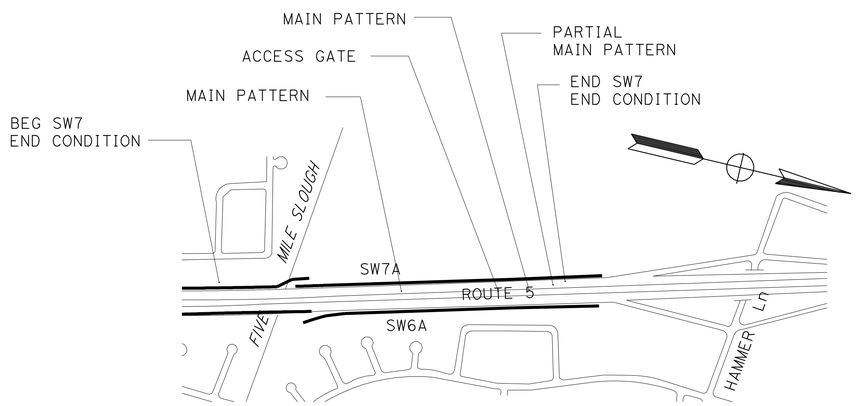

SOUND WALL 7
KEY PLAN

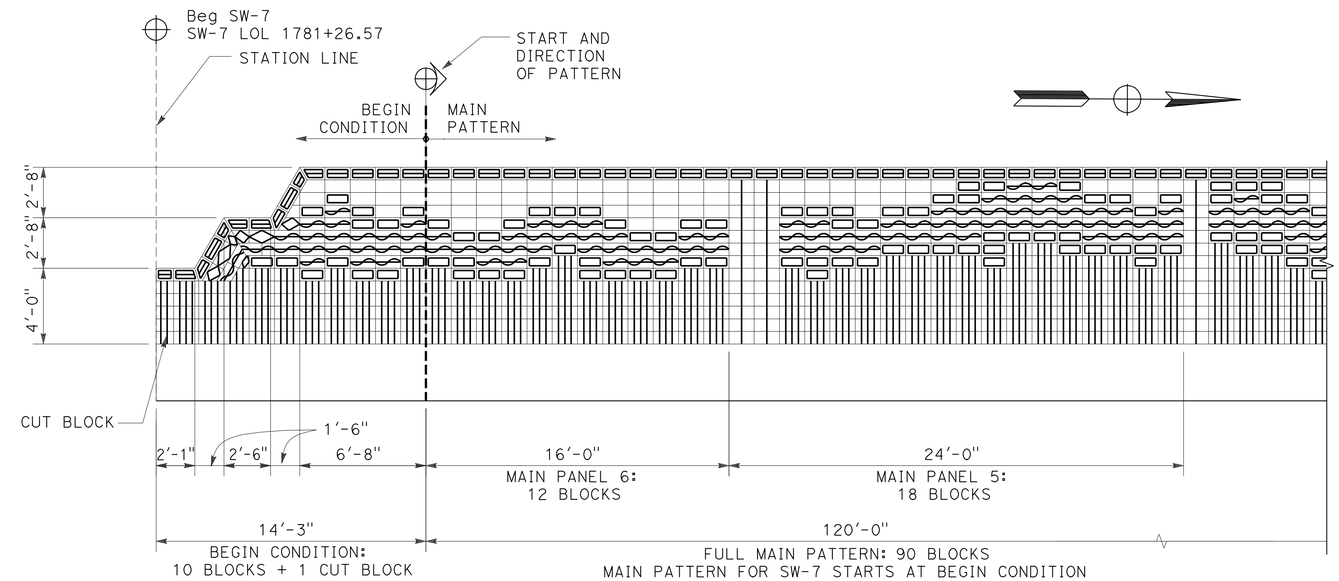

SOUND WALL 7
BEGIN CONDITION

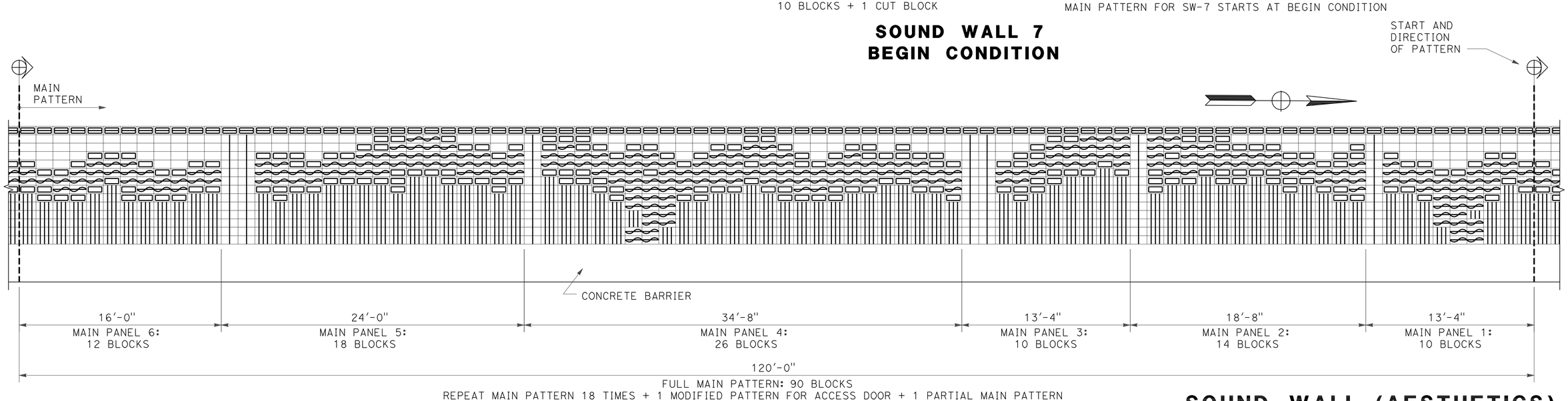

SOUND WALL 7
MAIN PATTERN - Typ

SOUND WALL (AESTHETICS)
SOUND WALL No. 7
NO SCALE

SW-100

THIS PLAN ACCURATE FOR SOUND WALL AESTHETIC TREATMENTS ONLY

STATE OF CALIFORNIA - DEPARTMENT OF TRANSPORTATION
Caltrans
CONSULTANT FUNCTIONAL SUPERVISOR: LINDA M. DEVIVI
CALCULATED-DESIGNED BY: CHRISTINA D. B. FRANKEL
CHECKED BY: LINDA M. DEVIVI
REVISED BY
DATE REVISED

LAST REVISION 07-07-10
DATE PLOTTED => 12-OCT-2010
TIME PLOTTED => 14:25

Dist	COUNTY	ROUTE	POST MILES TOTAL PROJECT	SHEET No.	TOTAL SHEETS
10	SJ	5	25.0/32.7	600	1132

REGISTERED CIVIL ENGINEER 04/21/10 DATE

10-11-10
PLANS APPROVAL DATE

REGISTERED PROFESSIONAL ENGINEER CHRISTINA D.B.FRANKEL No. C-25730 Exp. 05/31/11 CIVIL STATE OF CALIFORNIA

THE STATE OF CALIFORNIA OR ITS OFFICERS OR AGENTS SHALL NOT BE RESPONSIBLE FOR THE ACCURACY OR COMPLETENESS OF SCANNED COPIES OF THIS PLAN SHEET.

DERIVI CONSTRUCTION & ARCHITECTURE, INC.
924 N. YOSEMITE STREET
STOCKTON, CA 95203

SJCOG
555 E. WEBER AVE.
STOCKTON, CA 95202-2804

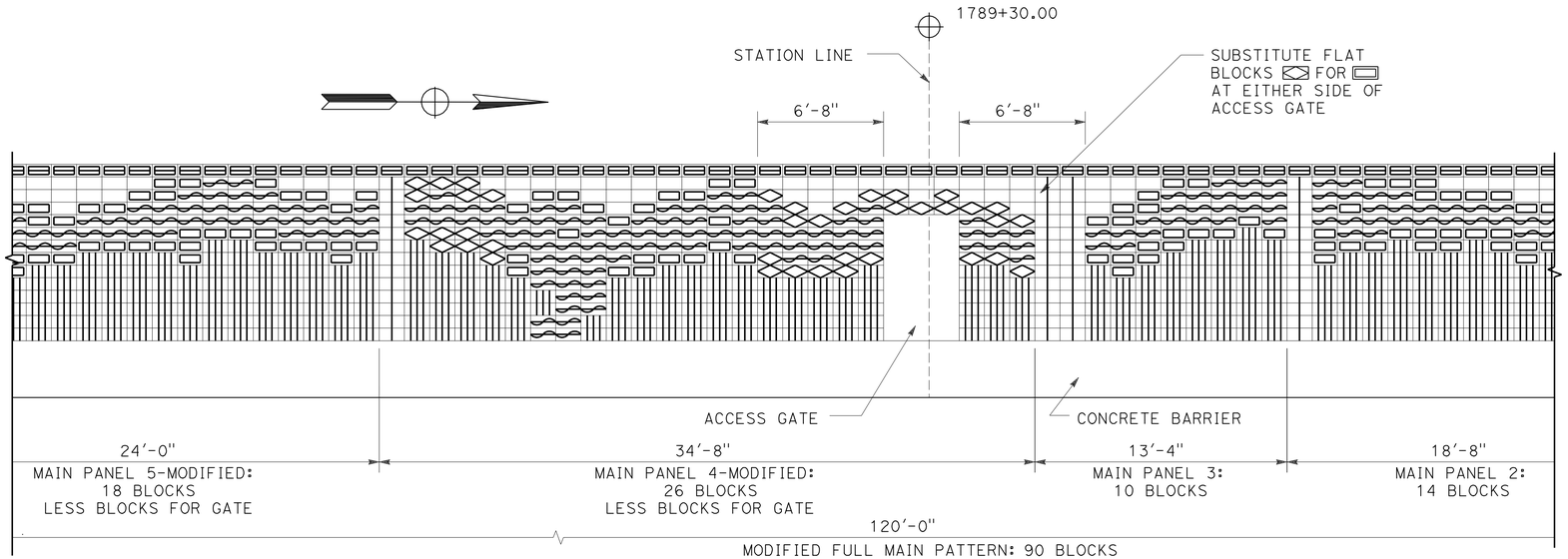

SOUND WALL 7
ACCESS GATE

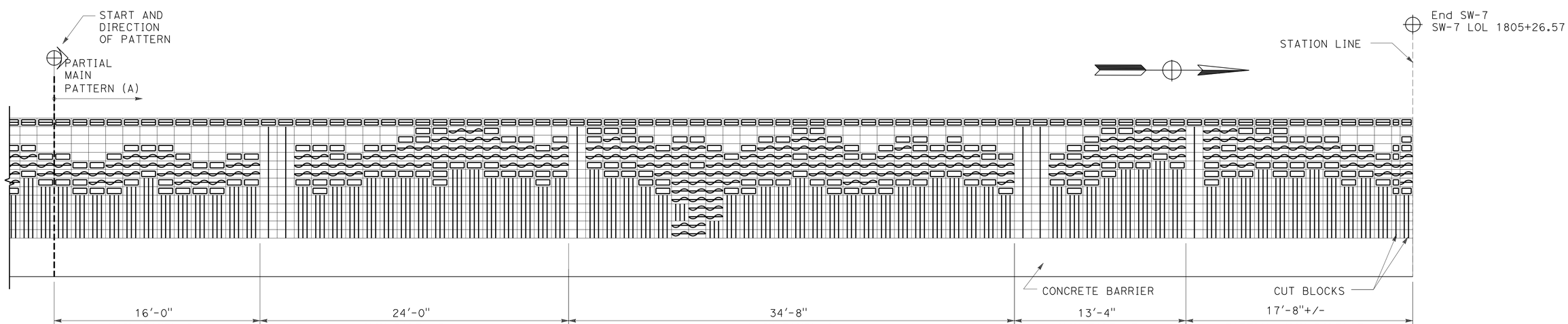

SOUND WALL 7
PARTIAL MAIN PATTERN (A)/END CONDITION

THIS PLAN ACCURATE FOR SOUND WALL AESTHETIC TREATMENTS ONLY

SOUND WALL (AESTHETICS)
SOUND WALL No. 7
NO SCALE

SW-101

REVISED BY | DATE REVISED
CHRISTINA D. B. FRANKEL | LINDA M. DEVIVI
CALCULATED-DESIGNED BY | CHECKED BY
CONSULTANT FUNCTIONAL SUPERVISOR: LINDA M. DEVIVI
STATE OF CALIFORNIA - DEPARTMENT OF TRANSPORTATION
Caltrans

LAST REVISION 07-07-10 | DATE PLOTTED => 12-OCT-2010 | TIME PLOTTED => 14:25