Dist	COUNTY	ROUTE	POST MILES TOTAL PROJECT	SHEET No.	TOTAL SHEETS
10	Mer	33	17.1/26.5	1	26

STP-S033(072)E

STATE OF CALIFORNIA
DEPARTMENT OF TRANSPORTATION

PROJECT PLANS FOR CONSTRUCTION ON
STATE HIGHWAY
IN MERCED COUNTY
NEAR SANTA NELLA
FROM 0.1 MILE SOUTH OF PLAZA ROAD
TO ROUTE 140

TO BE SUPPLEMENTED BY STANDARD PLANS DATED MAY 2006

INDEX OF PLANS

SHEET No.	DESCRIPTION
1	TITLE AND LOCATION MAP
2-3	TYPICAL CROSS SECTIONS
4-7	CONSTRUCTION DETAILS
8	CONSTRUCTION AREA SIGNS
9	PAVEMENT DELINEATION QUANTITIES
10-11	SUMMARY OF QUANTITIES
12	LANDSCAPE DETAILS
13	INDUCTIVE LOOP DETECTOR
14-26	REVISED STANDARD PLANS

THE STANDARD PLANS LIST APPLICABLE TO THIS CONTRACT IS INCLUDED IN THE NOTICE TO BIDDERS AND SPECIAL PROVISIONS BOOK.

LOCATION MAP

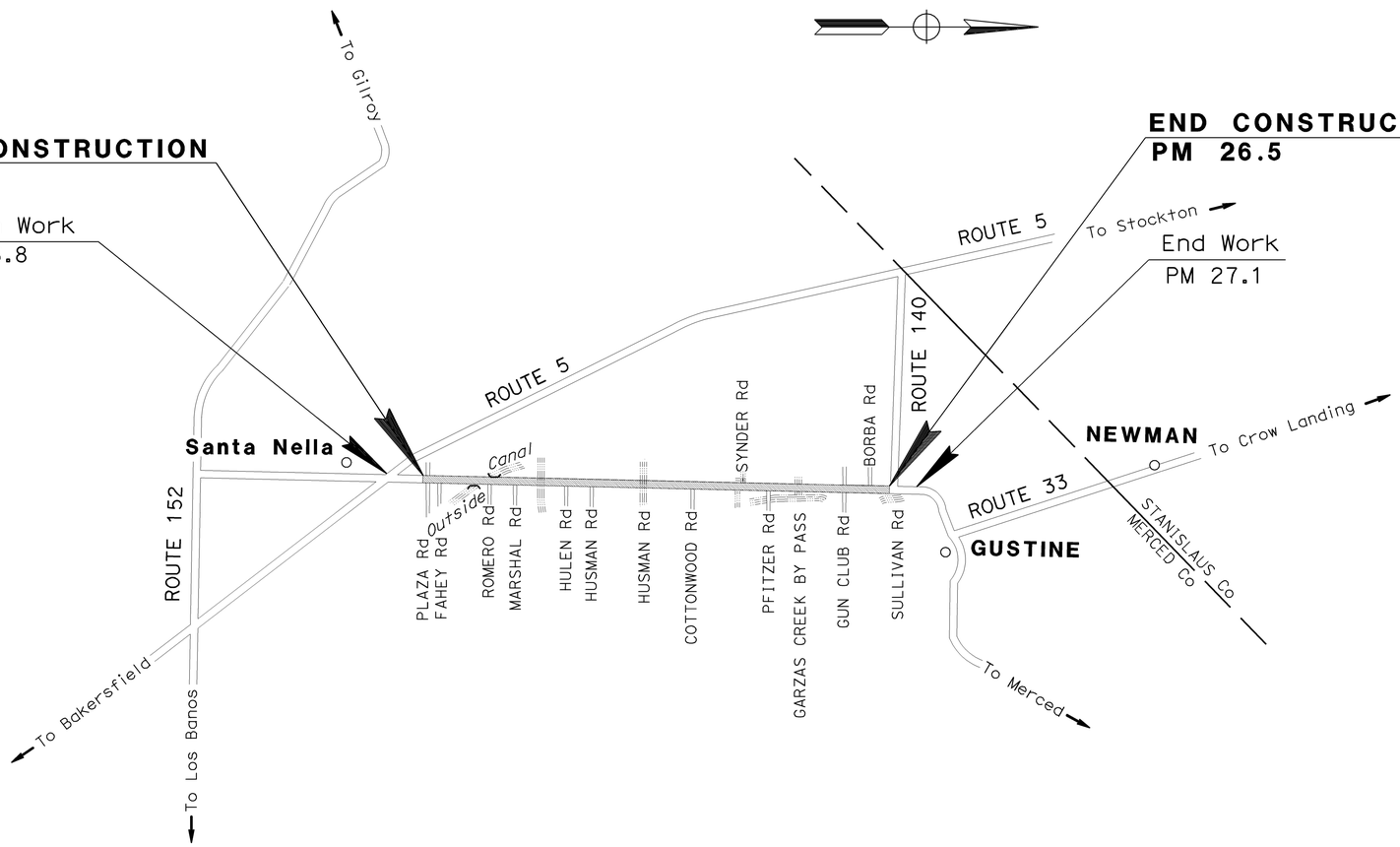

NO SCALE

THE CONTRACTOR SHALL POSSESS THE CLASS (OR CLASSES) OF LICENSE AS SPECIFIED IN THE "NOTICE TO BIDDERS."

PROJECT MANAGER: PETER JEMERIGBE

DESIGN ENGINEER: ABDUL BAKER

A Baker — 06-23-10
PROJECT ENGINEER REGISTERED CIVIL ENGINEER — DATE

July 6, 2010
PLANS APPROVAL DATE

REGISTERED PROFESSIONAL ENGINEER — Abdul Baker — No. 55322 — Exp. 12-31-10 — CIVIL — STATE OF CALIFORNIA

THE STATE OF CALIFORNIA OR ITS OFFICERS OR AGENTS SHALL NOT BE RESPONSIBLE FOR THE ACCURACY OR COMPLETENESS OF SCANNED COPIES OF THIS PLAN SHEET.

LAST REVISION 07-06-10 — DATE PLOTTED => 17-AUG-2010 — TIME PLOTTED => 13:15

CONTRACT No.	10-0E9404
PROJECT ID	1000020000

Dist	COUNTY	ROUTE	POST MILES TOTAL PROJECT	SHEET No.	TOTAL SHEETS
10	Mer	33	17.1/26.5	2	26

REGISTERED CIVIL ENGINEER 06-23-10 DATE

7-06-10
PLANS APPROVAL DATE

REGISTERED PROFESSIONAL ENGINEER Abdul Baker No. 55322 Exp. 12-31-10 CIVIL STATE OF CALIFORNIA

THE STATE OF CALIFORNIA OR ITS OFFICERS OR AGENTS SHALL NOT BE RESPONSIBLE FOR THE ACCURACY OR COMPLETENESS OF SCANNED COPIES OF THIS PLAN SHEET.

NOTES:

1. DIMENSIONS OF THE PAVEMENT STRUCTURES (STRUCTURAL SECTIONS) ARE SUBJECT TO TOLERANCES SPECIFIED IN THE STANDARD SPECIFICATIONS.
2. SUPERELEVATION AS SHOWN OR AS DIRECTED BY THE ENGINEER.
3. EXACT LOCATIONS OF SHOULDER BACKING IS TO BE DETERMINED BY THE ENGINEER.
4. EXACT LOCATIONS AND DIMENSIONS OF ALL METAL BEAM GUARD RAILS TO BE DETERMINED BY THE ENGINEER.

ABBREVIATIONS:

RHMA-G RUBBERIZED HOT MIX ASPHALT (GAP GRADED)

DESIGN DESIGNATION

2000 ADT	4,100
2010 ADT	8,200
DHV	900
% TRUCKS	13%

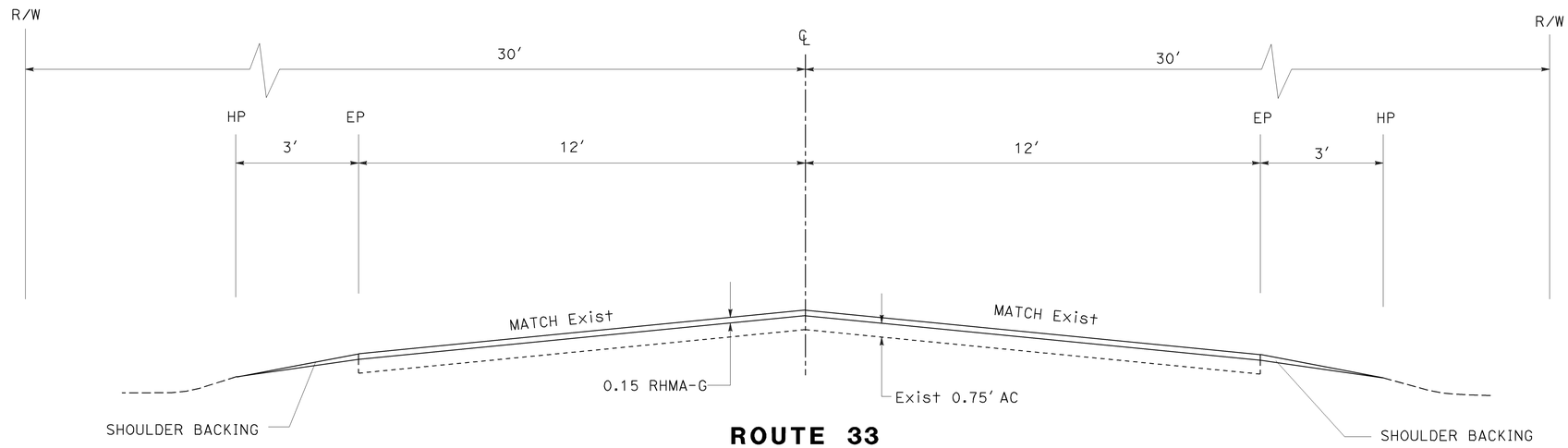

ROUTE 33

PM 17.3 TO 26.5

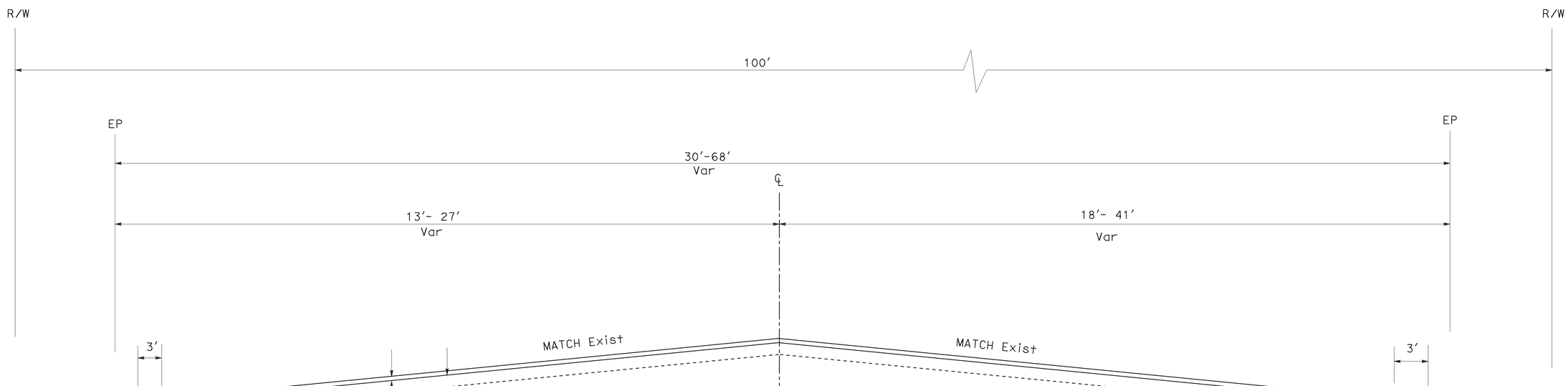

ROUTE 33

PM 17.1 TO 17.3

TYPICAL CROSS SECTIONS

NO SCALE

X-1

STATE OF CALIFORNIA - DEPARTMENT OF TRANSPORTATION

Caltrans

06-DESIGN

FUNCTIONAL SUPERVISOR: ABDUL BAKER

CALCULATED-DESIGNED BY: ELTAHIR ATAELGEED

CHECKED BY: ABDUL BAKER

REVISED BY

DATE REVISED

LAST REVISION 07-06-10

DATE PLOTTED => 09-JUL-2010

TIME PLOTTED => 15:11

Dist	COUNTY	ROUTE	POST MILES TOTAL PROJECT	SHEET No.	TOTAL SHEETS
10	Mer	33	17.1/26.5	3	26

REGISTERED CIVIL ENGINEER 06-23-10 DATE

7-06-10
PLANS APPROVAL DATE

REGISTERED PROFESSIONAL ENGINEER
Abdul Baker
No. 55322
Exp 12-31-10
CIVIL
STATE OF CALIFORNIA

THE STATE OF CALIFORNIA OR ITS OFFICERS OR AGENTS SHALL NOT BE RESPONSIBLE FOR THE ACCURACY OR COMPLETENESS OF SCANNED COPIES OF THIS PLAN SHEET.

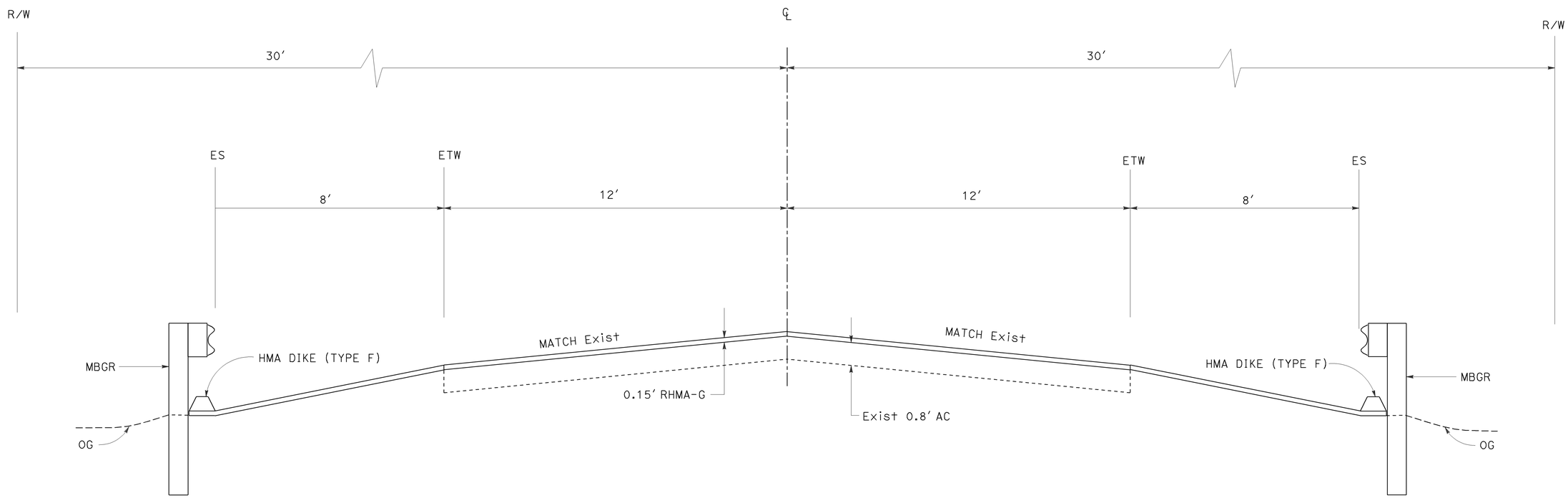

ROUTE 33

At PM 18.4, 21.3, 23.3, and 24.5

TYPICAL CROSS SECTIONS

NO SCALE

X-2

REVISED BY | DATE REVISED

ELTAHIR ATAELGEED | ABDUL BAKER

CALCULATED-DESIGNED BY | CHECKED BY

FUNCTIONAL SUPERVISOR | ABDUL BAKER

STATE OF CALIFORNIA - DEPARTMENT OF TRANSPORTATION

Caltrans

06-DESIGN

LAST REVISION 07-06-10 | DATE PLOTTED => 09-JUL-2010 | TIME PLOTTED => 15:11

Dist	COUNTY	ROUTE	POST MILES TOTAL PROJECT	SHEET No.	TOTAL SHEETS
10	Mer	33	17.1/26.5	4	26

REGISTERED CIVIL ENGINEER 06-23-10 DATE

7-06-10
PLANS APPROVAL DATE

REGISTERED PROFESSIONAL ENGINEER Abdul Baker No. 55322 Exp 12-31-10 CIVIL STATE OF CALIFORNIA

THE STATE OF CALIFORNIA OR ITS OFFICERS OR AGENTS SHALL NOT BE RESPONSIBLE FOR THE ACCURACY OR COMPLETENESS OF SCANNED COPIES OF THIS PLAN SHEET.

NOTE:
EXACT LOCATIONS AND DIMENSIONS OF TEMPORARY FENCE (TYPE ESA) TO BE DETERMINED BY THE ENGINEER.

LEGEND

COLD PLANE AC PAVEMENT

TEMPORARY FENCE (TYPE ESA)

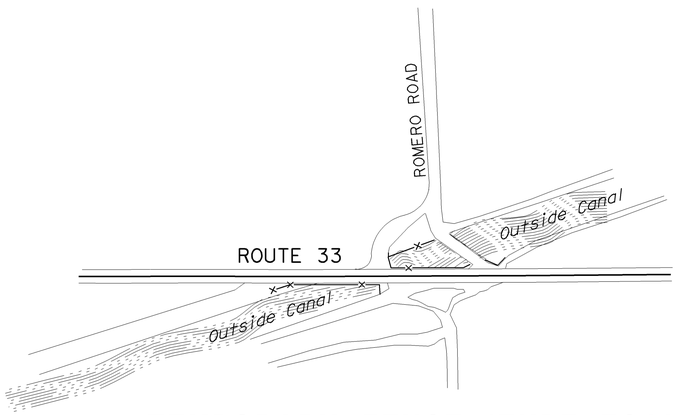

TEMPORARY FENCE (TYPE ESA)
PM 18.4

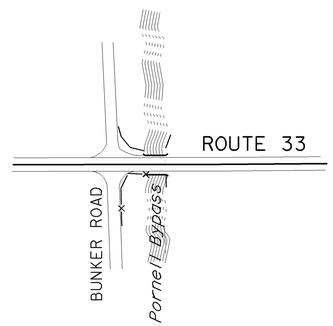

TEMPORARY FENCE (TYPE ESA)
PM 21.3

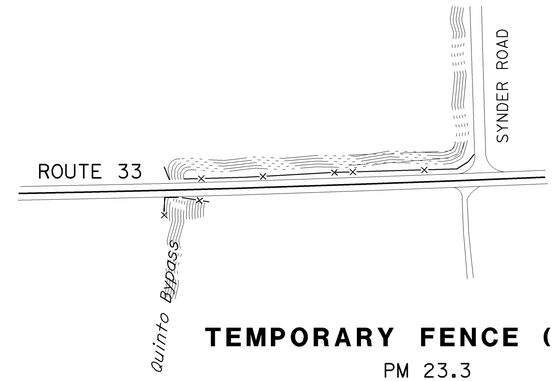

TEMPORARY FENCE (TYPE ESA)
PM 23.3

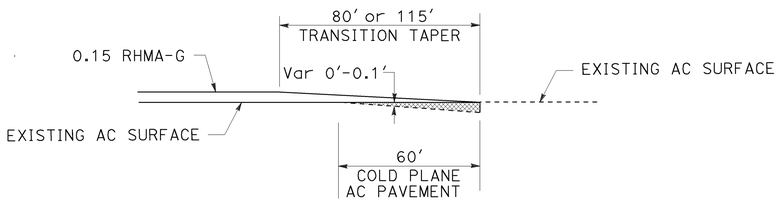

TYPICAL TRANSITION TO CONFORM AC PAVEMENT
ROUTE 33 @ PM 17.1 & PM 26.5

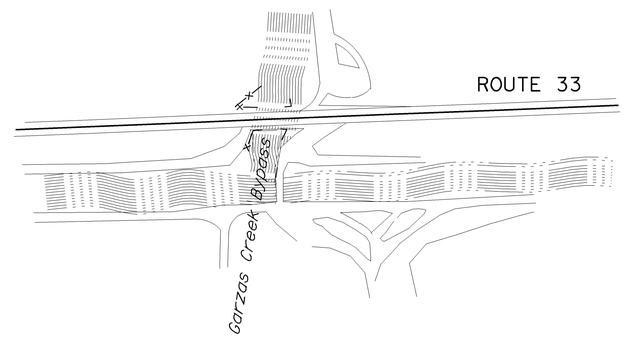

TEMPORARY FENCE (TYPE ESA)
PM 24.5

AC SURFACING LIMITS

DIRECTION	BEGIN POST MILE	END POST MILE	X FROM ℄ LF	DIRECTION	BEGIN POST MILE	END POST MILE	X FROM ℄ LF
NORTHBOUND	17.50	17.53	6.50	SOUTHBOUND	18.75	18.80	6.50
	18.40	18.43	7.00		18.80	18.92	7.00
	18.60	18.61	7.00		18.90	18.92	1.00
	18.70	18.74	6.00		19.05	19.06	7.00
	18.85	19.00	7.00		20.80	21.12	7.00
	19.05	19.08	7.00		20.90	21.04	1.00
	19.15	19.18	7.00		21.30	21.35	7.00
	19.25	19.32	7.00		21.40	21.43	1.00
	19.40	19.43	6.00		21.50	21.55	7.00
	19.80	19.90	6.50		21.70	21.72	6.50
	19.90	19.94	1.00		21.95	21.98	7.00
	20.00	20.10	7.00		22.05	22.09	7.00
	20.02	20.13	1.00		22.45	22.46	7.00
	20.50	20.53	6.50		22.50	22.61	7.00
	20.70	20.76	7.00		22.60	22.70	7.00
	20.90	21.00	6.50		23.35	23.37	1.00
	21.95	22.03	7.00		23.40	23.42	6.00
	22.10	22.12	7.00		23.50	23.56	7.00
	23.30	23.40	7.00		23.60	23.64	6.50
	23.50	23.60	7.00		23.80	23.87	7.00
	23.70	23.74	7.00		23.90	23.91	7.00
	23.90	23.91	7.00		24.54	24.57	7.00
	24.30	24.32	6.50		24.90	24.94	6.50
	24.45	24.50	7.00		24.55	24.62	7.00
	24.55	24.62	7.00		25.05	25.11	7.00
	25.30	25.40	7.00		25.90	25.92	7.00
	25.45	25.52	7.00		26.05	26.07	7.00
	25.80	25.95	7.00		26.20	26.27	7.00
	26.20	26.22	6.50		26.40	26.49	6.00
	26.40	26.43	0.00		26.46	26.50	0.00

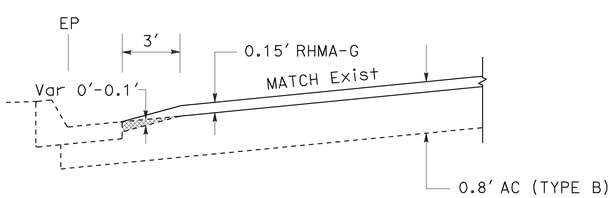

TYPICAL COLD PLANE TAPER
ROUTE 33 PM 17.1 TO PM 17.3

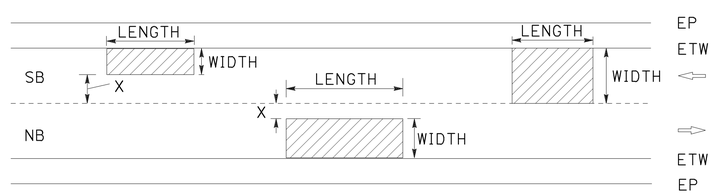

NOTE: FOR LOCATIONS, DEPTHS, LENGTHS, AND WIDTHS, SEE QUANTITY SHEETS.

REPLACE AC SURFACING
ROUTE 33 PM 17.5 TO PM 26.5

CONSTRUCTION DETAILS

NO SCALE

C-1

REVISED BY | DATE REVISED
DARSHAN MANN | ELTAHIR ATAELGEED
CALCULATED-DESIGNED BY | CHECKED BY
FUNCTIONAL SUPERVISOR | ABDUL BAKER
STATE OF CALIFORNIA - DEPARTMENT OF TRANSPORTATION
Caltrans | 06-DESIGN

LAST REVISION 07-06-10 | DATE PLOTTED => 17-AUG-2010 | TIME PLOTTED => 13:15

Dist	COUNTY	ROUTE	POST MILES TOTAL PROJECT	SHEET No.	TOTAL SHEETS
10	Mer	33	17.1/26.5	5	26

REGISTERED CIVIL ENGINEER 06-23-10 DATE

7-06-10
PLANS APPROVAL DATE

REGISTERED PROFESSIONAL ENGINEER Abdul Baker No. 55322 Exp 12-31-10 CIVIL STATE OF CALIFORNIA

THE STATE OF CALIFORNIA OR ITS OFFICERS OR AGENTS SHALL NOT BE RESPONSIBLE FOR THE ACCURACY OR COMPLETENESS OF SCANNED COPIES OF THIS PLAN SHEET.

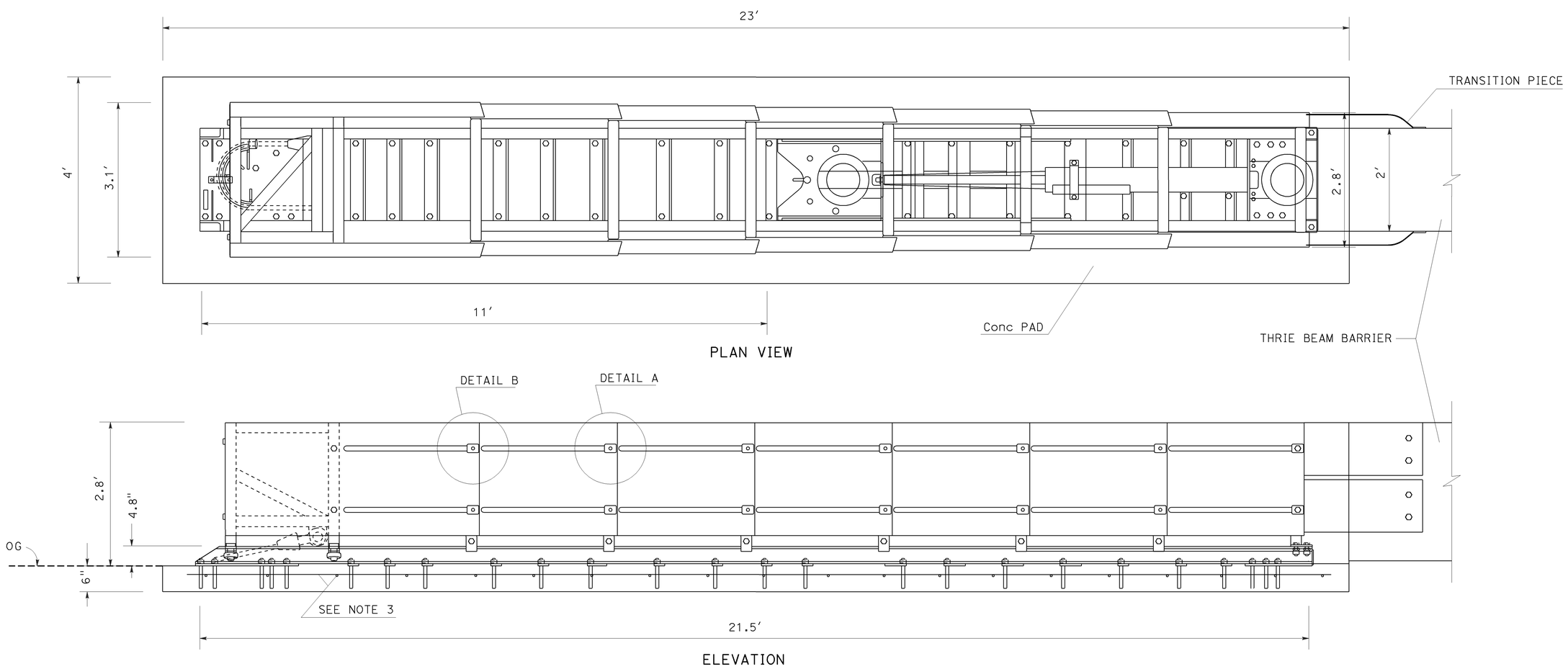

CRASH CUSHION SYSTEM (TYPE SCI-100GM)

CONSTRUCTION DETAILS

NO SCALE

C-2

REVISED BY | DATE REVISED
DARSHAN MANN | ELTAHIR ATAELGEED
CALCULATED-DESIGNED BY | CHECKED BY
FUNCTIONAL SUPERVISOR
ABDUL BAKER

STATE OF CALIFORNIA - DEPARTMENT OF TRANSPORTATION
Caltrans
06-DESIGN

LAST REVISION 07-06-10 | DATE PLOTTED => 09-JUL-2010 | TIME PLOTTED => 15:11

Dist	COUNTY	ROUTE	POST MILES TOTAL PROJECT	SHEET No.	TOTAL SHEETS
10	Mer	33	17.1/26.5	6	26

REGISTERED CIVIL ENGINEER 06-23-10 DATE

7-06-10
PLANS APPROVAL DATE

REGISTERED PROFESSIONAL ENGINEER Abdul Baker No. 55322 Exp 12-31-10 CIVIL STATE OF CALIFORNIA

THE STATE OF CALIFORNIA OR ITS OFFICERS OR AGENTS SHALL NOT BE RESPONSIBLE FOR THE ACCURACY OR COMPLETENESS OF SCANNED COPIES OF THIS PLAN SHEET.

LEGEND

→ Direction Of Traffic

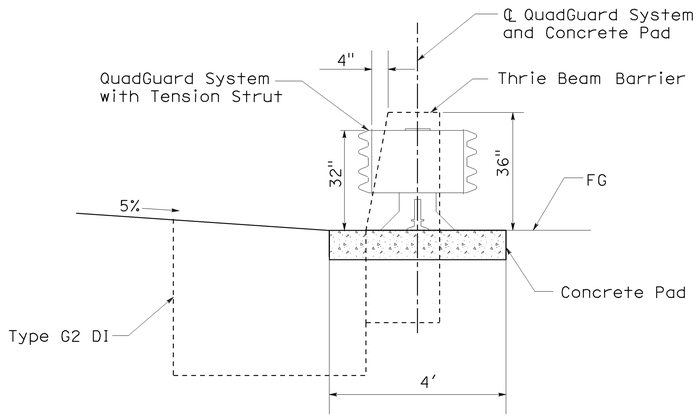

SECTION A-A

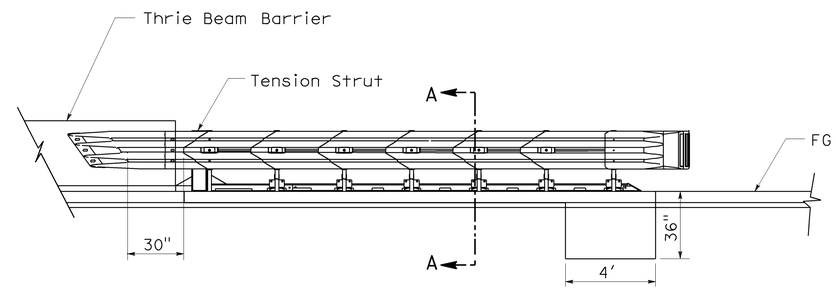

MODEL No.	No. OF BAYS	CARTRIDGES		NOMINAL WIDTH	EFFECTIVE LENGTH
		TYPE I	TYPE II		
QS2406Y	06	04	03	24"	.25"

CRASH CUSHION FRANGIBLE CARTRIDGE (QUADGUARD)

FOR DETAILS NOT SHOWN, SEE MANUFACTURER'S DESIGN AND INSTALLATION DETAILS.

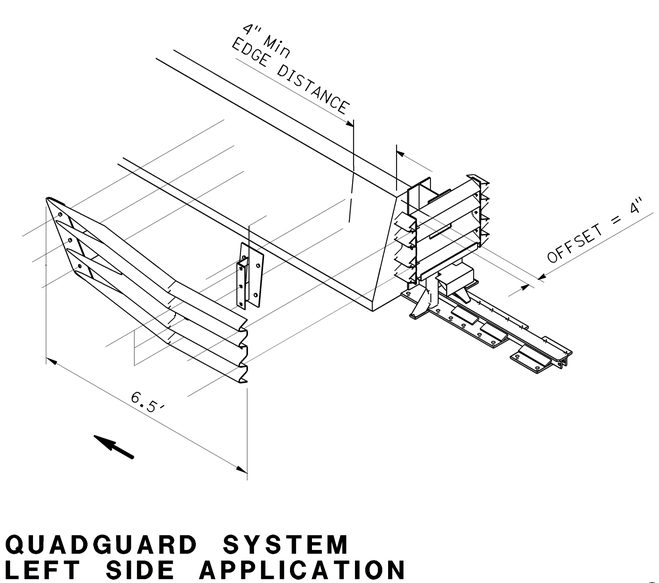

QUADGUARD SYSTEM LEFT SIDE APPLICATION

CRASH CUSHION (TYPE QUADGUARD)

CONSTRUCTION DETAILS

NO SCALE **C-3**

STATE OF CALIFORNIA - DEPARTMENT OF TRANSPORTATION
Caltrans
06-DESIGN
FUNCTIONAL SUPERVISOR: ABDUL BAKER
CALCULATED-DESIGNED BY: DARSHAN MANN
CHECKED BY: ELTAHIR ATAELGEED
REVISED BY
DATE REVISED

LAST REVISION DATE PLOTTED => 09-JUL-2010
07-06-10 TIME PLOTTED => 15:11

Dist	COUNTY	ROUTE	POST MILES TOTAL PROJECT	SHEET No.	TOTAL SHEETS
10	Mer	33	17.1/26.5	7	26

REGISTERED CIVIL ENGINEER 06-23-10 DATE

7-06-10
PLANS APPROVAL DATE

REGISTERED PROFESSIONAL ENGINEER
Abdul Baker
No. 55322
Exp 12-31-10
CIVIL
STATE OF CALIFORNIA

THE STATE OF CALIFORNIA OR ITS OFFICERS OR AGENTS SHALL NOT BE RESPONSIBLE FOR THE ACCURACY OR COMPLETENESS OF SCANNED COPIES OF THIS PLAN SHEET.

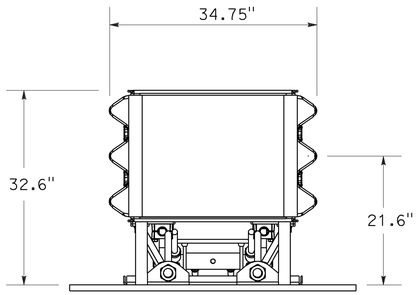

SECTION A-A

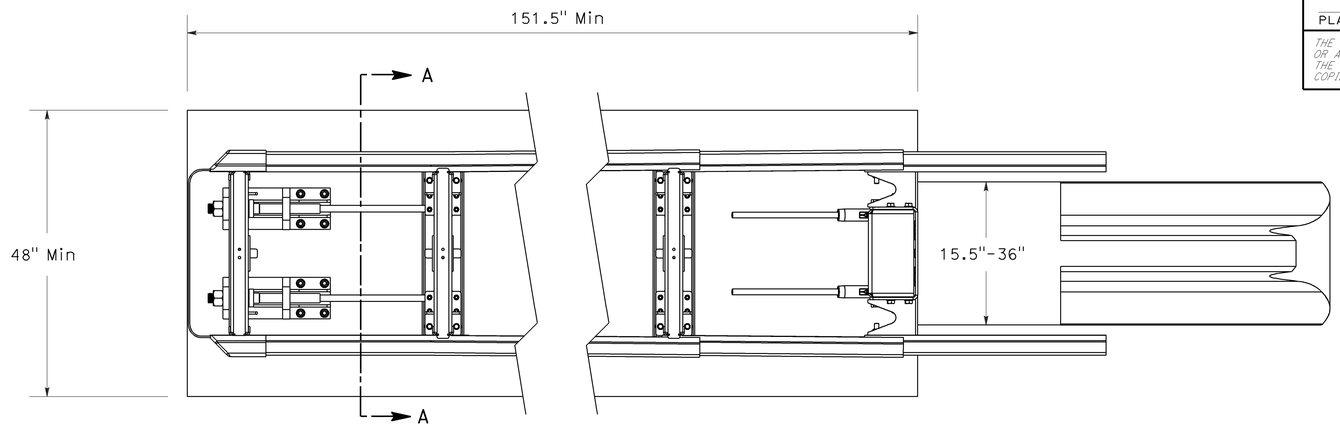

PLAN VIEW

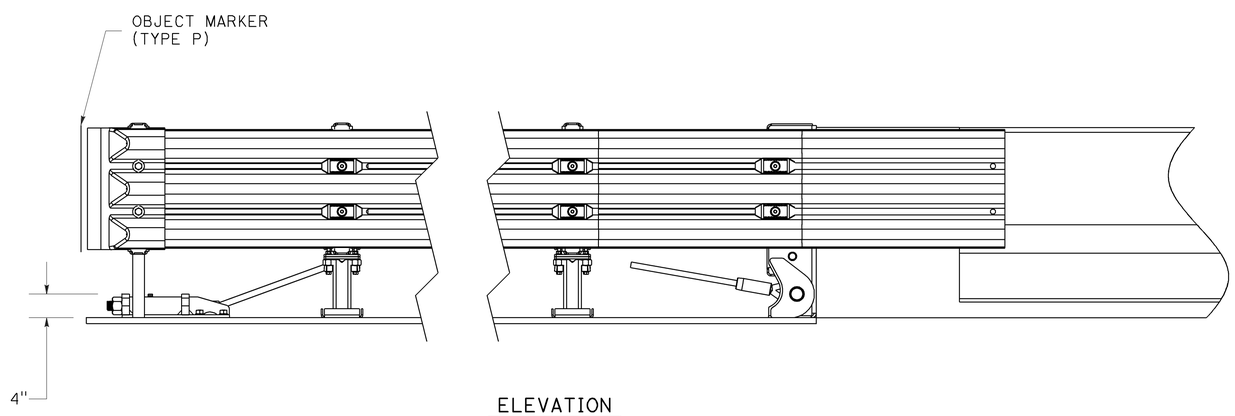

ELEVATION

CRASH CUSHION (TYPE TAU-II)

CONSTRUCTION DETAILS

NO SCALE

C-4

STATE OF CALIFORNIA - DEPARTMENT OF TRANSPORTATION
Caltrans
06-DESIGN

FUNCTIONAL SUPERVISOR: ABDUL BAKER
CALCULATED-DESIGNED BY: DARSHAN MANN
CHECKED BY: ELTAHIR ATAELGEED
REVISED BY
DATE REVISED

LAST REVISION 07-06-10
DATE PLOTTED => 09-JUL-2010
TIME PLOTTED => 15:11

Dist	COUNTY	ROUTE	POST MILES TOTAL PROJECT	SHEET No.	TOTAL SHEETS
10	Mer	33	17.1/26.5	8	26

Hassan Taha 06-22-10
REGISTERED CIVIL ENGINEER DATE

7-06-10
PLANS APPROVAL DATE

REGISTERED PROFESSIONAL ENGINEER HASSAN M. TAHA No. 60130 Exp 06/30/12 CIVIL STATE OF CALIFORNIA

THE STATE OF CALIFORNIA OR ITS OFFICERS OR AGENTS SHALL NOT BE RESPONSIBLE FOR THE ACCURACY OR COMPLETENESS OF SCANNED COPIES OF THIS PLAN SHEET.

STATIONARY MOUNTED CONSTRUCTION AREA SIGNS

SIGN No.	SIGN CODE	PANEL SIZE	SIGN MESSAGE	No. OF POST AND SIZE	EACH
A	W20-1	48" x 48"	ROAD WORK AHEAD	2-4" x 6"	3
B	W20-1	36" x 36"	ROAD WORK AHEAD	1-4" x 4"	12
C	G20-2	36" x 18"	END ROAD WORK	1-4" x 4"	2
D	C40(CA)	108" x 42"	TRAFFIC FINES DOUBLED IN WORK ZONES	2-6" x 6"	2

NOTE: SIGN LOCATIONS SHOWN ARE APPROXIMATE ONLY. EXACT LOCATIONS TO BE DETERMINED BY THE ENGINEER.

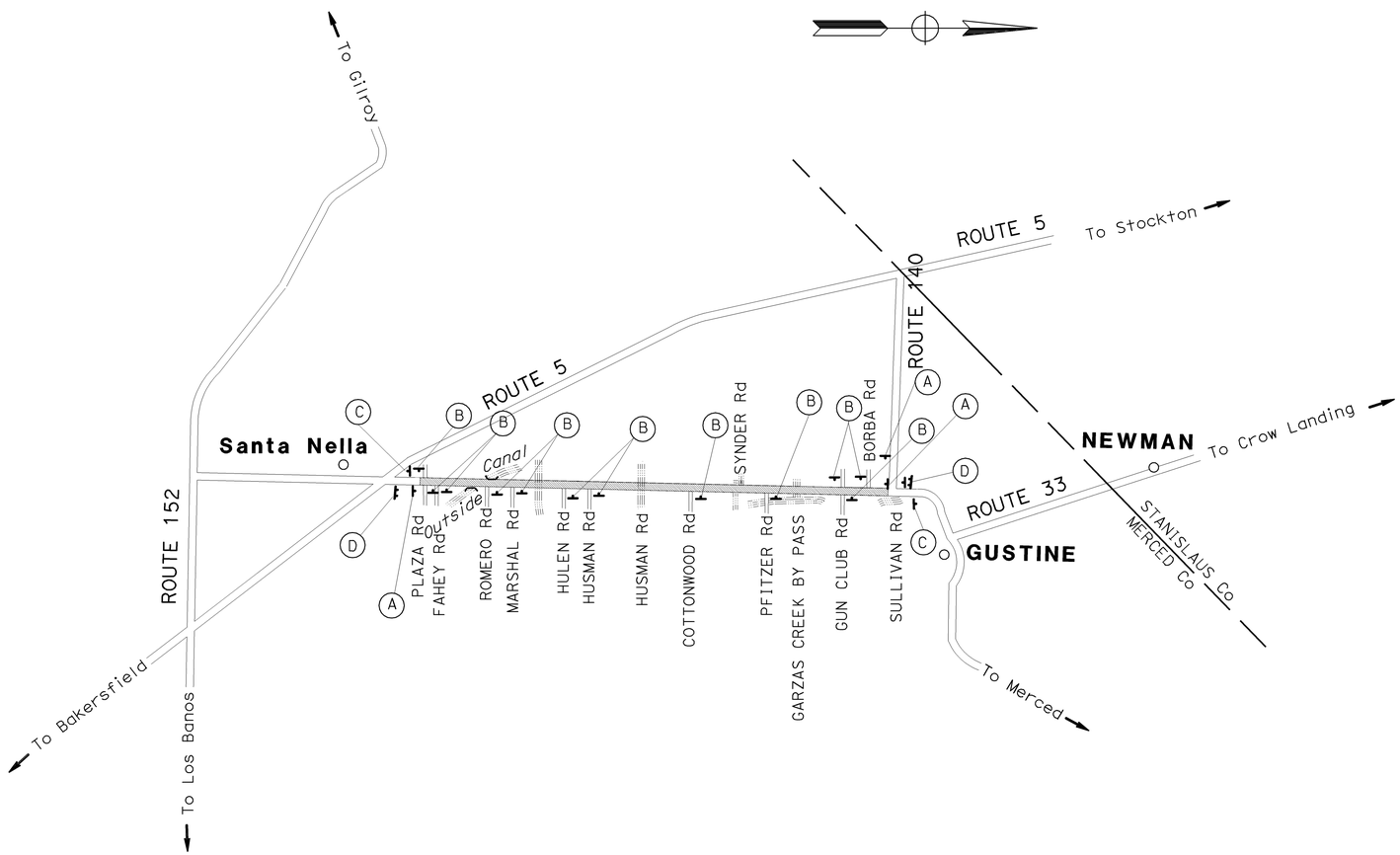

THIS PLAN ACCURATE FOR CONSTRUCTION AREA SIGN ONLY.

CONSTRUCTION AREA SIGNS

NO SCALE

CS-1

STATE OF CALIFORNIA - DEPARTMENT OF TRANSPORTATION
Caltrans 06-TRAFFIC DESIGN

FUNCTIONAL SUPERVISOR: MOHAMMED QATAMI
CALCULATED-DESIGNED BY: KAMRUL KHAN
CHECKED BY: HASSAN TAHA
REVISED BY
DATE REVISED

LAST REVISION 07-06-10
DATE PLOTTED => 09-JUL-2010
TIME PLOTTED => 15:11

Dist	COUNTY	ROUTE	POST MILES TOTAL PROJECT	SHEET No.	TOTAL SHEETS
10	Mer	33	17.1/26.5	9	26

Hassan Taha 06-22-10
REGISTERED CIVIL ENGINEER DATE

7-06-10
PLANS APPROVAL DATE

REGISTERED PROFESSIONAL ENGINEER HASSAN M.TAHA No. 60130 Exp06/30/12 CIVIL STATE OF CALIFORNIA

THE STATE OF CALIFORNIA OR ITS OFFICERS OR AGENTS SHALL NOT BE RESPONSIBLE FOR THE ACCURACY OR COMPLETENESS OF SCANNED COPIES OF THIS PLAN SHEET.

PAVEMENT DELINEATION QUANTITIES

LOCATION (PM TO PM)	DIRECTION	DETAIL No.	PAVEMENT MARKER (RETROREFLECTIVE) TYPE D	PAVEMENT MARKER (RETROREFLECTIVE) TYPE H	REMOVE PAVEMENT MARKER (N)	THERMOPLASTIC TRAFFIC STRIPE 8" SOLID	THERMOPLASTIC TRAFFIC STRIPE 4" SOLID	THERMOPLASTIC TRAFFIC STRIPE 4" BROKEN (36-12)	THERMOPLASTIC TRAFFIC STRIPE 4" BROKEN (12-3)	THERMOPLASTIC PAVEMENT MARKING DESCRIPTION	THERMOPLASTIC PAVEMENT MARKING SQFT	REMOVE THERMOPLASTIC PAVEMENT MARKING SQFT
			EA	EA	EA	LF	LF	LF	LF		SQFT	SQFT
17.10 TO 26.34	NB	27B					48,761					
26.32 TO 17.10	SB	27B					48,655					
17.10 TO 17.23	NB	32	75		75		1,373	1,373		4-TYPE III ARROW	168	168
17.23 TO 17.38	NB	22	68		68		1,584					
17.24 TO 17.27	NB	38				158				1-TYPE III ARROW	42	42
17.38 TO 17.44	NB	19	10	14	24		317	317				
17.44 TO 17.68	NB	6	27		27			1,267				
17.68 TO 18.04	NB	19	42	80	122		1,901	1,901				
17.77 TO 17.79	NB	27C							79			
18.04 TO 18.28	NB	6	27		27			1,267				
18.28 TO 18.40	NB	19	16	27	43		634	634				
18.4 TO 18.44	NB	22	20		20		422					
18.45 TO 18.55	NB	19	14	23	37		528	528				
18.55 TO 18.83	NB	6	32		32			1,478				
18.83 TO 18.92	NB	19	12	21	33		475	475				
18.92 TO 18.94	NB	27C							106			
18.93 TO 19.03	NB	19	14	23	37		528	528				
19.03 TO 19.83	NB	6	89		89			4,224				
19.83 TO 20.04	NB	19	26	47	73		1,109	1,109				
19.93 TO 19.94	NB	27C							53			
20.04 TO 20.33	NB	6	33		33			1,531				
20.33 TO 20.55	NB	19	28	49	77		1,162	1,162				
20.43 TO 20.44	NB	27C							53			
20.56 TO 21.33	NB	6	86		86			4,066				
21.33 TO 21.43	NB	19	14	23	37		528	528				
21.43 TO 21.45	NB	27C							106			
21.45 TO 21.54	NB	19	12	21	33		475	475				
21.54 TO 22.35	NB	6	90		90			4,277				
22.35 TO 22.44	NB	19	12	21	33		475	475				
22.44 TO 22.46	NB	27C							106			
22.46 TO 22.55	NB	19	12	21	33		475	475				
22.55 TO 23.34	NB	6	88		88			4,171				
23.34 TO 23.45	NB	19	16	25	41		581	581				
23.46 TO 23.56	NB	19	14	23	37		528	528				
23.56 TO 23.85	NB	6	33		33			1,531				
23.85 TO 23.94	NB	19	12	21	33		475	475				
23.94 TO 23.96	NB	27C							106			
23.96 TO 24.05	NB	19	12	21	33		475	475				
24.05 TO 25.35	NB	6	144		144			6,864				
25.35 TO 25.45	NB	19	14	23	37		528	528				
25.45 TO 25.51	NB	27C							317			
25.46 TO 25.55	NB	19	12	21	33		475	475				
25.55 TO 25.85	NB	6										
25.85 TO 25.95	NB	19	14	23	37		528	528				
25.96 TO 26.08	NB	19	16	27	43		634	633				
26.08 TO 26.14	NB	6	8		8			317				
26.14 TO 26.20	NB	19	10	14	24		317	317				
26.2 TO 26.50	NB	22	134		134		3,168					
26.46 TO 26.41	SB	27C							264			
25.94 TO 25.93	SB	27C							53			
25.44 TO 25.43	SB	27C							53			
23.94 TO 23.925	SB	27C							79			
23.44 TO 23.43	SB	27C							53			
22.44 TO 22.42	SB	27C							79			
21.44 TO 21.425	SB	27C							79			
20.44 TO 20.42	SB	27C							106			
18.93 TO 18.915	SB	27C							79			
18.45 TO 18.435	SB	27C							79			
18.40 TO 18.39	SB	27C							53			
17.45 TO 17.2	SB	12						1,320				
17.18 TO 17.1	SB	12						422				
17.23 TO 17.2	SB	38				158				1-TYPE III ARROW	42	42
SUB-TOTAL			1286	568	1854	316	117,111	47,256	1901		252	252
TOTAL			1854		1854	316	117,111	47,256	1901		252	252

(N) NOT A SEPERATE PAY ITEM, FOR INFORMATION ONLY

DELINEATORS AND MARKERS

LOCATION	DELINEATOR (CLASS 1) TYPE (E)	DELINEATOR (CLASS 1) TYPE (F)	OBJECT MARKER (OM2-2V)
	EA	EA	EA
Outside Canal (PM 18.40)	2	3	4
Bunker Road (PM 21.45)	2	3	4
Quinto Bypass (PM 23.35)			4
Garzas Creek Bypass (PM 24.54)			4
SUBTOTAL	4	6	
TOTAL	10		16

STATE OF CALIFORNIA - DEPARTMENT OF TRANSPORTATION
Caltrans 06-TRAFFIC DESIGN

FUNCTIONAL SUPERVISOR: MOHAMMED QATAMI
CALCULATED-DESIGNED BY: KAMRUL KHAN
CHECKED BY: HASSAN TAHA
REVISED BY
DATE REVISED

PAVEMENT DELINEATION QUANTITIES
PDQ-1

LAST REVISION 07-06-10 | DATE PLOTTED => 09-JUL-2010 | TIME PLOTTED => 15:11

Dist	COUNTY	ROUTE	POST MILES TOTAL PROJECT	SHEET No.	TOTAL SHEETS
10	Mer	33	17.1/26.5	10	26

REGISTERED CIVIL ENGINEER 06-23-10 DATE

7-06-10
PLANS APPROVAL DATE

REGISTERED PROFESSIONAL ENGINEER Abdul Baker No. 55322 Exp 12-31-10 CIVIL STATE OF CALIFORNIA

THE STATE OF CALIFORNIA OR ITS OFFICERS OR AGENTS SHALL NOT BE RESPONSIBLE FOR THE ACCURACY OR COMPLETENESS OF SCANNED COPIES OF THIS PLAN SHEET.

ABBREVIATIONS:

RHMA-G RUBBERIZED HOT MIX ASPHALT (GAP GRADED)

ROADWAY QUANTITIES

REPLACE AC SURFACING

DIRECTION	BEGIN POST MILE	END POST MILE	DEPTH (N)	LENGTH (N)	WIDTH (N)	REPLACE AC SURFACING
			LF	LF	LF	CY
NORTHBOUND	17.50	17.53	0.80	200	5	29.63
	18.40	18.43	0.80	200	5	29.63
	18.60	18.61	0.80	70	5	10.37
	18.70	18.74	0.80	260	5	38.52
	18.85	19.00	0.80	760	5	112.59
	19.05	19.08	0.80	160	5	23.70
	19.15	19.18	0.80	175	5	25.93
	19.25	19.32	0.80	400	5	59.26
	19.40	19.43	0.80	150	5	22.22
	19.80	19.90	0.80	500	5	74.07
	19.90	19.94	0.80	200	11	65.19
	20.00	20.10	0.80	400	5	59.26
	20.02	20.13	0.80	600	5	88.89
	20.50	20.53	0.80	190	5	28.15
	20.70	20.76	0.80	300	5	44.44
	20.90	21.00	0.80	525	5	77.78
	21.95	22.03	0.80	450	5	66.67
	22.10	22.12	0.80	125	5	18.52
	23.30	23.40	0.80	325	5	48.15
	23.50	23.60	0.80	520	5	77.04
	23.70	23.74	0.75	200	5	27.78
	23.90	23.91	0.75	60	5	8.33
	24.30	24.32	0.75	100	5	13.89
	24.45	24.50	0.75	200	5	27.78
	24.55	24.62	0.75	350	5	48.61
	25.30	25.40	0.75	350	5	48.61
	25.45	25.52	0.75	350	5	48.61
	25.80	25.95	0.75	800	5	111.11
	26.20	26.22	0.75	130	5	18.06
	26.40	26.43	0.75	150	12	50.0
SUBTOTAL						1402.79

(N) - NOT A SEPARATE PAY ITEM, FOR INFORMATION ONLY.

REPLACE AC SURFACING

DIRECTION	BEGINNING POST MILE	END POST MILE	DEPTH (N)	LENGTH (N)	WIDTH (N)	REPLACE AC SURFACING
			LF	LF	LF	CY
SOUTHBOUND	18.75	18.80	0.80	250	5	37.04
	18.80	18.92	0.80	650	5	96.30
	18.90	18.92	0.80	125	5	18.52
	19.05	19.06	0.80	60	5	8.89
	20.80	21.12	0.80	1700	5	251.85
	20.90	21.04	0.80	350	5	51.85
	21.30	21.35	0.80	300	5	44.44
	21.40	21.43	0.80	160	11	52.15
	21.50	21.55	0.80	270	5	40.00
	21.70	21.72	0.80	125	5	18.52
	21.95	21.98	0.80	150	5	22.22
	22.05	22.09	0.80	200	5	29.63
	22.45	22.46	0.80	50	5	7.41
	22.50	22.61	0.80	600	5	88.89
	22.60	22.70	0.80	525	5	77.78
	23.35	23.37	0.80	100	11	32.59
	23.40	23.42	0.80	130	5	19.26
	23.50	23.56	0.75	300	5	41.67
	23.60	23.64	0.75	235	5	32.64
	23.80	23.87	0.75	400	5	55.56
	23.90	23.91	0.75	50	5	6.94
	24.54	24.57	0.75	150	5	20.83
	24.90	24.94	0.75	200	5	27.78
	24.55	24.62	0.75	150	5	20.83
	25.05	25.11	0.75	300	5	41.67
	25.90	25.92	0.75	100	5	13.89
	26.05	26.07	0.75	100	5	13.89
	26.20	26.27	0.75	400	5	55.56
	26.40	26.49	0.75	500	5	69.44
	26.46	26.50	0.75	150	12	50.00
SUBTOTAL (TABLE 1)						1402.79
SUBTOTAL (TABLE 2)						1348.04
TOTAL						2750.83

REVISED BY | DATE REVISED

MARCO NABAVI | ELTAHIR ATAELGEED

CALCULATED-DESIGNED BY | CHECKED BY

FUNCTIONAL SUPERVISOR: ABDUL BAKER

STATE OF CALIFORNIA - DEPARTMENT OF TRANSPORTATION

Caltrans 06-DESIGN

SUMMARY OF QUANTITIES
Q-1

LAST REVISION | DATE PLOTTED => 17-AUG-2010 | TIME PLOTTED => 13:16
07-06-10

Dist	COUNTY	ROUTE	POST MILES TOTAL PROJECT	SHEET No.	TOTAL SHEETS
10	Mer	33	17.1/26.5	11	26

REGISTERED CIVIL ENGINEER 06-23-10 DATE

7-06-10
PLANS APPROVAL DATE

REGISTERED PROFESSIONAL ENGINEER
Abdul Baker
No. 55322
Exp 12-31-10
CIVIL
STATE OF CALIFORNIA

THE STATE OF CALIFORNIA OR ITS OFFICERS OR AGENTS SHALL NOT BE RESPONSIBLE FOR THE ACCURACY OR COMPLETENESS OF SCANNED COPIES OF THIS PLAN SHEET.

ROADWAY QUANTITIES

LOCATION	OVERLAY					COLD PLANE AC Pvmt	PLACE HMA DIKE (TYPE F)	REMOVE MBGR	MBGR (WOOD POST)
	THICKNESS (N)	WIDTH (N)	TACK COAT	CRACK TREATMENT	RHMA-G				
PM 17.1 TO PM 26.5	LF	LF	TON	LNMI	TON	SQYD	LF	LF	LF
	0.15	12	19.62	18.80	13,400	610.66	238	250	293
	TOTAL		19.62	18.80	13,400	610.66	238	250	293

ALTERNATIVE FLARED END SYSTEM

PM	DIRECTION	ALTERNATEVE FLARED TERMINAL SYSTEM	END ANCHOR ASSEMBLY (TYPE SFT)
		EA	EA
18.30	NB 33	1	1
18.40	SB 33	1	1
TOTAL		2	2

ALTERNATIVE CRASH CUSHION SYSTEM

LOCATION		EA
PM	DIRECTION	
21.95	NB 33	1
23.35	SB 33	1
TOTAL		2

(N) - NOT A SEPARATE PAY ITEM, FOR INFORMATION ONLY.

TEMPORARY FENCE (TYPE ESA)

LOCATION		LF
PM	DIRECTION	
18.30	NB 33	210
21.4		151
23.3		84
24.5		87
18.30	SB 33	294
21.4		105
23.3		550
24.5		126
TOTAL		1607

SURVEY MONUMENT (TYPE D)

SURVEY MONUMENT (TYPE D) (ALTERNATIVE 2)	POST MILE	EA
PLAZA ROAD	17.05	1
McCABE ROAD	17.27	1
FAHEY ROAD	17.77	1
ROMERO ROAD	18.43	1
COTTONWOOD ROAD	22.44	1
GUN CLUB ROAD	25.46	1
PFITZER ROAD	23.95	1
TOTAL		7

WEED CONTROL MAT (RUBBER)

LOCATION (PM 18.4)	MBGR (N)		WEED CONTROL MAT (RUBBER)
	(NB)	(SB)	
	LF	LF	SQYD
	176	117	120
TOTAL			120

SUMMARY OF QUANTITIES
Q-2

STATE OF CALIFORNIA - DEPARTMENT OF TRANSPORTATION
Caltrans
06-DESIGN

FUNCTIONAL SUPERVISOR: ABDUL BAKER
CALCULATED-DESIGNED BY: MARCO NABAVI
CHECKED BY: ELTAHIR ATAELGEED
REVISED BY
DATE REVISED

LAST REVISION 07-06-10
DATE PLOTTED => 17-AUG-2010
TIME PLOTTED => 13:16

Dist	COUNTY	ROUTE	POST MILES TOTAL PROJECT	SHEET No.	TOTAL SHEETS
10	Mer	33	17.1/26.5	12	26

Edward A. Hibbs
LICENSED LANDSCAPE ARCHITECT DATE

7-06-10
PLANS APPROVAL DATE

LICENSED LANDSCAPE ARCHITECT — EDWARD A HIBBS No. — SIGNATURE — 2/29/12 REVIEW DATE — 7/06/10 DATE — STATE OF CALIFORNIA

THE STATE OF CALIFORNIA OR ITS OFFICERS OR AGENTS SHALL NOT BE RESPONSIBLE FOR THE ACCURACY OR COMPLETENESS OF SCANNED COPIES OF THIS PLAN SHEET.

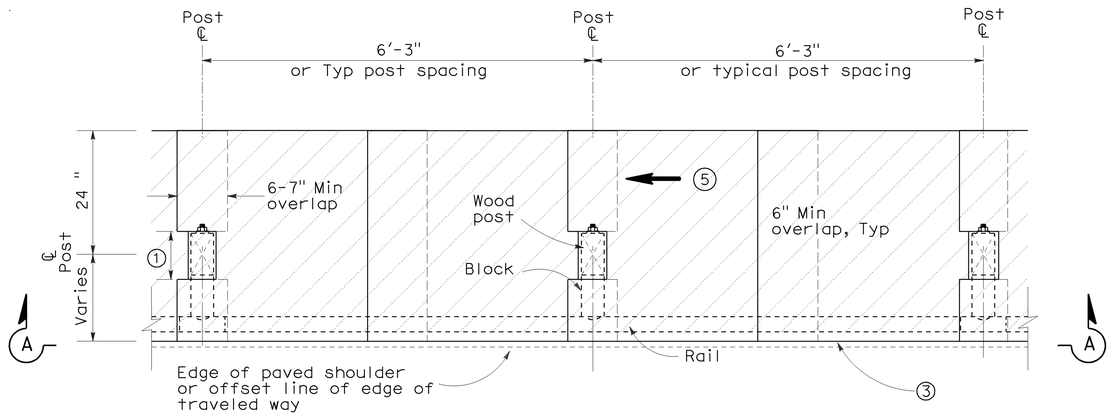

PLAN

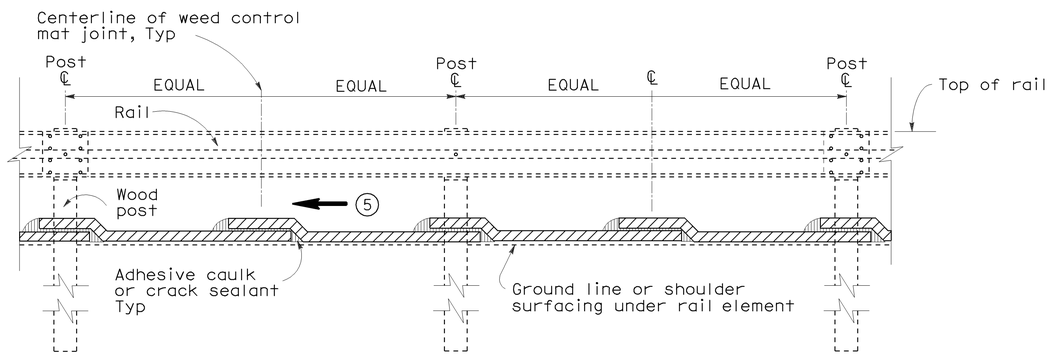

SECTION A-A

WEED CONTROL MAT (RUBBER) UNDER MBGR

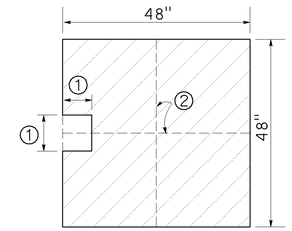

PLAN

WEED CONTROL MAT (RUBBER) TYPICAL TILE SECTION

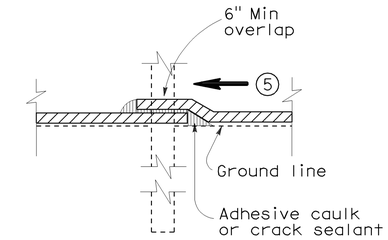

TYPICAL SECTION
at Sign Post

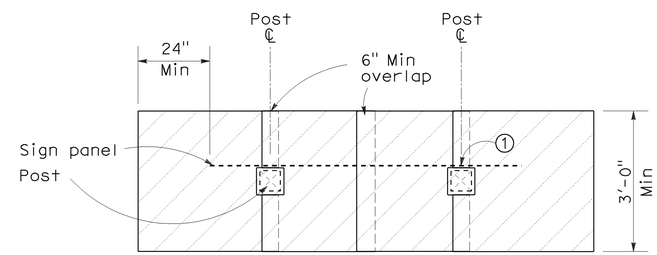

PLAN
(Two Post Sign)

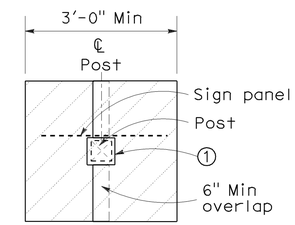

PLAN
(Single Post Sign)

WEED CONTROL MAT (RUBBER) UNDER ROADSIDE SIGN

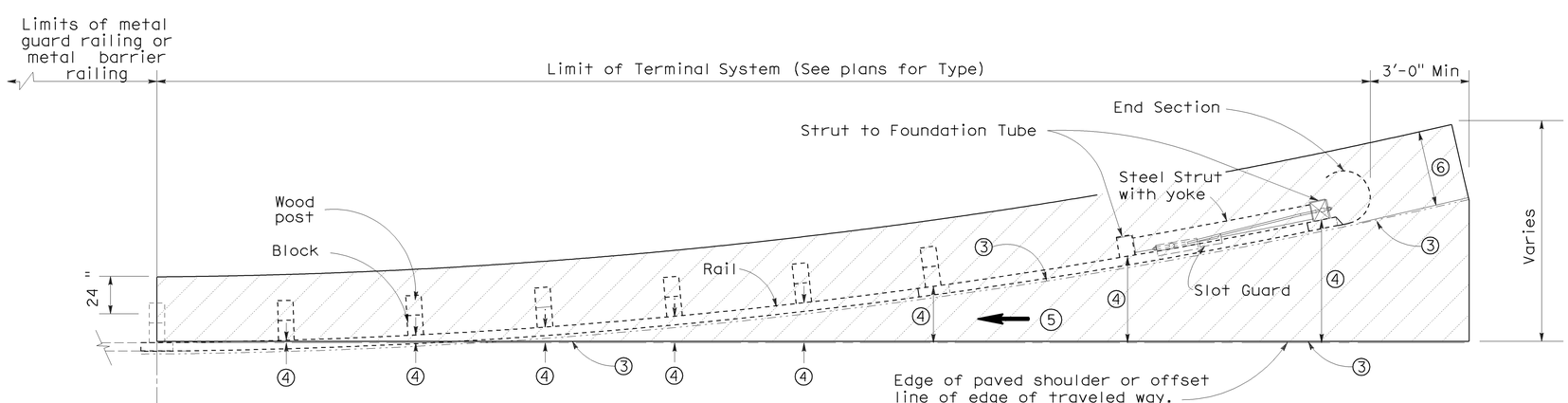

PLAN

WEED CONTROL MAT (RUBBER) AT MBGR TERMINAL SYSTEM

LEGEND:

Weed control mat (Rubber)

NOTES:

1. Cutout dimensions to fit snugly around wood or metal post for MBGR. (See plans for exact size and dimensions)
2. Weed control mat (rubber) tile may be comprised of four - 24" x 24" tile mats.
3. Trim weed control mat (rubber) flush with edge of shoulder, pavement or weed mat. Fill joints and openings with adhesive caulking or crack sealant.
4. See Standard Plans for corresponding post offset dimensions for terminal system.
5. Lap weed control mat in direction of water flow.
6. Dimension: 3'-0" or greater. Align with rail at end section.

LANDSCAPE DETAILS

NO SCALE

LD-1

STATE OF CALIFORNIA - DEPARTMENT OF TRANSPORTATION
Caltrans® LANDSCAPE ARCHITECTURE

FUNCTIONAL SUPERVISOR: ELBERT COX
CALCULATED-DESIGNED BY: KEN THOMSON
CHECKED BY: ED HIBBS
REVISED BY / DATE REVISED

LAST REVISION 07-06-10
DATE PLOTTED => 09-JUL-2010
TIME PLOTTED => 15:12

Dist	COUNTY	ROUTE	POST MILES TOTAL PROJECT	SHEET No.	TOTAL SHEETS
10	Mer	33	17.1/26.5	13	26

Norma M. Gallegos 06-21-10
REGISTERED CIVIL ENGINEER DATE

7-06-10
PLANS APPROVAL DATE

REGISTERED PROFESSIONAL ENGINEER
NORMA M. GALLEGOS
No. 19105
Exp. 6-30-12
CIVIL
STATE OF CALIFORNIA

THE STATE OF CALIFORNIA OR ITS OFFICERS OR AGENTS SHALL NOT BE RESPONSIBLE FOR THE ACCURACY OR COMPLETENESS OF SCANNED COPIES OF THIS PLAN SHEET.

NOTE:

1. FOR ACCURATE RIGHT OF WAY AND ACCESS DATA, CONTACT RIGHT OF WAY ENGINEERING AT THE DISTRICT OFFICE.

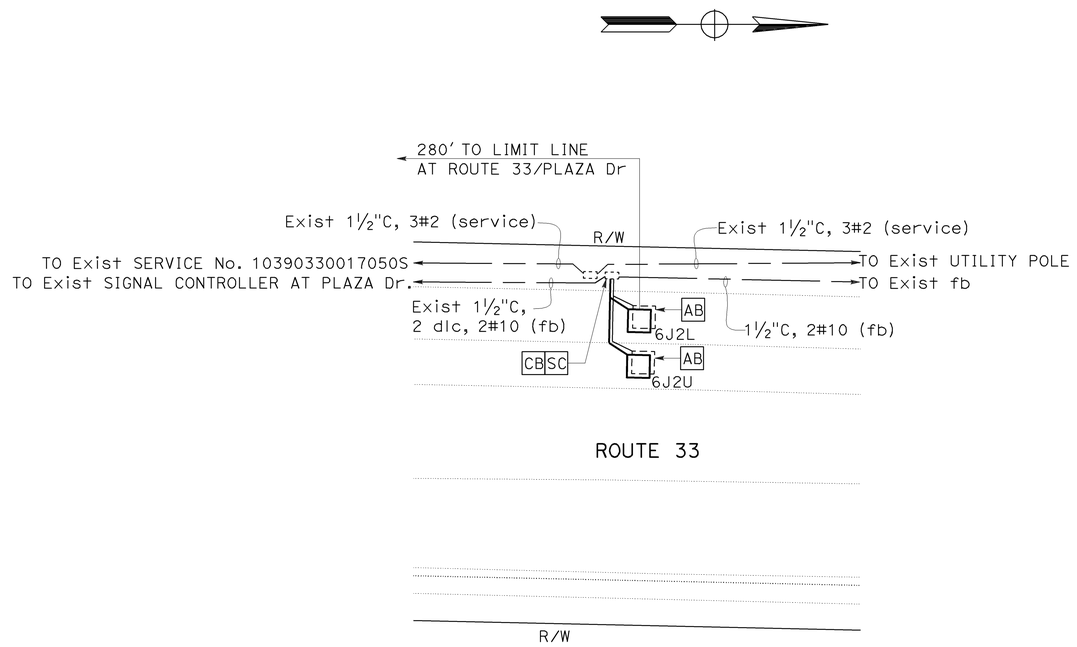

INDUCTIVE LOOP DETECTOR

E-1

THIS PLAN IS ACCURATE FOR ELECTRICAL WORK ONLY.

NO SCALE

STATE OF CALIFORNIA - DEPARTMENT OF TRANSPORTATION
Caltrans 06-ELECTRICAL DESIGN

FUNCTIONAL SUPERVISOR: ALI BAKHDOUD
CALCULATED-DESIGNED BY: NORMA M. GALLEGOS
CHECKED BY: DANIEL T. VO
REVISED BY
DATE REVISED

LAST REVISION 07-06-10 | DATE PLOTTED => 09-JUL-2010 | TIME PLOTTED => 15:12

DIST	COUNTY	ROUTE	POST MILES TOTAL PROJECT	SHEET NO.	TOTAL SHEETS
10	Mer	33	17.1/26.5	14	26

Mark S. Turner
PROFESSIONAL LAND SURVEYOR

June 30, 2006
PLANS APPROVAL DATE

LICENSED LAND SURVEYOR Mark S. Turner No. 6228 Exp. 3-31-08 STATE OF CALIFORNIA

The State of California or its officers or agents shall not be responsible for the accuracy or completeness of electronic copies of this plan sheet.

To accompany plans dated 7-06-10

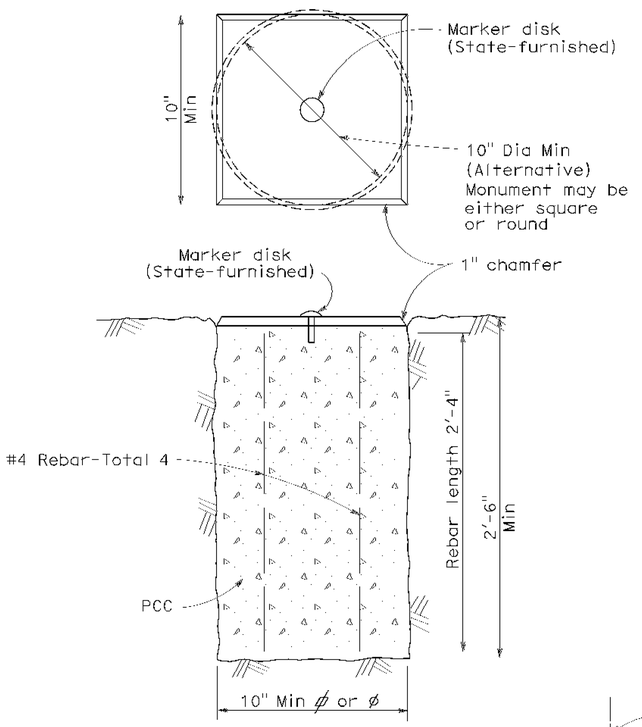

TYPE A

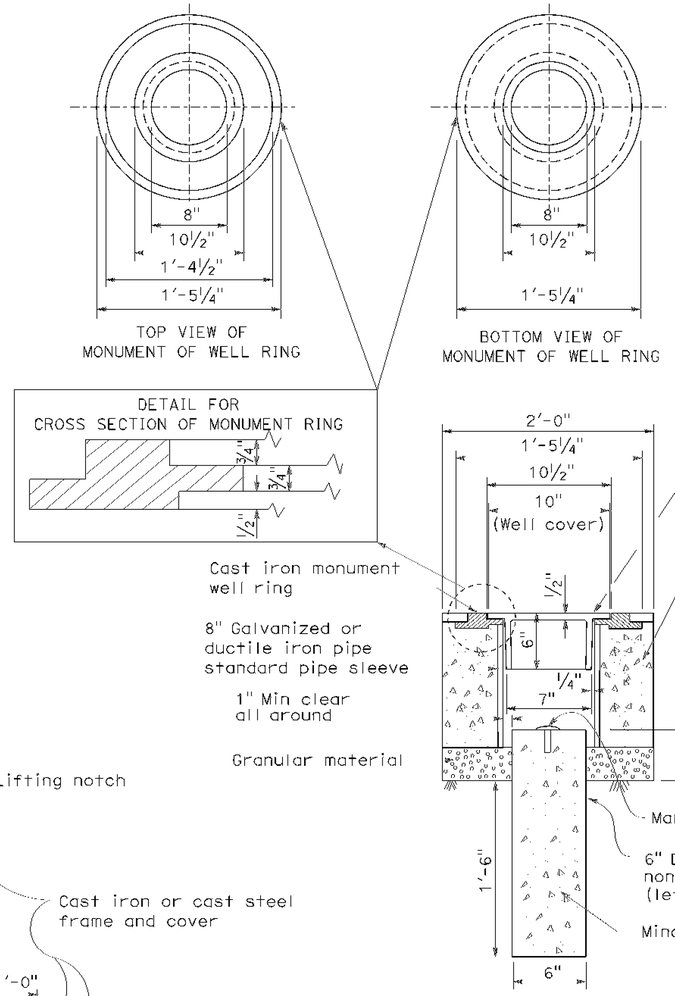

TYPE B

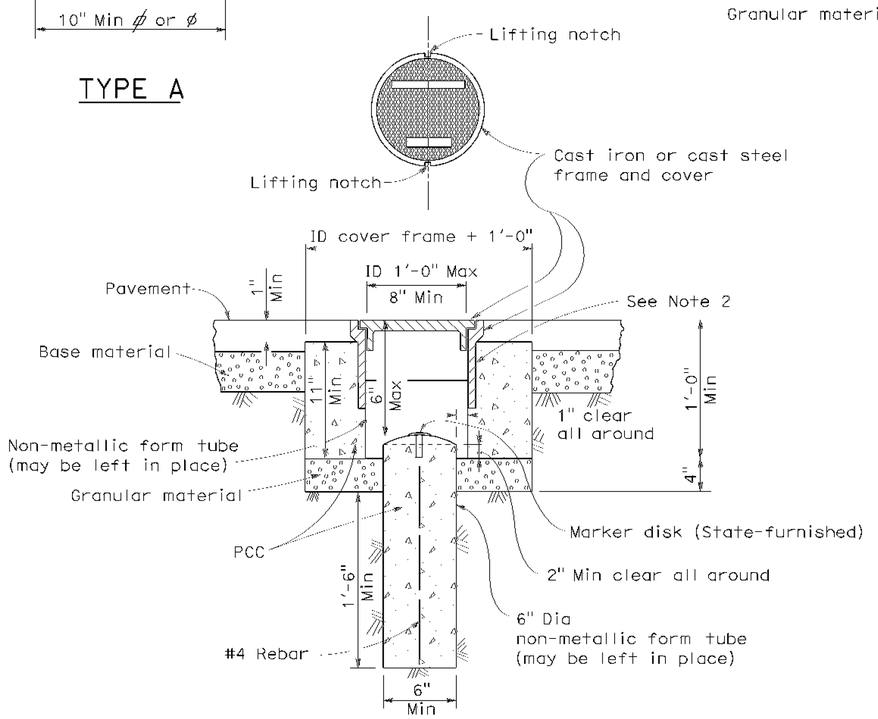

TYPE D
Alternative No. 1

NOTES:

1. The configuration of the cast iron or cast steel frame and cover may vary from that shown.
2. Frame shall be embedded in the concrete a minimum of 3".
3. Type D monument shall be either Alternative No. 1 or Alternative No. 2 at the contractor's option.
4. All portland cement concrete shall be Class 2 or minor concrete with 1" maximum aggregate.

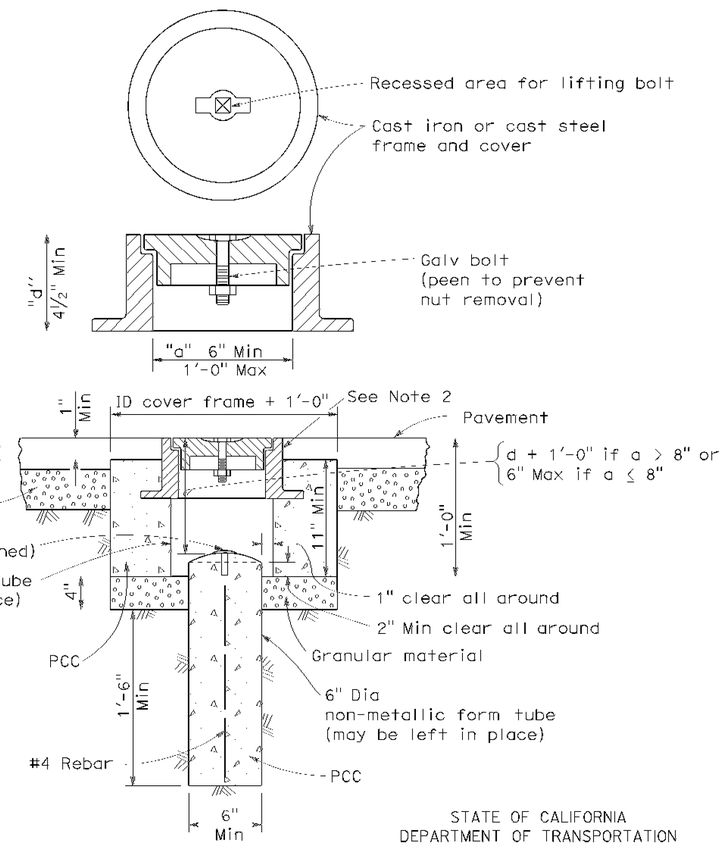

TYPE D
Alternative No. 2

STATE OF CALIFORNIA
DEPARTMENT OF TRANSPORTATION

SURVEY MONUMENTS

NO SCALE

RSP A74 DATED JUNE 30, 2006 SUPERSEDES STANDARD PLAN DATED MAY 1, 2006 - PAGE 28 OF THE STANDARD PLANS BOOK DATED MAY 2006.

REVISED STANDARD PLAN RSP A74

2006 REVISED STANDARD PLAN RSP A74

5 24 06

DIST	COUNTY	ROUTE	POST MILES TOTAL PROJECT	SHEET NO.	TOTAL SHEETS
10	Mer	33	17.1/26.5	15	26

Randell D. Hiatt
REGISTERED CIVIL ENGINEER

June 6, 2008
PLANS APPROVAL DATE

REGISTERED PROFESSIONAL ENGINEER
Randell D. Hiatt
No. C50200
Exp. 6-30-09
CIVIL
STATE OF CALIFORNIA

The State of California or its officers or agents shall not be responsible for the accuracy or completeness of electronic copies of this plan sheet.

To accompany plans dated 7-06-10

NOTES:

1. When necessary to place dike in front of face of guard railing, only Type C dike may be used. For dike details, see Standard Plan A87B.
2. For standard railing post embedment, see Standard Plans A77C3.
3. Guard railing delineation to be used where shown on the Project Plans.
4. When dike or curb is placed under guard railing, the maximum height of the dike or curb shall be 4". Mountable dike should not be used. For dike and curb details, see Revised Standard Plans RSP A87A and Standard Plan A87B.
5. For details of typical distance between the face of rail and hinge point, see Standard Plan A77C3.

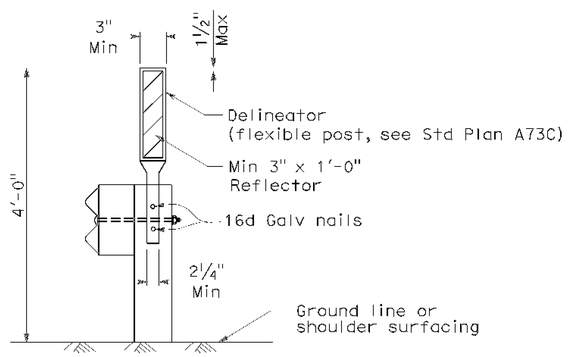

GUARD RAILING DELINEATION

See Note 3

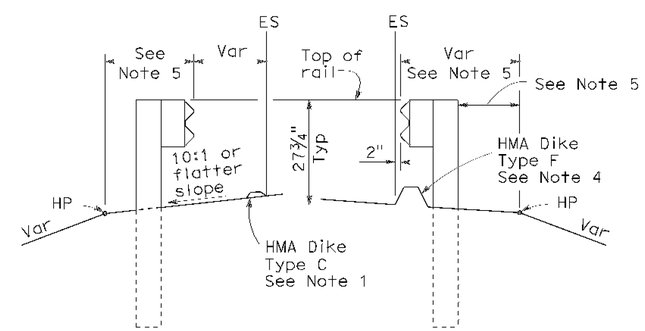

DIKE POSITIONING

See Note 1

STATE OF CALIFORNIA
DEPARTMENT OF TRANSPORTATION

METAL BEAM GUARD RAILING TYPICAL RAILING DELINEATION AND DIKE POSITIONING DETAILS

NO SCALE

RSP A77C4 DATED JUNE 6, 2008 SUPERSEDES STANDARD PLAN A77C4
DATED MAY 1, 2006 - PAGE 47 OF THE STANDARD PLANS BOOK DATED MAY 2006.

REVISED STANDARD PLAN RSP A77C4

2006 REVISED STANDARD PLAN RSP A77C4

12 10 07

DIST	COUNTY	ROUTE	POST MILES TOTAL PROJECT	SHEET NO.	TOTAL SHEETS
10	Mer	33	17.1/26.5	16	26

Randell D. Hiatt
REGISTERED CIVIL ENGINEER

June 6, 2008
PLANS APPROVAL DATE

REGISTERED PROFESSIONAL ENGINEER Randell D. Hiatt No. C50200 Exp. 6-30-09 CIVIL STATE OF CALIFORNIA

The State of California or its officers or agents shall not be responsible for the accuracy or completeness of electronic copies of this plan sheet.

To accompany plans dated 7-06-10

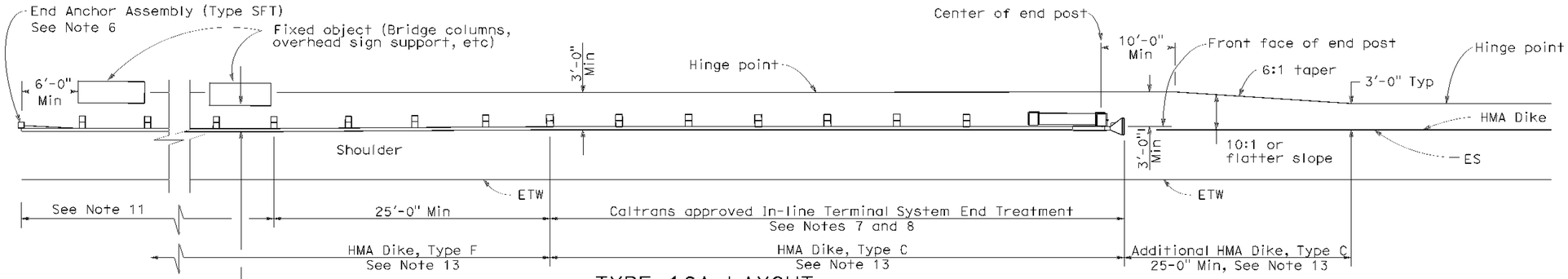

TYPE 16A LAYOUT

(GUARD RAILING INSTALLATION AT ROADSIDE FIXED OBJECT OR OBJECTS WITH AN IN-LINE END TREATMENT AT TRAFFIC APPROACH END OF RAILING)
See Notes 12 and 13

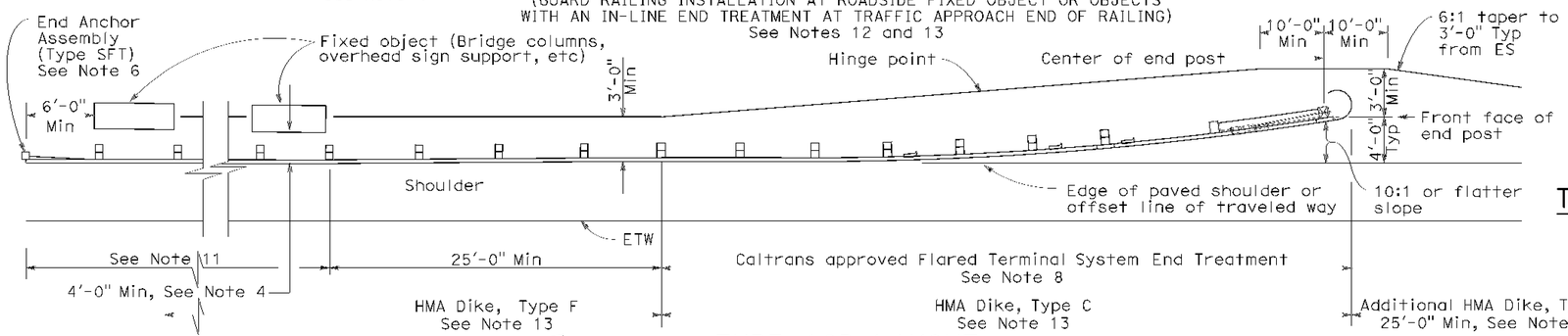

TYPE 16B LAYOUT

(GUARD RAILING INSTALLATION AT ROADSIDE FIXED OBJECT OR OBJECTS WITH A FLARED END TREATMENT AT TRAFFIC APPROACH END OF RAILING)
See Notes 12 and 13

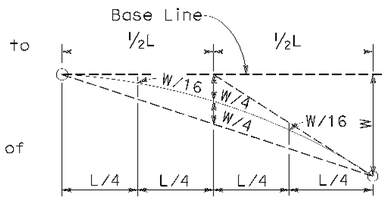

TYPICAL PARABOLIC LAYOUT

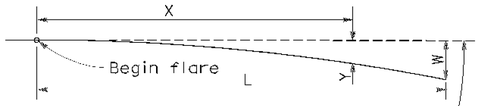

Base Line (Edge of paved shoulder or offset line of edge of traveled way)

$$Y = \frac{WX^2}{L^2}$$

Y = Offset from base line
W = Maximum offset
X = Distance along base line
L = Length of flare

PARABOLIC FLARE OFFSETS

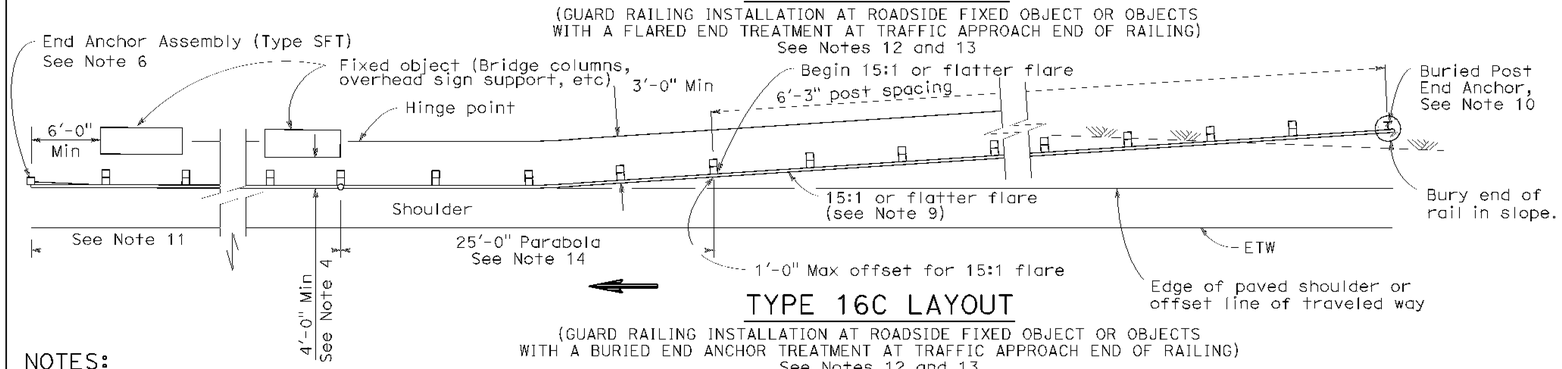

TYPE 16C LAYOUT

(GUARD RAILING INSTALLATION AT ROADSIDE FIXED OBJECT OR OBJECTS WITH A BURIED END ANCHOR TREATMENT AT TRAFFIC APPROACH END OF RAILING)
See Notes 12 and 13

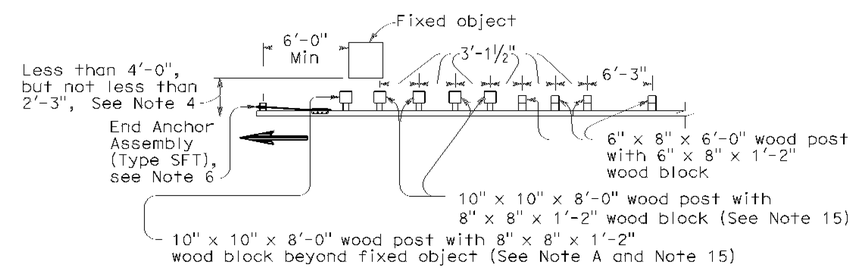

NOTE A: For a series of fixed objects (bridge columns, overhead sign supports, etc.) additional 10" x 10" x 8'-0" wood post with 8" x 8" x 1'-2" wood blocks at 3'-1½" center to center spacing are to be used between fixed objects.

STRENGTHENED RAILING SECTIONS FOR FIXED OBJECT

Use strengthened railing sections with Types 16A, 16B or 16C Layouts where minimum clearance between the face of the guard railing and fixed object(s) is less than 4'-0", but not less than 2'-3". See Note 4

NOTES:

1. Line post, blocks and hardware to be used are shown on Revised Standard Plans A77A1, A77A2, A77B1, A77C1 and A77C2.
2. Guard railing post spacing to be 6'-3" center to center, except as otherwise noted.
3. Except as noted, line posts are 6" x 8" x 6'-0" wood with 6" x 8" x 1'-2" wood blocks. W6 x 9 steel posts, 6'-0" in length, with 6" x 8" x 1'-2" notched wood blocks or notched recycled plastic blocks may be used for 6" x 8" x 6'-0" wood line posts with 6" x 8" x 1'-2" wood blocks where applicable and when specified.
4. A 4'-0" minimum clearance is required between the face of the railing and the face of a fixed object located directly behind standard guard railing sections with post spacing of 6'-3". Construct guard railing as shown in the detail "Strengthened Railing Sections for Fixed Objects" on this plan, where the clearance between the face of the railing and the face of a fixed object is less than 4'-0", but not less than 2'-3". Where the clearance is less than 2'-3", a concrete wall or barrier should be constructed to shield the fixed object(s).
5. Direction of adjacent traffic indicated by ⟶.
6. For End Anchor Assembly (Type SFT) details, see Standard Plan A77H1.
7. In-line Terminal System End Treatments are used where site conditions will not accommodate a flared end treatment.
8. The type of terminal system to be used will be shown on the Project Plans.
9. The 15:1 or flatter flare used with Type 16C Layout is based on the edge of the paved shoulder or offset line of edge of the traveled way. The length of guard railing within the 15:1 or flatter flare is based on site conditions and should be a length equal to multiples of 12'-6".
10. For details of the Buried Post End Anchor used with Type 16C Layout, see Standard Plan A77I2.
11. As site conditions dictate, construct additional guard railing to shield fixed object(s). Additional guard railing length equal to multiples of 12'-6". Post spacing at 6'-3" except as specified in Note 4.
12. Layout Types 16A, 16B or 16C are typically used where guard railing is recommended to shield roadside fixed object(s) and a crashworthy end treatment is required for only one direction of traffic.
13. Where placement of dike is required with guard railing, see Revised Standard Plan RSP A77C4 for dike positioning details.
14. For typical flare offsets for 25'-0" length parabola with maximum offset of 1'-0", see Revised Standard Plan RSP A77E1.
15. W6 x 15 steel post, 8'-0" in length, with 8" x 8" x 1'-2" notched wood block or notched recycled plastic blocks may be used in place of the 10" x 10" x 8'-0" wood post with 8" x 8" x 1'-2" wood block shown in the "Strengthened Railing Sections Detail".

STATE OF CALIFORNIA
DEPARTMENT OF TRANSPORTATION

METAL BEAM GUARD RAILING TYPICAL LAYOUTS FOR ROADSIDE FIXED OBJECTS

NO SCALE

RSP A77G3 DATED JUNE 6, 2008 SUPERSEDES STANDARD PLAN A77G3 DATED MAY 1, 2006 - PAGE 61 OF THE STANDARD PLANS BOOK DATED MAY 2006.

REVISED STANDARD PLAN RSP A77G3

2006 REVISED STANDARD PLAN RSP A77G3

12 10 07

DIST	COUNTY	ROUTE	POST MILES TOTAL PROJECT	SHEET NO.	TOTAL SHEETS
10	Mer	33	17.1/26.5	17	26

Randell D. Hiatt
REGISTERED CIVIL ENGINEER

June 6, 2008
PLANS APPROVAL DATE

REGISTERED PROFESSIONAL ENGINEER Randell D. Hiatt No. C50200 Exp. 6-30-09 CIVIL STATE OF CALIFORNIA

The State of California or its officers or agents shall not be responsible for the accuracy or completeness of electronic copies of this plan sheet.

To accompany plans dated 7-06-10

2006 REVISED STANDARD PLAN RSP A81A

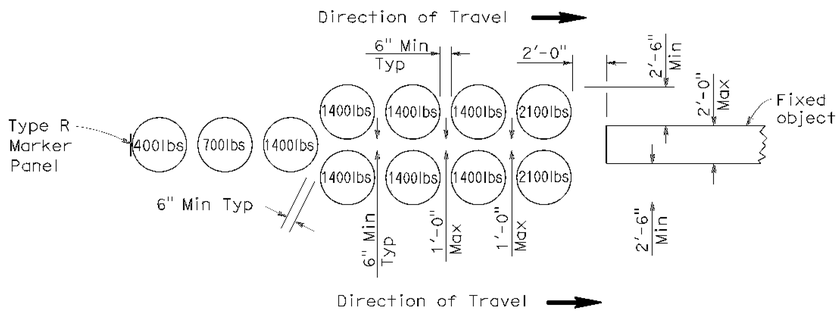

ARRAY 'U11'

Approach speed less than 45 mph

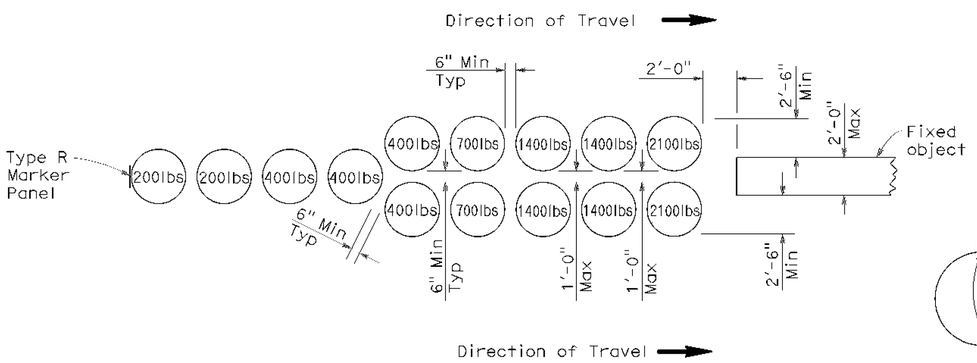

ARRAY 'U14'

Approach speed 45 mph or more

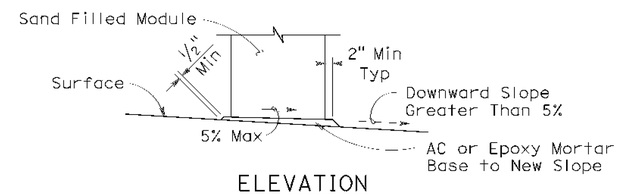

ELEVATION

SLOPED SEAT DETAIL

(See Note 4)

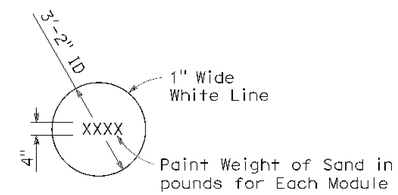

PAINTING DETAIL

(See Note 5)

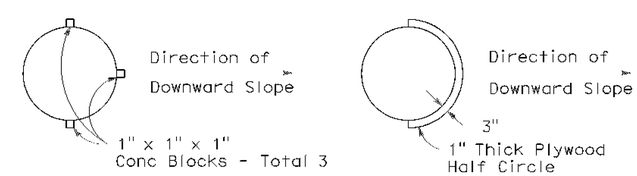

ALTERNATIVE 1

ALTERNATIVE 2

PLAN

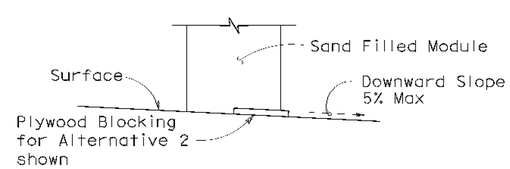

ELEVATION

BRIDGE DECK MODULE BLOCKING DETAILS

(See Note 6)

NOTES:

1. (XXX) Indicates module location and mass of sand in pounds for each module. Module spacing is based on the greater diameter of the modules.
2. All sand weights are nominal.
3. Each module is to contain amount of sand indicated, supported according to the manufacturer's instructions.
4. Modules shall be placed on asphalt concrete, epoxy mortar or concrete surface. Modules to be placed on surfacing with greater than 5% downward slope shall be seated as shown.
5. Mass of sand and outline of each module shall be painted on the surface at each module location.
6. Module blocking, epoxied to the deck surface, is required for all modules placed on bridge decks. Two acceptable alternatives are shown. Other alternatives recommended by the manufacturer and approved by the Engineer will be accepted.
7. Place the top of the Type R marker panel 1" below the module lid.
8. Approach speeds indicated conform to NCHRP Report criteria.

STATE OF CALIFORNIA
DEPARTMENT OF TRANSPORTATION

CRASH CUSHION, SAND FILLED (UNIDIRECTIONAL)

NO SCALE

RSP A81A DATED JUNE 6, 2008 SUPERSEDES STANDARD PLAN A81A DATED MAY 1, 2006 - PAGE 99 OF THE STANDARD PLANS BOOK DATED MAY 2006.

REVISED STANDARD PLAN RSP A81A

5 15 08

DIST	COUNTY	ROUTE	POST MILES TOTAL PROJECT	SHEET NO.	TOTAL SHEETS
10	Mer	33	17.1/26.5	18	26

Randell D. Hiatt
REGISTERED CIVIL ENGINEER

June 6, 2008
PLANS APPROVAL DATE

REGISTERED PROFESSIONAL ENGINEER Randell D. Hiatt No. C50200 Exp. 6-30-09 CIVIL STATE OF CALIFORNIA

The State of California or its officers or agents shall not be responsible for the accuracy or completeness of electronic copies of this plan sheet.

To accompany plans dated 7-06-10

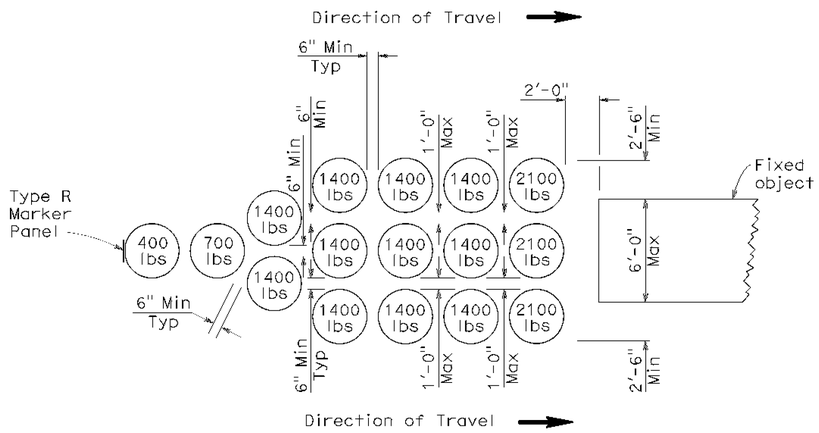

ARRAY 'U16'

Approach speed less than 45 mph

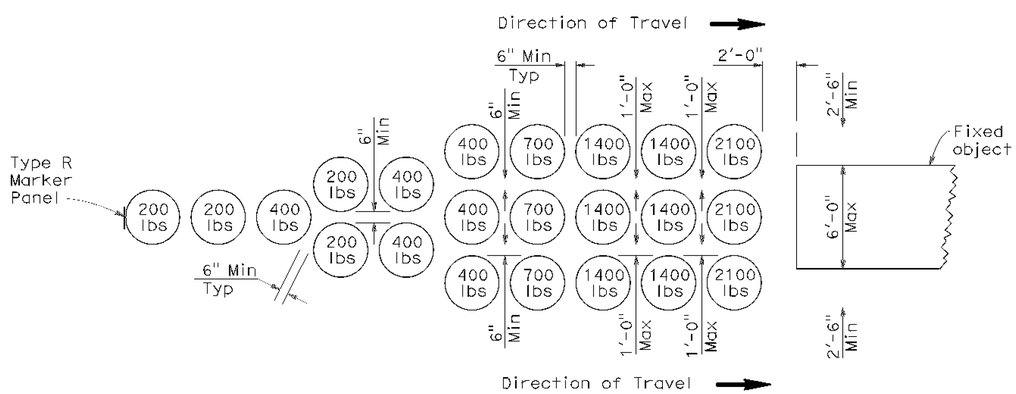

ARRAY 'U21'

Approach speed 45 mph or more

NOTES:

1. (XXX) Indicates module location and weight of sand in pounds for each module. Module spacing is based on the greater diameter of the modules.
2. All sand weights are nominal.
3. Each module is to contain amount of sand indicated, supported according to the manufacturer's instructions.
4. Modules shall be placed on asphalt concrete, epoxy mortar or concrete surface. Modules to be placed on surfacing with greater than 5% downward slope shall be seated as shown.
5. Mass of sand and outline of each module shall be painted on the surface at each module location.
6. Module blocking, epoxied to the deck surface, is required for all modules placed on bridge decks. Two acceptable alternatives are shown. Other alternatives recommended by the manufacturer and approved by the Engineer will be accepted.
7. Place the top of the Type R marker panel 1" below the module lid.
8. Approach speeds indicated conform to NCHRP Report criteria.

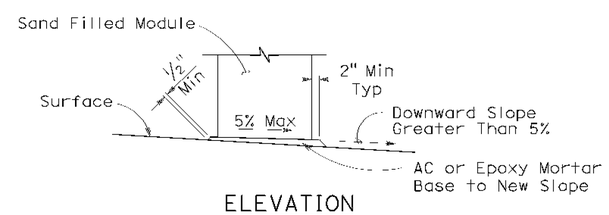

ELEVATION

SLOPED SEAT DETAIL

(See Note 4)

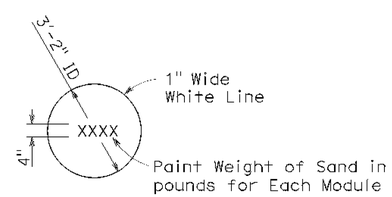

PAINTING DETAIL

(See Note 5)

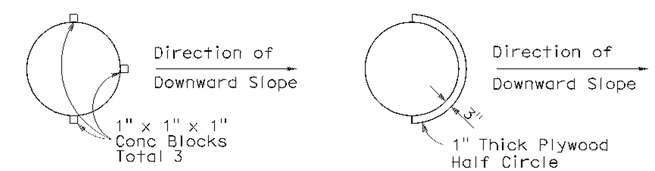

ALTERNATIVE 1 ALTERNATIVE 2

PLAN

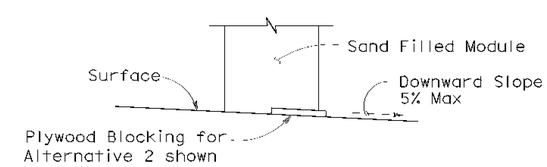

ELEVATION

BRIDGE DECK MODULE BLOCKING DETAILS

(See Note 6)

STATE OF CALIFORNIA
DEPARTMENT OF TRANSPORTATION

CRASH CUSHION, SAND FILLED (UNIDIRECTIONAL)

NO SCALE

RSP A81B DATED JUNE 6, 2008 SUPERSEDES STANDARD PLAN A81B DATED MAY 1, 2006 - PAGE 100 OF THE STANDARD PLANS BOOK DATED MAY 2006.

REVISED STANDARD PLAN RSP A81B

2006 REVISED STANDARD PLAN RSP A81B

5 15 08

DIST	COUNTY	ROUTE	POST MILES TOTAL PROJECT	SHEET NO.	TOTAL SHEETS
10	Mer	33	17.1/26.5	19	26

Randell D. Hiatt
REGISTERED CIVIL ENGINEER

June 6, 2008
PLANS APPROVAL DATE

REGISTERED PROFESSIONAL ENGINEER Randell D. Hiatt No. C50200 Exp. 6-30-09 CIVIL STATE OF CALIFORNIA

The State of California or its officers or agents shall not be responsible for the accuracy or completeness of electronic copies of this plan sheet.

To accompany plans dated 7-06-10

2006 REVISED STANDARD PLAN RSP A81C

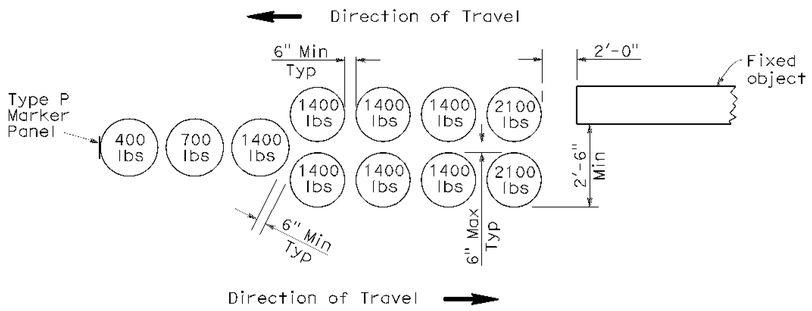

ARRAY 'B11'

Approach speed less than 45 mph

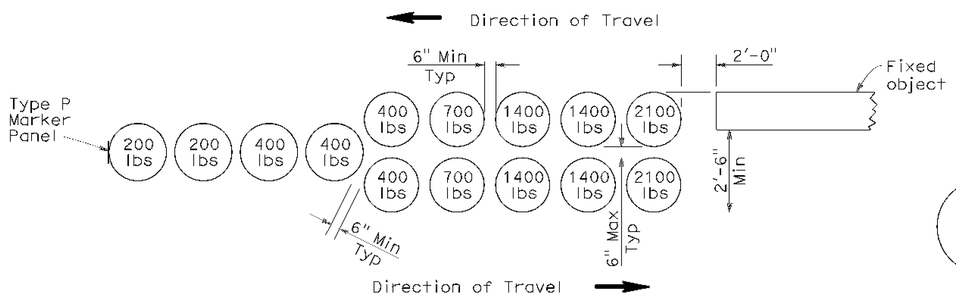

ARRAY 'B14'

Approach speed 45 mph or more

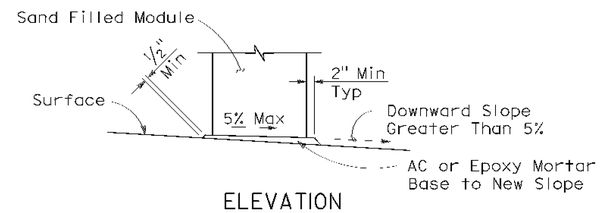

ELEVATION

SLOPED SEAT DETAIL

(See Note 5)

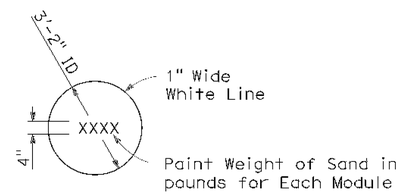

PAINTING DETAIL

(See Note 6)

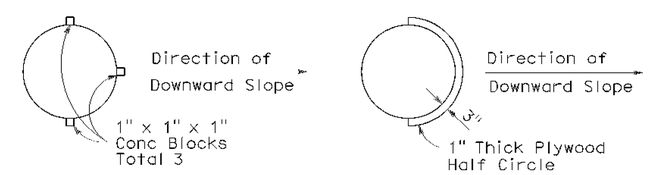

ALTERNATIVE 1

ALTERNATIVE 2

PLAN

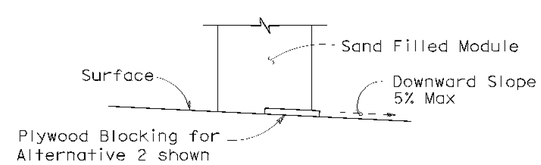

ELEVATION

BRIDGE DECK MODULE BLOCKING DETAILS

(See Note 7)

NOTES:

1. (XXX) Indicates module location and weight of sand in pounds for each module. Module spacing is based on the greater diameter of the module.
2. All sand weights are nominal.
3. Each module is to contain amount of sand indicated, supported according to the manufacturer's instructions.
4. Bidirectional crash cushion arrays may be angled toward approaching traffic. Amount of angle not to exceed 10 degrees.
5. Modules shall be placed on asphalt concrete, epoxy mortar or concrete surface. Modules to be placed on surfacing with greater than 5% downward slope shall be seated as shown.
6. Mass of sand and outline of each module shall be painted on the surface at each module location.
7. Module blocking, epoxied to the deck surface, is required for all modules placed on bridge decks. Two acceptable alternatives are shown. Other alternatives recommended by the manufacturer and approved by the Engineer will be accepted.
8. Place the Type P marker panel so that the bottom of the panel is at the bottom of the module.
9. Approach speeds indicated conform to NCHRP Report criteria.

STATE OF CALIFORNIA
DEPARTMENT OF TRANSPORTATION

CRASH CUSHION, SAND FILLED (BIDIRECTIONAL)

NO SCALE

RSP A81C DATED JUNE 6, 2008 SUPERSEDES STANDARD PLAN A81C
DATED MAY 1, 2006 - PAGE 101 OF THE STANDARD PLANS BOOK DATED MAY 2006.

REVISED STANDARD PLAN RSP A81C

DIST	COUNTY	ROUTE	POST MILES TOTAL PROJECT	SHEET NO.	TOTAL SHEETS
10	Mer	33	17.1/26.5	20	26

Randell D. Hiatt
REGISTERED CIVIL ENGINEER

June 6, 2008
PLANS APPROVAL DATE

The State of California or its officers or agents shall not be responsible for the accuracy or completeness of electronic copies of this plan sheet.

REGISTERED PROFESSIONAL ENGINEER Randell D. Hiatt No. C50200 Exp. 6-30-09 CIVIL STATE OF CALIFORNIA

To accompany plans dated 7-06-10

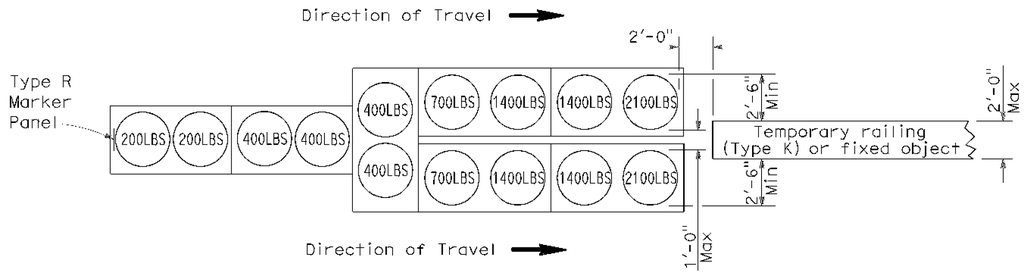

ARRAY 'TU14'

Approach speed 45 mph or more

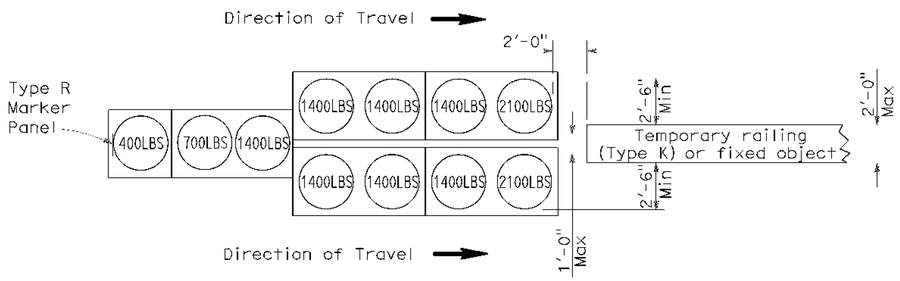

ARRAY 'TU11'

Approach speed less than 45 mph

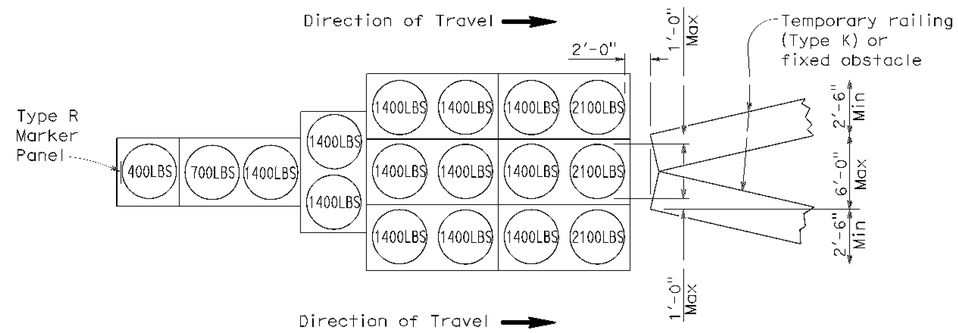

ARRAY 'TU17'

Approach speed less than 45 mph

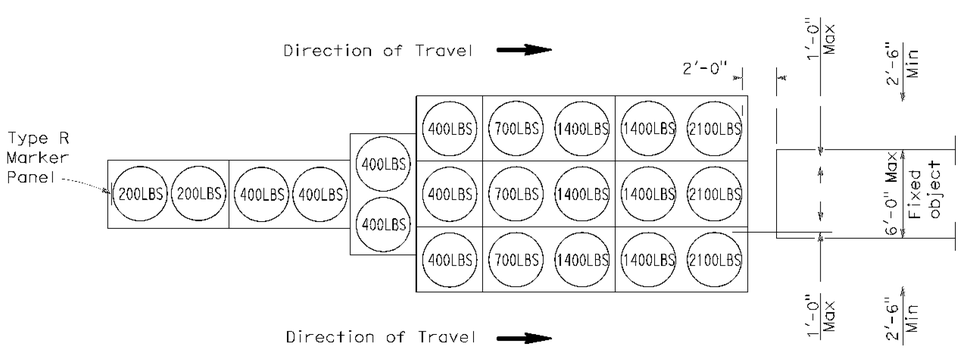

ARRAY 'TU21'

Approach speed 45 mph or more

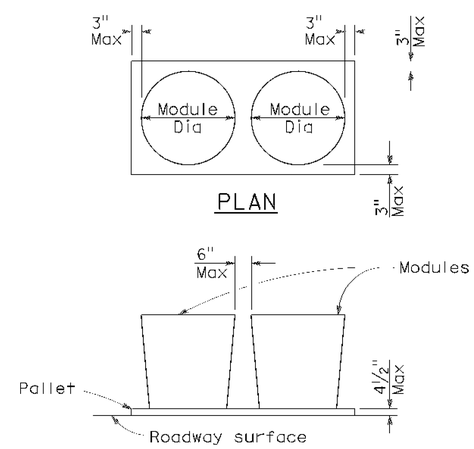

PLAN

ELEVATION

CRASH CUSHION PALLET DETAIL

See Note 7

NOTES:

1. (XXX) Indicates sand filled module location and weight of sand in pounds for each module. Module spacing is based on the greater diameter of the module.
2. All sand weights are nominal.
3. Temporary crash cushion arrays shall not encroach on the traveled way.
4. Place the top of Type R marker panel 1" below the module lid.
5. Refer to Standard Plan A73B for marker details.
6. Approach speeds indicated conform to NCHRP 350 Report criteria.
7. Use of pallets is optional.

STATE OF CALIFORNIA
DEPARTMENT OF TRANSPORTATION

TEMPORARY CRASH CUSHION, SAND FILLED (UNIDIRECTIONAL)

NO SCALE

RSP T1A DATED JUNE 6, 2008 SUPERSEDES STANDARD PLAN T1A DATED MAY 1, 2006 - PAGE 211 OF THE STANDARD PLANS BOOK DATED MAY 2006.

REVISED STANDARD PLAN RSP T1A

2006 REVISED STANDARD PLAN RSP T1A

5 15 08

DIST	COUNTY	ROUTE	POST MILES TOTAL PROJECT	SHEET NO.	TOTAL SHEETS
10	Mer	33	17.1/26.5	21	26

Randell D. Hiatt
REGISTERED CIVIL ENGINEER

June 6, 2008
PLANS APPROVAL DATE

REGISTERED PROFESSIONAL ENGINEER Randell D. Hiatt No. C50200 Exp. 6-30-09 CIVIL STATE OF CALIFORNIA

The State of California or its officers or agents shall not be responsible for the accuracy or completeness of electronic copies of this plan sheet.

To accompany plans dated 7-06-10

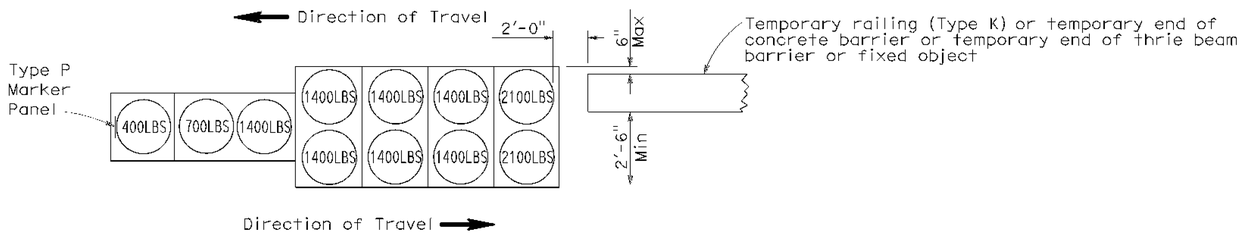

ARRAY 'TB11'

Approach speed less than 45 mph

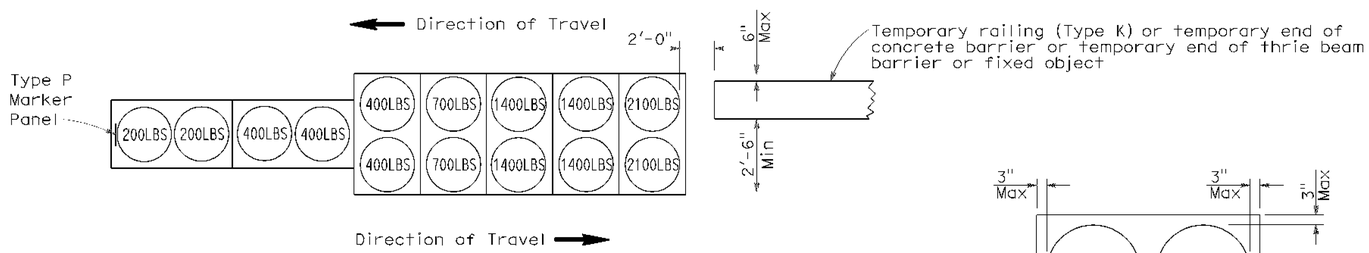

ARRAY 'TB14'

Approach speed 45 mph or more

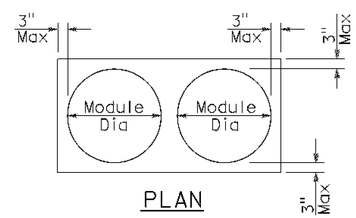

PLAN

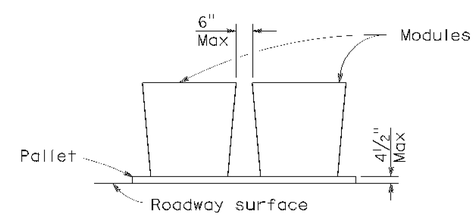

ELEVATION

CRASH CUSHION PALLET DETAIL

See Note 7

NOTES:

1. (XXX) Indicates sand filled module location and weight of sand in pounds for each module. Module spacing is based on the greater diameter of the module.
2. All sand weights are nominal.
3. Temporary crash cushion arrays shall not encroach on the traveled way.
4. Place the Type P marker panel so that the bottom of the panel rests upon the pallet.
5. Refer to Standard Plan A73B for marker details.
6. Approach speeds indicated conform to NCHRP 350 Report criteria.
7. Use of pallets is optional.

STATE OF CALIFORNIA
DEPARTMENT OF TRANSPORTATION

TEMPORARY CRASH CUSHION, SAND FILLED (BIDIRECTIONAL)

NO SCALE

RSP T1B DATED JUNE 6, 2008 SUPERSEDES STANDARD PLAN T1B
DATED MAY 1, 2006 - PAGE 212 OF THE STANDARD PLANS BOOK DATED MAY 2006.

REVISED STANDARD PLAN RSP T1B

2006 REVISED STANDARD PLAN RSP T1B

5 15 08

DIST	COUNTY	ROUTE	POST MILES TOTAL PROJECT	SHEET NO.	TOTAL SHEETS
10	Mer	33	17.1/26.5	22	26

Randell D. Hiatt
REGISTERED CIVIL ENGINEER

June 6, 2008
PLANS APPROVAL DATE

REGISTERED PROFESSIONAL ENGINEER
Randell D. Hiatt
No. C50200
Exp. 6-30-09
CIVIL
STATE OF CALIFORNIA

The State of California or its officers or agents shall not be responsible for the accuracy or completeness of electronic copies of this plan sheet.

To accompany plans dated 7-06-10

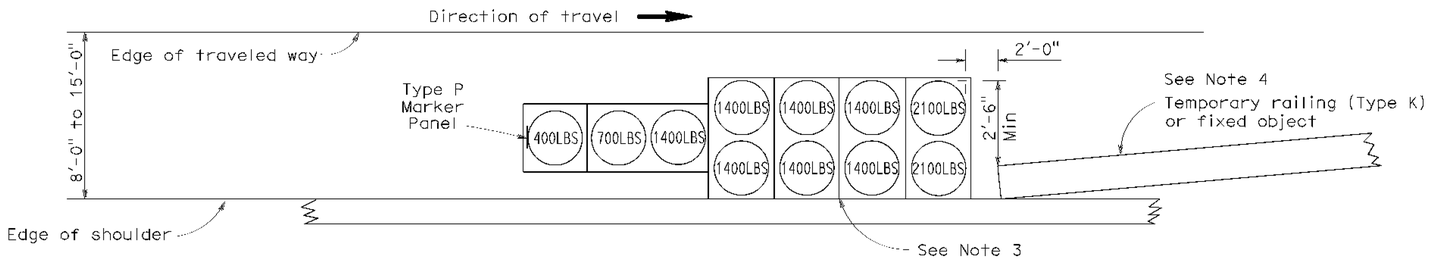

ARRAY 'TS11'

Approach speed less than 45 mph
See Note 9

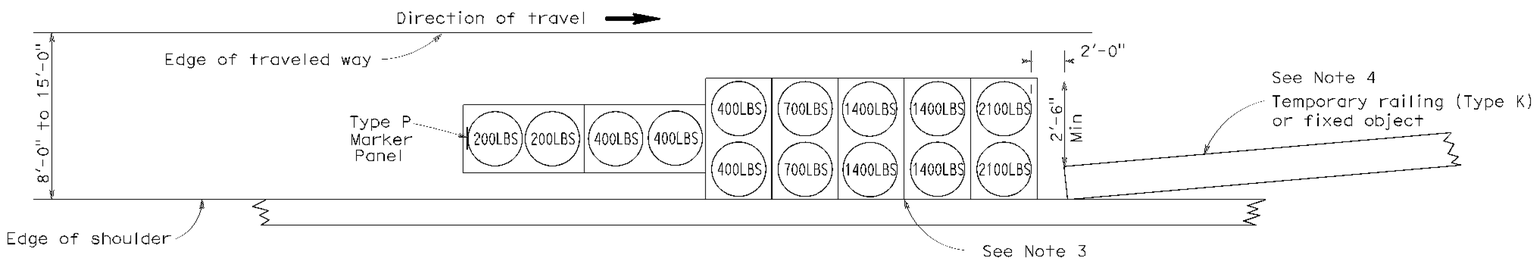

ARRAY 'TS14'

Approach speed 45 mph or more
See Note 9

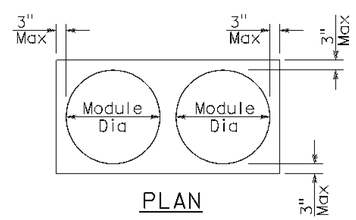

PLAN

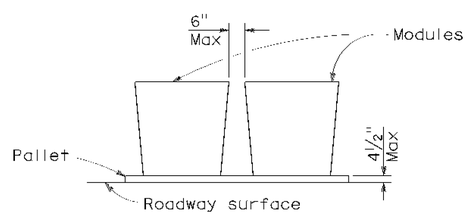

ELEVATION

CRASH CUSHION PALLET DETAIL

See Note 11

NOTES:

1. (XXX) Indicates sand filled module location and weight of sand in pounds for each module. Module spacing is based on the greater diameter of the module.
2. All sand weights are nominal.
3. The temporary crash cushion arrays shown on this plan shall be used only in locations where there will be traffic on one side of the temporary crash cushion array.
4. If the fixed object or approach end of the temporary railing is less than 15'-0" from the edge of traveled way, a temporary crash cushion is required in a construction or work zone.
5. Temporary crash cushion arrays shall not encroach on the traveled way.
6. Arrays for median shoulders shall conform to details shown on this plan for outside shoulders.
7. Place the Type P marker panel so that the bottom of the panel rests upon the pallet and faces traffic.
8. Refer to Standard Plan A73B for marker details.
9. For shoulder widths less than 8'-0", appropriate approved crash cushion protection, other than sand filled modules, shall be provided at fixed objects and at approach ends of temporary railing. The specific type of crash cushion shall be as shown on the project plans or as specified in the Special Provisions, or if not shown on the project plans or specified in the Special Provisions, shall be as approved by the Engineer.
10. Approach speeds indicated conform to NCHRP 350 Report criteria.
11. Use of pallets is optional.

STATE OF CALIFORNIA
DEPARTMENT OF TRANSPORTATION

TEMPORARY CRASH CUSHION, SAND FILLED (SHOULDER INSTALLATIONS)

NO SCALE

RSP T2 DATED JUNE 6, 2008 SUPERSEDES STANDARD PLAN T2
DATED MAY 1, 2006 - PAGE 213 OF THE STANDARD PLANS BOOK DATED MAY 2006.

REVISED STANDARD PLAN RSP T2

2006 REVISED STANDARD PLAN RSP T2

5 15 08

DIST	COUNTY	ROUTE	POST MILES TOTAL PROJECT	SHEET NO.	TOTAL SHEETS
10	Mer	33	17.1/26.5	23	26

REGISTERED ELECTRICAL ENGINEER

October 5, 2007
PLANS APPROVAL DATE

REGISTERED PROFESSIONAL ENGINEER Jeffery G. McRae No. E14512 Exp. 6-30-08 ELECTRICAL STATE OF CALIFORNIA

The State of California or its officers or agents shall not be responsible for the accuracy or completeness of electronic copies of this plan sheet.

To accompany plans dated 7-06-10

ELECTROLIERS

STANDARD TYPES
15, 15D
15 STRUCTURE
21, 21D STRUCTURE
30
31
32
35
36-20A

High mast light pole

Double Arm lighting standard

Existing electrolier

Electrolier foundation (Future installation)

NOTES:

1. Luminaires shall be 310 W HPS when installed on Type 21, 21D, 30, 31, 32, 35 and 36-20A Standards, unless otherwise specified. Luminaires shall be 200 W HPS when installed on other type standards or poles, unless otherwise specified.
2. Luminaires shall be the cutoff type, ANSI Type III medium cutoff lighting distribution, unless otherwise specified.
3. Variations noted adjacent to symbol on project plans.

Electrolier (see project notes or project plans)

Luminaire on wood pole

STANDARD NOTES:

- AB — Abandon. If applied to conduit, remove conductors.
- BC — Install pull box in existing conduit run.
- BP — Pedestrian barricade, type as indicated on plan.
- CB — Install conduit into existing pull box.
- CC — Connect new and existing conduit. Remove existing conductors and install conductors as indicated.
- CF — Conduit to remain for future use. Remove conductors. Install pull wire or rope.
- DH — Detector handhole.
- FA — Foundation to be abandoned.
- IS — Install sign on signal mast arm.
- NS — No slip base on standard.
- PEC — Photoelectric control.
- PEU — Photoelectric unit.
- RC — Equipment or material to be removed and become the property of the Contractor.
- RE — Remove electrolier, fuses and ballast. Tape ends of conductors.
- RL — Relocate equipment.
- RR — Remove and reuse equipment.
- RS — Remove and salvage equipment.
- SC — Splice new to existing conductors.
- SD — Service disconnect.
- SF — Standard to remain for future use. Remove luminaire, pole conductors, fuses and ballast.
- TSP — Telephone service point.

ABBREVIATIONS AND EQUIPMENT DESIGNATIONS

PROPOSED	EXISTING	
BBS	bbs	Battery backup system
BC	bc	Bolt circle
C	C	Conduit
CCTV	cctv	Closed circuit television
CKT	ckt	Circuit
CMS	cms	Changeable message sign
DLC	dlc	Loop detector lead-in cable
EMS	ems	Extinguishable message sign
EVC	evc	Emergency vehicle cable
EVD	evd	Emergency vehicle detector
FB	fb	Flashing beacon
FBCA	fbca	Flashing beacon control assembly
FBS	fbs	Flashing beacon with slip base
FO	fo	Fiber optic
G	G	Ground (Equipment Grounding Conductor)
GFCI	GFCI	Ground fault circuit interrupt
HAR	har	Highway advisory radio
HEX	hex	Hexagonal
HPS	hps	High pressure sodium
IISNS	iisns	Internally illuminated street name sign
ISL	isl	Induction sign lighting
LED	led	Light emitting diode
LMA	lma	Luminaire mast arm
LPS	lps	Low pressure sodium
LTG	ltg	Lighting
LUM	lum	Luminaire
MAT	mat	Mast arm mounting vehicle signal faces, top attachment
MAS	mas	Mast arm mounting vehicle signal faces, side attachment
MAS-4A	mas-4A	Mast arm mounting vehicle signal faces, side attachment - 4 signal section
MAS-4B	mas-4B	
MAS-4C	mas-4C	
MAS-5A	mas-5A	Mast arm mounting vehicle signal faces, side attachment - 5 signal section
MAS-5B	mas-5B	
MC	mc	Mercury contactor
M/M	m/m	Multiple to multiple transformer
MT	mt	Conduit with pull wire or rope only
MTG	mtg	Mounting
	mv	Mercury vapor lighting fixture
N	N	Neutral (Grounded Conductor)
NC	NC	Normally closed
NO	NO	Normally open
PB	pb	Pull box
PEC	pec	Photoelectric control (Type I, II, III, IV or V as shown)
PED	ped	Pedestrian
PEU	peu	Photoelectric unit
PPB	ppb	Pedestrian push button
RL		Relocated equipment
RM	rm	Ramp metering
SB	sb	Slip base
SIC	sic	Signal interconnect cable
SIG	sig	Signal
SMA	sma	Signal mast arm
SNS	sns	Street name sign
SP	sp	Service point
TDC	tdc	Telephone demarcation cabinet
TMS	tms	Traffic monitoring station
TOS	tos	Traffic Operations System
VEH	veh	Vehicle
XFMR	xfmr	Transformer
COMM	comm	Communication
RWIS	rwis	Roadway weather information system

SOFFIT AND WALL MOUNTED LUMINAIRES

Pendant, 70 W HPS unless otherwise specified.

Flush, 70 W HPS unless otherwise specified.

Wall surface, 70 W HPS unless otherwise specified.

Existing soffit or wall luminaire to remain unmodified.

Existing soffit or wall luminaire to be modified as specified.

NOTE:

Arrow indicates "street side" of luminaire.

STATE OF CALIFORNIA
DEPARTMENT OF TRANSPORTATION

ELECTRICAL SYSTEMS (SYMBOLS AND ABBREVIATIONS)

NO SCALE

RSP ES-1A DATED OCTOBER 5, 2007 SUPERSEDES STANDARD PLAN ES-1A DATED MAY 1, 2006 - PAGE 400 OF THE STANDARD PLANS BOOK DATED MAY 2006.

REVISED STANDARD PLAN RSP ES-1A

2006 REVISED STANDARD PLAN RSP ES-1A

DIST	COUNTY	ROUTE	POST MILES TOTAL PROJECT	SHEET NO.	TOTAL SHEETS
10	Mer	33	17.1/26.5	24	26

REGISTERED ELECTRICAL ENGINEER

October 5, 2007
PLANS APPROVAL DATE

The State of California or its officers or agents shall not be responsible for the accuracy or completeness of electronic copies of this plan sheet.

REGISTERED PROFESSIONAL ENGINEER Jeffery G. McRae No. E14512 Exp. 6-30-08 ELECTRICAL STATE OF CALIFORNIA

To accompany plans dated 7-06-10

CONDUIT

PROPOSED	EXISTING	
		Lighting Conduit, unless otherwise indicated or noted
		Traffic signal conduit
C	c	Communication conduit
T	t	Telephone conduit
F	f	Fire alarm conduit
FO	fo	Fiber optic conduit
		Conduit termination (RSP ES-9A C)
R	r	Conduit riser in/on structure or service pole

SERVICE EQUIPMENT

PROPOSED	EXISTING	
OH	oh	Overhead lines
U	U	Wood pole "U" indicates utility owned
		Pole guy with anchor
		Utility transformer - ground mounted
III		Service equipment enclosure type
		Service equipment enclosure door indicates front of enclosure
T	t	Telephone demarcation cabinet

POLE-MOUNTED SERVICE DESIGNATION

Type of installation

TYPE H SERVICE - 28'-10" ← Pole height above grade

ILLUMINATED OVERHEAD SIGN

PROPOSED	EXISTING	
		Overhead sign - Single post
		Overhead sign - Two post
		Overhead sign - Mounted on structure
		Overhead sign with electrolier

SIGNAL EQUIPMENT

PROPOSED	EXISTING	
		Pedestrian signal face
		Pedestrian push button post
		Pedestrian barricade
		Vehicle signal face (with backplate, 3-Section: red, yellow and green)
		Vehicle signal face with angle visors
PV	PV	Modifications of basic symbols: "L" indicates all non-arrow sections louvered "LG" indicates louvered green section only "PV" indicates 12" programmed visibility sections "8" indicates all 8" sections (only when specified)
		Type 15TS and Vehicle signal face
		Vehicle signal face with red, yellow and green left arrow sections
		Vehicle signal face with red and yellow sections and up green arrow
		Vehicle signal face (5 Section) with red, yellow and green sections and yellow and green right arrows
		Type 1 Standard and attached vehicle signal faces
		Standard with signal mast arm only and attached vehicle signal faces and internally illuminated street name sign
		Type 33 Standard, Left-turn vehicle signal face and sign
		Standard with luminaire and signal mast arms and attached vehicle signal faces
		Cantilever flashing beacon Type 9 Frame, with a sign unless otherwise specified or indicated
		Type 15-FBS Standard with two vehicle signal face sections with lens, backplate and visor with a sign
R	Y	Flashing beacon. One vehicle signal face section with lens, backplate and visor. "R" indicates red indication, "Y" indicates yellow indication
		Controller assembly. Door indicates front of cabinet

SIGNAL EQUIPMENT Cont

PROPOSED	EXISTING	
		Guard post
		Type 1 Standard with "Meter On" sign
		Emergency Vehicle detector

NOTES:

1. All signal sections shall be 12" unless shown otherwise.
2. Signal heads shall be provided with backplates unless shown otherwise.
3. Signal indication shall be LED.

STATE OF CALIFORNIA
DEPARTMENT OF TRANSPORTATION

ELECTRICAL SYSTEMS (SYMBOLS AND ABBREVIATIONS)

NO SCALE

RSP ES-1B DATED OCTOBER 5, 2007 SUPERCEDES STANDARD PLAN ES-1B DATED MAY 1, 2006 - PAGE 401 OF THE STANDARD PLANS BOOK DATED MAY 2006.

REVISED STANDARD PLAN RSP ES-1B

2006 REVISED STANDARD PLAN RSP ES-1B

DIST	COUNTY	ROUTE	POST MILES TOTAL PROJECT	SHEET NO.	TOTAL SHEETS
10	Mer	33	17.1/26.5	25	26

REGISTERED ELECTRICAL ENGINEER

October 5, 2007
PLANS APPROVAL DATE

REGISTERED PROFESSIONAL ENGINEER Jeffery G. McRae No. E14512 Exp. 6-30-08 ELECTRICAL STATE OF CALIFORNIA

The State of California or its officers or agents shall not be responsible for the accuracy or completeness of electronic copies of this plan sheet.

To accompany plans dated 7-06-10

EQUIPMENT IDENTIFICATION

ILLUMINATED SIGN IDENTIFICATION NUMBER:

Sign number - Place on post or structure

Sign No. 12345

10 ISL SCI 1.0

- 1.0 — Transformer rating (kVA)
- SCI — Lighting control type
- ISL — Number and type of fixtures

Do NOT place on standard or structure

ELECTROLIER OR EQUIPMENT IDENTIFICATION NUMBER:

12345 - 15'-0"

- 15'-0" — Mast arm length, if shown. Do not place on standard or structure.
- 12345 — Equipment number - Place on standard or structure. Existing equipment numbers are shown in parenthesis

CONDUIT AND CONDUCTOR IDENTIFICATION:

1½"C, 2#10, 15#14, 2 DLC

- 2#10, 15#14, 2 DLC — Number and size of conductors and cables
- 1½"C — Size of conduit in inches

ø1, ø2, ø2P, etc.	Traffic phase identification for signal faces, detectors and phase diagrams
|1| |2| |3|	Project note numbers
(A) (B) (C)	Equipment description, installation or item numbers
/1\ /2\ /3\	Conduit run numbers

SIGNAL AND LIGHTING STANDARD (TYPICAL DESIGNATION):

19A - 3 - 100

- 100 — Wind velocity = 100 mph
- 3 — Case 3 arm loading
- 19A — Standard type
- Standard Plan sheet number
- Detail number or letter

MISCELLANEOUS EQUIPMENT

PROPOSED	EXISTING	
CMS	cms	Changeable message sign
		Closed circuit television camera
		Highway advisory radio pole and antenna
EMS	ems	Extinguishable message sign
M V	m v	Detection device M = Microwave sensor V = Video image sensor

WIRING DIAGRAM LEGEND

P	Pole
CB	Circuit breaker
A	Ampere
V	Volt
M	Metered
UM	Unmetered
NB	Neutral bus
GB	Ground bus
G	Equipment grounding conductor
N	Grounded conductor (Neutral)

- External conductor
- Conductor or bus
- Tie point
- Contactor coil
- Contactor, Contact NO
- Terminal blocks
- Contactor, Contact NC
- Enclosure bond
- Grounding electrode
- Circuit breaker
- Receptacle

PULL BOXES

PROPOSED	EXISTING	
		Pull box-No. 5 unless otherwise indicated or noted.
3	9A(21)	Pull box-Additional designations or descriptions

3 = No. 3½ pull box
5 = No. 5 pull box
6 = No. 6 pull box
7 = No. 7 (Ceiling pull box)
8 = No. 8 (Pendant soffit pull box)
9 = No. 9 pull box
9A = No. 9A pull box

(C) = Communications pull box
(E) = Pull box with extension
(S) = Sprinkler control pull box
(21) = Anchor bolts and conduit for future installation of Type 21 Standard
(T) = Traffic pull box

VEHICLE DETECTORS

5 J 9 U

- U = Upper, L = Lower
- Slot number in input file
- Input file (I or J)
- Phase
- Vehicle detector designation

PROPOSED	EXISTING	
		Type A detector loop. Outline of sawcut shown.
		Type B detector loop. Outline of sawcut shown.
		Type C detector loop. Outline of sawcut shown.
		Type D detector loop. Outline of sawcut shown.
		Type E detector loop. Outline of sawcut shown.
		Type Q detector loop. Outline of sawcut shown.
		Magnetic detector
DH	dh	Detector handhole
		Microwave or video detection zone

STATE OF CALIFORNIA
DEPARTMENT OF TRANSPORTATION

ELECTRICAL SYSTEMS (SYMBOLS AND ABBREVIATIONS)

NO SCALE

RSP ES-1C DATED OCTOBER 5, 2007 SUPERCEDES STANDARD PLAN ES-1C DATED MAY 1, 2006 - PAGE 402 OF THE STANDARD PLANS BOOK DATED MAY 2006.

REVISED STANDARD PLAN RSP ES-1C

2006 REVISED STANDARD PLAN RSP ES-1C

DIST	COUNTY	ROUTE	POST MILES TOTAL PROJECT	SHEET NO.	TOTAL SHEETS
10	Mer	33	17.1/26.5	26	26

REGISTERED ELECTRICAL ENGINEER

October 5, 2007
PLANS APPROVAL DATE

The State of California or its officers or agents shall not be responsible for the accuracy or completeness of electronic copies of this plan sheet.

REGISTERED PROFESSIONAL ENGINEER Jeffery G. McRae No. E14512 Exp. 6-30-08 ELECTRICAL STATE OF CALIFORNIA

To accompany plans dated 7-06-10

2006 REVISED STANDARD PLAN RSP ES-5A

LOOP INSTALLATION PROCEDURE

1. Loops shall be centered in lanes.
2. Saw slots in pavement for loop conductors as shown in details.
3. Distance between side of loop and a lead-in saw cut from adjacent detectors shall be 2'-0" minimum. Distance between lead-in saw cuts shall be 6" minimum.
4. Bottom of saw slot shall be smooth with no sharp edges.
5. Slots shall be washed until clean, blown out and thoroughly dried before installing loop conductors.
6. Adjacent loops on the same sensor unit channel shall be wound in opposite directions.
7. Identify and tag loop circuit pairs in the pull box with loop number, start (S) and finish (F) of conductor. Identify and tag lead-in-cable with sensor number and phase.
8. Install loop conductor in slot using a 3/16" to 1/4" thick wood paddle. Hold loop conductors with wood paddles (at the bottom of the sawed slot) during sealant placement.
9. No more than 2 twisted pairs shall be installed in one sawed slot.
10. Allow additional 5'-0" of slack length of conductor for the lead-in run to pull box.
11. The additional length of each conductor for each loop shall be twisted together into a pair (6 turns per 3'-4" minimum) before being placed in the slot and conduit leading to pull box.
12. Test each loop circuit for continuity, circuit resistance and insulation resistance at the pull box before filling slots.
13. Fill slots as shown in details.
14. Splice loop conductors to lead-in-cable. Splices shall be soldered.
15. End of lead-in-cable and Type 2 loop conductor shall be waterproofed prior to installing in conduit to prevent moisture from entering the cable.
16. Lead-in-cable shall not be spliced between the pull box and the controller cabinet terminals.
17. Test each loop circuit for continuity, circuit resistance and insulation resistance at the controller cabinet location.
18. Where loop conductors are not to be spliced to a lead-in-cable, the ends of the conductors shall be taped and waterproofed with electrical insulating coating.

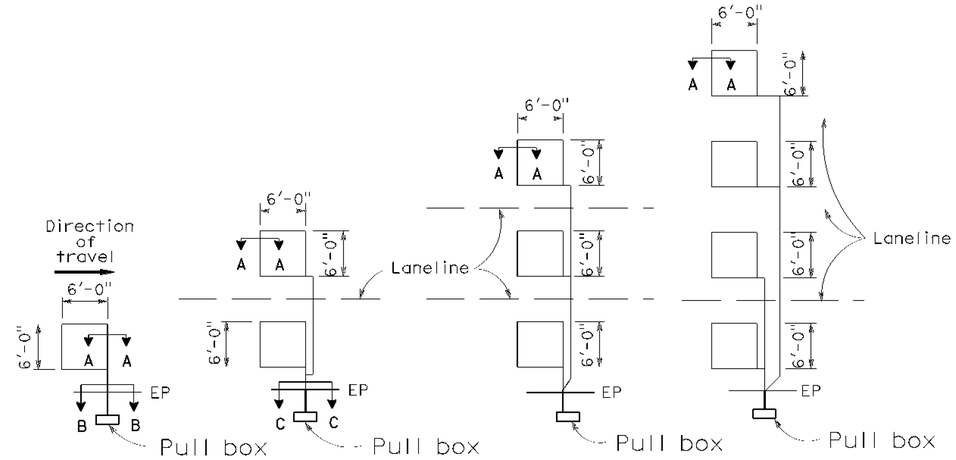

TYPE 1A INSTALLATION | TYPE 2A INSTALLATION | TYPE 3A INSTALLATION | TYPE 4A INSTALLATION

SAWCUT DETAILS

(Type A loop detector configurations illustrated)

1. 1A thru 4A = 1 Type A loop configuration in each lane.
2. 1B thru 4B = 1 Type B loop configuration in each lane.
3. 1C = 1 Type C loop configuration entering lanes as required.
4. 1D thru 4D = 1 Type D loop configuration in each lane.
5. 1E thru 4E = 1 Type E loop configuration in each lane.
6. 1Q thru 4Q = 1 Type Q loop configuration in each lane.
   (Use Type A, B, C, D, E or Q loop detector configurations only when specified or shown on plans)

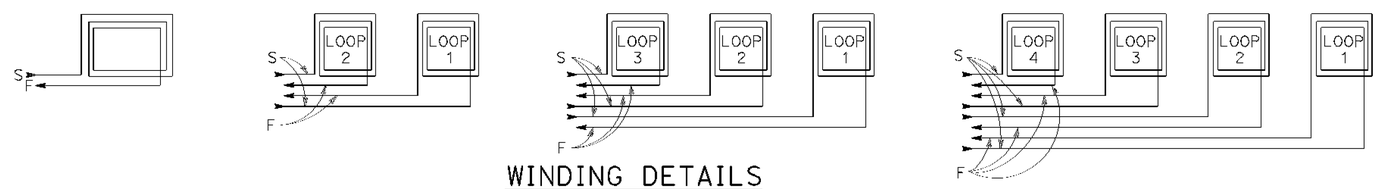

WINDING DETAILS

See Notes 6 and 7

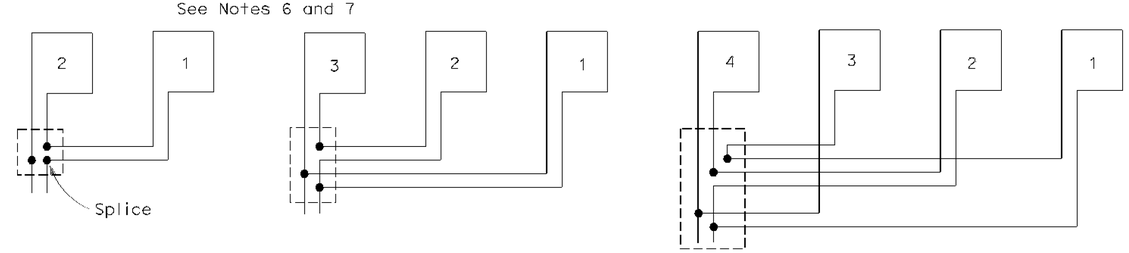

TYPICAL LOOP CONNECTIONS

(Dashed lines represent the pull box)

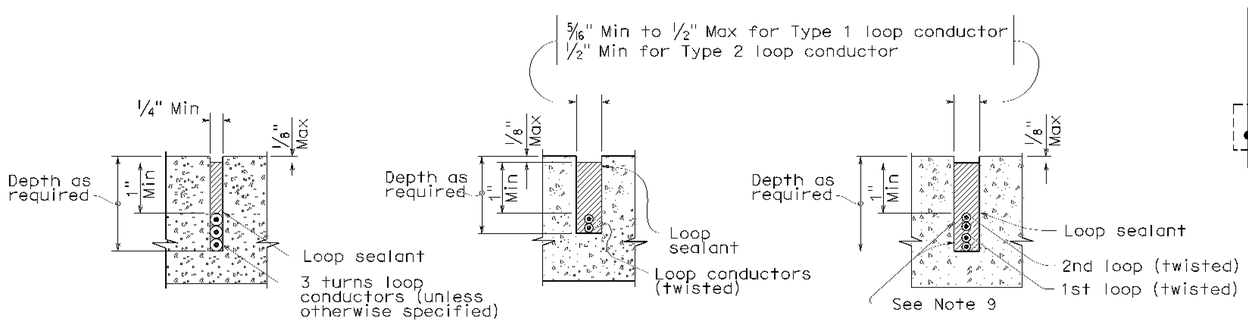

SECTION A-A | SECTION B-B | SECTION C-C

SLOT DETAILS - TYPE 1 AND TYPE 2 LOOP CONDUCTOR

STATE OF CALIFORNIA
DEPARTMENT OF TRANSPORTATION

ELECTRICAL SYSTEMS (DETECTORS)

NO SCALE

RSP ES-5A DATED OCTOBER 5, 2007 SUPERCEDES STANDARD PLAN ES-5A DATED MAY 1, 2006 - PAGE 423 OF THE STANDARD PLANS BOOK DATED MAY 2006.

REVISED STANDARD PLAN RSP ES-5A