HSSTP-P026(024)E

Dist	COUNTY	ROUTE	KILOMETER POST TOTAL PROJECT	SHEET No.	TOTAL SHEETS
10	SJ	26	8.2/10.0	1	83

STATE OF CALIFORNIA
DEPARTMENT OF TRANSPORTATION

PROJECT PLANS FOR CONSTRUCTION ON
STATE HIGHWAY
IN SAN JOAQUIN COUNTY
NEAR STOCKTON
FROM 0.5 KM WEST OF PINASCO ROAD
TO 0.5 KM EAST OF BEECHER ROAD

TO BE SUPPLEMENTED BY STANDARD PLANS DATED JULY 2004

INDEX OF SHEETS

SHEET No.	DESCRIPTION
1	TITLE AND LOCATION MAP
2-4	TYPICAL CROSS SECTIONS
5-10	LAYOUTS
11-12	PROFILE AND SUPERELEVATION DIAGRAMS
13-16	CONSTRUCTION DETAILS
17-23	EROSION CONTROL PLANS
24-38	DRAINAGE PLANS, PROFILES, DETAILS AND QUANTITIES
39-44	UTILITY PLANS
45	CONSTRUCTION AREA SIGNS
46-52	PAVEMENT DELINEATION AND SIGN PLANS
53-54	SIGN DETAILS AND QUANTITIES
55-56	SUMMARY OF QUANTITIES
57-58	ELECTRICAL PLANS
59-83	REVISED STANDARD PLANS

THE STANDARD PLANS LIST APPLICABLE TO THIS CONTRACT IS INCLUDED IN THE NOTICE TO BIDDERS AND SPECIAL PROVISIONS BOOK.

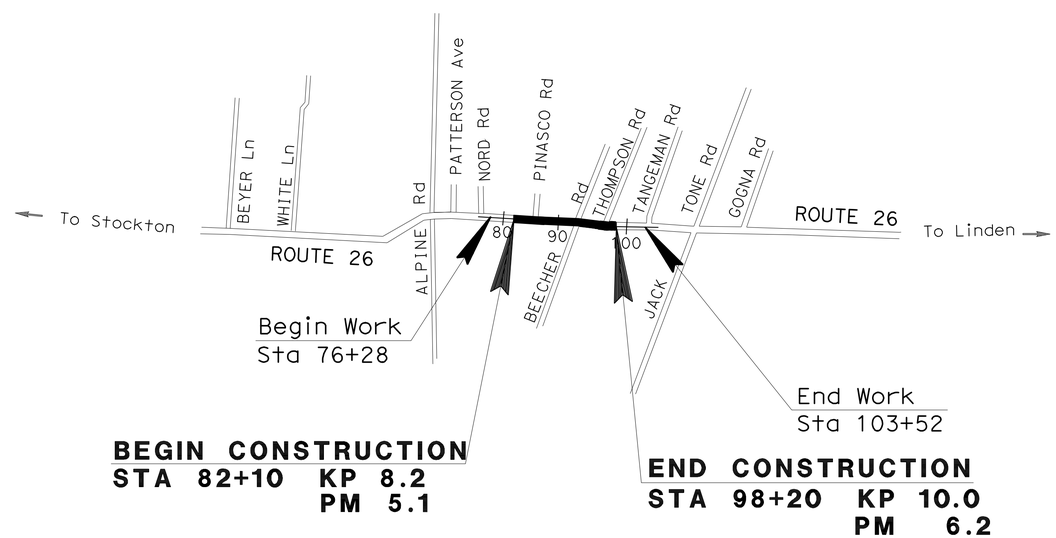

NO SCALE

THE CONTRACTOR SHALL POSSESS THE CLASS (OR CLASSES) OF LICENSE AS SPECIFIED IN THE ''NOTICE TO BIDDERS.''

PROJECT MANAGER: Arvinder Bajwa
DESIGN ENGINEER: David Sangha

07-27-09
PROJECT ENGINEER REGISTERED CIVIL ENGINEER — DATE

REGISTERED PROFESSIONAL ENGINEER
D S SANGHA
No. 59652
Exp. 12/31/09
CIVIL
STATE OF CALIFORNIA

August 24, 2009
PLANS APPROVAL DATE

THE STATE OF CALIFORNIA OR ITS OFFICERS OR AGENTS SHALL NOT BE RESPONSIBLE FOR THE ACCURACY OR COMPLETENESS OF ELECTRONIC COPIES OF THIS PLAN SHEET.

CONTRACT No.	10-0E9304
PROJECT ID	1000000029

LAST REVISION 07-27-09
DATE PLOTTED => 08-FEB-2011
TIME PLOTTED => 13:51

Dist	COUNTY	ROUTE	KILOMETER POST TOTAL PROJECT	SHEET No.	TOTAL SHEETS
10	SJ	26	8.2/10.0	2	83

REGISTERED CIVIL ENGINEER 07-27-09 DATE

8-24-09
PLANS APPROVAL DATE

REGISTERED PROFESSIONAL ENGINEER D S SANGHA No. 59652 Exp. 12/31/09 CIVIL STATE OF CALIFORNIA

THE STATE OF CALIFORNIA OR ITS OFFICERS OR AGENTS SHALL NOT BE RESPONSIBLE FOR THE ACCURACY OR COMPLETENESS OF ELECTRONIC COPIES OF THIS PLAN SHEET.

Caltrans Metric

NOTES:

1. DIMENSIONS OF THE STRUCTURAL SECTIONS ARE SUBJECT TO TOLERANCES SPECIFIED IN THE STANDARD SPECIFICATIONS.
2. SUPERELEVATION AS SHOWN OR AS DIRECTED BY THE ENGINEER.
3. FOR STATION 92+60 TO STATION 93+16 REFER TO SHEET C-2 (INTERSECTION DETAILS).
4. V-DITCH FROM STATION 86+70 TO STATION 92+60.
5. BERM FROM STATION 83+00 TO STATION 85+40.
6. V-DITCH FROM STATION 87+60 TO STATION 93+05.

ABBREVIATIONS

RHMA	RUBBERIZED HOT MIX ASPHALT
HMA	HOT MIX ASPHALT
TWLT	TWO WAY LEFT TURN

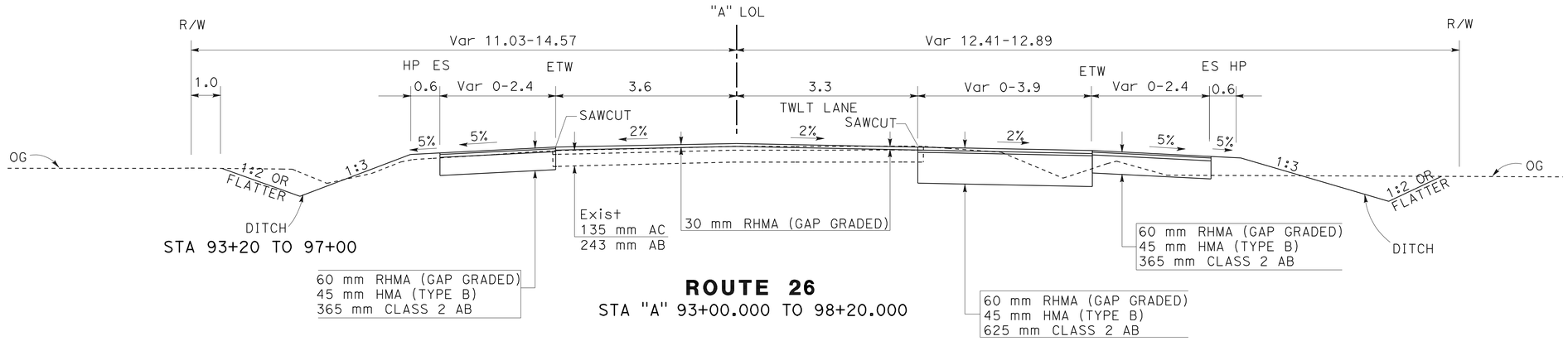

STA 93+20 TO 97+00

ROUTE 26

STA "A" 93+00.000 TO 98+20.000

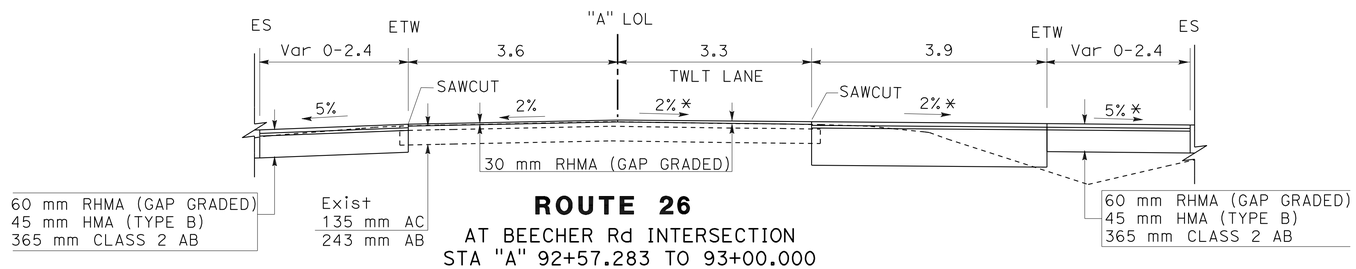

ROUTE 26

AT BEECHER Rd INTERSECTION

STA "A" 92+57.283 TO 93+00.000

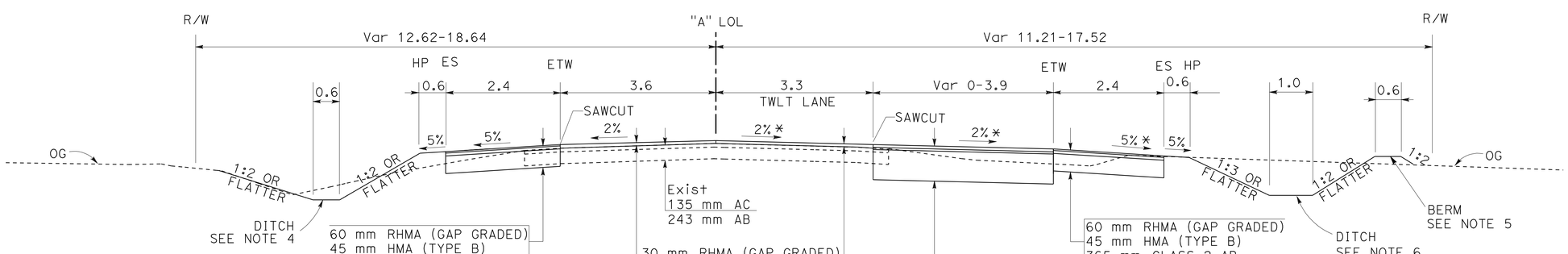

ROUTE 26

STA "A" 82+10.000 TO 92+57.283

* SUPERELEVATION FROM STA 88+85 TO STA 92+35
REFER TO SUPERELEVATION DIAGRAMS.

ALL DIMENSIONS ARE IN METERS
UNLESS OTHERWISE SHOWN

TYPICAL CROSS SECTIONS

NO SCALE

X-1

STATE OF CALIFORNIA - DEPARTMENT OF TRANSPORTATION
Caltrans
06-DESIGN

FUNCTIONAL SUPERVISOR: DAVID SANGHA
CALCULATED-DESIGNED BY: BALJIT KANDOLA
CHECKED BY: CARMELITA BELLE
REVISED BY
DATE REVISED

LAST REVISION 07-15-10
DATE PLOTTED => 14-SEP-2010
TIME PLOTTED => 11:04

Dist	COUNTY	ROUTE	KILOMETER POST TOTAL PROJECT	SHEET No.	TOTAL SHEETS
10	SJ	26	8.2/10.0	3	83

REGISTERED CIVIL ENGINEER 07-27-09 DATE

8-24-09
PLANS APPROVAL DATE

REGISTERED PROFESSIONAL ENGINEER D S SANGHA No. 59652 Exp. 12/31/09 CIVIL STATE OF CALIFORNIA

THE STATE OF CALIFORNIA OR ITS OFFICERS OR AGENTS SHALL NOT BE RESPONSIBLE FOR THE ACCURACY OR COMPLETENESS OF ELECTRONIC COPIES OF THIS PLAN SHEET.

Caltrans Metric

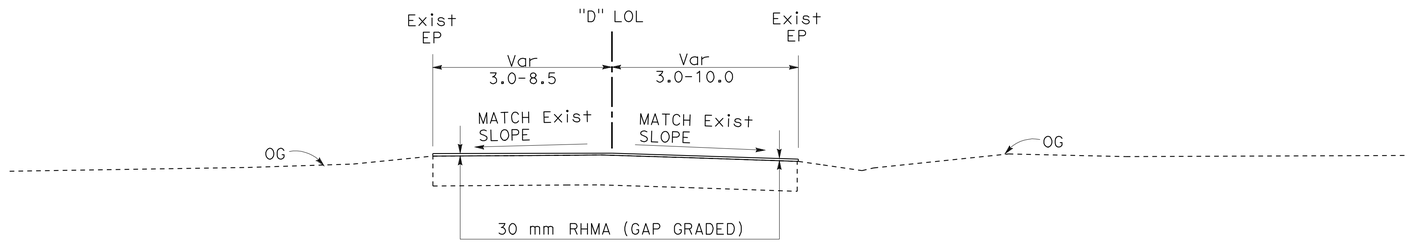

THOMPSON Rd

STA "D" 10+03.600 TO 10+31.000

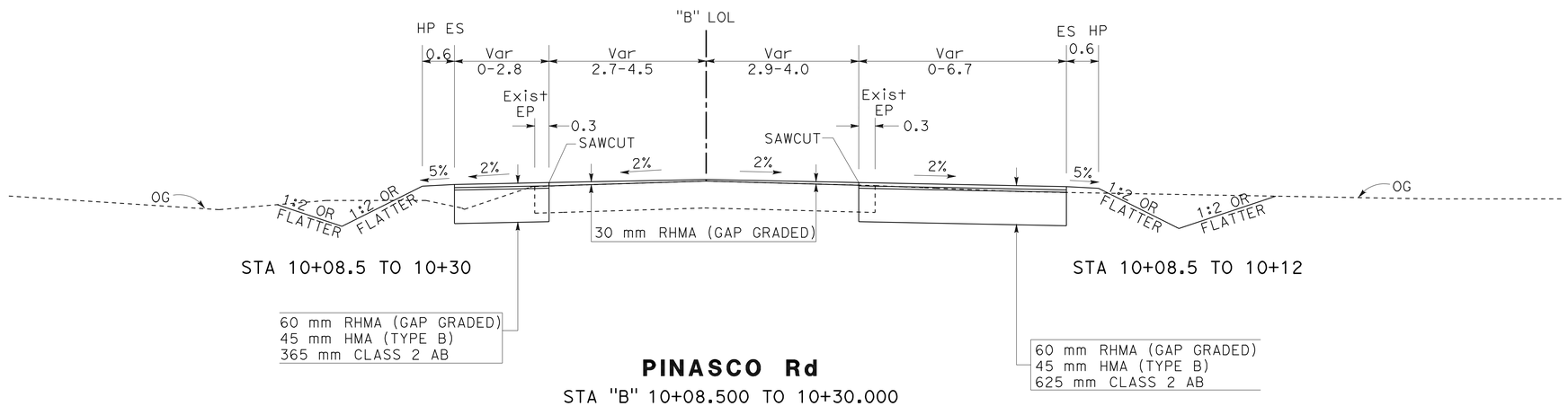

PINASCO Rd

STA "B" 10+08.500 TO 10+30.000

ALL DIMENSIONS ARE IN METERS
UNLESS OTHERWISE SHOWN

TYPICAL CROSS SECTIONS

NO SCALE

X-2

REVISED BY	DATE REVISED

CALCULATED-DESIGNED BY	BALJIT KANDOLA
CHECKED BY	CARMELITA BELLE

FUNCTIONAL SUPERVISOR **DAVID SANGHA**

STATE OF CALIFORNIA - DEPARTMENT OF TRANSPORTATION
Caltrans **06-DESIGN**

LAST REVISION 07-06-09
DATE PLOTTED => 14-SEP-2010
TIME PLOTTED => 11:04

Dist	COUNTY	ROUTE	KILOMETER POST TOTAL PROJECT	SHEET No.	TOTAL SHEETS
10	SJ	26	8.2/10.0	4	83

Caltrans Metric

REGISTERED CIVIL ENGINEER 07-27-09 DATE

8-24-09
PLANS APPROVAL DATE

REGISTERED PROFESSIONAL ENGINEER D S SANGHA No. 59652 Exp. 12/31/09 CIVIL STATE OF CALIFORNIA

THE STATE OF CALIFORNIA OR ITS OFFICERS OR AGENTS SHALL NOT BE RESPONSIBLE FOR THE ACCURACY OR COMPLETENESS OF ELECTRONIC COPIES OF THIS PLAN SHEET.

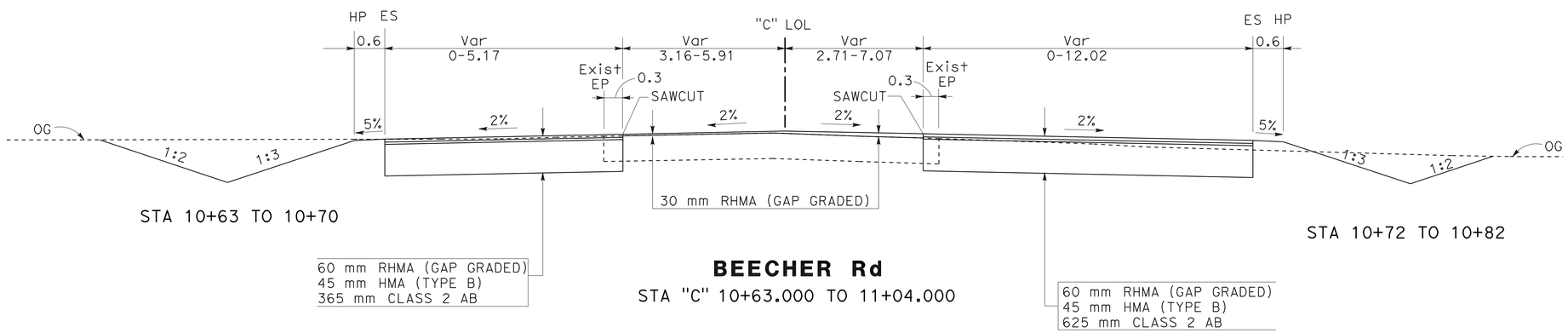

STA 10+63 TO 10+70

BEECHER Rd

STA "C" 10+63.000 TO 11+04.000

STA 10+72 TO 10+82

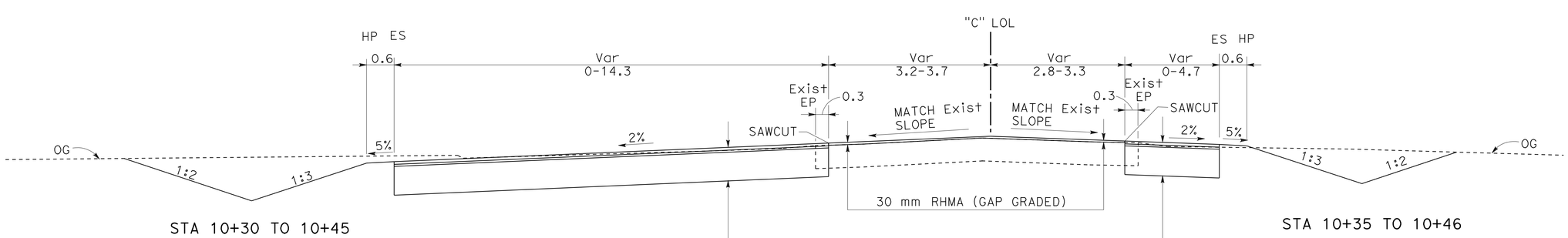

STA 10+30 TO 10+45

BEECHER Rd

STA "C" 10+06.000 TO 10+52.000

STA 10+35 TO 10+46

ALL DIMENSIONS ARE IN METERS
UNLESS OTHERWISE SHOWN

TYPICAL CROSS SECTIONS

NO SCALE

X-3

STATE OF CALIFORNIA - DEPARTMENT OF TRANSPORTATION
Caltrans
06-DESIGN

FUNCTIONAL SUPERVISOR: DAVID SANGHA
CALCULATED-DESIGNED BY: BALJIT KANDOLA
CHECKED BY: CARMELITA BELLE
REVISED BY
DATE REVISED

LAST REVISION 07-06-09 | DATE PLOTTED => 14-SEP-2010 | TIME PLOTTED => 11:04

Dist	COUNTY	ROUTE	KILOMETER POST TOTAL PROJECT	SHEET No.	TOTAL SHEETS
10	SJ	26	8.2/10.0	5	83

REGISTERED CIVIL ENGINEER 07-27-09 DATE

8-24-09
PLANS APPROVAL DATE

REGISTERED PROFESSIONAL ENGINEER D S SANGHA No. 59652 Exp.12/31/09 CIVIL STATE OF CALIFORNIA

THE STATE OF CALIFORNIA OR ITS OFFICERS OR AGENTS SHALL NOT BE RESPONSIBLE FOR THE ACCURACY OR COMPLETENESS OF ELECTRONIC COPIES OF THIS PLAN SHEET.

Caltrans Metric

LEGEND

- 75 mm Place HMA (Miscellaneous Area)
- 30 mm Cold Plane AC Pavement
  30 mm place Rubber Hot Mix Asphalt (Gap Graded)
- Pave Driveway
- Direction of Travel
- Mailbox
- Driveway No.
- Trees to be Removed

NOTES:

1. For accurate Right of Way and access Data.
   Contact Right of Way Engineering at the District Office.
2. For Driveway Radius, See Sheet C-3.

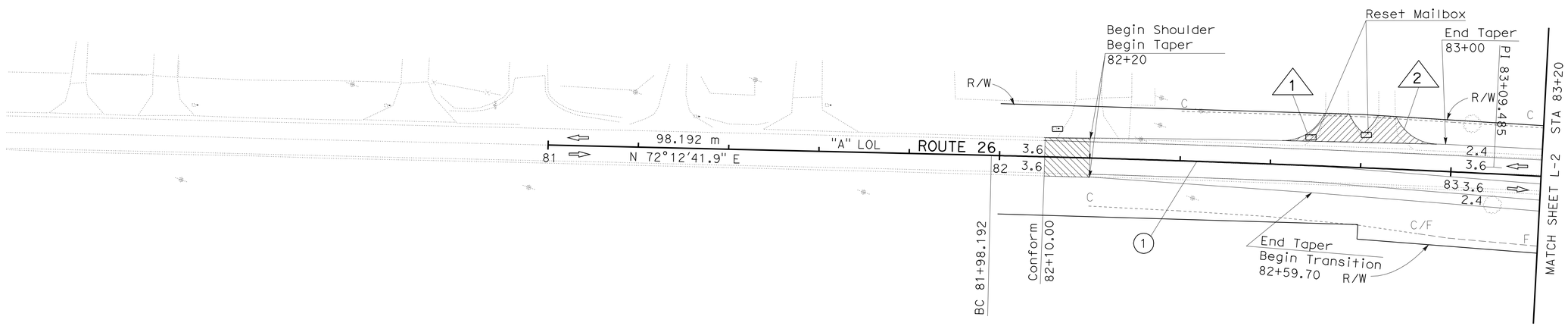

CURVE DATA

No.	R	Δ	T	L
1	4199.97	3°2'8"	111.29	222.52

ALL DIMENSIONS ARE IN METERS
UNLESS OTHERWISE SHOWN

SCALE 1:500

LAYOUT L-1

STATE OF CALIFORNIA - DEPARTMENT OF TRANSPORTATION
Caltrans 06-DESIGN

FUNCTIONAL SUPERVISOR DAVID SANGHA
CALCULATED-DESIGNED BY BALJIT KANDOLA
CHECKED BY CARMELITA BELLE
REVISED BY
DATE REVISED

LAST REVISION 09-07-10 DATE PLOTTED => 14-SEP-2010 TIME PLOTTED => 11:04

NOTE:

For accurate Right of Way and access Data.
Contact Right of Way Engineering at the Disctric Office.

Dist	COUNTY	ROUTE	KILOMETER POST TOTAL PROJECT	SHEET No.	TOTAL SHEETS
10	SJ	26	8.2/10.0	6	83

REGISTERED CIVIL ENGINEER 07-27-09 DATE

8-24-09
PLANS APPROVAL DATE

REGISTERED PROFESSIONAL ENGINEER D S SANGHA No. 59652 Exp.12/31/09 CIVIL STATE OF CALIFORNIA

THE STATE OF CALIFORNIA OR ITS OFFICERS OR AGENTS SHALL NOT BE RESPONSIBLE FOR THE ACCURACY OR COMPLETENESS OF ELECTRONIC COPIES OF THIS PLAN SHEET.

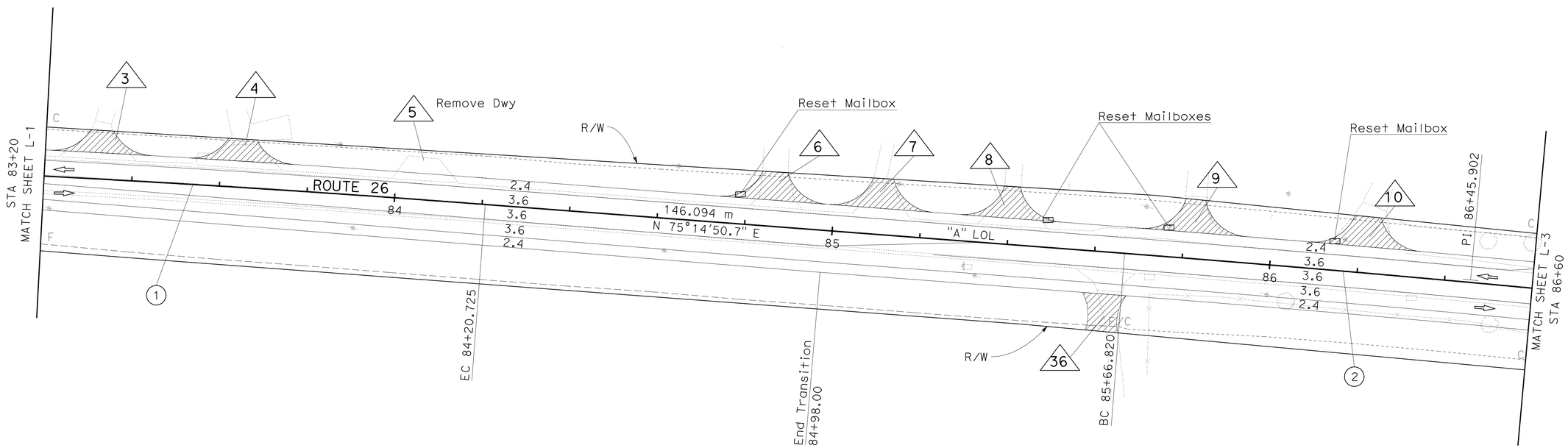

CURVE DATA

No.	R	Δ	T	L
1	4199.97	3°2'8"	111.29	222.52
2	5250.09	1°43'33"	79.08	158.15

ALL DIMENSIONS ARE IN METERS
UNLESS OTHERWISE SHOWN

SCALE 1:500

LAYOUT L-2

STATE OF CALIFORNIA - DEPARTMENT OF TRANSPORTATION
Caltrans
06-DESIGN

FUNCTIONAL SUPERVISOR: DAVID SANGHA
CALCULATED-DESIGNED BY: BALJIT KANDOLA
CHECKED BY: CARMELITA BELLE
REVISED BY / DATE REVISED

LAST REVISION 03-11-10 | DATE PLOTTED => 14-SEP-2010 | TIME PLOTTED => 11:04

Dist	COUNTY	ROUTE	KILOMETER POST TOTAL PROJECT	SHEET No.	TOTAL SHEETS
10	SJ	26	8.2/10.0	7	83

REGISTERED CIVIL ENGINEER 07-27-09 DATE

8-24-09
PLANS APPROVAL DATE

REGISTERED PROFESSIONAL ENGINEER D S SANGHA No. 59652 Exp.12/31/09 CIVIL STATE OF CALIFORNIA

THE STATE OF CALIFORNIA OR ITS OFFICERS OR AGENTS SHALL NOT BE RESPONSIBLE FOR THE ACCURACY OR COMPLETENESS OF ELECTRONIC COPIES OF THIS PLAN SHEET.

Caltrans Metric

NOTE:

For accurate Right of Way and access Data,
Contact Right of Way Engineering at District Office.

CURVE DATA

No.	R	Δ	T	L
2	5250.09	1°43'33"	79.08	158.15

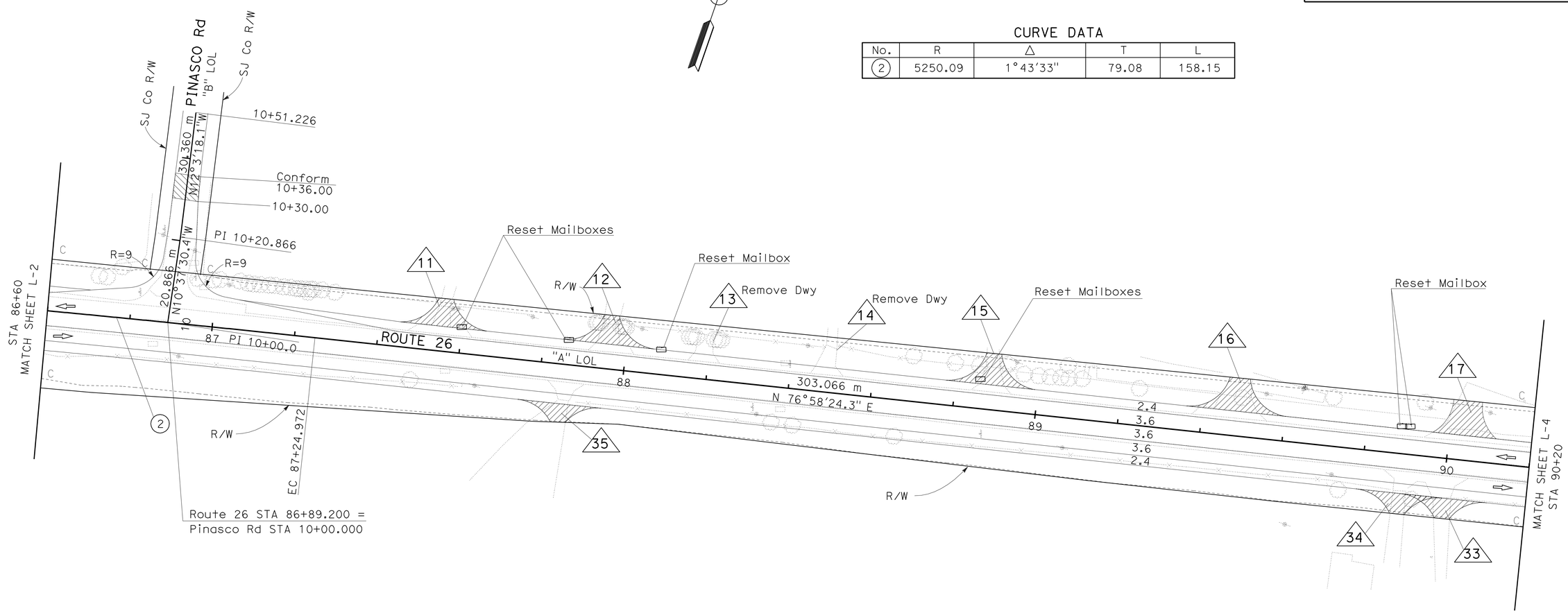

ALL DIMENSIONS ARE IN METERS
UNLESS OTHERWISE SHOWN

SCALE 1:500

LAYOUT
L-3

STATE OF CALIFORNIA - DEPARTMENT OF TRANSPORTATION
Caltrans 06-DESIGN

FUNCTIONAL SUPERVISOR DAVID SANGHA
CALCULATED-DESIGNED BY BALJIT KANDOLA
CHECKED BY CARMELITA BELLE
REVISED BY
DATE REVISED

LAST REVISION 03-11-10
DATE PLOTTED => 14-SEP-2010
TIME PLOTTED => 11:05

Dist	COUNTY	ROUTE	KILOMETER POST TOTAL PROJECT	SHEET No.	TOTAL SHEETS
10	SJ	26	8.2/10.0	8	83

REGISTERED CIVIL ENGINEER 07-27-09 DATE

8-24-09
PLANS APPROVAL DATE

REGISTERED PROFESSIONAL ENGINEER D S SANGHA No. 59652 Exp. 12/31/09 CIVIL STATE OF CALIFORNIA

THE STATE OF CALIFORNIA OR ITS OFFICERS OR AGENTS SHALL NOT BE RESPONSIBLE FOR THE ACCURACY OR COMPLETENESS OF ELECTRONIC COPIES OF THIS PLAN SHEET.

Caltrans Metric

NOTE:

For accurate Right of Way and access Data,
Contact Right of Way Engineering at District Office.

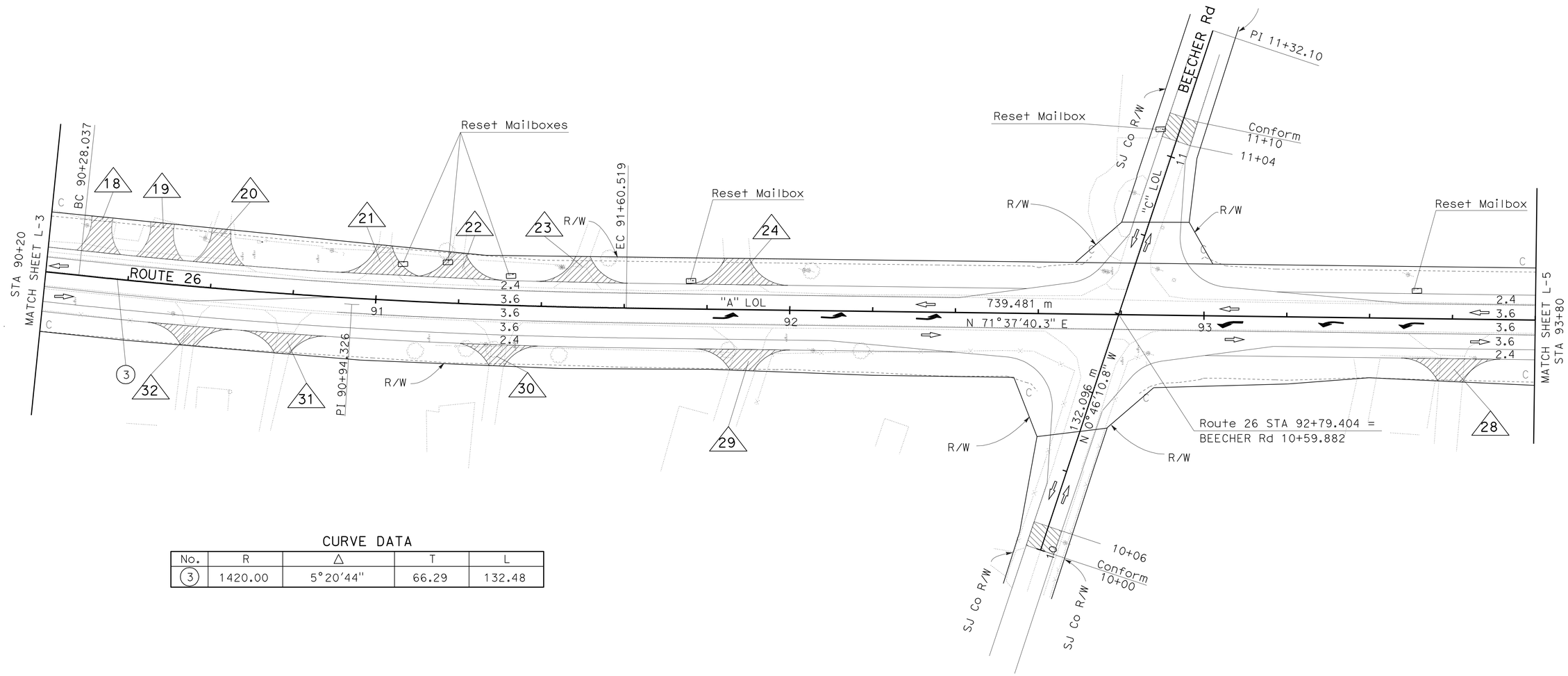

CURVE DATA

No.	R	Δ	T	L
3	1420.00	5°20'44"	66.29	132.48

ALL DIMENSIONS ARE IN METERS
UNLESS OTHERWISE SHOWN

SCALE 1:500

LAYOUT L-4

STATE OF CALIFORNIA - DEPARTMENT OF TRANSPORTATION
Caltrans
06-DESIGN

FUNCTIONAL SUPERVISOR: DAVID SANGHA
CALCULATED-DESIGNED BY: BALJIT KANDOLA
CHECKED BY: CARMELITA BELLE
REVISED BY
DATE REVISED

LAST REVISION 03-11-10
DATE PLOTTED => 14-SEP-2010
TIME PLOTTED => 11:05

NOTE:

For accurate Right of Way and access Data,
Contact Right of Way Engineering at District Office.

Caltrans Metric

Dist	COUNTY	ROUTE	KILOMETER POST TOTAL PROJECT	SHEET No.	TOTAL SHEETS
10	SJ	26	8.2/10.0	9	83

07-27-09
REGISTERED CIVIL ENGINEER DATE

8-24-09
PLANS APPROVAL DATE

REGISTERED PROFESSIONAL ENGINEER
D S SANGHA
No. 59652
Exp. 12/31/09
CIVIL
STATE OF CALIFORNIA

THE STATE OF CALIFORNIA OR ITS OFFICERS OR AGENTS SHALL NOT BE RESPONSIBLE FOR THE ACCURACY OR COMPLETENESS OF ELECTRONIC COPIES OF THIS PLAN SHEET.

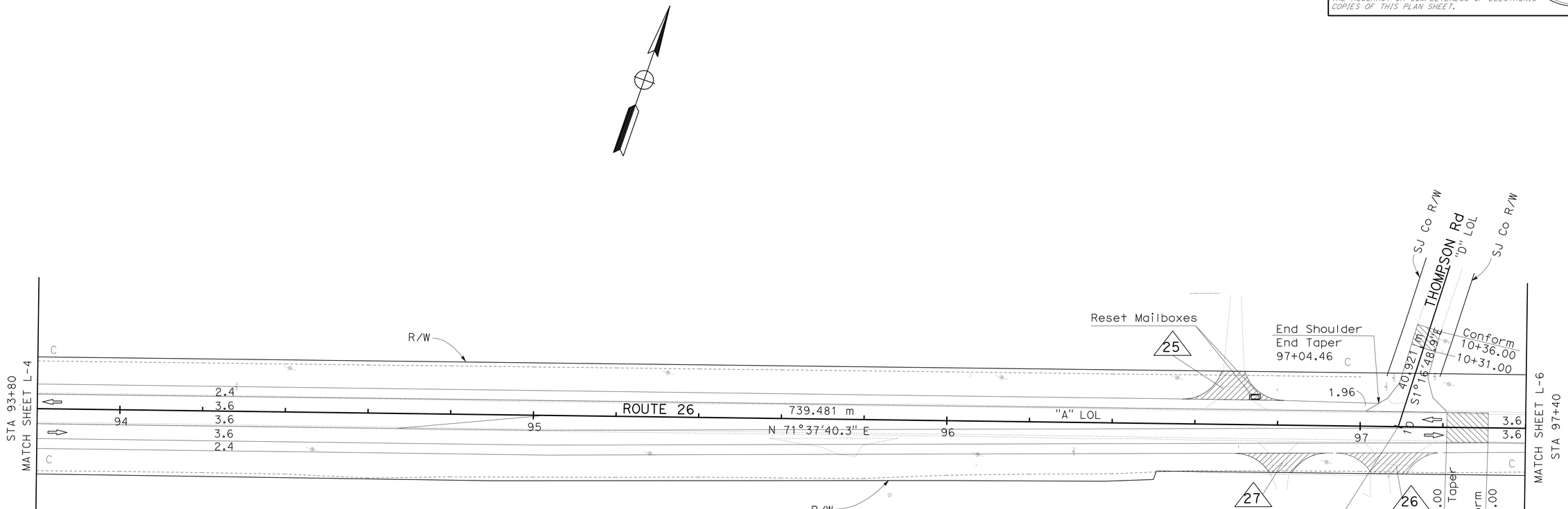

ALL DIMENSIONS ARE IN METERS
UNLESS OTHERWISE SHOWN

SCALE 1:500

LAYOUT
L-5

CALCULATED-DESIGNED BY	BALJIT KANDOLA
CHECKED BY	CARMELITA BELLE
REVISED BY	
DATE REVISED	
FUNCTIONAL SUPERVISOR	DAVID SANGHA

STATE OF CALIFORNIA - DEPARTMENT OF TRANSPORTATION
Caltrans 06-DESIGN

LAST REVISION 03-11-10
DATE PLOTTED => 14-SEP-2010
TIME PLOTTED => 11:05

Dist	COUNTY	ROUTE	KILOMETER POST TOTAL PROJECT	SHEET No.	TOTAL SHEETS
10	SJ	26	8.2/10.0	10	83

REGISTERED CIVIL ENGINEER 07-27-09 DATE

8-04-09
PLANS APPROVAL DATE

REGISTERED PROFESSIONAL ENGINEER
D S SANGHA
No. 59652
Exp. 12/31/09
CIVIL
STATE OF CALIFORNIA

THE STATE OF CALIFORNIA OR ITS OFFICERS OR AGENTS SHALL NOT BE RESPONSIBLE FOR THE ACCURACY OR COMPLETENESS OF ELECTRONIC COPIES OF THIS PLAN SHEET.

Caltrans Metric

NOTE:

For accurate Right of Way and access Data,
Contact Right of Way Engineering at District Office.

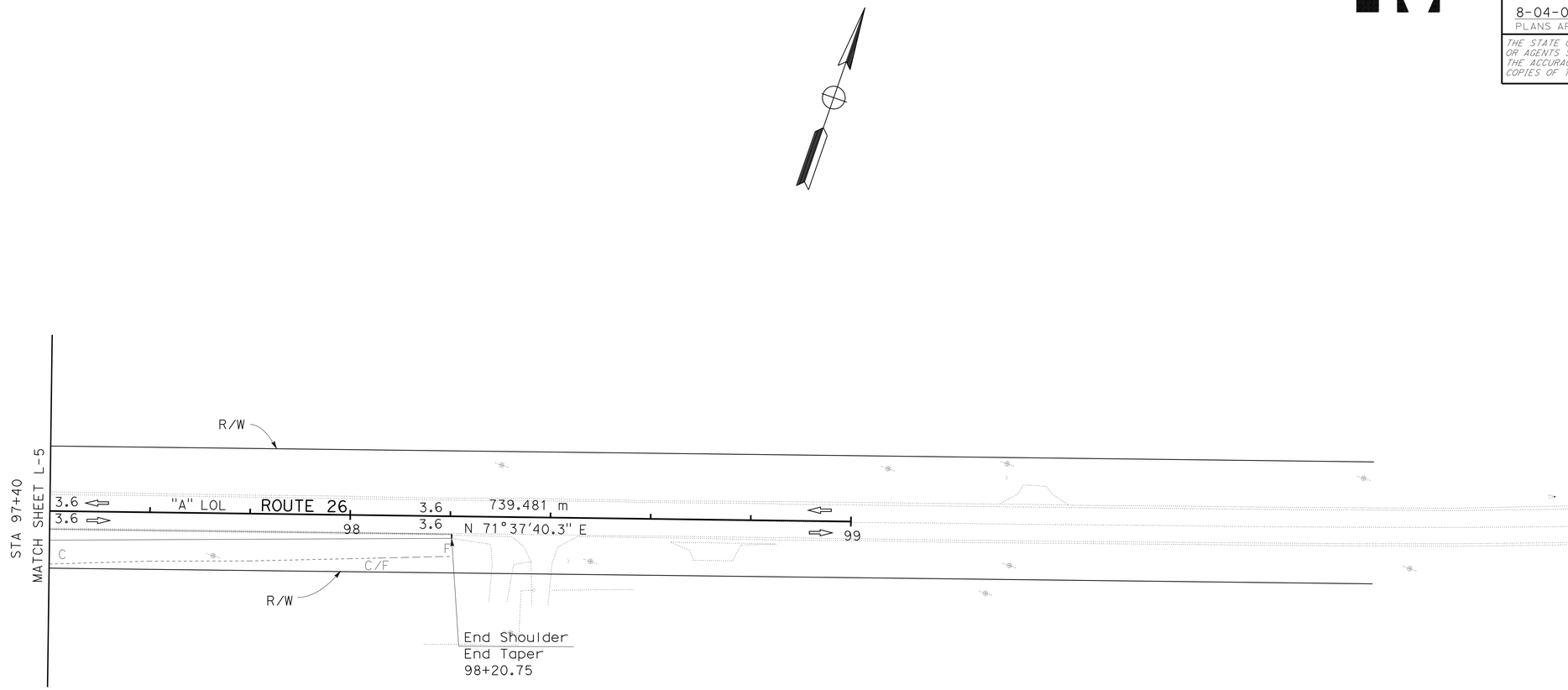

ALL DIMENSIONS ARE IN METERS
UNLESS OTHERWISE SHOWN

SCALE 1:500

LAYOUT
L-6

STATE OF CALIFORNIA - DEPARTMENT OF TRANSPORTATION
Caltrans 06-DESIGN

FUNCTIONAL SUPERVISOR DAVID SANGHA
CALCULATED-DESIGNED BY BALJIT KANDOLA
CHECKED BY CARMELITA BELLE
REVISED BY
DATE REVISED

LAST REVISION DATE PLOTTED => 14-SEP-2010
07-06-09 TIME PLOTTED => 11:05

Dist	COUNTY	ROUTE	KILOMETER POST TOTAL PROJECT	SHEET No.	TOTAL SHEETS
10	SJ	26	8.2/10.0	11	83

REGISTERED CIVIL ENGINEER 07-28-09 DATE

8-24-09
PLANS APPROVAL DATE

REGISTERED PROFESSIONAL ENGINEER D S SANGHA No. 59652 Exp. 12/31/09 CIVIL STATE OF CALIFORNIA

THE STATE OF CALIFORNIA OR ITS OFFICERS OR AGENTS SHALL NOT BE RESPONSIBLE FOR THE ACCURACY OR COMPLETENESS OF ELEVECTRONIC COPIES OF THIS PLAN SHEET.

Caltrans Metric

REVISED BY | DATE REVISED

BALJIT KANDOLA | CARMELITA BELLE

CALCULATED-DESIGNED BY | CHECKED BY

FUNCTIONAL SUPERVISOR **DAVID SANGHA**

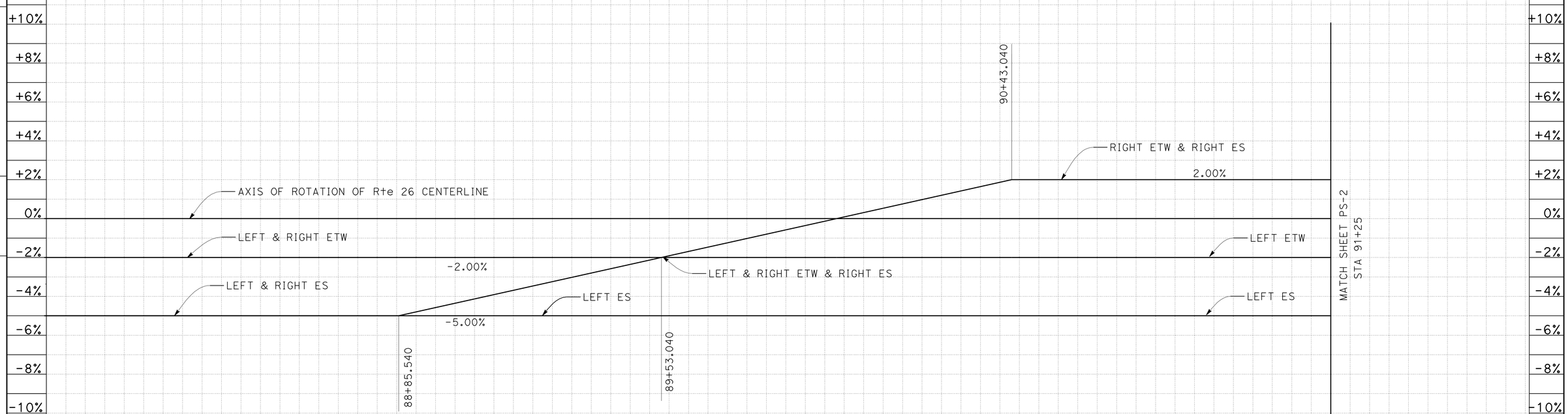

ROUTE 26 SUPERELEVATION DIAGRAM

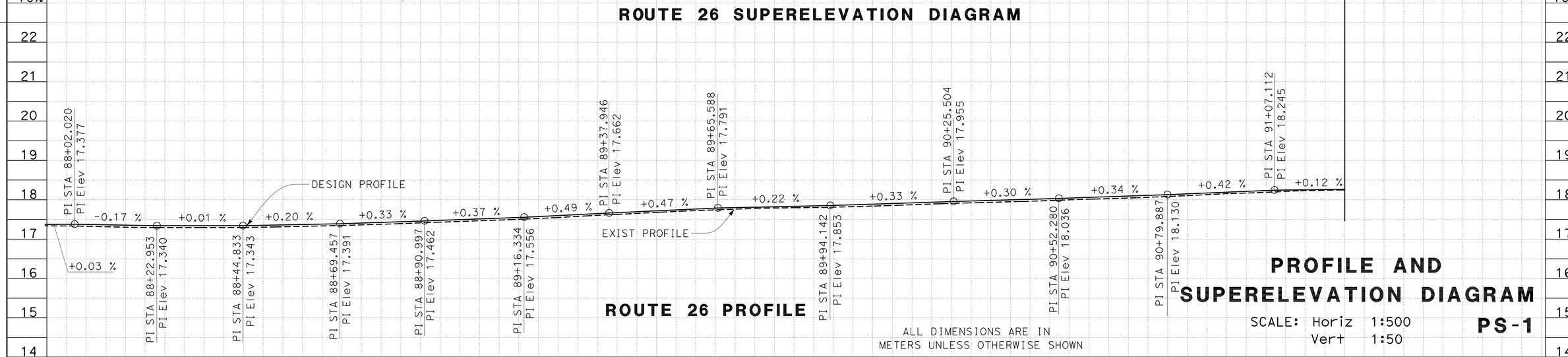

ROUTE 26 PROFILE

ALL DIMENSIONS ARE IN METERS UNLESS OTHERWISE SHOWN

Station	88+00	88+20	88+40	88+60	88+80	89+00	89+20	89+40	89+60	89+80	90+00	90+20	90+40	90+60	90+80	91+00	91+20	91+40	91+60

m^3	
Exc	1720
Emb	305

STATE OF CALIFORNIA - DEPARTMENT OF TRANSPORTATION
06-DESIGN
Caltrans

PROFILE AND SUPERELEVATION DIAGRAM

SCALE: Horiz 1:500
Vert 1:50

PS-1

LAST REVISION 04-06-09 | DATE PLOTTED => 14-SEP-2010 | TIME PLOTTED => 11:05

Dist	COUNTY	ROUTE	KILOMETER POST TOTAL PROJECT	SHEET No.	TOTAL SHEETS
10	SJ	26	8.2/10.0	12	83

REGISTERED CIVIL ENGINEER 03-30-09 DATE

8-24-09
PLANS APPROVAL DATE

REGISTERED PROFESSIONAL ENGINEER D S SANGHA No. 59652 Exp. 12/31/09 CIVIL STATE OF CALIFORNIA

THE STATE OF CALIFORNIA OR ITS OFFICERS OR AGENTS SHALL NOT BE RESPONSIBLE FOR THE ACCURACY OR COMPLETENESS OF ELEVECTRONIC COPIES OF THIS PLAN SHEET.

Caltrans Metric

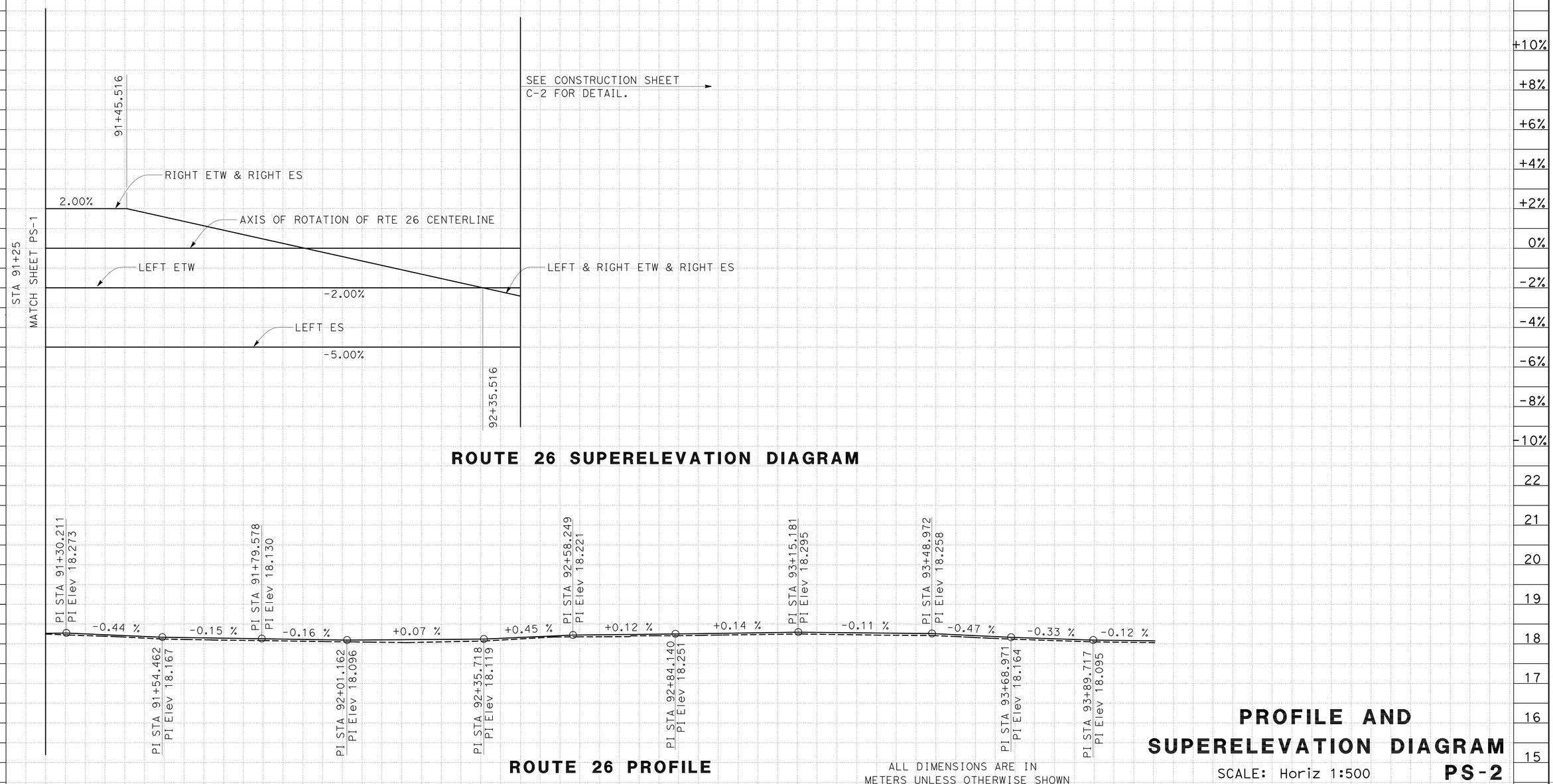

ALL DIMENSIONS ARE IN METERS UNLESS OTHERWISE SHOWN

PROFILE AND SUPERELEVATION DIAGRAM

SCALE: Horiz 1:500
Vert 1:50

PS-2

STATE OF CALIFORNIA - DEPARTMENT OF TRANSPORTATION
Caltrans
06-DESIGN

FUNCTIONAL SUPERVISOR: DAVID SANGHA

CALCULATED-DESIGNED BY: BALJIT KANDOLA
CHECKED BY: CARMELITA BELLE

REVISED BY
DATE REVISED

LAST REVISION DATE PLOTTED => 14-SEP-2010
TIME PLOTTED => 11:05
04-06-09

Dist	COUNTY	ROUTE	KILOMETER POST TOTAL PROJECT	SHEET No.	TOTAL SHEETS
10	SJ	26	8.2/10.0	13	83

REGISTERED CIVIL ENGINEER 07-27-09 DATE

8-24-09
PLANS APPROVAL DATE

REGISTERED PROFESSIONAL ENGINEER D S SANGHA No. 59652 Exp. 12/31/09 CIVIL STATE OF CALIFORNIA

THE STATE OF CALIFORNIA OR ITS OFFICERS OR AGENTS SHALL NOT BE RESPONSIBLE FOR THE ACCURACY OR COMPLETENESS OF ELECTRONIC COPIES OF THIS PLAN SHEET.

Caltrans Metric

LEGEND

70mm PLACE HMA (MISCELLANEOUS AREA)

30mm COLD PLANE AC Pvmt
30mm PLACE RHMA (GAP GRADED)

DIRECTION OF TRAVEL

NOTES:

1. SEE DRAINAGE SHEETS FOR SLOTTED PIPE INFORMATION.
2. SEE TYPICAL CROSS SECTIONS FOR NEW STRUCTURAL SECTION.
3. SAWCUT 0.30m FROM EP.

ABBREVIATION:

RHMA-RUBBERIZED HOT MIX ASPHALT

CURVE DATA

No.	R	Δ	T	L
4	9.00	76°50'1"	7.14	12.07
5	9.00	82°35'35"	7.91	12.97

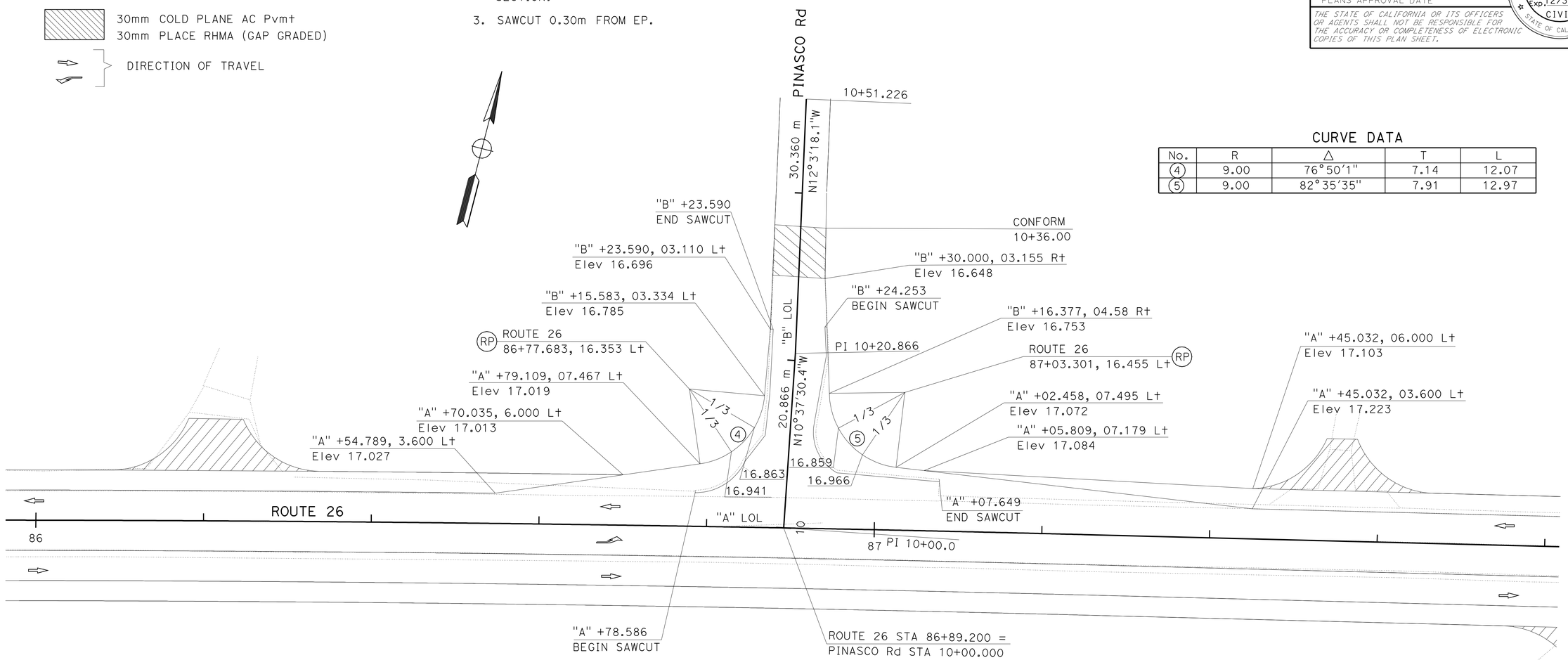

CONSTRUCTION DETAILS

C-1

ALL DIMENSIONS ARE IN METERS
UNLESS OTHERWISE SHOWN

SCALE 1:250

STATE OF CALIFORNIA - DEPARTMENT OF TRANSPORTATION
Caltrans
06-DESIGN

FUNCTIONAL SUPERVISOR: DAVID SANGHA
CALCULATED-DESIGNED BY: BALJIT KANDOLA
CHECKED BY: CARMELITA BELLE
REVISED BY / DATE REVISED

LAST REVISION 05-08-09
DATE PLOTTED => 14-SEP-2010
TIME PLOTTED => 11:05

Dist	COUNTY	ROUTE	KILOMETER POST TOTAL PROJECT	SHEET No.	TOTAL SHEETS
10	SJ	26	8.2/10.0	14	83

REGISTERED CIVIL ENGINEER 07-27-09 DATE

8-24-09
PLANS APPROVAL DATE

REGISTERED PROFESSIONAL ENGINEER D S SANGHA No. 59652 Exp. 12/31/09 CIVIL STATE OF CALIFORNIA

THE STATE OF CALIFORNIA OR ITS OFFICERS OR AGENTS SHALL NOT BE RESPONSIBLE FOR THE ACCURACY OR COMPLETENESS OF ELECTRONIC COPIES OF THIS PLAN SHEET.

Caltrans Metric

CURVE DATA

No.	R	Δ	T	L
6	12.00	41°39'40"	4.57	8.73
7	12.00	88°40'45"	11.73	18.57
8	12.00	41°39'41"	4.57	8.73
9	12.00	88°40'44"	11.73	18.57

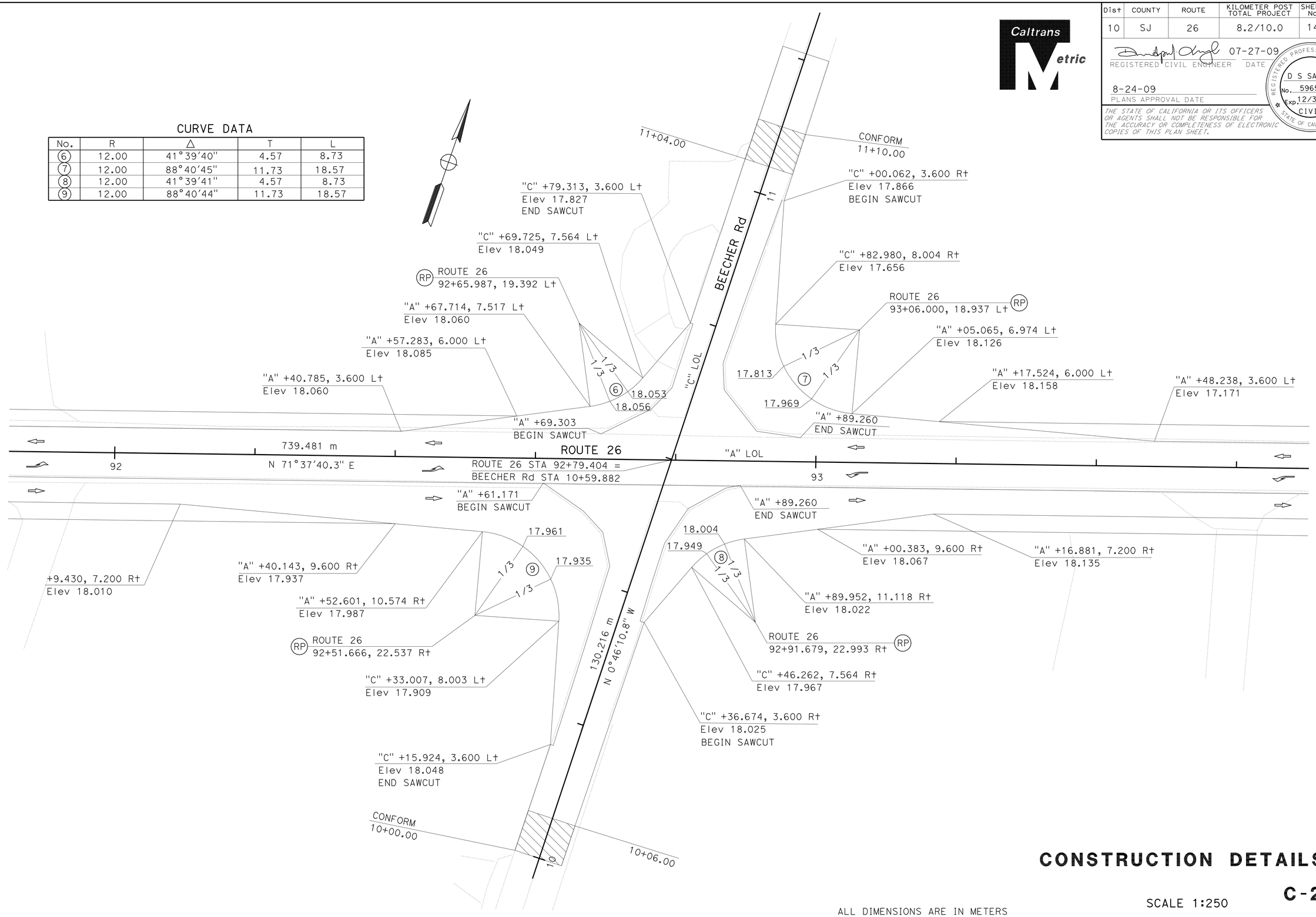

CONSTRUCTION DETAILS

SCALE 1:250

C-2

ALL DIMENSIONS ARE IN METERS
UNLESS OTHERWISE SHOWN

STATE OF CALIFORNIA - DEPARTMENT OF TRANSPORTATION
Caltrans
06-DESIGN

FUNCTIONAL SUPERVISOR DAVID SANGHA
CALCULATED-DESIGNED BY BALJIT KANDOLA
CHECKED BY CARMELITA BELLE
REVISED BY
DATE REVISED

LAST REVISION 04-06-09
DATE PLOTTED => 14-SEP-2010
TIME PLOTTED => 11:05

Dist	COUNTY	ROUTE	KILOMETER POST TOTAL PROJECT	SHEET No.	TOTAL SHEETS
10	SJ	26	8.2/10.0	15	83

Caltrans Metric

07-27-09
REGISTERED CIVIL ENGINEER DATE

8-24-09
PLANS APPROVAL DATE

REGISTERED PROFESSIONAL ENGINEER D S SANGHA No. 59652 Exp. 12/31/09 CIVIL STATE OF CALIFORNIA

THE STATE OF CALIFORNIA OR ITS OFFICERS OR AGENTS SHALL NOT BE RESPONSIBLE FOR THE ACCURACY OR COMPLETENESS OF ELECTRONIC COPIES OF THIS PLAN SHEET.

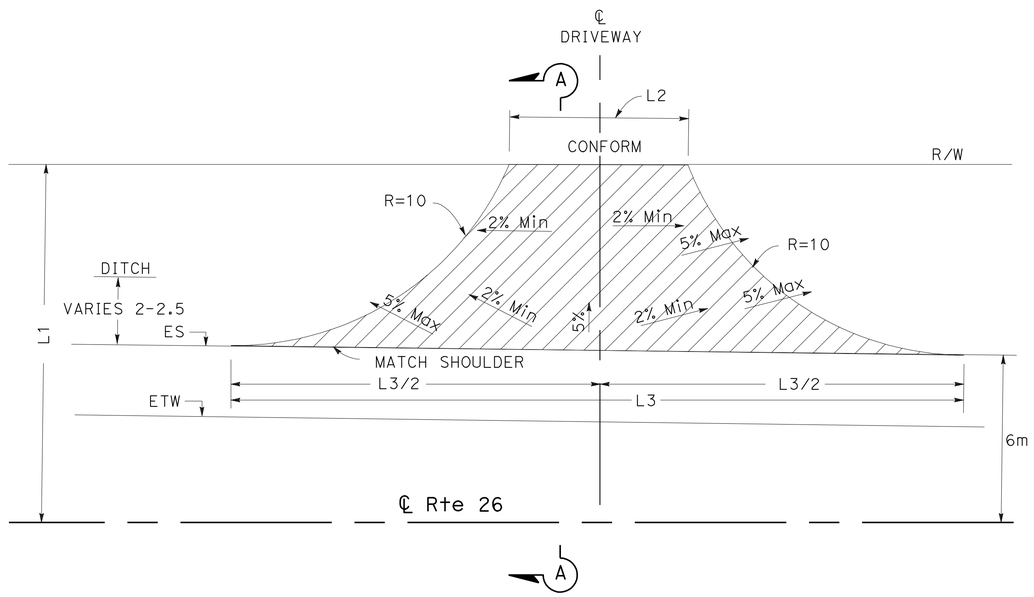

TYPICAL DRIVEWAY APPROACH

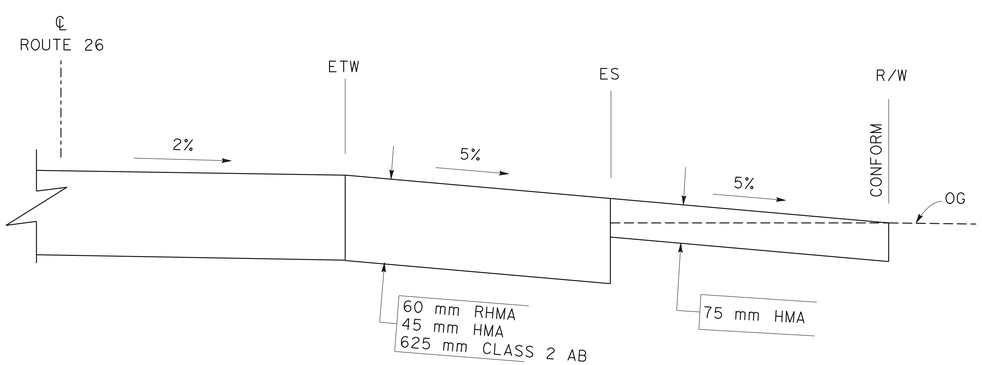

SECTION A-A

DRIVEWAY LOCATIONS

No.	* STATION	LOCATION	ACCESS OPENING (L2)	OFFSET FROM ℄ Rte 26 (L1)	LENGTH AT OPENING (L3)	AREA
		SIDE	m	m	m	m^2
1	"A" 82+75.3	North	5.5	11.7	17.93	113.43
2	"A" 82+86.4	North	4.1	11.7	16.32	
3	"A" 83+32.7	North	5.2	11.1	22.51	52.55
4	"A" 83+65.2	North	6.4	11.0	23.74	57.87
6	"A" 84+86.6	North	5.7	12.5	24.35	69.53
7	"A" 85+11.3	North	4.6	12.8	23.54	65.96
8	"A" 85+40.7	North	3.6	13.3	22.73	62.58
9	"A" 85+82.6	North	4.4	13.5	23.70	71.14
10	"A" 86+21.7	North	6.0	12.9	24.93	76.22
11	"A" 87+56	North	3.2	12.8	21.15	56.06
12	"A" 87+96.3	North	3.0	13.0	22.06	56.46
15	"A" 88+89.6	North	2.7	13.6	21.66	58.40
16	"A" 89+48.8	North	4.9	14.0	24.49	78.79
17	"A" 90+3.7	North	7.0	14.4	15.40	79.36
18	"A" 90+32.3	North	5.2	14.6	10.70	55.04
19	"A" 90+47.0	North	5.8	14.6	11.40	60.62
20	"A" 90+61.5	North	4.6	14.4	12.50	57.28
21	"A" 91+1.9	North	2.9	13.2	19.80	54.56
22	"A" 91+19.8	North	3.6	12.3	20.55	52.62
23	"A" 91+50.2	North	3.6	12.3	22.23	53.98
24	"A" 91+87.6	North	6.0	12.3	24.57	70.24

* STATION IS AT ℄ DRIVEWAY.

DRIVEWAY LOCATIONS

No.	* STATION	LOCATION	ACCESS OPENING (L2)	OFFSET FROM ℄ Rte 26 (L1)	LENGTH AT OPENING (L3)	AREA
		SIDE	m	m	m	m^2
25	"A" 96+69.6	North	5.5	12.9	24.59	73.06
26	"A" 97+7.7	South	9.0	11.4	26.55	67.84
27	"A" 96+81.0	South	5.7	11.5	22.29	49.09
28	"A" 93+61.4	South	6.0	15.1	23.87	60.89
29	"A" 91+89.5	South	6.0	14.7	23.05	54.35
30	"A" 91+30.2	South	3.6	14.7	18.89	43.48
31	"A" 90+78.9	South	3.6	14.4	20.64	42.05
32	"A" 90+56.2	South	3.6	14.3	20.49	40.96
33	"A" 90+0.71	South	3.6	14.5	16.00	42.40
34	"A" 88+89.9	South	3.6	14.6	16.00	42.81
35	"A" 87+85	South	3.6	14.1	20.26	38.16
36	"A" 85+62.9	South	7.5	18.1	10.00	63.26

ALL DIMENSIONS ARE IN METERS
UNLESS OTHERWISE SHOWN

CONSTRUCTION DETAILS

NO SCALE

C-3

REVISED BY | DATE REVISED
BALJIT KANDOLA | CARMELITA BELLE
CALCULATED-DESIGNED BY | CHECKED BY
FUNCTIONAL SUPERVISOR
DAVID SANGHA
STATE OF CALIFORNIA - DEPARTMENT OF TRANSPORTATION
06-DESIGN
Caltrans

LAST REVISION 03-11-10 | DATE PLOTTED => 14-SEP-2010 | TIME PLOTTED => 11:05

Dist	COUNTY	ROUTE	KILOMETER POST TOTAL PROJECT	SHEET No.	TOTAL SHEETS
10	SJ	26	8.2/10.0	16	83

REGISTERED CIVIL ENGINEER 07-27-09 DATE

8-24-09
PLANS APPROVAL DATE

REGISTERED PROFESSIONAL ENGINEER D S SANGHA No. 59652 Exp. 12/31/09 CIVIL STATE OF CALIFORNIA

THE STATE OF CALIFORNIA OR ITS OFFICERS OR AGENTS SHALL NOT BE RESPONSIBLE FOR THE ACCURACY OR COMPLETENESS OF ELECTRONIC COPIES OF THIS PLAN SHEET.

Caltrans Metric

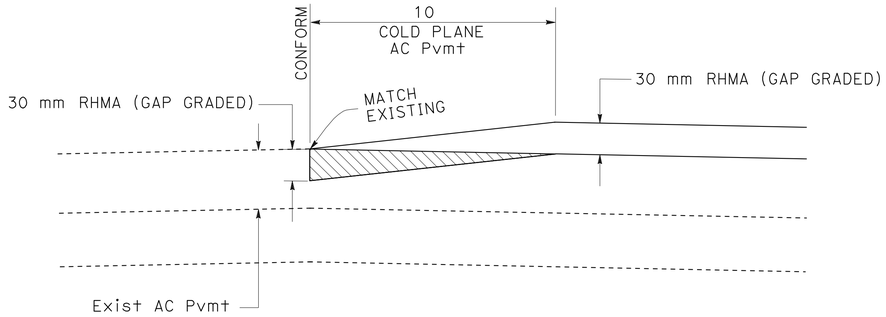

TYPICAL LONGITUDINAL PAVEMENT TRANSITION

ROUTE 26 KP 8.2 AND KP 9.7

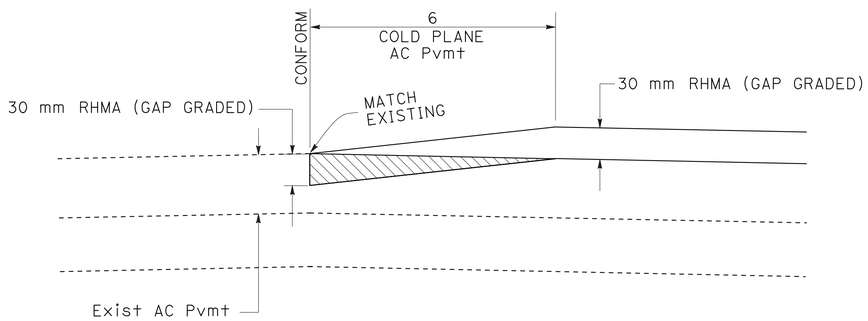

TYPICAL LONGITUDINAL PAVEMENT TRANSITION

PINASCO STA 10+30
BEECHER Rd STA 11+04 & STA 10+00
THOMPSON STA 10+30

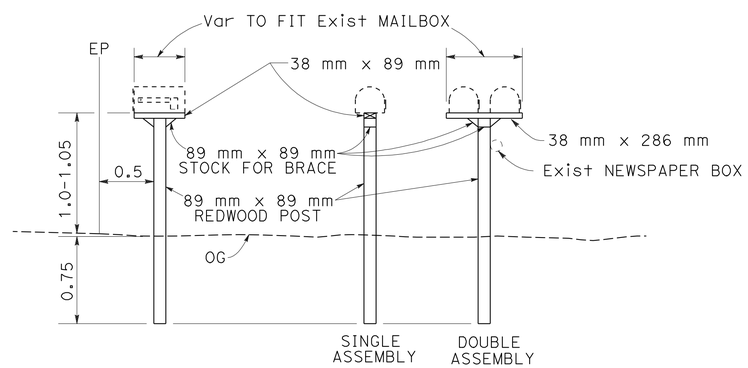

RESET MAILBOX DETAIL

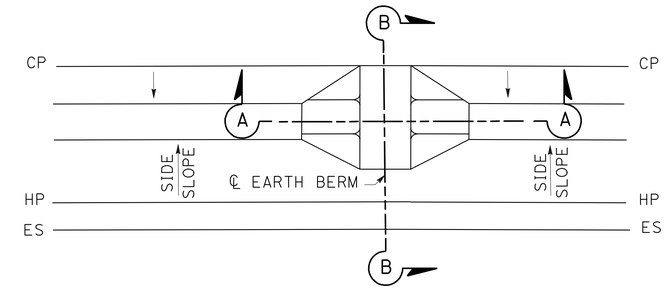

PLAN

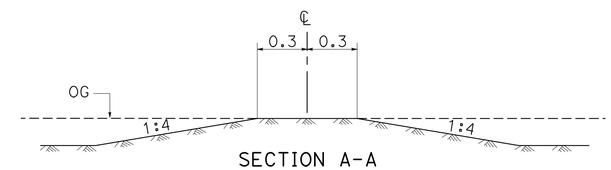

SECTION A-A
EARTH BERM

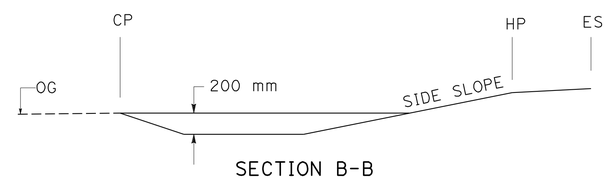

SECTION B-B
EARTH BERM

TYPICAL EARTH BERM LOCATIONS

STATION	OFFSET ℄ Rte 26
	m
83+00	7.10 Rt
94+00	9.60 Lt, 6.00 Rt
94+40	9.60 Lt, 6.00 Rt
94+80	9.60 Lt, 6.00 Rt
95+20	9.36 Lt, 6.00 Rt
95+60	8.70 Lt, 6.00 Rt
96+00	8.07 Lt, 6.00 Rt

ALL DIMENSIONS ARE IN METERS
UNLESS OTHERWISE SHOWN

CONSTRUCTION DETAILS

NO SCALE

C-4

REVISED BY | DATE REVISED
BALJIT KANDOLA | CARMELITA BELLE
CALCULATED-DESIGNED BY | CHECKED BY
FUNCTIONAL SUPERVISOR: DAVID SANGHA
STATE OF CALIFORNIA - DEPARTMENT OF TRANSPORTATION
Caltrans 06-DESIGN

LAST REVISION 03-11-10 | DATE PLOTTED => 14-SEP-2010 | TIME PLOTTED => 11:05

Dist	COUNTY	ROUTE	KILOMETER POST TOTAL PROJECT	SHEET No.	TOTAL SHEETS
10	SJ	26	8.2/10.0	17	83

LICENSED LANDSCAPE ARCHITECT

8-24-09
PLANS APPROVAL DATE

LICENSED LANDSCAPE ARCHITECT — JAMES VON DOHLEN — Signature — Renewal Date 1/31/10 — Date 07/14/09 — STATE OF CALIFORNIA

THE STATE OF CALIFORNIA OR ITS OFFICERS OR AGENTS SHALL NOT BE RESPONSIBLE FOR THE ACCURACY OR COMPLETENESS OF ELECTRONIC COPIES OF THIS PLAN SHEET.

Caltrans Metric

NOTE:

For complete Right of Way and Accurate Access Data, See Right of Way record maps at District Office.

LEGEND:

Erosion Control (Hydraulic matrix)

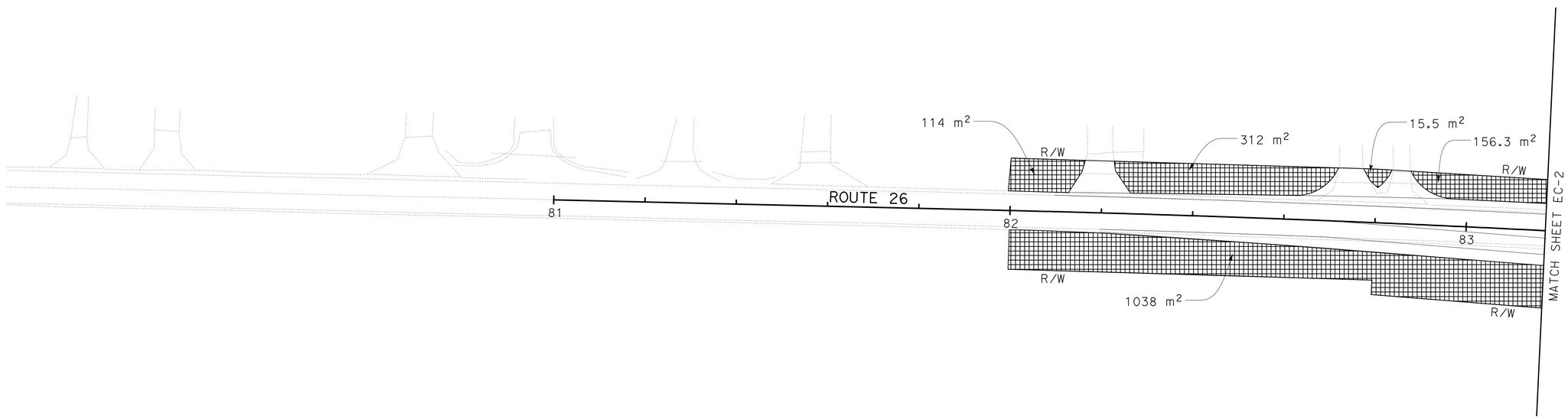

ALL DIMENSIONS ARE IN METERS UNLESS OTHERWISE SHOWN

EROSION CONTROL EC-1

SCALE 1:500

THIS PLAN ACCURATE FOR EROSION CONTROL WORK ONLY.

GE	REVISED BY	
07/14/09	DATE REVISED	

Gus Escutia — CALCULATED-DESIGNED BY
James von Dohlen — CHECKED BY

SENIOR LANDSCAPE ARCHITECT: BRAD COLE

STATE OF CALIFORNIA - DEPARTMENT OF TRANSPORTATION
Caltrans LANDSCAPE ARCHITECTURE

LAST REVISION 07-14-09 | DATE PLOTTED => 14-SEP-2010 | TIME PLOTTED => 11:05

Dist	COUNTY	ROUTE	KILOMETER POST TOTAL PROJECT	SHEET No.	TOTAL SHEETS
10	SJ	26	8.2/10.0	18	83

LICENSED LANDSCAPE ARCHITECT

8-24-09
PLANS APPROVAL DATE

LICENSED LANDSCAPE ARCHITECT
JAMES VON DOHLEN
Signature
1/31/10
Renewal Date
07/14/09
Date
STATE OF CALIFORNIA

THE STATE OF CALIFORNIA OR ITS OFFICERS OR AGENTS SHALL NOT BE RESPONSIBLE FOR THE ACCURACY OR COMPLETENESS OF ELECTRONIC COPIES OF THIS PLAN SHEET.

Caltrans Metric

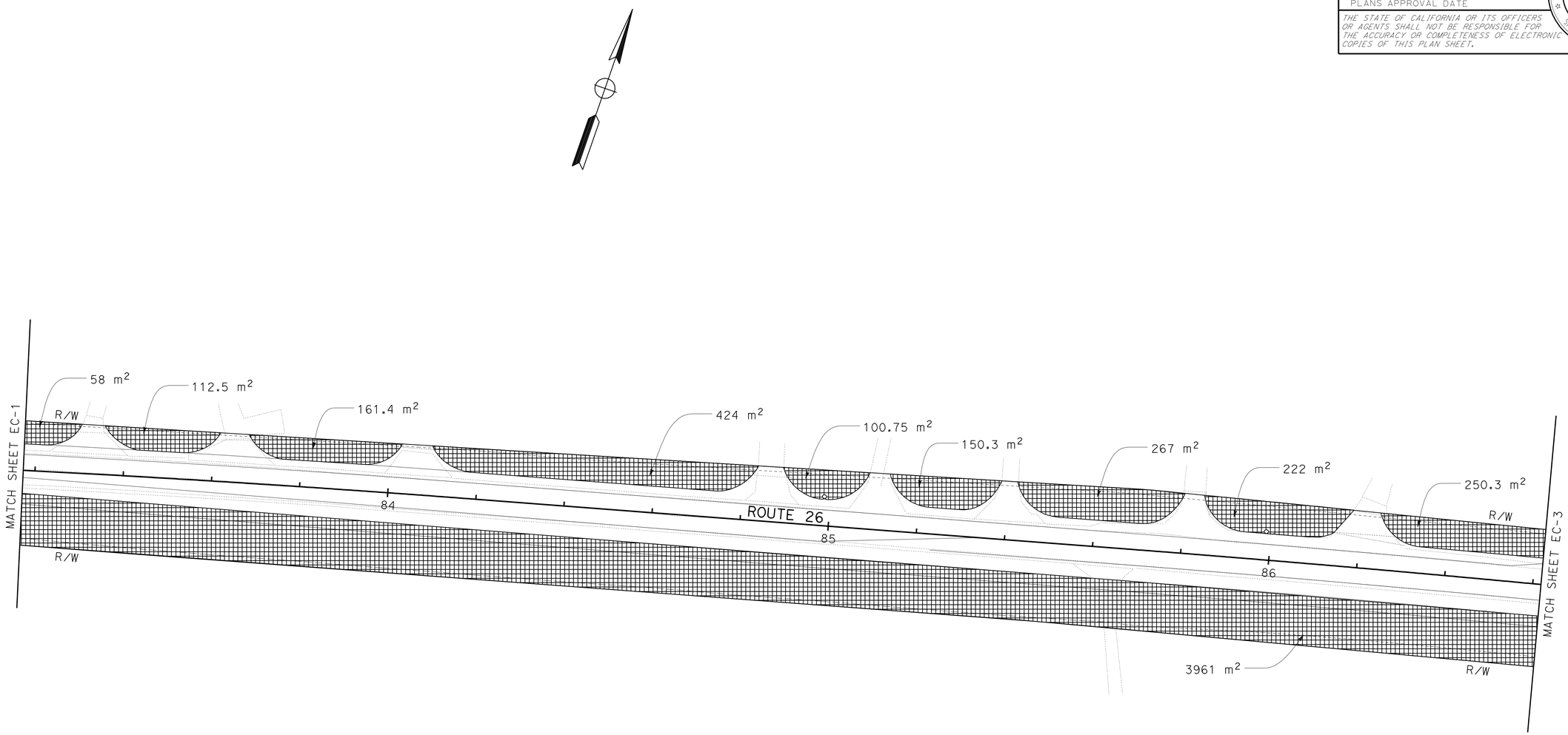

ALL DIMENSIONS ARE IN METERS
UNLESS OTHERWISE SHOWN

EROSION CONTROL EC-2

SCALE 1:500

THIS PLAN ACCURATE FOR EROSION CONTROL ONLY.

CALCULATED-DESIGNED BY	
CHECKED BY	
REVISED BY	GE
DATE REVISED	07/14/09
Gus Escutia	
James von Dohlen	
SENIOR LANDSCAPE ARCHITECT	
BRAD COLE	

STATE OF CALIFORNIA - DEPARTMENT OF TRANSPORTATION
Caltrans LANDSCAPE ARCHITECTURE

LAST REVISION 07-14-09
DATE PLOTTED => 14-SEP-2010
TIME PLOTTED => 11:05

Dist	COUNTY	ROUTE	KILOMETER POST TOTAL PROJECT	SHEET No.	TOTAL SHEETS
10	SJ	26	8.2/10.0	19	83

LICENSED LANDSCAPE ARCHITECT

8-24-09
PLANS APPROVAL DATE

LICENSED LANDSCAPE ARCHITECT JAMES VON DOHLEN 2882 Signature 1/31/10 Renewal Date 07/14/09 Date STATE OF CALIFORNIA

THE STATE OF CALIFORNIA OR ITS OFFICERS OR AGENTS SHALL NOT BE RESPONSIBLE FOR THE ACCURACY OR COMPLETENESS OF ELECTRONIC COPIES OF THIS PLAN SHEET.

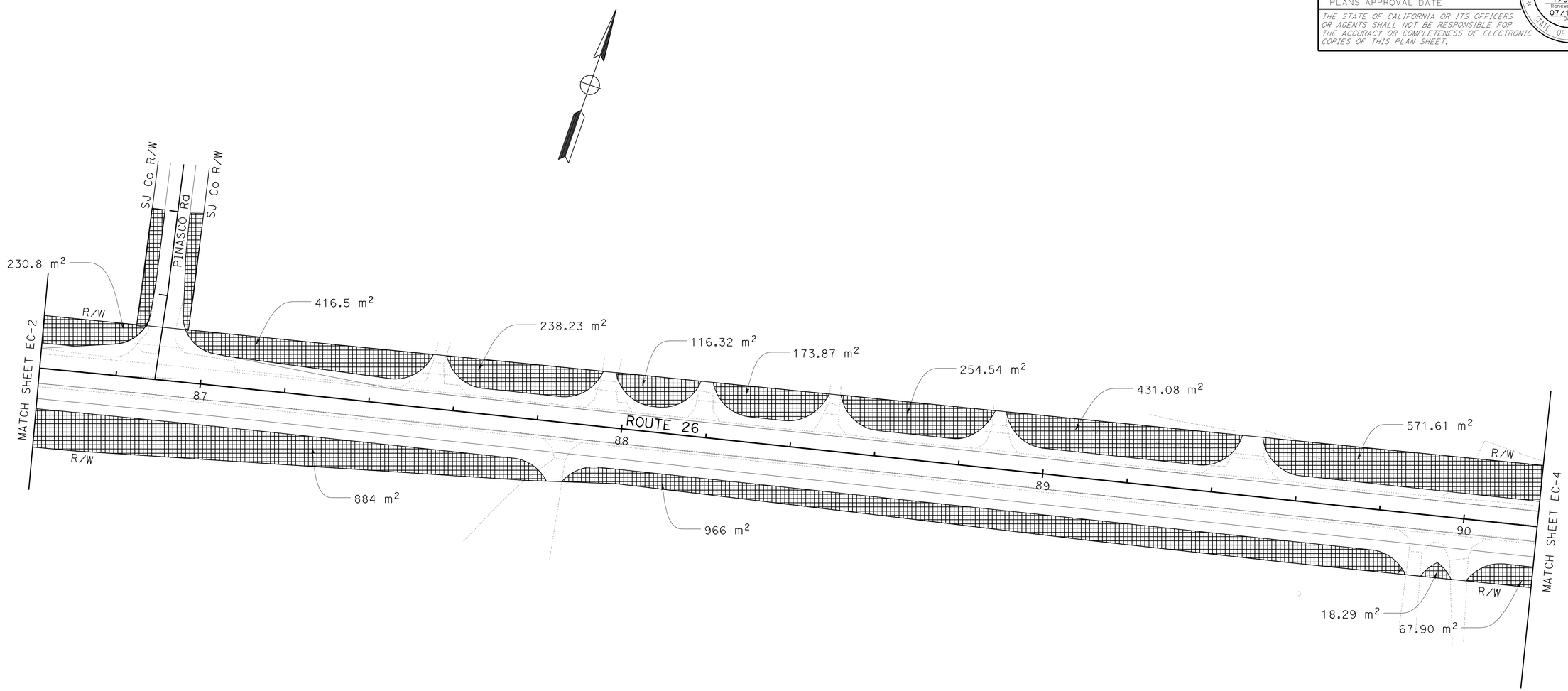

ALL DIMENSIONS ARE IN METERS
UNLESS OTHERWISE SHOWN

EROSION CONTROL EC-3

SCALE 1:500

THIS PLAN ACCURATE FOR EROSION CONTROL WORK ONLY.

CALCULATED-DESIGNED BY	Gus Escutia	REVISED BY GE
CHECKED BY	James von Dohlen	DATE REVISED 07/14/09
SENIOR LANDSCAPE ARCHITECT	BRAD COLE	

STATE OF CALIFORNIA - DEPARTMENT OF TRANSPORTATION
Caltrans LANDSCAPE ARCHITECTURE

LAST REVISION 07-14-09 DATE PLOTTED => 14-SEP-2010 TIME PLOTTED => 11:05

Dist	COUNTY	ROUTE	KILOMETER POST TOTAL PROJECT	SHEET No.	TOTAL SHEETS
10	SJ	26	8.2/10.0	20	83

LICENSED LANDSCAPE ARCHITECT

8-24-09
PLANS APPROVAL DATE

LICENSED LANDSCAPE ARCHITECT
JAMES VON DOHLEN
Signature
1/31/10
Renewal Date
07/14/09
Date
STATE OF CALIFORNIA

THE STATE OF CALIFORNIA OR ITS OFFICERS OR AGENTS SHALL NOT BE RESPONSIBLE FOR THE ACCURACY OR COMPLETENESS OF ELECTRONIC COPIES OF THIS PLAN SHEET.

Caltrans Metric

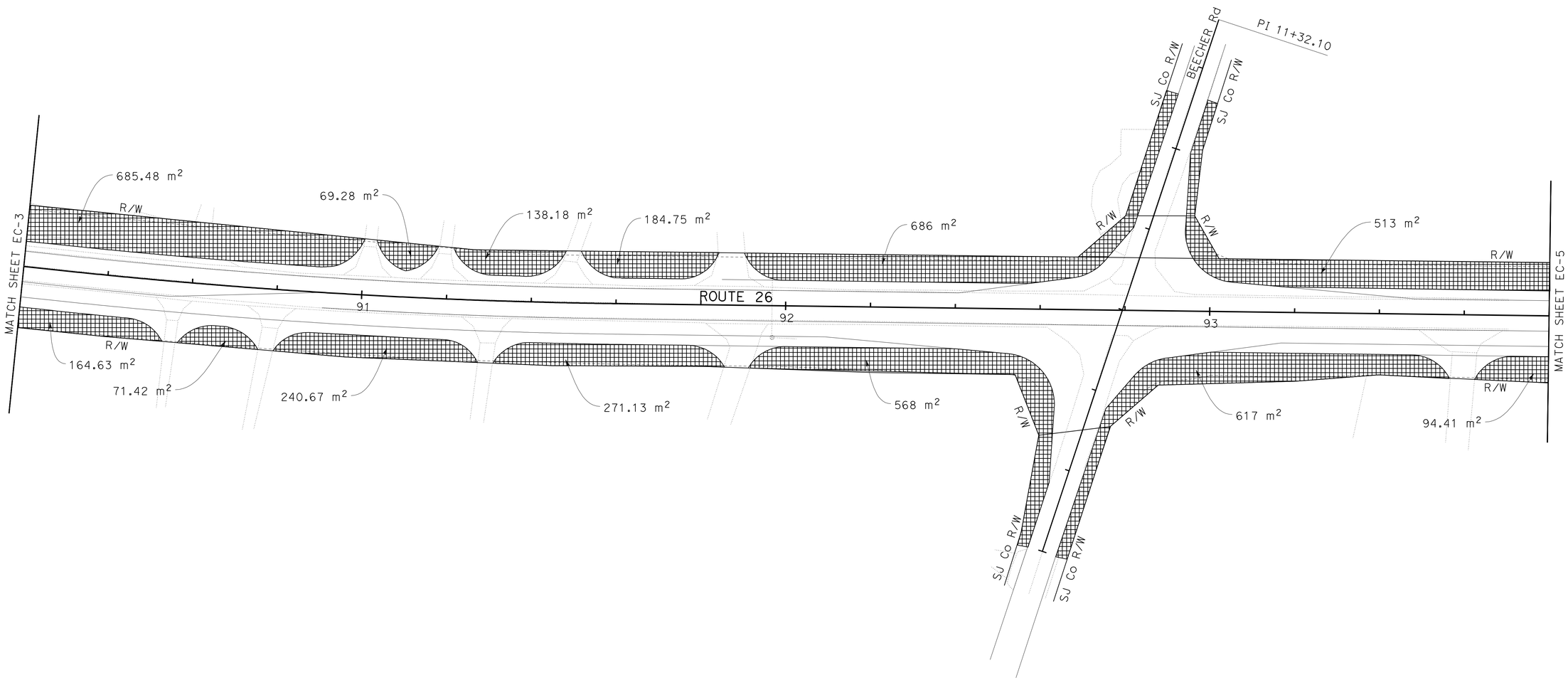

ALL DIMENSIONS ARE IN METERS
UNLESS OTHERWISE SHOWN

EROSION CONTROL EC-4

SCALE 1:500

THIS PLAN ACCURATE FOR EROSION CONTROL WORK ONLY.

CALCULATED-DESIGNED BY	Gus Escutia	REVISED BY	GE
CHECKED BY	James von Dohlen	DATE REVISED	07/14/09
SENIOR LANDSCAPE ARCHITECT	JAMES VON DOHLEN		

STATE OF CALIFORNIA - DEPARTMENT OF TRANSPORTATION
Caltrans LANDSCAPE ARCHITECTURE

LAST REVISION 07-14-09 | DATE PLOTTED => 14-SEP-2010 | TIME PLOTTED => 11:05

Dist	COUNTY	ROUTE	KILOMETER POST TOTAL PROJECT	SHEET No.	TOTAL SHEETS
10	SJ	26	8.2/10.0	21	83

LICENSED LANDSCAPE ARCHITECT

8-24-09
PLANS APPROVAL DATE

LICENSED LANDSCAPE ARCHITECT JAMES VON DOHLEN NO. 1993 STATE OF CALIFORNIA
Signature
1/31/10
Renewal Date
07/14/09
Date

THE STATE OF CALIFORNIA OR ITS OFFICERS OR AGENTS SHALL NOT BE RESPONSIBLE FOR THE ACCURACY OR COMPLETENESS OF ELECTRONIC COPIES OF THIS PLAN SHEET.

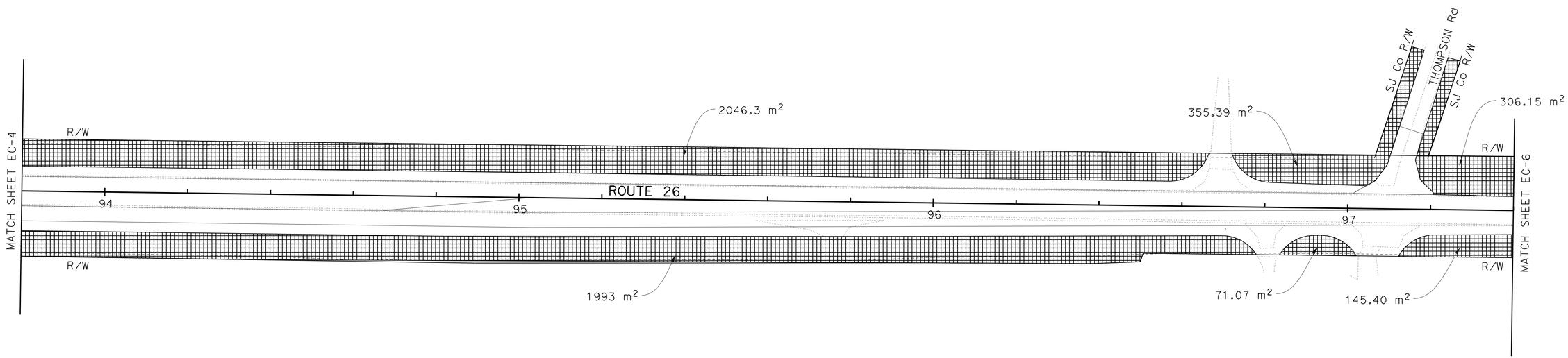

ALL DIMENSIONS ARE IN METERS
UNLESS OTHERWISE SHOWN

EROSION CONTROL
EC-5

SCALE 1:500

THIS PLAN ACCURATE FOR EROSION CONTROL WORK ONLY.

REVISED BY	GE	
DATE REVISED	07/14/09	
CALCULATED-DESIGNED BY	Gus Escutia	
CHECKED BY	James von Dohlen	
SENIOR LANDSCAPE ARCHITECT	BRAD COLE	

STATE OF CALIFORNIA - DEPARTMENT OF TRANSPORTATION
Caltrans LANDSCAPE ARCHITECTURE

LAST REVISION 07-14-09 | DATE PLOTTED => 14-SEP-2010 | TIME PLOTTED => 11:05

Dist	COUNTY	ROUTE	KILOMETER POST TOTAL PROJECT	SHEET No.	TOTAL SHEETS
10	SJ	26	8.2/10.0	22	83

LICENSED LANDSCAPE ARCHITECT

8-24-09
PLANS APPROVAL DATE

LICENSED LANDSCAPE ARCHITECT
JAMES VON DOHLEN
Signature
1/31/10
Renewal Date
07/14/09
Date
STATE OF CALIFORNIA

THE STATE OF CALIFORNIA OR ITS OFFICERS OR AGENTS SHALL NOT BE RESPONSIBLE FOR THE ACCURACY OR COMPLETENESS OF ELECTRONIC COPIES OF THIS PLAN SHEET.

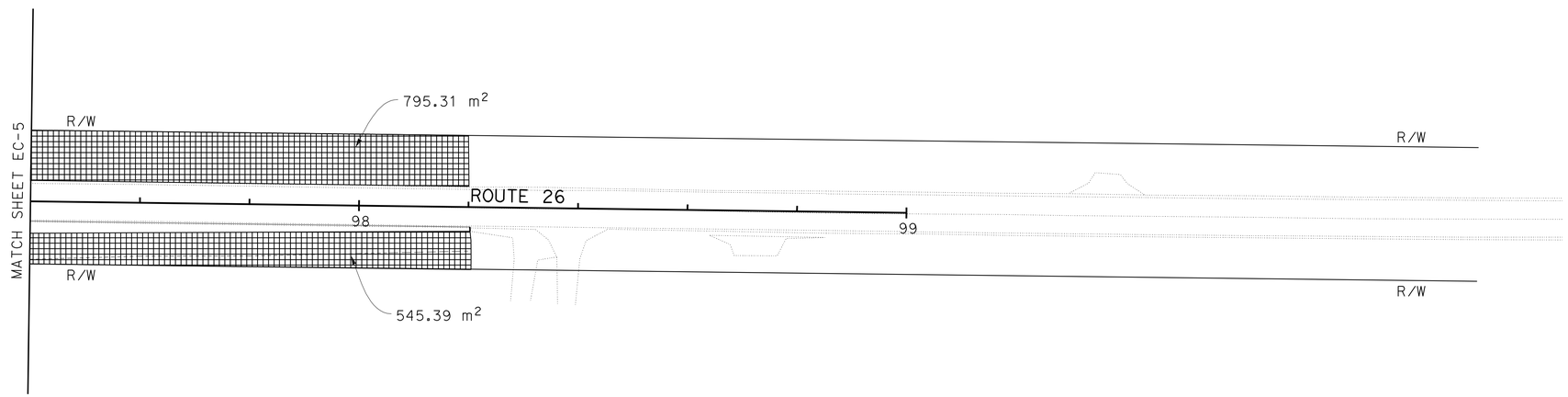

ALL DIMENSIONS ARE IN METERS
UNLESS OTHERWISE SHOWN

EROSION CONTROL
SCALE 1:500

EC-6

THIS PLAN ACCURATE FOR EROSION CONTROL WORK ONLY.

CALCULATED-DESIGNED BY	Gus Escutia	REVISED BY	GE
CHECKED BY	James von Dohlen	DATE REVISED	07/14/09

SENIOR LANDSCAPE ARCHITECT
BRAD COLE

STATE OF CALIFORNIA - DEPARTMENT OF TRANSPORTATION
Caltrans LANDSCAPE ARCHITECTURE

LAST REVISION 07-14-09
DATE PLOTTED => 14-SEP-2010
TIME PLOTTED => 11:05

Dist	COUNTY	ROUTE	KILOMETER POST TOTAL PROJECT	SHEET No.	TOTAL SHEETS
10	SJ	26	8.2/10.0	23	83

LICENSED LANDSCAPE ARCHITECT

8-24-09
PLANS APPROVAL DATE

LICENSED LANDSCAPE ARCHITECT JAMES VON DOHLEN 2486 Signature 1/31/10 Renewal Date 07/14/09 Date STATE OF CALIFORNIA

THE STATE OF CALIFORNIA OR ITS OFFICERS OR AGENTS SHALL NOT BE RESPONSIBLE FOR THE ACCURACY OR COMPLETENESS OF ELECTRONIC COPIES OF THIS PLAN SHEET.

Caltrans Metric

EROSION CONTROL (HYDRAULIC MATRIX)

LOCATION STATION TO STATION	EROSION CONTROL (HYDRAULIC MATRIX) AREA		PURE LIVE SEED (N)	SLOPE			FIBER (N)	TACKIFER (N)
	m^2	ha	kg	1:2	1:2.5	1:3	kg	kg
82+00 TO 82+12 Lt	114	.0114	.30			X	38.76	38.76
82+25 TO 82+65 Lt	312	.0312	.81			X	106.08	106.08
82+80 Lt	16	.0016	.04			X	5.44	5.44
82+90 TO 83+17 Lt	157	.0157	.41			X	53.38	53.38
82+00 TO 83+17 Rt	1038	.1038	2.70			X	352.92	352.92
83+17 TO 83+30 Lt	58	.0058	.15			X	19.72	19.72
83+38 TO 83+62 Lt	113	.0113	.29			X	38.42	38.42
83+70 TO 84+05 Lt	162	.0162	.42			X	55.08	55.08
84+10 TO 84+85 Lt	424	.0424	1.10			X	144.16	144.16
84+90 TO 85+08 Lt	101	.0101	.26			X	34.34	34.34
85+12 TO 85+38 Lt	150	.0150	.39			X	51.00	51.00
85+45 TO 85+80 Lt	267	.0267	.69	X			90.78	90.78
85+85 TO 86+18 Lt	222	.0222	.58	X			75.48	75.48
86+28 TO 86+62 Lt	250	.0250	.65	X			85.00	85.00
83+17 TO 86+62 Rt	3961	.3961	10.30			X	1346.74	1346.74
86+62 TO PENASCO Rd Lt	231	.0231	.60		X		78.54	78.54
PENASCO Rd TO 87+55 Lt	417	.0417	1.08		X		141.78	141.78
87+60 TO 87+92 Lt	238	.0238	.62		X		80.92	80.92
88+00 TO 88+18 Lt	116	.0116	.30		X		39.44	39.44
88+20 TO 88+48 Lt	174	.0174	.45		X		59.16	59.16
88+50 TO 88+88 Lt	255	.0255	.66		X		86.70	86.70
88+90 TO 89+45 Lt	431	.0431	1.12		X		146.54	146.54
89+55 TO 90+18 Lt	572	.0572	1.49		X		194.48	194.48
86+62 TO 87+85 Rt	884	.0884	2.30			X	300.56	300.56
87+90 TO 89+85 Rt	966	.0966	2.51		X		328.44	328.44
89+95 TO 90+18 Rt	18	.0018	.05		X		6.12	6.12
90+05 TO 90+18 Rt	68	.0068	.18		X		23.12	23.12
90+18 TO 91+00 Lt	685	.0685	1.78	X			232.90	232.90
91+05 TO 91+15 Lt	69	.0069	.18	X			23.46	23.46
91+25 TO 91+48 Lt	138	.0138	.36	X			46.92	46.92
91+53 TO 91+85 Lt	185	.0185	.48	X			62.90	62.90
91+90 TO BEECHER Rd Lt	686	.0686	1.78	X			233.24	233.24
BEECHER Rd TO 93+72 Lt	513	.0513	1.33	X			174.42	174.42
90+18 TO 90+58 Rt	165	.0165	.43		X		56.10	56.10
90+60 TO 90+80 Rt	71	.0071	.18		X		24.14	24.14

(N) - NOT A SEPARATE PAY ITEM, FOR INFORMATION ONLY.

EROSION CONTROL (HYDRAULIC MATRIX) Cont

LOCATION STATION TO STATION	EROSION CONTROL (HYDRAULIC MATRIX) AREA		PURE LIVE SEED (N)	SLOPE			FIBER (N)	TACKIFER (N)
	m^2	ha	kg	1:2	1:2.5	1:3	kg	kg
90+83 TO 91+30 Rt	241	.0241	.63		X		81.94	81.94
91+37 TO 91+90 Rt	271	.0271	.71		X		92.14	92.14
91+93 TO BEECHER Rd Rt	568	.0568	1.48		X		193.12	193.12
BEECHER Rd TO 93+58 Rt	617	.0617	1.60		X		209.78	209.78
93+70 TO 93+72 Rt	94	.0094	.24		X		30.94	30.94
93+72 TO 96+70 Lt	2046	.2046	5.32		X		695.64	695.64
96+73 TO THOMPSON Rd Lt	355	.0355	.92		X		120.70	120.70
THOMPSON Rd TO 97+40 Lt	306	.0306	.80		X		104.04	104.04
93+72 TO 96+80 Rt	1993	.1993	5.18			X	677.62	677.62
96+82 TO 96+84 Rt	71	.0071	.18			X	24.14	24.14
96+86 TO 97+10 Lt	145	.0145	.38			X	49.3	49.3
97+40 TO 98.20 Lt	795	.0795	2.07		X		270.30	270.30
97+40 TO 98+20 Rt	545	.0545	1.41		X		184.62	184.62
TOTAL	22 274	2.2274	57.89				7571.46	7571.46

(N) - NOT A SEPARATE PAY ITEM, FOR INFORMATION ONLY.

EROSION CONTROL QUANTITIES
ECQ-1

REVISED BY	DATE REVISED
GE	07/14/09

Gus Escutia
James von Dohlen

CALCULATED-DESIGNED BY
CHECKED BY

SENIOR LANDSCAPE ARCHITECT
BRAD COLE

STATE OF CALIFORNIA - DEPARTMENT OF TRANSPORTATION
Caltrans LANDSCAPE ARCHITECTURE

LAST REVISION 07-14-09
DATE PLOTTED => 14-SEP-2010
TIME PLOTTED => 11:05

Dist	COUNTY	ROUTE	KILOMETER POST TOTAL PROJECT	SHEET No.	TOTAL SHEETS
10	SJ	26	8.2/10.0	24	83

07-27-09
REGISTERED CIVIL ENGINEER DATE

8-24-09
PLANS APPROVAL DATE

REGISTERED PROFESSIONAL ENGINEER
D S SANGHA
No. 59652
Exp.12/31/09
CIVIL
STATE OF CALIFORNIA

THE STATE OF CALIFORNIA OR ITS OFFICERS OR AGENTS SHALL NOT BE RESPONSIBLE FOR THE ACCURACY OR COMPLETENESS OF ELECTRONIC COPIES OF THIS PLAN SHEET.

Caltrans Metric

NOTE:

For complete Right of Way Data, see Right of Way record maps at District Office.

LEGEND

X Drainage System No.

X Drainage Unit

Direction of Travel

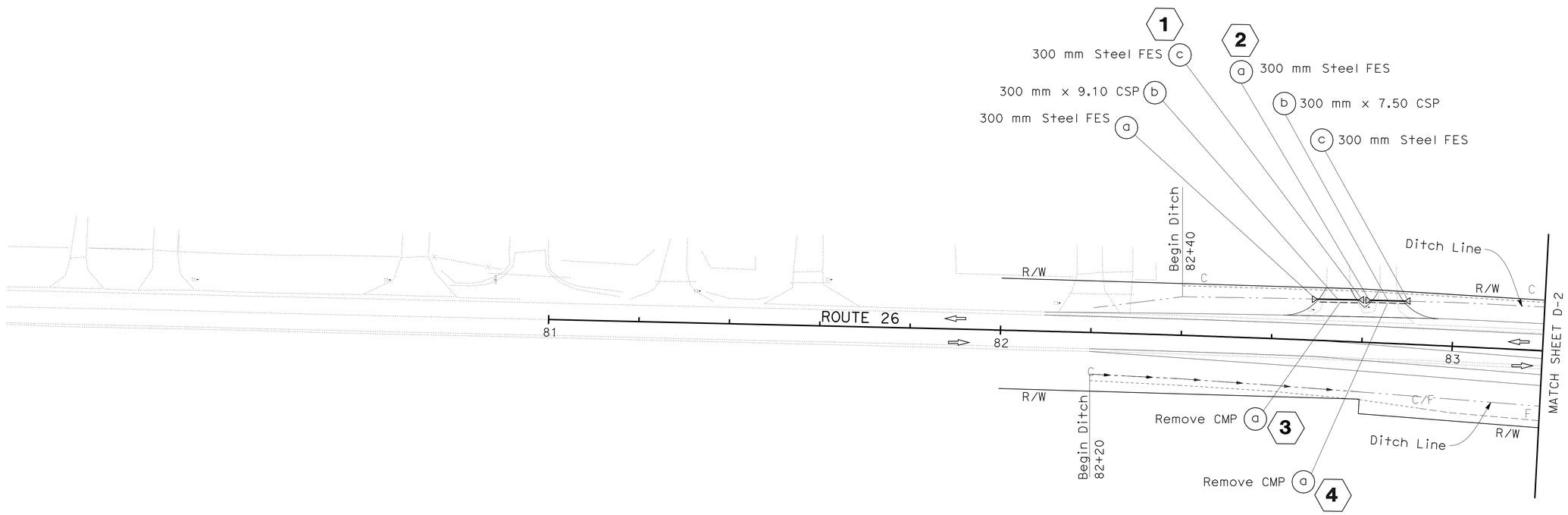

ALL DIMENSIONS ARE IN METERS
UNLESS OTHERWISE SHOWN

DRAINAGE PLAN

SCALE 1:500 **D-1**

THIS PLAN ACCURATE FOR DRAINAGE WORK ONLY

REVISED BY	DATE REVISED

CALCULATED-DESIGNED BY: BALJIT KANDOLA
CHECKED BY: CARMELITA BELLE
FUNCTIONAL SUPERVISOR: DAVID SANGHA

STATE OF CALIFORNIA - DEPARTMENT OF TRANSPORTATION
Caltrans 06-DESIGN

LAST REVISION 07-06-09
DATE PLOTTED => 14-SEP-2010
TIME PLOTTED => 11:05

Dist	COUNTY	ROUTE	KILOMETER POST TOTAL PROJECT	SHEET No.	TOTAL SHEETS
10	SJ	26	8.2/10.0	25	83

REGISTERED CIVIL ENGINEER 07-27-09 DATE

8-24-09
PLANS APPROVAL DATE

REGISTERED PROFESSIONAL ENGINEER D S SANGHA No. 59652 Exp.12/31/09 CIVIL STATE OF CALIFORNIA

THE STATE OF CALIFORNIA OR ITS OFFICERS OR AGENTS SHALL NOT BE RESPONSIBLE FOR THE ACCURACY OR COMPLETENESS OF ELECTRONIC COPIES OF THIS PLAN SHEET.

Caltrans Metric

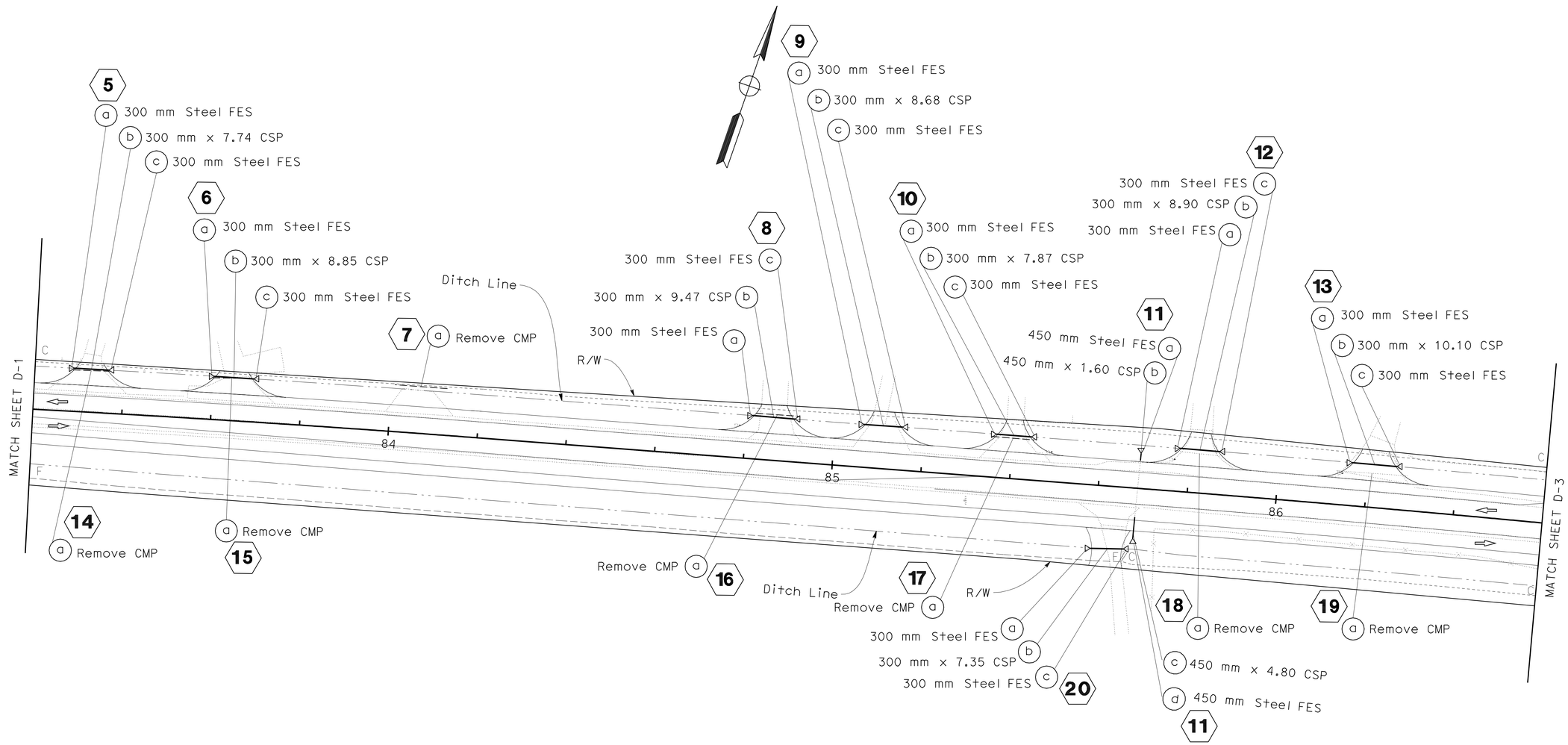

THIS PLAN ACCURATE FOR DRAINAGE WORK ONLY

ALL DIMENSIONS ARE IN METERS UNLESS OTHERWISE SHOWN

SCALE 1:500

DRAINAGE PLAN D-2

REVISED BY	DATE REVISED
BALJIT KANDOLA	
CARMELITA BELLE	
CALCULATED-DESIGNED BY	
CHECKED BY	
FUNCTIONAL SUPERVISOR	
DAVID SANGHA	

STATE OF CALIFORNIA - DEPARTMENT OF TRANSPORTATION
Caltrans 06-DESIGN

LAST REVISION 09-07-10 | DATE PLOTTED => 14-SEP-2010 | TIME PLOTTED => 11:06

Dist	COUNTY	ROUTE	KILOMETER POST TOTAL PROJECT	SHEET No.	TOTAL SHEETS
10	SJ	26	8.2/10.0	26	83

Caltrans Metric

07-27-09
REGISTERED CIVIL ENGINEER DATE

8-24-09
PLANS APPROVAL DATE

REGISTERED PROFESSIONAL ENGINEER
D S SANGHA
No. 59652
Exp. 12/31/09
CIVIL
STATE OF CALIFORNIA

THE STATE OF CALIFORNIA OR ITS OFFICERS OR AGENTS SHALL NOT BE RESPONSIBLE FOR THE ACCURACY OR COMPLETENESS OF ELECTRONIC COPIES OF THIS PLAN SHEET.

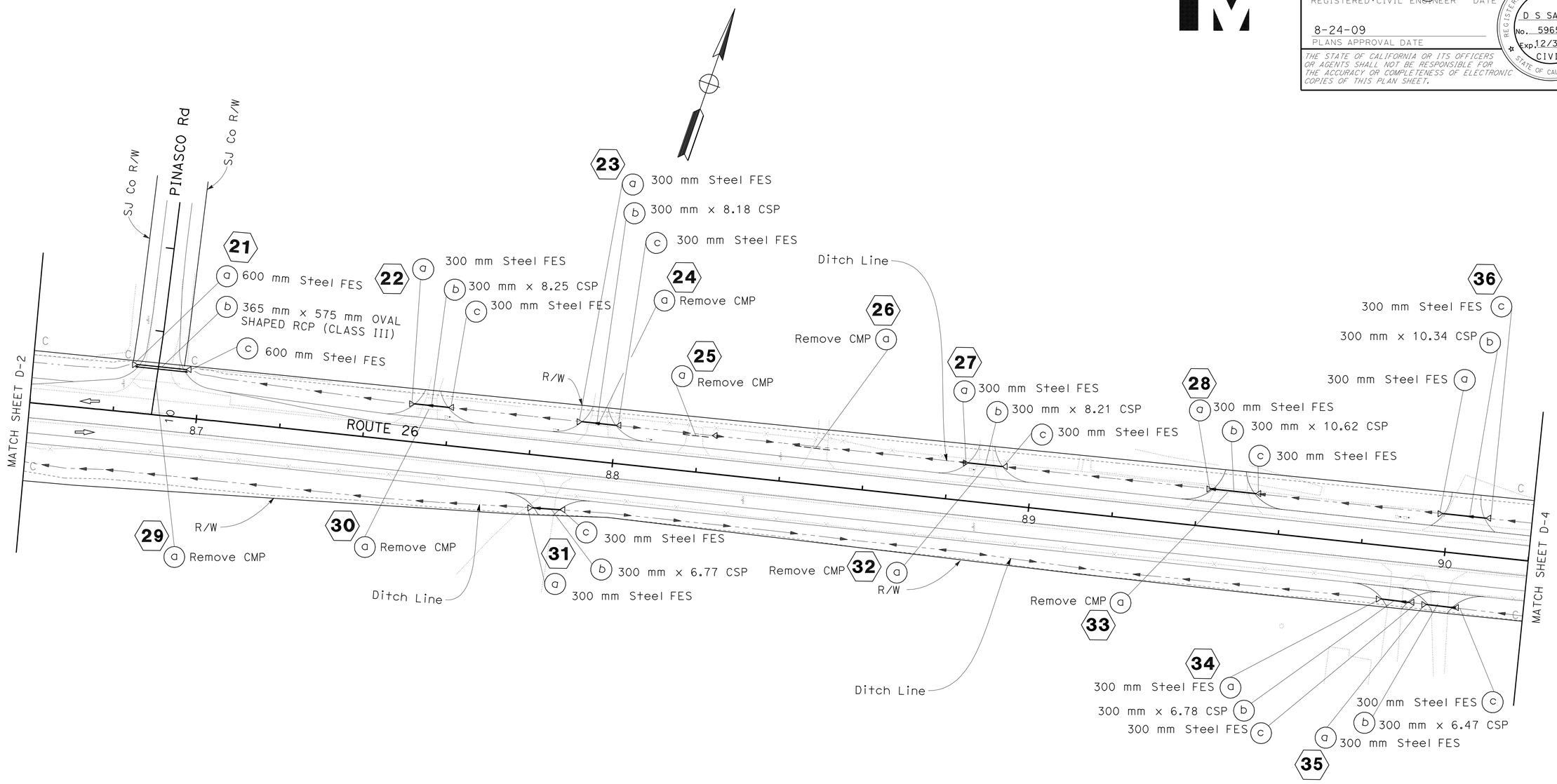

DRAINAGE PLAN
D-3

THIS PLAN ACCURATE FOR DRAINAGE WORK ONLY

ALL DIMENSIONS ARE IN METERS UNLESS OTHERWISE SHOWN

SCALE 1:500

REVISED BY	DATE REVISED

CALCULATED-DESIGNED BY: BALJIT KANDOLA
CHECKED BY: CARMELITA BELLE
FUNCTIONAL SUPERVISOR: DAVID SANGHA

STATE OF CALIFORNIA - DEPARTMENT OF TRANSPORTATION
Caltrans
06-DESIGN

LAST REVISION 09-07-10 | DATE PLOTTED => 14-SEP-2010 | TIME PLOTTED => 11:06

Dist	COUNTY	ROUTE	KILOMETER POST TOTAL PROJECT	SHEET No.	TOTAL SHEETS
10	SJ	26	8.2/10.0	27	83

REGISTERED CIVIL ENGINEER 07-27-09 DATE

8-24-09
PLANS APPROVAL DATE

REGISTERED PROFESSIONAL ENGINEER D S SANGHA No. 59652 Exp. 12/31/09 CIVIL STATE OF CALIFORNIA

THE STATE OF CALIFORNIA OR ITS OFFICERS OR AGENTS SHALL NOT BE RESPONSIBLE FOR THE ACCURACY OR COMPLETENESS OF ELECTRONIC COPIES OF THIS PLAN SHEET.

Caltrans Metric

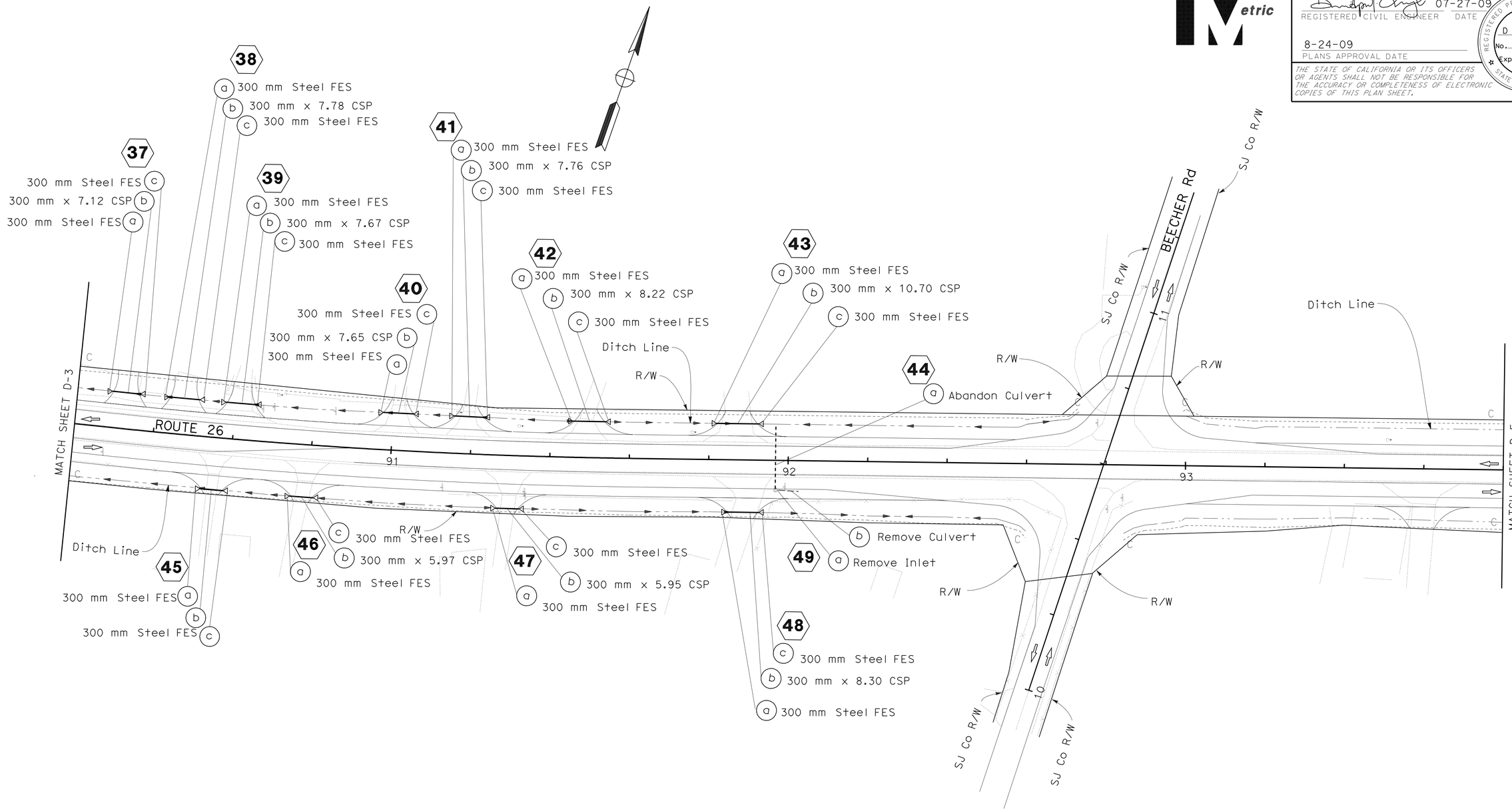

THIS PLAN ACCURATE FOR DRAINAGE WORK ONLY

ALL DIMENSIONS ARE IN METERS UNLESS OTHERWISE SHOWN

DRAINAGE PLAN D-4

SCALE 1:500

STATE OF CALIFORNIA - DEPARTMENT OF TRANSPORTATION
Caltrans 06-DESIGN

FUNCTIONAL SUPERVISOR DAVID SANGHA
CALCULATED-DESIGNED BY BALJIT KANDOLA
CHECKED BY CARMELITA BELLE
REVISED BY
DATE REVISED

LAST REVISION 03-16-10
DATE PLOTTED => 14-SEP-2010
TIME PLOTTED => 11:06

Dist	COUNTY	ROUTE	KILOMETER POST TOTAL PROJECT	SHEET No.	TOTAL SHEETS
10	SJ	26	8.2/10.0	28	83

REGISTERED CIVIL ENGINEER 07-27-09 DATE

8-24-09
PLANS APPROVAL DATE

REGISTERED PROFESSIONAL ENGINEER
D S SANGHA
No. 59652
Exp. 12/31/09
CIVIL
STATE OF CALIFORNIA

THE STATE OF CALIFORNIA OR ITS OFFICERS OR AGENTS SHALL NOT BE RESPONSIBLE FOR THE ACCURACY OR COMPLETENESS OF ELECTRONIC COPIES OF THIS PLAN SHEET.

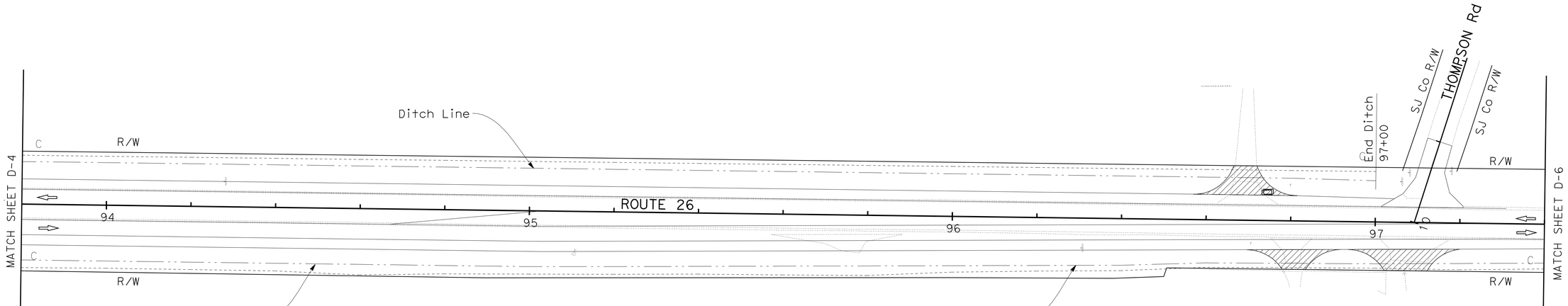

ALL DIMENSIONS ARE IN METERS
UNLESS OTHERWISE SHOWN

DRAINAGE PLAN

SCALE 1:500

D-5

THIS PLAN ACCURATE FOR DRAINAGE WORK ONLY

STATE OF CALIFORNIA - DEPARTMENT OF TRANSPORTATION
Caltrans
06-DESIGN

FUNCTIONAL SUPERVISOR
DAVID SANGHA

CALCULATED-DESIGNED BY
BALJIT KANDOLA

CHECKED BY
CARMELITA BELLE

REVISED BY

DATE REVISED

LAST REVISION 07-06-09
DATE PLOTTED => 14-SEP-2010
TIME PLOTTED => 11:06

Dist	COUNTY	ROUTE	KILOMETER POST TOTAL PROJECT	SHEET No.	TOTAL SHEETS
10	SJ	26	8.2/10.0	29	83

07-27-09
REGISTERED CIVIL ENGINEER DATE

8-24-09
PLANS APPROVAL DATE

REGISTERED PROFESSIONAL ENGINEER
D S SANGHA
No. 59652
Exp. 12/31/09
CIVIL
STATE OF CALIFORNIA

THE STATE OF CALIFORNIA OR ITS OFFICERS OR AGENTS SHALL NOT BE RESPONSIBLE FOR THE ACCURACY OR COMPLETENESS OF ELECTRONIC COPIES OF THIS PLAN SHEET.

Caltrans Metric

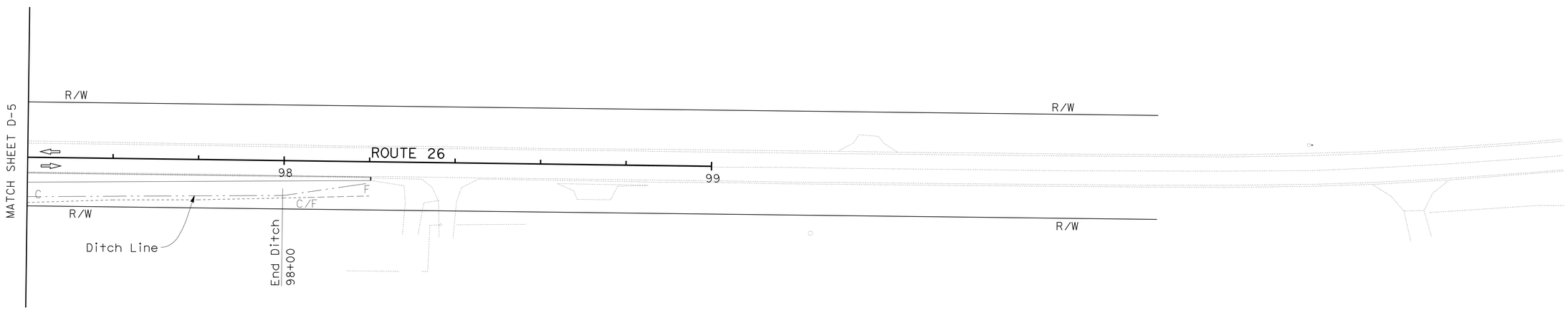

ALL DIMENSIONS ARE IN METERS
UNLESS OTHERWISE SHOWN

DRAINAGE PLAN

SCALE 1:500

D-6

THIS PLAN ACCURATE FOR DRAINAGE WORK ONLY

CALCULATED-DESIGNED BY	BALJIT KANDOLA
CHECKED BY	CARMELITA BELLE
REVISED BY	
DATE REVISED	
FUNCTIONAL SUPERVISOR	DAVID SANGHA

STATE OF CALIFORNIA - DEPARTMENT OF TRANSPORTATION
Caltrans
06-DESIGN

LAST REVISION 07-06-09
DATE PLOTTED => 14-SEP-2010
TIME PLOTTED => 11:06

Dist	COUNTY	ROUTE	KILOMETER POST TOTAL PROJECT	SHEET No.	TOTAL SHEETS
10	SJ	26	8.2/10.0	30	83

REGISTERED CIVIL ENGINEER 07/27/09 DATE

8-24-09
PLANS APPROVAL DATE

REGISTERED PROFESSIONAL ENGINEER D S SANGHA No. 59652 Exp. 12/31/09 CIVIL STATE OF CALIFORNIA

THE STATE OF CALIFORNIA OR ITS OFFICERS OR AGENTS SHALL NOT BE RESPONSIBLE FOR THE ACCURACY OR COMPLETENESS OF ELECTRONIC COPIES OF THIS PLAN SHEET.

Caltrans Metric

LEGEND

X DRAINAGE SYSTEM No.

X DRAINAGE UNIT

ABBREVIATION:

S SLOPE

NOTE:

SEE CONSTRUCTION DETAIL FOR DRIVEWAY CULVERT INLET & OUTLET FLOWLINE ELEVATION AND DETAILS.

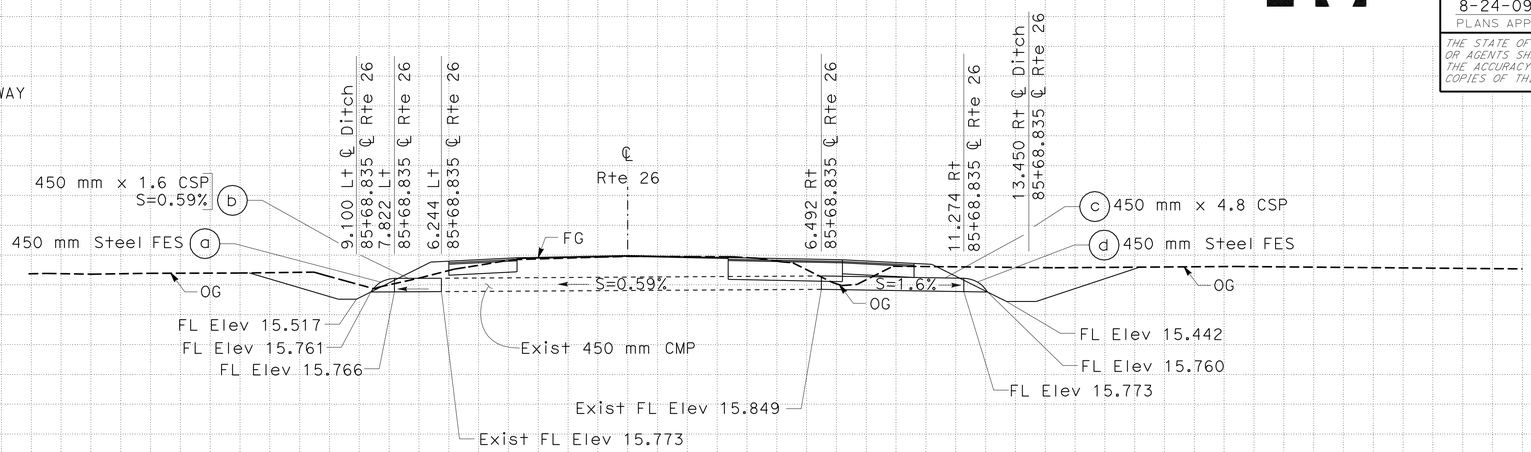

DRAINAGE SYSTEM No. 11

STA 85+68.835

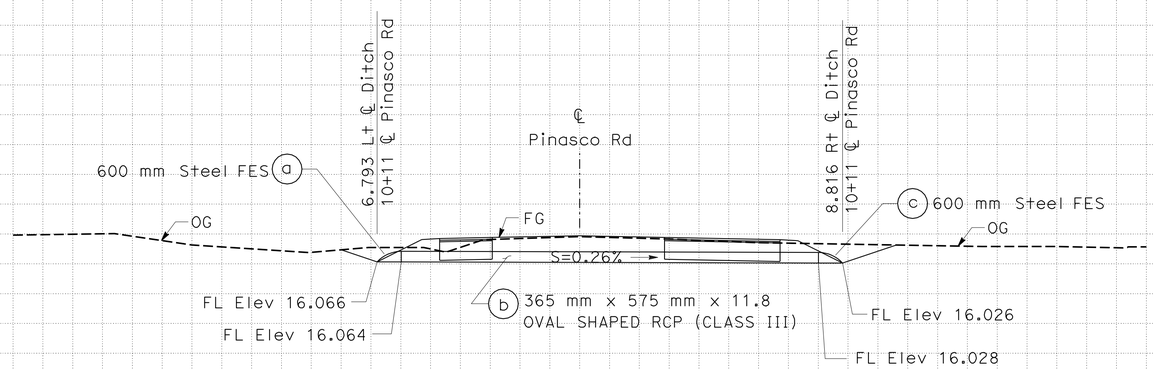

DRAINAGE SYSTEM No. 21

STA 10+11.000

ALL DIMENSIONS ARE IN METERS UNLESS OTHERWISE SHOWN

DRAINAGE PROFILE

SCALE: Horiz 1:100
Vert 1:100

DP-1

Station	-25	-20	-15	-10	-5	0	5	10	15	20	25
m^3 Exc											
m^3 Emb											

REVISED BY | DATE REVISED

AMRITPAL BADHESHA
BALJIT KANDOLA

CALCULATED-DESIGNED BY
CHECKED BY

FUNCTIONAL SUPERVISOR
DAVID SANGHA

STATE OF CALIFORNIA - DEPARTMENT OF TRANSPORTATION
06-DESIGN
Caltrans

LAST REVISION 03-11-10 DATE PLOTTED => 14-SEP-2010 TIME PLOTTED => 11:06

Dist	COUNTY	ROUTE	KILOMETER POST TOTAL PROJECT	SHEET No.	TOTAL SHEETS
10	SJ	26	8.2/10.0	31	83

REGISTERED CIVIL ENGINEER 07/27/09 DATE

8-24-09
PLANS APPROVAL DATE

REGISTERED PROFESSIONAL ENGINEER
D S SANGHA
No. 59652
Exp. 12/31/09
CIVIL
STATE OF CALIFORNIA

THE STATE OF CALIFORNIA OR ITS OFFICERS OR AGENTS SHALL NOT BE RESPONSIBLE FOR THE ACCURACY OR COMPLETENESS OF ELECTRONIC COPIES OF THIS PLAN SHEET.

Caltrans Metric

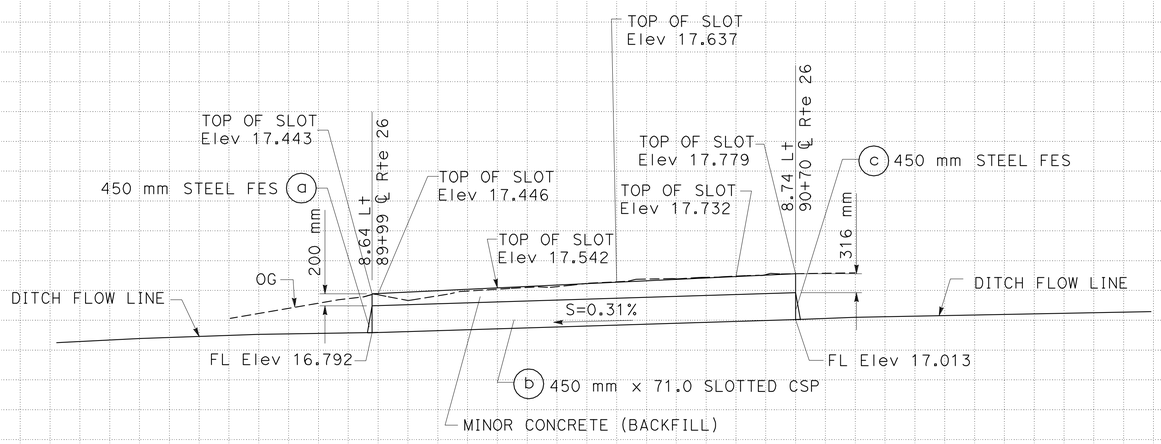

DRAINAGE SYSTEM No. 35

ALL DIMENSIONS ARE IN METERS
UNLESS OTHERWISE SHOWN

DRAINAGE PROFILE

SCALE Horiz 1:500
Vert 1:50

DP-2

Station	89+80	90+00	90+20	90+40	90+60	90+80	91+00
m^3 Exc							
m^3 Emb							

REVISED BY	DATE REVISED

CALCULATED-DESIGNED BY	AMRITPAL BADHESHA
CHECKED BY	BALJIT KANDOLA
FUNCTIONAL SUPERVISOR	DAVID SANGHA

STATE OF CALIFORNIA - DEPARTMENT OF TRANSPORTATION
06-DESIGN
Caltrans

LAST REVISION 06-08-09 DATE PLOTTED => 14-SEP-2010 TIME PLOTTED => 11:06

Dist	COUNTY	ROUTE	KILOMETER POST TOTAL PROJECT	SHEET No.	TOTAL SHEETS
10	SJ	26	8.2/10.0	32	83

REGISTERED CIVIL ENGINEER 07-27-09 DATE

8-24-09
PLANS APPROVAL DATE

REGISTERED PROFESSIONAL ENGINEER D S SANGHA No. 59652 Exp. 12/31/09 CIVIL STATE OF CALIFORNIA

THE STATE OF CALIFORNIA OR ITS OFFICERS OR AGENTS SHALL NOT BE RESPONSIBLE FOR THE ACCURACY OR COMPLETENESS OF ELECTRONIC COPIES OF THIS PLAN SHEET.

Caltrans Metric

NOTES:

1. SEE SHEET DD-2 FOR INLET AND OUTLET ELEVATIONS OF CULVERT FLOWLINE AND ADDITIONAL DETAILS.
2. REFER TO LAYOUT AND CONSTRUCTION DETAIL SHEETS FOR DRIVEWAY LOCATIONS.

LEGEND

MINOR CONCRETE (BACKFILL)

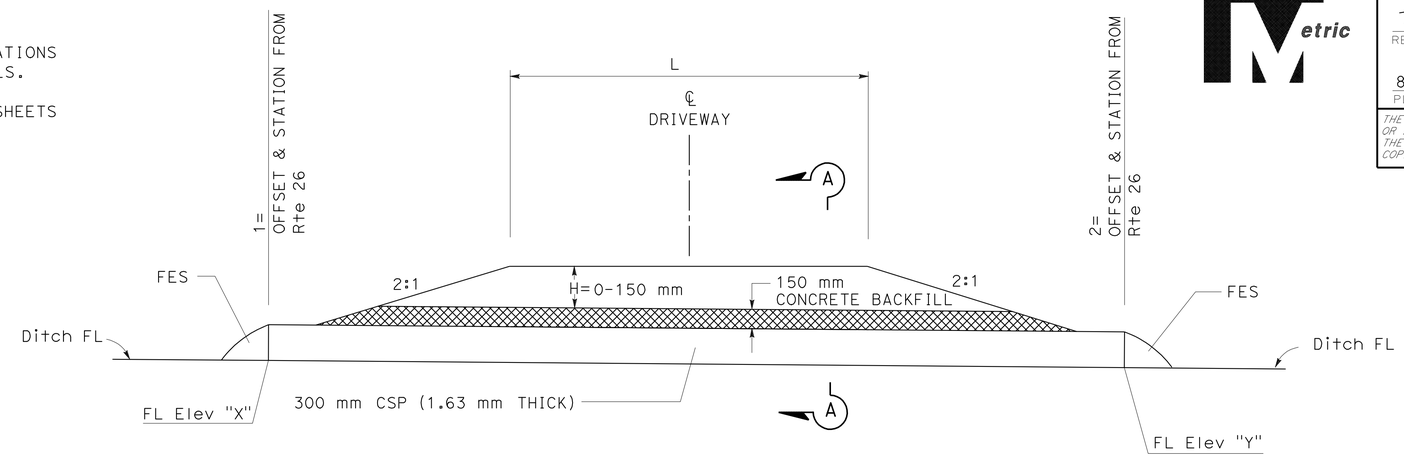

TYPICAL STRUCTURAL SECTION CULVERT UNDER DRIVEWAY

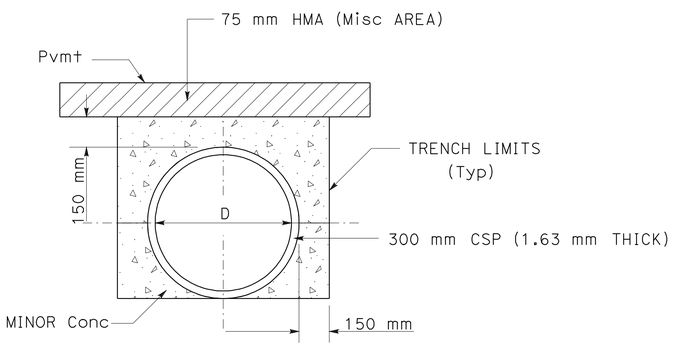

MINOR CONCRETE (BACKFILL) (DRIVEWAY)

CASE 1

SECTION A-A

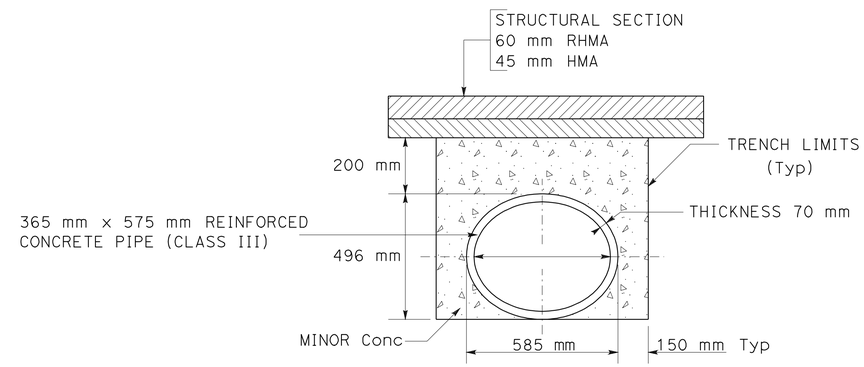

MINOR CONCRETE (BACKFILL)

DRAINAGE SYSTEM No. 21

STA 10+11.000

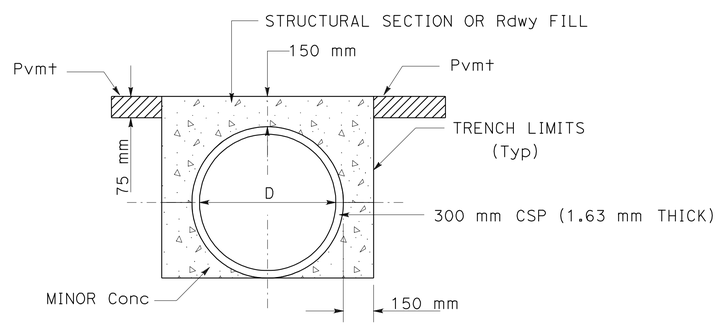

MINOR CONCRETE (BACKFILL) (DRIVEWAY)

CASE 2

SECTION A-A

THIS PLAN IS ACCURATE FOR DRAINAGE WORK ONLY.

ALL DIMENSIONS ARE IN METERS UNLESS OTHERWISE SHOWN.

DRAINAGE DETAILS

NO SCALE

DD-1

STATE OF CALIFORNIA - DEPARTMENT OF TRANSPORTATION
Caltrans
06-DESIGN

FUNCTIONAL SUPERVISOR DAVID SANGHA
CALCULATED-DESIGNED BY
CHECKED BY
BALJIT KANDOLA
CARMELITA BELLE
REVISED BY
DATE REVISED

LAST REVISION 03-11-10 DATE PLOTTED => 14-SEP-2010 TIME PLOTTED => 11:06

Dist	COUNTY	ROUTE	KILOMETER POST TOTAL PROJECT	SHEET No.	TOTAL SHEETS
10	SJ	26	8.2/10.0	33	83

REGISTERED CIVIL ENGINEER 07-27-09 DATE

8-24-09
PLANS APPROVAL DATE

REGISTERED PROFESSIONAL ENGINEER D S SANGHA No. 59652 Exp. 12/31/09 CIVIL STATE OF CALIFORNIA

THE STATE OF CALIFORNIA OR ITS OFFICERS OR AGENTS SHALL NOT BE RESPONSIBLE FOR THE ACCURACY OR COMPLETENESS OF ELECTRONIC COPIES OF THIS PLAN SHEET.

Caltrans Metric

CULVERT UNDER DRIVEWAY

SHEET No.	DRAINAGE SYSTEM No.	FL "X"= FLOW LINE ELEVATION	FL "Y"= FLOW LINE ELEVATION	300 mm CSP (1.63 mm THICK)	300 mm STEEL FES	L= LENGTH OF DRIVEWAY ABOVE CULVERT	1= OFFSET & STATION FROM Rte 26 ℄	2= OFFSET & STATION FROM Rte 26 ℄
		m	m	m	EA	m	m	m
D-1	1	15.665	15.674	9.10	2	8.498	L+ 9.120 m 82+69.811	L+ 9.297 m 82+78.907
D-1	2	15.678	15.692	7.49	2	6.887	L+ 9.360 m 82+81.630	L+ 9.480 m 82+89.117
D-2	5	15.859	15.907	7.74	2	7.135	L+ 9.688 m 83+28.830	L+ 9.693 m 83+36.566
D-2	6	15.963	15.973	8.85	2	8.248	L+ 9.634 m 83+60.239	L+ 9.624 m 83+69.087
D-2	8	15.947	15.930	9.47	2	8.872	L+ 9.493 m 84+81.276	L+ 9.647 m 84+90.763
D-2	9	15.915	15.917	8.68	2	8.078	L+ 9.634 m 85+06.463	L+ 9.674 m 85+15.141
D-2	10	15.918	15.918	7.87	2	7.271	L+ 9.700 m 85+36.307	L+ 9.700 m 85+44.178
D-2	12	15.649	15.774	8.89	2	8.287	L+ 9.681 m 85+77.689	L+ 9.677 m 85+86.552
D-2	13	16.005	16.018	10.09	2	9.487	L+ 9.658 m 86+16.405	L+ 9.661 m 86+26.454
D-2	20	15.936	15.939	7.35	2	6.754	R+ 14.242 m 85+59.255	R+ 13.828 m 85+66.596
D-3	22	16.246	16.255	8.25	2	7.653	L+ 9.100 m 87+51.422	L+ 9.100 m 87+59.675
D-3	23	16.300	16.300	8.18	2	7.580	L+ 9.100 m 87+91.681	L+ 9.100 m 87+99.861
D-3	27	16.360	16.389	8.21	2	7.609	L+ 9.100 m 88+84.513	L+ 9.100 m 88+92.723
D-3	28	16.610	16.661	10.62	2	10.017	L+ 9.100 m 89+43.038	L+ 9.100 m 89+53.655

CULVERT UNDER DRIVEWAY

SHEET No.	DRAINAGE SYSTEM No.	FL "X"= FLOW LINE ELEVATION	FL "Y"= FLOW LINE ELEVATION	300 mm CSP (1.63 mm THICK)	300 mm STEEL FES	L= LENGTH OF DRIVEWAY ABOVE CULVERT	1= STATION & OFFSET FROM Rte 26 ℄	2= STATION & OFFSET FROM Rte 26 ℄
		m	m	m	EA	m	m	m
D-3	31	16.460	16.515	6.77	2	6.168	R+ 12.625 m 87+82.132	R+ 12.399 m 87+88.896
D-3	34	16.892	16.908	6.78	2	6.177	R+ 12.775 m 89+86.033	R+ 12.860 m 89+92.810
D-3	35	16.921	16.937	6.47	2	5.869	R+ 12.913 m 89+97.033	R+ 12.994 m 90+03.501
D-3	36	16.792	16.823	10.34	2	9.736	L+ 9.100 m 89+98.561	L+ 9.100 m 90+08.897
D-4	37	16.885	16.907	7.12	2	6.519	L+ 9.103 m 90+28.747	L+ 9.111 m 90+35.866
D-4	38	16.929	16.953	7.78	2	7.177	L+ 9.119 m 90+43.124	L+ 9.135 m 90+50.901
D-4	39	16.974	16.998	7.67	2	7.068	L+ 9.119 m 90+57.505	L+ 9.114 m 90+65.303
D-4	40	17.083	17.010	7.65	2	7.045	L+ 9.363 m 90+97.413	L+ 9.406 m 91+05.056
D-4	41	17.117	17.131	7.76	2	7.161	L+ 9.403 m 91+15.390	L+ 9.356 m 91+23.151
D-4	42	17.138	17.107	8.22	2	7.617	L+ 9.129 m 91+45.629	L+ 9.131 m 91+53.846
D-4	43	17.054	17.043	10.69	2	10.093	L+ 9.100 m 91+81.803	L+ 9.100 m 91+92.495
D-4	45	17.200	17.228	5.85	2	5.247	R+ 13.167 m 90+53.016	R+ 13.191 m 90+58.863
D-4	46	17.230	17.254	5.97	2	5.365	R+ 13.189 m 90+75.488	R+ 13.200 m 90+81.452
D-4	47	17.351	17.338	5.95	2	5.345	R+ 13.368 m 91+26.788	R+ 13.367 m 91+32.741
D-4	48	17.096	17.050	8.28	2	7.681	R+ 13.306 m 91+84.480	R+ 13.285 m 91+92.762

DRAINAGE DETAILS
DD-2

STATE OF CALIFORNIA - DEPARTMENT OF TRANSPORTATION
Caltrans
06-DESIGN

FUNCTIONAL SUPERVISOR: DAVID SANGHA
CALCULATED-DESIGNED BY: AMRITPAL BADHESHA
CHECKED BY: BALJIT KANDOLA
REVISED BY
DATE REVISED

LAST REVISION 03-16-10
DATE PLOTTED => 14-SEP-2010
TIME PLOTTED => 11:06

Dist	COUNTY	ROUTE	KILOMETER POST TOTAL PROJECT	SHEET No.	TOTAL SHEETS
10	SJ	26	8.2/10.0	34	83

REGISTERED CIVIL ENGINEER 07-27-09 DATE

8-24-09
PLANS APPROVAL DATE

REGISTERED PROFESSIONAL ENGINEER D S SANGHA No. 59652 Exp. 12/31/09 CIVIL STATE OF CALIFORNIA

THE STATE OF CALIFORNIA OR ITS OFFICERS OR AGENTS SHALL NOT BE RESPONSIBLE FOR THE ACCURACY OR COMPLETENESS OF ELECTRONIC COPIES OF THIS PLAN SHEET.

Caltrans Metric

DRAINAGE QUANTITIES

DRAINAGE PLAN SHEET No.	DRAINAGE SYSTEM No.	DRAINAGE UNIT	ABANDON CULVERT	REMOVE CORRUGATED METAL PIPE	REMOVE INLET	300 mm STEEL FES	450 mm STEEL FES	600 mm STEEL FES	300 mm CSP (1.63 mm THICK)	450 mm CSP (2.01 mm THICK)	365 mm x 575 mm OVAL SHAPED REINFORCED CONCRETE PIPE (CLASS III)	MINOR CONCRETE (BACKFILL)	MARKER (CULVERT)	SAND BACKFILL	DESCRIPTION	STATION	DRAINAGE PLAN SHEET No.	DRAINAGE SYSTEM No.	DRAINAGE UNIT
			EA	m	EA	EA	EA	EA	m	m	m	m^3	EA	m^3					
D-1	1	a				1							1		300 mm STEEL FES	"Rte 26" 82+69.811	D-1	1	a
		b							9.10			1.70			300 mm CSP				b
		c				1							1		300 mm STEEL FES	"Rte 26" 82+78.907			c
D-1	2	a				1							1		300 mm STEEL FES	"Rte 26" 82+81.630	D-1	2	a
		b							7.49			1.37			300 mm CSP				b
		c				1							1		300 mm STEEL FES	"Rte 26" 82+89+117			c
D-1	3	a		8.99											REMOVE CMP	"Rte 26" 82+85.298	D-1	3	a
D-1	4	a		8.53											REMOVE CMP	"Rte 26" 82+88.806	D-1	4	a
D-2	5	a				1							1		300 mm STEEL FES	"Rte 26" 83+28.830	D-2	5	a
		b							7.74			1.42			300 mm CSP				b
		c				1							1		300 mm STEEL FES	"Rte 26" 83+36.566			c
D-2	6	a				1							1		300 mm STEEL FES	"Rte 26" 83+60.239	D-2	6	a
		b							8.85			1.65			300 mm CSP				b
		c				1							1		300 mm STEEL FES	"Rte 26" 83+69.087			c
D-2	7	a		11.85											REMOVE CMP	"Rte 26" 84+06.667	D-2	7	a
D-2	8	a				1							1		300 mm STEEL FES	"Rte 26" 84+81.276	D-2	8	a
		b							9.47			1.77			300 mm CSP				b
		c				1							1		300 mm STEEL FES	"Rte 26" 84+90.763			c
D-2	9	a				1							1		300 mm STEEL FES	"Rte 26" 85+06.463	D-2	9	a
		b							8.68			1.61			300 mm CSP				b
		c				1							1		300 mm STEEL FES	"Rte 26" 85+15.141			c
SUBTOTAL				29.37		12			51.33			9.52	12						

DRAINAGE QUANTITIES
DQ-1

STATE OF CALIFORNIA - DEPARTMENT OF TRANSPORTATION
Caltrans
06-DESIGN

FUNCTIONAL SUPERVISOR: DAVID SANGHA
CALCULATED-DESIGNED BY: AMRITPAL BADHESHA
CHECKED BY: CARMELITA BELLE
REVISED BY
DATE REVISED

LAST REVISION 09-07-10 | DATE PLOTTED => 14-SEP-2010 | TIME PLOTTED => 11:06

Dist	COUNTY	ROUTE	KILOMETER POST TOTAL PROJECT	SHEET No.	TOTAL SHEETS
10	SJ	26	8.2/10.0	35	83

REGISTERED CIVIL ENGINEER 03-30-09 DATE

8-24-09
PLANS APPROVAL DATE

REGISTERED PROFESSIONAL ENGINEER D S SANGHA No. 59652 Exp. 12/31/09 CIVIL STATE OF CALIFORNIA

THE STATE OF CALIFORNIA OR ITS OFFICERS OR AGENTS SHALL NOT BE RESPONSIBLE FOR THE ACCURACY OR COMPLETENESS OF ELECTRONIC COPIES OF THIS PLAN SHEET.

Caltrans Metric

DRAINAGE QUANTITIES

DRAINAGE PLAN SHEET No.	DRAINAGE SYSTEM No.	DRAINAGE UNIT	ABANDON CULVERT EA	REMOVE CORRUGATED METAL PIPE m	REMOVE INLET EA	300 mm STEEL FES EA	450 mm STEEL FES EA	600 mm STEEL FES EA	300 mm CSP (1.63 mm THICK) m	450 mm CSP (2.01 mm THICK) m	365 mm x 575 mm OVAL SHAPED REINFORCED CONCRETE PIPE (CLASS III) m	MINOR CONCRETE (BACKFILL) m^3	MARKER (CULVERT) EA	SAND BACKFILL m^3	DESCRIPTION	STATION	DRAINAGE PLAN SHEET No.	DRAINAGE SYSTEM No.	DRAINAGE UNIT
D-2	10	a				1							1		300 mm STEEL FES	"Rte 26" 85+36.307	D-2	10	a
		b							7.87			1.45			300 mm CSP				b
		c				1							1		300 mm STEEL FES	"Rte 26" 85+44.178			c
D-2	11	a					1						1		450 mm STEEL FES	"Rte 26" 85+68.835	D-2	11	a
		b								1.60		0.46			450 mm CSP	"Rte 26" 85+68.835			b
		c								4.80		1.39			450 mm CSP	"Rte 26" 85+68.835			c
		d					1						1		450 mm STEEL FES	"Rte 26" 85+68.835			d
D-2	12	a				1							1		300 mm STEEL FES	"Rte 26" 85+77.689	D-2	12	a
		b							8.89			1.65			300 mm CSP				b
		c				1							1		300 mm STEEL FES	"Rte 26" 85+86.552			c
D-2	13	a				1							1		300 mm STEEL FES	"Rte 26" 86+16.405	D-2	13	a
		b							10.09			1.89			300 mm CSP				b
		c				1							1		300 mm STEEL FES	"Rte 26" 86+26.454			c
D-2	14	a		8.23											REMOVE CMP	"Rte 26" 83+32.651	D-2	14	a
D-2	15	a		8.59											REMOVE CMP	"Rte 26" 83+64.158	D-2	15	a
D-2	16	a		9.57											REMOVE CMP	"Rte 26" 84+86.846	D-2	16	a
D-2	17	a		9.56											REMOVE CMP	"Rte 26" 85+20.114	D-2	17	a
D-2	18	a		9.00											REMOVE CMP	"Rte 26" 85+82.081	D-2	18	a
D-2	19	a		33.45											REMOVE CMP	"Rte 26" 86+20.994	D-2	19	a
D-2	20	a				1							1		300 mm STEEL FES	"Rte 26" 85+59.255	D-2	20	a
		b							7.35			1.35			300 mm CSP				b
		c				1							1		300 mm STEEL FES	"Rte 26" 85+66.596			c
SUBTOTAL				78.40		8	2		34.20	6.40		8.19	10						

DRAINAGE QUANTITIES
DQ-2

STATE OF CALIFORNIA - DEPARTMENT OF TRANSPORTATION
Caltrans
06-DESIGN

FUNCTIONAL SUPERVISOR DAVID SANGHA
CALCULATED-DESIGNED BY AMRITPAL BADHESHA
CHECKED BY CARMELITA BELLE
REVISED BY
DATE REVISED

LAST REVISION 09-07-10
DATE PLOTTED => 14-SEP-2010
TIME PLOTTED => 11:06

Dist	COUNTY	ROUTE	KILOMETER POST TOTAL PROJECT	SHEET No.	TOTAL SHEETS
10	SJ	26	8.2/10.0	36	83

REGISTERED CIVIL ENGINEER 07-27-09 DATE

8-24-09
PLANS APPROVAL DATE

REGISTERED PROFESSIONAL ENGINEER D S SANGHA No. 59652 Exp. 12/31/09 CIVIL STATE OF CALIFORNIA

THE STATE OF CALIFORNIA OR ITS OFFICERS OR AGENTS SHALL NOT BE RESPONSIBLE FOR THE ACCURACY OR COMPLETENESS OF ELECTRONIC COPIES OF THIS PLAN SHEET.

Caltrans Metric

DRAINAGE QUANTITIES

DRAINAGE PLAN SHEET No.	DRAINAGE SYSTEM No.	DRAINAGE UNIT	ABANDON CULVERT EA	REMOVE CORRUGATED METAL PIPE m	REMOVE INLET EA	300 mm STEEL FES EA	450 mm STEEL FES EA	600 mm STEEL FES EA	300 mm CSP (1.63 mm THICK) m	450 mm CSP (2.01 mm THICK) m	365 mm x 575 mm OVAL SHAPED REINFORCED CONCRETE PIPE (CLASS III) m	MINOR CONCRETE (BACKFILL) m^3	MARKER (CULVERT) EA	SAND BACKFILL m^3	DESCRIPTION	STATION	DRAINAGE PLAN SHEET No.	DRAINAGE SYSTEM No.	DRAINAGE UNIT
D-3	21	a						1					1		600 mm STEEL FES	"R+e 26" 86+84.676	D-3	21	a
		b									11.75	3.85			365 mm x 575 mm OVAL SHAPED RCP (CLASS III)				b
		c						1					1		600 mm STEEL FES	"R+e 26" 86+96.400			c
D-3	22	a				1							1		300 mm STEEL FES	"R+e 26" 87+51.422	D-3	22	a
		b							8.25			1.53			300 mm CSP				b
		c				1							1		300 mm STEEL FES	"R+e 26" 87+39.675			c
D-3	23	a				1							1		300 mm STEEL FES	"R+e 26" 87+91.681	D-3	23	a
		b							8.18			1.51			300 mm CSP				b
		c				1							1		300 mm STEEL FES	"R+e 26" 87+99.861			c
D-3	24	a		5.96											REMOVE CMP	"R+e 26" 87+95.539	D-3	24	a
D-3	25	a		6.12											REMOVE CMP	"R+e 26" 88+19.089	D-3	25	a
D-3	26	a		9.07											REMOVE CMP	"R+e 26" 88+47.869	D-3	26	a
D-3	27	a				1							1		300 mm STEEL FES	"R+e 26" 88+84.813	D-3	27	a
		b							8.21			1.52			300 mm CSP				b
		c				1							1		300 mm STEEL FES	"R+e 26" 88+92.423			c
D-3	28	a				1							1		300 mm STEEL FES	"R+e 26" 89+43.038	D-3	28	a
		b							10.62			2.00			300 mm CSP				b
		c				1							1		300 mm STEEL FES	"R+e 26" 89+53.655			c
D-3	29	a		12.06											REMOVE CMP	"R+e 26" 86+89.478	D-3	29	a
D-3	30	a		6.38											REMOVE CMP	"R+e 26" 87+55.014	D-3	30	a
SUBTOTAL				39.59		8		2	35.26		11.75	10.41	10						

DRAINAGE QUANTITIES
DQ-3

STATE OF CALIFORNIA - DEPARTMENT OF TRANSPORTATION
Caltrans 06-DESIGN

FUNCTIONAL SUPERVISOR DAVID SANGHA
CALCULATED-DESIGNED BY CARMELITA BELLE
CHECKED BY AMRITPAL BADHESHA
REVISED BY
DATE REVISED

LAST REVISION 09-07-10 | DATE PLOTTED => 14-SEP-2010 | TIME PLOTTED => 11:06

Dist	COUNTY	ROUTE	KILOMETER POST TOTAL PROJECT	SHEET No.	TOTAL SHEETS
10	SJ	26	8.2/10.0	37	83

REGISTERED CIVIL ENGINEER 07-27-09 DATE

8-24-09
PLANS APPROVAL DATE

REGISTERED PROFESSIONAL ENGINEER D S SANGHA No. 59652 Exp.12/31/09 CIVIL STATE OF CALIFORNIA

THE STATE OF CALIFORNIA OR ITS OFFICERS OR AGENTS SHALL NOT BE RESPONSIBLE FOR THE ACCURACY OR COMPLETENESS OF ELECTRONIC COPIES OF THIS PLAN SHEET.

Caltrans Metric

DRAINAGE QUANTITIES

DRAINAGE PLAN SHEET No.	DRAINAGE SYSTEM No. ⬡	DRAINAGE UNIT ◯	ABANDON CULVERT (EA)	REMOVE CORRUGATED METAL PIPE (m)	REMOVE INLET (EA)	300 mm STEEL FES (EA)	450 mm STEEL FES (EA)	600 mm STEEL FES (EA)	300 mm CSP (1.63 mm THICK) (m)	450 mm CSP (2.01 mm THICK) (m)	365 mm x 575 mm OVAL SHAPED REINFORCED CONCRETE PIPE (CLASS III) (m)	MINOR CONCRETE (BACKFILL) (m^3)	MARKER (CULVERT) (EA)	SAND BACKFILL (m^3)	DESCRIPTION	STATION	DRAINAGE PLAN SHEET No.	DRAINAGE SYSTEM No. ⬡	DRAINAGE UNIT ◯
D-3	31	a				1							1		300 mm STEEL FES	"Rte 26" 87+82.132	D-3	30	a
		b							6.77			1.23			300 mm CSP				b
		c				1							1		300 mm STEEL FES	"Rte 26" 87+88.896			c
D-3	32	a		6.51											REMOVE CMP	"Rte 26" 88+88.696	D-3	31	a
D-3	33	a		9.06											REMOVE CMP	"Rte 26" 89+46.884	D-3	32	a
D-3	34	a				1							1		300 mm STEEL FES	"Rte 26" 89+86.033	D-3	33	a
		b							6.78			1.23			300 mm CSP				b
		c				1							1		300 mm STEEL FES	"Rte 26" 89+92.810			c
D-3	35	a				1							1		300 mm STEEL FES	"Rte 26" 89+97.033	D-3	34	a
		b							6.47			1.17			300 mm CSP				b
		c				1							1		300 mm STEEL FES	"Rte 26" 90+03.501			c
D-3	36	a				1							1		300 mm STEEL FES	"Rte 26" 89+98.561	D-3	36	a
		b							10.34			1.94			300 mm CSP				b
		c				1							1		300 mm STEEL FES	"Rte 26" 90+08.897			c
D-4	37	a				1							1		300 mm STEEL FES	"Rte 26" 90+28.747	D-4	37	a
		b							7.12			1.30			300 mm CSP				b
		c				1							1		300 mm STEEL FES	"Rte 26" 90+35.866			c
D-4	38	a				1							1		300 mm STEEL FES	"Rte 26" 90+43.124	D-4	38	a
		b							7.78			1.43			300 mm CSP				b
		c				1							1		300 mm STEEL FES	"Rte 26" 90+50.901			c
D-4	39	a				1							1		300 mm STEEL FES	"Rte 26" 90+57.505	D-4	39	a
		b							7.67			1.41			300 mm CSP				b
		c				1							1		300 mm STEEL FES	"Rte 26" 90+65.303			c
D-4	40	a				1							1		300 mm STEEL FES	"Rte 26" 90+97.413	D-4	40	a
		b							7.65			1.41			300 mm CSP				b
		c				1							1		300 mm STEEL FES	"Rte 26" 91+05.056			c
D-4	41	a				1							1		300 mm STEEL FES	"Rte 26" 91+15.390	D-4	41	a
		b							7.76			1.43			300 mm CSP				b
		c				1							1		300 mm STEEL FES	"Rte 26" 91+23.151			c
SUBTOTAL				15.57		18			68.34			12.55	18						

DRAINAGE QUANTITIES
DQ-4

STATE OF CALIFORNIA - DEPARTMENT OF TRANSPORTATION
Caltrans 06-DESIGN

FUNCTIONAL SUPERVISOR: DAVID SANGHA
CALCULATED-DESIGNED BY: AMRITPAL BADHESHA
CHECKED BY: CARMELITA BELLE
REVISED BY / DATE REVISED

LAST REVISION 09-07-10 DATE PLOTTED => 14-SEP-2010 TIME PLOTTED => 11:06

Dist	COUNTY	ROUTE	KILOMETER POST TOTAL PROJECT	SHEET No.	TOTAL SHEETS
10	SJ	26	8.2/10.0	38	83

REGISTERED CIVIL ENGINEER 07-27-09 DATE

8-24-09
PLANS APPROVAL DATE

REGISTERED PROFESSIONAL ENGINEER D S SANGHA No. 59652 Exp. 12/31/09 CIVIL STATE OF CALIFORNIA

THE STATE OF CALIFORNIA OR ITS OFFICERS OR AGENTS SHALL NOT BE RESPONSIBLE FOR THE ACCURACY OR COMPLETENESS OF ELECTRONIC COPIES OF THIS PLAN SHEET.

Caltrans Metric

DRAINAGE QUANTITIES

DRAINAGE PLAN SHEET No.	DRAINAGE SYSTEM No. ⬡	DRAINAGE UNIT ◯	ABANDON CULVERT EA	REMOVE CORRUGATED METAL PIPE m	REMOVE INLET EA	300 mm STEEL FES EA	450 mm STEEL FES EA	600 mm STEEL FES EA	300 mm CSP (1.63 mm THICK) m	450 mm CSP (2.01 mm THICK) m	365 mm x 575 mm OVAL SHAPED REINFORCED CONCRETE PIPE (CLASS III) m	MINOR CONCRETE (BACKFILL) m^3	MARKER (CULVERT) EA	SAND BACKFILL m^3	DESCRIPTION	STATION	DRAINAGE PLAN SHEET No.	DRAINAGE SYSTEM No. ⬡	DRAINAGE UNIT ◯
D-4	42	a				1							1		300 mm STEEL FES	"Rte 26" 91+45.629	D-4	42	a
		b							8.22			1.52			300 mm CSP				b
		c				1							1		300 mm STEEL FES	"Rte 26" 91+53.846			c
D-4	43	a				1							1		300 mm STEEL FES	"Rte 26" 91+81.803	D-4	43	a
		b							10.69			2.01			300 mm CSP				b
		c				1							1		300 mm STEEL FES	"Rte 26" 91+92.495			c
D-4	44	a	1											3.0	ABANDON CULVERT (13.80 m)	"Rte 26" 91+96.798	D-4	44	a
D-4	45	a				1							1		300 mm STEEL FES	"Rte 26" 90+53.016	D-4	45	a
		b							5.85			1.05			300 mm CSP				b
		c				1							1		300 mm STEEL FES	"Rte 26" 90+58.863			c
D-4	46	a				1							1		300 mm STEEL FES	"Rte 26" 90+75.488	D-4	46	a
		b							5.97			1.07			300 mm CSP				b
		c				1							1		300 mm STEEL FES	"Rte 26" 90+81.452			c
D-4	47	a				1							1		300 mm STEEL FES	"Rte 26" 91+26.788	D-4	47	a
		b							5.95			1.07			300 mm CSP				b
		c				1							1		300 mm STEEL FES	"Rte 26" 91+32.741			c
D-4	48	a				1							1		300 mm STEEL FES	"Rte 26" 91+84.480	D-4	48	a
		b							8.28			1.53			300 mm CSP				b
		c				1							1		300 mm STEEL FES	"Rte 26" 91+92.762			c
D-4	49	a			1										REMOVE INLET	"Rte 26" 91+96.000	D-4	49	a
		b		5.35											REMOVE CULVERT				b
DQ-5 TOTAL			1	5.35	1	12			44.96			8.25	12	3.0					
DQ-4 TOTAL				15.57		18			68.34			12.55	18						
DQ-3 TOTAL				39.59		8		2	35.26		11.75	10.41	10						
DQ-2 TOTAL				78.40		8	2		34.20	6.40		8.19	10						
DQ-1 TOTAL				29.37		12			51.33			9.52	12						
TOTAL			1	168.28	1	58	2	2	234.09	6.40	11.75	48.92	62	3.0					

DRAINAGE QUANTITIES
DQ-5

STATE OF CALIFORNIA - DEPARTMENT OF TRANSPORTATION
Caltrans
06-DESIGN

FUNCTIONAL SUPERVISOR DAVID SANGHA

CALCULATED-DESIGNED BY AMRITPAL BADHESHA
CHECKED BY CARMELITA BELLE

REVISED BY
DATE REVISED

LAST REVISION 09-07-10
DATE PLOTTED => 20-SEP-2010
TIME PLOTTED => 11:49

Dist	COUNTY	ROUTE	KILOMETER POST TOTAL PROJECT	SHEET No.	TOTAL SHEETS
10	SJ	26	8.2/10.0	39	83

REGISTERED CIVIL ENGINEER 07-27-09 DATE

8-24-09
PLANS APPROVAL DATE

REGISTERED PROFESSIONAL ENGINEER D S SANGHA No. 59652 Exp.12/31/09 CIVIL STATE OF CALIFORNIA

THE STATE OF CALIFORNIA OR ITS OFFICERS OR AGENTS SHALL NOT BE RESPONSIBLE FOR THE ACCURACY OR COMPLETENESS OF ELECTRONIC COPIES OF THIS PLAN SHEET.

Caltrans Metric

LEGEND

—— - e ——— ——— -(oh)——— ——	PG&E (POWER) OVERHEAD
—— - - t ——— ——— - - t ——— ——	AT&T UNDERGROUND
—— - g ——— - ——— - g ——— - ——	PG&E GAS PIPE
—— - - t ——— ——— - -(oh)——— ——	AT&T OVERHEAD
—— - - tc ——— ——— - -(oh)——— ——	COMCAST CABLE OVERHEAD
—— - - tc ——— ——— - - tc ——— ——	COMCAST CABLE UNDERGROUND

#A AT&T UTILITY POLES

#P PG&E UTILITY POLES

X POTHOLE No.

FROM / TO RELOCATE POLE BY OTHERS PRIOR TO CONSTRUCTION

ABBREVIATIONS:

AT&T AMERICAN TELEPHONE AND TELEGRAPH

PG&E PACIFIC GAS AND ELECTRIC COMPANY

NOTES:

1. ALL DEPTHS ARE MEASURED FROM THE TOP OF PIPE UNLESS OTHERWISE STATED.
2. LOCATIONS OF UTILITY FACILITIES SHOWN ON THESE PLANS ARE APPROXIMATE AND SHALL BE VERIFIED BY THE CONTRACTOR PRIOR TO CONSTRUCTION.

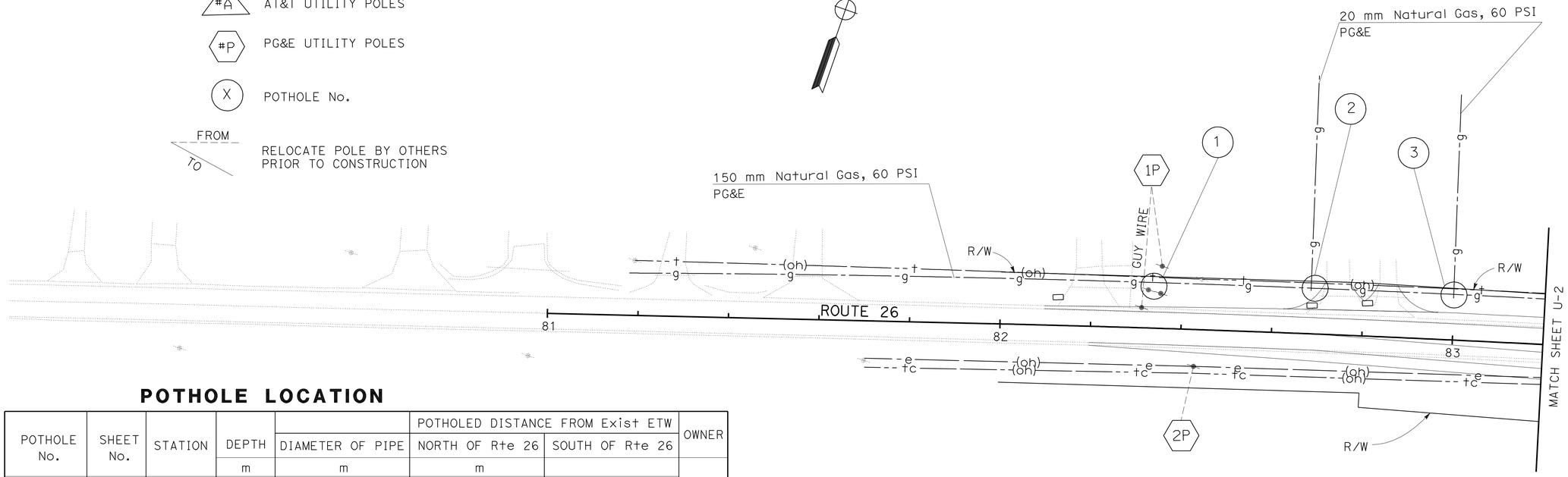

POTHOLE LOCATION

POTHOLE No.	SHEET No.	STATION	DEPTH	DIAMETER OF PIPE	POTHOLED DISTANCE FROM Exist ETW NORTH OF Rte 26	POTHOLED DISTANCE FROM Exist ETW SOUTH OF Rte 26	OWNER
			m	m	m		
1	U-1	82+34	0.94	0.15	6.10		PG&E
2	U-1	82+50	1.22	0.15	5.87		
3	U-1	83+00	0.81	0.15	5.49		
4	U-2	83+34	1.35	0.15	5.79		
5	U-2	84+69	0.69	0.15	6.46		
6	U-2	85+16	0.76	0.15	6.86		
7	U-2	85+20	0.92	0.15	6.71		
8	U-2	85+89	0.79	0.15	5.49		
9	U-2	85+94	0.74	0.15	5.49		
10	U-3	86+75	0.76	0.15	6.10		
11	U-3	86+94	1.40	0.15	5.18		
12	U-3	87+40	0.81	0.15	3.66		
13	U-3	87+54	1.17	0.15	3.76		
14	U-3	87+92	1.07	0.15	3.79		
15	U-3	88+51	1.09	0.15	3.96		
16	U-3	88+87	1.09	0.15	4.57		
17	U-3	89+43	0.86	0.15	4.88		
18	U-3	89+60	1.22	0.15	4.28		
19	U-4	90+44	0.94	0.15	5.34		
20	U-4	90+64	0.91	0.15	5.49		
21	U-4	91+04	0.91	0.15	5.79		
22	U-4	91+26	0.94	0.15	5.79		
23	U-4	91+36	0.94	0.15	5.18		

POTHOLE LOCATION

POTHOLE No.	SHEET No.	STATION	DEPTH	DIAMETER OF PIPE	POTHOLED DISTANCE FROM Exist ETW NORTH OF Rte 26	POTHOLED DISTANCE FROM Exist ETW SOUTH OF Rte 26	OWNER
			m	m	m		
24	U-4	91+74	0.61	0.15	5.18		PG&E
25	U-4	92+51	0.97	0.15	5.79		
26	U-4	92+90	1.17	0.15	5.49		
27	U-5	94+30	1.17	0.15	6.10		
28	U-5	96+60	0.99	0.15	5.49		
29	U-5	96+65	1.09	0.15	6.40		
30	U-5	97+02	1.02	0.15	6.10		
31	U-3	87+80	0.81	0.02		7.01	
32	U-3	89+90	0.94	0.02		3.45	
33	U-4	90+50	0.86	0.02		4.50	
34	U-4	90+60	0.48	0.02		4.28	
35	U-4	91+30	0.71	0.02		5.00	
36	U-4	91+90	0.74	0.02		5.54	
37	U-4	92+30	1.37	0.02		4.88	
38	U-4	93+60	0.92	0.02		5.23	
39	U-5	96+60	0.46	0.02		4.28	

THIS PLAN ACCURATE FOR UTILITIES WORK ONLY

ALL DIMENSIONS ARE IN METERS UNLESS OTHERWISE SHOWN

SCALE 1:500

UTILITY PLAN
U-1

REVISED BY | DATE REVISED

BALJIT KANDOLA | CARMELITA BELLE

CALCULATED-DESIGNED BY | CHECKED BY

FUNCTIONAL SUPERVISOR: DAVID SANGHA

STATE OF CALIFORNIA - DEPARTMENT OF TRANSPORTATION
Caltrans 06-DESIGN

LAST REVISION | DATE PLOTTED => 14-SEP-2010 | TIME PLOTTED => 11:06
07-06-09

Dist	COUNTY	ROUTE	KILOMETER POST TOTAL PROJECT	SHEET No.	TOTAL SHEETS
10	SJ	26	8.2/10.0	40	83

REGISTERED CIVIL ENGINEER 07-27-09 DATE

8-24-09
PLANS APPROVAL DATE

REGISTERED PROFESSIONAL ENGINEER
D S SANGHA
No. 59652
Exp. 12/31/09
CIVIL
STATE OF CALIFORNIA

THE STATE OF CALIFORNIA OR ITS OFFICERS OR AGENTS SHALL NOT BE RESPONSIBLE FOR THE ACCURACY OR COMPLETENESS OF ELECTRONIC COPIES OF THIS PLAN SHEET.

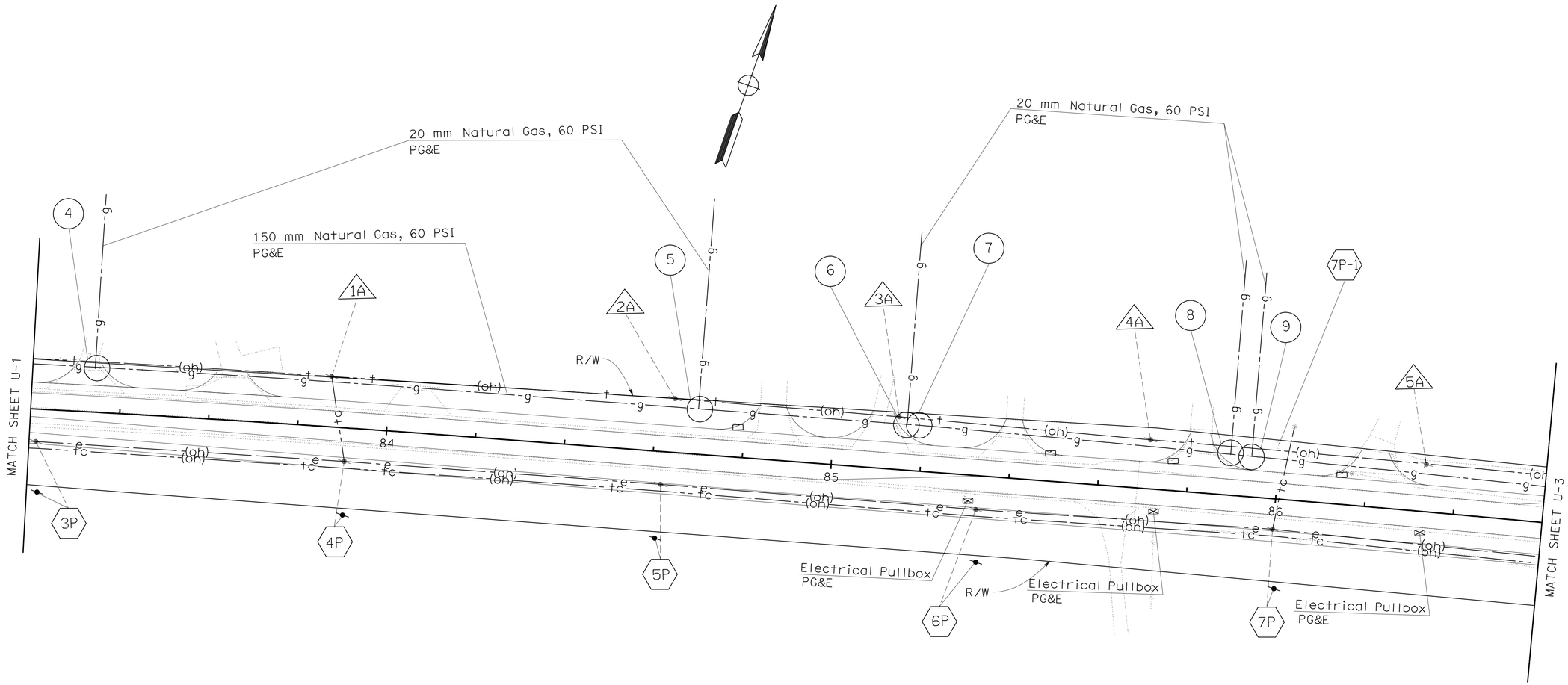

THIS PLAN ACCURATE FOR UTILITIES WORK ONLY

ALL DIMENSIONS ARE IN METERS
UNLESS OTHERWISE SHOWN

SCALE 1:500

UTILITY PLAN
U-2

STATE OF CALIFORNIA - DEPARTMENT OF TRANSPORTATION
Caltrans
06-DESIGN

FUNCTIONAL SUPERVISOR: DAVID SANGHA
CALCULATED-DESIGNED BY: BALJIT KANDOLA
CHECKED BY: CARMELITA BELLE
REVISED BY
DATE REVISED

LAST REVISION 07-06-09
DATE PLOTTED => 14-SEP-2010
TIME PLOTTED => 11:06

Dist	COUNTY	ROUTE	KILOMETER POST TOTAL PROJECT	SHEET No.	TOTAL SHEETS
10	SJ	26	8.2/10.0	41	83

07-27-09
REGISTERED CIVIL ENGINEER DATE

8-24-09
PLANS APPROVAL DATE

REGISTERED PROFESSIONAL ENGINEER
D S SANGHA
No. 59652
Exp. 12/31/09
CIVIL
STATE OF CALIFORNIA

THE STATE OF CALIFORNIA OR ITS OFFICERS OR AGENTS SHALL NOT BE RESPONSIBLE FOR THE ACCURACY OR COMPLETENESS OF ELECTRONIC COPIES OF THIS PLAN SHEET.

Caltrans Metric

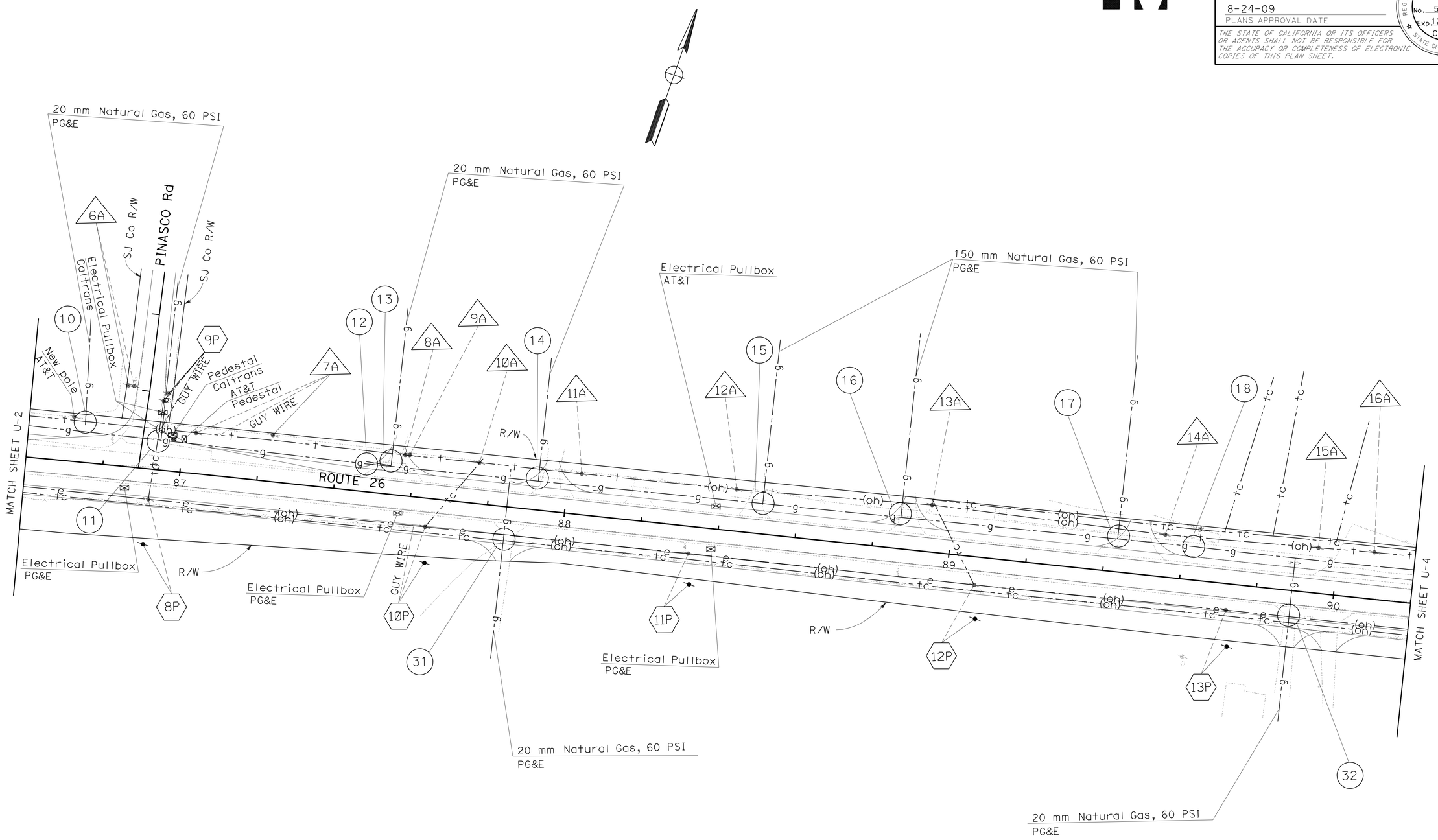

UTILITY PLAN
U-3

THIS PLAN ACCURATE FOR UTILITIES WORK ONLY

ALL DIMENSIONS ARE IN METERS
UNLESS OTHERWISE SHOWN

SCALE 1:500

STATE OF CALIFORNIA - DEPARTMENT OF TRANSPORTATION
Caltrans
06-DESIGN

FUNCTIONAL SUPERVISOR: DAVID SANGHA
CALCULATED-DESIGNED BY: BALJIT KANDOLA
CHECKED BY: CARMELITA BELLE
REVISED BY
DATE REVISED

LAST REVISION 07-06-09
DATE PLOTTED => 14-SEP-2010
TIME PLOTTED => 11:06

Dist	COUNTY	ROUTE	KILOMETER POST TOTAL PROJECT	SHEET No.	TOTAL SHEETS
10	SJ	26	8.2/10.0	42	83

07-27-09
REGISTERED CIVIL ENGINEER DATE

8-24-09
PLANS APPROVAL DATE

REGISTERED PROFESSIONAL ENGINEER
D S SANGHA
No. 59652
Exp. 12/31/09
CIVIL
STATE OF CALIFORNIA

THE STATE OF CALIFORNIA OR ITS OFFICERS OR AGENTS SHALL NOT BE RESPONSIBLE FOR THE ACCURACY OR COMPLETENESS OF ELECTRONIC COPIES OF THIS PLAN SHEET.

Caltrans Metric

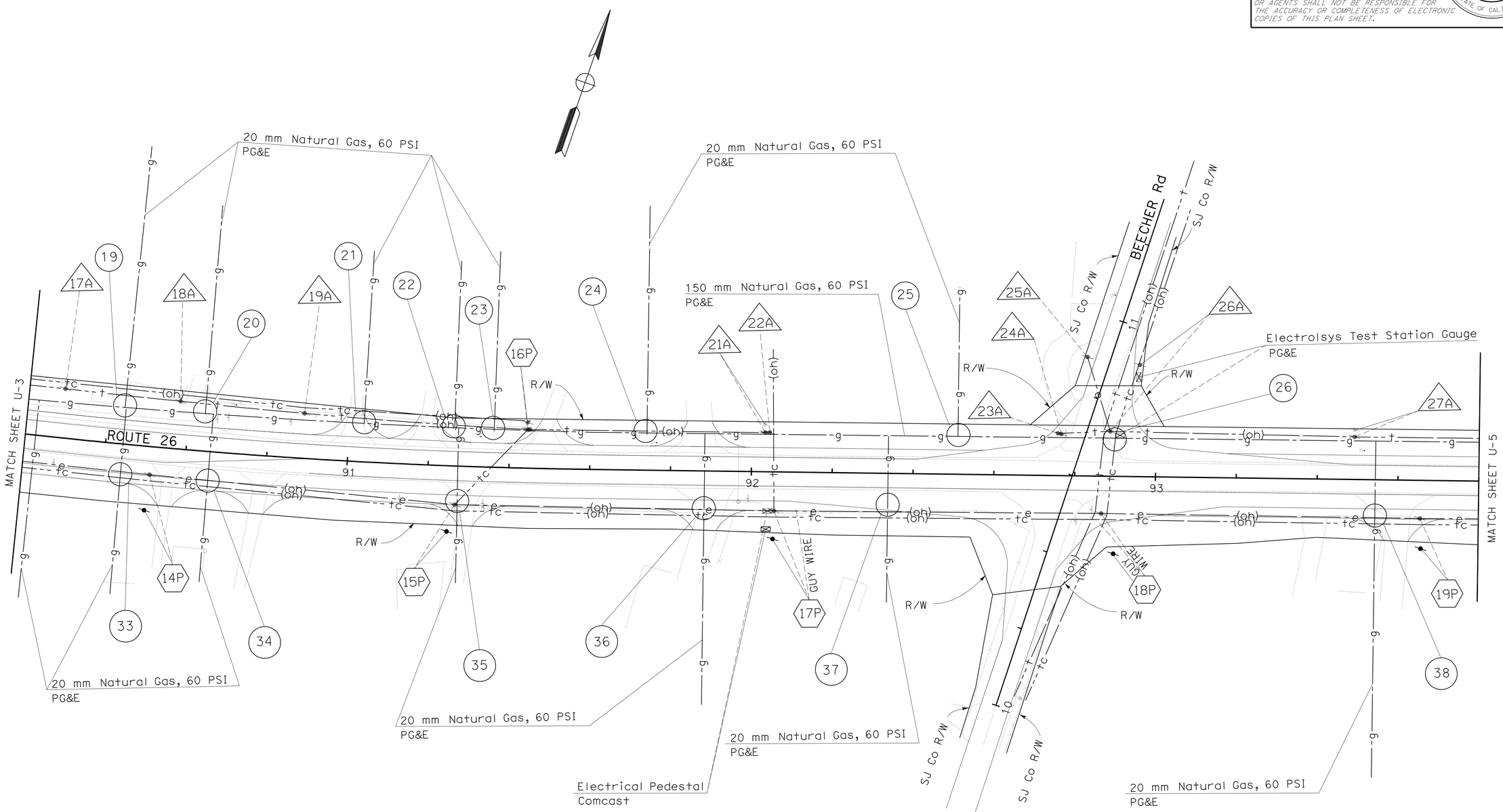

UTILITY PLAN
U-4

THIS PLAN ACCURATE FOR UTILITIES WORK ONLY

ALL DIMENSIONS ARE IN METERS UNLESS OTHERWISE SHOWN

SCALE 1:500

STATE OF CALIFORNIA - DEPARTMENT OF TRANSPORTATION
Caltrans
06-DESIGN

FUNCTIONAL SUPERVISOR: DAVID SANGHA
CALCULATED-DESIGNED BY: BALJIT KANDOLA
CHECKED BY: CARMELITA BELLE
REVISED BY
DATE REVISED

LAST REVISION 07-06-09
DATE PLOTTED => 14-SEP-2010
TIME PLOTTED => 11:07

Dist	COUNTY	ROUTE	KILOMETER POST TOTAL PROJECT	SHEET No.	TOTAL SHEETS
10	SJ	26	8.2/10.0	43	83

REGISTERED CIVIL ENGINEER 07-27-09 DATE

8-24-09
PLANS APPROVAL DATE

REGISTERED PROFESSIONAL ENGINEER D S SANGHA No. 59652 Exp. 12/31/09 CIVIL STATE OF CALIFORNIA

THE STATE OF CALIFORNIA OR ITS OFFICERS OR AGENTS SHALL NOT BE RESPONSIBLE FOR THE ACCURACY OR COMPLETENESS OF ELECTRONIC COPIES OF THIS PLAN SHEET.

Caltrans Metric

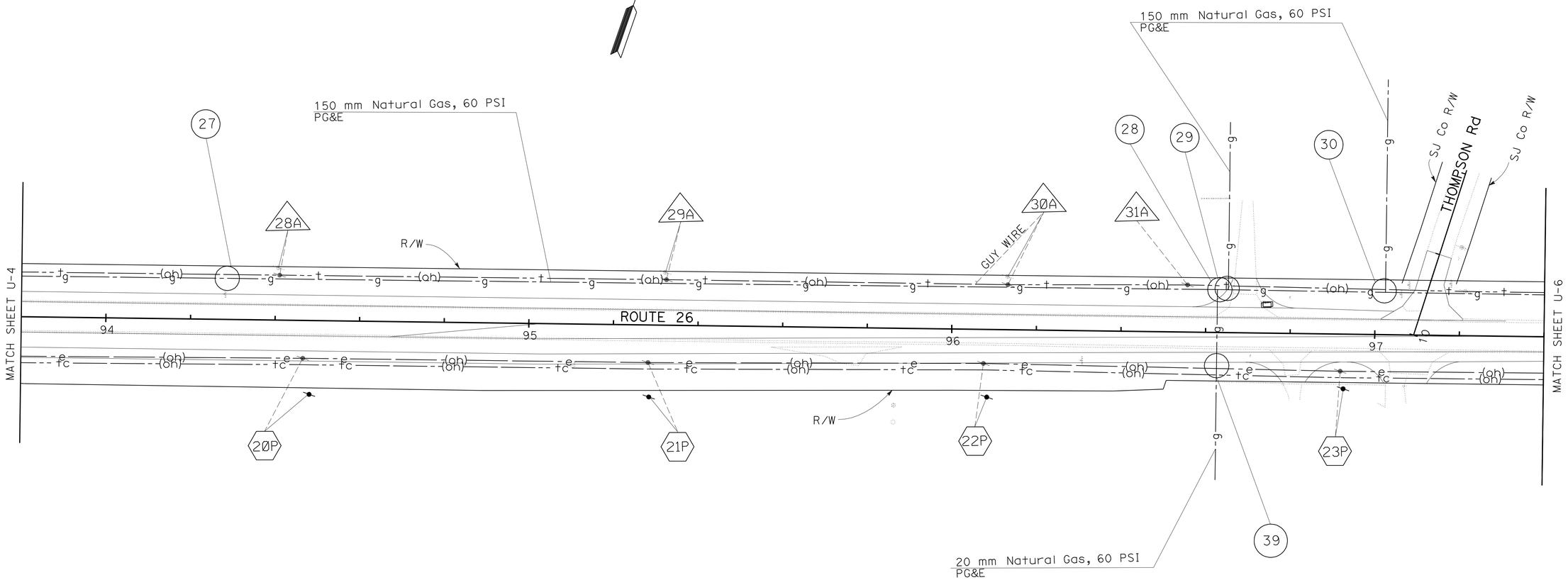

THIS PLAN ACCURATE FOR UTILITIES WORK ONLY

ALL DIMENSIONS ARE IN METERS UNLESS OTHERWISE SHOWN

SCALE 1:500

UTILITY PLAN
U-5

STATE OF CALIFORNIA - DEPARTMENT OF TRANSPORTATION
Caltrans 06-DESIGN

FUNCTIONAL SUPERVISOR: DAVID SANGHA
CALCULATED-DESIGNED BY: BALJIT KANDOLA
CHECKED BY: CARMELITA BELLE
REVISED BY / DATE REVISED

LAST REVISION 07-06-09 | DATE PLOTTED => 14-SEP-2010 | TIME PLOTTED => 11:07

BORDER LAST REVISED 3/1/2007 | RELATIVE BORDER SCALE IS IN MILLIMETERS 0 20 40 60 80 | USERNAME => trienard | DGN FILE => a0e930ka005.dgn | CU 06257 | EA 0E9301

Dist	COUNTY	ROUTE	KILOMETER POST TOTAL PROJECT	SHEET No.	TOTAL SHEETS
10	SJ	26	8.2/10.0	44	83

Caltrans Metric

07-27-09
REGISTERED CIVIL ENGINEER DATE

8-24-09
PLANS APPROVAL DATE

REGISTERED PROFESSIONAL ENGINEER
D S SANGHA
No. 59652
Exp. 12/31/09
CIVIL
STATE OF CALIFORNIA

THE STATE OF CALIFORNIA OR ITS OFFICERS OR AGENTS SHALL NOT BE RESPONSIBLE FOR THE ACCURACY OR COMPLETENESS OF ELECTRONIC COPIES OF THIS PLAN SHEET.

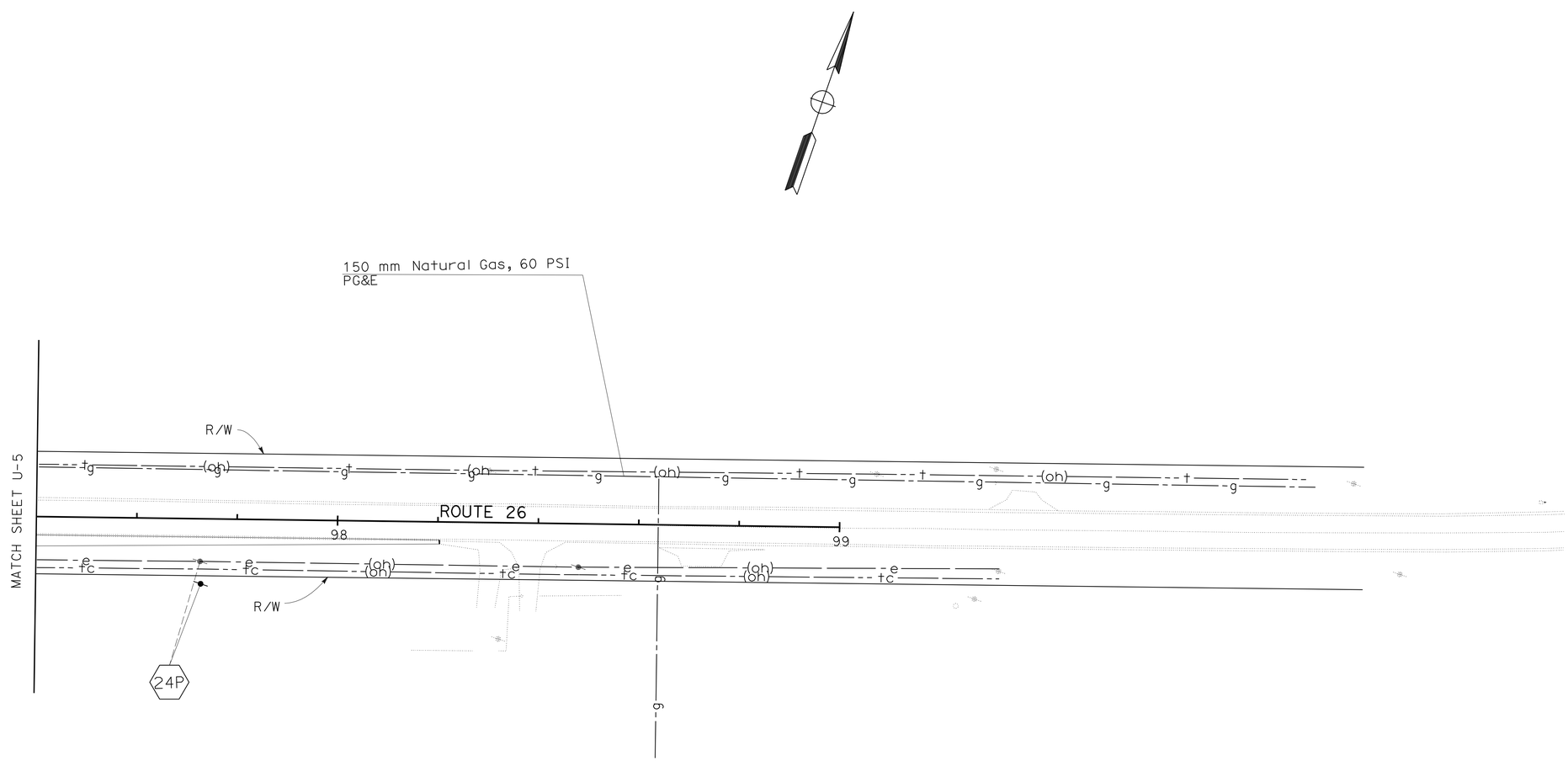

THIS PLAN ACCURATE FOR UTILITIES WORK ONLY

ALL DIMENSIONS ARE IN METERS
UNLESS OTHERWISE SHOWN

SCALE 1:500

UTILITY PLAN
U-6

STATE OF CALIFORNIA - DEPARTMENT OF TRANSPORTATION
Caltrans
06-DESIGN

FUNCTIONAL SUPERVISOR: DAVID SANGHA
CALCULATED-DESIGNED BY
CHECKED BY
BALJIT KANDOLA
CARMELITA BELLE
REVISED BY
DATE REVISED

LAST REVISION 07-06-09
DATE PLOTTED => 14-SEP-2010
TIME PLOTTED => 11:07

Dist	COUNTY	ROUTE	KILOMETER POST TOTAL PROJECT	SHEET No.	TOTAL SHEETS
10	SJ	26	8.2/10.0	45	83

Caltrans Metric

Hassan Marei 7-31-09
REGISTERED CIVIL ENGINEER DATE

8-24-09
PLANS APPROVAL DATE

REGISTERED PROFESSIONAL ENGINEER Hassan Marei No. 35068 Exp. 9/30/09 CIVIL STATE OF CALIFORNIA

THE STATE OF CALIFORNIA OR ITS OFFICERS OR AGENTS SHALL NOT BE RESPONSIBLE FOR THE ACCURACY OR COMPLETENESS OF ELECTRONIC COPIES OF THIS PLAN SHEET.

STATIONARY MOUNTED CONSTRUCTION AREA SIGNS

SIGN	SIGN CODE	PANEL SIZE (mm x mm)	SIGN MESSAGE	No. OF POST AND SIZE (mm x mm)	No. OF SIGNS
A	W20-1	1200 x 1200	ROAD WORK AHEAD	1- 140 x 140	2
B	G20-2	900 x 450	END ROAD WORK	1- 89 x 140	6
C	W20-1	900 x 900	ROAD WORK AHEAD	1- 89 x 89	4
D	C40(CA)	1829 x 914	TRAFFIC FINES DOUBLED IN CONSTRUCTION ZONE	2- 89 x 140	2

NOTE:
SIGN LOCATIONS SHOWN ARE APPROXIMATE,
EXACT LOCATION TO BE DETERMINED BY THE ENGINEER.

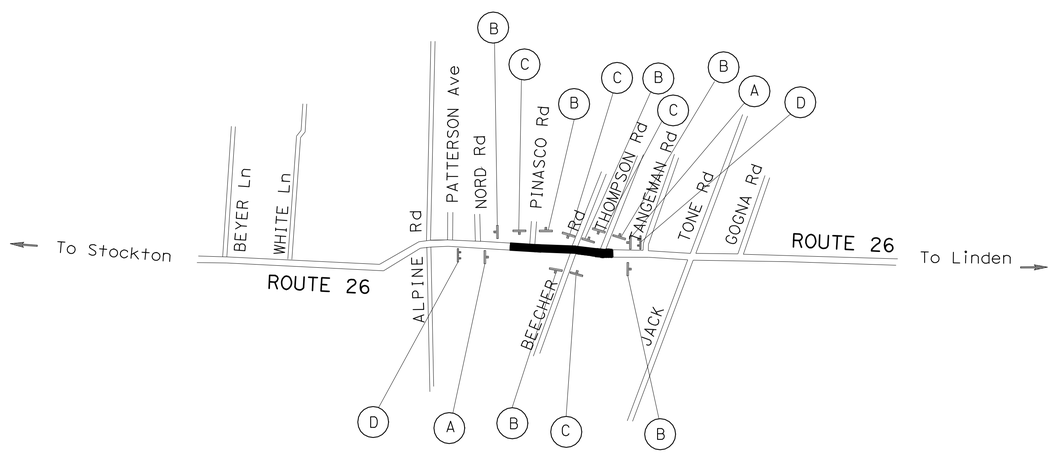

THIS PLAN ACCURATE FOR CONSTRUCTION AREA SIGN WORK ONLY

ALL DIMENSIONS ARE IN METERS
UNLESS OTHERWISE SHOWN

NO SCALE

CONSTRUCTION AREA SIGNS

CS-1

STATE OF CALIFORNIA - DEPARTMENT OF TRANSPORTATION
Caltrans
TRAFFIC DESIGN

FUNCTIONAL SUPERVISOR: HASSAN MAREI
CALCULATED-DESIGNED BY: QUAN TRINH
CHECKED BY: HUE NGUYEN
REVISED BY: QT
DATE REVISED: 07-28-09

LAST REVISION 07-28-09
DATE PLOTTED => 14-SEP-2010
TIME PLOTTED => 11:07

Dist	COUNTY	ROUTE	KILOMETER POST TOTAL PROJECT	SHEET No.	TOTAL SHEETS
10	SJ	26	8.2/10.0	46	83

Caltrans Metric

Hassan Marei 7-31-09
REGISTERED CIVIL ENGINEER DATE

8-24-09
PLANS APPROVAL DATE

REGISTERED PROFESSIONAL ENGINEER Hassan Marei No. 35068 Exp. 9/30/09 CIVIL STATE OF CALIFORNIA

THE STATE OF CALIFORNIA OR ITS OFFICERS OR AGENTS SHALL NOT BE RESPONSIBLE FOR THE ACCURACY OR COMPLETENESS OF ELECTRONIC COPIES OF THIS PLAN SHEET.

NOTES:

1. FOR COMPLETE RIGHT OF WAY DATA, SEE RIGHT OF WAY RECORD MAPS AT DISTRICT OFFICE.
2. SIGN LOCATIONS SHOWN ARE APPROXIMATE. EXACT LOCATIONS WILL BE DETERMINED BY THE ENGINEER.

LEGEND:

- THERMOPLASTIC TRAFFIC STRIPE(SPRAYABLE) DETAIL No.
- THERMOPLASTIC TRAFFIC STRIPE DETAIL No.
- REMOVE THERMOPLASTIC TRAFFIC STRIPE DETAIL No.
- THERMOPLASTIC PAVEMENT MARKING
- REMOVE THERMOPLASTIC PAVEMENT MARKING
- ROADSIDE SIGN (ONE POST)
- RESET ROADSIDE SIGN
- REMOVE ROADSIDE SIGN
- RELOCATE ROADSIDE SIGN
- (X) ROADSIDE SIGN No.
- ROADSIDE SIGN ON SIGNAL POLE/ELECTROLIER
- ROADSIDE SIGN TO REMAIN IN PLACE
- E OR F — DELINEATOR TYPE E/TYPE F
- MP — MILEPOST MARKER
- L — OBJECT MARKER CA TYPE L-1(OM2-1V)
- CHANGE OF PAVEMENT DELINEATION DETAIL

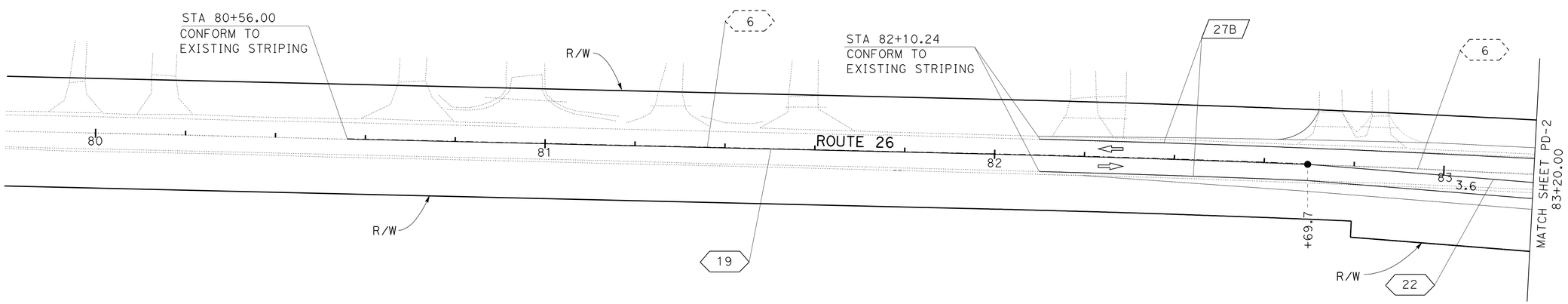

PAVEMENT DELINEATION AND SIGN PLAN

THIS PLAN ACCURATE FOR PAVEMENT DELINEATION AND SIGN WORK ONLY

SCALE 1:500

ALL DIMENSIONS ARE IN METERS UNLESS OTHERWISE SHOWN

PD-1

STATE OF CALIFORNIA - DEPARTMENT OF TRANSPORTATION
Caltrans
TRAFFIC DESIGN

FUNCTIONAL SUPERVISOR: HASSAN MAREI

CALCULATED-DESIGNED BY: QUAN TRINH
CHECKED BY: HUE NGUYEN

REVISED BY: QT
DATE REVISED: 07-28-09

LAST REVISION 07-28-09
DATE PLOTTED => 14-SEP-2010
TIME PLOTTED => 11:07

Dist	COUNTY	ROUTE	KILOMETER POST TOTAL PROJECT	SHEET No.	TOTAL SHEETS
10	SJ	26	8.2/10.0	47	83

Hassan Marei 7-31-09
REGISTERED CIVIL ENGINEER DATE

8-24-09
PLANS APPROVAL DATE

REGISTERED PROFESSIONAL ENGINEER Hassan Marei No. 35068 Exp. 9/30/09 CIVIL STATE OF CALIFORNIA

THE STATE OF CALIFORNIA OR ITS OFFICERS OR AGENTS SHALL NOT BE RESPONSIBLE FOR THE ACCURACY OR COMPLETENESS OF ELECTRONIC COPIES OF THIS PLAN SHEET.

Caltrans Metric

NOTES:

1. FOR COMPLETE RIGHT OF WAY DATA, SEE RIGHT OF WAY RECORD MAPS AT DISTRICT OFFICE.
2. SIGN LOCATIONS SHOWN ARE APPROXIMATE, EXACT LOCATIONS WILL BE DETERMINED BY THE ENGINEER.

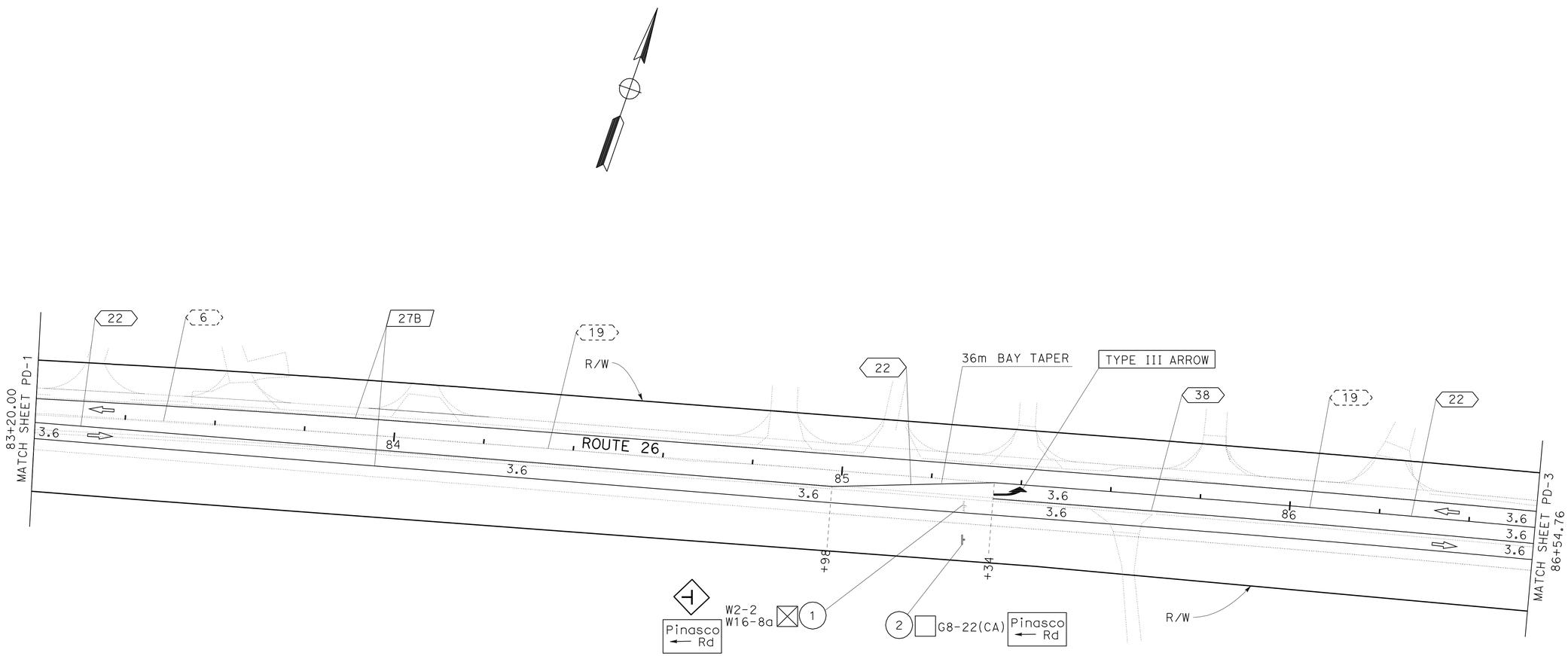

PAVEMENT DELINEATION AND SIGN PLAN

THIS PLAN ACCURATE FOR PAVEMENT DELINEATION AND SIGN WORK ONLY

SCALE 1:500

ALL DIMENSIONS ARE IN METERS UNLESS OTHERWISE SHOWN

PD-2

STATE OF CALIFORNIA - DEPARTMENT OF TRANSPORTATION
Caltrans
TRAFFIC DESIGN

FUNCTIONAL SUPERVISOR: HASSAN MAREI

CALCULATED-DESIGNED BY: QUAN TRINH
CHECKED BY: HUE NGUYEN

REVISED BY: QT
DATE REVISED: 07-28-09

LAST REVISION DATE PLOTTED => 14-SEP-2010
07-28-09 TIME PLOTTED => 11:07

Dist	COUNTY	ROUTE	KILOMETER POST TOTAL PROJECT	SHEET No.	TOTAL SHEETS
10	SJ	26	8.2/10.0	48	83

REGISTERED CIVIL ENGINEER 7-31-09 DATE

8-24-09
PLANS APPROVAL DATE

REGISTERED PROFESSIONAL ENGINEER Hassan Marei No. 35068 Exp. 9/30/09 CIVIL STATE OF CALIFORNIA

THE STATE OF CALIFORNIA OR ITS OFFICERS OR AGENTS SHALL NOT BE RESPONSIBLE FOR THE ACCURACY OR COMPLETENESS OF ELECTRONIC COPIES OF THIS PLAN SHEET.

Caltrans Metric

NOTES:

1. FOR COMPLETE RIGHT OF WAY DATA, SEE RIGHT OF WAY RECORD MAPS AT DISTRICT OFFICE.
2. SIGN LOCATIONS SHOWN ARE APPROXIMATE, EXACT LOCATIONS WILL BE DETERMINED BY THE ENGINEER.

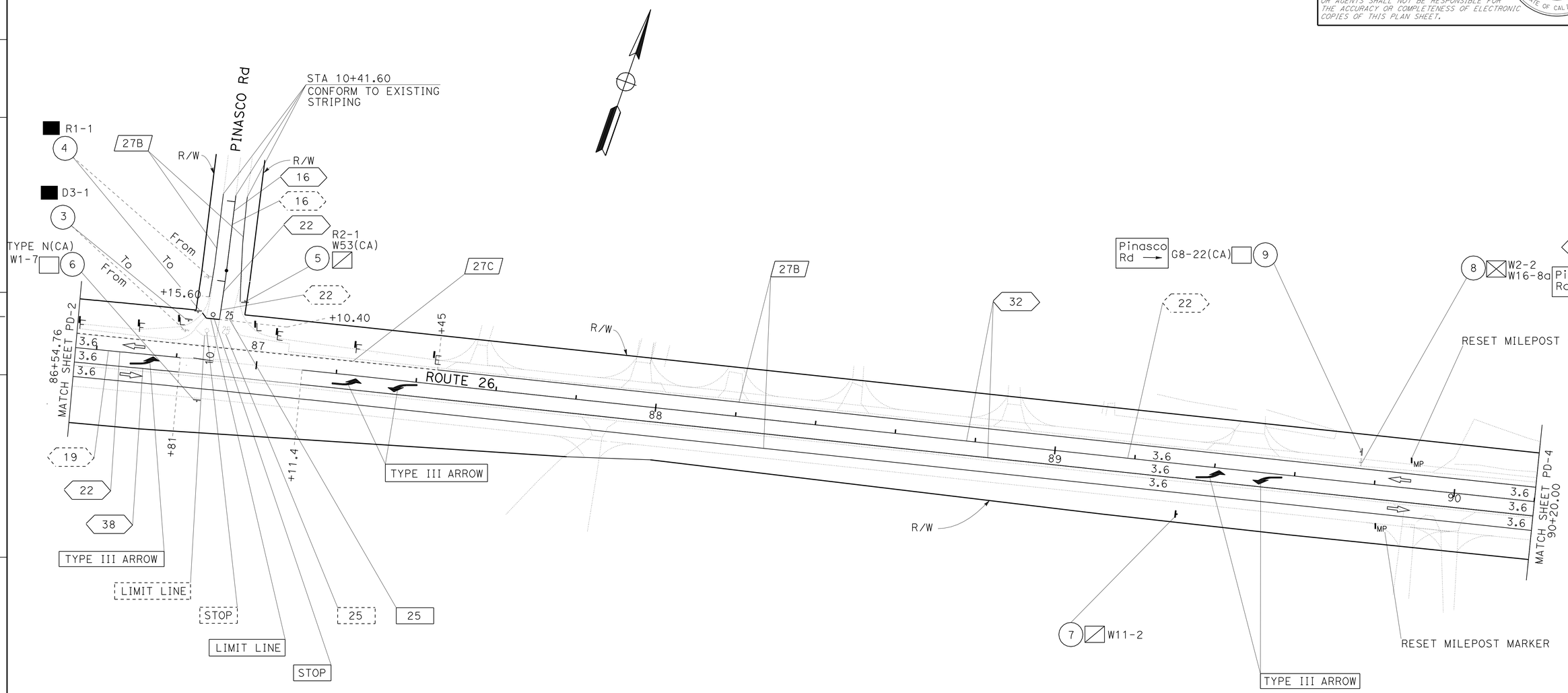

THIS PLAN ACCURATE FOR PAVEMENT DELINEATION AND SIGN WORK ONLY

SCALE 1:500

PAVEMENT DELINEATION AND SIGN PLAN

ALL DIMENSIONS ARE IN METERS UNLESS OTHERWISE SHOWN

PD-3

QUAN TRINH	CALCULATED-DESIGNED BY
HUE NGUYEN	CHECKED BY
HASSAN MAREI	FUNCTIONAL SUPERVISOR
QT	REVISED BY
07-28-09	DATE REVISED

STATE OF CALIFORNIA - DEPARTMENT OF TRANSPORTATION
Caltrans
TRAFFIC DESIGN

LAST REVISION 07-28-09
DATE PLOTTED => 14-SEP-2010
TIME PLOTTED => 11:07

Dist	COUNTY	ROUTE	KILOMETER POST TOTAL PROJECT	SHEET No.	TOTAL SHEETS
10	SJ	26	8.2/10.0	49	83

Hassan Marei 7-31-09
REGISTERED CIVIL ENGINEER DATE

8-24-09
PLANS APPROVAL DATE

REGISTERED PROFESSIONAL ENGINEER Hassan Marei No. 35068 Exp. 9/30/09 CIVIL STATE OF CALIFORNIA

THE STATE OF CALIFORNIA OR ITS OFFICERS OR AGENTS SHALL NOT BE RESPONSIBLE FOR THE ACCURACY OR COMPLETENESS OF ELECTRONIC COPIES OF THIS PLAN SHEET.

Caltrans Metric

NOTES:

1. FOR COMPLETE RIGHT OF WAY DATA, SEE RIGHT OF WAY RECORD MAPS AT DISTRICT OFFICE.
2. SIGN LOCATIONS SHOWN ARE APPROXIMATE, EXACT LOCATIONS WILL BE DETERMINED BY THE ENGINEER.

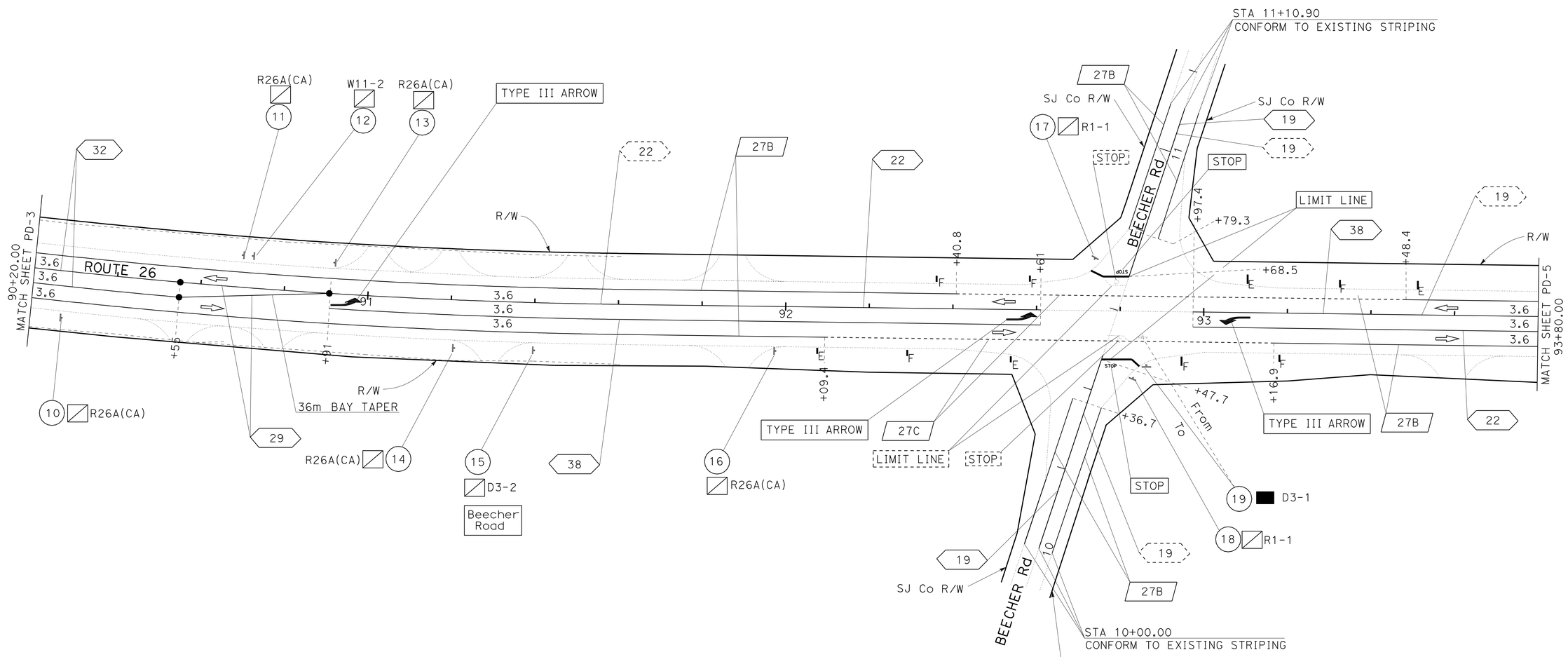

PAVEMENT DELINEATION AND SIGN PLAN

THIS PLAN ACCURATE FOR PAVEMENT DELINEATION AND SIGN WORK ONLY

SCALE 1:500

ALL DIMENSIONS ARE IN METERS UNLESS OTHERWISE SHOWN

PD-4

QT	07-28-09
REVISED BY	DATE REVISED
QUAN TRINH	
HUE NGUYEN	
CALCULATED-DESIGNED BY	
CHECKED BY	
FUNCTIONAL SUPERVISOR	
HASSAN MAREI	

STATE OF CALIFORNIA - DEPARTMENT OF TRANSPORTATION
Caltrans
TRAFFIC DESIGN

LAST REVISION 07-28-09 | DATE PLOTTED => 14-SEP-2010 | TIME PLOTTED => 11:07

Dist	COUNTY	ROUTE	KILOMETER POST TOTAL PROJECT	SHEET No.	TOTAL SHEETS
10	SJ	26	8.2/10.0	50	83

Hassan Marei 7-31-09
REGISTERED CIVIL ENGINEER DATE

8-24-09
PLANS APPROVAL DATE

REGISTERED PROFESSIONAL ENGINEER Hassan Marei No. 35068 Exp.09/30/09 CIVIL STATE OF CALIFORNIA

THE STATE OF CALIFORNIA OR ITS OFFICERS OR AGENTS SHALL NOT BE RESPONSIBLE FOR THE ACCURACY OR COMPLETENESS OF ELECTRONIC COPIES OF THIS PLAN SHEET.

Caltrans Metric

NOTES:

1. FOR COMPLETE RIGHT OF WAY DATA, SEE RIGHT OF WAY RECORD MAPS AT DISTRICT OFFICE.
2. SIGN LOCATIONS SHOWN ARE APPROXIMATE, EXACT LOCATIONS WILL BE DETERMINED BY THE ENGINEER.

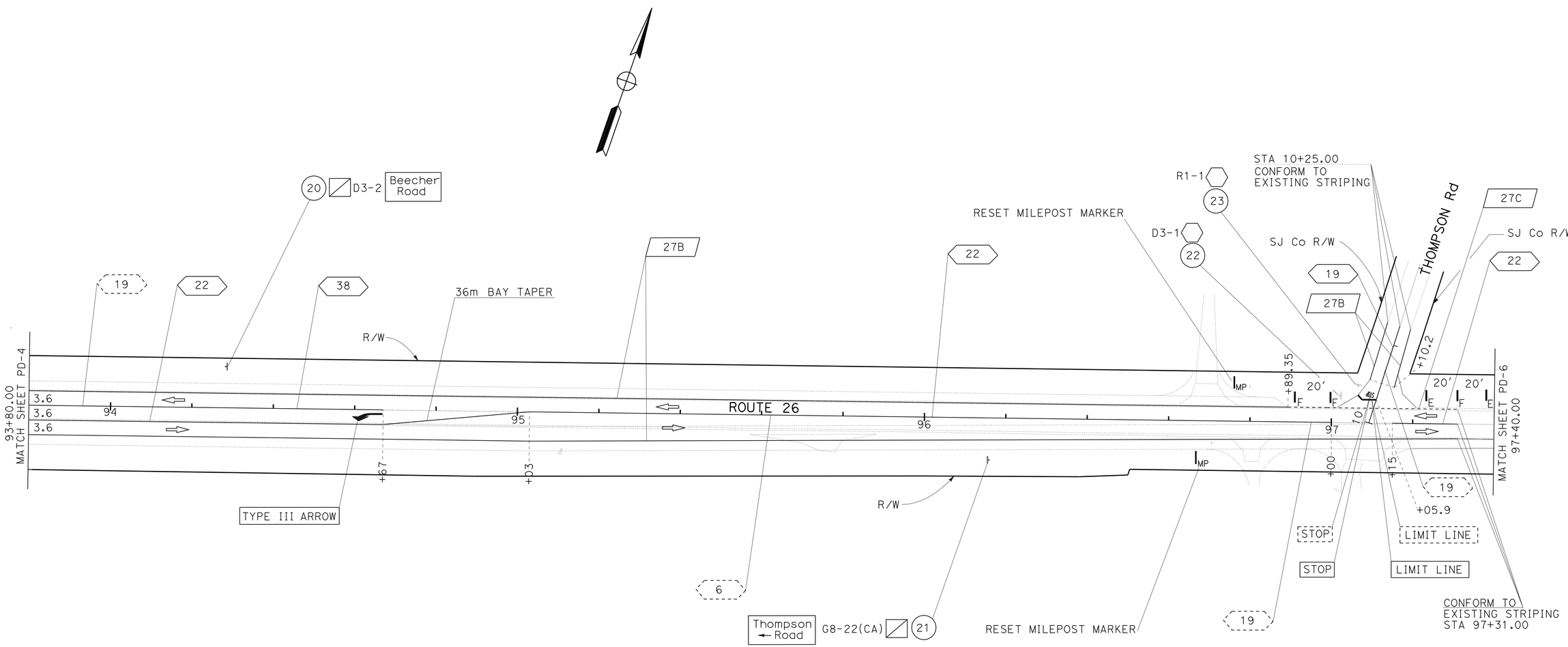

PAVEMENT DELINEATION AND SIGN PLAN

THIS PLAN ACCURATE FOR PAVEMENT DELINEATION AND SIGN WORK ONLY

SCALE 1:500

ALL DIMENSIONS ARE IN METERS UNLESS OTHERWISE SHOWN

PD-5

QUAN TRINH	REVISED BY: QT
HUE NGUYEN	DATE REVISED: 07-28-09
CALCULATED-DESIGNED BY	
CHECKED BY	
FUNCTIONAL SUPERVISOR	HASSAN MAREI

STATE OF CALIFORNIA - DEPARTMENT OF TRANSPORTATION
Caltrans
TRAFFIC DESIGN

LAST REVISION 07-28-09
DATE PLOTTED => 14-SEP-2010
TIME PLOTTED => 11:07

Dist	COUNTY	ROUTE	KILOMETER POST TOTAL PROJECT	SHEET No.	TOTAL SHEETS
10	SJ	26	8.2/10.0	51	83

REGISTERED CIVIL ENGINEER 7-31-09 DATE

8-24-09
PLANS APPROVAL DATE

REGISTERED PROFESSIONAL ENGINEER Hassan Marei No. 35068 Exp. 9/30/09 CIVIL STATE OF CALIFORNIA

THE STATE OF CALIFORNIA OR ITS OFFICERS OR AGENTS SHALL NOT BE RESPONSIBLE FOR THE ACCURACY OR COMPLETENESS OF ELECTRONIC COPIES OF THIS PLAN SHEET.

Caltrans Metric

NOTES:

1. FOR COMPLETE RIGHT OF WAY DATA, SEE RIGHT OF WAY RECORD MAPS AT DISTRICT OFFICE.
2. SIGN LOCATIONS SHOWN ARE APPROXIMATE, EXACT LOCATIONS WILL BE DETERMINED BY THE ENGINEER.

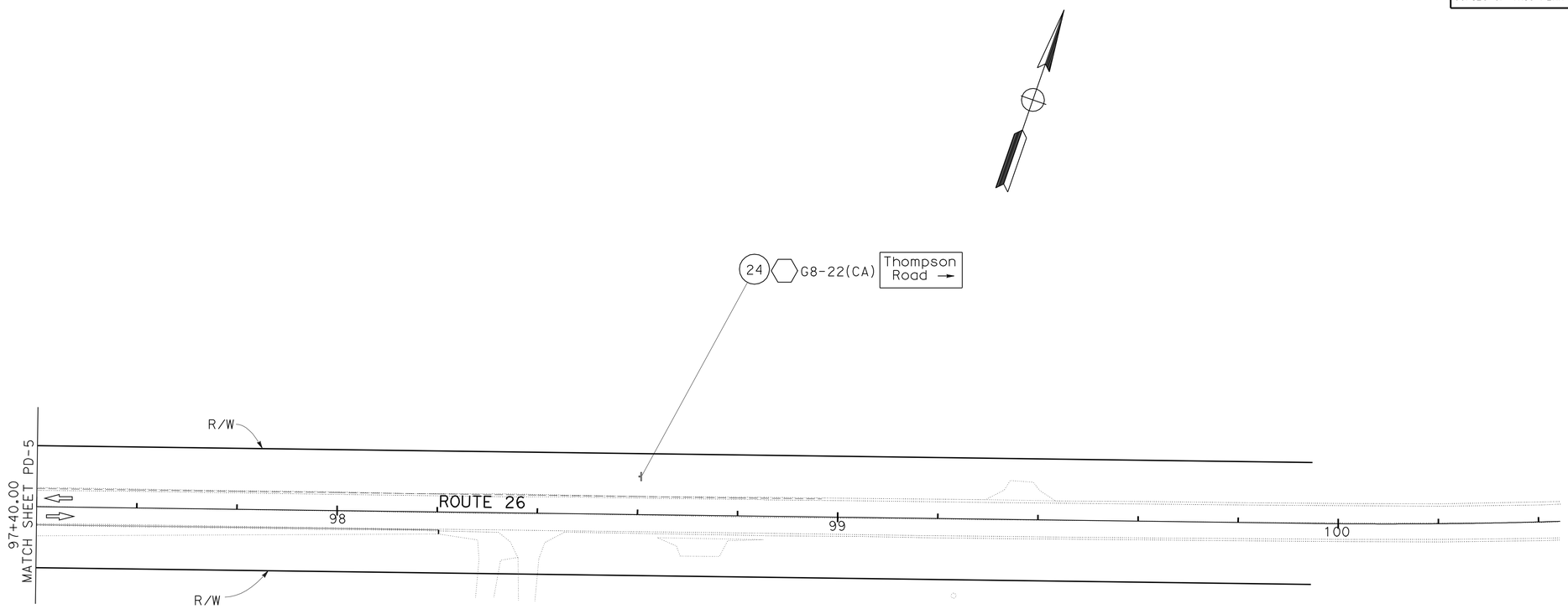

THIS PLAN ACCURATE FOR PAVEMENT DELINEATION AND SIGN WORK ONLY

SCALE 1:500

ALL DIMENSIONS ARE METERS UNLESS OTHERWISE SHOWN

PAVEMENT DELINEATION AND SIGN PLAN

PD-6

STATE OF CALIFORNIA - DEPARTMENT OF TRANSPORTATION
Caltrans
TRAFFIC DESIGN

FUNCTIONAL SUPERVISOR: HASSAN MAREI
CALCULATED-DESIGNED BY: QUAN TRINH
CHECKED BY: HUE NGUYEN
REVISED BY: QT
DATE REVISED: 07-28-09

LAST REVISION 07-28-09 | DATE PLOTTED => 14-SEP-2010 | TIME PLOTTED => 11:07

Dist	COUNTY	ROUTE	KILOMETER POST TOTAL PROJECT	SHEET No.	TOTAL SHEETS
10	SJ	26	8.2/10.0	52	83

REGISTERED CIVIL ENGINEER 7-31-09 DATE

8-24-09
PLANS APPROVAL DATE

REGISTERED PROFESSIONAL ENGINEER Hassan Marei No. 35068 Exp. 9-30-09 CIVIL STATE OF CALIFORNIA

THE STATE OF CALIFORNIA OR ITS OFFICERS OR AGENTS SHALL NOT BE RESPONSIBLE FOR THE ACCURACY OR COMPLETENESS OF ELECTRONIC COPIES OF THIS PLAN SHEET.

Caltrans Metric

PAVEMENT DELINEATION QUANTITIES

SHEET No.	STATION LIMIT	PAVEMENT MARKER (RETRO-REFLECTIVE) TYPE D	TYPE G	TYPE H	100 mm THERMOPLASTIC TRAFFIC STRIPE Det 27B	Det 27C	THERMOPLASTIC TRAFFIC STRIPE (SPRAYABLE) Det 29	Det 22	Det 38	Det 32	Det 19	Det 16	THERMOPLASTIC PAVEMENT MARKING STOP	LIMIT LINE	ARROW TYPE III	NUMERAL	REMOVE PAVEMENT MARKER	REMOVE THERMOPLASTIC PAVEMENT MARKING	REMOVE YELLOW THERMOPLASTIC TRAFFIC STRIPE
		EA			m		m						m2				EA	m2	m
PD-1	80+56.0 to 82+69.7	16		30							213.7								
	82+69.7 to 83+20.0	16						50.3											
	82+10.2 to 83+20.0				219.5												19		66
PD-2	83+20.0 to 86+54.7	94						334.8									63		358.5
	85+34.0 to 86+54.7		18						120.7										
	83+20.0 to 86+54.7				669.4										3.9				
PD-3	86+54.7 to 86+81.0	10	5					26.3	26.3										
	86+54.7 to 87+45.0					90.3											9		42.5
	87+11.4 to 90+20.0	110								617.2									
	86+54.7 to 90+20.0				640.3										19.5		92		660
	PINASCO Rd	9		5	52			12.3				18.8	2.04	1.50		1.63	12	5.38	52.1
PD-4	90+20.0 to 90+55.0	18								70									
	90+55.0 to 90+91.0	12					72												
	90+91.0 to 92+61.0	48	24					170	170										
	92+09.4 to 93+48.4					215.1													
	90+20.0 to 93+80.0				504.9										11.7		96		648.8
	BEECHER Rd	9		15	136.6						89.9		4.08	5.8			25	7.39	122.8
PD-5	93+80.0 to 94+67.0		13						87										
	93+80.0 to 97+31.0	98				41.7		351											
	93+80.0 to 97+31.0				660.3								2.04	1.5	3.9		40		170.8
	THOMPSON Rd	3		4	29.6						19						7	3.56	23.8
	SUB TOTAL	443	60	54	2912.6	347.1	72	944.7	404	687.2	322.6	18.8	8.16	8.8	39	1.63	363	16.33	2145.3
TOTAL		557			3259.7		2449.3						57.6				363	16.33	2145.3

DELINEATOR AND OBJECT MARKER

SHEET No.	DELINEATOR (CLASS 1) TYPE F	TYPE E	OBJECT MARKER (TYPE L)	RESET MILEPOST MARKER
	EA		EA	EA
PD-3	3	2	2	2
PD-4	6	4		
PD-5	3	2		2
SUB-TOTAL	12	8	2	4
TOTAL	20		2	4

STATE OF CALIFORNIA - DEPARTMENT OF TRANSPORTATION
Caltrans TRAFFIC DESIGN
FUNCTIONAL SUPERVISOR HASSAN MAREI
CALCULATED-DESIGNED BY HUE NGUYEN
CHECKED BY QUAN TRINH
REVISED BY QT
DATE REVISED 07-28-09

PAVEMENT DELINEATION QUANTITIES
PDQ-1

LAST REVISION 07-28-09 DATE PLOTTED => 14-SEP-2010 TIME PLOTTED => 11:07

Dist	COUNTY	ROUTE	KILOMETER POST TOTAL PROJECT	SHEET No.	TOTAL SHEETS
10	SJ	26	8.2/10.0	53	83

Caltrans Metric

Hassan Marei 7-31-09
REGISTERED CIVIL ENGINEER DATE

8-24-09
PLANS APPROVAL DATE

REGISTERED PROFESSIONAL ENGINEER
Hassan Marei
No. 35068
Exp. 9/30/10
CIVIL
STATE OF CALIFORNIA

THE STATE OF CALIFORNIA OR ITS OFFICERS OR AGENTS SHALL NOT BE RESPONSIBLE FOR THE ACCURACY OR COMPLETENESS OF ELECTRONIC COPIES OF THIS PLAN SHEET.

REFER TO ROADSIDE SIGN #2 ON PD-2, DIMENSIONS ARE IN MILIMETERS

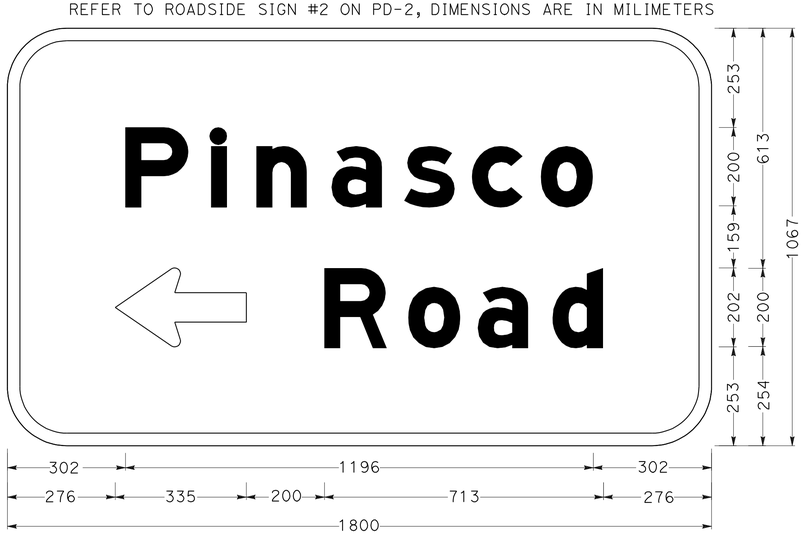

152mm Radius, 32mm Border, White on Green;
[Pinasco] E Mod; [Road] E Mod; Standard Arrow Custom 335mm x 202mm 180 Degrees;

REFER TO ROADSIDE SIGN #9 ON PD-3, DIMENSIONS ARE IN MILIMETERS

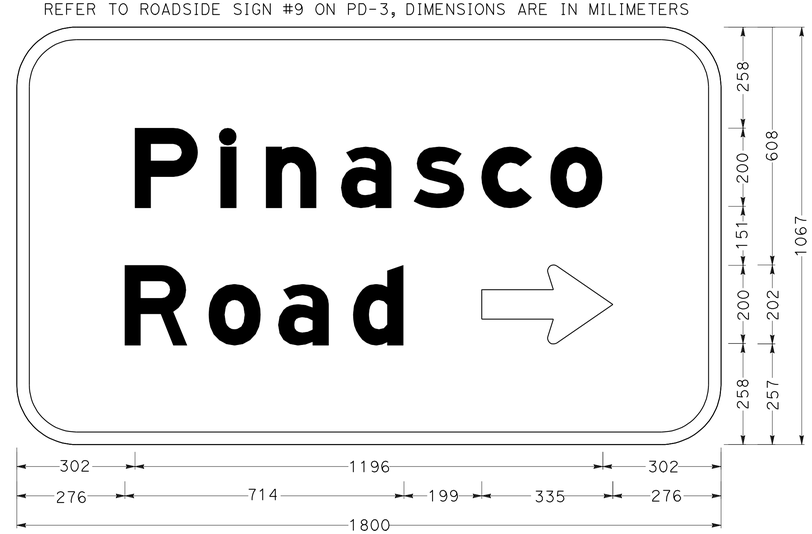

152mm Radius, 32mm Border, White on Green;
[Pinasco] E Mod; [Road] E Mod; Standard Arrow Custom 335mm x 202mm 0 Degree;

SIGN DETAILS
SD-1

NO SCALE

STATE OF CALIFORNIA - DEPARTMENT OF TRANSPORTATION
Caltrans
TRAFFIC DESIGN

FUNCTIONAL SUPERVISOR: HASSAN MAREI
CALCULATED-DESIGNED BY: QUAN TRINH
CHECKED BY: HUE NGUYEN
REVISED BY: QT
DATE REVISED: 07-28-09

LAST REVISION 07-28-09 | DATE PLOTTED => 14-SEP-2010 | TIME PLOTTED => 11:07

Dist	COUNTY	ROUTE	KILOMETER POST TOTAL PROJECT	SHEET No.	TOTAL SHEETS
10	SJ	26	8.2/10.0	54	83

REGISTERED CIVIL ENGINEER 7-31-09 DATE

8-24-09
PLANS APPROVAL DATE

REGISTERED PROFESSIONAL ENGINEER Hassan Marei No. 35068 Exp. 9/30/10 CIVIL STATE OF CALIFORNIA

THE STATE OF CALIFORNIA OR ITS OFFICERS OR AGENTS SHALL NOT BE RESPONSIBLE FOR THE ACCURACY OR COMPLETENESS OF ELECTRONIC COPIES OF THIS PLAN SHEET.

Caltrans Metric

NOTES:

1. EXACT LOCATIONS OF ROADSIDE SIGNS TO BE DETERMINED BY THE ENGINEER
2. CALIFORNIA SIGN CODES ARE DESIGNATED BY (CA), OTHERWISE, FEDERAL SIGN CODES ARE SHOWN.

L= Length of Sign

D= Depth of Sign

(N) - NOT A SEPARATE PAY ITEM, FOR INFORMATION ONLY

✳ - ELECTRICAL ITEM

ROADSIDE SIGN QUANTITIES

SHEET No.	SIGN No.	SIGN CODE	SIGN MESSAGE	PANEL SIZE (L x D) (mm x mm)	POST SIZE (mm x mm)	No. OF SIGN ✳ (N)	RESET ROADSIDE SIGN (WOOD POST)	RELOCATE ROADSIDE SIGN	ROADSIDE SIGN -ONE POST	EXISTING ROADSIDE SIGN TO REMAIN (N)	SIGN MATERIALS: FURNISH SINGLE SHEET ALUMINIUM SIGN UNFRAMED 1.6mm	SINGLE FACED	BACKGROUND: SHEETING COLOR	BACKGROUND: Retroreflectivity ASTM TYPE	LEGEND: SHEETING COLOR	LEGEND: Retroreflectivity ASTM TYPE	GRAFFITI FILM: STANDARD	GRAFFITI FILM: PREMIUM
						EA	EA	EA	EA	EA	M2							
PD-2	1	W2-2/W16-8a	PINASCO Rd/T-INTERSECTION SYMBOL ON FLASHING BEACON POLE		REMOVED PER ELECTRICAL	1												
	2	G8-22(CA)	← PINASCO RD	1800 x 1067	89 x 140				1		1.92	×	GREEN	VII	WHITE	VII		×
PD-3	3	D3-1	HWY 26/PINASCO RD					1										
	4	R1-1	STOP					1										
	5	R2-1/ W-53(CA)	SPEED LIMIT/ NOT A THROUGH ROAD				1											
	6	W1-7 TYPE N(CA)	TWO-DIRECTION ARROWS OBJECT MARKER TYPE N	1219 x 610 / 457 x 457	89 x 140				1		.74 / .21	×	YELLOW	IV	BLACK	IV		×
	7	W11-2	PEDESTRIAN CROSSING SYMBOL				1											
	8	W2-2/W16-8a	PINASCO Rd/T-INTERSECTION SYMBOL ON FLASHING BEACON POLE		REMOVED PER ELECTRICAL	1												
	9	G8-22(CA)	PINASCO RD →	1800 x 1067	89 x 140				1		1.92	×	GREEN	VII	WHITE	VII		×
PD-4	10	R26A(CA)	NO PARKING ANY TIME				1											
	11	R26A(CA)	NO PARKING ANY TIME				1											
	12	W11-2	PEDESTRIAN CROSSING SYMBOL				1											
	13	R26A(CA)	NO PARKING ANY TIME				1											
	14	R26A(CA)	NO PARKING ANY TIME				1											
	15	D3-2	BEECHER ROAD				1											
	16	R26A(CA)	NO PARKING ANY TIME				1											
	17	R1-1	STOP				1											
	18	R1-1	STOP				1											
	19	D3-1	BEECHER ROAD/HWY 26					1										
PD-5	20	D3-2	BEECHER ROAD				1											
	21	G8-22(CA)	← THOMPSON RD				1											
	22	D3-1	THOMPSON RD							1								
	23	R1-1	STOP							1								
PD-6	24	G8-22(CA)	THOMPSON RD							1								
TOTAL							13	3	3		4.79							

SIGN QUANTITIES AND DETAILS
SQ-1

STATE OF CALIFORNIA - DEPARTMENT OF TRANSPORTATION
Caltrans
TRAFFIC DESIGN

FUNCTIONAL SUPERVISOR: HASSAN MAREI
CALCULATED-DESIGNED BY: QUAN TRINH
CHECKED BY: HUE NGUYEN
REVISED BY: QT
DATE REVISED: 07-28-09

LAST REVISION 07-28-09 DATE PLOTTED => 14-SEP-2010 TIME PLOTTED => 11:07

Dist	COUNTY	ROUTE	KILOMETER POST TOTAL PROJECT	SHEET No.	TOTAL SHEETS
10	SJ	26	8.2/10.0	55	83

REGISTERED CIVIL ENGINEER 07/27/09 DATE

8-24-09
PLANS APPROVAL DATE

REGISTERED PROFESSIONAL ENGINEER D S SANGHA No. 59652 Exp. 12/31/09 CIVIL STATE OF CALIFORNIA

THE STATE OF CALIFORNIA OR ITS OFFICERS OR AGENTS SHALL NOT BE RESPONSIBLE FOR THE ACCURACY OR COMPLETENESS OF ELECTRONIC COPIES OF THIS PLAN SHEET.

Caltrans Metric

NOTE:

(N) NOT A SEPARATE PAY ITEM, FOR INFORMATION ONLY.

ABBREVIATIONS:

RHMA RUBBRTIZED HOT MIX ASPHALT
HMA HOT MIX ASPHALT
NW NORTHWEST
NE NORTHEAST
SW SOUTHWEST
SE SOUTHEAST

ROADWAY QUANTITIES

SHEET No.	STATION TO STATION	DESCRIPTION	RHMA (GAP GRADED)	HMA (TYPE B)	CLASS 2 AGGREGATE BASE	TACK COAT	PLACE HMA (Misc AREA)	ROADWAY EXCAVATION	(N) EMBANKMENT	(N) REMOVE TREE	TEMPORARY FIBER ROLL
			TONN	TONN	m^3	TONN	m^2	m^3	m^3	EA	m
L-1 TO L-6	"A" 82+10 TO "A" 98+20	ROUTE 26	2770	1402	6328	16.1		8208	1535	67	50
L-3	"B" 10+00 TO "B" 10+36	PINASCO Rd	24	7	38	0.4		42	8		
L-4	"C" 10+00 TO "C" 11+10	BEECHER Rd	140	44	252	1.2		306	8		
L-5	"D" 10+00 TO "D" 10+36	THOMPSON Rd	10			0.2					
Q-2		DRIVEWAY Q+y		346		1.4	1936	144	420		
TOTAL			2944	1799	6618	19.3	1936	8700			50

RESET MAILBOX

SHEET No.	STATION TO LOCATION	QUANTITY
		EA
L-1	"A" 82+68.23 Lt/ Rte 26	1
L-1	"A" 82+80.41 Lt/ Rte 26	1
L-2	"A" 84+77.89 Lt/ Rte 26	1
L-2	"A" 85+48.16 Lt/ Rte 26	1
L-2	"A" 85+75.83 Lt/ Rte 26	1
L-2	"A" 86+13.58 Lt/ Rte 26	1
L-3	"A" 87+59.35 Lt/ Rte 26	1
L-3	"A" 87+85.46 Lt/ Rte 26	1
L-3	"A" 88+08.00 Lt/ Rte 26	1
L-3	"A" 88+85.23 Lt/ Rte 26	1
L-3	"A" 89+87.77 Lt/ Rte 26	1
L-3	"A" 89+89.77 Lt/ Rte 26	1
L-4	"A" 91+05.47 Lt/ Rte 26	1
L-4	"A" 91+16.41 Lt/ Rte 26	1
L-4	"A" 91+32.07 Lt/ Rte 26	1
L-4	"A" 91+75.73 Lt/ Rte 26	1
L-4	"C" 11+05.43 Lt/ BEECHER Rd	1
L-4	"A" 93+50.80 Lt/ Rte 26	1
L-5	"A" 96+73.35 Lt/ Rte 26	1
L-5	"A" 96+73.84 Lt/ Rte 26	1
TOTAL		20

COLD PLANE AC PAVEMENT

SHEET No.	LOCATION	STATION TO STATION	QUANTITY
			m^2
L-1		"A" 82+10 TO "A" 82+20	85.1
L-3		"B" 10+30 TO "B" 10+36	37.1
L-4		"C" 10+00 TO "C" 10+06	42.0
L-4		"C" 11+04 TO "C" 11+10	42.5
L-5		"D" 10+31 TO "D" 10+36	29.7
L-5		"A" 97+21 TO "A" 97+31	72.8
L-1	EB	"A" 82+20 TO "A" 82+40	72
L-2	EB	"A" 83+00 TO "A" 83+40	144
L-2	EB	"A" 83+60 TO "A" 85+00	504
L-2	EB	"A" 85+20 TO "A" 87+40	792
L-3	EB	"A" 87+60 TO "A" 89+80	792
L-4	EB	"A" 92+35 TO "A" 92+85	180
L-4	EB	"A" 92+87 TO "A" 93+60	262.8
L-5	EB	"A" 93+80 TO "A" 96+00	792
L-5	EB	"A" 96+20 TO "A" 98+00	648
L-5	WB	"A" 95+20 TO "A" 97+00	648
TOTAL			5144.0

SUMMARY OF QUANTITIES

Q-1

STATE OF CALIFORNIA - DEPARTMENT OF TRANSPORTATION
Caltrans
06-DESIGN

FUNCTIONAL SUPERVISOR: DAVID SANGHA
CALCULATED-DESIGNED BY: AMRITPAL BADHESHA
CHECKED BY: BALJIT KANDOLA
REVISED BY
DATE REVISED

LAST REVISION 03-18-10
DATE PLOTTED => 14-SEP-2010
TIME PLOTTED => 11:07

Dist	COUNTY	ROUTE	KILOMETER POST TOTAL PROJECT	SHEET No.	TOTAL SHEETS
10	SJ	26	8.2/10.0	56	83

07-27-08
REGISTERED CIVIL ENGINEER DATE

8-24-09
PLANS APPROVAL DATE

REGISTERED PROFESSIONAL ENGINEER D S SANGHA No. 59652 Exp. 12/31/09 CIVIL STATE OF CALIFORNIA

THE STATE OF CALIFORNIA OR ITS OFFICERS OR AGENTS SHALL NOT BE RESPONSIBLE FOR THE ACCURACY OR COMPLETENESS OF ELECTRONIC COPIES OF THIS PLAN SHEET.

Caltrans Metric

DRIVEWAY QUANTITIES

TABLE 1

No.	STATION	LOCATION	PLACE HMA (Misc AREA)	ROADWAY EXCAVATION	HMA (TYPE B)	(N) REMOVE AC DRIVEWAY
		SIDE	m^2	m^3	TONN	EA
1	"A" 82+75.3	North	113.43	8.51	20.42	
2	"A" 82+86.4	NORTH				
3	"A" 83+32.7	NORTH	52.55	3.94	9.46	
4	"A" 83+65.2	NORTH	57.87	4.34	10.42	
5	"A" 84+06.5	NORTH				1
6	"A" 84+86.6	NORTH	69.53	5.21	12.52	
7	"A" 85+11.3	NORTH	65.96	4.95	11.87	
8	"A" 85+40.7	NORTH	62.58	4.69	11.26	
9	"A" 85+82.6	NORTH	71.14	5.34	12.81	
10	"A" 86+21.7	NORTH	76.22	5.72	13.72	
11	"A" 87+56	NORTH	58.02	4.20	10.09	
12	"A" 87+96.3	NORTH	60.01	4.23	10.16	
13	"A" 88+19.4	NORTH				1
14	"A" 88+49.7	NORTH				1
15	"A" 88+89.6	NORTH	64.03	4.38	10.51	
16	"A" 89+48.8	NORTH	78.79	5.91	14.18	
17	"A" 90+03.7	NORTH	79.36	5.95	14.28	
18	"A" 90+32.3	NORTH	55.04	4.13	9.91	
19	"A" 90+47.0	NORTH	60.62	4.55	10.91	
20	"A" 90+61.5	NORTH	57.28	4.30	10.31	
SUB-TOTAL			1082.43	80.35	192.83	

TABLE 2

No.	STATION	LOCATION	PLACE HMA (Misc AREA)	ROADWAY EXCAVATION	HMA (TYPE B)	(N) REMOVE AC DRIVEWAY
		SIDE	m^2	m^3	TONN	EA
21	"A" 91+1.9	NORTH	58.13	4.09	9.82	
22	"A" 91+19.8	NORTH	52.50	4.95	9.47	
23	"A" 91+50.2	NORTH	53.98	4.05	9.72	
24	"A" 91+87.6	NORTH	70.24	5.27	12.64	
25	"A" 96+69.6	NORTH	73.06	5.48	13.15	
26	"A" 97+7.7	SOUTH	67.84	5.09	12.21	
27	"A" 96+81.0	SOUTH	49.09	3.68	8.84	
28	"A" 93+61.4	SOUTH	60.89	4.57	10.96	
29	"A" 91+89.5	SOUTH	54.35	4.08	9.78	
30	"A" 91+30.2	SOUTH	43.48	3.26	7.83	
31	"A" 90+78.9	SOUTH	42.05	3.15	7.57	
32	"A" 90+56.2	SOUTH	40.96	3.07	7.37	
33	"A" 90+0.71	SOUTH	42.40	3.18	7.63	
34	"A" 88+89.9	SOUTH	42.81	3.21	7.71	
35	"A" 87+85	SOUTH	38.16	2.86	6.87	
36	"A" 85+62.9	SOUTH	63.26	4.74	11.39	
TABLE 2 SUB-TOTAL			853.20	63.73	152.96	
TABLE 1 SUB-TOTAL			1082.43	80.35	192.83	
TOTAL			* 1935.63	* 144.08	* 345.79	

* THIS QUANTITY INCLUDED ON THE ROADWAY QUANTITIES TABLE

SUMMARY OF QUANTITIES

Q-2

STATE OF CALIFORNIA - DEPARTMENT OF TRANSPORTATION
Caltrans
06-DESIGN

FUNCTIONAL SUPERVISOR: DAVID SANGHA
CALCULATED-DESIGNED BY: AMRITPAL BADHESHA
CHECKED BY: BALJIT KANDOLA
REVISED BY / DATE REVISED

LAST REVISION 03-17-10
DATE PLOTTED => 14-SEP-2010
TIME PLOTTED => 11:07

Dist	COUNTY	ROUTE	KILOMETER POST TOTAL PROJECT	SHEET No.	TOTAL SHEETS
10	SJ	26	8.2/10.0	57	83

Omar Mendoza 7-30-09
REGISTERED ELECTRICAL ENGINEER

8-24-09
PLANS APPROVAL DATE

REGISTERED PROFESSIONAL ENGINEER OMAR MENDOZA No. 17982 Exp. 12/31/10 ELECTRICAL STATE OF CALIFORNIA

THE STATE OF CALIFORNIA OR ITS OFFICERS OR AGENTS SHALL NOT BE RESPONSIBLE FOR THE ACCURACY OR COMPLETENESS OF ELECTRONIC COPIES OF THIS PLAN SHEET.

Caltrans Metric

NOTES: (FOR THIS SHEET ONLY)

1. 120/240 V, 1ø, 3-WIRE, TYPE III-AF SERVICE EQUIPMENT ENCLOSURE WITH THE FOLLOWING CIRCUIT BREAKERS:
   CTID No. 10290260005410L

AMPERES	VOLTS	POLES	LOAD	METER	PHOTOELECTRIC CONTROL TYPE
100	240	2	MAIN BREAKER	YES	—
20	240	2	LIGHTING	YES	V
15	120	1	LIGHTING CONTROL	YES	—
20	120	1	SPARE	YES	—
—	—	6	SPACE	—	—

2. THE CONTRACTOR SHALL COORDINATE WITH PG&E FOR CONDUCTOR SPLICING.

3. TYPE 15-SB STANDARD.

4. FOR COMPLETE RIGHT OF WAY AND ACCURATE ACCESS DATA, SEE RIGHT OF WAY RECORD MAPS AT DISTRICT OFFICE.

ABBREVIATIONS:

PG&E - PACIFIC GAS AND ELECTRIC COMPANY
STC - SCREENED TRANSMISSION CABLE
CTID - CALTRANS IDENTIFICATION

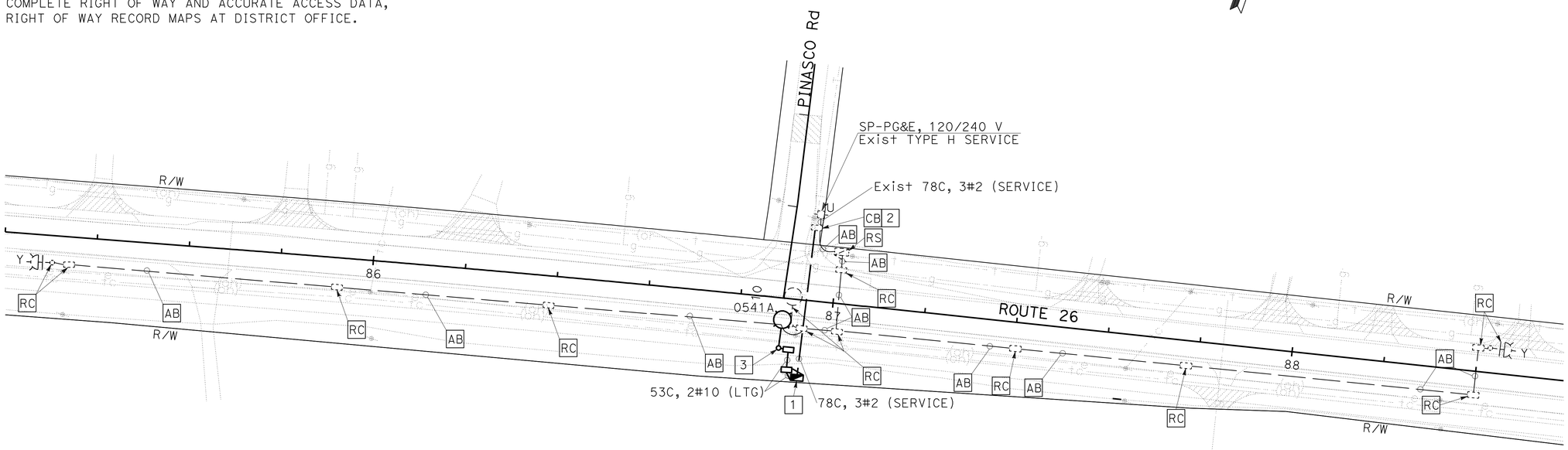

THIS PLAN IS ACCURATE FOR ELECTRICAL WORK ONLY.

ALL DIMENSIONS ARE IN METERS UNLESS OTHERWISE SHOWN

MODIFY LIGHTING

SCALE 1:500

E-1

STATE OF CALIFORNIA - DEPARTMENT OF TRANSPORTATION
Caltrans ELECTRICAL DESIGN

FUNCTIONAL SUPERVISOR: ALI BAKHDOUD
CALCULATED-DESIGNED BY: PAUL MATOS
CHECKED BY: OMAR MENDOZA
REVISED BY / DATE REVISED

LAST REVISION 07-16-09 | DATE PLOTTED => 14-SEP-2010 | TIME PLOTTED => 11:07

Dist	COUNTY	ROUTE	KILOMETER POST TOTAL PROJECT	SHEET No.	TOTAL SHEETS
10	SJ	26	8.2/10.0	58	83

Caltrans Metric

Omar Mendoza 7-30-09
REGISTERED ELECTRICAL ENGINEER

8-24-09
PLANS APPROVAL DATE

REGISTERED PROFESSIONAL ENGINEER OMAR MENDOZA No. 17982 Exp. 12/31/10 ELECTRICAL STATE OF CALIFORNIA

THE STATE OF CALIFORNIA OR ITS OFFICERS OR AGENTS SHALL NOT BE RESPONSIBLE FOR THE ACCURACY OR COMPLETENESS OF ELECTRONIC COPIES OF THIS PLAN SHEET.

NOTES: (FOR THIS SHEET ONLY)

1. 120/240 V, 1ø, 3-WIRE, TYPE III-CF SERVICE EQUIPMENT ENCLOSURE WITH THE FOLLOWING CIRCUIT BREAKERS:

CTID No. 10290260005780T

AMPERES	VOLTS	POLES	LOAD	METER	PHOTOELECTRIC CONTROL TYPE
100	240	2	MAIN BREAKER	YES	—
30	120	1	TMS	YES	—
15	120	1	SPARE	YES	—
20	120	1	SPARE	YES	—
—	—	6	SPACE	—	—

CTID No. 10290260005780L

AMPERES	VOLTS	POLES	LOAD	METER	PHOTOELECTRIC CONTROL TYPE
100	240	2	MAIN BREAKER	YES	—
30	240	2	LIGHTING	YES	V
15	120	1	LIGHTING CONTROL	YES	—
20	120	1	SPARE	YES	—
—	—	6	SPACE	—	—

2. PULL BOX PER PG&E REQUIREMENTS.

3. MODEL 334 CABINET WITH STATE-FURNISHED MODEL 2070 CONTROLLER UNIT FOR TMS.

4. DETECTOR LOOPS AND PIEZO AXLE SENSORS SHALL BE INSTALLED AND IDENTIFIED AS SHOWN IN DETAILS A, B, AND C.

5. FOR COMPLETE RIGHT OF WAY AND ACCURATE ACCESS DATA, SEE RIGHT OF WAY RECORD MAPS AT DISTRICT OFFICE.

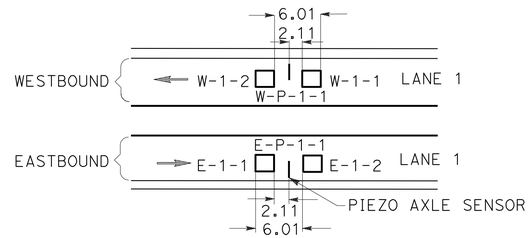

DETECTOR LOOPS AND PIEZO AXLE SENSOR PLACEMENT AND DESIGNATION DETAIL A

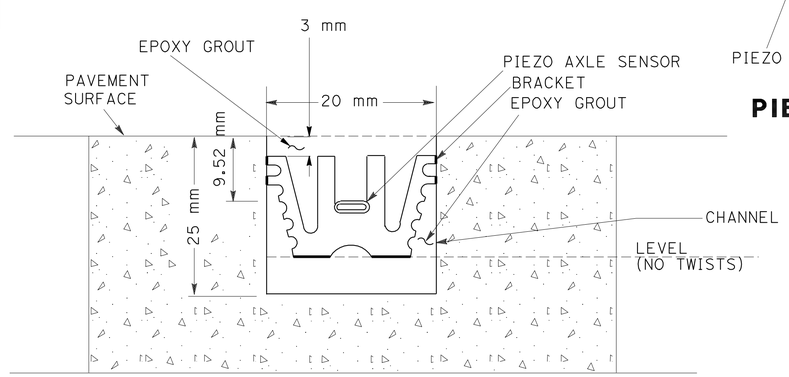

PIEZO AXLE SENSOR INSTALLATION DETAIL B

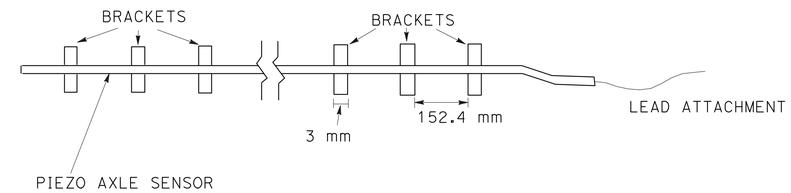

PIEZO AXLE SENSOR INSTALLATION DETAIL C

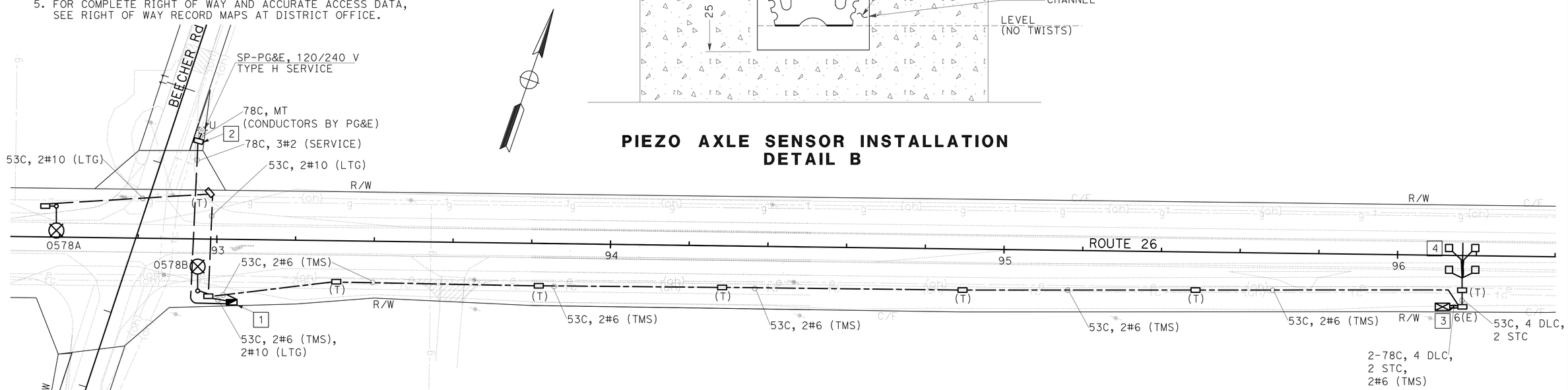

PIEZO AXLE SENSOR INSTALLATION DETAIL B

LIGHTING TRAFFIC MONITORING STATION

E-2

SCALE 1:500

THIS PLAN IS ACCURATE FOR ELECTRICAL WORK ONLY.

ALL DIMENSIONS ARE IN METERS UNLESS OTHERWISE SHOWN

STATE OF CALIFORNIA - DEPARTMENT OF TRANSPORTATION
Caltrans
ELECTRICAL DESIGN

FUNCTIONAL SUPERVISOR: ALI BAKHDOUD
CALCULATED-DESIGNED BY: PAUL MATOS
CHECKED BY: OMAR MENDOZA
REVISED BY / DATE REVISED

LAST REVISION: DATE PLOTTED => 14-SEP-2010 07-16-09 TIME PLOTTED => 11:07

To accompany plans dated 8-24-09

Caltrans Metric

DIST	COUNTY	ROUTE	KILOMETER POST TOTAL PROJECT	SHEET NO.	TOTAL SHEETS
10	SJ	26	8.2/10.0	59	83

Raymond Don Tsztoo
REGISTERED CIVIL ENGINEER

June 6, 2008
PLANS APPROVAL DATE

REGISTERED PROFESSIONAL ENGINEER Raymond Don Tsztoo No. C37332 Exp. 6-30-08 STATE OF CALIFORNIA

The State of California or its officers or agents shall not be responsible for the accuracy or completeness of electronic copies of this plan sheet.

To get to the Caltrans web site, go to: http://www.dot.ca.gov

ANNULAR AND HELICAL PROFILE

COUPLING TYPE	PIPE CORRUGATION (mm)	PIPE SIZE (mm)	W OR A (mm)	PIPE WALL THICKNESS CSP (mm)	PIPE WALL THICKNESS CAP (mm)	BAND THICKNESS CSP (mm)	BAND THICKNESS CAP (mm)	BAR AND STRAP (CSP ONLY) STRAP THICKNESS (mm)	BOLTS (mm ø)	BAR Dia (mm)	BAR YIELD STRENGTH (MPa)	ANGLE DIMENSIONS CSP (mm)	ANGLE DIMENSIONS CAP (mm)	BOLTS (No.-mm ø) CSP	BOLTS (No.-mm ø) CAP	RIVETS ANGLE TO BAND CSP	RIVETS ANGLE TO BAND CAP	SPOT WELDS ANGLE TO BAND CSP
TWO PIECE INTEGRAL FLANGE	38 x 6.5	150 - 250	178	1.32 - 2.01	1.22 - 1.52	1.32	1.52							2-10	2-10			
		300 - 450	178	1.32 - 2.01		1.63								2-13				
	68 x 13	300 - 600	178	1.32 - 2.01	1.52 - 2.67	1.63	1.52							2-13	2-13			
UNIVERSAL	68 x 13	THROUGH 900	305	1.32 - 3.51	1.52 - 3.43	1.32	1.52					51 x 51 x 4.8	51 x 51 x 4.8	3-13	3-13	3-9.5 mm	3-9.5 mm	3-15 mm
		1050 - 1500	305	1.32 - 4.27	1.91 - 4.17	1.32	1.52					51 x 51 x 4.8	51 x 51 x 4.8	3-13	3-13	3-9.5 mm	3-9.5 mm	5-15 mm
		THROUGH 1800	305	1.32 - 4.27	4.17	1.32	2.67	2.01	13	22	220	51 x 51 x 4.8	51 x 51 x 4.8	3-13	3-13	3-9.5 mm	3-9.5 mm	5-15 mm
		1950 - 2100	413	4.27		2.01		DOUBLE 2.01	13	22	220							
ANNULAR	68 x 13	THROUGH 900	178	1.63 - 3.51	1.52 - 3.43	1.32	1.52	2.01	13	22	220	51 x 51 x 4.8	51 x 51 x 4.8	2-13	2-13	3-9.5 mm	3-9.5 mm	3-15 mm
		1050 - 1800	305	1.63 - 4.27	1.91 - 4.17	1.32	2.67	2.01	13	22	220	51 x 51 x 4.8	51 x 51 x 4.8	3-13	3-13	3-9.5 mm	3-9.5 mm	5-15 mm
		1950 - 2100	305	4.27		2.01		2.77	13	22	310	51 x 51 x 4.8		3-13		3-9.5 mm		5-15 mm
	75 x 25	1200 - 2250	355	1.63 - 2.77		1.32		2.01	13	22	220	51 x 51 x 4.8		3-13		3-9.5 mm		5-15 mm
		2400 - 3000	355	2.01 - 2.77		1.32		2.77	13	22	310	51 x 51 x 4.8		3-13		4-9.5 mm		
		1050 - 2700	355		1.52 - 3.43		1.52						51 x 51 x 4.8		3-13		3-9.5 mm	
HELICAL	68 x 13	THROUGH 900	305	1.32 - 3.51	1.52 - 3.43	1.32	1.52	2.01	13	22	220	51 x 51 x 4.8	51 x 51 x 4.8	3-13	3-13	3-9.5 mm	3-9.5 mm	3-15 mm
		1050 - 1800	305	1.32 - 4.27	1.91 - 4.17	1.32	1.52	2.01	13	22	220	51 x 51 x 4.8	51 x 51 x 4.8	3-13	3-13	3-9.5 mm	3-9.5 mm	5-15 mm
		1950 - 2100	305	4.27		2.01		2.77	13	22	310	51 x 51 x 4.8		3-13		3-9.5 mm		5-15 mm
	75 x 25	1200 - 2250	355	1.63 - 2.77		1.32		2.01	13	22	220	51 x 51 x 4.8		3-13		3-9.5 mm		5-15 mm
		2400 - 3000	355	2.01 - 2.77		1.32		2.77	13	22	310	51 x 51 x 4.8		3-13		4-9.5 mm		
		1050 - 2700	355		1.52 - 3.43		1.52						51 x 51 x 4.8		3-13		3-9.5 mm	
HUGGER	68 x 13 REROLLED END	300 - 1350	100	1.32 - 2.77		1.32						64 x 38 x 4.8	64 x 38 x 4.8	1-13				3-15 mm
		1500 - 1650	100	2.77		1.63						64 x 38 x 4.8	64 x 38 x 4.8	1-13				3-15 mm
		900 - 1200	100	3.51		1.63						64 x 38 x 4.8	64 x 38 x 4.8	1-13				3-15 mm
		THROUGH 1800	267	1.32 - 4.27		1.32		2.01	13	22	220							
		1950 - 2100	267	4.27		2.01		2.77	13	22	310							
	75 x 25 REROLLED END	1200 - 2250	267	1.63 - 2.77		1.32		2.01	13	22	220							
		2400 - 3000	267	2.01 - 2.77		1.32		2.77	13	22	310							
	125 x 25 REROLLED END	1200 - 1650	190	1.63 - 2.77		1.63		2.01	13	22	220	64 x 38 x 4.8	64 x 38 x 4.8	1-13				3-15 mm
		1800 - 2250	190	1.63 - 2.01		1.63		2.01	13	22	220	64 x 38 x 4.8	64 x 38 x 4.8	1-13				3-15 mm
		1200 - 2250	190	1.63 - 3.51		1.63		2.01	13	22	220							
		1200 - 3000	305 SEE	1.63 - 2.77		1.63		2.01	13	22	220							
		1200 - 2100	305 NOTE	3.51		1.63		2.01	13	22	220							
		2250 - 3000	305 11	3.51		1.63		DOUBLE 2.01	13	22	220							

SPIRAL RIB PROFILE

COUPLING TYPE	PIPE CORRUGATION (mm)	PIPE SIZE (mm)	W (mm)	PIPE WALL THICKNESS SSRP (mm)	PIPE WALL THICKNESS ASRP (mm)	BAND THICKNESS SSRP (mm)	BAND THICKNESS ASRP (mm)	BAR AND STRAP (SSRP ONLY) STRAP THICKNESS (mm)	BOLTS (mm ø)	BAR Dia (mm)	BAR YIELD STRENGTH (MPa)	ANGLE DIMENSIONS SSRP (mm)	ANGLE DIMENSIONS ASRP (mm)	BOLTS (No.- mm ø) SSRP	BOLTS (No.- mm ø) ASRP	RIVETS ANGLE TO BAND SSRP	RIVETS ANGLE TO BAND ASRP	SPOT WELDS ANGLE TO BAND SSRP
ANNULAR	68 x 13 * REROLLED END	600 - 900	305	1.63 - 2.77	1.52 - 2.67	1.32	1.52	2.01	13	22	220	51 x 51 x 4.8	51 x 51 x 4.8	3-13	3-13	3-9.5 mm	3-9.5 mm	5-15 mm
		1050 - 1500	305	1.63 - 2.77	1.91 - 2.67	1.32	2.67	2.01	13	22	220	51 x 51 x 4.8	51 x 51 x 4.8	3-13	3-13	3-9.5 mm	3-9.5 mm	5-15 mm
		1650 - 1800	305	1.63 - 2.77		1.32		2.01	13	22	220	51 x 51 x 4.8	51 x 51 x 4.8	3-13	3-13	3-9.5 mm	3-9.5 mm	5-15 mm
		1950 - 2900	305	2.01 - 2.77		2.01		2.77	13	22	310	51 x 51 x 4.8	51 x 51 x 4.8	3-13	3-13	3-9.5 mm	3-9.5 mm	5-15 mm
HUGGER	68 x 13 * REROLLED END	600 - 1800	267	1.63 - 2.77		1.32		2.01	13	22	220							
		1950 - 2100	267	2.77		2.01		2.77	13	22	310							

* See Note 14.

14. All profiles of Spiral Rib Pipe (19 mm x 19 mm ribs at 191mm pitch and 19 mm x 25 mm ribs at 292 mm pitch in both steel and aluminum and 19 mm x 25 mm ribs at 216 mm pitch in steel only) shall be manufactured with rerolled ends. Corrugation profile of the rerolled ends shall be 68 mm x 13 mm annual corrugations with a minimum of two full corrugations at each end.

ALL DIMENSIONS ARE IN MILLIMETERS UNLESS OTHERWISE SHOWN

NOTES

1. All ferrous metal coupling band connection hardware shall be galvanized or electro-plated in accordance with the Standard Specifications.
2. For helically corrugated coupling bands, the connection angles may be oriented parallel to the pipe axis, provided connecting holes are slotted lengthwise sufficiently to allow adjustment for the helix angle.
3. Tension strap may be connected to band with either spot welds or fillet welds that develop minimum required strength of strap.
4. Use 32 mm gage line dimension on attached angle leg for rivets and spot welds.
5. Band thickness shall not be less than:
   a. 3 standard thicknesses lighter than the thickness of the pipe for Corrugated Steel Pipe.
   b. 2 standard thicknesses lighter than the thickness of the pipe and in no case lighter than 1.5 mm for Corrugated Aluminum Pipe.
6. Dimensions, thicknesses and strengths shown are minimum.
7. For pipe arches use same width band as for round pipe of equal periphery.
8. Fillet welds of equivalent strenght may be substituted for spot welds or rivets.
9. Spot welds shall develop minimum required strength of strap.
10. Pipe with rerolled ends having at least two 68 mm x 13 mm annular corrugations at each end with or without an upturned flange may be connected with any of the annular coupling bands shown for pipe of the same diameter and wall thickness and having 68 mm x 13 mm corrugations.
11. In the case of H-305 huggerbands, two piece bands are required for diameters through 2400 mm and three piece bands are required for diameters 2550 mm through 3000 mm.
12. Two piece bands are required for pipes greater than 1050 mm diameter.
13. The 57 mm x 51mm x 2.8 mm thick galvanized die-formed angle connector may be used in lieu of the 51mm x 51mm 4.8 mm angle connector for standard joints only on pipes through 1800 mm diameter.

STATE OF CALIFORNIA
DEPARTMENT OF TRANSPORTATION

CORRUGATED METAL PIPE COUPLING DETAILS No. 5 STANDARD JOINT

NO SCALE

RSP D97E DATED JUNE 6, 2008 SUPERSEDES STANDARD PLAN D97E DATED July 1, 2004 - PAGE 187 OF THE STANDARD PLANS BOOK DATED July 2004.

REVISED STANDARD PLAN RSP D97E

2004 REVISED Std PLAN RSP D97E

05-19-08

To accompany plans dated 8-24-09

Caltrans Metric

DIST	COUNTY	ROUTE	KILOMETER POST TOTAL PROJECT	SHEET NO.	TOTAL SHEETS
10	SJ	26	8.2/10.0	60	83

Raymond Don Tsztoo
REGISTERED CIVIL ENGINEER

June 6, 2008
PLANS APPROVAL DATE

REGISTERED PROFESSIONAL ENGINEER Raymond Don Tsztoo No. C37332 Exp. 6-30-08 STATE OF CALIFORNIA

The State of California or its officers or agents shall not be responsible for the accuracy or completeness of electronic copies of this plan sheet.

To get to the Caltrans web site, go to: http://www.dot.ca.gov

ANNULAR AND HELICAL PROFILE

COUPLING TYPE	PIPE CORRUGATION (mm)	PIPE SIZE (mm)	W OR A (mm)	PIPE WALL THICKNESS CSP (mm)	PIPE WALL THICKNESS CAP (mm)	BAND THICKNESS CSP (mm)	BAND THICKNESS CAP (mm)	BAR AND STRAP (CSP ONLY) STRAP THICKNESS (mm)	BOLTS (mm ø)	BAR Dia (mm)	BAR YIELD STRENGTH (MPa)	ANGLE DIMENSIONS CSP (mm)	ANGLE DIMENSIONS CAP (mm)	BOLTS (No. - mm ø) CSP	BOLTS CAP	RIVETS ANGLE TO BAND CSP	RIVETS ANGLE TO BAND CAP	SPOT WELDS ANGLE TO BAND CSP
TWO PIECE INTEGRAL FLANGE	38 x 6.5	150-250	178	1.63-2.01	1.52	1.63	1.52							2-10	2-10			
	68 x 13	300-600	305		1.52-2.67		1.52								3-13			
UNIVERSAL	68 x 13	THROUGH 900	305	1.63-3.51	1.52-3.43	1.63	1.52	2.01	13	22	220	51 x 51 x 4.8	51 x 51 x 4.8	3-13	3-13	3-9.5 mm	3-9.5 mm	5-15 mm
		1050-1500	413	1.63-4.27	1.52-4.17	1.63	1.52	DOUBLE 2.01	13	22	220	51 x 51 x 6.4	51 x 51 x 6.4	4-13	4-13	5-9.5 mm	5-9.5 mm	
ANNULAR	68 x 13	THROUGH 900	305	1.63-3.51	1.52-3.43	1.63	1.52					51 x 51 x 4.8	51 x 51 x 4.8	3-13	3-13	3-9.5 mm	3-9.5 mm	5-15 mm
		1050-1500	305	1.63-2.01		1.63						51 x 51 x 4.8		3-13		3-9.5 mm		5-15 mm
		1050-1500	305	2.77-4.27	3.43-4.17	1.63	1.91					51 x 51 x 6.4	51 x 51 x 6.4	3-13	3-13	5-9.5 mm	5-9.5 mm	
		1650-1800	610		4.17		2.67						51 x 51 x 6.4		5-13		5-13 mm	
		1650-2100	610	2.77-4.27		1.63						51 x 51 x 6.4		5-13		7-9.5 mm		
		1050-1350	305		1.52-2.67		1.52						51 x 51 x 4.8		3-13		3-9.5 mm	
	75 x 25	1200-1500	355	1.63-2.01		1.63						51 x 51 x 4.8		3-13		3-9.5 mm		5-15 mm
		1200-1500	355	2.77		1.63						51 x 51 x 4.8		3-13		5-9.5 mm		
		1650-3000	635	1.63-2.77		1.63						51 x 51 x 4.8		5-13		9-9.5 mm		
		1050-1500	355		1.52-2.67		1.52						51 x 51 x 4.8		3-13		5-9.5 mm	
		1050-1500	355		3.43		1.91						51 x 51 x 6.4		3-13		5-9.5 mm	
		1650-2400	635		1.52-3.43		1.52						51 x 51 x 6.4		5-13		7-9.5 mm	
		2400-2700	635		3.43		1.91						51 x 51 x 6.4		5-13		7-9.5 mm	
HELICAL	68 x 13	THROUGH 900	305	1.63-3.51	1.52-3.43	1.63	1.52					51 x 51 x 4.8	51 x 51 x 4.8	3-13	3-13	3-9.5 mm	3-9.5 mm	5-15 mm
		1050-1350	305		1.52-2.67		1.52						51 x 51 x 4.8		3-13		3-9.5 mm	
		1050-1500	305	1.63-2.01		1.63						51 x 51 x 4.8		3-13		3-9.5 mm		5-15 mm
		1050-1500	305	2.77-4.27	3.43-4.17	1.63	1.91					51 x 51 x 6.4	51 x 51 x 6.4	3-13	3-13	5-9.5 mm	5-9.5 mm	
		1650-2100	610	2.77-4.27		1.63						51 x 51 x 6.4		5-13		7-9.5 mm		
		1650-1800	610		4.17		2.67						51 x 51 x 6.4		5-13		5-9.5 mm	
	75 x 25	1200-1500	355	1.63-2.01		1.63						51 x 51 x 4.8		3-13		3-9.5 mm		5-15 mm
		1200-1500	355	2.77		1.63						51 x 51 x 4.8		3-13		5-9.5 mm		
		1650-3000	635	1.63-2.77		1.63						51 x 51 x 4.8		5-13		9-9.5 mm		
		1050-1500	355		1.52-2.67		1.52						51 x 51 x 4.8		3-13		5-9.5 mm	
		1050-1500	355		3.43		1.91						51 x 51 x 6.4		3-13		5-9.5 mm	
		1650-2400	635		1.52-3.43		1.52						51 x 51 x 6.4		5-13		7-9.5 mm	
		2400-2700	635		3.43		1.91						51 x 51 x 6.4		5-13		7-9.5 mm	
HUGGER	68 x 13 REROLLED END	THROUGH 1200	267	2.77		1.63		2.01	13	22	220							
		1350 - 1650	267	2.77		1.63		DOUBLE 2.01	13	22	220							
		THROUGH 1350	267	1.63 - 2.01		1.63		2.01	13	22	220							
		THROUGH 1500	267	3.51		2.01		DOUBLE 2.01	13	22	220							
		1650 - 1800	267	3.51		2.77		DOUBLE 2.01	13	22	220							
		THROUGH 1800	267	4.27		2.77		DOUBLE 2.77	13	22	310							
	75 x 25 REROLLED END	1200 - 2100	267	2.77		2.01		DOUBLE 2.01	13	22	220							
		1200 - 2250	267	1.63 - 2.01		1.63		DOUBLE 2.01	13	22	220							
		2400 - 2550	267	2.01		2.01		DOUBLE 2.01	13	22	220							
		2250 - 3000	267	2.77		2.77		DOUBLE 2.77	13	22	310							

SPIRAL RIB PROFILE

COUPLING TYPE	PIPE CORRUGATION (mm)	PIPE SIZE (mm)	W (mm)	PIPE WALL THICKNESS SSRP (mm)	PIPE WALL THICKNESS ASRP (mm)	BAND THICKNESS SSRP (mm)	BAND THICKNESS ASRP (mm)	BAR AND STRAP (SSRP ONLY) STRAP THICKNESS (mm)	BOLTS (mm ø)	BAR Dia (mm)	BAR YIELD STRENGTH (MPa)	ANGLE DIMENSIONS SSRP (mm)	ANGLE DIMENSIONS ASRP (mm)	BOLTS (No.- mm ø) SSRP	BOLTS ASRP	RIVETS ANGLE TO BAND SSRP	RIVETS ANGLE TO BAND ASRP	SPOT WELDS ANGLE TO BAND SSRP
ANNULAR	68 x 13 ✳ REROLLED END	600 - 900	305	1.63 - 2.77	1.52 - 2.67	1.63	1.52	2.01	13	22	220	51 x 51 x 4.8	51 x 51 x 4.8	3-13	3-13	3-9.5 mm	3-9.5 mm	5-15 mm
		1050 - 1500	305	1.63 - 2.01	1.90 - 2.67	1.63	1.90	2.01	13	22	220	51 x 51 x 4.8	51 x 51 x 4.8	3-13	3-13	3-9.5 mm	3-9.5 mm	5-15 mm
		1050 - 1500	305	2.77		1.63		2.01	13	22	220	51 x 51 x 6.4		3-13		5-9.5 mm		
		1650 - 2100	610	2.77		1.63		2.01	13	22	220	51 x 51 x 6.4		5-13		7-9.5 mm		
HUGGER	68 x 13 ✳ REROLLED END	600 - 1350	267	1.63 - 2.01		1.63		2.01	13	22	220							
		600 - 1200	267	2.77		1.63		2.01	13	22	220							
		1350 - 1650	267	2.77		1.63		Double 2.01	13	22	220							

✳ See Note 13.

13. All profiles of Spiral Rib Pipe (19 mm x 19 mm ribs at 191 mm pitch and 19 mm x 25 mm ribs at 292 mm pitch in both steel and aluminum and 19 mm x 25 mm ribs at 216 mm pitch in steel only) shall be manufactured with rerolled ends. Corrugation profile of the rerolled ends shall be 68 mm x 13 mm annual corrugations with a minimum of two full corrugations at each end.

ALL DIMENSIONS ARE IN MILLIMETERS UNLESS OTHERWISE SHOWN

NOTES

1. All ferrous metal coupling band connection hardware shall be galvanized or electro-plated in accordance with the Standard Specifications.
2. For helically corrugated coupling bands, the connection angles may be oriented parallel to the pipe axis, provided connecting holes are slotted lengthwise sufficiently to allow adjustment for the helix angle.
3. Tension strap may be connected to band with either spot welds or fillet welds that develop minimum required strength of strap.
4. Use 32 mm gage line dimension on attached angle leg for rivets and spot welds.
5. Band thickness shall not be less than:
   a. 3 standard thicknesses lighter than the thickness of the pipe for corrugated steel pipe.
   b. 2 standard thicknesses lighter than the thickness of the pipe and in no case lighter than 1.5 mm for corrugated aluminum pipe.
6. Dimensions, thicknesses and strengths shown are minimum.
7. For pipe arches use same width band as for round pipe of equal periphery.
8. Fillet welds of equivalent strength may be substituted for spot welds or rivets.
9. Spot welds shall develop minimum required strength of strap.
10. Pipe with rerolled ends having at least two 68 mm x 13 mm annular corrugations at each end with or without an upturned flange may be connected with any of the annular coupling bands shown for pipe of the same diameter and wall thickness and having 68 mm x 13 mm corrugations.
11. In the case of H-305 huggerbands, two piece bands are required for diameters through 2400 mm and three piece bands are required for diameters 2550 mm through 3000 mm.
12. Two piece bands are required for pipes greater than 1050 mm diameter.

STATE OF CALIFORNIA
DEPARTMENT OF TRANSPORTATION

CORRUGATED METAL PIPE COUPLING DETAILS No. 6 POSITIVE JOINT

NO SCALE

RSP D97F DATED JUNE 6, 2008 SUPERSEDES STANDARD PLAN D97F DATED July 1, 2004 - PAGE 188 OF THE STANDARD PLANS BOOK DATED July 2004.

REVISED STANDARD PLAN RSP D97F

2004 REVISED Std PLAN RSP D97F

05-19-08

To accompany plans dated 8-24-09

Caltrans Metric

DIST	COUNTY	ROUTE	KILOMETER POST TOTAL PROJECT	SHEET NO.	TOTAL SHEETS
10	SJ	26	8.2/10.0	61	83

Raymond Don Tsztoo
REGISTERED CIVIL ENGINEER

June 6, 2008
PLANS APPROVAL DATE

REGISTERED PROFESSIONAL ENGINEER Raymond Don Tsztoo No. C37332 Exp. 6-30-08 STATE OF CALIFORNIA

The State of California or its officers or agents shall not be responsible for the accuracy or completeness of electronic copies of this plan sheet.

To get to the Caltrans web site, go to: http://www.dot.ca.gov

ANNULAR AND HELICAL PROFILE

COUPLING TYPE	PIPE CORRUGATION (mm)	PIPE SIZE (mm)	W OR A (mm)	PIPE WALL THICKNESS		BAND THICKNESS		BAR AND STRAP (CSP ONLY)			ANGLE						
											DIMENSIONS		BOLTS (No.-mm ø)		RIVETS ANGLE TO BAND		SPOT WELDS ANGLE TO BAND
				CSP (mm)	CAP (mm)	CSP (mm)	CAP (mm)	STRAP THICKNESS (mm)	BOLTS (mm ø)	BAR Dia (mm)	CSP (mm)	CAP (mm)	CSP	CAP	CSP	CAP	CSP
TWO PIECE INTEGRAL FLANGE	38 x 6.5	150	178	1.63 - 4.27		1.32							3-10				
	38 x 6.5	200 - 250	178	1.63 - 4.27	1.52 - 4.17	1.63	1.52						3-10	3-10			
ANNULAR	68 x 13	THROUGH 600	305	1.63 - 4.27	1.52 - 4.17	1.63	1.52				51 x 51 x 4.8	51 x 51 x 4.8	3-13	3-13	3-9.5 mm	3-9.5 mm	3-15 mm
HUGGER	68 x 13 REROLLED END	THROUGH 600	267	1.63 - 4.27		1.63		2.01	13	22	51 x 51 x 4.8	51 x 51 x 4.8	3-13	3-13	3-9.5 mm	3-9.5 mm	3-15 mm

SPIRAL RIB PROFILE

COUPLING TYPE	PIPE CORRUGATION (mm)	PIPE SIZE (mm)	W (mm)	PIPE WALL THICKNESS		BAND THICKNESS		BAR AND STRAP (SSRP ONLY)			ANGLE						
											DIMENSIONS		BOLTS (No.- mm ø)		RIVETS ANGLE TO BAND		SPOT WELDS ANGLE TO BAND
				SSRP (mm)	ASRP (mm)	SSRP (mm)	ASRP (mm)	STRAP THICKNESS (mm)	BOLTS (mm ø)	BAR Dia (mm)	SSRP (mm)	ASRP (mm)	SSRP	ASRP	SSRP	ASRP	SSRP
ANNULAR	68 x 13 * REROLLED END	600	305	1.63 - 4.27	1.52 - 4.17	1.63	1.52				51 x 51 x 4.8	51 x 51 x 4.8	3-13	3-13	3-9.5 mm	3-9.5 mm	3-15 mm
HUGGER	68 x 13 * REROLLED END	600	267	1.63 - 4.27		1.63		2.01	13	22							

* See Note 12.

NOTES

1. All ferrous metal coupling band connection hardware shall be galvanized or electroplated in accordance with the Standard Specifications.
2. For helically corrugated coupling bands, the connection angles may be oriented parallel to the pipe axis, provided connecting holes are slotted lengthwise sufficiently to allow adjustment for the helix angle.
3. Tension straps may be connected to band with either spot welds or fillet welds that develop minimum required strength of strap.
4. Use 32 mm gage line dimension on attached angle leg for rivets and spot welds.
5. Band thickness shall not be less than:
   a. 3 standard thickness lighter than the thickness of the pipe for corrugated steel pipe.
   b. 2 standard thickness lighter than the thickness of the pipe and in no case lighter than 1.5 mm for corrugated aluminum pipe.
6. Dimensions, thickness and strengths shown are minimum.
7. For pipe arches use same width band as for round pipe of equal periphery.
8. Fillet welds of equivalent strength may be substituted for spot welds or rivets.
9. Spot welds shall develop minimum required strength of strap.
10. Pipe with rerolled ends having at least two 68 mm x 13 mm annular corrugations at each end with or without an upturned flange may be connected with any of the annular coupling bands shown for pipe of the same diameter and wall thickness and having 68 mm x 13 mm corrugations.
11. For downdrain applications, two piece integral flange couplers shall have factory applied sleeve type rubber gaskets with a minimum length of 175 mm measured along the length of the pipe.
12. All profiles of Spiral Rib Pipe (19 mm x 19 mm ribs at 191 mm pitch and 19 mm x 25 mm ribs at 292 mm pitch in both steel and aluminum and 19 mm x 25 mm ribs at 216 mm pitch in steel only) shall be manufactured with rerolled ends. Corrugation profile of the rerolled ends shall be 68 mm x 13 mm annual corrugations with a minimum of two full corrugations at each end.

STATE OF CALIFORNIA
DEPARTMENT OF TRANSPORTATION

CORRUGATED METAL PIPE COUPLING DETAILS No. 7 DOWNDRAIN

NO SCALE

ALL DIMENSIONS ARE IN MILLIMETERS UNLESS OTHERWISE SHOWN

RSP D97G DATED JUNE 6, 2008 SUPERSEDES STANDARD PLAN D97G DATED July 1, 2004 - PAGE 189 OF THE STANDARD PLANS BOOK DATED July 2004.

REVISED STANDARD PLAN RSP D97G

2004 REVISED Std PLAN RSP D97G

DIST	COUNTY	ROUTE	KILOMETER POST TOTAL PROJECT	SHEET NO.	TOTAL SHEETS
10	SJ	26	8.2/10.0	62	83

Caltrans Metric

Randell D. Hiatt
REGISTERED CIVIL ENGINEER

June 6, 2008
PLANS APPROVAL DATE

REGISTERED PROFESSIONAL ENGINEER
Randell D. Hiatt
No. C50200
Exp. 6-30-09
CIVIL
STATE OF CALIFORNIA

The State of California or its officers or agents shall not be responsible for the accuracy or completeness of electronic copies of this plan sheet.

To get to the Caltrans web site, go to: http://www.dot.ca.gov

To accompany plans dated 8-24-09

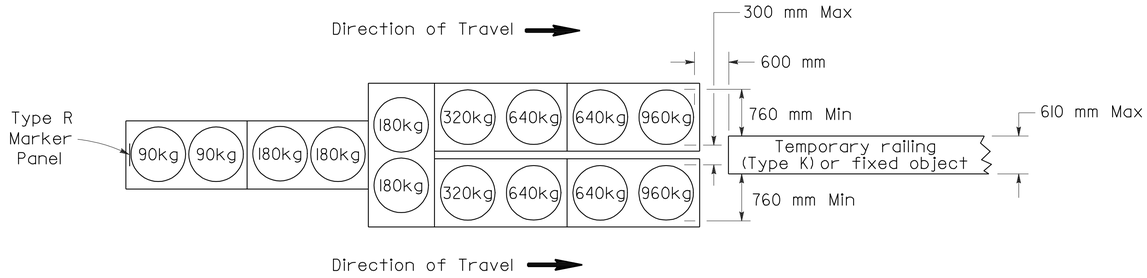

ARRAY 'TU14'

Approach speed 70 km/h or more

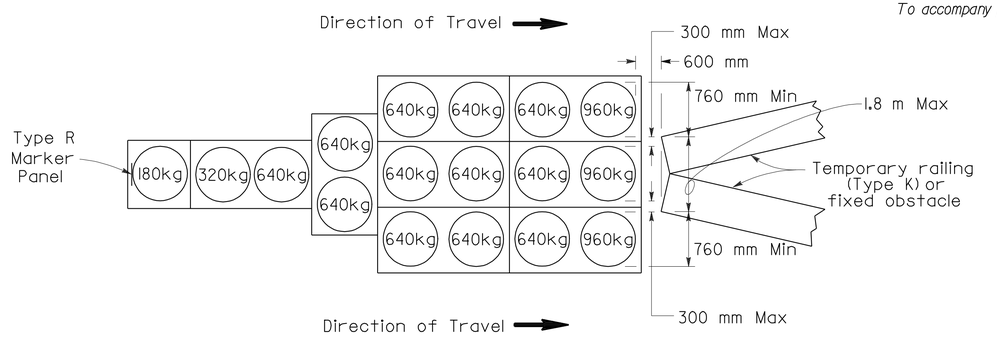

ARRAY 'TU17'

Approach speed less than 70 km/h

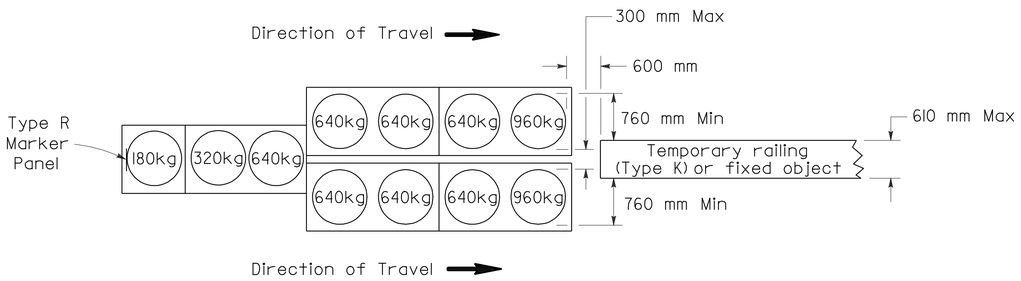

ARRAY 'TU11'

Approach speed less than 70 km/h

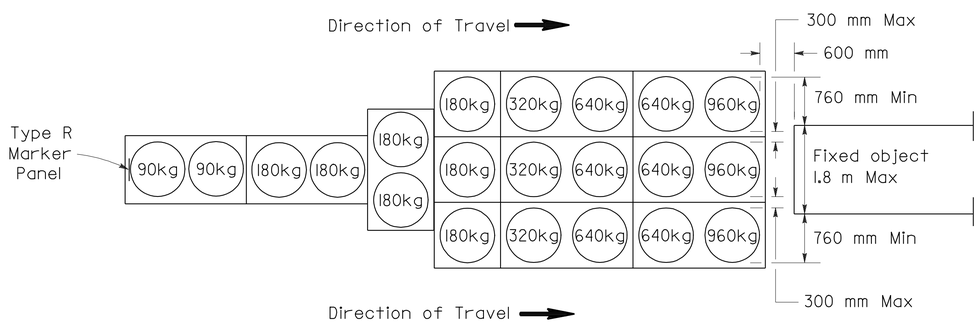

ARRAY 'TU21'

Approach speed 70 km/h or more

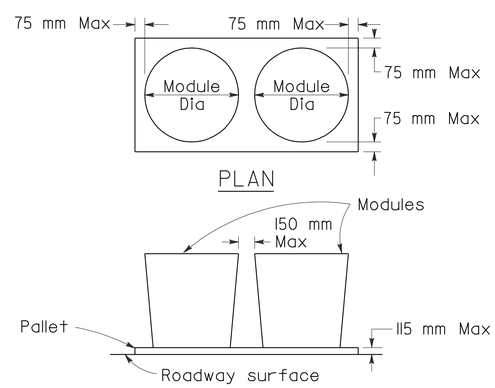

CRASH CUSHION PALLET DETAIL

See Note 7

NOTES

1. (XXX) Indicates sand filled module location and mass of sand in kilograms for each module. Module spacing is based on the greater diameter of the module.
2. All sand masses are nominal.
3. Temporary crash cushion arrays shall not encroach on the traveled way.
4. Place the top of Type R marker panel 25 mm below the module lid.
5. Refer to Standard Plan A73B for marker details.
6. Approach speeds indicated conform to NCHRP 350 Report criteria.
7. Use of Pallets is optional.

STATE OF CALIFORNIA
DEPARTMENT OF TRANSPORTATION

TEMPORARY CRASH CUSHION, SAND FILLED (UNIDIRECTIONAL)

NO SCALE

ALL DIMENSIONS ARE IN MILLIMETERS UNLESS OTHERWISE SHOWN

RSP T1A DATED JUNE 6, 2008 SUPERSEDES STANDARD PLAN T1A
DATED July 1, 2004 - PAGE 211 OF THE STANDARD PLANS BOOK DATED July 2004.

REVISED STANDARD PLAN RSP T1A

2004 REVISED Std PLAN RSP T1A

5-16-08

DIST	COUNTY	ROUTE	KILOMETER POST TOTAL PROJECT	SHEET NO.	TOTAL SHEETS
10	SJ	26	8.2/10.0	63	83

Caltrans Metric

Randell D. Hiatt
REGISTERED CIVIL ENGINEER

June 6, 2008
PLANS APPROVAL DATE

REGISTERED PROFESSIONAL ENGINEER
Randell D. Hiatt
No. C50200
Exp. 6-30-09
CIVIL
STATE OF CALIFORNIA

The State of California or its officers or agents shall not be responsible for the accuracy or completeness of electronic copies of this plan sheet.

To get to the Caltrans web site, go to: http://www.dot.ca.gov

To accompany plans dated 8-24-09

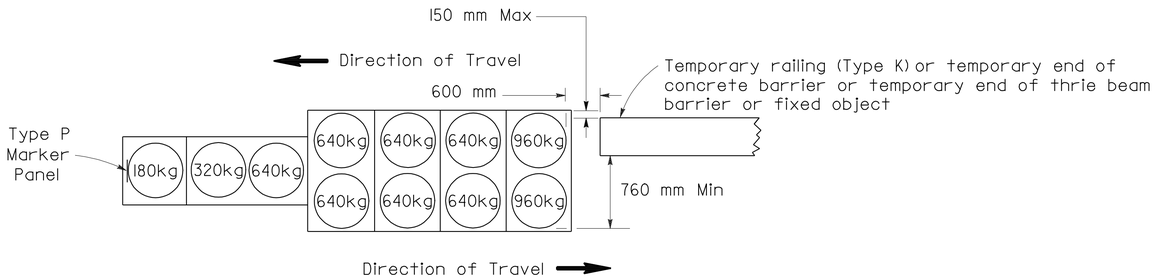

ARRAY 'TBI1'

Approach speed less than 70 km/h

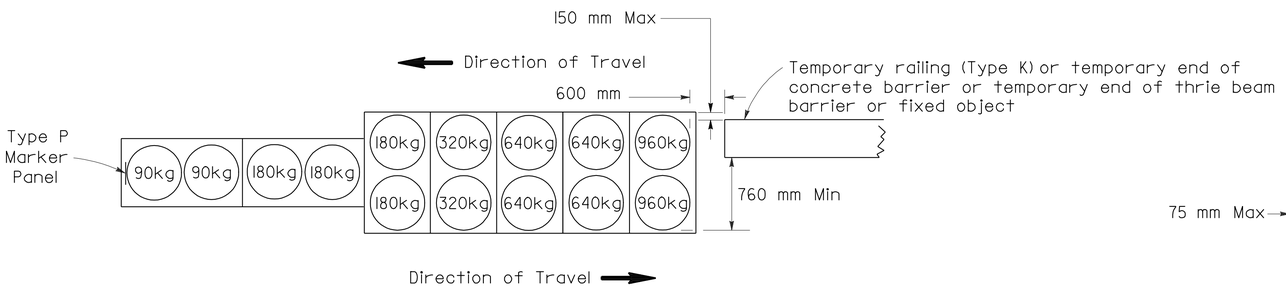

ARRAY 'TBI4'

Approach speed 70 km/h or more

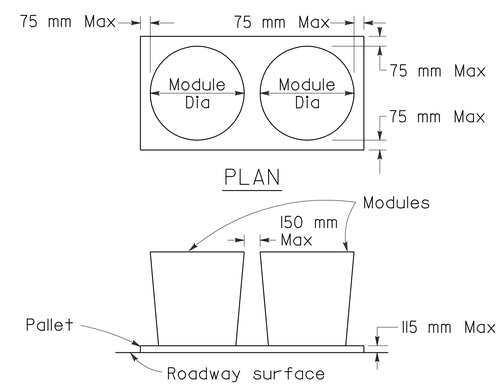

CRASH CUSHION PALLET DETAIL

See Note 7

NOTES

1. (XXX) Indicates sand filled module location and mass of sand in kilograms for each module. Module spacing is based on the greater diameter of the module.
2. All sand masses are nominal.
3. Temporary crash cushion arrays shall not encroach on the traveled way.
4. Place the Type P marker panel so that the bottom of the panel rests upon the pallet.
5. Refer to Standard Plan A73B for marker details.
6. Approach speeds indicated conform to NCHRP 350 Report criteria.
7. Use of Pallets is optional.

STATE OF CALIFORNIA
DEPARTMENT OF TRANSPORTATION

TEMPORARY CRASH CUSHION, SAND FILLED (BIDIRECTIONAL)

NO SCALE

ALL DIMENSIONS ARE IN MILLIMETERS UNLESS OTHERWISE SHOWN

RSP T1B DATED JUNE 6, 2008 SUPERSEDES STANDARD PLAN T1B DATED July 1, 2004 - PAGE 212 OF THE STANDARD PLANS BOOK DATED July 2004.

REVISED STANDARD PLAN RSP T1B

2004 REVISED Std PLAN RSP T1B

5-16-08

DIST	COUNTY	ROUTE	KILOMETER POST TOTAL PROJECT	SHEET NO.	TOTAL SHEETS
10	SJ	26	8.2/10.0	64	83

Caltrans Metric

Randell D. Hiatt
REGISTERED CIVIL ENGINEER

June 6, 2008
PLANS APPROVAL DATE

REGISTERED PROFESSIONAL ENGINEER
Randell D. Hiatt
No. C50200
Exp. 6-30-09
CIVIL
STATE OF CALIFORNIA

The State of California or its officers or agents shall not be responsible for the accuracy or completeness of electronic copies of this plan sheet.

To get to the Caltrans web site, go to: http://www.dot.ca.gov

To accompany plans dated 8-24-09

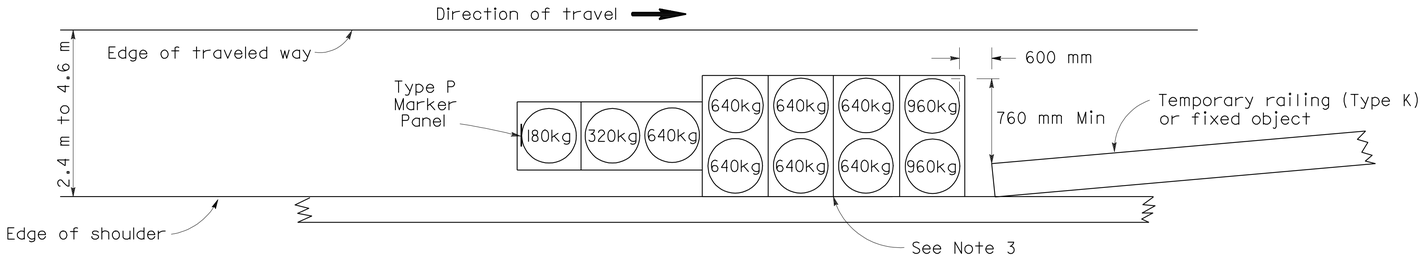

ARRAY 'TSI1'

Approach speed less than 70 km/h
See Note 9

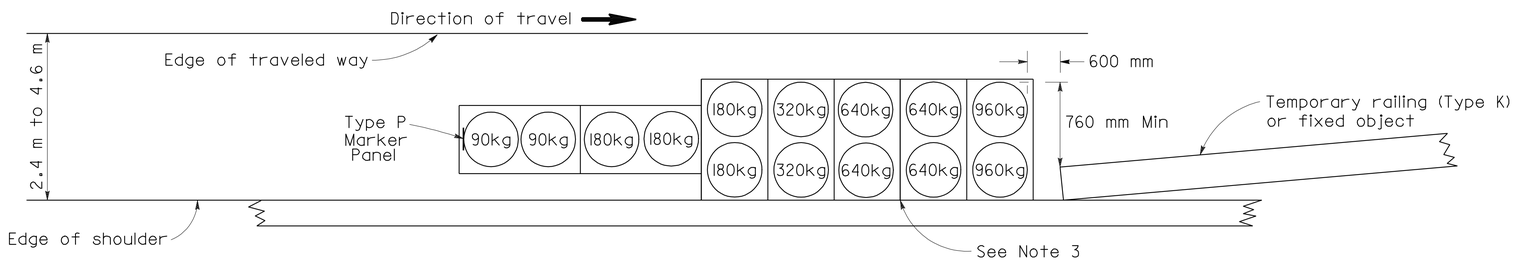

ARRAY 'TSI4'

Approach speed 70 km/h or more
See Note 9

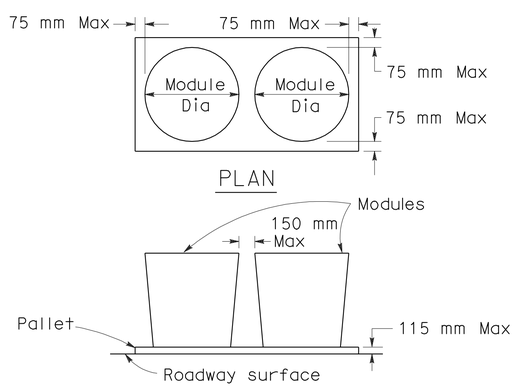

CRASH CUSHION PALLET DETAIL

See Note 11

NOTES

1. (XXX) Indicates sand filled module location and mass of sand in kilograms for each module. Module spacing is based on the greater diameter of the module.
2. All sand masses are nominal.
3. The temporary crash cushion arrays shown on this plan shall be used only in locations where there will be traffic on one side of the temporary crash cushion array.
4. If the fixed object or approach end of the temporary railing is less than 4.60 meters from the edge of traveled way, a temporary crash cushion is required.
5. Temporary crash cushion arrays shall not encroach on the traveled way.
6. Arrays for median shoulders shall conform to details shown on this plan for outside shoulders.
7. Place the Type P marker panel so that the bottom of the panel rest upon the pallet and faces traffic.
8. Refer to Standard Plan A73B for marker details.
9. For shoulder widths less than 2.4 m, appropriate approved crash cushion protection, other than sand filled modules, shall be provided at fixed objects and at approach ends of temporary railing. The specific type of crash cushion shall be as shown on the project plans or as specified in the Special Provisions, or if not shown on the project plans or specified in the Special Provisions, shall be as approved by the Engineer.
10. Approach speeds indicated conform to NCHRP 350 Report criteria.
11. Use of Pallets is optional.

STATE OF CALIFORNIA
DEPARTMENT OF TRANSPORTATION

TEMPORARY CRASH CUSHION, SAND FILLED (SHOULDER INSTALLATIONS)

NO SCALE

ALL DIMENSIONS ARE IN MILLIMETERS UNLESS OTHERWISE SHOWN

RSP T2 DATED JUNE 6, 2008 SUPERSEDES STANDARD PLAN T2
DATED July 1, 2004 - PAGE 213 OF THE STANDARD PLANS BOOK DATED July 2004.

REVISED STANDARD PLAN RSP T2

2004 REVISED Std PLAN RSP T2

5-16-08

NOTES

Unless otherwise specified in the special provisions, all temporary warning signs shall have black legend on orange background.

California code are designated by (CA). Otherwise, Federal codes are shown.

To accompany plans dated 8-24-09

Caltrans Metric

DIST	COUNTY	ROUTE	KILOMETER POST TOTAL PROJECT	SHEET No.	TOTAL SHEETS
10	SJ	26	8.2/10.0	65	83

REGISTERED CIVIL ENGINEER

April 28, 2005
PLANS APPROVAL DATE

REGISTERED PROFESSIONAL ENGINEER G.W. Edwards No. C36386 Exp. 6-30-06 CIVIL STATE OF CALIFORNIA

The State of California or its officers or agents shall not be responsible for the accuracy or completeness of electronic copies of this plan sheet.

To get to the Caltrans web site, go to: http://www.dot.ca.gov

TYPICAL LANE CLOSURE WITH REVERSIBLE CONTROL

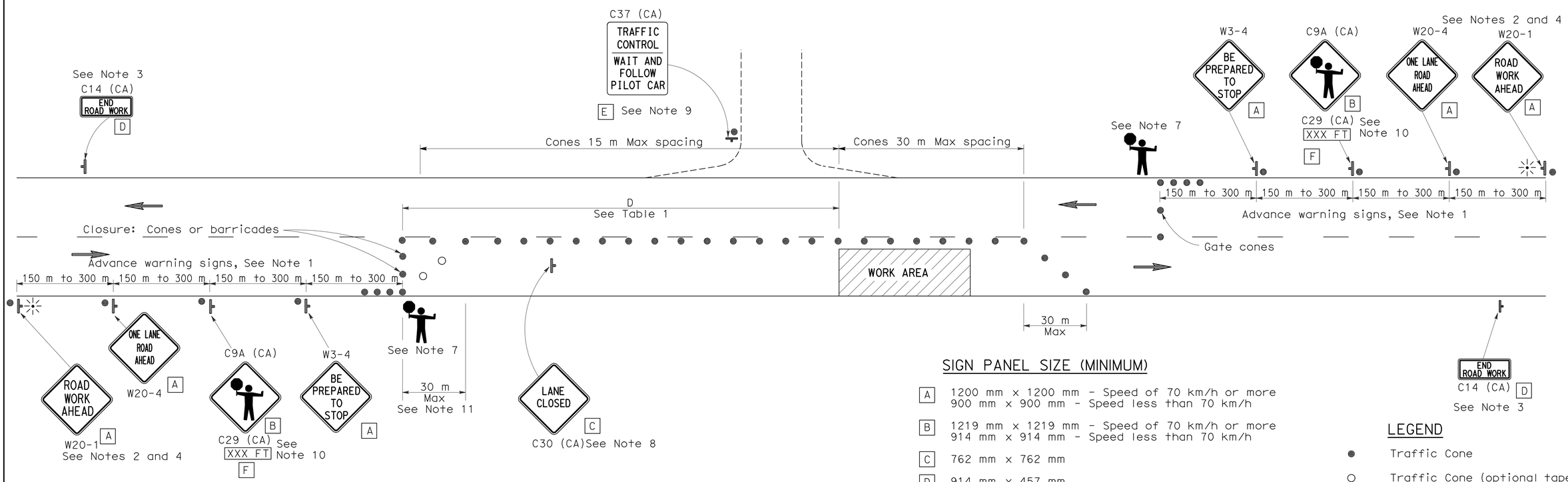

SIGN PANEL SIZE (MINIMUM)

A	1200 mm x 1200 mm - Speed of 70 km/h or more 900 mm x 900 mm - Speed less than 70 km/h
B	1219 mm x 1219 mm - Speed of 70 km/h or more 914 mm x 914 mm - Speed less than 70 km/h
C	762 mm x 762 mm
D	914 mm x 457 mm
E	914 mm x 1067 mm
F	914 mm x 229 mm

LEGEND

- Traffic Cone
- Traffic Cone (optional taper)
- Temporary Sign
- Direction of Travel
- Portable Flashing Beacon
- Flagger

NOTES

1. Where approach speeds are low, advance warning signs may be placed at 90 m spacing, and closer in urban areas.
2. Each advance warning sign in each direction of travel shall be equipped with at least two flags for daytime closure. Each flag shall be at least 400 mm x 400 mm in size and shall be orange or fluorescent red-orange in color. Flashing beacons shall be placed at the locations indicated for lane closure during hours of darkness.
3. A C14 (CA) "END ROAD WORK" sign, as appropriate, shall be placed at the end of the lane control unless the end of work area is obvious, or ends within a larger project's limits.
4. If the W20-1 sign would follow within 600 m of a stationary W20-1 or C11 (CA) "ROAD WORK NEXT_____ MILES", use a C16 (CA) sign for the first advance warning sign.
5. All cones used for lane closures during the hours of darkness shall be fitted with retroreflective bands (or sleeves) as specified in the specifications.
6. Portable delineators, placed at one-half the spacing indicated for traffic cones, may be used instead of cones for daytime closures only.
7. Additional advance flaggers may be required. Flagger should stand in a conspicuous place, be visible to approaching traffic as well as approaching vehicles after the first vehicle has stopped. During the hours of darkness, the flagging-station and flagger shall be illuminated and clearly visible to approaching traffic. The illumination footprint of the lighting on the ground shall be at least 6 m in diameter. Place a minimum of four cones at 15 m intervals in advance of flagger station as shown.
8. Place C30 (CA) "LANE CLOSED" sign at 150 to 300 m intervals throughout extended work areas. They are optional if the work area is visible from the flagger station.
9. When a pilot car is used, place a C37 (CA) "TRAFFIC CONTROL-WAIT AND FOLLOW PILOT CAR" sign at all intersections within traffic control area. Signs shall be clean and visible at all times.
10. An optional C29 (CA) sign may be placed below the C9A (CA) sign.
11. Traffic cones or barricades may be placed on the optional taper as shown, barricades shall be Type I, II, or III.

TABLE I

Approach Speed	Minimum D	Downgrade Minimum D *
km/h	m	m
30	60	72
40	60	72
50	60	72
60	90	108
70	90	108
80	150	180
90	150	180
100	150	180
110	170	204

* Use on substained downgrade steeper than -3 percent and longer than 1.6 km.

STATE OF CALIFORNIA
DEPARTMENT OF TRANSPORTATION

TRAFFIC CONTROL SYSTEM FOR LANE CLOSURE ON TWO LANE CONVENTIONAL HIGHWAYS

NO SCALE

ALL DIMENSIONS ARE IN MILLIMETERS UNLESS OTHERWISE SHOWN

RSP T13 DATED APRIL 28, 2005 SUPERSEDES STANDARD PLAN T13 DATED JULY 1, 2004-PAGE 222 OF THE STANDARD PLANS BOOK DATED JULY 2004.

REVISED STANDARD PLAN RSP T13

2004 REVISED Std PLAN RSP T13

DIST	COUNTY	ROUTE	KILOMETER POST TOTAL PROJECT	SHEET NO.	TOTAL SHEETS
10	SJ	26	8.2/10.0	66	83

Caltrans Metric

REGISTERED CIVIL ENGINEER

April 28, 2005
PLANS APPROVAL DATE

REGISTERED PROFESSIONAL ENGINEER
Greg W. Edwards
No. C36386
Exp. 6-30-06
CIVIL
STATE OF CALIFORNIA

The State of California or its officers or agents shall not be responsible for the accuracy or completeness of electronic copies of this plan sheet.

To get to the Caltrans web site, go to: http://www.dot.ca.gov

To accompany plans dated 8-24-09

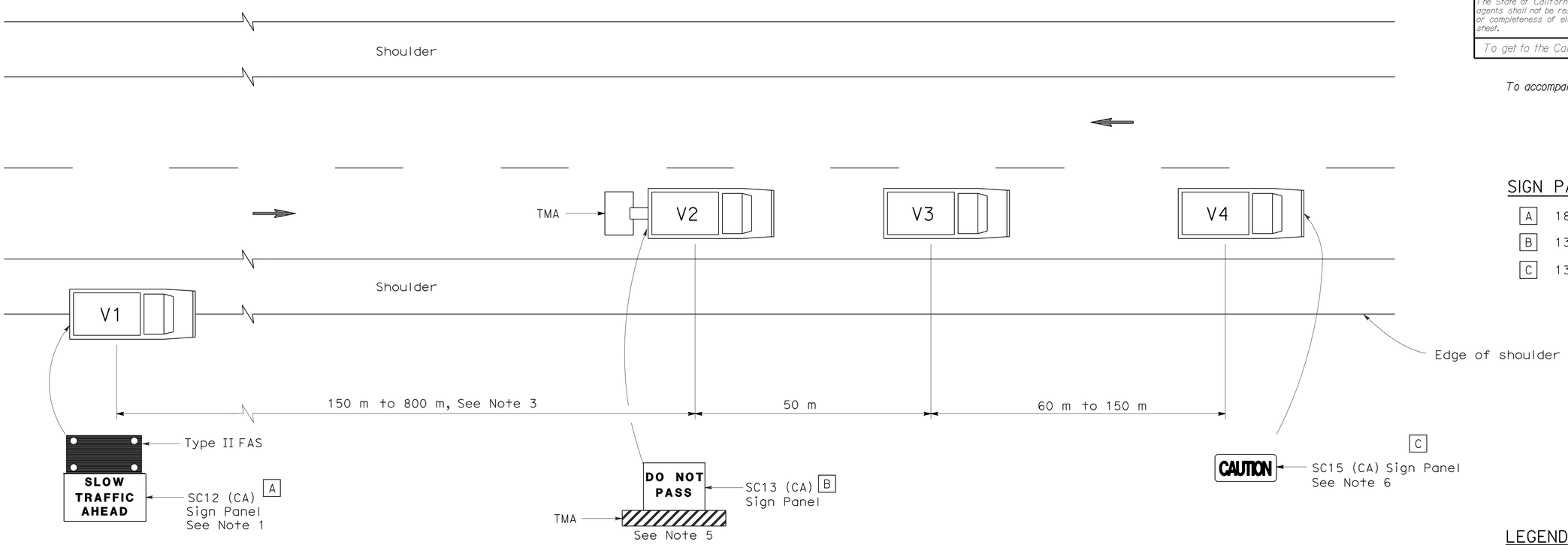

SIGN PANEL SIZE (Min)

A	1829 mm x 1067 mm
B	1372 mm x 1067 mm
C	1372 mm x 610 mm

LEGEND

V1	Sign Vehicle
V2	Shadow Vehicle
V3	Work/Application Vehicle
V4	Sign Vehicle
TMA	Truck-Mounted Attenuator
→	Direction of Travel
▭	Flashing Arrow Sign (FAS) in flashing caution mode

NOTES

1. Either a changeable message sign or a SC12 (CA) "SLOW TRAFFIC AHEAD" sign shall be mounted on the rear of sign vehicle V1. A Type II flashing arrow sign may be used with the SC12 (CA) sign panel.
2. Sign vehicle V1 should be positioned where highly
3. If traffic queues develop, sign vehicle V1 should be
4. Vehicle-mounted sign panels shall be Type III, IV VII, VIII, or IX retroreflective sheeting, black on white, black on orange, or black on fluorescent orange, with 150 mm minimum series D letters per Caltrans sign specifications.
5. Gross Vehicle Weight of shadow vehicle shall be a minimum of 9000 kilograms and shall be equipped with a truck-mounted attenuator. The sign panel shown shall be mounted on the rear of shadow vehicle V2. The message "LANE CLOSED" may be used in place of the "DO NOT PASS" message.
6. The sign panel shown shall be mounted on the front of sign vehicle V4, facing opposing traffic.
7. All vehicles shall be equipped with flashing or rotating amber lights.
8. Sign vehicle V4 will not be required when the work and vehicles V2 and V3 are 0.6 m or more from the centerline of the highway during the work or application operations.
9. All vehicles used for lane closures shall be equipped with two-way radios and the vehicle operators shall maintain communication during the work or application operation.
10. This plan shall not be used where workers would be on foot in the work area. Use a stationary type lane closure (Revised Standard Plan RSP T13) for this condition.
11. When multiple work vehicles are used in close proximity to each other, only one shadow vehicle is required and spacing between work vehicles shall be minimized in order to deter traffic from entering the closed lane.

STATE OF CALIFORNIA
DEPARTMENT OF TRANSPORTATION

TRAFFIC CONTROL SYSTEM FOR MOVING LANE CLOSURE ON TWO LANE HIGHWAYS

NO SCALE

ALL DIMENSIONS ARE IN MILLIMETERS UNLESS OTHERWISE SHOWN

RSP T17 DATED APRIL 28, 2005 SUPERSEDES STANDARD PLAN T17 DATED JULY 1, 2004-PAGE 226 OF THE STANDARD PLANS BOOK DATED JULY 2004.

REVISED STANDARD PLAN RSP T17

2004 REVISED Std PLAN RSP T17

DIST	COUNTY	ROUTE	KILOMETER POST TOTAL PROJECT	SHEET NO.	TOTAL SHEETS
10	SJ	26	8.2/10.0	67	83

Caltrans Metric

REGISTERED ELECTRICAL ENGINEER

October 5, 2007
PLANS APPROVAL DATE

REGISTERED PROFESSIONAL ENGINEER Jeffery G. McRae No. E14512 Exp. 6-30-08 ELECTRICAL STATE OF CALIFORNIA

The State of California or its officers or agents shall not be responsible for the accuracy or completeness of electronic copies of this plan sheet.

To get to the Caltrans web site, go to: http://www.dot.ca.gov

To accompany plans dated 8-24-09

ELECTROLIERS

STANDARD TYPES
15, 15D
15 STRUCTURE
21, 21D STRUCTURE
30
31
32
35
36-20A

High mast lighting standard

Double arm lighting standard

Existing electrolier

Electrolier foundation (Future installation)

NOTES

1. Luminaires shall be 310 W HPS when installed on Type 21, 21D, 30, 31, 32, 35 and 36-20A Standards, unless otherwise specified. Luminaires shall be 200 W HPS when installed on other type standards or poles, unless otherwise specified.
2. Luminaires shall be the cutoff type, ANSI Type III medium cutoff lighting distribution, unless otherwise specified.
3. Variations noted adjacent to symbol on project plans.

Electrolier (see project notes or project plans)

Luminaire on wood pole

STANDARD NOTES

- AB — Abandon. If applied to conduit, remove conductors.
- BC — Install pull box in existing conduit run.
- BP — Pedestrian barricade, type as indicated on plan.
- CB — Install conduit into existing pull box.
- CC — Connect new and existing conduit. Remove existing conductors and install conductors as indicated.
- CF — Conduit to remain for future use. Remove conductors. Install pull wire or rope.
- DH — Detector handhole.
- FA — Foundation to be abandoned.
- IS — Install sign on signal mast arm.
- NS — No slip base on standard.
- PEC — Photoelectric control.
- PEU — Photoelectric unit.
- RC — Equipment or material to be removed and become the property of the Contractor.
- RE — Remove electrolier, fuses and ballast. Tape ends of conductors.
- RL — Relocate equipment.
- RR — Remove and reuse equipment.
- RS — Remove and salvage equipment.
- SC — Splice new to existing conductors.
- SD — Service disconnect.
- SF — Standard to remain for future use. Remove luminaire, pole conductors, fuses and ballast. Tape disconnects.
- TSP — Telephone service point.

ABBREVIATIONS AND EQUIPMENT DESIGNATIONS

PROPOSED	EXISTING	
BBS	bbs	Battery backup system
BC	bc	Bolt circle
C	C	Conduit
CCTV	cctv	Closed circuit television
CKT	ckt	Circuit
CMS	cms	Changeable message sign
DLC	dlc	Loop detector lead-in cable
EMS	ems	Extinguishable message sign
EVC	evc	Emergency vehicle cable
EVD	evd	Emergency vehicle detector
FB	fb	Flashing beacon
FBCA	fbca	Flashing beacon control assembly
FBS	fbs	Flashing beacon with slip base
FO	fo	Fiber optic
G	G	Ground (Equipment Grounding Conductor)
GFCI	GFCI	Ground fault circuit interrupt
HAR	har	Highway advisory radio
HEX	hex	Hexagonal
HPS	hps	High pressure sodium
IISNS	iisns	Internally illuminated street name sign
ISL	isl	Induction sign lighting
LED	led	Light emitting diode
LMA	lma	Luminaire mast arm
LPS	lps	Low pressure sodium
LTG	ltg	Lighting
LUM	lum	Luminaire
MAT	mat	Mast arm mounted vehicle signal faces, top attachment
MAS	mas	Mast arm mounted vehicle signal faces, side attachment
MAS-4A	mas-4A	Mast arm mounted vehicle signal faces, side attachment - 4 signal section
MAS-4B	mas-4B	
MAS-4C	mas-4C	
MAS-5A	mas-5A	Mast arm mounted vehicle signal faces, side attachment - 5 signal section
MAS-5B	mas-5B	
MC	mc	Mercury contactor
M/M	m/m	Multiple to multiple transformer
MT	mt	Conduit with pull wire or rope only
MTG	mtg	Mounting
	mv	Mercury vapor lighting fixture
N	N	Neutral (Grounded Conductor)
NC	NC	Normally closed
NO	NO	Normally open
PB	pb	Pull box
PEC	pec	Photoelectric control (Type I, II, III, IV or V as shown)
PED	ped	Pedestrian
PEU	peu	Photoelectric unit
PPB	ppb	Pedestrian push button
RL	RL	Relocated equipment
RM	rm	Ramp metering
SB	sb	Slip base
SIC	sic	Signal interconnect cable
SIG	sig	Signal
SMA	sma	Signal mast arm
SNS	sns	Street name sign
SP	sp	Service point
TDC	tdc	Telephone demarcation cabinet
TMS	tms	Traffic monitoring station
TOS	tos	Traffic Operations System
VEH	veh	Vehicle
XFMR	xfmr	Transformer
COMM	comm	Communication
RWIS	rwis	Roadway weather information system

SOFFIT AND WALL MOUNTED LUMINAIRES

Pendant, 70 W HPS unless otherwise specified.

Flush, 70 W HPS unless otherwise specified.

Wall surface, 70 W HPS unless otherwise specified.

Existing soffit or wall luminaire to remain unmodified.

Existing soffit or wall luminaire to be modified as specified.

NOTE

Arrow indicates "street side" of luminaire.

STATE OF CALIFORNIA
DEPARTMENT OF TRANSPORTATION

ELECTRICAL SYSTEMS (SYMBOLS AND ABBREVIATIONS)

NO SCALE

ALL DIMENSIONS ARE IN MILLIMETERS UNLESS OTHERWISE SHOWN

RSP ES-1A DATED OCTOBER 5, 2007 SUPERSEDES STANDARD PLAN ES-1A DATED JULY 1, 2004-PAGE 413 OF THE STANDARD PLANS BOOK DATED JULY 2004.

REVISED STANDARD PLAN RSP ES-1A

2004 REVISED Std PLAN RSP ES-1A

6-27-07

DIST	COUNTY	ROUTE	KILOMETER POST TOTAL PROJECT	SHEET NO.	TOTAL SHEETS
10	SJ	26	8.2/10.0	68	83

Caltrans Metric

REGISTERED ELECTRICAL ENGINEER

October 5, 2007
PLANS APPROVAL DATE

REGISTERED PROFESSIONAL ENGINEER Jeffery G. McRae No. E14512 Exp. 6-30-08 ELECTRICAL STATE OF CALIFORNIA

The State of California or its officers or agents shall not be responsible for the accuracy or completeness of electronic copies of this plan sheet.

To get to the Caltrans web site, go to: http://www.dot.ca.gov

To accompany plans dated 8-24-09

CONDUIT

PROPOSED	EXISTING	
		Lighting conduit, unless otherwise indicated or noted
		Traffic signal conduit
C	c	Communication conduit
T	t	Telephone conduit
F	f	Fire alarm conduit
FO	fo	Fiber optic conduit
		Conduit termination (RSP ES-9A C)
R	r	Conduit riser in/on structure or Service pole

SERVICE EQUIPMENT

PROPOSED	EXISTING	
OH	oh	Overhead lines
U	u	Wood pole "U" indicates utility owned
		Pole guy-with anchor
		Utility transformer-ground mounted
III		Service equipment enclosure type
		Service equipment enclosure door indicates front of enclosure
T	t	Telephone demarcation cabinet

POLE-MOUNTED SERVICE DESIGNATION

TYPE H SERVICE - 8.8 m

Type of installation

Pole height above grade

ILLUMINATED OVERHEAD SIGN

PROPOSED	EXISTING	
		Overhead sign - Single post
		Overhead sign - Two post
		Overhead sign - Mounted on structure
		Overhead sign with electrolier

SIGNAL EQUIPMENT

PROPOSED	EXISTING	
		Pedestrian signal face
		Pedestrian push button post
		Pedestrian barricade
		Vehicle signal face (with backplate, 3-Section: red, yellow and green)
		Vehicle signal face with angle visors
PV	PV	Modifications of basic symbols: "L" Indicates all non-arrow sections louvered "LG" Indicates louvered green section only "PV" indicates 300 mm programmed visibility sections "200" indicates all 200 mm sections (only when specified)
		Type 15TS and Vehicle signal face
		Vehicle signal face with red, yellow and green left arrow sections
		Vehicle signal face with red and yellow sections and up green arrow
		Vehicle signal face (5 Section) with red, yellow and green sections and yellow and green right arrows
		Type 1 Standard and attached vehicle signal faces
		Standard with signal mast arm only and attached vehicle signal faces and internally illuminated street name sign
		Type 33 Standard, Left-turn vehicle signal face and sign
		Standard with luminaire and signal mast arms and attached vehicle signal faces
		Cantilever flashing beacon Type 9 Frame, with a sign unless otherwise specified or indicated
Y Y	Y Y	Type 15-FBS Standard with two vehicle signal face sections with lens, backplate and visor with a sign
R	Y	Flashing beacon. One vehicle signal face section with lens, backplate and visor. "R" indicates red indication, "Y" indicates yellow indication
		Controller assembly. Door indicates front of cabinet
		Guard post
		Type 1 Standard with "Meter On" sign
		Emergency vehicle detector

NOTES

1. All signal sections shall be 300 mm unless shown otherwise.
2. Signal heads shall be provided with backplates unless shown otherwise.
3. Signal indication shall be LED.

STATE OF CALIFORNIA
DEPARTMENT OF TRANSPORTATION

ELECTRICAL SYSTEMS (SYMBOLS AND ABBREVIATIONS)

NO SCALE

ALL DIMENSIONS ARE IN MILLIMETERS UNLESS OTHERWISE SHOWN

RSP ES-1B DATED OCTOBER 5, 2007 SUPERSEDES STANDARD PLAN ES-1B DATED JULY 1, 2004-PAGE 414 OF THE STANDARD PLANS BOOK DATED JULY 2004.

REVISED STANDARD PLAN RSP ES-1B

2004 REVISED Std PLAN RSP ES-1B

DIST	COUNTY	ROUTE	KILOMETER POST TOTAL PROJECT	SHEET NO.	TOTAL SHEETS
10	SJ	26	8.2/10.0	69	83

Caltrans Metric

REGISTERED ELECTRICAL ENGINEER

October 5, 2007
PLANS APPROVAL DATE

REGISTERED PROFESSIONAL ENGINEER Jeffery G. McRae No. E14512 Exp. 6-30-08 ELECTRICAL STATE OF CALIFORNIA

The State of California or its officers or agents shall not be responsible for the accuracy or completeness of electronic copies of this plan sheet.

To get to the Caltrans web site, go to: http://www.dot.ca.gov

To accompany plans dated 8-24-09

EQUIPMENT IDENTIFICATION

ILLUMINATED SIGN IDENTIFICATION NUMBER:

Sign No. 12345 — Sign number - Place on post or structure

10 ISL SCI 1.0

- 1.0 — Transformer rating (kVA)
- SCI — Lighting control type
- ISL — Number and type of fixtures

Do NOT place on standard or structure

ELECTROLIER OR EQUIPMENT IDENTIFICATION NUMBER:

12345 - 4.6

- 4.6 — Mast arm length in meters, if shown. Do not place on standard or structure.
- 12345 — Equipment number - Place on standard or structure. Existing equipment numbers are shown in parenthesis

CONDUIT AND CONDUCTOR IDENTIFICATION:

41C, 2#10, 15#14, 2 DLC

- 2#10, 15#14, 2 DLC — Number and size of conductors and cables
- 41C — Size of conduit in millimeters

Ø1, Ø2, Ø2P, etc.	Traffic phase identification for signal faces, detectors and phase diagrams
1 2 3	Project note numbers
A B C	Equipment description, installation or item numbers
1 2 3	Conduit run numbers

SIGNAL AND LIGHTING STANDARD (TYPICAL DESIGNATION):

19A - 3 - 161

- 161 — Wind velocity=161 km/h
- 3 — Case 3 arm loading
- 19A — Standard type
- Standard Plan sheet number
- Detail number or letter

WIRING DIAGRAM LEGEND

P	Pole
CB	Circuit breaker
A	Ampere
V	Volt
M	Metered
UM	Unmetered
NB	Neutral bus
GB	Ground bus
G	Equipment grounding conductor
N	Grounded conductor (Neutral)

- External conductor
- Conductor or bus
- Tie point
- Contactor coil
- Contactor, Contact NO
- Terminal blocks
- Contactor, Contact NC
- Enclosure bond
- Grounding electrode
- Circuit breaker
- Receptacle

PULL BOXES

PROPOSED EXISTING

Pull box-No. 5 unless otherwise indicated or noted.

3 / 9A(21)

Pull box-Additional designations or descriptions

3 = No. 3½ pull box
5 = No. 5 pull box
6 = No. 6 pull box
7 = No. 7 (Ceiling pull box)
8 = No. 8 (Pendant soffit pull box)
9 = No. 9 pull box
9A = No. 9A pull box

(C) = Communications pull box
(E) = Pull box with extension
(S) = Sprinkler control pull box
(21) = Anchor bolts and conduit for future installation of Type 21 Standard
(T) = Traffic pull box

MISCELLANEOUS EQUIPMENT

PROPOSED	EXISTING	
CMS	cms	Changeable message sign
		Closed circuit television camera
		Highway advisory radio pole and antenna
EMS	ems	Extinguishable message sign
		Detection device
M V	m v	M = Microwave sensor V = Video image sensor

VEHICLE DETECTORS

5 J 9 U

- Vehicle detector designation
- U = Upper, L = Lower
- Slot number in input file
- Input file (I or J)
- Phase

PROPOSED	EXISTING	
		Type A detector loop. Outline of sawcut shown.
		Type B detector loop. Outline of sawcut shown.
		Type C detector loop. Outline of sawcut shown.
		Type D detector loop. Outline of sawcut shown.
		Type E detector loop. Outline of sawcut shown.
		Type Q detector loop. Outline of sawcut shown.
		Magnetic detector
DH	dh	Detector handhole
		Microwave or video detection zone

STATE OF CALIFORNIA
DEPARTMENT OF TRANSPORTATION

ELECTRICAL SYSTEMS (SYMBOLS AND ABBREVIATIONS)

NO SCALE

ALL DIMENSIONS ARE IN MILLIMETERS UNLESS OTHERWISE SHOWN

RSP ES-1C DATED OCTOBER 5, 2007 SUPERSEDES STANDARD PLAN ES-1C DATED JULY 1, 2004-PAGE 415 OF THE STANDARD PLANS BOOK DATED JULY 2004.

REVISED STANDARD PLAN RSP ES-1C

2004 REVISED Std PLAN RSP ES-1C

10-1-07

DIST	COUNTY	ROUTE	KILOMETER POST TOTAL PROJECT	SHEET NO.	TOTAL SHEETS
10	SJ	26	8.2/10.0	70	83

Caltrans Metric

REGISTERED ELECTRICAL ENGINEER

October 5, 2007
PLANS APPROVAL DATE

REGISTERED PROFESSIONAL ENGINEER Jeffery G. McRae No. E14512 Exp. 6-30-08 ELECTRICAL STATE OF CALIFORNIA

The State of California or its officers or agents shall not be responsible for the accuracy or completeness of electronic copies of this plan sheet.

To get to the Caltrans web site, go to: http://www.dot.ca.gov

To accompany plans dated 8-24-09

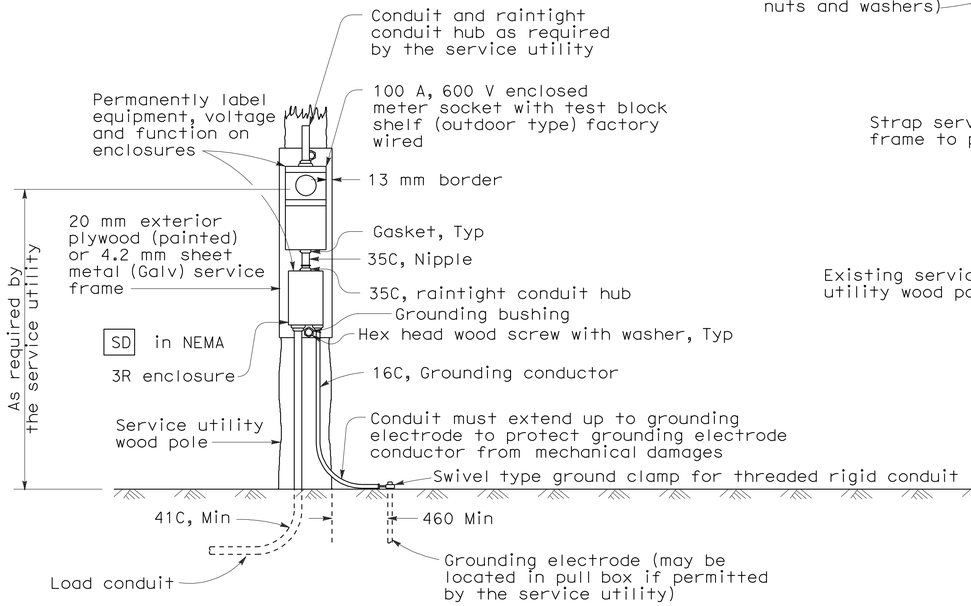

TYPE SCE-1 SERVICE

TOP VIEW

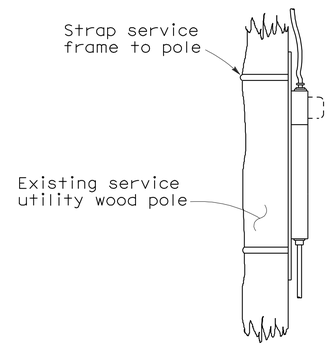

SIDE VIEW

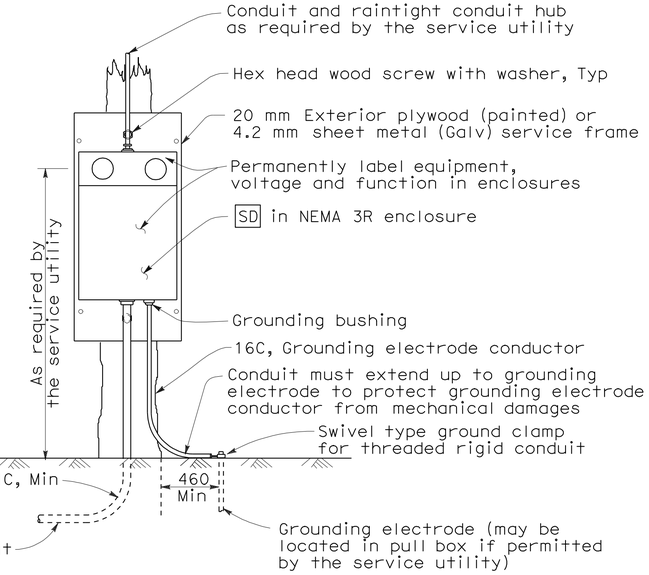

TYPE SCE-2 SERVICE

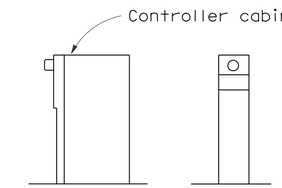

TYPE II TYPE III

TYPE OF SERVICE (TYPICAL)

Type II service equipment enclosure mounted on a side of a controller cabinet.
Type III complete free-standing service equipment enclosure.

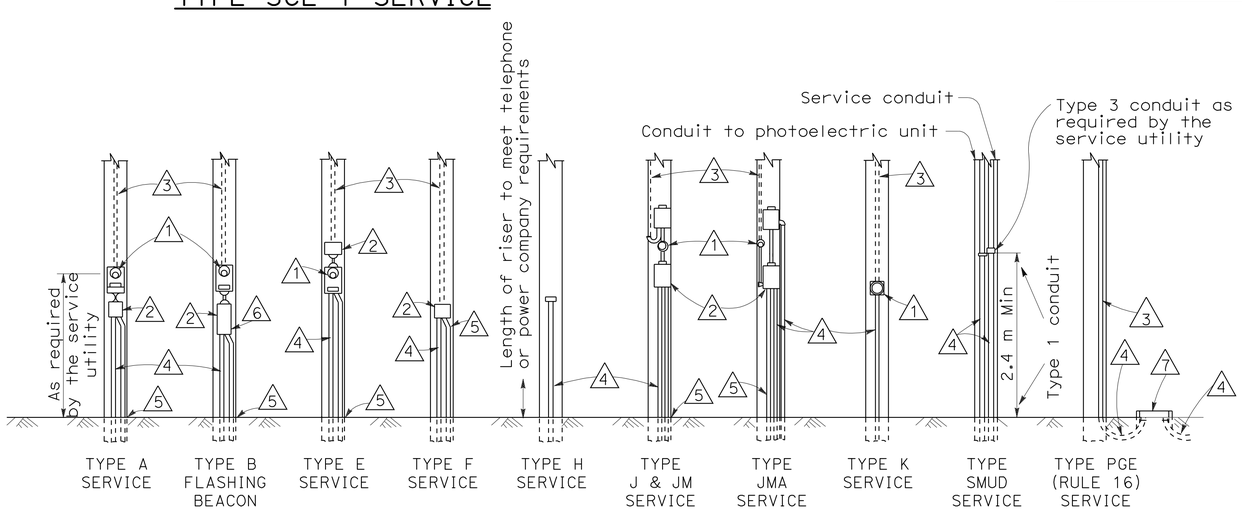

NOTES

1. Meter socket.
2. Service enclosure with a minimum 60 A rated main circuit breaker, unless otherwise shown.
3. (a) Utility owned pole. The service utility will furnish and install required service riser, PEU with conductors and other equipment as needed.
   (b) State owned pole. The Contractor shall furnish and install required service riser and equipment.
4. Conduit, length and size as required.
5. 16C, 1#6. See "Service Grounding" detail.
6. Flashing beacon control assembly.
7. Service pull box, No. 5 unless otherwise noted, furnished and installed by the Contractor. Service utility shall determine the exact location.

POLE MOUNTED SERVICE INSTALLATIONS

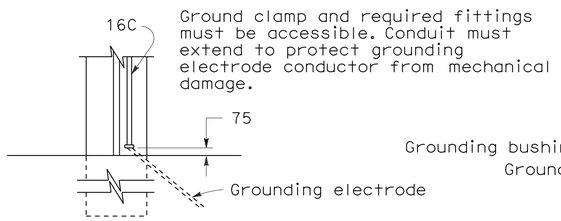

TYPE A

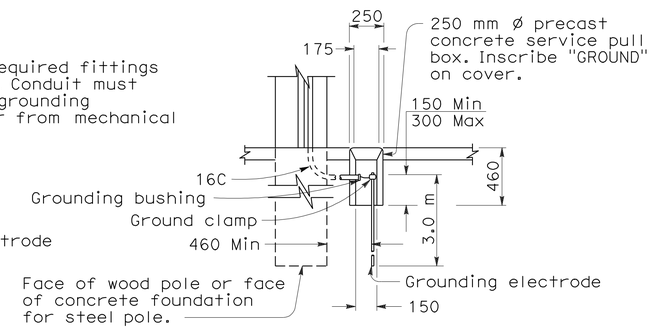

TYPE B

Use where service utility requires 460 mm clearance between grounding electrode and the pole or service equipment enclosure. Installation shown is for sidewalk or paved areas. In unpaved areas, omit special service pull box and locate ground clamp above ground or locate ground clamp in nearest pull box.

SERVICE GROUNDING

STATE OF CALIFORNIA
DEPARTMENT OF TRANSPORTATION

ELECTRICAL SYSTEMS (SERVICE EQUIPMENT)

NO SCALE

ALL DIMENSIONS ARE IN MILLIMETERS UNLESS OTHERWISE SHOWN

RSP ES-2A DATED OCTOBER 5, 2007 SUPERSEDES STANDARD PLAN ES-2A DATED JULY 1, 2004-PAGE 416 OF THE STANDARD PLANS BOOK DATED JULY 2004.

REVISED STANDARD PLAN RSP ES-2A

2004 REVISED Std PLAN RSP ES-2A

T-2-07

DIST	COUNTY	ROUTE	KILOMETER POST TOTAL PROJECT	SHEET NO.	TOTAL SHEETS
10	SJ	26	8.2/10.0	71	83

Caltrans Metric

REGISTERED ELECTRICAL ENGINEER

October 5, 2007
PLANS APPROVAL DATE

REGISTERED PROFESSIONAL ENGINEER
Jeffery G. McRae
No. E14512
Exp. 6-30-08
ELECTRICAL
STATE OF CALIFORNIA

The State of California or its officers or agents shall not be responsible for the accuracy or completeness of electronic copies of this plan sheet.

To get to the Caltrans web site, go to: http://www.dot.ca.gov

To accompany plans dated 8-24-09

2004 REVISED Std PLAN RSP ES-2C

NOTES-TYPE III SERVICE EQUIPMENT ENCLOSURES:

1. Service equipment enclosure and metering equipment shall meet the requirements of the service utility. The meter area shall have a sealable, lockable, weathertight cover that can be removed without the use of tools.

2. Service equipment enclosures shall be factory wired and conform to NEMA standards.

3. Dimensions of service equipment enclosures shall meet the requirements of the service utility.

4. The dead front panels on Type III-A service equipment enclosures shall have a continuous stainless steel or aluminum piano hinge. The panel in front of the breakers shall be secured with a latch or captive screws. No live parts shall be mounted on the dead front panel.

5. The exterior door shall have provisions for padlocking. The padlock hole shall be a minimum diameter of 11 mm.

6. Enclosures housing transformers of more than one kVA shall have effective screened ventilation louvers of not less than 32 000 mm^2. Screen shall be stainless steel No. 304, with a No. 10 size mesh. Framed screen shall be secured with at least four bolts.

7. Fasteners on the exterior of the enclosure shall be vandal-resistant and shall not be removable from the exterior. Screws, nuts, bolts and washers shall be stainless steel.

8. Landing lugs for incoming service conductors shall be compatible with either copper or aluminum conductors sized to suit the conductors shown on the plan. Landing lugs shall be copper or tin-plated aluminum. Neutral bus shall be rated for 125 A and be suitable for copper or aluminum conductors unless otherwise specified. The terminal shall include but not be limited to:

   a) Incoming terminals (landing lugs)
   b) Neutral lugs
   c) Solid neutral terminal strip

9. At least 6 standard single pole circuit breaker spaces, 20 mm nominal, shall be provided for branch circuits. Circuit breaker interiors shall be copper. Interiors of enclosure shall accept plug-in or cable-in/cable-out circuit breakers.

10. Control wiring shall be 600 V, 14 stranded machine tool wire. Where subject to flexing, 19 strand wire shall be used.

11. Main bus shall be rated for 125 A and shall be tin-plated copper.

12. A plastic laminated wiring diagram shall be provided with brass mounting eyelets and attached to the inside of the enclosure and the wiring diagram shall affixed to the interior with a UL or ETL approved method.

13. An engraved phenolic nameplate on the dead front panel indicating the function of each circuit or device shall be installed with stainless steel rivets or stainless steel screws:

    a) Adjacent to the breaker or device with character size a minimum of 3 mm.

    b) At the top of the exterior door panel indicating system number, voltage level and number of phases with character size a minimum of 5 mm.

14. The plan shows the approximate location of devices within the enclosure. Components may be rearranged, however, the "working" clearances within the service equipment enclosure shall be maintained.

15. In unpaved areas a raised portland cement concrete pad 600 mm x 100 mm x width of foundation shall be constructed in front of new service equipment enclosure installation. Pad shall be set to elevation of foundation.

16. Foundation shall extend 50 mm minimum beyond edge of service equipment enclosure.

17. Internal bus, where shown, is typical only. Alternative design of proposed service equipment enclosure shall be submitted to the Engineer for approval.

18. Plug-in circuit breakers may be mounted in the vertical or horizontal position. Cable-in/cable-out circuit breakers shall be mounted in the vertical position.

19. Type III-AF and Type III-BF service equipment enclosures shall have the meter viewing windows located on the front side of the service equipment enclosures.

20. Type III-AR and Type III-BR service equipment enclosures shall be similarly constructed as Type III-AF and Type III-BF respectively, except the meter viewing windows shall be located on the back side of the service equipment enclosures.

21. Minimum clearance shall be required for front and back of service equipment enclosure per National Electrical Code, Article 110.26, "Spaces About Electric Equipment (600 Volts, Nominal, or Less)".

STATE OF CALIFORNIA
DEPARTMENT OF TRANSPORTATION

ELECTRICAL SYSTEMS (SERVICE EQUIPMENT NOTES TYPE III SERIES)

NO SCALE

ALL DIMENSIONS ARE IN MILLIMETERS UNLESS OTHERWISE SHOWN

RSP ES-2C DATED OCTOBER 5, 2007 SUPERSEDES STANDARD PLAN ES-2C DATED JULY 1, 2004-PAGE 418 OF THE STANDARD PLANS BOOK DATED JULY 2004.

REVISED STANDARD PLAN RSP ES-2C

DIST	COUNTY	ROUTE	KILOMETER POST TOTAL PROJECT	SHEET NO.	TOTAL SHEETS
10	SJ	26	8.2/10.0	72	83

Caltrans Metric

Jeffery G. McRae
REGISTERED ELECTRICAL ENGINEER

October 5, 2007
PLANS APPROVAL DATE

REGISTERED PROFESSIONAL ENGINEER Jeffery G. McRae No. E14512 Exp. 6-30-08 ELECTRICAL STATE OF CALIFORNIA

The State of California or its officers or agents shall not be responsible for the accuracy or completeness of electronic copies of this plan sheet.

To get to the Caltrans web site, go to: http://www.dot.ca.gov

To accompany plans dated 8-24-09

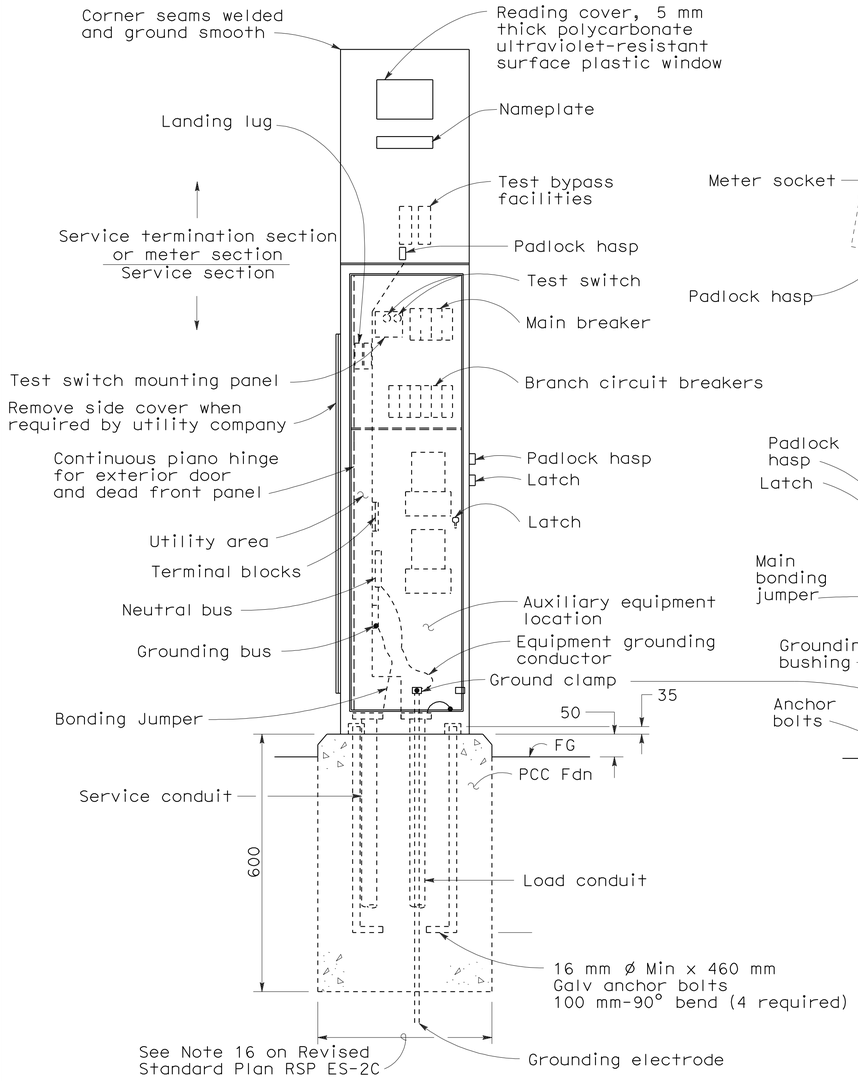

FRONT VIEW

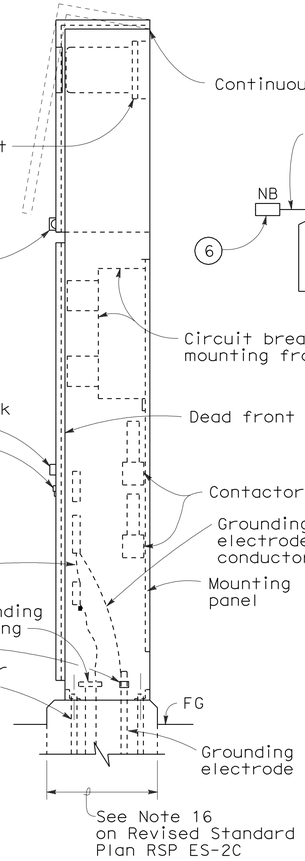

SIDE VIEW

TYPE III-AF SERVICE EQUIPMENT ENCLOSURE (TYPICAL)

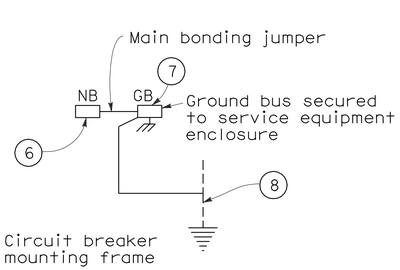

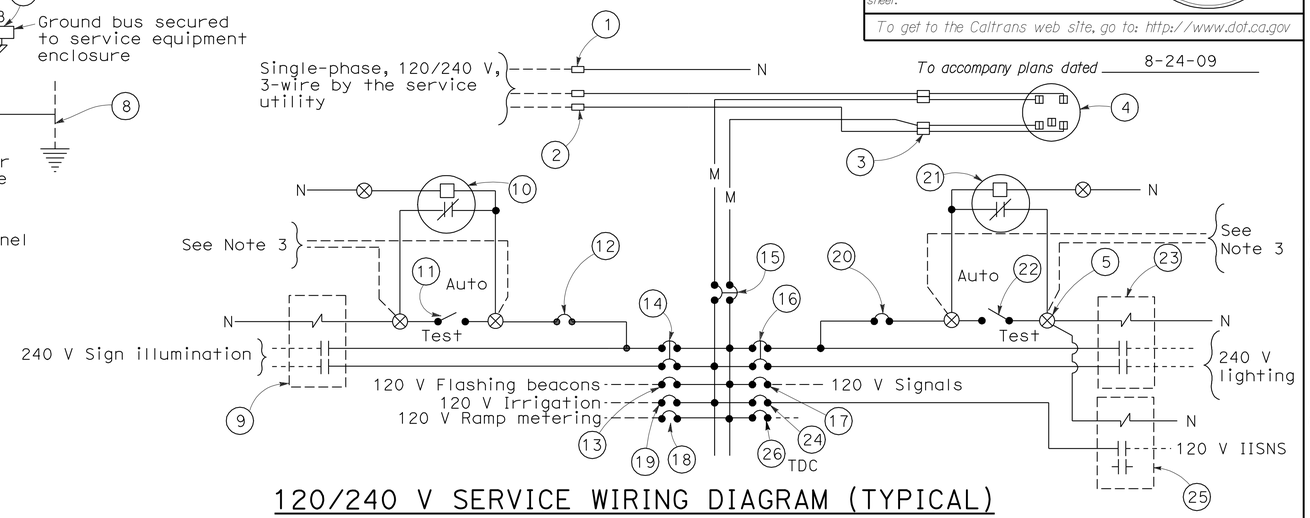

120/240 V SERVICE WIRING DIAGRAM (TYPICAL)

TYPE III-A SERVICE (120/240 V) EQUIPMENT LEGEND

ITEM No.	COMPONENT	NAME PLATE DESCRIPTION	ITEM No.	COMPONENT	NAME PLATE DESCRIPTION
1	Neutral lug		14	30 A, 240 V, 2P, CB	Sign Illumination
2	Landing lug (Note 6)		15	100 A, 240 V, 2P, CB	Main Breaker
3	Test bypass facility		16	30 A, 240 V, 2P, CB	Lighting
4	Meter socket and support		17	50 A, 120 V, 1P, CB	Signals
5	Terminal blocks		18	30 A, 120 V, 1P, CB	Ramp Metering
6	Neutral bus		19	20 A, 120 V, 1P, CB	Irrigation
7	Ground bus		20	15 A, 120 V, 1P, CB	Lighting Control
8	Grounding electrode		21	Photoelectric unit (Note 7)	
9	30 A, 2PNO Contactor	Sign Illumination	22	15 A, 1P, Test switch	Lighting Test Switch
10	Photoelectric unit (Note 7)		23	60 A, 2PNO Contactor	Lighting
11	15 A, 1P, Test switch	Sign Illumination Test Switch	24	15 A, 120 V, 1P, CB	IISNS
12	15 A, 120 V, 1P, CB	Sign Illumination Control	25	30 A, 2PNO Contactor	IISNS
13	15 A, 120 V, 1P, CB	Flashing Beacon	26	20 A, 120 V, 1P, CB	Telephone Demarcation Cabinet

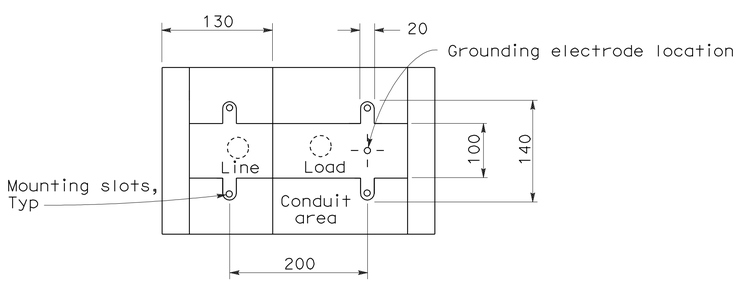

BASE FOR TYPE III-A SERVICE EQUIPMENT ENCLOSURE

NOTES: (FOR SERVICE EQUIPMENT ENCLOSURE)

1. Voltage ratings of service equipment shall conform to the service voltages indicated on the plans.
2. Unless otherwise indicated on the plans, service equipment items shall be provided for each service equipment enclosure as shown.
3. Connect to remote test switch mounted on lighting standards, sign post or structure when required.
4. Items No. 1 and 6 shall be isolated from the service equipment enclosure.
5. Meter sockets shall be 5 clip type.
6. The landing lug shall be suitable for multiple conductors.
7. Type V photoelectric control shall be used unless otherwise indicated on the plans.

STATE OF CALIFORNIA
DEPARTMENT OF TRANSPORTATION

ELECTRICAL SYSTEMS (SERVICE EQUIPMENT AND TYPICAL WIRING DIAGRAM, TYPE III -A SERIES)

NO SCALE

ALL DIMENSIONS ARE IN MILLIMETERS UNLESS OTHERWISE SHOWN

RSP ES-2D DATED OCTOBER 5, 2007 SUPERSEDES STANDARD PLAN ES-2D DATED JULY 1, 2004-PAGE 419 OF THE STANDARD PLANS BOOK DATED JULY 2004.

REVISED STANDARD PLAN RSP ES-2D

2004 REVISED Std PLAN RSP ES-2D

10-1-07

DIST	COUNTY	ROUTE	KILOMETER POST TOTAL PROJECT	SHEET NO.	TOTAL SHEETS
10	SJ	26	8.2/10.0	73	83

Jeffery G. McRae
REGISTERED ELECTRICAL ENGINEER

October 5, 2007
PLANS APPROVAL DATE

REGISTERED PROFESSIONAL ENGINEER Jeffery G. McRae No. E14512 Exp. 6-30-08 ELECTRICAL STATE OF CALIFORNIA

The State of California or its officers or agents shall not be responsible for the accuracy or completeness of electronic copies of this plan sheet.

To get to the Caltrans web site, go to: http://www.dot.ca.gov

Caltrans Metric

To accompany plans dated 8-24-09

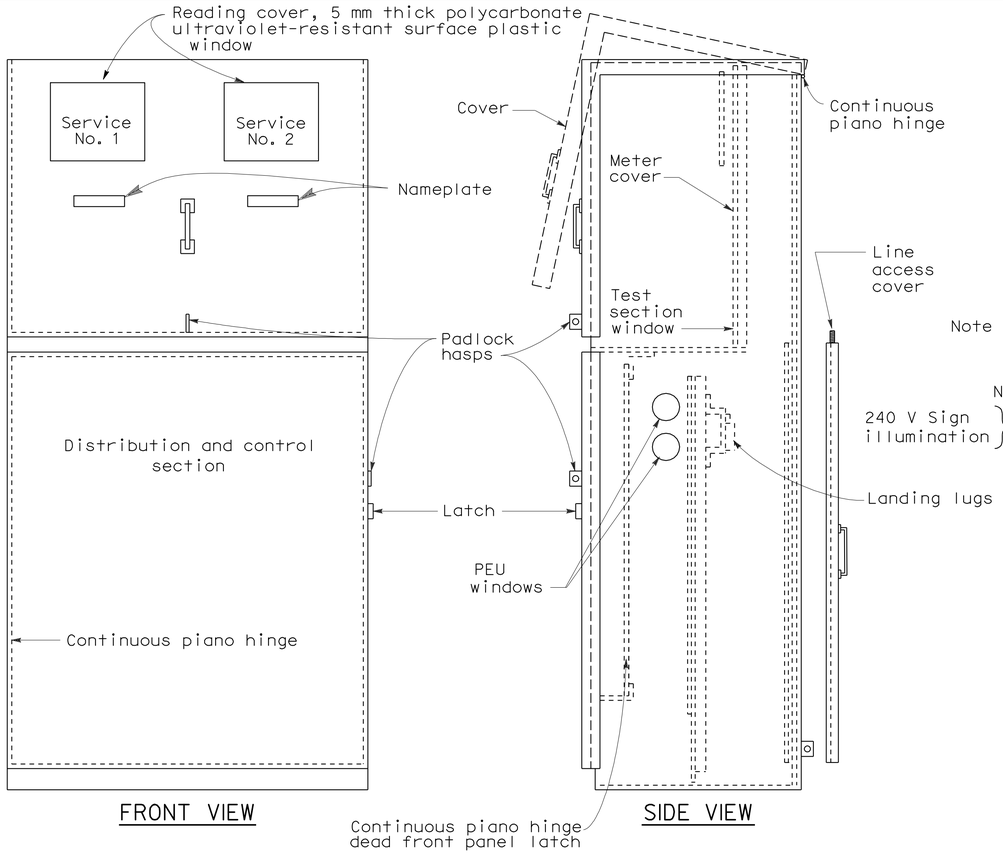

TYPE III-CF SERVICE EQUIPMENT ENCLOSURE WITH PROVISIONS FOR TWO 100 A METERS (TYPICAL)

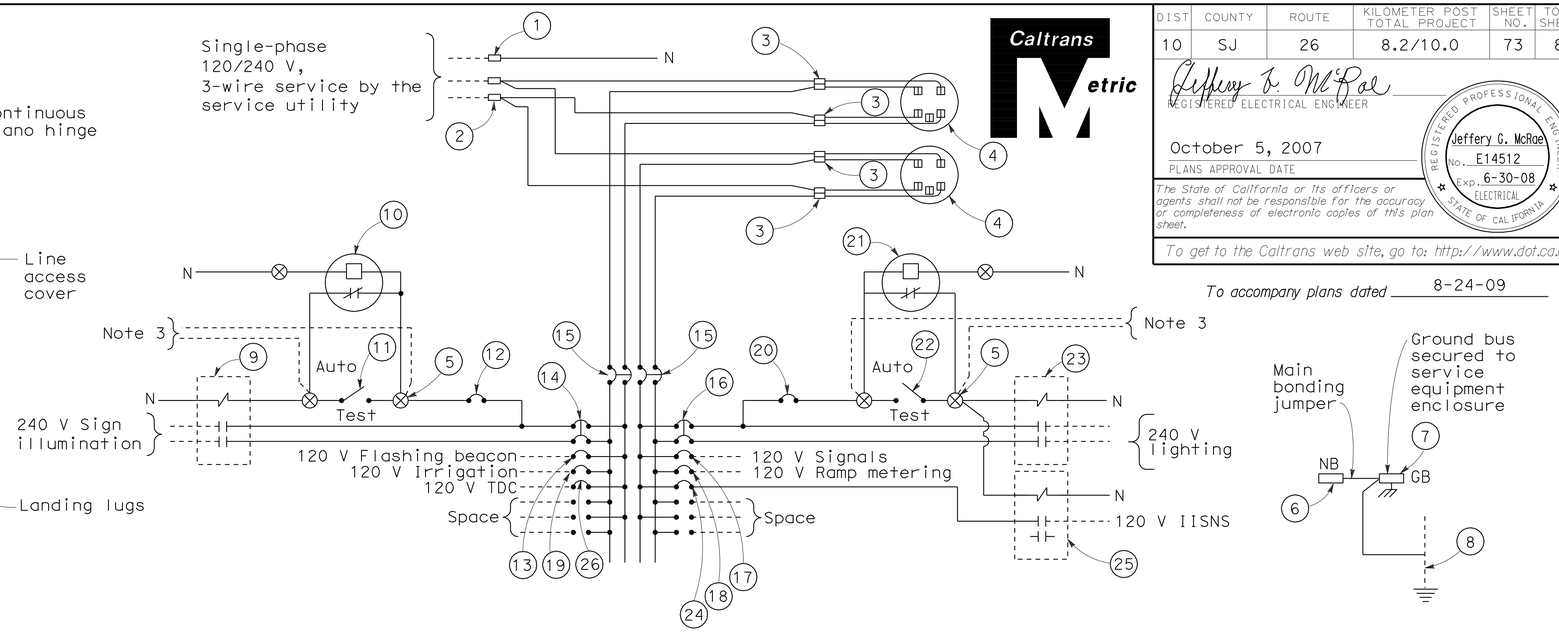

120/240 V SERVICE WIRING DIAGRAM (TYPICAL)

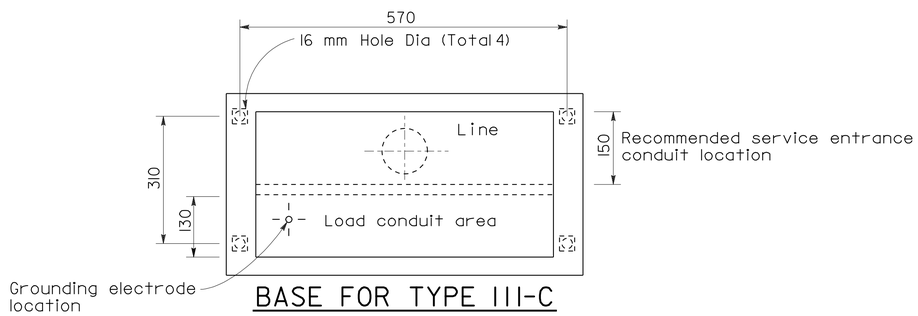

BASE FOR TYPE III-C SERVICE EQUIPMENT ENCLOSURE

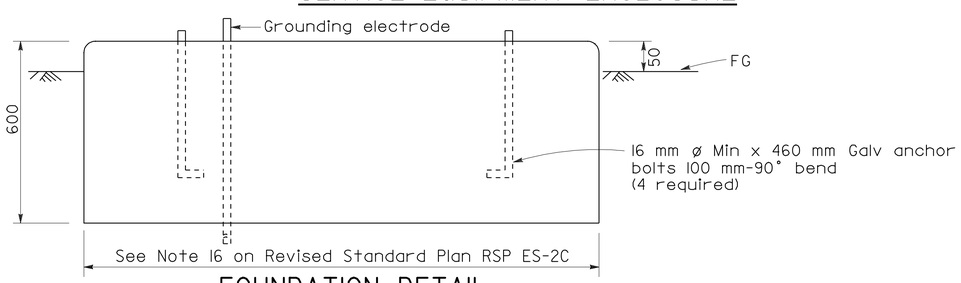

FOUNDATION DETAIL

TYPE III-C SERVICE (120/240 V) EQUIPMENT LEGEND

ITEM No.	COMPONENT	NAME PLATE DESCRIPTION	ITEM No.	COMPONENT	NAME PLATE DESCRIPTION
1	Neutral lug		14	30 A,240 V,2P,CB	Sign Illumination
2	Landing lug (Note 6)		15	100 A,240 V,2P,CB	Main Breaker
3	Test bypass facility		16	30 A,240 V,2P,CB	Lighting
4	Meter socket and support		17	50 A,120 V,1P,CB	Signals
5	Terminal blocks		18	30 A,120 V,1P,CB	Ramp Metering
6	Neutral bus		19	20 A,120 V,1P,CB	Irrigation
7	Ground bus		20	15 A,120 V,1P,CB	Lighting Control
8	Grounding electrode		21	Photoelectric unit(Note 7)	
9	30 A,2PNO, Contactor	Sign Illumination	22	15 A,1P,Test switch	Lighting Control
10	Photoelectric unit (Note 7)		23	60 A,2PNO Contactor	Lighting
11	15 A,1P, Test switch	Sign Illumination Test Switch	24	15 A,120 V,1P,CB	IISNS
12	15 A,120 V,1P,CB	Sign Illumination Control	25	30 A,2PNO Contactor	IISNS
13	15 A,120 V,1P,CB	Flashing Beacon	26	20 A,120 V,1P,CB	Telephone Demarcation Cabinet

NOTES (FOR SERVICE EQUIPMENT ENCLOSURE)

1. Voltage ratings of service equipment shall conform to the service voltages indicated on the plans.
2. Unless otherwise indicated on the plans, service equipment items shall be provided for each service equipment enclosure as shown.
3. Connect to remote test switch mounted on lighting standards, sign post or structure when required.
4. Items No. 1 and 6 shall be isolated from the service equipment enclosure.
5. Meter sockets shall be 5 clip type.
6. The landing lug shall be suitable for multiple conductors.
7. Type V photoelectric control shall be used unless otherwise indicated on the plans.

STATE OF CALIFORNIA
DEPARTMENT OF TRANSPORTATION

ELECTRICAL SYSTEMS (SERVICE EQUIPMENT AND TYPICAL WIRING DIAGRAM TYPE III -C SERIES)

NO SCALE

ALL DIMENSIONS ARE IN MILLIMETERS UNLESS OTHERWISE SHOWN

RSP ES-2F DATED OCTOBER 5, 2007 SUPERSEDES STANDARD PLAN ES-2F DATED JULY 1, 2004-PAGE 421 OF THE STANDARD PLANS BOOK DATED JULY 2004.

REVISED STANDARD PLAN RSP ES-2F

2004 REVISED Std PLAN RSP ES-2F

8-9-07

DIST	COUNTY	ROUTE	KILOMETER POST TOTAL PROJECT	SHEET NO.	TOTAL SHEETS
10	SJ	26	8.2/10.0	74	83

Caltrans Metric

Jeffery G. McRae
REGISTERED ELECTRICAL ENGINEER

October 5, 2007
PLANS APPROVAL DATE

REGISTERED PROFESSIONAL ENGINEER
Jeffery G. McRae
No. E14512
Exp. 6-30-08
ELECTRICAL
STATE OF CALIFORNIA

The State of California or its officers or agents shall not be responsible for the accuracy or completeness of electronic copies of this plan sheet.

To get to the Caltrans web site, go to: http://www.dot.ca.gov

To accompany plans dated 8-24-09

NOTES - CONTROLLER CABINETS

1. Cabinet dimensions are nominal.
2. Foundations shall be located to provide 600 mm minimum clearance between face of curb and any portion of cabinet.
3. Type G, M, P, R, S and Model 336 cabinets shall be installed with the back toward the nearest lane of traffic.
4. The controller cabinet ground bus shall be bonded to the controller equipment enclosure.
5. In unpaved areas, a raised portland cement concrete pad shall be constructed in front of each controller cabinet. Pad shall be 900 mm x 900 mm x 100 mm for Type G cabinets and shall be 900 mm x 100 mm thick x width of foundation for Types M, P, R, S and Model 336 cabinets.
6. In unpaved areas, the top of foundation for Type G, P, R and S cabinets shall be 150 mm above surrounding grade. Top of foundation for Type M or Model 336 cabinet shall be 460 mm above surrounding grade.
7. In sidewalks and other paved areas, top of foundation for Type G cabinet shall be level with surrounding grade. Top of foundation for Type P, R and S cabinets shall be 90 mm above surrounding grade.
8. The steel pedestal, base plate, bolt circle and foundation for Type G cabinet shall be the same as that shown for a Type 1-C Standard. Pedestal shall be 640 mm - 760 mm in length. Anchor bolts shall be 19 mm ø x 460 mm with a 50 mm - 90° bend. Four bolts required per cabinet.
9. Type G cabinet shall be provided with a slipfitter to permit mounting an 114 mm outside diameter pedestal. Slipfitter shall be bolted to bottom of the cabinet.
10. Type G cabinet shall be provided with 8 screened, raintight holes, 13 mm diameter or larger, in the bottom of the cabinet.
11. A 25 mm drain shall be provided through the foundation of a Type M or Model 336 cabinet. Drain pipe shall be screened.
12. See Table for cabinet and foundation dimensions; "D" = Depth, "H" = Height and "W" = Width.
13. Cabinet shelves shall be adjustable for vertical spacing and shall be removable. Type M, P, R and S cabinets shall be provided with a minimum of two shelves.
14. Anchor bolts for Type M, P, R, S and Model 336 cabinets shall be 19 mm ø x 460 mm with a 50 mm - 90° bend.
15. An approved mastic or caulking compound shall be placed on the foundation prior to placing the cabinet to seal openings between bottom of cabinet and foundation.
16. Controller units, plug-mounted equipment, shelf-mounted equipment and wall-mounted equipment shall be located to permit safe and easy removal or replacement without removing any other piece of equipment.
17. Cabinet fan may be installed at an alternate location near the top of the cabinet when approved by the Engineer.
18. Where telephone interconnect is required, a minimum of 130 mm clear vertical space shall be provided inside the cabinet for the equipment.
19. Telephone interconnect conductors shall be enclosed in a 21C or larger conduit through the foundation. Type 4 metal conduit shall be used to separate telephone and power conductors in cabinets and pedestals.
20. For Model 332, 334 and 336 cabinet details, see "Traffic signal controller equipment specifications".

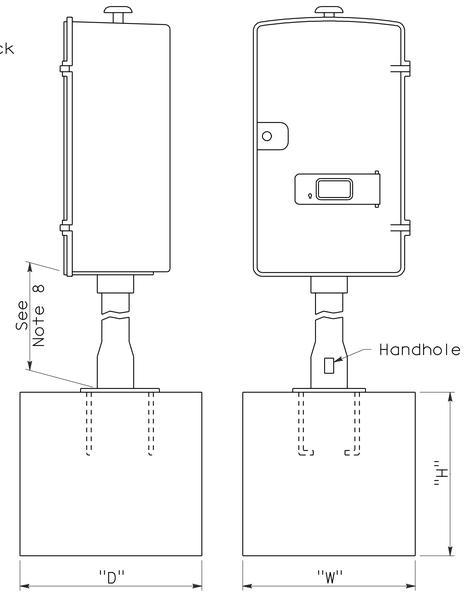

FOUNDATION FOR TYPE G CABINET

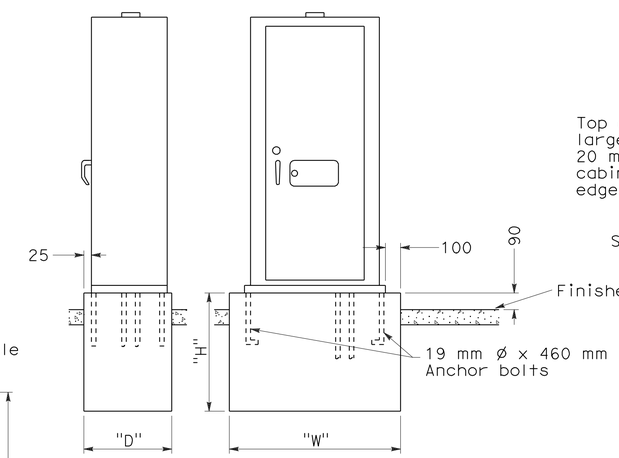

FOUNDATION FOR TYPE P, R AND S CABINETS

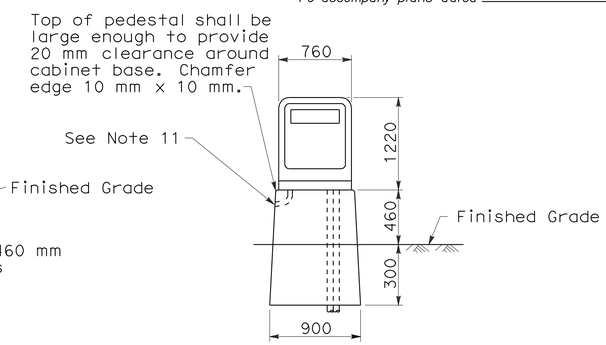

PEDESTAL FOUNDATION FOR TYPE M OR MODEL 336 CABINET

CABINET	FOUNDATION		
TYPE/ MODEL	H (mm)	W (mm)	D (mm)
G	900	600	600
M 336	760	900	560
P	460	1330	710
R	460	1330	710
S	460	1820	710

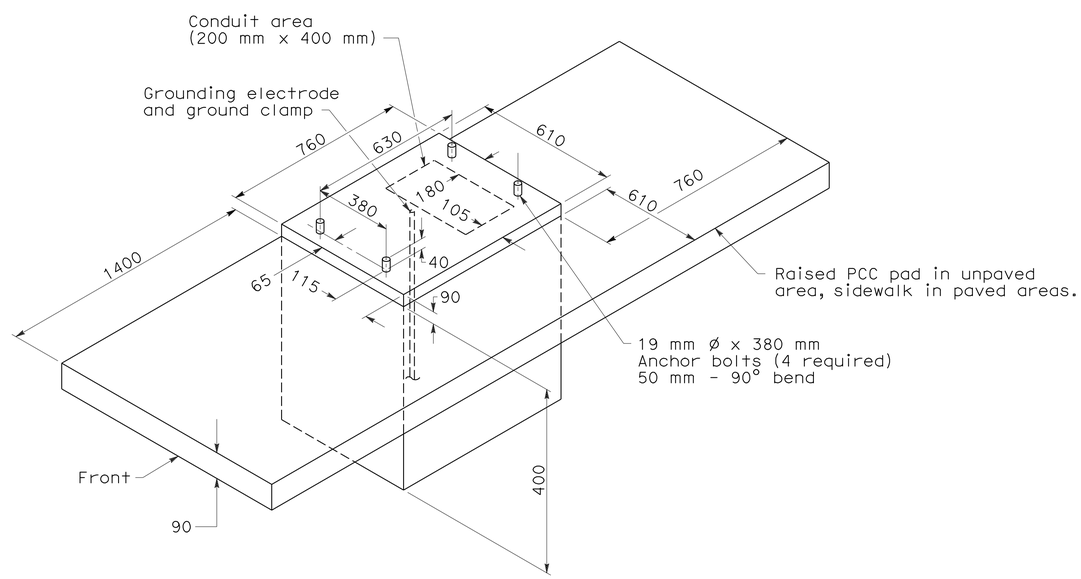

FOUNDATION DETAILS
For Model 332 and 334 cabinets

STATE OF CALIFORNIA
DEPARTMENT OF TRANSPORTATION

ELECTRICAL SYSTEMS (CONTROLLER CABINET DETAILS)

NO SCALE

ALL DIMENSIONS ARE IN MILLIMETERS UNLESS OTHERWISE SHOWN

RSP ES-3C DATED OCTOBER 5, 2007 SUPERSEDES STANDARD PLAN ES-3C DATED JULY 1, 2004-PAGE 425 OF THE STANDARD PLANS BOOK DATED JULY 2004.

REVISED STANDARD PLAN RSP ES-3C

2004 REVISED Std PLAN RSP ES-3C

6-27-07

DIST	COUNTY	ROUTE	KILOMETER POST TOTAL PROJECT	SHEET NO.	TOTAL SHEETS
10	SJ	26	8.2/10.0	75	83

REGISTERED ELECTRICAL ENGINEER

October 5, 2007
PLANS APPROVAL DATE

REGISTERED PROFESSIONAL ENGINEER Jeffery G. McRae No. E14512 Exp. 6-30-08 ELECTRICAL STATE OF CALIFORNIA

The State of California or its officers or agents shall not be responsible for the accuracy or completeness of electronic copies of this plan sheet.

To get to the Caltrans web site, go to: http://www.dot.ca.gov

To accompany plans dated 8-24-09

Caltrans Metric

LOOP INSTALLATION PROCEDURE

1. Loops shall be centered in lanes.
2. Saw slots in pavement for loop conductors as shown in details.
3. Distance between side of loop and a lead-in saw cut from adjacent detectors shall be 600 mm minimum. Distance between lead-in saw cuts shall be 150 mm minimum.
4. Bottom of saw slot shall be smooth with no sharp edges.
5. Slots shall be washed until clean, blown out and thoroughly dried before installing loop conductors.
6. Adjacent loops on the same sensor unit channel shall be wound in opposite directions.
7. Identify and tag loop circuit pairs in the pull box with loop number, start (S) and finish (F) of conductor. Identify and tag lead-in-cable with sensor number and phase.
8. Install loop conductor in slot using a 5 mm to 6 mm thick wood paddle. Hold loop conductors with wood paddles (at the bottom of the sawed slot) during sealant placement.
9. No more than 2 twisted pairs shall be installed in one sawed slot.
10. Allow additional 1.5 m of slack length of conductor for the lead-in run to pull box.
11. The additional length of each conductor for each loop shall be twisted together into a pair (6 turns per meter minimum) before being placed in the slot and conduit leading to pull box.
12. Test each loop circuit for continuity, circuit resistance and insulation resistance at the pull box before filling slots.
13. Fill slots as shown in details.
14. Splice loop conductors to lead-in cable. Splices shall be soldered.
15. End of lead-in-cable and Type 2 loop conductor shall be waterproofed prior to installing in conduit to prevent moisture from entering the cable.
16. Lead-in-cable shall not be spliced between the pull box and the controller cabinet terminals.
17. Test each loop circuit for continuity, circuit resistance and insulation resistance at the controller cabinet location.
18. Where loop conductors are not to be spliced to a lead-in-cable, the ends of the conductors shall be taped and waterproofed with electrical insulating coating.

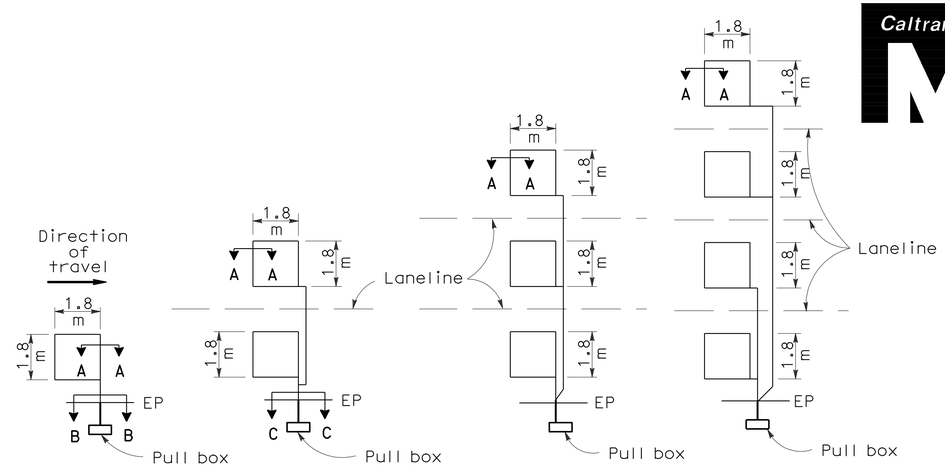

TYPE 1A INSTALLATION | TYPE 2A INSTALLATION | TYPE 3A INSTALLATION | TYPE 4A INSTALLATION

SAWCUT DETAILS

(Type A loop detector configurations illustrated)

1. 1A thru 4A = 1 Type A loop configuration in each lane.
2. 1B thru 4B = 1 Type B loop configuration in each lane.
3. 1C = 1 Type C loop configuration entering lanes as required.
4. 1D thru 4D = 1 Type D loop configuration in each lane.
5. 1E thru 4E = 1 Type E loop configuration in each lane.
6. 1Q thru 4Q = 1 Type Q loop configuration in each lane.
   (Use Type A, B, C, D, E or Q loop detector configurations only when specified or shown on plans)

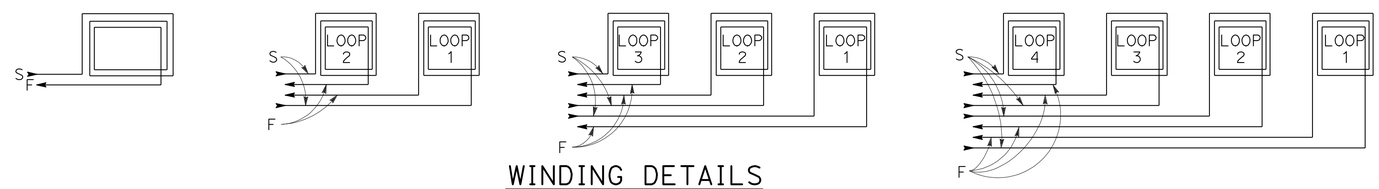

WINDING DETAILS

See Notes 6 and 7

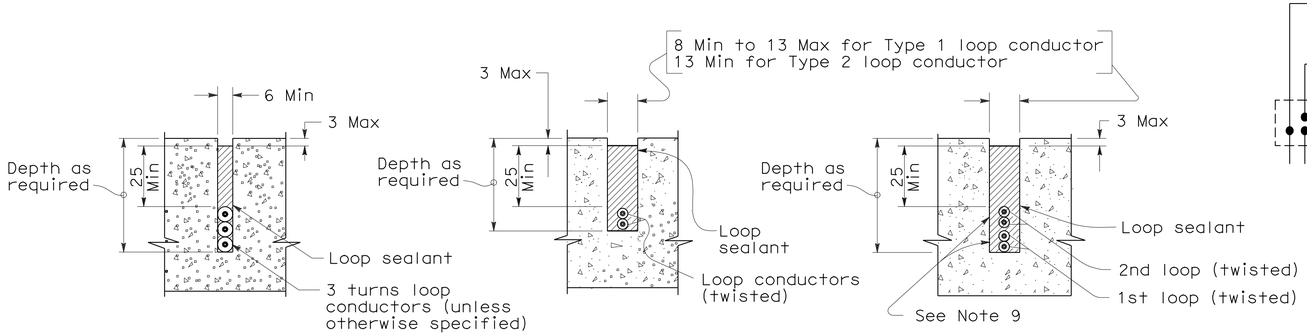

SECTION A-A | SECTION B-B | SECTION C-C

SLOT DETAILS - TYPE 1 AND TYPE 2 LOOP CONDUCTOR

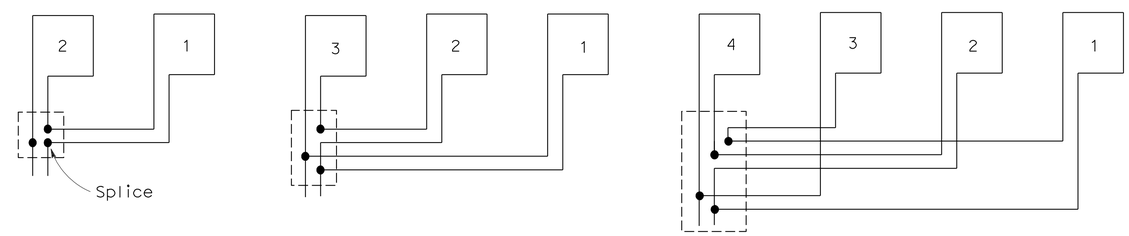

TYPICAL LOOP CONNECTIONS

(Dashed lines represent the pull box)

STATE OF CALIFORNIA
DEPARTMENT OF TRANSPORTATION

ELECTRICAL SYSTEMS (DETECTORS)

NO SCALE

ALL DIMENSIONS ARE IN MILLIMETERS UNLESS OTHERWISE SHOWN

RSP ES-5A DATED OCTOBER 5, 2007 SUPERSEDES STANDARD PLAN ES-5A DATED JULY 1, 2004-PAGE 436 OF THE STANDARD PLANS BOOK DATED JULY 2004.

REVISED STANDARD PLAN RSP ES-5A

2004 REVISED Std PLAN RSP ES-5A

8-9-07

DIST	COUNTY	ROUTE	KILOMETER POST TOTAL PROJECT	SHEET NO.	TOTAL SHEETS
10	SJ	26	8.2/10.0	76	83

Caltrans Metric

REGISTERED ELECTRICAL ENGINEER

October 5, 2007
PLANS APPROVAL DATE

REGISTERED PROFESSIONAL ENGINEER Jeffery G. McRae No. E14512 Exp. 6-30-08 ELECTRICAL STATE OF CALIFORNIA

The State of California or its officers or agents shall not be responsible for the accuracy or completeness of electronic copies of this plan sheet.

To get to the Caltrans web site, go to: http://www.dot.ca.gov

To accompany plans dated 8-24-09

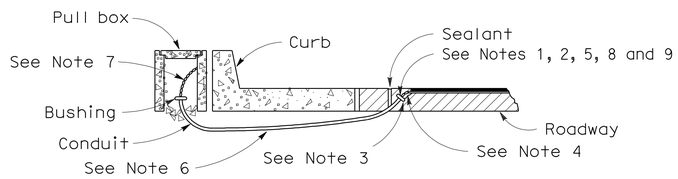

TYPE A
CURB TERMINATION DETAIL

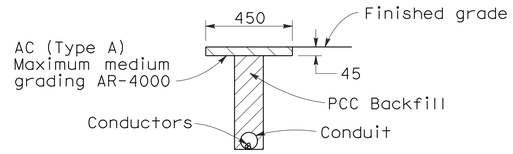

"T" TRENCH DETAIL

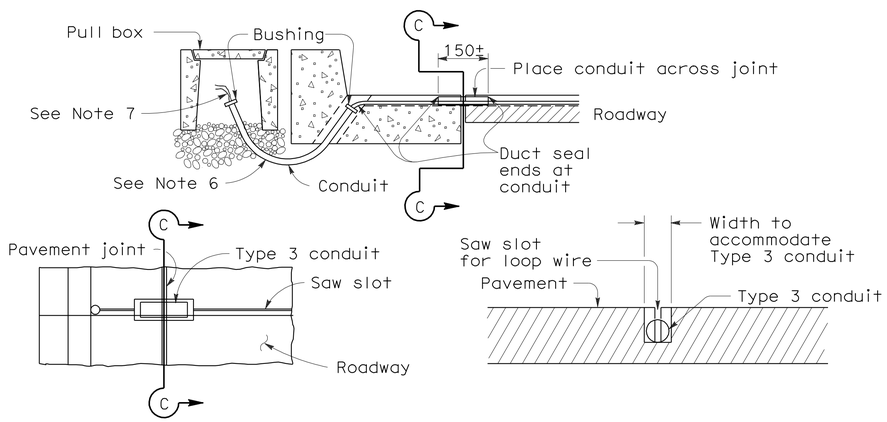

PLAN VIEW

SECTION C-C

TYPE B
CURB TERMINATION DETAILS

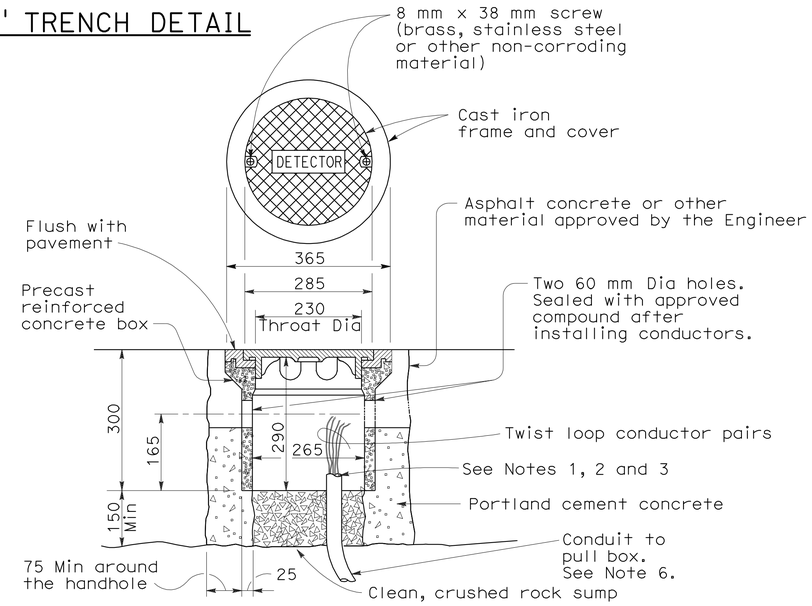

DETECTOR HANDHOLE DETAILS

NOTES (This sheet only):

1. Bushing shall be used at end of conduit.
2. Tape detector conductors or cables 75 mm each side of bushings.
3. Install duct seal compound to each end of termination conduit before installing sealant.
4. Round all sharp edges where detector conductors or cables have to pass.
5. End of conduit shall be 80 mm below roadway surface.
6. Conduit size / Loop Conductors
   - 27C Minimum — 1 to 2 pairs
   - 41C Minimum — 3 to 4 pairs
   - 53C Minimum — 5 or more pairs
7. Splice detector conductors or cables to lead-in-cable run to controller cabinet.
8. Location of detector handhole when shown on plans.
9. When the shoulder and traveled way are paved with the same material and there is no joint between them, the conduit shall extend only 600 mm into the shoulder pavement.

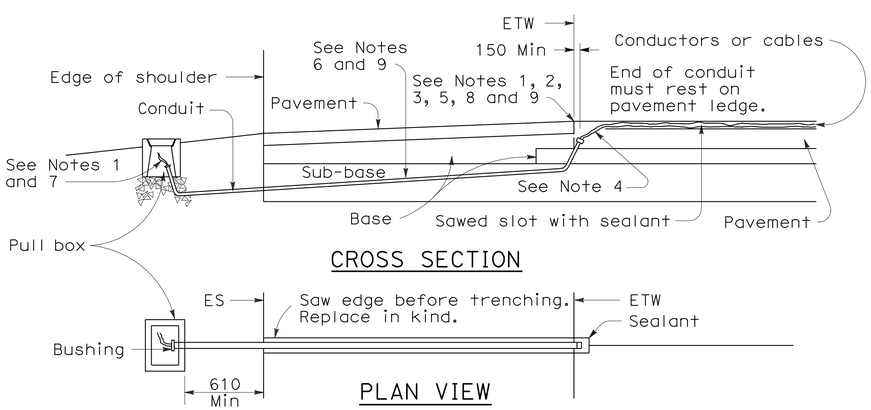

CROSS SECTION

PLAN VIEW

SHOULDER TERMINATION DETAILS

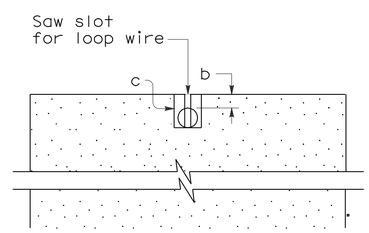

SECTION A-A

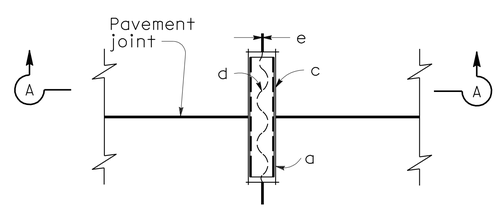

PLAN VIEW

TYPICAL LOOP LEAD-IN DETAILS AT PAVEMENT JOINT

NOTES:

a. 21C, Type 3 conduit 150 mm long minimum, plug both ends with caulking compound to keep out sealant.

b. 13 mm minimum between top of conduit and pavement surface.

c. Saw cut shall not exceed 25 mm in width and 3 mm longer than conduit to be installed.

d. Conductors with 13 mm minimum slack inside conduit.

e. Inductive loop detector saw slot.

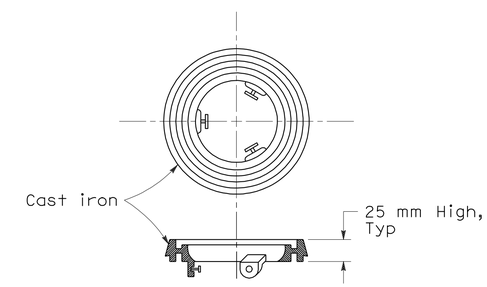

NOTE:

Use for Type A detector handhole on pavement resurfacing only.

LOCKING GRADE RING

STATE OF CALIFORNIA
DEPARTMENT OF TRANSPORTATION

ELECTRICAL SYSTEMS (DETECTORS)

NO SCALE

ALL DIMENSIONS ARE IN
MILLIMETERS UNLESS OTHERWISE SHOWN

RSP ES-5D DATED OCTOBER 5, 2007 SUPERSEDES STANDARD PLAN ES-5D
DATED JULY 1, 2004-PAGE 439 OF THE STANDARD PLANS BOOK DATED JULY 2004.

REVISED STANDARD PLAN RSP ES-5D

2004 REVISED Std PLAN RSP ES-5D

10-1-07

DIST	COUNTY	ROUTE	KILOMETER POST TOTAL PROJECT	SHEET NO.	TOTAL SHEETS
10	SJ	26	8.2/10.0	77	83

Caltrans Metric

REGISTERED CIVIL ENGINEER

October 5, 2007
PLANS APPROVAL DATE

REGISTERED PROFESSIONAL ENGINEER
Stanley P. Johnson
No. C57793
Exp. 03-31-08
CIVIL
STATE OF CALIFORNIA

The State of California or its officers or agents shall not be responsible for the accuracy or completeness of electronic copies of this plan sheet.

To get to the Caltrans web site, go to: http://www.dot.ca.gov

To accompany plans dated 8-24-09

2004 REVISED Std PLAN RSP ES-6A

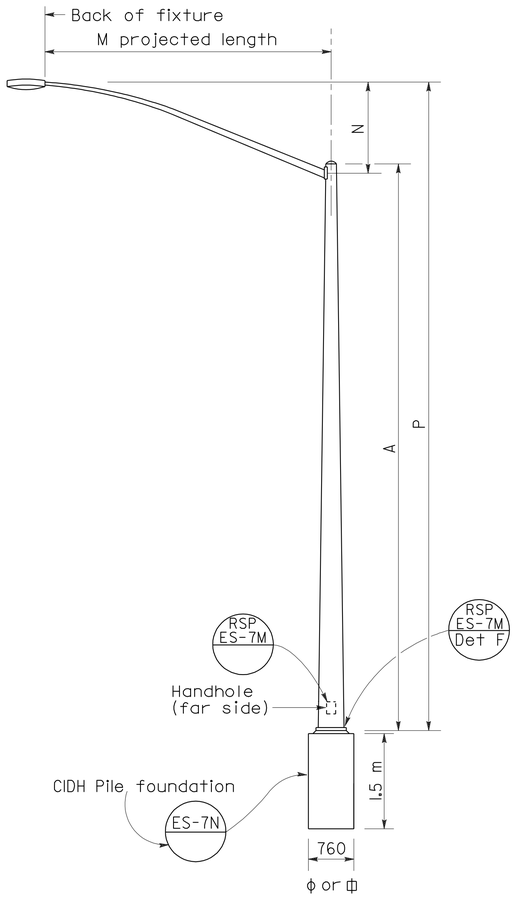

ELEVATION
TYPE 15 AND TYPE 21

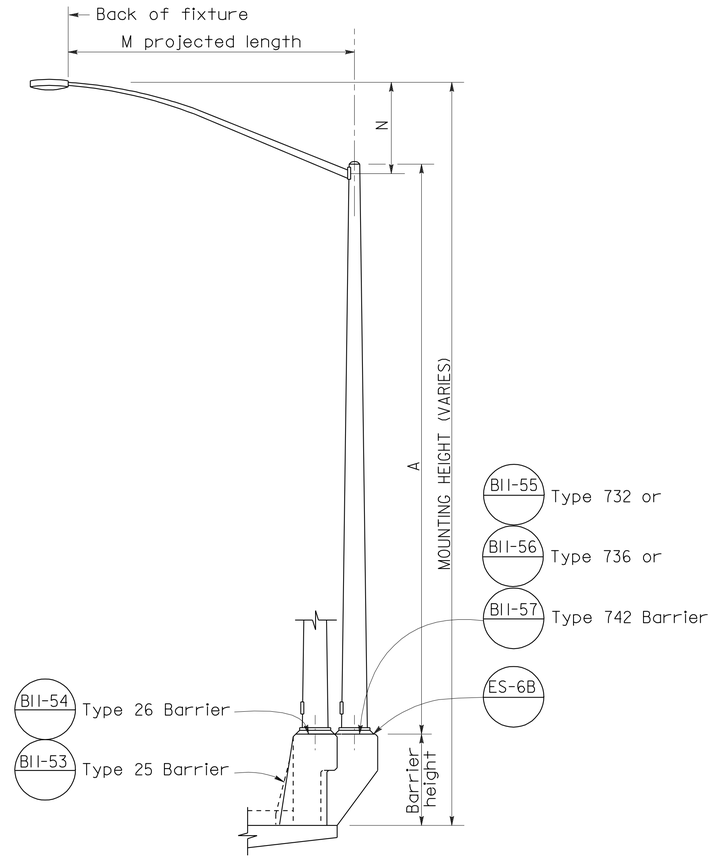

ELEVATION
TYPE 15 AND TYPE 21 BARRIER RAIL MOUNTED

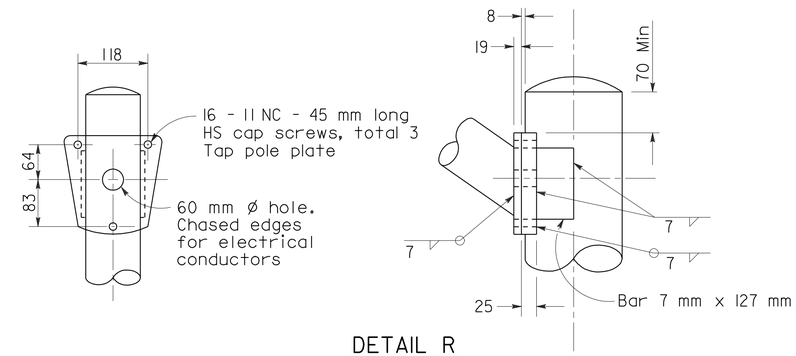

DETAIL R
LUMINAIRE ARM CONNECTION

HIGH STRENGTH CAP SCREWS
16 - 11NC - 45
Length (mm)
Threads (per inch)
Size (mm)

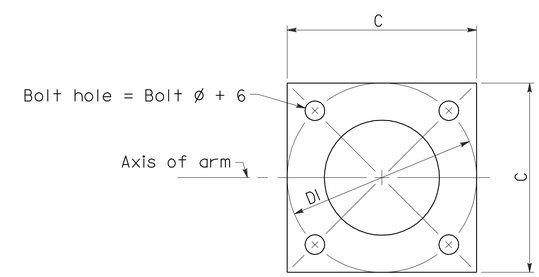

BASE PLATE

POLE TYPE	POLE DATA				BASE PLATE DATA				LUMINAIRE ARM
	A Height	Min OD Base	Min OD Top	Wall Thickness	C	D1 Bolt Circle	Thick-ness	Anchor Bolts Size	
	m	mm	mm	mm	mm				m
15	9.1	203	98	3.04	305	305	25	25 ϕ x 915 x 102*	1.8-4.6 [3.7]
21	10.7	219	98	3.04	305	305	25	See ES-6B	1.8-4.6 [3.7]

*For barrier rail bolts, see Standard Plan ES-6B.

LUMINAIRE ARM DATA					
M Projected Length	N Rise	Min OD At Pole	Nominal Thickness	P Type 15	P Type 21
m	mm	mm	mm	m	m
1.8	610±	83	3.04	9.5±	11.2±
2.4	760±	89	3.04	9.7±	11.3±
3.1	990±	98	3.04	9.9±	11.5±
3.7	1290±	98	3.04	10.2±	11.8±
4.6	1450±	108	3.04	10.3±	11.9±

NOTES:

1. ☐ Indicates arm length to be used unless otherwise noted on the plans.
2. For Type 15-SB, use Type 15 standard with Type 30 base plate details, see Standard Plan ES-6F.
3. For additional notes, see Revised Standard Plan RSP ES-7M and ES-7N.

STATE OF CALIFORNIA
DEPARTMENT OF TRANSPORTATION

ELECTRICAL SYSTEMS (LIGHTING STANDARD TYPES 15 AND 21)

NO SCALE

ALL DIMENSIONS ARE IN MILLIMETERS UNLESS OTHERWISE SHOWN

RSP ES-6A DATED OCTOBER 5, 2007 SUPERSEDES STANDARD PLAN ES-6A DATED JULY 1, 2004-PAGE 440 OF THE STANDARD PLANS BOOK DATED JULY 2004.

REVISED STANDARD PLAN RSP ES-6A

DIST	COUNTY	ROUTE	KILOMETER POST TOTAL PROJECT	SHEET NO.	TOTAL SHEETS
10	SJ	26	8.2/10.0	78	83

REGISTERED CIVIL ENGINEER

April 28, 2005
PLANS APPROVAL DATE

REGISTERED PROFESSIONAL ENGINEER Tillat Sattar No. C42892 Exp. 03-31-2006 CIVIL STATE OF CALIFORNIA

The State of California or its officers or agents shall not be responsible for the accuracy or completeness of electronic copies of this plan sheet.

To get to the Caltrans web site, go to: http://www.dot.ca.gov

To accompany plans dated 8-24-09

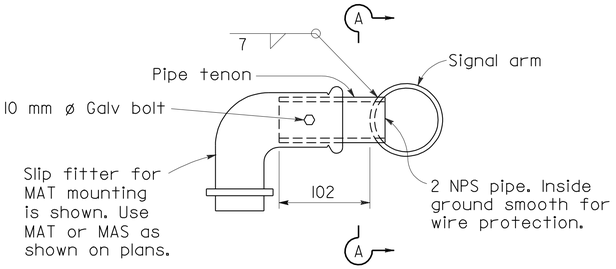

ES-4D

DETAIL S-SIDE TENON

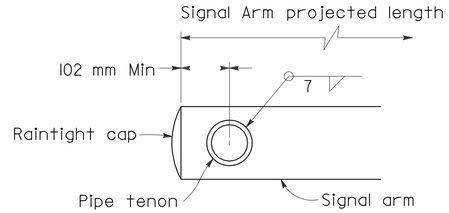

SECTION A-A

PIPE TENONS

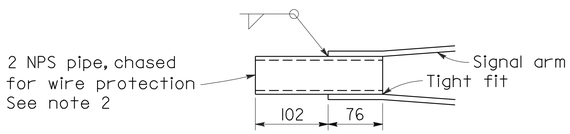

DETAIL TS-TIP TENON

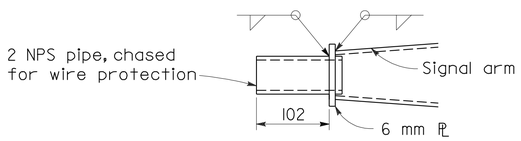

DETAIL TL-TIP TENON

This detail supersedes Detail S when so designated

IDENTIFICATION NUMBER

Attach a stamped metal tag with each pole's indentification number to shaft above handhole. 7 mm high number minimum.

A similar tag shall be attached to the top of the signal mast arm near the pole plate.

Sample Identification Number

Type — Load case — Design wind velocity (km/h) — Signal arm length maximum (m) — Standard plan year — Only for poles with fatigue resistant welds

19A - 3 - 161 - 9.1 - 04 - F

Use SL for special load case

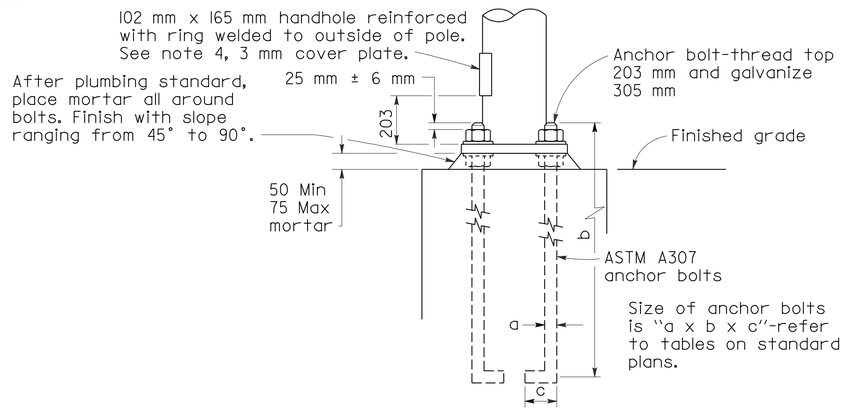

HANDHOLE AND ANCHORAGE DETAILS

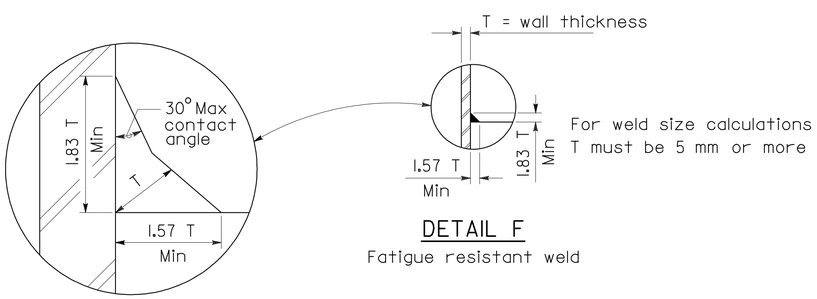

DETAIL F

Fatigue resistant weld

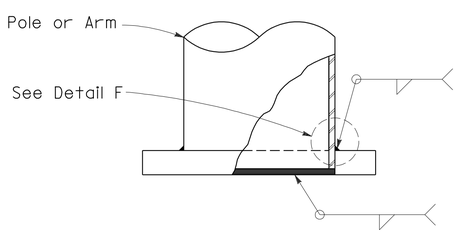

ELEVATION A

Weld Size	Wall Thickness
7	3.04
8	4.55
10	6.07
11	7.94
4	3.04
5	4.55
7	6.07
8	7.94

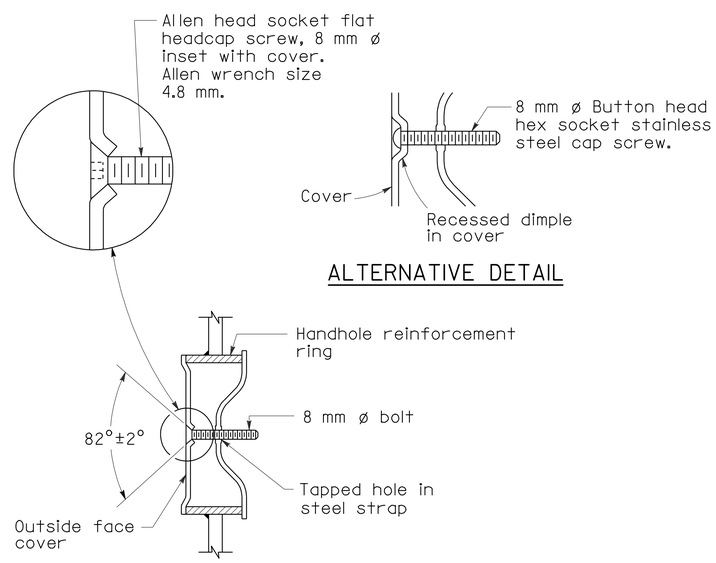

ALTERNATIVE DETAIL

TAMPER RESISTANT HANDHOLE COVER

GENERAL NOTES

SPECIFICATIONS

DESIGN : AASHTO Standard specifications for structural supports for highway signs, luminaires and traffic signals dated 2001.

Loading

WIND LOADINGS : 161 km/h

Unit Stresses

STRUCTURAL STEEL : fy = 330 MPa tapered steel tube
fy = 250 MPa unless otherwise noted

CONSTRUCTION : Standard Specifications and the Special Provisions

NOTES

1. ASTM A307 anchor bolts are required for each pole. Provide a hex nut, leveling nut and 2 washers for each bolt.
2. Luminaire arms shall be round, tapered steel tubes, taper of 11.45 mm/m to 11.66 mm/m with an end section 60 mm OD for mounting hardware. Extensions of 2 NPS Standard pipe and 178 mm long may be used at the option of the manufacturer. When low pressure sodium luminaires are required, the extension shall be 381 mm.
3. Signal arms shall be round, tapered steel tubes, maximum taper 11.66 mm/m.
4. Handhole reinforcement ring shall be 6 mm x 51 mm for 3.04 mm to 6.07 mm poles, 10 mm x 51mm for 7.94 mm.
5. Handholes for lighting standards shall be located on the downstream side of the pole unless otherwise noted on the plans.
6. Detail F, fatigue resistant weld, is required at signal arm plate and pole base plate.
7. Cap screws shall be tightened by the turn-of-nut method 1/3 turn to form a snug tight condition. No washer will be required.
8. During pole erection, the post shall be raked as necessary with the use of leveling nuts to provide a plumb pole axis.
9. When Project Plans show a lesser number of signs and signals, the Project Plans shall prevail.
10. Outside diameter, wall thickness, and corresponding section properties at the base of traffic signal poles and arms as shown in the Standard Plans are minimums. Unless otherwise specified, alternative sections require approval by the Engineer.

STATE OF CALIFORNIA
DEPARTMENT OF TRANSPORTATION

ELECTRICAL SYSTEMS (SIGNAL AND LIGHTING STANDARDS DETAILS No. 1)

NO SCALE

ALL DIMENSIONS ARE IN MILLIMETERS UNLESS OTHERWISE SHOWN

RSP ES-7M DATED APRIL 28, 2005 SUPERSEDES RSP ES-7M DATED JANUARY 24,2005 AND STANDARD PLAN ES-7M DATED JULY 1, 2004-PAGE 463 OF THE STANDARD PLANS BOOK DATED JULY 2004.

REVISED STANDARD PLAN RSP ES-7M

2004 REVISED Std PLAN RSP ES-7M

DIST	COUNTY	ROUTE	KILOMETER POST TOTAL PROJECT	SHEET NO.	TOTAL SHEETS
10	SJ	26	8.2/10.0	79	83

Caltrans Metric

REGISTERED ELECTRICAL ENGINEER

October 5, 2007
PLANS APPROVAL DATE

REGISTERED PROFESSIONAL ENGINEER Jeffery G. McRae No. E14512 Exp. 6-30-08 ELECTRICAL STATE OF CALIFORNIA

The State of California or its officers or agents shall not be responsible for the accuracy or completeness of electronic copies of this plan sheet.

To get to the Caltrans web site, go to: http://www.dot.ca.gov

To accompany plans dated 8-24-09

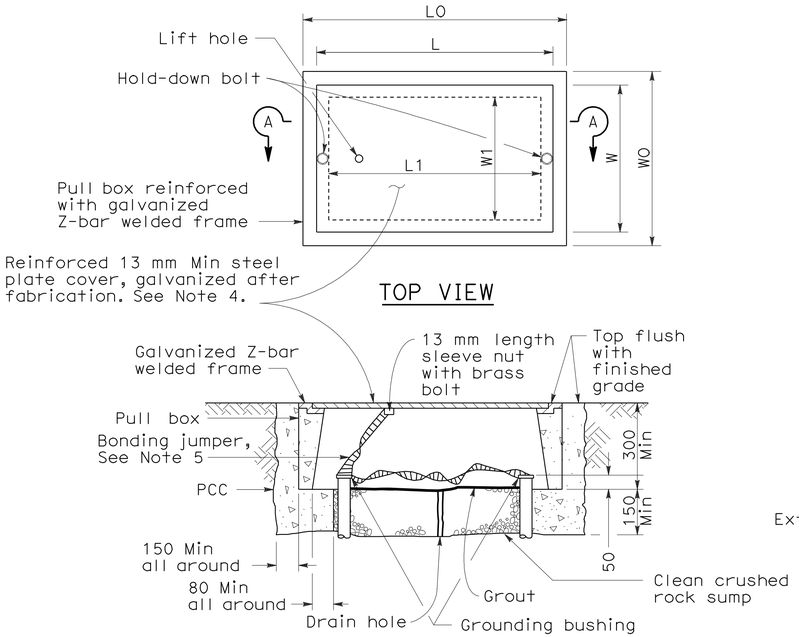

SECTION A-A

No. 3½(T), No. 5(T) AND No. 6(T) TRAFFIC PULL BOX

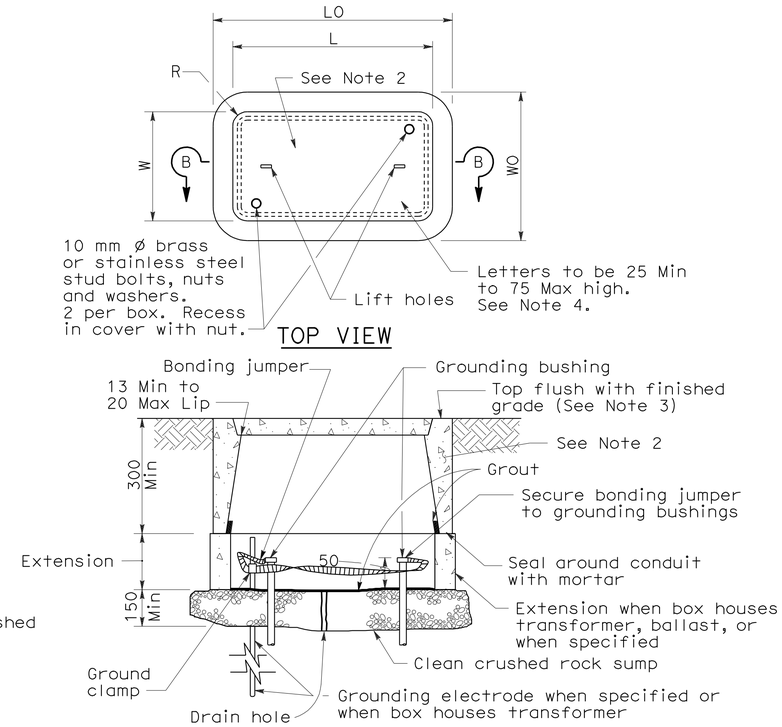

SECTION B-B

INSTALLATION DETAILS

DIMENSION TABLE

PULL BOX	CONCRETE BOX				NON-PCC BOX		CONCRETE OR NON-PCC COVERS				
	Minimum * Thickness	Minimum Depth Box and Extension	LO (mm)	WO (mm)	Minimum ** Thickness	Minimum Depth Box and Extension	L ** (mm)	W ** (mm)	R (mm)	Edge Thickness	Edge Taper
No. 3½	25 mm	No Extension	457	330	8 mm	No Extension	390	260	27	45 mm	3 mm
No. 5	25 mm	560 mm	666	425	8 mm	510 mm	590	350	32	50 mm	3 mm
No. 6	40 mm	610 mm	854	524	10 mm	510 mm	775	444	32	50 mm	3 mm

* Excluding conduit web ** Top dimension

DIMENSION TABLE

PULL BOX	CONCRETE BOX						NON-PCC BOX		CONCRETE OR NON-PCC COVERS				
	Minimum * Thickness	Minimum Depth Box and Extension	LO (mm)	WO (mm)	L1 (mm)	W1 (mm)	Minimum ** Thickness	Minimum Depth Box and Extension	L ** (mm)	W ** (mm)	R (mm)	Edge Thickness	Edge Taper
No. 3½(T)	40 mm	305 mm	530 ±	430 ± 25	370 ±	270 ± 25	Does Not Apply		510 ±	350 ±	0	13 mm	None
No. 5(T)	45 mm	305 mm	750 ±	600 ± 25	480 ±	330 ± 25	Does Not Apply		690 ±	410 ±	0	13 mm	None
No. 6(T)	50 mm	305 mm	900 ±	760 ± 25	600 ±	430 ± 25	Does Not Apply		840 ±	510 ±	0	13 mm	None

* Excluding conduit web ** Top dimension

NOTES ON PULL BOXES:

1. Traffic pull box shall be provided with steel cover and special concrete footing. Steel cover shall have embossed non-skid pattern.

2. Steel reinforcing shall be as regularly used in the standard products of the respective manufacturer.

3. Top of pull boxes shall be flush with surrounding grade or top of adjacent curb, except that in unpaved areas where pull box is not immediately adjacent to and protected by a concrete foundation, pole or other protective construction, the box shall be placed with its top 30 mm above surrounding grade. Where practicable, pull boxes shown in the vicinity of curbs shall be placed adjacent to the back of curb, and pull boxes shown adjacent to standards shall be placed on side of foundation facing away from traffic, unless otherwise noted. When pull box is installed in sidewalk area, the depth of the pull box shall be adjusted so that the top of the pull box is flush with the sidewalk.

4. Pull box covers shall be marked as follows: "SERVICE" Service circuits between service point and service disconnect; "SPRINKLER-CONTROL" Sprinkler control circuits, 50 V or less; "CALTRANS" On all pull boxes, except pull boxes marked "SPRINKLER-CONTROL"; and "TELEPHONE" Telephone service.

   a) No. 3½ pull box.

      1) "SIGNAL" Traffic signal circuits with or without street or sign lighting circuits.

      2) "ST LIGHTING" Street or sign lighting circuits where voltage is under 600 V.

   b) No. 5, 6, 9 or 9A pull box.

      1) "TRAFFIC SIGNAL" Traffic signal circuits with or without street or sign lighting circuits.

      2) "STREET LIGHTING" Street or sign lighting circuits where voltage is under 600 V.

      3) "STREET LIGHTING-HIGH VOLTAGE" Street or sign lighting circuits where voltage is above 600 V.

      4) "IRRIGATION" Circuits to irrigation controller 120 V or more.

      5) "RAMP METER" Ramp meter circuits.

      6) "COUNT STATION" Count or speed monitor circuits.

      7) "COMMUNICATION" Communication circuits.

      8) "TOS COMMUNICATIONS" TOS communications line.

      9) "TOS POWER" TOS power.

      10) "TDC POWER" Telephone demarcation cabinet power.

      11) "CCTV" Closed circuit television circuits.

      12) "TMS" Traffic monitoring station circuits.

      13) "CMS" Changeable message sign circuits.

      14) "HAR" Highway advisory radio circuits.

5. Bonding jumper for metal covers shall be 1 m long, minimum.

6. The nominal dimensions of the opening in which the cover sets shall be the same as the cover dimensions except the length and width dimensions shall be 3 mm greater.

7. Covers and boxes shall be interchangeable with California standard male and female gages. When interchanged with a standard male or female gage, the top surfaces shall be flush within 3 mm. Top outside edge of concrete covers and pull boxes shall have a 6 mm minimum radius.

8. Pull box shall not be installed within the boundaries of new or existing curb ramps.

9. Pull boxes for electroliers, post and signal standards shall be located ± 1.5 m from the station of the adjacent electrolier, post or signal standard. Pull boxes shall be placed adjacent to back of curb or edge of shoulder except where this is impractical, a box may be placed in another suitable protected and accessible location.

STATE OF CALIFORNIA
DEPARTMENT OF TRANSPORTATION

ELECTRICAL SYSTEMS (PULL BOX DETAILS)

NO SCALE

ALL DIMENSIONS ARE IN MILLIMETERS UNLESS OTHERWISE SHOWN

RSP ES-8 DATED OCTOBER 5, 2007 SUPERSEDES STANDARD PLAN ES-8 DATED JULY 1, 2004-PAGE 467 OF THE STANDARD PLANS BOOK DATED JULY 2004.

REVISED STANDARD PLAN RSP ES-8

2004 REVISED Std PLAN RSP ES-8

7-3-07

DIST	COUNTY	ROUTE	KILOMETER POST TOTAL PROJECT	SHEET NO.	TOTAL SHEETS
10	SJ	26	8.2/10.0	80	83

Caltrans Metric

Jeffery G. McRae
REGISTERED ELECTRICAL ENGINEER

October 5, 2007
PLANS APPROVAL DATE

REGISTERED PROFESSIONAL ENGINEER
Jeffery G. McRae
No. E14512
Exp. 6-30-08
ELECTRICAL
STATE OF CALIFORNIA

The State of California or its officers or agents shall not be responsible for the accuracy or completeness of electronic copies of this plan sheet.

To get to the Caltrans web site, go to: http://www.dot.ca.gov

To accompany plans dated 8-24-09

ISOLUX CURVE - MINIMUM

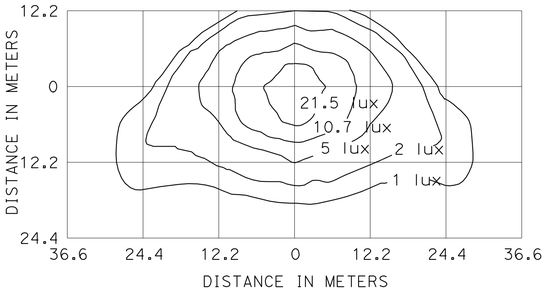

TYPE III MEDIUM CUTOFF

Cutoff Luminaire
10.4 m Mounting Height
LAMP OPERATED AT 22 000 lm
200 W HIGH PRESSURE SODIUM LAMP
ANSI DESIGNATION S66

ISOLUX CURVE - MINIMUM

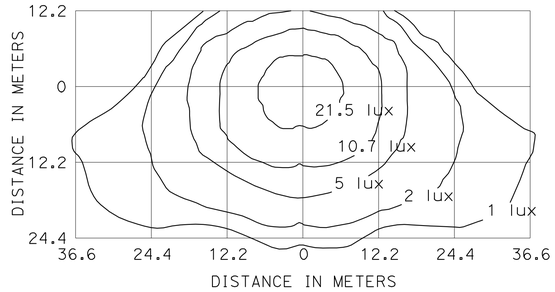

TYPE III MEDIUM CUTOFF

Cutoff Luminaire
12.2 m Mounting Height
LAMP OPERATED AT 37 000 lm
310 W HIGH PRESSURE SODIUM LAMP
ANSI DESIGNATION S67

ISOLUX CURVE - MINIMUM

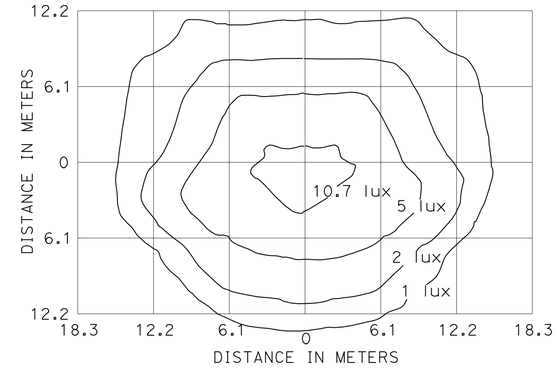

FLUSH SOFFIT LUMINAIRE

5.2 m Mounting Height
LAMP OPERATED AT 5800 lm
70 W HIGH PRESSURE SODIUM LAMP
ANSI DESIGNATION S62

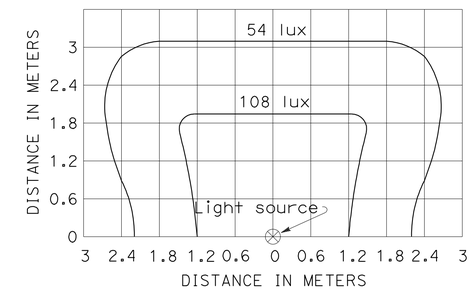

SIGN LIGHTING FIXTURE ISOLUX DIAGRAM

1. Curves represent the minimum lux of initial illumination on a 3 m x 6 m panel.
2. The lux shown are with the fixture attached to the light fixture mounting channel which places the center of the source 1420 mm in front of panel and 300 mm below the bottom edge.
3. Applicable lamp: 85-W fluorescent phosphor coated induction lamp.

ISOLUX CURVE - MINIMUM

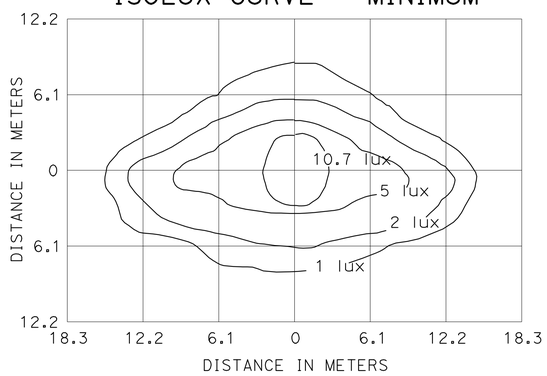

PENDANT SOFFIT LUMINAIRE TYPE III SHORT

5.2 m Mounting Height
LAMP OPERATED AT 5800 lm
70 W HIGH PRESSURE SODIUM LAMP
ANSI DESIGNATION S62

ISOLUX CURVE - MINIMUM

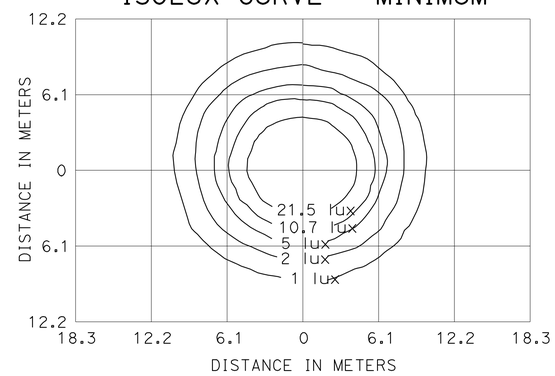

PENDANT SOFFIT LUMINAIRE

5.2 m Mounting Height
LAMP OPERATED AT 5800 lm
70 W HIGH PRESSURE SODIUM LAMP
ANSI DESIGNATION S62

ISOLUX CURVE - MINIMUM

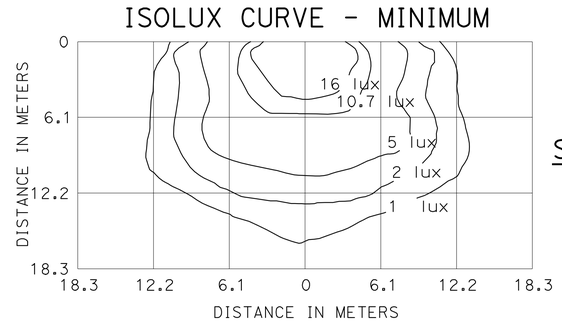

DETAIL ``W'' WALL LUMINAIRE

4.6 m Mounting Height
LAMP OPERATED AT 9500 lm
100 W HIGH PRESSURE SODIUM LAMP
ANSI DESIGNATION S54

ISOLUX CURVE - MINIMUM

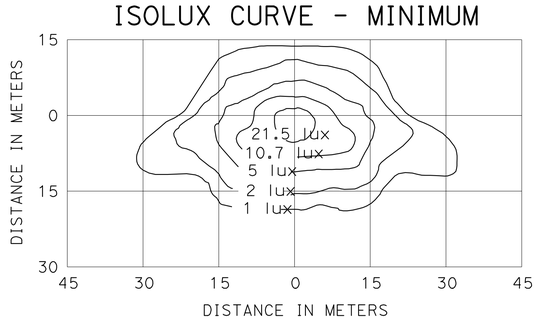

TYPE III MEDIUM CUTOFF

Cutoff Luminaire
9.1 m Mounting Height
LAMP OPERATED AT 16 000 lm
150 W HIGH PRESSURE SODIUM LAMP
ANSI DESIGNATION S55

ISOLUX CURVE - MINIMUM

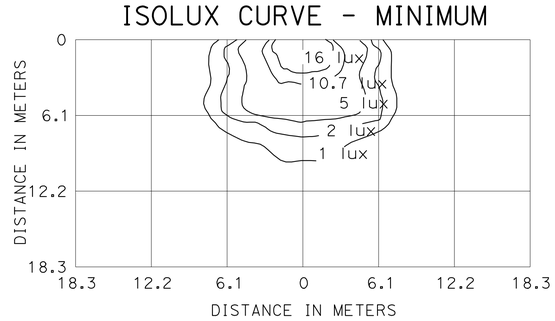

WALL LUMINAIRE

4.6 m Mounting Height
LAMP OPERATED AT 5800 lm
70 W HIGH PRESSURE SODIUM LAMP
ANSI DESIGNATION S62

ISOLUX CURVE - MINIMUM

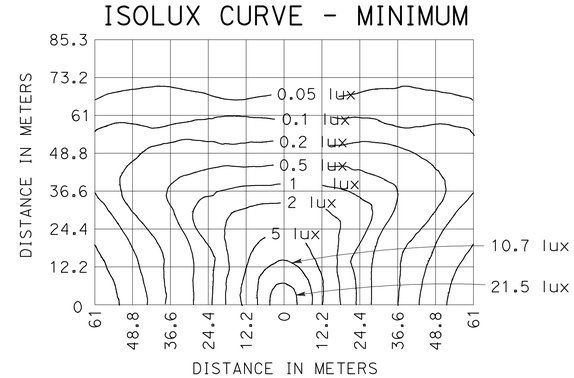

LOW PRESSURE SODIUM LUMINAIRE

12.2 m Mounting Height
LAMP OPERATED AT 33 000 lm
180 W LOW PRESSURE SODIUM LAMP

NOTE

Isolux diagrams show the minimum horizontal lux required.

STATE OF CALIFORNIA
DEPARTMENT OF TRANSPORTATION

ELECTRICAL SYSTEMS (ISOLUX DIAGRAMS)

NO SCALE

ALL DIMENSIONS ARE IN MILLIMETERS UNLESS OTHERWISE SHOWN

RSP ES-10 DATED OCTOBER 5, 2007 SUPERSEDES STANDARD PLAN ES-10 DATED JULY 1, 2004-PAGE 474 OF THE STANDARD PLANS BOOK DATED JULY 2004.

REVISED STANDARD PLAN RSP ES-10

2004 REVISED Std PLAN RSP ES-10

6-27-07

DIST	COUNTY	ROUTE	KILOMETER POST TOTAL PROJECT	SHEET NO.	TOTAL SHEETS
10	SJ	26	8.2/10.0	81	83

REGISTERED CIVIL ENGINEER

October 5, 2007
PLANS APPROVAL DATE

REGISTERED PROFESSIONAL ENGINEER
Stanley P. Johnson
No. C57793
Exp. 03-31-08
CIVIL
STATE OF CALIFORNIA

The State of California or its officers or agents shall not be responsible for the accuracy or completeness of electronic copies of this plan sheet.

To get to the Caltrans web site, go to: http://www.dot.ca.gov

To accompany plans dated 8-24-09

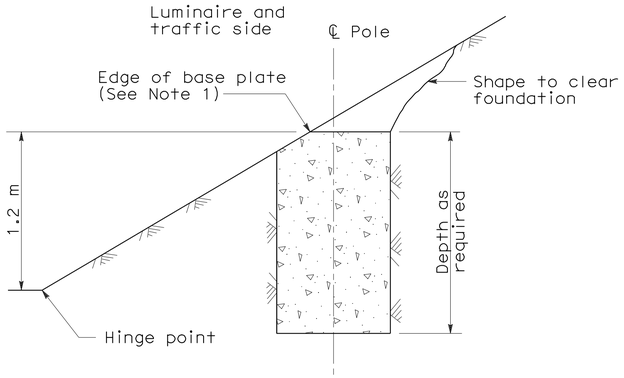

CUT SLOPES
STEEPER THAN 1:4
See Note 2

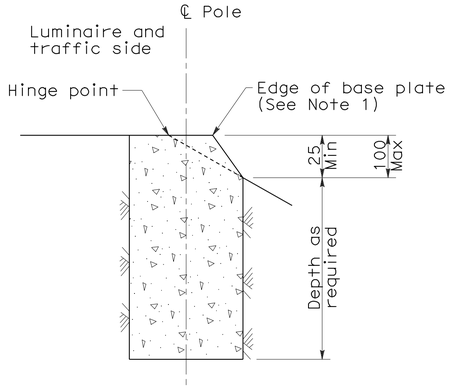

FILL SLOPES
STEEPER THAN 1:4
See Note 2

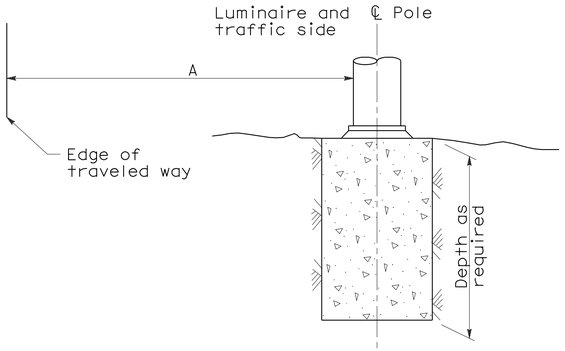

FLAT SECTIONS, CUT OR FILL SLOPES
1:4 OR FLATTER

STANDARD TYPE	SETBACK (DIMENSION A)
32	9 m Min
31, 36-20A	6 m Min
15, 15D, 15-SB, 21, 21D, 30	Mast Arm Length (Min)

FOUNDATIONS ADJACENT TO ALL ROADWAYS EXCEPT IN SIDEWALK, MEDIAN AND ISLAND AREAS

NOTES:

1. Where a portion of the foundation is above grade, the top edges shall have a 25 mm chamfer.
2. Horizontal setbacks on cut and fill slopes steeper than 1:4 shall not exceed the distance shown for flat sections.

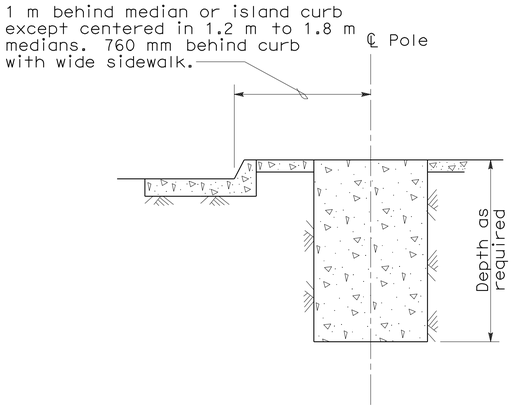

MEDIAN, ISLAND
OR WIDE SIDEWALK
(2 m wide and wider)

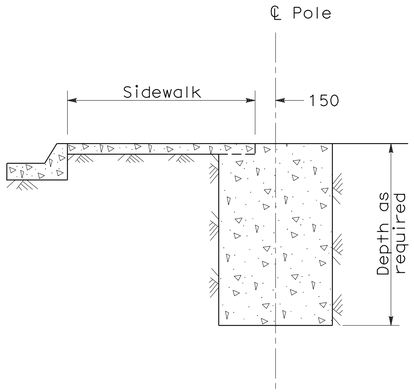

NARROW SIDEWALK
(Less than 2 m wide)

FOUNDATIONS IN SIDEWALK, MEDIAN AND ISLAND AREAS

STATE OF CALIFORNIA
DEPARTMENT OF TRANSPORTATION

ELECTRICAL SYSTEMS (FOUNDATION INSTALLATIONS)

NO SCALE

ALL DIMENSIONS ARE IN MILLIMETERS UNLESS OTHERWISE SHOWN

RSP ES-11 DATED OCTOBER 5, 2007 SUPERSEDES STANDARD PLAN ES-11 DATED JULY 1, 2004-PAGE 475 OF THE STANDARD PLANS BOOK DATED JULY 2004.

REVISED STANDARD PLAN RSP ES-11

2004 REVISED Std PLAN RSP ES-11

10-1-07

DIST	COUNTY	ROUTE	KILOMETER POST TOTAL PROJECT	SHEET NO.	TOTAL SHEETS
10	SJ	26	8.2/10.0	82	83

Caltrans Metric

REGISTERED ELECTRICAL ENGINEER

October 5, 2007
PLANS APPROVAL DATE

REGISTERED PROFESSIONAL ENGINEER Jeffery G. McRae No. E14512 Exp. 6-30-08 ELECTRICAL STATE OF CALIFORNIA

The State of California or its officers or agents shall not be responsible for the accuracy or completeness of electronic copies of this plan sheet.

To get to the Caltrans web site, go to: http://www.dot.ca.gov

To accompany plans dated 8-24-09

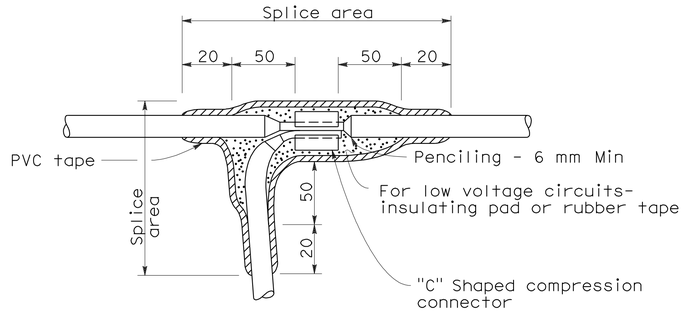

TYPE "C" SPLICE

Between 1 free-end and 1 through conductor

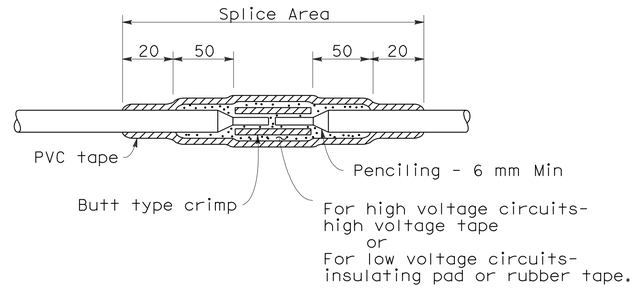

TYPE "S" SPLICE

Between 2 free-ends

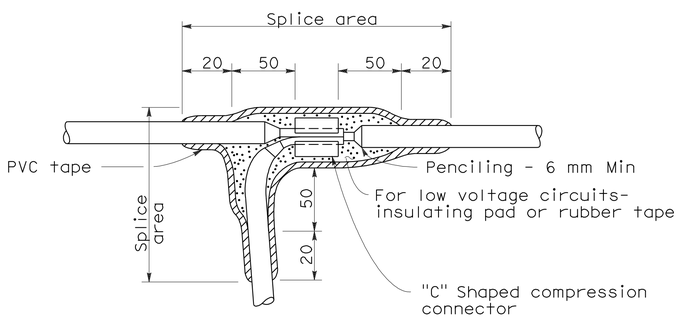

TYPE "T" SPLICE

For 3 free-ends

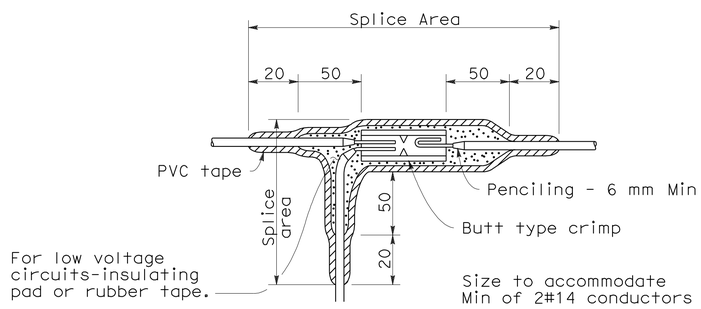

TYPE "ST" SPLICE

NOTES:

1. Dimensions are minimum.
2. Rubber tapes shall be rolled after application.

INSULATION METHODS

Low Voltage Circuits (0-600 V)

METHOD "B"

1. Completely cover the splice area with electrical insulating coating and allow to dry.
2. Apply 2 layers of electrical insulating pad with minimum thickness of 4 mm each layer or 2 layers, half lapped, synthetic oil resistant, self fusing rubber tape.
3. Apply 3 layers half lapped polyvinyl chloride tape.
4. Cover entire splice with electrical insulating coating and allow to dry.

High Voltage Circuits (Over 600 V)

1. Completely cover the splice area with electrical insulating coating and allow to dry.
2. Apply high voltage tape to a minimum thickness equal to original insulation.
3. Apply 3 layers half lapped polyvinyl chloride tape.
4. Cover entire splice with electrical insulating coating and allow to dry.

STATE OF CALIFORNIA
DEPARTMENT OF TRANSPORTATION

ELECTRICAL SYSTEMS (SPLICING DETAILS)

NO SCALE

ALL DIMENSIONS ARE IN MILLIMETERS UNLESS OTHERWISE SHOWN

RSP ES-13A DATED OCTOBER 5, 2007 SUPERSEDES STANDARD PLAN ES-13A DATED JULY 1, 2004-PAGE 478 OF THE STANDARD PLANS BOOK DATED JULY 2004.

REVISED STANDARD PLAN RSP ES-13A

2004 REVISED Std PLAN RSP ES-13A

6-27-07

DIST	COUNTY	ROUTE	KILOMETER POST TOTAL PROJECT	SHEET NO.	TOTAL SHEETS
10	SJ	26	8.2/10.0	83	83

Caltrans Metric

REGISTERED ELECTRICAL ENGINEER

October 5, 2007
PLANS APPROVAL DATE

REGISTERED PROFESSIONAL ENGINEER Jeffery G. McRae No. E14512 Exp. 6-30-08 ELECTRICAL STATE OF CALIFORNIA

The State of California or its officers or agents shall not be responsible for the accuracy or completeness of electronic copies of this plan sheet.

To get to the Caltrans web site, go to: http://www.dot.ca.gov

To accompany plans dated 8-24-09

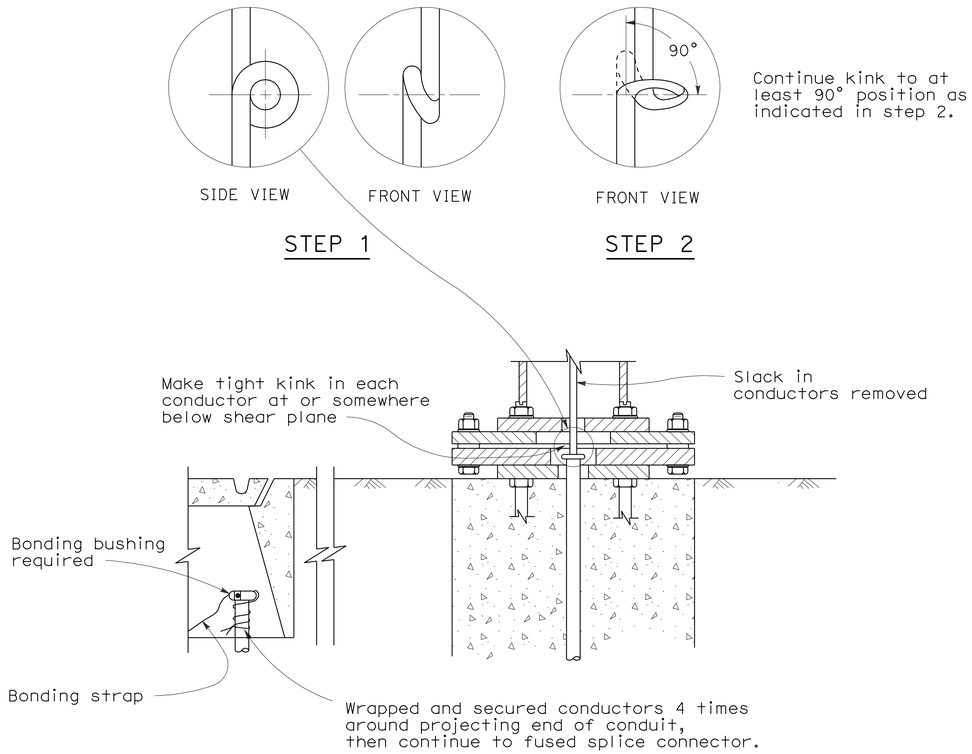

KINKING DETAIL FOR SLIP BASE STANDARDS

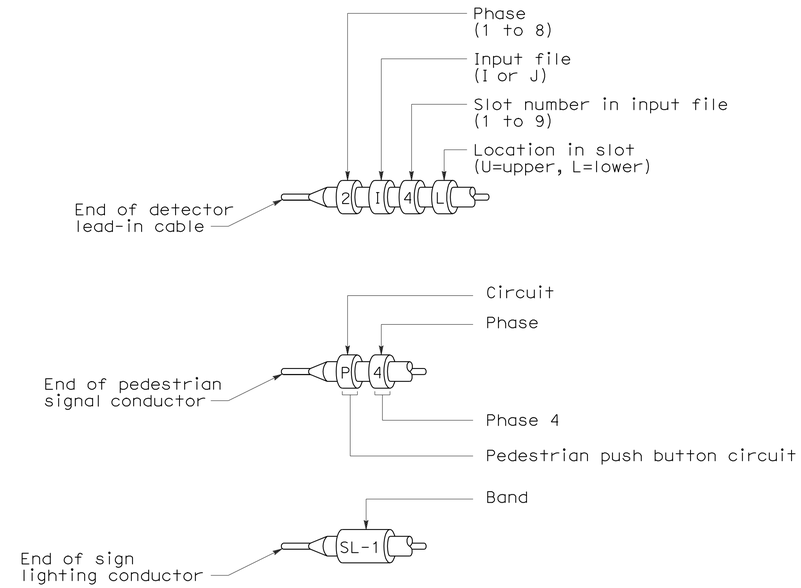

TYPICAL BANDING OF CONDUCTOR ENDS

Primary lines of multiple ballasts shall be provided with fused connectors.
Fuse ratings shall be as noted below.

CIRCUIT VOLTAGE	FUSE VOLTAGE RATING	FUSE CURRENT RATING																
		HPS LAMP BALLAST								LOW PRESSURE SODIUM BALLAST					INDUCTION SIGN LIGHTING	SINGLE PHASE (TWO WIRE) TRANSFORMERS (PRIMARY SIDE)		
		70 W	100 W	150 W	200 W	250 W	310 W	400 W	1000 W	35 W	55 W	90 W	135 W	180 W	85 W	1 kVA	2 kVA	3 kVA
120 V	250 V	5	5	5	5	5	5	5	-	5	5	5	5	5	5	10	20	30
240 V	250 V	5	5	5	5	5	5	5	5	3	3	3	5	5	5	6	10	20
480 V	500-600 V	5	5	5	5	5	5	5	5	2	2	2	3	3	1*	3	6	10

* See Revised Standard Plan RSP ES-15D, Type SC3 Control.

FUSE RATINGS FOR FUSED CONNECTORS

LUMINAIRE BALLAST FUSING

STATE OF CALIFORNIA
DEPARTMENT OF TRANSPORTATION

ELECTRICAL SYSTEMS (WIRING DETAILS AND FUSE RATINGS)

NO SCALE

ALL DIMENSIONS ARE IN MILLIMETERS UNLESS OTHERWISE SHOWN

RSP ES-13B DATED OCTOBER 5, 2007 SUPERSEDES STANDARD PLAN ES-13B DATED JULY 1, 2004-PAGE 479 OF THE STANDARD PLANS BOOK DATED JULY 2004.

REVISED STANDARD PLAN RSP ES-13B

2004 REVISED Std PLAN RSP ES-13B

10-1-07