| Dist | COUNTY | ROUTE | POST MILES TOTAL PROJECT | SHEET No. | TOTAL SHEETS |
|---|---|---|---|---|---|
| 10 | Sta | 108 | 31.2 | 1 | 30 |

INDEX OF PLANS


| SHEET No. | DESCRIPTION |
|---|---|
| 1 | TITLE AND LOCATION MAP |
| 2-3 | TYPICAL CROSS SECTIONS |
| 4 | CONSTRUCTION DETAILS |
| 5-7 | DRAINAGE PLAN AND PROFILES |
| 8-10 | UTILITY PLAN |
| 11 | CONSTRUCTION AREA SIGNS |
| 12 | STAGE CONSTRUCTION PLANS |
| 13 | PAVEMENT DELINEATION, SIGN PLAN AND QUANTITIES |
| 14 | SUMMARY OF QUANTITIES |
| 15-18 | RETAINING WALL PLAN |
| 19-30 | REVISED STANDARD PLANS |


THE STANDARD PLANS LIST APPLICABLE TO THIS CONTRACT IS INCLUDED IN THE NOTICE TO BIDDERS AND SPECIAL PROVISIONS BOOK.

STATE OF CALIFORNIA

# DEPARTMENT OF TRANSPORTATION

# PROJECT PLANS FOR CONSTRUCTION ON STATE HIGHWAY

## IN STANISLAUS COUNTY IN RIVERBANK AT ESTELLE AVENUE

TO BE SUPPLEMENTED BY STANDARD PLANS DATED 2010

LOCATION MAP

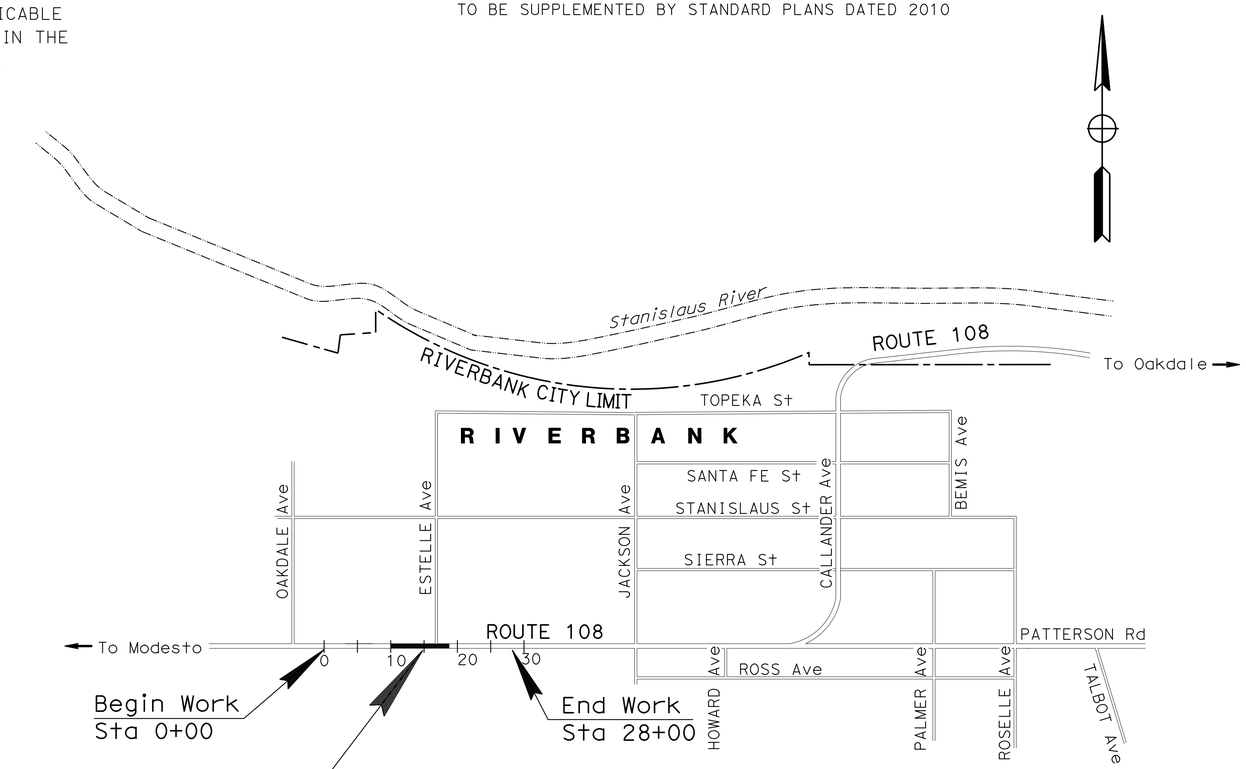


**LOCATION OF CONSTRUCTION**
**PM 31.2**

PROJECT MANAGER AJAIB S BRAR

DESIGN ENGINEER GETACHEW ESHETE

12-09-13
PROJECT ENGINEER DATE
REGISTERED CIVIL ENGINEER

REGISTERED PROFESSIONAL ENGINEER
THAAR F. JAWHAR
No. 64207
Exp. 6-30-15
CIVIL
STATE OF CALIFORNIA

March 17, 2014
PLANS APPROVAL DATE

*THE STATE OF CALIFORNIA OR ITS OFFICERS OR AGENTS SHALL NOT BE RESPONSIBLE FOR THE ACCURACY OR COMPLETENESS OF SCANNED COPIES OF THIS PLAN SHEET.*

THE CONTRACTOR SHALL POSSESS THE CLASS (OR CLASSES) OF LICENSE AS SPECIFIED IN THE "NOTICE TO BIDDERS."

NO SCALE

| CONTRACT No. | 10-0C9004 |
|---|---|
| PROJECT ID | 1000000017 |

LAST REVISION 03-10-14
DATE PLOTTED => 29-AUG-2014
TIME PLOTTED => 08:36

| Dist | COUNTY | ROUTE | POST MILES TOTAL PROJECT | SHEET No. | TOTAL SHEETS |
|---|---|---|---|---|---|
| 10 | Sta | 108 | 31.2 | 2 | 30 |

REGISTERED CIVIL ENGINEER 12-09-13 DATE

3-17-14
PLANS APPROVAL DATE

REGISTERED PROFESSIONAL ENGINEER THAAR F. JAWHAR No. 64207 Exp. 6-30-15 CIVIL STATE OF CALIFORNIA

*THE STATE OF CALIFORNIA OR ITS OFFICERS OR AGENTS SHALL NOT BE RESPONSIBLE FOR THE ACCURACY OR COMPLETENESS OF SCANNED COPIES OF THIS PLAN SHEET.*

NOTES:

1. DIMENSIONS OF THE PAVEMENT STRUCTURES (STRUCTURAL SECTIONS) ARE SUBJECT TO TOLERANCES SPECIFIED IN THE STANDARD SPECIFICATIONS.
2. FOR ACCURATE RIGHT OF WAY DATA, CONTACT RIGHT OF WAY ENGINEERING AT THE DISTRICT OFFICE.
3. SEE CONSTRUCTION DETAIL SHEET C-1 FOR LOCATIONS OF CURB, RETAINING WALL AND CABLE RAILING.

DESIGN DESIGNATION (ROUTE 108)

2014 ADT = 23,600 D = 60.3%
2024 ADT = 31,800 T = 5%
DHV = 2,860 V = 45 MPH

PAVEMENT CLIMATE REGION

INLAND VALLEY

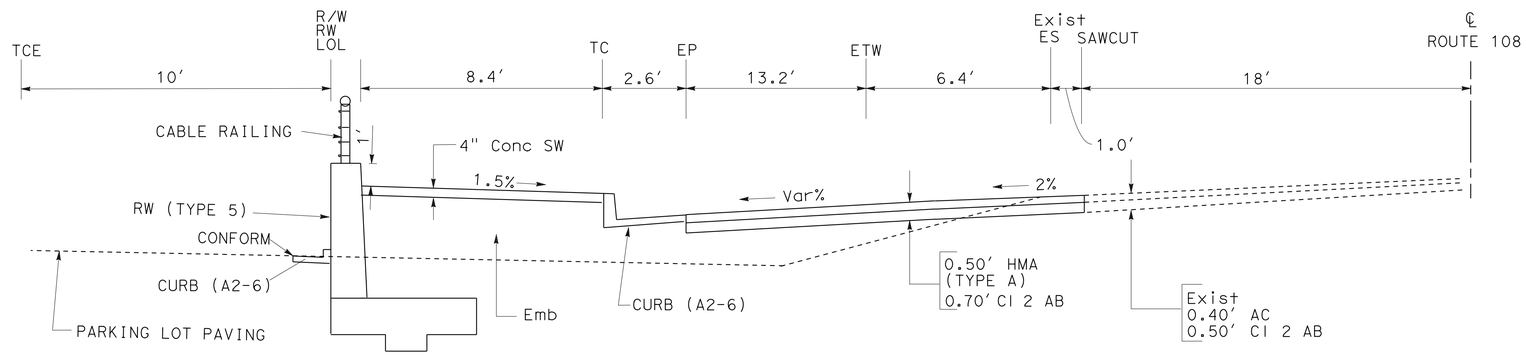


**ROUTE 108**
Sta 10+15.20 TO 11+02.39
Sta 11+38.39 TO 11+98.00

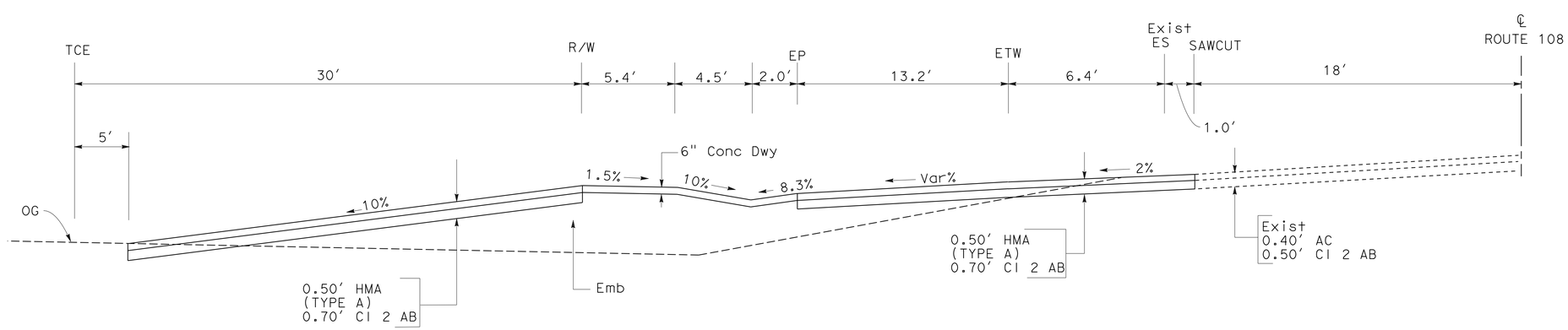


**ROUTE 108**
Sta 11+02.39 TO 11+38.39
Sta 10+00.20 TO 10+15.20

* REMOVE AC SURFACING IS NOT A SEPARATE PAY ITEM, COVERED UNDER ROADWAY EXCAVATION

# TYPICAL CROSS SECTIONS

NO SCALE

**X-1**

| REVISED BY | DATE REVISED |
|---|---|
| | |

CALCULATED-DESIGNED BY: SATWINDER BRAR
CHECKED BY: MAHESH MONGA
FUNCTIONAL SUPERVISOR: GETACHEW ESHETE

STATE OF CALIFORNIA - DEPARTMENT OF TRANSPORTATION
Caltrans
06-DESIGN

LAST REVISION 03-12-14
DATE PLOTTED => 29-AUG-2014
TIME PLOTTED => 08:36

| Dist | COUNTY | ROUTE | POST MILES TOTAL PROJECT | SHEET No. | TOTAL SHEETS |
|---|---|---|---|---|---|
| 10 | Sta | 108 | 31.2 | 3 | 30 |

REGISTERED CIVIL ENGINEER 12-09-13 DATE

3-17-14
PLANS APPROVAL DATE

REGISTERED PROFESSIONAL ENGINEER THAAR F. JAWHAR No. 64207 Exp. 6-30-15 CIVIL STATE OF CALIFORNIA

*THE STATE OF CALIFORNIA OR ITS OFFICERS OR AGENTS SHALL NOT BE RESPONSIBLE FOR THE ACCURACY OR COMPLETENESS OF SCANNED COPIES OF THIS PLAN SHEET.*

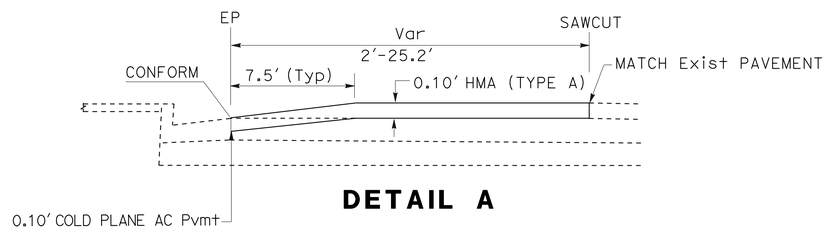


**DETAIL A**

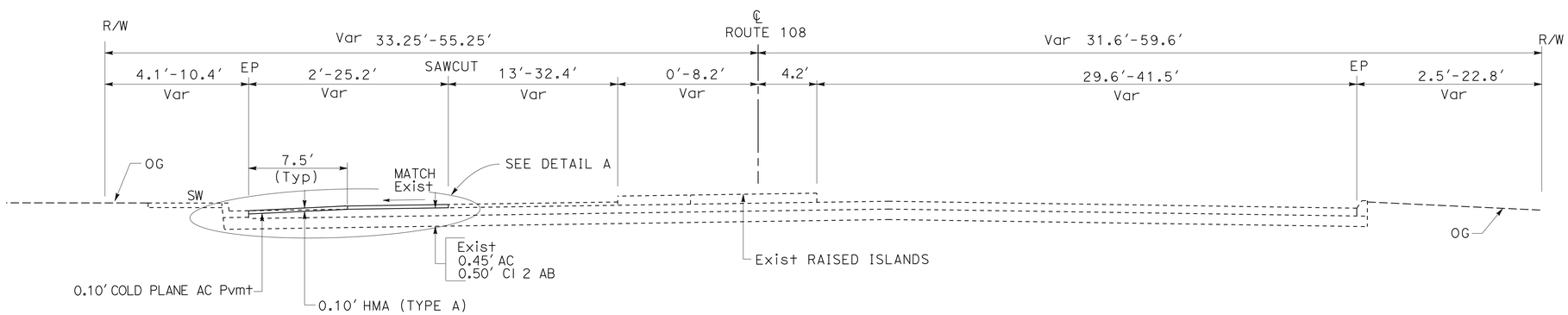


**ROUTE 108**

Sta 11+98.00 TO 14+00.00

# TYPICAL CROSS SECTIONS

NO SCALE

**X-2**

STATE OF CALIFORNIA - DEPARTMENT OF TRANSPORTATION
Caltrans
06-DESIGN

FUNCTIONAL SUPERVISOR: GETACHEW ESHETE
CALCULATED-DESIGNED BY: SATWINDER BRAR
CHECKED BY: MAHESH MONGA
REVISED BY
DATE REVISED

LAST REVISION 03-10-14 DATE PLOTTED => 29-AUG-2014 TIME PLOTTED => 08:36

| Dist | COUNTY | ROUTE | POST MILES TOTAL PROJECT | SHEET No. | TOTAL SHEETS |
|---|---|---|---|---|---|
| 10 | Sta | 108 | 31.2 | 4 | 30 |

REGISTERED CIVIL ENGINEER 12-09-13 DATE

3-17-14
PLANS APPROVAL DATE

REGISTERED PROFESSIONAL ENGINEER THAAR F. JAWHAR No. 64207 Exp 6-30-15 CIVIL STATE OF CALIFORNIA

*THE STATE OF CALIFORNIA OR ITS OFFICERS OR AGENTS SHALL NOT BE RESPONSIBLE FOR THE ACCURACY OR COMPLETENESS OF SCANNED COPIES OF THIS PLAN SHEET.*

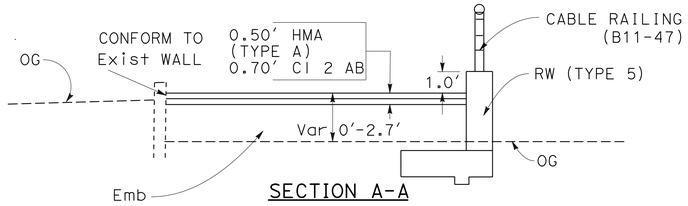


SECTION A-A
Sta 10+00.20 TO 10+15.20
NO SCALE

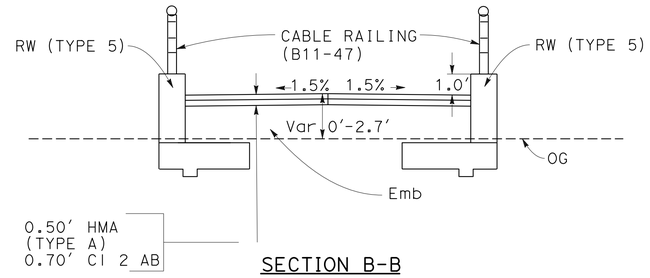


SECTION B-B
Sta 11+02.39 TO 11+38.39
NO SCALE

**ABBREVIATIONS:**

ADA - AMERICANS WITH DISABILITIES ACT
CR - CABLE RAILING

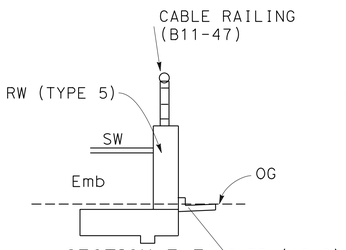


SECTION E-E
NO SCALE

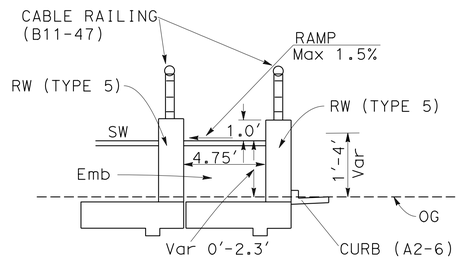


SECTION C-C
NO SCALE

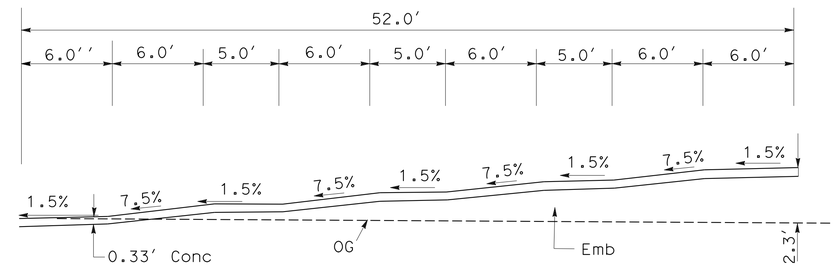


SECTION D-D
NO SCALE

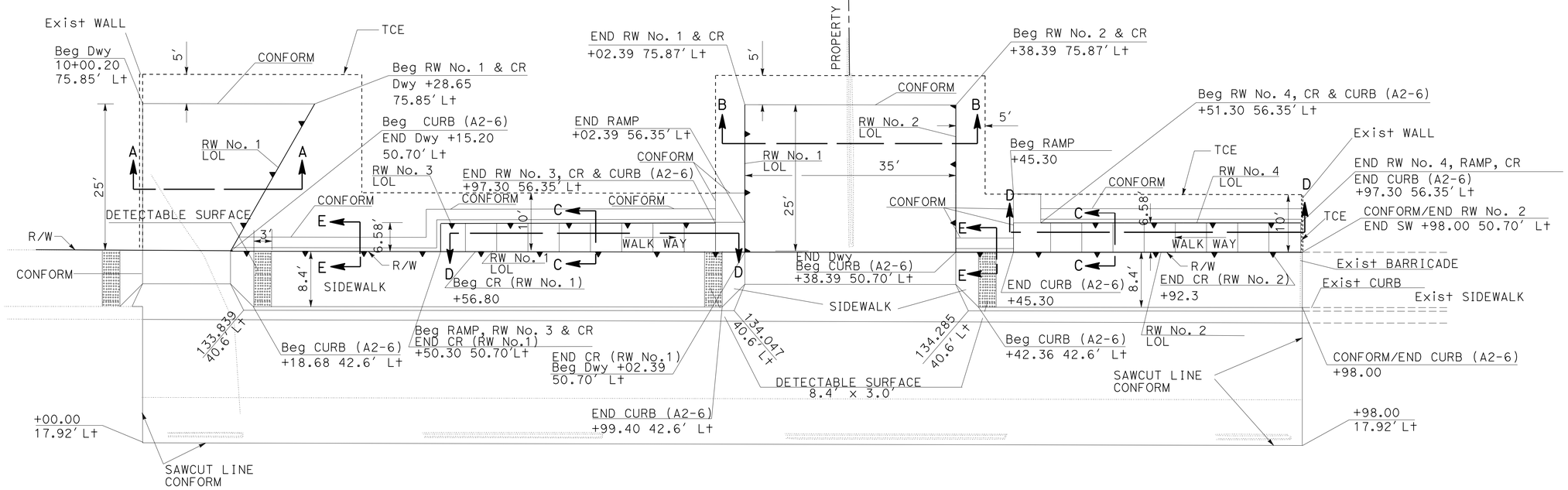


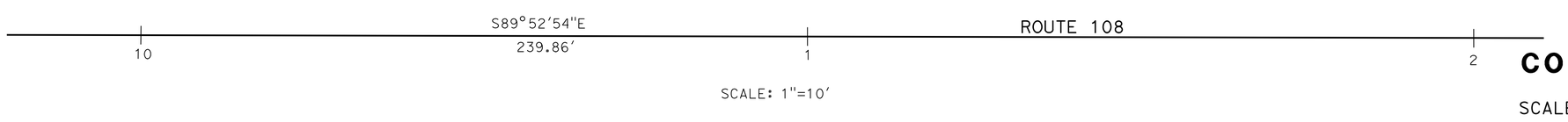


SCALE: 1"=10'

# CONSTRUCTION DETAILS

SCALE AS SHOWN

C-1

STATE OF CALIFORNIA - DEPARTMENT OF TRANSPORTATION
06-DESIGN
FUNCTIONAL SUPERVISOR: GETACHEW ESHETE
CALCULATED-DESIGNED BY: SATWINDER BRAR
CHECKED BY: MAHESH MONGA
REVISED BY
DATE REVISED

LAST REVISION 03-10-14
DATE PLOTTED => 29-AUG-2014
TIME PLOTTED => 08:36

| Dist | COUNTY | ROUTE | POST MILES TOTAL PROJECT | SHEET No. | TOTAL SHEETS |
|---|---|---|---|---|---|
| 10 | Sta | 108 | 31.2 | 5 | 30 |

REGISTERED CIVIL ENGINEER DATE 12-09-13

3-17-14
PLANS APPROVAL DATE

REGISTERED PROFESSIONAL ENGINEER THAAR F. JAWHAR No. 64207 Exp 6-30-15 CIVIL STATE OF CALIFORNIA

*THE STATE OF CALIFORNIA OR ITS OFFICERS OR AGENTS SHALL NOT BE RESPONSIBLE FOR THE ACCURACY OR COMPLETENESS OF SCANNED COPIES OF THIS PLAN SHEET.*

**NOTE:** FOR ACCURATE RIGHT OF WAY DATA,
CONTACT RIGHT OF WAY ENGINEERING AT THE DISTRICT OFFICE.

**ABBREVIATION:**

S - SLOPE

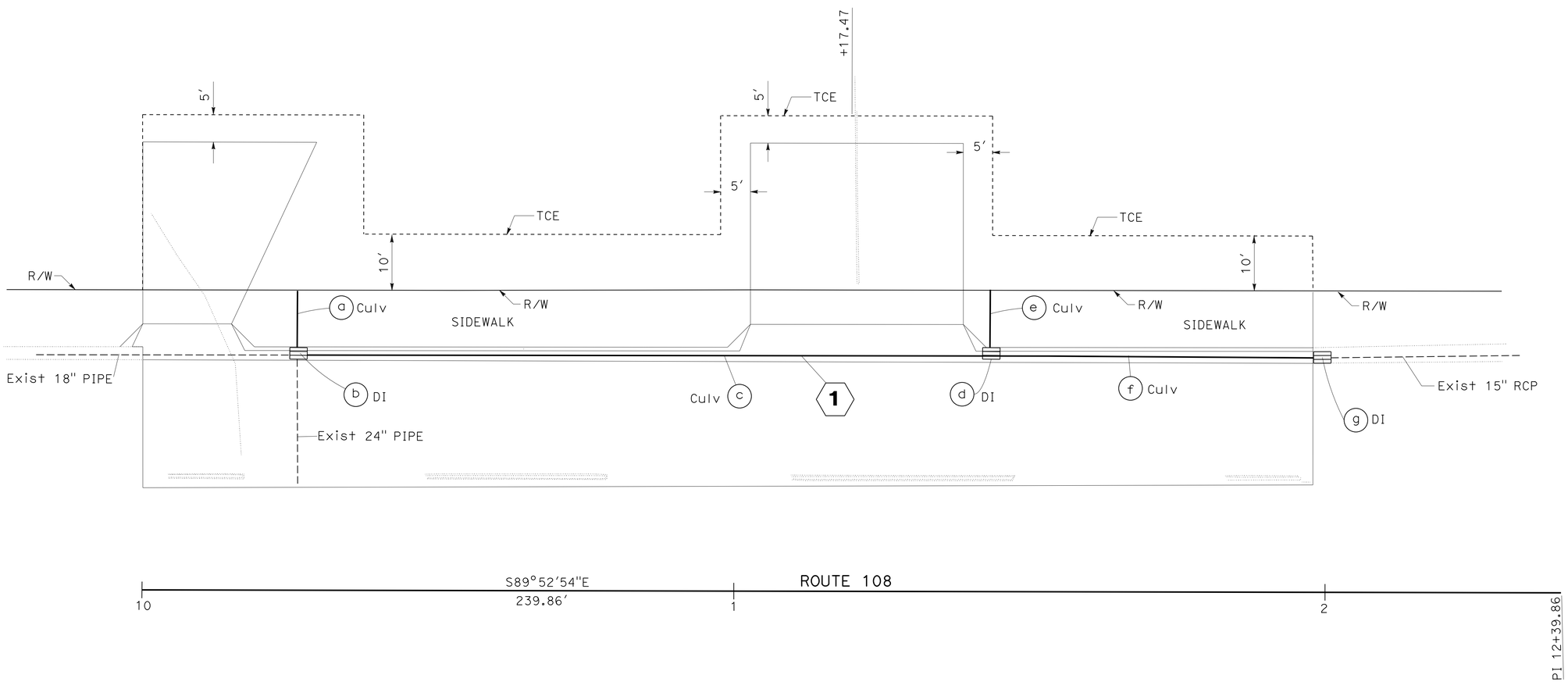


*APPROVED FOR DRAINAGE WORK ONLY*

# DRAINAGE PLAN

SCALE: 1"=10'

**D-1**

STATE OF CALIFORNIA - DEPARTMENT OF TRANSPORTATION
Caltrans
06-DESIGN

FUNCTIONAL SUPERVISOR: GETACHEW ESHETE
CALCULATED-DESIGNED BY: SATWINDER BRAR
CHECKED BY: MAHESH MONGA
REVISED BY
DATE REVISED

LAST REVISION 03-10-14
DATE PLOTTED => 29-AUG-2014
TIME PLOTTED => 08:36

| Dist | COUNTY | ROUTE | POST MILES TOTAL PROJECT | SHEET No. | TOTAL SHEETS |
|---|---|---|---|---|---|
| 10 | Sta | 108 | 31.2 | 6 | 30 |

REGISTERED CIVIL ENGINEER DATE 12-09-13

3-17-14
PLANS APPROVAL DATE

REGISTERED PROFESSIONAL ENGINEER THAAR F. JAWHAR No. 64207 Exp 6-30-15 CIVIL STATE OF CALIFORNIA

*THE STATE OF CALIFORNIA OR ITS OFFICERS OR AGENTS SHALL NOT BE RESPONSIBLE FOR THE ACCURACY OR COMPLETENESS OF SCANNED COPIES OF THIS PLAN SHEET.*

ABBREVIATIONS:

S - SLOPE
MID - MODESTO IRRIGATION DISTRICT

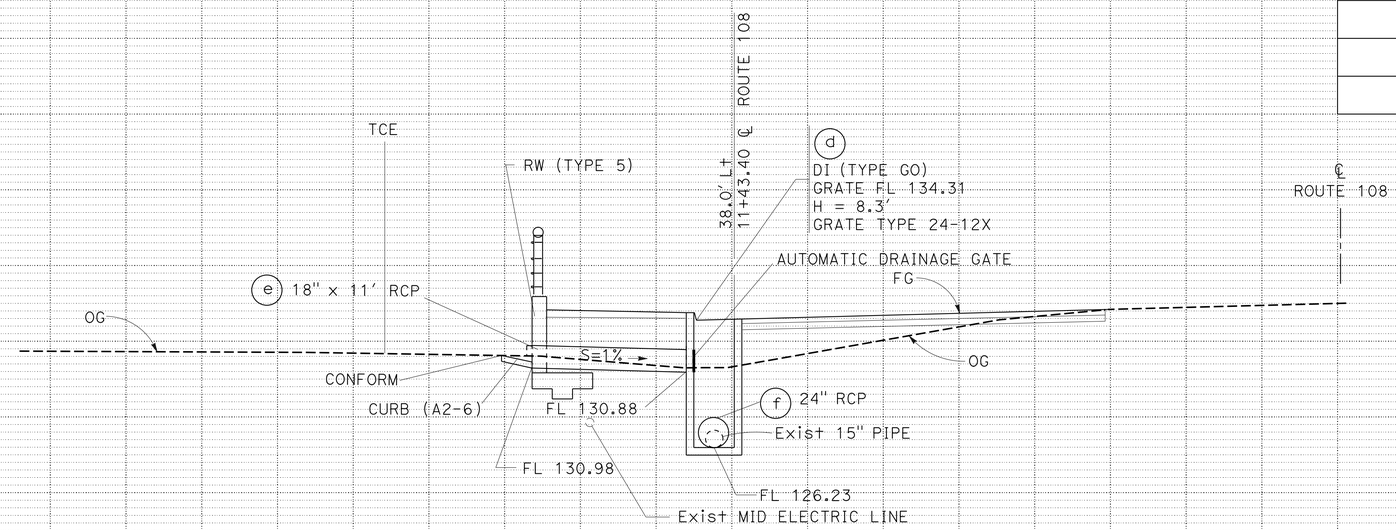


**DRAINAGE SYSTEM No. 1**
Sta 11+41.80

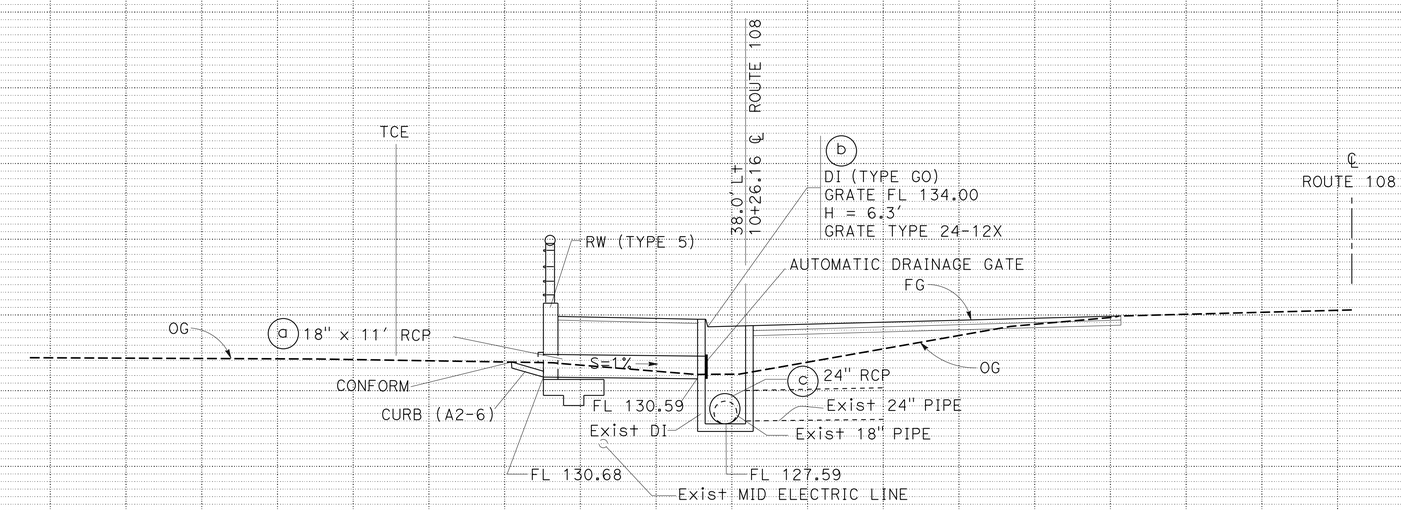


**DRAINAGE SYSTEM No. 1**
Sta 10+26.16

# DRAINAGE PROFILES

SCALE: 1"= 5' Vert
1"= 5' Horiz

**DP-1**

STATE OF CALIFORNIA - DEPARTMENT OF TRANSPORTATION
Caltrans
06-DESIGN

FUNCTIONAL SUPERVISOR: GETACHEW ESHETE
CALCULATED-DESIGNED BY: SATWINDER BRAR
CHECKED BY: MAHESH MONGA
REVISED BY
DATE REVISED

LAST REVISION 06-10-14 | DATE PLOTTED => 29-AUG-2014 | TIME PLOTTED => 08:36

| Dist | COUNTY | ROUTE | POST MILES TOTAL PROJECT | SHEET No. | TOTAL SHEETS |
|---|---|---|---|---|---|
| 10 | Sta | 108 | 31.2 | 7 | 30 |

REGISTERED CIVIL ENGINEER DATE 12-09-13

3-17-14
PLANS APPROVAL DATE

REGISTERED PROFESSIONAL ENGINEER THAAR F. JAWHAR No. 64207 Exp 6-30-15 CIVIL STATE OF CALIFORNIA

*THE STATE OF CALIFORNIA OR ITS OFFICERS OR AGENTS SHALL NOT BE RESPONSIBLE FOR THE ACCURACY OR COMPLETENESS OF SCANNED COPIES OF THIS PLAN SHEET.*

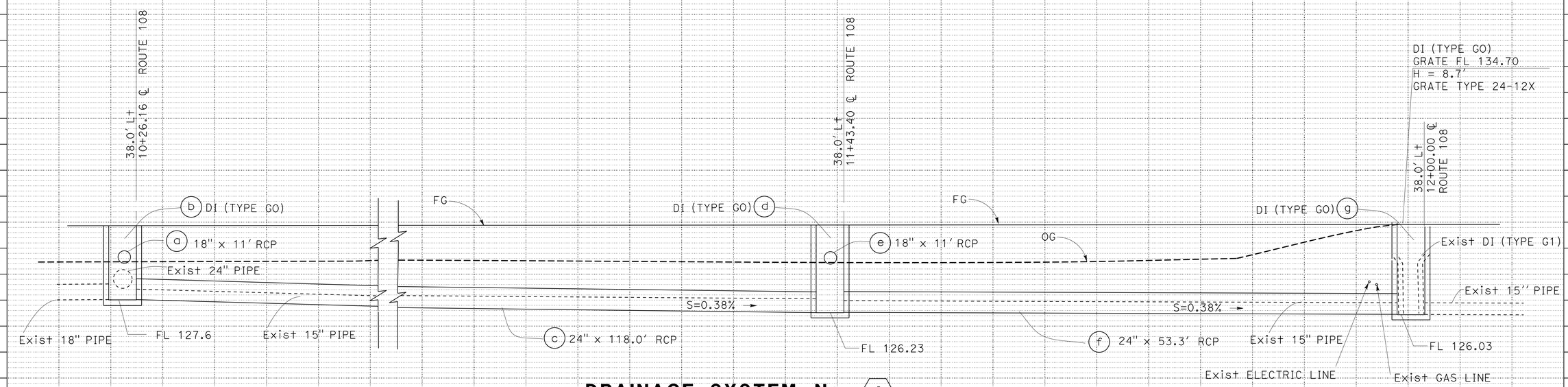


**DRAINAGE SYSTEM No. 1**
Sta 10+22.00 TO Sta 12+02.00

# DRAINAGE PROFILES

SCALE: 1"= 5' Vert
1"= 5' Horiz

**DP-2**

STATE OF CALIFORNIA - DEPARTMENT OF TRANSPORTATION
**06-DESIGN**
Caltrans

FUNCTIONAL SUPERVISOR: GETACHEW ESHETE
CALCULATED-DESIGNED BY: SATWINDER BRAR
CHECKED BY: MAHESH MONGA
REVISED BY
DATE REVISED

LAST REVISION 06-10-14
DATE PLOTTED => 29-AUG-2014
TIME PLOTTED => 08:36

| Dist | COUNTY | ROUTE | POST MILES TOTAL PROJECT | SHEET No. | TOTAL SHEETS |
|---|---|---|---|---|---|
| 10 | Sta | 108 | 31.2 | 8 | 30 |

REGISTERED CIVIL ENGINEER 12-09-13 DATE

3-12-14
PLANS APPROVAL DATE

REGISTERED PROFESSIONAL ENGINEER THAAR F. JAWHAR No. 64207 Exp. 6-30-15 CIVIL STATE OF CALIFORNIA

*THE STATE OF CALIFORNIA OR ITS OFFICERS OR AGENTS SHALL NOT BE RESPONSIBLE FOR THE ACCURACY OR COMPLETENESS OF SCANNED COPIES OF THIS PLAN SHEET.*

## NOTES:

1. FOR ACCURATE RIGHT OF WAY DATA, CONTACT RIGHT OF WAY ENGINEERING AT THE DISTRICT OFFICE.
2. ELEVATIONS SHOWN REFER TO THE TOP OF PIPE OR CONDUIT. DEPTH IS SHOWN FOR ALL UTILITIES FROM ORIGINAL GROUND (OG)
3. UTILITY OWNERSHIP ON THIS PROJECT ARE AS SHOWN:.

GAS - PACIFIC GAS & ELECTRIC
ELECTRIC - PACIFIC GAS & ELECTRIC/ MODESTO IRRIGATION DISTRICT (MID)
FIBER OPTIC - AMERICAN TELEPHONE AND TELEGRAPH
WATER LINE - CITY OF RIVERBANK

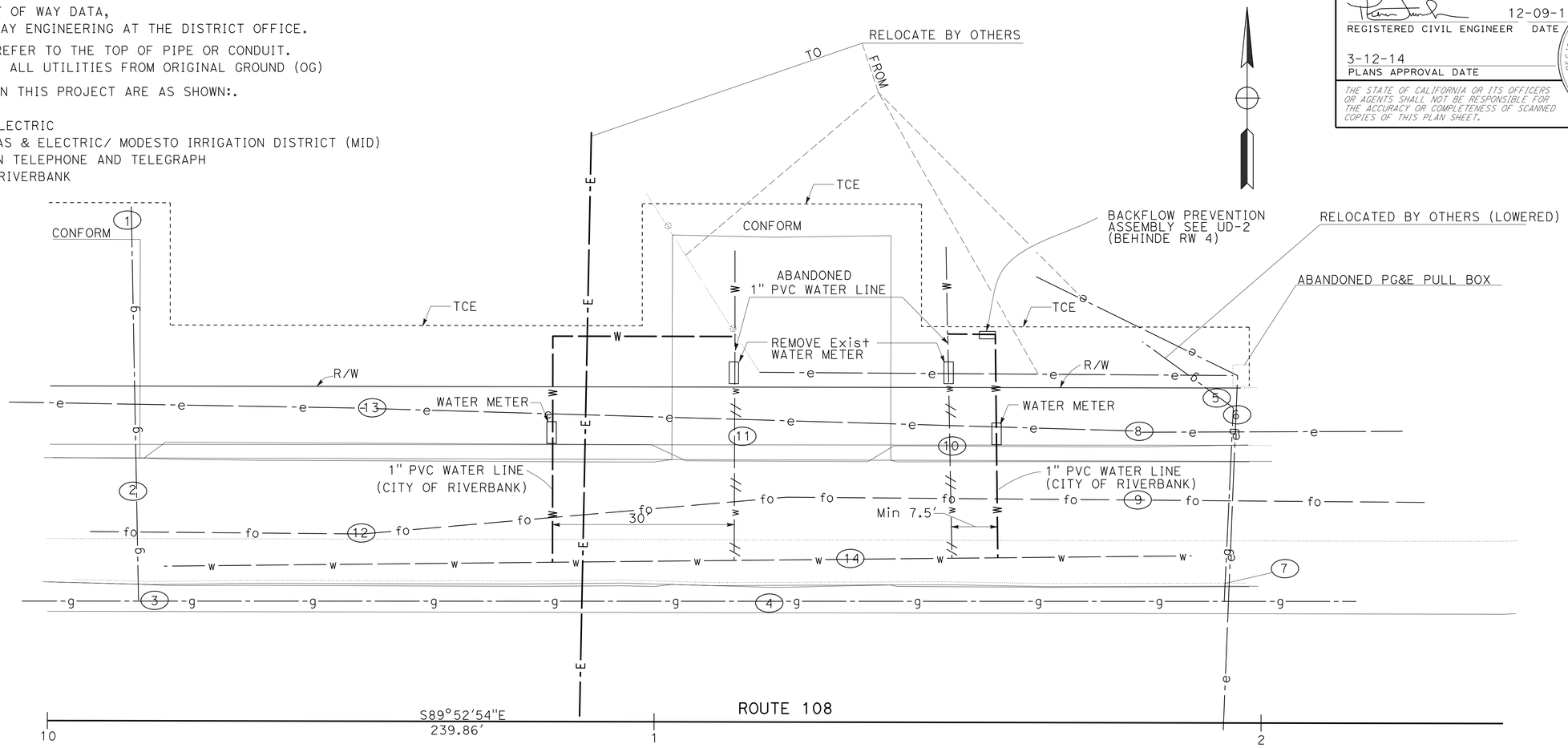


## POTHOLING INFORMATION

| No. | STATION | ROUTE/OFFSET | DEPTH | ELEVATION | DESCRIPTION | REMARKS |
|---|---|---|---|---|---|---|
| 1 | 10+13.08 | 88.28' Lt OF ℄ ROUTE 108 | 2'-6" | 129.51 | PG&E GAS LINE | 1/2" Dia PVC GAS SERVICE LINE |
| 2 | 10+14.02 | 37.73' Lt OF ℄ ROUTE 108 | 4'-1" | 128.42 | PG&E GAS LINE | 1/2" Dia PVC GAS SERVICE LINE |
| 3 | 10+17.55 | 19.70' Lt OF ℄ ROUTE 108 | 6'-1" | 126.44 | PG&E GAS LINE | 2" Dia HP STEEL GAS LINE |
| 4 | 11+19.34 | 19.89' Lt OF ℄ ROUTE 108 | 6'-5" | 128.76 | PG&E GAS LINE | 2" Dia HP STEEL GAS LINE |
| 5 | 11+92.98 | 52.50' Lt OF ℄ ROUTE 108 | 3'-11" | 128.91 | PG&E ELECTRIC | 3" Dia PVC ELECTRIC SERVICE LINE TO BE RELOCATED BY OTHERS |
| 6 | 11+95.34 | 51.98' Lt OF ℄ ROUTE 108 | 3'-1" | 129.77 | PG&E GAS LINE | 3/4" Dia PVC GAS SERVICE LINE TO BE RELOCATED BY OTHERS |
| 7 | 11+93.98 | 21.85' Lt OF ℄ ROUTE 108 | 5'-2"/4'-11" | 130.55 | PG&E GAS & ELECTRIC | 3/4" Dia PVC GAS SERVICE LINE/4" Dia PVC ELECTRIC SERVICE LINE |
| 8 | 11+79.86 | 47.91' Lt OF ℄ ROUTE 108 | 3'-11" | 127.22 | MID ELECTRIC | 6" Dia PVC HIGH VOLTAGE ELECTRIC LINE |
| 9 | 11+79.62 | 36.64' Lt OF ℄ ROUTE 108 | 5'-7" | 129.66 | FIBER OPTIC | CONCRETE CASING |
| 10 | 11+48.99 | 45.25' Lt OF ℄ ROUTE 108 | 3'-2" | 129.47 | WATER LINE | 1" Dia PVC WATER SERVICE LINE |
| 11 | 11+13.66 | 46.73' Lt OF ℄ ROUTE 108 | 2'-6" | 129.87 | WATER LINE | 1" Dia PVC WATER SERVICE LINE |
| 12 | 10+51.90 | 30.76' Lt OF ℄ ROUTE 108 | 3'-10" | 129.56 | FIBER OPTIC | CONCRETE CASING |
| 13 | 10+54.01 | 51.51' Lt OF ℄ ROUTE 108 | 4'-11" | 126.64 | MID ELECTRIC | 6" Dia PVC HIGH VOLTAGE ELECTRIC LINE |
| 14 | 11+33.20 | 23.00' Lt OF C ROUTE 108 | 5'-04" | 126.31 | WATER MAIN LINE | 10" Dia DUCTILE IRON PIPE |

*APPROVED FOR UTILITY WORK ONLY*

# UTILITY PLAN

SCALE: 1"=10'

**U-1**

REVISED BY | DATE REVISED
SATWINDER BRAR | MAHESH MONGA
CALCULATED-DESIGNED BY | CHECKED BY
FUNCTIONAL SUPERVISOR: GETACHEW ESHETE

STATE OF CALIFORNIA - DEPARTMENT OF TRANSPORTATION
Caltrans
06-DESIGN

LAST REVISION 03-12-14 | DATE PLOTTED => 29-AUG-2014 | TIME PLOTTED => 08:36

| Dist | COUNTY | ROUTE | POST MILES TOTAL PROJECT | SHEET No. | TOTAL SHEETS |
|---|---|---|---|---|---|
| 10 | Sta | 108 | 31.2 | 9 | 30 |

REGISTERED CIVIL ENGINEER 12-09-13 DATE

3-17-14
PLANS APPROVAL DATE

REGISTERED PROFESSIONAL ENGINEER THAAR F. JAWHAR No. 64207 Exp. 6-30-15 CIVIL STATE OF CALIFORNIA

*THE STATE OF CALIFORNIA OR ITS OFFICERS OR AGENTS SHALL NOT BE RESPONSIBLE FOR THE ACCURACY OR COMPLETENESS OF SCANNED COPIES OF THIS PLAN SHEET.*

## NOTES:

1. CURB, GUTTER AND SIDEWALK TO BE INSTALLED AFTER WATER SERVICE INSTALLATION, UNLESS OTHERWISE NOTED.
2. SERVICE LINE SHALL BE A MINIMUM OF 24" BELOW BOTTOM OF CURB.
3. INSTALL APPRORIATELY SIZED WEATHER BLANKET TO ALL BACKFLOW PREVENTION DEVICES.
4. BACKFLOW PREVENTERS SHALL BE PLACED BEHIND THE RETAINING WALL CURB RAMP A Min OF 24" CLEAR FROM ADJACENT CURBS. BACKFLOW PREVENTERS NOT PLACED IN CURBS SHALL REQUIRE GUARD POSTS TO THE SATISFACTION OF THE ENGINEER.

## ABBREVIATIONS:

MID - MODESTO IRRIGATION DISTRICT
CTS - COPPER TUBE SIZE

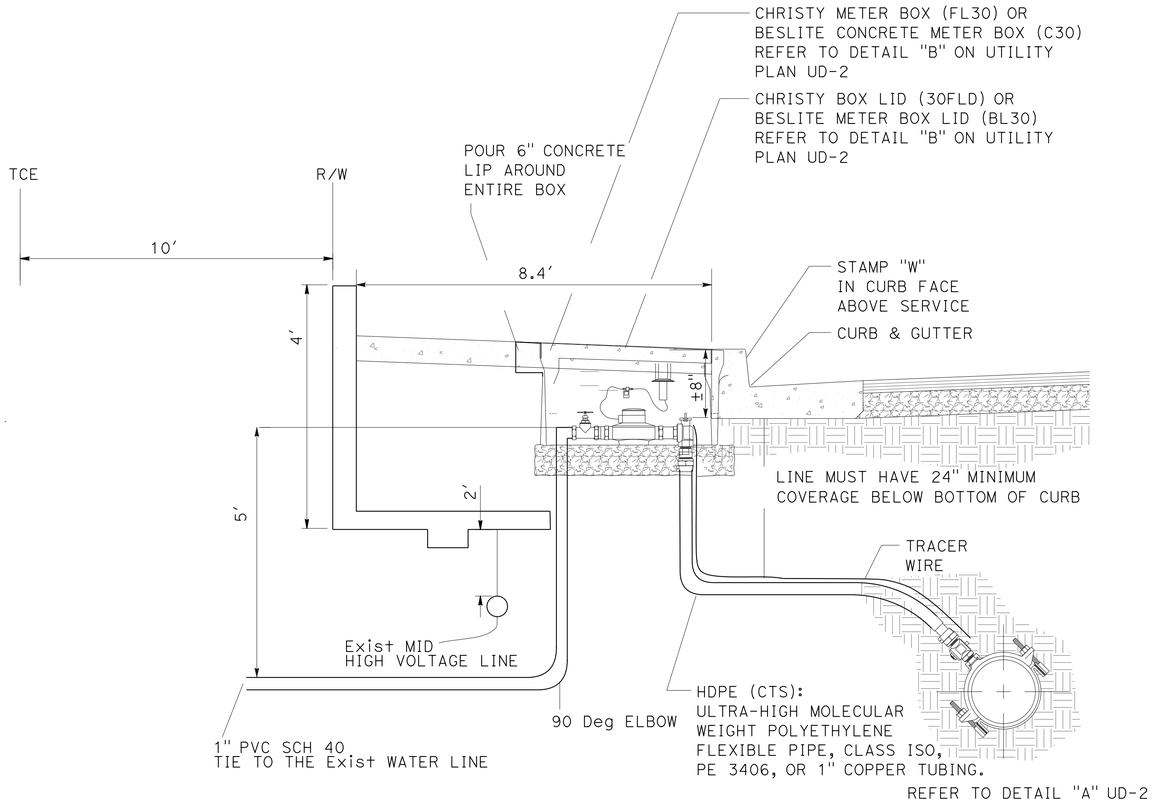


**1" WATER SERVICE**

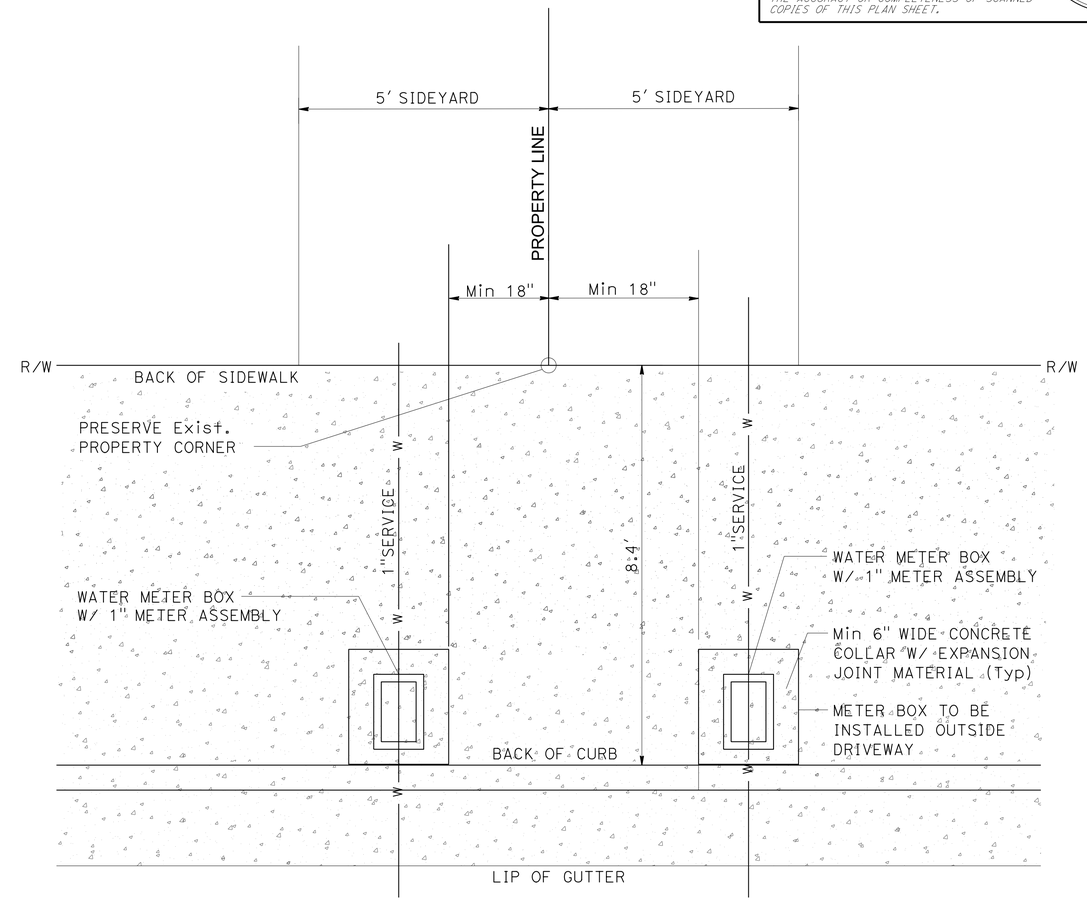


**1" WATER SERVICE METER BOX LOCATION**

# UTILITY DETAIL
## (CITY OF RIVERBANK)

NO SCALE **UD-1**

STATE OF CALIFORNIA - DEPARTMENT OF TRANSPORTATION
Caltrans® 06-DESIGN

FUNCTIONAL SUPERVISOR: GETACHEW ESHETE
CALCULATED-DESIGNED BY: SATWINDER BRAR
CHECKED BY: MAHESH MONGA
REVISED BY
DATE REVISED

LAST REVISION 03-10-14 | DATE PLOTTED => 29-AUG-2014 | TIME PLOTTED => 08:36

| Dist | COUNTY | ROUTE | POST MILES TOTAL PROJECT | SHEET No. | TOTAL SHEETS |
|---|---|---|---|---|---|
| 10 | Sta | 108 | 31.2 | 10 | 30 |

REGISTERED CIVIL ENGINEER 12-09-13 DATE

3-17-14
PLANS APPROVAL DATE

REGISTERED PROFESSIONAL ENGINEER THAAR F. JAWHAR No. 64207 Exp. 6-30-15 CIVIL STATE OF CALIFORNIA

*THE STATE OF CALIFORNIA OR ITS OFFICERS OR AGENTS SHALL NOT BE RESPONSIBLE FOR THE ACCURACY OR COMPLETENESS OF SCANNED COPIES OF THIS PLAN SHEET.*

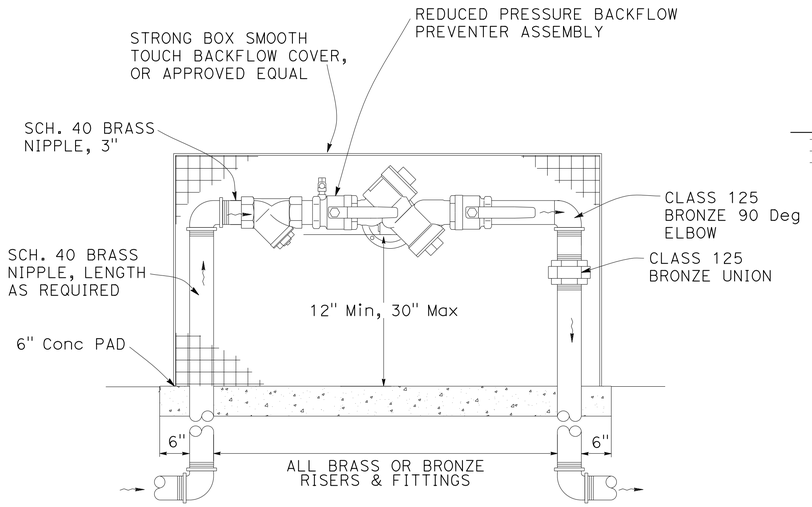


**BACKFLOW PREVENTION ASSEMBLY**

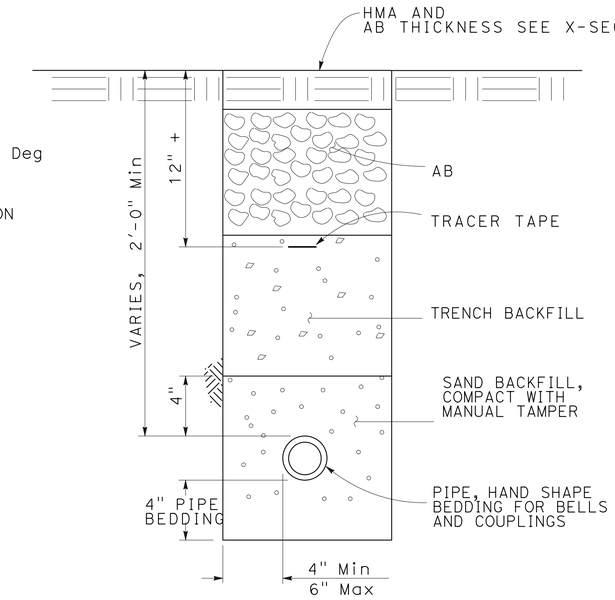


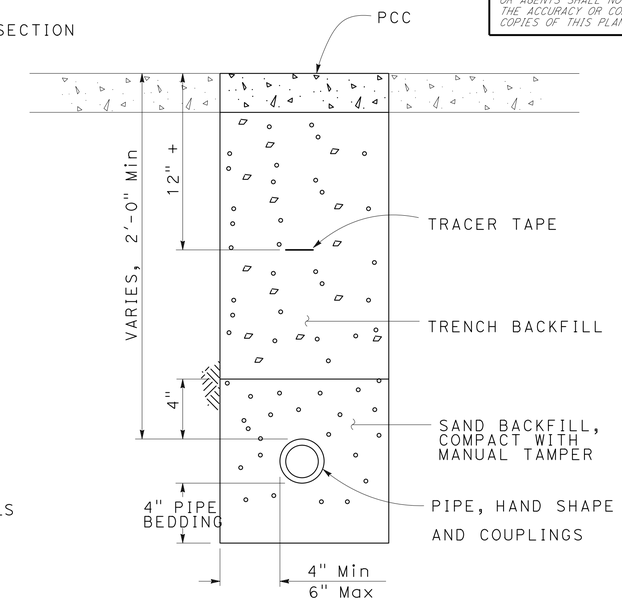


**WATER PIPE**

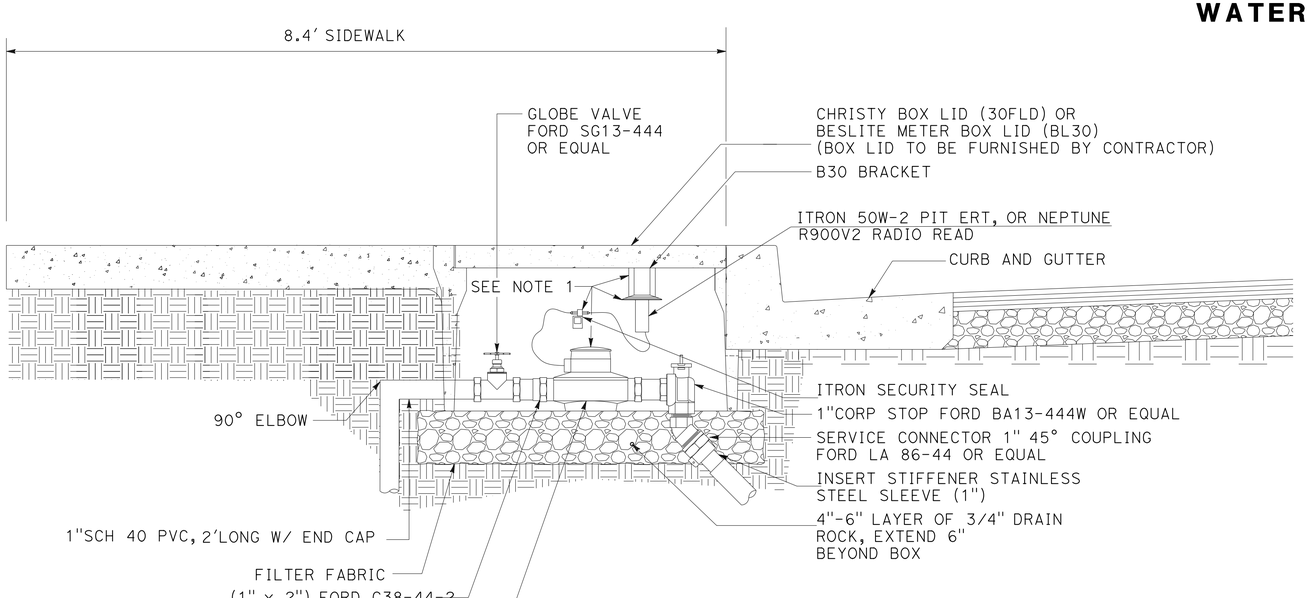


DETAIL "B"

**1" WATER SERVICE**

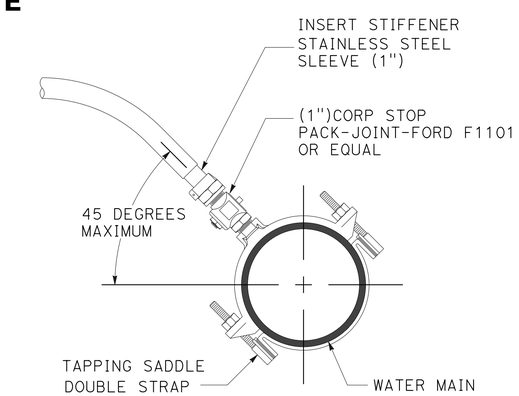


DETAIL "A"

**1" WATER SERVICE**

# UTILITY DETAIL
## (CITY OF RIVERBANK)

NO SCALE **UD-2**

STATE OF CALIFORNIA - DEPARTMENT OF TRANSPORTATION
Caltrans®
06-DESIGN

FUNCTIONAL SUPERVISOR: GETACHEW ESHETE
CALCULATED-DESIGNED BY: SATWINDER BRAR
CHECKED BY: THAER JAWHAR
REVISED BY
DATE REVISED

LAST REVISION 03-14-14
DATE PLOTTED => 29-AUG-2014
TIME PLOTTED => 08:36

| Dist | COUNTY | ROUTE | POST MILES TOTAL PROJECT | SHEET No. | TOTAL SHEETS |
|---|---|---|---|---|---|
| 10 | Sta | 108 | 31.2 | 11 | 30 |

REGISTERED CIVIL ENGINEER 03-10-14 DATE

3-17-14
PLANS APPROVAL DATE

REGISTERED PROFESSIONAL ENGINEER HASSAN M. TAHA No. 60130 Exp. 06/30/14 CIVIL STATE OF CALIFORNIA

*THE STATE OF CALIFORNIA OR ITS OFFICERS OR AGENTS SHALL NOT BE RESPONSIBLE FOR THE ACCURACY OR COMPLETENESS OF SCANNED COPIES OF THIS PLAN SHEET.*

# STATIONARY MOUNTED CONSTRUCTION AREA SIGNS

| SIGN No. | SIGN CODE | PANEL SIZE in x in | SIGN MESSAGE | No. OF POSTS | POST SIZE in x in | No. OF SIGNS |
|---|---|---|---|---|---|---|
| A | W20-1 | 47 x 47 | ROAD WORK AHEAD | 1 | 6 x 6 | 3 |
| B | G20-2 | 47 x 23 | END ROAD WORK | 1 | 4 x 6 | 2 |

NOTE: EXACT SIGN LOCATIONS TO BE DETERMINED BY THE ENGINEER.

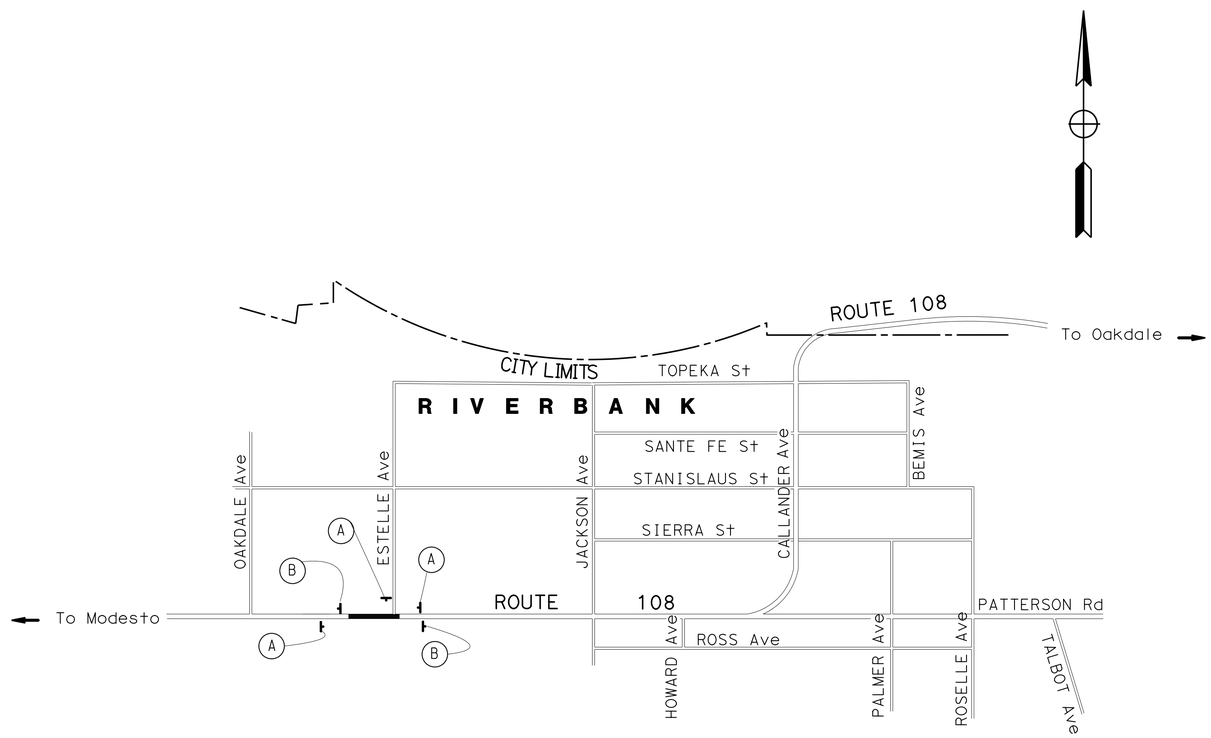


*APPROVED FOR CONSTRUCTION AREA SIGN WORK ONLY*

## CONSTRUCTION AREA SIGNS

NO SCALE **CS-1**

STATE OF CALIFORNIA - DEPARTMENT OF TRANSPORTATION
Caltrans® TRAFFIC DESIGN

FUNCTIONAL SUPERVISOR: MOHAMMED QATAMI
CALCULATED-DESIGNED BY: AMIT NIJHAWAN
CHECKED BY: HASSAN TAHA
REVISED BY
DATE REVISED

LAST REVISION 03-10-14 | DATE PLOTTED => 29-AUG-2014 | TIME PLOTTED => 08:37

| Dist | COUNTY | ROUTE | POST MILES TOTAL PROJECT | SHEET No. | TOTAL SHEETS |
|---|---|---|---|---|---|
| 10 | Sta | 108 | 31.2 | 12 | 30 |

12-09-13
REGISTERED CIVIL ENGINEER DATE

3-17-14
PLANS APPROVAL DATE

REGISTERED PROFESSIONAL ENGINEER THAAR F. JAWHAR No. 64207 Exp. 6-30-15 CIVIL STATE OF CALIFORNIA

*THE STATE OF CALIFORNIA OR ITS OFFICERS OR AGENTS SHALL NOT BE RESPONSIBLE FOR THE ACCURACY OR COMPLETENESS OF SCANNED COPIES OF THIS PLAN SHEET.*

## LEGEND:

STAGE 1 -
CONSTRUCT DRAINAGE SYSTEM No.(1) Sta 10+22.00 TO Sta 12+02.00
CONSTRUCT PORTIONS OF RW 1 AND 2
CONSTRUCT JOINT DRIVEWAY

STAGE 2 -
CONSTRUCT REMAINING OF RW 1 AND 2
CONSTRUCT RW 3 AND 4
CONSTRUCT ADA RAMPS
CONSTRUCT CURB (A2-6) AND SIDEWALK
CONSTRUCT DRIVEWAY

STAGE 3 -
CONSTRUCT WESTBOUND LANE No. 2 AND SHOULDER

## ABBREVIATION:

ADA - AMERICANS WITH DISABILITIES ACT

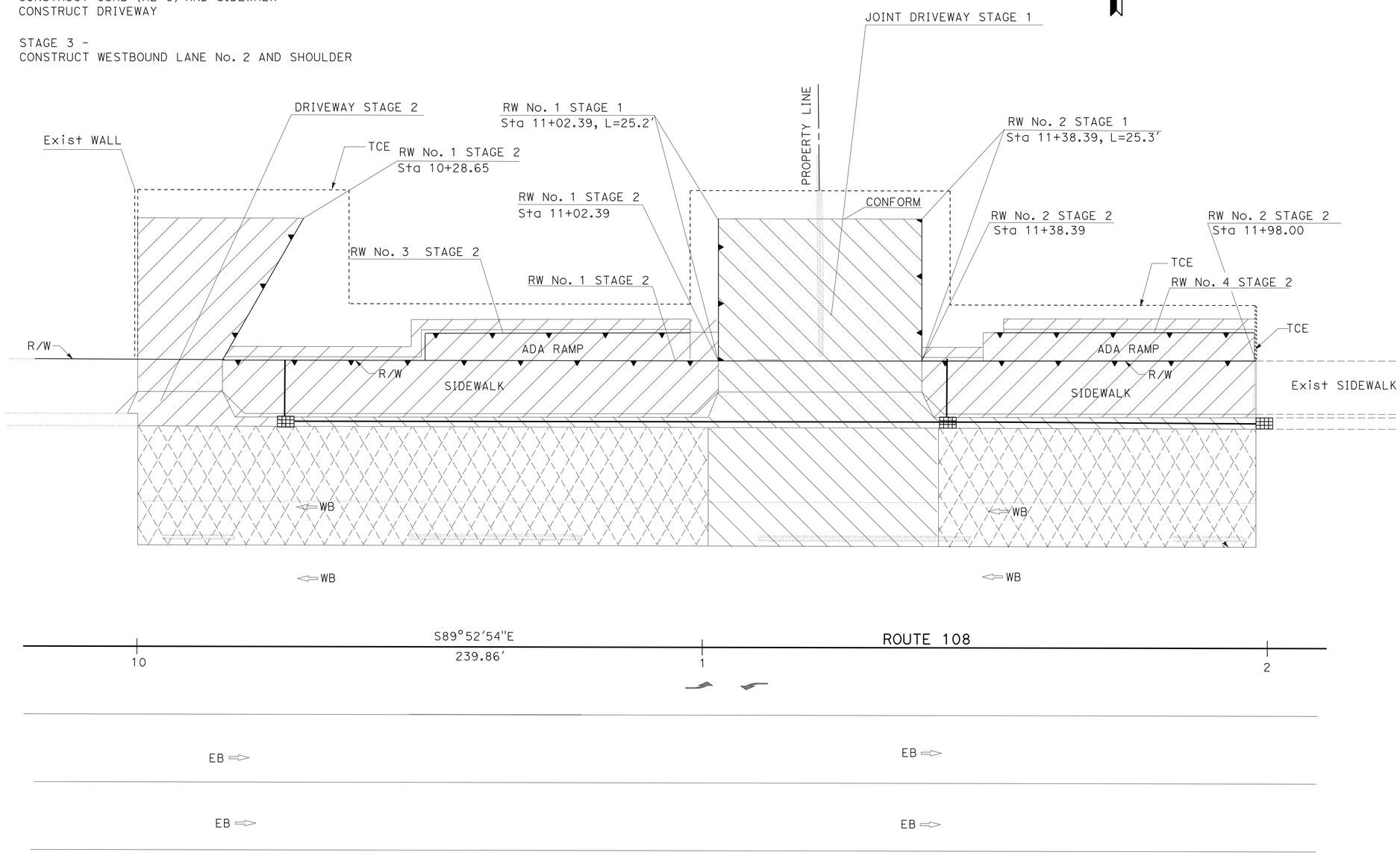


*APPROVED FOR STAGE CONSTRUCTION WORK ONLY*

# STAGE CONSTRUCTION PLAN

SCALE: 1"=10'

**SC-1**

STATE OF CALIFORNIA - DEPARTMENT OF TRANSPORTATION
Caltrans®
06-DESIGN

FUNCTIONAL SUPERVISOR: GETACHEW ESHETE
CALCULATED-DESIGNED BY: SATWINDER BRAR
CHECKED BY: MAHESH MONGA
REVISED BY
DATE REVISED

LAST REVISION 03-10-14
DATE PLOTTED => 29-AUG-2014
TIME PLOTTED => 08:37

| Dist | COUNTY | ROUTE | POST MILES TOTAL PROJECT | SHEET No. | TOTAL SHEETS |
|---|---|---|---|---|---|
| 10 | Sta | 108 | 31.2/31.3 | 13 | 30 |

Hassan Taha 03-10-14
REGISTERED CIVIL ENGINEER DATE

3-17-14
PLANS APPROVAL DATE

REGISTERED PROFESSIONAL ENGINEER HASSAN M. TAHA No. 60130 Exp. 06/30/14 CIVIL STATE OF CALIFORNIA

*THE STATE OF CALIFORNIA OR ITS OFFICERS OR AGENTS SHALL NOT BE RESPONSIBLE FOR THE ACCURACY OR COMPLETENESS OF SCANNED COPIES OF THIS PLAN SHEET.*

LEGEND:

- XX TRAFFIC STRIPE DETAIL No.
- XX Exist TRAFFIC STRIPE DETAIL No. TO BE REMOCED
- TYPE II (R) ARROW
- TYPE III ARROW
- TYPE IV ARROW
- XX ROADSIDE SIGN No.
- REMOVE ROADSIDE SIGN

## ROADSIDE SIGN QUANTITIES

| SIGN No. | SIGN CODE | REMOVE ROADSIDE SIGN |
|---|---|---|
| | | EA |
| 1 | R18(CA) | 1 |

## REMOVE CHANNELIZER

| ROUTE | REMOVE CHANNELIZER |
|---|---|
| | EA |
| ROUTE 108 | 28 |

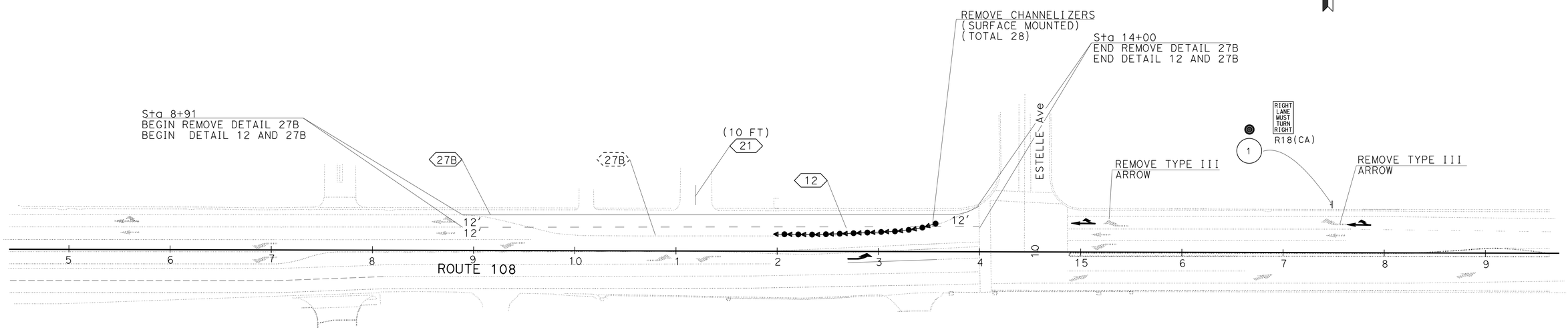


## PAVEMENT DELINEATION QUANTITIES

| ROUTE | LOCATION | DIRECTION | DETAIL No. | PAVEMENT MARKERS (RETROREFLECTIVE) | THERMOPLASTIC TRAFFIC STRIPE | | THERMOPLASTIC PAVEMENT MARKING | | REMOVE THERMOPLASTIC PAVEMENT MARKING |
|---|---|---|---|---|---|---|---|---|---|
| | | | | | 4" SOLID | 4" "BROKEN (36'-12") | | | |
| | | | | TYPE G | | | | | |
| | | | | EA | LF | LF | DESCRIPTION | SQFT | SQFT |
| ROUTE 108 | Sta 8+91 TO Sta 14+00 | WB | 27B | | 509 | | 2 -TYPE III ARROW | | 84 |
| | | WB | 12 | 11 | | 509 | 2 -TYPE II(R) ARROW | 90 | |
| | DRIVEWAY STRIPE | | 21 | | 10 | | | | |
| TOTAL | | | | 11 | 519 | 509 | | 90 | 84 |

*APPROVED FOR PAVEMENT DELINEATION AND SIGN WORK ONLY*

# PAVEMENT DELINEATION, SIGN PLAN AND QUANTITIES

SCALE: 1"=50"

**PD-1**

STATE OF CALIFORNIA - DEPARTMENT OF TRANSPORTATION
Caltrans® TRAFFIC DESIGN

FUNCTIONAL SUPERVISOR: MOHAMMED QATAMI
CALCULATED-DESIGNED BY: AMIT NIJHAWAN
CHECKED BY: HASSAN TAHA
REVISED BY
DATE REVISED

LAST REVISION 01-10-14
DATE PLOTTED => 29-AUG-2014
TIME PLOTTED => 08:37

| Dist | COUNTY | ROUTE | POST MILES TOTAL PROJECT | SHEET No. | TOTAL SHEETS |
|---|---|---|---|---|---|
| 10 | Sta | 108 | 31.2 | 14 | 30 |

REGISTERED CIVIL ENGINEER 12-09-13 DATE

3-17-14
PLANS APPROVAL DATE

REGISTERED PROFESSIONAL ENGINEER THAAR F. JAWHAR No. 64207 Exp. 6-30-15 CIVIL STATE OF CALIFORNIA

*THE STATE OF CALIFORNIA OR ITS OFFICERS OR AGENTS SHALL NOT BE RESPONSIBLE FOR THE ACCURACY OR COMPLETENESS OF SCANNED COPIES OF THIS PLAN SHEET.*

## RETAINING WALL

| FROM | TO | SIDE | STRUCTURAL Conc, RW | Str Exc (RW) | Str Bkf (RW) | BAR Reinf STEEL (RW) | CABLE RAILING |
|---|---|---|---|---|---|---|---|
| STA | STA | | CY | CY | CY | LB | LF |
| 10+28.65 | 11+02.39 | 75.85' Lt TO 75.87' Lt | 54 | 93 | 65 | 3004 | 142 |
| 11+38.39 | 11+98.00 | 75.87' Lt TO 50.90' Lt | 32 | 56 | 40 | 1851 | 80 |
| 10+50.08 | 10+97.30 | 50.60' Lt TO 56.90' Lt | 20 | 28 | 20 | 895 | 51 |
| 11+51.30 | 11+97.30 | 50.90' Lt TO 56.90' Lt | 18 | 28 | 20 | 895 | 46 |
| TOTAL | | | 124 | 205 | 145 | 6645 | 319 |

## ROADWAY QUANTITIES

| STATION/LOCATION | | | ROADWAY EXCAVATION | EMBANKMENT (N) | IMPORTED BORROW | CLASS 2 AB | HMA (TYPE A) | COLD PLANE AC PAVEMENT |
|---|---|---|---|---|---|---|---|---|
| FROM | TO | LOCATION | CY | CY | CY | CY | TON | SQYD |
| 10+00.20 | 11+98.00 | ROUTE 108 | 200 | 200 | 80 | 110 | 167 | |
| 11+98.00 | 14+00.00 | ROUTE 108 | | | | | 27 | 168 |
| DRIVEWAYS | | | 35 | 25 | 6 | 29 | 60 | |
| TOTAL | | | 235 | | 86 | 139 | 254 | 168 |

(N) - NOT A SEPARATE PAY ITEM, INFORMATION ONLY

## STORM WATER POLLUTION PREVENTION

| LOCATION | SIDE | TEMPORARY DRAINAGE INLET PROTECTION | TEMPORARY GRAVEL BAG BERM |
|---|---|---|---|
| | | EA | LF |
| CURB & GUTTER | Lt | 3 | 225 |

## MINOR CONCRETE (Misc Const)

| LOCATION | SIDE | VOLUME |
|---|---|---|
| | | CY |
| SIDEWALK | Lt | 18.70 |
| CURB & GUTTER | Lt | 23.50 |
| CURB (TYPE A2-6) | Lt | 10.00 |
| TOTAL | | 52.20 |

## DRAINAGE QUANTITIES

| DRAINAGE SYSTEM No. ⬡ | DRAINAGE UNIT ○ | DRAINAGE INLET TYPE | MINOR CONCRETE (MINOR STRUCTURE) | DESIGN H (N) | INLET FRAME & GRATE (TYPE 24-12x) (N) | AUTOMATIC DRAINAGE GATE | 18" RCP | 24" RCP | Misc IRON AND STEEL | DESCRIPTION | STATION | DRAINAGE PLAN SHEET No. |
|---|---|---|---|---|---|---|---|---|---|---|---|---|
| | | | CY | LF | EA | EA | LF | LF | LB | | | |
| 1 | a | | | | | 1 | 11 | | | 18" RCP | | DP-1 & 2 |
| | b | GO | 2.9 | 6.34 | 1 | | | | 239 | GO DI | 40.0' Lt 10+26.16 ℄ | DP-1 & 2 |
| | c | | | | | | | 118.00 | | 24" RCP | 40.0' Lt 11+26.16 ℄ | DP-1 & 2 |
| | d | GO | 3.5 | 8.34 | 1 | | | | 239 | GO DI | 40.0' Lt 11+41.80 ℄ | DP-1 & 2 |
| | e | | | | | 1 | 11 | | | 18" RCP | | DP-1 & 2 |
| | f | | | | | | | 53.31 | | 24" RCP | 40.0' Lt 11+41.80 ℄ | DP-1 & 2 |
| | g | GO | 3.6 | 8.34 | 1 | | | | 239 | GO DI | 40.0' Lt 12+00.00 ℄ | DP-1 |
| TOTAL | | | 10.0 | | | 2 | 22 | 171.31 | 717 | | | |

(N) - NOT A SEPARATE PAY ITEM, INFORMATION ONLY

# SUMMARY OF QUANTITIES

Q-1

REVISED BY | DATE REVISED
SATWINDER BRAR | MAHESH MONGA
CALCULATED-DESIGNED BY | CHECKED BY
FUNCTIONAL SUPERVISOR: GETACHEW ESHETE

STATE OF CALIFORNIA - DEPARTMENT OF TRANSPORTATION
Caltrans
06-DESIGN

LAST REVISION 03-10-14 | DATE PLOTTED => 29-AUG-2014 TIME PLOTTED => 08:37

| Dist | COUNTY | ROUTE | POST MILES TOTAL PROJECT | SHEET No. | TOTAL SHEETS |
|---|---|---|---|---|---|
| 10 | Sta | 108 | 31.2 | 15 | 30 |

REGISTERED CIVIL ENGINEER 12-09-13 DATE

3-17-14
PLANS APPROVAL DATE

REGISTERED PROFESSIONAL ENGINEER THAAR F. JAWHAR No. 64207 Exp 6-30-15 CIVIL STATE OF CALIFORNIA

*THE STATE OF CALIFORNIA OR ITS OFFICERS OR AGENTS SHALL NOT BE RESPONSIBLE FOR THE ACCURACY OR COMPLETENESS OF SCANNED COPIES OF THIS PLAN SHEET.*

**LEGEND:**

STANDARD PLAN SHEET No.

DETAIL No.

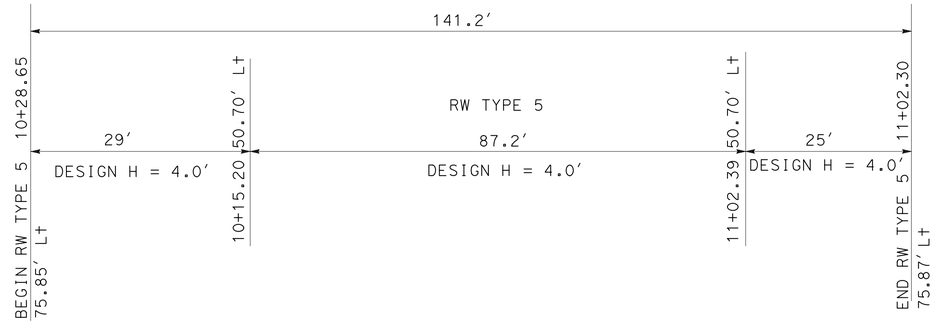


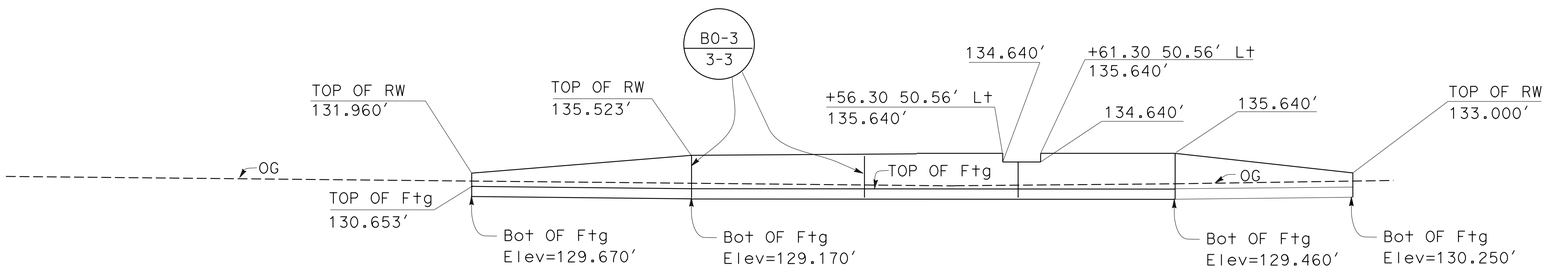


## RW No. 1 Elev

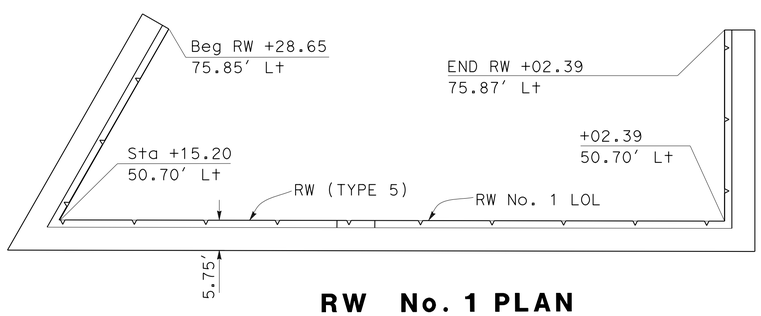


## RW No. 1 PLAN

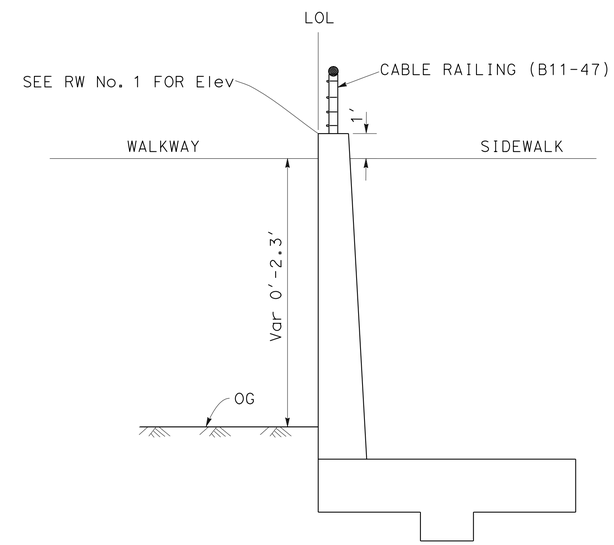


## TYPICAL SECTION
## RETAINING WALL TYPE 5

ROUTE 108

S89°52′54″E
239.86

10 — 1 — 2

*APPROVED FOR RETAINING WALL WORK ONLY*

# RETAINING WALL PLAN

NO SCALE

**R-1**

STATE OF CALIFORNIA - DEPARTMENT OF TRANSPORTATION
Caltrans
06-DESIGN

FUNCTIONAL SUPERVISOR: GETACHEW ESHETE
CALCULATED-DESIGNED BY: SATWINDER BRAR
CHECKED BY: MAHESH MONGA
REVISED BY
DATE REVISED

LAST REVISION 03-12-14
DATE PLOTTED => 29-AUG-2014
TIME PLOTTED => 08:37

| Dist | COUNTY | ROUTE | POST MILES TOTAL PROJECT | SHEET No. | TOTAL SHEETS |
|---|---|---|---|---|---|
| 10 | Sta | 108 | 31.2 | 16 | 30 |

REGISTERED CIVIL ENGINEER 12-09-13 DATE

3-17-14
PLANS APPROVAL DATE

REGISTERED PROFESSIONAL ENGINEER THAAR F. JAWHAR No. 64207 Exp. 6-30-15 CIVIL STATE OF CALIFORNIA

*THE STATE OF CALIFORNIA OR ITS OFFICERS OR AGENTS SHALL NOT BE RESPONSIBLE FOR THE ACCURACY OR COMPLETENESS OF SCANNED COPIES OF THIS PLAN SHEET.*

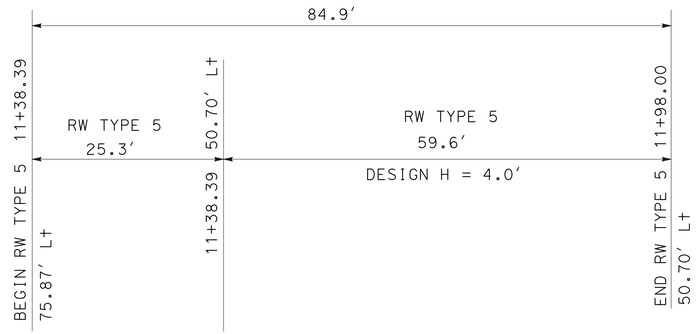


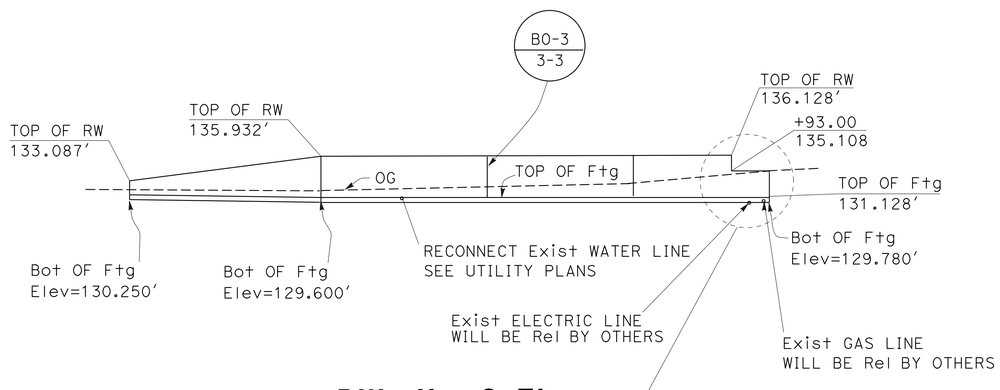


**RW No. 2 Elev**

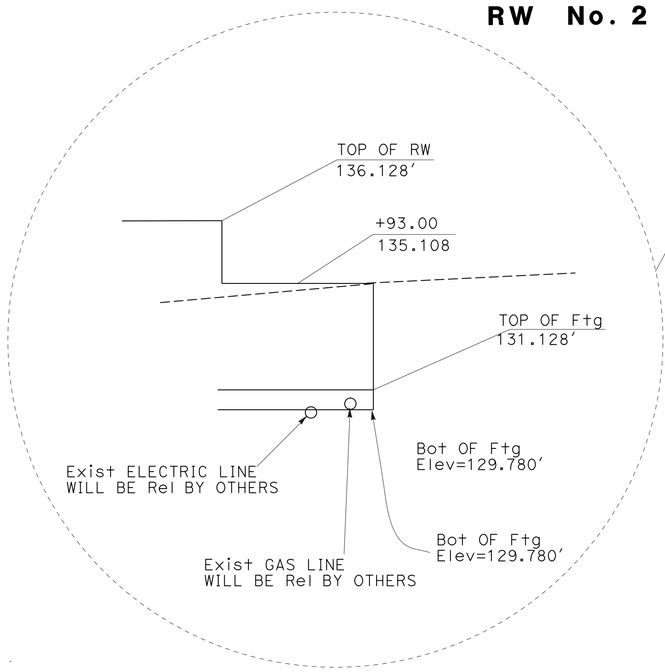


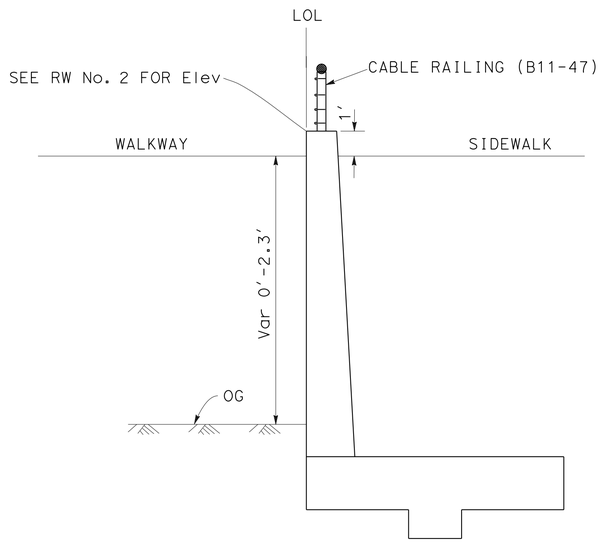


**TYPICAL SECTION**
**RETAINING WALL TYPE 5**

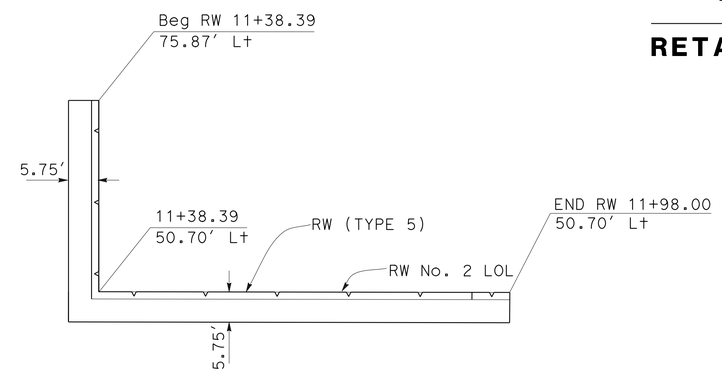


**RW No. 2 PLAN**

ROUTE 108
1 S89°52′54"E 2

*APPROVED FOR RETAINING WALL WORK ONLY*

# RETAINING WALL PLAN

NO SCALE

**R-2**

| | |
|---|---|
| REVISED BY | SATWINDER BRAR |
| DATE REVISED | MAHESH MONGA |
| CALCULATED-DESIGNED BY | |
| CHECKED BY | |
| FUNCTIONAL SUPERVISOR | GETACHEW ESHETE |

STATE OF CALIFORNIA - DEPARTMENT OF TRANSPORTATION
Caltrans
06-DESIGN

LAST REVISION 03-10-14 | DATE PLOTTED => 29-AUG-2014 | TIME PLOTTED => 08:37

| Dist | COUNTY | ROUTE | POST MILES TOTAL PROJECT | SHEET No. | TOTAL SHEETS |
|---|---|---|---|---|---|
| 10 | Sta | 108 | 31.2 | 17 | 30 |

REGISTERED CIVIL ENGINEER 12-09-13 DATE

3-17-14
PLANS APPROVAL DATE

REGISTERED PROFESSIONAL ENGINEER THAAR F. JAWHAR No. 64207 Exp 6-30-15 CIVIL STATE OF CALIFORNIA

*THE STATE OF CALIFORNIA OR ITS OFFICERS OR AGENTS SHALL NOT BE RESPONSIBLE FOR THE ACCURACY OR COMPLETENESS OF SCANNED COPIES OF THIS PLAN SHEET.*

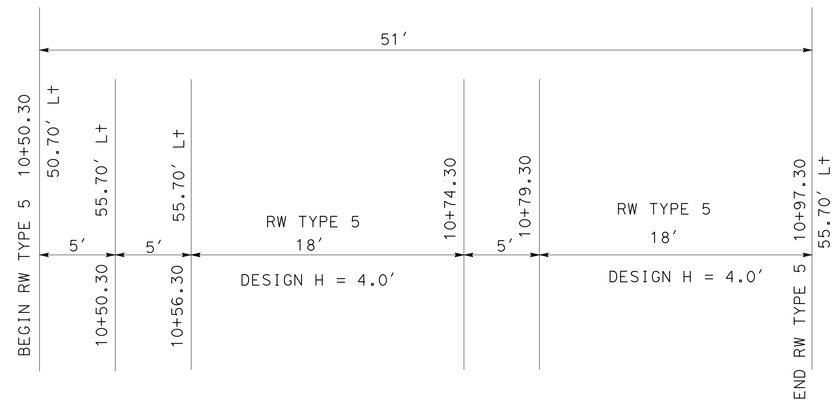


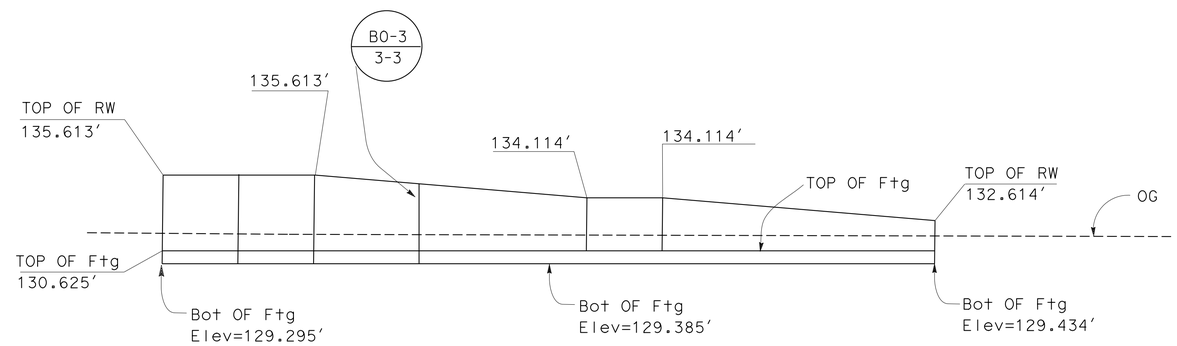


## RW No. 3 Elev

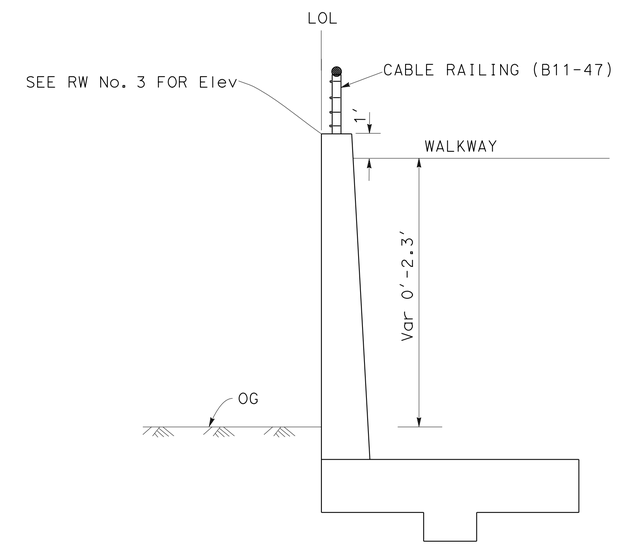


## TYPICAL SECTION
## RETAINING WALL TYPE 5

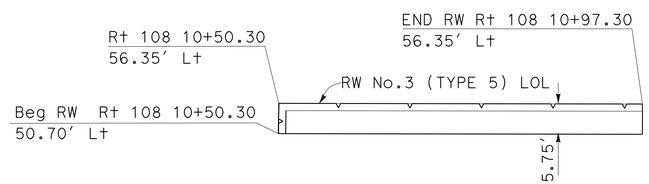


## RW No. 3 PLAN




*APPROVED FOR RETAINING WALL WORK ONLY*

# RETAINING WALL PLAN

NO SCALE

**R-3**

| REVISED BY | DATE REVISED |
|---|---|
| | |

| CALCULATED-DESIGNED BY | SATWINDER BRAR |
|---|---|
| CHECKED BY | MAHESH MONGA |

FUNCTIONAL SUPERVISOR: GETACHEW ESHETE

STATE OF CALIFORNIA - DEPARTMENT OF TRANSPORTATION

Caltrans

06-DESIGN

LAST REVISION 03-10-14 | DATE PLOTTED => 29-AUG-2014 | TIME PLOTTED => 08:37

| Dist | COUNTY | ROUTE | POST MILES TOTAL PROJECT | SHEET No. | TOTAL SHEETS |
|---|---|---|---|---|---|
| 10 | Sta | 108 | 31.2 | 18 | 30 |

REGISTERED CIVIL ENGINEER 12-09-13 DATE

3-17-14
PLANS APPROVAL DATE

REGISTERED PROFESSIONAL ENGINEER THAAR F. JAWHAR No. 64207 Exp. 6-30-15 CIVIL STATE OF CALIFORNIA

*THE STATE OF CALIFORNIA OR ITS OFFICERS OR AGENTS SHALL NOT BE RESPONSIBLE FOR THE ACCURACY OR COMPLETENESS OF SCANNED COPIES OF THIS PLAN SHEET.*

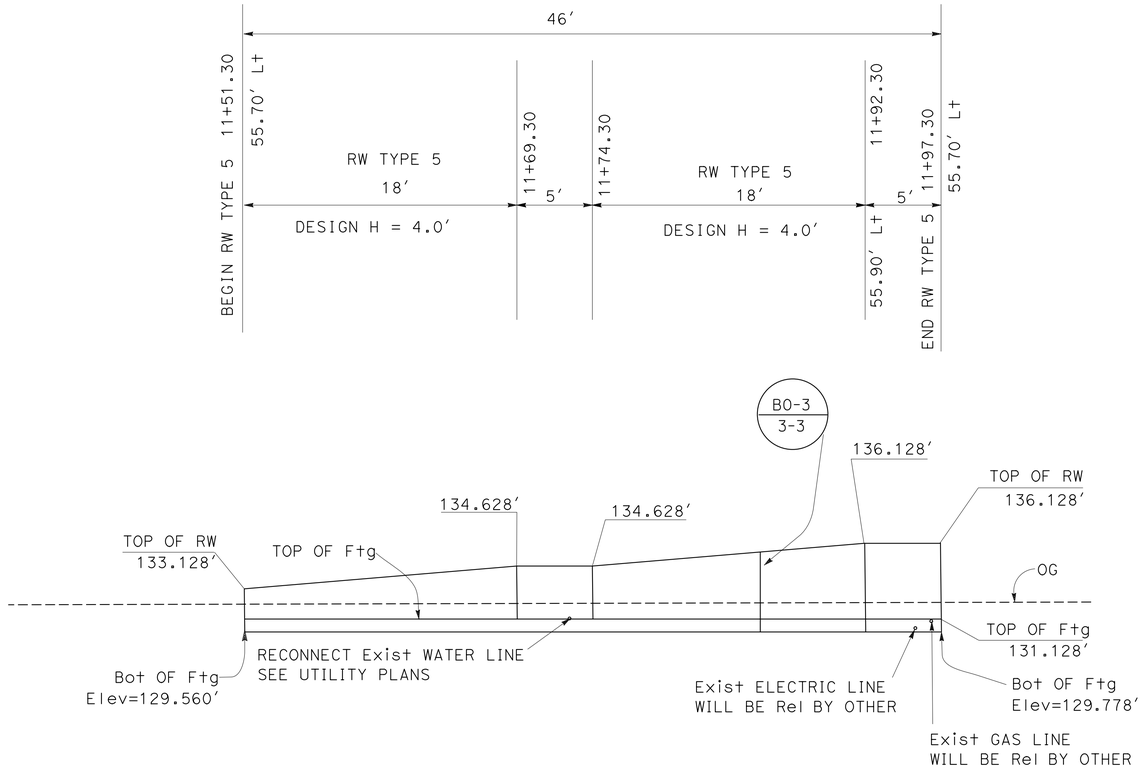


**RW No. 4 Elev**

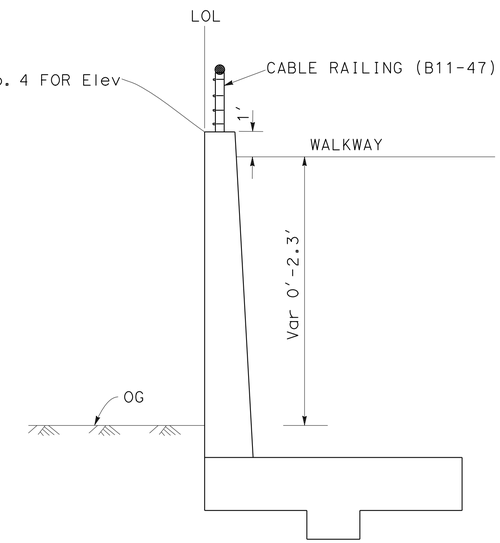


**TYPICAL SECTION**
**RETAINING WALL TYPE 5**

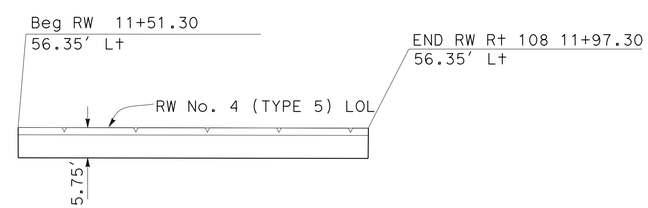


**RW No. 4 PLAN**

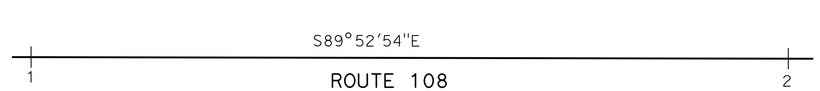


*APPROVED FOR RETAINING WALL WORK ONLY*

# RETAINING WALL PLAN

NO SCALE

**R-4**

STATE OF CALIFORNIA - DEPARTMENT OF TRANSPORTATION
Caltrans
06-DESIGN

FUNCTIONAL SUPERVISOR: GETACHEW ESHETE
CALCULATED-DESIGNED BY: SATWINDER BRAR
CHECKED BY: MAHESH MONGA
REVISED BY
DATE REVISED

LAST REVISION 03-10-14
DATE PLOTTED => 29-AUG-2014
TIME PLOTTED => 08:37

## M

| | |
|---|---|
| Maint | MAINTENANCE |
| Max | MAXIMUM |
| MB | METAL BEAM |
| MBB | METAL BEAM BARRIER |
| MBGR | METAL BEAM GUARD RAILING |
| Med | MEDIAN |
| MGS | MIDWEST GUARDRAIL SYSTEM |
| MH | MANHOLE |
| Min | MINIMUM |
| Misc | MISCELLANEOUS |
| Misc I & S | MISCELLANEOUS IRON AND STEEL |
| Mkr | MARKER |
| Mod | MODIFIED,<br>MODIFY |
| Mon | MONUMENT |
| MP | METAL PLATE |
| MPGR | METAL PLATE GUARD RAILING |
| MR | MOVEMENT RATING |
| MSE | MECHANICALLY STABILIZED EMBANKMENT |
| Mt | MOUNTAIN, MOUNT |
| Mtl | MATERIAL |
| MVP | MAINTENANCE VEHICLE PULLOUT |

## N

| | |
|---|---|
| N | NORTH |
| NB | NORTHBOUND |
| No. | NUMBER (MUST HAVE PERIOD) |
| Nos. | NUMBERS (MUST HAVE PERIOD) |
| NPS | NOMINAL PIPE SIZE |
| NS | NEAR SIDE |
| NSP | NEW STANDARD PLAN |
| NTS | NOT TO SCALE |

## O

| | |
|---|---|
| Oblr | OBLITERATE |
| OC | OVERCROSSING |
| OD | OUTSIDE DIAMETER |
| OF | OUTSIDE FACE |
| OG | ORIGINAL GROUND |
| OGAC | OPEN GRADED ASPHALT CONCRETE |
| OGFC | OPEN GRADED FRICTION COURSE |
| OH | OVERHEAD |
| OHWM | ORDINARY HIGH WATER MARK |
| O-O | OUT TO OUT |
| Opp | OPPOSITE |
| OSD | OVERSIDE DRAIN |

## P

| | |
|---|---|
| P | PAGE |
| PAP | PERFORATED ALUMINUM PIPE |
| PB | PULL BOX |
| PC | POINT OF CURVATURE,<br>PRECAST |
| PCC | POINT OF COMPOUND CURVE,<br>PORTLAND CEMENT CONCRETE |
| PCMS | PORTABLE CHANGEABLE MESSAGE SIGN |
| PCP | PERFORATED CONCRETE PIPE,<br>PRESTRESSED CONCRETE PIPE |
| PCVC | POINT OF COMPOUND VERTICAL CURVE |
| PEC | PERMIT TO ENTER AND CONSTRUCT |
| Ped | PEDESTRIAN |
| Ped OC | PEDESTRIAN OVERCROSSING |
| Ped UC | PEDESTRIAN UNDERCROSSING |
| Perm Mtl | PERMEABLE MATERIAL |

## P continued

| | |
|---|---|
| PG | PROFILE GRADE |
| PI | POINT OF INTERSECTION |
| PJP | PARTIAL JOINT PENETRATION |
| Pkwy | PARKWAY |
| ℙ,PL | PLATE |
| P/L | PROPERTY LINE |
| PM | POST MILE,<br>TIME FROM NOON TO MIDNIGHT |
| PN | PAVING NOTCH |
| POC | POINT OF HORIZONTAL CURVE |
| POT | POINT OF TANGENT |
| POVC | POINT OF VERTICAL CURVE |
| PP | PIPE PILE,<br>PLASTIC PIPE,<br>POWER POLE |
| PPL | PREFORMED PERMEABLE LINER |
| PPP | PERFORATED PLASTIC PIPE |
| PRC | POINT OF REVERSE CURVE |
| PRF | PAVEMENT REINFORCING FABRIC |
| PRVC | POINT OF REVERSE VERTICAL CURVE |
| PS&E | PLANS, SPECIFICATIONS AND ESTIMATES |
| PS, P/S | PRESTRESSED |
| PSP | PERFORATED STEEL PIPE |
| PT | POINT OF TANGENCY |
| PVC | POLYVINYL CHLORIDE |
| Pvmt | PAVEMENT |

## Q

| | |
|---|---|
| Qty | QUANTITY |

## R

| | |
|---|---|
| R | RADIUS |
| R & D | REMOVE AND DISPOSE |
| R & S | REMOVE AND SALVAGE |
| R/C | RATE OF CHANGE |
| RCA | REINFORCED CONCRETE ARCH |
| RCB | REINFORCED CONCRETE BOX |
| RCP | REINFORCED CONCRETE PIPE |
| RCPA | REINFORCED CONCRETE PIPE ARCH |
| Rd | ROAD |
| Reinf | REINFORCED,<br>REINFORCEMENT,<br>REINFORCING |
| Rel | RELOCATE |
| Repl | REPLACEMENT |
| Ret | RETAINING |
| Rev | REVISED, REVISION |
| Rdwy | ROADWAY |
| RHMA | RUBBERIZED HOT MIX ASPHALT |
| Riv | RIVER |
| RM | ROAD-MIXED |
| RP | RADIUS POINT,<br>REFERENCE POINT |
| RR | RAILROAD |
| RSP | ROCK SLOPE PROTECTION,<br>REVISED STANDARD PLAN |
| Rt | RIGHT |
| Rte | ROUTE |
| RW | REDWOOD,<br>RETAINING WALL |
| R/W | RIGHT OF WAY |
| Rwy | RAILWAY |

## S

| | |
|---|---|
| S | SOUTH,<br>SUPPLEMENT |
| SAE | STRUCTURE APPROACH EMBANKMENT |
| Salv | SALVAGE |
| SAPP | STRUCTURAL ALUMINUM PLATE PIPE |
| SB | SOUTHBOUND |
| SC | SAND CUSHION |
| SCSP | SLOTTED CORRUGATED STEEL PIPE |
| SD | STORM DRAIN |
| Sec | SECOND,<br>SECTION |
| Sep | SEPARATION |
| SG | SUBGRADE |
| Shld | SHOULDER |
| Sht | SHEET |
| Sim | SIMILAR |
| ₤ | STATION LINE |
| SM | SELECTED MATERIAL |
| Spec | SPECIAL,<br>SPECIFICATIONS |
| SPP | SLOTTED PLASTIC PIPE |
| SS | SLOPE STAKE |
| SSBM | STRAP AND SADDLE BRACKET METHOD |
| SSD | STRUCTURAL SECTION DRAIN |
| SSPA | STRUCTURAL STEEL PLATE ARCH |
| SSPP | STRUCTURAL STEEL PLATE PIPE |
| SSPPA | STRUCTURAL STEEL PLATE PIPE ARCH |
| SSRP | STEEL SPIRAL RIB PIPE |
| St | STREET |
| Sta | STATION |
| STBB | SINGLE THRIE BEAM BARRIER |
| Std | STANDARD |
| Str | STRUCTURE |
| Surf | SURFACING |
| SW | SIDEWALK,<br>SOUND WALL |
| Swr | SEWER |
| Sym | SYMMETRICAL |
| S4S | SURFACE 4 SIDES |

## T

| | |
|---|---|
| T | SEMI-TANGENT |
| Tan | TANGENT |
| TBB | THRIE BEAM BARRIER |
| Tbr | TIMBER |
| TC | TOP OF CURB |
| TCB | TRAFFIC CONTROL BOX |
| TCE | TEMPORARY CONSTRUCTION EASEMENT |
| Tel | TELEPHONE |
| Temp | TEMPORARY |
| TG | TOP OF GRADE |
| Tot | TOTAL |
| TP | TELEPHONE POLE |
| TPB | TREATED PERMEABLE BASE |
| TPM | TREATED PERMEABLE MATERIAL |
| Trans | TRANSITION |

## T continued

| | |
|---|---|
| TS | TRANSVERSE,<br>TRAFFIC SIGNAL,<br>TUBULAR STEEL |
| Typ | TYPICAL |

## U

| | |
|---|---|
| UC | UNDERCROSSING |
| UD | UNDERDRAIN |
| UG | UNDERGROUND |
| UON | UNLESS OTHERWISE NOTED |
| UP | UNDERPASS |

## V

| | |
|---|---|
| V | VALVE,<br>DESIGN SPEED |
| Var | VARIABLE,<br>VARIES |
| VC | VERTICAL CURVE |
| VCP | VITRIFIED CLAY PIPE |
| Vert | VERTICAL |
| Via | VIADUCT |
| Vol | VOLUME |

## W

| | |
|---|---|
| W | WEST,<br>WIDTH |
| WB | WESTBOUND |
| WH | WEEP HOLE |
| WM | WIRE MESH |
| WS | WATER SURFACE |
| WSP | WELDED STEEL PIPE |
| Wt | WEIGHT |
| WV | WATER VALVE |
| WW | WINGWALL |
| WWLOL | WINGWALL LAYOUT LINE |

## X

| | |
|---|---|
| X Sec | CROSS SECTION |
| Xing | CROSSING |

## Y

| | |
|---|---|
| Yr | YEAR |
| Yrs | YEARS |

| Dist | COUNTY | ROUTE | POST MILES TOTAL PROJECT | SHEET No. | TOTAL SHEETS |
|---|---|---|---|---|---|
| 10 | Sta | 108 | 31.2 | 19 | 30 |

Grace M. Tsushima
REGISTERED CIVIL ENGINEER

July 19, 2013
PLANS APPROVAL DATE

REGISTERED PROFESSIONAL ENGINEER
Grace M. Tsushima
No. C49814
Exp. 9-30-14
CIVIL
STATE OF CALIFORNIA

*THE STATE OF CALIFORNIA OR ITS OFFICERS OR AGENTS SHALL NOT BE RESPONSIBLE FOR THE ACCURACY OR COMPLETENESS OF SCANNED COPIES OF THIS PLAN SHEET.*

TO ACCOMPANY PLANS DATED 3-17-14

**2010 REVISED STANDARD PLAN RSP A10B**

### UNIT OF MEASUREMENT SYMBOLS:

Some of the symbols used in the project plan quantity tables and in the Bid Item List are:

TABLE A

| SYMBOL USED | DEFINITIONS |
|---|---|
| ACRE | ACRE |
| CF | CUBIC FOOT |
| CY | CUBIC YARD |
| EA | EACH |
| GAL | GALLON |
| LB | POUND |
| LF | LINEAR FOOT |
| SQFT | SQUARE FOOT |
| SQYD | SQUARE YARD |
| STA | 100 FEET |
| TAB | TABLET |
| TON | 2,000 POUNDS |

Some of the symbols used in the plans other than in the project plan quantity tables are:

TABLE B

| SYMBOL USED | DEFINITIONS |
|---|---|
| ksi | KIPS PER SQUARE INCH |
| ksf | KIPS PER SQUARE FOOT |
| psi | POUNDS PER SQUARE INCH |
| psf | POUNDS PER SQUARE FOOT |
| $lb/ft^3$, pcf | POUNDS PER CUBIC FOOT |
| tsf | TONS PER SQUARE FOOT |
| mph, MPH * | MILES PER HOUR |
| ø | NOMINAL DIAMETER |
| oz | OUNCE |
| lb | POUND |
| kip | 1,000 POUNDS |
| cal | CALORIE |
| ft | FOOT OR FEET |
| gal | GALLON |

* For use on a sign panel only

STATE OF CALIFORNIA
DEPARTMENT OF TRANSPORTATION

# ABBREVIATIONS (SHEET 2 OF 2)

NO SCALE

RSP A10B DATED JULY 19, 2013 SUPERSEDES STANDARD PLAN A10B DATED MAY 20, 2011 - PAGE 2 OF THE STANDARD PLANS BOOK DATED 2010.

**REVISED STANDARD PLAN RSP A10B**

6-7-13

| Dist | COUNTY | ROUTE | POST MILES TOTAL PROJECT | SHEET No. | TOTAL SHEETS |
|---|---|---|---|---|---|
| 10 | Sta | 108 | 31.2 | 20 | 30 |

REGISTERED CIVIL ENGINEER

July 19, 2013
PLANS APPROVAL DATE

REGISTERED PROFESSIONAL ENGINEER Michael Janzen No. 44788 Exp. 03-31-14 CIVIL STATE OF CALIFORNIA

*THE STATE OF CALIFORNIA OR ITS OFFICERS OR AGENTS SHALL NOT BE RESPONSIBLE FOR THE ACCURACY OR COMPLETENESS OF SCANNED COPIES OF THIS PLAN SHEET.*

TO ACCOMPANY PLANS DATED 3-17-14

**2010 REVISED STANDARD PLAN RSP A87A**

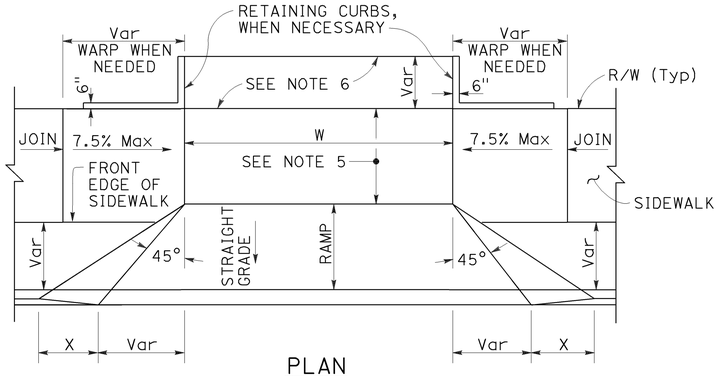


PLAN

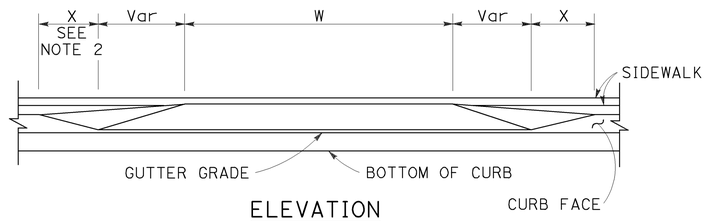


ELEVATION

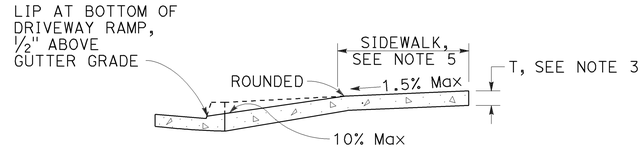


CASE A

Typical driveway, sidewalk not depressed

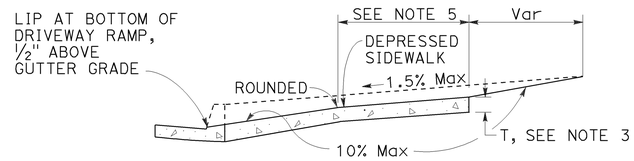


CASE B

Driveway with depressed sidewalk

SECTIONS

## TABLE A

| CURB TYPE | DIMENSIONS | | | |
|---|---|---|---|---|
| | "H1" | "H2" | "W1" | "W2" |
| A1-6 | 1'-2" | 6" | 7½" | 1½" |
| A1-8 | 1'-4" | 8" | 8" | 2" |
| A2-6 | 1'-0" | 6" | 2'-7½" | 1½" |
| A2-8 | 1'-2" | 8" | 2'-8" | 2" |
| A3-6 | 6" | 5" | 7¼" | 1¼" |
| A3-8 | 8" | 7" | 7¾" | 1¾" |
| B1-4 | 1'-0" | 4" | 7½" | 2½" |
| B1-6 | 1'-2" | 6" | 9" | 4" |
| B2-4 | 10" | 4" | 2'-7½" | 2½" |
| B2-6 | 1'-0" | 6" | 2'-9" | 4" |
| B3-4 | 4" | 3" | 7" | 2" |
| B3-6 | 6" | 5" | 8½" | 3½" |
| D-4 | 10" | 4" | 1'-6" | 1'-1" |
| D-6 | 1'-0" | 6" | 2'-2" | 1'-9" |

## CURB QUANTITIES

| TYPE | CUBIC YARDS PER LINEAR FOOT |
|---|---|
| A1-6 | 0.02585 |
| A1-8 | 0.03084 |
| A2-6 | 0.05903 |
| A2-8 | 0.06379 |
| A3-6 | 0.01036 |
| A3-8 | 0.01435 |
| B1-4 | 0.02185 |
| B1-6 | 0.02930 |
| B2-4 | 0.05515 |
| B2-6 | 0.06171 |
| B3-4 | 0.00641 |
| B3-6 | 0.01074 |
| B4 | 0.05709 |
| D-4 | 0.04083 |
| D-6 | 0.06804 |
| E | 0.06661 |

## DRIVEWAYS

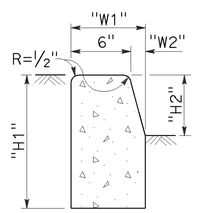


TYPE A1 CURBS

See Table A

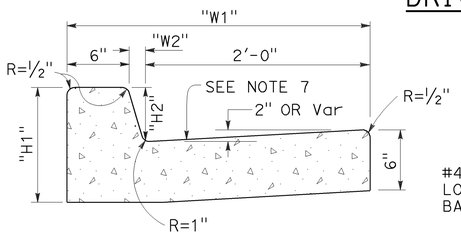


TYPE A2 CURBS

See Table A

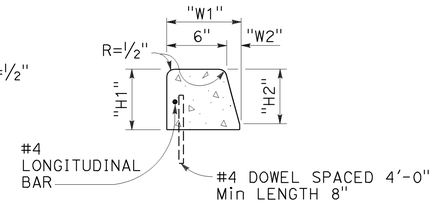


TYPE A3 CURBS

Superimposed on existing pavement
See Table A

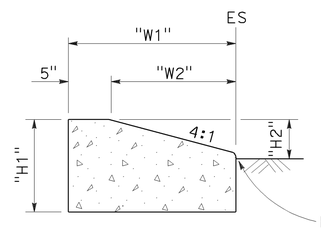


TYPE D CURBS

See Table A

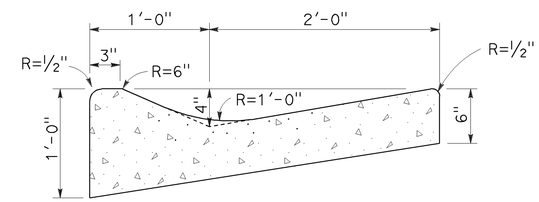


TYPE E CURB

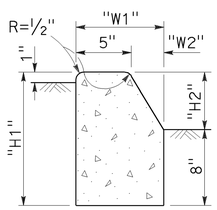


TYPE B1 CURBS

See Table A

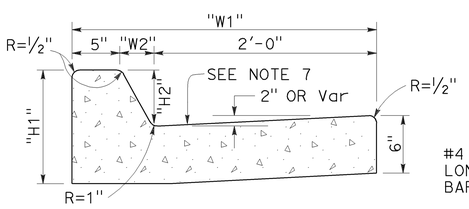


TYPE B2 CURBS

See Table A

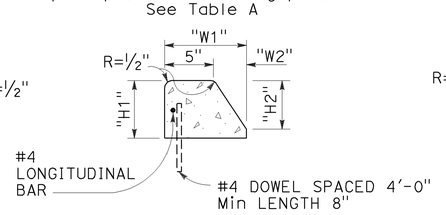


TYPE B3 CURBS

Superimposed on existing pavement
See Table A

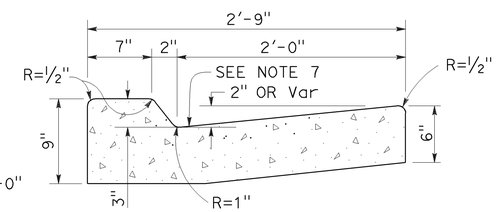


TYPE B4 CURBS

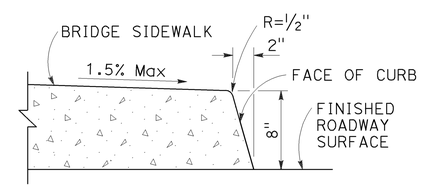


TYPE H CURB

On Bridges

CURBS

NOTES:

1. Case A driveway section typically applies.
2. X=3'-0" except for curb heights over 10" where 4:1 slopes shall be used on curb slope.
3. Sidewalk and ramp thickness "T" at driveway shall be 4" for residental and 6" for commercial.
4. Difference in slope of the driveway ramp and the slope of a line between the gutter and a point on the roadway 5'-0" from gutter line shall not exceed 15%. Reduce driveway ramp slope, not gutter slope, where required.
5. Minimum width of clear passageway for sidewalk shall be 4'-2".
6. Retaining curbs and acquisition of construction easement may be necessary for narrow sidewalks or curb heights in excess of 6".
7. Across the pedestrian route at curb ramp locations, the gutter pan slope shall not exceed 1" of depth for each 2'-0" of width.

STATE OF CALIFORNIA
DEPARTMENT OF TRANSPORTATION

# CURBS AND DRIVEWAYS

NO SCALE

RSP A87A DATED JULY 19, 2013 SUPERSEDES STANDARD PLAN A87A DATED MAY 20, 2011 - PAGE 119 OF THE STANDARD PLANS BOOK DATED 2010.

**REVISED STANDARD PLAN RSP A87A**

7-8-13

| Dist | COUNTY | ROUTE | POST MILES TOTAL PROJECT | SHEET No. | TOTAL SHEETS |
|---|---|---|---|---|---|
| 10 | Sta | 108 | 31.2 | 21 | 30 |

REGISTERED CIVIL ENGINEER

July 19, 2013
PLANS APPROVAL DATE

REGISTERED PROFESSIONAL ENGINEER
Hector David Cordova
No. C41957
Exp. 3-31-14
CIVIL
STATE OF CALIFORNIA

*THE STATE OF CALIFORNIA OR ITS OFFICERS OR AGENTS SHALL NOT BE RESPONSIBLE FOR THE ACCURACY OR COMPLETENESS OF SCANNED COPIES OF THIS PLAN SHEET.*

TO ACCOMPANY PLANS DATED 3-17-14

**2010 REVISED STANDARD PLAN RSP A88A**

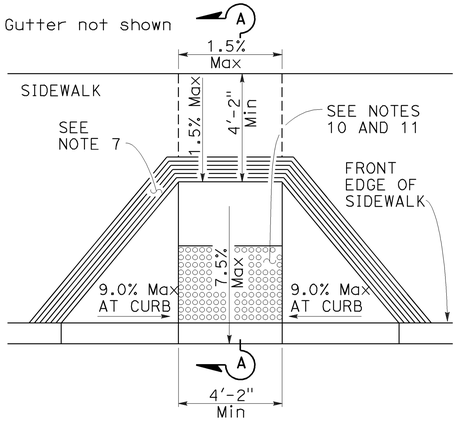


CASE A

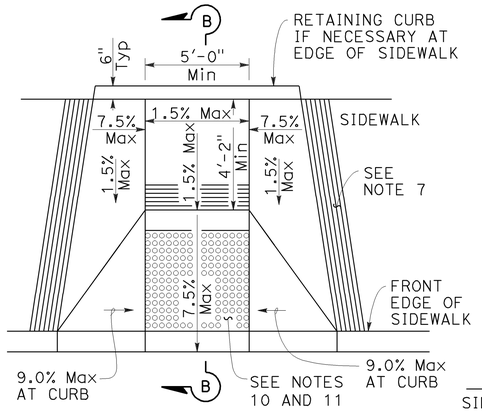


CASE B

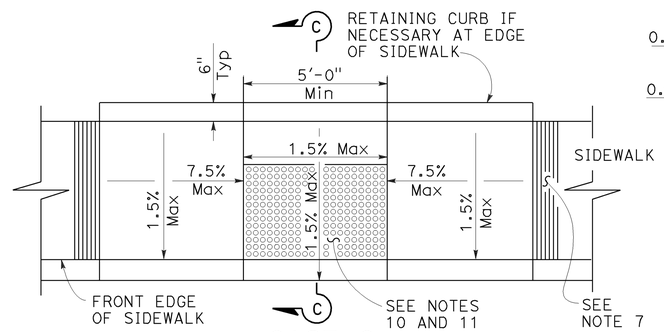


CASE C

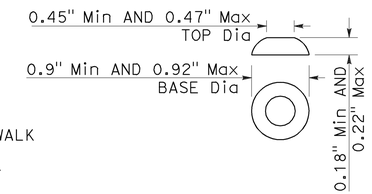


RAISED TRUNCATED DOME

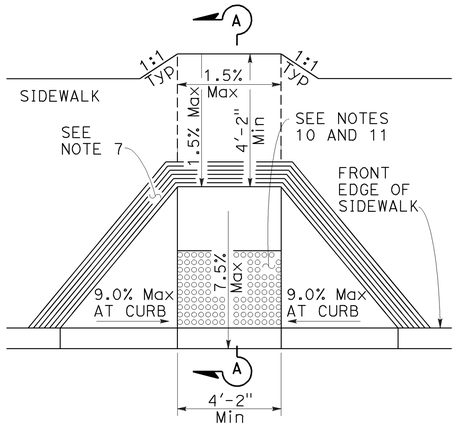


CASE D

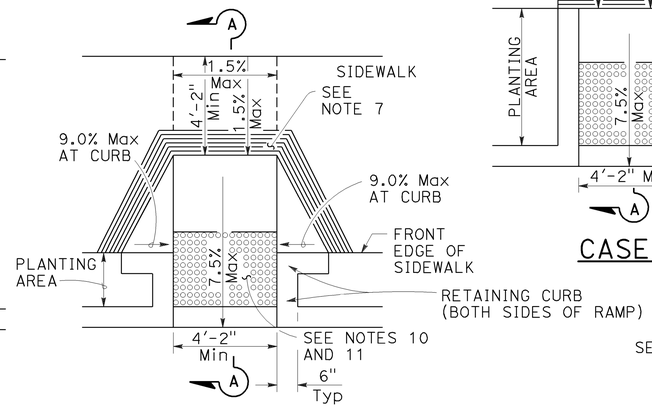


CASE E

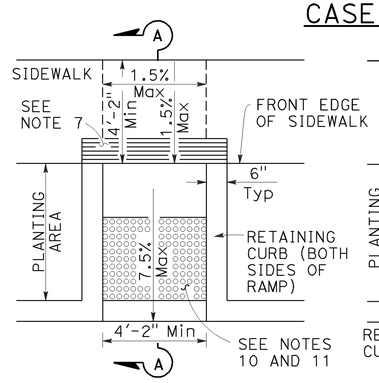


CASE F

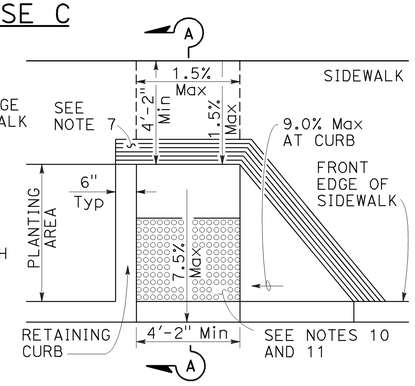


CASE G

See Note 4

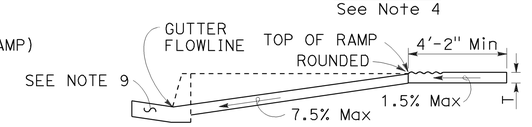


SECTION A-A

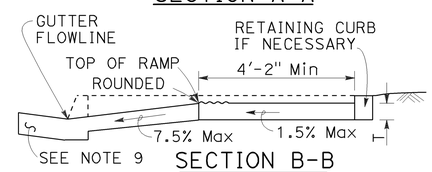


SECTION B-B

Depress entire sidewalk as required

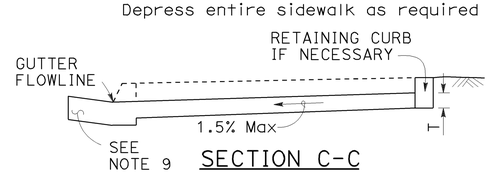


SECTION C-C

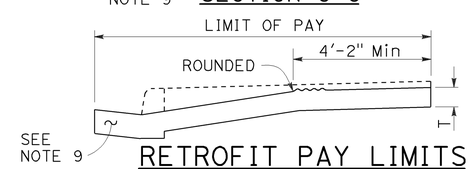


RETROFIT PAY LIMITS

Existing curb and sidewalk

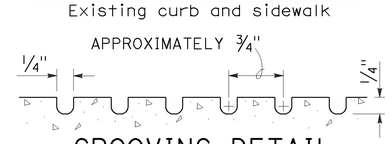


GROOVING DETAIL

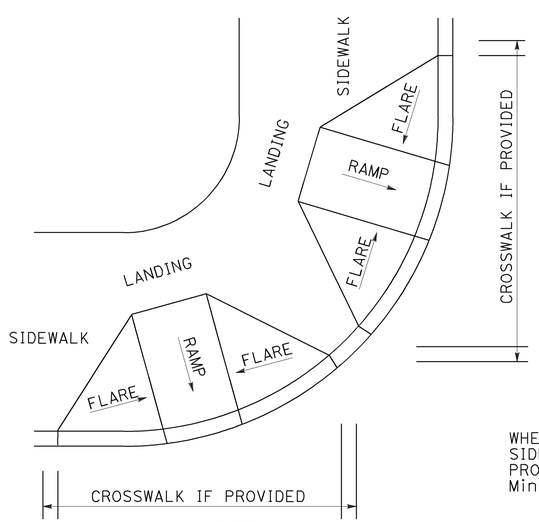


DETAIL A

TYPICAL TWO-RAMP CORNER INSTALLATION

See Note 1

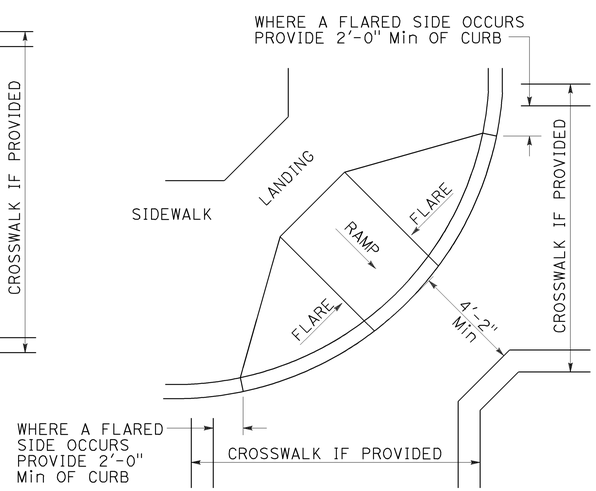


DETAIL B

TYPICAL ONE-RAMP CORNER INSTALLATION

See Notes 1 and 3

## NOTES:

1. As site conditions dictate, Case A through Case G curb ramps may be used for corner installations similar to those shown in Detail A and Detail B. The case of curb ramps used in Detail A do not have to be the same. Case A through Case G curb ramps also may be used at mid block locations, as site conditions dictate.
2. If distance from curb to back of sidewalk is too short to accommodate ramp and 4'-2" platform (landing) as shown in Case A, the sidewalk may be depressed longitudinally as in Case B, or C or may be widened as in Case D.
3. When ramp is located in center of curb return, crosswalk configuration must be similar to that shown for Detail B.
4. As site conditions dictate, the retaining curb side and the flared side of the Case G ramp shall be constructed in reversed position.
5. If located on a curve, the sides of the ramp need not be parallel, but the minimum width of the ramp shall be 4'-2".
6. Side slope of ramp flares vary uniformly from a maximum of 9.0% at curb to conform with longitudinal sidewalk slope adjacent to top of the ramp, except in Case C and Case F.
7. The curb ramp shall be outlined, as shown, with a 1'-0" wide border with 1/4" grooves approximately 3/4" on center. See grooving detail.
8. Transitions from ramps and landing to walks, gutters or streets shall be flush (no lip) and free of abrupt changes.
9. Counter slopes of adjoining gutters and road surfaces immediately adjacent to and within 24 inches of the curb ramp shall not be steeper than 1:20 (5.0%). Gutter pan slope shall not exceed 1" of depth for each 2'-0" of width.
10. Curb ramps shall have a detectable warning surface that extends the full width and 3'-0" depth of the ramp. Detectable Warning Surfaces shall conform to the details on this plan and the requirements in the Standard Specifications.
11. The edge of the detectable warning surface nearest the street shall be between 6" and 8" from the gutter flowline.
12. Sidewalk and ramp thickness, "T", shall be 3 1/2" minimum.
13. Utility pull boxes, manholes, vaults and all other utility facilities within the boundaries of the curb ramp will be relocated or adjusted to grade by the owner prior to, or in conjunction with, curb ramp construction.
14. Detectable warning surface may have to be cut to allow removal of utility covers while maintaining full detectable warning width and depth.

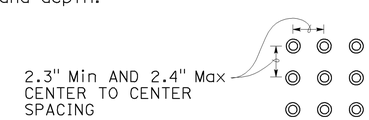


RAISED TRUNCATED DOME PATTERN (IN-LINE)

DETECTABLE WARNING SURFACE

See Note 10

STATE OF CALIFORNIA
DEPARTMENT OF TRANSPORTATION

# CURB RAMP DETAILS

NO SCALE

RSP A88A DATED JULY 19, 2013 SUPERSEDES STANDARD PLAN A88A
DATED MAY 20, 2011 - PAGE 121 OF THE STANDARD PLANS BOOK DATED 2010.

**REVISED STANDARD PLAN RSP A88A**

7-8-13

| Dist | COUNTY | ROUTE | POST MILES TOTAL PROJECT | SHEET No. | TOTAL SHEETS |
|---|---|---|---|---|---|
| 10 | Sta | 108 | 31.2 | 22 | 30 |

REGISTERED CIVIL ENGINEER

July 19, 2013
PLANS APPROVAL DATE

REGISTERED PROFESSIONAL ENGINEER
Hector David Cordova
No. C41957
Exp. 3-31-14
CIVIL
STATE OF CALIFORNIA

*THE STATE OF CALIFORNIA OR ITS OFFICERS OR AGENTS SHALL NOT BE RESPONSIBLE FOR THE ACCURACY OR COMPLETENESS OF SCANNED COPIES OF THIS PLAN SHEET.*

TO ACCOMPANY PLANS DATED 3-17-14

Gutter not shown

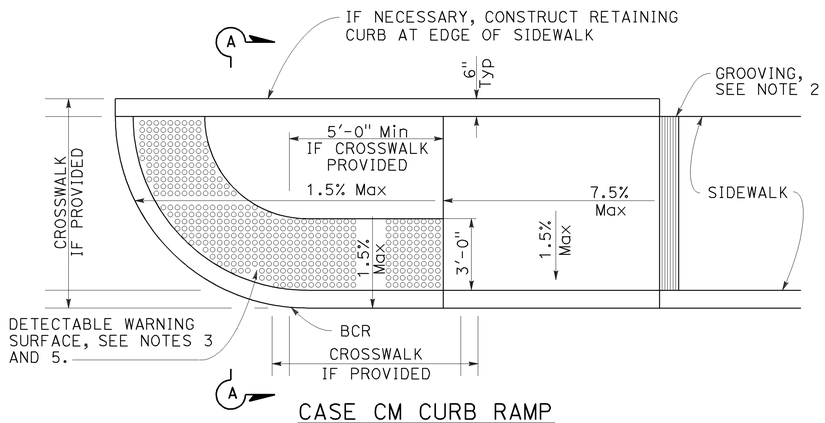


CASE CM CURB RAMP

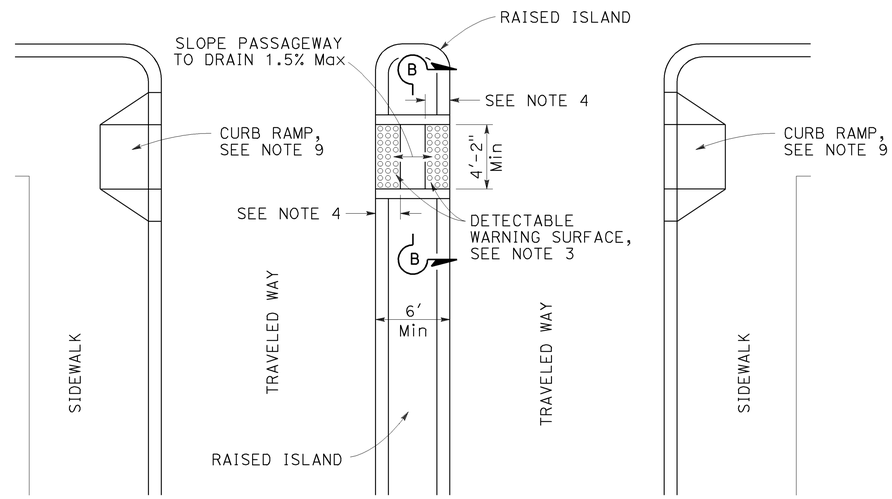


TYPE A PASSAGEWAY

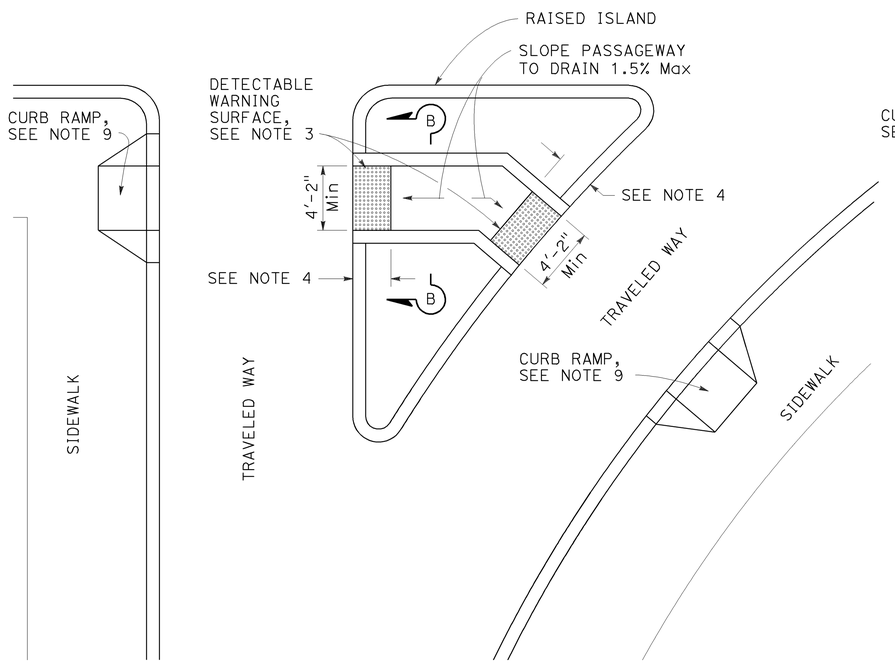


TYPE B PASSAGEWAY

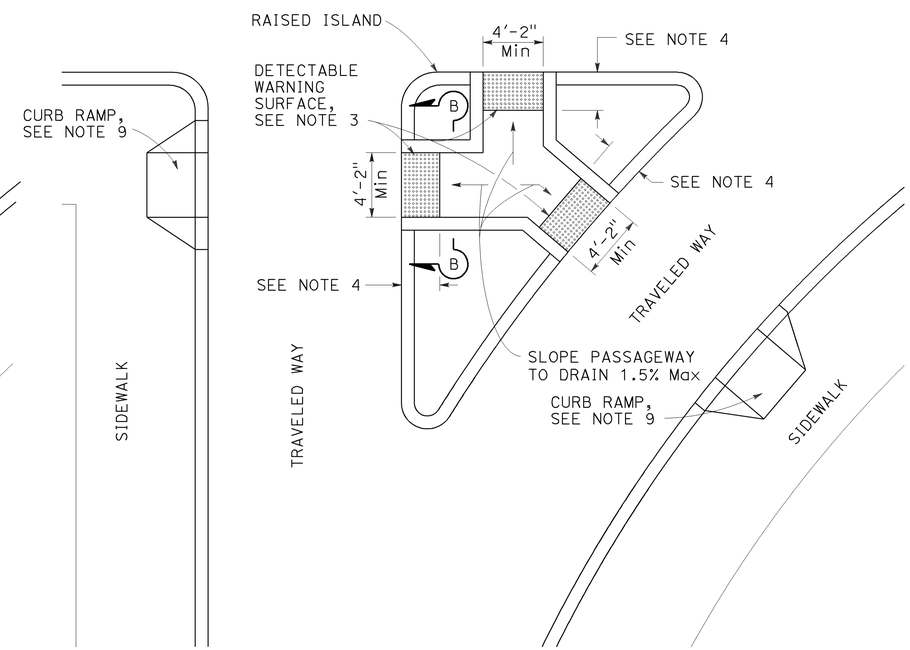


TYPE C PASSAGEWAY

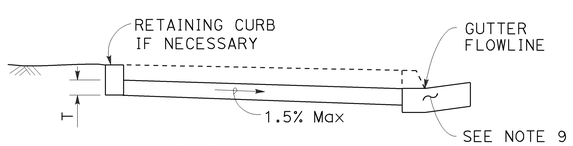


SECTION A-A

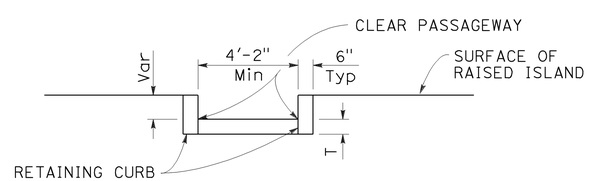


SECTION B-B

## NOTES:

1. Sidewalk, ramp and passageway thickness, "T", shall be 3½" minimum.
2. For details of grooving used with Case CM curb ramp, see Revised Standard Plan RSP A88A.
3. For details of detectable warning surfaces, see Revised Standard Plan RSP A88A.
4. Where an island passageway length is greater than or equal to 6'-0", but less than 8'-0", each detectable warning surface shall extend the full width and 2'-0" depth of the passageway length. Where an island passageway length is greater than or equal to 8'-0", each detectable warning surface shall extend the full width and 3'-0" depth of the passageway length.
5. For Case CM curb ramp, the edge of the detectable warning surface nearest the street shall be between 6" and 8" from the gutter flowline.
6. Transitions from ramps to walks, gutters or streets shall be flush (no lip) and free of abrupt changes.
7. Utility pull boxes, manholes, vaults and all other utility facilities within the boundaries of the curb ramp will be relocated or adjusted to grade by the owner prior to, or in conjunction with, curb ramp construction.
8. Detectable warning surface may have to be cut to allow removal of utility covers while maintaining full detectable warning width and depth.
9. For additional curb ramp details, see Revised Standard Plan RSP A88A.

STATE OF CALIFORNIA
DEPARTMENT OF TRANSPORTATION

# CURB RAMP AND ISLAND PASSAGEWAY DETAILS

NO SCALE

RSP A88B DATED JULY 19, 2013 SUPERSEDES STANDARD PLAN A88B DATED MAY 20, 2011 - PAGE 122 OF THE STANDARD PLANS BOOK DATED 2010.

**REVISED STANDARD PLAN RSP A88B**

**2010 REVISED STANDARD PLAN RSP A88B**

6-25-13

| Dist | COUNTY | ROUTE | POST MILES TOTAL PROJECT | SHEET No. | TOTAL SHEETS |
|---|---|---|---|---|---|
| 10 | Sta | 108 | 31.2 | 23 | 30 |

REGISTERED CIVIL ENGINEER

April 20, 2012
PLANS APPROVAL DATE

REGISTERED PROFESSIONAL ENGINEER Gary Wang No. C58298 Exp. 6-30-12 CIVIL STATE OF CALIFORNIA

*THE STATE OF CALIFORNIA OR ITS OFFICERS OR AGENTS SHALL NOT BE RESPONSIBLE FOR THE ACCURACY OR COMPLETENESS OF SCANNED COPIES OF THIS PLAN SHEET.*

TO ACCOMPANY PLANS DATED 3-17-14

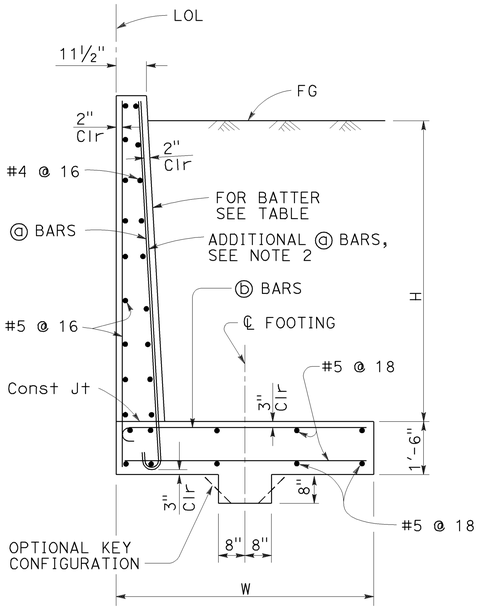


SPREAD FOOTING SECTION

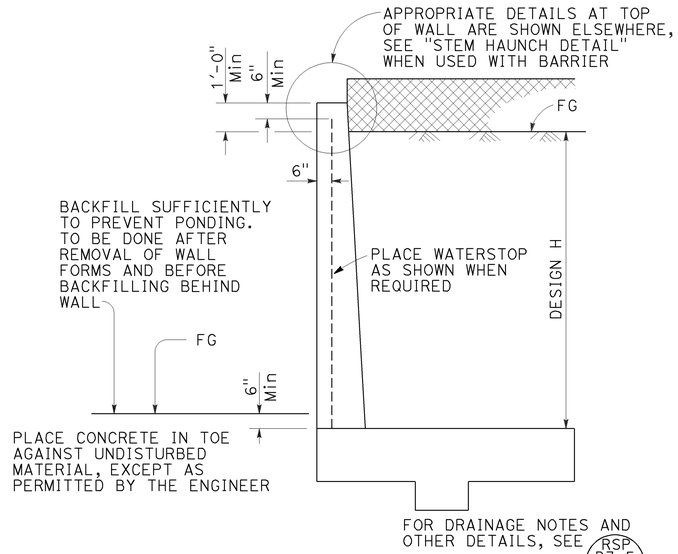


DESIGN SECTION

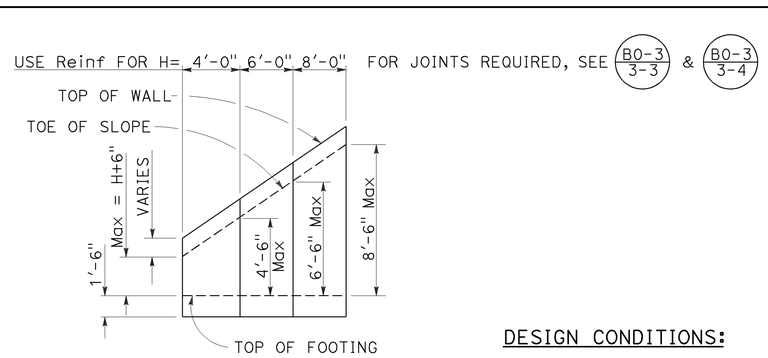


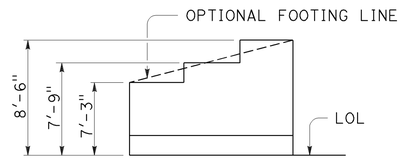


TYPICAL LAYOUT EXAMPLE

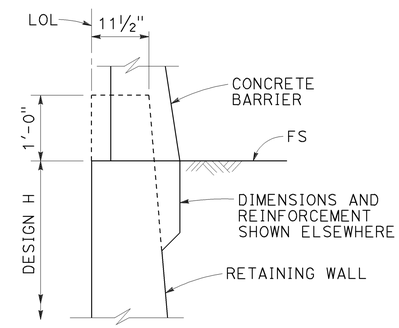


STEM HAUNCH DETAIL

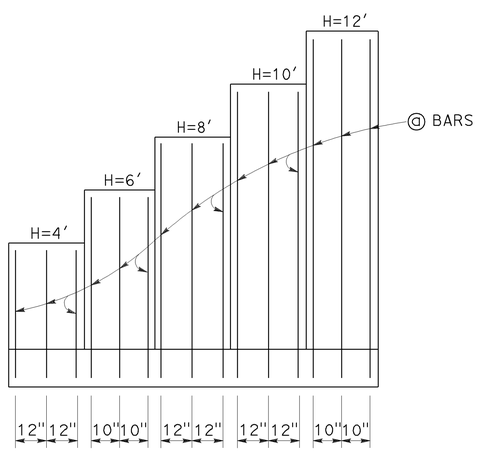


ELEVATION

## SYMBOLS:

Ser - service limit state I
Str - strength limit state I
Ext I - extreme event limit state I
Ext II - extreme event limit state II
B' - effective footing width (ft)
$q_o'$ - net bearing stress (ksf), OG assumed to be FG at toe
$q_o$ - gross uniform bearing stress (ksf)

TABLE OF REINFORCING STEEL, DIMENSIONS AND DATA

| DESIGN H | 4' | 6' | 8' | 10' | 12' |
|---|---|---|---|---|---|
| W | 7'-3" | 7'-9" | 8'-6" | 9'-6" | 10'-6" |
| BATTER | NONE | NONE | 100 : 2 | 100 : 3 | 100 : 4 |
| ⓐ BARS | #7 @ 12 | #7 @ 10 | #7 @ 12 | #7 @ 12 | #7 @ 10 |
| ⓑ BARS | #7 @ 12 | #7 @ 10 | #8 @ 12 | #9 @ 12 | #10 @ 10 |
| Ser: B', $q_o'$ | 6.2, 1.4 | 6.1, 1.8 | 6.4, 2.1 | 7.0, 2.5 | 7.7, 2.8 |
| Str: B', $q_o$ | 6.2, 2.4 | 6.1, 2.9 | 5.3, 3.0 | 6.0, 3.5 | 6.6, 4.0 |
| Ext I: B', $q_o$ | 4.4, 1.5 | 4.1, 2.2 | 4.0, 3.1 | 4.1, 3.9 | 4.2, 4.8 |
| Ext II: B', $q_o$ | 2.5, 2.7 | 3.1, 3.0 | 3.8, 3.2 | 4.9, 3.3 | 5.8, 3.5 |

## DESIGN CONDITIONS:

Design H may be exceeded by 6" before going to the next size. Special footing design is required where foundation material is incapable of supporting bearing stress listed in the table.

## DESIGN NOTES:

DESIGN: AASHTO LRFD Bridge Design Specifications, 4th Edition with California Amendments

LS: Varied surcharge on level ground surface

DC: Stem Architectural Treatment of thickness up to 6" of concrete (75 psf) considered

CT: 54 kip transverse force applied at He = 32", distributed over 10 feet at the top of wall and 1 : 1 distribution down and outward. Distribution below footing taken no less than 40'.

SEISMIC: $k_h = 0.2$
$k_v = 0.0$

SOIL: $\phi = 34°$
$\gamma = 120$ pcf

REINFORCED CONCRETE: f'c = 3,600 psi
fy = 60,000 psi

LOAD COMBINATIONS AND LIMIT STATES:

| | |
|---|---|
| Service I | Q = 1.00DC+1.00EV+1.00EH+1.00LS |
| Strength I | Q = αDC+βEV+ηEH+1.75LS |
| Extreme I | Q = 1.00DC+1.00EV+1.00EH+1.00EQD+1.00EQE |
| Extreme II | Q = 1.00DC+1.00EV+1.00EH+1.00CT |

Where:

| | |
|---|---|
| Q: | Force Effects |
| α: | 1.25 or 0.90, Whichever Controls Design |
| β: | 1.35 or 1.00, Whichever Controls Design |
| η: | 1.50 or 0.90, Whichever Controls Design |
| DC: | Dead Load of Structure Components |
| EH: | Horizontal Earth Fill Pressure |
| EV: | Vertical Earth Pressure from Earth Fill Weight |
| LS: | Live Load Surcharge |
| EQE: | Seismic Earth Pressure |
| EQD: | Soil and Structural and Nonstructural Components Inertia |
| CT: | Vehicular Collision Force |

## NOTES:

1. At ⓐ bars:
   H ≤ 6', no splices are allowed within 1'-8" above the top of footing.
   H > 6', no splices are allowed within H/4 above the top of footing.

2. Provide #6 @ 8" ⓐ bars in addition to tabulated ⓐ bars over a distance of 8'-0" measured from all expansion joints, begin wall and end wall locations.

STATE OF CALIFORNIA
DEPARTMENT OF TRANSPORTATION

# RETAINING WALL TYPE 5 (CASE 1)

NO SCALE

RSP B3-4A DATED APRIL 20, 2012 SUPPLEMENTS THE STANDARD PLANS BOOK DATED 2010.

**REVISED STANDARD PLAN RSP B3-4A**

**2010 REVISED STANDARD PLAN RSP B3-4A**

3-1-12

| Dist | COUNTY | ROUTE | POST MILES TOTAL PROJECT | SHEET No. | TOTAL SHEETS |
|---|---|---|---|---|---|
| 10 | Sta | 108 | 31.2 | 24 | 30 |

REGISTERED CIVIL ENGINEER

April 20, 2012
PLANS APPROVAL DATE

REGISTERED PROFESSIONAL ENGINEER Gary Wang No. C58298 Exp. 6-30-12 CIVIL STATE OF CALIFORNIA

THE STATE OF CALIFORNIA OR ITS OFFICERS OR AGENTS SHALL NOT BE RESPONSIBLE FOR THE ACCURACY OR COMPLETENESS OF SCANNED COPIES OF THIS PLAN SHEET.

TO ACCOMPANY PLANS DATED 3-17-14

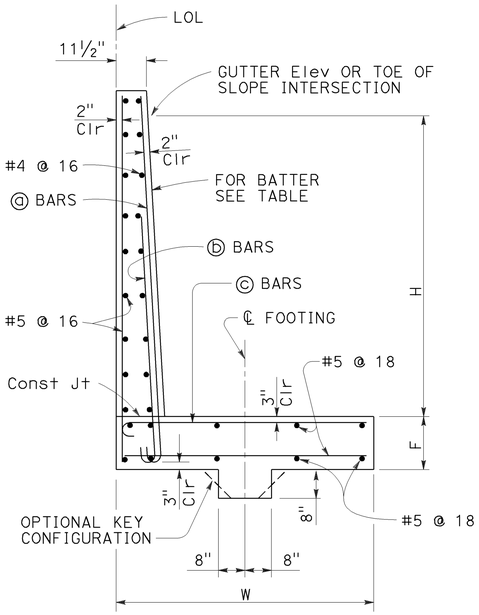


SPREAD FOOTING SECTION

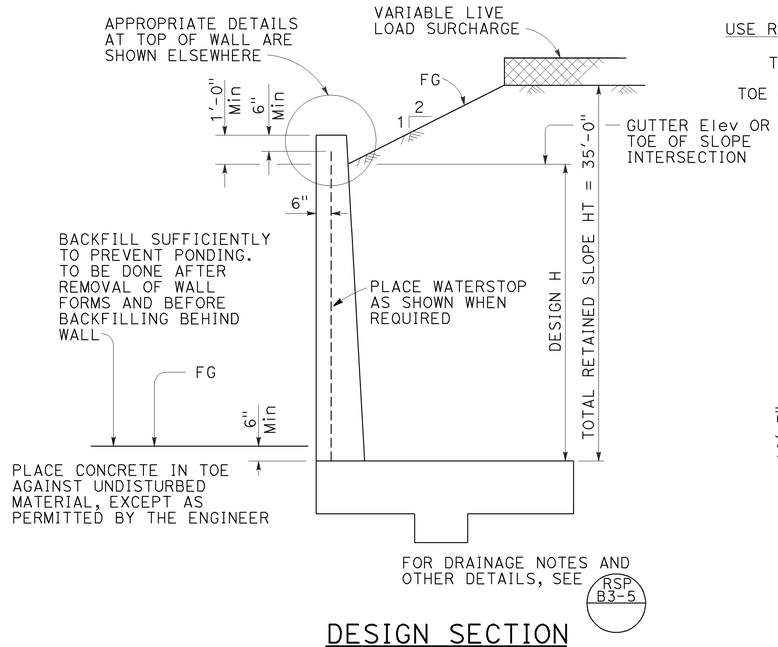


DESIGN SECTION

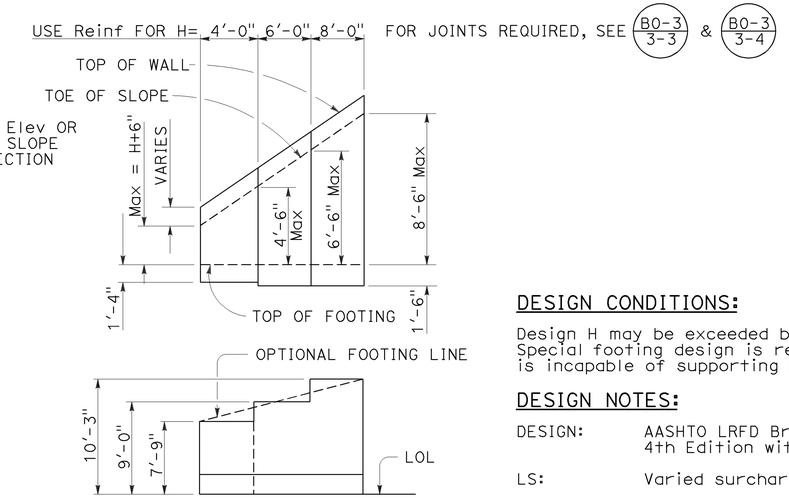


TYPICAL LAYOUT EXAMPLE

## DESIGN CONDITIONS:

Design H may be exceeded by 6" before going to the next size. Special footing design is required where foundation material is incapable of supporting bearing stress listed in the table.

## DESIGN NOTES:

DESIGN: AASHTO LRFD Bridge Design Specifications, 4th Edition with California Amendments

LS: Varied surcharge on level ground surface

DC: Stem Architectural Treatment of thickness up to 6" of concrete (75 psf) considered

SEISMIC: $k_h = 0.2$
$k_v = 0.0$

SOIL: $\phi = 34°$
$\gamma = 120$ pcf

REINFORCED CONCRETE: $f'c = 3{,}600$ psi
$fy = 60{,}000$ psi

LOAD COMBINATIONS AND LIMIT STATES:

| | |
|---|---|
| Service I | $Q = 1.00DC+1.00EV+1.00EH+1.00LS$ |
| Strength I | $Q = \alpha DC+\beta EV+\eta EH+1.75LS$ |
| Extreme I | $Q = 1.00DC+1.00EV+1.00EH+1.00EQD+1.00EQE$ |

Where:

| | |
|---|---|
| Q: | Force Effects |
| α: | 1.25 or 0.90, Whichever Controls Design |
| β: | 1.35 or 1.00, Whichever Controls Design |
| η: | 1.50 or 0.90, Whichever Controls Design |
| DC: | Dead Load of Structure Components |
| EH: | Horizontal Earth Fill Pressure |
| EV: | Vertical Earth Pressure from Earth Fill Weight |
| LS: | Live Load Surcharge |
| EQE: | Seismic Earth Pressure |
| EQD: | Soil and Structural and Nonstructural Components Inertia |

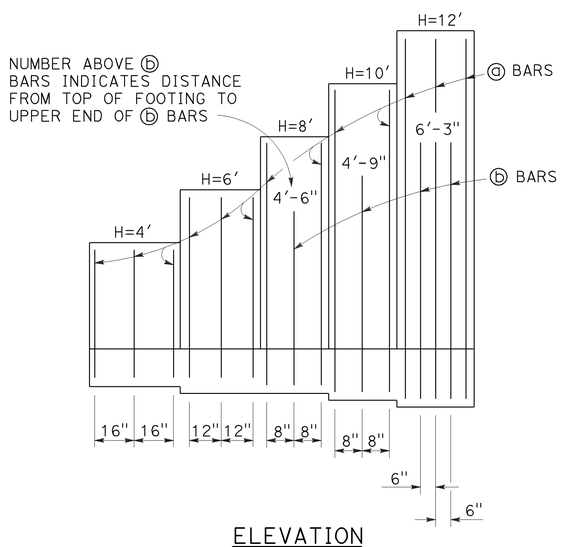


ELEVATION

## SYMBOLS:

Ser - service limit state I
Str - strength limit state I
Ext - extreme event limit state I
B' - effective footing width (ft)
$q'_o$ - net bearing stress (ksf), OG assumed to be FG at toe
$q_o$ - gross uniform bearing stress (ksf)

TABLE OF REINFORCING STEEL, DIMENSIONS AND DATA

| DESIGN H | 4' | 6' | 8' | 10' | 12' |
|---|---|---|---|---|---|
| W | 7'-9" | 9'-0" | 10'-3" | 11'-6" | 13'-3" |
| F SPREAD FOOTING | 1'-4" | 1'-6" | 1'-6" | 1'-6" | 1'-10" |
| BATTER | NONE | NONE | NONE | 100 : 3 | 100 : 5 |
| ⓐ BARS | #5 @ 16 | #5 @ 12 | #5 @ 16 | #6 @ 16 | #5 @ 12 |
| ⓑ BARS | NONE | NONE | #6 @ 16 | #6 @ 16 | #6 @ 12 |
| ⓒ BARS | #7 @ 8 | #7 @ 12 | #8 @ 8 | #9 @ 8 | #10 @ 6 |
| Ser: B', $q'_o$ | 5.2,1.3 | 6.0,1.8 | 9.1,1.8 | 10.0,2.3 | 11.4,2.7 |
| Str: B', $q_o$ | 3.6,2.2 | 4.1,2.8 | 4.8,3.4 | 5.5,3.9 | 6.7,4.3 |
| Ext: B', $q_o$ | 3.7,2.9 | 3.6,4.5 | 3.7,5.9 | 3.9,7.2 | 4.4,8.4 |

## NOTES:

1. At ⓐ and ⓑ bars:
   H ≤ 6', no splices are allowed within 1'-8" above the top of footing.
   H > 6', no splices are allowed within H/4 above the top of footing.

STATE OF CALIFORNIA
DEPARTMENT OF TRANSPORTATION

# RETAINING WALL TYPE 5 (CASE 2)

NO SCALE

RSP B3-4B DATED APRIL 20, 2012 SUPPLEMENTS THE STANDARD PLANS BOOK DATED 2010.

**REVISED STANDARD PLAN RSP B3-4B**

**2010 REVISED STANDARD PLAN RSP B3-4B**

3-30-12

| Dist | COUNTY | ROUTE | POST MILES TOTAL PROJECT | SHEET No. | TOTAL SHEETS |
|---|---|---|---|---|---|
| 10 | Sta | 108 | 31.2 | 25 | 30 |

REGISTERED CIVIL ENGINEER

April 20, 2012
PLANS APPROVAL DATE

REGISTERED PROFESSIONAL ENGINEER Gary Wang No. C58298 Exp. 6-30-12 CIVIL STATE OF CALIFORNIA

*THE STATE OF CALIFORNIA OR ITS OFFICERS OR AGENTS SHALL NOT BE RESPONSIBLE FOR THE ACCURACY OR COMPLETENESS OF SCANNED COPIES OF THIS PLAN SHEET.*

TO ACCOMPANY PLANS DATED 3-17-14

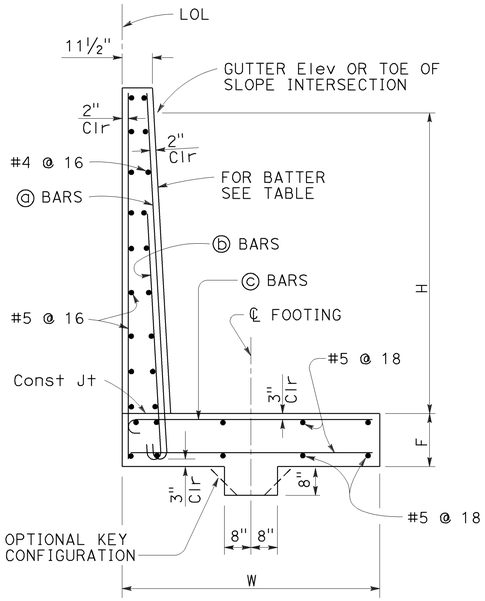


## SPREAD FOOTING SECTION

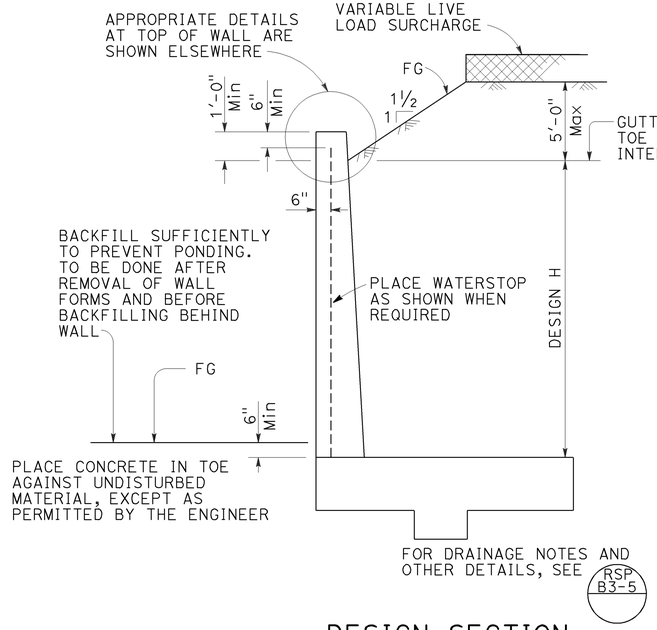


## DESIGN SECTION

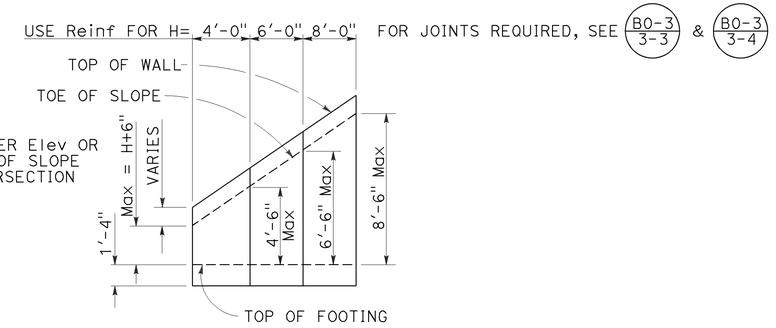


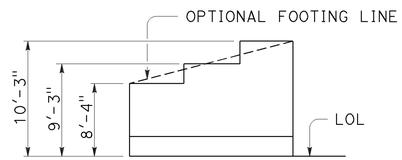


## TYPICAL LAYOUT EXAMPLE

## DESIGN CONDITIONS:

Design H may be exceeded by 6" before going to the next size. Special footing design is required where foundation material is incapable of supporting bearing stress listed in the table.

## DESIGN NOTES:

DESIGN: AASHTO LRFD Bridge Design Specifications, 4th Edition with California Amendments

LS: Varied surcharge on level ground surface

DC: Stem Architectural Treatment of thickness up to 6" of concrete (75 psf) considered

SEISMIC: $k_h = 0.2$
$k_v = 0.0$

SOIL: $\phi = 34°$
$\gamma = 120$ pcf

REINFORCED CONCRETE: $f'c = 3{,}600$ psi
$fy = 60{,}000$ psi

LOAD COMBINATIONS AND LIMIT STATES:

| | |
|---|---|
| Service I | $Q = 1.00DC+1.00EV+1.00EH+1.00LS$ |
| Strength I | $Q = \alpha DC+\phi EV+\eta EH+1.75LS$ |
| Extreme I | $Q = 1.00DC+1.00EV+1.00EH+1.00EQD+1.00EQE$ |

Where:

| | |
|---|---|
| Q: | Force Effects |
| α: | 1.25 or 0.90, Whichever Controls Design |
| ϕ: | 1.35 or 1.00, Whichever Controls Design |
| η: | 1.50 or 0.90, Whichever Controls Design |
| DC: | Dead Load of Structure Components |
| EH: | Horizontal Earth Fill Pressure |
| EV: | Vertical Earth Pressure from Earth Fill Weight |
| LS: | Live Load Surcharge |
| EQE: | Seismic Earth Pressure |
| EQD: | Soil and Structural and Nonstructural Components Inertia |

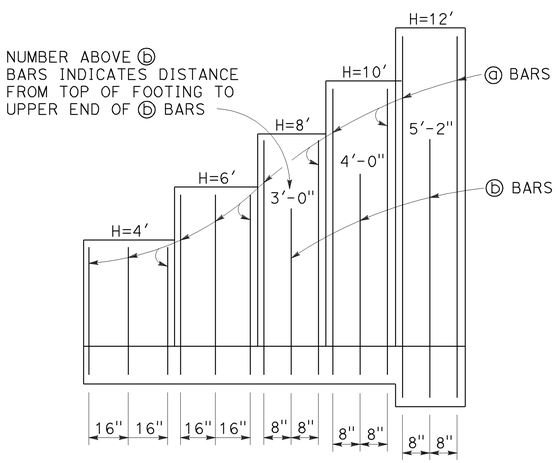


## ELEVATION

## SYMBOLS:

Ser - service limit state I
Str - strength limit state I
Ext - extreme event limit state I
B' - effective footing width (ft)
$q'_o$ - net bearing stress (ksf), OG assumed to be FG at toe
$q_o$ - gross uniform bearing stress (ksf)

| TABLE OF REINFORCING STEEL, DIMENSIONS AND DATA | | | | | |
|---|---|---|---|---|---|
| DESIGN H | 4' | 6' | 8' | 10' | 12' |
| W | 8'-4" | 9'-3" | 10'-3" | 11'-0" | 12'-4" |
| F SPREAD FOOTING | 1'-4" | 1'-4" | 1'-4" | 1'-4" | 1'-7" |
| BATTER | NONE | NONE | NONE | 100 : 3 | 100 : 5 |
| ⓐ BARS | #5 @ 16 | #5 @ 16 | #5 @ 16 | #5 @ 16 | #5 @ 16 |
| ⓑ BARS | NONE | NONE | #5 @ 16 | #5 @ 16 | #5 @ 16 |
| ⓒ BARS | #6 @ 8 | #7 @ 8 | #8 @ 8 | #9 @ 8 | #9 @ 8 |
| Ser: B', $q'_o$ | 5.6, 1.4 | 6.4, 1.8 | 7.4, 2.2 | 7.8, 2.6 | 8.9, 3.0 |
| Str: B', $q_o$ | 3.6, 2.4 | 4.2, 3.0 | 5.0, 3.4 | 5.3, 4.0 | 6.4, 4.2 |
| Ext: B', $q_o$ | 4.4, 2.1 | 4.2, 3.0 | 4.2, 4.0 | 3.9, 5.5 | 4.2, 6.7 |

## NOTES:

1. At ⓐ and ⓑ bars:
   H ≤ 6', no splices are allowed within 1'-8" above the top of footing.
   H > 6', no splices are allowed within H/4 above the top of footing.

STATE OF CALIFORNIA
DEPARTMENT OF TRANSPORTATION

# RETAINING WALL TYPE 5 (CASE 3)

NO SCALE

RSP B3-4C DATED APRIL 20, 2012 SUPPLEMENTS THE STANDARD PLANS BOOK DATED 2010.

**REVISED STANDARD PLAN RSP B3-4C**

**2010 REVISED STANDARD PLAN RSP B3-4C**

3-30-12

| Dist | COUNTY | ROUTE | POST MILES TOTAL PROJECT | SHEET No. | TOTAL SHEETS |
|---|---|---|---|---|---|
| 10 | Sta | 108 | 31.2 | 26 | 30 |

REGISTERED CIVIL ENGINEER

April 20, 2012
PLANS APPROVAL DATE

REGISTERED PROFESSIONAL ENGINEER Gary Wang No. C58298 Exp. 6-30-12 CIVIL STATE OF CALIFORNIA

*THE STATE OF CALIFORNIA OR ITS OFFICERS OR AGENTS SHALL NOT BE RESPONSIBLE FOR THE ACCURACY OR COMPLETENESS OF SCANNED COPIES OF THIS PLAN SHEET.*

TO ACCOMPANY PLANS DATED 3-17-14

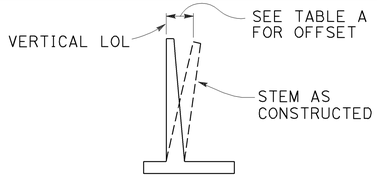


## APPROXIMATE WALL OFFSET VALUES

Values for offseting forms to be determined by the Engineer.

TABLE A

| H | OFFSET |
|---|---|
| 4'-12' | H/200 |
| 14'-16' | H/160 |
| 18'-20' | H/140 |
| 22'-24' | H/130 |
| 26'-36' | 2½" |

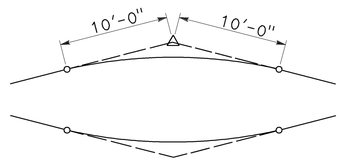


## 20'-0" VC AT TOP OF WALL SLOPE CHANGE

Where shown on the plans

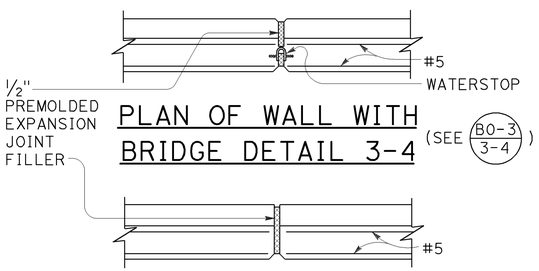


## PLAN OF WALL WITH BRIDGE DETAIL 3-4

(SEE B0-3 / 3-4)

## PLAN OF WALL WITH EXPANSION JOINT ONLY

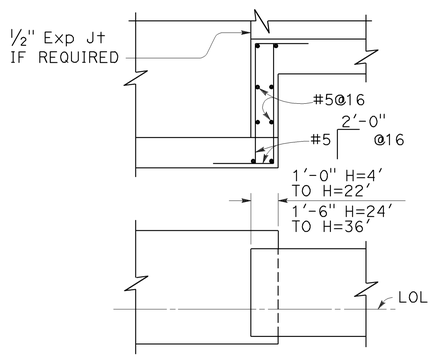


## FOOTING STEP

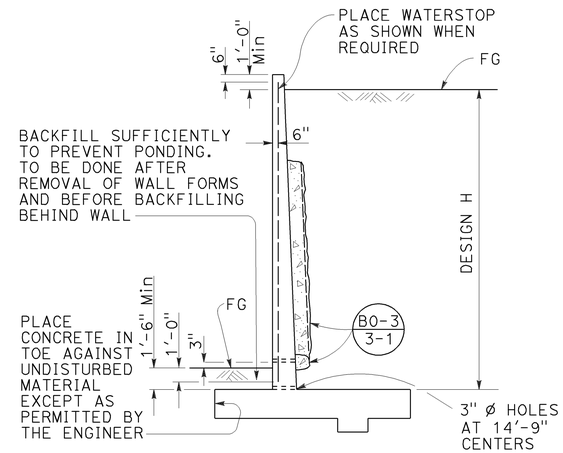


## DESIGN AND DRAINAGE

## DESIGN CONDITIONS:

Design "H" may be exceeded by 6" before going to the next size. Special footing design is required where foundation material is incapable of supporting bearing stress listed in table

Return wall not required unless shown elsewhere

## DESIGN NOTES:

DESIGN: AASHTO LRFD Bridge Design Specifications, 4th edition with California Amendments

LIVE LOAD: Surcharge on level ground surface

SOIL: $\phi$ = 34°
$\gamma$ = 120 pcf

REINFORCED CONCRETE: fy = 60,000 psi
fc' = 3,600 psi

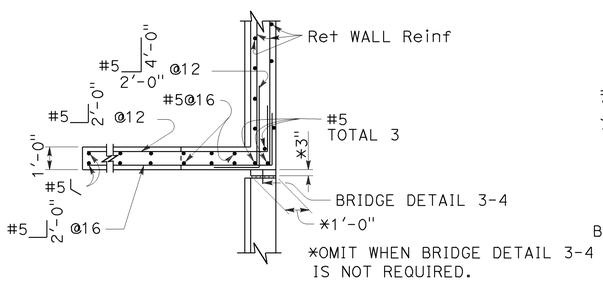


## PLAN
(For return wall Type "A")

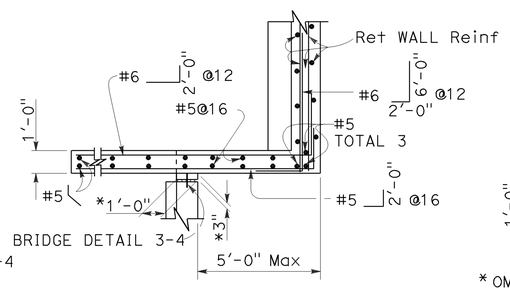


## PLAN
(For return wall Type "B")

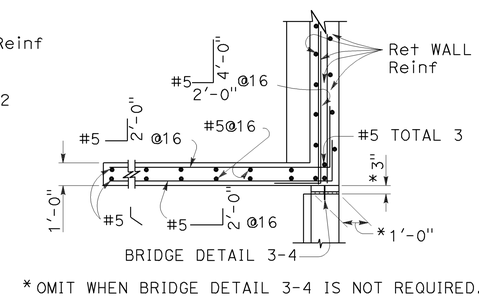


## PLAN
(For return wall Type "C")

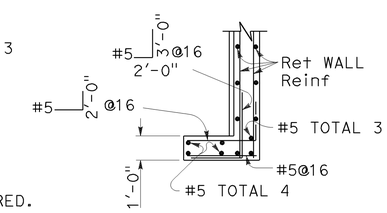


## PLAN
(For return wall Type "D")

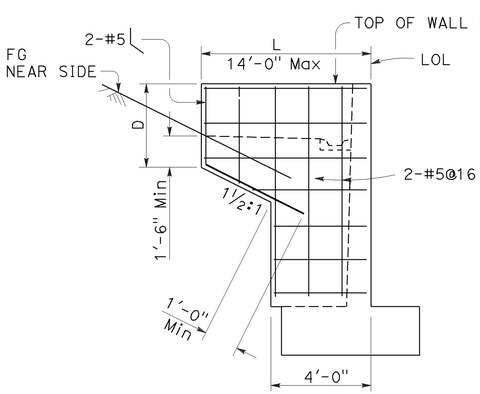


## ELEVATION
## RETURN WALL TYPE "A"
Use where H=8' or less

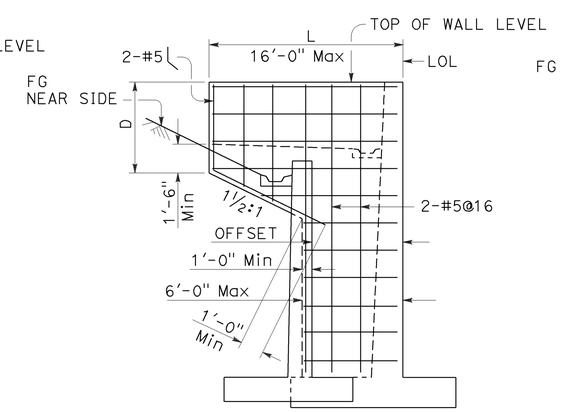


## ELEVATION
## RETURN WALL TYPE "B"
Use where H=10' or more on offset walls

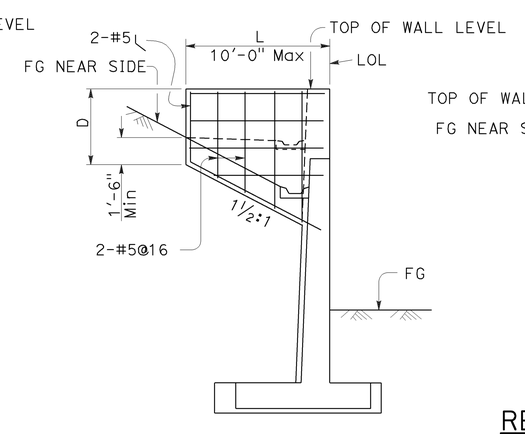


## ELEVATION
## RETURN WALL TYPE "C"
Use where H=10' or more on straight walls

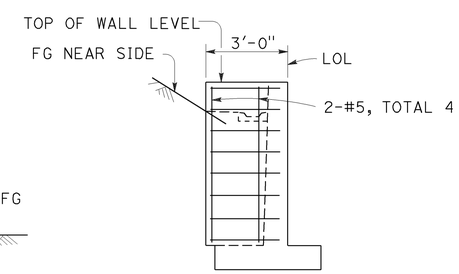


## ELEVATION
## RETURN WALL TYPE "D"
Use where H=6' or less

STATE OF CALIFORNIA
DEPARTMENT OF TRANSPORTATION

# RETAINING WALL DETAILS No. 1

NO SCALE

RSP B3-5 DATED APRIL 20, 2012 SUPERSEDES STANDARD PLAN B3-5
DATED MAY 20, 2011 - PAGE 277 OF THE STANDARD PLANS BOOK DATED 2010.

**REVISED STANDARD PLAN RSP B3-5**

**2010 REVISED STANDARD PLAN RSP B3-5**

| Dist | COUNTY | ROUTE | POST MILES TOTAL PROJECT | SHEET No. | TOTAL SHEETS |
|---|---|---|---|---|---|
| 10 | Sta | 108 | 31.2 | 27 | 30 |

REGISTERED CIVIL ENGINEER

October 21, 2011
PLANS APPROVAL DATE

REGISTERED PROFESSIONAL ENGINEER Tillat Satter No. C42892 Exp. 3-31-12 CIVIL STATE OF CALIFORNIA

*THE STATE OF CALIFORNIA OR ITS OFFICERS OR AGENTS SHALL NOT BE RESPONSIBLE FOR THE ACCURACY OR COMPLETENESS OF SCANNED COPIES OF THIS PLAN SHEET.*

TO ACCOMPANY PLANS DATED 3-17-14

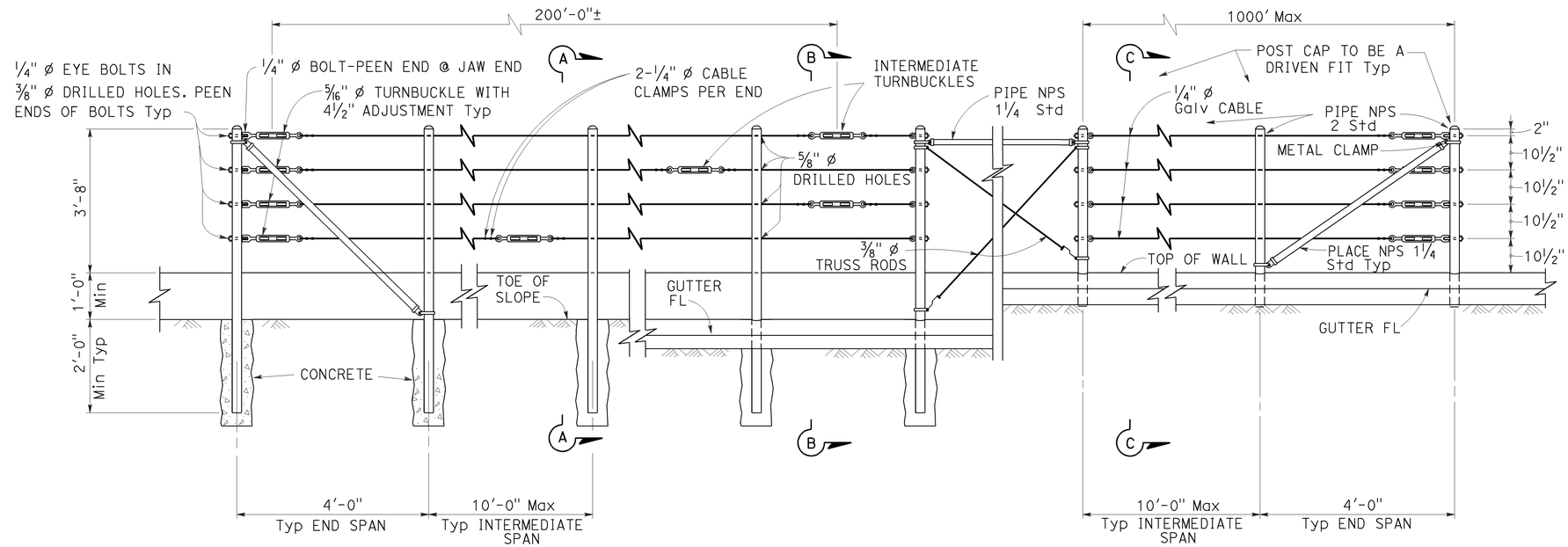


EXISTING WALL (WITHOUT GUTTER)
Existing

RETAINING WALL (WITH GUTTER)
Existing

RETAINING WALL (WITH GUTTER)
New construction

ELEVATION

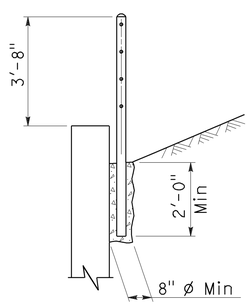


SECTION A-A
Existing

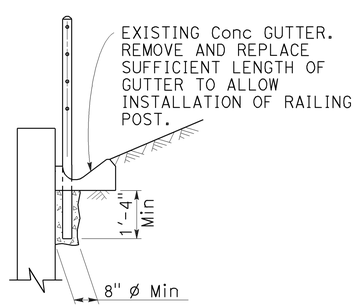


SECTION B-B
Existing

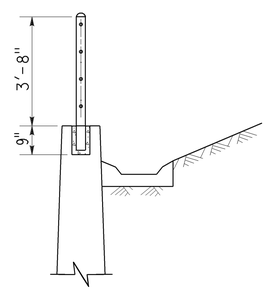


SECTION C-C
New construction

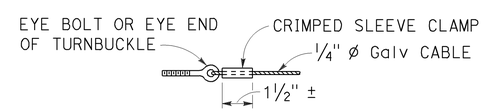


ALTERNATIVE CABLE CONNECTION

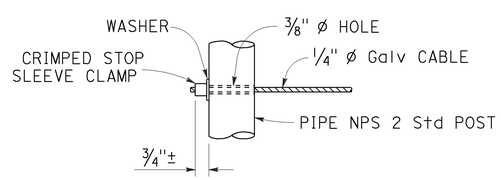


ALTERNATIVE DEAD END ANCHORAGE

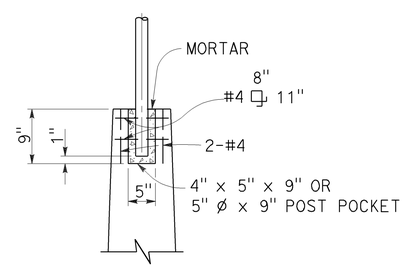


POST POCKET

NOTES:

1. Maximum distance between turnbuckles shall be 200'-0"±.
2. Intermediate turnbuckles to be placed in adjacent spans.
3. Cable shall not be spliced between intermediate turnbuckles and end posts.
4. Posts to be vertical.
5. Alignment of holes in posts may vary to conform to slope of top of retaining wall.
6. The Contractor shall verify all dependent dimensions in the field before ordering or fabricating any material.
7. Line posts shall be braced horizontally and trussed diagonally in both directions at intervals not to exceed 1000'.
8. Post pockets to be centered in top of wall.
9. Typical end spans, braced in both directions, shall be constructed at changes in line where the angle of deflection is 15° or more.
10. Provide thimbles at all cable loops.

STATE OF CALIFORNIA
DEPARTMENT OF TRANSPORTATION

# CABLE RAILING

NO SCALE

RSP B11-47 DATED OCTOBER 21, 2011 SUPERSEDES STANDARD PLAN B11-47 DATED MAY 20, 2011 - PAGE 293 OF THE STANDARD PLANS BOOK DATED 2010.

**REVISED STANDARD PLAN RSP B11-47**

**2010 REVISED STANDARD PLAN RSP B11-47**

9-14-11

| Dist | COUNTY | ROUTE | POST MILES TOTAL PROJECT | SHEET No. | TOTAL SHEETS |
|---|---|---|---|---|---|
| 10 | Sta | 108 | 31.2 | 28 | 30 |

Raymond Don Tsztoo
REGISTERED CIVIL ENGINEER

April 19, 2013
PLANS APPROVAL DATE

REGISTERED PROFESSIONAL ENGINEER
Raymond Don Tsztoo
No. C37332
Exp. 6-30-14
CIVIL
STATE OF CALIFORNIA

THE STATE OF CALIFORNIA OR ITS OFFICERS OR AGENTS SHALL NOT BE RESPONSIBLE FOR THE ACCURACY OR COMPLETENESS OF SCANNED COPIES OF THIS PLAN SHEET.

TO ACCOMPANY PLANS DATED 3-17-14

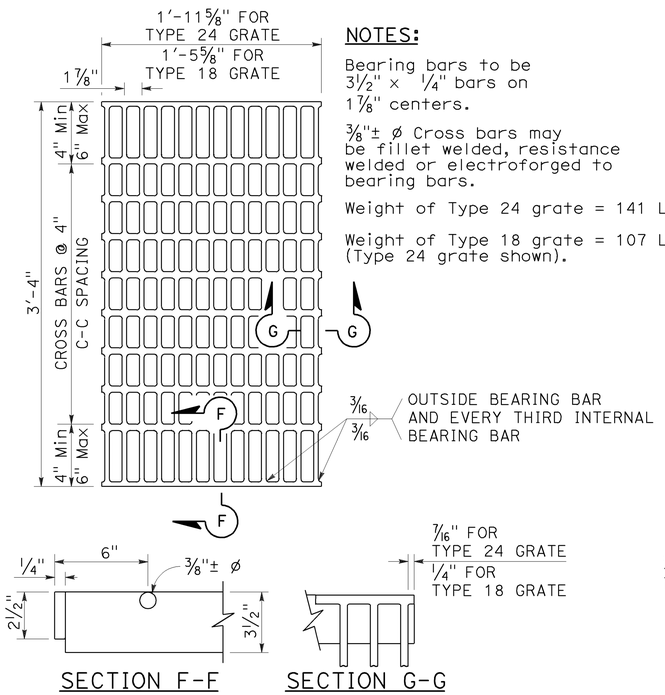


NOTES:

Bearing bars to be 3½" × ¼" bars on 1⅞" centers.

⅜"± ø Cross bars may be fillet welded, resistance welded or electroforged to bearing bars.

Weight of Type 24 grate = 141 LBS.

Weight of Type 18 grate = 107 LBS. (Type 24 grate shown).

SECTION F-F SECTION G-G

## TYPE 18-10 AND 24-13 GRATE

(Welded Steel)

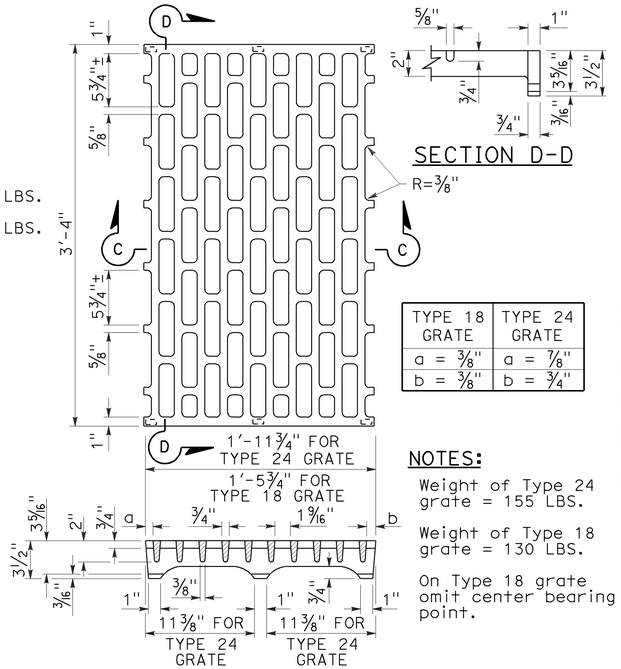


NOTES:

Weight of Type 24 grate = 155 LBS.

Weight of Type 18 grate = 130 LBS.

On Type 18 grate omit center bearing point.

| TYPE 18 GRATE | TYPE 24 GRATE |
|---|---|
| a = ⅜" | a = ⅞" |
| b = ⅜" | b = ¾" |

SECTION D-D

SECTION C-C

## TYPE 18-8C AND 24-10C GRATE

(Cast ductile iron)

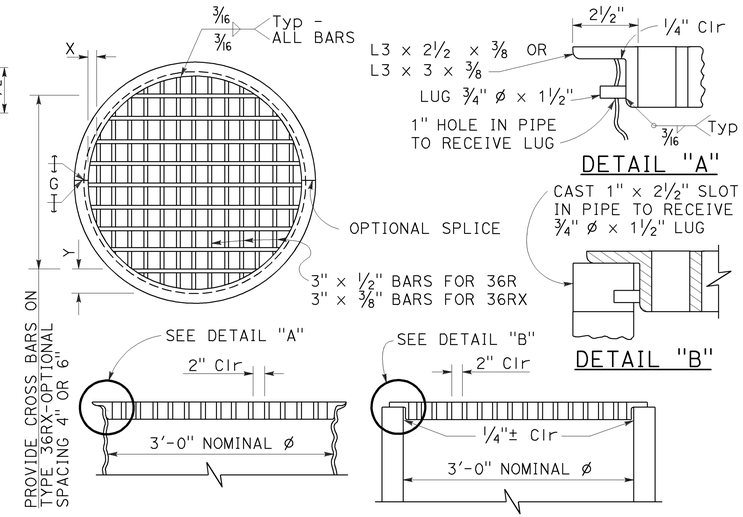


## TYPE 36R AND 36RX GRATE DETAILS

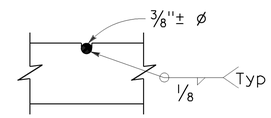


⅜"± ø Cross bars may be fillet welded, resistance welded or electroforged to bearing bars.

## CROSS BAR DETAIL TYPE 36RX GRATE (WELDED STEEL)

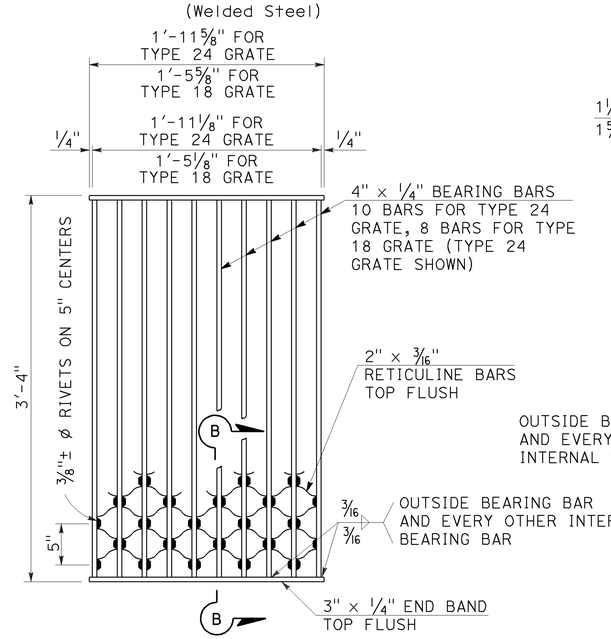


NOTES:

Weight of Type 24 grate = 182 LBS.
Weight of Type 18 grate = 145 LBS.

SECTION B-B

## TYPE 18-8S AND 24-10S GRATE

(Welded Steel) Reticuline type

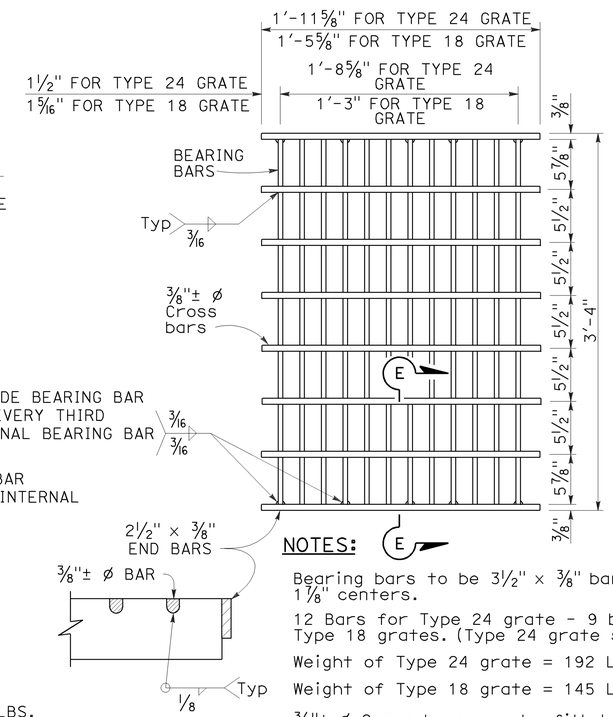


NOTES:

Bearing bars to be 3½" × ⅜" bars on 1⅞" centers.

12 Bars for Type 24 grate - 9 bars for Type 18 grates. (Type 24 grate shown).

Weight of Type 24 grate = 192 LBS.

Weight of Type 18 grate = 145 LBS.

⅜"± ø Cross bars may be fillet welded, resistance welded or electroforged to bearing bars.

SECTION E-E

## TYPE 18-9X AND 24-12X GRATE

(Welded Steel)

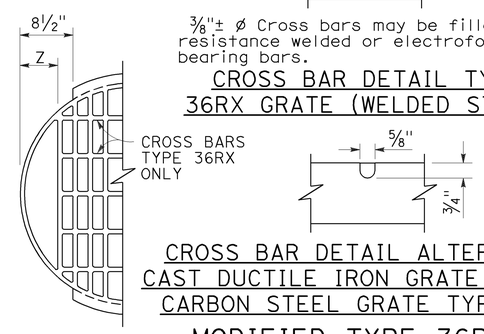


## CROSS BAR DETAIL ALTERNATIVE CAST DUCTILE IRON GRATE OR CAST CARBON STEEL GRATE TYPE 36RX

## MODIFIED TYPE 36R AND 36RX GRATE FOR ODI INLET

NOTES:

1. When alternative grates are allowed - Final pay based on alternative with the lesser weight.
2. Use frame shown on Standard Plan D74A, D74B or RSP D77A as appropriate.
3. When Type 24-10S, 24-12X or 24-13 grates are used with GDO Inlets, a ¼" × 3½" × 3'-4⅞" steel bar shall be welded across the center of inlet frame to separate the individual grates.
4. See Revised Standard Plan RSP D77A for connecting chain to welded grate and frame. When chain is required, do not use cast ductile iron grate.

GRATE BAR SPACING TABLE

| TYPE | No. OF BARS | CLEAR BAR SPACING | X | Y 4" SPACING | Y 6" SPACING | Z |
|---|---|---|---|---|---|---|
| 36R | 13 | 2" | 2⅛" | - | - | - |
| 36RX (STEEL) | 15 | 2" | 9/16" | 3¾" | 5¾" | - |
| 36RX (CAST) | 13 | 2" | 2⅛" | 3¾" | 5¾" | - |
| 36R Mod | 12 | 2" | 2⅛" | - | - | 5" |
| 36RX Mod (STEEL) | 13 | 2" | 9/16" | 3¾" | 5¾" | 5 11/16" |
| 36RX Mod (CAST) | 12 | 2" | 2⅛" | 3¾" | 5¾" | 5" |

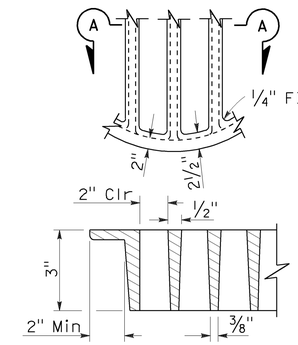


SECTION A-A

## ALTERNATIVE CAST DUCTILE IRON GRATE OR CAST CARBON STEEL GRATE TYPE 36R AND 36RX

BASIS FOR Misc IRON AND STEEL FINAL PAY WEIGHTS FOR DRAINAGE INLETS

| INLET TYPE | GRATE TYPE | No. OF GRATES | WEIGHT LB |
|---|---|---|---|
| GDO (SEE NOTE 4) | 24-10C | 2 | 391 |
| | 24-10S | 2 | 456 |
| | 24-12X | 2 | 473 |
| | 24-13 | 2 | 374 |
| G0,G0L,G1,G2, G3,G4 (TYPE 24) | 24-10C | 1 | 202 |
| | 24-10S | 1 | 229 |
| | 24-12X | 1 | 239 |
| | 24-13 | 1 | 188 |
| G4 (TYPE 18) G5,G6 | 18-8S | 1 | 187 |
| | 18-9X | 1 | 187 |
| | 18-10 | 1 | 149 |
| GT1,GT2 | 18-8S | 2 | 374 |
| | 18-9X | 2 | 374 |
| | 18-10 | 2 | 298 |
| GT3,GT4 | 24-10C | 2 | 404 |
| | 24-10S | 2 | 458 |
| | 24-12X | 2 | 478 |
| | 24-13 | 2 | 376 |
| ODI | 36RX (Mod) | 1 | 196 |
| GMP,GCP,GCPI | 36RX | 1 | 215 |
| ODI | 36R (Mod) | 1 | 220 |
| GMP,GCP,GCPI | 36R | 1 | 236 |
| TRASH RACK | | | 22 |
| GRATE CHAIN | | | 3 |

STATE OF CALIFORNIA
DEPARTMENT OF TRANSPORTATION

# GRATE DETAILS No. 2

NO SCALE

RSP D77B DATED APRIL 19, 2013 SUPERSEDES RSP D77B DATED JULY 20, 2012 AND STANDARD PLAN D77B DATED MAY 20, 2011 - PAGE 165 OF THE STANDARD PLANS BOOK DATED 2010.

**REVISED STANDARD PLAN RSP D77B**

**2010 REVISED STANDARD PLAN RSP D77B**

4-4-13

| Dist | COUNTY | ROUTE | POST MILES TOTAL PROJECT | SHEET No. | TOTAL SHEETS |
|---|---|---|---|---|---|
| 10 | Sta | 108 | 31.2 | 29 | 30 |

REGISTERED CIVIL ENGINEER

July 19, 2013
PLANS APPROVAL DATE

REGISTERED PROFESSIONAL ENGINEER
Gurinderpal Bhullar
No. C48815
Exp. 9-30-14
CIVIL
STATE OF CALIFORNIA

THE STATE OF CALIFORNIA OR ITS OFFICERS OR AGENTS SHALL NOT BE RESPONSIBLE FOR THE ACCURACY OR COMPLETENESS OF SCANNED COPIES OF THIS PLAN SHEET.

TO ACCOMPANY PLANS DATED 3-17-14

2010 REVISED STANDARD PLAN RSP T9

## TABLE 1

### TAPER LENGTH CRITERIA AND CHANNELIZING DEVICE SPACING

| SPEED (S) | MINIMUM TAPER LENGTH * FOR WIDTH OF OFFSET 12 FEET (W) | | | | MAXIMUM CHANNELIZING DEVICE SPACING | | |
|---|---|---|---|---|---|---|---|
| | | | | | X | Y | Z ** |
| | TANGENT 2L | MERGING L | SHIFTING L/2 | SHOULDER L/3 | TAPER | TANGENT | CONFLICT |
| mph | ft | ft | ft | ft | ft | ft | ft |
| 20 | 160 | 80 | 40 | 27 | 20 | 40 | 10 |
| 25 | 250 | 125 | 63 | 42 | 25 | 50 | 12 |
| 30 | 360 | 180 | 90 | 60 | 30 | 60 | 15 |
| 35 | 490 | 245 | 123 | 82 | 35 | 70 | 17 |
| 40 | 640 | 320 | 160 | 107 | 40 | 80 | 20 |
| 45 | 1080 | 540 | 270 | 180 | 45 | 90 | 22 |
| 50 | 1200 | 600 | 300 | 200 | 50 | 100 | 25 |
| 55 | 1320 | 660 | 330 | 220 | 55 | 110 | 27 |
| 60 | 1440 | 720 | 360 | 240 | 60 | 120 | 30 |
| 65 | 1560 | 780 | 390 | 260 | 65 | 130 | 32 |
| 70 | 1680 | 840 | 420 | 280 | 70 | 140 | 35 |

* - For other offsets, use the following merging taper length formula for L:
For speed of 40 mph or less, $L = WS^2/60$
For speed of 45 mph or more, $L = WS$

Where: L = Taper length in feet
W = Width of offset in feet
S = Posted speed limit, off-peak 85th-percentile speed prior to work starting, or the anticipated operating speed in mph

** - Use for taper and tangent sections where there are no pavement markings or where there is a conflict between existing pavement markings and channelizers (CA).

## TABLE 2

### LONGITUDINAL BUFFER SPACE AND FLAGGER STATION SPACING

| SPEED * | Min D ** | DOWNGRADE Min D *** | | |
|---|---|---|---|---|
| | | -3% | -6% | -9% |
| mph | ft | ft | ft | ft |
| 20 | 115 | 116 | 120 | 126 |
| 25 | 155 | 158 | 165 | 173 |
| 30 | 200 | 205 | 215 | 227 |
| 35 | 250 | 257 | 271 | 287 |
| 40 | 305 | 315 | 333 | 354 |
| 45 | 360 | 378 | 400 | 427 |
| 50 | 425 | 446 | 474 | 507 |
| 55 | 495 | 520 | 553 | 593 |
| 60 | 570 | 598 | 638 | 686 |
| 65 | 645 | 682 | 728 | 785 |
| 70 | 730 | 771 | 825 | 891 |

* - Speed is posted speed limit, off-peak 85th-percentile speed prior to work starting, or the anticipated operating speed in mph

** - Longitudinal buffer space or flagger station spacing

*** - Use on sustained downgrade steeper than -3 percent and longer than 1 mile.

## TABLE 3

### ADVANCE WARNING SIGN SPACING

| ROAD TYPE | DISTANCE BETWEEN SIGNS * | | |
|---|---|---|---|
| | A | B | C |
| | ft | ft | ft |
| URBAN - 25 mph OR LESS | 100 | 100 | 100 |
| URBAN - MORE THAN 25 mph TO 40 mph | 250 | 250 | 250 |
| URBAN - MORE THAN 40 mph | 350 | 350 | 350 |
| RURAL | 500 | 500 | 500 |
| EXPRESSWAY / FREEWAY | 1000 | 1500 | 2640 |

* - The distances are approximate, are intended for guidance purposes only, and should be applied with engineering judgment. These distances should be adjusted by the Engineer for field conditions, if necessary, by increasing or decreasing the recommmended distances.

STATE OF CALIFORNIA
DEPARTMENT OF TRANSPORTATION

# TRAFFIC CONTROL SYSTEM TABLES FOR LANE AND RAMP CLOSURES

NO SCALE

RSP T9 DATED JULY 19, 2013 SUPERSEDES RSP T9 DATED APRIL 19, 2013 THAT SUPPLEMENTS THE STANDARD PLANS BOOK DATED 2010.

**REVISED STANDARD PLAN RSP T9**

4-30-13

| Dist | COUNTY | ROUTE | POST MILES TOTAL PROJECT | SHEET No. | TOTAL SHEETS |
|---|---|---|---|---|---|
| 10 | Sta | 108 | 31.2 | 30 | 30 |

REGISTERED CIVIL ENGINEER

April 19, 2013
PLANS APPROVAL DATE

REGISTERED PROFESSIONAL ENGINEER Gurinderpal Bhullar No. C48815 Exp. 9-30-14 CIVIL STATE OF CALIFORNIA

*THE STATE OF CALIFORNIA OR ITS OFFICERS OR AGENTS SHALL NOT BE RESPONSIBLE FOR THE ACCURACY OR COMPLETENESS OF SCANNED COPIES OF THIS PLAN SHEET.*

TO ACCOMPANY PLANS DATED 3-17-14

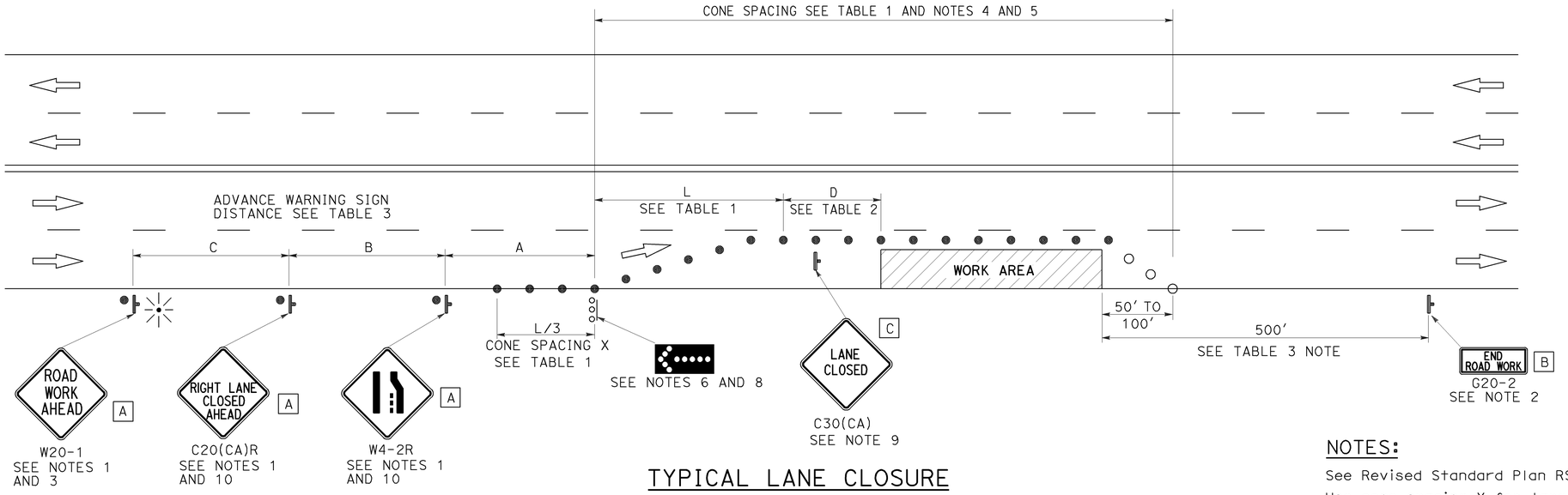


## TYPICAL LANE CLOSURE

## NOTES:

See Revised Standard Plan RSP T9 for tables.

Use cone spacing X for taper segment, Y for tangent segment or Z for conflict situations, as approriate, per Table 1, unless X, Y, or Z cone spacing is shown on this sheet.

Unless otherwise specified in the special provisions, all temporary warning signs shall have black legend on fluorescent orange background.

California codes are designated by (CA). Otherwise, Federal (MUTCD) codes are shown.

## NOTES:

1. Each advance warning sign shall be equipped with at least two flags for daytime closure. Each flag shall be at least 16" x 16" in size and shall be orange or fluorescent red-orange in color. Flashing beacons shall be placed at the locations indicated for lane closure during hours of darkness.
2. A G20-2 "END ROAD WORK" sign, as appropriate, shall be placed at the end of the lane closure unless the end of work area is obvious, or ends within a larger project's limits.
3. If the W20-1 sign would follow within 2000' of a stationary W20-1 or G20-1 "ROAD WORK NEXT _____ MILES", use a C20(CA) sign for the first advance warning sign.
4. All cones used for lane closures during the hours of darkness shall be fitted with retroreflective bands (or sleeves) as specified in the specifications.
5. Portable delineators, placed at one-half the spacing indicated for traffic cones, may be used instead of cones for daytime closures only.
6. Flashing arrow sign shall be either Type I or Type II.
7. For approach speeds over 50 mph, use the "Traffic Control System for Lane Closure On Freeways And Expressways" plan for lane closure details and requirements.
8. A minimum 1500' of sight distance shall be provided where possible for vehicles approaching the first flashing arrow sign. Lane closures shall not begin at the top of crest vertical curve or on a horizontal curve.
9. Place a C30(CA) sign every 2000' throughout length of lane closure.
10. Median lane closures shall conform to the details as shown except that C20(CA)L and W4-2L signs shall be used.
11. At least one person shall be assigned to provide full time maintenance of traffic control devices for lane closure unless, otherwise directed by the Engineer.

## LEGEND

- TRAFFIC CONE
- TRAFFIC CONE (OPTIONAL TAPER)
- TEMPORARY TRAFFIC CONTROL SIGN
- FLASHING ARROW SIGN (FAS)
- FAS SUPPORT OR TRAILER
- PORTABLE FLASHING BEACON

## SIGN PANEL SIZE (Min)

| | |
|---|---|
| A | 48" x 48" |
| B | 36" x 18" |
| C | 30" x 30" |

STATE OF CALIFORNIA
DEPARTMENT OF TRANSPORTATION

# TRAFFIC CONTROL SYSTEM FOR LANE CLOSURE ON MULTILANE CONVENTIONAL HIGHWAYS

NO SCALE

RSP T11 DATED APRIL 19, 2013 SUPERSEDES STANDARD PLAN T11 DATED MAY 20, 2011 - PAGE 239 OF THE STANDARD PLANS BOOK DATED 2010.

**REVISED STANDARD PLAN RSP T11**

**2010 REVISED STANDARD PLAN RSP T11**

4-2-13