Dist	COUNTY	ROUTE	KILOMETER POST TOTAL PROJECT	SHEET No.	TOTAL SHEETS
10	Sta	219,108	3.4/7.9, 44.3/44.9	201	522

Caltrans Metric

REGISTERED CIVIL ENGINEER 6/16/09 DATE

6-28-10
PLANS APPROVAL DATE

REGISTERED PROFESSIONAL ENGINEER WUTHY SENG No. 60114 Exp. 6/30/10 CIVIL STATE OF CALIFORNIA

THE STATE OF CALIFORNIA OR ITS OFFICERS OR AGENTS SHALL NOT BE RESPONSIBLE FOR THE ACCURACY OR COMPLETENESS OF ELECTRONIC COPIES OF THIS PLAN SHEET.

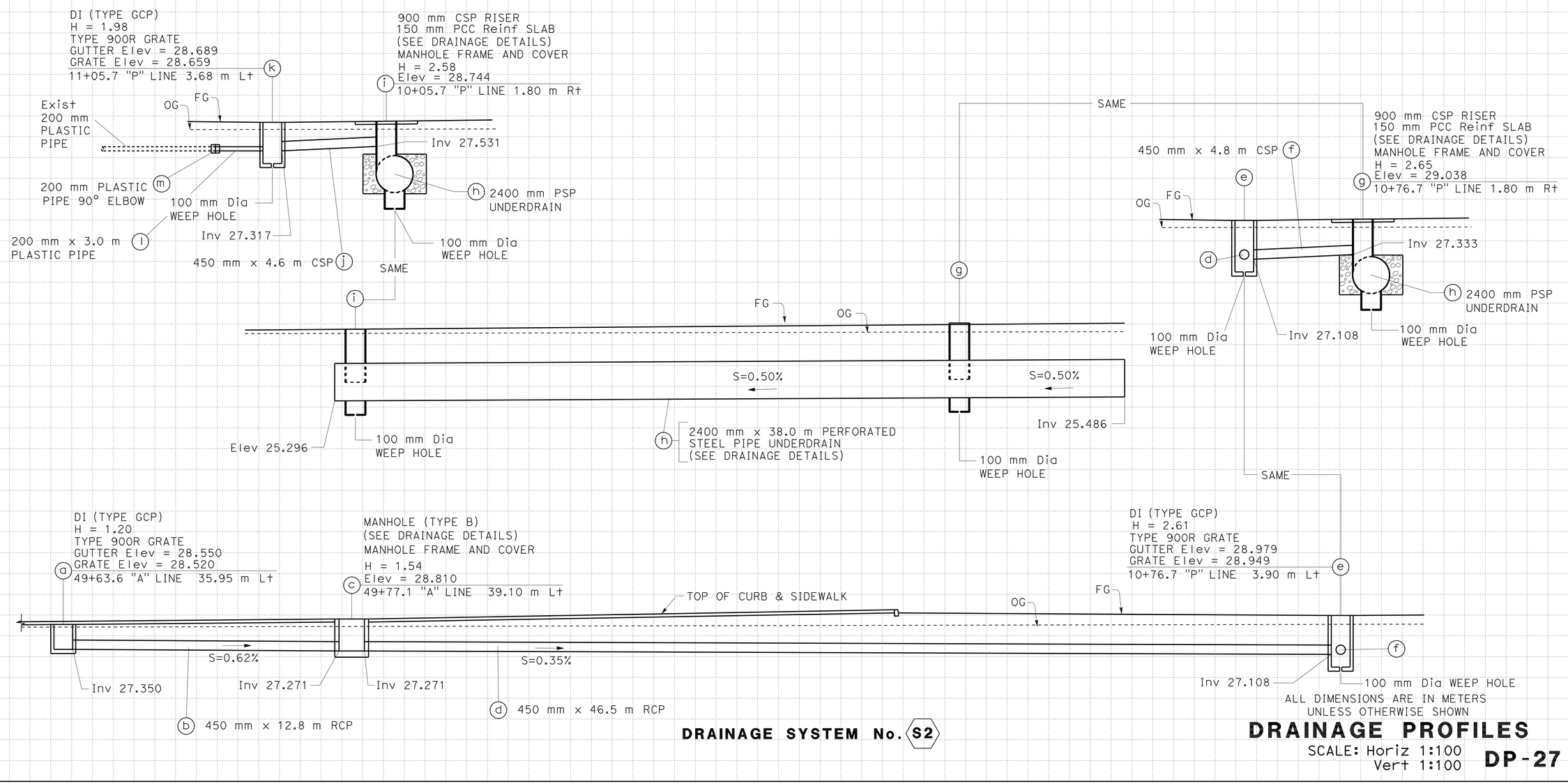

ALL DIMENSIONS ARE IN METERS UNLESS OTHERWISE SHOWN

DRAINAGE SYSTEM No. S2

DRAINAGE PROFILES

SCALE: Horiz 1:100
Vert 1:100

DP-27

Station	
m^3 Exc	
m^3 Emb	

STATE OF CALIFORNIA - DEPARTMENT OF TRANSPORTATION
Caltrans DESIGN

FUNCTIONAL SUPERVISOR: JOSE HUERTA
CALCULATED-DESIGNED BY: WUTHY SENG
CHECKED BY: HERNANDO RAPOSAS
REVISED BY: WS
DATE REVISED: 4/13/10

LAST REVISION 00-00-00
DATE PLOTTED => 26-JAN-2012
TIME PLOTTED => 10:55

Dist	COUNTY	ROUTE	KILOMETER POST TOTAL PROJECT	SHEET No.	TOTAL SHEETS
10	Sta	219,108	3.4/7.9, 44.3/44.9	202	522

Wuthy Seng 6/16/09
REGISTERED CIVIL ENGINEER DATE

6-28-10
PLANS APPROVAL DATE

REGISTERED PROFESSIONAL ENGINEER WUTHY SENG No. 60114 Exp. 6/30/10 CIVIL STATE OF CALIFORNIA

THE STATE OF CALIFORNIA OR ITS OFFICERS OR AGENTS SHALL NOT BE RESPONSIBLE FOR THE ACCURACY OR COMPLETENESS OF ELECTRONIC COPIES OF THIS PLAN SHEET.

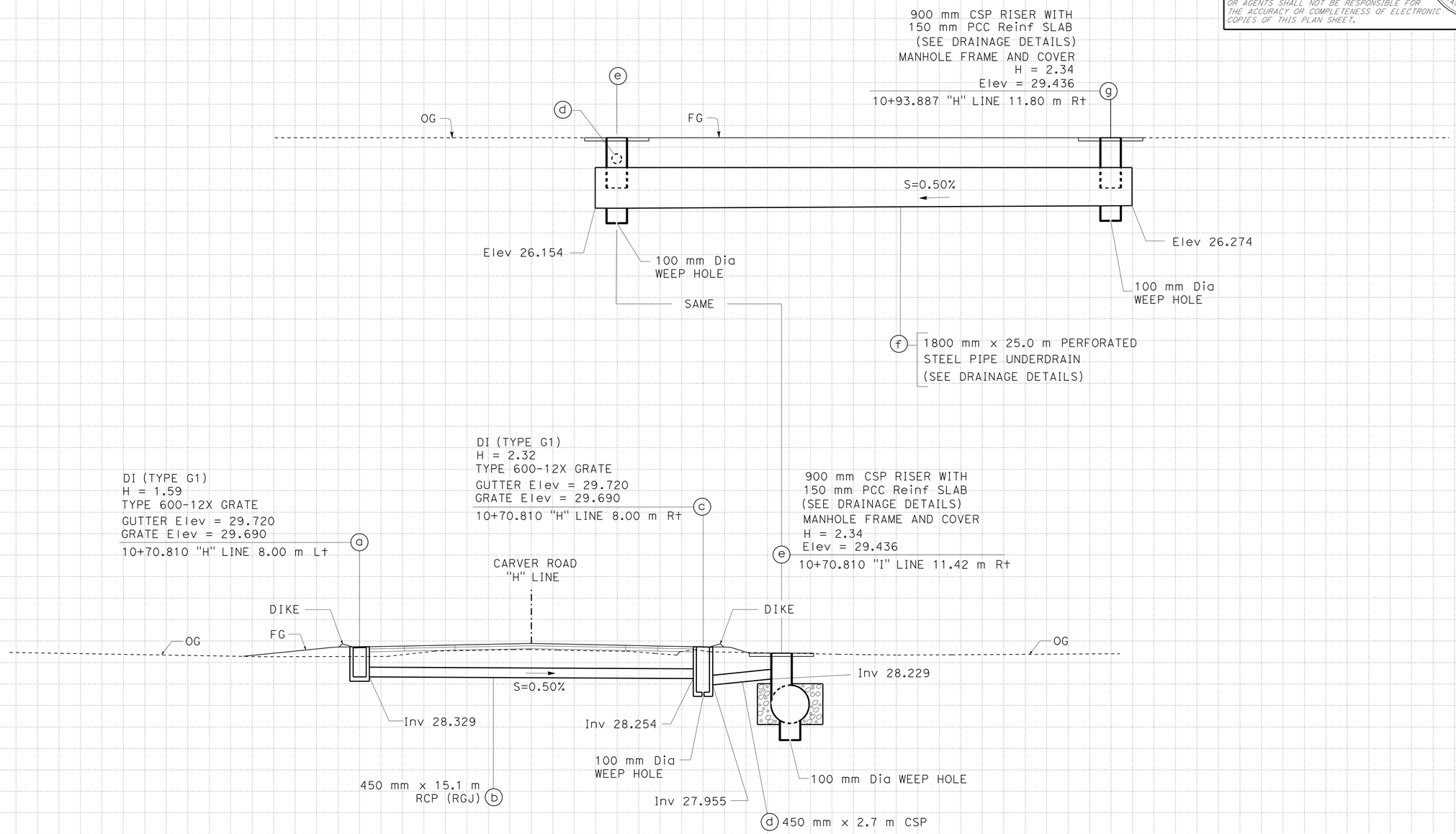

DRAINAGE SYSTEM No. C1

ALL DIMENSIONS ARE IN METERS
UNLESS OTHERWISE SHOWN

DRAINAGE PROFILES

SCALE: Horiz 1:100
Vert 1:100

DP-28

Station	
m^3 Exc	
m^3 Emb	

FUNCTIONAL SUPERVISOR	JOSE HUERTA	
CALCULATED-DESIGNED BY	HERNANDO RAPOSAS	HR
CHECKED BY	WUTHY SENG	7/13/09
REVISED BY	DATE REVISED	

STATE OF CALIFORNIA - DEPARTMENT OF TRANSPORTATION
Caltrans
DESIGN

LAST REVISION 00-00-00 DATE PLOTTED => 26-JAN-2012 TIME PLOTTED => 10:55

Dist	COUNTY	ROUTE	KILOMETER POST TOTAL PROJECT	SHEET No.	TOTAL SHEETS
10	Sta	219,108	3.4/7.9, 44.3/44.9	203	522

REGISTERED CIVIL ENGINEER 6/16/09 DATE

6-28-10
PLANS APPROVAL DATE

REGISTERED PROFESSIONAL ENGINEER WUTHY SENG No. 60114 Exp. 6/30/10 CIVIL STATE OF CALIFORNIA

THE STATE OF CALIFORNIA OR ITS OFFICERS OR AGENTS SHALL NOT BE RESPONSIBLE FOR THE ACCURACY OR COMPLETENESS OF ELECTRONIC COPIES OF THIS PLAN SHEET.

Caltrans Metric

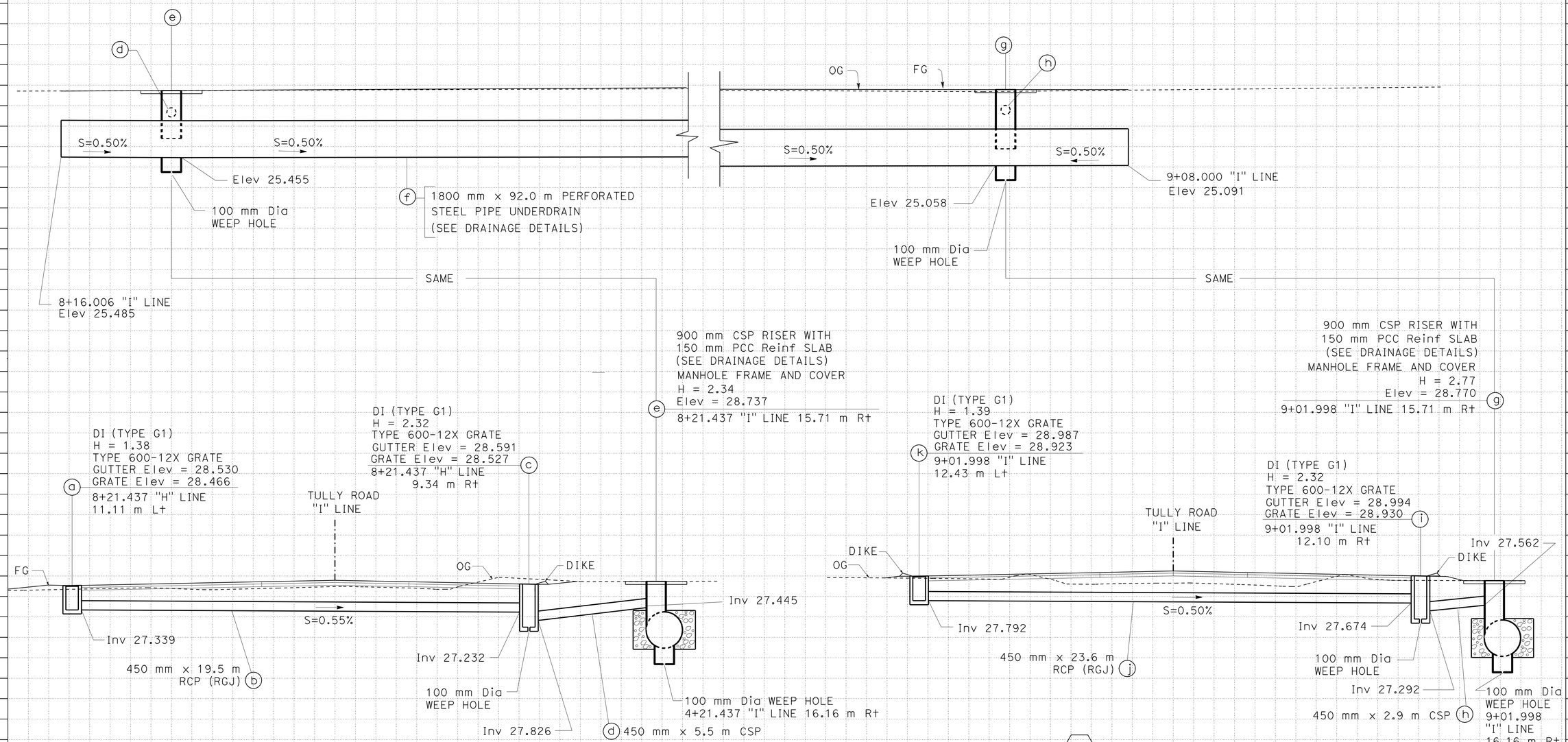

DRAINAGE SYSTEM No. T1

ALL DIMENSIONS ARE IN METERS
UNLESS OTHERWISE SHOWN

DRAINAGE PROFILES

SCALE: Horiz 1:100
Vert 1:100

DP-29

Station	
m^3 Exc	
m^3 Emb	

STATE OF CALIFORNIA - DEPARTMENT OF TRANSPORTATION
Caltrans
DESIGN
FUNCTIONAL SUPERVISOR: JOSE HUERTA
CALCULATED-DESIGNED BY: WUTHY SENG
CHECKED BY: HERNANDO RAPOSAS
REVISED BY: HR
DATE REVISED: 7/13/09

LAST REVISION 00-00-00
DATE PLOTTED => 26-JAN-2012
TIME PLOTTED => 10:55

Dist	COUNTY	ROUTE	KILOMETER POST TOTAL PROJECT	SHEET No.	TOTAL SHEETS
10	Sta	219,108	3.4/7.9, 44.3/44.9	204	522

REGISTERED CIVIL ENGINEER 6/16/09 DATE

6-28-10
PLANS APPROVAL DATE

REGISTERED PROFESSIONAL ENGINEER WUTHY SENG No. 60114 Exp. 6/30/10 CIVIL STATE OF CALIFORNIA

THE STATE OF CALIFORNIA OR ITS OFFICERS OR AGENTS SHALL NOT BE RESPONSIBLE FOR THE ACCURACY OR COMPLETENESS OF ELECTRONIC COPIES OF THIS PLAN SHEET.

Caltrans Metric

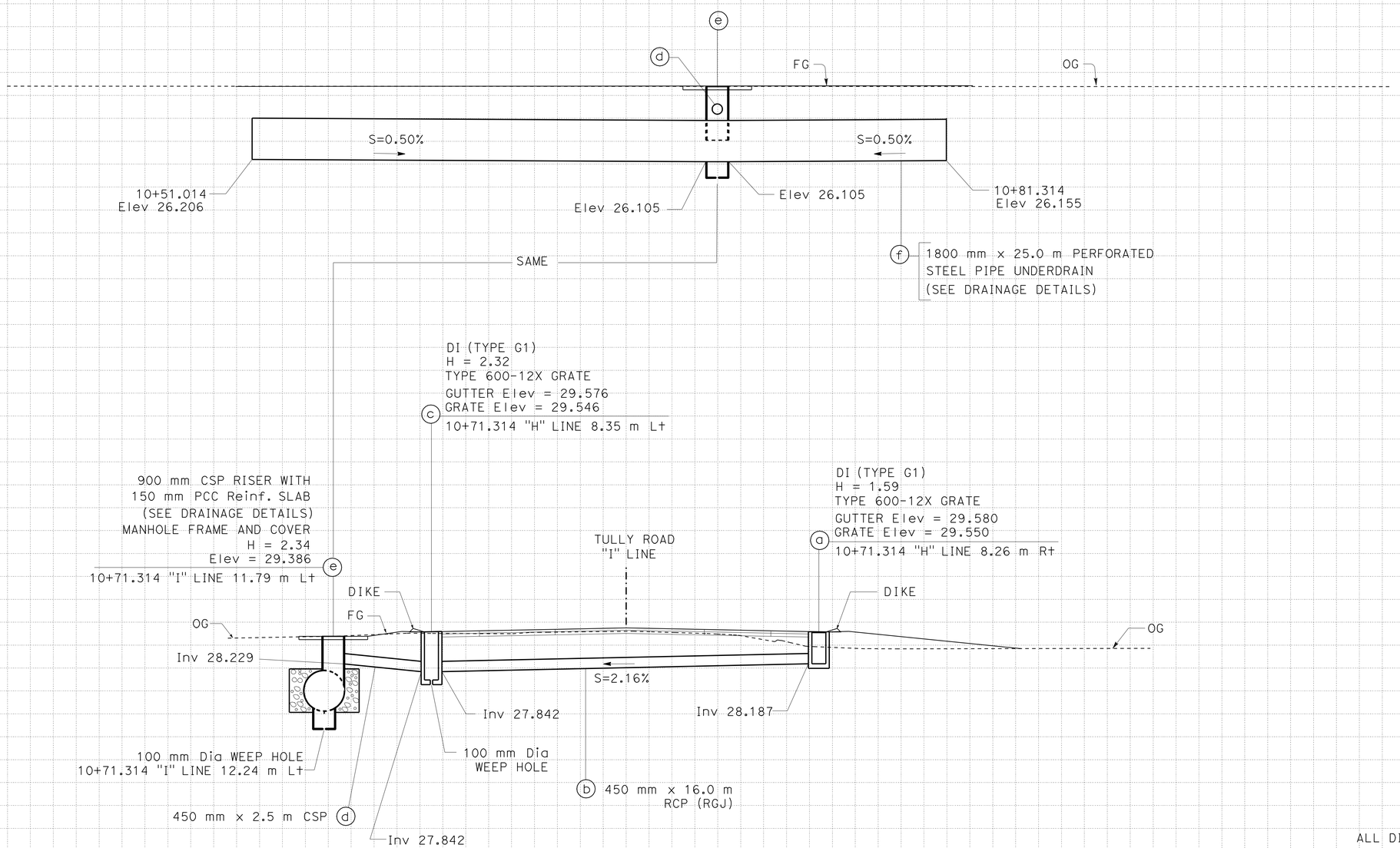

DRAINAGE SYSTEM No. T2

ALL DIMENSIONS ARE IN METERS
UNLESS OTHERWISE SHOWN

DRAINAGE PROFILES

SCALE: Horiz 1:100
Vert 1:100

DP-30

Station	
m^3 Exc	
m^3 Emb	

REVISED BY: HR — DATE REVISED: 7/13/09
CALCULATED-DESIGNED BY: HERNANDO RAPOSAS — CHECKED BY: WUTHY SENG
FUNCTIONAL SUPERVISOR: JOSE HUERTA

STATE OF CALIFORNIA - DEPARTMENT OF TRANSPORTATION
DESIGN
Caltrans

LAST REVISION 00-00-00 DATE PLOTTED => 26-JAN-2012 TIME PLOTTED => 10:55

Dist	COUNTY	ROUTE	KILOMETER POST TOTAL PROJECT	SHEET No.	TOTAL SHEETS
10	Sta	219,108	3.4/7.9, 44.3/44.9	205	522

Caltrans Metric

Wuthy Seng 6/16/09
REGISTERED CIVIL ENGINEER DATE

6-28-10
PLANS APPROVAL DATE

REGISTERED PROFESSIONAL ENGINEER WUTHY SENG No. 60114 Exp. 6/30/10 CIVIL STATE OF CALIFORNIA

THE STATE OF CALIFORNIA OR ITS OFFICERS OR AGENTS SHALL NOT BE RESPONSIBLE FOR THE ACCURACY OR COMPLETENESS OF ELECTRONIC COPIES OF THIS PLAN SHEET.

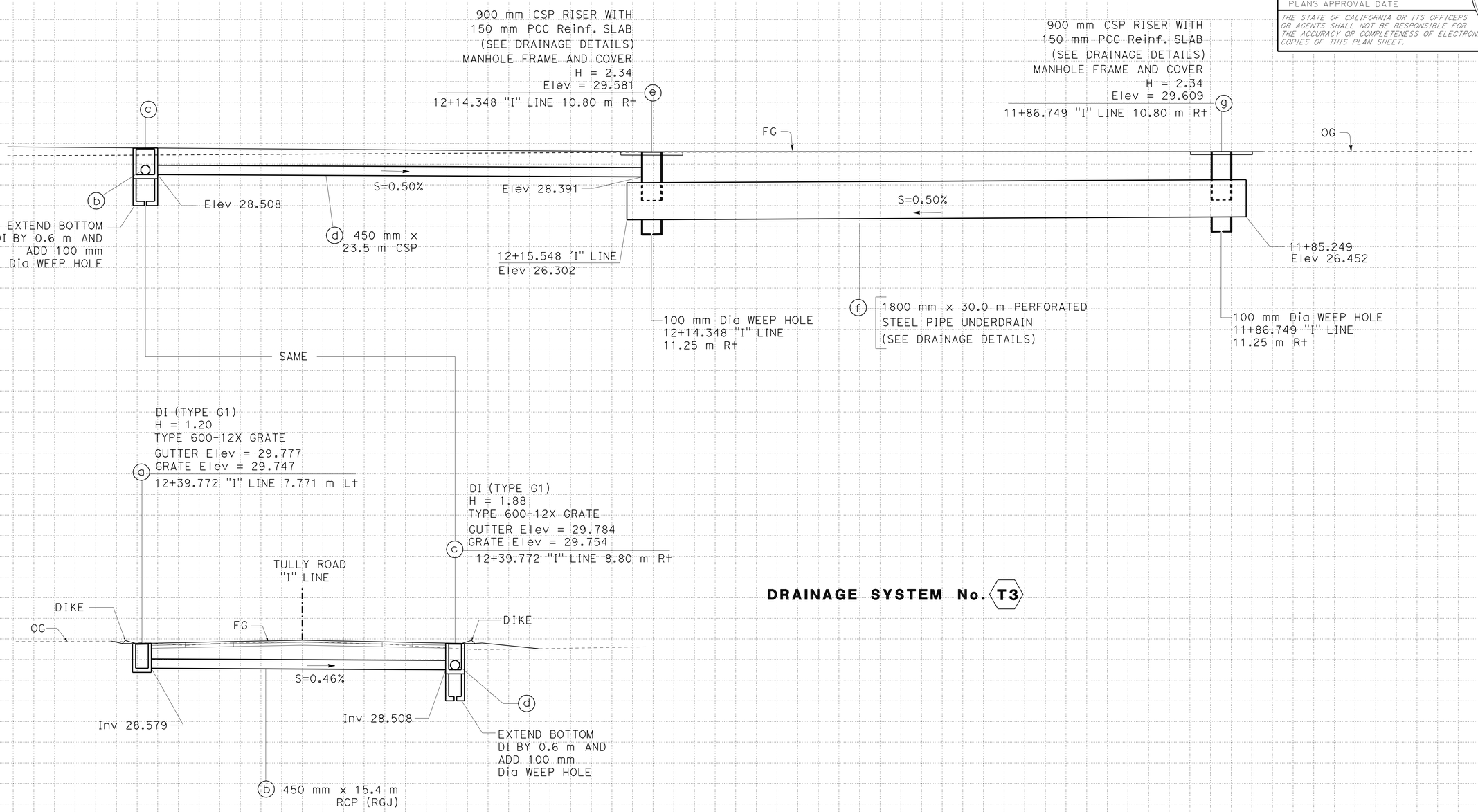

DRAINAGE SYSTEM No. T3

ALL DIMENSIONS ARE IN METERS
UNLESS OTHERWISE SHOWN

DRAINAGE PROFILES

SCALE: Horiz 1:100
Vert 1:100

DP-31

Station	
m^3	Exc
	Emb

STATE OF CALIFORNIA - DEPARTMENT OF TRANSPORTATION
Caltrans
DESIGN

FUNCTIONAL SUPERVISOR: JOSE HUERTA
CALCULATED-DESIGNED BY: WUTHY SENG
CHECKED BY: HERNANDO RAPOSAS
REVISED BY: HR
DATE REVISED: 7/13/09

LAST REVISION 00-00-00
DATE PLOTTED => 26-JAN-2012
TIME PLOTTED => 10:55

Dist	COUNTY	ROUTE	KILOMETER POST TOTAL PROJECT	SHEET No.	TOTAL SHEETS
10	Sta	219,108	3.4/7.9, 44.3/44.9	206	522

Wuthy Seng 6/16/09
REGISTERED CIVIL ENGINEER DATE

6-28-10
PLANS APPROVAL DATE

REGISTERED PROFESSIONAL ENGINEER
WUTHY SENG
No. 60114
Exp. 6/30/10
CIVIL
STATE OF CALIFORNIA

THE STATE OF CALIFORNIA OR ITS OFFICERS OR AGENTS SHALL NOT BE RESPONSIBLE FOR THE ACCURACY OR COMPLETENESS OF ELECTRONIC COPIES OF THIS PLAN SHEET.

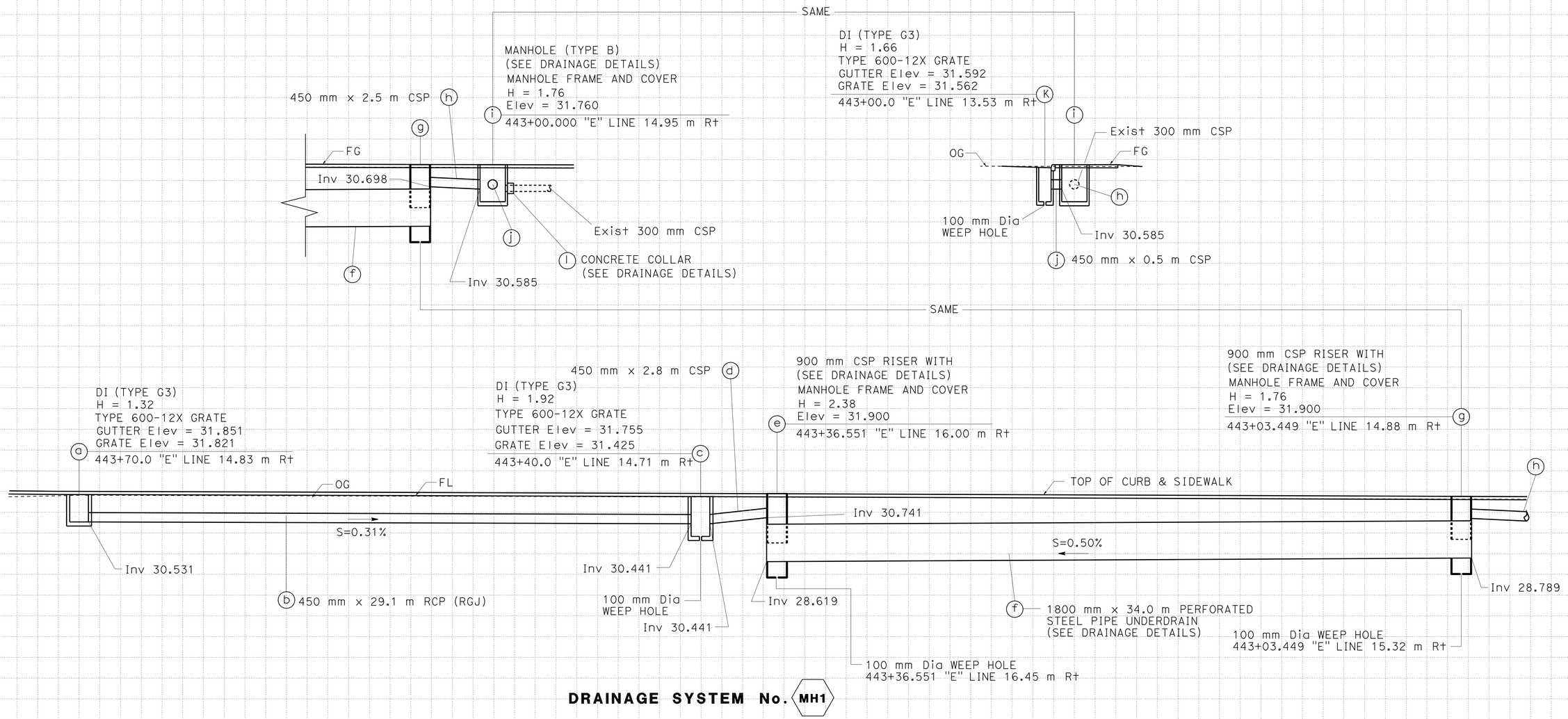

DRAINAGE SYSTEM No. MH1

ALL DIMENSIONS ARE IN METERS
UNLESS OTHERWISE SHOWN

DRAINAGE PROFILES

SCALE: Horiz 1:100
Vert 1:100

DP-32

REVISED BY	DATE REVISED
WS	4/13/10

HERNANDO RAPOSAS
WUTHY SENG
CALCULATED-DESIGNED BY
CHECKED BY
FUNCTIONAL SUPERVISOR
JOSE HUERTA

STATE OF CALIFORNIA - DEPARTMENT OF TRANSPORTATION
Caltrans
DESIGN

Station	
m^3 Exc	
m^3 Emb	

LAST REVISION 00-00-00
DATE PLOTTED => 26-JAN-2012
TIME PLOTTED => 10:56

Dist	COUNTY	ROUTE	KILOMETER POST TOTAL PROJECT	SHEET No.	TOTAL SHEETS
10	Sta	219,108	3.4/7.9, 44.3/44.9	207	522

REGISTERED CIVIL ENGINEER 6/16/09 DATE

6-28-10
PLANS APPROVAL DATE

REGISTERED PROFESSIONAL ENGINEER WUTHY SENG No. 60114 Exp. 6/30/10 CIVIL STATE OF CALIFORNIA

THE STATE OF CALIFORNIA OR ITS OFFICERS OR AGENTS SHALL NOT BE RESPONSIBLE FOR THE ACCURACY OR COMPLETENESS OF ELECTRONIC COPIES OF THIS PLAN SHEET.

Caltrans Metric

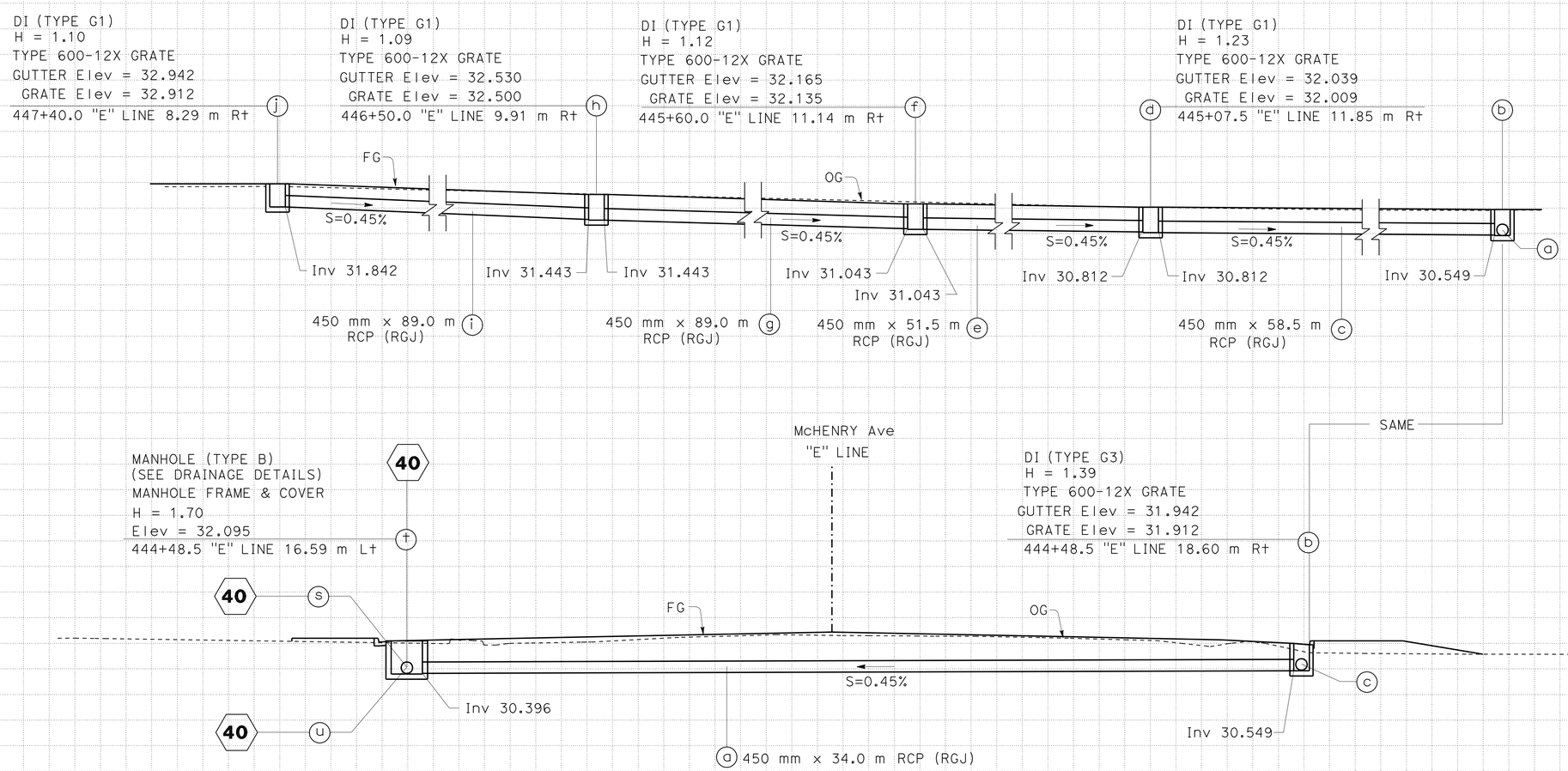

DRAINAGE SYSTEM No. MH2

ALL DIMENSIONS ARE IN METERS
UNLESS OTHERWISE SHOWN

DRAINAGE PROFILES

SCALE: Horiz 1:100
Vert 1:100

DP-33

REVISED BY	DATE REVISED
HR	7/13/09

HERNANDO RAPOSAS — WUTHY SENG

CALCULATED-DESIGNED BY — CHECKED BY

FUNCTIONAL SUPERVISOR — JOSE HUERTA

STATE OF CALIFORNIA - DEPARTMENT OF TRANSPORTATION — DESIGN

Caltrans

Station	
m^3	Exc
	Emb

LAST REVISION 00-00-00 — DATE PLOTTED => 26-JAN-2012 — TIME PLOTTED => 10:56

Dist	COUNTY	ROUTE	KILOMETER POST TOTAL PROJECT	SHEET No.	TOTAL SHEETS
10	Sta	219,108	3.4/7.9, 44.3/44.9	208	522

Caltrans Metric

Wuthy Seng 6/16/09
REGISTERED CIVIL ENGINEER DATE

6-28-10
PLANS APPROVAL DATE

REGISTERED PROFESSIONAL ENGINEER WUTHY SENG No. 60114 Exp. 6/30/10 CIVIL STATE OF CALIFORNIA

THE STATE OF CALIFORNIA OR ITS OFFICERS OR AGENTS SHALL NOT BE RESPONSIBLE FOR THE ACCURACY OR COMPLETENESS OF ELECTRONIC COPIES OF THIS PLAN SHEET.

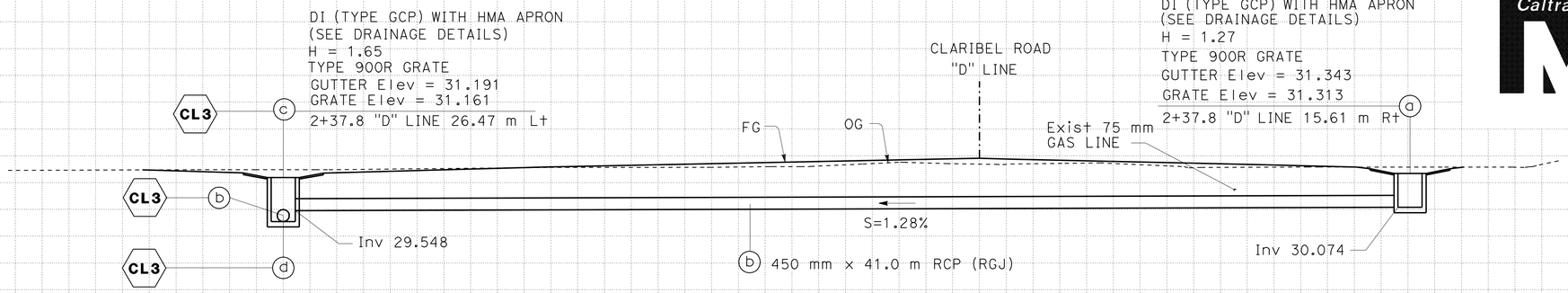

DRAINAGE SYSTEM No. CL2

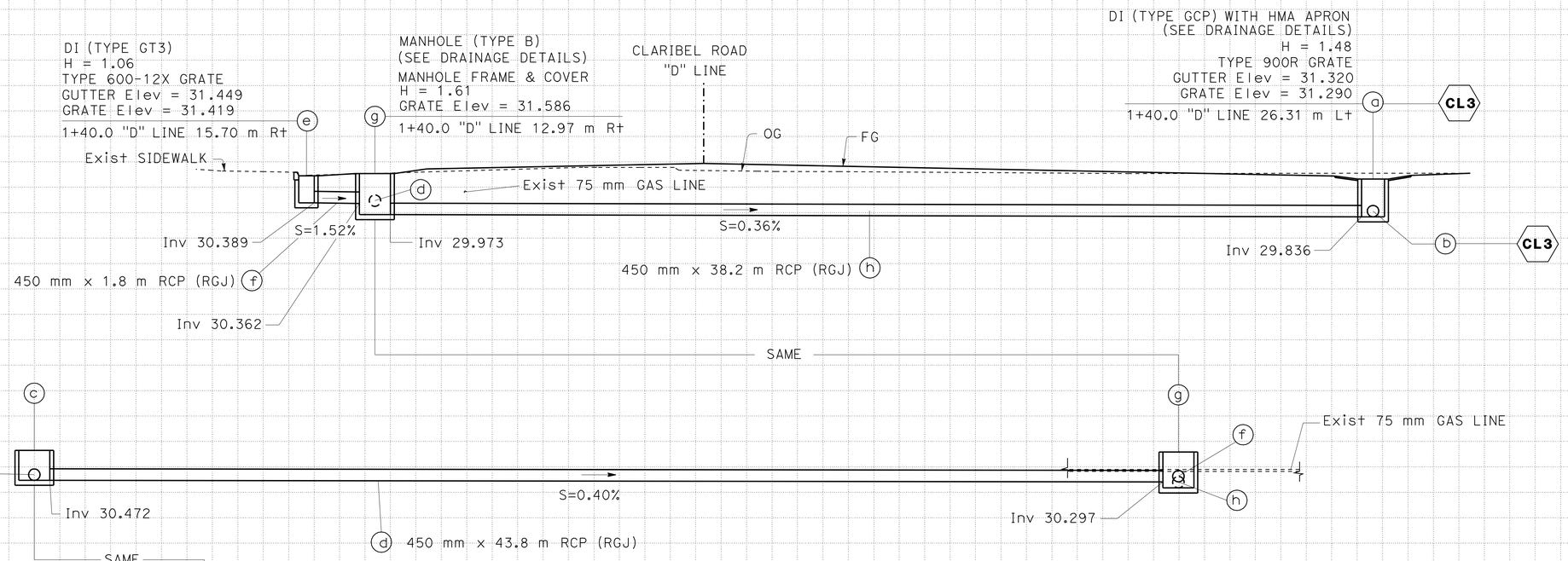

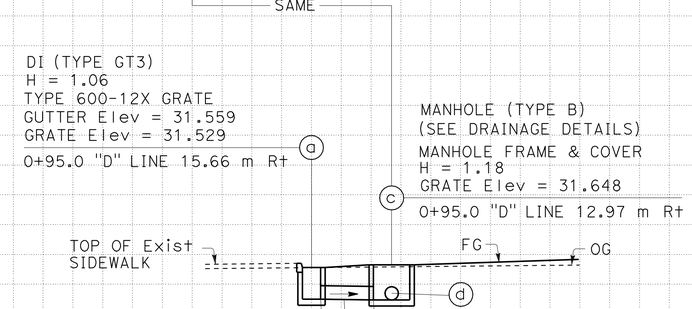

DRAINAGE SYSTEM No. CL1

ALL DIMENSIONS ARE IN METERS
UNLESS OTHERWISE SHOWN

DRAINAGE PROFILES

SCALE: Horiz 1:100
Vert 1:100

DP-34

REVISED BY	DATE REVISED
WS	4/13/10

HERNANDO RAPOSAS — WUTHY SENG — CALCULATED-DESIGNED BY — CHECKED BY — FUNCTIONAL SUPERVISOR — JOSE HUERTA

STATE OF CALIFORNIA - DEPARTMENT OF TRANSPORTATION — DESIGN — Caltrans

Station	
m^3	Exc
	Emb

LAST REVISION 00-00-00 — DATE PLOTTED => 26-JAN-2012 — TIME PLOTTED => 10:56

Dist	COUNTY	ROUTE	KILOMETER POST TOTAL PROJECT	SHEET No.	TOTAL SHEETS
10	Sta	219,108	3.4/7.9, 44.3/44.9	209	522

REGISTERED CIVIL ENGINEER 6/16/09 DATE

6-28-10
PLANS APPROVAL DATE

REGISTERED PROFESSIONAL ENGINEER WUTHY SENG No. 60114 Exp. 6/30/10 CIVIL STATE OF CALIFORNIA

THE STATE OF CALIFORNIA OR ITS OFFICERS OR AGENTS SHALL NOT BE RESPONSIBLE FOR THE ACCURACY OR COMPLETENESS OF ELECTRONIC COPIES OF THIS PLAN SHEET.

Caltrans Metric

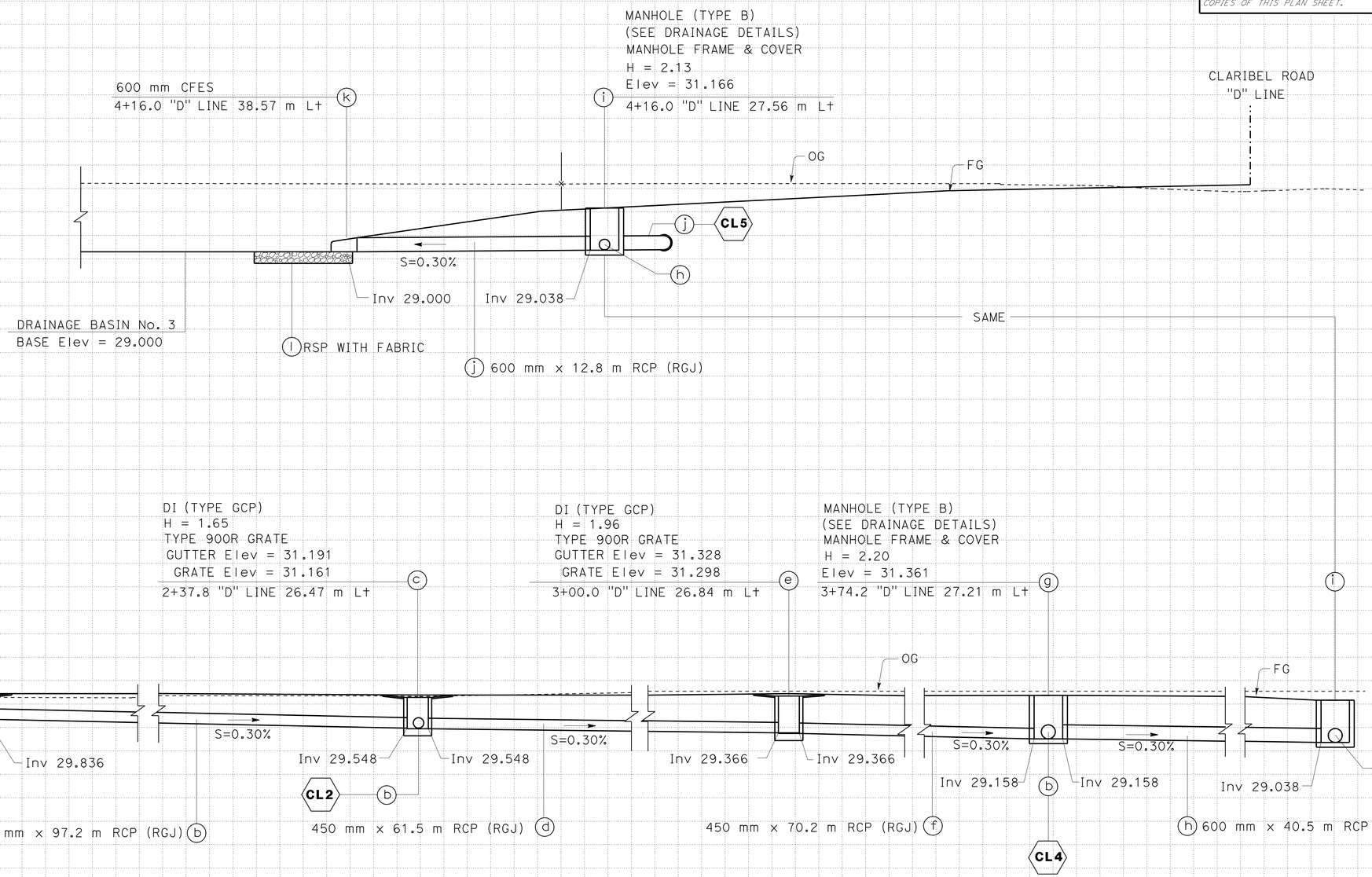

DRAINAGE SYSTEM No. CL3

ALL DIMENSIONS ARE IN METERS
UNLESS OTHERWISE SHOWN

DRAINAGE PROFILES

SCALE: Horiz 1:100
Vert 1:100

DP-35

REVISED BY	DATE REVISED
HR	7/13/09

HERNANDO RAPOSAS — WUTHY SENG — CALCULATED-DESIGNED BY — CHECKED BY — FUNCTIONAL SUPERVISOR — JOSE HUERTA

STATE OF CALIFORNIA - DEPARTMENT OF TRANSPORTATION — DESIGN — Caltrans

Station	
m^3 Exc	
m^3 Emb	

LAST REVISION 00-00-00 — DATE PLOTTED => 26-JAN-2012 — TIME PLOTTED => 10:56

Dist	COUNTY	ROUTE	KILOMETER POST TOTAL PROJECT	SHEET No.	TOTAL SHEETS
10	Sta	219,108	3.4/7.9, 44.3/44.9	210	522

Wuthy Seng 6/16/09
REGISTERED CIVIL ENGINEER DATE

6-28-10
PLANS APPROVAL DATE

REGISTERED PROFESSIONAL ENGINEER
WUTHY SENG
No. 60114
Exp. 6/30/10
CIVIL
STATE OF CALIFORNIA

THE STATE OF CALIFORNIA OR ITS OFFICERS OR AGENTS SHALL NOT BE RESPONSIBLE FOR THE ACCURACY OR COMPLETENESS OF ELECTRONIC COPIES OF THIS PLAN SHEET.

Caltrans Metric

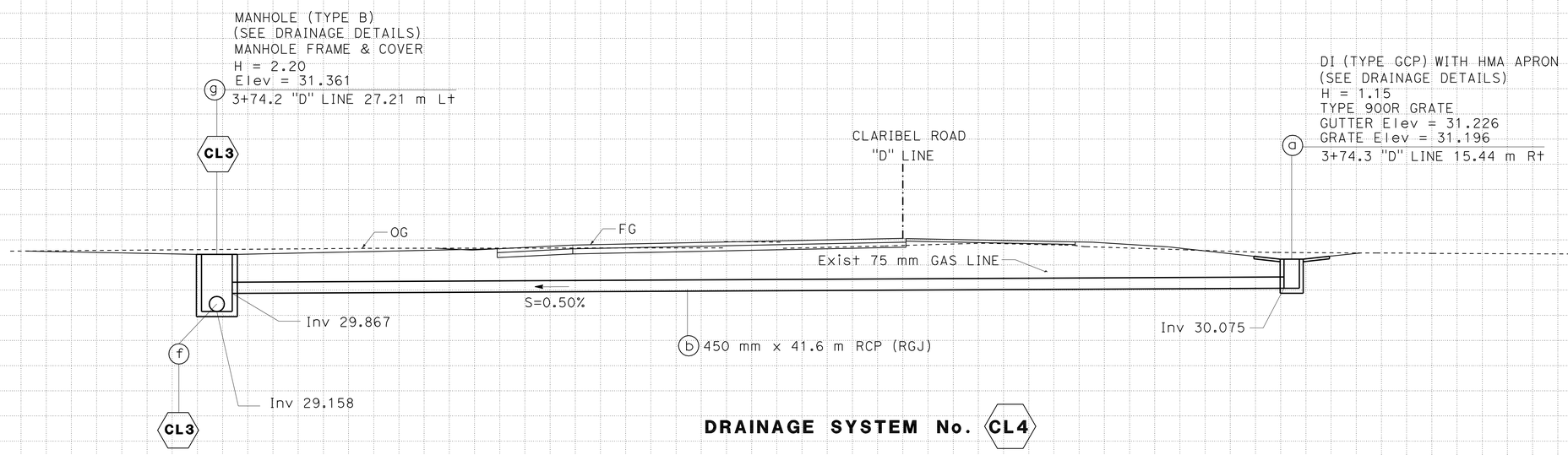

DRAINAGE SYSTEM No. CL4

ALL DIMENSIONS ARE IN METERS
UNLESS OTHERWISE SHOWN

DRAINAGE PROFILES

SCALE: Horiz 1:100
Vert 1:100

DP-36

REVISED BY	DATE REVISED
WS	4/13/10

HERNANDO RAPOSAS
WUTHY SENG

CALCULATED-DESIGNED BY
CHECKED BY

FUNCTIONAL SUPERVISOR
JOSE HUERTA

STATE OF CALIFORNIA - DEPARTMENT OF TRANSPORTATION
Caltrans
DESIGN

Station	
m^3 Exc	
m^3 Emb	

LAST REVISION 00-00-00
DATE PLOTTED => 26-JAN-2012
TIME PLOTTED => 10:56

Dist	COUNTY	ROUTE	KILOMETER POST TOTAL PROJECT	SHEET No.	TOTAL SHEETS
10	Sta	219,108	3.4/7.9, 44.3/44.9	211	522

Caltrans Metric

Wuthy Seng 6/16/09
REGISTERED CIVIL ENGINEER DATE

6-28-10
PLANS APPROVAL DATE

REGISTERED PROFESSIONAL ENGINEER WUTHY SENG No. 60114 Exp. 6/30/10 CIVIL STATE OF CALIFORNIA

THE STATE OF CALIFORNIA OR ITS OFFICERS OR AGENTS SHALL NOT BE RESPONSIBLE FOR THE ACCURACY OR COMPLETENESS OF ELECTRONIC COPIES OF THIS PLAN SHEET.

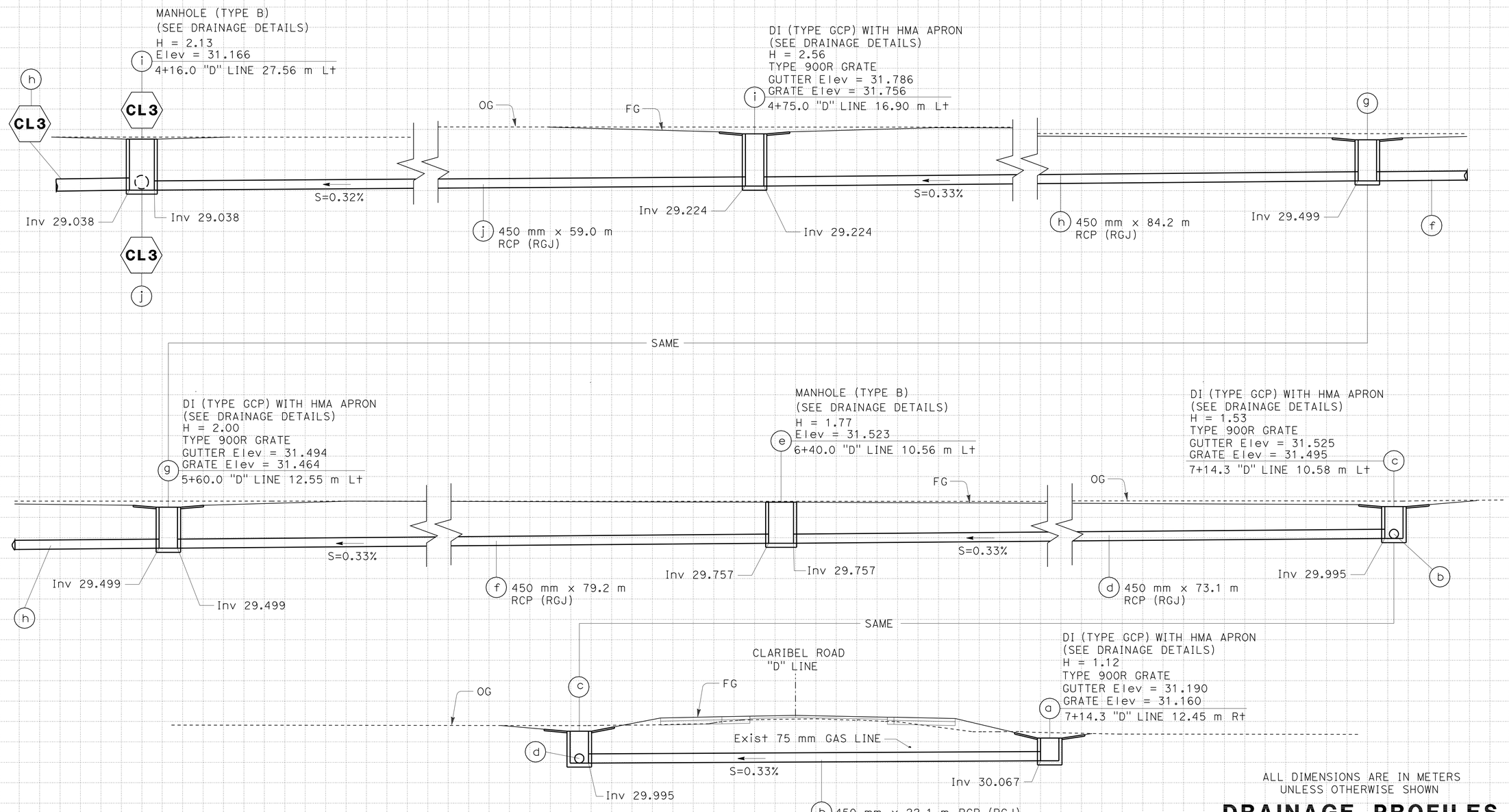

DRAINAGE SYSTEM No. CL5

ALL DIMENSIONS ARE IN METERS
UNLESS OTHERWISE SHOWN

DRAINAGE PROFILES

SCALE: Horiz 1:100
Vert 1:100

DP-37

REVISED BY	DATE REVISED
WS	4/13/10

HERNANDO RAPOSAS — WUTHY SENG — JOSE HUERTA

CALCULATED-DESIGNED BY — CHECKED BY — FUNCTIONAL SUPERVISOR

STATE OF CALIFORNIA - DEPARTMENT OF TRANSPORTATION — DESIGN — Caltrans

Station	
m^3 Exc	
m^3 Emb	

LAST REVISION 00-00-00 DATE PLOTTED => 26-JAN-2012 TIME PLOTTED => 10:56

Dist	COUNTY	ROUTE	KILOMETER POST TOTAL PROJECT	SHEET No.	TOTAL SHEETS
10	Sta	219,108	3.4/7.9, 44.3/44.9	212	522

Wuthy Seng 6/16/09
REGISTERED CIVIL ENGINEER DATE

6-28-10
PLANS APPROVAL DATE

REGISTERED PROFESSIONAL ENGINEER
WUTHY SENG
No. 60114
Exp. 6/30/10
CIVIL
STATE OF CALIFORNIA

THE STATE OF CALIFORNIA OR ITS OFFICERS OR AGENTS SHALL NOT BE RESPONSIBLE FOR THE ACCURACY OR COMPLETENESS OF ELECTRONIC COPIES OF THIS PLAN SHEET.

Caltrans Metric

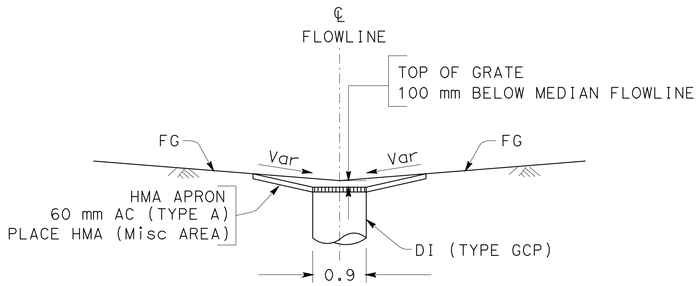

SECTION A-A

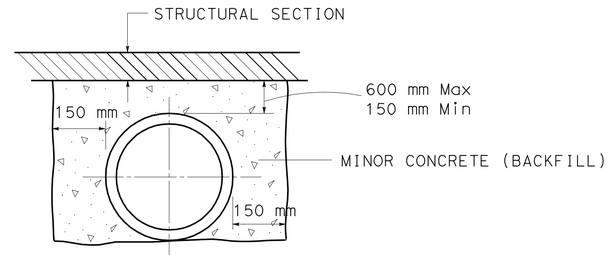

MINOR CONCRETE (BACKFILL)

DRAINAGE SYSTEM No.

2 8 9 11 12 13 14 24 25 28 S1

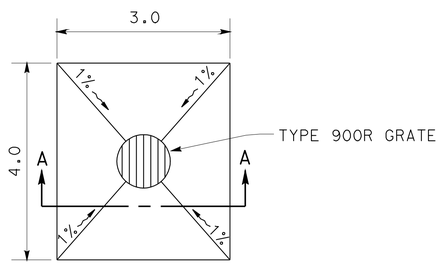

APRON DETAIL

DRAINAGE SYSTEM No.

1 2 4 6 7 8 10 12 15 16 17 19 21 22 25 27 31 33 34 37 38 39 41 S1 CL1

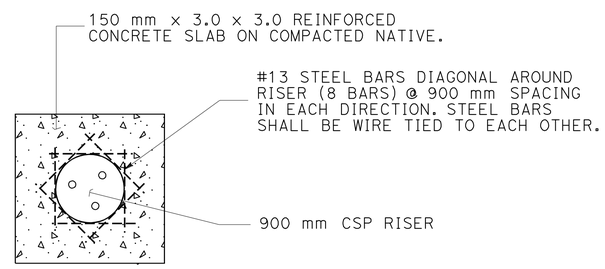

PCC Reinf SLAB

DRAINAGE SYSTEM No.

13 20 C1 T1 T2 T3 CL4

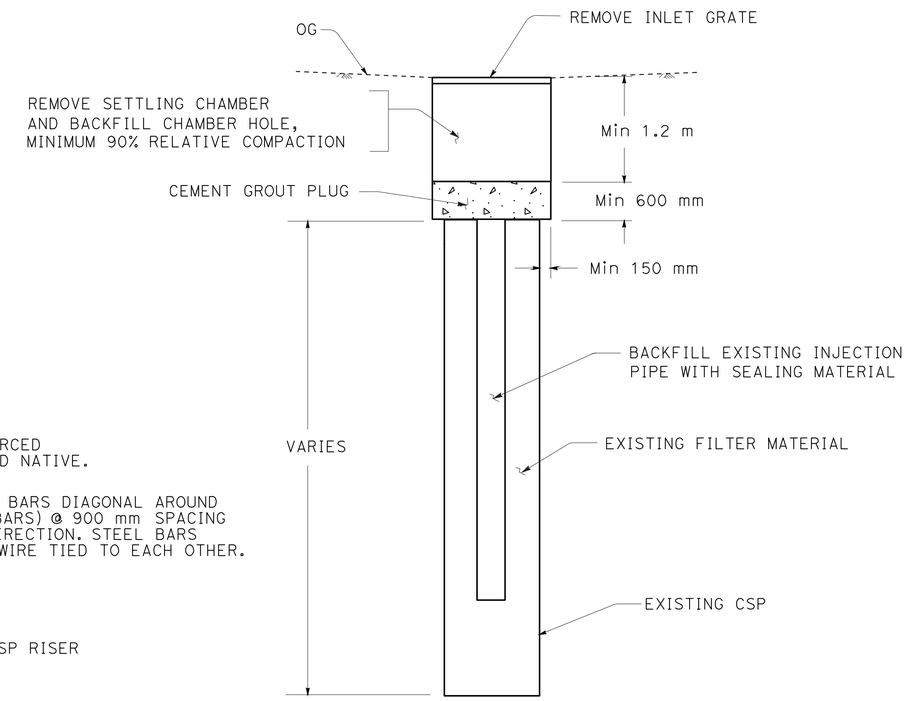

ABANDON DRYWELL

ALL DIMENSIONS ARE IN
METERS UNLESS OTHERWISE SHOWN

DRAINAGE DETAILS

NO SCALE

DD-1

STATE OF CALIFORNIA - DEPARTMENT OF TRANSPORTATION
Caltrans
DESIGN

FUNCTIONAL SUPERVISOR: JOSE HUERTA
CALCULATED-DESIGNED BY: WUTHY SENG
CHECKED BY: ALLEN LAO
REVISED BY: WS
DATE REVISED: 7/9/09

LAST REVISION 00-00-00
DATE PLOTTED => 26-JAN-2012
TIME PLOTTED => 10:56

Dist	COUNTY	ROUTE	KILOMETER POST TOTAL PROJECT	SHEET No.	TOTAL SHEETS
10	Sta	219,108	3.4/7.9, 44.3/44.9	213	522

Wuthy Seng 6/16/09
REGISTERED CIVIL ENGINEER DATE

6-28-10
PLANS APPROVAL DATE

REGISTERED PROFESSIONAL ENGINEER WUTHY SENG No. 60114 Exp. 6/30/10 CIVIL STATE OF CALIFORNIA

THE STATE OF CALIFORNIA OR ITS OFFICERS OR AGENTS SHALL NOT BE RESPONSIBLE FOR THE ACCURACY OR COMPLETENESS OF ELECTRONIC COPIES OF THIS PLAN SHEET.

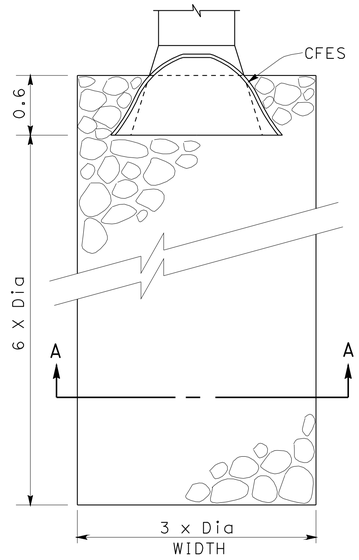

PLAN

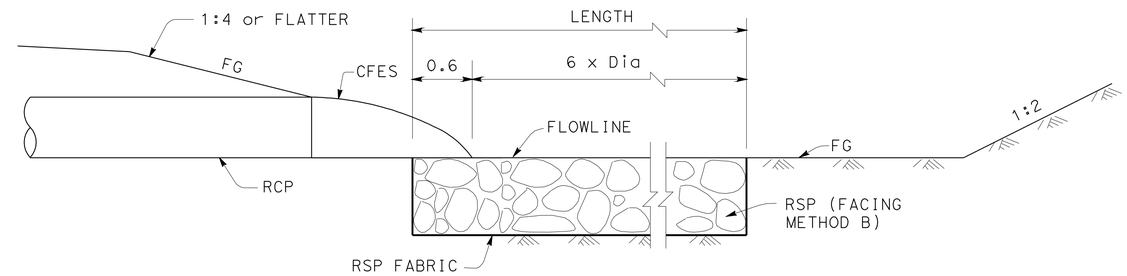

PROFILE

ROCK SLOPE PROTECTION AT CULVERT OUTLET (FACING, METHOD B)

DRAINAGE SYSTEM No.

1 2 4 6 7 8 10 12 14 15
16 18 20 21 22 25 27 31 33 34
35 37 40 CL3

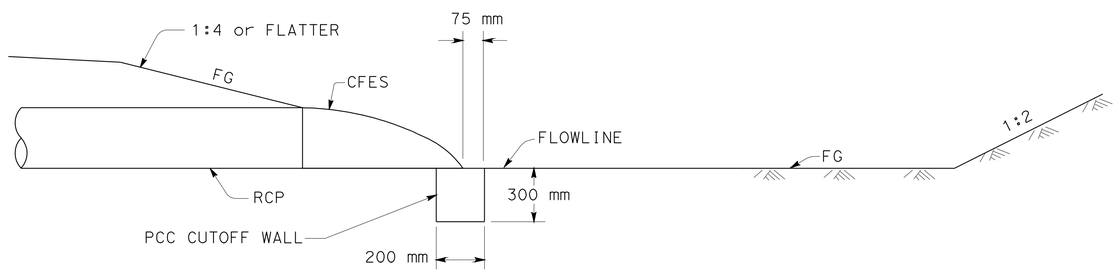

PROFILE

FLARED END SECTION AT CULVERT OUTLET

DRAINAGE SYSTEM No.

3 5 9 11 17 23
24 26 28 29 30 32

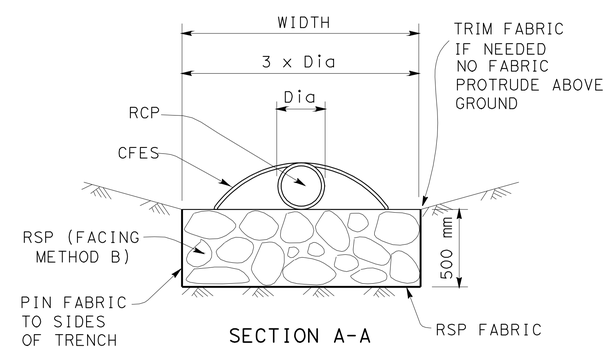

SECTION A-A

ALL DIMENSIONS ARE IN METERS UNLESS OTHERWISE SHOWN

DRAINAGE DETAILS

NO SCALE

DD-2

WS	7/9/09
REVISED BY	DATE REVISED
ALLEN LAO	WUTHY SENG
CALCULATED-DESIGNED BY	CHECKED BY
FUNCTIONAL SUPERVISOR	JOSE HUERTA

STATE OF CALIFORNIA - DEPARTMENT OF TRANSPORTATION
Caltrans
DESIGN

LAST REVISION 00-00-00 | DATE PLOTTED => 26-JAN-2012 | TIME PLOTTED => 10:56

Dist	COUNTY	ROUTE	KILOMETER POST TOTAL PROJECT	SHEET No.	TOTAL SHEETS
10	Sta	219,108	3.4/7.9, 44.3/44.9	214	522

REGISTERED CIVIL ENGINEER 6/16/09 DATE

6-28-10
PLANS APPROVAL DATE

REGISTERED PROFESSIONAL ENGINEER WUTHY SENG No. 60114 Exp. 6/30/10 CIVIL STATE OF CALIFORNIA

THE STATE OF CALIFORNIA OR ITS OFFICERS OR AGENTS SHALL NOT BE RESPONSIBLE FOR THE ACCURACY OR COMPLETENESS OF ELECTRONIC COPIES OF THIS PLAN SHEET.

Caltrans Metric

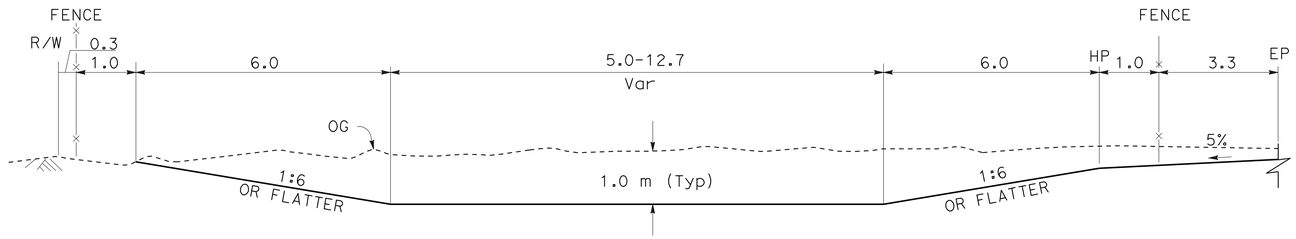

DRAINAGE BASIN No. 1

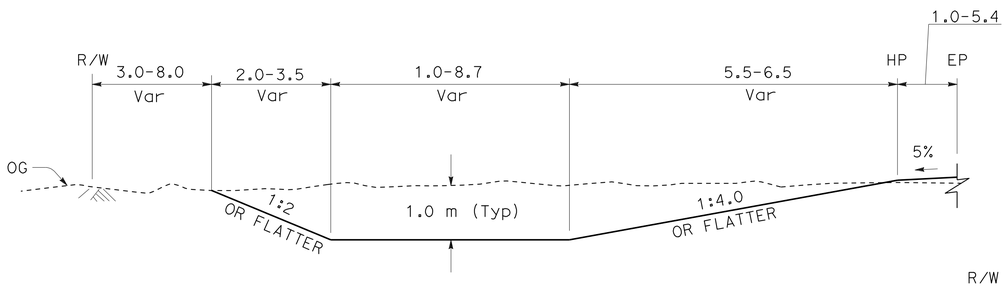

DRAINAGE GUTTER SECTION AT TYPICAL LOCATIONS

Sta 34+94.737 TO Sta 35+64.924 Lt "A" LINE
Sta 36+05.508 TO Sta 37+51.169 Lt "A" LINE
Sta 38+59.495 TO Sta 39+53.528 Lt "A" LINE
Sta 39+66.470 TO Sta 41+03.534 Lt "A" LINE
Sta 41+30.895 TO Sta 41+72.433 Lt "A" LINE
Sta 41+99.477 TO Sta 43+11.628 Lt "A" LINE
Sta 43+44.044 TO Sta 45+59.876 Lt "A" LINE
Sta 46+10.058 TO Sta 47+63.214 Lt "A" LINE
Sta 50+48.991 TO Sta 53+39.817 Lt "A" LINE
Sta 57+32.358 TO Sta 58+73.727 Lt "A" LINE
Sta 59+26.142 TO Sta 60+43.073 Lt "A" LINE
Sta 62+85.795 TO Sta 64+40.000 Lt "A" LINE
Sta 64+68.167 TO Sta 66+28.941 Lt "A" LINE
Sta 66+60.060 TO Sta 68+27.322 Lt "A" LINE
Sta 38+60.227 TO Sta 39+65.250 Rt "A" LINE
Sta 40+75.476 TO Sta 41+57.703 Rt "A" LINE
Sta 44+51.894 TO Sta 46+66.804 Rt "A" LINE
Sta 46+99.262 TO Sta 47+62.214 Rt "A" LINE
Sta 48+19.768 TO Sta 49+76.303 Rt "A" LINE
Sta 50+09.407 TO Sta 52+76.109 Rt "A" LINE
Sta 53+07.274 TO Sta 54+21.263 Rt "A" LINE
Sta 54+99.256 TO Sta 56+25.524 Rt "A" LINE
Sta 57+05.076 TO Sta 59+69.608 Rt "A" LINE
Sta 59+98.096 TO Sta 60+63.396 Rt "A" LINE
Sta 60+91.881 TO Sta 62+18.305 Rt "A" LINE
Sta 63+02.504 TO Sta 63+58.367 Rt "A" LINE
Sta 63+86.461 TO Sta 66+00.000 Rt "A" LINE

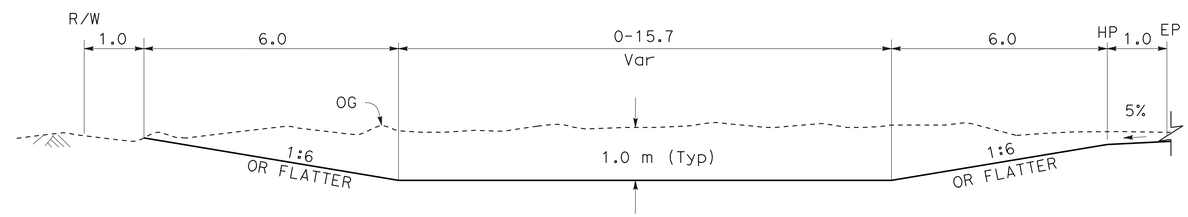

DRAINAGE GUTTER SECTION AT TYPICAL LOCATIONS

Sta 6+99.850 TO Sta 8+83.933 Lt "H" LINE

ALL DIMENSIONS ARE IN METERS UNLESS OTHERWISE SHOWN

DRAINAGE DETAILS

NO SCALE

DD-3

CALCULATED-DESIGNED BY	ALLEN LAO
CHECKED BY	WUTHY SENG
REVISED BY	WS
DATE REVISED	7/9/09
FUNCTIONAL SUPERVISOR	JOSE HUERTA

STATE OF CALIFORNIA - DEPARTMENT OF TRANSPORTATION
Caltrans DESIGN

LAST REVISION 00-00-00 DATE PLOTTED => 26-JAN-2012 TIME PLOTTED => 10:56

Dist	COUNTY	ROUTE	KILOMETER POST TOTAL PROJECT	SHEET No.	TOTAL SHEETS
10	Sta	219,108	3.4/7.9, 44.3/44.9	215	522

REGISTERED CIVIL ENGINEER 6/16/09 DATE

6-28-10
PLANS APPROVAL DATE

REGISTERED PROFESSIONAL ENGINEER WUTHY SENG No. 60114 Exp. 6/30/10 CIVIL STATE OF CALIFORNIA

THE STATE OF CALIFORNIA OR ITS OFFICERS OR AGENTS SHALL NOT BE RESPONSIBLE FOR THE ACCURACY OR COMPLETENESS OF ELECTRONIC COPIES OF THIS PLAN SHEET.

Caltrans Metric

NOTE: SEE DRAINAGE SYSTEM FOR SPECIFIC INLET TYPE.

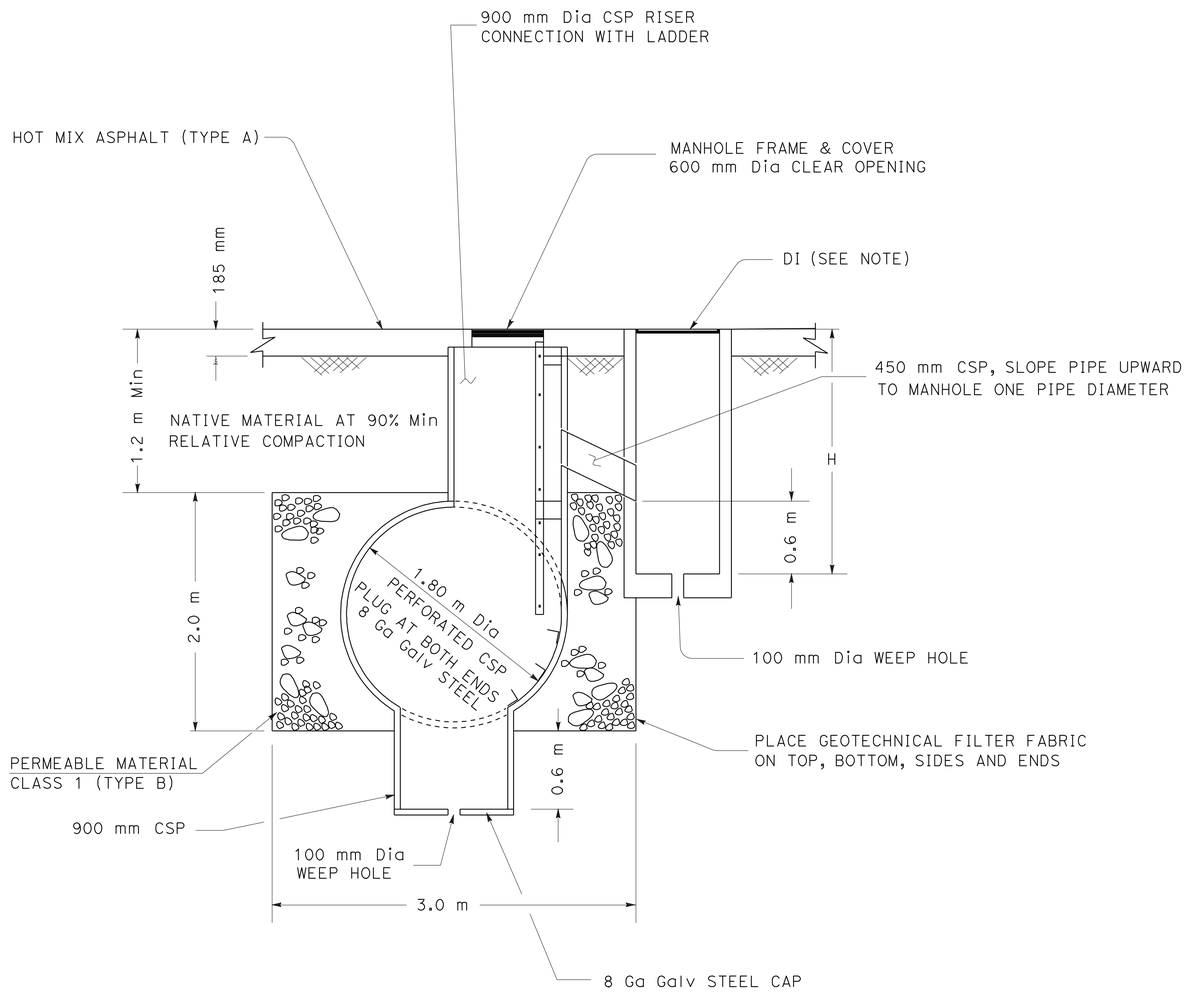

TYPICAL SECTION WITH MANHOLE

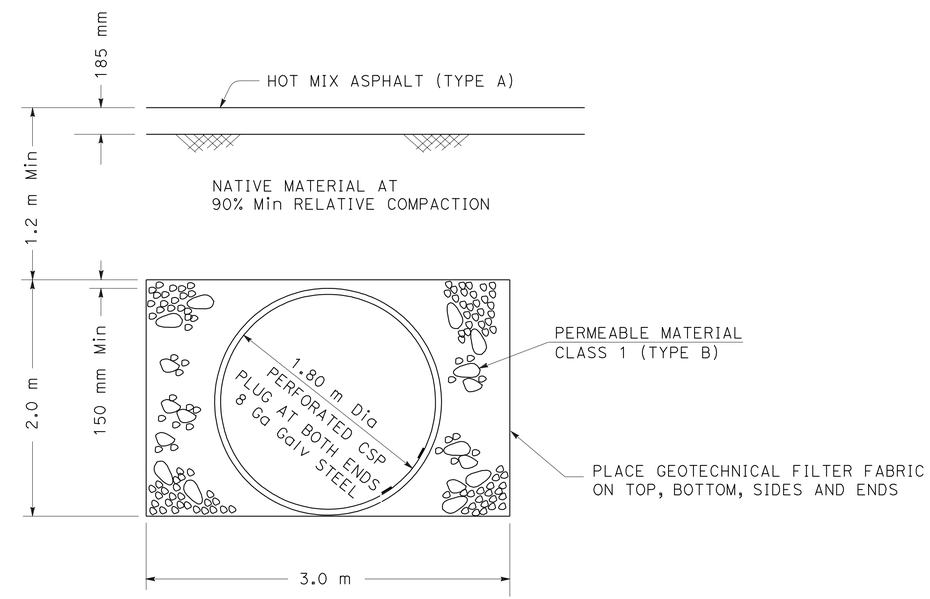

TYPICAL SECTION

UNDERDRAIN

DRAINAGE SYSTEM No.

13 19 C1 S1 S2 T1 T2 T3 MH1

ALL DIMENSIONS ARE IN
METERS UNLESS OTHERWISE SHOWN

DRAINAGE DETAILS

NO SCALE

DD-4

STATE OF CALIFORNIA - DEPARTMENT OF TRANSPORTATION
Caltrans **DESIGN**

FUNCTIONAL SUPERVISOR: JOSE HUERTA
CALCULATED-DESIGNED BY: ALLEN LAO
CHECKED BY: WUTHY SENG
REVISED BY: WS
DATE REVISED: 7/9/09

LAST REVISION 00-00-00
DATE PLOTTED => 26-JAN-2012
TIME PLOTTED => 10:56

Dist	COUNTY	ROUTE	KILOMETER POST TOTAL PROJECT	SHEET No.	TOTAL SHEETS
10	Sta	219,108	3.4/7.9, 44.3/44.9	216	522

Caltrans Metric

REGISTERED CIVIL ENGINEER 6/16/09 DATE

6-28-10
PLANS APPROVAL DATE

REGISTERED PROFESSIONAL ENGINEER WUTHY SENG No. 60114 Exp. 6/30/10 CIVIL STATE OF CALIFORNIA

THE STATE OF CALIFORNIA OR ITS OFFICERS OR AGENTS SHALL NOT BE RESPONSIBLE FOR THE ACCURACY OR COMPLETENESS OF ELECTRONIC COPIES OF THIS PLAN SHEET.

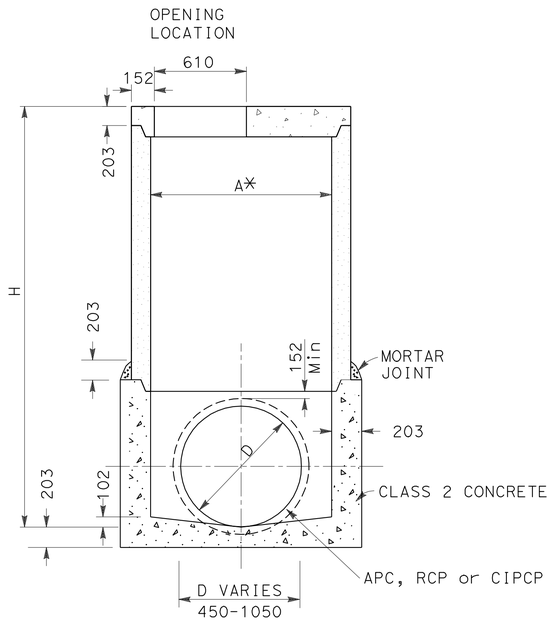

SECTION A-A

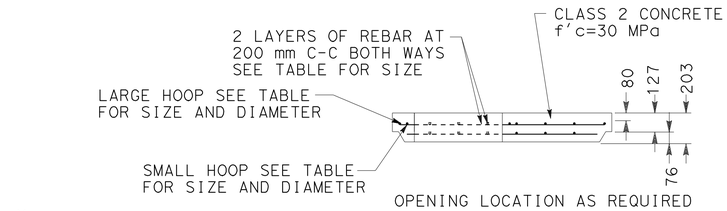

FLAT SLAB LID

*STANDARD MANHOLE
CASE I A=1219 mm
CASE II A=1524 mm
CASE III A=1829 mm

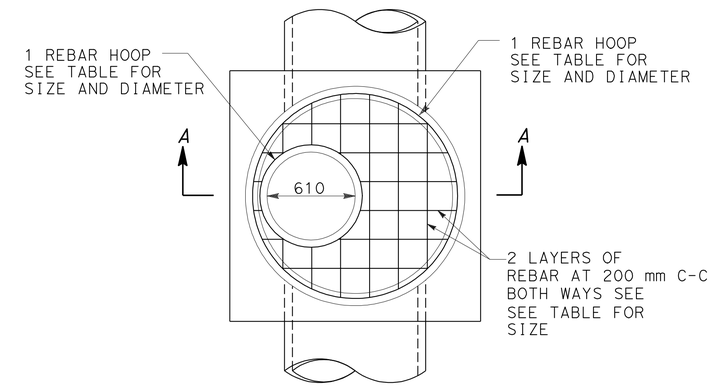

PLAN

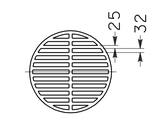

PLAN OF GRATE

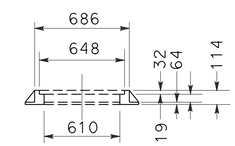

SECTION OF FRAME

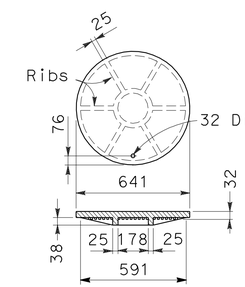

COVER

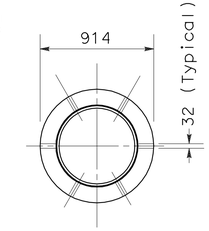

PLAN OF FRAME

FLAT SLAB LID
REINFORCING STEEL

MANHOLE DIAMETER	GRID BAR SIZE	HOOP BAR SIZE	SMALL HOOP Dia.	LARGE HOOP Dia.
1219	10	10	711	1372
1524	15	15	711	1728
1829	15	15	711	1983

MANHOLE (TYPE B)

NOTES:

1. IN NON-PAVED AREAS, WHERE SHOWN ON THE CONSTRUCTION DRAWINGS, MANHOLE FRAME AND LID SHALL BE SET 300 mm BELOW FINISH GRADE WITH NO GRADE RINGS AND THE CONCRETE COLLAR SET FLUSH WITH TOP OF FRAME. THE FRAME AND LID SHALL BE WITH BOLT DOWN TYPE, ALHAMBRA FOUNDRY COMPANY, LTD. MODEL A-1254B-6 OR APPROVED EQUAL.

2. STEPS SHALL BE INSTALLED WHEN MANHOLE HEIGHT EXCEEDS 750 mm.

ALL DIMENSIONS ARE IN MILLIMETERS UNLESS OTHERWISE SHOWN

DRAINAGE DETAILS

NO SCALE

DD-5

REVISED BY	DATE REVISED
WS	7/9/09

CALCULATED-DESIGNED BY: ALLEN LAO
CHECKED BY: WUTHY SENG
FUNCTIONAL SUPERVISOR: JOSE HUERTA

STATE OF CALIFORNIA - DEPARTMENT OF TRANSPORTATION
Caltrans DESIGN

LAST REVISION 00-00-00 | DATE PLOTTED => 26-JAN-2012 | TIME PLOTTED => 10:57

Dist	COUNTY	ROUTE	KILOMETER POST TOTAL PROJECT	SHEET No.	TOTAL SHEETS
10	Sta	219,108	3.4/7.9, 44.3/44.9	217	522

Wuthy Seng 6/16/09
REGISTERED CIVIL ENGINEER DATE

6-28-10
PLANS APPROVAL DATE

REGISTERED PROFESSIONAL ENGINEER
WUTHY SENG
No. 60114
Exp. 6/30/10
CIVIL
STATE OF CALIFORNIA

THE STATE OF CALIFORNIA OR ITS OFFICERS OR AGENTS SHALL NOT BE RESPONSIBLE FOR THE ACCURACY OR COMPLETENESS OF ELECTRONIC COPIES OF THIS PLAN SHEET.

Caltrans Metric

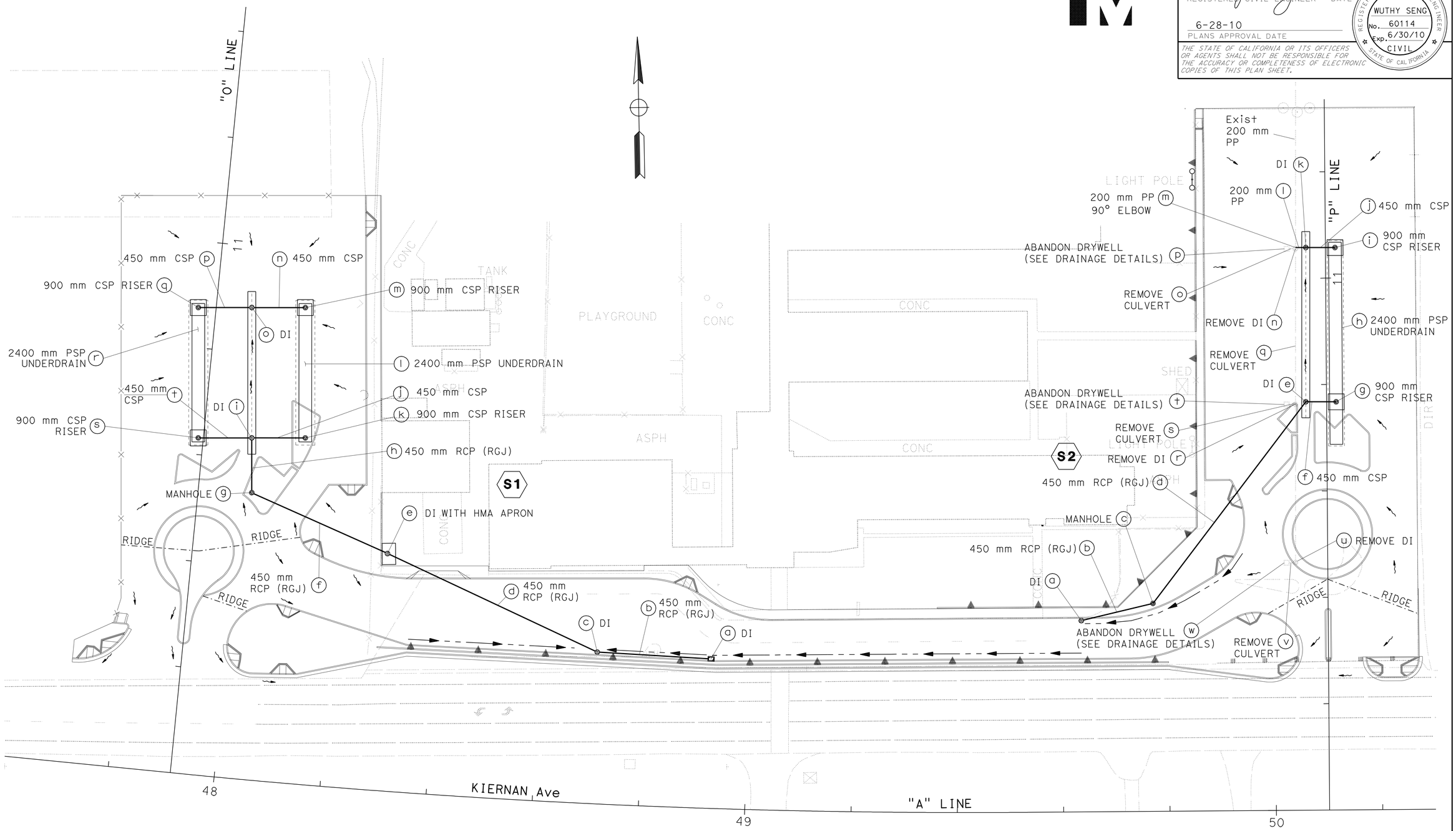

ALL DIMENSIONS ARE IN METERS UNLESS OTHERWISE SHOWN

DRAINAGE DETAILS

NO SCALE

DD-6

THIS PLAN ACCURATE FOR DRAINAGE WORK ONLY

FUNCTIONAL SUPERVISOR	CALCULATED-DESIGNED BY	REVISED BY	DATE REVISED
JOSE HUERTA	ALLEN LAO	WS	4/13/10
	WUTHY SENG		
	CHECKED BY		

STATE OF CALIFORNIA - DEPARTMENT OF TRANSPORTATION
Caltrans
DESIGN

LAST REVISION 00-00-00
DATE PLOTTED => 26-JAN-2012
TIME PLOTTED => 10:57

Dist	COUNTY	ROUTE	KILOMETER POST TOTAL PROJECT	SHEET No.	TOTAL SHEETS
10	Sta	219,108	3.4/7.9, 44.3/44.9	218	522

REGISTERED CIVIL ENGINEER 6/16/09 DATE

6-28-10
PLANS APPROVAL DATE

REGISTERED PROFESSIONAL ENGINEER WUTHY SENG No. 60114 Exp. 6/30/10 CIVIL STATE OF CALIFORNIA

THE STATE OF CALIFORNIA OR ITS OFFICERS OR AGENTS SHALL NOT BE RESPONSIBLE FOR THE ACCURACY OR COMPLETENESS OF ELECTRONIC COPIES OF THIS PLAN SHEET.

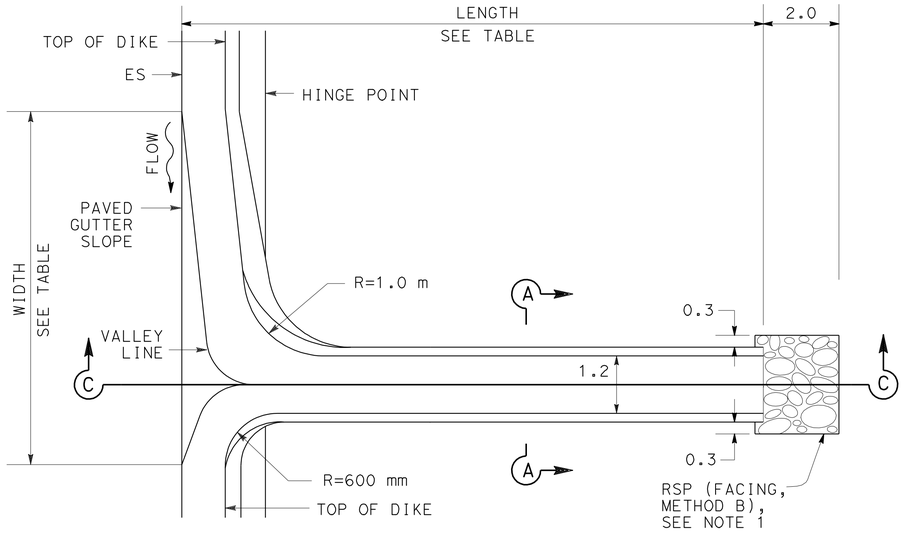

PLAN

NOTES

1. SEE TABLE FOR HMA OS DRAIN REQUIRING RSP.
2. FOR DETAILS NOT SHOWN SEE STANDARD PLAN D87D.
3. FOR HMA OS DRAINS OUTLETING TO A DRAINAGE GUTTER, EXTEND REQUIRED RSP TO TOP OF OPPOSITE BANK.

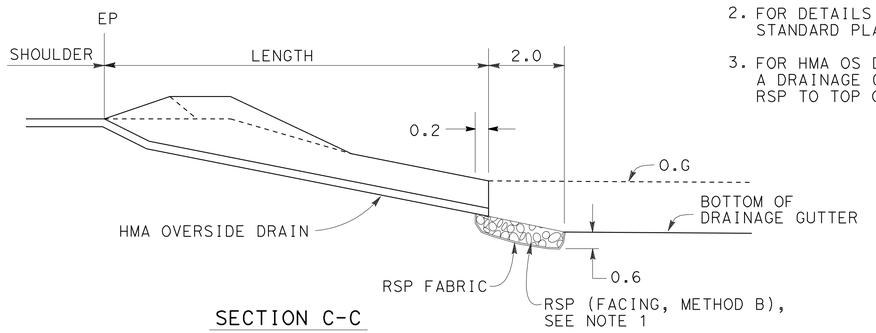

SECTION C-C

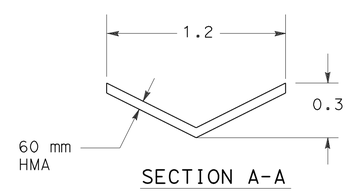

SECTION A-A

LOCATION	WIDTH (m)	LENGTH (m)	RSP (FACING, METHOD B) (m3)		RSP FABRIC (m2)	HMA (tonn)	PLACE HMA (Misc AREA) (m2)	REMOVE FES (EA)		REMOVE ROCK SLOPE PROTECTION (m3)		REMOVE CULVERT (m)
	(N)	(N)	Lt	Rt				Lt	Rt	Lt	Rt	
38+48.0 "A" LINE	1.2	13.0		2.5	9.10	2.2	15.6	1	1	2.5		34.5
39+50.0 "A" LINE									2		2.5	39.8
19.50 m Rt 44+42.1 "A" LINE	1.2	9.1		2.5	9.10	1.6	10.9					
20.84 m Rt 65+99.5 "A" LINE	1.2	6.5			9.10	1.1	7.8					
		TOTAL	5.0 (R)		27.3 (R)	**4.9	**34.3	4		5.0		74.3 (R)

** SEE SUMMARY QUANTITIES SHEETS, Q-1 AND Q-6, FOR TOTAL QUANTITIES.
(R) SEE DRAINAGE QUANTITIES SHEET, DQ-15, FOR TOTAL QUANTITIES.
(N) NOT A SEPARATE PAY ITEM, FOR QUANTITY INFORMATION ONLY.

HMA OVERSIDE DRAIN

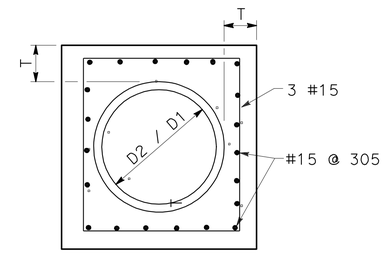

SECTION B-B

D (mm)	L (mm)	T (mm)
300	305	105
450	305	130
600	305	155
900	460	205

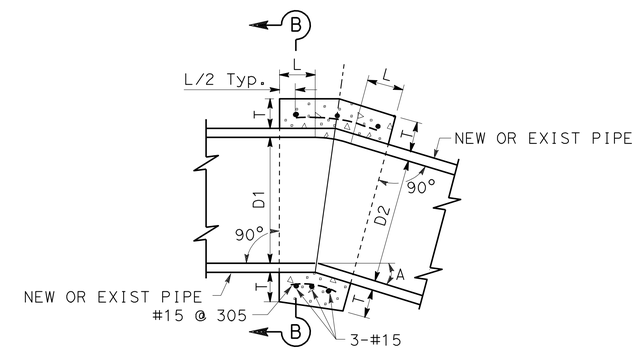

NOTES

1. WHERE PIPES OF DIFFERENT DIAMETERS ARE JOINED WITH A CONCRETE COLLAR, 'L' AND 'T' SHALL BE THOSE OF THE LARGER PIPE. D=D1 OR D2, WHICHEVER IS GREATER.
2. FOR PIPE SIZE NOT LISTED USE NEXT SIZE LARGER.
3. JOIN PIPES AT INVERTS.
4. REINFORCEMENT SHALL BE PLACED 40 mm CLEAR FROM OUTSIDE DIAMETER OF PIPE.
5. FOR ARCH PIPES, TAKE D EQUAL TO SPAN DIMENSION.

CONCRETE COLLAR

ALL DIMENSIONS ARE IN METERS UNLESS OTHERWISE SHOWN

DRAINAGE DETAILS

NO SCALE

DD-7

REVISED BY	WS
DATE REVISED	7/9/09
CALCULATED-DESIGNED BY	ALLEN LAO
CHECKED BY	WUTHY SENG
FUNCTIONAL SUPERVISOR	JOSE HUERTA

STATE OF CALIFORNIA - DEPARTMENT OF TRANSPORTATION
Caltrans
DESIGN

LAST REVISION 00-00-00 | DATE PLOTTED => 26-JAN-2012 | TIME PLOTTED => 10:57

Dist	COUNTY	ROUTE	KILOMETER POST TOTAL PROJECT	SHEET No.	TOTAL SHEETS
10	Sta	219,108	3.4/7.9, 44.3/44.9	219	522

Wuthy Seng 6/16/09
REGISTERED CIVIL ENGINEER DATE

6-28-10
PLANS APPROVAL DATE

REGISTERED PROFESSIONAL ENGINEER
WUTHY SENG
No. 60114
Exp. 6/30/10
CIVIL
STATE OF CALIFORNIA

THE STATE OF CALIFORNIA OR ITS OFFICERS OR AGENTS SHALL NOT BE RESPONSIBLE FOR THE ACCURACY OR COMPLETENESS OF ELECTRONIC COPIES OF THIS PLAN SHEET.

Caltrans Metric

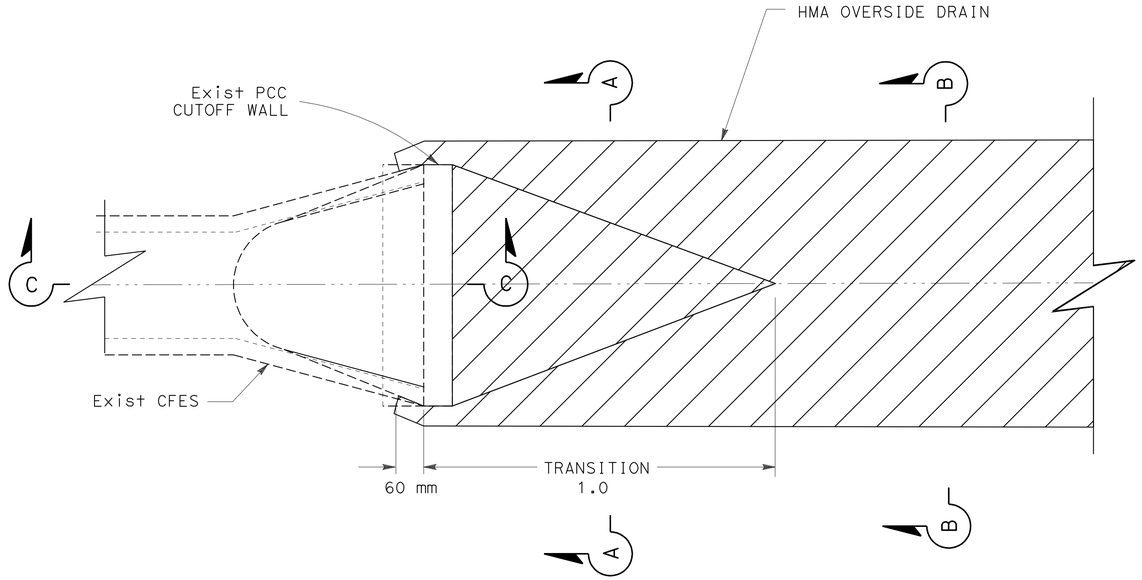

PLAN

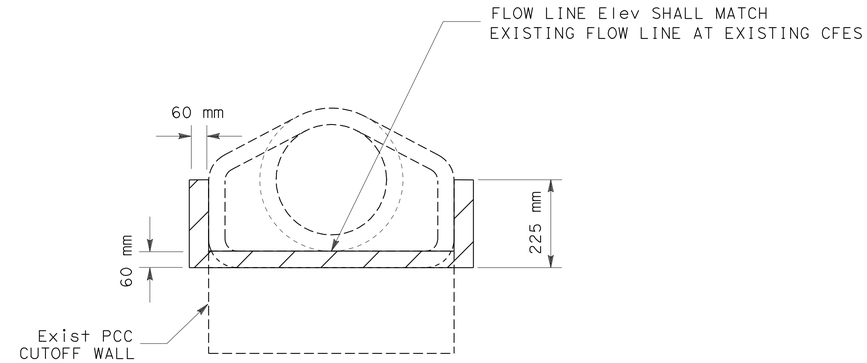

SECTION A-A

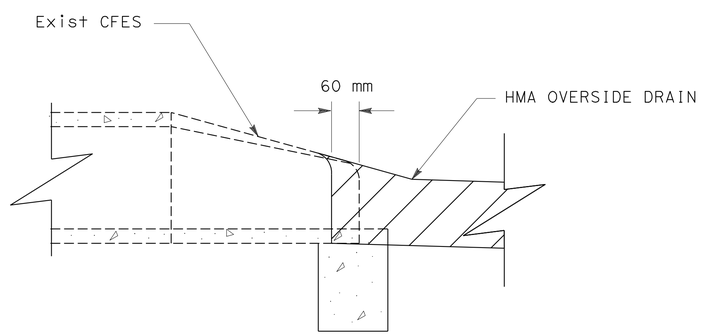

SECTION C-C

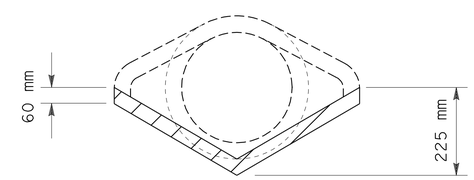

SECTION B-B

HMA OVERSIDE CONNECTION DETAIL

ALL DIMENSIONS ARE IN METERS UNLESS OTHERWISE SHOWN

DRAINAGE DETAILS

NO SCALE

DD-8

STATE OF CALIFORNIA - DEPARTMENT OF TRANSPORTATION
Caltrans
DESIGN

FUNCTIONAL SUPERVISOR: JOSE HUERTA
CALCULATED-DESIGNED BY: ALLEN LAO
CHECKED BY: WUTHY SENG
REVISED BY: WS
DATE REVISED: 7/9/09

LAST REVISION: 00-00-00
DATE PLOTTED => 26-JAN-2012
TIME PLOTTED => 10:57

Dist	COUNTY	ROUTE	KILOMETER POST TOTAL PROJECT	SHEET No.	TOTAL SHEETS
10	Sta	219,108	3.4/7.9, 44.3/44.9	220	522

REGISTERED CIVIL ENGINEER 4/13/10 DATE

6-28-10
PLANS APPROVAL DATE

REGISTERED PROFESSIONAL ENGINEER WUTHY SENG No. 60114 Exp. 06/30/10 CIVIL STATE OF CALIFORNIA

THE STATE OF CALIFORNIA OR ITS OFFICERS OR AGENTS SHALL NOT BE RESPONSIBLE FOR THE ACCURACY OR COMPLETENESS OF ELECTRONIC COPIES OF THIS PLAN SHEET.

Caltrans Metric

NOTES:

1. THOROUGHLY BRUSH ALL DEBRIS AND CLEAN EACH END OF PIPE AROUND THE ENTIRE CIRCUMFERENCE WITH WATER PRIOR TO PLACEMENT OF CONCRETE OR MORTAR.
2. PROPERLY SEAL CONNECTION BY CONCRETE PLACEMENT AROUND THE PIPELINE AFTER PERMANENT PLACEMENT OF A PLYWOOD PLUG. A Min CONCRETE BAND WIDTH OF 300 mm IS REQUIRED. USE SOFT BRISTLE BRUSH TO BLEND THE CONCRETE TOGETHER.
3. ALL PIPELINES MUST BE PLUGGED USING A 25 mm THICK PLYWOOD SHEET WITH REINFORCED CONCRETE.
4. PROPERLY SEAL CONNECTION BY MORTARING FROM INSIDE MANHOLE AFTER PERMANENT PLACEMENT OF CONCRETE COLLAR. USE SOFT BRISTLE BRUSH TO BLEND MORTAR AND CONCRETE TOGETHER.
5. FOR MANHOLE DETAILS, SEE DRAINAGE DETAILS DD-5.

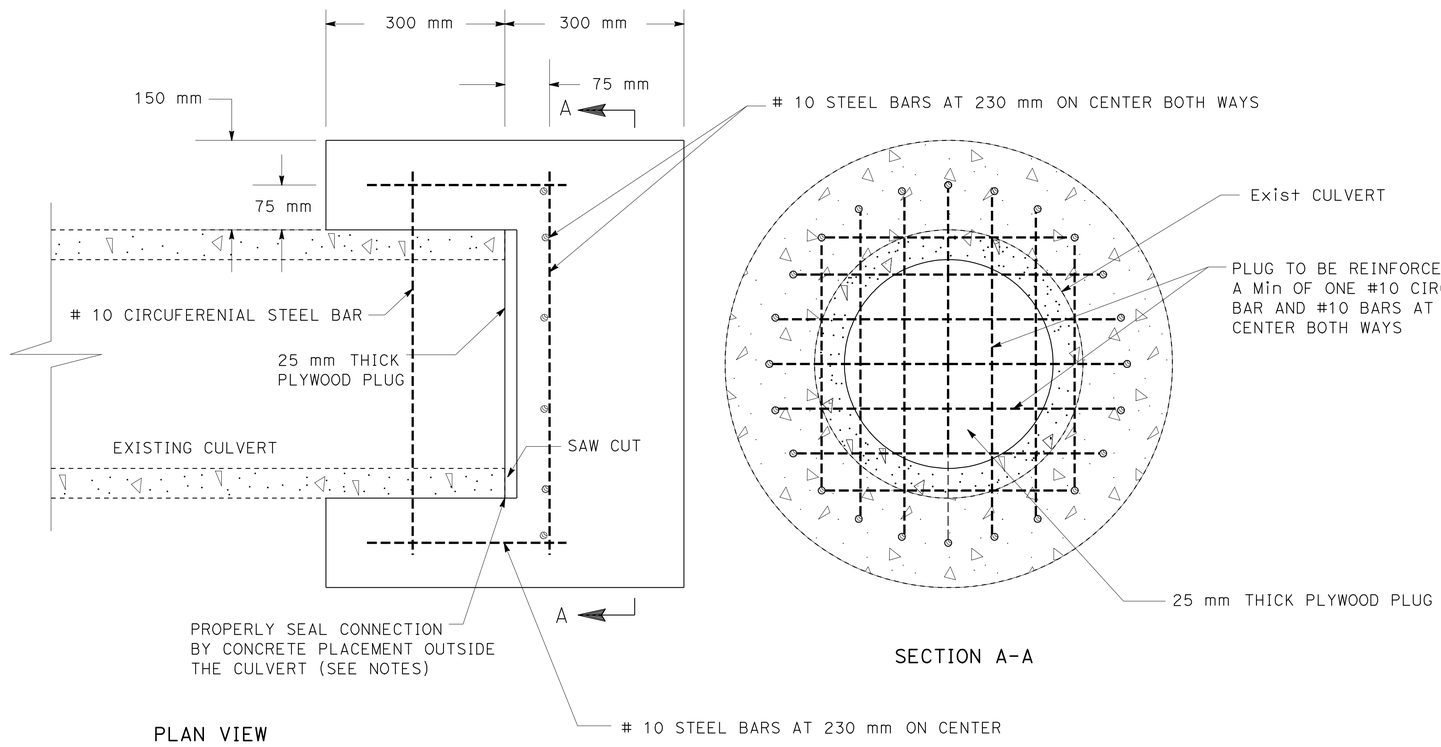

PLAN VIEW

SECTION A-A

CONCRETE PLUG

DRAINAGE SYSTEM No. 40

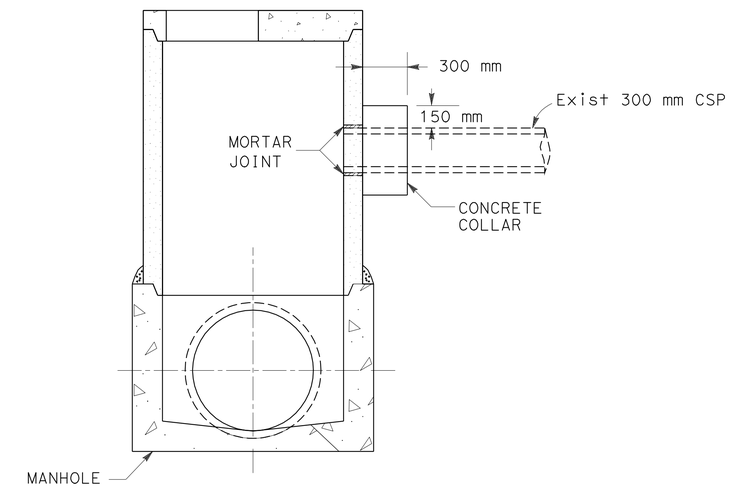

CONCRETE COLLAR

DRAINAGE SYSTEM No. MH1

ALL DIMENSIONS ARE IN METERS UNLESS OTHERWISE SHOWN

DRAINAGE DETAILS

NO SCALE **DD-9**

STATE OF CALIFORNIA - DEPARTMENT OF TRANSPORTATION
Caltrans
DESIGN

FUNCTIONAL SUPERVISOR: JOSE HUERTA
CALCULATED-DESIGNED BY: WUTHY SENG
CHECKED BY: HUONG LE
REVISED BY: HL
DATE REVISED: 4/13/10

LAST REVISION 00-00-00 | DATE PLOTTED => 26-JAN-2012 | TIME PLOTTED => 10:57

Dist	COUNTY	ROUTE	KILOMETER POST TOTAL PROJECT	SHEET No.	TOTAL SHEETS
10	Sta	219,108	3.4/7.9, 44.3/44.9	221	522

REGISTERED CIVIL ENGINEER 6/16/09 DATE

6-28-10
PLANS APPROVAL DATE

REGISTERED PROFESSIONAL ENGINEER WUTHY SENG No. 60114 Exp. 6/30/10 CIVIL STATE OF CALIFORNIA

THE STATE OF CALIFORNIA OR ITS OFFICERS OR AGENTS SHALL NOT BE RESPONSIBLE FOR THE ACCURACY OR COMPLETENESS OF ELECTRONIC COPIES OF THIS PLAN SHEET.

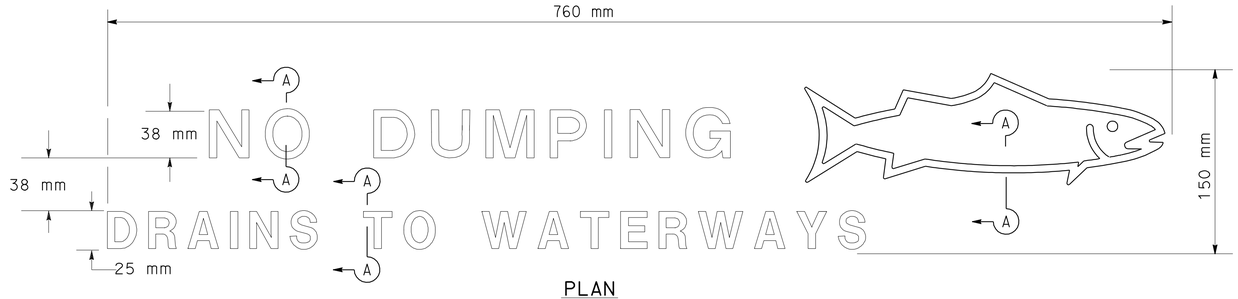

PLAN

DRAINAGE INLET MARKER
(STAMPED CONCRETE IMPRINT)

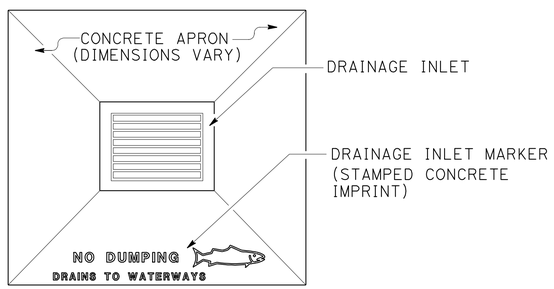

PLAN

DRAINAGE INLET MARKER ON DRAINAGE INLET APRON

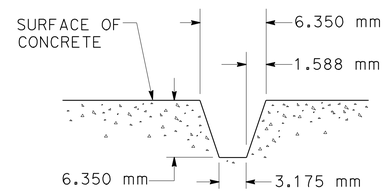

SECTION A-A

STAMPED CONCRETE IMPRINT DETAIL

NOTES:

1. THE STAMPED CONCRETE IMPRESSION SHALL BE LEGIBLE AND FREE OF BLEMISHES.
2. THE DIMENSIONS OF THE DRAINAGE INLET MARKER (STAMPED CONCRETE IMPRINT) SHALL VARY NO MORE THAN 25 mm IN WIDTH AND LENGTH.
3. THE DRAINAGE INLET MARKER SHALL BE CENTERED OPPOSITE THE DRAINAGE FACILITY.
4. THE TEXT, GRAPHIC AND BACKGROUND SHALL BE OF CONTRASTING COLORS FOR DRAINAGE INLET MARKERS. COLORS FOR TEXT AND GRAPHIC SHALL BE BLUE OR GREEN.
5. SEE DRAINAGE QUANTITIES PLANS FOR LOCATIONS OF INLETS TO BE INSTALLED WITH DRAINAGE INLET MARKERS.

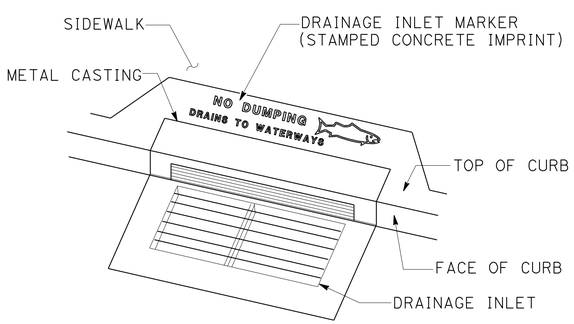

PERSPECTIVE

DRAINAGE INLET MARKER ON DRAINAGE INLET

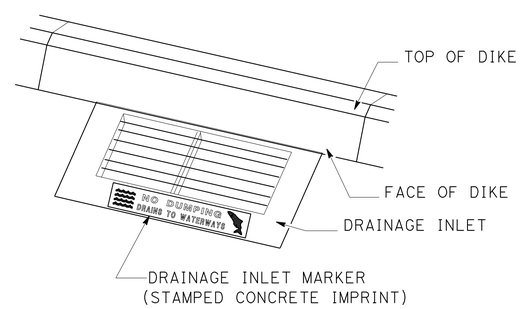

PERSPECTIVE

DRAINAGE INLET MARKER ON HOT MIXED ASPHALT DIKE

ALL DIMENSIONS ARE IN MILLIMETERS UNLESS OTHERWISE SHOWN

DRAINAGE DETAILS
(DRAINAGE INLET MARKER)

NO SCALE

DD-10

STATE OF CALIFORNIA - DEPARTMENT OF TRANSPORTATION
Caltrans DESIGN

FUNCTIONAL SUPERVISOR: JOSE HUERTA
CALCULATED-DESIGNED BY: SARAVUTH PHIN
CHECKED BY: WUTHY SENG
REVISED BY: WS
DATE REVISED: 7/9/09

LAST REVISION 00-00-00
DATE PLOTTED => 26-JAN-2012
TIME PLOTTED => 10:57

Dist	COUNTY	ROUTE	KILOMETER POST TOTAL PROJECT	SHEET No.	TOTAL SHEETS
10	Sta	219,108	3.4/7.9, 44.3/44.9	222	522

REGISTERED CIVIL ENGINEER 6/16/09 DATE

6-28-10
PLANS APPROVAL DATE

REGISTERED PROFESSIONAL ENGINEER WUTHY SENG No. 60114 Exp. 6/30/10 CIVIL STATE OF CALIFORNIA

THE STATE OF CALIFORNIA OR ITS OFFICERS OR AGENTS SHALL NOT BE RESPONSIBLE FOR THE ACCURACY OR COMPLETENESS OF ELECTRONIC COPIES OF THIS PLAN SHEET.

Caltrans Metric

NOTES: (N) NOT A SEPARATE PAY ITEM, FOR INFORMATION ONLY.
** REMOVAL OF FLARED END SECTIONS (FES) INCLUDED.

ABBREVIATIONS:
S - STANDARD
RGJ - RUBBER GASKET JOINT

DRAINAGE QUANTITIES

DRAINAGE PLAN SHEET No.	DRAINAGE SYSTEM No. ⬡	DRAINAGE UNIT No. ◯	(N) 200 mm PP 90° ELBOW	REMOVE CULVERT	REMOVE INLET	REMOVE MANHOLE	1800 mm PSP UNDERDRAIN (3.51 mm THICK)	2400 mm PSP UNDERDRAIN (3.51 mm THICK)	DRAINAGE MANHOLE (TYPE B)	FRAME & COVER	MINOR CONCRETE (MINOR STRUCTURE & PCC Reinf SLAB)	CONCRETE FLARED END SECTION (CFES) 450 mm	600 mm	750 mm	ROCK SLOPE PROTECTION (RSP) (FACING, METHOD B)	ROCK SLOPE PROTECTION FABRIC	MISCELLANEOUS IRON & STEEL	PLACE HMA (Misc AREA)	450 mm CSP (2.01 mm THICK)	200 mm PLASTIC PIPE	REINFORCED CONCRETE PIPE (RGJ) LENGTH 450 mm	600 mm	750 mm	(N) CONCRETE PLUG	(N) CONCRETE COLLAR	MINOR CONCRETE (BACKFILL)	900 mm CSP (3.51 mm THICK)	900 mm CSP RISER (3.51 mm THICK)	900 mm PRECAST Conc PIPE INLET	(N) HEIGHT OF INLET (H)	(N) PIPE JOINT CLASSIFICATION	(N) MAXIMUM COVER	(N) DRAINAGE INLET MARKER	DESCRIPTION	STATION	DRAINAGE PLAN SHEET No.	DRAINAGE SYSTEM No. ⬡	DRAINAGE UNIT No. ◯
			EA	m	EA	EA	m	m	EA	EA	m^3	EA	EA	EA	m^3	m^2	kg	m^2	m	m	m	m	m	EA	EA	m^3	m	m	m	m		m	EA					
D-2	1	a									0.20						107	11.4											1.12	0.97				GCP INLET, TYPE 900R GRATE, W/ HMA APRON	37+40.00 "A" LINE ℄	D-2	1	a
		b																			24.0										S	0.93		450 mm RCP (RGJ)				b
		c										1																						450 mm CFES	37+40.0 "A" LINE, 23.60 m L+			c
		d													2.20	9.10																		RSP WITH FABRIC				d
D-2	2	a									0.20						107	11.4											1.02	0.87				GCP INLET, TYPE 900R GRATE, W/ HMA APRON	38+70.0 "A" LINE ℄	D-2	2	a
		b																			23.5										S	0.93		450 mm RCP (RGJ)				b
		c										1																						450 mm CFES	38+70.0 "A" LINE, 23.93 m L+			c
		d													2.20	9.10																		RSP WITH FABRIC				d
		e																			9.1					2.7					S	0.45		450 mm RCP (RGJ)				e
		f									0.20						107	11.4											1.02	0.87				GCP INLET, TYPE 900R GRATE, W/ HMA APRON	38+60.9 "A" LINE ℄			f
		g		** 33.4																																		g
D-3	3	a										1																						450 mm CFES	39+53.5 "A" LINE, 26.747 m L+	D-3	3	a
		b																			9.0										S	0.70		450 mm RCP (RGJ)				b
		c										1																						450 mm CFES	39+66.5 "A" LINE, 27.747 m L+			c
D-3	4	a									0.20						107	11.4											0.92	0.77				GCP INLET, TYPE 900R GRATE, W/ HMA APRON	41+40.0 "A" LINE ℄	D-3	4	a
		b																			26.5										S	1.29		450 mm RCP (RGJ)				b
		c										1																						450 mm CFES	41+40.0 "A" LINE, 26.61 m R+			c
		d													2.20	9.10																		RSP WITH FABRIC				d
D-3	5	a										1																						450 mm CFES	41+72.4 "A" LINE, 27.63 m L+	D-3	5	a
		b																			23.5										S	0.74		450 mm RCP (RGJ)				b
		c										1																						450 mm CFES	41+99.5 "A" LINE, 27.99 m L+			c
D-3	6	a									0.20						107	11.4											1.12	0.96				GCP INLET, TYPE 900R GRATE, W/ HMA APRON	42+40.0 "A" LINE ℄	D-3	6	a
		b																			25.8										S	1.26		450 mm RCP (RGJ)				b
		c										1																						450 mm CFES	42+40.0 "A" LINE, 26.10 m L+			c
		d													2.20	9.10																		RSP WITH FABRIC				d
SHEET TOTAL				33.4							1.00	8			8.80	36.40	535	57.0			141.4					2.7			5.20								

DRAINAGE QUANTITIES

DQ-1

STATE OF CALIFORNIA - DEPARTMENT OF TRANSPORTATION
Caltrans
DESIGN

FUNCTIONAL SUPERVISOR: JOSE HUERTA
CALCULATED-DESIGNED BY: WUTHY SENG
CHECKED BY: ALLEN LAO
REVISED BY: WS
DATE REVISED: 4/13/10

LAST REVISION 00-00-00 | DATE PLOTTED => 26-JAN-2012 | TIME PLOTTED => 10:57

Dist	COUNTY	ROUTE	KILOMETER POST TOTAL PROJECT	SHEET No.	TOTAL SHEETS
10	Sta	219,108	3.4/7.9, 44.3/44.9	223	522

Caltrans Metric

Wuthy Seng 6/16/09
REGISTERED CIVIL ENGINEER DATE

6-28-10
PLANS APPROVAL DATE

REGISTERED PROFESSIONAL ENGINEER WUTHY SENG No. 60114 Exp. 6/30/10 CIVIL STATE OF CALIFORNIA

THE STATE OF CALIFORNIA OR ITS OFFICERS OR AGENTS SHALL NOT BE RESPONSIBLE FOR THE ACCURACY OR COMPLETENESS OF ELECTRONIC COPIES OF THIS PLAN SHEET.

DRAINAGE QUANTITIES

DRAINAGE PLAN SHEET No.	DRAINAGE SYSTEM No. ⬡	DRAINAGE UNIT No. ◯	(N) 200 mm PP 90° ELBOW	REMOVE CULVERT	REMOVE INLET	REMOVE MANHOLE	1800 mm PSP UNDERDRAIN (3.51 mm THICK)	2400 mm PSP UNDERDRAIN (3.51 mm THICK)	DRAINAGE MANHOLE (TYPE B)	FRAME & COVER	MINOR CONCRETE (MINOR STRUCTURE & PCC Reinf SLAB)	CONCRETE FLARED END SECTION (CFES) 450 mm	CFES 600 mm	CFES 750 mm	ROCK SLOPE PROTECTION (RSP) (FACING, METHOD B)	ROCK SLOPE PROTECTION FABRIC	MISCELLANEOUS IRON & STEEL	PLACE HMA (Misc AREA)	450 mm CSP (2.01 mm THICK)	200 mm PLASTIC PIPE	REINFORCED CONCRETE PIPE (RGJ) LENGTH 450 mm	RGJ 600 mm	RGJ 750 mm	(N) CONCRETE PLUG	(N) CONCRETE COLLAR	MINOR CONCRETE (BACKFILL)	900 mm CSP (3.51 mm THICK)	900 mm CSP RISER (3.51 mm THICK)	900 mm PRECAST Conc PIPE INLET	(N) HEIGHT OF INLET (H)	(N) PIPE JOINT CLASSIFICATION	(N) MAXIMUM COVER	(N) DRAINAGE INLET MARKER	DESCRIPTION	STATION	DRAINAGE PLAN SHEET No.	DRAINAGE SYSTEM No. ⬡	DRAINAGE UNIT No. ◯
			EA	m	EA	EA	m	m	EA	EA	m^3	EA	EA	EA	m^3	m^2	kg	m^2	m	m	m	m	m	EA	EA	m^3	m	m	m	m		m	EA					
D-4	7	a									0.20						107	11.4											0.91	0.76				GCP INLET, TYPE 900R GRATE, W/ HMA APRON	44+80.0 "A" LINE ℄	D-4	7	a
		b																			24.7										S	0.96		450 mm RCP (RGJ)				b
		c										1																						450 mm CFES	44+80.0 "A" LINE, 24.89 m Lt			c
		d													2.20	9.10																		RSP WITH FABRIC				d
D-5	8	a									0.20						107	11.4											0.83	0.68				GCP INLET, TYPE 900R GRATE, W/ HMA APRON	45+91.0 "A" LINE, 1.80 m Lt	D-5	8	a
		b																			9.1										S	0.92		450 mm RCP (RGJ)				b
		c									0.20						107	11.4											0.90	0.74				GCP INLET, TYPE 900R GRATE, W/ HMA APRON	46+01.0 "A" LINE, 1.80 m Lt			c
		d																			27.9					7.6					S	0.30		450 mm RCP (RGJ)				d
		e										1																						450 mm CFES	46+01.0 "A" LINE, 26.20 m Rt			e
		f													2.20	9.10																		RSP WITH FABRIC				f
D-5	9	a										1																						450 mm CFES	45+60.5 "A" LINE, 23.13 m Lt	D-5	9	a
		b																			49.5					14.4					S	0.87		450 mm RCP (RGJ)				b
		c										1																						450 mm CFES	46+09.6 "A" LINE, 26.74 m Lt			c
D-5	10	a									0.20						107	11.4											1.02	0.87				GCP INLET, TYPE 900R GRATE, W/ HMA APRON	46+80.0 "A" LINE ℄	D-5	10	a
		b																			23.1										S	0.92		450 mm RCP (RGJ)				b
		c										1																						450 mm CFES	46+80.0 "A" LINE, 25.19 m Lt			c
		d													2.20	9.10																		RSP WITH FABRIC				d
D-5	11	a										1																						450 mm CFES	46+66.8 "A" LINE, 28.63 m Rt	D-5	11	a
		b																			32.4					8.0					S	0.62		450 mm RCP (RGJ)				b
		c										1																						450 mm CFES	26+99.2 "A" LINE, 30.05 m Rt			c
SHEET TOTAL											0.80	7			6.60	27.30	428	45.6			166.7					30.0			3.66									

DRAINAGE QUANTITIES

DQ-2

STATE OF CALIFORNIA - DEPARTMENT OF TRANSPORTATION
Caltrans
DESIGN

FUNCTIONAL SUPERVISOR: JOSE HUERTA
CALCULATED-DESIGNED BY: WUTHY SENG
CHECKED BY: ALLEN LAO
REVISED BY: WS
DATE REVISED: 4/13/10

LAST REVISION 00-00-00 | DATE PLOTTED => 26-JAN-2012 | TIME PLOTTED => 10:57

Dist	COUNTY	ROUTE	KILOMETER POST TOTAL PROJECT	SHEET No.	TOTAL SHEETS
10	Sta	219,108	3.4/7.9, 44.3/44.9	224	522

REGISTERED CIVIL ENGINEER 6/16/09 DATE

6-28-10
PLANS APPROVAL DATE

REGISTERED PROFESSIONAL ENGINEER WUTHY SENG No. 60114 Exp. 6/30/10 CIVIL STATE OF CALIFORNIA

THE STATE OF CALIFORNIA OR ITS OFFICERS OR AGENTS SHALL NOT BE RESPONSIBLE FOR THE ACCURACY OR COMPLETENESS OF ELECTRONIC COPIES OF THIS PLAN SHEET.

Caltrans Metric

DRAINAGE QUANTITIES

DRAINAGE PLAN SHEET No.	DRAINAGE SYSTEM No.	DRAINAGE UNIT No.	(N) 200 mm PP 90° ELBOW	REMOVE CULVERT	REMOVE INLET	REMOVE MANHOLE	1800 mm PSP UNDERDRAIN (3.51 mm THICK)	2400 mm PSP UNDERDRAIN (3.51 mm THICK)	DRAINAGE MANHOLE (TYPE B)	FRAME & COVER	MINOR CONCRETE (MINOR STRUCTURE & PCC Reinf SLAB)	CONCRETE FLARED END SECTION (CFES) 450 mm	CFES 600 mm	CFES 750 mm	ROCK SLOPE PROTECTION (RSP) (FACING, METHOD B)	ROCK SLOPE PROTECTION FABRIC	MISCELLANEOUS IRON & STEEL	PLACE HMA (Misc AREA)	450 mm CSP (2.01 mm THICK)	200 mm PLASTIC PIPE	REINFORCED CONCRETE PIPE (RGJ) LENGTH 450 mm	RGJ 600 mm	RGJ 750 mm	(N) CONCRETE PLUG	(N) CONCRETE COLLAR	MINOR CONCRETE (BACKFILL)	900 mm CSP (3.51 mm THICK)	900 mm CSP RISER (3.51 mm THICK)	900 mm PRECAST Conc PIPE INLET	(N) HEIGHT OF INLET (H)	(N) PIPE JOINT CLASSIFICATION	(N) MAXIMUM COVER	(N) DRAINAGE INLET MARKER	DESCRIPTION	STATION	DRAINAGE PLAN SHEET No.	DRAINAGE SYSTEM No.	DRAINAGE UNIT No.
			EA	m	EA	EA	m	m	EA	EA	m^3	EA	EA	EA	m^3	m^2	kg	m^2	m	m	m	m	m	EA	EA	m^3	m	m	m	m		m	EA					
D-5	12	a									0.20						107	11.4											1.12	0.97				GCP INLET, TYPE 900R GRATE, W/ HMA APRON	48+60.0 "A" LINE ℄	D-5	12	a
		b																			9.1					2.7					S	0.60		450 mm RCP (RGJ)				b
		c									0.20						107	11.4											1.12	0.97				GCP INLET, TYPE 900R GRATE, W/ HMA APRON	48+70.9 "A" LINE ℄			c
		d																			27.0										S	1.41		450 mm RCP (RGJ)				d
		e										1																						450 mm CFES	48+70.9 "A" LINE, 27.12 m R+			e
		f													2.20	9.10																		RSP WITH FABRIC				f
D-6	13	a									1.45						108													2.18			1	G3 INLET, TYPE 600-12x GRATE	49+42.0 "A" LINE, 26.95 m L+	D-6	13	a
		b																	1.9												S	0.41		450 mm CSP				b
		c								1	2.70																0.75	2.25						900 mm CSP RISER W/ PCC Reinf SLAB	49+42.0 "A" LINE, 24.15 m L+			c
		d					72.0																								S	1.24		1800 mm PSP UNDERDRAIN				d
D-5		e									1.48						108													2.17			1	G3 INLET, TYPE 600-12x GRATE	48+70.9 "A" LINE, 26.33 m L+	D-5		e
		f																	3.0												S	0.64		450 mm CSP				f
		g								1	2.70																0.75	2.39						900 mm CSP RISER W/ PCC Reinf SLAB	48+70.9 "A" LINE, 22.33 m L+			g
		h																			64.3										S	1.25		450 mm RCP (RGJ)				h
		i									0.94						108													1.24			1	G3 INLET, TYPE 600-12x GRATE	48+05.0 "A" LINE, 19.92 m L+			I
D-6	14	a									0.20						107	11.4											1.02	0.87				GCP INLET, TYPE 900R GRATE, W/ HMA APRON	50+20.0 "A" LINE ℄	D-6	14	a
		b																			26.8										S	0.98		450 mm RCP (RGJ)				b
		c										1																						450 mm CFES	50+20.0 "A" LINE, 27.20 m R+			c
		d													2.20	9.10																		RSP WITH FABRIC				d
D-7	15	a									0.20						107	11.4											1.44	1.29				GCP INLET, TYPE 900R GRATE, W/ HMA APRON	52+58.0 "A" LINE, 1.40 m L+	D-7	15	a
		b																			34.7										S	1.29		450 mm RCP (RGJ)				b
		c										1																						450 mm CFES	52+58.0 "A" LINE, 33.91 m R+			c
		d													2.20	9.10																		RSP WITH FABRIC				d
SHEET TOTAL							72.0			2	10.07	3			6.60	27.30	752	45.6	4.9		161.9					2.7	1.50	4.64	4.70								

DRAINAGE QUANTITIES

DQ-3

ALLEN LAO — WUTHY SENG — REVISED BY WS — DATE REVISED 4/13/10

CALCULATED-DESIGNED BY — CHECKED BY

FUNCTIONAL SUPERVISOR JOSE HUERTA

STATE OF CALIFORNIA - DEPARTMENT OF TRANSPORTATION

Caltrans DESIGN

LAST REVISION 00-00-00 DATE PLOTTED => 26-JAN-2012 TIME PLOTTED => 10:57

Dist	COUNTY	ROUTE	KILOMETER POST TOTAL PROJECT	SHEET No.	TOTAL SHEETS
10	Sta	219,108	3.4/7.9, 44.3/44.9	225	522

REGISTERED CIVIL ENGINEER 6/16/09 DATE

6-28-10
PLANS APPROVAL DATE

REGISTERED PROFESSIONAL ENGINEER WUTHY SENG No. 60114 Exp. 6/30/10 CIVIL STATE OF CALIFORNIA

THE STATE OF CALIFORNIA OR ITS OFFICERS OR AGENTS SHALL NOT BE RESPONSIBLE FOR THE ACCURACY OR COMPLETENESS OF ELECTRONIC COPIES OF THIS PLAN SHEET.

Caltrans Metric

DRAINAGE QUANTITIES

DRAINAGE PLAN SHEET No.	DRAINAGE SYSTEM No.	DRAINAGE UNIT No.	(N) 200 mm PP 90° ELBOW	REMOVE CULVERT	REMOVE INLET	REMOVE MANHOLE	1800 mm PSP UNDERDRAIN (3.51 mm THICK)	2400 mm PSP UNDERDRAIN (3.51 mm THICK)	DRAINAGE MANHOLE (TYPE B)	FRAME & COVER	MINOR CONCRETE (MINOR STRUCTURE & PCC Reinf SLAB)	CONCRETE FLARED END SECTION (CFES) 450 mm	600 mm	750 mm	ROCK SLOPE PROTECTION (RSP) (FACING, METHOD B)	ROCK SLOPE PROTECTION FABRIC	MISCELLANEOUS IRON & STEEL	PLACE HMA (Misc AREA)	450 mm CSP (2.01 mm THICK)	200 mm PLASTIC PIPE	REINFORCED CONCRETE PIPE (RGJ) LENGTH 450 mm	600 mm	750 mm	(N) CONCRETE PLUG	(N) CONCRETE COLLAR	MINOR CONCRETE (BACKFILL)	900 mm CSP (3.51 mm THICK)	900 mm CSP RISER (3.51 mm THICK)	900 mm PRECAST Conc PIPE INLET	(N) HEIGHT OF INLET (H)	(N) PIPE JOINT CLASSIFICATION	(N) MAXIMUM COVER	(N) DRAINAGE INLET MARKER	DESCRIPTION	STATION	DRAINAGE PLAN SHEET No.	DRAINAGE SYSTEM No.	DRAINAGE UNIT No.
			EA	m	EA	EA	m	m	EA	EA	m^3	EA	EA	EA	m^3	m^2	kg	m^2	m	m	m	m	m	EA	EA	m^3	m	m	m	m		m	EA					
D-7	16	a									0.20						107	11.4											1.25	1.10				GCP INLET, TYPE 900R GRATE, W/ HMA APRON	53+00.4 "A" LINE, 1.80 m L+	D-7	16	a
		b																			30.8										S	1.19		450 mm RCP (RGJ)				b
		c										1																						450 mm CFES	53+00.4 "A" LINE, 32.84 m L+			c
		d													2.20	9.10																		RSP WITH FABRIC				d
		e																			9.1										S	0.55		450 mm RCP (RGJ)				e
		f									0.20						107	11.4											1.22	1.07				GCP INLET, TYPE 900R GRATE, W/ HMA APRON	53+10.4 "A" LINE, 1.82 m L+			f
D-7	17	a										1																						450 mm CFES	52+76.9 "A" LINE, 38.12 m R+	D-7	17	a
		b																			29.5										S	0.87		450 mm RCP (RGJ)				b
		c										1																						450 mm CFES	53+06.4 "A" LINE, 37.75 m R+			c
D-7	18	a									0.20						107	11.4											1.35	1.20				GCP INLET, TYPE 900R GRATE, W/ HMA APRON	55+00.0 "A" LINE, 1.50 m R+	D-7	18	a
		b																			28.0										S	1.24		450 mm RCP (RGJ)				b
		c										1																						450 mm CFES	55+00.0 "A" LINE, 29.81 m R+			c
		d													2.20	9.10																		RSP WITH FABRIC				d
		e																			8.6										S	0.75		450 mm RCP (RGJ)				e
		f									0.20						107	11.4											1.25	1.10				GCP INLET, TYPE 900R GRATE, W/ HMA APRON	55+09.5 "A" LINE, 1.50 m R+			f
D-7	19	a									0.86						108													1.20			1	G1 INLET, TYPE 600-12x GRATE	54+41.7 "A" LINE, 38.13 m L+	D-7	19	a
		b																			24.6										S	1.47		450 mm RCP (RGJ)				b
		c									1.37						108													2.13			1	G1 INLET, TYPE 600-12x GRATE	54+68.7 "A" LINE, 37.07 m L+			C
		d																			12.4										S	0.75		450 mm CSP				d
		e								1	2.70																0.75	2.15						900 mm CSP RISER W/ PCC Reinf SLAB	54+83.0 "A" LINE, 36.62 m L+			e
		f					60.0																								S	1.36		1800 mm PSP UNDERDRAIN				f
		g								1	2.70																0.75	2.00						900 mm CSP RISER W/ PCC Reinf SLAB	55+39.9 "A" LINE, 34.39 m L+			g
SHEET TOTAL							60.0			2	8.43	4			4.40	18.20	644	45.6			143.0						1.50	4.15	5.07									

ALLEN LAO | WUTHY SENG | REVISED BY | DATE REVISED | WS | 4/13/10

CALCULATED-DESIGNED BY | CHECKED BY

FUNCTIONAL SUPERVISOR: JOSE HUERTA

STATE OF CALIFORNIA - DEPARTMENT OF TRANSPORTATION

DESIGN

Caltrans

DRAINAGE QUANTITIES

DQ-4

LAST REVISION 00-00-00 | DATE PLOTTED => 25-JAN-2012 | TIME PLOTTED => 09:47

Dist	COUNTY	ROUTE	KILOMETER POST TOTAL PROJECT	SHEET No.	TOTAL SHEETS
10	Sta	219,108	3.4/7.9, 44.3/44.9	226	522

Wuthy Seng 6/16/09
REGISTERED CIVIL ENGINEER DATE

6-28-10
PLANS APPROVAL DATE

REGISTERED PROFESSIONAL ENGINEER WUTHY SENG No. 60114 Exp. 6/30/10 CIVIL STATE OF CALIFORNIA

THE STATE OF CALIFORNIA OR ITS OFFICERS OR AGENTS SHALL NOT BE RESPONSIBLE FOR THE ACCURACY OR COMPLETENESS OF ELECTRONIC COPIES OF THIS PLAN SHEET.

Caltrans Metric

DRAINAGE QUANTITIES

DRAINAGE PLAN SHEET No.	DRAINAGE SYSTEM No.	DRAINAGE UNIT No.	(N) 200 mm PP 90° ELBOW	REMOVE CULVERT	REMOVE INLET	REMOVE MANHOLE	1800 mm PSP UNDERDRAIN (3.51 mm THICK)	2400 mm PSP UNDERDRAIN (3.51 mm THICK)	DRAINAGE MANHOLE (TYPE B)	FRAME & COVER	MINOR CONCRETE (MINOR STRUCTURE & PCC Reinf SLAB)	CONCRETE FLARED END SECTION (CFES) 450 mm	600 mm	750 mm	ROCK SLOPE PROTECTION (RSP) (FACING, METHOD B)	ROCK SLOPE PROTECTION FABRIC	MISCELLANEOUS IRON & STEEL	PLACE HMA (Misc AREA)	450 mm CSP (2.01 mm THICK)	200 mm PLASTIC PIPE	REINFORCED CONCRETE PIPE (RGJ) LENGTH 450 mm	600 mm	750 mm	(N) CONCRETE PLUG	(N) CONCRETE COLLAR	MINOR CONCRETE (BACKFILL)	900 mm CSP (3.51 mm THICK)	900 mm CSP RISER (3.51 mm THICK)	900 mm PRECAST Conc PIPE INLET	(N) HEIGHT OF INLET (H)	(N) PIPE JOINT CLASSIFICATION	(N) MAXIMUM COVER	(N) DRAINAGE INLET MARKER	DESCRIPTION	STATION	DRAINAGE PLAN SHEET No.	DRAINAGE SYSTEM No.	DRAINAGE UNIT No.
			EA	m	EA	EA	m	m	EA	EA	m^3	EA	EA	EA	m^3	m^2	kg	m^2	m	m	m	m	m	EA	EA	m^3	m	m	m	m		m	EA					
D-8	20	a									0.20						107	11.4											0.85	0.70				GCP INLET, TYPE 900R GRATE, W/ HMA APRON	7+97.5 "H" LINE, 16.19 m R+	D-8	20	a
		b																			29.5										S	1.08		450 mm RCP (RGJ)				b
		c										1																						450 mm CFES	7+97.5 "H" LINE, 13.48 m L+			c
		d													2.20	9.10																		RSP WITH FABRIC				d
D-10	21	a									0.20						107	11.4											1.32	1.17				GCP INLET, TYPE 900R GRATE, W/ HMA APRON	57+20.0 "A" LINE ℄	D-10	21	a
		b																			28.5										S	1.50		450 mm RCP (RGJ)				b
		c										1																						450 mm CFES	57+20.0 "A" LINE, 29.00 m R+			c
		d													2.20	9.10																		RSP WITH FABRIC				d
D-10	22	a									0.20						107	11.4											0.92	0.77				GCP INLET, TYPE 900R GRATE, W/ HMA APRON	59+31.0 "A" LINE ℄	D-10	22	a
		b																			29.7										S	1.04		450 mm RCP (RGJ)				b
		c										1																						450 mm CFES	59+31.0 "A" LINE, 29.80 m R+			c
		d													2.20	9.10																		RSP WITH FABRIC				d
D-10	23	a										1																						450 mm CFES	58+74.5 "A" LINE, 31.50 m L+	D-10	23	a
		b																			50.8										S	0.63		450 mm RCP (RGJ)				b
		c										1																						450 mm CFES	59+25.3 "A" LINE, 30.85 m L+			c
D-11	24	a										1																						450 mm CFES	59+70.4 "A" LINE, 32.79 m R+	D-11	24	a
		b																			26.9					7.0					S	0.62		450 mm RCP (RGJ)				b
		c										1																						450 mm CFES	59+97.3 "A" LINE, 33.10 m R+			c
D-11	25	a									0.20						107	11.4											0.95	0.80				GCP INLET, TYPE 900R GRATE, W/ HMA APRON	59+69.2 "A" LINE ℄	D-11	25	a
		b																			28.3										S	1.09		450 mm RCP (RGJ)				b
		c										1																						450 mm CFES	59+69.2 "A" LINE, 28.80 m L+			c
		d													2.20	9.10																		RSP WITH FABRIC				d
		e																			9.1					2.7					S	0.35		450 mm RCP (RGJ)				e
		f									0.20						107	11.4											0.95	0.80				GCP INLET, TYPE 900R GRATE, W/ HMA APRON	59+79.2 "A" LINE ℄			f
SHEET TOTAL											1.00	8			8.80	36.40	535	57.0			202.8					9.7			4.99									

ALLEN LAO — REVISED BY
WUTHY SENG — DATE REVISED 4/13/10 — WS
CALCULATED-DESIGNED BY
CHECKED BY
FUNCTIONAL SUPERVISOR
JOSE HUERTA

STATE OF CALIFORNIA - DEPARTMENT OF TRANSPORTATION
Caltrans
DESIGN

DRAINAGE QUANTITIES
DQ-5

LAST REVISION 00-00-00 DATE PLOTTED => 25-JAN-2012 TIME PLOTTED => 09:48

Dist	COUNTY	ROUTE	KILOMETER POST TOTAL PROJECT	SHEET No.	TOTAL SHEETS
10	Sta	219,108	3.4/7.9, 44.3/44.9	227	522

Caltrans Metric

Wuthy Seng 6/16/09
REGISTERED CIVIL ENGINEER DATE

6-28-10
PLANS APPROVAL DATE

REGISTERED PROFESSIONAL ENGINEER WUTHY SENG No. 60114 Exp. 6/30/10 CIVIL STATE OF CALIFORNIA

THE STATE OF CALIFORNIA OR ITS OFFICERS OR AGENTS SHALL NOT BE RESPONSIBLE FOR THE ACCURACY OR COMPLETENESS OF ELECTRONIC COPIES OF THIS PLAN SHEET.

DRAINAGE QUANTITIES

DRAINAGE PLAN SHEET No.	DRAINAGE SYSTEM No.	DRAINAGE UNIT No.	(N) 200 mm PP 90° ELBOW	REMOVE CULVERT	REMOVE INLET	REMOVE MANHOLE	1800 mm PSP UNDERDRAIN (3.51 mm THICK)	2400 mm PSP UNDERDRAIN (3.51 mm THICK)	DRAINAGE MANHOLE (TYPE B)	FRAME & COVER	MINOR CONCRETE (MINOR STRUCTURE & PCC Reinf SLAB)	CONCRETE FLARED END SECTION (CFES) 450 mm	CFES 600 mm	CFES 750 mm	ROCK SLOPE PROTECTION (RSP) (FACING, METHOD B)	ROCK SLOPE PROTECTION FABRIC	MISCELLANEOUS IRON & STEEL	PLACE HMA (Misc AREA)	450 mm CSP (2.01 mm THICK)	200 mm PLASTIC PIPE	REINFORCED CONCRETE PIPE (RGJ) LENGTH 450 mm	RGJ 600 mm	RGJ 750 mm	(N) CONCRETE PLUG	(N) CONCRETE COLLAR	MINOR CONCRETE (BACKFILL)	900 mm CSP (3.51 mm THICK)	900 mm CSP RISER (3.51 mm THICK)	900 mm PRECAST Conc PIPE INLET	(N) HEIGHT OF INLET (H)	(N) PIPE JOINT CLASSIFICATION	(N) MAXIMUM COVER	(N) DRAINAGE INLET MARKER	DESCRIPTION	STATION	DRAINAGE PLAN SHEET No.	DRAINAGE SYSTEM No.	DRAINAGE UNIT No.
			EA	m	EA	EA	m	m	EA	EA	m^3	EA	EA	EA	m^3	m^2	kg	m^2	m	m	m	m	m	EA	EA	m^3	m	m	m	m		m	EA					
D-11	26	a										1																						450 mm CFES	60+43.8 "A" LINE, 30.85 m Lt	D-11	26	a
		b																			51.3										S	0.97		450 mm RCP (RGJ)				b
		c										1																						450 mm CFES	60+94.9 "A" LINE, 34.00 m Lt			c
D-11	27	a									0.20						107	11.4											1.15	1.00				GCP INLET, TYPE 900R GRATE, W/ HMA APRON	61+00.0 "A" LINE, 1.80 m Lt	D-10	27	a
		b																			33.2										S	1.06		450 mm RCP (RGJ)				b
		c										1																						450 mm CFES	61+00.0 "A" LINE, 35.09 m Lt			c
		d													2.20	9.10																		RSP WITH FABRIC				d
D-11	28	a										1																						450 mm CFES	60+64.2 "A" LINE, 33.66 m Rt	D-11	28	a
		b																			26.9					6.8					S	0.64		450 mm RCP (RGJ)				b
		c										1																						450 mm CFES	60+91.1 "A" LINE, 38.07 m Rt			c
D-11	29	a											1																					600 mm CFES	62+25.4 "A" LINE, 41.19 m Lt	D-11	29	a
		b																				57.0									S	1.47		600 mm RCP (RGJ)				b
		c											1																					600 mm CFES	62+85.2 "A" LINE, 36.23 m Lt			c
D-14	30	a										1																						450 mm CFES	63+59.2 "A" LINE, 33.60 m Rt	D-14	30	a
		b																			26.5										S	0.91		450 mm RCP (RGJ)				b
		c										1																						450 mm CFES	63+84.6 "A" LINE, 32.80 m Rt			c
D-14	31	a									0.20						107	11.4											1.15	1.00				GCP INLET, TYPE 900R GRATE, W/ HMA APRON	64+49.7 "A" LINE, 3.52 m Rt	D-14	31	a
		b																			25.0										S	1.08		450 mm RCP (RGJ)				b
		c										1																						450 mm CFES	64+49.6 "A" LINE, 28.72 m Rt			c
		d													2.20	9.10																		RSP WITH FABRIC				d
		e																			11.5										S	0.56		450 mm RCP (RGJ)				e
		f									0.20						107	11.4											1.15	1.00				GCP INLET, TYPE 900R GRATE, W/ HMA APRON	64+39.7 "A" LINE, 3.41 m Rt			f
SHEET TOTAL											0.60	8	2		4.40	18.20	321	34.2			174.40	57.0				6.8			3.45									

DRAINAGE QUANTITIES

DQ-6

ALLEN LAO	REVISED BY	WS	
WUTHY SENG	DATE REVISED	4/13/10	

CALCULATED-DESIGNED BY
CHECKED BY

FUNCTIONAL SUPERVISOR
JOSE HUERTA

STATE OF CALIFORNIA - DEPARTMENT OF TRANSPORTATION
Caltrans
DESIGN

LAST REVISION 00-00-00
DATE PLOTTED => 25-JAN-2012
TIME PLOTTED => 07:27

Dist	COUNTY	ROUTE	KILOMETER POST TOTAL PROJECT	SHEET No.	TOTAL SHEETS
10	Sta	219,108	3.4/7.9, 44.3/44.9	228	522

Wuthy Seng 6/16/09
REGISTERED CIVIL ENGINEER DATE

6-28-10
PLANS APPROVAL DATE

REGISTERED PROFESSIONAL ENGINEER WUTHY SENG No. 60114 Exp. 6/30/10 CIVIL STATE OF CALIFORNIA

THE STATE OF CALIFORNIA OR ITS OFFICERS OR AGENTS SHALL NOT BE RESPONSIBLE FOR THE ACCURACY OR COMPLETENESS OF ELECTRONIC COPIES OF THIS PLAN SHEET.

Caltrans Metric

DRAINAGE QUANTITIES

DRAINAGE PLAN SHEET No.	DRAINAGE SYSTEM No.	DRAINAGE UNIT No.	(N) 200 mm PP 90° ELBOW	REMOVE CULVERT	REMOVE INLET	REMOVE MANHOLE	1800 mm PSP UNDERDRAIN (3.51 mm THICK)	2400 mm PSP UNDERDRAIN (3.51 mm THICK)	DRAINAGE MANHOLE (TYPE B)	FRAME & COVER	MINOR CONCRETE (MINOR STRUCTURE & PCC Reinf SLAB)	CONCRETE FLARED END SECTION (CFES) 450 mm	CFES 600 mm	CFES 750 mm	ROCK SLOPE PROTECTION (RSP) (FACING, METHOD B)	ROCK SLOPE PROTECTION FABRIC	MISCELLANEOUS IRON & STEEL	PLACE HMA (Misc AREA)	450 mm CSP (2.01 mm THICK)	200 mm PLASTIC PIPE	REINFORCED CONCRETE PIPE (RGJ) LENGTH 450 mm	RGJ 600 mm	RGJ 750 mm	(N) CONCRETE PLUG	(N) CONCRETE COLLAR	MINOR CONCRETE (BACKFILL)	900 mm CSP (3.51 mm THICK)	900 mm CSP RISER (3.51 mm THICK)	900 mm PRECAST Conc PIPE INLET	(N) HEIGHT OF INLET (H)	(N) PIPE JOINT CLASSIFICATION	(N) MAXIMUM COVER	(N) DRAINAGE INLET MARKER	DESCRIPTION	STATION	DRAINAGE PLAN SHEET No.	DRAINAGE SYSTEM No.	DRAINAGE UNIT No.
			EA	m	EA	EA	m	m	EA	EA	m^3	EA	EA	EA	m^3	m^2	kg	m^2	m	m	m	m	m	EA	EA	m^3	m	m	m	m		m	EA					
D-14	32	a										1																						450 mm CFES	64+40.8 "A" LINE, 37.20 m Lt	D-14	32	a
		b																			37.2										S	0.88		450 mm RCP (RGJ)				b
		c										1																						450 mm CFES	64+67.4 "A" LINE, 36.90 m Lt			c
D-15	33	a									0.20						107	11.4											1.15	1.00				GCP INLET, TYPE 900R GRATE, W/ HMA APRON	66+27.2 "A" LINE ℄	D-15	33	a
		b																			30.4										S	1.22		450 mm RCP (RGJ)				b
		c										1																						450 mm CFES	66+27.2 "A" LINE, 30.40 m Lt			c
		d													2.20	9.10																		RSP WITH FABRIC				d
D-15	34	a									0.75						108													1.00			1	G1 INLET, TYPE 600-12x GRATE	68+11.9 "N" LINE, 9.90 m Rt	D-15	34	a
		b																			18.5										S	1.03		450 mm RCP (RGJ)				b
		c									0.20						107	11.4											1.45	1.30				GCP INLET, TYPE 900R GRATE, W/ HMA APRON	68+12.0 "N" LINE, 9.30 m Rt			c
		d																			29.5										S	1.71		450 mm RCP (RGJ)				d
		e										1																						450 mm CFES	68+12.0 "A" LINE, 19.82 m Lt			e
		f													2.20	9.10																		RSP WITH FABRIC				f
D-15	35	a									0.88						127													1.17			1	G1 INLET, TYPE 600-12x GRATE	69+10.0 "N" LINE, 10.20 m Lt	D-15	35	a
		b																			35.3										S	0.69		450 mm RCP (RGJ)				b
		c									1.29						215													1.00			1	GDO INLET, TYPE 600-12x GRATE	10+21.9 "J" LINE, 22.58 m Rt			c
		d																			43.6										S	1.43		450 mm RCP (RGJ)				d
		e										1																						450 mm CFES	68+27.3 "M" LINE, 21.59 m Lt			e
		f													2.20	9.10																		RSP WITH FABRIC				f
D-16	36	a									1.44						217													1.10			1	GT3 INLET, TYPE 600-12x GRATE	71+80.0 "N" LINE, 10.20 m Rt	D-16	36	a
		b																			70.1										S	0.67		450 mm RCP (RGJ)				b
		c									1.46						217													1.12			1	GT3 INLET, TYPE 600-12x GRATE	72+51.0 "N" LINE, 10.20 m Rt			c
		d																			63.0										S	1.00		450 mm RCP (RGJ)				d
SHEET TOTAL											6.22	5			6.60	27.30	1098	22.8			327.6								2.60									

DRAINAGE QUANTITIES

DQ-7

STATE OF CALIFORNIA - DEPARTMENT OF TRANSPORTATION
Caltrans
DESIGN

FUNCTIONAL SUPERVISOR: JOSE HUERTA
CALCULATED-DESIGNED BY: WUTHY SENG
CHECKED BY: ALLEN LAO
REVISED BY: WS
DATE REVISED: 4/13/10

LAST REVISION 00-00-00
DATE PLOTTED => 25-JAN-2012
TIME PLOTTED => 07:30

Dist	COUNTY	ROUTE	KILOMETER POST TOTAL PROJECT	SHEET No.	TOTAL SHEETS
10	Sta	219,108	3.4/7.9, 44.3/44.9	229	522

Wuthy Seng 6/16/09
REGISTERED CIVIL ENGINEER DATE

6-28-10
PLANS APPROVAL DATE

REGISTERED PROFESSIONAL ENGINEER WUTHY SENG No. 60114 Exp. 6/30/10 CIVIL STATE OF CALIFORNIA

THE STATE OF CALIFORNIA OR ITS OFFICERS OR AGENTS SHALL NOT BE RESPONSIBLE FOR THE ACCURACY OR COMPLETENESS OF ELECTRONIC COPIES OF THIS PLAN SHEET.

Caltrans Metric

DRAINAGE QUANTITIES

DRAINAGE PLAN SHEET No.	DRAINAGE SYSTEM No. ⬡	DRAINAGE UNIT No. ◯	(N) 200 mm PP 90° ELBOW	REMOVE CULVERT	REMOVE INLET	REMOVE MANHOLE	1800 mm PSP UNDERDRAIN (3.51 mm THICK)	2400 mm PSP UNDERDRAIN (3.51 mm THICK)	DRAINAGE MANHOLE (TYPE B)	FRAME & COVER	MINOR CONCRETE (MINOR STRUCTURE & PCC Reinf SLAB)	CONCRETE FLARED END SECTION (CFES) 450 mm	CFES 600 mm	CFES 750 mm	ROCK SLOPE PROTECTION (RSP) (FACING, METHOD B)	ROCK SLOPE PROTECTION FABRIC	MISCELLANEOUS IRON & STEEL	PLACE HMA (Misc AREA)	450 mm CSP (2.01 mm THICK)	200 mm PLASTIC PIPE	REINFORCED CONCRETE PIPE (RGJ) LENGTH 450 mm	RCP 600 mm	RCP 750 mm	(N) CONCRETE PLUG	(N) CONCRETE COLLAR	MINOR CONCRETE (BACKFILL)	900 mm CSP (3.51 mm THICK)	900 mm CSP RISER (3.51 mm THICK)	900 mm PRECAST Conc PIPE INLET	(N) HEIGHT OF INLET (H)	(N) PIPE JOINT CLASSIFICATION	(N) MAXIMUM COVER	(N) DRAINAGE INLET MARKER	DESCRIPTION	STATION	DRAINAGE PLAN SHEET No.	DRAINAGE SYSTEM No. ⬡	DRAINAGE UNIT No. ◯
			EA	m	EA	EA	m	m	EA	EA	m^3	EA	EA	EA	m^3	m^2	kg	m^2	m	m	m	m	m	EA	EA	m^3	m	m	m	m		m	EA					
D-16	37	a									0.20						107	11.4											1.05	0.90				GCP INLET, TYPE 900R GRATE, W/ HMA APRON	71+80.0 "M" LINE, 7.31 m R+	D-16	37	a
		b																			20.2										S	0.99		450 mm RCP (RGJ)				b
		c									1.45						215													1.20			1	GDO INLET, TYPE 600-12x GRATE	71+80.0 "M" LINE, 13.93 m L+			c
		d																			70.3										S	0.93		450 mm RCP (RGJ)				d
		e									0.91						108													1.30			1	G1 INLET, TYPE 600-12x GRATE	72+51.4 "M" LINE, 11.30 m L+			e
		f																			48.2										S	0.83		450 mm RCP (RGJ)				f
D-17		g									0.97						108													1.40			1	G1 INLET, TYPE 600-12x GRATE	73+22.2 "M" LINE, 9.90 m L+			g
		h																				41.8									S	0.93		600 mm RCP (RGJ)				h
		i									1.68						108													1.97			1	G2 INLET, TYPE 600-12x GRATE	73+65.0 "M" LINE, 10.20 m L+			i
		j																				17.5									S	1.00		600 mm RCP (RGJ)				j
		k											1																					600 mm CFES	73+65.0 "M" LINE, 27.69 m L+			k
		l													2.20	9.10																		RSP WITH FABRIC				l
D-17	38	a									0.86						108													1.20				G1 INLET, TYPE 600-12x GRATE	73+15.0 "N" LINE, 11.61 m R+	D-17	38	a
		b																			18.2										S	0.98		450 mm RCP (RGJ)				b
		c									0.20						107	11.4											1.49	1.34				GCP INLET, TYPE 900R GRATE, W/ HMA APRON	73+15.0 "N" LINE, 7.38 m L+			c
		d																			18.0										S	0.69		450 mm RCP (RGJ)				d
		e																			9.1										S	0.75		450 mm RCP (RGJ)				e
		f									0.20						107	11.4											1.52	1.37				GCP INLET, TYPE 600-12x GRATE	73+25.0 "N" LINE, 7.28 m L+			f
D-17	39	a									0.20						107	11.4											1.24	1.09				GCP INLET, TYPE 900R GRATE, W/ HMA APRON	75+17.0 "N" LINE, 4.80 m L+	D-17	39	a
		b																			26.3										S	0.89		450 mm RCP (RGJ)				b
		c							1	1																				2.60				MANHOLE (TYPE B)	75+44.3 "N" LINE, 4.80 m L+			c
		d																				13.8									S	1.63		450 mm RCP (RGJ)				d
SHEET TOTAL									1	1	6.67		1		2.20	9.10	1075	45.6			210.3	73.1							5.30									

DRAINAGE QUANTITIES

DQ-8

ALLEN LAO | WUTHY SENG | REVISED BY WS | DATE REVISED 4/13/10 | CALCULATED-DESIGNED BY | CHECKED BY | FUNCTIONAL SUPERVISOR JOSE HUERTA

STATE OF CALIFORNIA - DEPARTMENT OF TRANSPORTATION
Caltrans
DESIGN

LAST REVISION 00-00-00 | DATE PLOTTED => 26-JAN-2012 | TIME PLOTTED => 10:49

Dist	COUNTY	ROUTE	KILOMETER POST TOTAL PROJECT	SHEET No.	TOTAL SHEETS
10	Sta	219,108	3.4/7.9, 44.3/44.9	230	522

Wuthy Seng 6/16/09
REGISTERED CIVIL ENGINEER DATE

6-28-10
PLANS APPROVAL DATE

REGISTERED PROFESSIONAL ENGINEER WUTHY SENG No. 60114 Exp. 6/30/10 CIVIL STATE OF CALIFORNIA

THE STATE OF CALIFORNIA OR ITS OFFICERS OR AGENTS SHALL NOT BE RESPONSIBLE FOR THE ACCURACY OR COMPLETENESS OF ELECTRONIC COPIES OF THIS PLAN SHEET.

Caltrans Metric

DRAINAGE QUANTITIES

DRAINAGE PLAN SHEET No.	DRAINAGE SYSTEM No.	DRAINAGE UNIT No.	(N) 200 mm PP 90° ELBOW	REMOVE CULVERT	REMOVE INLET	REMOVE MANHOLE	1800 mm PSP UNDERDRAIN (3.51 mm THICK)	2400 mm PSP UNDERDRAIN (3.51 mm THICK)	DRAINAGE MANHOLE (TYPE B)	FRAME & COVER	MINOR CONCRETE (MINOR STRUCTURE & PCC Reinf SLAB)	CONCRETE FLARED END SECTION (CFES) 450 mm	600 mm	750 mm	ROCK SLOPE PROTECTION (RSP) (FACING, METHOD B)	ROCK SLOPE PROTECTION FABRIC	MISCELLANEOUS IRON & STEEL	PLACE HMA (Misc AREA)	450 mm CSP (2.01 mm THICK)	200 mm PLASTIC PIPE	REINFORCED CONCRETE PIPE (RGJ) LENGTH 450 mm	600 mm	750 mm	(N) CONCRETE PLUG	(N) CONCRETE COLLAR	MINOR CONCRETE (BACKFILL)	900 mm CSP (3.51 mm THICK)	900 mm CSP RISER (3.51 mm THICK)	900 mm PRECAST Conc PIPE INLET	(N) HEIGHT OF INLET (H)	(N) PIPE JOINT CLASSIFICATION	(N) MAXIMUM COVER	(N) DRAINAGE INLET MARKER	DESCRIPTION	STATION	DRAINAGE PLAN SHEET No.	DRAINAGE SYSTEM No.	DRAINAGE UNIT No.
			EA	m	EA	EA	m	m	EA	EA	m^3	EA	EA	EA	m^3	m^2	kg	m^2	m	m	m	m	m	EA	EA	m^3	m	m	m	m		m	EA					
D-17	40	a													2.20	9.10																		RSP WITH FABRIC	74+40.0 "M" LINE, 25.78 m Lt	D-17	40	a
		b												1																				750 mm CFES				b
		c																					15.5								S	1.19		750 mm RCP (RGJ)				c
		d							1	1																				2.68				MANHOLE (TYPE B)	74+40.0 "M" LINE, 9.59 m Lt			d
		e																					83.2								S	1.46		750 mm RCP (RGJ)				e
		f									1.43						108													2.24			1	G1 INLET, TYPE 600-12x GRATE	75+24.4 "N" LINE, 19.65 m Lt			f
		g																					19.2								S	1.32		750 mm RCP (RGJ)				g
		h									1.36						108													2.11			1	G1 INLET, TYPE 600-12x GRATE	75+44.3 "N" LINE, 19.54 m Lt			h
		i																				74.4									S	0.91		600 mm RCP (RGJ)				i
		j									1.38						108													2.16			1	G1 INLET, TYPE 600-12x GRATE	76+20.0 "N" LINE, 19.43 m Lt			j
D-18	40	k																				131.5									S	1.04		600 mm RCP (RGJ)		D-18	40	k
		l									1.23						108													1.77			1	G3 INLET, TYPE 600-12x GRATE	77+52.5 "N" LINE, 19.50 m Lt			l
		m																			23.9										S	1.14		450 mm RCP (RGJ)				m
		n									1.36						108													1.65			1	G0 INLET, TYPE 600-12x GRATE	77+77.0 "N" LINE, 19.60 m Lt			n
		o																			22.8										S	1.19		450 mm RCP (RGJ)				o
		p									1.16						108													1.64			1	G3 INLET, TYPE 600-12x GRATE	78+00.8 "N" LINE, 19.50 m Lt			p
		q																			26.8										S	0.80		450 mm RCP (RGJ)				q
		r							1	1																				1.80			1	MANHOLE (TYPE B)	78+28.7 "N" LINE, 19.50 m Lt			r
		s																			13.7										S	0.88		450 mm RCP (RGJ)				s
		t							1	1																				1.70				MANHOLE (TYPE B)	444+48.5 "E" LINE, 16.59 m Lt			t
		u																			69.0										S	0.86		450 mm RCP (RGJ)				u
D-19	40	v									1.18						108													1.35			1	G0 INLET, TYPE 600-12x GRATE	445+18.7 "E" LINE, 16.70 m Lt	D-19	40	v
		x																																ABANDON DRYWELL (SEE DQ-15)				x
		y		1.5																														CULVERT				y
		z			1																													DRAINAGE INLET				z
D-18	40			91.0	2	2																												CULVERT, DRAINAGE, INLET & MANHOLE	76+70.0 TO 77+80.0 "N" LINE, Lt	D-18	40	
				22.0	3	3																												REMOVE CULVERT, DRAINAGE, & MANHOLE (SEE DETAIL "A", DRAINAGE PLAN PAGE D-18) ABANDON DRYWELL (SEE DQ-15)	77+80.0 TO 78+50.0 "N" LINE, Lt			
D-17	40			10.0																				1										CULVERT & CONCRETE PLUG	76+60.0 TO 76+70.0 "N" LINE, Lt	D-17	40	
D-17	41	a																						1										CONCRETE PLUG	75+31.1 "N" LINE, 19.00 m Rt	D-17	41	a
		b		13.5																														REMOVE CULVERT				b
		c									0.20						107	11.4											1.91	1.76				GCP INLET, TYPE 900R GRATE, W/ HMA APRON	75+44.3 "N" LINE, 18.92 m Rt			c
		d																				22.7									S	1.97		600 mm RCP (RGJ)				d
SHEET TOTAL			138.0	6	5			3	3	9.30			1	2.20	9.10	863	11.4			156.2	228.6	117.9						1.91									

DRAINAGE QUANTITIES

DQ-9

ALLEN LAO | WUTHY SENG | REVISED BY WS | DATE REVISED 4/13/10 | CALCULATED-DESIGNED BY | CHECKED BY | FUNCTIONAL SUPERVISOR JOSE HUERTA

STATE OF CALIFORNIA - DEPARTMENT OF TRANSPORTATION
Caltrans DESIGN

LAST REVISION 00-00-00 | DATE PLOTTED => 30-JUN-2010 | TIME PLOTTED => 14:39

Dist	COUNTY	ROUTE	KILOMETER POST TOTAL PROJECT	SHEET No.	TOTAL SHEETS
10	Sta	219,108	3.4/7.9, 44.3/44.9	231	522

REGISTERED CIVIL ENGINEER 6/16/09 DATE

6-28-10
PLANS APPROVAL DATE

REGISTERED PROFESSIONAL ENGINEER WUTHY SENG No. 60114 Exp. 6/30/10 CIVIL STATE OF CALIFORNIA

THE STATE OF CALIFORNIA OR ITS OFFICERS OR AGENTS SHALL NOT BE RESPONSIBLE FOR THE ACCURACY OR COMPLETENESS OF ELECTRONIC COPIES OF THIS PLAN SHEET.

Caltrans Metric

DRAINAGE QUANTITIES

DRAINAGE PLAN SHEET No.	DRAINAGE SYSTEM No. ⬡	DRAINAGE UNIT No. ○	(N) 200 mm PP 90° ELBOW	REMOVE CULVERT	REMOVE INLET	REMOVE MANHOLE	1800 mm PSP UNDERDRAIN (3.51 mm THICK)	2400 mm PSP UNDERDRAIN (3.51 mm THICK)	DRAINAGE MANHOLE (TYPE B)	FRAME & COVER	MINOR CONCRETE (MINOR STRUCTURE & PCC Reinf SLAB)	CONCRETE FLARED END SECTION (CFES) 450 mm	CFES 600 mm	CFES 750 mm	ROCK SLOPE PROTECTION (RSP) (FACING, METHOD B)	ROCK SLOPE PROTECTION FABRIC	MISCELLANEOUS IRON & STEEL	PLACE HMA (Misc AREA)	450 mm CSP (2.01 mm THICK)	200 mm PLASTIC PIPE	REINFORCED CONCRETE PIPE (RGJ) LENGTH 450 mm	RGJ 600 mm	RGJ 750 mm	(N) CONCRETE PLUG	(N) CONCRETE COLLAR	MINOR CONCRETE (BACKFILL)	900 mm CSP (3.51 mm THICK)	900 mm CSP RISER (3.51 mm THICK)	900 mm PRECAST Conc PIPE INLET	(N) HEIGHT OF INLET (H)	(N) PIPE JOINT CLASSIFICATION	(N) MAXIMUM COVER	(N) DRAINAGE INLET MARKER	DESCRIPTION	STATION	DRAINAGE PLAN SHEET No.	DRAINAGE SYSTEM No. ⬡	DRAINAGE UNIT No. ○
			EA	m	EA	EA	m	m	EA	EA	m^3	EA	EA	EA	m^3	m^2	kg	m^2	m	m	m	m	m	EA	EA	m^3	m	m	m	m		m	EA					
D-5	S1	a									0.82						108													1.03			1	G3 INLET, TYPE 600-12x GRATE	48+93.4 "A" LINE, 28.12 m Lt	D-5	S1	a
		b																			20.9										S	0.98		450 mm RCP (RGJ)				b
		c									0.20						108													1.06				GCP INLET, TYPE 900R GRATE	48+70.9 "A" LINE, 28.53 m Lt			c
		d																			42.6										S	0.96		450 mm RCP (RGJ)				d
		e									0.20						98	11.4											1.43	1.28				GCP INLET, TYPE 900R GRATE, W/ HMA APRON	10+45.0 "O" LINE, 36.61 m Rt			e
		f																			27.1										S	0.90		450 mm RCP (RGJ)				f
		g							1	1																				1.96				MANHOLE (TYPE B)	10+53.9 "O" LINE, 10.07 m Rt			g
		h																			9.4										S	0.90		450 mm RCP (RGJ)				h
		i									0.20						98												2.49	2.34				GCP INLET, TYPE 900RX GRATE	10+64.2 "O" LINE, 8.97 m Rt			i
		j																	9.40													0.60		450 mm CSP				j
		k								1																	0.75	2.98						900 mm CSP RISER	10+65.1 "O" LINE, 19.08 m Rt			k
		l						26																										2400 mm PSP UNDERDRAIN				l
		m								1	1.35																0.75	2.71						900 mm CSP RISER W/ PCC Reinf SLAB	10+89.5 "O" LINE, 16.69 m Rt			m
		n																	9.20												S	0.60		450 mm CSP				n
		o									0.20						108												2.15	2.00				GCP INLET, TYPE 900RX GRATE	10+88.5 "O" LINE, 6.66 m Rt			o
		p																	9.20												S	0.60		450 mm CSP				p
		q								1	1.35																0.75	2.71						900 mm CSP RISER	10+89.5 "O" LINE, 16.69 m Rt			q
		r						26																										2400 mm PSP UNDERDRAIN				r
		s								1	1.35																0.75	2.81						900 mm CSP RISER W/ PCC Reinf SLAB	10+63.1 "O" LINE, 0.95 m Lt			s
		t																	9.20												S	0.60		450 mm CSP				t
D-6	S2	a									0.20						108												1.35	1.20				GCP INLET, TYPE 900RX GRATE	49+63.6 "A" LINE, 35.95 m Lt	D-6	S2	a
		b																			12.8										S	0.60		450 mm RCP (RGJ)				b
		c							1	1																			1.54					MANHOLE (TYPE B)	49+77.1 "A" LINE, 39.10 m Lt			c
		d																			46.5										S	0.60		450 mm RCP (RGJ)				d
		e									0.20																		2.76	2.61				GCP INLET, TYPE 900RX GRATE	10+76.7 "P" LINE, 3.90 m Lt			e
		f																	4.80												S	0.60		450 mm CSP				f
		g								1	1.35																0.75	2.65						900 mm CSP RISER W/ PCC Reinf SLAB	10+76.7 "P" LINE, 1.80 m Rt			g
		h						38																										2400 mm PSP UNDERDRAIN				h
		i								1	1.35																0.75	2.58						900 mm CSP RISER W/ PCC Reinf SLAB	10+05.7 "P" LINE, 1.80 m Rt			i
		j																	4.60												S	0.60		450 mm CSP				j
		k									0.20																		2.13	1.98				GCP INLET, TYPE 900RX GRATE	11+05.7 "P" LINE, 3.68 m Lt			k
		l																		3.00											S	0.60		200 mm PLASTIC PIPE				l
		m	1																															200 mm PLASTIC PIPE 90° ELBOW				m
SHEET TOTAL								90	2	8	8.97						628	11.4	46.4	3.00	159.3						4.50	16.44	13.85								

DRAINAGE QUANTITIES

DQ-10

STATE OF CALIFORNIA - DEPARTMENT OF TRANSPORTATION
Caltrans
DESIGN

FUNCTIONAL SUPERVISOR: JOSE HUERTA
CALCULATED-DESIGNED BY: WUTHY SENG
CHECKED BY: ALLEN LAO
REVISED BY: WS
DATE REVISED: 4/13/10

LAST REVISION 00-00-00
DATE PLOTTED => 25-JAN-2012
TIME PLOTTED => 07:12

Dist	COUNTY	ROUTE	KILOMETER POST TOTAL PROJECT	SHEET No.	TOTAL SHEETS
10	Sta	219,108	3.4/7.9, 44.3/44.9	232	522

Caltrans Metric

Wuthy Seng 6/16/09
REGISTERED CIVIL ENGINEER DATE

6-28-10
PLANS APPROVAL DATE

REGISTERED PROFESSIONAL ENGINEER WUTHY SENG No. 60114 Exp. 6/30/10 CIVIL STATE OF CALIFORNIA

THE STATE OF CALIFORNIA OR ITS OFFICERS OR AGENTS SHALL NOT BE RESPONSIBLE FOR THE ACCURACY OR COMPLETENESS OF ELECTRONIC COPIES OF THIS PLAN SHEET.

DRAINAGE QUANTITIES

DRAINAGE PLAN SHEET No.	DRAINAGE SYSTEM No.	DRAINAGE UNIT No.	(N) 200 mm PP 90° ELBOW	REMOVE CULVERT	REMOVE INLET	REMOVE MANHOLE	1800 mm PSP UNDERDRAIN (3.51 mm THICK)	2400 mm PSP UNDERDRAIN (3.51 mm THICK)	DRAINAGE MANHOLE (TYPE B)	FRAME & COVER	MINOR CONCRETE (MINOR STRUCTURE & PCC Reinf SLAB)	CONCRETE FLARED END SECTION (CFES) 450 mm	CFES 600 mm	CFES 750 mm	ROCK SLOPE PROTECTION (RSP) (FACING, METHOD B)	ROCK SLOPE PROTECTION FABRIC	MISCELLANEOUS IRON & STEEL	PLACE HMA (Misc AREA)	450 mm CSP (2.01 mm THICK)	200 mm PLASTIC PIPE	REINFORCED CONCRETE PIPE (RGJ) LENGTH 450 mm	RGJ 600 mm	RGJ 750 mm	(N) CONCRETE PLUG	(N) CONCRETE COLLAR	MINOR CONCRETE (BACKFILL)	900 mm CSP (3.51 mm THICK)	900 mm CSP RISER (3.51 mm THICK)	900 mm PRECAST Conc PIPE INLET	(N) HEIGHT OF INLET (H)	(N) PIPE JOINT CLASSIFICATION	(N) MAXIMUM COVER	(N) DRAINAGE INLET MARKER	DESCRIPTION	STATION	DRAINAGE PLAN SHEET No.	DRAINAGE SYSTEM No.	DRAINAGE UNIT No.
			EA	m	EA	EA	m	m	EA	EA	m^3	EA	EA	EA	m^3	m^2	kg	m^2	m	m	m	m	m	EA	EA	m^3	m	m	m	m		m	EA					
D-6	S2	n			1																													REMOVE DRAINAGE INLET		D-6	S2	n
		o		1.5																														REMOVE CULVERT				o
		p																																ABANDON DRYWELL (SEE DQ-15)				p
		q		61.2																														REMOVE CULVERT				q
		r			1																													REMOVE DRAINAGE INLET				r
		s		1.5																														REMOVE CULVERT				s
		t																																ABANDON DRYWELL (SEE DQ-15)				t
		u			1																													REMOVE DRAINAGE INLET				u
		v		1.5																														REMOVE CULVERT				v
		w			1																													ABANDON DRYWELL (SEE DQ-15)				w
D-7	C1	a									1.07						108													1.59			1	G1 INLET, TYPE 600-12x GRATE	10+70.8 "H" LINE, 8.00 m Lt	D-7	C1	a
		b																			15.1										S	0.60		450 mm CSP				b
		c									1.47						108													2.32			1	G1 INLET, TYPE 600-12x GRATE	10+70.8 "N" LINE, 8.00 m Rt			c
		d																	2.7												S	0.60		450 mm CSP				d
		e								1	2.70																0.75	2.34						900 mm CSP RISER W/ PCC Reinf SLAB	10+70.8 "I" LINE, 11.42 m Rt			e
		f					25.0																											1800 mm PSP UNDERDRAIN	49+77.1 "A" LINE, 39.10 m Lt			f
		g								1	2.70																0.75	2.34						900 mm CSP RISER W/ PCC Reinf SLAB	10+93.8 "I" LINE, 11.80 m Rt			g
SHEET TOTAL				65.7	4		25.0			2	7.94	0					216		2.7		15.1						1.50	4.68										

DRAINAGE QUANTITIES
DQ-11

REVISED BY	DATE REVISED
WS	4/13/10

ALLEN LAO — CALCULATED-DESIGNED BY
WUTHY SENG — CHECKED BY
JOSE HUERTA — FUNCTIONAL SUPERVISOR

STATE OF CALIFORNIA - DEPARTMENT OF TRANSPORTATION
Caltrans
DESIGN

LAST REVISION 00-00-00
DATE PLOTTED => 25-JAN-2012
TIME PLOTTED => 07:13

Dist	COUNTY	ROUTE	KILOMETER POST TOTAL PROJECT	SHEET No.	TOTAL SHEETS
10	Sta	219,108	3.4/7.9, 44.3/44.9	233	522

Wuthy Seng 6/16/09
REGISTERED CIVIL ENGINEER DATE

6-28-10
PLANS APPROVAL DATE

REGISTERED PROFESSIONAL ENGINEER WUTHY SENG No. 60114 Exp. 6/30/10 CIVIL STATE OF CALIFORNIA

THE STATE OF CALIFORNIA OR ITS OFFICERS OR AGENTS SHALL NOT BE RESPONSIBLE FOR THE ACCURACY OR COMPLETENESS OF ELECTRONIC COPIES OF THIS PLAN SHEET.

Caltrans Metric

DRAINAGE QUANTITIES

DRAINAGE PLAN SHEET No.	DRAINAGE SYSTEM No. ⬡	DRAINAGE UNIT No. ◯	(N) 200 mm PP 90° ELBOW	REMOVE CULVERT	REMOVE INLET	REMOVE MANHOLE	1800 mm PSP UNDERDRAIN (3.51 mm THICK)	2400 mm PSP UNDERDRAIN (3.51 mm THICK)	DRAINAGE MANHOLE (TYPE B)	FRAME & COVER	MINOR CONCRETE (MINOR STRUCTURE & PCC Reinf SLAB)	CONCRETE FLARED END SECTION (CFES) 450 mm	CFES 600 mm	CFES 750 mm	ROCK SLOPE PROTECTION (RSP) (FACING, METHOD B)	ROCK SLOPE PROTECTION FABRIC	MISCELLANEOUS IRON & STEEL	PLACE HMA (Misc AREA)	450 mm CSP (2.01 mm THICK)	200 mm PLASTIC PIPE	REINFORCED CONCRETE PIPE (RGJ) LENGTH 450 mm	RGJ 600 mm	RGJ 750 mm	(N) CONCRETE PLUG	(N) CONCRETE COLLAR	MINOR CONCRETE (BACKFILL)	900 mm CSP (3.51 mm THICK)	900 mm CSP RISER (3.51 mm THICK)	900 mm PRECAST Conc PIPE INLET	(N) HEIGHT OF INLET (H)	(N) PIPE JOINT CLASSIFICATION	(N) MAXIMUM COVER	(N) DRAINAGE INLET MARKER	DESCRIPTION	STATION	DRAINAGE PLAN SHEET No.	DRAINAGE SYSTEM No. ⬡	DRAINAGE UNIT No. ◯
			EA	m	EA	EA	m	m	EA	EA	m^3	EA	EA	EA	m^3	m^2	kg	m^2	m	m	m	m	m	EA	EA	m^3	m	m	m	m		m	EA					
D-12	T1	a									0.95						108													1.38			1	G1 INLET, TYPE 600-12x GRATE	8+21.4 "H" LINE, 11.11 m L+	D-12	T1	a
		b																			19.5										S	0.60		450 mm RCP (RGJ)				b
		c									1.47						108													2.32			1	G1 INLET, TYPE 600-12x GRATE	8+21.4 "H" LINE, 9.34 m R+			c
		d																	5.5												S	0.60		450 mm CSP				d
		e								1	2.70																0.75	2.34						900 mm CSP RISER W/ PCC Reinf SLAB	8+21.4 "I" LINE, 15.71 m R+			e
		f					92.0																											1800 mm PSP UNDERDRAIN	8+21.4 "I" LINE, 15.71 m R+			f
		g								1	2.70																0.75	2.77						900 mm CSP RISER W/ PCC Reinf SLAB	9+01.9 "I" LINE, 15.71 m R+			g
		h																	2.9												S	0.60		450 mm CSP				h
		i									1.47						108													2.32			1	G1 INLET, TYPE 600-12x GRATE	9+01.9 "I" LINE, 12.10 m R+			i
		j																			23.6										S	1.19		450 mm RCP (RGJ)				j
		k									0.95						108													1.39			1	G1 INLET, TYPE 600-12x GRATE	9+01.9 "I" LINE, 12.43 m L+			k
D-11	T2	a									0.75						108													1.59			1	G1 INLET, TYPE 600-12x GRATE	10+71.3 "H" LINE, 8.26 m R+	D-11	T2	a
		b																			16.0										S	1.19		450 mm RCP (RGJ)				b
		c									0.75						108													2.32			1	G1 INLET, TYPE 600-12x GRATE	10+71.3 "H" LINE, 8.35 m L+			c
		d																	2.5												S	0.60		450 mm CSP				d
		e								1	2.70																0.75	2.34						900 mm CSP RISER W/ PCC Reinf SLAB	10+71.3 "I" LINE, 11.79 m L+			e
		f					25.0																											1800 mm PSP UNDERDRAIN	10+71.3 "I" LINE, 12.78 m L+			f
D-13	T3	a									0.97						108													1.20			1	G1 INLET, TYPE 600-12x GRATE	12+39.7 "I" LINE, 7.77 m L+	D-13	T3	a
		b																			15.4										S	1.19		450 mm RCP (RGJ)				b
		c									1.23						108													1.88			1	G1 INLET, TYPE 600-12x GRATE	12+39.7 "I" LINE, 8.80 m R+			c
		d																	23.5												S	0.60		450 mm CSP				d
		e								1	2.70																0.75	2.34						900 mm CSP RISER W/ PCC Reinf SLAB	12+14.3 "I" LINE, 10.8 m R+			e
		f					30.0																											1800 mm PSP UNDERDRAIN	12+14.3 "I" LINE, 10.8 m R+			f
		g								1	2.70																0.75	2.34						900 mm CSP RISER W/ PCC Reinf SLAB	12+14.3 "I" LINE, 10.8 m R+			g
SHEET TOTAL							147			5	22.04						864		34.4		74.5						3.75	12.13										

DRAINAGE QUANTITIES

DQ-12

ALLEN LAO | WUTHY SENG | REVISED BY | DATE REVISED | WS | 4/13/10

CALCULATED-DESIGNED BY | CHECKED BY

FUNCTIONAL SUPERVISOR: JOSE HUERTA

STATE OF CALIFORNIA - DEPARTMENT OF TRANSPORTATION

Caltrans DESIGN

LAST REVISION 00-00-00 | DATE PLOTTED => 25-JAN-2012 | TIME PLOTTED => 07:38

Dist	COUNTY	ROUTE	KILOMETER POST TOTAL PROJECT	SHEET No.	TOTAL SHEETS
10	Sta	219,108	3.4/7.9, 44.3/44.9	234	522

Caltrans Metric

Wuthy Seng 6/16/09
REGISTERED CIVIL ENGINEER DATE

6-28-10
PLANS APPROVAL DATE

REGISTERED PROFESSIONAL ENGINEER WUTHY SENG No. 60114 Exp. 6/30/10 CIVIL STATE OF CALIFORNIA

THE STATE OF CALIFORNIA OR ITS OFFICERS OR AGENTS SHALL NOT BE RESPONSIBLE FOR THE ACCURACY OR COMPLETENESS OF ELECTRONIC COPIES OF THIS PLAN SHEET.

DRAINAGE QUANTITIES

DRAINAGE PLAN SHEET No.	DRAINAGE SYSTEM No. ⬡	DRAINAGE UNIT No. ○	(N) 200 mm PP 90° ELBOW	REMOVE CULVERT	REMOVE INLET	REMOVE MANHOLE	1800 mm PSP UNDERDRAIN (3.51 mm THICK)	2400 mm PSP UNDERDRAIN (3.51 mm THICK)	DRAINAGE MANHOLE (TYPE B)	FRAME & COVER	MINOR CONCRETE (MINOR STRUCTURE & PCC Reinf SLAB)	CONCRETE FLARED END SECTION (CFES) 450 mm	600 mm	750 mm	ROCK SLOPE PROTECTION (RSP) (FACING, METHOD B)	ROCK SLOPE PROTECTION FABRIC	MISCELLANEOUS IRON & STEEL	PLACE HMA (Misc AREA)	450 mm CSP (2.01 mm THICK)	200 mm PLASTIC PIPE	REINFORCED CONCRETE PIPE (RGJ) LENGTH 450 mm	600 mm	750 mm	(N) CONCRETE PLUG	(N) CONCRETE COLLAR	MINOR CONCRETE (BACKFILL)	900 mm CSP (3.51 mm THICK)	900 mm CSP RISER (3.51 mm THICK)	900 mm PRECAST Conc PIPE INLET	(N) HEIGHT OF INLET (H)	(N) PIPE JOINT CLASSIFICATION	(N) MAXIMUM COVER	(N) DRAINAGE INLET MARKER	DESCRIPTION	STATION	DRAINAGE PLAN SHEET No.	DRAINAGE SYSTEM No. ⬡	DRAINAGE UNIT No. ○
			EA	m	EA	EA	m	m	EA	EA	m^3	EA	EA	EA	m^3	m^2	kg	m^2	m	m	m	m	m	EA	EA	m^3	m	m	m	m		m	EA					
D-18	MH1	a									0.98						108													1.32			1	G3 INLET, TYPE 600-12x GRATE	443+70.0 "E" LINE, 15.14 m Rt	D-18	MH1	a
		b																			29.1										S	0.86		450 mm RCP (RGJ)				b
		c									0.97						108													1.92			1	G3 INLET, TYPE 600-12x GRATE	443+30.0 "E" LINE, 14.96 m Rt			c
		d																	2.8												S	0.82		450 mm CSP				d
		e								1							108										0.75	2.38						900 mm CSP RISER	443+36.5 "E" LINE, 16.0 m Rt			e
		f					34.0																								S	1.15		1800 mm PSP UNDERDRAIN				f
		g								1																	0.75	1.76						900 mm CSP RISER	443+03.4 "E" LINE, 14.88 m Rt			g
		h																	2.5												S	0.82		450 mm CSP				h
		i							1	1																				1.76				MANHOLE (TYPE B)	443+00.0 "E" LINE, 14.95 m Rt			i
		j																	0.5												S	0.82		450 mm CSP				j
		k									1.17						108													1.66			1	G3 INLET, TYPE 600-12x GRATE	443+00.0 "E" LINE, 13.5 m Rt			k
		l																							1									CONCRETE COLLAR				l
D-18	MH2	a																			34.0										S	1.07		450 mm RCP (RGJ)		D-18	MH2	a
		b									1.02						108													1.39			1	G3 INLET, TYPE 600-12x GRATE	444+48.5 "E" LINE, 18.60 m Rt			b
		c																			58.5										S	0.47		450 mm RCP (RGJ)				c
		d									0.87						108													1.23			1	G1 INLET, TYPE 600-12x GRATE	445+07.5 "E" LINE, 11.85 m Rt			d
		e																			51.5										S	0.47		450 mm RCP (RGJ)				e
		f									0.81						108													1.12			1	G1 INLET, TYPE 600-12x GRATE	445+60.0 "E" LINE, 11.14 m Rt			f
		g																			89.0										S	0.47		450 mm RCP (RGJ)				g
		h									0.79						108													1.09			1	G1 INLET, TYPE 600-12x GRATE	446+50.0 "E" LINE, 9.91 m Rt			h
		i																			89.0										S	0.49		450 mm RCP (RGJ)				i
		j									0.80						108													1.10			1	G1 INLET, TYPE 600-12x GRATE	447+40.0 "E" LINE, 8.29 m Rt			j
D-20	CL1	a									1.41						217													1.06			1	GT3 INLET, TYPE 600-12x GRATE	0+95.0 "D" LINE, 15.66 m Rt	D-20	CL1	a
		b																			1.8										S	0.45		450 mm RCP (RGJ)				b
		c							1	1																				1.18				MANHOLE (TYPE B)	1+40.0 "D" LINE, 15.91 m Rt			c
		d																			43.8										S	1.01		450 mm RCP (RGJ)				d
		e									1.41						217													1.06			1	GT3 INLET, TYPE 600-12x GRATE	1+40.0 "D" LINE, 15.70 m Rt			e
		f																			1.8										S	1.01		450 mm RCP (RGJ)				f
		g							1	1																				1.61				MANHOLE (TYPE B)	1+40.0 "D" LINE, 12.97 m Rt			g
		h																			38.2										S	1.01		450 mm RCP (RGJ)				h
SHEET TOTAL							34.0		3	5	10.23						1406		5.8		436.7						1.50	4.14										

DRAINAGE QUANTITIES

DQ-13

ALLEN LAO | WUTHY SENG | REVISED BY | DATE REVISED | WS | 4/13/10

CALCULATED-DESIGNED BY | CHECKED BY

FUNCTIONAL SUPERVISOR: JOSE HUERTA

STATE OF CALIFORNIA - DEPARTMENT OF TRANSPORTATION

Caltrans DESIGN

LAST REVISION 00-00-00 | DATE PLOTTED => 30-JUN-2010 | TIME PLOTTED => 14:39

Dist	COUNTY	ROUTE	KILOMETER POST TOTAL PROJECT	SHEET No.	TOTAL SHEETS
10	Sta	219,108	3.4/7.9, 44.3/44.9	235	522

Caltrans Metric

Wuthy Seng 6/16/09
REGISTERED CIVIL ENGINEER DATE

6-28-10
PLANS APPROVAL DATE

REGISTERED PROFESSIONAL ENGINEER WUTHY SENG No. 60114 Exp. 6/30/10 CIVIL STATE OF CALIFORNIA

THE STATE OF CALIFORNIA OR ITS OFFICERS OR AGENTS SHALL NOT BE RESPONSIBLE FOR THE ACCURACY OR COMPLETENESS OF ELECTRONIC COPIES OF THIS PLAN SHEET.

DRAINAGE QUANTITIES

DRAINAGE PLAN SHEET No.	DRAINAGE SYSTEM No. ⬡	DRAINAGE UNIT No. ◯	(N) 200 mm PP 90° ELBOW	REMOVE CULVERT	REMOVE INLET	REMOVE MANHOLE	1800 mm PSP UNDERDRAIN (3.51 mm THICK)	2400 mm PSP UNDERDRAIN (3.51 mm THICK)	DRAINAGE MANHOLE (TYPE B)	FRAME & COVER	MINOR CONCRETE (MINOR STRUCTURE & PCC Reinf SLAB)	CONCRETE FLARED END SECTION (CFES) 450 mm	600 mm	750 mm	ROCK SLOPE PROTECTION (RSP) (FACING, METHOD B)	ROCK SLOPE PROTECTION FABRIC	MISCELLANEOUS IRON & STEEL	PLACE HMA (Misc AREA)	450 mm CSP (2.01 mm THICK)	200 mm PLASTIC PIPE	REINFORCED CONCRETE PIPE (RGJ) LENGTH 450 mm	600 mm	750 mm	(N) CONCRETE PLUG	(N) CONCRETE COLLAR	MINOR CONCRETE (BACKFILL)	900 mm CSP (3.51 mm THICK)	900 mm CSP RISER (3.51 mm THICK)	900 mm PRECAST Conc PIPE INLET	(N) HEIGHT OF INLET (H)	(N) PIPE JOINT CLASSIFICATION	(N) MAXIMUM COVER	(N) DRAINAGE INLET MARKER	DESCRIPTION	STATION	DRAINAGE PLAN SHEET No.	DRAINAGE SYSTEM No. ⬡	DRAINAGE UNIT No. ◯
			EA	m	EA	EA	m	m	EA	EA	m^3	EA	EA	EA	m^3	m^2	kg	m^2	m	m	m	m	m	EA	EA	m^3	m	m	m	m		m	EA					
D-20	CL2	a									0.20						107	11.4											1.42	1.27				GCP INLET, TYPE 900R GRATE W/ HMA APRON	2+37.8 "D" LINE, 15.61 m R†	D-20	CL2	a
		b																			41.0										S	0.95		450 mm RCP (RGJ)				b
		c									0.20						107	11.4											1.70	1.65				GCP INLET, TYPE 900R GRATE W/ HMA APRON	2+37.8 "D" LINE, 26.47 m L†			c
D-20	CL3	a									0.20						107	11.4											1.63	1.48				GCP INLET, TYPE 900R GRATE, W/ HMA APRON	1+40.0 "D" LINE, 26.31 m L†	D-20	CL3	a
		b																			97.2										S	0.62		450 mm RCP (RGJ)				b
		c									0.20						107	11.4											1.80	1.65				GCP INLET, TYPE 900R GRATE, W/ HMA APRON	2+37.8 "D" LINE, 26.47 m L†			c
		d																			61.5										S	1.19		450 mm RCP (RGJ)				d
		e									0.20						107	11.4											2.03	1.96				GCP INLET, TYPE 900R GRATE, W/ HMA APRON	3+00.0 "D" LINE, 26.84 m L†			e
		f																				70.2									S	1.39		600 mm RCP (RGJ)				f
		g							1	1																				2.20				MANHOLE (TYPE B)	3+74.2 "D" LINE, 27.21 m L†			g
		h																				40.5									S	1.73		600 mm RCP (RGJ)				h
		i							1	1																				2.13				MANHOLE (TYPE B)	4+16.0 "D" LINE, 27.56 m L†			i
		j																				12.8									S	1.17		600 mm RCP (RGJ)				j
		k											1																					600 mm CFES	4+16.0 "D" LINE, 38.57 m L†			k
		l													2.20	9.10																		RSP WITH FABRIC				l
D-20	CL4	a									0.83						108													1.15			1	G1 INLET, TYPE 900R GRATE, W/ HMA APRON	3+74.3 "D" LINE, 10.25 m R†	D-20	CL4	a
		b																			41.6										S	1.25		450 mm RCP (RGJ)				b
D-21	CL5	a									0.20						107	11.4											1.27	1.12				GCP INLET, TYPE 900R GRATE, W/ HMA APRON	7+14.3 "D" LINE, 12.45 m R†	D-21	CL5	a
		b																			22.1										S	1.83		450 mm RCP (RGJ)				b
		c									0.20						107	11.4											1.71	1.53				GCP INLET, TYPE 900R GRATE, W/ HMA APRON	7+14.3 "D" LINE, 10.58 m L†			c
		d																			73.1										S	1.38		450 mm RCP (RGJ)				d
		e							1	1																				1.77				MANHOLE (TYPE B)	6+40.0 "D" LINE, 10.56 m L†			e
		f																			79.2										S	1.77		450 mm RCP (RGJ)				f
		g									0.20						107	11.4											2.15	2.00				GCP INLET, TYPE 900R GRATE, W/ HMA APRON	5+60.0 "D" LINE, 12.55 m L†			g
		h																			84.2										S	2.27		450 mm RCP (RGJ)				h
		i									0.20						107	11.4											2.71	2.56				GCP INLET, TYPE 900R GRATE, W/ HMA APRON	4+75.0 "D" LINE, 12.55 m L†			i
		j																			59.0													450 mm RCP (RGJ)				j
SHEET TOTAL									3	3	2.63		1		2.20	9.10	1071	102.6			558.9	123.5							16.42									

DRAINAGE QUANTITIES

DQ-14

ALLEN LAO | WUTHY SENG | REVISED BY | DATE REVISED | WS | 4/13/10

CALCULATED-DESIGNED BY | CHECKED BY

FUNCTIONAL SUPERVISOR: JOSE HUERTA

STATE OF CALIFORNIA - DEPARTMENT OF TRANSPORTATION
DESIGN
Caltrans

LAST REVISION 00-00-00 | DATE PLOTTED => 25-JAN-2012 | TIME PLOTTED => 07:08

Dist	COUNTY	ROUTE	KILOMETER POST TOTAL PROJECT	SHEET No.	TOTAL SHEETS
10	Sta	219,108	3.4/7.9, 44.3/44.9	236	522

REGISTERED CIVIL ENGINEER 6/16/09 DATE

6-28-10
PLANS APPROVAL DATE

REGISTERED PROFESSIONAL ENGINEER WUTHY SENG No. 60114 Exp. 6/30/10 CIVIL STATE OF CALIFORNIA

THE STATE OF CALIFORNIA OR ITS OFFICERS OR AGENTS SHALL NOT BE RESPONSIBLE FOR THE ACCURACY OR COMPLETENESS OF ELECTRONIC COPIES OF THIS PLAN SHEET.

Caltrans Metric

DRAINAGE QUANTITIES

DRAINAGE PLAN SHEET No.	DRAINAGE SYSTEM No. ⬡	DRAINAGE UNIT No. ◯	(N) 200 mm PP 90° ELBOW	REMOVE CULVERT	REMOVE INLET	REMOVE MANHOLE	1800 mm PSP UNDERDRAIN (3.51 mm THICK)	2400 mm PSP UNDERDRAIN (3.51 mm THICK)	DRAINAGE MANHOLE (TYPE B)	FRAME & COVER	MINOR CONCRETE (MINOR STRUCTURE & PCC Reinf SLAB)	CONCRETE FLARED END SECTION (CFES) 450 mm	600 mm	750 mm	ROCK SLOPE PROTECTION (RSP) (FACING, METHOD B)	ROCK SLOPE PROTECTION FABRIC	MISCELLANEOUS IRON & STEEL	PLACE HMA (Misc AREA)	450 mm CSP (2.01 mm THICK)	200 mm PLASTIC PIPE	RCP (RGJ) LENGTH 450 mm	600 mm	750 mm	(N) CONCRETE PLUG	(N) CONCRETE COLLAR	MINOR CONCRETE (BACKFILL)	900 mm CSP (3.51 mm THICK)	900 mm CSP RISER (3.51 mm THICK)	900 mm PRECAST Conc PIPE INLET	(N) HEIGHT OF INLET (H)	(N) PIPE JOINT CLASSIFICATION	(N) MAXIMUM COVER	(N) DRAINAGE INLET MARKER	DESCRIPTION	STATION	DRAINAGE PLAN SHEET No.	DRAINAGE SYSTEM No. ⬡	DRAINAGE UNIT No. ◯
			EA	m	EA	EA	m	m	EA	EA	m^3	EA	EA	EA	m^3	m^2	kg	m^2	m	m	m	m	m	EA	EA	m^3	m	m	m	m		m	EA					
DQ-1				33.4							1.00	8			8.80	36.40	535	57.0			141.4					2.7			5.20					SHEET TOTAL DQ-1				
DQ-2											0.80	7			6.60	27.30	428	45.6			166.7					30.0			3.66					SHEET TOTAL DQ-2				
DQ-3							72.0			2	10.07	3			6.60	27.30	752	45.6	4.9		161.9					2.7	1.50	4.64	4.70					SHEET TOTAL DQ-3				
DQ-4							60.0			2	8.43	4			4.40	18.20	644	45.6			143.0						1.50	4.15	5.07					SHEET TOTAL DQ-4				
DQ-5											1.00	8			8.80	36.40	535	57.0			202.8					9.7			4.99					SHEET TOTAL DQ-5				
DQ-6											0.60	8	2		4.40	18.20	321	34.2			174.4	57.0				6.8			3.45					SHEET TOTAL DQ-6				
DQ-7											6.22	5			6.60	27.30	1098	22.8			327.6								2.60					SHEET TOTAL DQ-7				
DQ-8									1	1	6.67		1		2.20	9.10	1075	45.6			210.3	73.1							5.30					SHEET TOTAL DQ-8				
DQ-9				138.0	6	5			3	3	9.30			1	2.20	9.10	863	11.4			156.2	228.6	117.9	2					1.91					SHEET TOTAL DQ-9				
DQ-10			1					90	2	8	8.97						628	11.4	46.4	3.00	159.3						4.50	16.44	13.85					SHEET TOTAL DQ-10				
DQ-11				65.7	4		25.0			2	7.94						216		2.7		15.1						1.50	4.68						SHEET TOTAL DQ-11				
DQ-12							147.0			5	22.04						864		34.4		74.5						3.75	12.13						SHEET TOTAL DQ-12				
DQ-13							34.0		3	5	10.23						1406		5.8		436.7				1		1.50	4.14						SHEET TOTAL DQ-13				
DQ-14									3	3	2.63		1		2.20	9.10	1071	102.6			558.9	123.5							16.42					SHEET TOTAL DQ-14				
				*794.6							*62.81						*2848						*161.6											SHEET UQ-1				
				74.3(R)											5.0(R)	27.3(R)																		SHEET DD-7				
TOTAL				1106.0	10	5	338.0	90	12	31	158.71	43	4	1	57.80	245.70	13284	### 478.8	94.2	3.00	2928.8	482.2	279.5			52.0	14.25	46.18	67.15									

SEE SUMMARY OF QUANTITIES SHEET, Q-6, FOR TOTAL QUANTITIES.
* SEE UTILITY QUANTITIES SHEET, UQ-1, FOR DETAILED INFORMATION.
(R) SEE DRAINAGE DETAILS SHEET, DD-7, FOR DETAILED INFORMATION.
(N) NOT A SEPARATE PAY ITEM, FOR INFORMATION ONLY.

ABANDON DRYWELL

LOCATION	QUANTITY (EA)	LOCATION	QUANTITY (EA)
47+91.0 "A" LINE 19.50 m L+	1	10+46.6 "P" LINE 7.83 m L+	1
47+98.0 "A" LINE 20.00 m L+	1	10+76.3 "P" LINE 7.55 m L+	1
10+43.0 "O" LINE 36.50 m R+	1	11+05.6 "P" LINE 7.39 m L+	1
54+44.0 "A" LINE 4.00 m R+	1	77+90.0 "M" LINE 0.50 m R+	1
54+60.0 "A" LINE 5.00 m R+	1	78+07.5 "M" LINE 0.50 m R+	1
62+35.0 "A" LINE 31.50 m R+	1	78+25.0 "M" LINE 0.50 m R+	1
63+10.0 "A" LINE 9.50 m R+	1	443+20.5 "E" LINE 14.50 m R+	1
63+16.0 "A" LINE 9.30 m R+	1	444+40.0 "E" LINE 14.50 m L+	1
63+19.5 "A" LINE 28.0 m R+	1	444+77.5 "E" LINE 15.00 m R+	1
66+39.0 "A" LINE 11.70 m R+	1	445+35.3 "E" LINE 14.73 m L+	1
66+39.5 "A" LINE 25.00 m R+	1		
TOTAL	11		10
GRAND TOTAL	21		

DRAINAGE QUANTITIES
DQ-15

ALLEN LAO | REVISED BY | WS
WUTHY SENG | DATE REVISED | 4/13/10
CALCULATED-DESIGNED BY
CHECKED BY
FUNCTIONAL SUPERVISOR
JOSE HUERTA
STATE OF CALIFORNIA - DEPARTMENT OF TRANSPORTATION
Caltrans DESIGN

LAST REVISION 00-00-00 | DATE PLOTTED => 26-JAN-2012 | TIME PLOTTED => 06:19

Dist	COUNTY	ROUTE	KILOMETER POST TOTAL PROJECT	SHEET No.	TOTAL SHEETS
10	Sta	219,108	3.4/7.9, 44.3/44.9	237	522

REGISTERED CIVIL ENGINEER 6/16/09 DATE

6-28-10
PLANS APPROVAL DATE

REGISTERED PROFESSIONAL ENGINEER ERIC C-S CHIN No. 71272 Exp. 12/31/09 CIVIL STATE OF CALIFORNIA

THE STATE OF CALIFORNIA OR ITS OFFICERS OR AGENTS SHALL NOT BE RESPONSIBLE FOR THE ACCURACY OR COMPLETENESS OF ELECTRONIC COPIES OF THIS PLAN SHEET.

Caltrans Metric

NOTES:
1. FOR COMPLETE R/W DATA, SEE R/W RECORD MAPS AT DISTRICT OFFICE.
2. PROPOSED AND DEACTIVATED UTILITIES TO BE DONE BY OTHERS.

UTILITY OWNERSHIP:

- EXISTING OVERHEAD TELEPHONE CABLES (AT&T)
- EXISTING OVERHEAD 12 KV POWER LINES (MID)
- EXISTING OVERHEAD FIBER OPTIC CABLE (AT&T)
- EXISTING GAS PIPE LINE (PG&E)
- EXISTING TELEPHONE CABLE CONDUIT (AT&T)
- EXISTING WATER PIPE LINE (MID/PRIVATE)
- EXISTING STORM DRAIN PIPE LINE (STATE/CITY OF MODESTO)
- EXISTING SEWER PIPE LINE (CITY OF MODESTO)
- PROPOSED GAS PIPE LINE (PG&E)
- DEACTIVATED AND ABANDONED GAS PIPE IN PLACE (PG&E)

LEGEND:

- EXISTING POLE (MID/AT&T)
- EXISTING CABLES VAULT (AT&T)
- SSMH EXISTING SEWER MANHOLE (CITY OF MODESTO)
- TLMH EXISTING CABLES MANHOLE (AT&T)
- SDMH EXISTING STORM DRAIN MANHOLE (STATE/CITY OF MODESTO)
- DI EXISTING DRAINAGE INLET/DRYWELL (STATE)
- DI EXISTING DRAINAGE INLET (STATE)
- EXISTING WATER VALVE (MID/PRIVATE)
- EXISTING FIRE HYDRANT (CITY OF MODESTO)
- # POTHOLE NUMBER
- CUT OFF AND ABANDONED GAS SERVICE
- P# UTILITY DETAILS FOR PRIVATE IRRAGATION FACILITIES
- # UTILITY DETAILS FOR MID IRRIGATION FACILITIES

ABBREVIATIONS:

MID - MODESTO IRRIGATION DISTRICT
PG&E - PACIFIC GAS AND ELECTRIC
AT&T - AMERICAN TELEPHONE AND TELEGRAPH
SL - SERVICE LINE
SSMH - SANITARY SEWER MANHOLE
TLMH - TELEPHONE MANHOLE
SDMH - STORM DRAIN MANHOLE

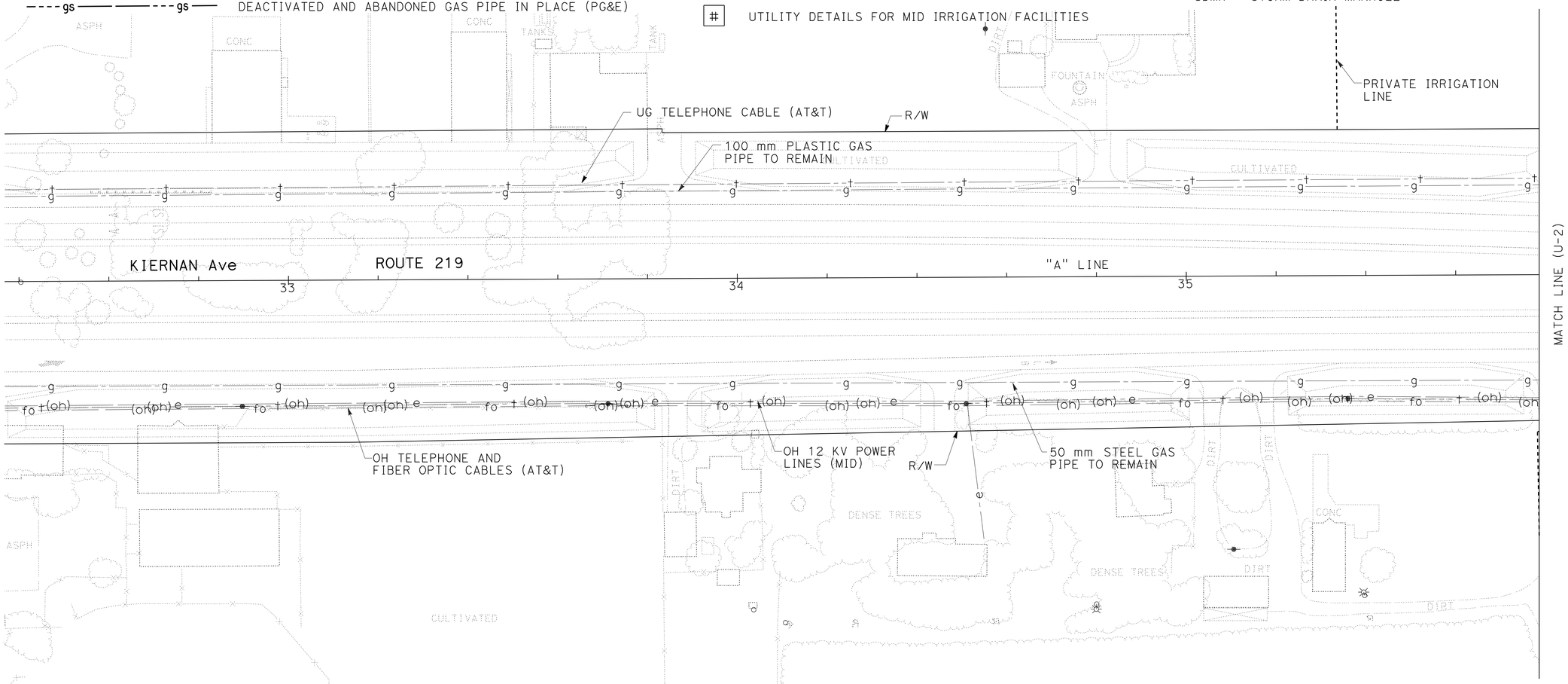

ALL DIMENSIONS ARE IN METERS UNLESS OTHERWISE SHOWN

THIS PLAN ACCURATE FOR UTILITY WORK ONLY.

UTILITY PLAN

SCALE 1:500

U-1

EC	6/20/09	
REVISED BY	DATE REVISED	
ERIC CHIN	WUTHY SENG	
CALCULATED-DESIGNED BY	CHECKED BY	
FUNCTIONAL SUPERVISOR	JOSE HUERTA	

STATE OF CALIFORNIA - DEPARTMENT OF TRANSPORTATION
Caltrans DESIGN

LAST REVISION 00-00-00 | DATE PLOTTED => 30-JUN-2010 | TIME PLOTTED => 14:40

NOTE: FOR COMPLETE R/W DATA, SEE R/W RECORD MAPS AT DISTRICT OFFICE.

Dist	COUNTY	ROUTE	KILOMETER POST TOTAL PROJECT	SHEET No.	TOTAL SHEETS
10	Sta	219,108	3.4/7.9, 44.3/44.9	238	522

REGISTERED CIVIL ENGINEER 6/16/09 DATE

6-28-10
PLANS APPROVAL DATE

REGISTERED PROFESSIONAL ENGINEER ERIC C-S CHIN No. 71272 Exp. 12/31/09 CIVIL STATE OF CALIFORNIA

THE STATE OF CALIFORNIA OR ITS OFFICERS OR AGENTS SHALL NOT BE RESPONSIBLE FOR THE ACCURACY OR COMPLETENESS OF ELECTRONIC COPIES OF THIS PLAN SHEET.

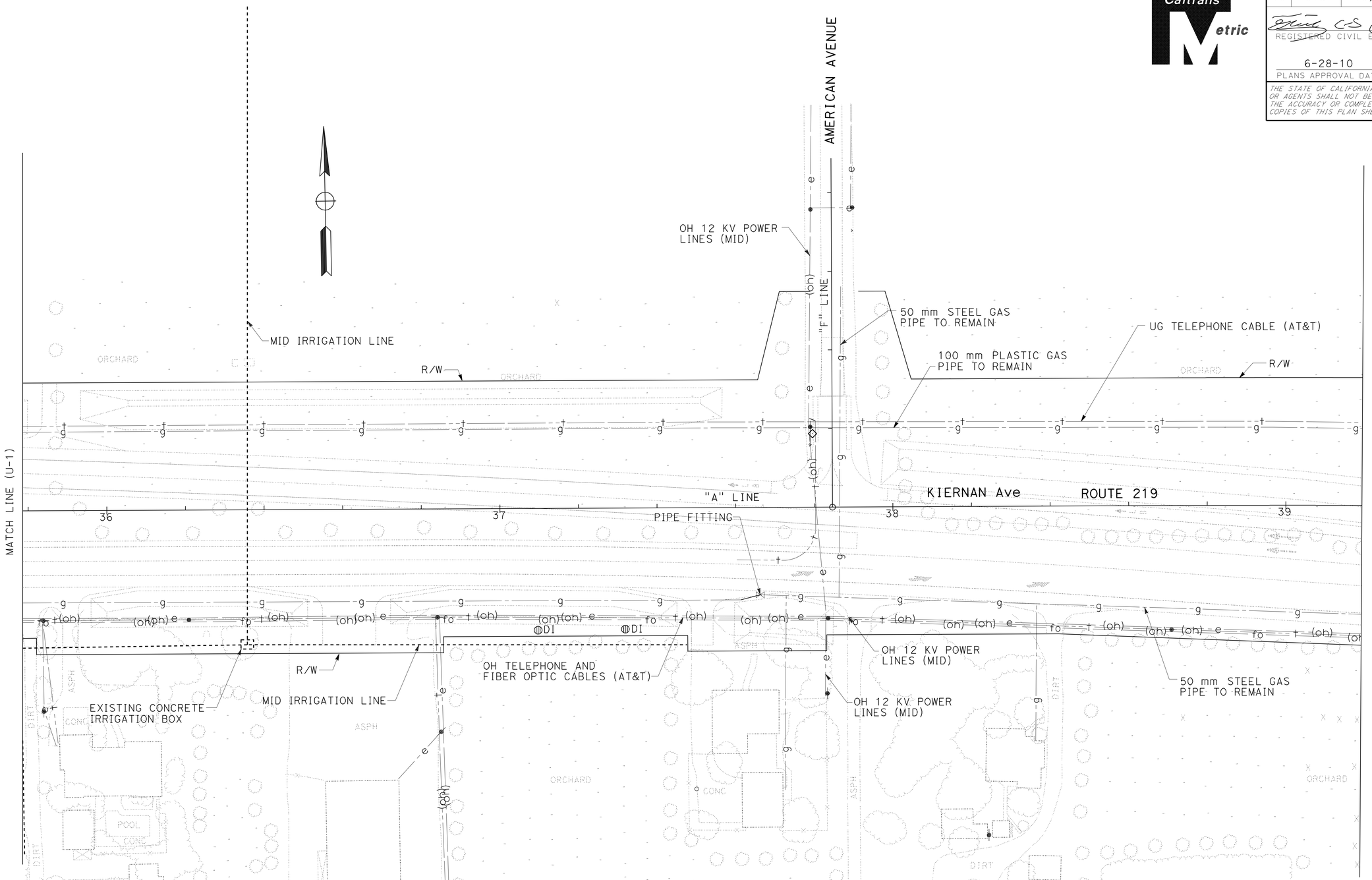

ALL DIMENSIONS ARE IN METERS UNLESS OTHERWISE SHOWN

THIS PLAN ACCURATE FOR UTILITY WORK ONLY.

UTILITY PLAN

SCALE 1:500 **U-2**

REVISED BY	EC
DATE REVISED	6/20/09
ERIC CHIN	
WUTHY SENG	
CALCULATED-DESIGNED BY	
CHECKED BY	
FUNCTIONAL SUPERVISOR	
JOSE HUERTA	

STATE OF CALIFORNIA - DEPARTMENT OF TRANSPORTATION
Caltrans
DESIGN

LAST REVISION 00-00-00
DATE PLOTTED => 30-JUN-2010
TIME PLOTTED => 14:40

Dist	COUNTY	ROUTE	KILOMETER POST TOTAL PROJECT	SHEET No.	TOTAL SHEETS
10	Sta	219,108	3.4/7.9, 44.3/44.9	239	522

REGISTERED CIVIL ENGINEER 6/16/09 DATE

6-28-10
PLANS APPROVAL DATE

REGISTERED PROFESSIONAL ENGINEER ERIC C-S CHIN No. 71272 Exp. 12/31/09 CIVIL STATE OF CALIFORNIA

THE STATE OF CALIFORNIA OR ITS OFFICERS OR AGENTS SHALL NOT BE RESPONSIBLE FOR THE ACCURACY OR COMPLETENESS OF ELECTRONIC COPIES OF THIS PLAN SHEET.

Caltrans Metric

NOTE: FOR COMPLETE R/W DATA, SEE R/W RECORD MAPS AT DISTRICT OFFICE.

POTHOLE No.	OG Elev	UTILITY TOP Elev	DEPTH (m)	STATION	OFFSET (m)
1	28.491	27.678	0.813	"A" 42+64.700	30.785 Rt

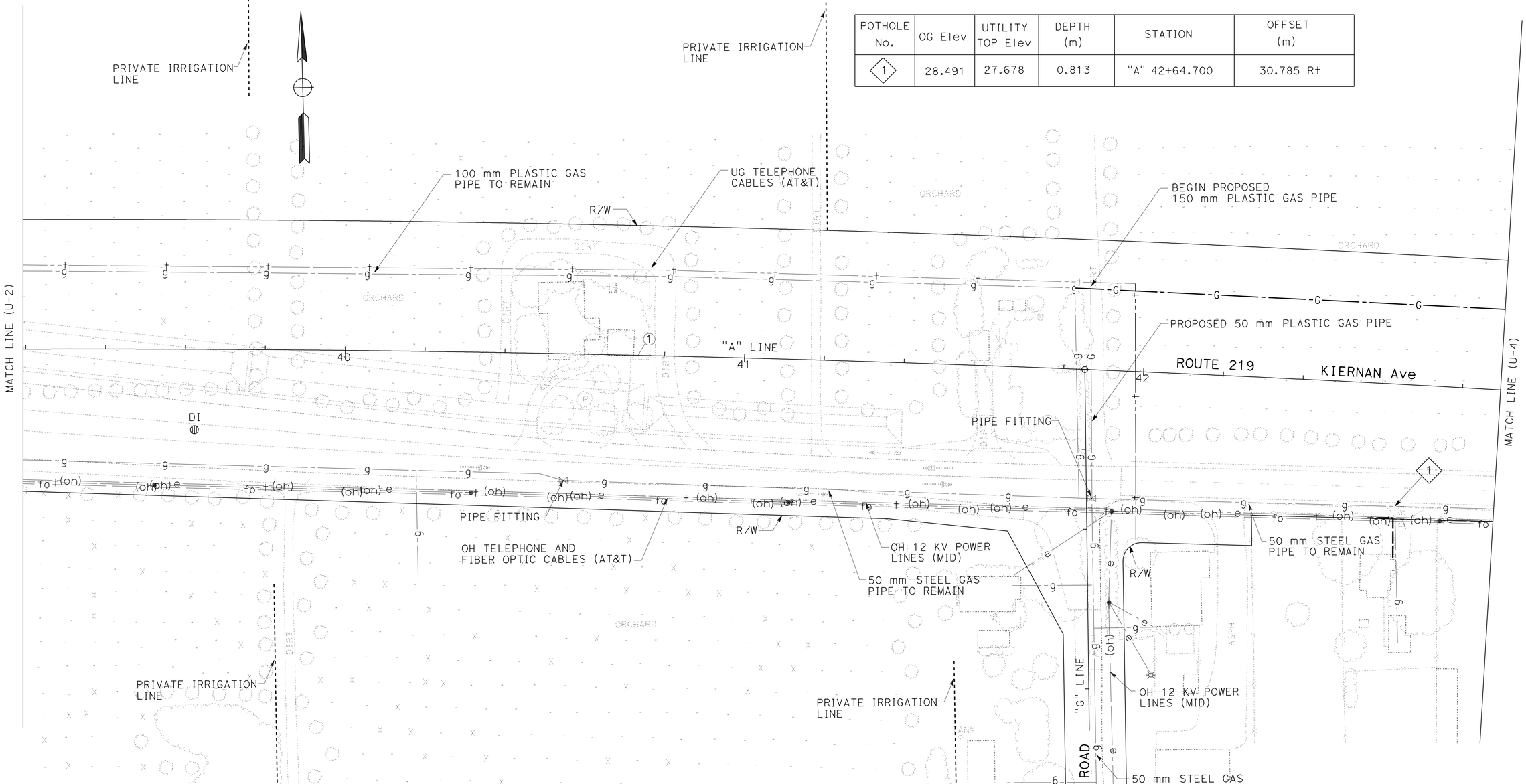

ALL DIMENSIONS ARE IN METERS UNLESS OTHERWISE SHOWN

THIS PLAN ACCURATE FOR UTILITY WORK ONLY.

UTILITY PLAN

SCALE 1:500

U-3

STATE OF CALIFORNIA - DEPARTMENT OF TRANSPORTATION
Caltrans DESIGN

FUNCTIONAL SUPERVISOR: JOSE HUERTA
CALCULATED-DESIGNED BY: ERIC CHIN
CHECKED BY: WUTHY SENG
REVISED BY: EC
DATE REVISED: 6/20/09

LAST REVISION 00-00-00 DATE PLOTTED => 30-JUN-2010 TIME PLOTTED => 14:40

NOTE: FOR COMPLETE R/W DATA, SEE R/W RECORD MAPS AT DISTRICT OFFICE.

Dist	COUNTY	ROUTE	KILOMETER POST TOTAL PROJECT	SHEET No.	TOTAL SHEETS
10	Sta	219,108	3.4/7.9, 44.3/44.9	240	522

REGISTERED CIVIL ENGINEER 6/16/09 DATE

6-28-10
PLANS APPROVAL DATE

REGISTERED PROFESSIONAL ENGINEER ERIC C-S CHIN No. 71272 Exp. 12/31/09 CIVIL STATE OF CALIFORNIA

THE STATE OF CALIFORNIA OR ITS OFFICERS OR AGENTS SHALL NOT BE RESPONSIBLE FOR THE ACCURACY OR COMPLETENESS OF ELECTRONIC COPIES OF THIS PLAN SHEET.

POTHOLE No.	OG Elev	UTILITY TOP Elev	DEPTH (m)	STATION	OFFSET (m)
2	28.470	27.581	0.889	"A" 43+92.451	25.796 Rt

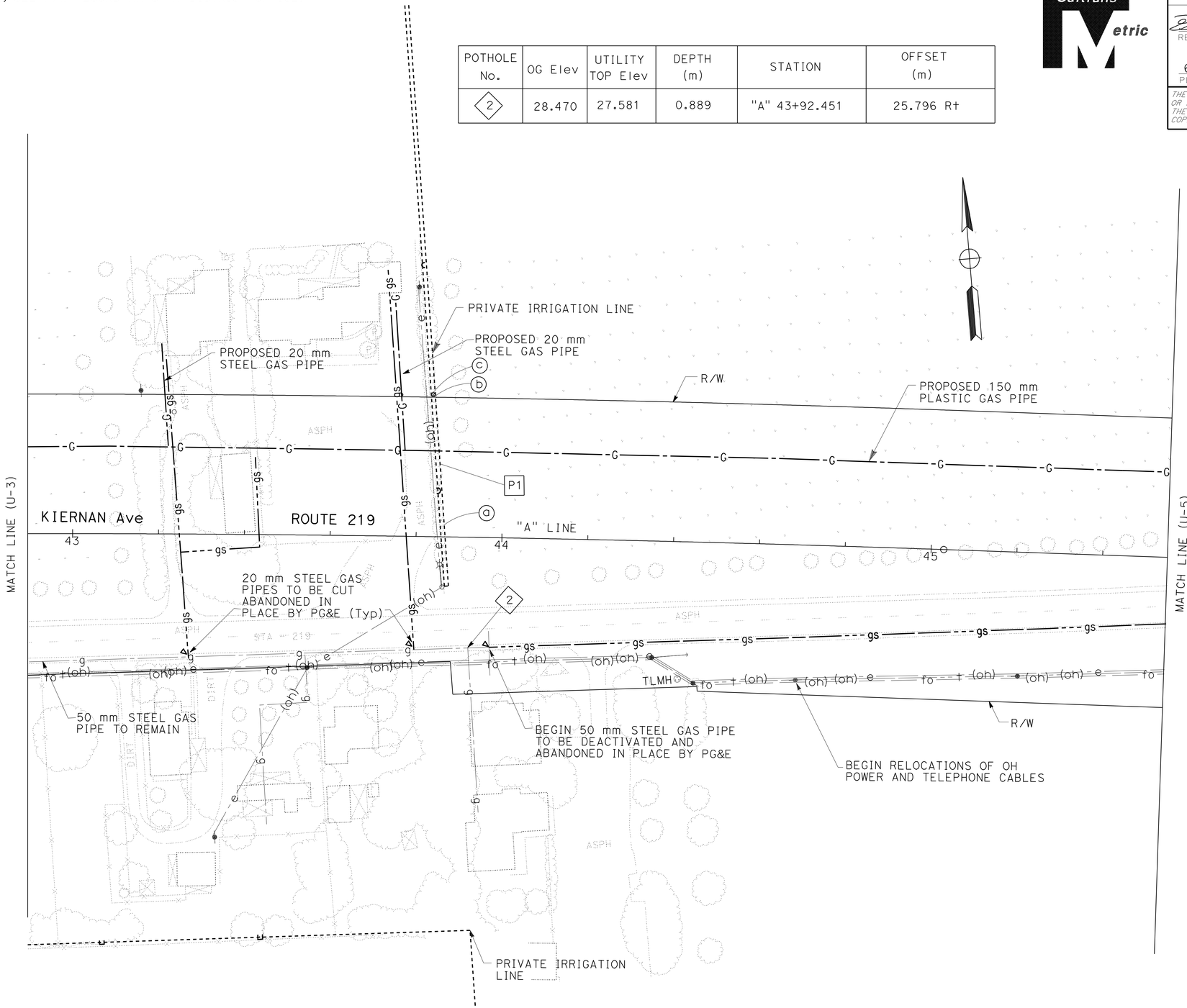

THIS PLAN ACCURATE FOR UTILITY WORK ONLY.

ALL DIMENSIONS ARE IN METERS UNLESS OTHERWISE SHOWN

UTILITY PLAN

SCALE 1:500

U-4

STATE OF CALIFORNIA - DEPARTMENT OF TRANSPORTATION
Caltrans
DESIGN

FUNCTIONAL SUPERVISOR: JOSE HUERTA
CALCULATED-DESIGNED BY: ERIC CHIN
CHECKED BY: WUTHY SENG
REVISED BY: EC
DATE REVISED: 6/20/09

LAST REVISION 00-00-00
DATE PLOTTED => 30-JUN-2010
TIME PLOTTED => 15:00

Dist	COUNTY	ROUTE	KILOMETER POST TOTAL PROJECT	SHEET No.	TOTAL SHEETS
10	Sta	219,108	3.4/7.9, 44.3/44.9	241	522

REGISTERED CIVIL ENGINEER 6/16/09 DATE

6-28-10
PLANS APPROVAL DATE

REGISTERED PROFESSIONAL ENGINEER ERIC C-S CHIN No. 71272 Exp. 12/31/09 CIVIL STATE OF CALIFORNIA

THE STATE OF CALIFORNIA OR ITS OFFICERS OR AGENTS SHALL NOT BE RESPONSIBLE FOR THE ACCURACY OR COMPLETENESS OF ELECTRONIC COPIES OF THIS PLAN SHEET.

Caltrans Metric

NOTE: FOR COMPLETE R/W DATA, SEE R/W RECORD MAPS AT DISTRICT OFFICE.

POTHOLE No.	OG Elev	UTILITY TOP Elev	DEPTH (m)	STATION	OFFSET (m)
4	28.261	27.474	0.787	"A" 48+48.975	23.793 Lt

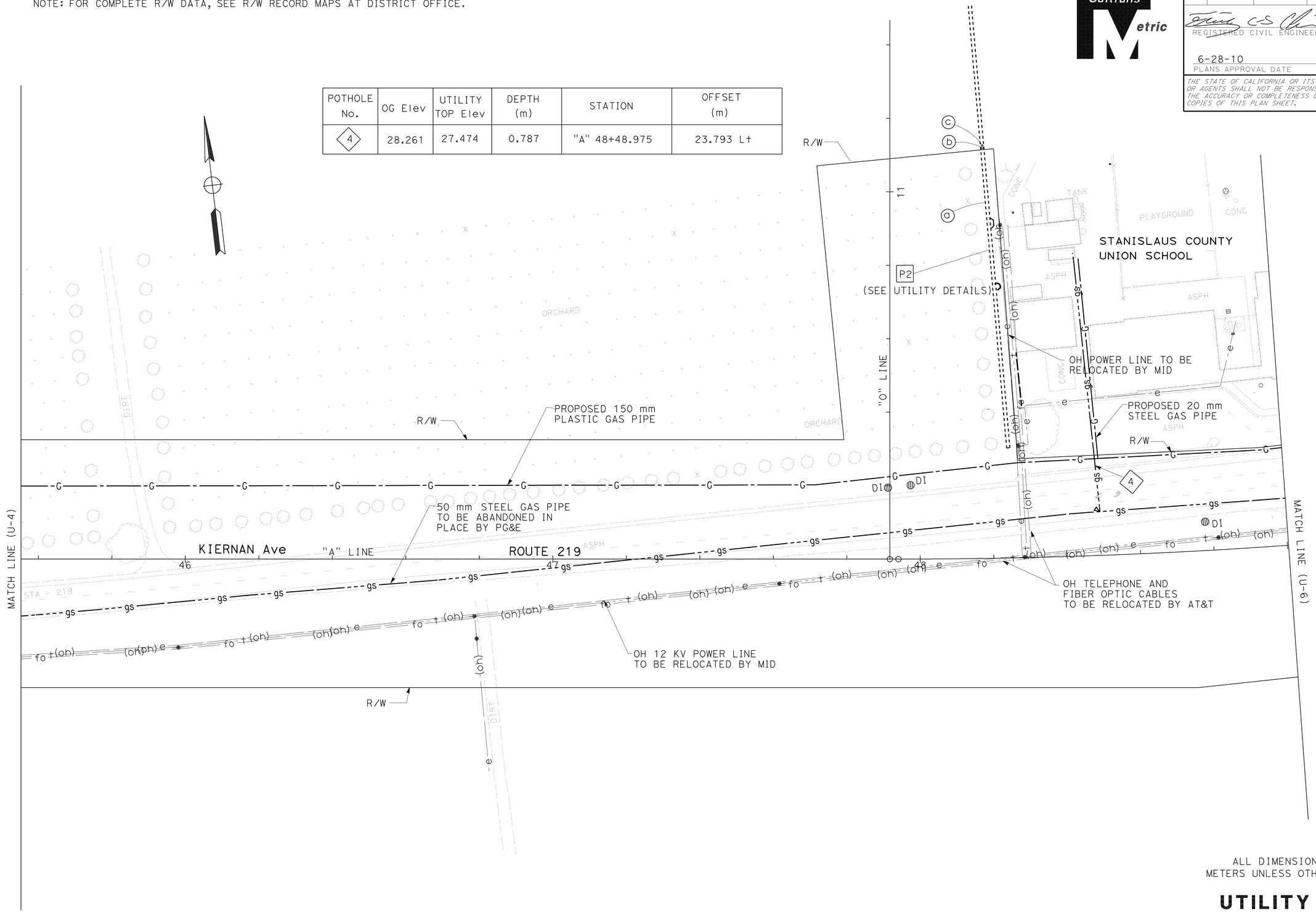

ALL DIMENSIONS ARE IN METERS UNLESS OTHERWISE SHOWN

THIS PLAN ACCURATE FOR UTILITY WORK ONLY.

UTILITY PLAN

SCALE 1:500 **U-5**

CALCULATED-DESIGNED BY	ERIC CHIN
CHECKED BY	WUTHY SENG
REVISED BY	EC
DATE REVISED	6/20/09
FUNCTIONAL SUPERVISOR	JOSE HUERTA

STATE OF CALIFORNIA - DEPARTMENT OF TRANSPORTATION
Caltrans
DESIGN

LAST REVISION 00-00-00 | DATE PLOTTED => 30-JUN-2010 | TIME PLOTTED => 15:00

NOTE: FOR COMPLETE R/W DATA, SEE R/W RECORD MAPS AT DISTRICT OFFICE.

POTHOLE No.	OG Elev	UTILITY TOP Elev	DEPTH (m)	STATION	OFFSET (m)
5	28.779	27.509	1.270	"A" 49+59.606	12.154 Lt
7A	29.241	27.971	1.270	"A" 52+09.782	14.453 Lt

Caltrans Metric

Dist	COUNTY	ROUTE	KILOMETER POST TOTAL PROJECT	SHEET No.	TOTAL SHEETS
10	Sta	219,108	3.4/7.9, 44.3/44.9	242	522

REGISTERED CIVIL ENGINEER 6/16/09 DATE

6-28-10
PLANS APPROVAL DATE

REGISTERED PROFESSIONAL ENGINEER ERIC C-S CHIN No. 71272 Exp. 12/31/09 CIVIL STATE OF CALIFORNIA

THE STATE OF CALIFORNIA OR ITS OFFICERS OR AGENTS SHALL NOT BE RESPONSIBLE FOR THE ACCURACY OR COMPLETENESS OF ELECTRONIC COPIES OF THIS PLAN SHEET.

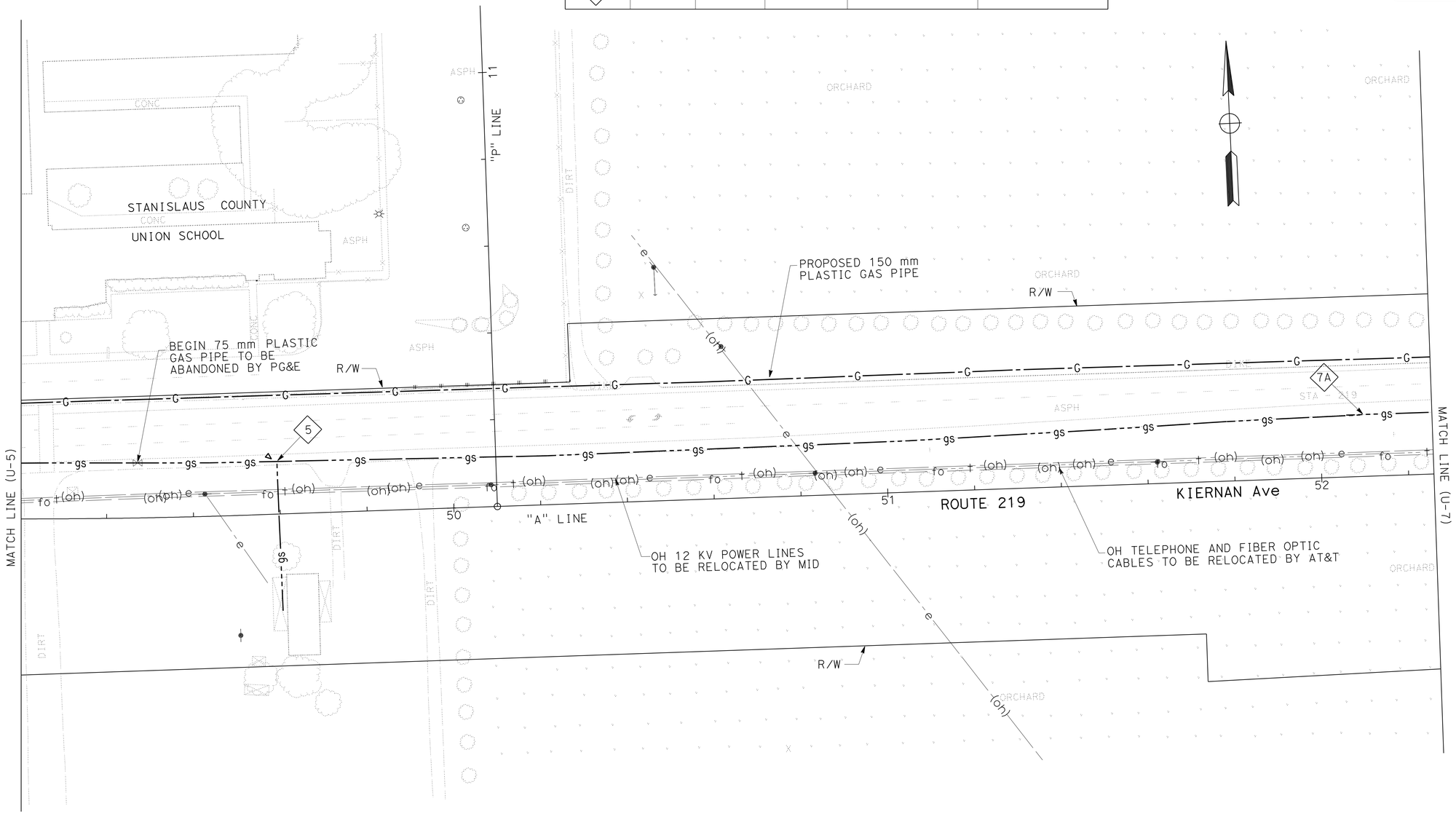

ALL DIMENSIONS ARE IN METERS UNLESS OTHERWISE SHOWN

THIS PLAN ACCURATE FOR UTILITY WORK ONLY.

UTILITY PLAN

SCALE 1:500

U-6

ERIC CHIN	EC	6/20/09
WUTHY SENG	REVISED BY	DATE REVISED
CALCULATED-DESIGNED BY		
CHECKED BY		
FUNCTIONAL SUPERVISOR		
JOSE HUERTA		

STATE OF CALIFORNIA - DEPARTMENT OF TRANSPORTATION

Caltrans

DESIGN

LAST REVISION 00-00-00 DATE PLOTTED => 30-JUN-2010 TIME PLOTTED => 15:01

Dist	COUNTY	ROUTE	KILOMETER POST TOTAL PROJECT	SHEET No.	TOTAL SHEETS
10	Sta	219,108	3.4/7.9, 44.3/44.9	243	522

REGISTERED CIVIL ENGINEER 6/16/09 DATE

6-28-10
PLANS APPROVAL DATE

REGISTERED PROFESSIONAL ENGINEER ERIC C-S CHIN No. 71272 Exp. 12/31/09 CIVIL STATE OF CALIFORNIA

THE STATE OF CALIFORNIA OR ITS OFFICERS OR AGENTS SHALL NOT BE RESPONSIBLE FOR THE ACCURACY OR COMPLETENESS OF ELECTRONIC COPIES OF THIS PLAN SHEET.

Caltrans Metric

NOTE: FOR COMPLETE R/W DATA, SEE R/W RECORD MAPS AT DISTRICT OFFICE.

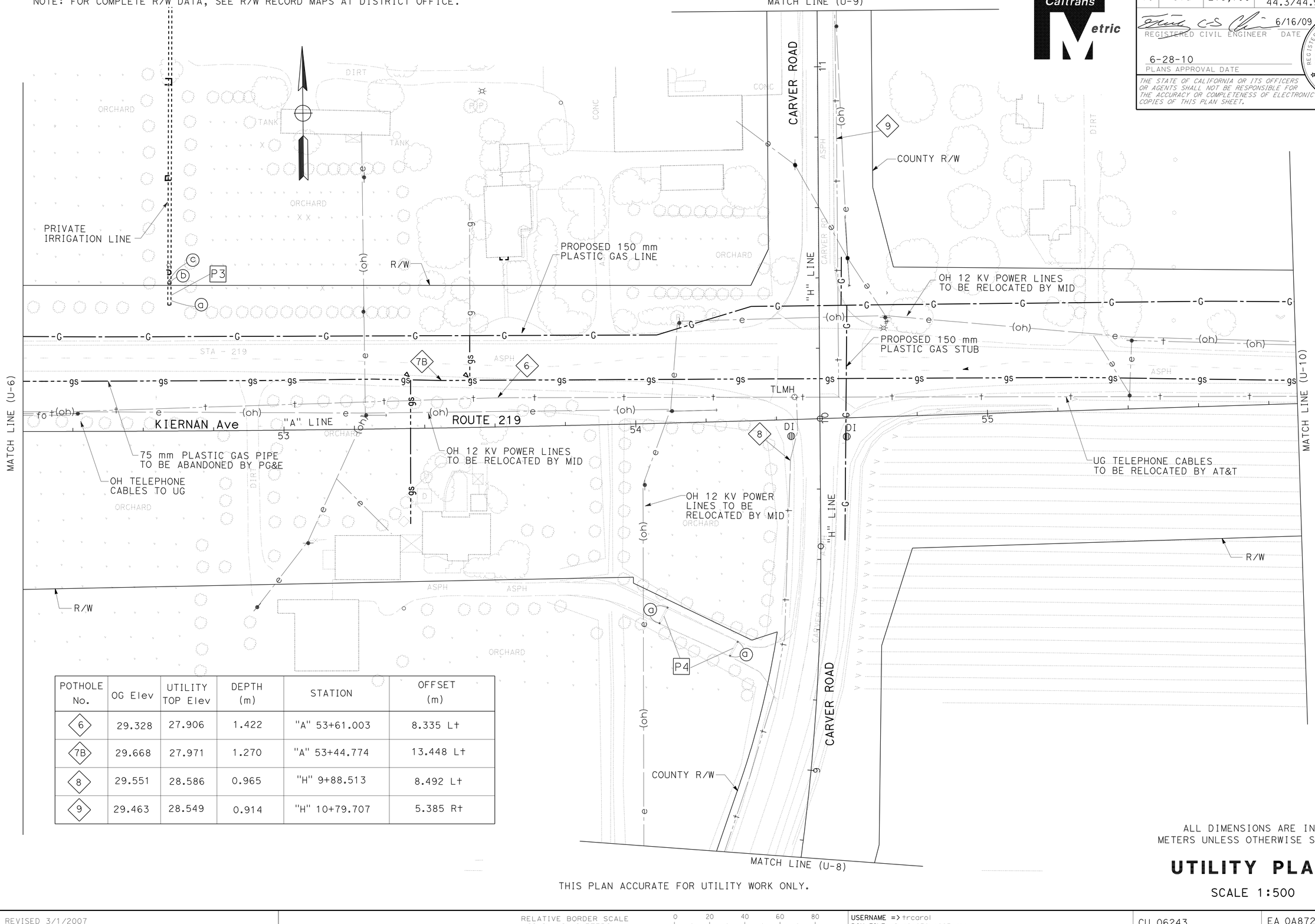

POTHOLE No.	OG Elev	UTILITY TOP Elev	DEPTH (m)	STATION	OFFSET (m)
6	29.328	27.906	1.422	"A" 53+61.003	8.335 L†
7B	29.668	27.971	1.270	"A" 53+44.774	13.448 L†
8	29.551	28.586	0.965	"H" 9+88.513	8.492 L†
9	29.463	28.549	0.914	"H" 10+79.707	5.385 R†

THIS PLAN ACCURATE FOR UTILITY WORK ONLY.

ALL DIMENSIONS ARE IN METERS UNLESS OTHERWISE SHOWN

UTILITY PLAN

SCALE 1:500

U-7

CALCULATED-DESIGNED BY	ERIC CHIN	REVISED BY	EC
CHECKED BY	WUTHY SENG	DATE REVISED	6/20/09
FUNCTIONAL SUPERVISOR	JOSE HUERTA		

STATE OF CALIFORNIA - DEPARTMENT OF TRANSPORTATION

Caltrans DESIGN

LAST REVISION 00-00-00 DATE PLOTTED => 30-JUN-2010 TIME PLOTTED => 15:01

NOTE: FOR COMPLETE R/W DATA, SEE R/W RECORD MAPS AT DISTRICT OFFICE.

Dist	COUNTY	ROUTE	KILOMETER POST TOTAL PROJECT	SHEET No.	TOTAL SHEETS
10	Sta	219,108	3.4/7.9, 44.3/44.9	244	522

REGISTERED CIVIL ENGINEER 6/16/09 DATE

6-28-10
PLANS APPROVAL DATE

REGISTERED PROFESSIONAL ENGINEER ERIC C-S CHIN No. 71272 Exp. 12/31/09 CIVIL STATE OF CALIFORNIA

THE STATE OF CALIFORNIA OR ITS OFFICERS OR AGENTS SHALL NOT BE RESPONSIBLE FOR THE ACCURACY OR COMPLETENESS OF ELECTRONIC COPIES OF THIS PLAN SHEET.

POTHOLE No.	OG Elev	UTILITY TOP Elev.	DEPTH (m)	STATION	OFFSET (m)
8B	29.499	28.483	1.016	"H" 8+86.955	8.880 Lt

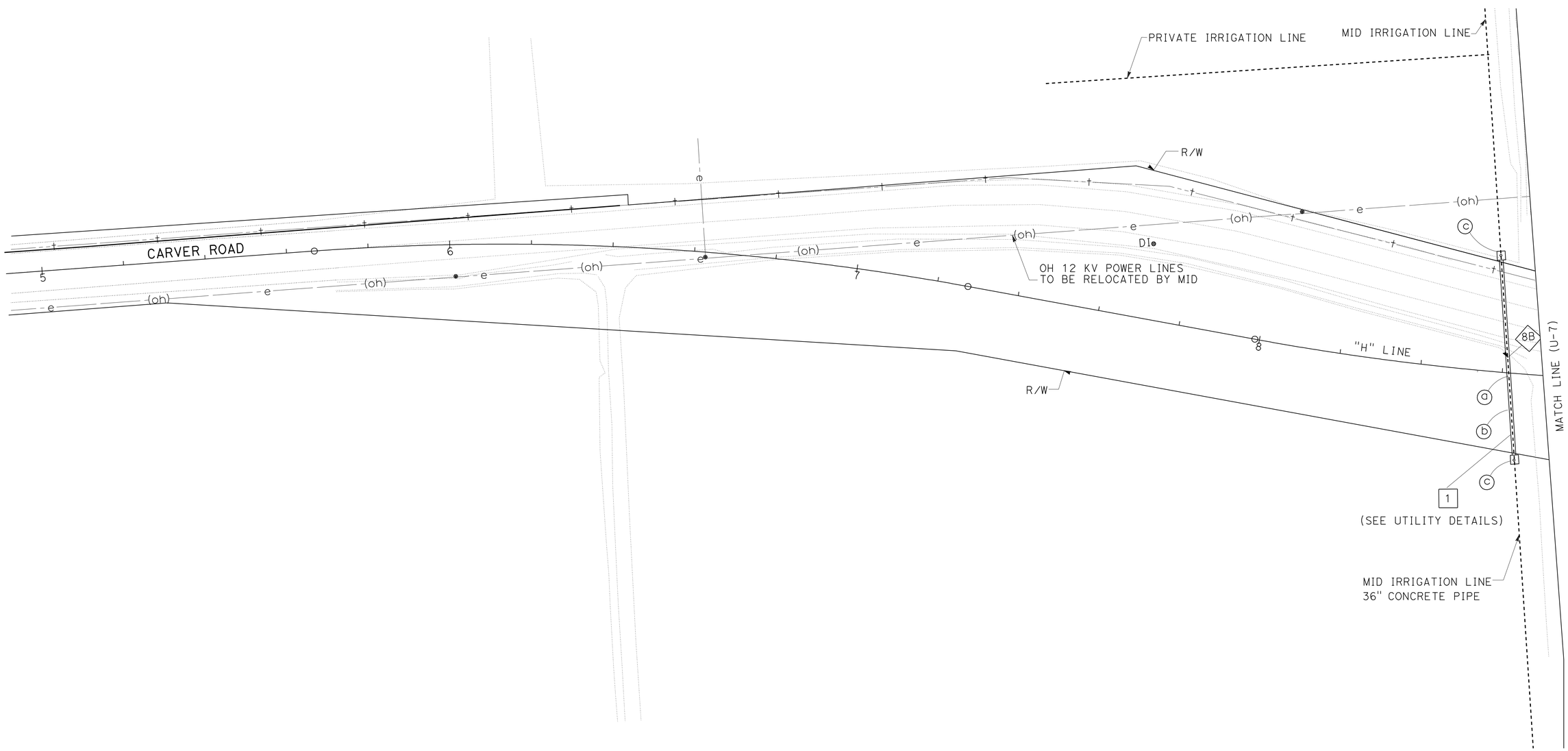

ALL DIMENSIONS ARE IN METERS UNLESS OTHERWISE SHOWN

THIS PLAN ACCURATE FOR UTILITY WORK ONLY.

UTILITY PLAN

SCALE 1:500

U-8

EC	6/20/09
REVISED BY	DATE REVISED
ERIC CHIN	WUTHY SENG
CALCULATED-DESIGNED BY	CHECKED BY
FUNCTIONAL SUPERVISOR	JOSE HUERTA

STATE OF CALIFORNIA - DEPARTMENT OF TRANSPORTATION

Caltrans

DESIGN

LAST REVISION 00-00-00 | DATE PLOTTED => 30-JUN-2010 | TIME PLOTTED => 15:01

NOTE: FOR COMPLETE R/W DATA, SEE R/W RECORD MAPS AT DISTRICT OFFICE.

Dist	COUNTY	ROUTE	KILOMETER POST TOTAL PROJECT	SHEET No.	TOTAL SHEETS
10	Sta	219,108	3.4/7.9, 44.3/44.9	245	522

REGISTERED CIVIL ENGINEER 6/16/09 DATE

6-28-10
PLANS APPROVAL DATE

REGISTERED PROFESSIONAL ENGINEER ERIC C-S CHIN No. 71272 Exp. 12/31/09 CIVIL STATE OF CALIFORNIA

THE STATE OF CALIFORNIA OR ITS OFFICERS OR AGENTS SHALL NOT BE RESPONSIBLE FOR THE ACCURACY OR COMPLETENESS OF ELECTRONIC COPIES OF THIS PLAN SHEET.

POTHOLE No.	OG Elev	UTILITY TOP Elev	DEPTH (m)	STATION	OFFSET (m)
10	29.759	28.845	0.914	"H" 11+63.490	4.581 Rt

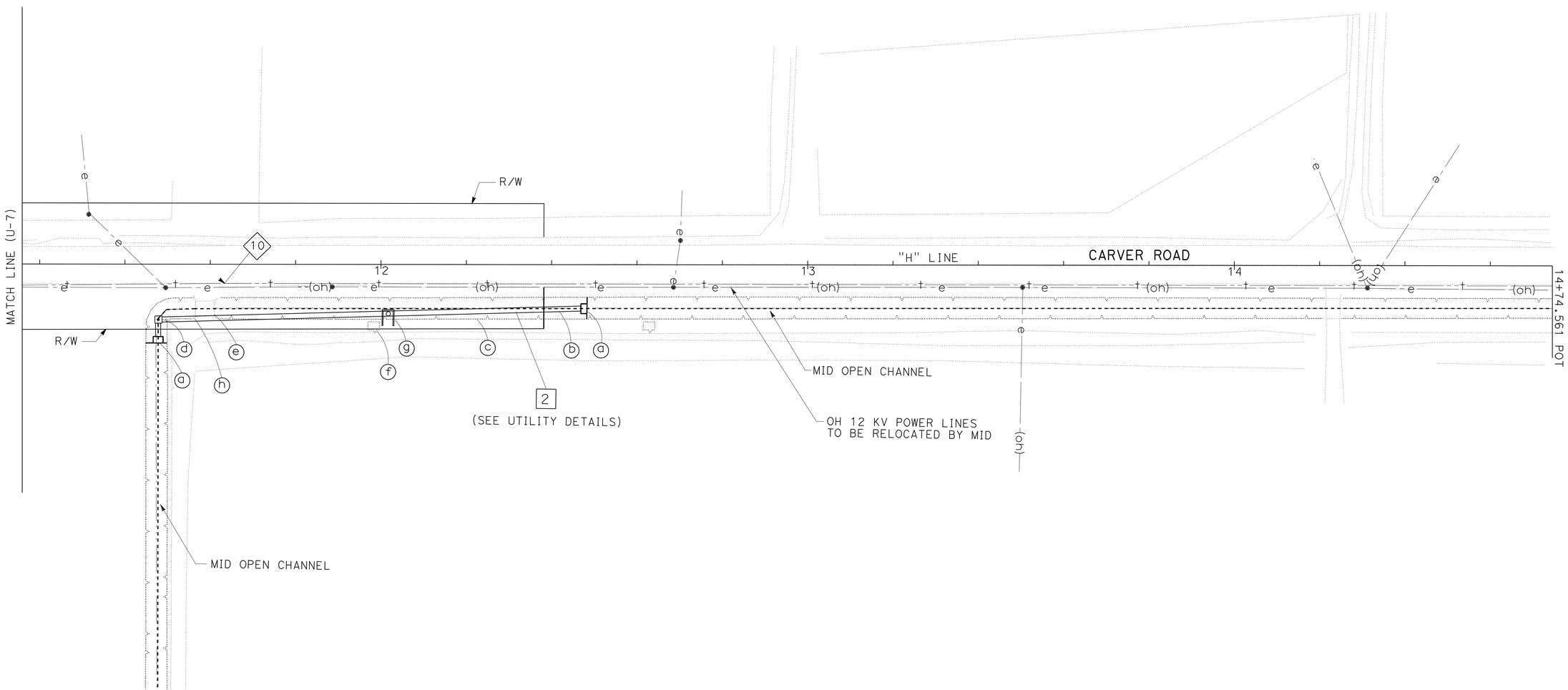

ALL DIMENSIONS ARE IN METERS UNLESS OTHERWISE SHOWN

THIS PLAN ACCURATE FOR UTILITY WORK ONLY.

UTILITY PLAN

SCALE 1:500

U-9

CALCULATED-DESIGNED BY	ERIC CHIN	EC
CHECKED BY	WUTHY SENG	6/20/09
FUNCTIONAL SUPERVISOR	JOSE HUERTA	REVISED BY / DATE REVISED

STATE OF CALIFORNIA - DEPARTMENT OF TRANSPORTATION

Caltrans DESIGN

LAST REVISION 00-00-00 DATE PLOTTED => 30-JUN-2010 TIME PLOTTED => 15:01

Dist	COUNTY	ROUTE	KILOMETER POST TOTAL PROJECT	SHEET No.	TOTAL SHEETS
10	Sta	219,108	3.4/7.9, 44.3/44.9	246	522

REGISTERED CIVIL ENGINEER 6/16/09 DATE

6-28-10
PLANS APPROVAL DATE

REGISTERED PROFESSIONAL ENGINEER ERIC C-S CHIN No. 71272 Exp. 12/31/09 CIVIL STATE OF CALIFORNIA

THE STATE OF CALIFORNIA OR ITS OFFICERS OR AGENTS SHALL NOT BE RESPONSIBLE FOR THE ACCURACY OR COMPLETENESS OF ELECTRONIC COPIES OF THIS PLAN SHEET.

Caltrans Metric

NOTE: FOR COMPLETE R/W DATA, SEE R/W RECORD MAPS AT DISTRICT OFFICE.

POTHOLE No.	OG Elev	UTILITY TOP Elev	DEPTH (m)	STATION	OFFSET (m)
11	30.084	29.170	0.914	"A" 56+47.338	0.169 L†
12	29.986	28.894	1.092	"A" 56+79.760	0.731 R†
12A	29.897	28.830	1.067	"A" 56+78.096	2.863 R†
12B	29.448	28.330	1.118	"A" 58+15.873	9.141 R†
13	29.269	28.329 28.456	0.940 MAIN 0.813 SL	"A" 59+00.687	13.290 R†

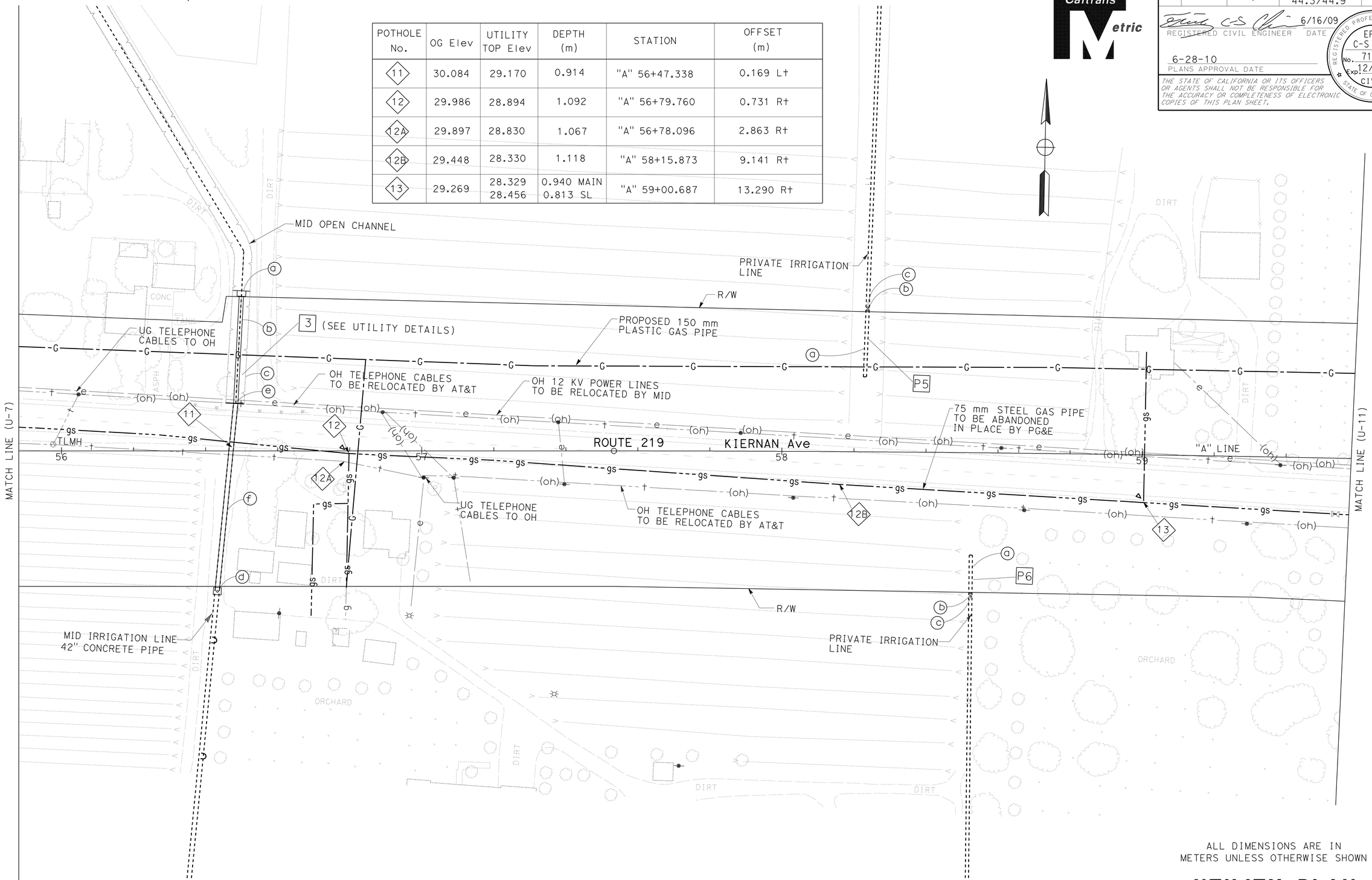

ALL DIMENSIONS ARE IN METERS UNLESS OTHERWISE SHOWN

THIS PLAN ACCURATE FOR UTILITY WORK ONLY.

UTILITY PLAN

SCALE 1:500

U-10

REVISED BY	DATE REVISED
EC	6/20/09

ERIC CHIN — CALCULATED-DESIGNED BY
WUTHY SENG — CHECKED BY
JOSE HUERTA — FUNCTIONAL SUPERVISOR

STATE OF CALIFORNIA - DEPARTMENT OF TRANSPORTATION
Caltrans
DESIGN

LAST REVISION 00-00-00
DATE PLOTTED => 30-JUN-2010
TIME PLOTTED => 15:01

Dist	COUNTY	ROUTE	KILOMETER POST TOTAL PROJECT	SHEET No.	TOTAL SHEETS
10	Sta	219,108	3.4/7.9, 44.3/44.9	247	522

REGISTERED CIVIL ENGINEER 6/16/09 DATE

6-28-10
PLANS APPROVAL DATE

REGISTERED PROFESSIONAL ENGINEER ERIC C-S CHIN No. 71272 Exp. 12/31/09 CIVIL STATE OF CALIFORNIA

THE STATE OF CALIFORNIA OR ITS OFFICERS OR AGENTS SHALL NOT BE RESPONSIBLE FOR THE ACCURACY OR COMPLETENESS OF ELECTRONIC COPIES OF THIS PLAN SHEET.

Caltrans Metric

NOTE: FOR COMPLETE R/W DATA, SEE R/W RECORD MAPS AT DISTRICT OFFICE.

POTHOLE No.	OG Elev	UTILITY TOP Elev	DEPTH (m)	STATION	OFFSET (m)
14	29.105	28.140 27.784	0.965 (GAS) 1.321 (Tel)	"A" 60+21.496	18.004 R†
15	29.258	28.344 28.115	0.914 SL 1.143 (GAS)	"A" 61+30.513	20.945 R†
16	29.059	28.145	0.914	"A" 62+23.497	28.806 R†
16A	29.425	28.714	0.711	"A" 62+21.223	10.336 R†
18	28.740	27.749	0.991	"I" 9+39.556	4.738 R†

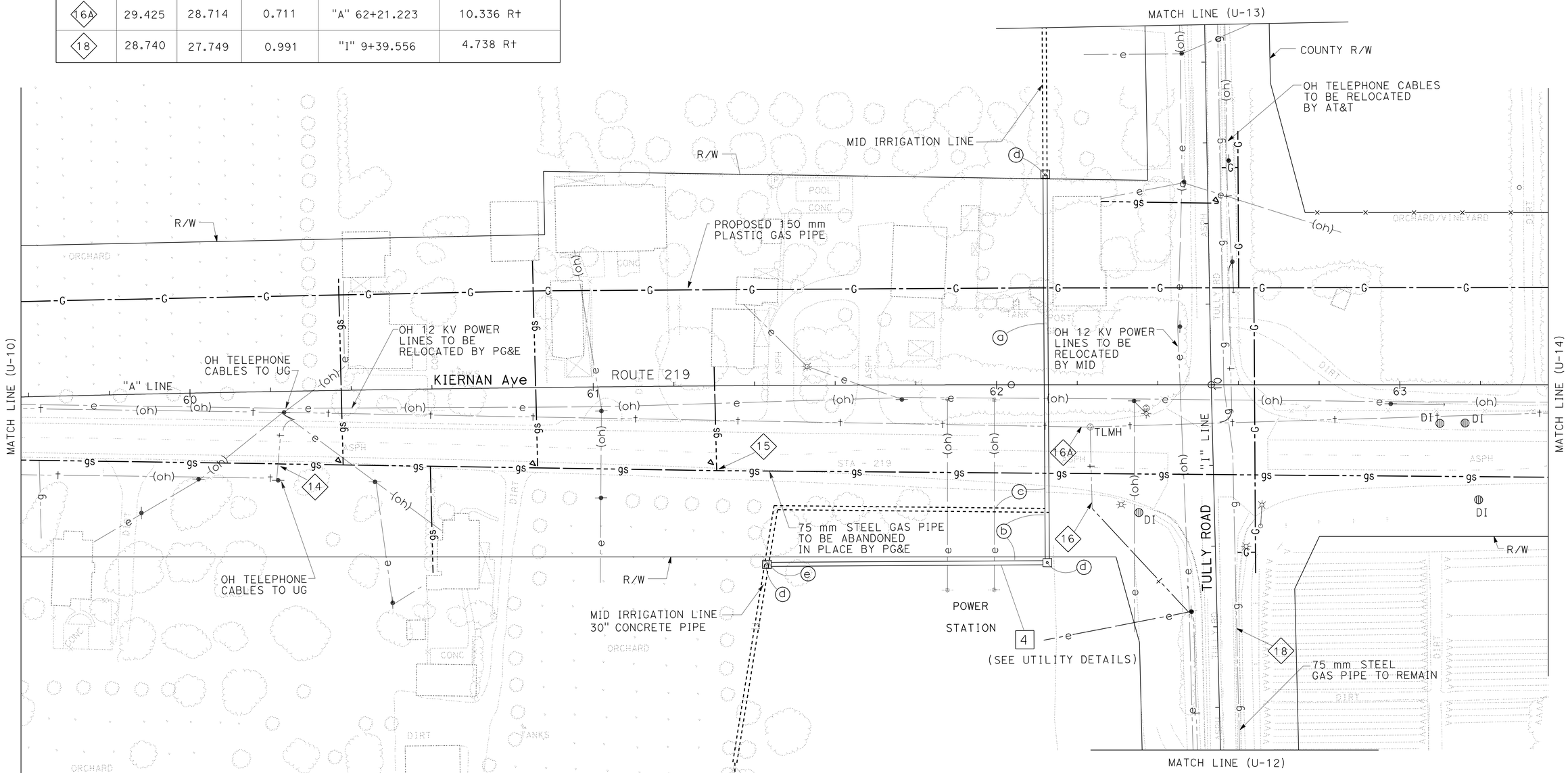

ALL DIMENSIONS ARE IN METERS UNLESS OTHERWISE SHOWN

THIS PLAN ACCURATE FOR UTILITY WORK ONLY.

UTILITY PLAN

SCALE 1:500 **U-11**

EC	6/20/09	ERIC CHIN
REVISED BY	DATE REVISED	WUTHY SENG
CALCULATED-DESIGNED BY		
CHECKED BY		
FUNCTIONAL SUPERVISOR		JOSE HUERTA

STATE OF CALIFORNIA - DEPARTMENT OF TRANSPORTATION
Caltrans
DESIGN

LAST REVISION 00-00-00 | DATE PLOTTED => 30-JUN-2010 | TIME PLOTTED => 15:01

Dist	COUNTY	ROUTE	KILOMETER POST TOTAL PROJECT	SHEET No.	TOTAL SHEETS
10	Sta	219,108	3.4/7.9, 44.3/44.9	248	522

REGISTERED CIVIL ENGINEER 6/16/09 DATE

6-28-10
PLANS APPROVAL DATE

REGISTERED PROFESSIONAL ENGINEER ERIC C-S CHIN No. 71272 Exp. 12/31/09 CIVIL STATE OF CALIFORNIA

THE STATE OF CALIFORNIA OR ITS OFFICERS OR AGENTS SHALL NOT BE RESPONSIBLE FOR THE ACCURACY OR COMPLETENESS OF ELECTRONIC COPIES OF THIS PLAN SHEET.

Caltrans Metric

NOTE: FOR COMPLETE R/W DATA, SEE R/W RECORD MAPS AT DISTRICT OFFICE.

POTHOLE No.	OG Elev.	UTILITY TOP Elev.	DEPTH (m)	STATION	OFFSET (m)
17	28.363	27.347	1.016	"I" 8+39.082	4.670 Rt

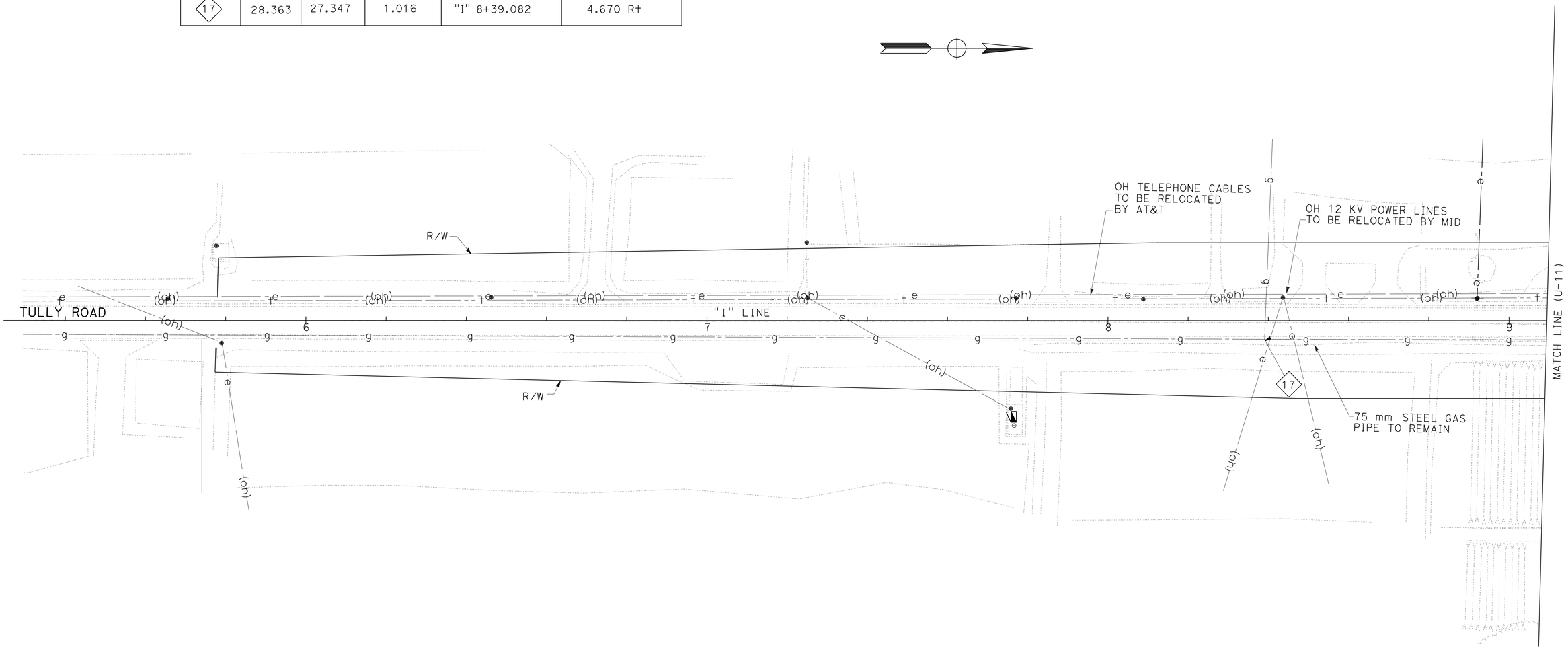

ALL DIMENSIONS ARE IN METERS UNLESS OTHERWISE SHOWN

THIS PLAN ACCURATE FOR UTILITY WORK ONLY.

UTILITY PLAN

SCALE 1:500 **U-12**

FUNCTIONAL SUPERVISOR	JOSE HUERTA	
CALCULATED-DESIGNED BY	ERIC CHIN	EC
CHECKED BY	WUTHY SENG	6/20/09
REVISED BY		
DATE REVISED		

STATE OF CALIFORNIA - DEPARTMENT OF TRANSPORTATION
Caltrans
DESIGN

LAST REVISION 00-00-00 | DATE PLOTTED => 30-JUN-2010 | TIME PLOTTED => 15:01

Dist	COUNTY	ROUTE	KILOMETER POST TOTAL PROJECT	SHEET No.	TOTAL SHEETS
10	Sta	219,108	3.4/7.9, 44.3/44.9	249	522

REGISTERED CIVIL ENGINEER 6/16/09 DATE

6-28-10
PLANS APPROVAL DATE

REGISTERED PROFESSIONAL ENGINEER ERIC C-S CHIN No. 71272 Exp. 12/31/09 CIVIL STATE OF CALIFORNIA

THE STATE OF CALIFORNIA OR ITS OFFICERS OR AGENTS SHALL NOT BE RESPONSIBLE FOR THE ACCURACY OR COMPLETENESS OF ELECTRONIC COPIES OF THIS PLAN SHEET.

Caltrans Metric

NOTE: FOR COMPLETE R/W DATA, SEE R/W RECORD MAPS AT DISTRICT OFFICE.

POTHOLE No.	OG Elev	UTILITY TOP Elev	DEPTH (m)	STATION	OFFSET (m)
19	29.604	28.613	0.991	"I" 11+13.166	3.571 Rt
20	29.728	28.712 28.788	1.016 (GAS) 0.940 SL	"I" 11+72.296	3.270 Rt

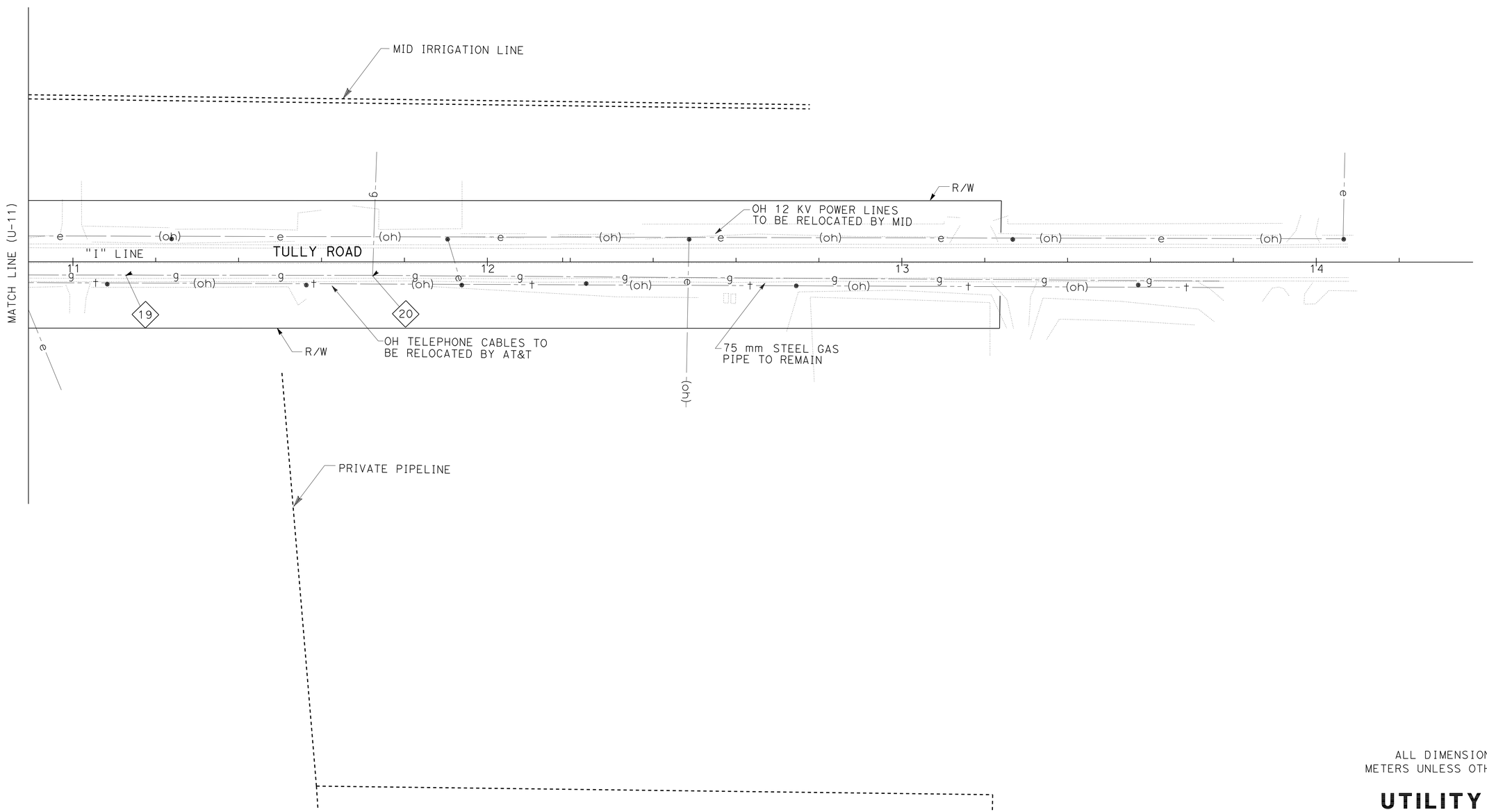

THIS PLAN ACCURATE FOR UTILITY WORK ONLY.

ALL DIMENSIONS ARE IN METERS UNLESS OTHERWISE SHOWN

UTILITY PLAN

SCALE 1:500 **U-13**

STATE OF CALIFORNIA - DEPARTMENT OF TRANSPORTATION
Caltrans DESIGN

FUNCTIONAL SUPERVISOR: JOSE HUERTA
CALCULATED-DESIGNED BY: ERIC CHIN
CHECKED BY: WUTHY SENG
REVISED BY: EC
DATE REVISED: 6/20/09

LAST REVISION 00-00-00 | DATE PLOTTED => 30-JUN-2010 | TIME PLOTTED => 15:01

NOTE: FOR COMPLETE R/W DATA, SEE R/W RECORD MAPS AT DISTRICT OFFICE.

Dist	COUNTY	ROUTE	KILOMETER POST TOTAL PROJECT	SHEET No.	TOTAL SHEETS
10	Sta	219,108	3.4/7.9, 44.3/44.9	250	522

REGISTERED CIVIL ENGINEER 6/16/09 DATE

6-28-10
PLANS APPROVAL DATE

REGISTERED PROFESSIONAL ENGINEER ERIC C-S CHIN No. 71272 Exp. 12/31/09 CIVIL STATE OF CALIFORNIA

THE STATE OF CALIFORNIA OR ITS OFFICERS OR AGENTS SHALL NOT BE RESPONSIBLE FOR THE ACCURACY OR COMPLETENESS OF ELECTRONIC COPIES OF THIS PLAN SHEET.

POTHOLE No.	OG Elev	UTILITY TOP Elev	DEPTH (m)	STATION	OFFSET (m)
21	29.445	28.277	1.168	"A" 65+54.712	22.846 Rt

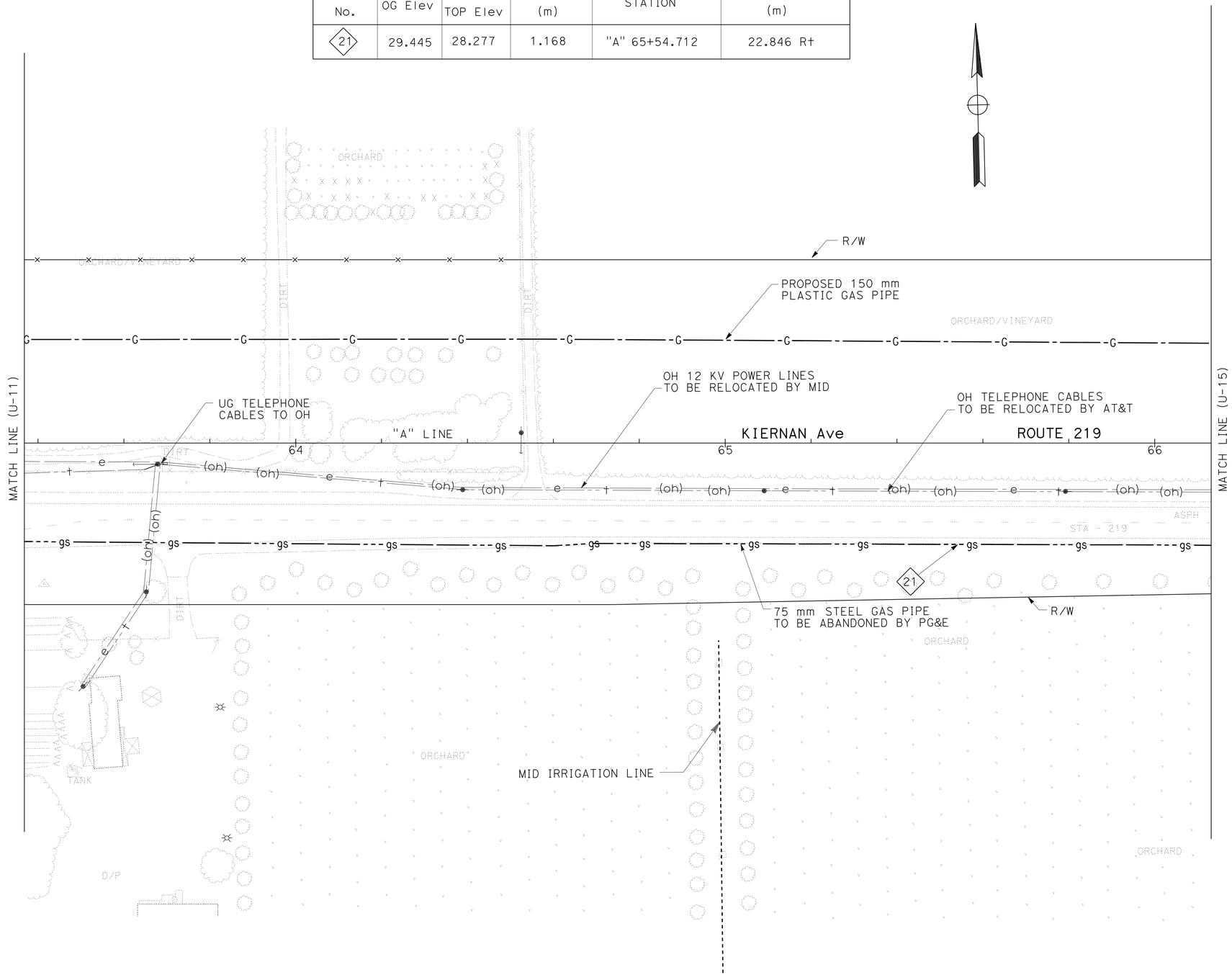

THIS PLAN ACCURATE FOR UTILITY WORK ONLY.

ALL DIMENSIONS ARE IN METERS UNLESS OTHERWISE SHOWN

UTILITY PLAN

SCALE 1:500

U-14

REVISED BY	DATE REVISED
EC	6/20/09

ERIC CHIN — CALCULATED-DESIGNED BY
WUTHY SENG — CHECKED BY
JOSE HUERTA — FUNCTIONAL SUPERVISOR

STATE OF CALIFORNIA - DEPARTMENT OF TRANSPORTATION
Caltrans
DESIGN

LAST REVISION 00-00-00
DATE PLOTTED => 30-JUN-2010
TIME PLOTTED => 15:01

NOTE: FOR COMPLETE R/W DATA, SEE R/W RECORD MAPS AT DISTRICT OFFICE.

Dist	COUNTY	ROUTE	KILOMETER POST TOTAL PROJECT	SHEET No.	TOTAL SHEETS
10	Sta	219,108	3.4/7.9, 44.3/44.9	251	522

REGISTERED CIVIL ENGINEER 6/16/09 DATE

6-28-10
PLANS APPROVAL DATE

REGISTERED PROFESSIONAL ENGINEER ERIC C-S CHIN No. 71272 Exp. 12/31/09 CIVIL STATE OF CALIFORNIA

THE STATE OF CALIFORNIA OR ITS OFFICERS OR AGENTS SHALL NOT BE RESPONSIBLE FOR THE ACCURACY OR COMPLETENESS OF ELECTRONIC COPIES OF THIS PLAN SHEET.

Caltrans Metric

POTHOLE No.	OG Elev	UTILITY TOP Elev	DEPTH (m)	STATION	OFFSET (m)
22	29.447	28.279	1.168	"A" 66+46.156	24.034 Rt
23	31.256	30.037	1.219	"A" 68+45.001	24.502 Rt
24	31.947	31.134 31.236	0.813 (GAS) 0.711 SL	"A" 69+22.291	24.403 Rt

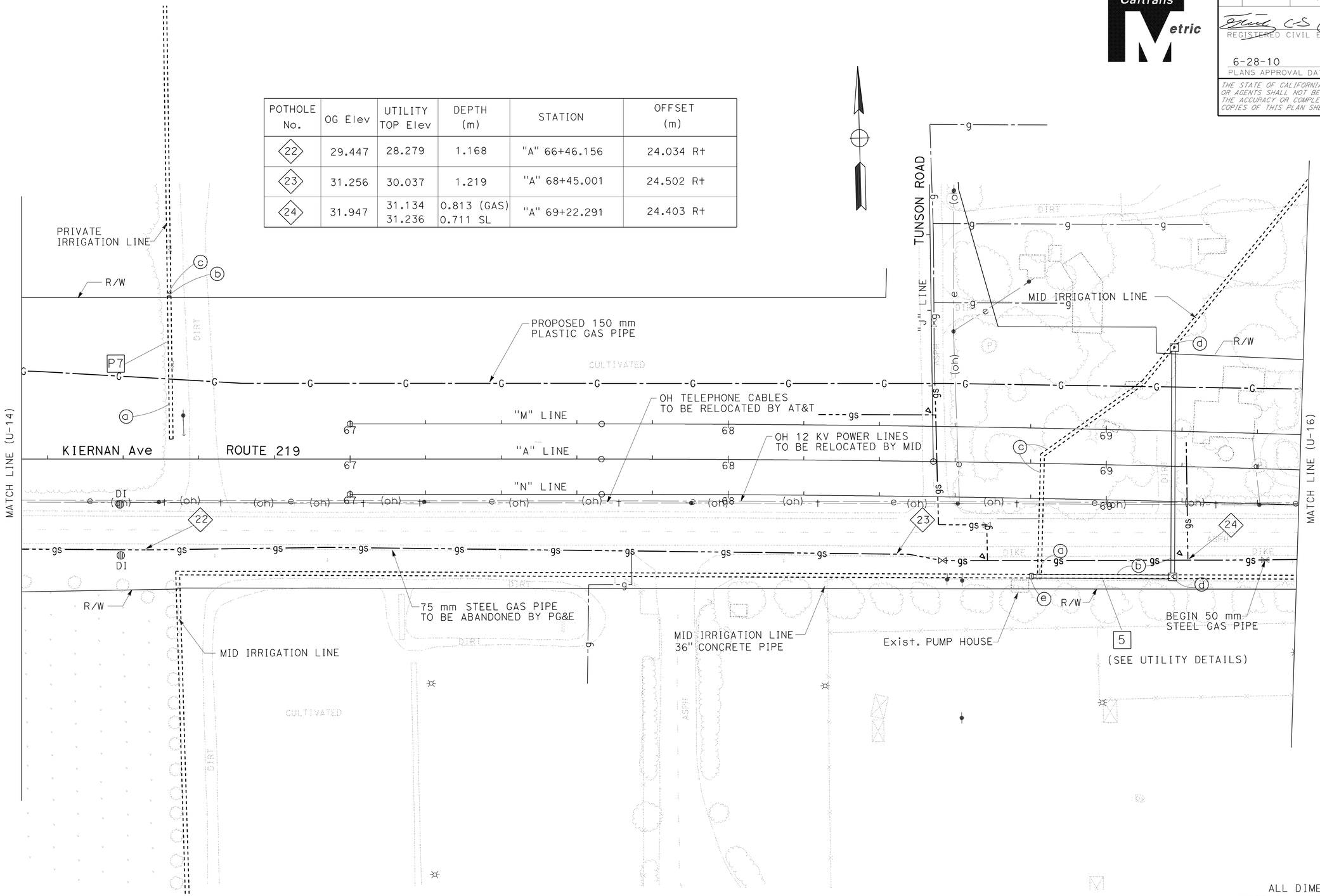

ALL DIMENSIONS ARE IN METERS UNLESS OTHERWISE SHOWN

THIS PLAN ACCURATE FOR UTILITY WORK ONLY.

UTILITY PLAN

SCALE 1:500 **U-15**

ERIC CHIN	EC	6/20/09	
WUTHY SENG			
JOSE HUERTA			

REVISED BY / DATE REVISED

CALCULATED-DESIGNED BY / CHECKED BY

FUNCTIONAL SUPERVISOR

STATE OF CALIFORNIA - DEPARTMENT OF TRANSPORTATION

Caltrans **DESIGN**

LAST REVISION 00-00-00 DATE PLOTTED => 30-JUN-2010 TIME PLOTTED => 15:02

Dist	COUNTY	ROUTE	KILOMETER POST TOTAL PROJECT	SHEET No.	TOTAL SHEETS
10	Sta	219,108	3.4/7.9, 44.3/44.9	252	522

REGISTERED CIVIL ENGINEER 6/16/09 DATE

6-28-10
PLANS APPROVAL DATE

REGISTERED PROFESSIONAL ENGINEER ERIC C-S CHIN No. 71272 Exp. 12/31/09 CIVIL STATE OF CALIFORNIA

THE STATE OF CALIFORNIA OR ITS OFFICERS OR AGENTS SHALL NOT BE RESPONSIBLE FOR THE ACCURACY OR COMPLETENESS OF ELECTRONIC COPIES OF THIS PLAN SHEET.

Caltrans Metric

NOTE: FOR COMPLETE R/W DATA, SEE R/W RECORD MAPS AT DISTRICT OFFICE.

POTHOLE No.	OG Elev	UTILITY TOP Elev	DEPTH (m)	STATION	OFFSET (m)
24A	32.132	31.218	0.914	"A" 69+53.028	23.456 Rt
25	32.017	31.103	0.914	"A" 71+07.007	16.969 Rt

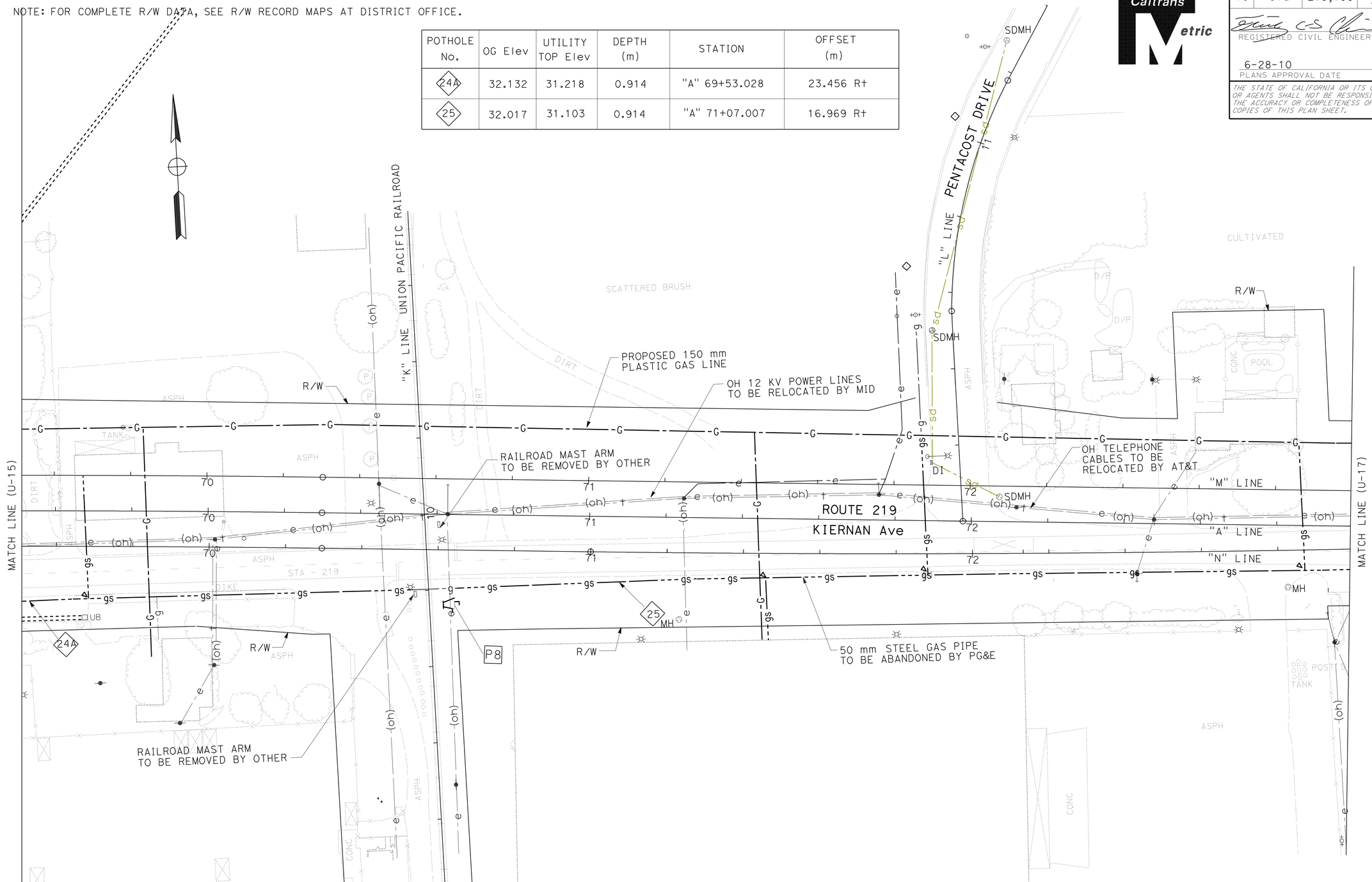

ALL DIMENSIONS ARE IN METERS UNLESS OTHERWISE SHOWN

THIS PLAN ACCURATE FOR UTILITY WORK ONLY.

UTILITY PLAN

SCALE 1:500 **U-16**

EC	6/20/09	
REVISED BY	DATE REVISED	
ERIC CHIN	WUTHY SENG	
CALCULATED-DESIGNED BY	CHECKED BY	
FUNCTIONAL SUPERVISOR	JOSE HUERTA	

STATE OF CALIFORNIA - DEPARTMENT OF TRANSPORTATION
Caltrans
DESIGN

LAST REVISION 00-00-00 | DATE PLOTTED => 30-JUN-2010 | TIME PLOTTED => 15:02

NOTE: FOR COMPLETE R/W DATA, SEE R/W RECORD MAPS AT DITSTRICT OFFICE.

Dist	COUNTY	ROUTE	KILOMETER POST TOTAL PROJECT	SHEET No.	TOTAL SHEETS
10	Sta	219,108	3.4/7.9, 44.3/44.9	253	522

REGISTERED CIVIL ENGINEER 6/16/09 DATE

6-28-10
PLANS APPROVAL DATE

REGISTERED PROFESSIONAL ENGINEER ERIC C-S CHIN No. 71272 Exp. 12/31/09 CIVIL STATE OF CALIFORNIA

THE STATE OF CALIFORNIA OR ITS OFFICERS OR AGENTS SHALL NOT BE RESPONSIBLE FOR THE ACCURACY OR COMPLETENESS OF ELECTRONIC COPIES OF THIS PLAN SHEET.

POTHOLE No.	OG Elev	UTILITY TOP Elev	DEPTH (m)	STATION	OFFSET (m)
26	31.716	30.827	0.889	"A" 73+05.876	11.097 Rt

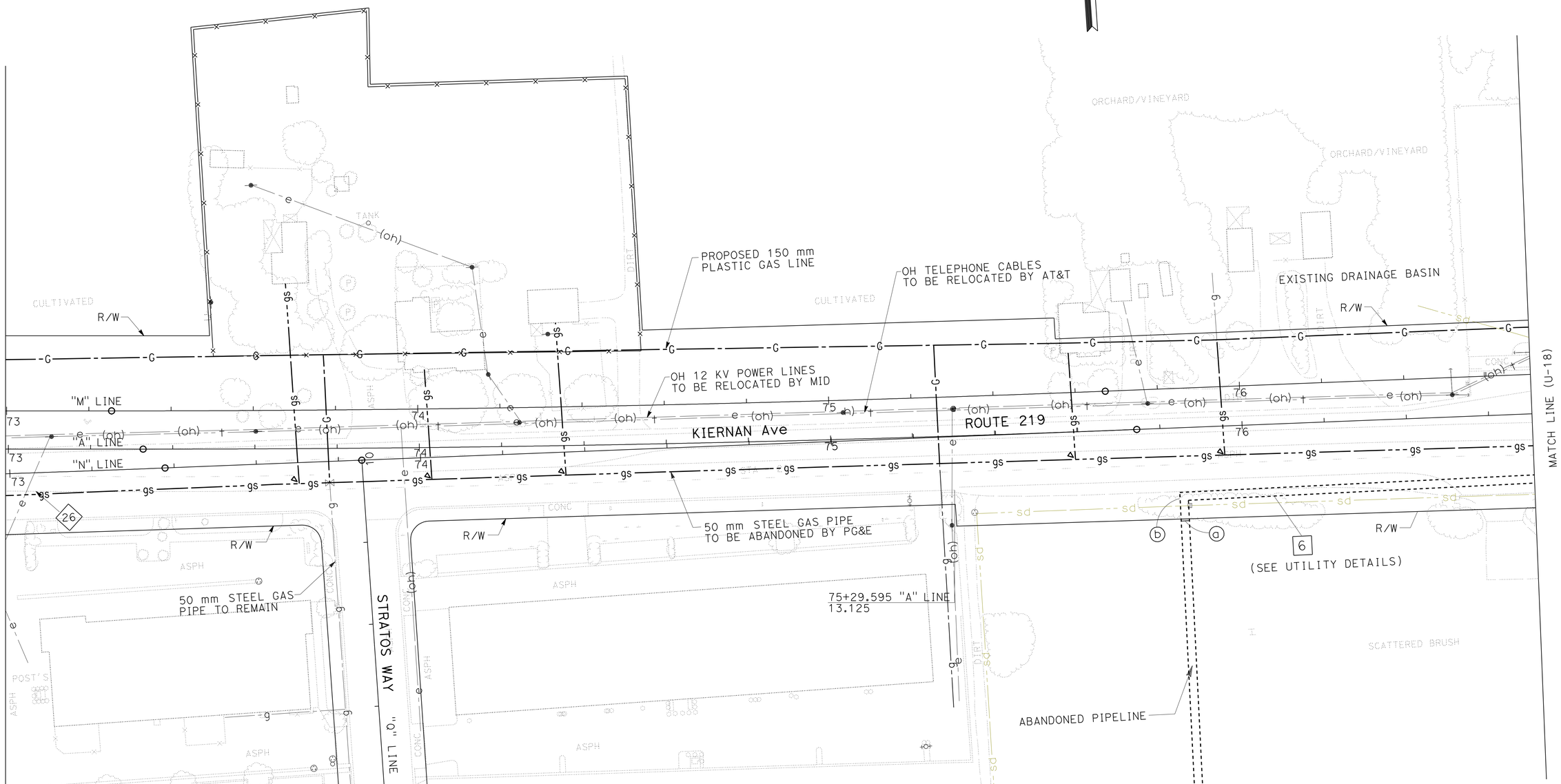

ALL DIMENSIONS ARE IN METERS UNLESS OTHERWISE SHOWN

THIS PLAN ACCURATE FOR UTILITY WORK ONLY.

UTILITY PLAN

SCALE 1:500 **U-17**

STATE OF CALIFORNIA - DEPARTMENT OF TRANSPORTATION
Caltrans
DESIGN

FUNCTIONAL SUPERVISOR: JOSE HUERTA
CALCULATED-DESIGNED BY: ERIC CHIN
CHECKED BY: WUTHY SENG
REVISED BY: EC
DATE REVISED: 6/20/09

LAST REVISION 00-00-00
DATE PLOTTED => 30-JUN-2010
TIME PLOTTED => 15:02

Dist	COUNTY	ROUTE	KILOMETER POST TOTAL PROJECT	SHEET No.	TOTAL SHEETS
10	Sta	219,108	3.4/7.9, 44.3/44.9	254	522

REGISTERED CIVIL ENGINEER 6/16/09 DATE

6-28-10
PLANS APPROVAL DATE

REGISTERED PROFESSIONAL ENGINEER ERIC C-S CHIN No. 71272 Exp. 12/31/09 CIVIL STATE OF CALIFORNIA

THE STATE OF CALIFORNIA OR ITS OFFICERS OR AGENTS SHALL NOT BE RESPONSIBLE FOR THE ACCURACY OR COMPLETENESS OF ELECTRONIC COPIES OF THIS PLAN SHEET.

Caltrans Metric

NOTE: FOR COMPLETE R/W DATA, SEE R/W RECORD MAPS AT DISTRICT OFFICE.

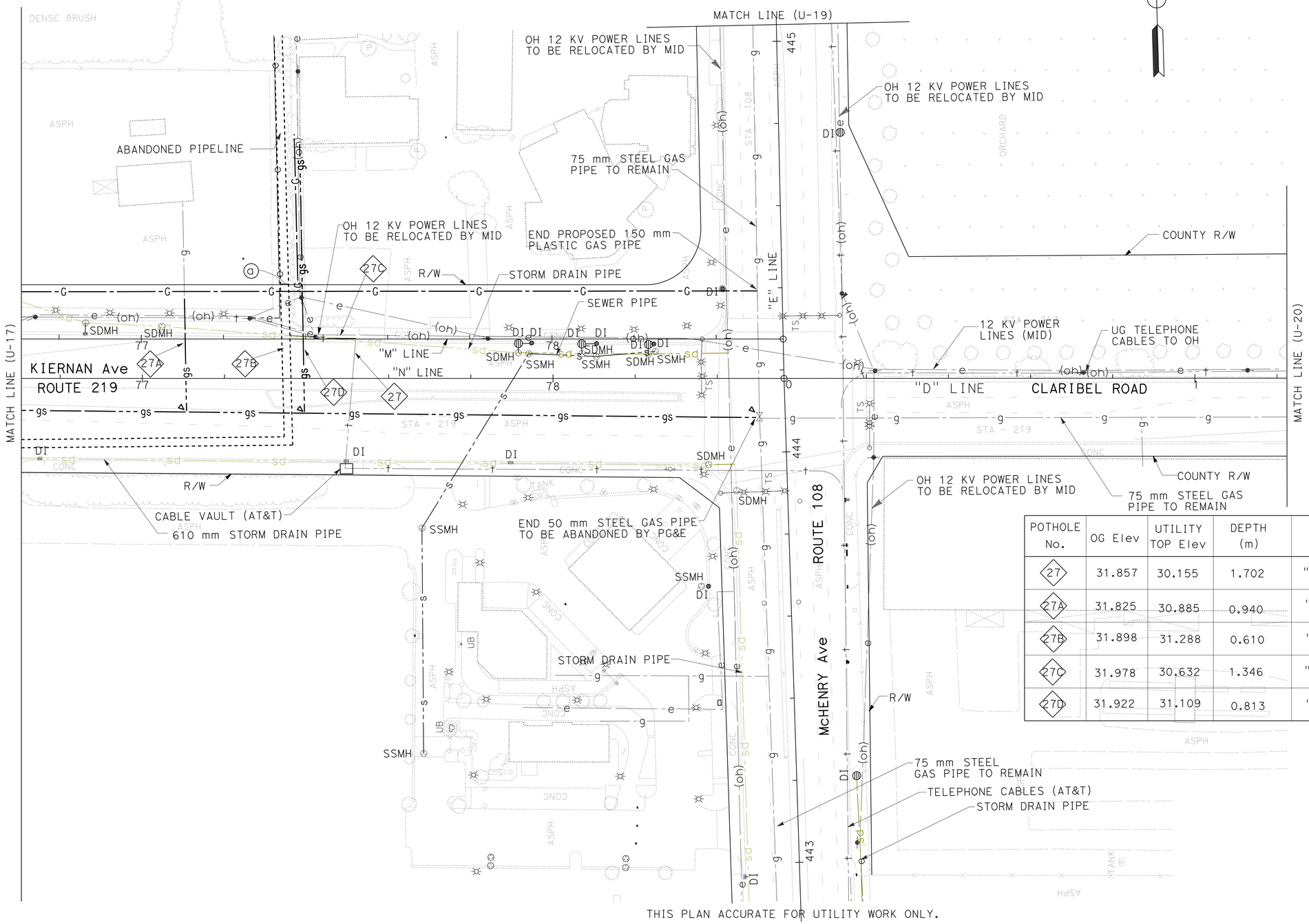

POTHOLE No.	OG Elev	UTILITY TOP Elev	DEPTH (m)	STATION	OFFSET (m)
27	31.857	30.155	1.702	"A" 77+51.703	6.542 Lt
27A	31.825	30.885	0.940	"A" 77+10.523	8.543 Lt
27B	31.898	31.288	0.610	"A" 77+35.012	6.706 Lt
27C	31.978	30.632	1.346	"A" 77+47.934	9.798 Lt
27D	31.922	31.109	0.813	"A" 77+39.140	6.832 Lt

THIS PLAN ACCURATE FOR UTILITY WORK ONLY.

ALL DIMENSIONS ARE IN METERS UNLESS OTHERWISE SHOWN

UTILITY PLAN

SCALE 1:500

U-18

CALCULATED-DESIGNED BY	ERIC CHIN	REVISED BY	EC
CHECKED BY	WUTHY SENG	DATE REVISED	6/20/09
FUNCTIONAL SUPERVISOR	JOSE HUERTA		

STATE OF CALIFORNIA - DEPARTMENT OF TRANSPORTATION
Caltrans DESIGN

LAST REVISION 00-00-00 DATE PLOTTED => 30-JUN-2010 TIME PLOTTED => 15:02

Dist	COUNTY	ROUTE	KILOMETER POST TOTAL PROJECT	SHEET No.	TOTAL SHEETS
10	Sta	219,108	3.4/7.9, 44.3/44.9	255	522

REGISTERED CIVIL ENGINEER 6/16/09 DATE

6-28-10
PLANS APPROVAL DATE

REGISTERED PROFESSIONAL ENGINEER ERIC C-S CHIN No. 71272 Exp. 12/31/09 CIVIL STATE OF CALIFORNIA

THE STATE OF CALIFORNIA OR ITS OFFICERS OR AGENTS SHALL NOT BE RESPONSIBLE FOR THE ACCURACY OR COMPLETENESS OF ELECTRONIC COPIES OF THIS PLAN SHEET.

Caltrans Metric

NOTE: FOR COMPLETE R/W DATA, SEE R/W RECORD MAPS AT DISTRICT OFFICE.

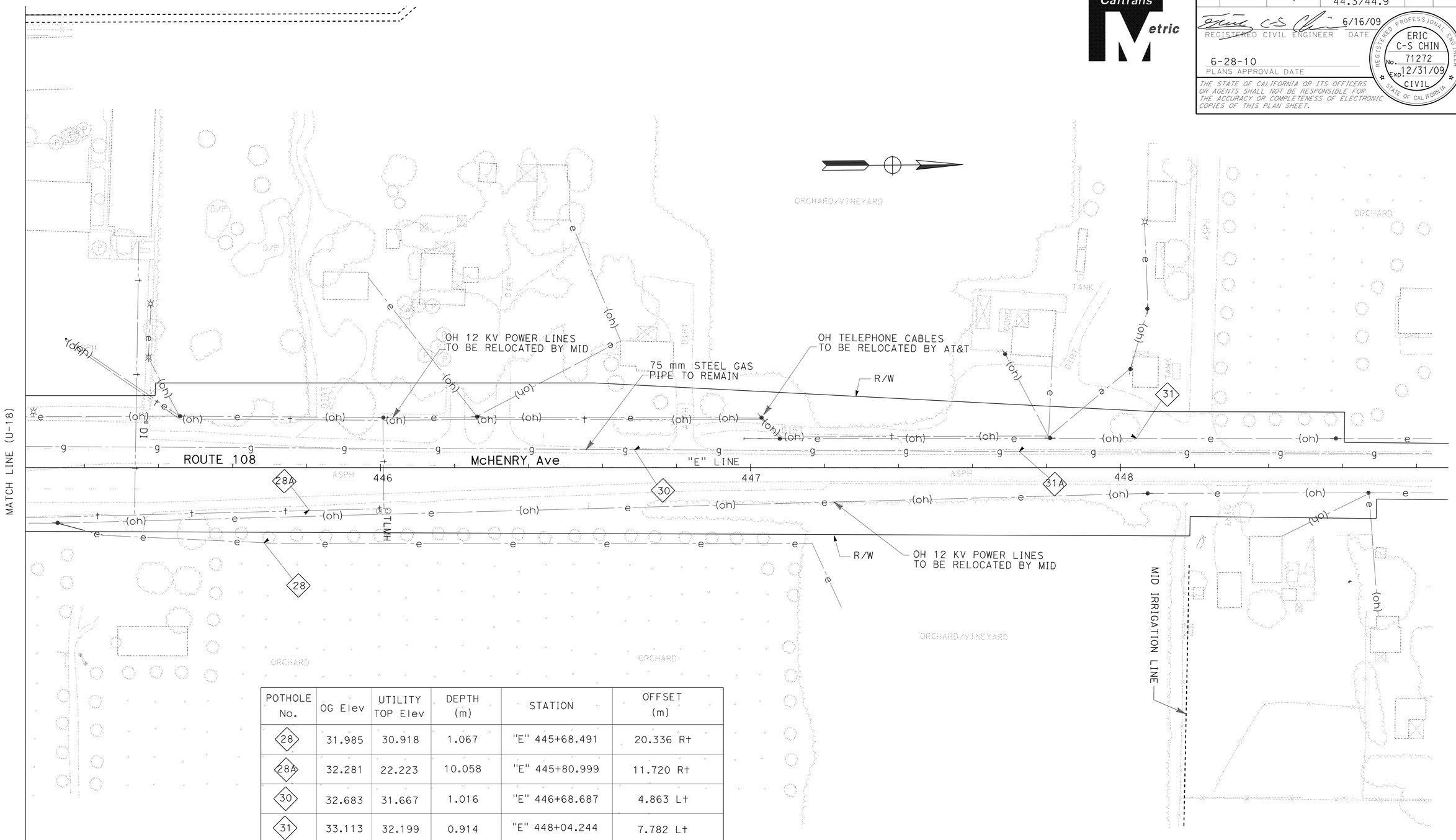

POTHOLE No.	OG Elev	UTILITY TOP Elev	DEPTH (m)	STATION	OFFSET (m)
28	31.985	30.918	1.067	"E" 445+68.491	20.336 R+
28A	32.281	22.223	10.058	"E" 445+80.999	11.720 R+
30	32.683	31.667	1.016	"E" 446+68.687	4.863 L+
31	33.113	32.199	0.914	"E" 448+04.244	7.782 L+
31A	33.142	32.228	0.914	"E" 447+72.164	5.013 L+

ALL DIMENSIONS ARE IN METERS UNLESS OTHERWISE SHOWN

THIS PLAN ACCURATE FOR UTILITY WORK ONLY.

UTILITY PLAN

SCALE 1:500

U-19

REVISED BY	EC
DATE REVISED	6/20/09
CALCULATED-DESIGNED BY	ERIC CHIN
CHECKED BY	WUTHY SENG
FUNCTIONAL SUPERVISOR	JOSE HUERTA

STATE OF CALIFORNIA - DEPARTMENT OF TRANSPORTATION
Caltrans
DESIGN

LAST REVISION 00-00-00 | DATE PLOTTED => 30-JUN-2010 | TIME PLOTTED => 15:02

Dist	COUNTY	ROUTE	KILOMETER POST TOTAL PROJECT	SHEET No.	TOTAL SHEETS
10	Sta	219,108	3.4/7.9, 44.3/44.9	256	522

REGISTERED CIVIL ENGINEER 6/16/09 DATE

6-28-10
PLANS APPROVAL DATE

REGISTERED PROFESSIONAL ENGINEER ERIC C-S CHIN No. 71272 Exp. 12/31/09 CIVIL STATE OF CALIFORNIA

THE STATE OF CALIFORNIA OR ITS OFFICERS OR AGENTS SHALL NOT BE RESPONSIBLE FOR THE ACCURACY OR COMPLETENESS OF ELECTRONIC COPIES OF THIS PLAN SHEET.

Caltrans Metric

NOTE: FOR COMPLETE R/W DATA, SEE R/W RECORD MAPS AT DISTRICT OFFICE.

POTHOLE No.	OG Elev	UTILITY TOP Elev	DEPTH (m)	STATION	OFFSET (m)
32	31.635	30.898	0.737	"D" 1+56.323	13.925 Rt
32A	31.526	30.840	0.686	"D" 1+69.872	9.604 Rt
33	31.600	30.762	0.838	"D" 3+34.877	8.385 Rt

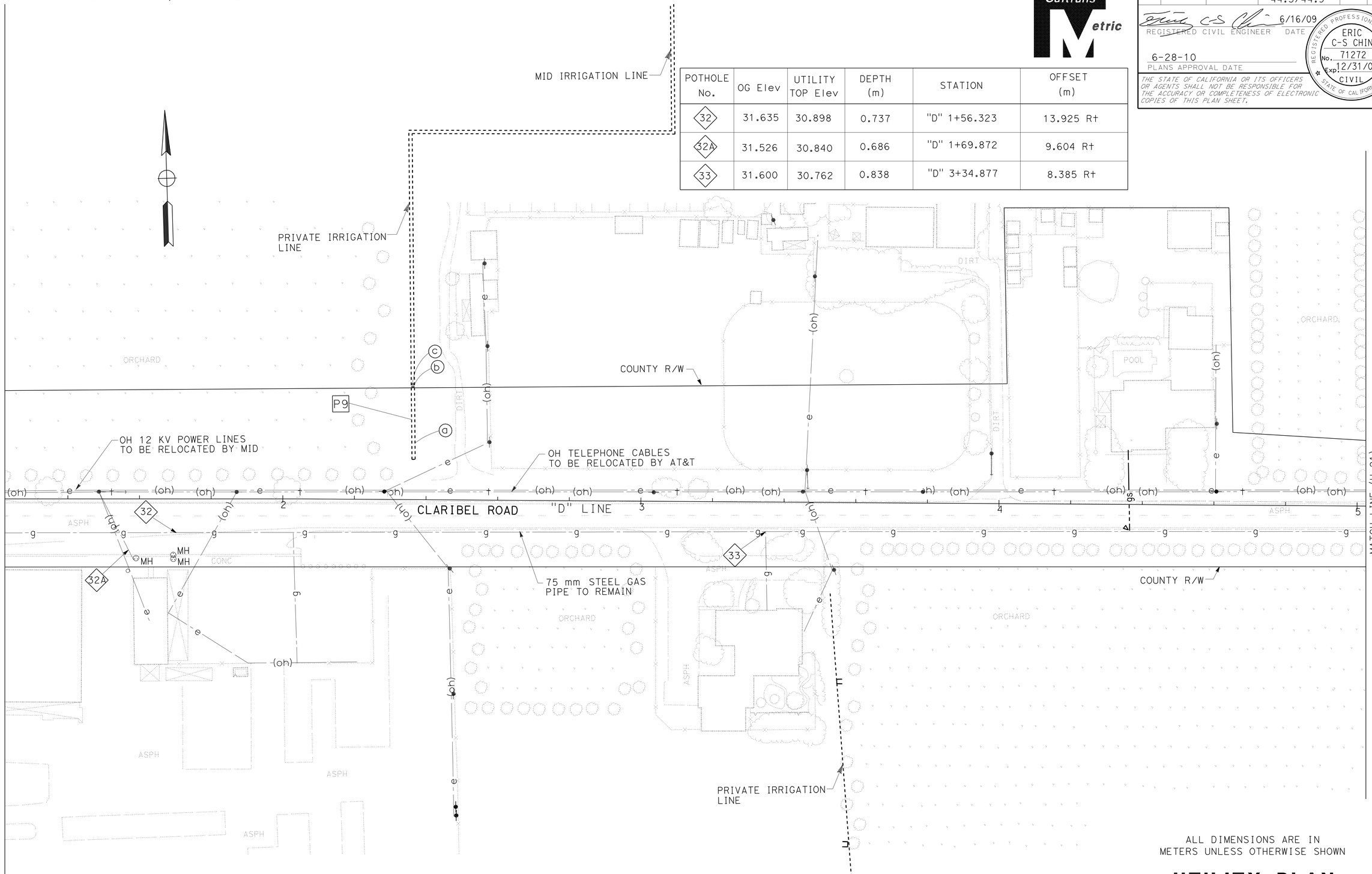

ALL DIMENSIONS ARE IN METERS UNLESS OTHERWISE SHOWN

THIS PLAN ACCURATE FOR UTILITY WORK ONLY.

UTILITY PLAN

SCALE 1:500 **U-20**

FUNCTIONAL SUPERVISOR	JOSE HUERTA		
CALCULATED-DESIGNED BY	ERIC CHIN	REVISED BY	EC
CHECKED BY	WUTHY SENG	DATE REVISED	6/20/09

STATE OF CALIFORNIA - DEPARTMENT OF TRANSPORTATION
Caltrans
DESIGN

LAST REVISION 00-00-00 DATE PLOTTED => 30-JUN-2010 TIME PLOTTED => 15:02

NOTE: FOR COMPLETE R/W DATA, SEE R/W RECORD MAPS AT DISTRICT OFFICE.

Dist	COUNTY	ROUTE	KILOMETER POST TOTAL PROJECT	SHEET No.	TOTAL SHEETS
10	Sta	219,108	3.4/7.9, 44.3/44.9	257	522

REGISTERED CIVIL ENGINEER 6/16/09 DATE

6-28-10
PLANS APPROVAL DATE

REGISTERED PROFESSIONAL ENGINEER ERIC C-S CHIN No. 71272 Exp. 12/31/09 CIVIL STATE OF CALIFORNIA

THE STATE OF CALIFORNIA OR ITS OFFICERS OR AGENTS SHALL NOT BE RESPONSIBLE FOR THE ACCURACY OR COMPLETENESS OF ELECTRONIC COPIES OF THIS PLAN SHEET.

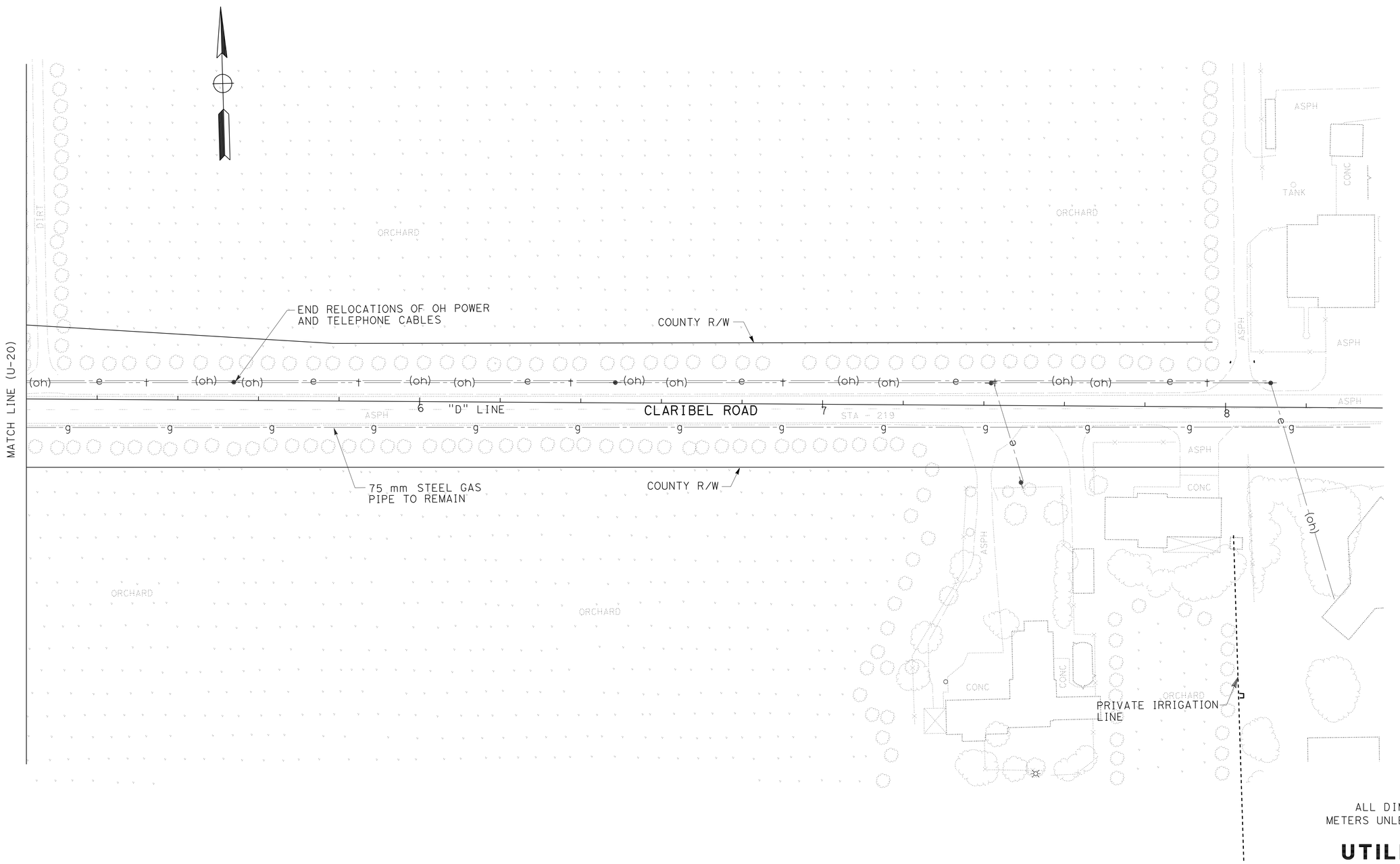

ALL DIMENSIONS ARE IN METERS UNLESS OTHERWISE SHOWN

THIS PLAN ACCURATE FOR UTILITY WORK ONLY.

UTILITY PLAN

SCALE 1:500 **U-21**

CALCULATED-DESIGNED BY	ERIC CHIN
CHECKED BY	WUTHY SENG
REVISED BY	EC
DATE REVISED	6/20/09
FUNCTIONAL SUPERVISOR	JOSE HUERTA

STATE OF CALIFORNIA - DEPARTMENT OF TRANSPORTATION
Caltrans DESIGN

LAST REVISION 00-00-00
DATE PLOTTED => 30-JUN-2010
TIME PLOTTED => 15:02

Dist	COUNTY	ROUTE	KILOMETER POST TOTAL PROJECT	SHEET No.	TOTAL SHEETS
10	Sta	219,108	3.4/7.9, 44.3/44.9	258	522

REGISTERED CIVIL ENGINEER DATE 6/16/09

6-28-10
PLANS APPROVAL DATE

REGISTERED PROFESSIONAL ENGINEER ERIC C-S CHIN No. 71272 Exp. 12/31/09 CIVIL STATE OF CALIFORNIA

THE STATE OF CALIFORNIA OR ITS OFFICERS OR AGENTS SHALL NOT BE RESPONSIBLE FOR THE ACCURACY OR COMPLETENESS OF ELECTRONIC COPIES OF THIS PLAN SHEET.

Caltrans Metric

ABBREVIATION

MID - MODESTO IRRIGATION DISTRICT

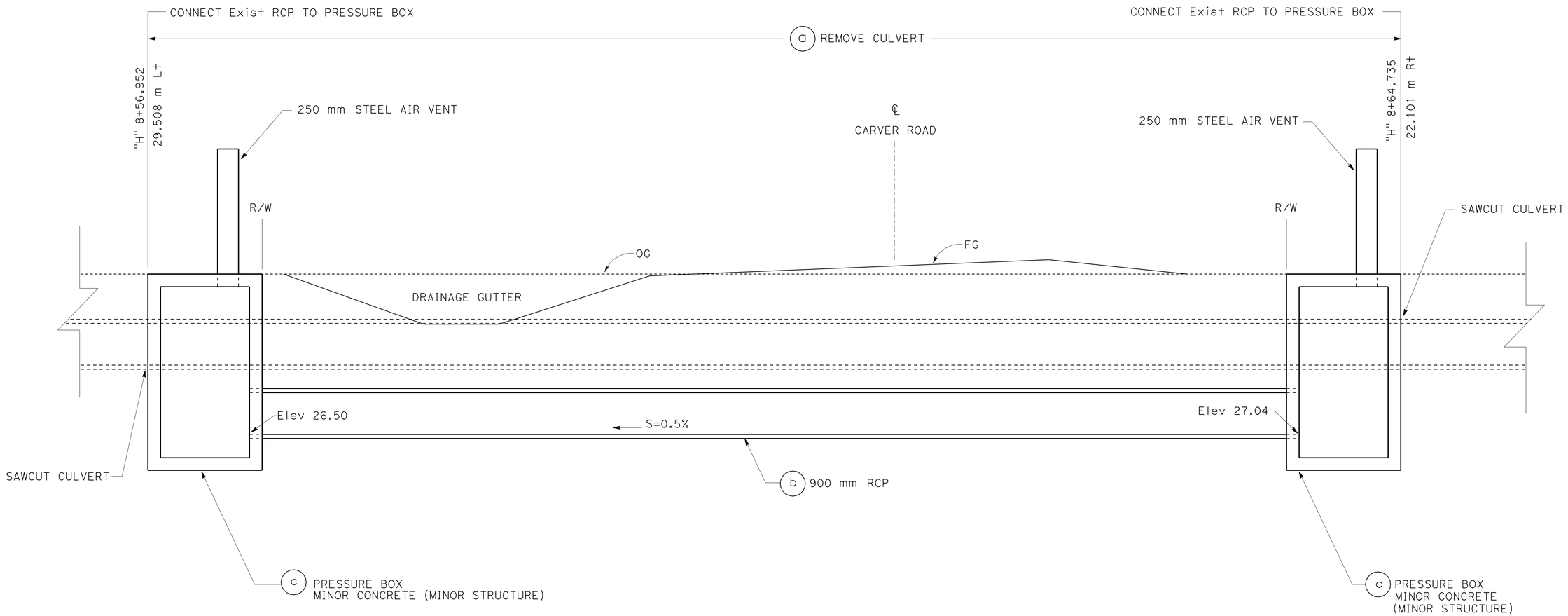

MODESTO IRRIGATION DISTRICT FACILITY No. 1

ALL DIMENSIONS ARE IN METERS UNLESS OTHERWISE SHOWN

UTILITY DETAILS

NO SCALE **UD-1**

EC	6/20/09
REVISED BY	DATE REVISED
ERIC CHIN	WUTHY SENG
CALCULATED-DESIGNED BY	CHECKED BY
FUNCTIONAL SUPERVISOR	JOSE HUERTA

STATE OF CALIFORNIA - DEPARTMENT OF TRANSPORTATION
Caltrans
DESIGN

LAST REVISION 05-22-09 | DATE PLOTTED => 30-JUN-2010 | TIME PLOTTED => 15:02

Dist	COUNTY	ROUTE	KILOMETER POST TOTAL PROJECT	SHEET No.	TOTAL SHEETS
10	Sta	219,108	3.4/7.9, 44.3/44.9	259	522

Caltrans Metric

REGISTERED CIVIL ENGINEER 6/16/09 DATE

6-28-10
PLANS APPROVAL DATE

REGISTERED PROFESSIONAL ENGINEER ERIC C-S CHIN No. 71272 Exp. 12/31/09 CIVIL STATE OF CALIFORNIA

THE STATE OF CALIFORNIA OR ITS OFFICERS OR AGENTS SHALL NOT BE RESPONSIBLE FOR THE ACCURACY OR COMPLETENESS OF ELECTRONIC COPIES OF THIS PLAN SHEET.

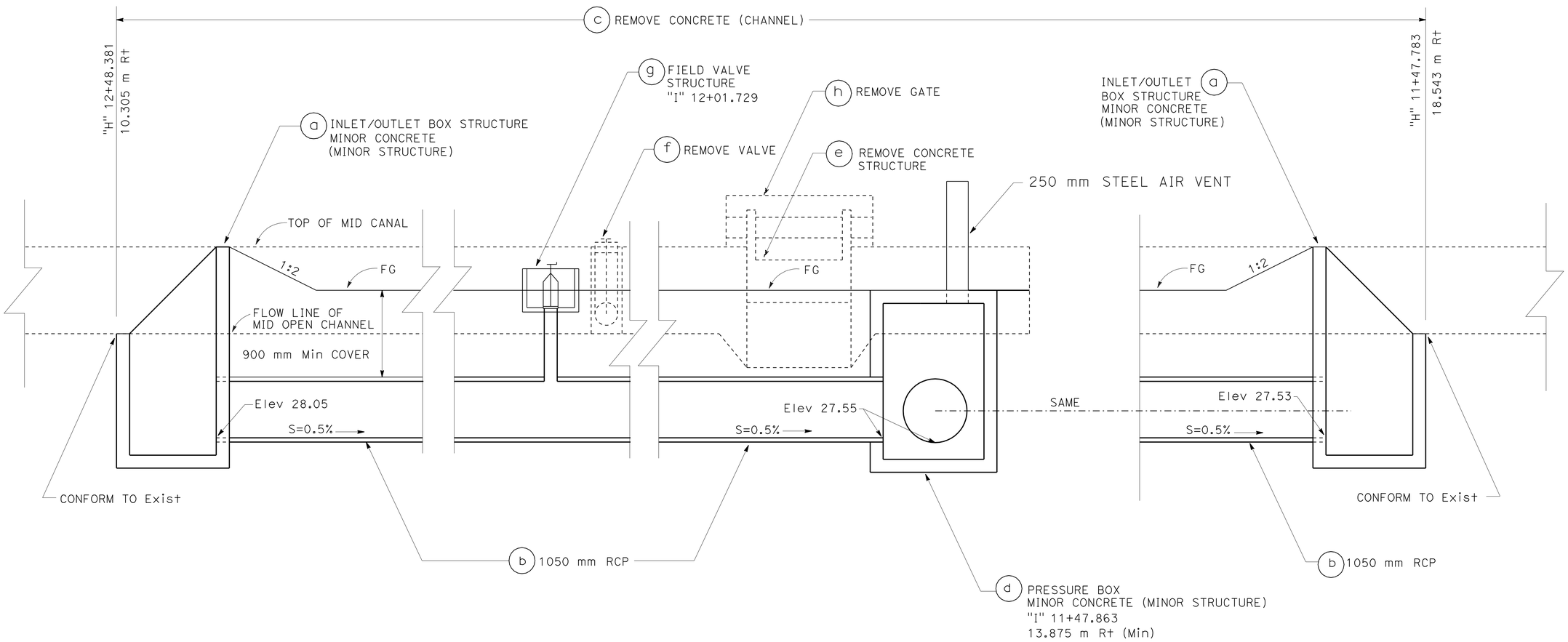

MODESTO IRRIGATION DISTRICT FACILITY No. 2

ALL DIMENSIONS ARE IN METERS UNLESS OTHERWISE SHOWN

UTILITY DETAILS

NO SCALE **UD-2**

REVISED BY	DATE REVISED
EC	6/20/09

ERIC CHIN — CALCULATED-DESIGNED BY
WUTHY SENG — CHECKED BY
JOSE HUERTA — FUNCTIONAL SUPERVISOR

STATE OF CALIFORNIA - DEPARTMENT OF TRANSPORTATION
Caltrans
DESIGN

LAST REVISION 00-00-00 DATE PLOTTED => 30-JUN-2010 TIME PLOTTED => 15:03

Dist	COUNTY	ROUTE	KILOMETER POST TOTAL PROJECT	SHEET No.	TOTAL SHEETS
10	Sta	219,108	3.4/7.9, 44.3/44.9	260	522

REGISTERED CIVIL ENGINEER 6/16/09 DATE

6-28-10
PLANS APPROVAL DATE

REGISTERED PROFESSIONAL ENGINEER ERIC C-S CHIN No. 71272 Exp. 12/31/09 CIVIL STATE OF CALIFORNIA

THE STATE OF CALIFORNIA OR ITS OFFICERS OR AGENTS SHALL NOT BE RESPONSIBLE FOR THE ACCURACY OR COMPLETENESS OF ELECTRONIC COPIES OF THIS PLAN SHEET.

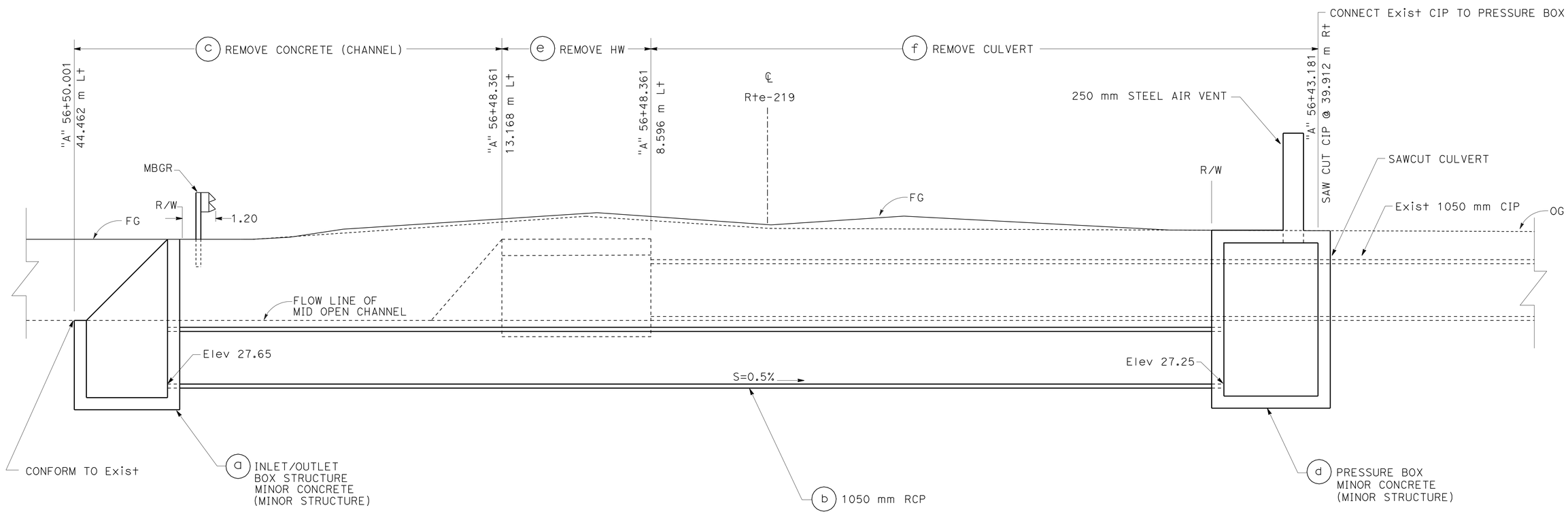

MODESTO IRRIGATION DISTRICT FACILITY No. 3

ALL DIMENSIONS ARE IN METERS UNLESS OTHERWISE SHOWN

UTILITY DETAILS

NO SCALE

UD-3

STATE OF CALIFORNIA - DEPARTMENT OF TRANSPORTATION
Caltrans
DESIGN

FUNCTIONAL SUPERVISOR: JOSE HUERTA
CALCULATED-DESIGNED BY: ERIC CHIN
CHECKED BY: WUTHY SENG
REVISED BY: EC
DATE REVISED: 6/20/09

LAST REVISION 00-00-00
DATE PLOTTED => 30-JUN-2010
TIME PLOTTED => 15:03

Dist	COUNTY	ROUTE	KILOMETER POST TOTAL PROJECT	SHEET No.	TOTAL SHEETS
10	Sta	219,108	3.4/7.9, 44.3/44.9	261	522

REGISTERED CIVIL ENGINEER 6/16/09 DATE

6-28-10
PLANS APPROVAL DATE

REGISTERED PROFESSIONAL ENGINEER ERIC C-S CHIN No. 71272 Exp. 12/31/09 CIVIL STATE OF CALIFORNIA

THE STATE OF CALIFORNIA OR ITS OFFICERS OR AGENTS SHALL NOT BE RESPONSIBLE FOR THE ACCURACY OR COMPLETENESS OF ELECTRONIC COPIES OF THIS PLAN SHEET.

Caltrans Metric

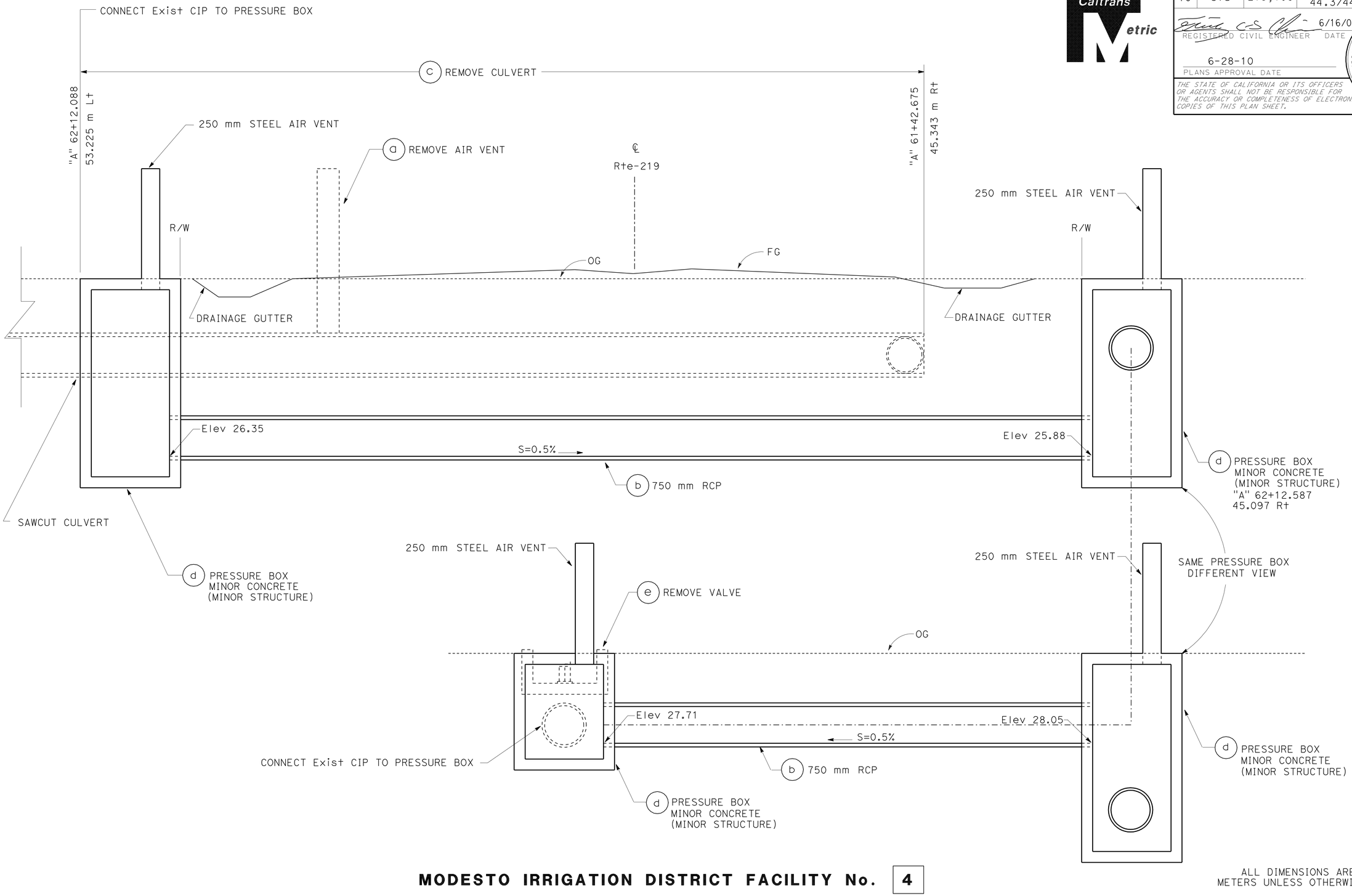

MODESTO IRRIGATION DISTRICT FACILITY No. 4

ALL DIMENSIONS ARE IN METERS UNLESS OTHERWISE SHOWN

UTILITY DETAILS

NO SCALE

UD-4

STATE OF CALIFORNIA - DEPARTMENT OF TRANSPORTATION
Caltrans
DESIGN

FUNCTIONAL SUPERVISOR: JOSE HUERTA
CALCULATED-DESIGNED BY: ERIC CHIN
CHECKED BY: WUTHY SENG
REVISED BY: EC
DATE REVISED: 6/20/09

LAST REVISION 00-00-00
DATE PLOTTED => 30-JUN-2010
TIME PLOTTED => 14:49

Dist	COUNTY	ROUTE	KILOMETER POST TOTAL PROJECT	SHEET No.	TOTAL SHEETS
10	Sta	219,108	3.4/7.9, 44.3/44.9	262	522

REGISTERED CIVIL ENGINEER DATE 6/16/09

6-28-10
PLANS APPROVAL DATE

REGISTERED PROFESSIONAL ENGINEER ERIC C-S CHIN No. 71272 Exp. 12/31/09 CIVIL STATE OF CALIFORNIA

THE STATE OF CALIFORNIA OR ITS OFFICERS OR AGENTS SHALL NOT BE RESPONSIBLE FOR THE ACCURACY OR COMPLETENESS OF ELECTRONIC COPIES OF THIS PLAN SHEET.

Caltrans Metric

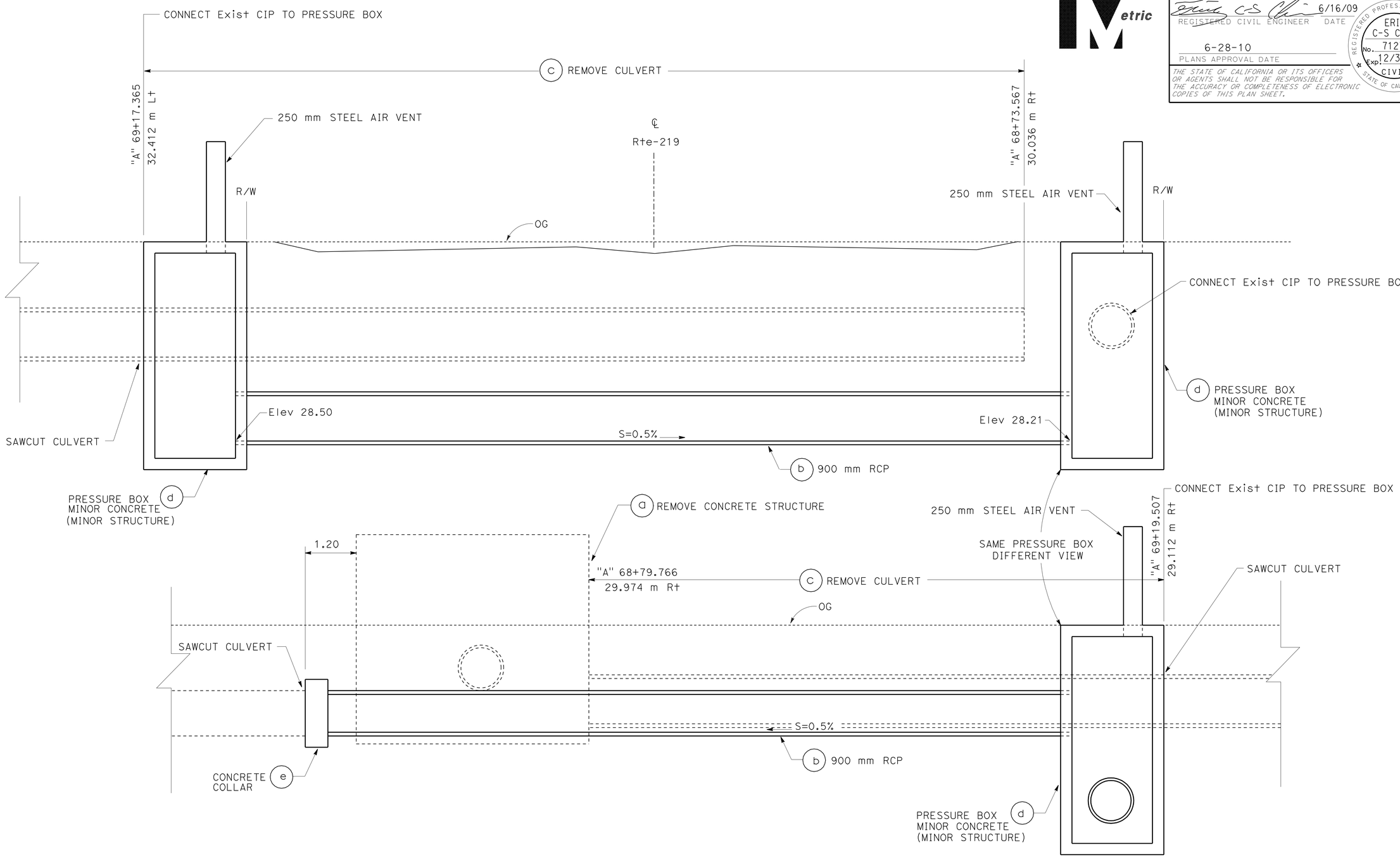

MODESTO IRRIGATION DISTRICT FACILITY No. 5

ALL DIMENSIONS ARE IN METERS UNLESS OTHERWISE SHOWN

UTILITY DETAILS

NO SCALE **UD-5**

EC	6/20/09
REVISED BY	DATE REVISED
ERIC CHIN	WUTHY SENG
CALCULATED-DESIGNED BY	CHECKED BY
FUNCTIONAL SUPERVISOR	JOSE HUERTA

STATE OF CALIFORNIA - DEPARTMENT OF TRANSPORTATION
Caltrans
DESIGN

LAST REVISION 00-00-00 | DATE PLOTTED => 30-JUN-2010 | TIME PLOTTED => 14:49

Dist	COUNTY	ROUTE	KILOMETER POST TOTAL PROJECT	SHEET No.	TOTAL SHEETS
10	Sta	219,108	3.4/7.9, 44.3/44.9	263	522

Caltrans Metric

REGISTERED CIVIL ENGINEER DATE 6/16/09

6-28-10
PLANS APPROVAL DATE

REGISTERED PROFESSIONAL ENGINEER ERIC C-S CHIN No. 71272 Exp. 12/31/09 CIVIL STATE OF CALIFORNIA

THE STATE OF CALIFORNIA OR ITS OFFICERS OR AGENTS SHALL NOT BE RESPONSIBLE FOR THE ACCURACY OR COMPLETENESS OF ELECTRONIC COPIES OF THIS PLAN SHEET.

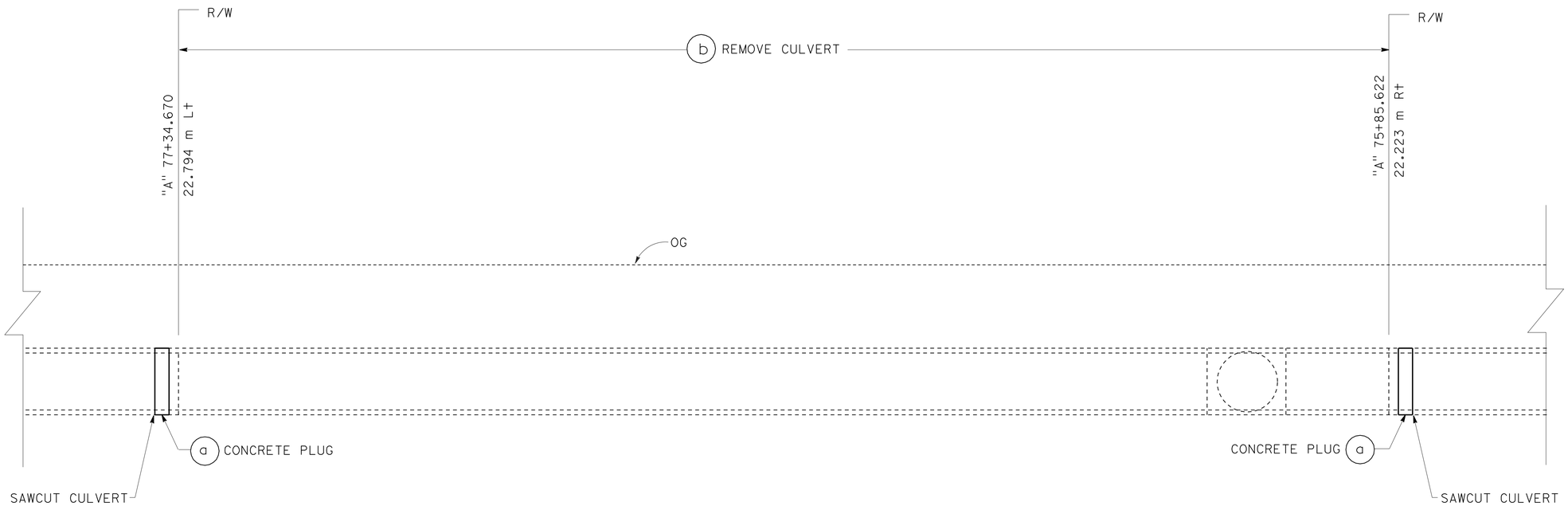

MODESTO IRRIGATION DISTRICT FACILITY No. 6

ALL DIMENSIONS ARE IN METERS UNLESS OTHERWISE SHOWN

UTILITY DETAILS

NO SCALE **UD-6**

STATE OF CALIFORNIA - DEPARTMENT OF TRANSPORTATION	Caltrans DESIGN
FUNCTIONAL SUPERVISOR	JOSE HUERTA
CALCULATED-DESIGNED BY	ERIC CHIN
CHECKED BY	WUTHY SENG
REVISED BY	EC
DATE REVISED	6/20/09

LAST REVISION 00-00-00
DATE PLOTTED => 30-JUN-2010
TIME PLOTTED => 14:49

Dist	COUNTY	ROUTE	KILOMETER POST TOTAL PROJECT	SHEET No.	TOTAL SHEETS
10	Sta	219,108	3.4/7.9, 44.3/44.9	264	522

REGISTERED CIVIL ENGINEER 6/16/09 DATE

6-28-10
PLANS APPROVAL DATE

REGISTERED PROFESSIONAL ENGINEER ERIC C-S CHIN No. 71272 Exp. 12/31/09 CIVIL STATE OF CALIFORNIA

THE STATE OF CALIFORNIA OR ITS OFFICERS OR AGENTS SHALL NOT BE RESPONSIBLE FOR THE ACCURACY OR COMPLETENESS OF ELECTRONIC COPIES OF THIS PLAN SHEET.

Caltrans Metric

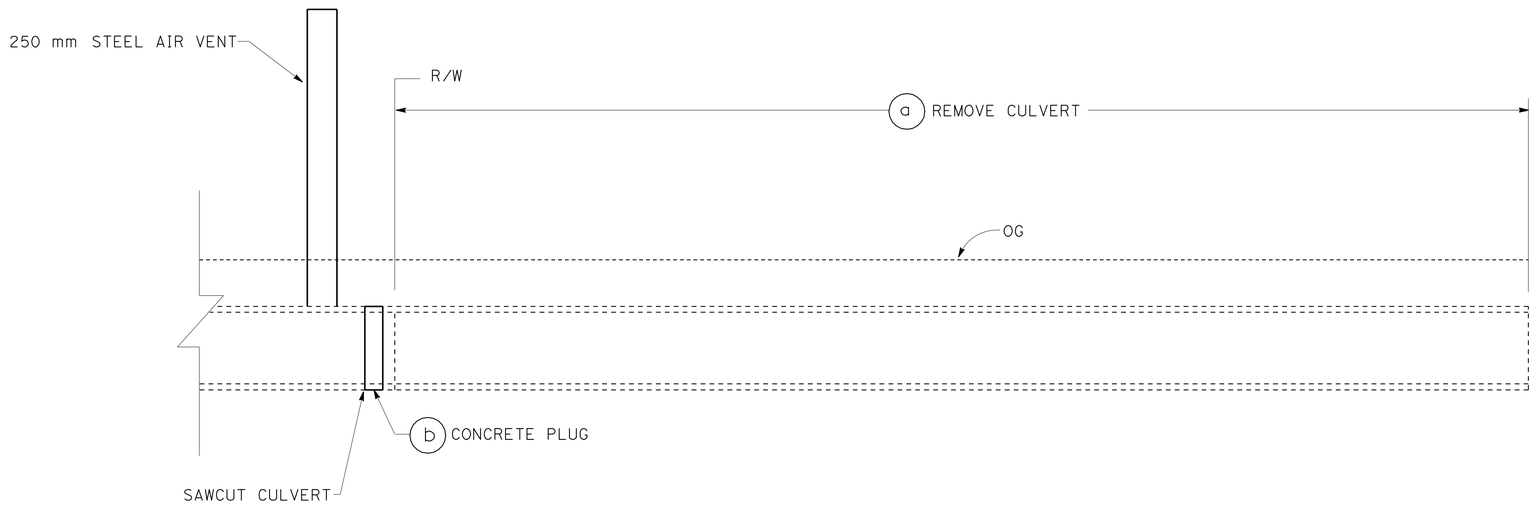

PRIVATE PIPELINE FACILITY No. P1 P2 P3 P6 P7 P9

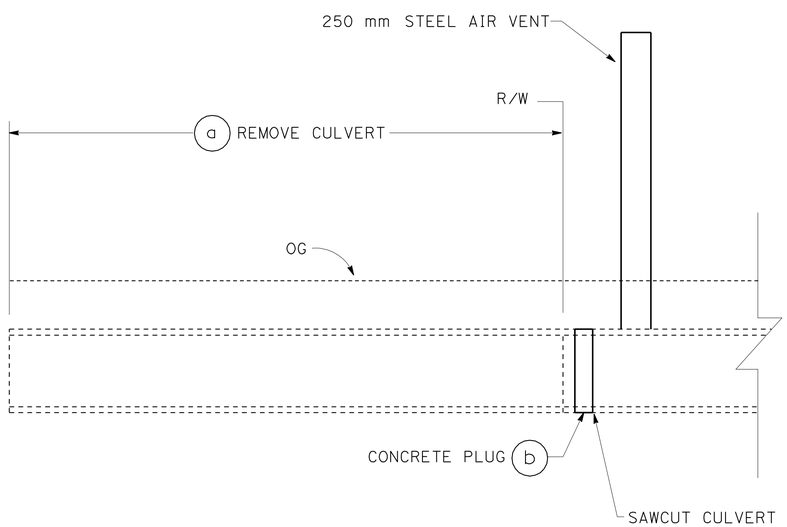

PRIVATE PIPELINE FACILITY No. P6

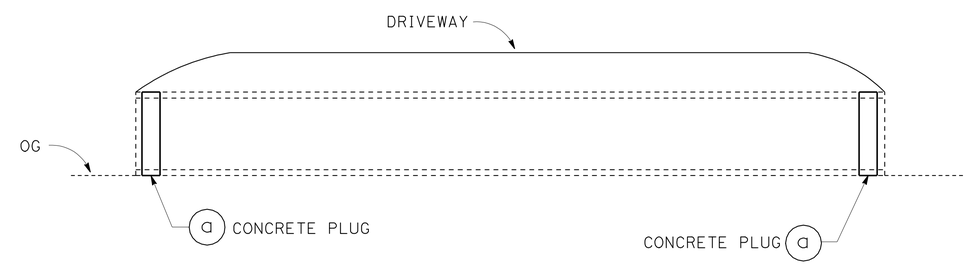

PRIVATE PIPELINE FACILITY No. P4

ALL DIMENSIONS ARE IN METERS UNLESS OTHERWISE SHOWN

UTILITY DETAILS

SCALE 1:500 **UD-7**

STATE OF CALIFORNIA - DEPARTMENT OF TRANSPORTATION
Caltrans DESIGN

FUNCTIONAL SUPERVISOR: JOSE HUERTA
CALCULATED-DESIGNED BY: ERIC CHIN
CHECKED BY: WUTHY SENG
REVISED BY / DATE REVISED

LAST REVISION 00-00-00 | DATE PLOTTED => 30-JUN-2010 | TIME PLOTTED => 14:50

Dist	COUNTY	ROUTE	KILOMETER POST TOTAL PROJECT	SHEET No.	TOTAL SHEETS
10	Sta	219,108	3.4/7.9, 44.3/44.9	265	522

REGISTERED CIVIL ENGINEER DATE

6-28-10
PLANS APPROVAL DATE

REGISTERED PROFESSIONAL ENGINEER ERIC C-S CHIN No. 71272 Exp. 12/31/09 CIVIL STATE OF CALIFORNIA

THE STATE OF CALIFORNIA OR ITS OFFICERS OR AGENTS SHALL NOT BE RESPONSIBLE FOR THE ACCURACY OR COMPLETENESS OF ELECTRONIC COPIES OF THIS PLAN SHEET.

Caltrans Metric

NOTES:

1. CONCRETE STRENGTH TO BE 20,500 Kpa @ 28 DAYS. NO ADMIXTURES SHALL BE INCORPORATED INTO CONCRETE MIX UNLESS PRIOR APPROVAL FROM MID IS OBTAINED.
2. ALL PIPE SHALL ENTER BOX AT OR NEAR PERPENDICULAR ANGLES TO THE BOX.
3. ALL COLD JOINTS REQUIRE 150 mm RUBBER WATER STOP EMBEDDED IN CENTER OF WALL AT COLD JOINT LOCATION PER MANUFACTURERS RECOMMENDATIONS.
4. GRATE REQUIRED ONLY FOR INLET STRUCTURE.

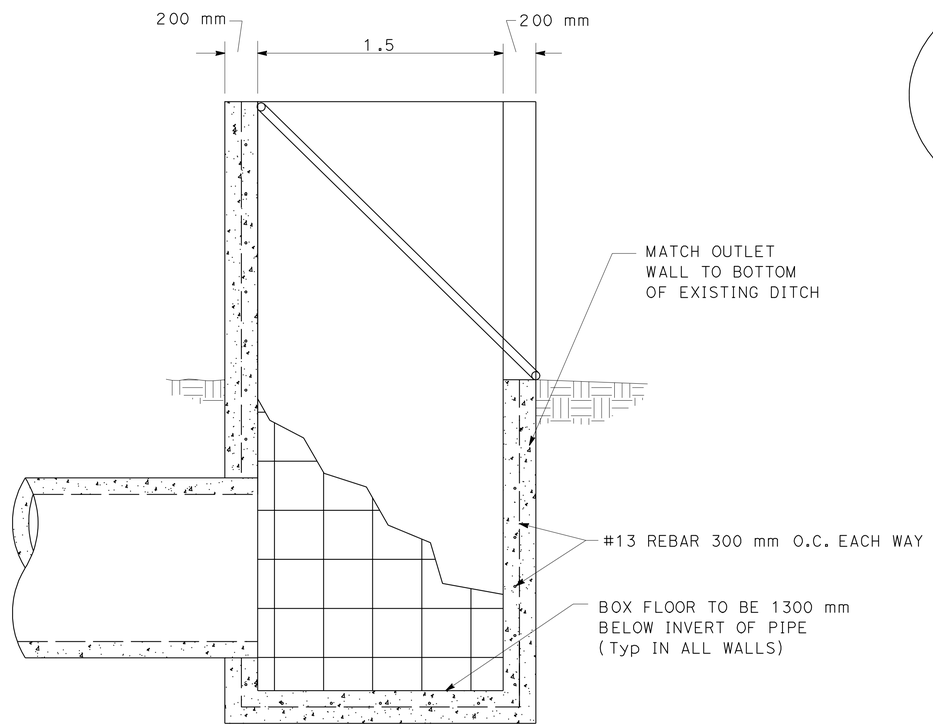

SECTION A-A

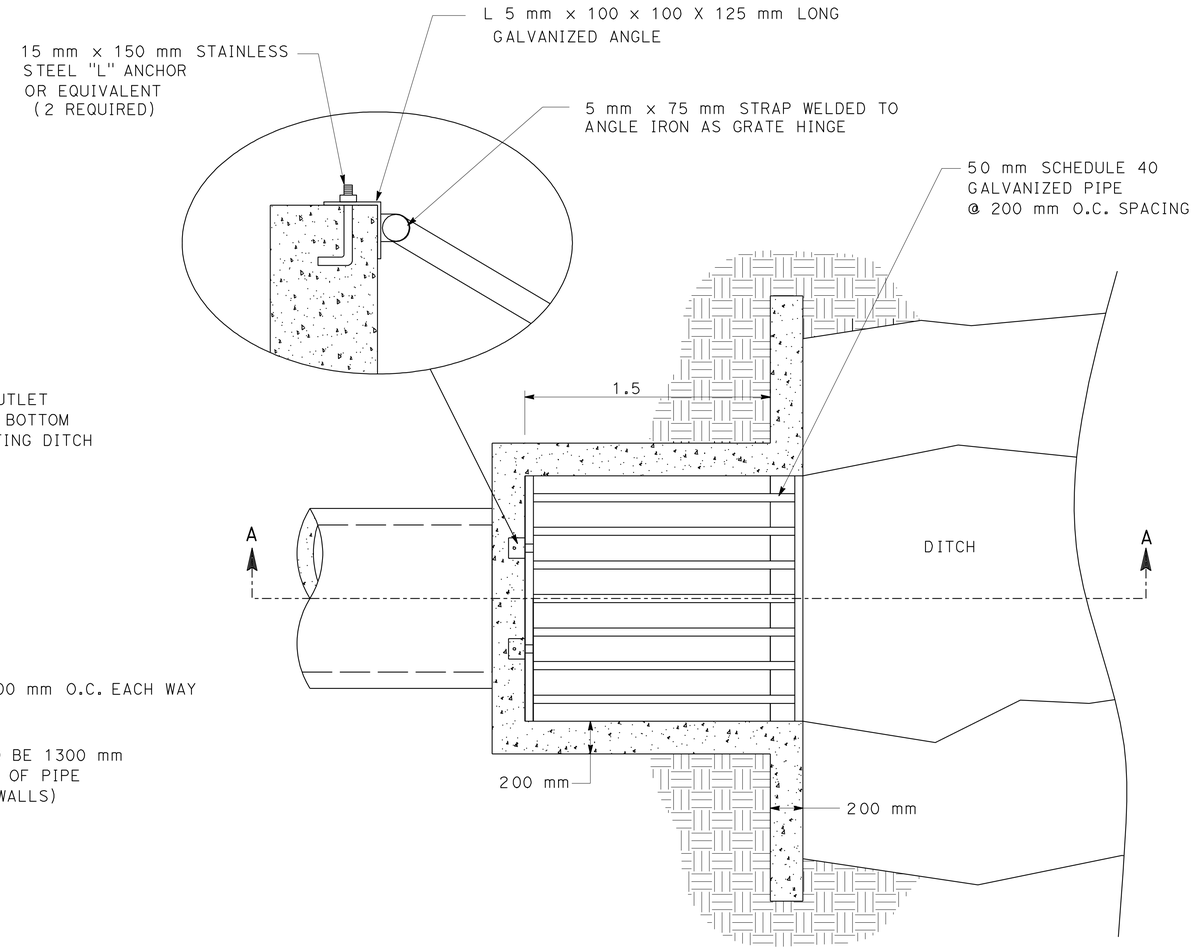

PLAN VIEW

INLET/OUTLET BOX STRUCTURE FOR CONCRETE PIPELINE

ALL DIMENSIONS ARE IN METERS UNLESS OTHERWISE SHOWN

UTILITY DETAILS

NO SCALE **UD-8**

EC	6/20/09		
REVISED BY	DATE REVISED		
ERIC CHIN	WUTHY SENG		
CALCULATED-DESIGNED BY	CHECKED BY		
FUNCTIONAL SUPERVISOR	JOSE HUERTA		

STATE OF CALIFORNIA - DEPARTMENT OF TRANSPORTATION
Caltrans **DESIGN**

LAST REVISION 00-00-00 | DATE PLOTTED => 30-JUN-2010 | TIME PLOTTED => 14:50

Dist	COUNTY	ROUTE	KILOMETER POST TOTAL PROJECT	SHEET No.	TOTAL SHEETS
10	Sta	219,108	3.4/7.9, 44.3/44.9	266	522

Caltrans Metric

REGISTERED CIVIL ENGINEER 6/16/09 DATE

6-28-10
PLANS APPROVAL DATE

REGISTERED PROFESSIONAL ENGINEER ERIC C-S CHIN No. 71272 Exp. 12/31/09 CIVIL STATE OF CALIFORNIA

THE STATE OF CALIFORNIA OR ITS OFFICERS OR AGENTS SHALL NOT BE RESPONSIBLE FOR THE ACCURACY OR COMPLETENESS OF ELECTRONIC COPIES OF THIS PLAN SHEET.

NOTES:

1. CONCRETE STRENGTH TO BE 20,500 Kpa @ 28 DAYS. NO ADMIXTURES SHALL BE INCORPORATED INTO CONCRETE MIX UNLESS PRIOR APPROVAL FROM M.I.D. IS OBTAINED.
2. ALL PIPE SHALL ENTER BOX AT OR NEAR PERPENDICULAR ANGLES TO THE BOX.
3. ALL COLD JOINTS REQUIRE 150 mm RUBBER WATER STOP EMBEDDED IN CENTER OF WALL AT COLD JOINT LOCATION PER MANUFACTURERS RECOMMENDATIONS.
4. CONSULT WITH MID FOR THE TOP ELEVATIONS OF ALL AIR VENTS.

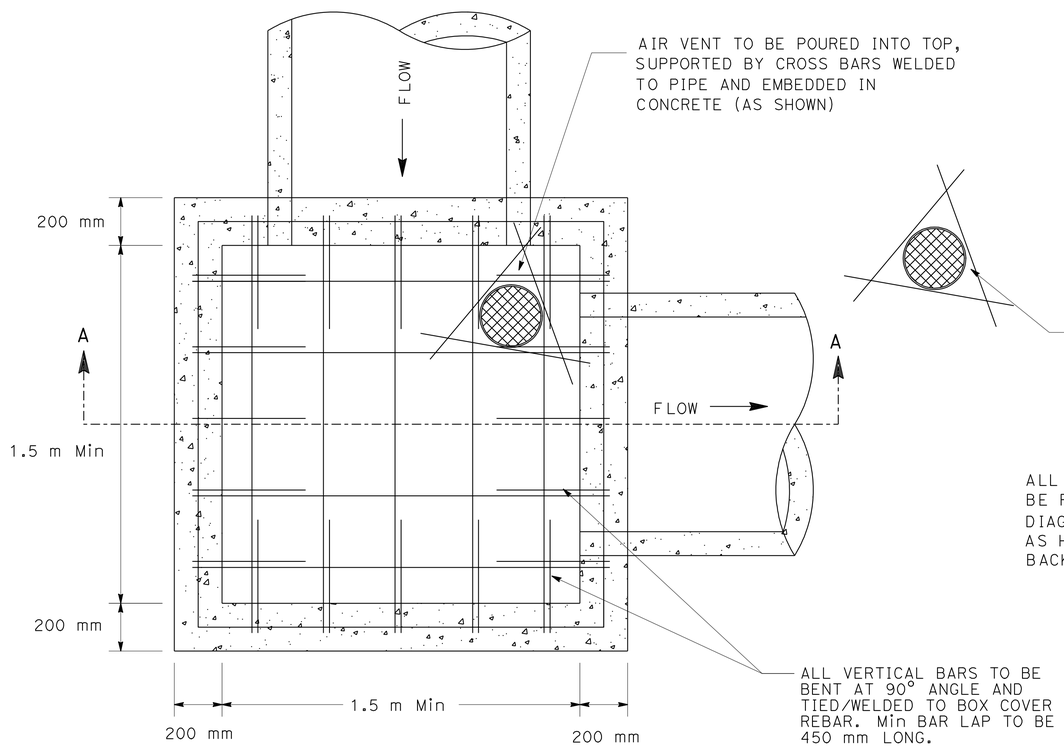

PLAN VIEW

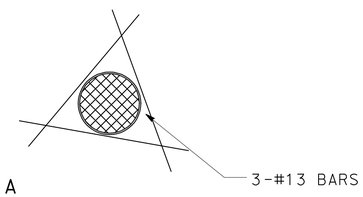

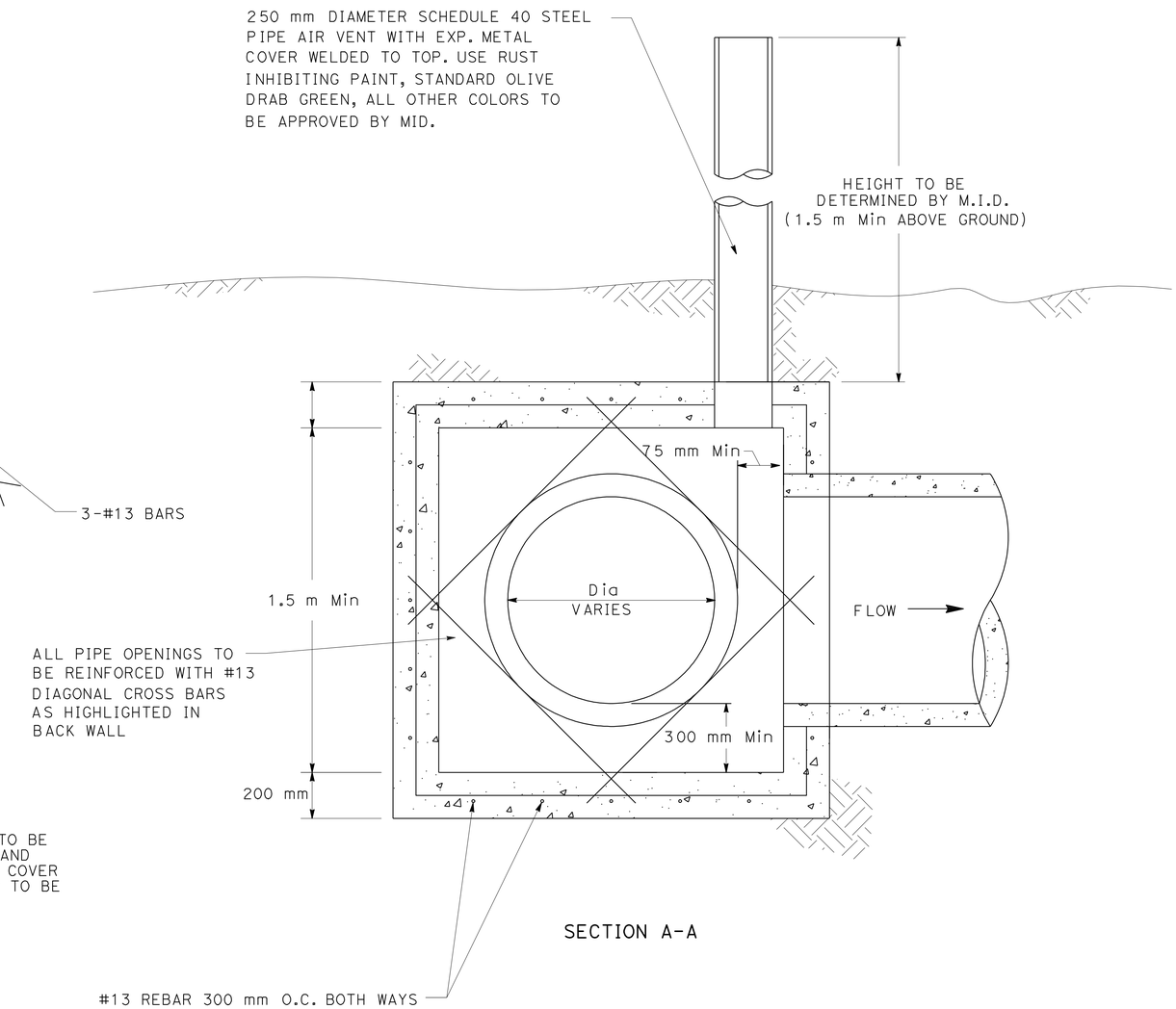

SECTION A-A

PRESSURE BOX FOR CONCRETE PIPELINE

ALL DIMENSIONS ARE IN METERS UNLESS OTHERWISE SHOWN

UTILITY DETAILS

NO SCALE **UD-9**

REVISED BY	DATE REVISED
EC	6/23/09

ERIC CHIN — CALCULATED-DESIGNED BY
WUTHY SENG — CHECKED BY
FUNCTIONAL SUPERVISOR: JOSE HUERTA

STATE OF CALIFORNIA - DEPARTMENT OF TRANSPORTATION
Caltrans DESIGN

LAST REVISION 00-00-00 | DATE PLOTTED => 30-JUN-2010 | TIME PLOTTED => 14:50

Dist	COUNTY	ROUTE	KILOMETER POST TOTAL PROJECT	SHEET No.	TOTAL SHEETS
10	Sta	219,108	3.4/7.9, 44.3/44.9	267	522

REGISTERED CIVIL ENGINEER 6/16/09 DATE

6-28-10
PLANS APPROVAL DATE

REGISTERED PROFESSIONAL ENGINEER C-S CHIN No. 71272 Exp. 12/31/09 CIVIL STATE OF CALIFORNIA

THE STATE OF CALIFORNIA OR ITS OFFICERS OR AGENTS SHALL NOT BE RESPONSIBLE FOR THE ACCURACY OR COMPLETENESS OF ELECTRONIC COPIES OF THIS PLAN SHEET.

Caltrans Metric

NOTES:

1. CONCRETE STRENGTH TO BE 20,500 Kpa @ 28 DAYS. NO ADMIXTURES SHALL BE INCORPORATED INTO CONCRETE MIX UNLESS PRIOR APPROVAL FROM M.I.D. IS OBTAINED.
2. PROPERLY SEAL CONNECTION BY MORTARING FROM INSIDE PIPELINE AFTER PERMANENT PLACEMENT OF FIELD VALVE OPENING. USE SOFT BRISTLE BRUSH TO BLEND MORTAR AND CONCRETE TOGETHER. USE MID STANDARD MORTAR MIX OR EQUIVALENT.

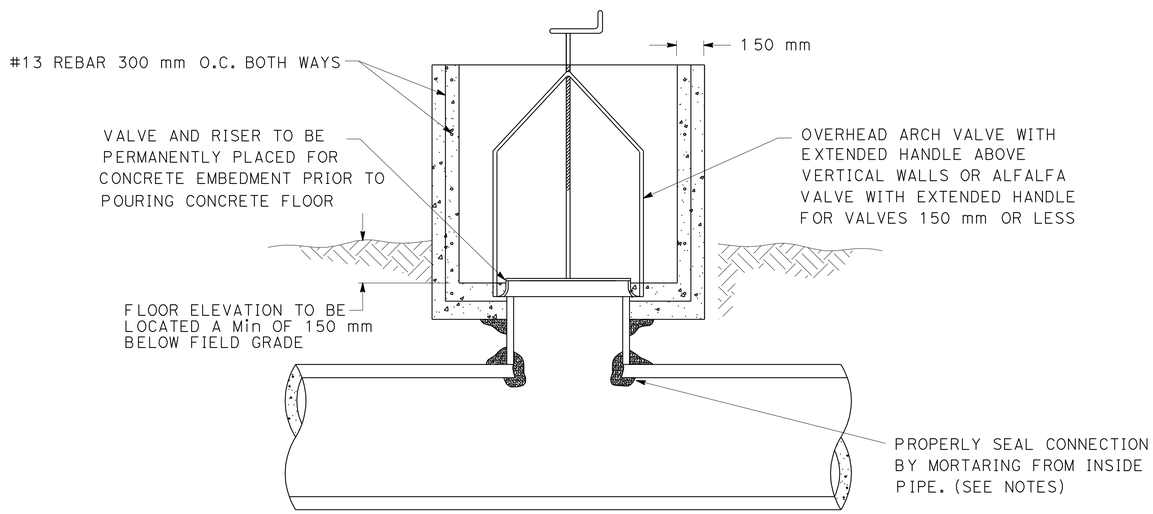

SECTION A-A

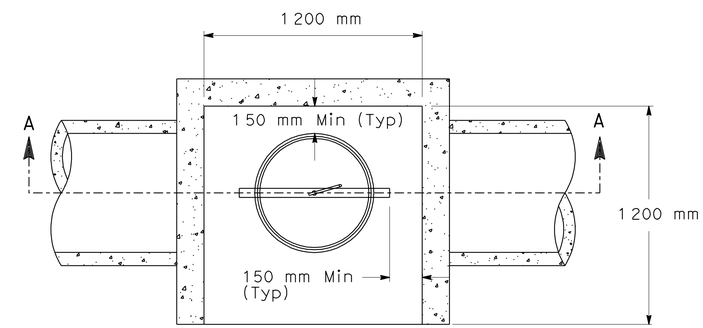

TOP VIEW

FIELD VALVE STRUCTURE FOR CONCRETE PIPELINE

ALL DIMENSIONS ARE IN METERS UNLESS OTHERWISE SHOWN

UTILITY DETAILS

NO SCALE **UD-10**

ERIC CHIN	EC	6/23/09
WUTHY SENG	REVISED BY	DATE REVISED
CALCULATED-DESIGNED BY		
CHECKED BY		
FUNCTIONAL SUPERVISOR		
JOSE HUERTA		

STATE OF CALIFORNIA - DEPARTMENT OF TRANSPORTATION
Caltrans DESIGN

LAST REVISION 00-00-00 | DATE PLOTTED => 30-JUN-2010 | TIME PLOTTED => 14:50

Dist	COUNTY	ROUTE	KILOMETER POST TOTAL PROJECT	SHEET No.	TOTAL SHEETS
10	Sta	219,108	3.4/7.9, 44.3/44.9	268	522

REGISTERED CIVIL ENGINEER 6/16/09 DATE

6-28-10
PLANS APPROVAL DATE

REGISTERED PROFESSIONAL ENGINEER ERIC C-S CHIN No. 71272 Exp. 12/31/09 CIVIL STATE OF CALIFORNIA

THE STATE OF CALIFORNIA OR ITS OFFICERS OR AGENTS SHALL NOT BE RESPONSIBLE FOR THE ACCURACY OR COMPLETENESS OF ELECTRONIC COPIES OF THIS PLAN SHEET.

Caltrans Metric

NOTES:

1. CONCRETE STRENGTH TO BE 20,500 Kpa @ 28 DAYS. NO ADMIXTURES SHALL BE INCORPORATED INTO CONCRETE MIX UNLESS PRIOR APPROVAL FROM M.I.D. IS OBTAINED.
2. THOROUGHLY BRUSH ALL DEBRIS AND CLEAN EACH END OF PIPE AROUND THE ENTIRE CIRCUMFERENCE WITH WATER PRIOR TO PLACEMENT OF CONCRETE OR MORTAR.
3. REINFORCED COLLAR REQUIRED FOR ALL PIPELINES GREATER THAN 450 mm ID OR FOR PIPE CONNECTIONS WITH A CHANGE IN DIAMETER GREATER THAN 125 mm.
4. Min #13 BARS FOR ALL COLLAR REINFORCEMENT.
5. A Min OF TWO CIRCUMFERENCE BARS REQ'D, ONE BAR TO BE PLACED OVER THE END OF EACH PIPE WITH A Min 450 mm BAR LAP. THE BARS MUST HAVE A Min OF 50 mm CLEAR FROM EACH PIPE OD AND 75 mm Min OF CONCRETE COVER.
6. HORIZONTAL BARS SHALL BE PLACED AT 300 mm O.C. EQUALLY SPACED AROUND THE CIRCUMFERENCE OF THE PIPE WITH A Min OF SIX (6) HORIZONTAL BARS.
7. PROPERLY SEAL CONNECTION BY MORTARING FROM INSIDE PIPELINE AFTER PERMANENT PLACEMENT OF CONCRETE COLLAR AND PIPE SECTIONS. A Min MORTARED BAND WIDTH OF 125 mm IS REQUIRED. USE SOFT BRISTLE BRUSH TO BLEND MORTAR AND CONCRETE TOGETHER. USE M.I.D. STANDARD MORTAR MIX OR EQUIVALENT.

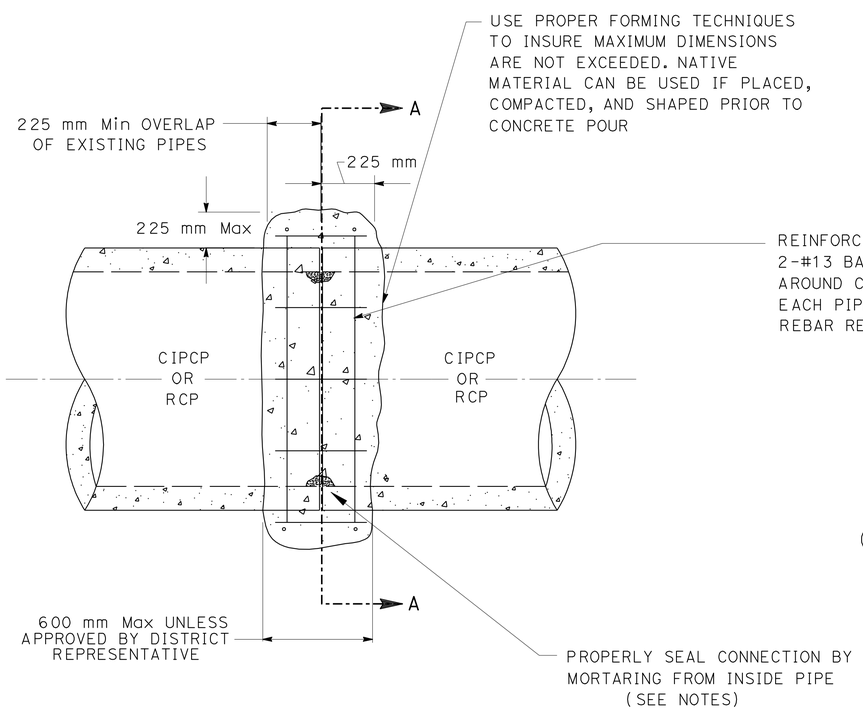

PLAN VIEW

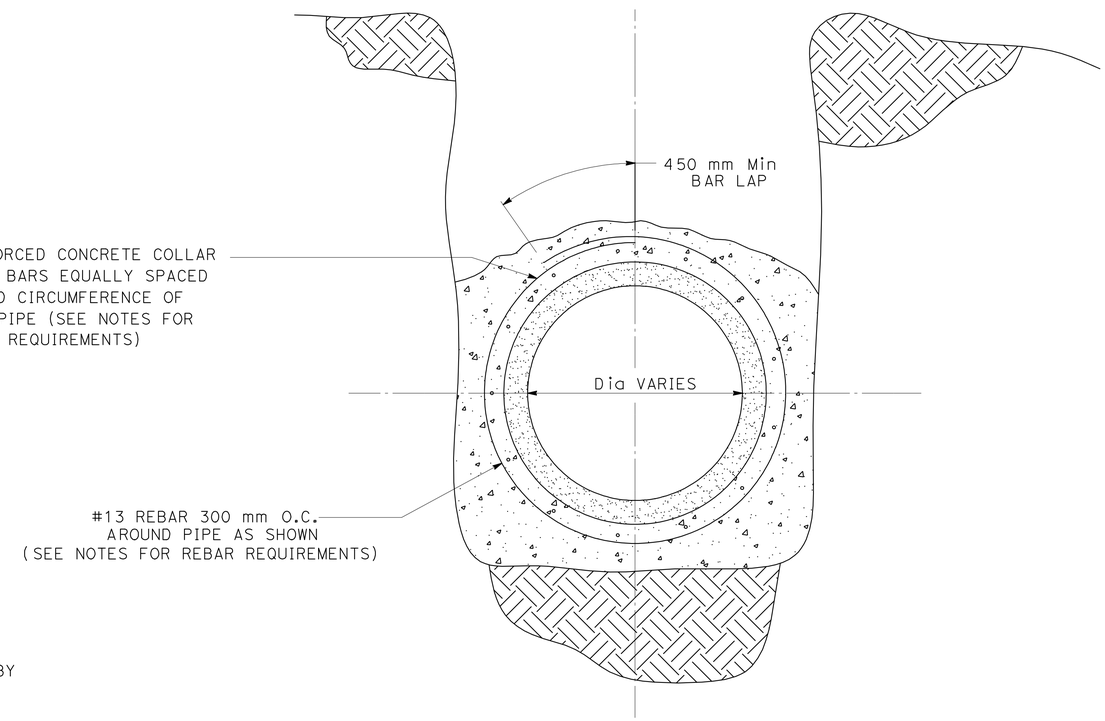

SECTION A-A

CONCRETE COLLAR FOR CONCRETE PIPELINE

ALL DIMENSIONS ARE IN METERS UNLESS OTHERWISE SHOWN

UTILITY DETAILS

NO SCALE

UD-11

STATE OF CALIFORNIA - DEPARTMENT OF TRANSPORTATION
Caltrans
DESIGN

FUNCTIONAL SUPERVISOR: JOSE HUERTA
CALCULATED-DESIGNED BY: ERIC CHIN
CHECKED BY: WUTHY SENG
REVISED BY: EC
DATE REVISED: 6/23/09

LAST REVISION 00-00-00
DATE PLOTTED => 30-JUN-2010
TIME PLOTTED => 14:50

Dist	COUNTY	ROUTE	KILOMETER POST TOTAL PROJECT	SHEET No.	TOTAL SHEETS
10	Sta	219,108	3.4/7.9, 44.3/44.9	269	522

Caltrans Metric

REGISTERED CIVIL ENGINEER 6/16/09 DATE

6-28-10
PLANS APPROVAL DATE

REGISTERED PROFESSIONAL ENGINEER ERIC C-S CHIN No. 71272 Exp. 12/31/09 CIVIL STATE OF CALIFORNIA

THE STATE OF CALIFORNIA OR ITS OFFICERS OR AGENTS SHALL NOT BE RESPONSIBLE FOR THE ACCURACY OR COMPLETENESS OF ELECTRONIC COPIES OF THIS PLAN SHEET.

NOTES:

1. THOROUGHLY BRUSH ALL DEBRIS AND CLEAN EACH END OF PIPE AROUND THE ENTIRE CIRCUMFERENCE WITH WATER PRIOR TO PLACEMENT OF CONCRETE OR MORTAR.
2. PROPERLY SEAL CONNECTION BY MORTARING FROM INSIDE PIPELINE AFTER PERMANENT PLACEMENT OF PIPELINE PLUG. A Min MORTARED BAND WIDTH OF 120 mm IS REQUIRED. USE SOFT BRISTLE BRUSH TO BLEND MORTAR AND CONCRETE TOGETHER.
3. ALL PIPELINES MUST BE PLUGGED USING FORMWORK OR PRECAST PLUGS (NO SUBSTITUTIONS)

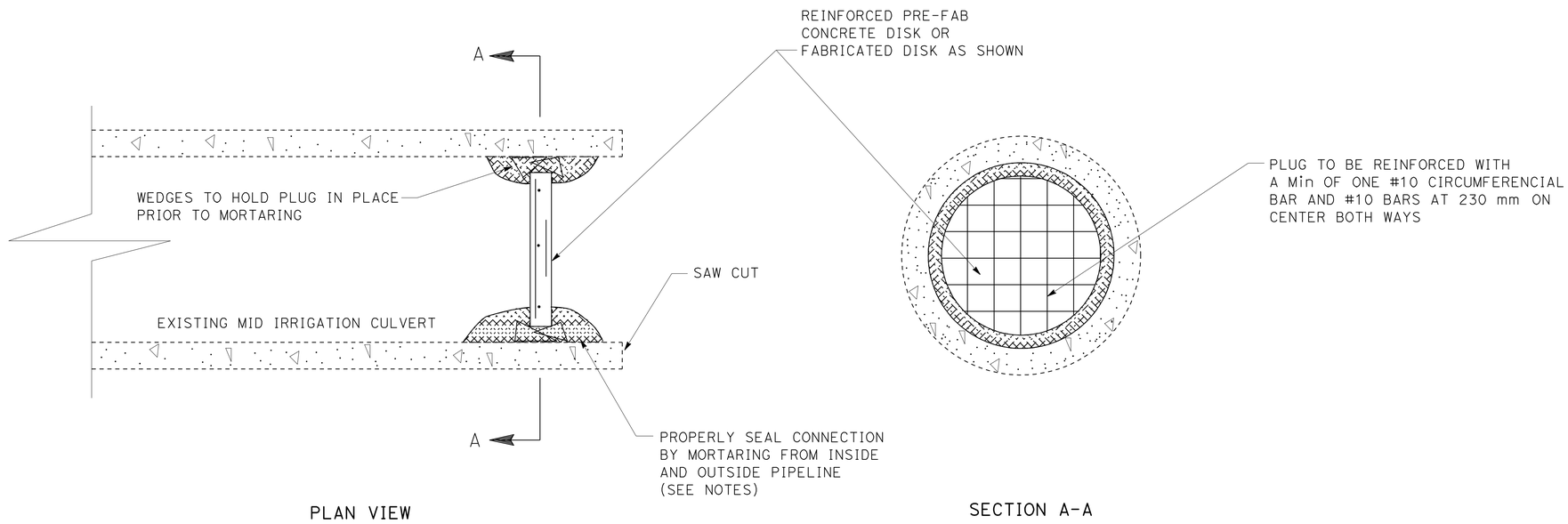

PLAN VIEW

SECTION A-A

CONCRETE PLUG

ALL DIMENSIONS ARE IN METERS UNLESS OTHERWISE SHOWN

UTILITY DETAILS

NO SCALE **UD-12**

ERIC CHIN	EC	6/23/09
WUTHY SENG	REVISED BY	DATE REVISED
CALCULATED-DESIGNED BY		
CHECKED BY		
FUNCTIONAL SUPERVISOR		
JOSE HUERTA		

STATE OF CALIFORNIA - DEPARTMENT OF TRANSPORTATION
Caltrans
DESIGN

LAST REVISION 00-00-00 | DATE PLOTTED => 30-JUN-2010 | TIME PLOTTED => 14:50

Dist	COUNTY	ROUTE	KILOMETER POST TOTAL PROJECT	SHEET No.	TOTAL SHEETS
10	Sta	219,108	3.4/7.9, 44.3/44.9	270	522

REGISTERED CIVIL ENGINEER 6/16/09 DATE

6-28-10
PLANS APPROVAL DATE

REGISTERED PROFESSIONAL ENGINEER ERIC C-S CHIN No. 71272 Exp. 12/31/09 CIVIL STATE OF CALIFORNIA

THE STATE OF CALIFORNIA OR ITS OFFICERS OR AGENTS SHALL NOT BE RESPONSIBLE FOR THE ACCURACY OR COMPLETENESS OF ELECTRONIC COPIES OF THIS PLAN SHEET.

Caltrans Metric

NOTES:

1. THOROUGHLY BRUSH ALL DEBRIS AND CLEAN EACH END OF PIPE AROUND THE ENTIRE CIRCUMFERENCE WITH WATER PRIOR TO PLACEMENT OF VENT
2. PROPERLY SEAL CONNECTION BY MORTARING FROM INSIDE PIPELINE AFTER PERMANENT PLACEMENT OF VENT PIPE. USE SOFT BRISTLE BRUSH TO BLEND MORTAR AND CONCRETE TOGETHER.
3. IMMEDIATELY AFTER PLACEMENT OF MORTAR AND BEFORE BACK FILLING, COVER EXPOSED MORTAR WITH PLASTIC TO AVOID CRACKING.
4. CONCRETE STRENGTH TO BE 20.68 MPa AT 28 DAYS.

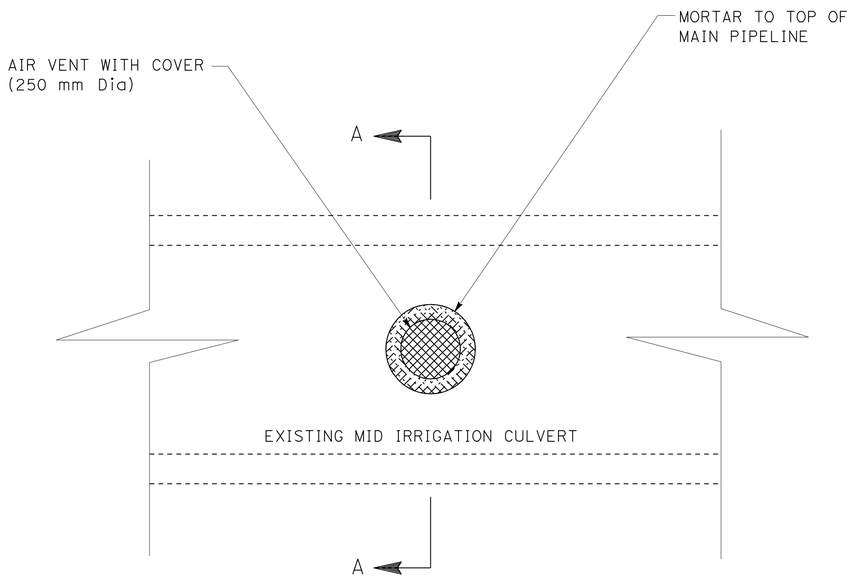

PLAN VIEW

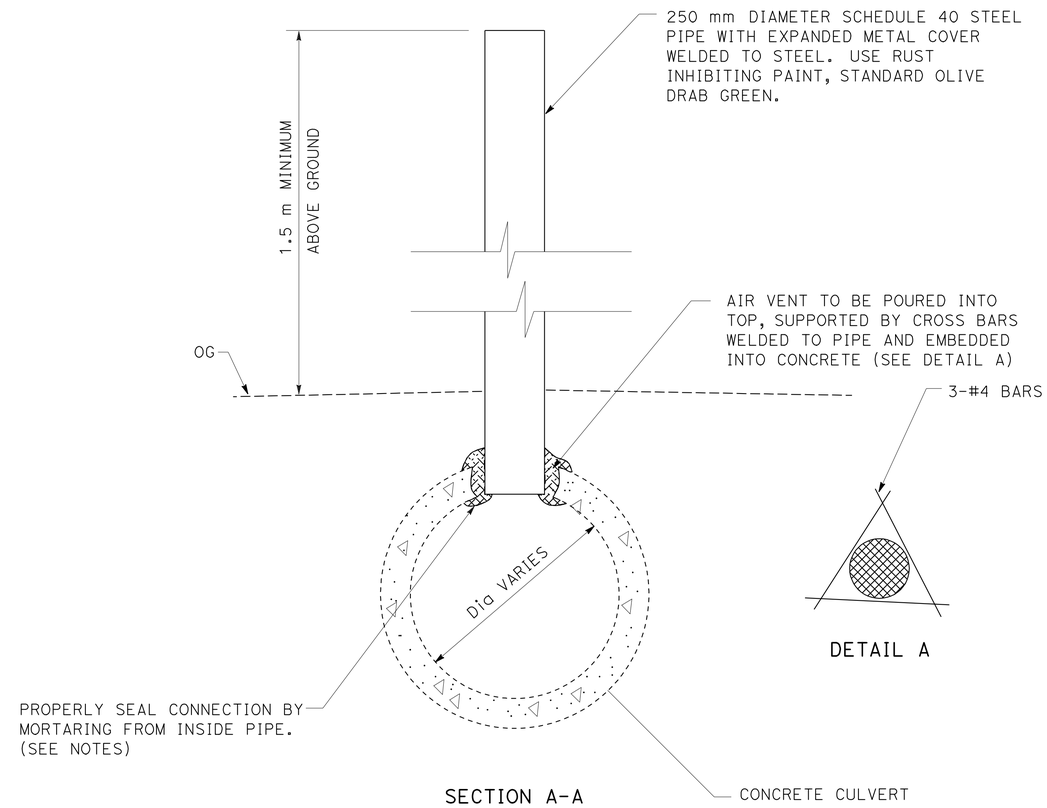

SECTION A-A

DETAIL A

STEEL AIR VENT

ALL DIMENSIONS ARE IN METERS UNLESS OTHERWISE SHOWN

UTILITY DETAILS

NO SCALE

UD-13

STATE OF CALIFORNIA - DEPARTMENT OF TRANSPORTATION
Caltrans DESIGN

FUNCTIONAL SUPERVISOR: JOSE HUERTA
CALCULATED-DESIGNED BY: ERIC CHIN
CHECKED BY: WUTHY SENG
REVISED BY / DATE REVISED

LAST REVISION 00-00-00 | DATE PLOTTED => 30-JUN-2010 | TIME PLOTTED => 14:50

Dist	COUNTY	ROUTE	KILOMETER POST TOTAL PROJECT	SHEET No.	TOTAL SHEETS
10	Sta	219,108	3.4/7.9, 44.3/44.9	271	522

REGISTERED CIVIL ENGINEER 6/16/09 DATE

6-28-10
PLANS APPROVAL DATE

REGISTERED PROFESSIONAL ENGINEER ERIC C-S CHIN No. 71272 Exp. 12/31/09 CIVIL STATE OF CALIFORNIA

THE STATE OF CALIFORNIA OR ITS OFFICERS OR AGENTS SHALL NOT BE RESPONSIBLE FOR THE ACCURACY OR COMPLETENESS OF ELECTRONIC COPIES OF THIS PLAN SHEET.

Caltrans Metric

UTILITY QUANTITIES

FACILITY No. x	STATION	REMOVE CULVERT	REMOVE HEADWALL	REMOVE VALVE	REMOVE GATE	REMOVE AIR VENT	REMOVE Conc (STRUCTURE)	REMOVE CONCRETE (CHANNEL)	MINOR Conc (MINOR Struc)	Misc IRON AND STEEL	CONCRETE COLLAR (N)	250 mm STEEL AIR VENT	CONCRETE PLUG (N)	FIELD VALVE STRUCTURE	1050 mm RCP	900 mm RCP	750 mm RCP (RGJ)
		m	EA	EA	EA	EA	m^3	m	m^3	kg	EA	m	EA	EA	m	m	m
1	"H" 8+56.952 TO "H" 8+64.735	52.2							11.53	458.4						47.8	
2	"H" 11+47.783 TO "H" 12+48.381			1	1		10.95	108.1	14.39	922.4				1	101.2		
3	"A" 56+43.181 TO "A" 56+49.045	49.3	1					31.3	9.58	381.1					62.9		
4	"A" 61+42.675 TO "A" 62+12.088	166.3		1		1			16.77	666.9							161.6
5	"A" 69+17.365 TO "A" 69+19.507	115.2					2.70		10.54	419.2	1					101.1	
6	"A" 75+85.622 TO "A" 77+34.670	194.5											2				
P1	"A" 43+86.330 L+	44.1		1								1.5	1				
P2	"A" 48+24.544 L+	81.5		2								1.5	1				
P3	"A" 52+67.644 L+	5.6										1.5	1				
P4	"H" 9+33.222 L+												4				
P5	"A" 58+22.990 L+	18.1		1								1.5	1				
P6	"A" 58+52.789 L+	10.3										1.5	1				
P7	"A" 66+52.766 L+	37.4		1								1.5	1				
P8	"A" 70+62.986 R+						0.90					1.5					
P9	"D" 2+36.550 L+	20.0										1.5	1				
TOTAL		* 794.6	1	7	1	1	14.55	139.4	* 62.81	* 2848.0		12.0		1	164.1	148.9	161.6 *

NOTES:

(N) NOT A SEPARATE PAY ITEM, FOR INFORMATION ONLY.

* SEE DRAINAGE QUANTITIES SHEET, DQ-15, FOR TOTAL QUANTITIES.

UTILITY QUANTITIES
UQ-1

STATE OF CALIFORNIA - DEPARTMENT OF TRANSPORTATION
Caltrans DESIGN

FUNCTIONAL SUPERVISOR: JOSE HUERTA
CALCULATED-DESIGNED BY: ERIC CHIN
CHECKED BY: WUTHY SENG
REVISED BY: EC
DATE REVISED: 6/23/09

LAST REVISION 00-00-00
DATE PLOTTED => 30-JUN-2010
TIME PLOTTED => 14:50

Dist	COUNTY	ROUTE	KILOMETER POST TOTAL PROJECT	SHEET No.	TOTAL SHEETS
10	Sta	219,108	3.4/7.9, 44.3/44.9	272	522

Caltrans Metric

Hassan Marei 6/12/09
REGISTERED CIVIL ENGINEER DATE

6-28-10
PLANS APPROVAL DATE

REGISTERED PROFESSIONAL ENGINEER HASSAN MAREI No. 35068 Exp. 9/30/10 CIVIL STATE OF CALIFORNIA

THE STATE OF CALIFORNIA OR ITS OFFICERS OR AGENTS SHALL NOT BE RESPONSIBLE FOR THE ACCURACY OR COMPLETENESS OF ELECTRONIC COPIES OF THIS PLAN SHEET.

STATIONARY MOUNTED CONSTRUCTION AREA SIGNS

SIGN No.	SIGN CODE	PANEL SIZE (mm x mm)	No. OF POST AND SIZE (mm x mm)	No. OF SIGNS	SIGN MESSAGE
A	W20-1	1200 x 1200	1-140 x 140	2	ROAD WORK AHEAD
B	G20-2	900 x 450	1-89 x 89	13	END ROAD WORK
C	W20-1	900 x 900	1-89 x 140	11	ROAD WORK AHEAD
D	CPFIS	3360 x 2700	2-140 x 184	2	PROJECT FUNDING

NOTES: 1. EXACT SIGN LOCATIONS TO BE DETERMINED BY THE ENGINEER.
2. SEE SHEET SD-5 FOR MORE CPFIS INFORMATION.

ABBREVIATION

CPFIS - CONSTRUCTION PROJECT FUNDING IDENTIFICATION SIGN.

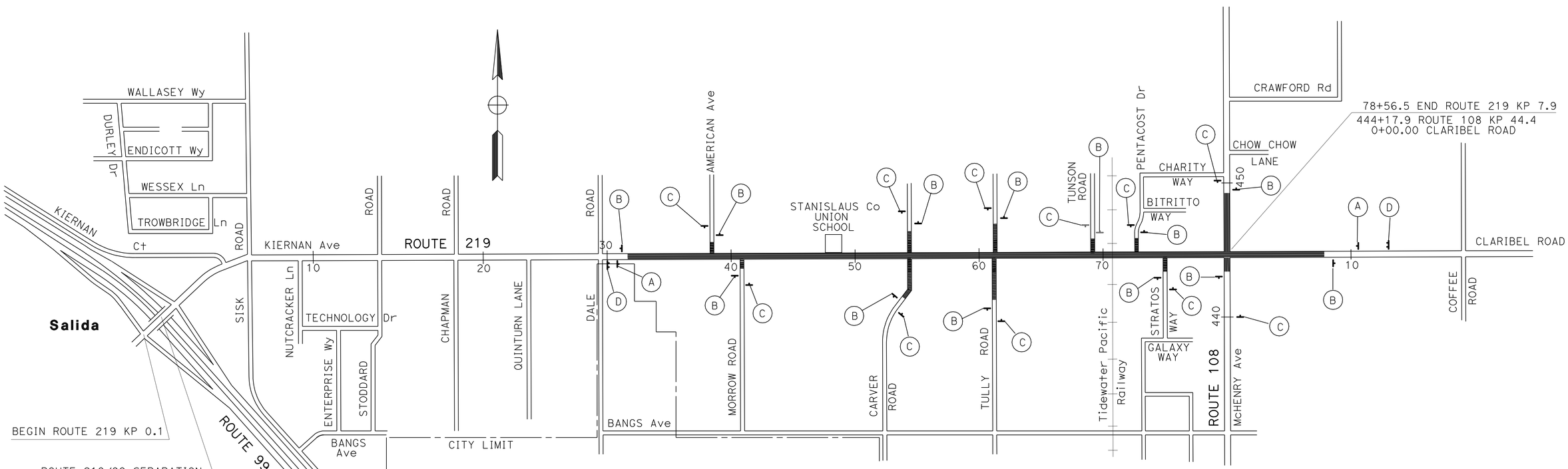

THIS PLAN ACCURATE FOR CONSTRUCTION AREA SIGN WORK ONLY.

CONSTRUCTION AREA SIGNS

NO SCALE

CS-1

STATE OF CALIFORNIA - DEPARTMENT OF TRANSPORTATION
Caltrans TRAFFIC DESIGN

FUNCTIONAL SUPERVISOR: HASSAN MAREI
CALCULATED-DESIGNED BY: CECILE NGUYEN
CHECKED BY: ALI JUMA
REVISED BY: CN
DATE REVISED: 6/25/09

LAST REVISION 00-00-00
DATE PLOTTED => 30-JUN-2010
TIME PLOTTED => 14:50

Dist	COUNTY	ROUTE	KILOMETER POST TOTAL PROJECT	SHEET No.	TOTAL SHEETS
10	Sta	219,108	3.4/7.9, 44.3/44.9	273	522

Wuthy Seng 6/16/09
REGISTERED CIVIL ENGINEER DATE

6-28-10
PLANS APPROVAL DATE

REGISTERED PROFESSIONAL ENGINEER
WUTHY SENG
No. 60114
Exp. 6-30-10
CIVIL
STATE OF CALIFORNIA

THE STATE OF CALIFORNIA OR ITS OFFICERS OR AGENTS SHALL NOT BE RESPONSIBLE FOR THE ACCURACY OR COMPLETENESS OF ELECTRONIC COPIES OF THIS PLAN SHEET.

Caltrans Metric

LEGEND

CONSTRUCT THIS STAGE

EXISTING OR CONSTRUCTED PREVIOUS STAGE

NOTES:

1. INSTALL TRAFFIC SIGNAL ON ROUTE 219 AT STANISLAUS COUNTY UNION SCHOOL.
2. INSTALL TRAFFIC SIGNAL AT THE SOUTH SIDE OF ROUTE 219 AT CARVER ROAD INTERSECTION.

TRAFFIC:

1. MAINTAIN EB AND WB ROUTE 219 TRAFFIC ON EXISTING ALIGNMENT.

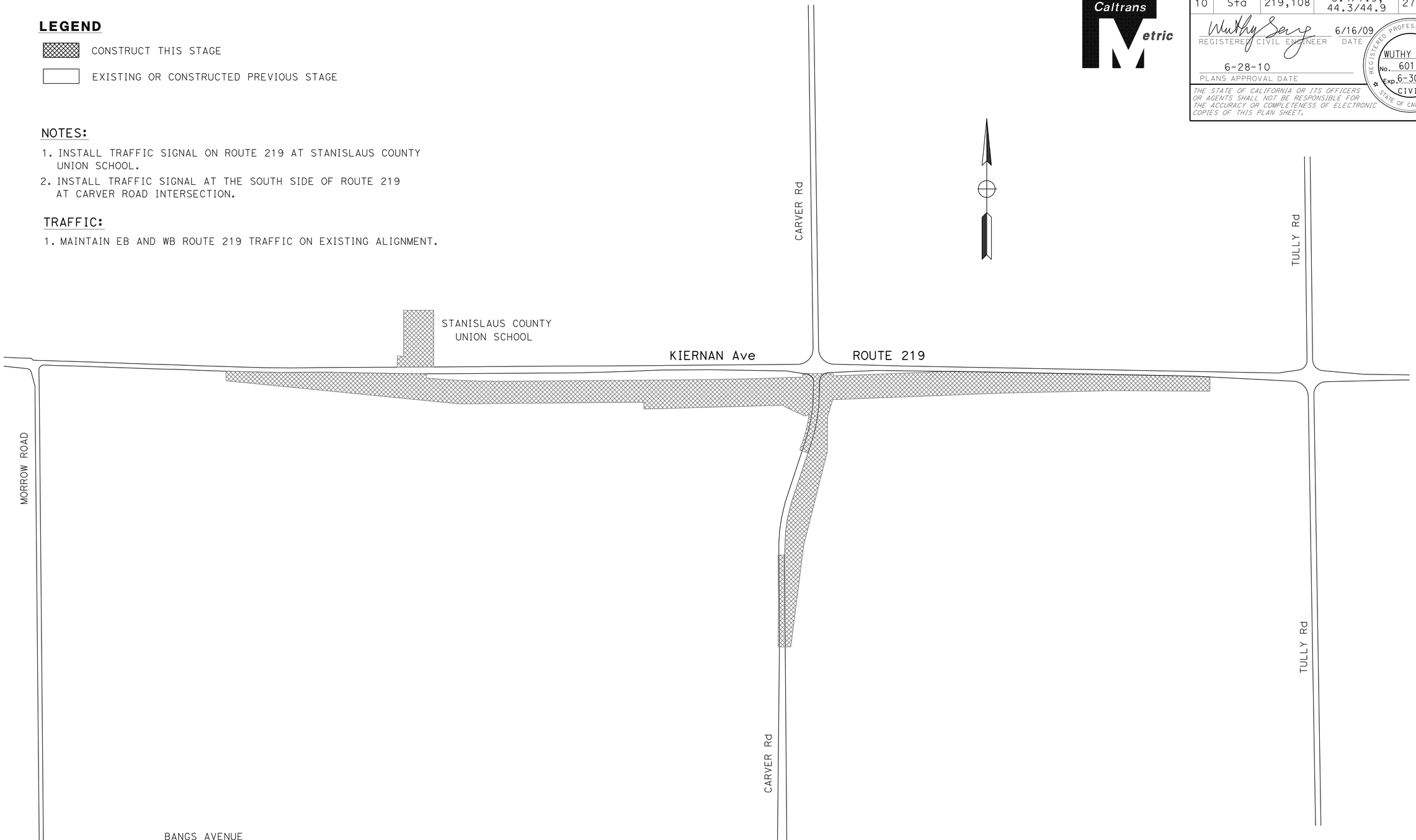

ALL DIMENSIONS ARE IN METERS UNLESS OTHERWISE SHOWN

STAGE CONSTRUCTION
(STAGE 1)

NO SCALE

SC-1

THIS PLAN ACCURATE FOR STA.GE CONSTRUCTION WORK ONLY.

HUONG LE	HL	REVISED BY	
WUTHY SENG	6/23/09	DATE REVISED	
CALCULATED-DESIGNED BY			
CHECKED BY			
FUNCTIONAL SUPERVISOR			
JOSE HUERTA			

STATE OF CALIFORNIA - DEPARTMENT OF TRANSPORTATION
Caltrans
DESIGN

LAST REVISION 00-00-00
DATE PLOTTED => 30-JUN-2010
TIME PLOTTED => 14:51

Dist	COUNTY	ROUTE	KILOMETER POST TOTAL PROJECT	SHEET No.	TOTAL SHEETS
10	Sta	219,108	3.4/7.9, 44.3/44.9	274	522

Wuthy Seng 6/16/09
REGISTERED CIVIL ENGINEER DATE

6-28-10
PLANS APPROVAL DATE

REGISTERED PROFESSIONAL ENGINEER
WUTHY SENG
No. 60114
Exp. 6-30-10
CIVIL
STATE OF CALIFORNIA

THE STATE OF CALIFORNIA OR ITS OFFICERS OR AGENTS SHALL NOT BE RESPONSIBLE FOR THE ACCURACY OR COMPLETENESS OF ELECTRONIC COPIES OF THIS PLAN SHEET.

Caltrans Metric

NOTES:

1. INSTALL TRAFFIC SIGNALS AT ROUTE 108 JUNCTION AND AT THE NORTH SIDE OF ROUTE 219 AT CARVER ROAD AND TULLY ROAD INTERSECTIONS.
2. PIPE MODESTO IRRIGATION DISTRICT (MID) OPEN CHANNEL ALONG CARVER ROAD, NORTH OF ROUTE 219.

TRAFFIC:

1. SHIFT EB AND WB ROUTE 219 TRAFFIC ON NEW ALIGNMENT BETWEEN STANISLAUS COUNTY UNION SCHOOL AND TULLY ROAD INTERSECTION.
2. SHIFT PARENT/STAFF'S VEHICLE AND SCHOOL BUS PARKINGS TO NEW PARKING LOT AT WEST OF STANISLAUS COUNTY UNION SCHOOL.

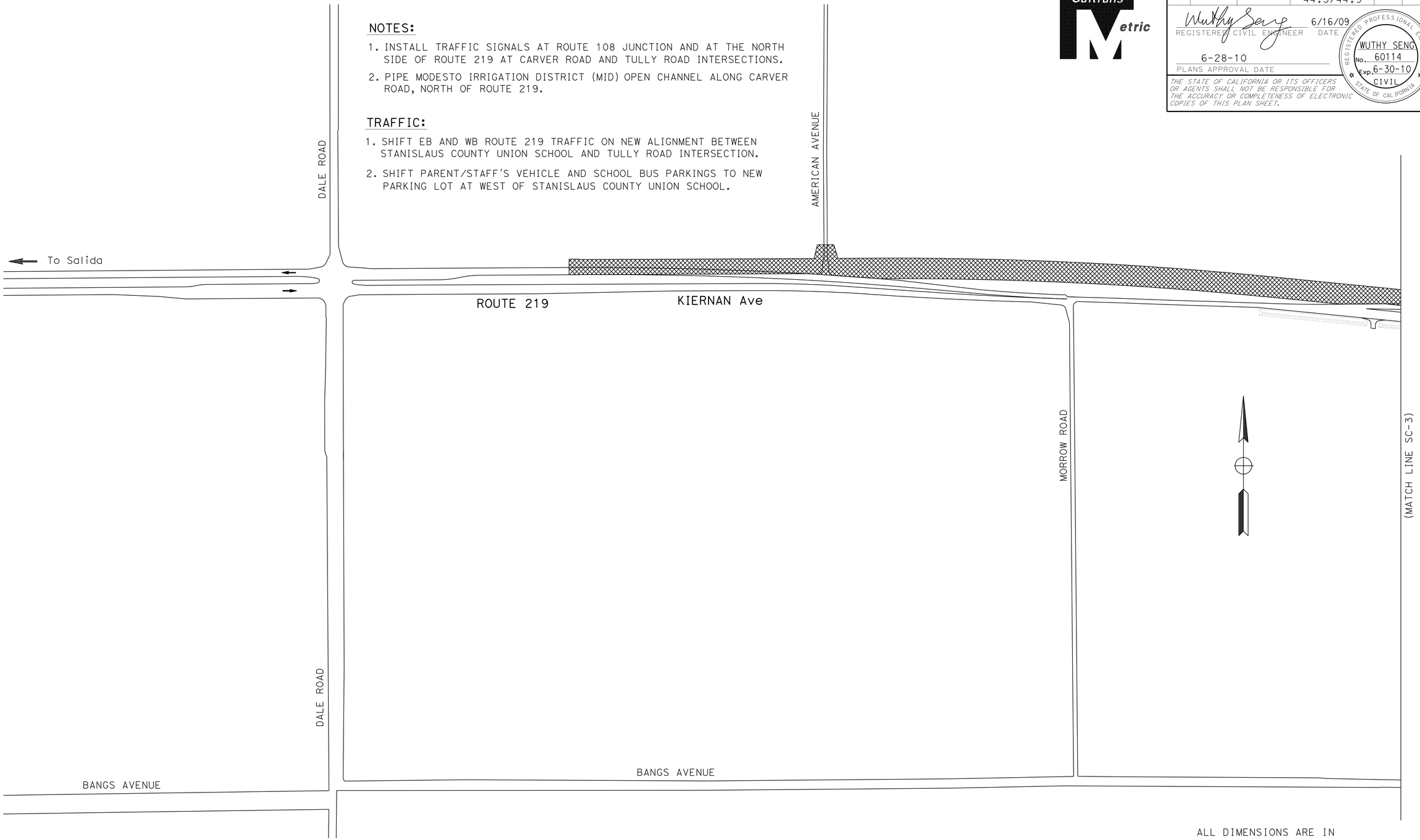

ALL DIMENSIONS ARE IN METERS UNLESS OTHERWISE SHOWN

STAGE CONSTRUCTION
(STAGE 2A)

NO SCALE

SC-2

THIS PLAN ACCURATE FOR STAGE CONSTRUCTION WORK ONLY.

REVISED BY	HL
DATE REVISED	6/23/09
CALCULATED-DESIGNED BY	HUONG LE
CHECKED BY	WUTHY SENG
FUNCTIONAL SUPERVISOR	JOSE HUERTA

STATE OF CALIFORNIA - DEPARTMENT OF TRANSPORTATION
Caltrans
DESIGN

LAST REVISION 00-00-00 | DATE PLOTTED => 30-JUN-2010 | TIME PLOTTED => 14:51

Dist	COUNTY	ROUTE	KILOMETER POST TOTAL PROJECT	SHEET No.	TOTAL SHEETS
10	Sta	219,108	3.4/7.9, 44.3/44.9	275	522

Wuthy Seng 6/16/09
REGISTERED CIVIL ENGINEER DATE

6-28-10
PLANS APPROVAL DATE

REGISTERED PROFESSIONAL ENGINEER
WUTHY SENG
No. 60114
Exp. 6-30-10
CIVIL
STATE OF CALIFORNIA

THE STATE OF CALIFORNIA OR ITS OFFICERS OR AGENTS SHALL NOT BE RESPONSIBLE FOR THE ACCURACY OR COMPLETENESS OF ELECTRONIC COPIES OF THIS PLAN SHEET.

Caltrans Metric

ALL DIMENSIONS ARE IN METERS UNLESS OTHERWISE SHOWN

STAGE CONSTRUCTION
(STAGE 2A)

NO SCALE

SC-3

THIS PLAN ACCURATE FOR STAGE CONSTRUCTION WORK ONLY.

REVISED BY	HL
DATE REVISED	6/23/09
CALCULATED-DESIGNED BY	HUONG LE
CHECKED BY	WUTHY SENG
FUNCTIONAL SUPERVISOR	JOSE HUERTA

STATE OF CALIFORNIA - DEPARTMENT OF TRANSPORTATION
Caltrans
DESIGN

LAST REVISION 00-00-00 | DATE PLOTTED => 30-JUN-2010 | TIME PLOTTED => 14:51

Dist	COUNTY	ROUTE	KILOMETER POST TOTAL PROJECT	SHEET No.	TOTAL SHEETS
10	Sta	219,108	3.4/7.9, 44.3/44.9	276	522

Wuthy Seng 6/16/09
REGISTERED CIVIL ENGINEER DATE

6-28-10
PLANS APPROVAL DATE

REGISTERED PROFESSIONAL ENGINEER
WUTHY SENG
No. 60114
Exp. 6-30-10
CIVIL
STATE OF CALIFORNIA

THE STATE OF CALIFORNIA OR ITS OFFICERS OR AGENTS SHALL NOT BE RESPONSIBLE FOR THE ACCURACY OR COMPLETENESS OF ELECTRONIC COPIES OF THIS PLAN SHEET.

Caltrans Metric

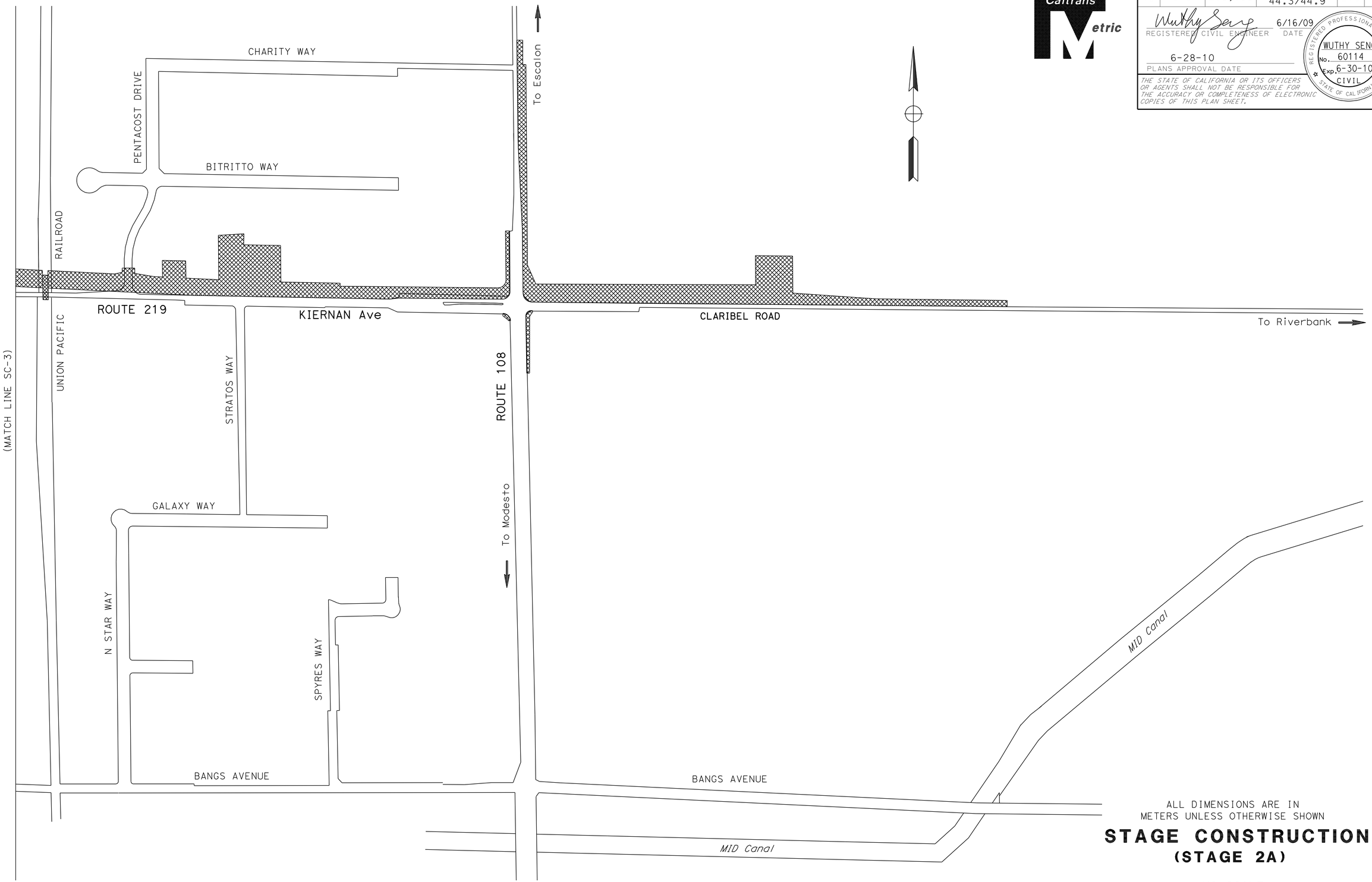

ALL DIMENSIONS ARE IN METERS UNLESS OTHERWISE SHOWN

STAGE CONSTRUCTION
(STAGE 2A)

NO SCALE

SC-4

THIS PLAN ACCURATE FOR STAGE CONSTRUCTION WORK ONLY.

HUONG LE	REVISED BY	HL	
WUTHY SENG	DATE REVISED	6/23/09	
CALCULATED-DESIGNED BY			
CHECKED BY			
FUNCTIONAL SUPERVISOR			
JOSE HUERTA			

STATE OF CALIFORNIA - DEPARTMENT OF TRANSPORTATION
Caltrans
DESIGN

LAST REVISION 00-00-00
DATE PLOTTED => 30-JUN-2010
TIME PLOTTED => 14:51

Dist	COUNTY	ROUTE	KILOMETER POST TOTAL PROJECT	SHEET No.	TOTAL SHEETS
10	Sta	219,108	3.4/7.9, 44.3/44.9	277	522

Wuthy Seng 6/16/09
REGISTERED CIVIL ENGINEER DATE

6-28-10
PLANS APPROVAL DATE

REGISTERED PROFESSIONAL ENGINEER
WUTHY SENG
No. 60114
Exp. 6-30-10
CIVIL
STATE OF CALIFORNIA

THE STATE OF CALIFORNIA OR ITS OFFICERS OR AGENTS SHALL NOT BE RESPONSIBLE FOR THE ACCURACY OR COMPLETENESS OF ELECTRONIC COPIES OF THIS PLAN SHEET.

Caltrans Metric

NOTES:

1. WIDEN NORTH LEGS ON CARVER ROAD, TULLY ROAD, AND ROUTE 108.
2. WIDEN CLARIBEL ROAD ALONG THE SOUTH SIDE.

TRAFFIC:

1. MAINTAIN EB AND WB ROUTE 219 TRAFFIC ON THE SAME ALIGNMENT AS STAGE 2A.
2. ACTIVATE TEMPORARY TRAFFIC SIGNAL AT ROUTE 108 JUNCTION.

ALL DIMENSIONS ARE IN METERS UNLESS OTHERWISE SHOWN

STAGE CONSTRUCTION
(STAGE 2B)

NO SCALE

SC-5

THIS PLAN ACCURATE FOR STAGE CONSTRUCTION WORK ONLY.

REVISED BY	HL
DATE REVISED	6/23/09
CALCULATED-DESIGNED BY	HUONG LE
CHECKED BY	WUTHY SENG
FUNCTIONAL SUPERVISOR	JOSE HUERTA

STATE OF CALIFORNIA - DEPARTMENT OF TRANSPORTATION
Caltrans
DESIGN

LAST REVISION 00-00-00
DATE PLOTTED => 30-JUN-2010
TIME PLOTTED => 1451

Dist	COUNTY	ROUTE	KILOMETER POST TOTAL PROJECT	SHEET No.	TOTAL SHEETS
10	Sta	219,108	3.4/7.9, 44.3/44.9	278	522

Wuthy Seng 6/16/09
REGISTERED CIVIL ENGINEER DATE

6-28-10
PLANS APPROVAL DATE

REGISTERED PROFESSIONAL ENGINEER
WUTHY SENG
No. 60114
Exp. 6-30-10
CIVIL
STATE OF CALIFORNIA

THE STATE OF CALIFORNIA OR ITS OFFICERS OR AGENTS SHALL NOT BE RESPONSIBLE FOR THE ACCURACY OR COMPLETENESS OF ELECTRONIC COPIES OF THIS PLAN SHEET.

Caltrans Metric

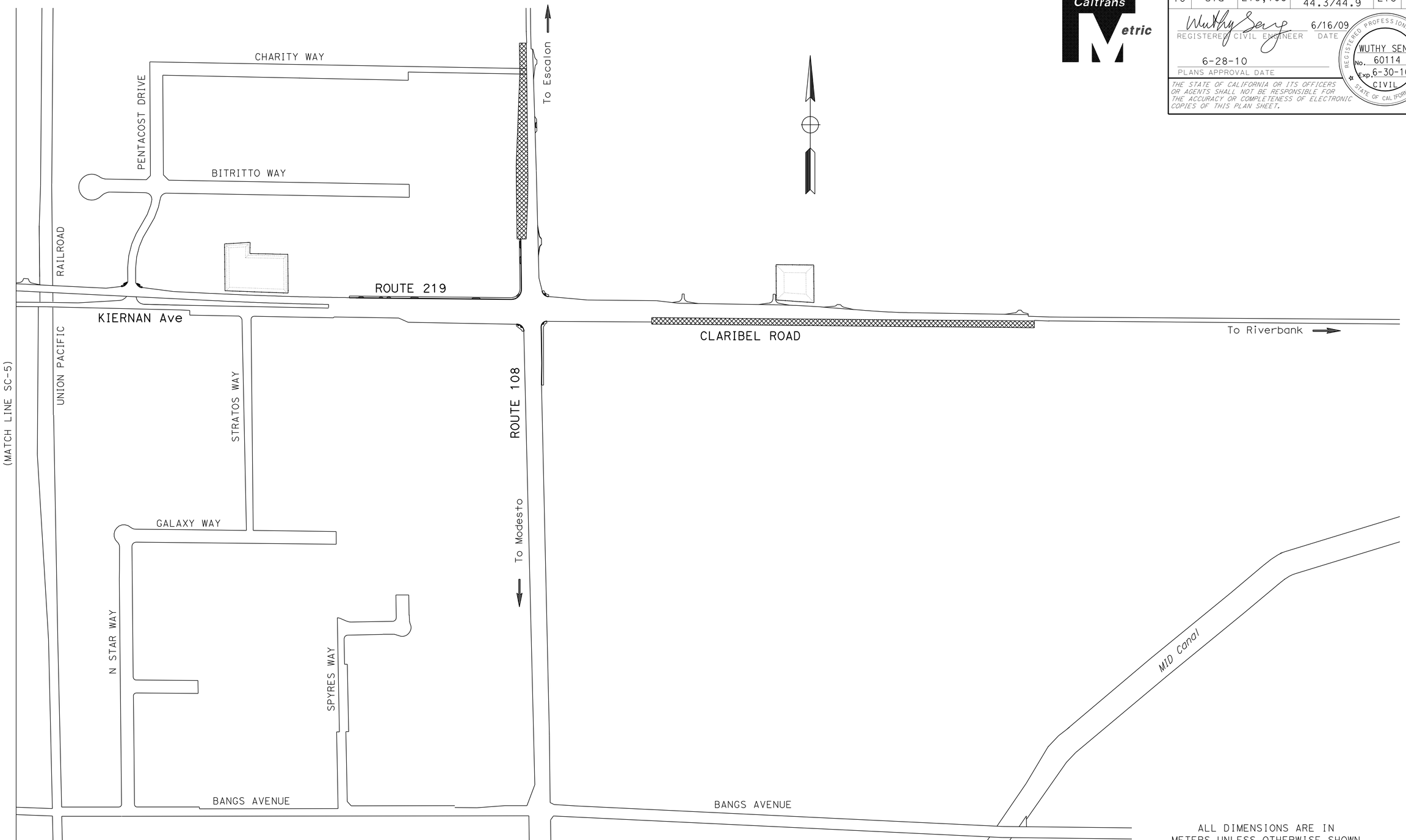

ALL DIMENSIONS ARE IN METERS UNLESS OTHERWISE SHOWN

STAGE CONSTRUCTION
(STAGE 2B)

NO SCALE

SC-6

THIS PLAN ACCURATE FOR STAGE CONSTRUCTION WORK ONLY.

HUONG LE	REVISED BY	HL	
WUTHY SENG	DATE REVISED	6/23/09	
CALCULATED-DESIGNED BY	FUNCTIONAL SUPERVISOR		
CHECKED BY	JOSE HUERTA		

STATE OF CALIFORNIA - DEPARTMENT OF TRANSPORTATION
Caltrans
DESIGN

LAST REVISION 00-00-00
DATE PLOTTED => 30-JUN-2010
TIME PLOTTED => 14:51

Dist	COUNTY	ROUTE	KILOMETER POST TOTAL PROJECT	SHEET No.	TOTAL SHEETS
10	Sta	219,108	3.4/7.9, 44.3/44.9	279	522

Wuthy Seng 6/16/09
REGISTERED CIVIL ENGINEER DATE

6-28-10
PLANS APPROVAL DATE

REGISTERED PROFESSIONAL ENGINEER
WUTHY SENG
No. 60114
Exp. 6-30-10
CIVIL
STATE OF CALIFORNIA

THE STATE OF CALIFORNIA OR ITS OFFICERS OR AGENTS SHALL NOT BE RESPONSIBLE FOR THE ACCURACY OR COMPLETENESS OF ELECTRONIC COPIES OF THIS PLAN SHEET.

Caltrans Metric

NOTES:

1. INSTALL TRAFFIC SIGNAL AT THE SOUTH SIDE OF ROUTE 219 AT TULLY ROAD INTERSECTION,

TRAFFIC:

1. SHIFT EB AND WB ROUTE 219 TRAFFIC ONTO NEW WESTBOUND ALIGNMENT BETWEEN STANISLAUS COUNTY UNION SCHOOL AND 0.8 KM EAST OF ROUTE 108 JUNCTION, ON CLARIBEL ROAD.
2. MOVE TEMPORARY SIGNAL HEADS AT ROUTE 108 JUNCTION TO ACCOMMODATE THE SHIFT OF EB AND WB ROUTE 219 TRAFFIC TO NEW WESTBOUND ALIGNMENT.
3. ACTIVATE TEMPORARY TRAFFIC SIGNAL AT STANISLAUS COUNTY UNION SCHOOL.

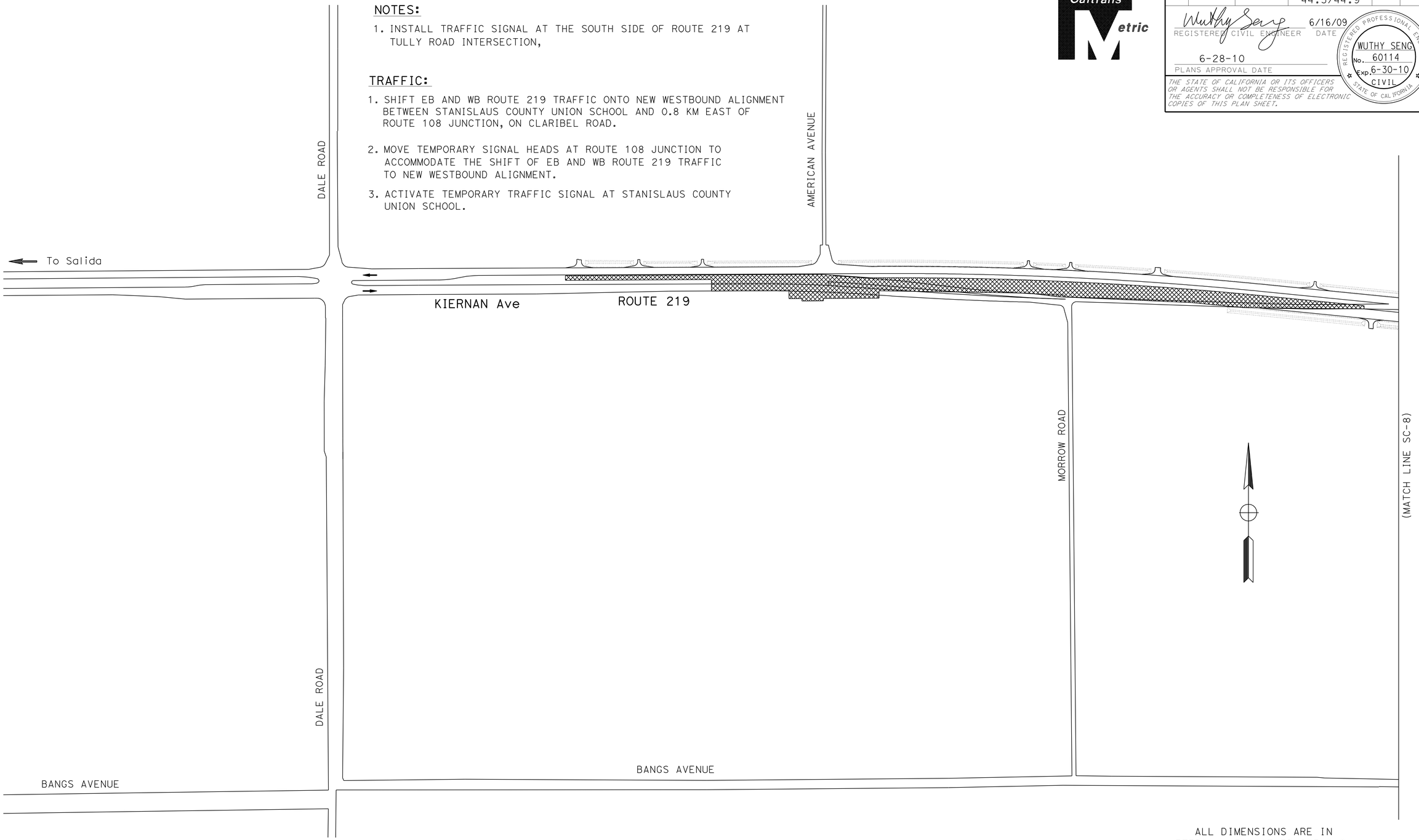

ALL DIMENSIONS ARE IN METERS UNLESS OTHERWISE SHOWN

STAGE CONSTRUCTION
(STAGE 3A)

NO SCALE

SC-7

THIS PLAN ACCURATE FOR STAGE CONSTRUCTION WORK ONLY.

REVISED BY	HL
DATE REVISED	6/23/09
CALCULATED-DESIGNED BY	HUONG LE
CHECKED BY	WUTHY SENG
FUNCTIONAL SUPERVISOR	JOSE HUERTA

STATE OF CALIFORNIA - DEPARTMENT OF TRANSPORTATION
Caltrans
DESIGN

LAST REVISION 00-00-00 | DATE PLOTTED => 30-JUN-2010 | TIME PLOTTED => 14:51

Dist	COUNTY	ROUTE	KILOMETER POST TOTAL PROJECT	SHEET No.	TOTAL SHEETS
10	Sta	219,108	3.4/7.9, 44.3/44.9	280	522

Wuthy Seng 6/16/09
REGISTERED CIVIL ENGINEER DATE

6-28-10
PLANS APPROVAL DATE

REGISTERED PROFESSIONAL ENGINEER
WUTHY SENG
No. 60114
Exp. 6-30-10
CIVIL
STATE OF CALIFORNIA

THE STATE OF CALIFORNIA OR ITS OFFICERS OR AGENTS SHALL NOT BE RESPONSIBLE FOR THE ACCURACY OR COMPLETENESS OF ELECTRONIC COPIES OF THIS PLAN SHEET.

Caltrans Metric

ALL DIMENSIONS ARE IN METERS UNLESS OTHERWISE SHOWN

STAGE CONSTRUCTION
(STAGE 3A)

NO SCALE

SC-8

THIS PLAN ACCURATE FOR STAGE CONSTRUCTION WORK ONLY.

STATE OF CALIFORNIA - DEPARTMENT OF TRANSPORTATION
Caltrans
DESIGN

FUNCTIONAL SUPERVISOR: JOSE HUERTA
CALCULATED-DESIGNED BY: HUONG LE
CHECKED BY: WUTHY SENG
REVISED BY: HL
DATE REVISED: 6/23/09

LAST REVISION 00-00-00
DATE PLOTTED => 30-JUN-2010
TIME PLOTTED => 16:29

Dist	COUNTY	ROUTE	KILOMETER POST TOTAL PROJECT	SHEET No.	TOTAL SHEETS
10	Sta	219,108	3.4/7.9, 44.3/44.9	281	522

Wuthy Seng 6/16/09
REGISTERED CIVIL ENGINEER DATE

6-28-10
PLANS APPROVAL DATE

REGISTERED PROFESSIONAL ENGINEER
WUTHY SENG
No. 60114
Exp. 6-30-10
CIVIL
STATE OF CALIFORNIA

THE STATE OF CALIFORNIA OR ITS OFFICERS OR AGENTS SHALL NOT BE RESPONSIBLE FOR THE ACCURACY OR COMPLETENESS OF ELECTRONIC COPIES OF THIS PLAN SHEET.

Caltrans Metric

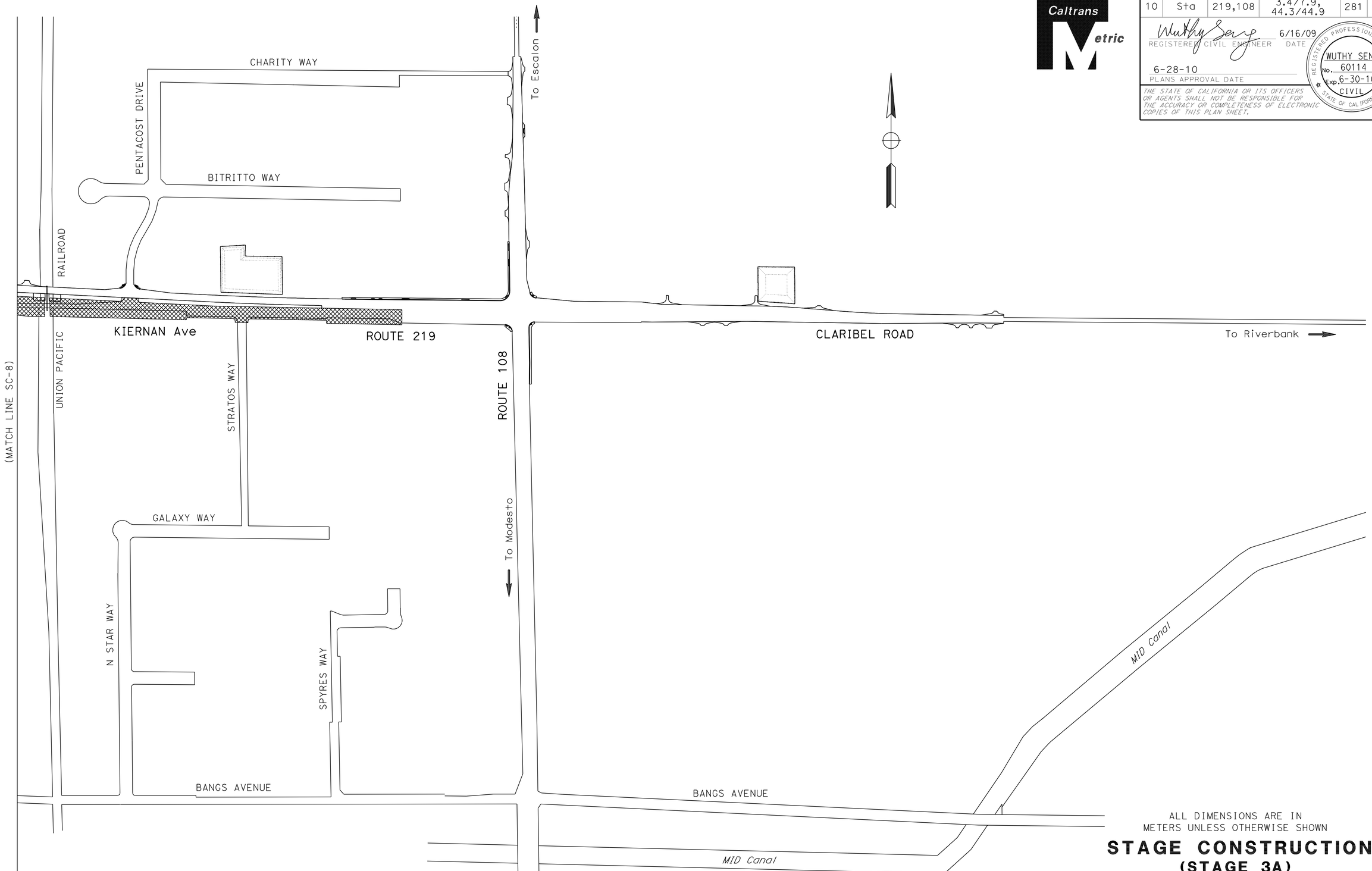

ALL DIMENSIONS ARE IN METERS UNLESS OTHERWISE SHOWN

STAGE CONSTRUCTION
(STAGE 3A)

NO SCALE

SC-9

THIS PLAN ACCURATE FOR STAGE CONSTRUCTION WORK ONLY.

HUONG LE	REVISED BY	HL	
WUTHY SENG	DATE REVISED	6/23/09	
CALCULATED-DESIGNED BY	FUNCTIONAL SUPERVISOR		
CHECKED BY	JOSE HUERTA		

STATE OF CALIFORNIA - DEPARTMENT OF TRANSPORTATION
Caltrans
DESIGN

LAST REVISION 00-00-00 | DATE PLOTTED => 30-JUN-2010 | TIME PLOTTED => 16:30

Dist	COUNTY	ROUTE	KILOMETER POST TOTAL PROJECT	SHEET No.	TOTAL SHEETS
10	Sta	219,108	3.4/7.9, 44.3/44.9	282	522

Wuthy Seng 6/16/09
REGISTERED CIVIL ENGINEER DATE

6-28-10
PLANS APPROVAL DATE

REGISTERED PROFESSIONAL ENGINEER
WUTHY SENG
No. 60114
Exp. 6-30-10
CIVIL
STATE OF CALIFORNIA

THE STATE OF CALIFORNIA OR ITS OFFICERS OR AGENTS SHALL NOT BE RESPONSIBLE FOR THE ACCURACY OR COMPLETENESS OF ELECTRONIC COPIES OF THIS PLAN SHEET.

Caltrans Metric

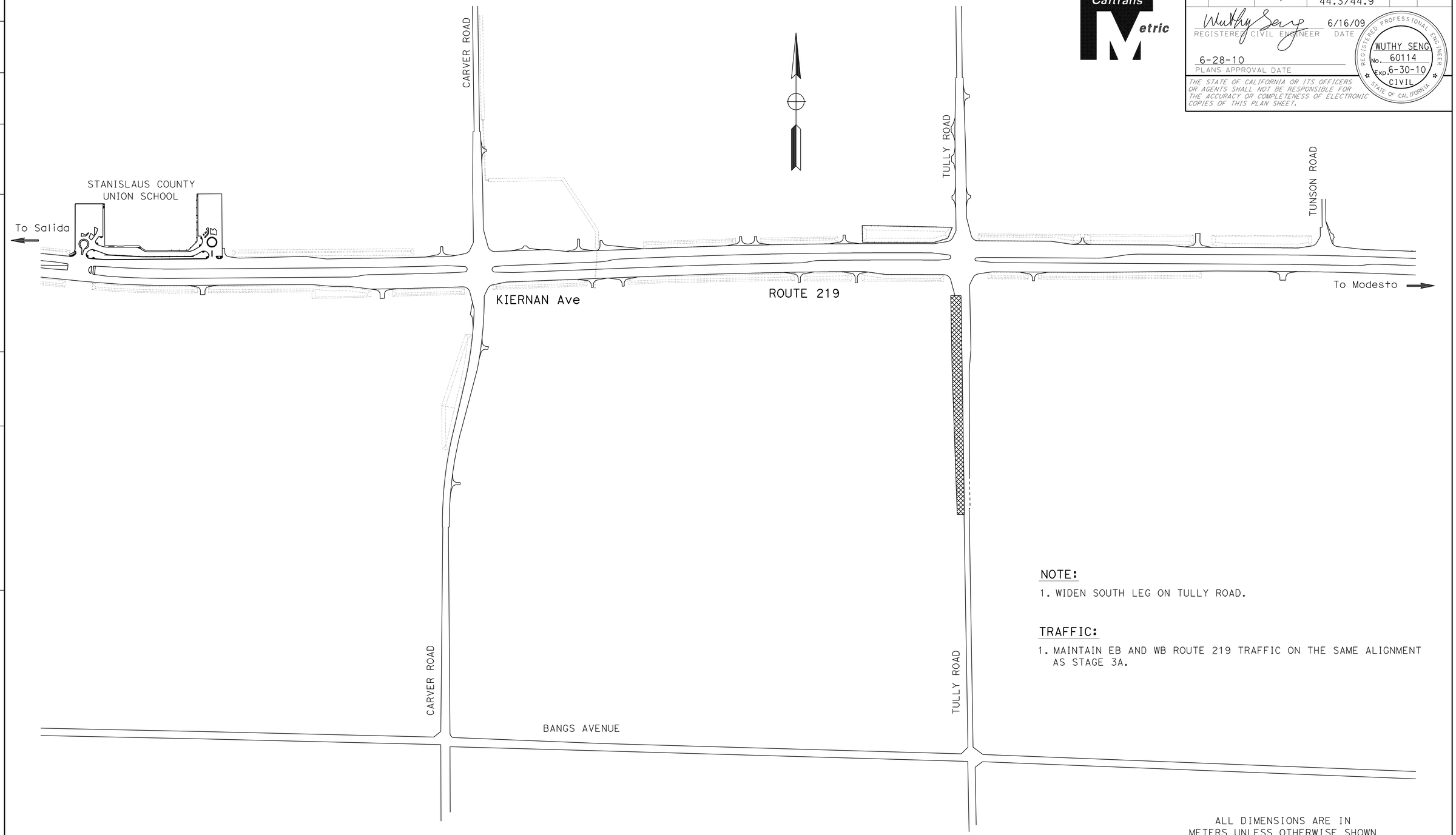

NOTE:

1. WIDEN SOUTH LEG ON TULLY ROAD.

TRAFFIC:

1. MAINTAIN EB AND WB ROUTE 219 TRAFFIC ON THE SAME ALIGNMENT AS STAGE 3A.

ALL DIMENSIONS ARE IN METERS UNLESS OTHERWISE SHOWN

STAGE CONSTRUCTION
(STAGE 3B)

NO SCALE

SC-10

THIS PLAN ACCURATE FOR STAGE CONSTRUCTION WORK ONLY.

REVISED BY	DATE REVISED
HL	6/23/09

CALCULATED-DESIGNED BY: HUONG LE
CHECKED BY: WUTHY SENG
FUNCTIONAL SUPERVISOR: JOSE HUERTA

STATE OF CALIFORNIA - DEPARTMENT OF TRANSPORTATION
Caltrans
DESIGN

LAST REVISION 00-00-00
DATE PLOTTED => 30-JUN-2010
TIME PLOTTED => 16:30

Dist	COUNTY	ROUTE	KILOMETER POST TOTAL PROJECT	SHEET No.	TOTAL SHEETS
10	Sta	219,108	3.4/7.9, 44.3/44.9	283	522

Wuthy Seng 6/16/09
REGISTERED CIVIL ENGINEER DATE

6-28-10
PLANS APPROVAL DATE

REGISTERED PROFESSIONAL ENGINEER
WUTHY SENG
No. 60114
Exp. 6-30-10
CIVIL
STATE OF CALIFORNIA

THE STATE OF CALIFORNIA OR ITS OFFICERS OR AGENTS SHALL NOT BE RESPONSIBLE FOR THE ACCURACY OR COMPLETENESS OF ELECTRONIC COPIES OF THIS PLAN SHEET.

Caltrans Metric

NOTES:

1. CONSTRUCT RAISED ISLANDS AT A SIGNAL INTERSECTION AT STANISLAUS COUNTY UNION SCHOOL AND ROUTE 108 JUNCTION.
2. THE APPLICATION OF THE LAST HMA (TYPE A) LIFT SHALL BE DURING THE END OF ROADWAY CONSTRUCTION, PRIOR TO PERMANENT PAVEMENT DELINEATION AND OPEN TO THE PUBLIC TRAFFIC.

TRAFFIC:

1. SHIFT EB ROUTE 219 TRAFFIC ON NEW EB ALIGNMENT.
2. ACTIVATE PERMANENT TRAFFIC SIGNALS AT THE INTERSECTIONS OF STANISLAUS COUNTY UNION SCHOOL, CARVER Rd, TULLY Rd, AND ROUTE 108 JUNCTION.

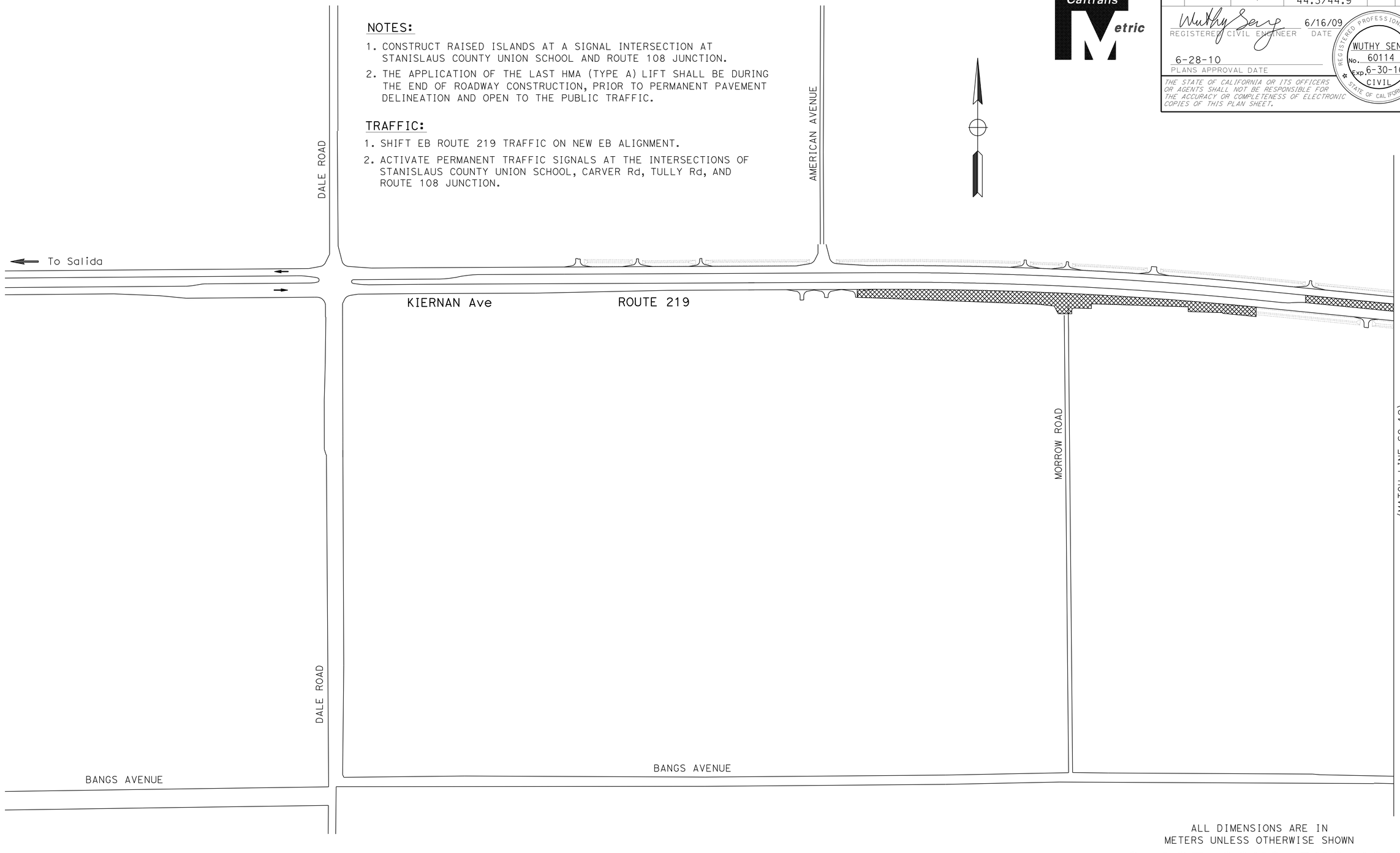

ALL DIMENSIONS ARE IN METERS UNLESS OTHERWISE SHOWN

STAGE CONSTRUCTION (STAGE 4)

NO SCALE

SC-11

THIS PLAN ACCURATE FOR STAGE CONSTRUCTION WORK ONLY.

STATE OF CALIFORNIA - DEPARTMENT OF TRANSPORTATION
Caltrans
DESIGN

FUNCTIONAL SUPERVISOR: JOSE HUERTA
CALCULATED-DESIGNED BY: HUONG LE
CHECKED BY: WUTHY SENG
REVISED BY: HL
DATE REVISED: 6/23/09

LAST REVISION 00-00-00
DATE PLOTTED => 30-JUN-2010
TIME PLOTTED => 16:30

Dist	COUNTY	ROUTE	KILOMETER POST TOTAL PROJECT	SHEET No.	TOTAL SHEETS
10	Sta	219,108	3.4/7.9, 44.3/44.9	284	522

Wuthy Seng 6/16/09
REGISTERED CIVIL ENGINEER DATE

6-28-10
PLANS APPROVAL DATE

REGISTERED PROFESSIONAL ENGINEER
WUTHY SENG
No. 60114
Exp. 6-30-10
CIVIL
STATE OF CALIFORNIA

THE STATE OF CALIFORNIA OR ITS OFFICERS OR AGENTS SHALL NOT BE RESPONSIBLE FOR THE ACCURACY OR COMPLETENESS OF ELECTRONIC COPIES OF THIS PLAN SHEET.

Caltrans Metric

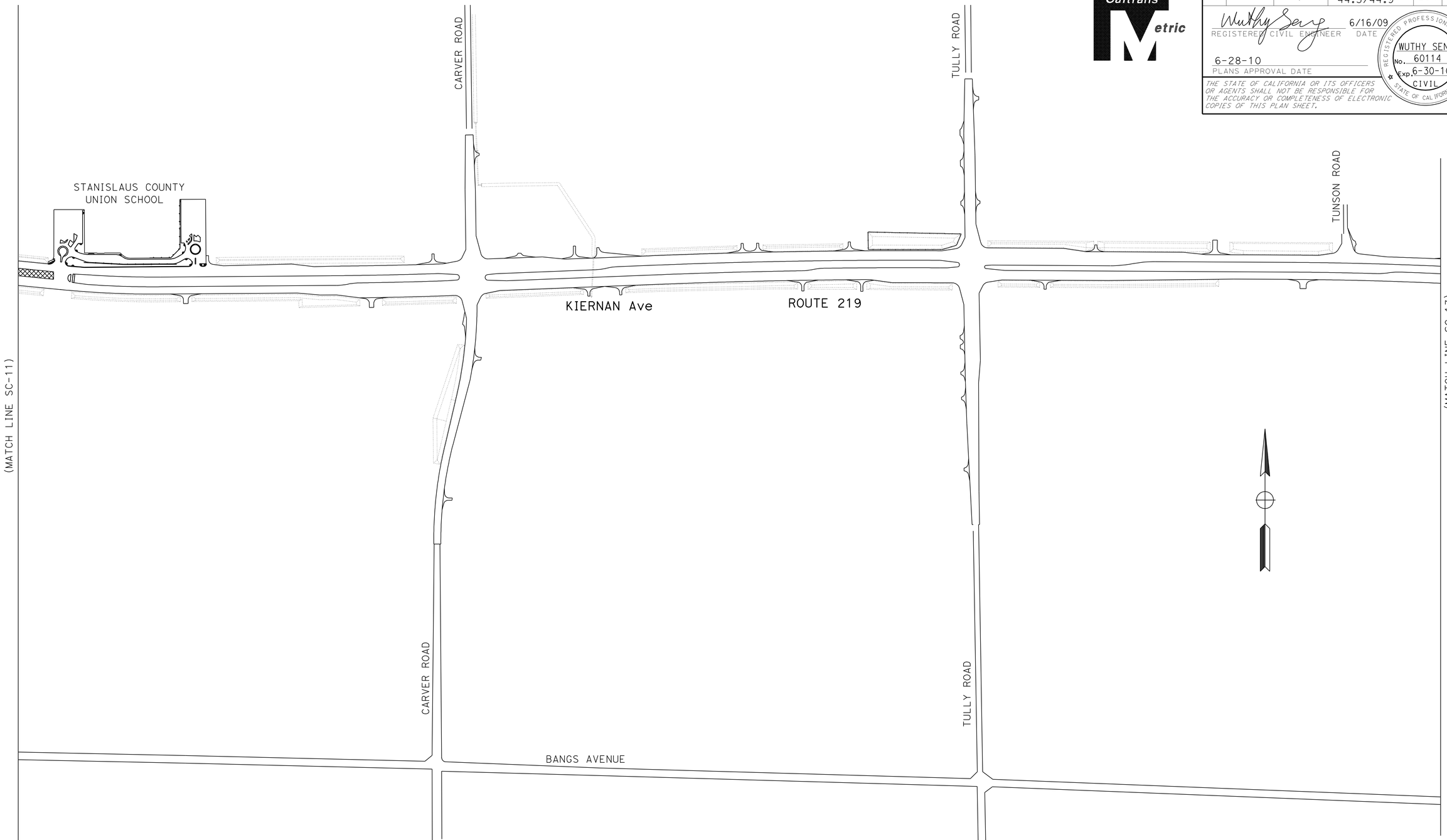

ALL DIMENSIONS ARE IN
METERS UNLESS OTHERWISE SHOWN

STAGE CONSTRUCTION
(STAGE 4)

NO SCALE

SC-12

THIS PLAN ACCURATE FOR STAGE CONSTRUCTION WORK ONLY.

REVISED BY	HL
DATE REVISED	6/23/09
CALCULATED-DESIGNED BY	HUONG LE
CHECKED BY	WUTHY SENG
FUNCTIONAL SUPERVISOR	JOSE HUERTA

STATE OF CALIFORNIA - DEPARTMENT OF TRANSPORTATION
Caltrans
DESIGN

LAST REVISION 00-00-00
DATE PLOTTED => 30-JUN-2010
TIME PLOTTED => 16:30

Dist	COUNTY	ROUTE	KILOMETER POST TOTAL PROJECT	SHEET No.	TOTAL SHEETS
10	Sta	219,108	3.4/7.9, 44.3/44.9	285	522

Wuthy Seng 6/16/09
REGISTERED CIVIL ENGINEER DATE

6-28-10
PLANS APPROVAL DATE

REGISTERED PROFESSIONAL ENGINEER
WUTHY SENG
No. 60114
Exp. 6-30-10
CIVIL
STATE OF CALIFORNIA

THE STATE OF CALIFORNIA OR ITS OFFICERS OR AGENTS SHALL NOT BE RESPONSIBLE FOR THE ACCURACY OR COMPLETENESS OF ELECTRONIC COPIES OF THIS PLAN SHEET.

Caltrans Metric

ALL DIMENSIONS ARE IN METERS UNLESS OTHERWISE SHOWN

STAGE CONSTRUCTION
(STAGE 4)

NO SCALE

SC-13

THIS PLAN ACCURATE FOR STAGE CONSTRUCTION WORK ONLY.

HL	6/23/09	HUONG LE	WUTHY SENG
REVISED BY	DATE REVISED	CALCULATED-DESIGNED BY	CHECKED BY

FUNCTIONAL SUPERVISOR: JOSE HUERTA

STATE OF CALIFORNIA - DEPARTMENT OF TRANSPORTATION
Caltrans
DESIGN

LAST REVISION 00-00-00 | DATE PLOTTED => 30-JUN-2010 | TIME PLOTTED => 16:30

Dist	COUNTY	ROUTE	KILOMETER POST TOTAL PROJECT	SHEET No.	TOTAL SHEETS
10	Sta	219,108	3.4/7.9, 44.3/44.9	286	522

REGISTERED CIVIL ENGINEER — DATE 6/12/09

6-28-10
PLANS APPROVAL DATE

REGISTERED PROFESSIONAL ENGINEER HASSAN MAREI No. 35068 Exp. 9/30/10 CIVIL STATE OF CALIFORNIA

THE STATE OF CALIFORNIA OR ITS OFFICERS OR AGENTS SHALL NOT BE RESPONSIBLE FOR THE ACCURACY OR COMPLETENESS OF ELECTRONIC COPIES OF THIS PLAN SHEET.

Caltrans Metric

LEGEND

- CONSTRUCTION THIS STAGE
- CONSTRUCT UNDER ONE WAY TRAFFIC CONTROL
- DIRECTION OF TRAFFIC
- TEMPORARY CRASH CUSHION MODULE (ARRAY "TS14")
- REMOVE THERMOPLASTIC TRAFFIC STRIPE
- CHANNELIZER (SURFACE MOUNTED)
- TEMPORARY TRAFFIC STRIPE (PAINT)
- TEMPORARY RAILING (TYPE K)
- REMOVE THERMOPLASTIC PAVEMENT MARKING
- THERMOPLASTIC PAVEMENT MARKING OR TEMPORARY PAVEMENT MARKING (PAINT)
- ROADSIDE SIGN
- TYPE III BARRICADE
- TYPE P MARKER
- X CHANGE OF PAVEMENT DELINEATION DETAIL
- ROADSIDE SIGN TO REMAIN IN PLACE
- RELOCATE ROADSIDE SIGN — FROM / TO
- REMOVE MILEPOST MARKER
- REMOVE ROADSIDE SIGN PANEL
- REMOVE ROADSIDE SIGN
- RESET ROADSIDE SIGN IN PLACE
- TEMPORARY DELINEATOR
- REMOVE THERMOPLASTIC TRAFFIC STRIPE (SPRAYABLE)
- THERMOPLASTIC TRAFFIC STRIPE (SPRAYABLE)
- THERMOPLASTIC TRAFFIC STRIPE
- TYPE III (L OR R) ARROW THERMOPLASTIC PAVEMENT MARKING OR PAINT PAVEMENT MARKING
- TYPE V ARROW THERMOPLASTIC PAVEMENT MARKING OR PAINT PAVEMENT MARKING
- TYPE VI ARROW THERMOPLASTIC PAVEMENT MARKING OR PAINT PAVEMENT MARKING

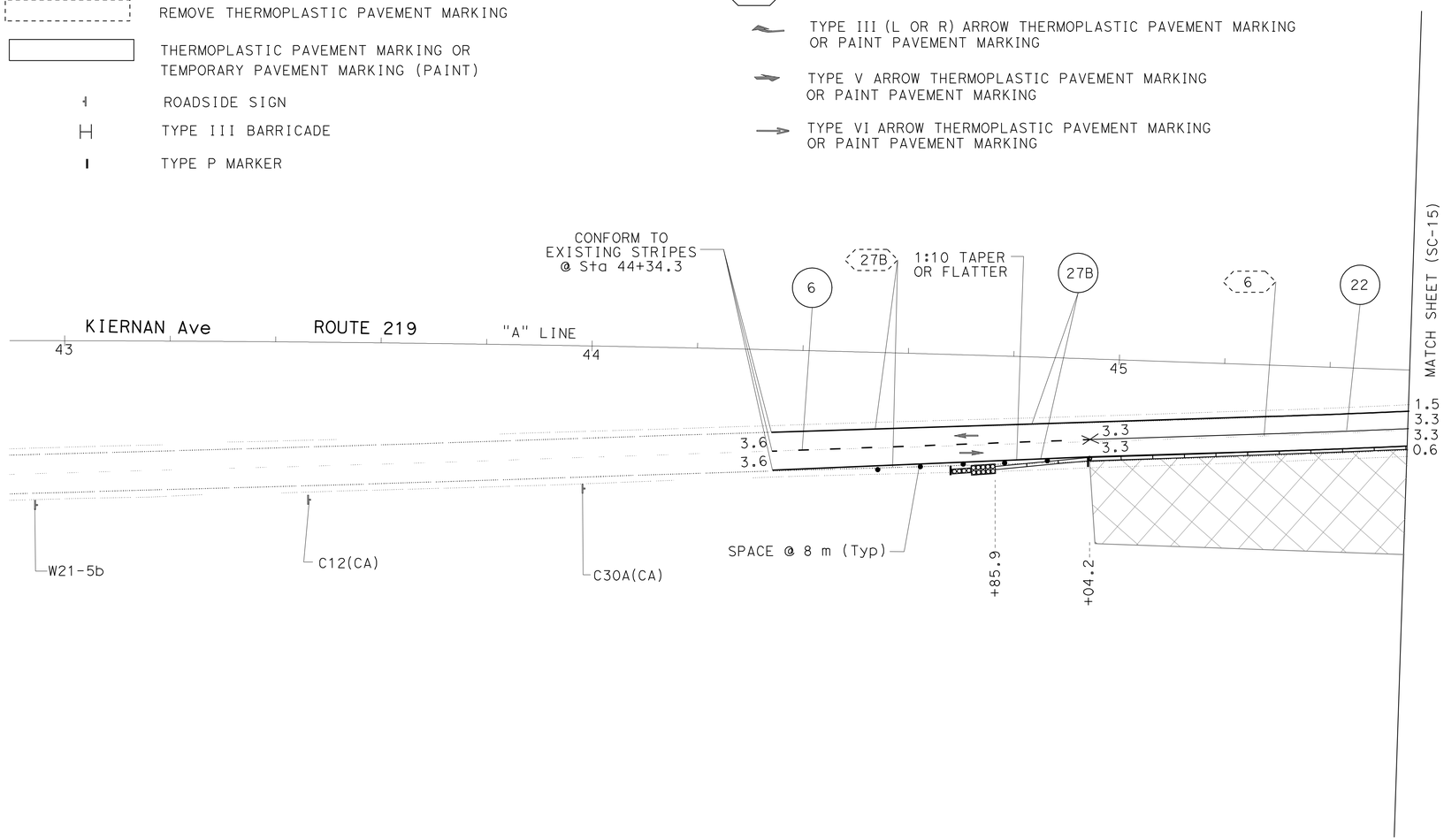

ALL DIMENSIONS ARE IN METERS UNLESS OTHERWISE SHOWN

STAGE CONSTRUCTION AND TRAFFIC HANDLING PLAN

(STAGE 1)

SCALE 1:500

SC-14

THIS PLAN ACCURATE FOR STAGE CONSTRUCTION AND TRAFFIC HANDLING WORK ONLY.

REVISED BY	DATE REVISED
CN	7/3/09

CECILE NGUYEN — CALCULATED-DESIGNED BY
QUAN H TRINH — CHECKED BY
FUNCTIONAL SUPERVISOR: HASSAN MAREI

STATE OF CALIFORNIA - DEPARTMENT OF TRANSPORTATION
Caltrans TRAFFIC DESIGN

LAST REVISION 00-00-00 | DATE PLOTTED => 30-JUN-2010 | TIME PLOTTED => 16:30

Dist	COUNTY	ROUTE	KILOMETER POST TOTAL PROJECT	SHEET No.	TOTAL SHEETS
10	Sta	219,108	3.4/7.9, 44.3/44.9	287	522

Caltrans Metric

Hassan Marei 6/12/09
REGISTERED CIVIL ENGINEER DATE

6-28-10
PLANS APPROVAL DATE

REGISTERED PROFESSIONAL ENGINEER HASSAN MAREI No. 35068 Exp. 9/30/10 CIVIL STATE OF CALIFORNIA

THE STATE OF CALIFORNIA OR ITS OFFICERS OR AGENTS SHALL NOT BE RESPONSIBLE FOR THE ACCURACY OR COMPLETENESS OF ELECTRONIC COPIES OF THIS PLAN SHEET.

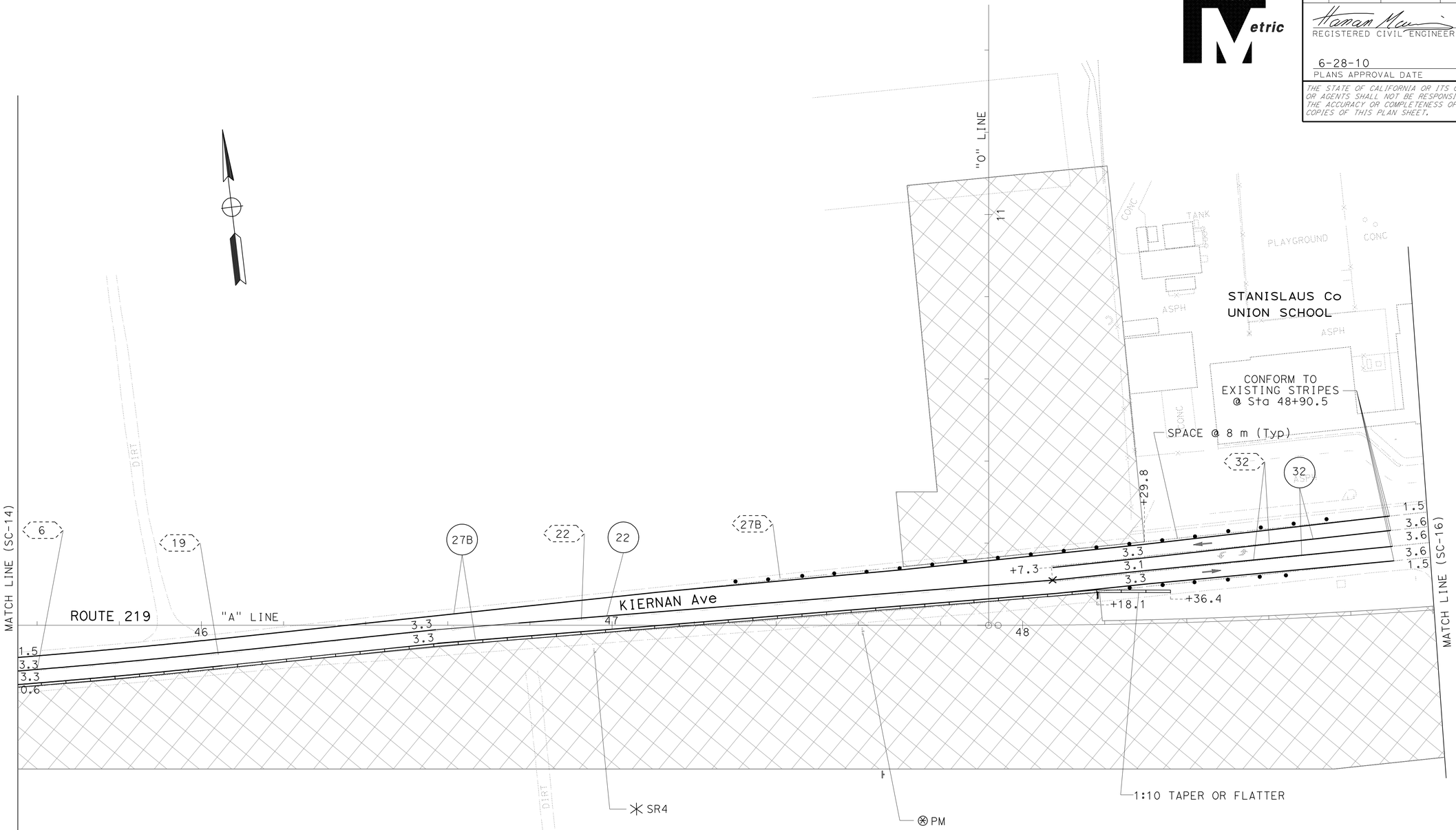

ALL DIMENSIONS ARE IN METERS
UNLESS OTHERWISE SHOWN

STAGE CONSTRUCTION AND TRAFFIC HANDLING PLAN
(STAGE 1)

SCALE 1:500

SC-15

THIS PLAN ACCURATE FOR STAGE CONSTRUCTION AND TRAFFIC HANDLING WORK ONLY.

CALCULATED-DESIGNED BY	CECILE NGUYEN	REVISED BY	CN
CHECKED BY	QUAN H TRINH	DATE REVISED	7/3/09
FUNCTIONAL SUPERVISOR	HASSAN MAREI		

STATE OF CALIFORNIA - DEPARTMENT OF TRANSPORTATION
Caltrans
TRAFFIC DESIGN

LAST REVISION 00-00-00 DATE PLOTTED => 30-JUN-2010 TIME PLOTTED => 16:30

Dist	COUNTY	ROUTE	KILOMETER POST TOTAL PROJECT	SHEET No.	TOTAL SHEETS
10	Sta	219,108	3.4/7.9, 44.3/44.9	288	522

Caltrans Metric

Hassan Marei 6/12/09
REGISTERED CIVIL ENGINEER DATE

6-28-10
PLANS APPROVAL DATE

REGISTERED PROFESSIONAL ENGINEER HASSAN MAREI No. 35068 Exp. 9/30/10 CIVIL STATE OF CALIFORNIA

THE STATE OF CALIFORNIA OR ITS OFFICERS OR AGENTS SHALL NOT BE RESPONSIBLE FOR THE ACCURACY OR COMPLETENESS OF ELECTRONIC COPIES OF THIS PLAN SHEET.

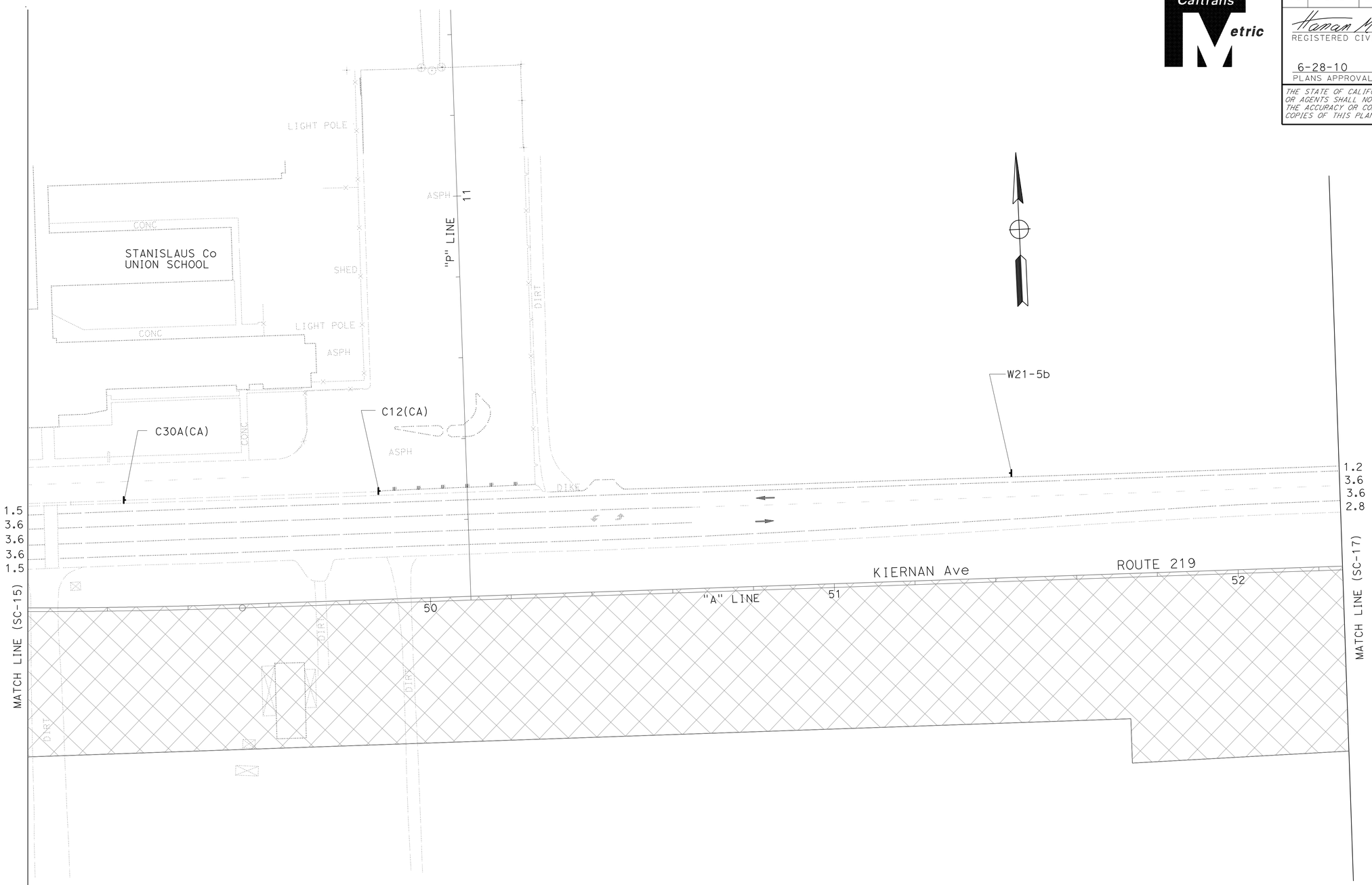

ALL DIMENSIONS ARE IN METERS
UNLESS OTHERWISE SHOWN

STAGE CONSTRUCTION AND TRAFFIC HANDLING PLAN
(STAGE 1)

THIS PLAN ACCURATE FOR STAGE CONSTRUCTION AND TRAFFIC HANDLING WORK ONLY.

SCALE 1:500

SC-16

CALCULATED-DESIGNED BY	CECILE NGUYEN	REVISED BY	CN
CHECKED BY	QUAN H TRINH	DATE REVISED	7/3/09
FUNCTIONAL SUPERVISOR	HASSAN MAREI		

STATE OF CALIFORNIA - DEPARTMENT OF TRANSPORTATION
Caltrans
TRAFFIC DESIGN

LAST REVISION 00-00-00 | DATE PLOTTED => 30-JUN-2010 | TIME PLOTTED => 16:30

Dist	COUNTY	ROUTE	KILOMETER POST TOTAL PROJECT	SHEET No.	TOTAL SHEETS
10	Sta	219,108	3.4/7.9, 44.3/44.9	289	522

Hassan Marei 6/12/09
REGISTERED CIVIL ENGINEER DATE

6-28-10
PLANS APPROVAL DATE

REGISTERED PROFESSIONAL ENGINEER HASSAN MAREI No. 35068 Exp. 9/30/10 CIVIL STATE OF CALIFORNIA

THE STATE OF CALIFORNIA OR ITS OFFICERS OR AGENTS SHALL NOT BE RESPONSIBLE FOR THE ACCURACY OR COMPLETENESS OF ELECTRONIC COPIES OF THIS PLAN SHEET.

Caltrans Metric

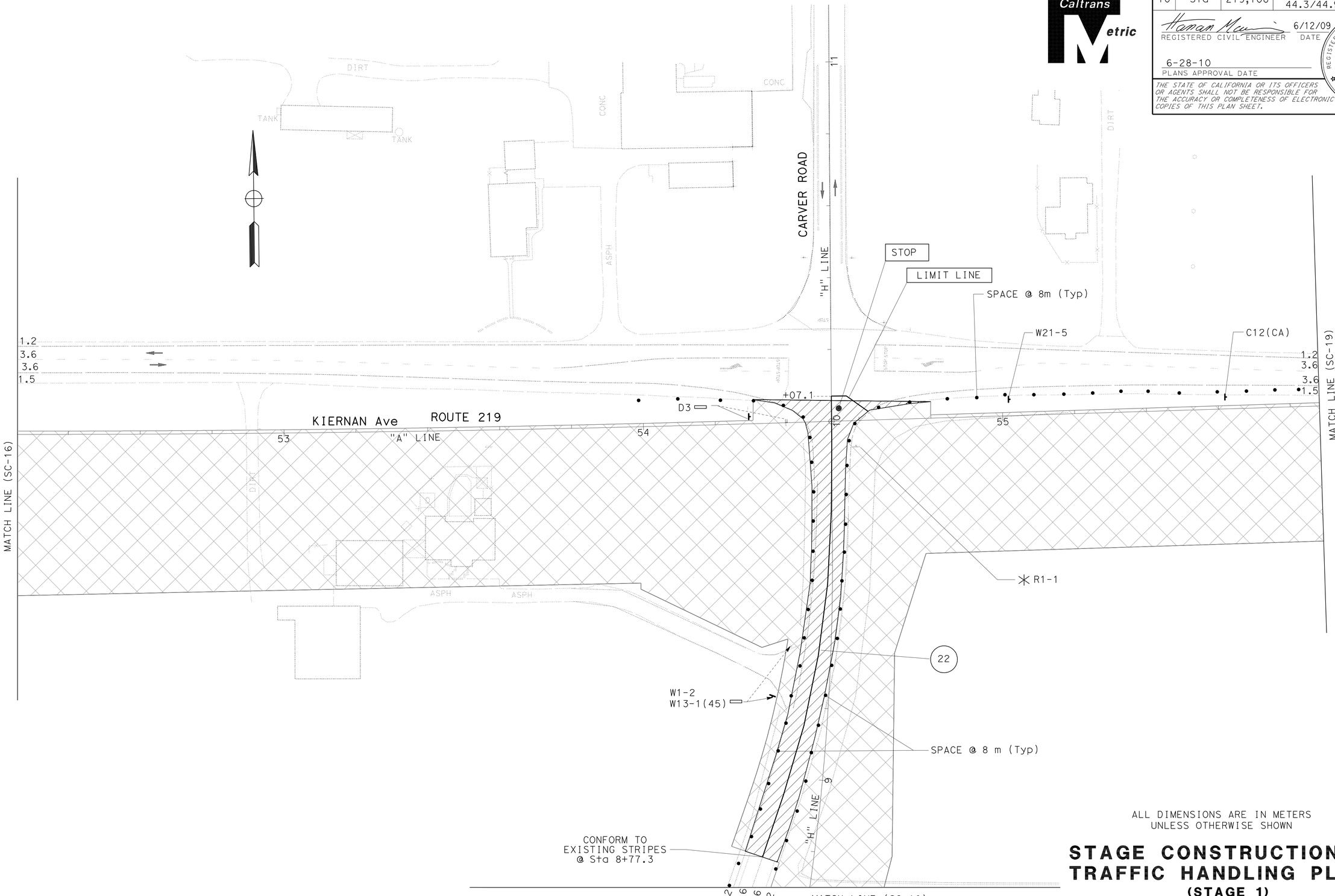

ALL DIMENSIONS ARE IN METERS
UNLESS OTHERWISE SHOWN

STAGE CONSTRUCTION AND TRAFFIC HANDLING PLAN

(STAGE 1)

SCALE 1:500

SC-17

THIS PLAN ACCURATE FOR STAGE CONSTRUCTION AND TRAFFIC HANDLING WORK ONLY.

CALCULATED-DESIGNED BY	CECILE NGUYEN	REVISED BY	CN
CHECKED BY	QUAN H TRINH	DATE REVISED	7/3/09
FUNCTIONAL SUPERVISOR	HASSAN MAREI		

STATE OF CALIFORNIA - DEPARTMENT OF TRANSPORTATION
Caltrans
DESIGN

LAST REVISION 00-00-00
DATE PLOTTED => 30-JUN-2010
TIME PLOTTED => 16:30

Dist	COUNTY	ROUTE	KILOMETER POST TOTAL PROJECT	SHEET No.	TOTAL SHEETS
10	Sta	219,108	3.4/7.9, 44.3/44.9	290	522

Caltrans Metric

REGISTERED CIVIL ENGINEER — DATE 6/12/09

6-28-10
PLANS APPROVAL DATE

REGISTERED PROFESSIONAL ENGINEER HASSAN MAREI No. 35068 Exp. 9/30/10 CIVIL STATE OF CALIFORNIA

THE STATE OF CALIFORNIA OR ITS OFFICERS OR AGENTS SHALL NOT BE RESPONSIBLE FOR THE ACCURACY OR COMPLETENESS OF ELECTRONIC COPIES OF THIS PLAN SHEET.

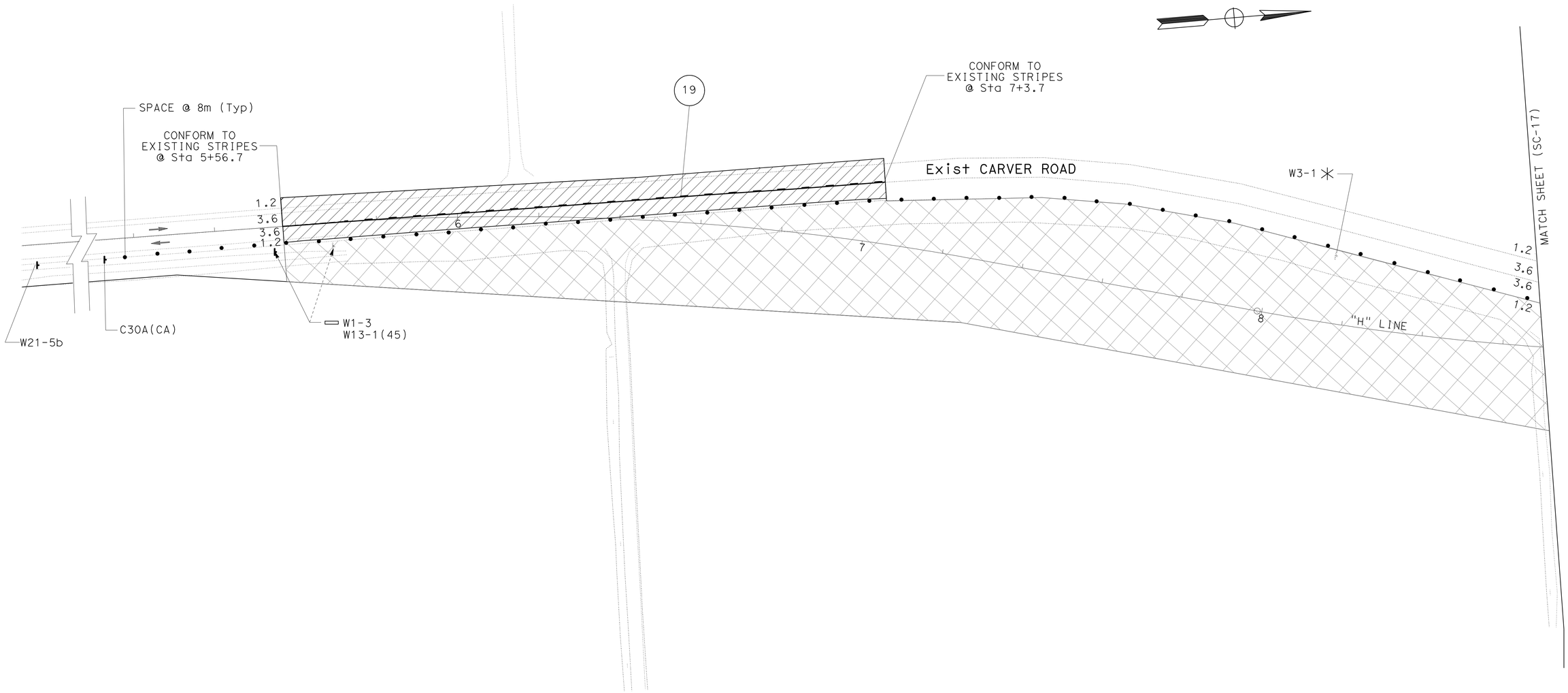

ALL DIMENSIONS ARE IN METERS UNLESS OTHERWISE SHOWN

STAGE CONSTRUCTION AND TRAFFIC HANDLING PLAN
(STAGE 1)

SCALE 1:500

SC-18

THIS PLAN ACCURATE FOR STAGE CONSTRUCTION AND TRAFFIC HANDLING WORK ONLY.

STATE OF CALIFORNIA - DEPARTMENT OF TRANSPORTATION
Caltrans **TRAFFIC DESIGN**

FUNCTIONAL SUPERVISOR: HASSAN MAREI
CALCULATED-DESIGNED BY: CECILE NGUYEN
CHECKED BY: QUAN H TRINH
REVISED BY: CN
DATE REVISED: 7/3/09

LAST REVISION 00-00-00
DATE PLOTTED => 30-JUN-2010
TIME PLOTTED => 16:30

Dist	COUNTY	ROUTE	KILOMETER POST TOTAL PROJECT	SHEET No.	TOTAL SHEETS
10	Sta	219,108	3.4/7.9, 44.3/44.9	291	522

Caltrans Metric

Hassan Marei 6/12/09
REGISTERED CIVIL ENGINEER DATE

6-28-10
PLANS APPROVAL DATE

REGISTERED PROFESSIONAL ENGINEER HASSAN MAREI No. 35068 Exp. 9/30/10 CIVIL STATE OF CALIFORNIA

THE STATE OF CALIFORNIA OR ITS OFFICERS OR AGENTS SHALL NOT BE RESPONSIBLE FOR THE ACCURACY OR COMPLETENESS OF ELECTRONIC COPIES OF THIS PLAN SHEET.

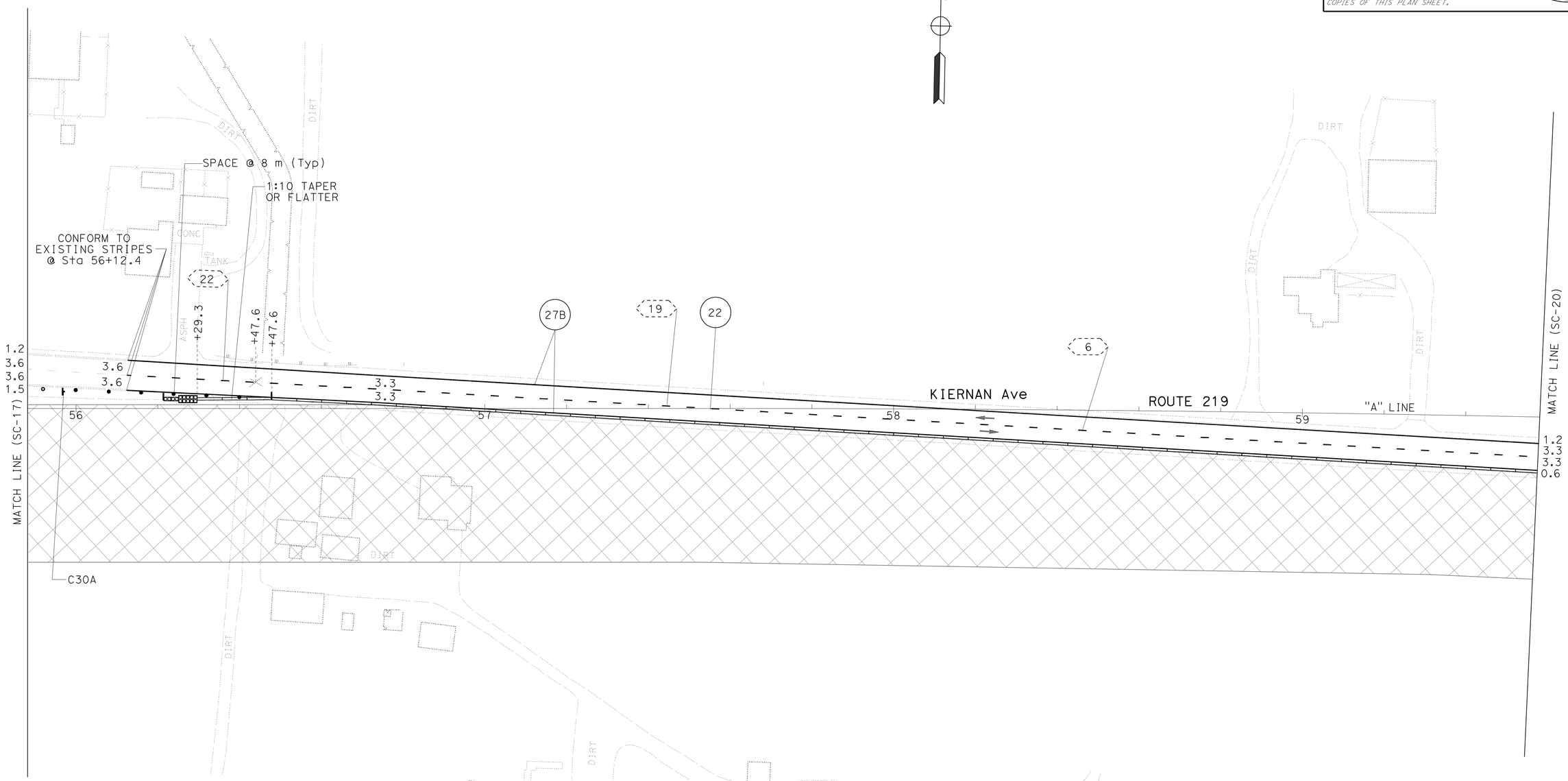

ALL DIMENSIONS ARE IN METERS
UNLESS OTHERWISE SHOWN

STAGE CONSTRUCTION AND TRAFFIC HANDLING PLAN
(STAGE 1)

SCALE 1:500

SC-19

THIS PLAN ACCURATE FOR STAGE CONSTRUCTION AND TRAFFIC HANDLING WORK ONLY.

CALCULATED-DESIGNED BY	CECILE NGUYEN
CHECKED BY	QUAN H TRINH
REVISED BY	CN
DATE REVISED	7/3/09
FUNCTIONAL SUPERVISOR	HASSAN MAREI

STATE OF CALIFORNIA - DEPARTMENT OF TRANSPORTATION
Caltrans
TRAFFIC DESIGN

LAST REVISION 00-00-00 | DATE PLOTTED => 30-JUN-2010 | TIME PLOTTED => 16:30

Dist	COUNTY	ROUTE	KILOMETER POST TOTAL PROJECT	SHEET No.	TOTAL SHEETS
10	Sta	219,108	3.4/7.9, 44.3/44.9	292	522

Caltrans Metric

REGISTERED CIVIL ENGINEER — DATE 6/12/09

6-28-10
PLANS APPROVAL DATE

REGISTERED PROFESSIONAL ENGINEER HASSAN MAREI No. 35068 Exp. 9/30/10 CIVIL STATE OF CALIFORNIA

THE STATE OF CALIFORNIA OR ITS OFFICERS OR AGENTS SHALL NOT BE RESPONSIBLE FOR THE ACCURACY OR COMPLETENESS OF ELECTRONIC COPIES OF THIS PLAN SHEET.

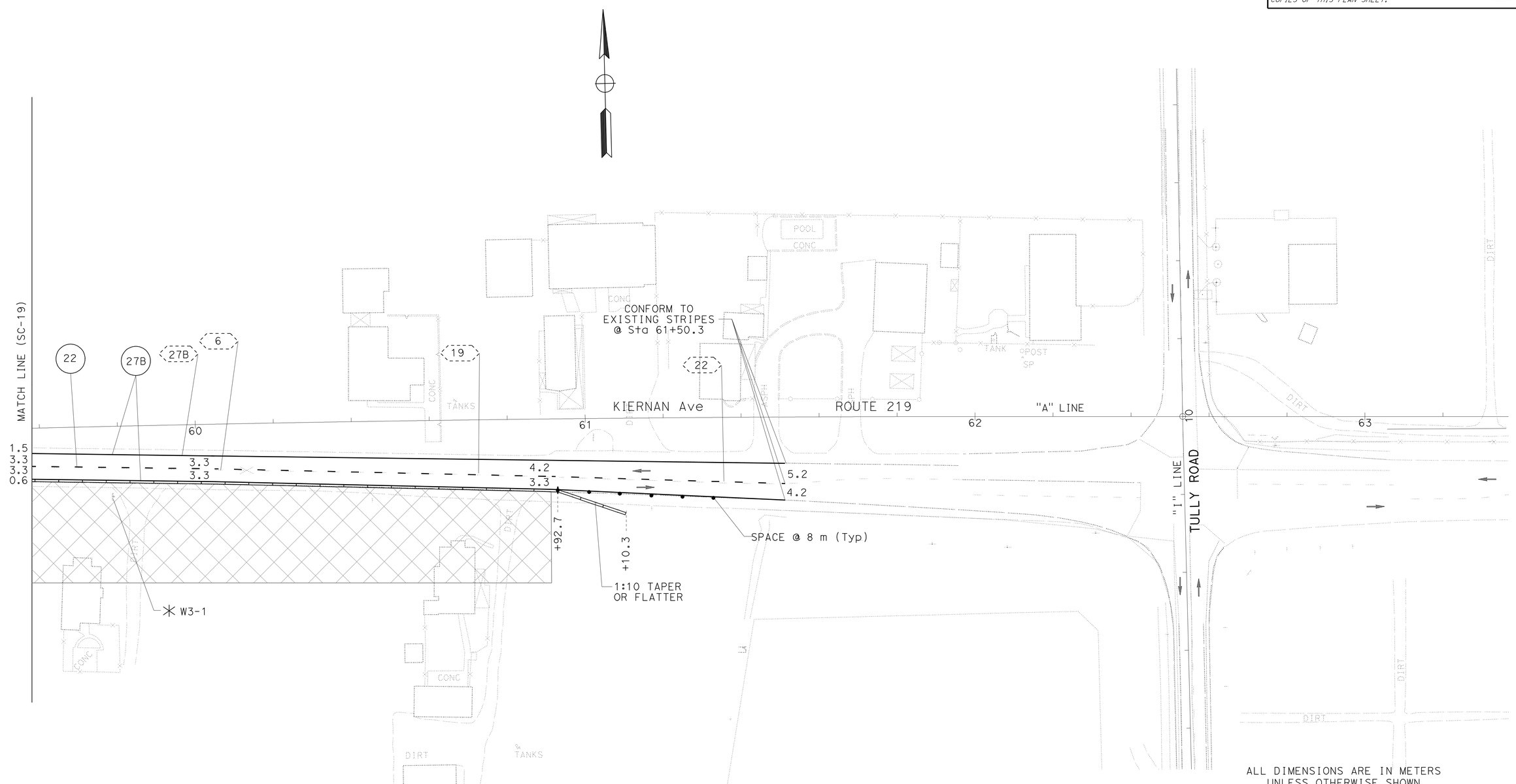

ALL DIMENSIONS ARE IN METERS UNLESS OTHERWISE SHOWN

STAGE CONSTRUCTION AND TRAFFIC HANDLING PLAN
(STAGE 1)

SCALE 1:500

SC-20

THIS PLAN ACCURATE FOR STAGE CONSTRUCTION AND TRAFFIC HANDLING WORK ONLY.

FUNCTIONAL SUPERVISOR	HASSAN MAREI	CALCULATED-DESIGNED BY	CECILE NGUYEN
		CHECKED BY	QUAN H TRINH
REVISED BY	CN		
DATE REVISED	7/3/09		

STATE OF CALIFORNIA - DEPARTMENT OF TRANSPORTATION
Caltrans
TRAFFIC DESIGN

LAST REVISION 00-00-00 | DATE PLOTTED => 30-JUN-2010 | TIME PLOTTED => 16:31

Dist	COUNTY	ROUTE	KILOMETER POST TOTAL PROJECT	SHEET No.	TOTAL SHEETS
10	Sta	219,108	3.4/7.9, 44.3/44.9	293	522

Caltrans Metric

Hassan Marei 6/12/09
REGISTERED CIVIL ENGINEER DATE

6-28-10
PLANS APPROVAL DATE

REGISTERED PROFESSIONAL ENGINEER HASSAN MAREI No. 35068 Exp. 9/30/10 CIVIL STATE OF CALIFORNIA

THE STATE OF CALIFORNIA OR ITS OFFICERS OR AGENTS SHALL NOT BE RESPONSIBLE FOR THE ACCURACY OR COMPLETENESS OF ELECTRONIC COPIES OF THIS PLAN SHEET.

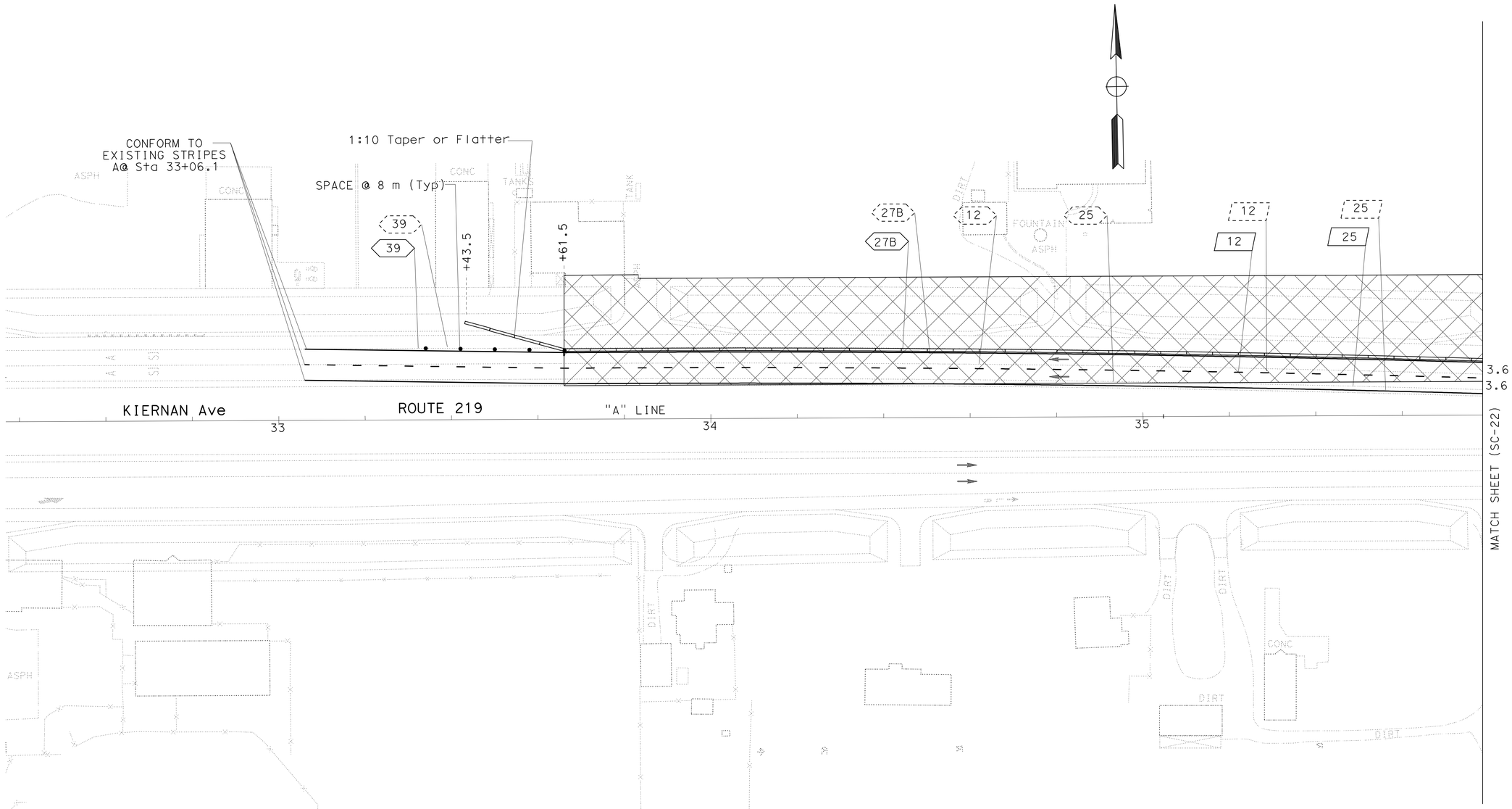

ALL DIMENSIONS ARE IN METERS
UNLESS OTHERWISE SHOWN

STAGE CONSTRUCTION AND TRAFFIC HANDLING PLAN
(STAGE 2A)

SCALE 1:500

SC-21

THIS PLAN ACCURATE FOR STAGE CONSTRUCTION AND TRAFFIC HANDLING WORK ONLY.

CALCULATED-DESIGNED BY	CECILE NGUYEN
CHECKED BY	QUAN H TRINH
REVISED BY	CN
DATE REVISED	7/3/09
FUNCTIONAL SUPERVISOR	HASSAN MAREI

STATE OF CALIFORNIA - DEPARTMENT OF TRANSPORTATION
Caltrans TRAFFIC DESIGN

LAST REVISION 00-00-00 | DATE PLOTTED => 30-JUN-2010 | TIME PLOTTED => 16:31

Dist	COUNTY	ROUTE	KILOMETER POST TOTAL PROJECT	SHEET No.	TOTAL SHEETS
10	Sta	219,108	3.4/7.9, 44.3/44.9	294	522

Hassan Marei 6/12/09
REGISTERED CIVIL ENGINEER DATE

6-28-10
PLANS APPROVAL DATE

REGISTERED PROFESSIONAL ENGINEER HASSAN MAREI No. 35068 Exp. 9/30/10 CIVIL STATE OF CALIFORNIA

THE STATE OF CALIFORNIA OR ITS OFFICERS OR AGENTS SHALL NOT BE RESPONSIBLE FOR THE ACCURACY OR COMPLETENESS OF ELECTRONIC COPIES OF THIS PLAN SHEET.

Caltrans Metric

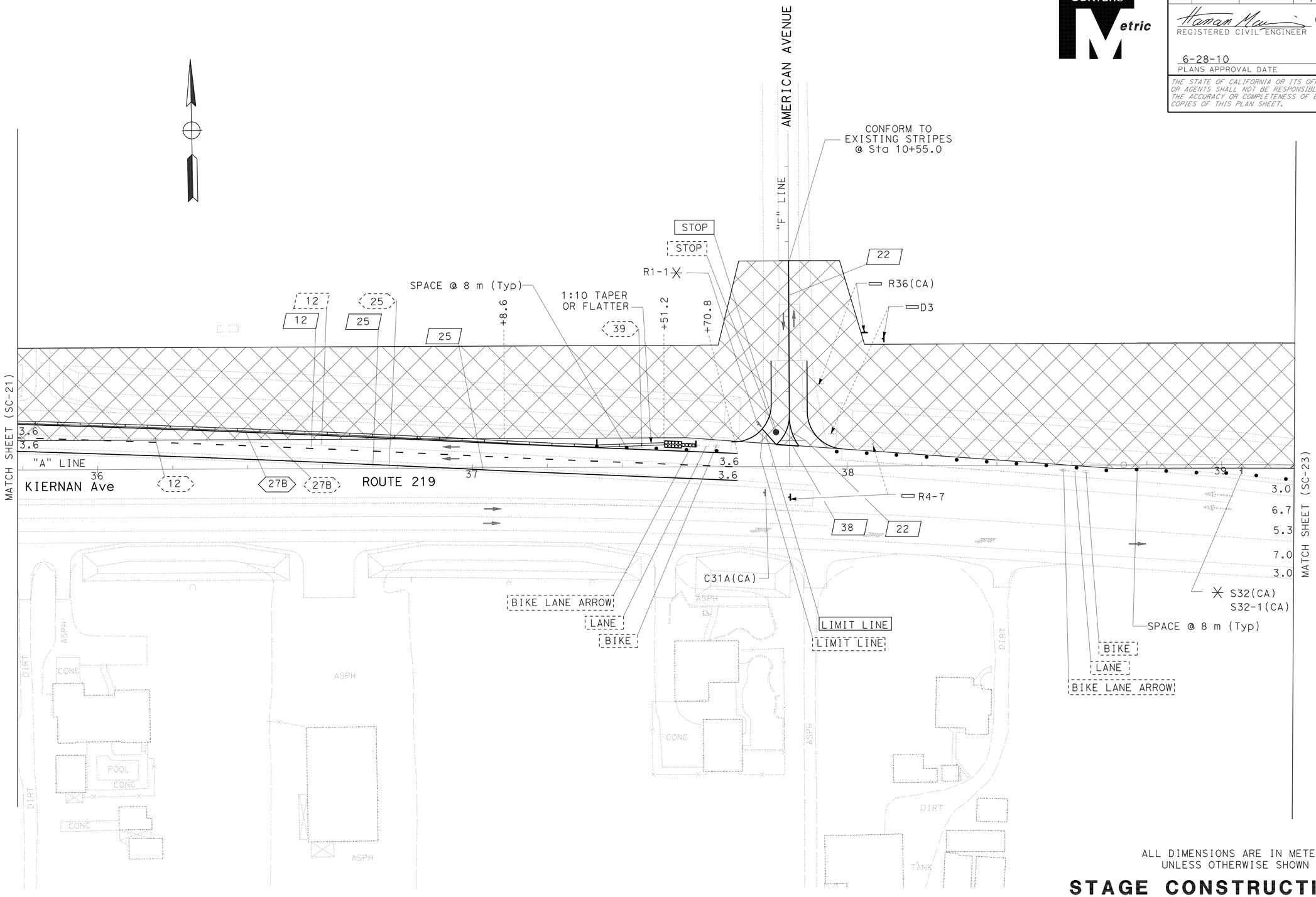

ALL DIMENSIONS ARE IN METERS
UNLESS OTHERWISE SHOWN

STAGE CONSTRUCTION AND TRAFFIC HANDLING PLAN
(STAGE 2A)

SCALE 1:500

SC-22

THIS PLAN ACCURATE FOR STAGE CONSTRUCTION AND TRAFFIC HANDLING WORK ONLY.

CALCULATED-DESIGNED BY	CECILE NGUYEN
CHECKED BY	QUAN H TRINH
REVISED BY	CN
DATE REVISED	7/3/09
FUNCTIONAL SUPERVISOR	HASSAN MAREI

STATE OF CALIFORNIA - DEPARTMENT OF TRANSPORTATION
Caltrans TRAFFIC DESIGN

LAST REVISION 00-00-00
DATE PLOTTED => 30-JUN-2010
TIME PLOTTED => 16:31

Dist	COUNTY	ROUTE	KILOMETER POST TOTAL PROJECT	SHEET No.	TOTAL SHEETS
10	Sta	219,108	3.4/7.9, 44.3/44.9	295	522

Caltrans Metric

REGISTERED CIVIL ENGINEER — DATE 6/12/09

6-28-10
PLANS APPROVAL DATE

REGISTERED PROFESSIONAL ENGINEER HASSAN MAREI No. 35068 Exp. 9/30/10 CIVIL STATE OF CALIFORNIA

THE STATE OF CALIFORNIA OR ITS OFFICERS OR AGENTS SHALL NOT BE RESPONSIBLE FOR THE ACCURACY OR COMPLETENESS OF ELECTRONIC COPIES OF THIS PLAN SHEET.

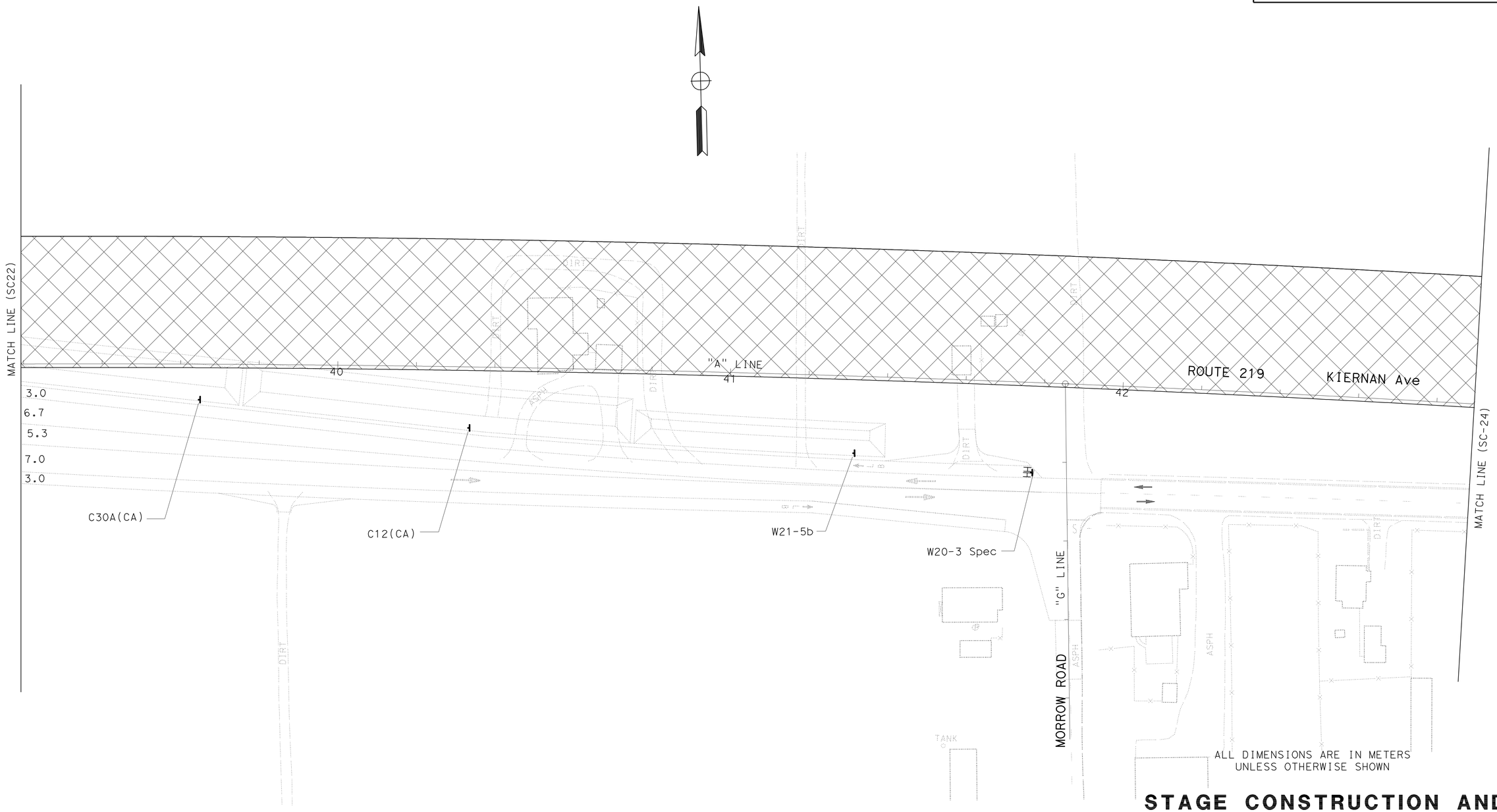

ALL DIMENSIONS ARE IN METERS UNLESS OTHERWISE SHOWN

STAGE CONSTRUCTION AND TRAFFIC HANDLING PLAN

(STAGE 2A)

SCALE 1:500

SC-23

THIS PLAN ACCURATE FOR STAGE CONSTRUCTION AND TRAFFIC HANDLING WORK ONLY.

CALCULATED-DESIGNED BY	CECILE NGUYEN
CHECKED BY	QUAN H TRINH
REVISED BY	CN
DATE REVISED	7/3/09
FUNCTIONAL SUPERVISOR	HASSAN MAREI

STATE OF CALIFORNIA - DEPARTMENT OF TRANSPORTATION
Caltrans
TRAFFIC DESIGN

LAST REVISION 00-00-00 | DATE PLOTTED => 30-JUN-2010 | TIME PLOTTED => 16:31

Dist	COUNTY	ROUTE	KILOMETER POST TOTAL PROJECT	SHEET No.	TOTAL SHEETS
10	Sta	219,108	3.4/7.9, 44.3/44.9	296	522

Caltrans Metric

Hassan Marei 6/12/09
REGISTERED CIVIL ENGINEER DATE

6-28-10
PLANS APPROVAL DATE

REGISTERED PROFESSIONAL ENGINEER HASSAN MAREI No. 35068 Exp. 9/30/10 CIVIL STATE OF CALIFORNIA

THE STATE OF CALIFORNIA OR ITS OFFICERS OR AGENTS SHALL NOT BE RESPONSIBLE FOR THE ACCURACY OR COMPLETENESS OF ELECTRONIC COPIES OF THIS PLAN SHEET.

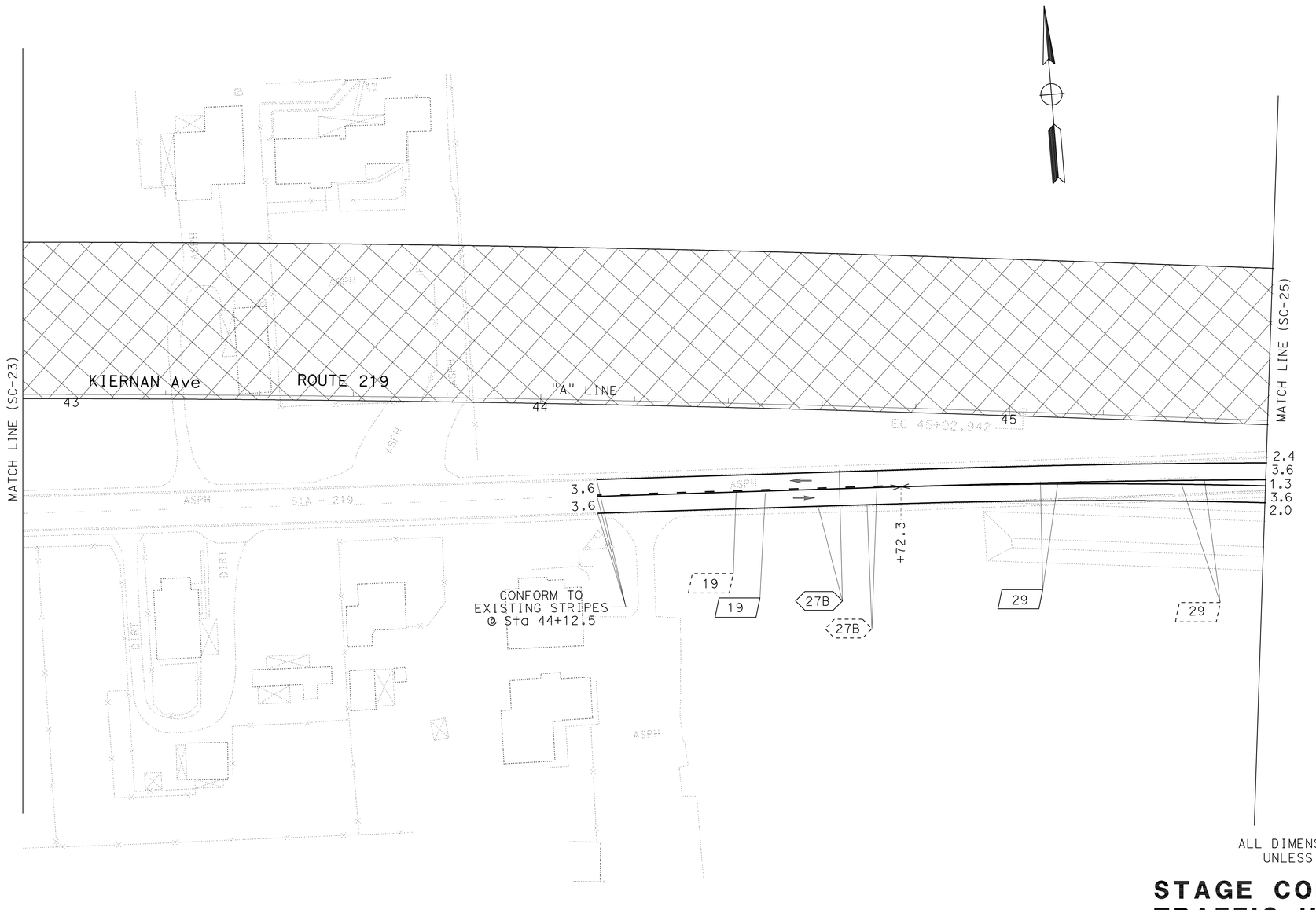

ALL DIMENSIONS ARE IN METERS UNLESS OTHERWISE SHOWN

STAGE CONSTRUCTION AND TRAFFIC HANDLING PLAN

(STAGE 2A)

SCALE 1:500

SC-24

THIS PLAN ACCURATE FOR STAGE CONSTRUCTION AND TRAFFIC HANDLING WORK ONLY.

STATE OF CALIFORNIA - DEPARTMENT OF TRANSPORTATION
Caltrans **TRAFFIC DESIGN**

FUNCTIONAL SUPERVISOR: HASSAN MAREI
CALCULATED-DESIGNED BY: CECILE NGUYEN
CHECKED BY: QUAN H TRINH
REVISED BY: CN
DATE REVISED: 7/3/09

LAST REVISION 00-00-00 | DATE PLOTTED => 30-JUN-2010 | TIME PLOTTED => 16:31

Dist	COUNTY	ROUTE	KILOMETER POST TOTAL PROJECT	SHEET No.	TOTAL SHEETS
10	Sta	219,108	3.4/7.9, 44.3/44.9	297	522

Caltrans Metric

REGISTERED CIVIL ENGINEER — DATE 6/12/09

6-28-10
PLANS APPROVAL DATE

REGISTERED PROFESSIONAL ENGINEER HASSAN MAREI No. 35068 Exp. 9/30/10 CIVIL STATE OF CALIFORNIA

THE STATE OF CALIFORNIA OR ITS OFFICERS OR AGENTS SHALL NOT BE RESPONSIBLE FOR THE ACCURACY OR COMPLETENESS OF ELECTRONIC COPIES OF THIS PLAN SHEET.

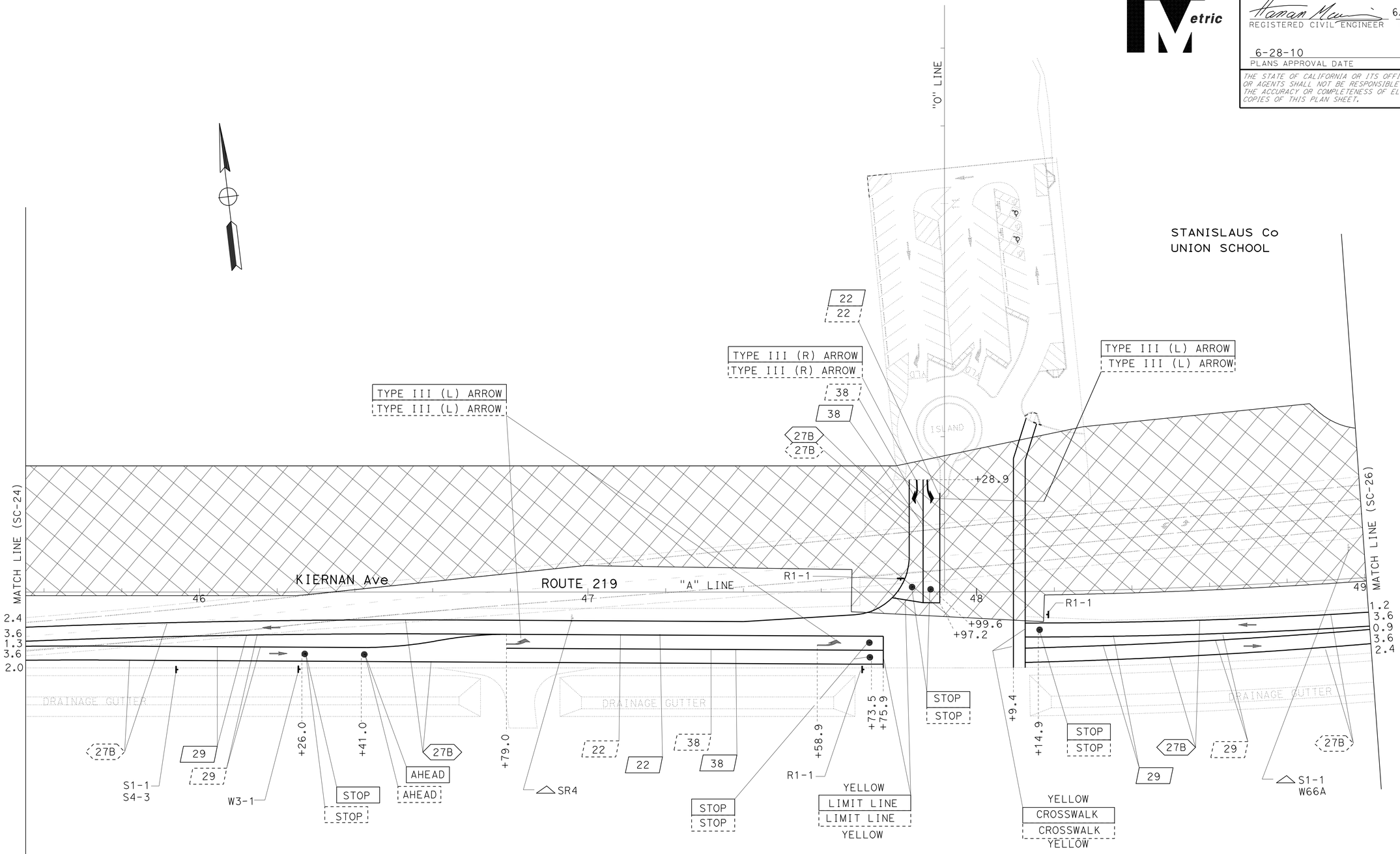

ALL DIMENSIONS ARE IN METERS
UNLESS OTHERWISE SHOWN

STAGE CONSTRUCTION AND TRAFFIC HANDLING PLAN
(STAGE 2A)

SCALE 1:500

SC-25

THIS PLAN ACCURATE FOR STAGE CONSTRUCTION AND TRAFFIC HANDLING WORK ONLY.

CALCULATED-DESIGNED BY	CECILE NGUYEN
CHECKED BY	QUAN H TRINH
REVISED BY	CN
DATE REVISED	7/3/09
FUNCTIONAL SUPERVISOR	HASSAN MAREI

STATE OF CALIFORNIA - DEPARTMENT OF TRANSPORTATION
Caltrans
TRAFFIC DESIGN

LAST REVISION 00-00-00 | DATE PLOTTED => 30-JUN-2010 | TIME PLOTTED => 16:31

Dist	COUNTY	ROUTE	KILOMETER POST TOTAL PROJECT	SHEET No.	TOTAL SHEETS
10	Sta	219,108	3.4/7.9, 44.3/44.9	298	522

Caltrans Metric

Hassan Marei 6/12/09
REGISTERED CIVIL ENGINEER DATE

6-28-10
PLANS APPROVAL DATE

REGISTERED PROFESSIONAL ENGINEER HASSAN MAREI No. 35068 Exp. 9/30/10 CIVIL STATE OF CALIFORNIA

THE STATE OF CALIFORNIA OR ITS OFFICERS OR AGENTS SHALL NOT BE RESPONSIBLE FOR THE ACCURACY OR COMPLETENESS OF ELECTRONIC COPIES OF THIS PLAN SHEET.

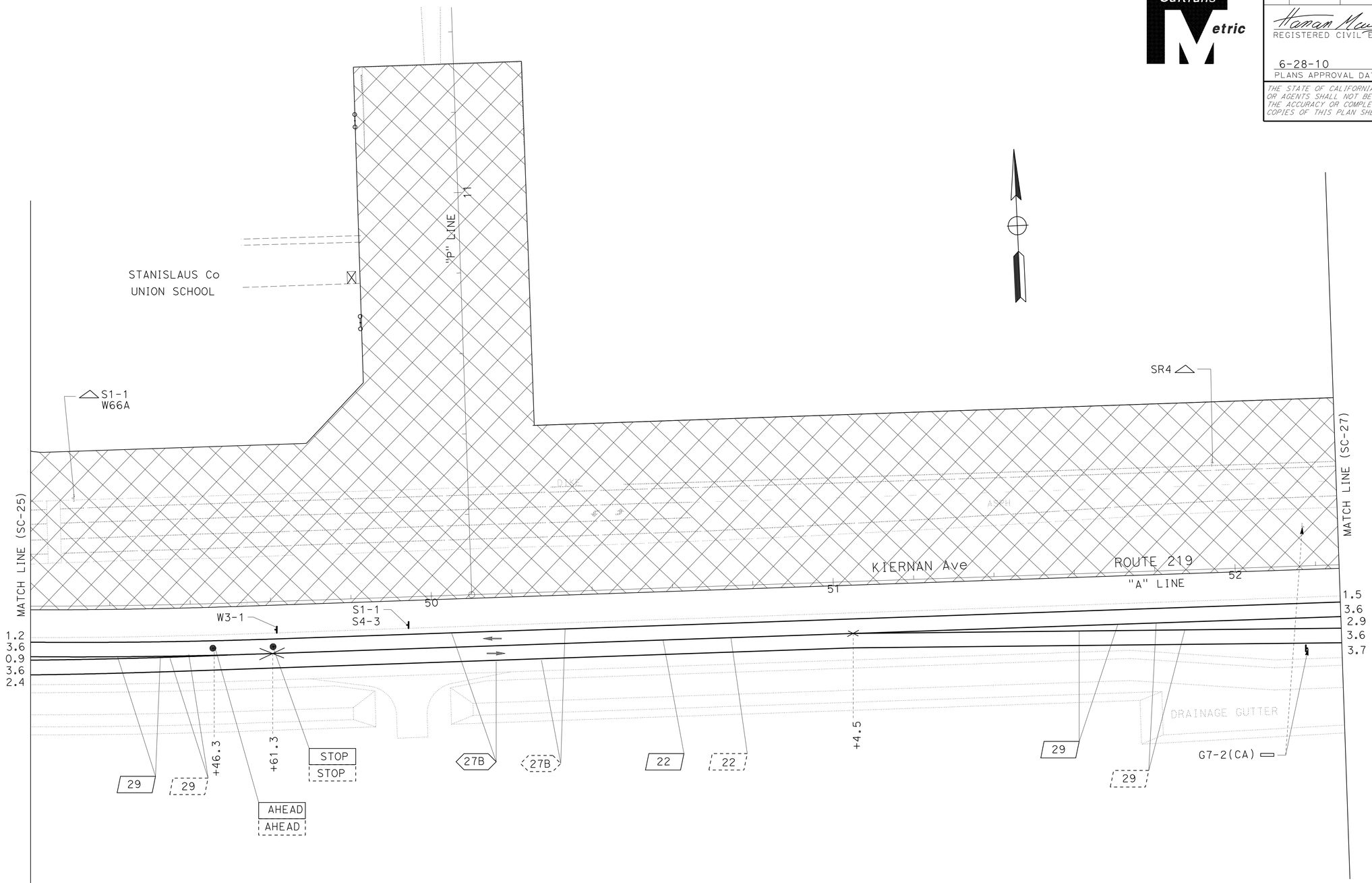

ALL DIMENSIONS ARE IN METERS
UNLESS OTHERWISE SHOWN

STAGE CONSTRUCTION AND TRAFFIC HANDLING PLAN
(STAGE 2A)

THIS PLAN ACCURATE FOR STAGE CONSTRUCTION AND TRAFFIC HANDLING WORK ONLY.

SCALE 1:500

SC-26

CALCULATED-DESIGNED BY	CECILE NGUYEN
CHECKED BY	QUAN H TRINH
REVISED BY	CN
DATE REVISED	7/3/09
FUNCTIONAL SUPERVISOR	HASSAN MAREI

STATE OF CALIFORNIA - DEPARTMENT OF TRANSPORTATION
Caltrans **TRAFFIC DESIGN**

LAST REVISION 00-00-00 | DATE PLOTTED => 30-JUN-2010 | TIME PLOTTED => 16:31

Dist	COUNTY	ROUTE	KILOMETER POST TOTAL PROJECT	SHEET No.	TOTAL SHEETS
10	Sta	219,108	3.4/7.9, 44.3/44.9	299	522

Hassan Marei 6/12/09
REGISTERED CIVIL ENGINEER DATE

6-28-10
PLANS APPROVAL DATE

REGISTERED PROFESSIONAL ENGINEER HASSAN MAREI No. 35068 Exp. 9/30/10 CIVIL STATE OF CALIFORNIA

THE STATE OF CALIFORNIA OR ITS OFFICERS OR AGENTS SHALL NOT BE RESPONSIBLE FOR THE ACCURACY OR COMPLETENESS OF ELECTRONIC COPIES OF THIS PLAN SHEET.

Caltrans Metric

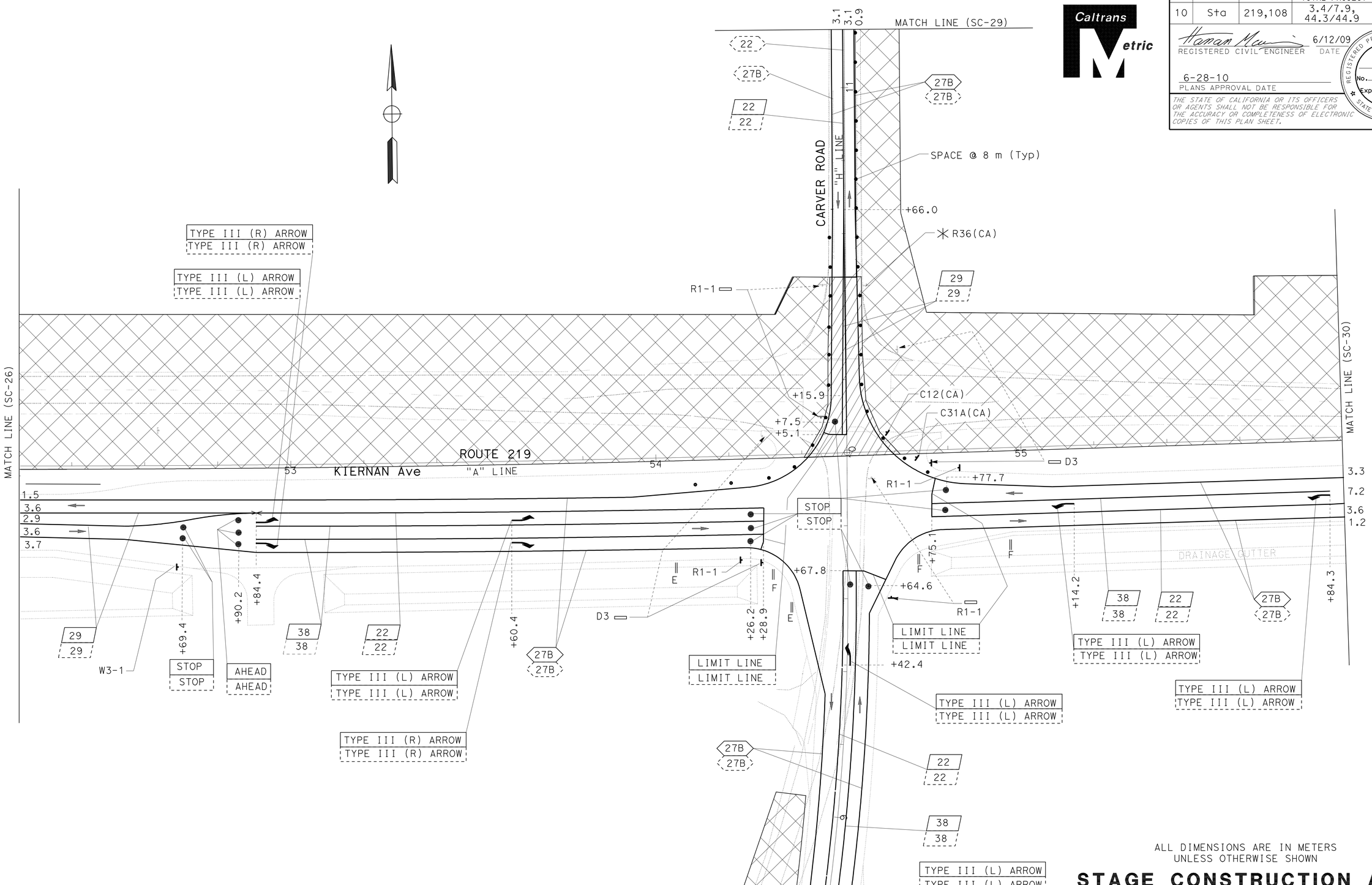

ALL DIMENSIONS ARE IN METERS
UNLESS OTHERWISE SHOWN

STAGE CONSTRUCTION AND TRAFFIC HANDLING PLAN
(STAGE 2A)

SCALE 1:500

SC-27

THIS PLAN ACCURATE FOR STAGE CONSTRUCTION AND TRAFFIC HANDLING WORK ONLY.

REVISED BY	DATE REVISED
CN	7/3/09

CALCULATED-DESIGNED BY: CECILE NGUYEN
CHECKED BY: QUAN H TRINH
FUNCTIONAL SUPERVISOR: HASSAN MAREI

STATE OF CALIFORNIA - DEPARTMENT OF TRANSPORTATION
Caltrans TRAFFIC DESIGN

LAST REVISION 00-00-00 DATE PLOTTED => 30-JUN-2010 TIME PLOTTED => 16:31

Dist	COUNTY	ROUTE	KILOMETER POST TOTAL PROJECT	SHEET No.	TOTAL SHEETS
10	Sta	219,108	3.4/7.9, 44.3/44.9	300	522

Caltrans Metric

Hassan Marei 6/12/09
REGISTERED CIVIL ENGINEER DATE

6-28-10
PLANS APPROVAL DATE

REGISTERED PROFESSIONAL ENGINEER HASSAN MAREI No. 35068 Exp. 9/30/10 CIVIL STATE OF CALIFORNIA

THE STATE OF CALIFORNIA OR ITS OFFICERS OR AGENTS SHALL NOT BE RESPONSIBLE FOR THE ACCURACY OR COMPLETENESS OF ELECTRONIC COPIES OF THIS PLAN SHEET.

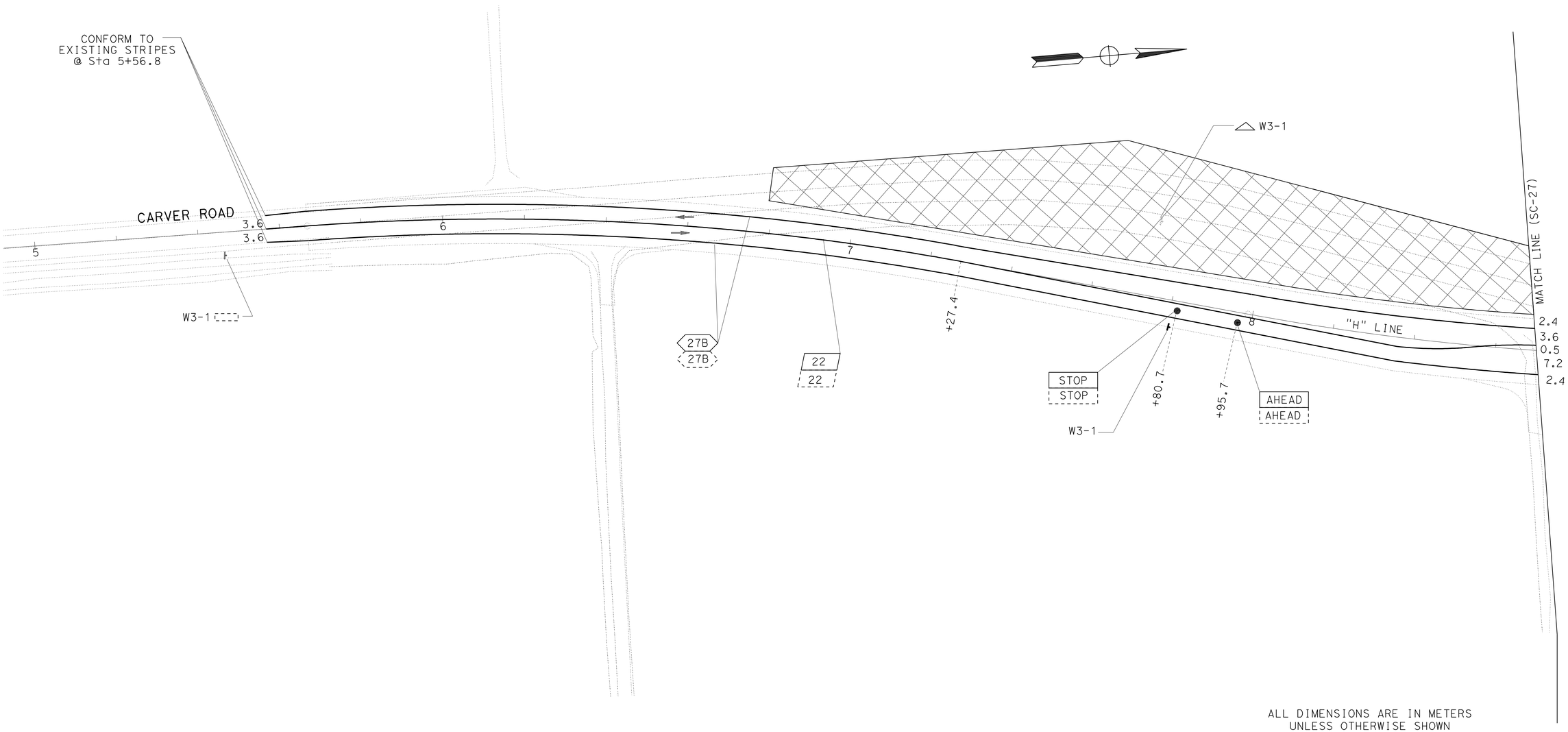

ALL DIMENSIONS ARE IN METERS
UNLESS OTHERWISE SHOWN

STAGE CONSTRUCTION AND TRAFFIC HANDLING PLAN
(STAGE 2A)

SCALE 1:500

SC-28

THIS PLAN ACCURATE FOR STAGE CONSTRUCTION AND TRAFFIC HANDLING WORK ONLY.

REVISED BY	CN
DATE REVISED	7/3/09
CALCULATED-DESIGNED BY	CECILE NGUYEN
CHECKED BY	QUAN H TRINH
FUNCTIONAL SUPERVISOR	HASSAN MAREI

STATE OF CALIFORNIA - DEPARTMENT OF TRANSPORTATION
Caltrans TRAFFIC DESIGN

LAST REVISION 00-00-00 | DATE PLOTTED => 30-JUN-2010 | TIME PLOTTED => 16:32