Dist	COUNTY	ROUTE	POST MILES TOTAL PROJECT	SHEET No.	TOTAL SHEETS
10	Sta	99	15.1/17.0	1	176

ACNH-P099(544)E

STATE OF CALIFORNIA
DEPARTMENT OF TRANSPORTATION

PROJECT PLANS FOR CONSTRUCTION ON
STATE HIGHWAY
IN STANISLAUS COUNTY
IN MODESTO
AT VARIOUS LOCATIONS FROM 0.2 MILE SOUTH OF TUOLUMNE BOULEVARD UNDERCROSSING TO 0.2 MILE NORTH OF KANSAS AVENUE OVERCROSSING

TO BE SUPPLEMENTED BY STANDARD PLANS DATED MAY 2006

INDEX OF PLANS

SHEET No.	DESCRIPTION
1	TITLE AND LOCATION MAP
2-15	TYPICAL CROSS SECTIONS
16	PROJECT CONTROL
17-23	LAYOUTS
24-32	SUPERELEVATION DIAGRAMS AND PROFILES
33-40	CONSTRUCTION DETAILS
41-47	WATER POLLUTION CONTROL PLANS
48-50	EROSION CONTROL PLANS AND QUANTITIES
51-74	DRAINAGE PLANS, PROFILES, DETAILS AND QUANTITIES
75-81	UTILITY PLANS AND DETAILS
82-91	TRAFFIC HANDLING PLANS AND QUANTITIES
92	CONSTRUCTION AREA SIGNS
93-100	PAVEMENT DELINEATION AND SIGNING PLANS AND QUANTITIES
101-103	SUMMARY OF QUANTITIES
104-109	SIGN DETAILS AND QUANTITIES
110-11	RETAINING WALL PLANS AND QUANTITIES
112-124	HIGHWAY PLANTING
125-133	ELECTRICAL PLANS
134-176	REVISED AND NEW STANDARD PLANS

THE STANDARD PLANS LIST APPLICABLE TO THIS CONTRACT IS INCLUDED IN THE NOTICE TO BIDDERS AND SPECIAL PROVISIONS BOOK.

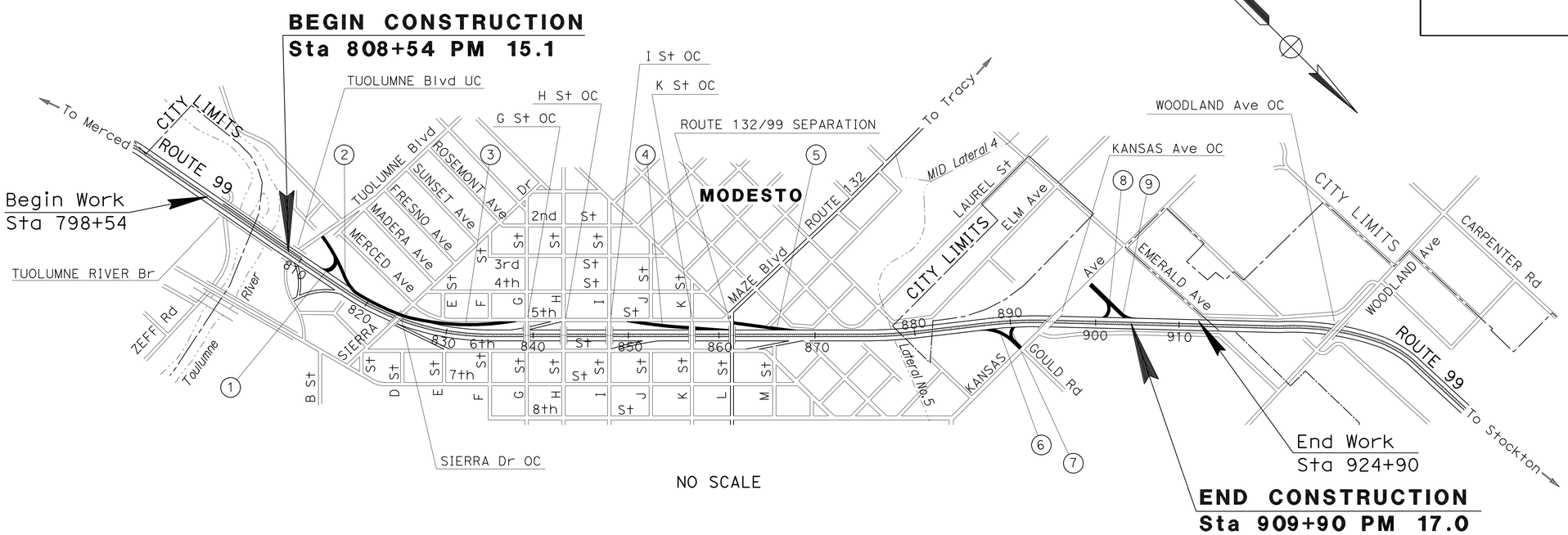

LOCATIONS OF CONSTRUCTION						
No.	COUNTY	ROUTE	POST MILE	DESCRIPTION	DIRECTION	SHEET No.
1	Sta	99	PM 15.1	TUOLUMNE Blvd ON RAMP	SOUTHBOUND	L-1
2	Sta	99	PM 15.3	TUOLUMNE Blvd OFF RAMP	SOUTHBOUND	L-1
3	Sta	99	PM 15.4	5th AND F St ON RAMP	SOUTHBOUND	L-2
4	Sta	99	PM 16.0	5th AND I St OFF RAMP	SOUTHBOUND	L-3
5	Sta	99	PM 16.1	5th AND L St OFF RAMP	SOUTHBOUND	L-4

LOCATIONS OF CONSTRUCTION						
No.	COUNTY	ROUTE	POST MILE	DESCRIPTION	DIRECTION	SHEET No.
6	Sta	99	PM 16.7	KANSAS Ave OFF RAMP	NORTHBOUND	L-5
7	Sta	99	PM 16.8	KANSAS Ave ON RAMP	NORTHBOUND	L-6
8	Sta	99	PM 16.8	KANSAS Ave ON RAMP	SOUTHBOUND	L-7
9	Sta	99	PM 17.0	KANSAS Ave OFF RAMP	SOUTHBOUND	L-7

THE CONTRACTOR SHALL POSSESS THE CLASS (OR CLASSES) OF LICENSE AS SPECIFIED IN THE "NOTICE TO BIDDERS."

PROJECT MANAGER GILBERT BETANCOURT

DESIGN ENGINEER ERNIE PENUNA

Rotimi Adebayo 05-19-10
PROJECT ENGINEER DATE
REGISTERED CIVIL ENGINEER

September 7, 2010
PLANS APPROVAL DATE

REGISTERED PROFESSIONAL ENGINEER ROTIMI D. ADEBAYO No. 69102 Exp. 6/30/12 CIVIL STATE OF CALIFORNIA

THE STATE OF CALIFORNIA OR ITS OFFICERS OR AGENTS SHALL NOT BE RESPONSIBLE FOR THE ACCURACY OR COMPLETENESS OF SCANNED COPIES OF THIS PLAN SHEET.

CONTRACT No.	10-0A6714
PROJECT ID	1000000006

LAST REVISION 05-19-10 DATE PLOTTED => 11-JAN-2011 TIME PLOTTED => 14:53

Dist	COUNTY	ROUTE	POST MILES TOTAL PROJECT	SHEET No.	TOTAL SHEETS
10	Sta	99	15.1/17.0	2	176

REGISTERED CIVIL ENGINEER 05-24-10 DATE

9-7-10
PLANS APPROVAL DATE

REGISTERED PROFESSIONAL ENGINEER ROTIMI D. ADEBAYO No. 69102 Exp. 6/30/12 CIVIL STATE OF CALIFORNIA

THE STATE OF CALIFORNIA OR ITS OFFICERS OR AGENTS SHALL NOT BE RESPONSIBLE FOR THE ACCURACY OR COMPLETENESS OF SCANNED COPIES OF THIS PLAN SHEET.

NOTES:

1. DIMENSIONS OF THE PAVEMENT STRUCTURES (STRUCTURAL SECTIONS) ARE SUBJECT TO TOLERANCES SPECIFIED IN THE STANDARD SPECIFICATIONS.
2. SUPERELEVATION AS SHOWN OR AS DIRECTED BY THE ENGINEER.
3. FOR ACCURATE RIGHT OF WAY AND ACCESS DATA, CONTACT RIGHT OF WAY ENGINEERING AT THE DISTRICT OFFICE.

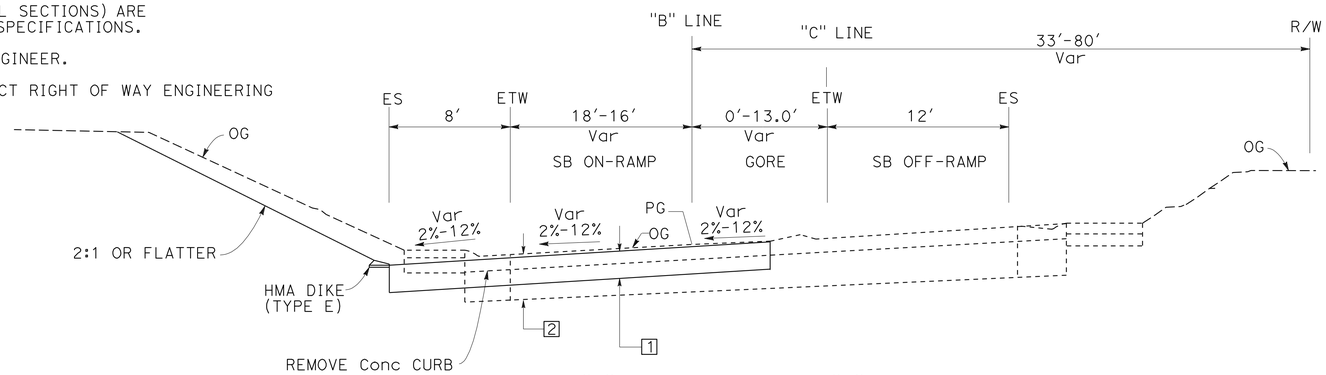

STA "B" 13+92.19 TO STA "B" 14+69.53

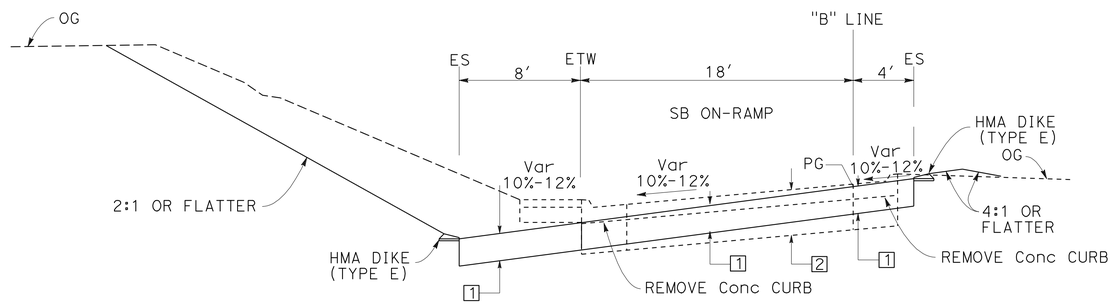

STA "B" 12+00.00 TO STA "B" 13+92.19

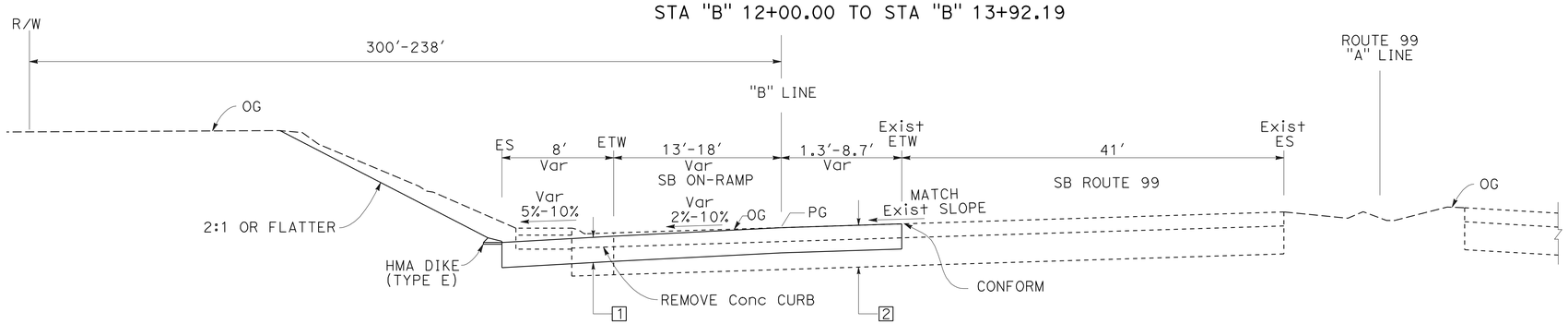

STA "B" 10+80.00 TO STA "B" 12+00.00

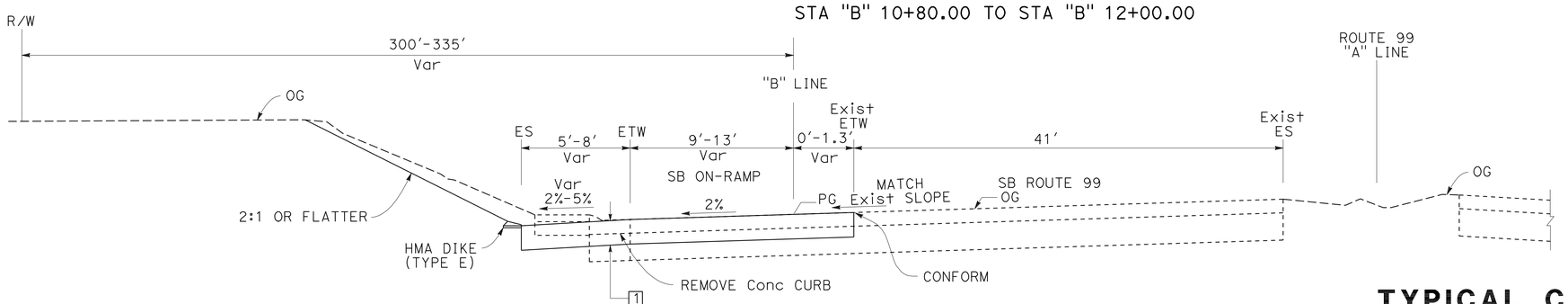

STA "B" 9+09.58 TO STA "B" 10+80.00

LEGEND

1. 0.90' HMA (TYPE A)
2. Exist
   0.25' HMA (TYPE A)
   0.50' CL 2 AB
   0.67' CL 2 AS
3. Exist
   0.25' AC (TYPE A)
   0.83' CL 2 AS
4. Exist
   0.20' HMA (TYPE A)
   0.50' CL 2 AB
   0.60' CL 2 AS
5. Exist
   0.20' HMA (TYPE A)
   0.50' CL 2 AB
   0.33' CL 2 AS
6. Exist
   0.20' AC (TYPE A)
   0.50' CL 2 AS
7. Exist
   0.30' AC (TYPE A)
   0.50' CL 2 AS
8. 0.20' COLD PLANE AC PAVEMENT
   0.20' HMA (TYPE A)

TYPICAL CROSS SECTIONS

NO SCALE

X-1

TUOLUMNE Blvd SB ON-RAMP (LOCATION 1)

STATE OF CALIFORNIA - DEPARTMENT OF TRANSPORTATION
Caltrans
06-DESIGN

FUNCTIONAL SUPERVISOR: ERNIE PENUNA
CALCULATED-DESIGNED BY: JOSEPH VALDIVIA
CHECKED BY: ROTIMI ADEBAYO
REVISED BY / DATE REVISED

LAST REVISION 05-17-10
DATE PLOTTED => 08-SEP-2010
TIME PLOTTED => 09:10

Dist	COUNTY	ROUTE	POST MILES TOTAL PROJECT	SHEET No.	TOTAL SHEETS
10	Sta	99	15.1/17.0	3	176

REGISTERED CIVIL ENGINEER 05-24-10 DATE

9-7-10
PLANS APPROVAL DATE

REGISTERED PROFESSIONAL ENGINEER ROTIMI D. ADEBAYO No. 69102 Exp. 6/30/12 CIVIL STATE OF CALIFORNIA

THE STATE OF CALIFORNIA OR ITS OFFICERS OR AGENTS SHALL NOT BE RESPONSIBLE FOR THE ACCURACY OR COMPLETENESS OF SCANNED COPIES OF THIS PLAN SHEET.

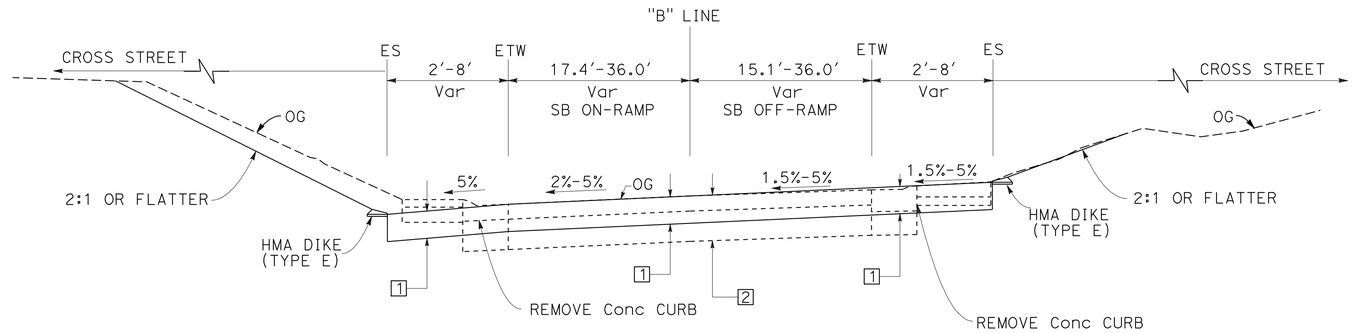

STA "B" 17+80.00 TO STA "B" 18+40.88

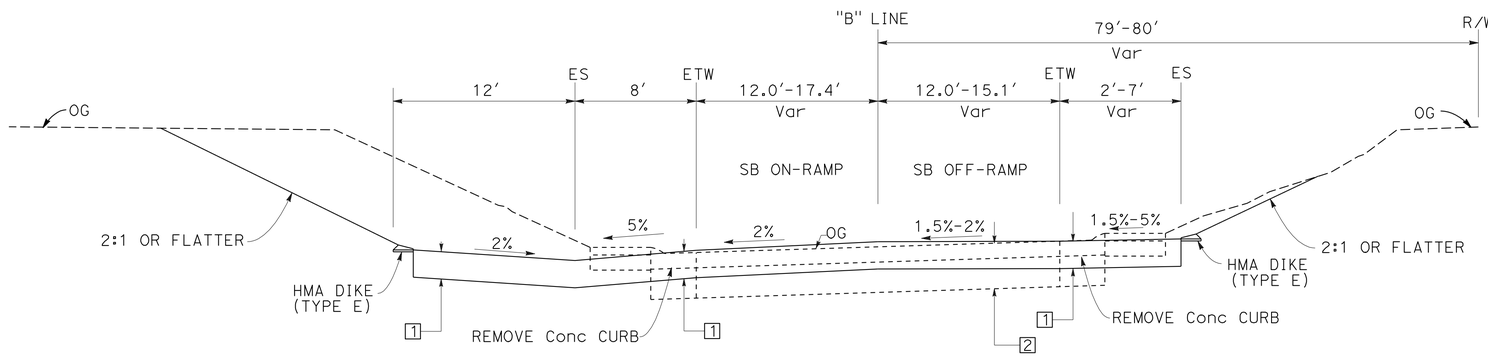

STA "B" 16+20.00 TO STA "B" 17+80.00

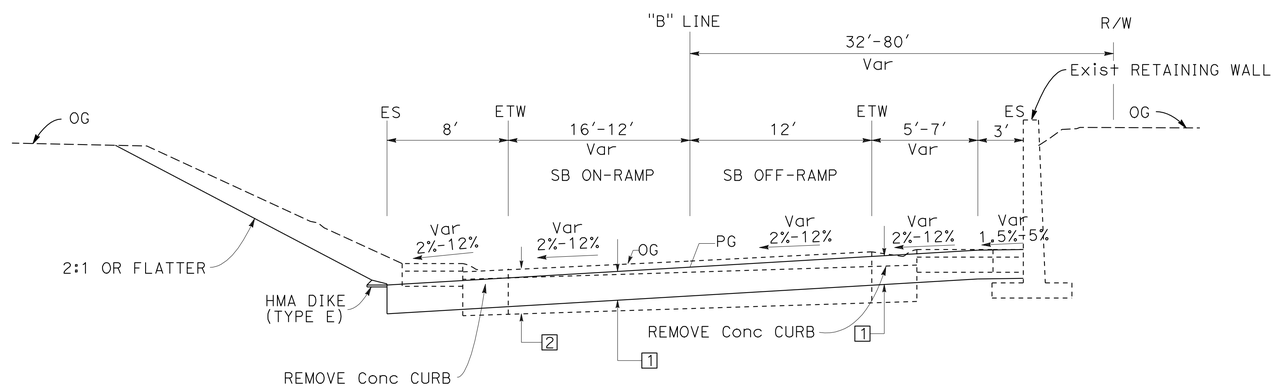

STA "B" 14+69.53 TO STA "B" 16+20.00

TUOLUMNE Blvd SB ON-RAMP (LOCATION 1)

TYPICAL CROSS SECTIONS

NO SCALE

X-2

STATE OF CALIFORNIA - DEPARTMENT OF TRANSPORTATION
Caltrans
06-DESIGN

FUNCTIONAL SUPERVISOR: ERNIE PENUNA
CALCULATED-DESIGNED BY: JOSEPH VALDIVIA
CHECKED BY: ROTIMI ADEBAYO
REVISED BY
DATE REVISED

LAST REVISION 05-19-10
DATE PLOTTED => 08-SEP-2010
TIME PLOTTED => 09:10

Dist	COUNTY	ROUTE	POST MILES TOTAL PROJECT	SHEET No.	TOTAL SHEETS
10	Sta	99	15.1/17.0	4	176

REGISTERED CIVIL ENGINEER 05-24-10 DATE

9-7-10
PLANS APPROVAL DATE

REGISTERED PROFESSIONAL ENGINEER ROTIMI D. ADEBAYO No. 69102 Exp. 6/30/12 CIVIL STATE OF CALIFORNIA

THE STATE OF CALIFORNIA OR ITS OFFICERS OR AGENTS SHALL NOT BE RESPONSIBLE FOR THE ACCURACY OR COMPLETENESS OF SCANNED COPIES OF THIS PLAN SHEET.

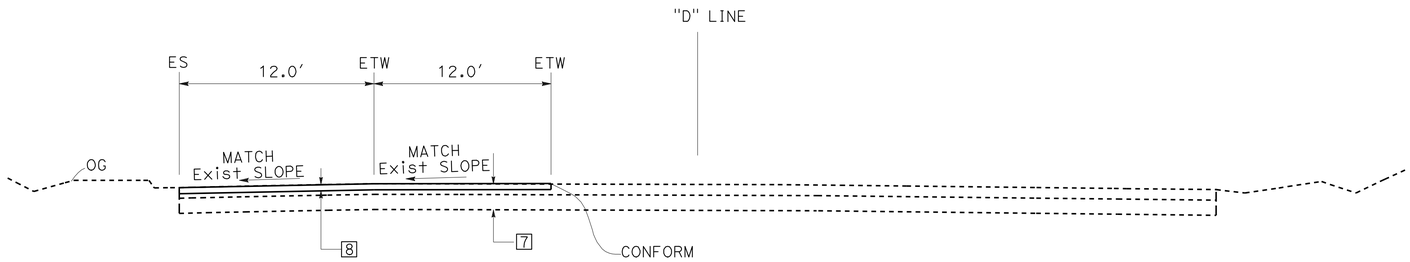

STA "D" 96+25.83 TO STA "D" 996+62.50

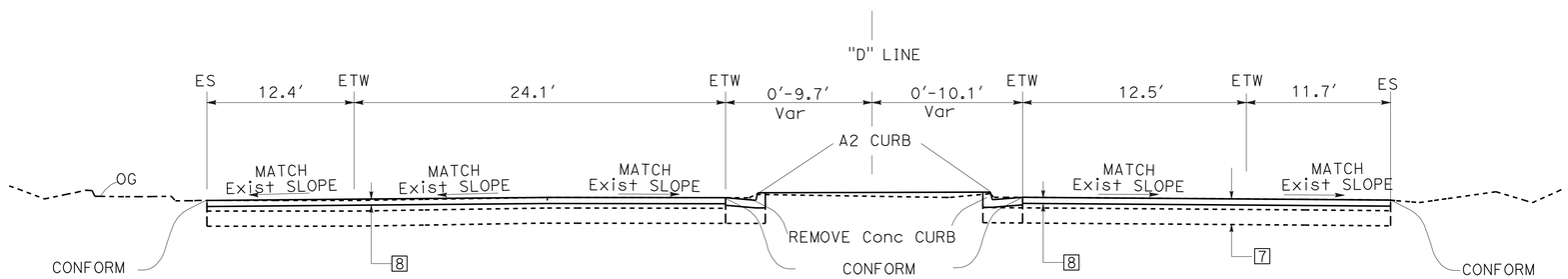

STA "D" 95+80.00 TO STA "D" 96+25.83

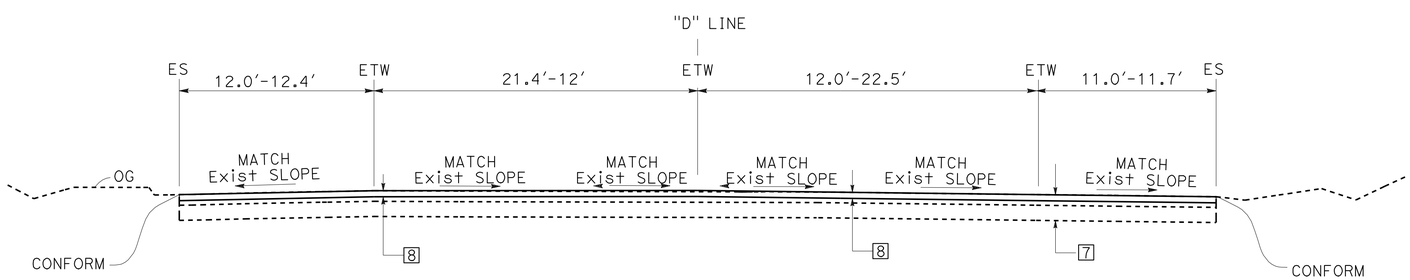

STA "D" 95+04.91 TO STA "D" 95+80.00

TUOLUMNE Blvd (LOCATION 1)

TUOLUMNE Blvd SB ON-RAMP (LOCATION 1)

TYPICAL CROSS SECTIONS

NO SCALE **X-3**

STATE OF CALIFORNIA - DEPARTMENT OF TRANSPORTATION
Caltrans
06-DESIGN

FUNCTIONAL SUPERVISOR: ERNIE PENUNA
CALCULATED-DESIGNED BY: JOSEPH VALDIVIA
CHECKED BY: ROTIMI ADEBAYO
REVISED BY
DATE REVISED

LAST REVISION 05-17-10
DATE PLOTTED => 08-SEP-2010
TIME PLOTTED => 09:10

Dist	COUNTY	ROUTE	POST MILES TOTAL PROJECT	SHEET No.	TOTAL SHEETS
10	Sta	99	15.1/17.0	5	176

REGISTERED CIVIL ENGINEER 05-24-10 DATE

9-7-10
PLANS APPROVAL DATE

REGISTERED PROFESSIONAL ENGINEER ROTIMI D. ADEBAYO No. 69102 Exp. 6/30/12 CIVIL STATE OF CALIFORNIA

THE STATE OF CALIFORNIA OR ITS OFFICERS OR AGENTS SHALL NOT BE RESPONSIBLE FOR THE ACCURACY OR COMPLETENESS OF SCANNED COPIES OF THIS PLAN SHEET.

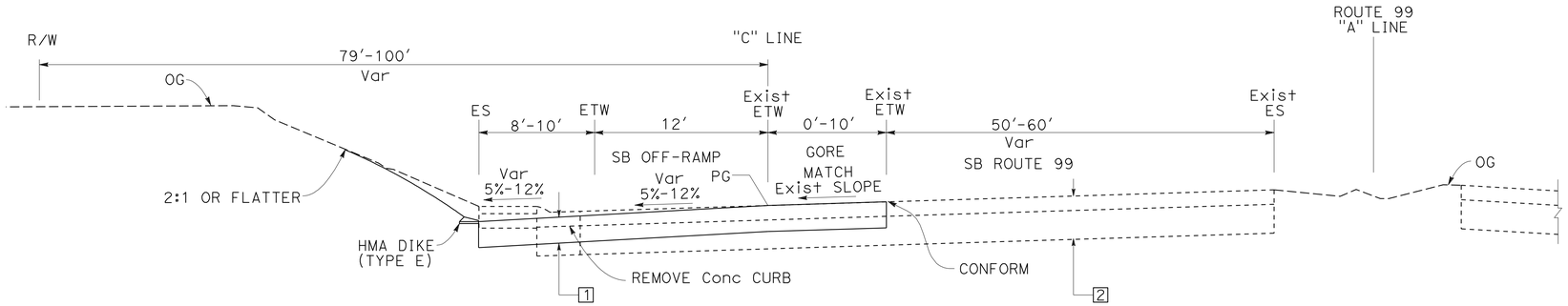

STA "C" 63+69.87 TO STA "C" 67+60

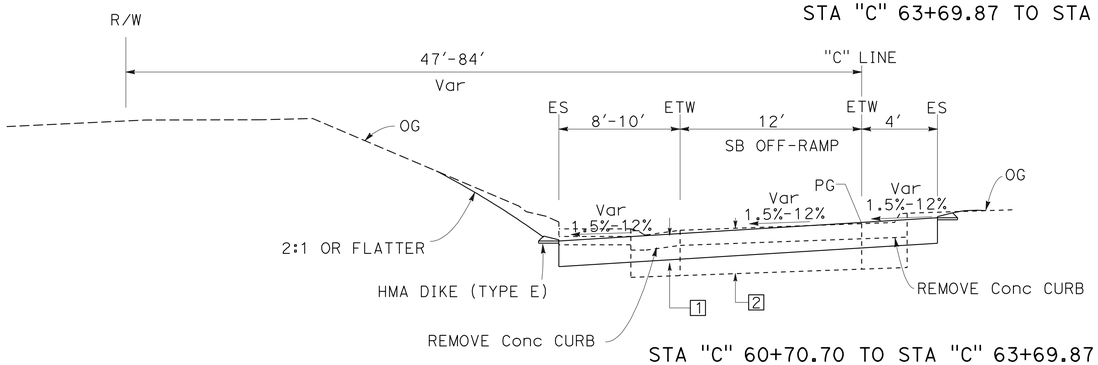

STA "C" 60+70.70 TO STA "C" 63+69.87

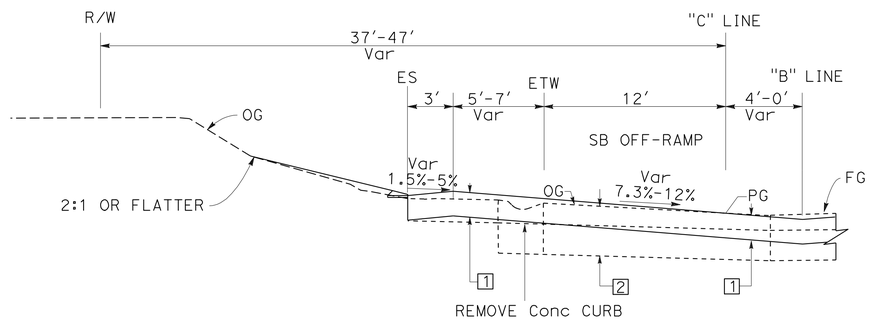

STA "C" 60+40.00 TO STA "C" 60+70.70

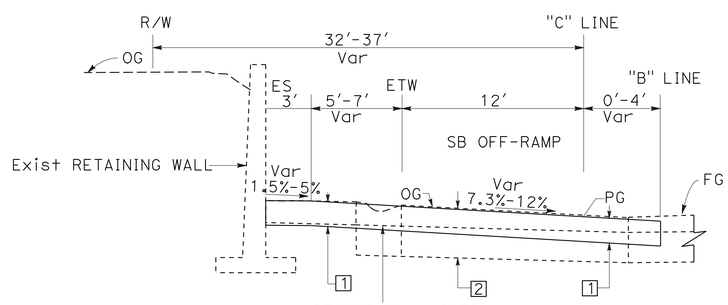

STA "C" 60+00.00 TO STA "C" 60+40.00

TYPICAL CROSS SECTIONS

NO SCALE

X-4

TUOLUMNE Blvd SB OFF-RAMP (LOCATION 2)

STATE OF CALIFORNIA - DEPARTMENT OF TRANSPORTATION
Caltrans
06-DESIGN

FUNCTIONAL SUPERVISOR: ERNIE PENUNA
CALCULATED-DESIGNED BY: JOSEPH VALDIVIA
CHECKED BY: ROTIMI ADEBAYO
REVISED BY
DATE REVISED

LAST REVISION 05-17-10
DATE PLOTTED => 08-SEP-2010
TIME PLOTTED => 09:10

Dist	COUNTY	LOCATION CODE	POST MILES TOTAL PROJECT	SHEET No.	TOTAL SHEETS
10	Sta	99	15.1/17.0	6	176

REGISTERED CIVIL ENGINEER 05-24-10 DATE

9-7-10
PLANS APPROVAL DATE

REGISTERED PROFESSIONAL ENGINEER ROTIMI D. ADEBAYO No. 69102 Exp. 6/30/12 CIVIL STATE OF CALIFORNIA

THE STATE OF CALIFORNIA OR ITS OFFICERS OR AGENTS SHALL NOT BE RESPONSIBLE FOR THE ACCURACY OR COMPLETENESS OF SCANNED COPIES OF THIS PLAN SHEET.

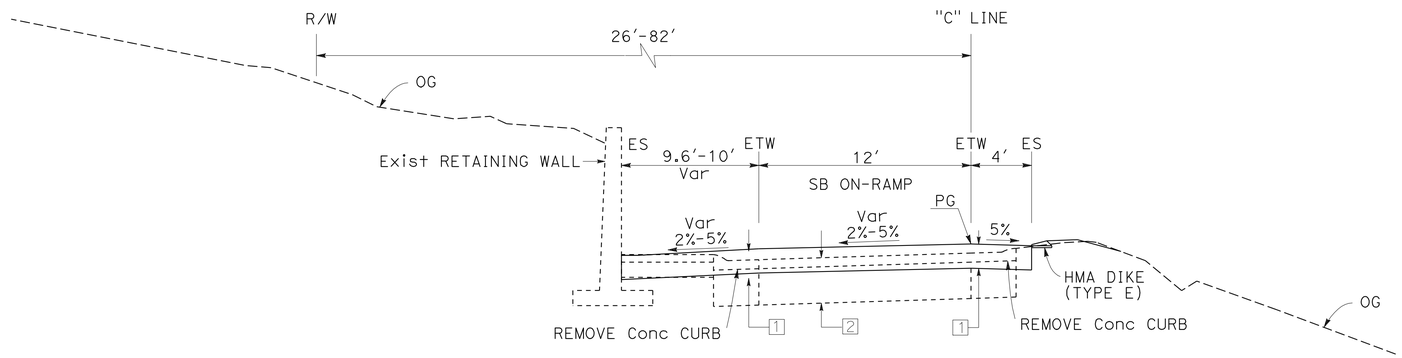

STA "C" 73+20.00 TO STA "C" 77+68.53

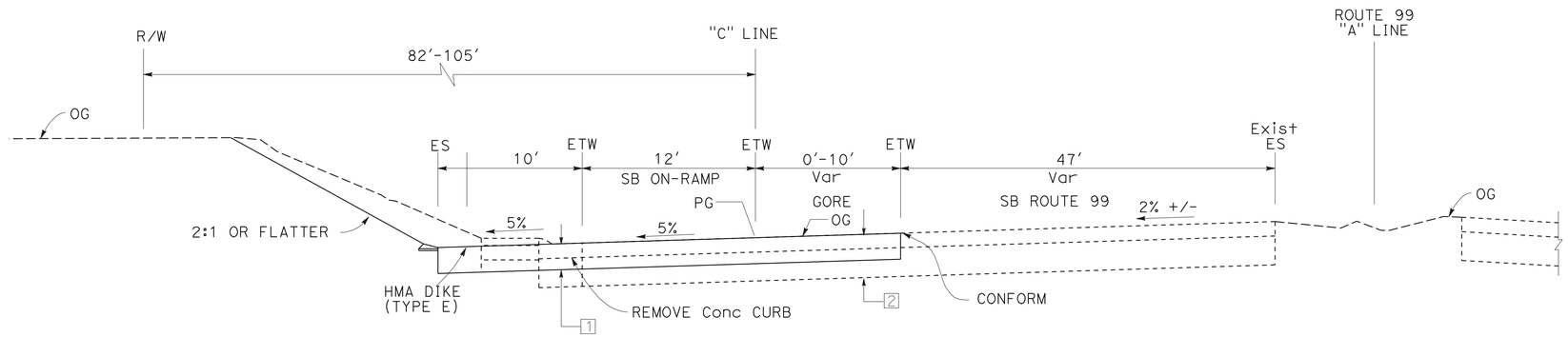

STA "C" 70+11.34 TO STA "C" 73+20.00

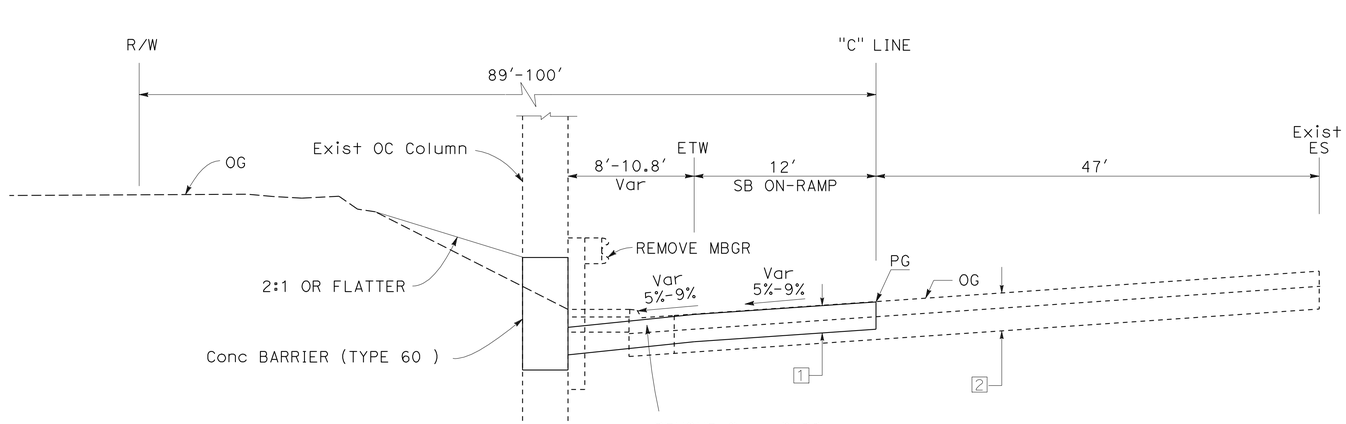

STA "C" 67+60 TO STA "C" 70+11.34

5th/G St SB ON-RAMP (LOCATION 3)

TYPICAL CROSS SECTIONS

NO SCALE

X-5

CALCULATED-DESIGNED BY	REVISED BY	FUNCTIONAL SUPERVISOR
JOSEPH VALDIVIA		ERNIE PENUNA
CHECKED BY	DATE REVISED	
ROTIMI ADEBAYO		

STATE OF CALIFORNIA - DEPARTMENT OF TRANSPORTATION

Caltrans® **06-DESIGN**

LAST REVISION 05-17-10 | DATE PLOTTED => 08-SEP-2010 | TIME PLOTTED => 09:10

Dist	COUNTY	LOCATION CODE	POST MILES TOTAL PROJECT	SHEET No.	TOTAL SHEETS
10	Sta	99	15.1/17.0	7	176

REGISTERED CIVIL ENGINEER 05-24-10 DATE

9-7-10
PLANS APPROVAL DATE

REGISTERED PROFESSIONAL ENGINEER ROTIMI D. ADEBAYO No. 69102 Exp. 6/30/12 CIVIL STATE OF CALIFORNIA

THE STATE OF CALIFORNIA OR ITS OFFICERS OR AGENTS SHALL NOT BE RESPONSIBLE FOR THE ACCURACY OR COMPLETENESS OF SCANNED COPIES OF THIS PLAN SHEET.

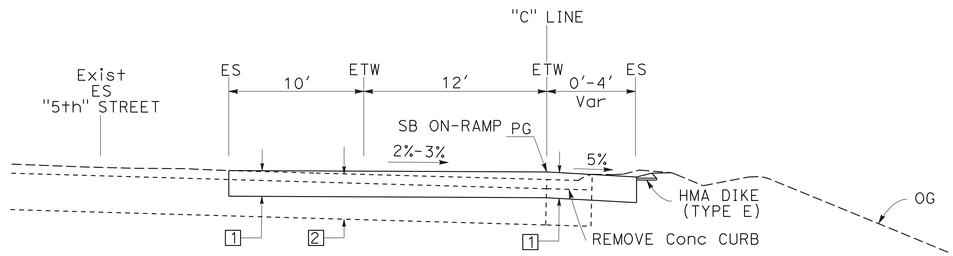

STA "C" 78+22.82 TO STA "C" 78+67.46

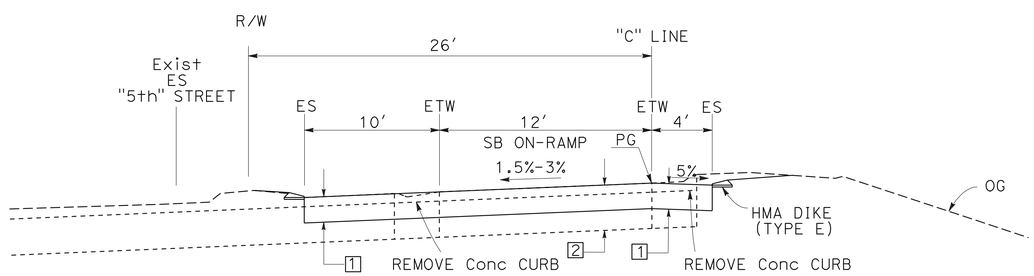

STA "C" 77+68.53 TO STA "C" 78+22.82

5th/G STREET SB ON-RAMP (LOCATION 3)

TYPICAL CROSS SECTIONS

NO SCALE

X-6

STATE OF CALIFORNIA - DEPARTMENT OF TRANSPORTATION
Caltrans
06-DESIGN

FUNCTIONAL SUPERVISOR: ERNIE PENUNA
CALCULATED-DESIGNED BY: JOSEPH VALDIVIA
CHECKED BY: ROTIMI ADEBAYO
REVISED BY
DATE REVISED

LAST REVISION 05-17-10
DATE PLOTTED => 08-SEP-2010
TIME PLOTTED => 09:10

Dist	COUNTY	ROUTE	POST MILES TOTAL PROJECT	SHEET No.	TOTAL SHEETS
10	Sta	99	15.1/17.0	8	176

REGISTERED CIVIL ENGINEER 05-24-10 DATE

9-7-10
PLANS APPROVAL DATE

REGISTERED PROFESSIONAL ENGINEER ROTIMI D. ADEBAYO No. 69102 Exp. 6/30/12 CIVIL STATE OF CALIFORNIA

THE STATE OF CALIFORNIA OR ITS OFFICERS OR AGENTS SHALL NOT BE RESPONSIBLE FOR THE ACCURACY OR COMPLETENESS OF SCANNED COPIES OF THIS PLAN SHEET.

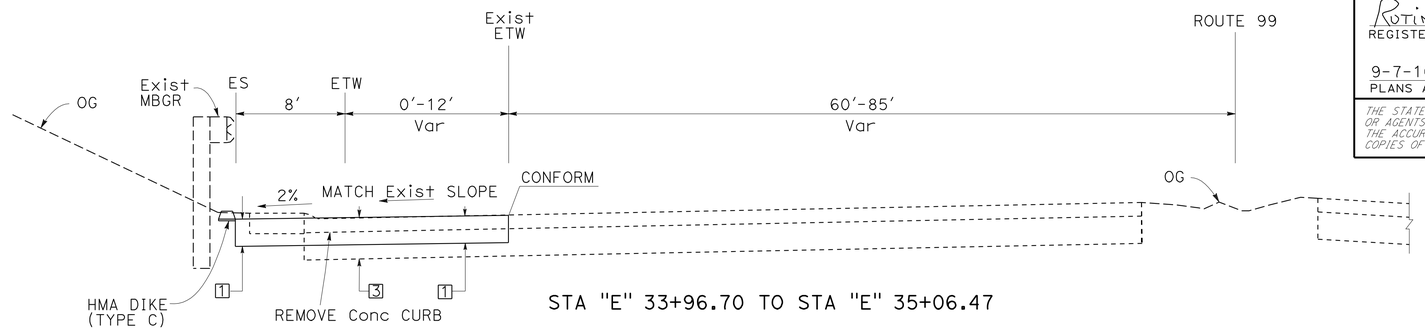

STA "E" 33+96.70 TO STA "E" 35+06.47

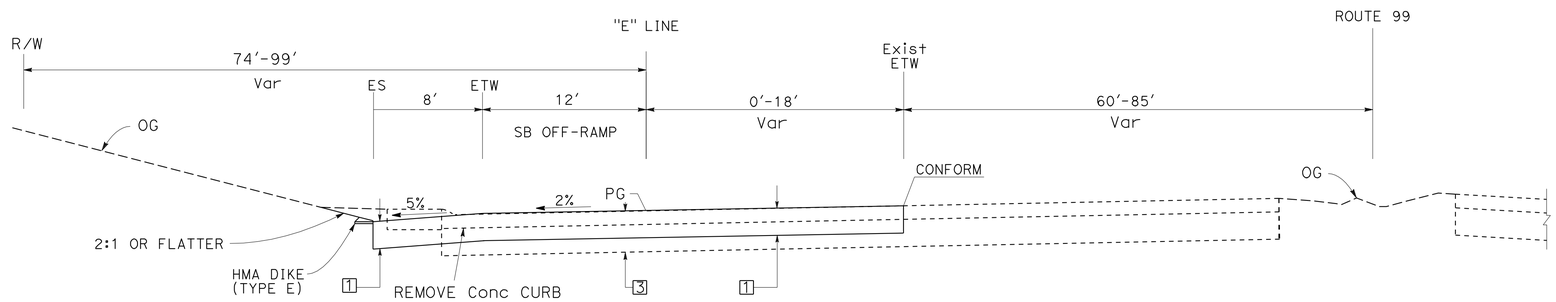

STA "E" 29+00.00 TO STA "E" 33+96.70

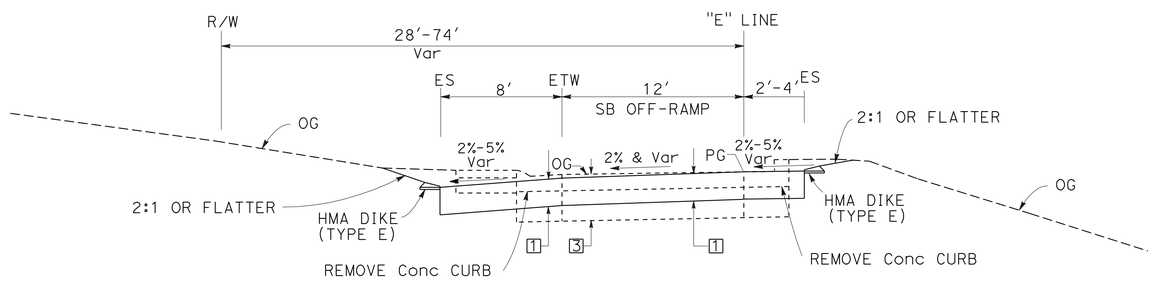

STA "E" 24+00.00 TO STA "E" 29+00.00

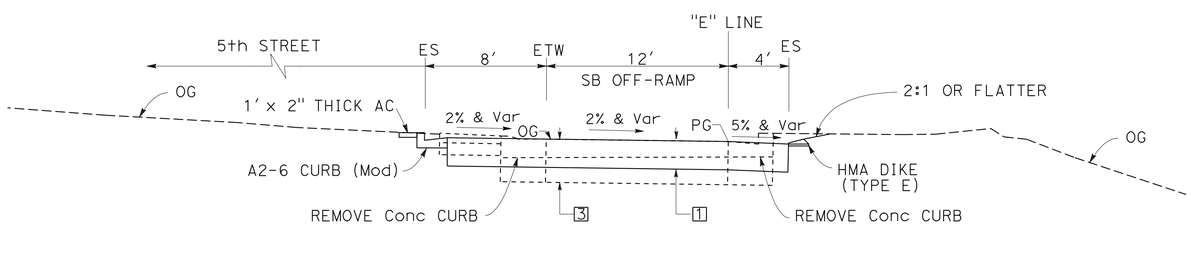

STA "E" 23+05.19 TO STA "E" 24+00.00

I St SB OFF-RAMP (LOCATION 4)

TYPICAL CROSS SECTIONS

NO SCALE

X-7

STATE OF CALIFORNIA - DEPARTMENT OF TRANSPORTATION
Caltrans
06-DESIGN

FUNCTIONAL SUPERVISOR: ERNIE PENUNA

CALCULATED-DESIGNED BY: JOSEPH VALDIVIA
CHECKED BY: ROTIMI ADEBAYO

REVISED BY | DATE REVISED

LAST REVISION 05-17-10 | DATE PLOTTED => 08-SEP-2010 | TIME PLOTTED => 09:10

Dist	COUNTY	ROUTE	POST MILES TOTAL PROJECT	SHEET No.	TOTAL SHEETS
10	Sta	99	15.1/17.0	9	176

REGISTERED CIVIL ENGINEER 05-24-10 DATE

9-7-10
PLANS APPROVAL DATE

REGISTERED PROFESSIONAL ENGINEER ROTIMI D. ADEBAYO No. 69102 Exp. 6/30/12 CIVIL STATE OF CALIFORNIA

THE STATE OF CALIFORNIA OR ITS OFFICERS OR AGENTS SHALL NOT BE RESPONSIBLE FOR THE ACCURACY OR COMPLETENESS OF SCANNED COPIES OF THIS PLAN SHEET.

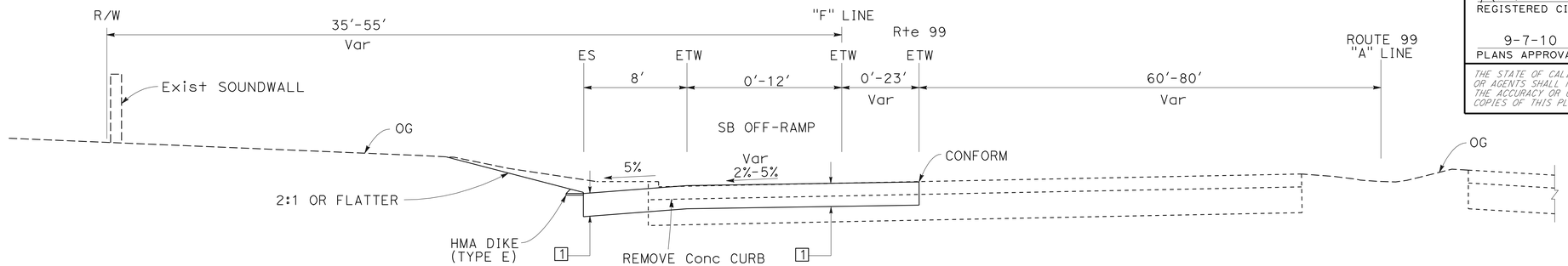

STA "F" 35+37.93 TO STA "F" 41+11.29

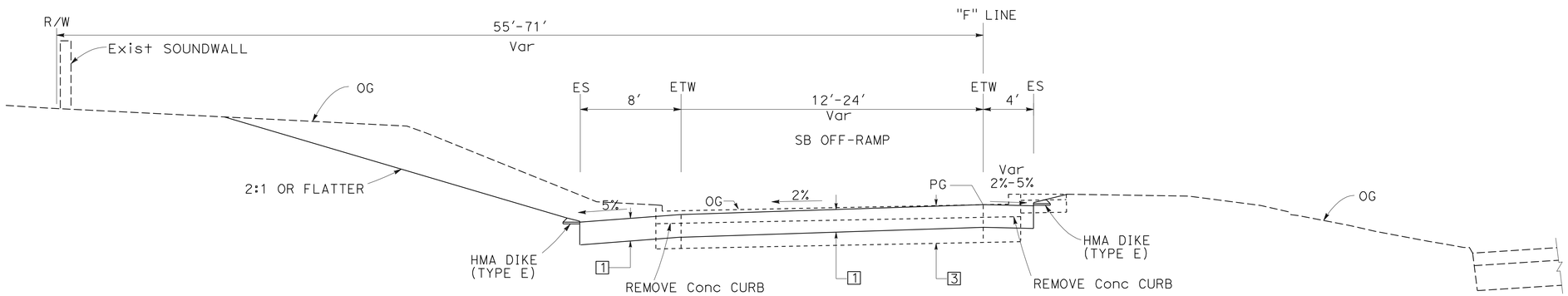

STA "F" 31+76.41 TO STA "F" 35+37.93

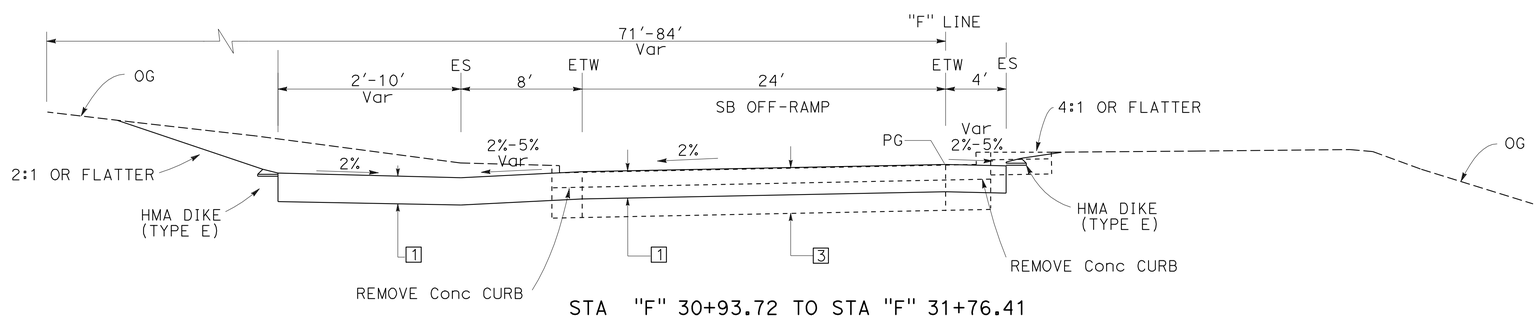

STA "F" 30+93.72 TO STA "F" 31+76.41

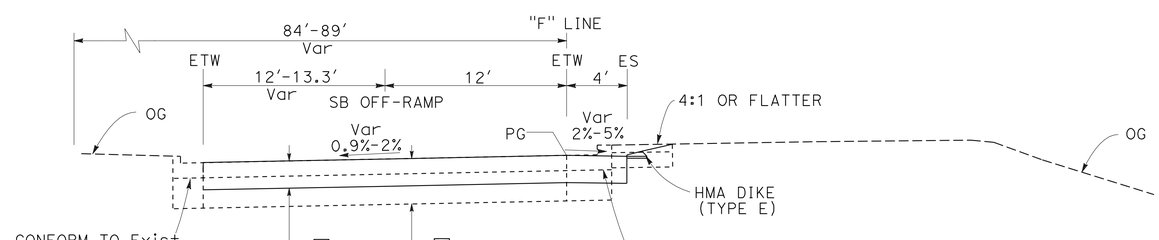

STA "F" 30+32.68 TO STA "F" 30+93.72

L St SB OFF-RAMP (LOCATION 5)

TYPICAL CROSS SECTIONS

NO SCALE

X-8

STATE OF CALIFORNIA - DEPARTMENT OF TRANSPORTATION
Caltrans®
06-DESIGN

FUNCTIONAL SUPERVISOR: ERNIE PENUNA
CALCULATED-DESIGNED BY: JOSEPH VALDIVIA
CHECKED BY: ROTIMI ADEBAYO
REVISED BY
DATE REVISED

LAST REVISION 05-17-10
DATE PLOTTED => 08-SEP-2010
TIME PLOTTED => 09:40

BORDER LAST REVISED 4/11/2008
RELATIVE BORDER SCALE IS IN INCHES 0 1 2 3
USERNAME => trmnguye
DGN FILE => a0A671ca008.dgn
CU 06253
EA 0A6711

Dist	COUNTY	ROUTE	POST MILES TOTAL PROJECT	SHEET No.	TOTAL SHEETS
10	Sta	99	15.1/17.0	10	176

REGISTERED CIVIL ENGINEER 05-24-10 DATE

9-7-10
PLANS APPROVAL DATE

REGISTERED PROFESSIONAL ENGINEER ROTIMI D. ADEBAYO No. 69102 Exp. 6/30/12 CIVIL STATE OF CALIFORNIA

THE STATE OF CALIFORNIA OR ITS OFFICERS OR AGENTS SHALL NOT BE RESPONSIBLE FOR THE ACCURACY OR COMPLETENESS OF SCANNED COPIES OF THIS PLAN SHEET.

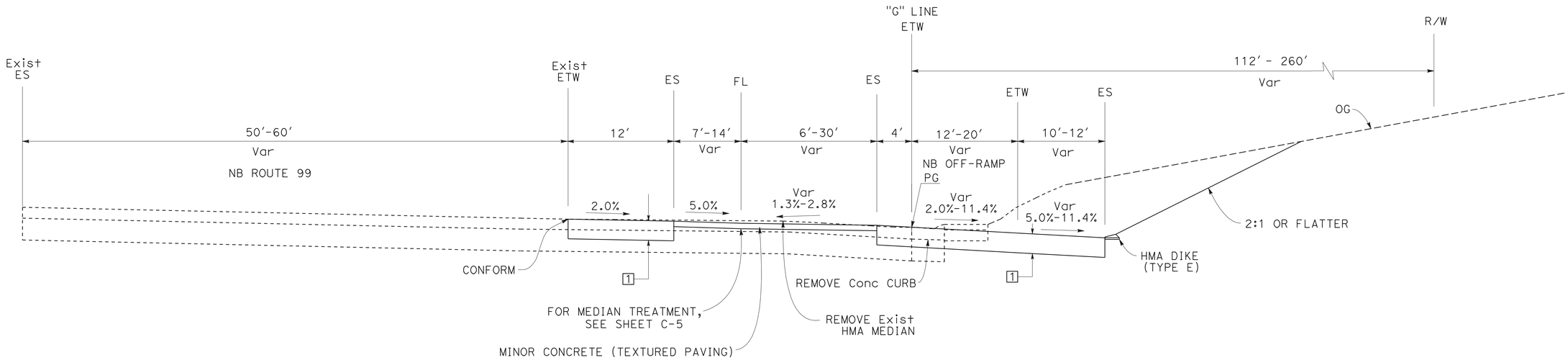

STA "G" 71+14.00 TO STA "G" 74+00.00

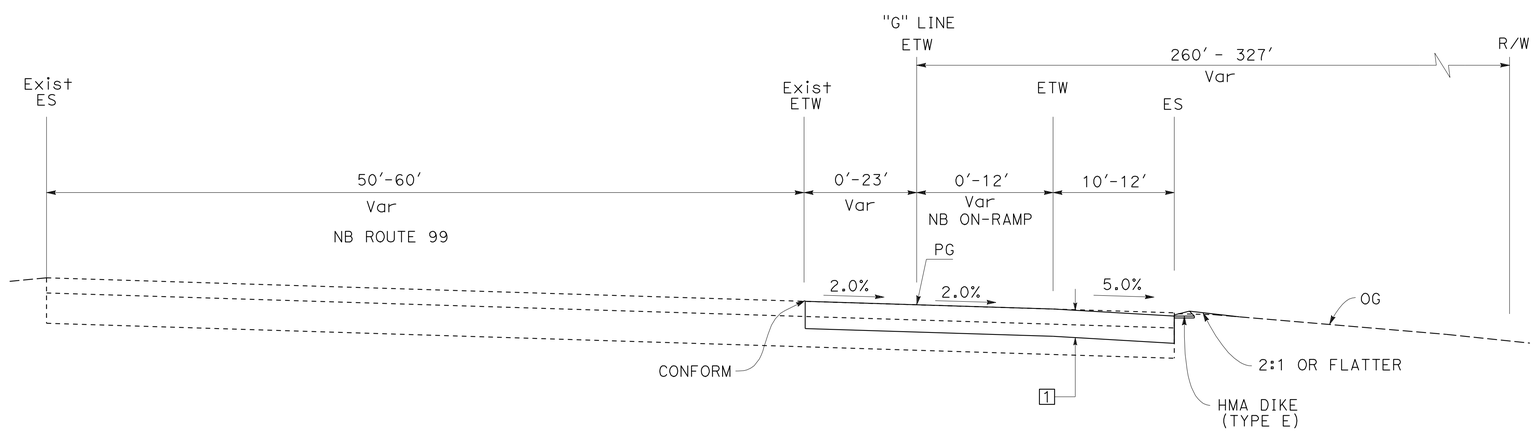

STA "G" 67+00.00 TO STA "G" 71+14.00

KANSAS Ave NB OFF-RAMP (LOCATION 6)

TYPICAL CROSS SECTIONS

NO SCALE **X-9**

REVISED BY | DATE REVISED
JOSEPH VALDIVIA | ROTIMI ADEBAYO
CALCULATED-DESIGNED BY | CHECKED BY
FUNCTIONAL SUPERVISOR: ERNIE PENUNA

STATE OF CALIFORNIA - DEPARTMENT OF TRANSPORTATION
Caltrans
06-DESIGN

LAST REVISION 05-19-10 | DATE PLOTTED => 08-SEP-2010 | TIME PLOTTED => 09:40

Dist	COUNTY	ROUTE	POST MILES TOTAL PROJECT	SHEET No.	TOTAL SHEETS
10	Sta	99	15.1/17.0	11	176

REGISTERED CIVIL ENGINEER 05-24-10 DATE

9-7-10
PLANS APPROVAL DATE

REGISTERED PROFESSIONAL ENGINEER ROTIMI D. ADEBAYO No. 69102 Exp. 6/30/12 CIVIL STATE OF CALIFORNIA

THE STATE OF CALIFORNIA OR ITS OFFICERS OR AGENTS SHALL NOT BE RESPONSIBLE FOR THE ACCURACY OR COMPLETENESS OF SCANNED COPIES OF THIS PLAN SHEET.

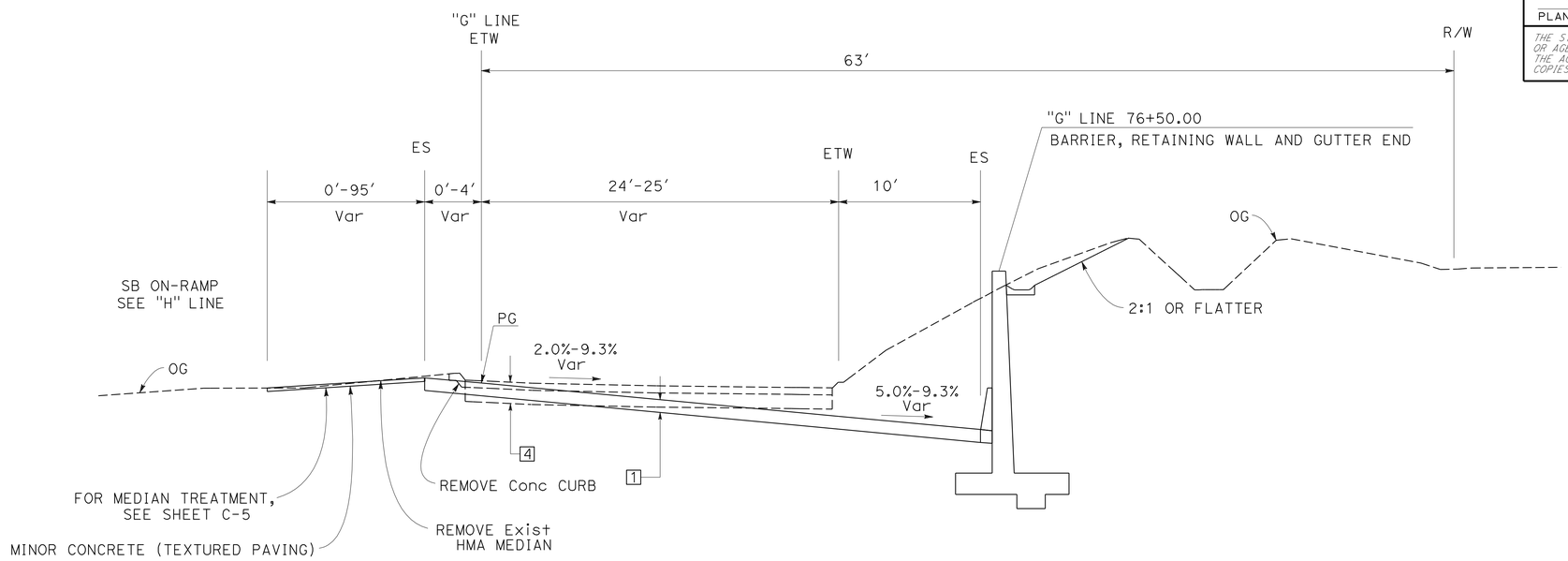

STA "G" 75+50.00 TO STA "G" 77+66.90

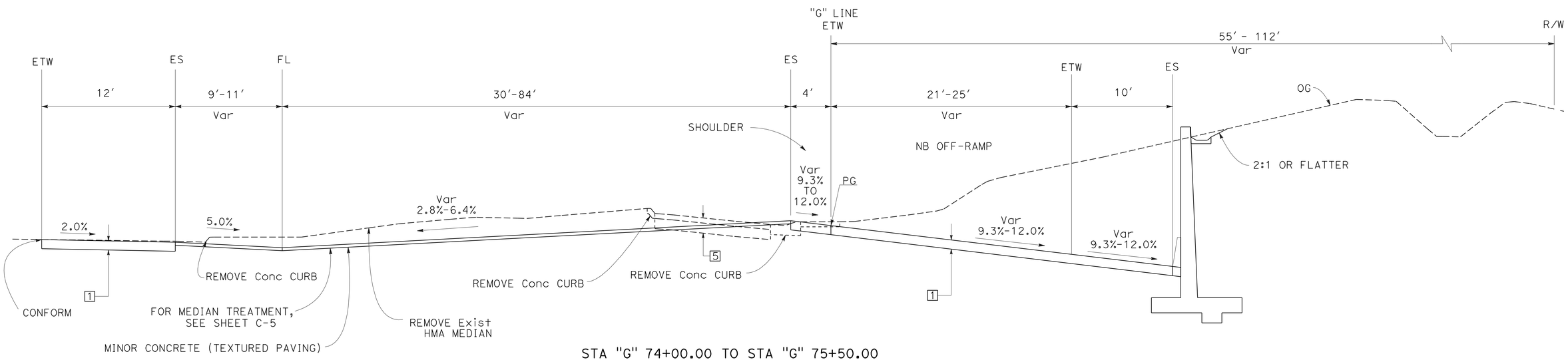

STA "G" 74+00.00 TO STA "G" 75+50.00

KANSAS AVENUE NB OFF-RAMP (LOCATION 6)

TYPICAL CROSS SECTIONS

NO SCALE

X-10

REVISED BY	DATE REVISED

CALCULATED-DESIGNED BY	CHECKED BY
JOSEPH VALDIVIA	ROTIMI ADEBAYO

FUNCTIONAL SUPERVISOR: ERNIE PENUNA

STATE OF CALIFORNIA - DEPARTMENT OF TRANSPORTATION

Caltrans® 06-DESIGN

LAST REVISION 05-14-10 | DATE PLOTTED => 08-SEP-2010 | TIME PLOTTED => 09:40

Dist	COUNTY	ROUTE	POST MILES TOTAL PROJECT	SHEET No.	TOTAL SHEETS
10	Sta	99	15.1/17.0	12	176

REGISTERED CIVIL ENGINEER 05-24-10 DATE

9-7-10
PLANS APPROVAL DATE

REGISTERED PROFESSIONAL ENGINEER ROTIMI D. ADEBAYO No. 69102 Exp. 6/30/12 CIVIL STATE OF CALIFORNIA

THE STATE OF CALIFORNIA OR ITS OFFICERS OR AGENTS SHALL NOT BE RESPONSIBLE FOR THE ACCURACY OR COMPLETENESS OF SCANNED COPIES OF THIS PLAN SHEET.

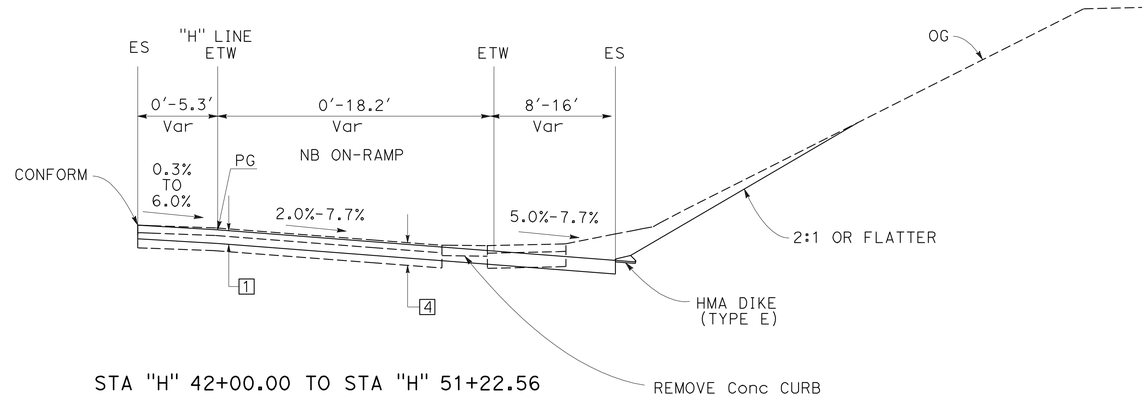

STA "H" 42+00.00 TO STA "H" 51+22.56

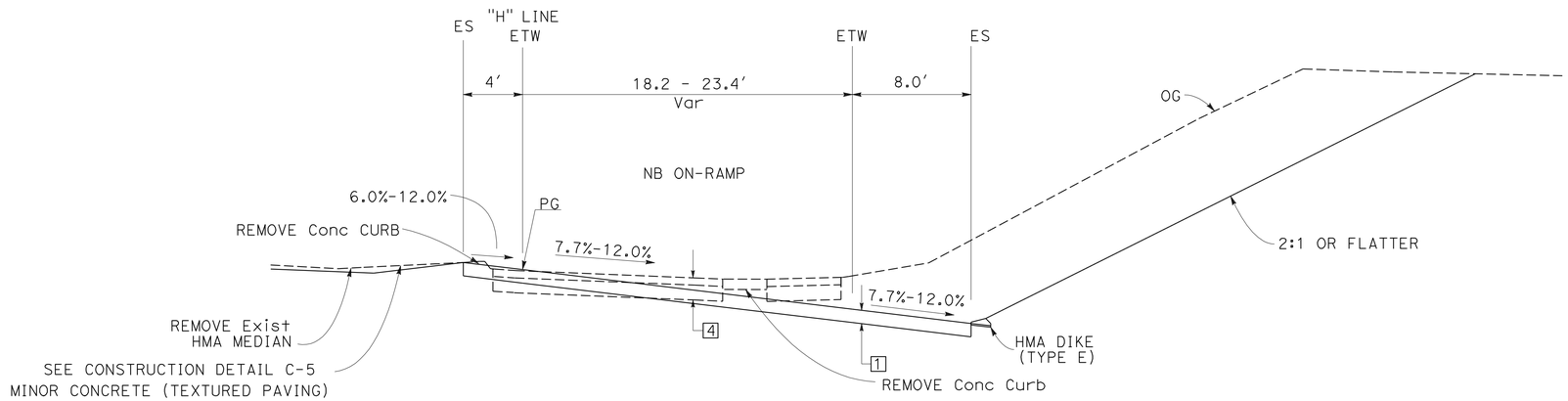

STA "H" 39+50.00 TO STA "H" 42+00.00

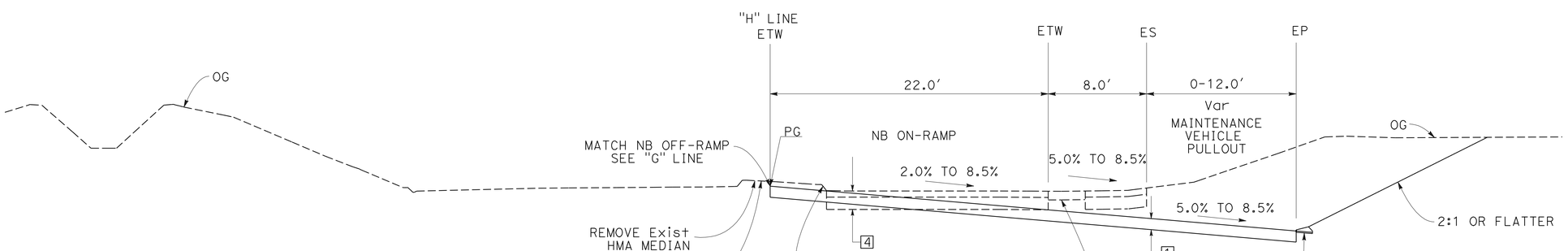

STA "H" 38+20.00 TO STA "H" 39+50.00

TYPICAL CROSS SECTIONS

KANSAS Ave NB ON-RAMP (LOCATION 7)

NO SCALE

X-11

STATE OF CALIFORNIA - DEPARTMENT OF TRANSPORTATION
Caltrans®
06-DESIGN

FUNCTIONAL SUPERVISOR: ERNIE PENUNA
CALCULATED-DESIGNED BY: JOSEPH VALDIVIA
CHECKED BY: ROTIMI ADEBAYO
REVISED BY
DATE REVISED

LAST REVISION: 05-14-10
DATE PLOTTED => 08-SEP-2010
TIME PLOTTED => 09:40

Dist	COUNTY	ROUTE	POST MILES TOTAL PROJECT	SHEET No.	TOTAL SHEETS
10	Sta	99	15.1/17.0	13	176

REGISTERED CIVIL ENGINEER 05-24-10 DATE

9-7-10
PLANS APPROVAL DATE

REGISTERED PROFESSIONAL ENGINEER ROTIMI D. ADEBAYO No. 69102 Exp. 6/30/12 CIVIL STATE OF CALIFORNIA

THE STATE OF CALIFORNIA OR ITS OFFICERS OR AGENTS SHALL NOT BE RESPONSIBLE FOR THE ACCURACY OR COMPLETENESS OF SCANNED COPIES OF THIS PLAN SHEET.

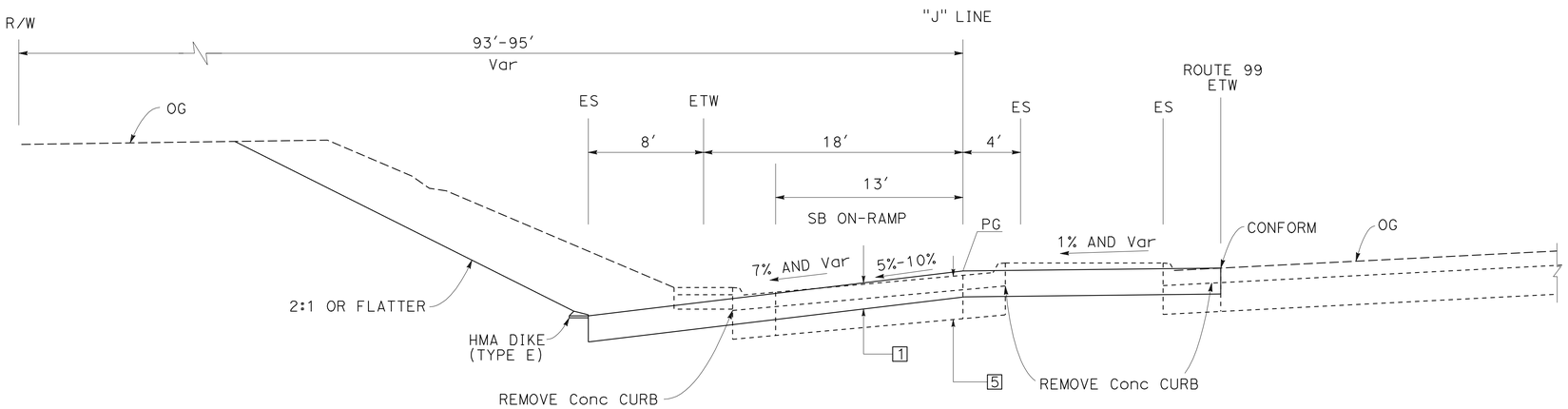

STA "J" 51+70.33 TO STA "J" 51+76.73

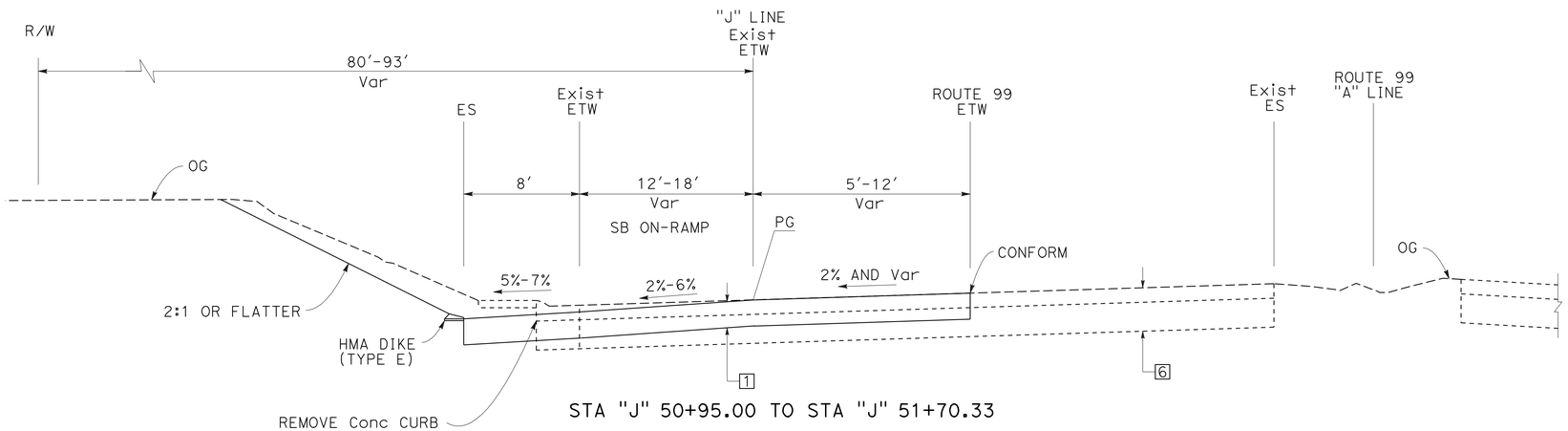

STA "J" 50+95.00 TO STA "J" 51+70.33

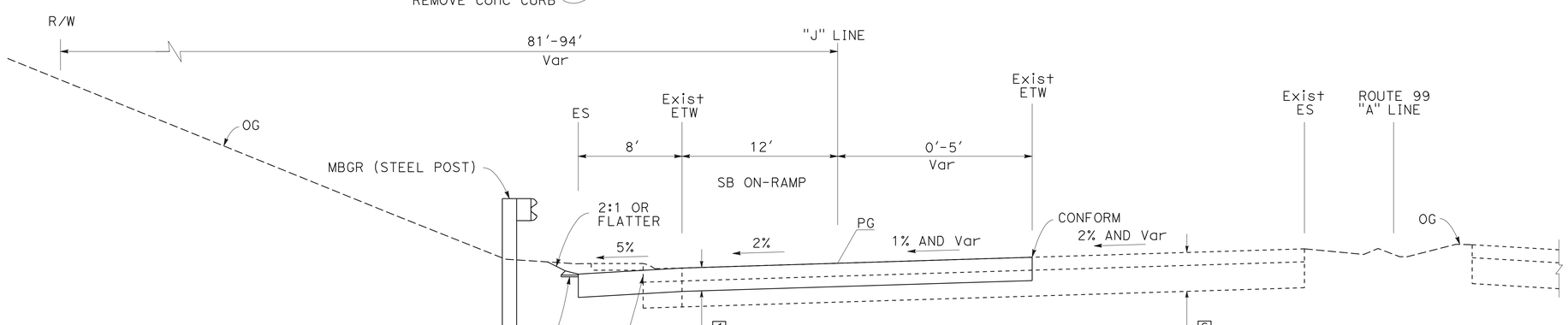

STA "J" 47+70.67 TO STA "J" 50+95.00

KANSAS Ave SB ON-RAMP (LOCATION 8)

TYPICAL CROSS SECTIONS

NO SCALE

X-12

STATE OF CALIFORNIA - DEPARTMENT OF TRANSPORTATION
Caltrans
06-DESIGN

FUNCTIONAL SUPERVISOR: ERNIE PENUNA
CALCULATED-DESIGNED BY: JOSEPH VALDIVIA
CHECKED BY: ROTIMI ADEBAYO
REVISED BY
DATE REVISED

LAST REVISION 05-19-10
DATE PLOTTED => 08-SEP-2010
TIME PLOTTED => 09:40

Dist	COUNTY	ROUTE	POST MILES TOTAL PROJECT	SHEET No.	TOTAL SHEETS
10	Sta	99	15.1/17.0	14	176

REGISTERED CIVIL ENGINEER 05-24-10 DATE

9-7-10
PLANS APPROVAL DATE

REGISTERED PROFESSIONAL ENGINEER ROTIMI D. ADEBAYO No. 69102 Exp. 6/30/12 CIVIL STATE OF CALIFORNIA

THE STATE OF CALIFORNIA OR ITS OFFICERS OR AGENTS SHALL NOT BE RESPONSIBLE FOR THE ACCURACY OR COMPLETENESS OF SCANNED COPIES OF THIS PLAN SHEET.

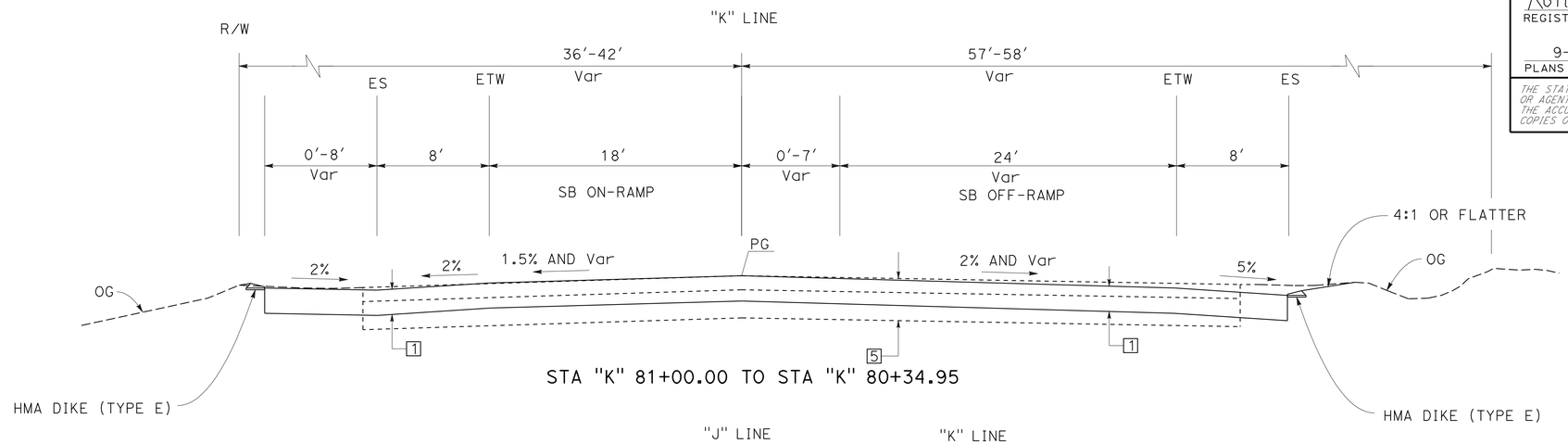

STA "K" 81+00.00 TO STA "K" 80+34.95

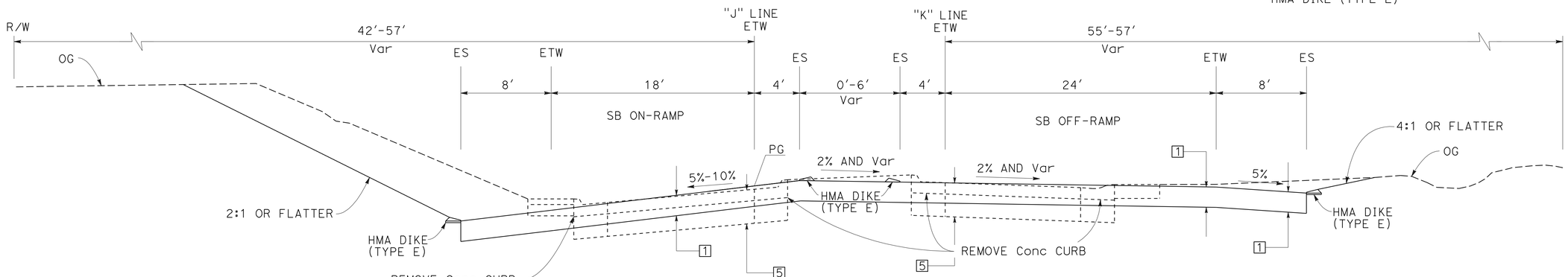

STA "J" 54+71.70 TO STA "J" 56+03.47
STA "K" 82+31.47 TO STA "K" 81+00.00

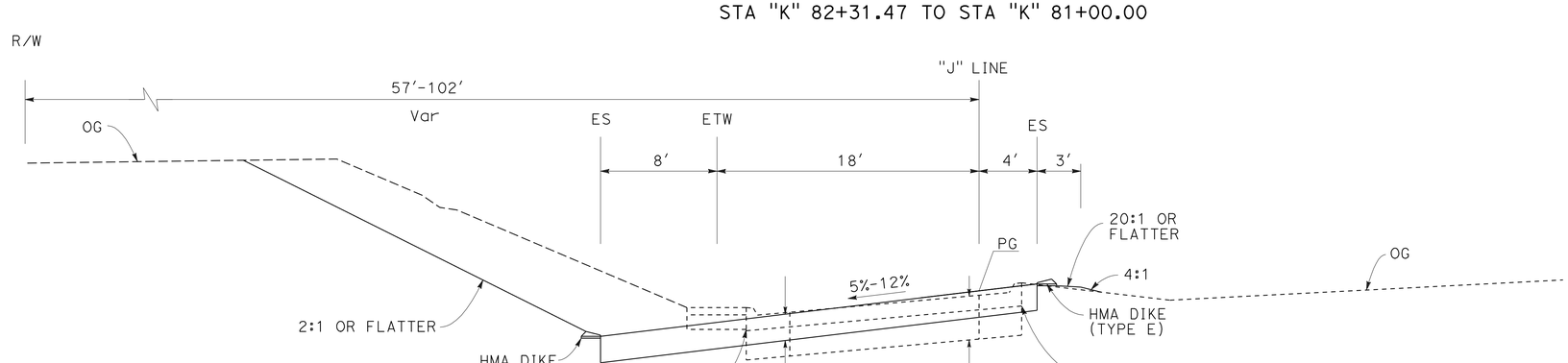

STA "J" 51+76.73 TO STA "J" 54+83.99

KANSAS AVENUE SB ON-RAMP (LOCATION 8)
KANSAS AVENUE SB OFF-RAMP (LOCATION 9)

TYPICAL CROSS SECTIONS

NO SCALE

X-13

STATE OF CALIFORNIA - DEPARTMENT OF TRANSPORTATION
Caltrans®
06-DESIGN
FUNCTIONAL SUPERVISOR: ERNIE PENUNA
CALCULATED-DESIGNED BY: JOSEPH VALDIVIA
CHECKED BY: ROTIMI ADEBAYO
REVISED BY
DATE REVISED

LAST REVISION 05-19-10
DATE PLOTTED => 08-SEP-2010
TIME PLOTTED => 09:40

Dist	COUNTY	ROUTE	POST MILES TOTAL PROJECT	SHEET No.	TOTAL SHEETS
10	Sta	99	15.1/17.0	15	176

REGISTERED CIVIL ENGINEER 05-24-10 DATE

9-7-10
PLANS APPROVAL DATE

REGISTERED PROFESSIONAL ENGINEER ROTIMI D. ADEBAYO No. 69102 Exp. 6/30/12 CIVIL STATE OF CALIFORNIA

THE STATE OF CALIFORNIA OR ITS OFFICERS OR AGENTS SHALL NOT BE RESPONSIBLE FOR THE ACCURACY OR COMPLETENESS OF SCANNED COPIES OF THIS PLAN SHEET.

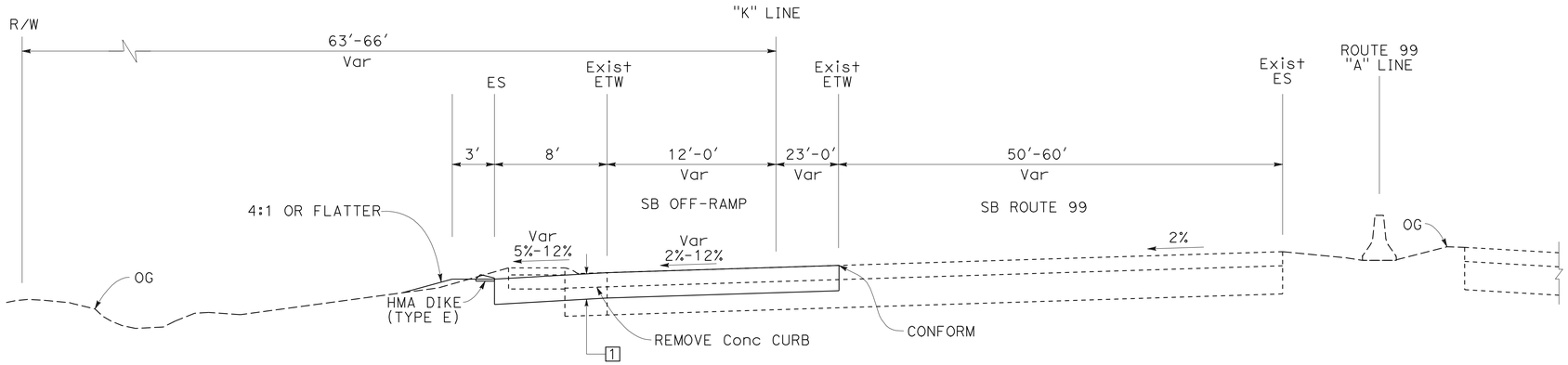

STA "K" 86+54.41 TO STA "K" 91+21.74

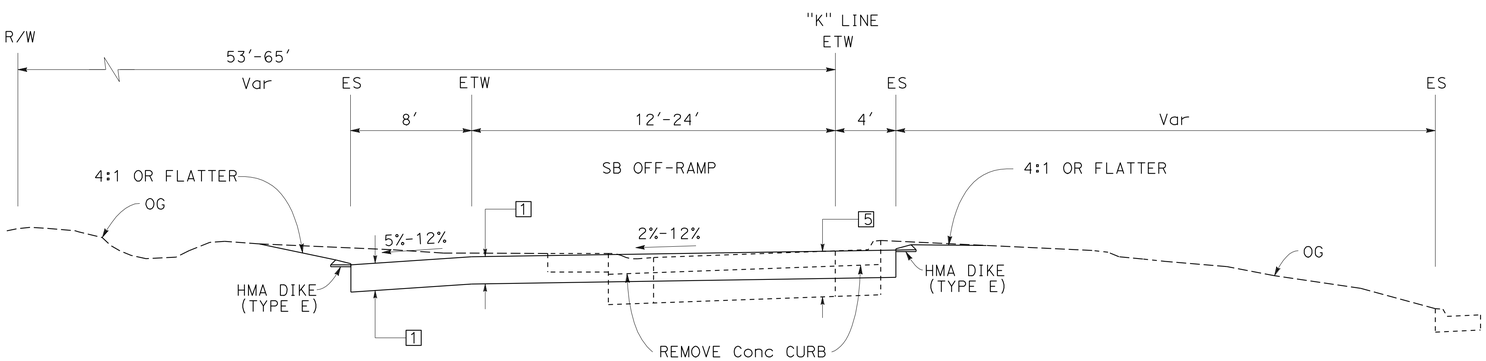

STA "K" 82+31.47 TO STA "K" 86+54.41

KANSAS AVENUE SB OFF-RAMP (LOCATION 9)

TYPICAL CROSS SECTIONS

NO SCALE

X-14

STATE OF CALIFORNIA - DEPARTMENT OF TRANSPORTATION
Caltrans
06-DESIGN

FUNCTIONAL SUPERVISOR: ERNIE PENUNA
CALCULATED-DESIGNED BY: JOSEPH VALDIVIA
CHECKED BY: ROTIMI ADEBAYO
REVISED BY
DATE REVISED

LAST REVISION 05-13-10
DATE PLOTTED => 08-SEP-2010
TIME PLOTTED => 09:40

Dist	COUNTY	ROUTE	POST MILES TOTAL PROJECT	SHEET No.	TOTAL SHEETS
10	Sta	99	15.1/17.0	16	176

REGISTERED CIVIL ENGINEER 05-24-10 DATE

9-7-10
PLANS APPROVAL DATE

REGISTERED PROFESSIONAL ENGINEER ROTIMI D. ADEBAYO No. 69102 Exp. 6/30/12 CIVIL STATE OF CALIFORNIA

THE STATE OF CALIFORNIA OR ITS OFFICERS OR AGENTS SHALL NOT BE RESPONSIBLE FOR THE ACCURACY OR COMPLETENESS OF SCANNED COPIES OF THIS PLAN SHEET.

NOTES:

1. FOR COMPLETE PROJECT CONTROL DATA, SEE THE SURVEY RECORDS ON FILE IN THE SURVEYS DEPARTMENT AT THE DISTRICT OFFICE.
2. BEARING AND COORDINATES FOR THIS PROJECT ARE BASED ON THE CALIFORNIA COORDINATE SYSTEM OF 1983, HPGN EPOCH ADJUSTMENT [CCS 83 (1991.35)], ZONE 4, U.S. SURVEY FOOT.
3. ELEVATIONS FOR THIS PROJECT ARE BASED ON THE NORTH AMERICAN VERTICAL DATUM OF 1988(NAVD 88).
4. IN EVENT GPS MACHINE CONTROL/GUIDANCE IS USED FOR THIS PROJECT, THE CONTRACTOR SHALL CONTACT AND MEET WITH THE SURVEYS DEPARTMENT AT THE DISTRICT OFFICE TO OBTAIN THE CONTROL NECESSARY TO ESTABLISH A PROJECT CALIBRATION COMPATIBLE FOR ALL USER.

ABBREVIATION:

W/RPP - WITH RED PLASTIC PLUG

LEGEND:

2ND ORDER STATION

CONTROL FOR DESIGN AND CONSTRUCTION

STATION DESIGNATION	ORDER	NORTHING	EASTING	ELEVATION	DESCRIPTION
SUHV123	2ND	2051810.00	6417608.72	82.23	5/8" REBAR W/RPP
SUHV122	2ND	2051823.43	6417452.18	79.79	5/8" REBAR W/RPP
SUHV121	2ND	2052059.01	6417564.97	75.07	5/8" REBAR W/RPP
SUHV119	2ND	2052610.08	6417404.42	60.19	5/8" REBAR W/RPP
SUHV118	2ND	2053030.09	6417180.49	63.19	5/8" REBAR W/RPP
SUHV116	2ND	2053332.81	6416856.14	86.03	5/8" REBAR W/RPP
SUHV150	2ND	2054971.97	6415371.88	80.37	5/8" REBAR W/RPP
SUHV149	2ND	2055185.32	6415157.99	67.85	5/8" REBAR W/RPP
SUHV148	2ND	2055550.63	6414844.95	69.47	5/8" REBAR W/RPP
SUHV147	2ND	2055533.69	6414769.28	87.65	PK NAIL IN AC
SUHV146	2ND	2055913.04	6414511.88	79.99	5/8" REBAR W/RPP
SUHV145	2ND	2056363.82	6414078.63	86.02	5/8" REBAR W/RPP
SUHV133	2ND	2057441.45	6412963.35	84.94	5/8" REBAR W/RPP
SUHV134	2ND	2057767.61	6412570.05	72.24	5/8" REBAR W/RPP
SUHV135	2ND	2057994.66	6412660.70	84.65	5/8" REBAR W/RPP
SUHV136	2ND	2058105.27	6412213.29	63.46	5/8" REBAR W/RPP
SUHV142	2ND	2058491.80	6411682.68	75.01	5/8" REBAR W/RPP
SUHV141	2ND	2058404.09	6411511.62	81.54	5/8" REBAR W/RPP
SUHV139	2ND	2058723.43	6411466.28	81.34	5/8" REBAR W/RPP
SUHV138	2ND	2059279.14	6410950.60	81.31	5/8" REBAR W/RPP

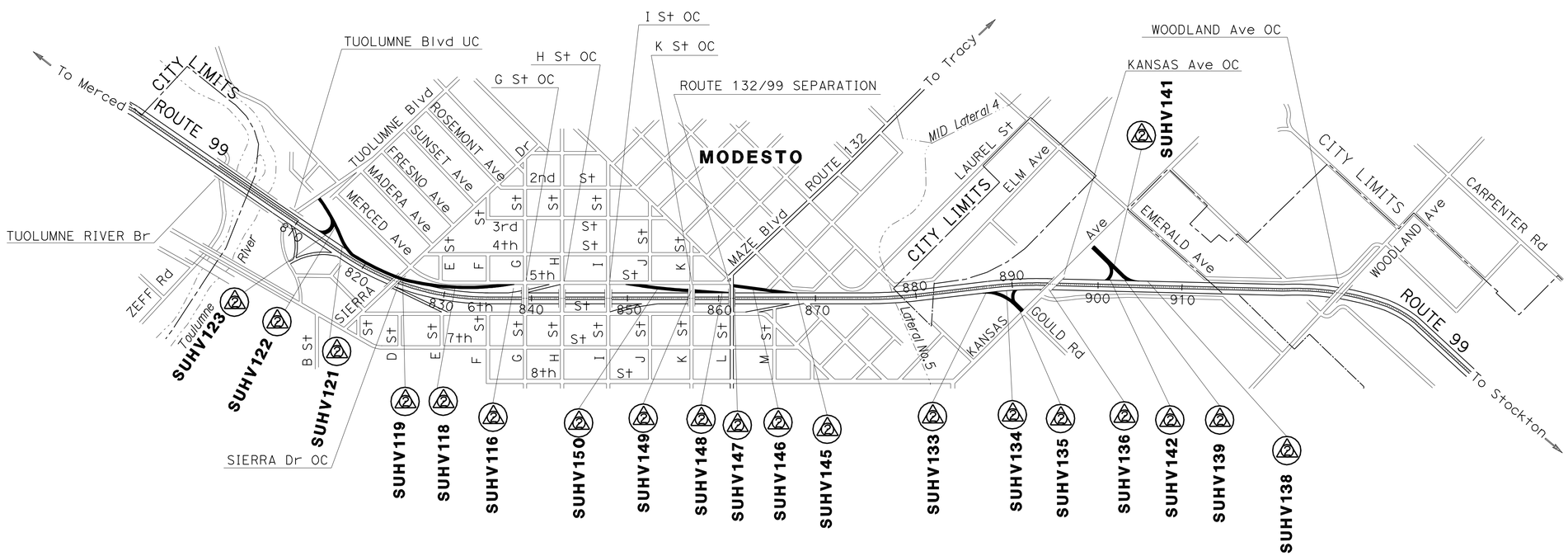

THIS PLAN ACCURATE FOR PROJECT CONTROL INFORMATION ONLY

PROJECT CONTROL

NO SCALE

PC-1

REVISED BY | DATE REVISED
RASAQ ATANDA | ROTIMI ADEBAYO
CALCULATED-DESIGNED BY | CHECKED BY
FUNCTIONAL SUPERVISOR: ERNIE PENUNA

STATE OF CALIFORNIA - DEPARTMENT OF TRANSPORTATION
Caltrans
06-DESIGN

LAST REVISION 07-29-10
DATE PLOTTED => 08-SEP-2010
TIME PLOTTED => 09:41

Dist	COUNTY	ROUTE	POST MILES TOTAL PROJECT	SHEET No.	TOTAL SHEETS
10	Sta	99	15.1/17.0	17	176

REGISTERED CIVIL ENGINEER 05-24-10 DATE

9-7-10
PLANS APPROVAL DATE

REGISTERED PROFESSIONAL ENGINEER ROTIMI D. ADEBAYO No. 69102 Exp. 6/30/12 CIVIL STATE OF CALIFORNIA

THE STATE OF CALIFORNIA OR ITS OFFICERS OR AGENTS SHALL NOT BE RESPONSIBLE FOR THE ACCURACY OR COMPLETENESS OF SCANNED COPIES OF THIS PLAN SHEET.

NOTES:

1. FOR COMPLETE RIGHT OF WAY AND ACCURATE ACCESS DATA, CONTACT RIGHT OF WAY ENGINEERING AT THE DISTRICT OFFICE.
2. FOR MEDIAN TREATMENT, SEE CONSTRUCTION DETAILS SHEET C-5

LEGEND:

- REMOVE ISLAND, 0.9' HMA (TYPE A)
- REMOVE GORE, 0.9' HMA (TYPE A)
- COLD PLANE, 0.20' HMA (TYPE A)
- CONTRASTING SURFACE TREATMENT (TEXTURED PAVING)
- OVERHEAD SIGN

CURVE DATA

No.	R	Δ	T	L
1	400.00	77°28'15"	320.87	540.84
2	80.00	74°02'09"	60.32	103.37
3	30.00	91°57'04"	31.04	48.15
4	200.00	29°24'46"	52.49	102.67
5	98.00	168°35'33"	981.17	288.36
6	300.00	32°58'05"	88.77	172.62
7	1500.00	13°58'55"	183.94	366.05
8	2500.00	33°15'16"	746.58	1451.00
9	2439.81	6°27'56"	137.81	275.32
29	91.94	21°38'31"	17.57	34.73
30	7.03	158°16'40"	36.63	19.42

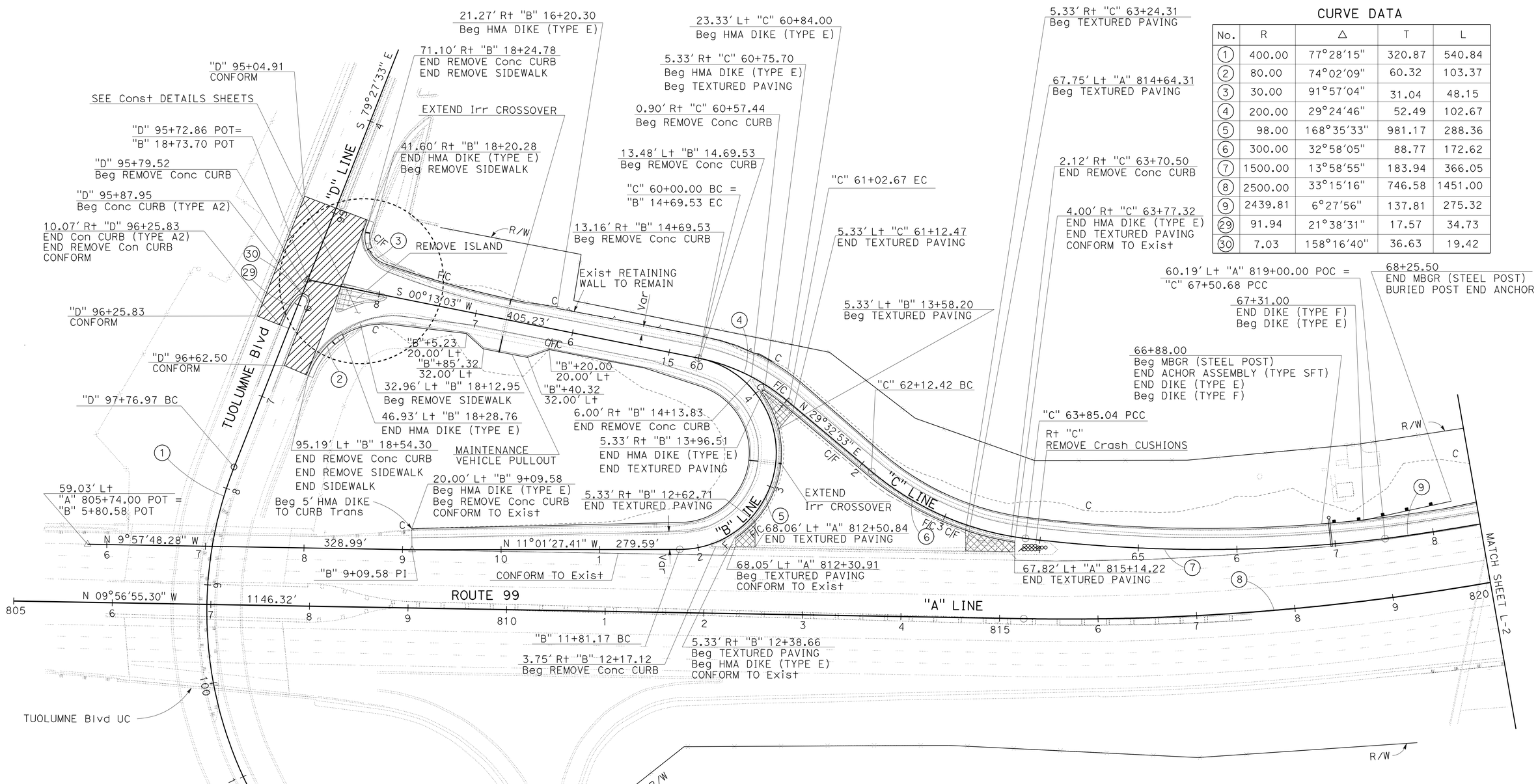

TUOLUMNE Blvd SB ON-RAMP (LOCATION 1)
TUOLUMNE Blvd SB OFF-RAMP (LOCATION 2)

LAYOUT

SCALE: 1" = 50'

L-1

STATE OF CALIFORNIA - DEPARTMENT OF TRANSPORTATION
06-DESIGN
Caltrans

FUNCTIONAL SUPERVISOR: ERNIE PENUNA
CALCULATED-DESIGNED BY: JOSEPH VALDIVIA
CHECKED BY: ROTIMI ADEBAYO
REVISED BY
DATE REVISED

LAST REVISION 05-20-10
DATE PLOTTED => 08-SEP-2010
TIME PLOTTED => 09:41

Dist	COUNTY	ROUTE	POST MILES TOTAL PROJECT	SHEET No.	TOTAL SHEETS
10	Sta	99	15.1/17.0	18	176

Rotimi Adebayo 05-24-10
REGISTERED CIVIL ENGINEER DATE

9-7-10
PLANS APPROVAL DATE

REGISTERED PROFESSIONAL ENGINEER ROTIMI D. ADEBAYO No. 69102 Exp. 6/30/12 CIVIL STATE OF CALIFORNIA

THE STATE OF CALIFORNIA OR ITS OFFICERS OR AGENTS SHALL NOT BE RESPONSIBLE FOR THE ACCURACY OR COMPLETENESS OF SCANNED COPIES OF THIS PLAN SHEET.

NOTE:

FOR COMPLETE RIGHT OF WAY AND ACCURATE ACCESS DATA, CONTACT RIGHT OF WAY ENGINEERING AT THE DISTRICT OFFICE.

CURVE DATA

No.	R	Δ	T	L
9	2439.81′	6°27′56"	137.81′	275.32
10	1500.00′	10°22′28"	136.17	271.60
11	900.00′	12°05′47"	95.36	190.01

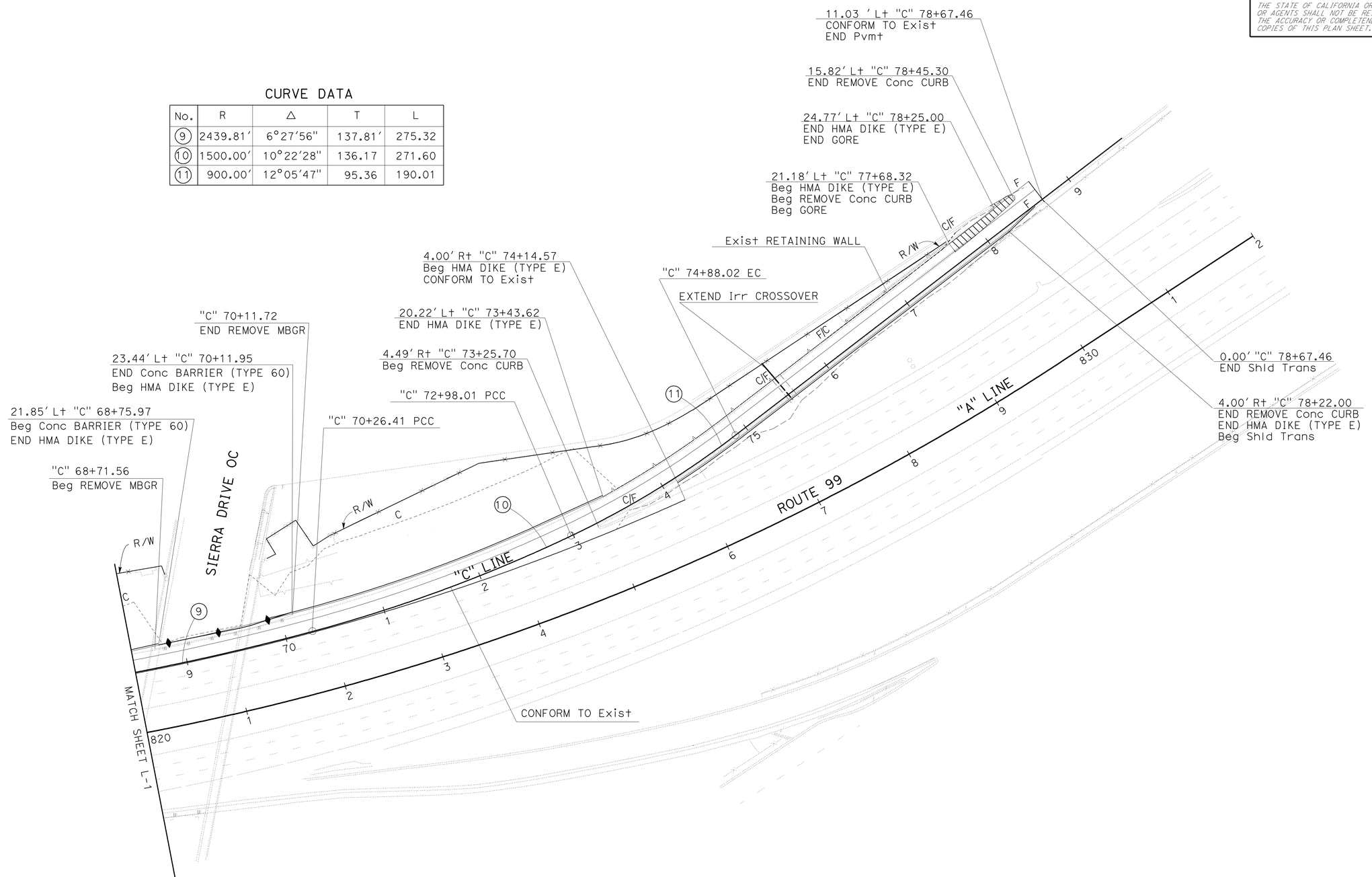

5th/G STREET SB ON-RAMP (LOCATION 3)

LAYOUT

SCALE: 1" = 50′ **L-2**

STATE OF CALIFORNIA - DEPARTMENT OF TRANSPORTATION
Caltrans
06-DESIGN

FUNCTIONAL SUPERVISOR: ERNIE PENUNA
CALCULATED-DESIGNED BY: JOSEPH VALDIVIA
CHECKED BY: ROTIMI ADEBAYO
REVISED BY
DATE REVISED

LAST REVISION 05-20-10
DATE PLOTTED => 08-SEP-2010
TIME PLOTTED => 09:41

BORDER LAST REVISED 4/11/2008
RELATIVE BORDER SCALE IS IN INCHES 0 1 2 3
USERNAME => trmnguye
DGN FILE => a0A671ea002.dgn
CU 06253
EA 0A6711

Dist	COUNTY	ROUTE	POST MILES TOTAL PROJECT	SHEET No.	TOTAL SHEETS
10	Sta	99	15.1/17.0	19	176

REGISTERED CIVIL ENGINEER 05-24-10 DATE

9-7-10
PLANS APPROVAL DATE

REGISTERED PROFESSIONAL ENGINEER ROTIMI D. ADEBAYO No. 69102 Exp. 6/30/12 CIVIL STATE OF CALIFORNIA

THE STATE OF CALIFORNIA OR ITS OFFICERS OR AGENTS SHALL NOT BE RESPONSIBLE FOR THE ACCURACY OR COMPLETENESS OF SCANNED COPIES OF THIS PLAN SHEET.

NOTE:

FOR COMPLETE RIGHT OF WAY AND ACCURATE ACCESS DATA, CONTACT RIGHT OF WAY ENGINEERING AT THE DISTRICT OFFICE.

CURVE DATA

No.	R	Δ	T	L
12	1000′	9°47′41"	85.69′	170.95′
13	1000′	6°35′14"	57.55′	114.97′

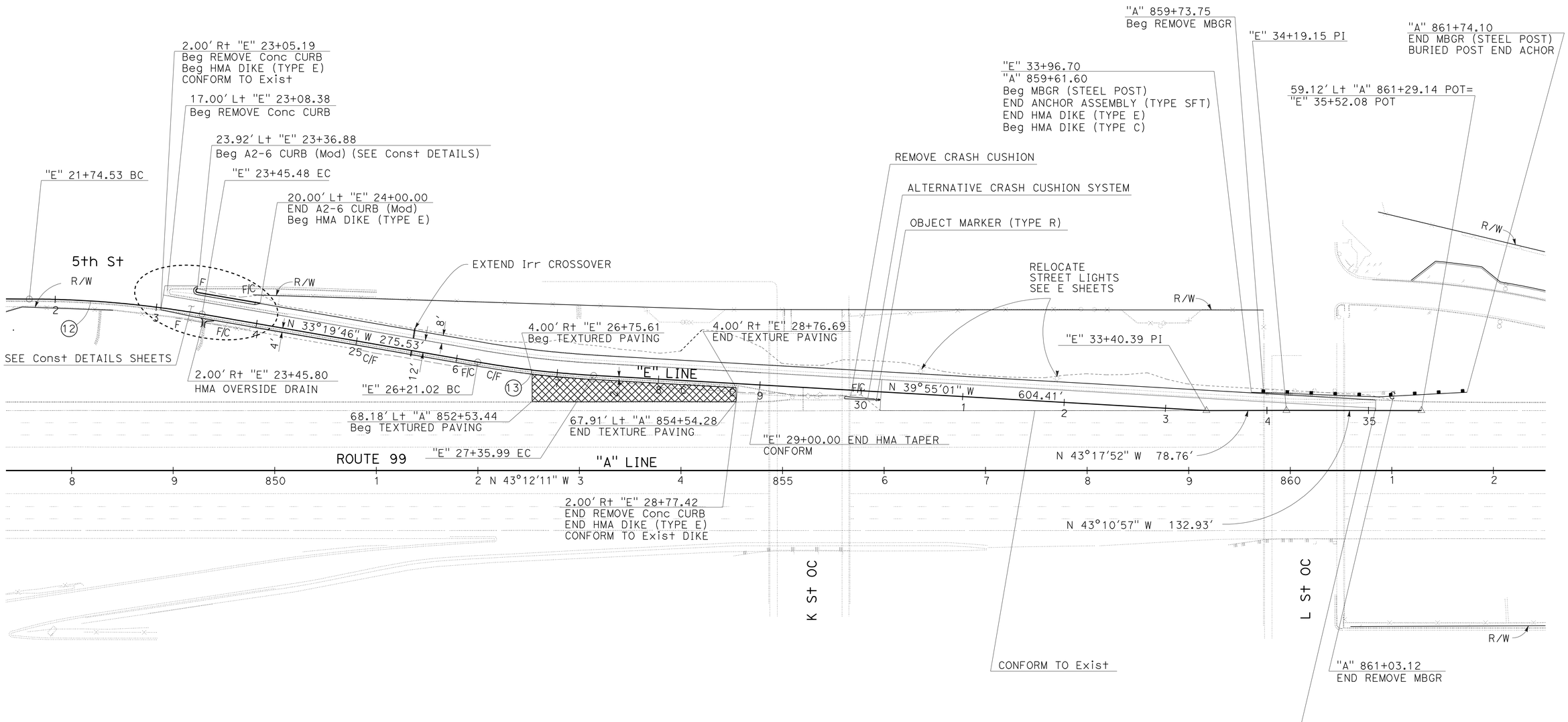

I St SB OFF-RAMP (LOCATION 4)

LAYOUT

SCALE: 1" = 50′ **L-3**

STATE OF CALIFORNIA - DEPARTMENT OF TRANSPORTATION
Caltrans
06-DESIGN

FUNCTIONAL SUPERVISOR: ERNIE PENUNA
CALCULATED-DESIGNED BY: JOSEPH VALDIVIA
CHECKED BY: ROTIMI ADEBAYO
REVISED BY / DATE REVISED

LAST REVISION 05-20-10 | DATE PLOTTED => 23-SEP-2010 | TIME PLOTTED => 10:04

Dist	COUNTY	ROUTE	POST MILES TOTAL PROJECT	SHEET No.	TOTAL SHEETS
10	Sta	99	15.1/17.0	20	176

REGISTERED CIVIL ENGINEER 05-24-10 DATE

9-7-10
PLANS APPROVAL DATE

REGISTERED PROFESSIONAL ENGINEER ROTIMI D. ADEBAYO No. 69102 Exp. 6/30/12 CIVIL STATE OF CALIFORNIA

THE STATE OF CALIFORNIA OR ITS OFFICERS OR AGENTS SHALL NOT BE RESPONSIBLE FOR THE ACCURACY OR COMPLETENESS OF SCANNED COPIES OF THIS PLAN SHEET.

NOTE:
FOR COMPLETE RIGHT OF WAY AND ACCURATE ACCESS DATA, CONTACT RIGHT OF WAY ENGINEERING AT THE DISTRICT OFFICE.

CURVE DATA

No.	R	Δ	T	L
14	850.00	12°27′21″	92.76	184.79
15	850.00	11°41′13″	86.99	173.38
16	3768.70	2°16′58″	75.09	150.16
17	3750.00	1°42′32″	55.79	111.57

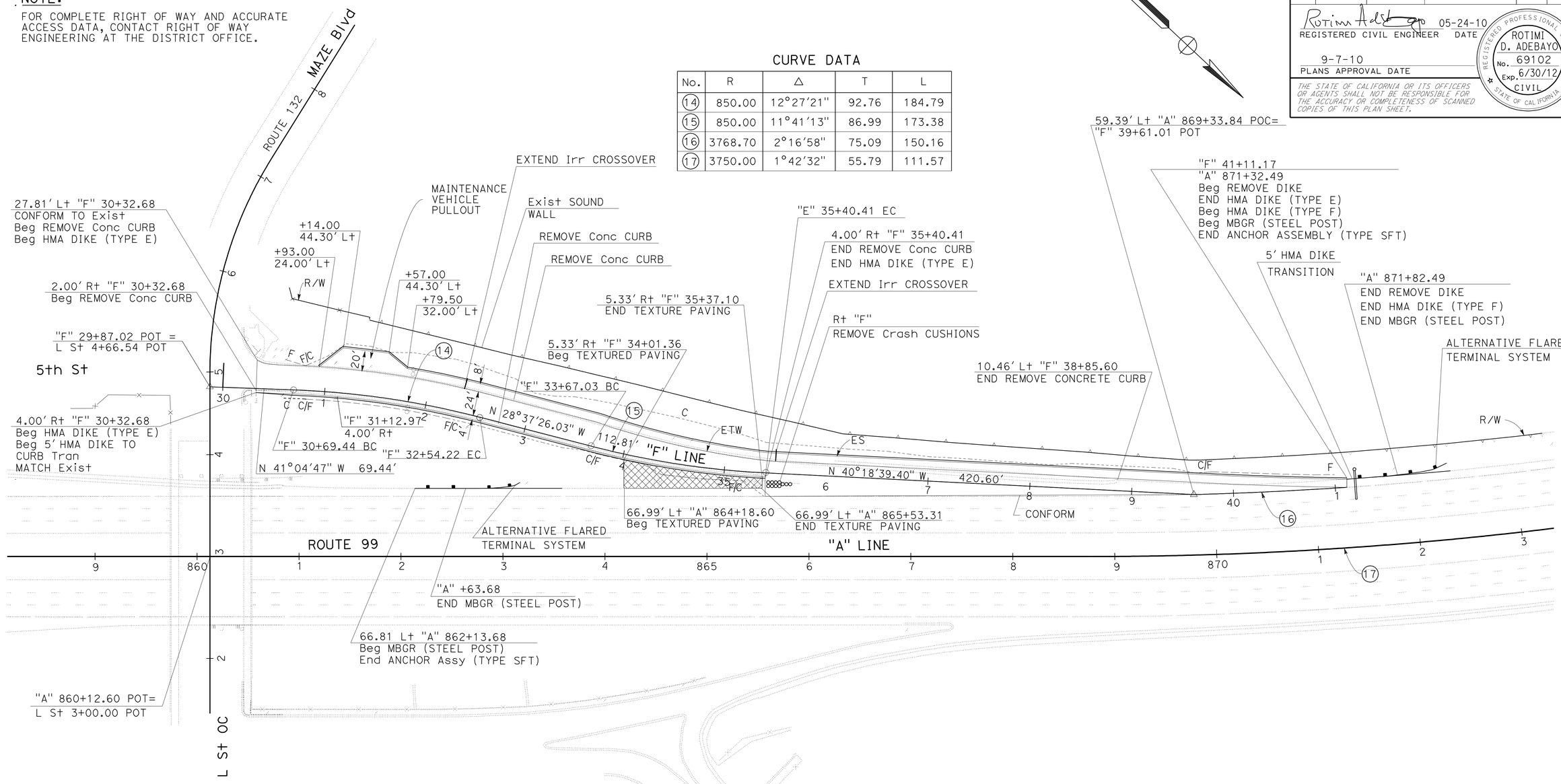

L St SB OFF-RAMP (LOCATION 5)

LAYOUT

SCALE: 1" = 50′ **L-4**

STATE OF CALIFORNIA - DEPARTMENT OF TRANSPORTATION
06-DESIGN
Caltrans

FUNCTIONAL SUPERVISOR: ERNIE PENUNA
CALCULATED-DESIGNED BY: JOSEPH VALDIVIA
CHECKED BY: ROTIMI ADEBAYO
REVISED BY / DATE REVISED

LAST REVISION 05-20-10 | DATE PLOTTED => 08-SEP-2010 | TIME PLOTTED => 09:41

Dist	COUNTY	ROUTE	POST MILES TOTAL PROJECT	SHEET No.	TOTAL SHEETS
10	Sta	99	15.1/17.0	21	176

REGISTERED CIVIL ENGINEER 05-24-10 DATE

9-7-10
PLANS APPROVAL DATE

REGISTERED PROFESSIONAL ENGINEER ROTIMI D. ADEBAYO No. 69102 Exp. 6/30/12 CIVIL STATE OF CALIFORNIA

THE STATE OF CALIFORNIA OR ITS OFFICERS OR AGENTS SHALL NOT BE RESPONSIBLE FOR THE ACCURACY OR COMPLETENESS OF SCANNED COPIES OF THIS PLAN SHEET.

NOTE:

FOR COMPLETE RIGHT OF WAY AND ACCURATE ACCESS DATA, CONTACT RIGHT OF WAY ENGINEERING AT THE DISTRICT OFFICE.

CURVE DATA

No.	R	Δ	T	L
18	3250.00	9°14′21″	262.61	524.08
19	3191.09	6°13′49″	173.67	347.00
20	305.00	47°32′53″	134.35	253.11
21	35.00	90°08′56″	35.09	55.07

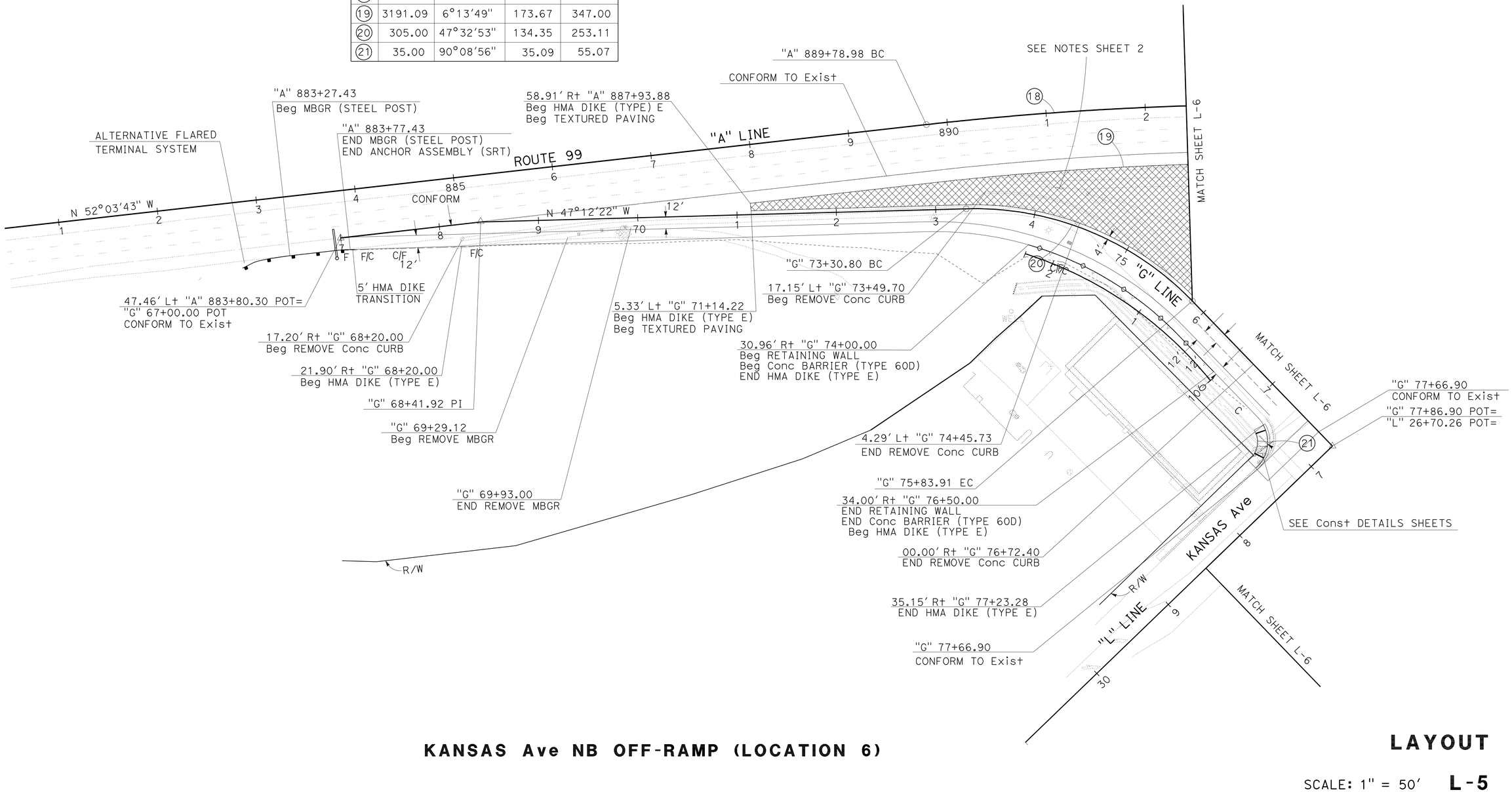

KANSAS Ave NB OFF-RAMP (LOCATION 6)

LAYOUT

SCALE: 1" = 50′ **L-5**

STATE OF CALIFORNIA - DEPARTMENT OF TRANSPORTATION
Caltrans
06-DESIGN

FUNCTIONAL SUPERVISOR: ERNIE PENUNA
CALCULATED-DESIGNED BY: JOSEPH VALDIVIA
CHECKED BY: ROTIMI ADEBAYO
REVISED BY
DATE REVISED

LAST REVISION 05-20-10
DATE PLOTTED => 08-SEP-2010
TIME PLOTTED => 09:42

Dist	COUNTY	ROUTE	POST MILES TOTAL PROJECT	SHEET No.	TOTAL SHEETS
10	Sta	99	15.1/17.0	22	176

REGISTERED CIVIL ENGINEER 05-24-10 DATE

9-7-10
PLANS APPROVAL DATE

REGISTERED PROFESSIONAL ENGINEER ROTIMI D. ADEBAYO No. 69102 Exp. 6/30/12 CIVIL STATE OF CALIFORNIA

THE STATE OF CALIFORNIA OR ITS OFFICERS OR AGENTS SHALL NOT BE RESPONSIBLE FOR THE ACCURACY OR COMPLETENESS OF SCANNED COPIES OF THIS PLAN SHEET.

NOTE:

FOR COMPLETE RIGHT OF WAY AND ACCURATE ACCESS DATA, CONTACT RIGHT OF WAY ENGINEERING AT THE DISTRICT OFFICE.

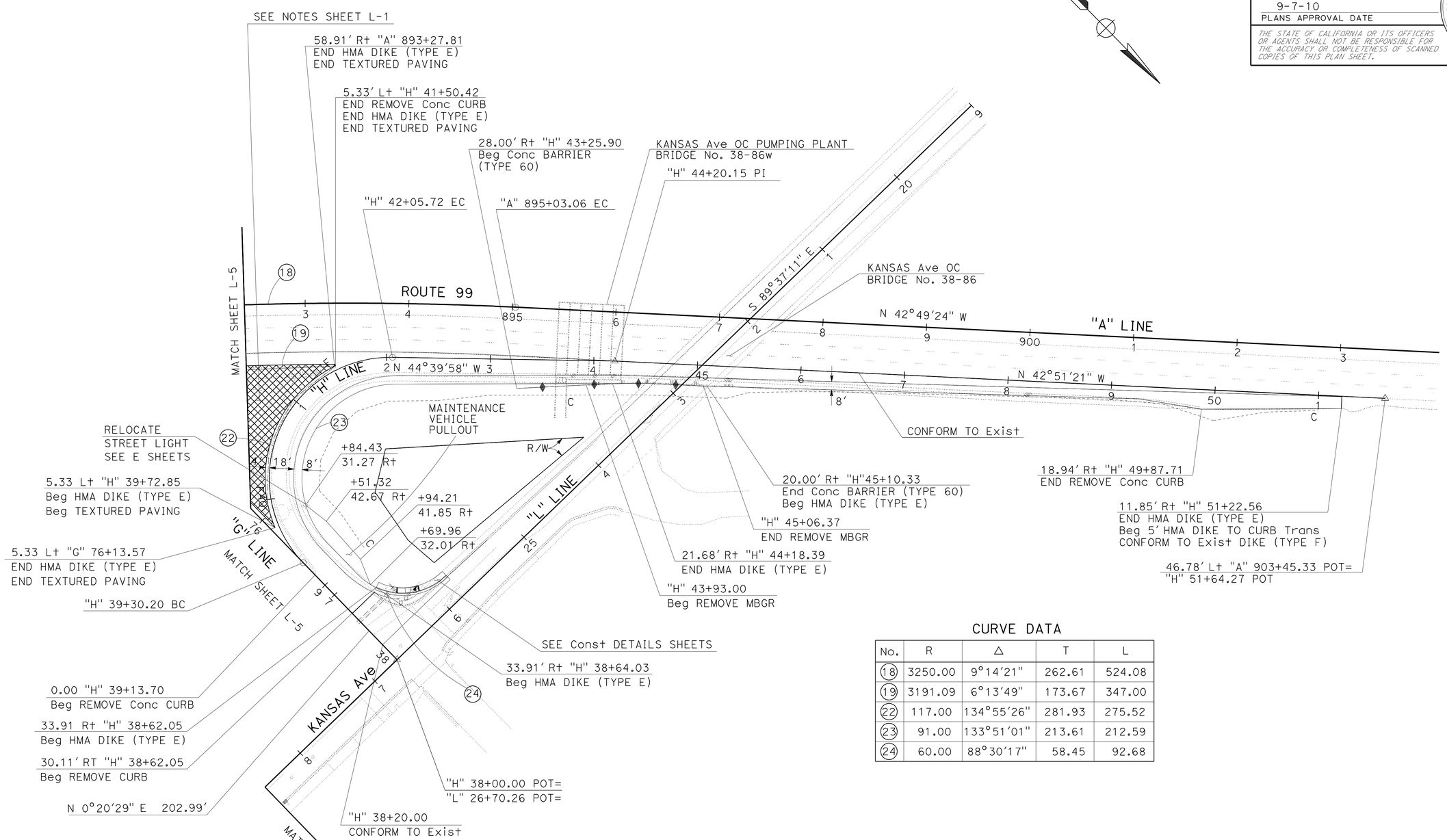

CURVE DATA

No.	R	Δ	T	L
18	3250.00	9°14′21"	262.61	524.08
19	3191.09	6°13′49"	173.67	347.00
22	117.00	134°55′26"	281.93	275.52
23	91.00	133°51′01"	213.61	212.59
24	60.00	88°30′17"	58.45	92.68

KANSAS Ave NB ON-RAMP (LOCATION 7)

LAYOUT

SCALE: 1" = 50′ **L-6**

STATE OF CALIFORNIA - DEPARTMENT OF TRANSPORTATION
Caltrans
06-DESIGN

FUNCTIONAL SUPERVISOR: ERNIE PENUNA
CALCULATED-DESIGNED BY: JOSEPH VALDIVIA
CHECKED BY: ROTIMI ADEBAYO
REVISED BY
DATE REVISED

LAST REVISION 05-20-10
DATE PLOTTED => 08-SEP-2010
TIME PLOTTED => 09:42

Dist	COUNTY	ROUTE	POST MILES TOTAL PROJECT	SHEET No.	TOTAL SHEETS
10	Sta	99	15.1/17.0	23	176

REGISTERED CIVIL ENGINEER 05-24-10 DATE

9-7-10
PLANS APPROVAL DATE

REGISTERED PROFESSIONAL ENGINEER ROTIMI D. ADEBAYO No. 69102 Exp. 6/30/12 CIVIL STATE OF CALIFORNIA

THE STATE OF CALIFORNIA OR ITS OFFICERS OR AGENTS SHALL NOT BE RESPONSIBLE FOR THE ACCURACY OR COMPLETENESS OF SCANNED COPIES OF THIS PLAN SHEET.

NOTE:

FOR COMPLETE RIGHT OF WAY AND ACCURATE ACCESS DATA, CONTACT RIGHT OF WAY ENGINEERING AT THE DISTRICT OFFICE.

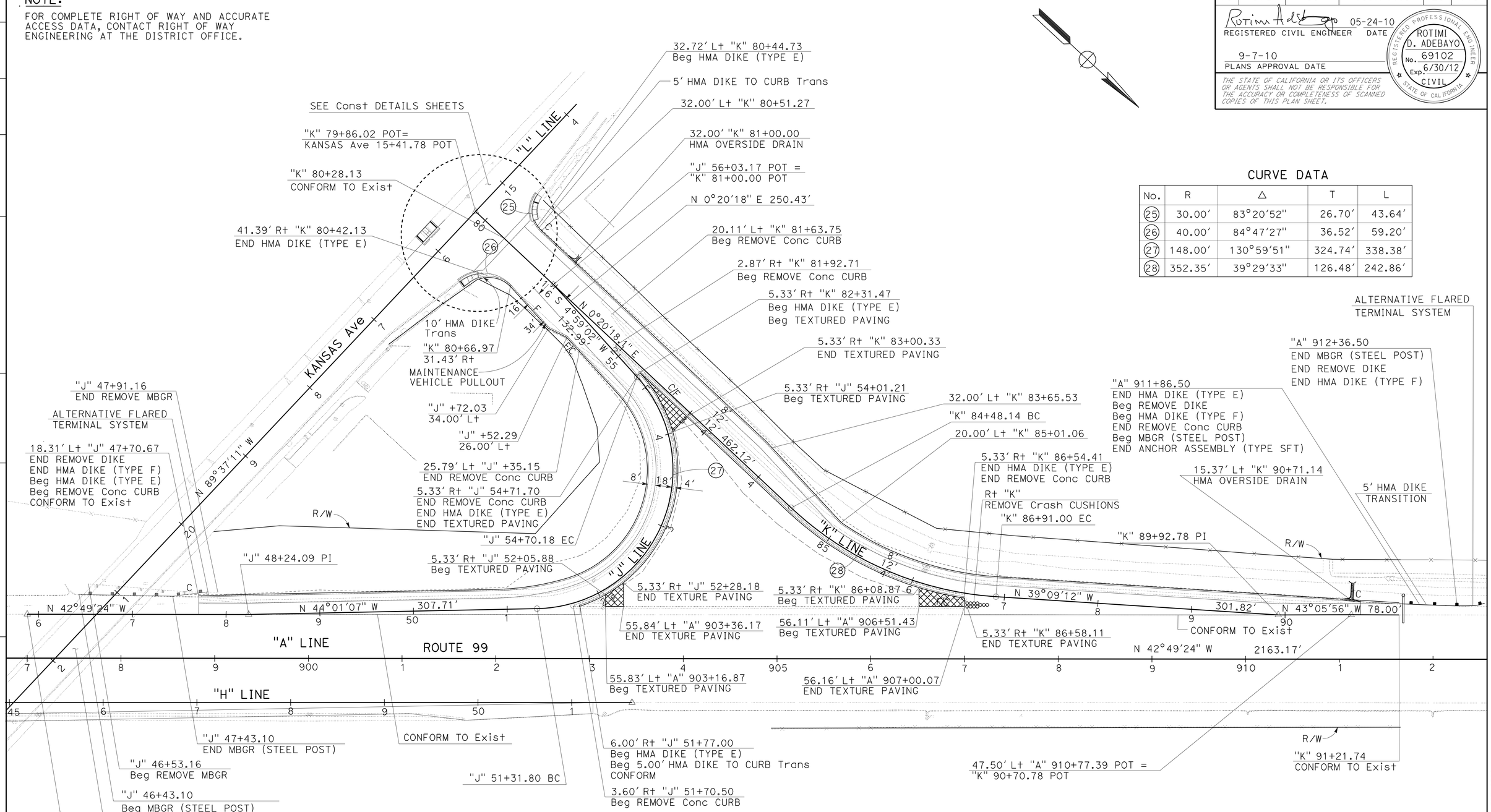

CURVE DATA

No.	R	Δ	T	L
25	30.00'	83°20'52"	26.70'	43.64'
26	40.00'	84°47'27"	36.52'	59.20'
27	148.00'	130°59'51"	324.74'	338.38'
28	352.35'	39°29'33"	126.48'	242.86'

KANSAS Ave SB ON-RAMP(LOCATION 8)
KANSAS Ave SB OFF-RAMP (LOCATION 9)

LAYOUT

SCALE: 1" = 50'

L-7

REVISED BY | DATE REVISED
JOSEPH VALDIVIA | ROTIMI ADEBAYO
CALCULATED-DESIGNED BY | CHECKED BY
FUNCTIONAL SUPERVISOR | ERNIE PENUNA
STATE OF CALIFORNIA - DEPARTMENT OF TRANSPORTATION
Caltrans
06-DESIGN

LAST REVISION 05-20-10 | DATE PLOTTED => 08-SEP-2010 | TIME PLOTTED => 09:42

Dist	COUNTY	ROUTE	POST MILES TOTAL PROJECT	SHEET No.	TOTAL SHEETS
10	Sta	99	15.1/17.0	24	176

Rotimi Adebayo 05-24-10
REGISTERED CIVIL ENGINEER DATE

9-7-10
PLANS APPROVAL DATE

REGISTERED PROFESSIONAL ENGINEER ROTIMI D. ADEBAYO No. 69102 Exp. 6/30/12 CIVIL STATE OF CALIFORNIA

THE STATE OF CALIFORNIA OR ITS OFFICERS OR AGENTS SHALL NOT BE RESPONSIBLE FOR THE ACCURACY OR COMPLETENESS OF SCANNED COPIES OF THIS PLAN SHEET.

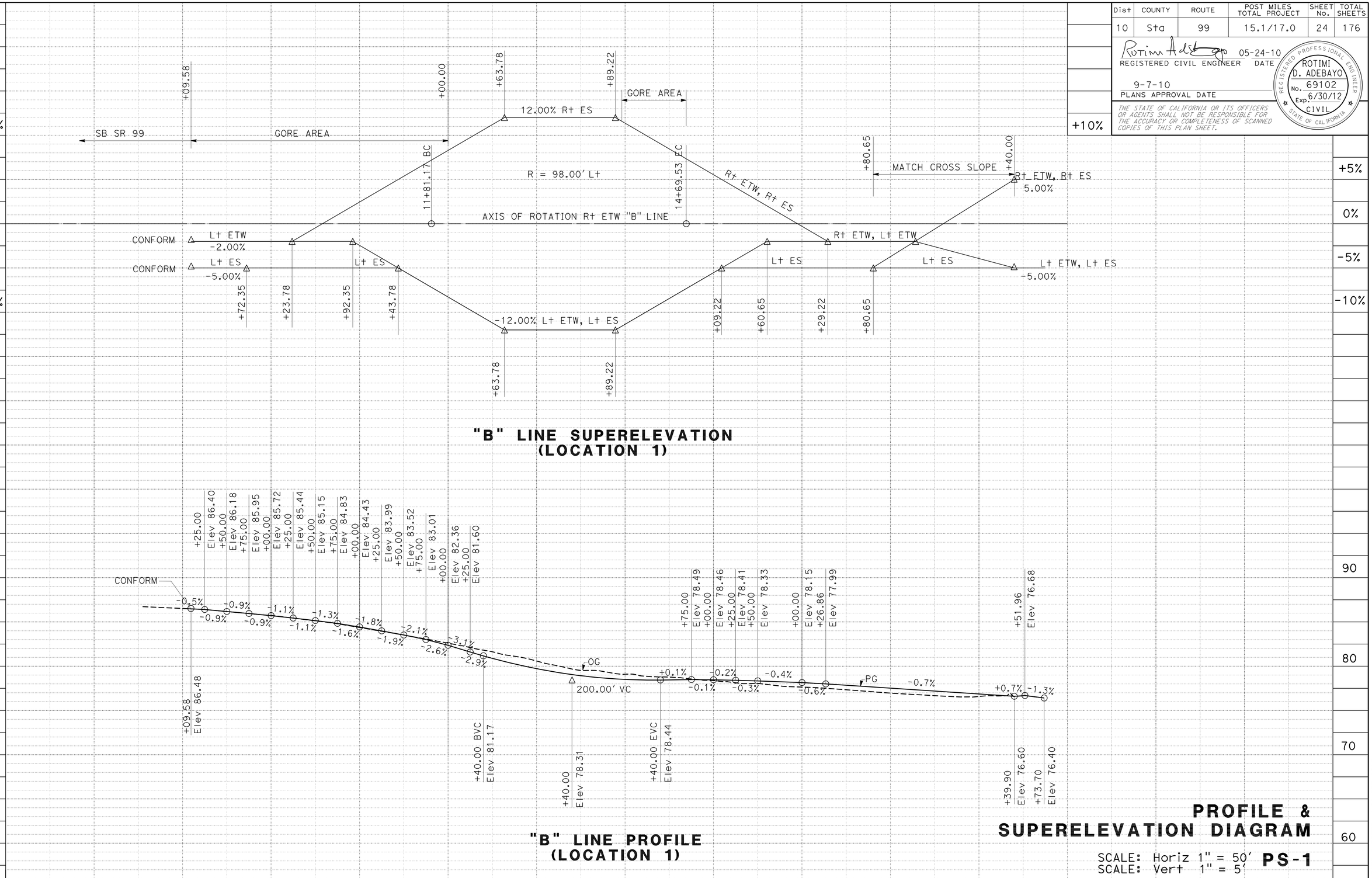

PROFILE & SUPERELEVATION DIAGRAM

SCALE: Horiz 1" = 50'
SCALE: Vert 1" = 5'

PS-1

STATION	8	9	10	11	12	13	14	15	16	17	18	19	20	21	TOTAL
CY Exc							2270								2270
CY Emb							116								116

STATE OF CALIFORNIA - DEPARTMENT OF TRANSPORTATION
Caltrans
06-DESIGN

FUNCTIONAL SUPERVISOR: ERNIE PENUNA
CALCULATED-DESIGNED BY: JOSEPH VALDIVIA
CHECKED BY: ROTIMI ADEBAYO
REVISED BY
DATE REVISED

LAST REVISION 05-13-10
DATE PLOTTED => 08-SEP-2010
TIME PLOTTED => 09:43

Dist	COUNTY	ROUTE	POST MILES TOTAL PROJECT	SHEET No.	TOTAL SHEETS
10	Sta	99	15.1/17.0	25	176

REGISTERED CIVIL ENGINEER 05-24-10 DATE

9-7-10
PLANS APPROVAL DATE

REGISTERED PROFESSIONAL ENGINEER ROTIMI D. ADEBAYO No. 69102 Exp. 6/30/12 CIVIL STATE OF CALIFORNIA

THE STATE OF CALIFORNIA OR ITS OFFICERS OR AGENTS SHALL NOT BE RESPONSIBLE FOR THE ACCURACY OR COMPLETENESS OF SCANNED COPIES OF THIS PLAN SHEET.

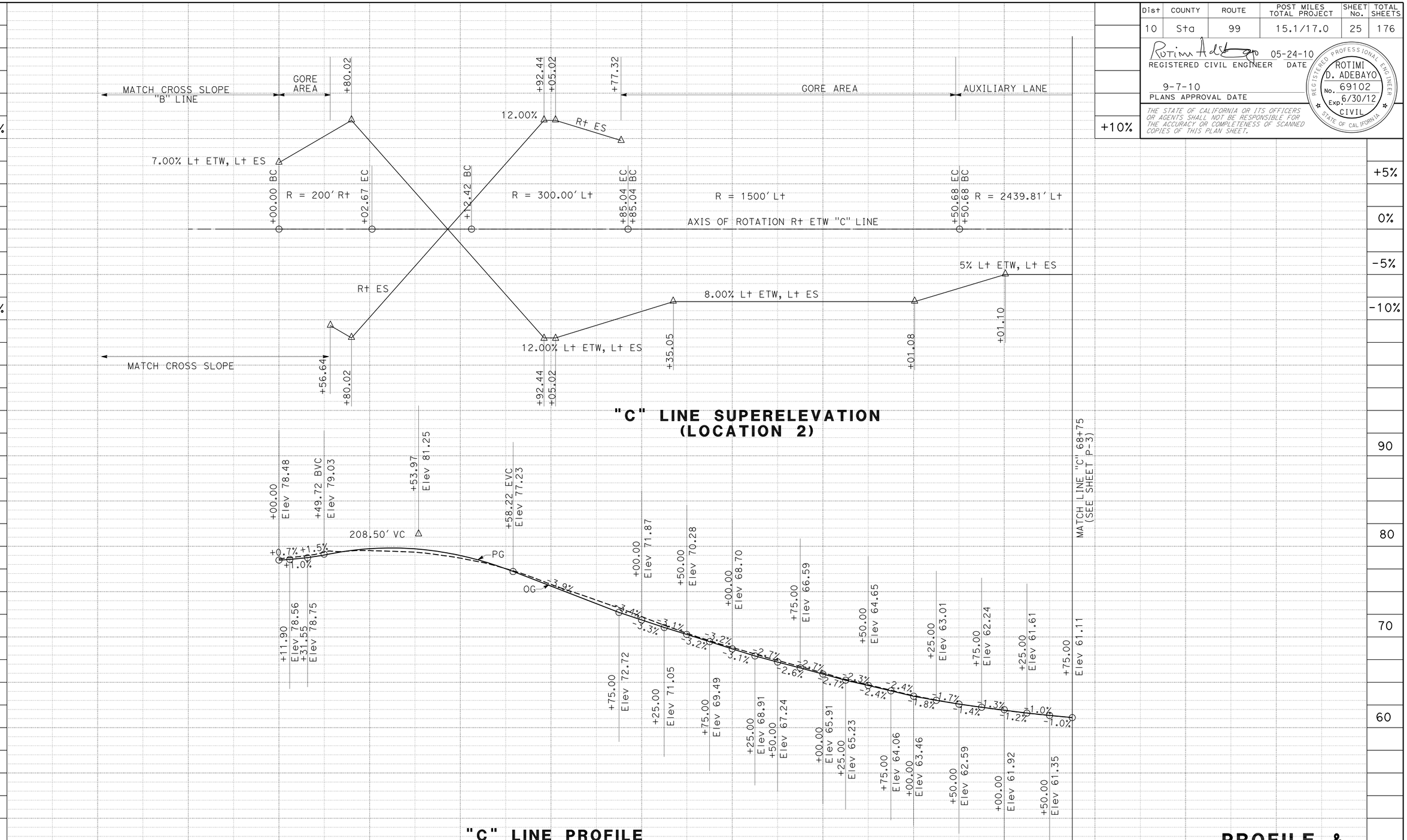

PROFILE & SUPERELEVATION DIAGRAM

SCALE: Horiz 1" = 50'
SCALE: Vert 1" = 5'

PS-2

STATION		58	59	60	61	62	63	64	65	66	67	68	69	70	71	TOTAL
CY	Exc			815												815
	Emb			30												30

STATE OF CALIFORNIA - DEPARTMENT OF TRANSPORTATION
Caltrans
06-DESIGN

FUNCTIONAL SUPERVISOR: ERNIE PENUNA
CALCULATED-DESIGNED BY: JOSEPH VALDIVIA
CHECKED BY: ROTIMI ADEBAYO
REVISED BY
DATE REVISED

LAST REVISION 05-19-10
DATE PLOTTED => 08-SEP-2010
TIME PLOTTED => 09:43

Dist	COUNTY	ROUTE	POST MILES TOTAL PROJECT	SHEET No.	TOTAL SHEETS
10	Sta	99	15.1/17.0	26	176

REGISTERED CIVIL ENGINEER 05-24-10 DATE

9-7-10
PLANS APPROVAL DATE

REGISTERED PROFESSIONAL ENGINEER ROTIMI D. ADEBAYO No. 69102 Exp. 6/30/12 CIVIL STATE OF CALIFORNIA

THE STATE OF CALIFORNIA OR ITS OFFICERS OR AGENTS SHALL NOT BE RESPONSIBLE FOR THE ACCURACY OR COMPLETENESS OF SCANNED COPIES OF THIS PLAN SHEET.

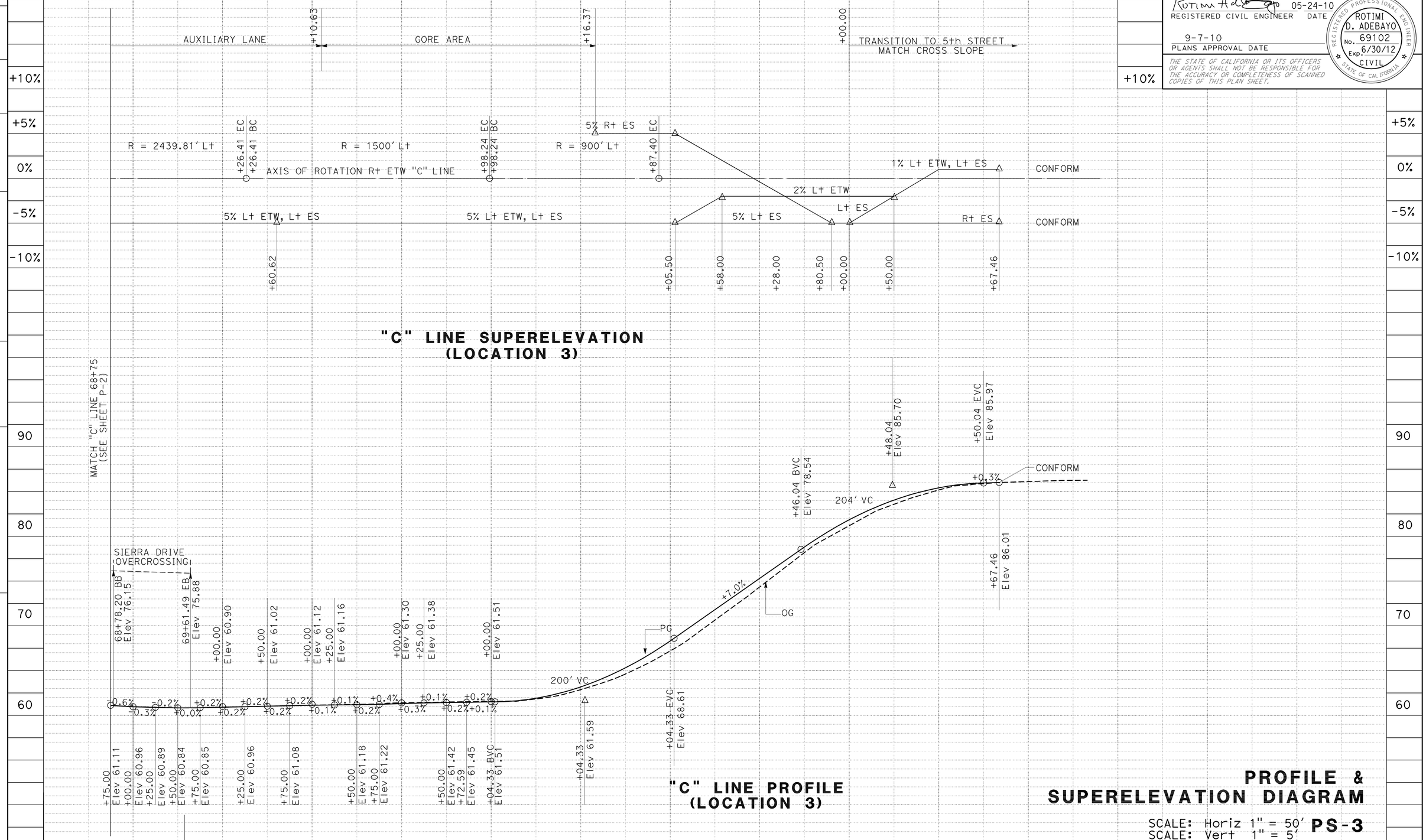

STATION	69	70	71	72	73	74	75	76	77	78	79	80	81	82	TOTAL
CY Exc	1265														1265
CY Emb	40														40

PROFILE & SUPERELEVATION DIAGRAM

SCALE: Horiz 1" = 50'
SCALE: Vert 1" = 5'

PS-3

STATE OF CALIFORNIA - DEPARTMENT OF TRANSPORTATION
Caltrans
06-DESIGN

FUNCTIONAL SUPERVISOR: ERNIE PENUNA
CALCULATED-DESIGNED BY: JOSEPH VALDIVIA
CHECKED BY: ROTIMI ADEBAYO
REVISED BY
DATE REVISED

LAST REVISION 05-19-10
DATE PLOTTED => 08-SEP-2010
TIME PLOTTED => 09:43

BORDER LAST REVISED 4/11/2008
RELATIVE BORDER SCALE IS IN INCHES 0 1 2 3
USERNAME => trrichf
DGN FILE => a0A671fb003.dgn
CU 06253
EA 0A6711

Dist	COUNTY	ROUTE	POST MILES TOTAL PROJECT	SHEET No.	TOTAL SHEETS
10	Sta	99	15.1/17.0	27	176

REGISTERED CIVIL ENGINEER 05-24-10 DATE

9-7-10
PLANS APPROVAL DATE

REGISTERED PROFESSIONAL ENGINEER ROTIMI D. ADEBAYO No. 69102 Exp. 6/30/12 CIVIL STATE OF CALIFORNIA

THE STATE OF CALIFORNIA OR ITS OFFICERS OR AGENTS SHALL NOT BE RESPONSIBLE FOR THE ACCURACY OR COMPLETENESS OF SCANNED COPIES OF THIS PLAN SHEET.

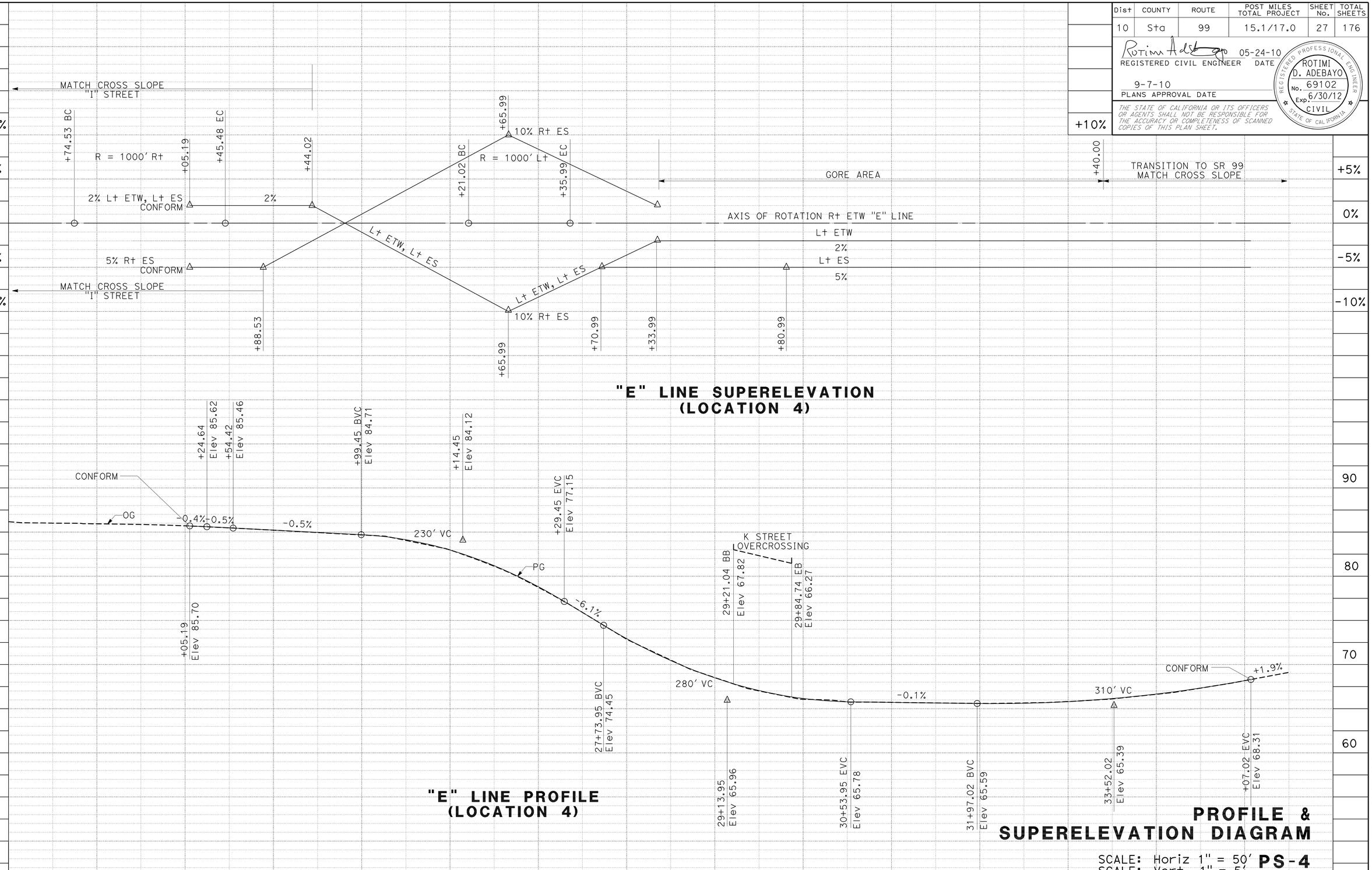

STATION	22	23	24	25	26	27	28	29	30	31	32	33	34	35	TOTAL
CY Exc							1228								1228
CY Emb							5								5

STATE OF CALIFORNIA - DEPARTMENT OF TRANSPORTATION
Caltrans®
06-DESIGN

FUNCTIONAL SUPERVISOR: ERNIE PENUNA
CALCULATED-DESIGNED BY: JOSEPH VALDIVIA
CHECKED BY: ROTIMI ADEBAYO
REVISED BY
DATE REVISED

LAST REVISION DATE PLOTTED => 08-SEP-2010
05-19-10 TIME PLOTTED => 09:43

Dist	COUNTY	ROUTE	POST MILES TOTAL PROJECT	SHEET No.	TOTAL SHEETS
10	Sta	99	15.1/17.0	28	176

REGISTERED CIVIL ENGINEER 05-24-10 DATE

9-7-10
PLANS APPROVAL DATE

REGISTERED PROFESSIONAL ENGINEER ROTIMI D. ADEBAYO No. 69102 Exp. 6/30/12 CIVIL STATE OF CALIFORNIA

THE STATE OF CALIFORNIA OR ITS OFFICERS OR AGENTS SHALL NOT BE RESPONSIBLE FOR THE ACCURACY OR COMPLETENESS OF SCANNED COPIES OF THIS PLAN SHEET.

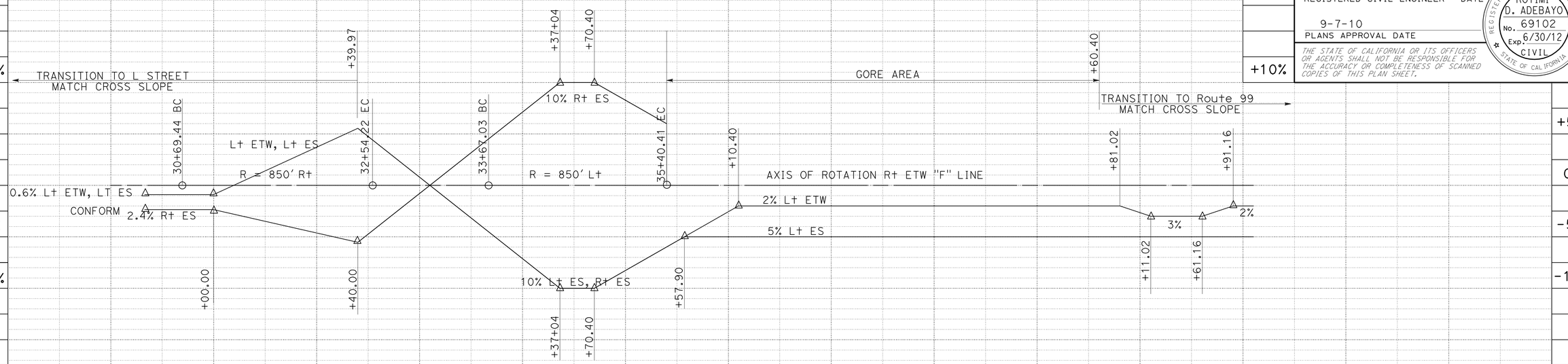

"F" LINE SUPERELEVATION (LOCATION 5)

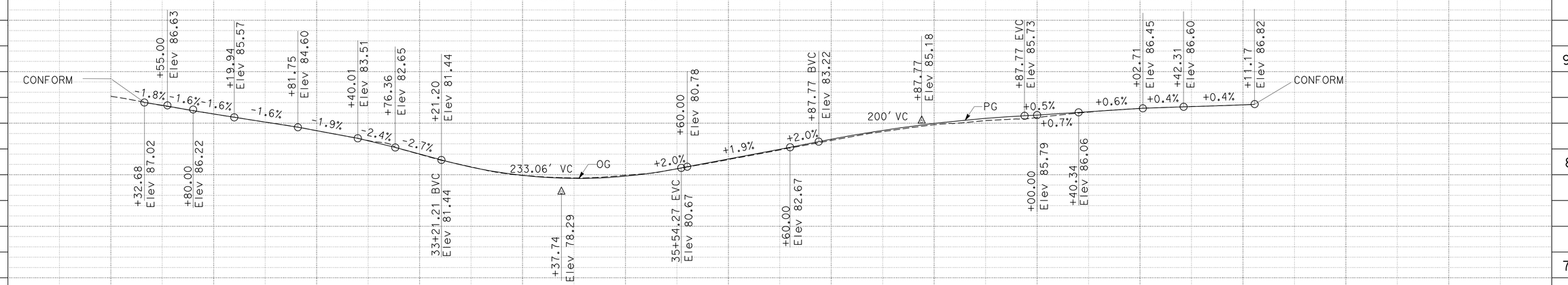

"F" LINE PROFILE (LOCATION 5)

STATION	30	31	32	33	34	35	36	37	38	39	40	41	42	43	TOTAL
CY Exc							1516								1516
CY Emb							72								72

PROFILE & SUPERELEVATION DIAGRAM

SCALE: Horiz 1" = 50'
SCALE: Vert 1" = 5'

PS-5

STATE OF CALIFORNIA - DEPARTMENT OF TRANSPORTATION
Caltrans
06-DESIGN

FUNCTIONAL SUPERVISOR: ERNIE PENUNA
CALCULATED-DESIGNED BY: ROTIMI ADEBAYO
CHECKED BY: JOSEPH VALDIVIA
REVISED BY
DATE REVISED

LAST REVISION 05-19-10
DATE PLOTTED => 08-SEP-2010
TIME PLOTTED => 09:43

Dist	COUNTY	ROUTE	POST MILES TOTAL PROJECT	SHEET No.	TOTAL SHEETS
10	Sta	99	15.1/17.0	29	176

REGISTERED CIVIL ENGINEER 05-24-10 DATE

9-7-10
PLANS APPROVAL DATE

REGISTERED PROFESSIONAL ENGINEER ROTIMI D. ADEBAYO No. 69102 Exp. 6/30/12 CIVIL STATE OF CALIFORNIA

THE STATE OF CALIFORNIA OR ITS OFFICERS OR AGENTS SHALL NOT BE RESPONSIBLE FOR THE ACCURACY OR COMPLETENESS OF SCANNED COPIES OF THIS PLAN SHEET.

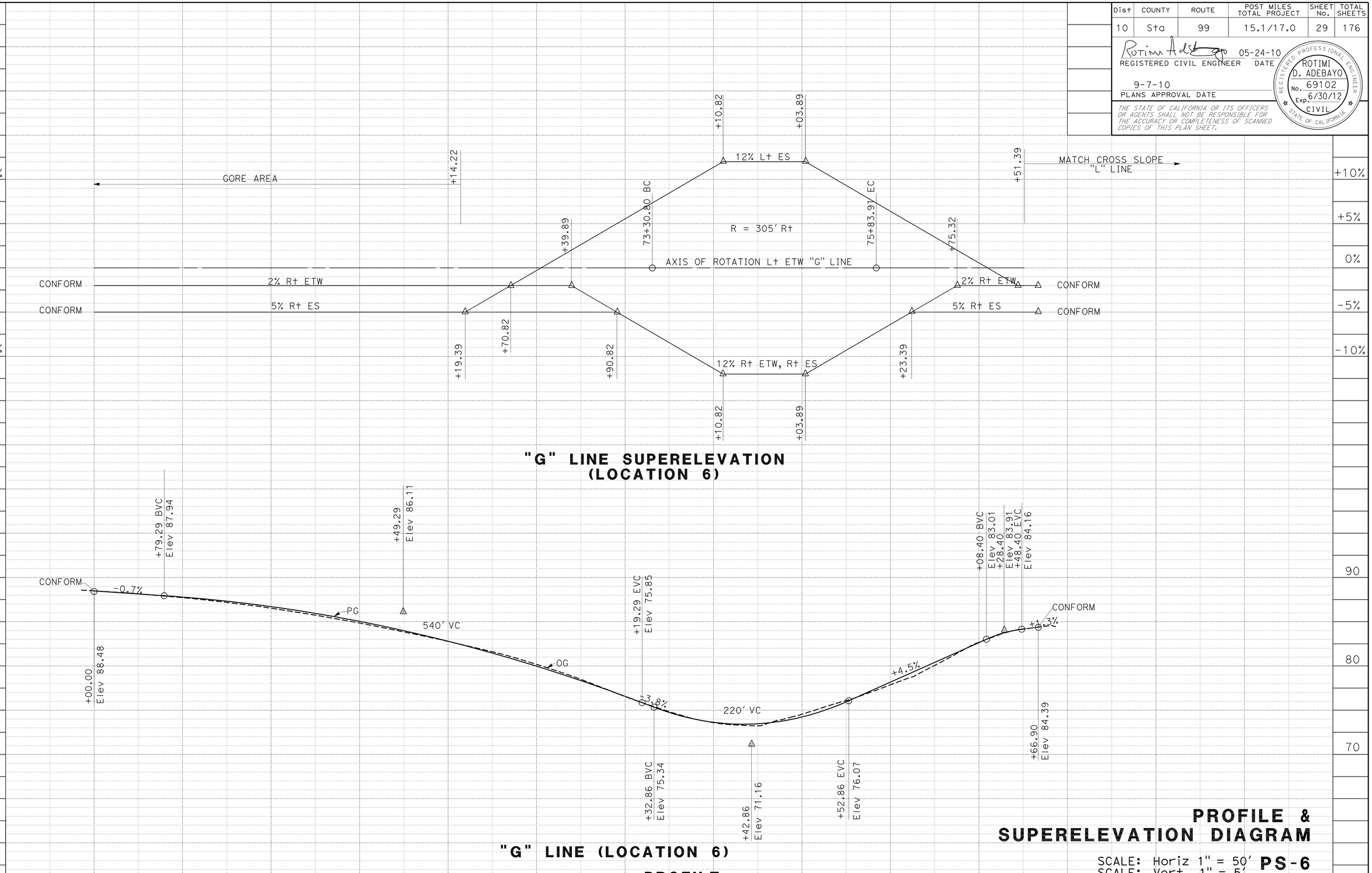

PROFILE & SUPERELEVATION DIAGRAM

SCALE: Horiz 1" = 50'
SCALE: Vert 1" = 5'

PS-6

STATE OF CALIFORNIA - DEPARTMENT OF TRANSPORTATION
Caltrans
06-DESIGN

FUNCTIONAL SUPERVISOR: ERNIE PENUNA
CALCULATED-DESIGNED BY: JOSEPH VALDIVIA
CHECKED BY: ROTIMI ADEBAYO
REVISED BY
DATE REVISED

LAST REVISION 05-19-10
DATE PLOTTED => 08-SEP-2010
TIME PLOTTED => 09:43

Dist	COUNTY	ROUTE	POST MILES TOTAL PROJECT	SHEET No.	TOTAL SHEETS
10	Sta	99	15.1/17.0	30	176

REGISTERED CIVIL ENGINEER 05-24-10 DATE

9-7-10
PLANS APPROVAL DATE

REGISTERED PROFESSIONAL ENGINEER ROTIMI D. ADEBAYO No. 69102 Exp. 6/30/12 CIVIL STATE OF CALIFORNIA

THE STATE OF CALIFORNIA OR ITS OFFICERS OR AGENTS SHALL NOT BE RESPONSIBLE FOR THE ACCURACY OR COMPLETENESS OF SCANNED COPIES OF THIS PLAN SHEET.

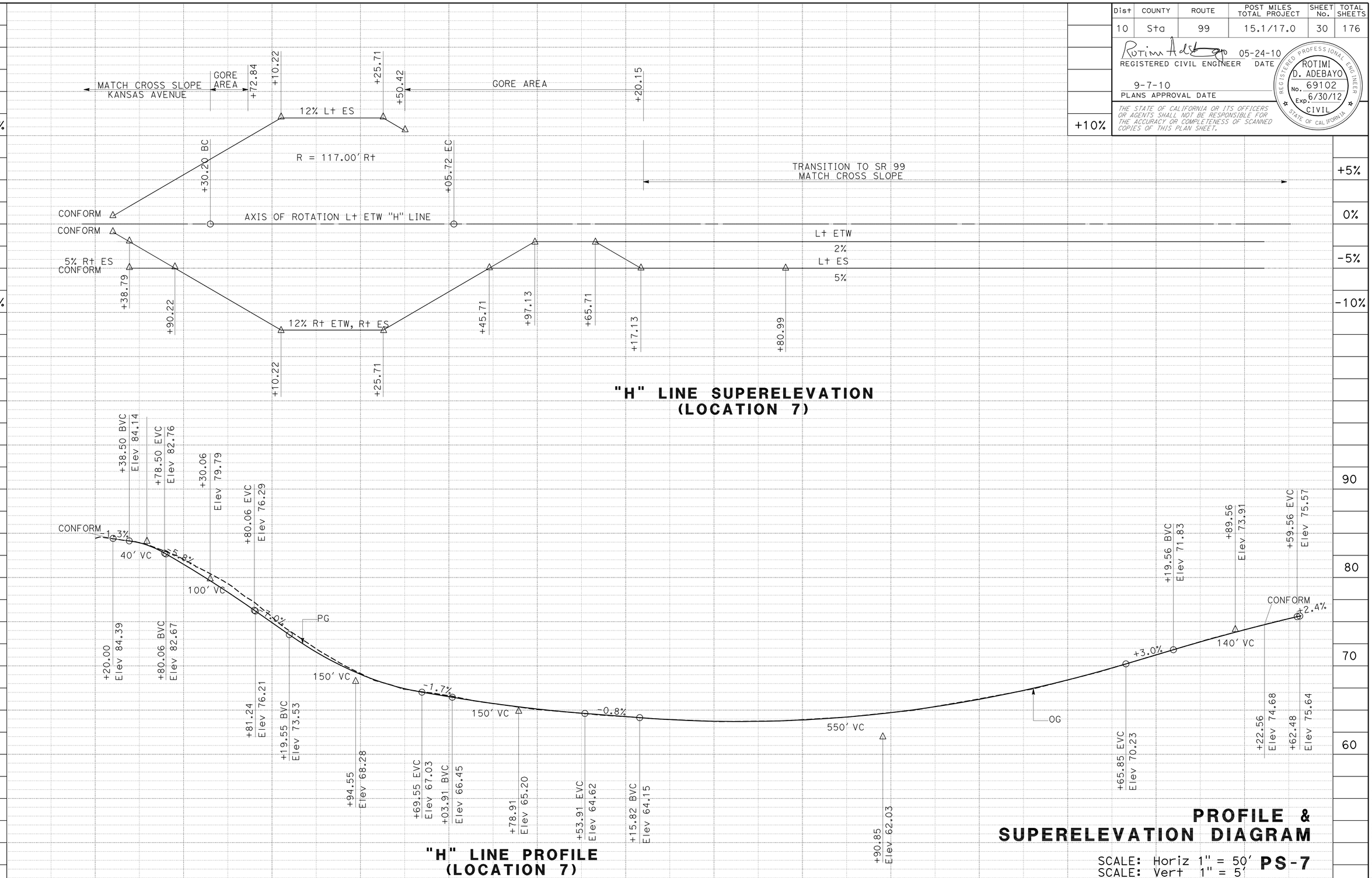

PROFILE & SUPERELEVATION DIAGRAM

SCALE: Horiz 1" = 50'
SCALE: Vert 1" = 5'

PS-7

STATE OF CALIFORNIA - DEPARTMENT OF TRANSPORTATION
Caltrans
06-DESIGN

FUNCTIONAL SUPERVISOR: ERNIE PENUNA
CALCULATED-DESIGNED BY: JOSEPH VALDIVIA
CHECKED BY: ROTIMI ADEBAYO
REVISED BY
DATE REVISED

LAST REVISION 04-13-10
DATE PLOTTED => 08-SEP-2010
TIME PLOTTED => 09:43

BORDER LAST REVISED 4/11/2008
RELATIVE BORDER SCALE IS IN INCHES 0 1 2 3
USERNAME => trrichf
DGN FILE => a0A671fb007.dgn
CU 06253
EA 0A6711

Dist	COUNTY	ROUTE	POST MILES TOTAL PROJECT	SHEET No.	TOTAL SHEETS
10	Sta	99	15.1/17.0	31	176

REGISTERED CIVIL ENGINEER 05-24-10 DATE

9-7-10
PLANS APPROVAL DATE

REGISTERED PROFESSIONAL ENGINEER ROTIMI D. ADEBAYO No. 69102 Exp. 6/30/12 CIVIL STATE OF CALIFORNIA

THE STATE OF CALIFORNIA OR ITS OFFICERS OR AGENTS SHALL NOT BE RESPONSIBLE FOR THE ACCURACY OR COMPLETENESS OF SCANNED COPIES OF THIS PLAN SHEET.

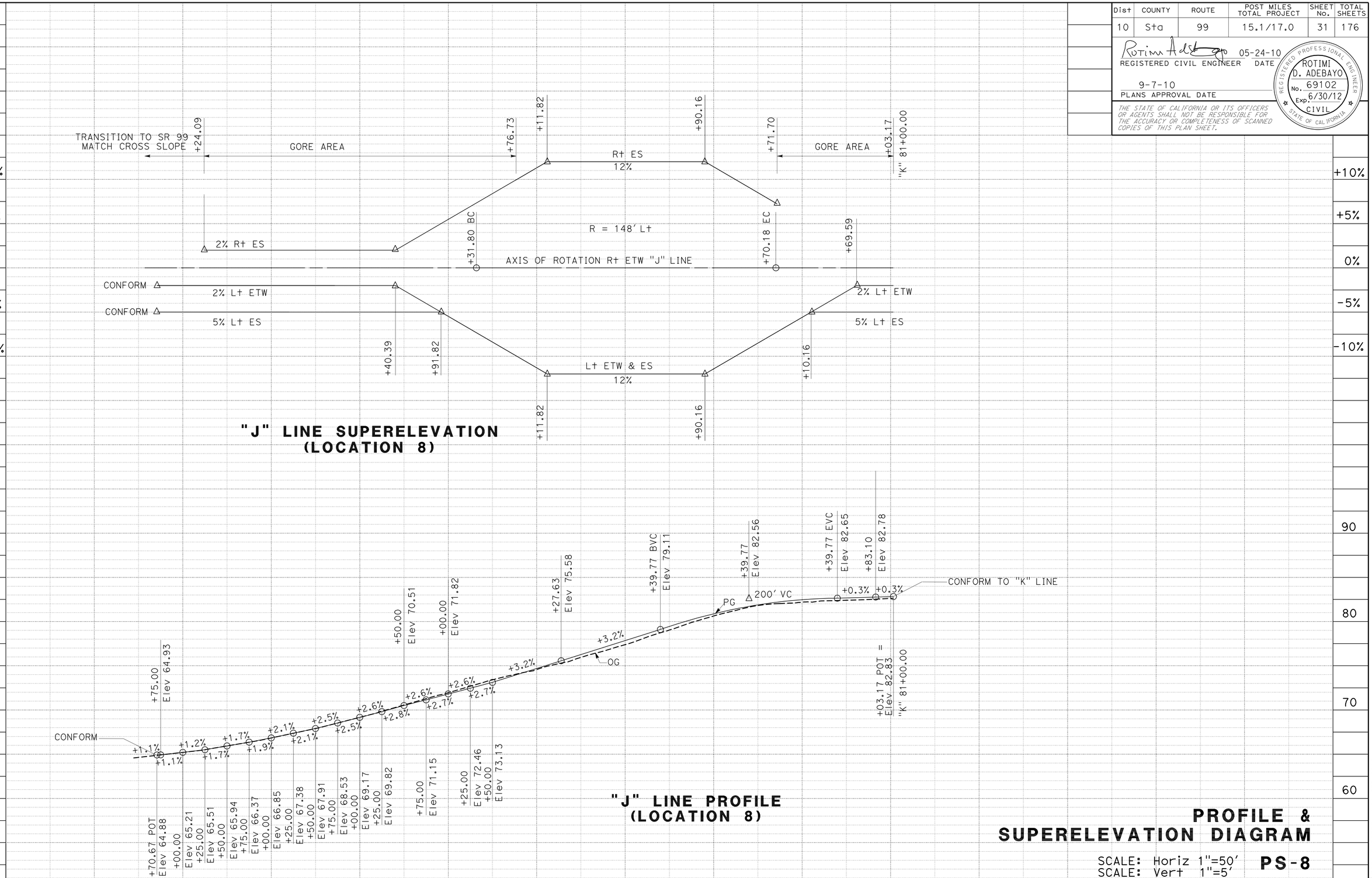

PROFILE & SUPERELEVATION DIAGRAM

SCALE: Horiz 1"=50'
SCALE: Vert 1"=5'

PS-8

STATION	47	48	49	50	51	52	53	54	55	56	57	58	59	60	TOTAL
CY Exc		1163													1163
CY Emb		30													30

REVISED BY | DATE REVISED
JOSEPH VALDIVIA | ROTIMI ADEBAYO
CALCULATED-DESIGNED BY | CHECKED BY
FUNCTIONAL SUPERVISOR: ERNIE PENUNA

STATE OF CALIFORNIA - DEPARTMENT OF TRANSPORTATION
Caltrans
06-DESIGN

LAST REVISION 05-19-10 | DATE PLOTTED => 08-SEP-2010 | TIME PLOTTED => 09:41

Dist	COUNTY	ROUTE	POST MILES TOTAL PROJECT	SHEET No.	TOTAL SHEETS
10	Sta	99	15.1/17.0	32	176

REGISTERED CIVIL ENGINEER 05-24-10 DATE

9-7-10
PLANS APPROVAL DATE

REGISTERED PROFESSIONAL ENGINEER ROTIMI D. ADEBAYO No. 69102 Exp. 6/30/12 CIVIL STATE OF CALIFORNIA

THE STATE OF CALIFORNIA OR ITS OFFICERS OR AGENTS SHALL NOT BE RESPONSIBLE FOR THE ACCURACY OR COMPLETENESS OF SCANNED COPIES OF THIS PLAN SHEET.

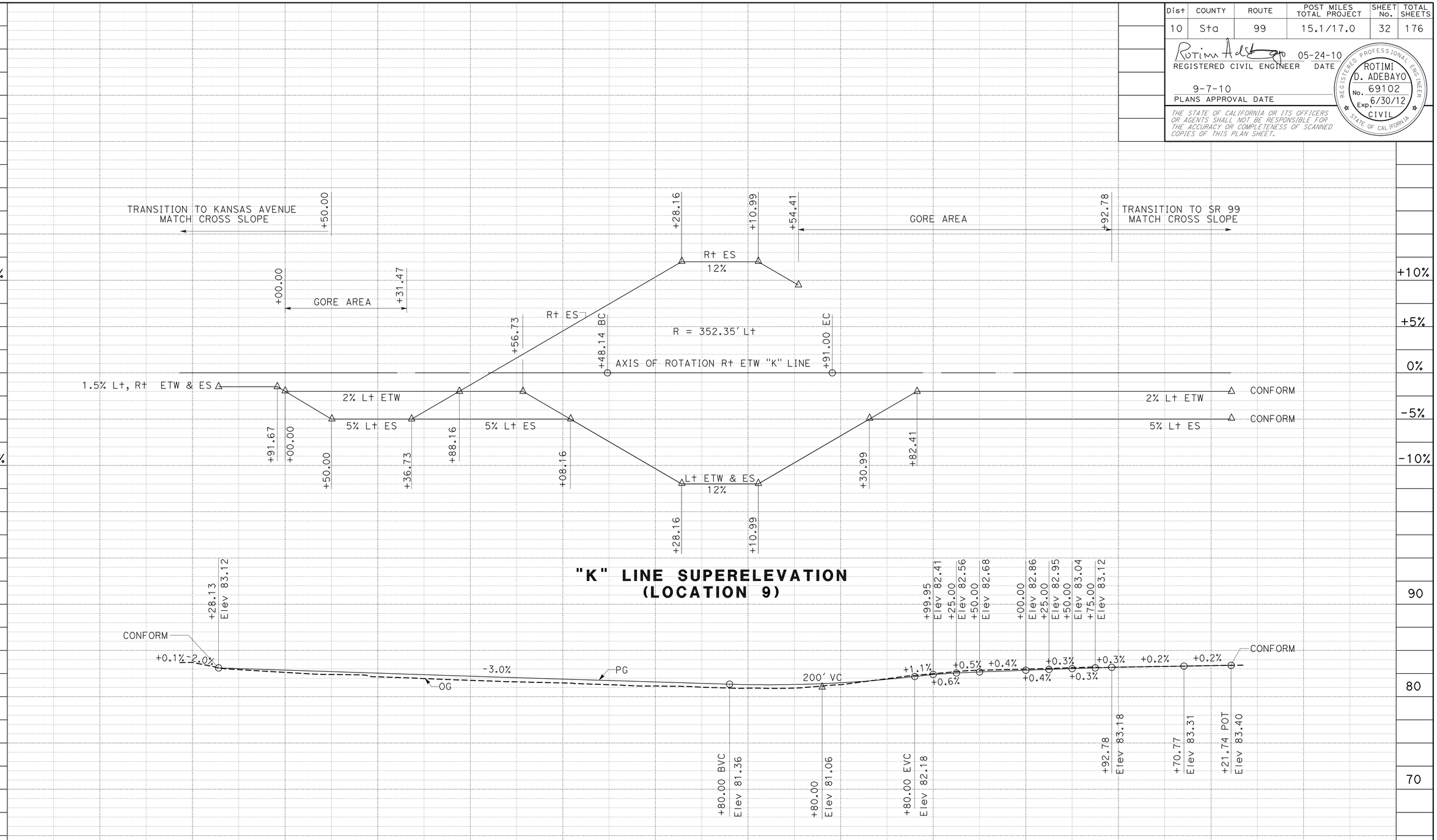

PROFILE & SUPERELEVATION DIAGRAM

SCALE: Horiz 1"=50'
SCALE: Vert 1"=5'

PS-9

STATION		79	80	81	82	83	84	85	86	87	88	89	90	91	92	TOTAL
CY	Exc								982							982
	Emb								76							76

STATE OF CALIFORNIA - DEPARTMENT OF TRANSPORTATION
06-DESIGN
Caltrans

FUNCTIONAL SUPERVISOR: ERNIE PENUNA
CALCULATED-DESIGNED BY: JOSEPH VALDIVIA
CHECKED BY: ROTIMI ADEBAYO
REVISED BY
DATE REVISED

LAST REVISION 05-19-10
DATE PLOTTED => 08-SEP-2010
TIME PLOTTED => 09:42

Dist	COUNTY	ROUTE	POST MILES TOTAL PROJECT	SHEET No.	TOTAL SHEETS
10	Sta	99	15.1/17.0	33	176

REGISTERED CIVIL ENGINEER 05-24-10 DATE

9-7-10
PLANS APPROVAL DATE

REGISTERED PROFESSIONAL ENGINEER ROTIMI D. ADEBAYO No. 69102 Exp. 6/30/12 CIVIL STATE OF CALIFORNIA

THE STATE OF CALIFORNIA OR ITS OFFICERS OR AGENTS SHALL NOT BE RESPONSIBLE FOR THE ACCURACY OR COMPLETENESS OF SCANNED COPIES OF THIS PLAN SHEET.

CURVE DATA

No.	R	Δ	T	L
2	80.00	74°02′09″	60.32	103.37
3	30.00	91°57′04″	31.04	48.15
29	91.94	21°38′31″	17.57	34.73
30	7.03	158°16′40″	36.63	19.42

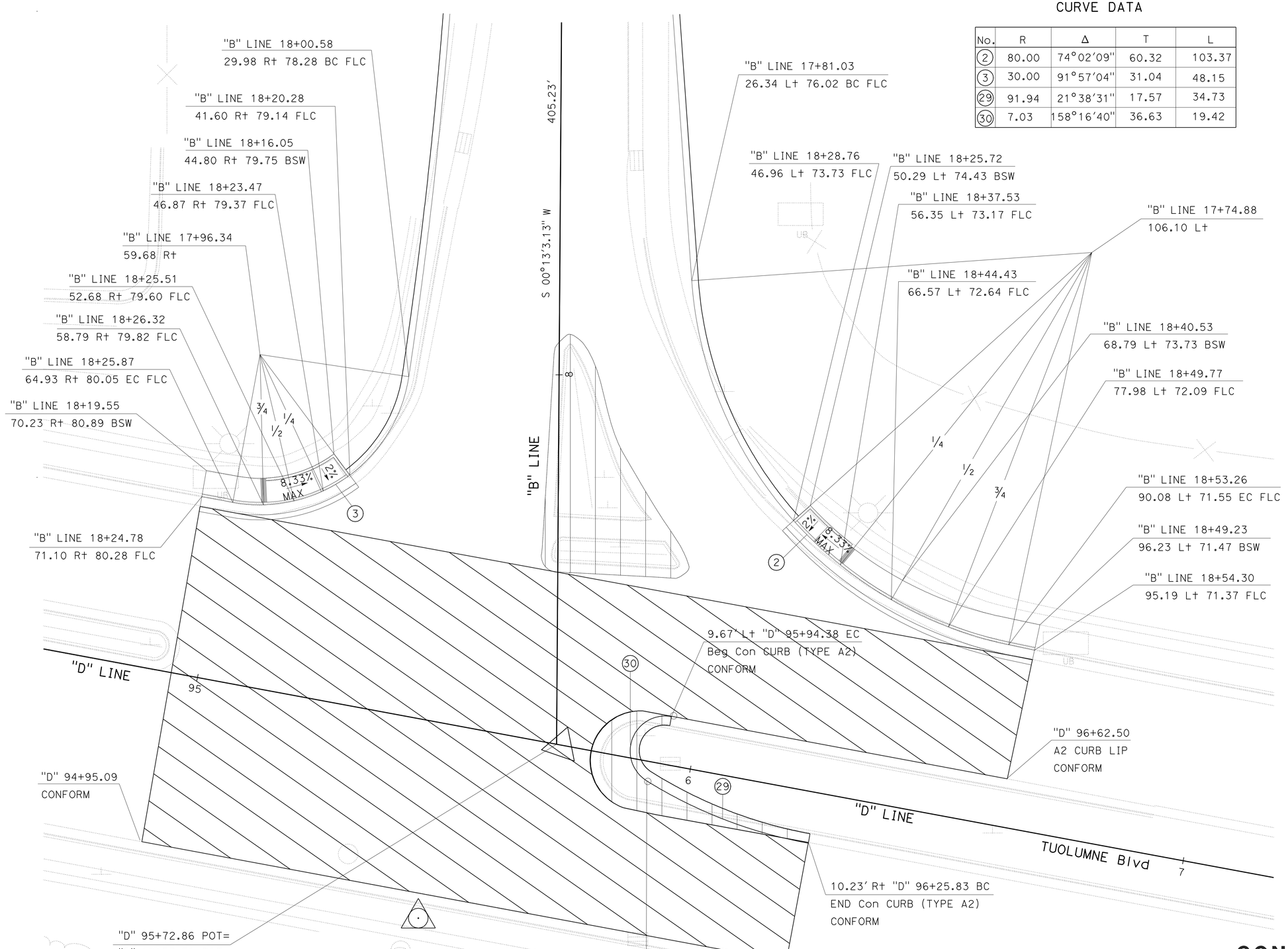

CONSTRUCTION DETAILS

SCALE: 1" = 10′

C-1

STATE OF CALIFORNIA - DEPARTMENT OF TRANSPORTATION
Caltrans
06-DESIGN

FUNCTIONAL SUPERVISOR: ERNIE PENUNA
CALCULATED-DESIGNED BY: JOSEPH VALDIVIA
CHECKED BY: ROTIMI ADEBAYO
REVISED BY
DATE REVISED

LAST REVISION 05-18-10
DATE PLOTTED => 08-SEP-2010
TIME PLOTTED => 09:42

Dist	COUNTY	ROUTE	POST MILES TOTAL PROJECT	SHEET No.	TOTAL SHEETS
10	Sta	99	15.1/17.0	34	176

REGISTERED CIVIL ENGINEER 05-24-10 DATE

9-7-10
PLANS APPROVAL DATE

REGISTERED PROFESSIONAL ENGINEER ROTIMI D. ADEBAYO No. 69102 Exp. 6/30/12 CIVIL STATE OF CALIFORNIA

THE STATE OF CALIFORNIA OR ITS OFFICERS OR AGENTS SHALL NOT BE RESPONSIBLE FOR THE ACCURACY OR COMPLETENESS OF SCANNED COPIES OF THIS PLAN SHEET.

NOTE:

FOR COMPLETE RIGHT OF WAY AND ACCURATE ACCESS DATA, CONTACT RIGHT OF WAY ENGINEERING AT THE DISTRICT OFFICE.

CURVE DATA

No.	R	Δ	T	L
12	1000′	9°47′41″	85.69′	170.95′

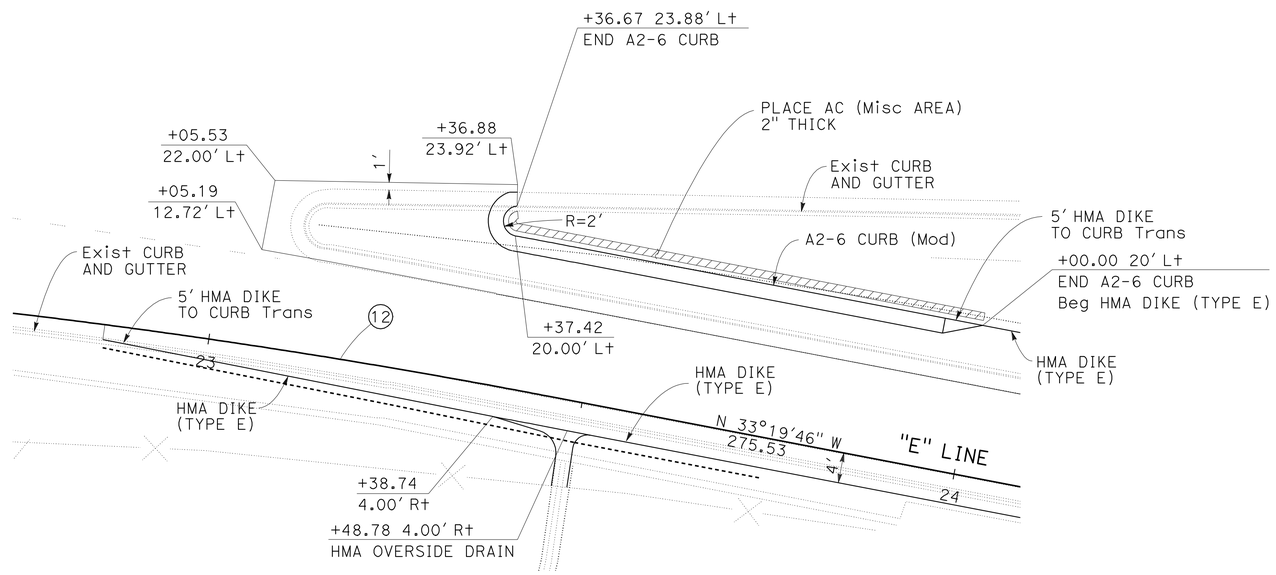

"I" STREET SOUTHBOUND OFF-RAMP (LOCATION 4) DETAIL

CONSTRUCTION DETAILS

NO SCALE

C-2

STATE OF CALIFORNIA - DEPARTMENT OF TRANSPORTATION
Caltrans
06-DESIGN

FUNCTIONAL SUPERVISOR: ERNIE PENUNA
CALCULATED-DESIGNED BY: JOSEPH VALDIVIA
CHECKED BY: ROTIMI ADEBAYO
REVISED BY
DATE REVISED

LAST REVISION 05-19-10
DATE PLOTTED => 08-SEP-2010
TIME PLOTTED => 09:42

Dist	COUNTY	ROUTE	POST MILES TOTAL PROJECT	SHEET No.	TOTAL SHEETS
10	Sta	99	15.1/17.0	35	176

REGISTERED CIVIL ENGINEER 05-24-10 DATE

9-7-10
PLANS APPROVAL DATE

REGISTERED PROFESSIONAL ENGINEER ROTIMI D. ADEBAYO No. 69102 Exp. 6/30/12 CIVIL STATE OF CALIFORNIA

THE STATE OF CALIFORNIA OR ITS OFFICERS OR AGENTS SHALL NOT BE RESPONSIBLE FOR THE ACCURACY OR COMPLETENESS OF SCANNED COPIES OF THIS PLAN SHEET.

CURVE DATA

No.	R	Δ	T	L
21	35.00	90°08'56"	35.09	55.07
24	60.00	88°30'17"	58.45	92.68

LEGEND:

PLACE HOT MIX ASPHALT (MISCELLANEOUS AREA)

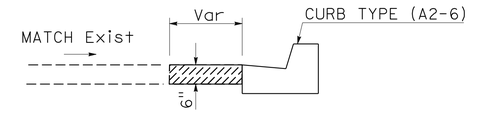

PLACE HOT MIX ASPHALT (MISCELLANEOS AREA) DETAILS

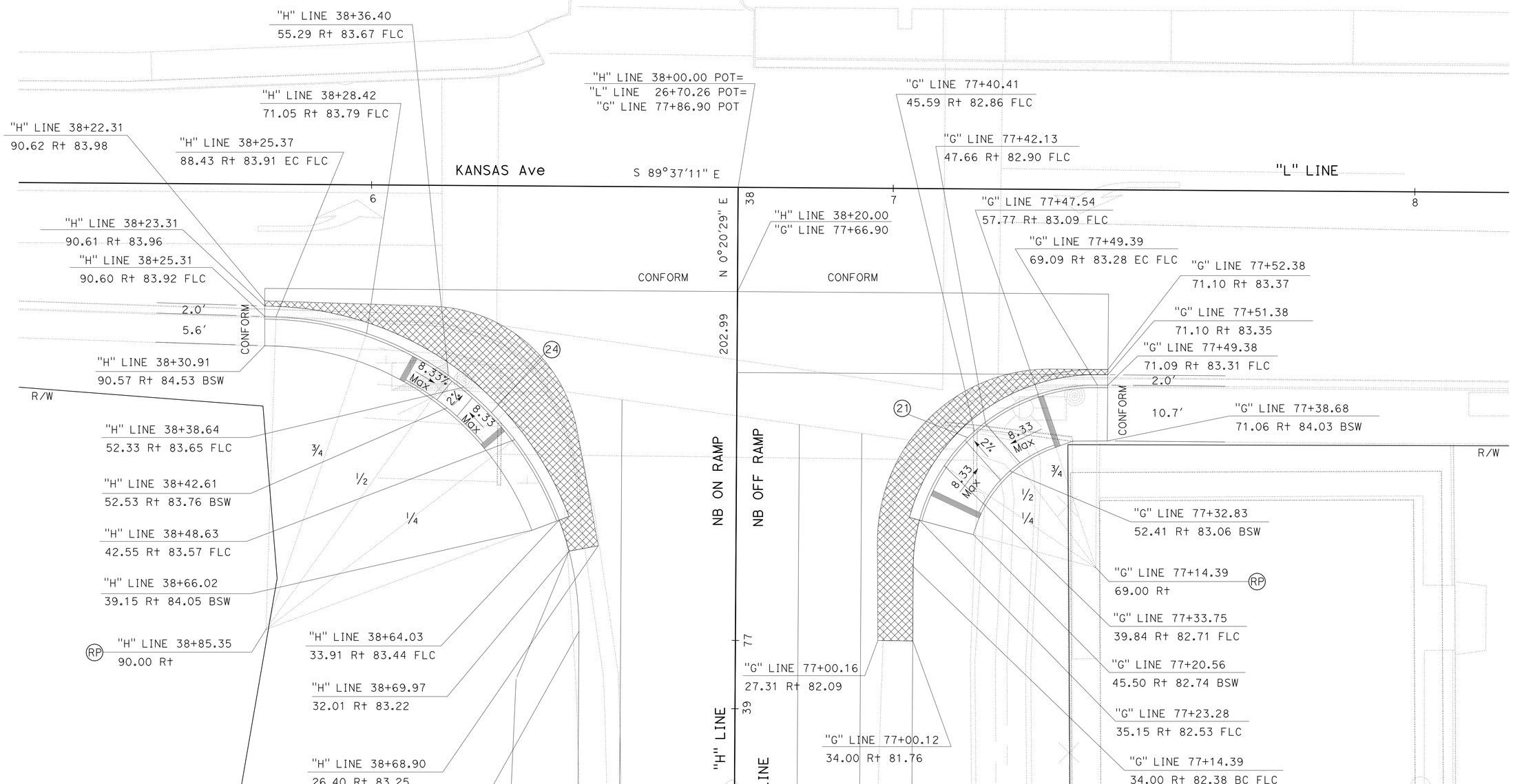

CURB RAMP DETAILS

LOCATION 6 & 7

CONSTRUCTION DETAILS

SCALE: 1" = 10'

C-3

REVISED BY	DATE REVISED
JOSEPH VALDIVIA	ROTIMI ADEBAYO
CALCULATED-DESIGNED BY	CHECKED BY
FUNCTIONAL SUPERVISOR	ERNIE PENUNA

STATE OF CALIFORNIA - DEPARTMENT OF TRANSPORTATION

Caltrans 06-DESIGN

LAST REVISION 08-10-10 DATE PLOTTED => 08-SEP-2010 TIME PLOTTED => 13:41

Dist	COUNTY	ROUTE	POST MILES TOTAL PROJECT	SHEET No.	TOTAL SHEETS
10	Sta	99	15.1/17.0	36	176

REGISTERED CIVIL ENGINEER 05-24-10 DATE

9-7-10
PLANS APPROVAL DATE

REGISTERED PROFESSIONAL ENGINEER ROTIMI D. ADEBAYO No. 69102 Exp. 6/30/12 CIVIL STATE OF CALIFORNIA

THE STATE OF CALIFORNIA OR ITS OFFICERS OR AGENTS SHALL NOT BE RESPONSIBLE FOR THE ACCURACY OR COMPLETENESS OF SCANNED COPIES OF THIS PLAN SHEET.

CURVE DATA

No.	R	Δ	T	L
25	30.00	83°20'52"	26.70	43.64
26	40.00	84°47'27"	36.52	59.20

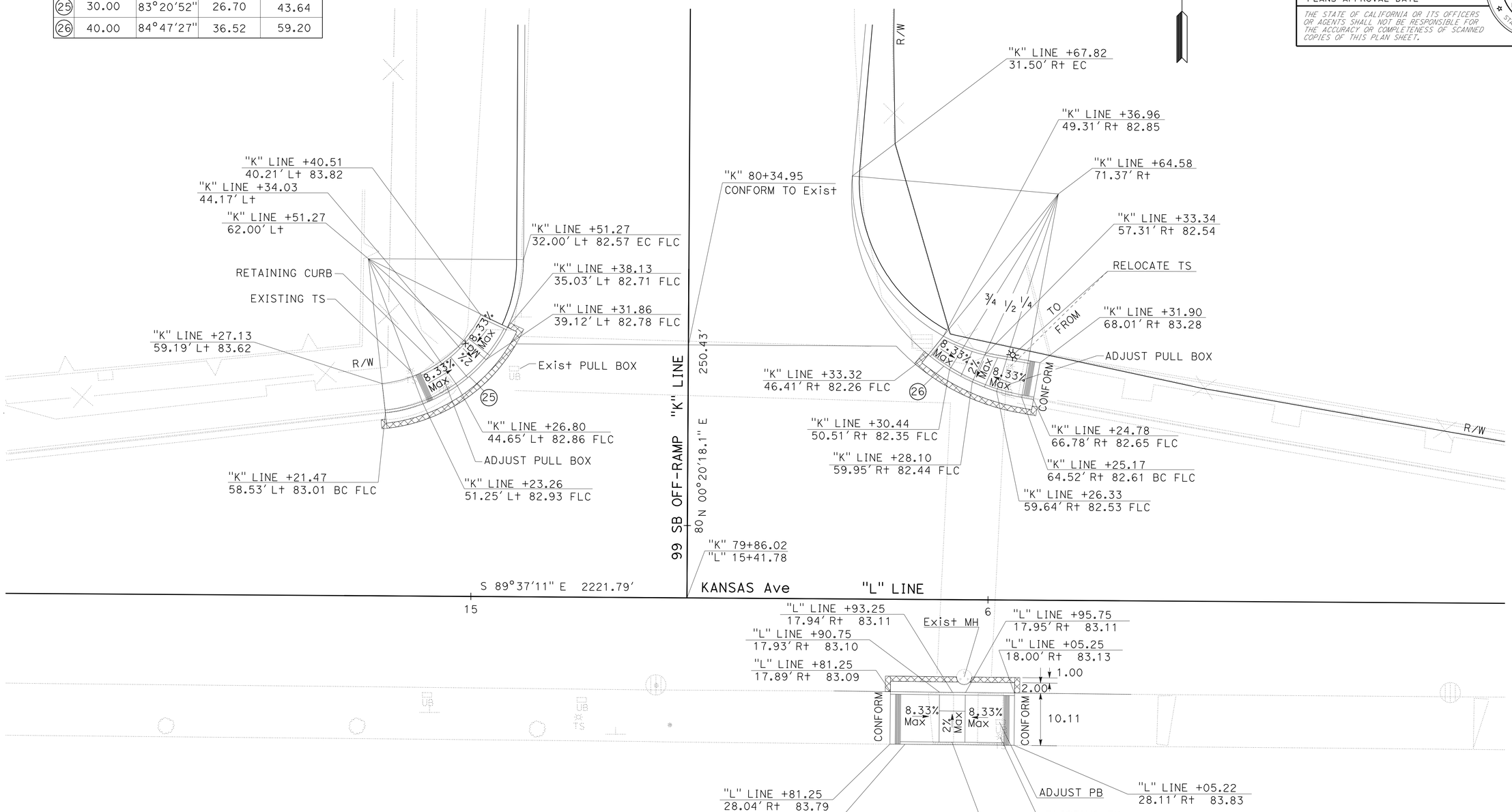

CURB RAMP DETAILS

LOCATION 8 & 9

CONSTRUCTION DETAILS

SCALE: 1" = 10'

C-4

STATE OF CALIFORNIA - DEPARTMENT OF TRANSPORTATION
Caltrans
06-DESIGN

FUNCTIONAL SUPERVISOR: ERNIE PENUNA
CALCULATED-DESIGNED BY: JOSEPH VALDIVIA
CHECKED BY: ROTIMI ADEBAYO
REVISED BY
DATE REVISED

LAST REVISION 08-10-10
DATE PLOTTED => 08-SEP-2010
TIME PLOTTED => 13:41

Dist	COUNTY	ROUTE	POST MILES TOTAL PROJECT	SHEET No.	TOTAL SHEETS
10	Sta	99	15.1/17.0	37	176

REGISTERED CIVIL ENGINEER 05-24-10 DATE

9-7-10
PLANS APPROVAL DATE

REGISTERED PROFESSIONAL ENGINEER ROTIMI D. ADEBAYO No. 69102 Exp. 6/30/12 CIVIL STATE OF CALIFORNIA

THE STATE OF CALIFORNIA OR ITS OFFICERS OR AGENTS SHALL NOT BE RESPONSIBLE FOR THE ACCURACY OR COMPLETENESS OF SCANNED COPIES OF THIS PLAN SHEET.

NOTE:

ALL ELEVATIONS ARE TOP OF CURB OR DIKE.

LEGEND:

COBBLESTONE RUNNING BOND PATTERN

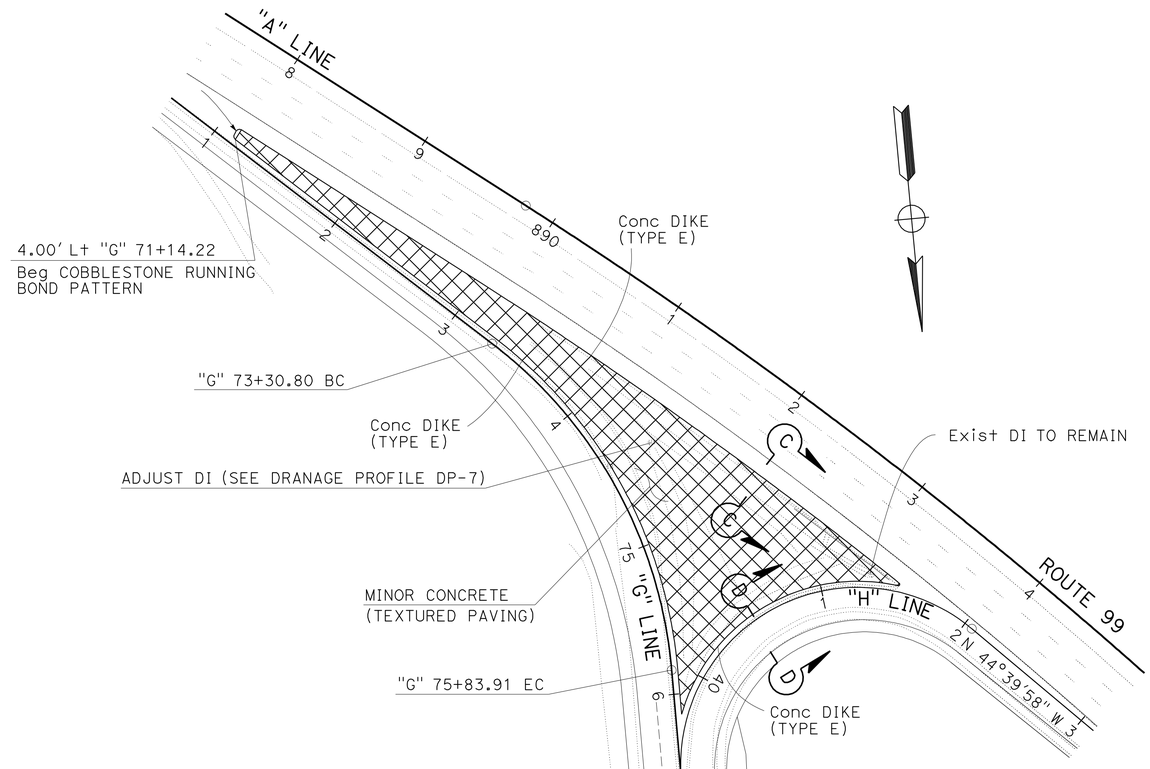

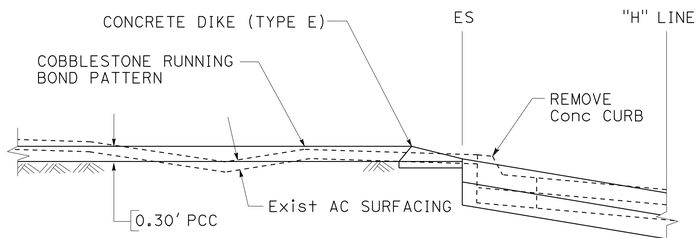

SECTION D-D
NO SCALE

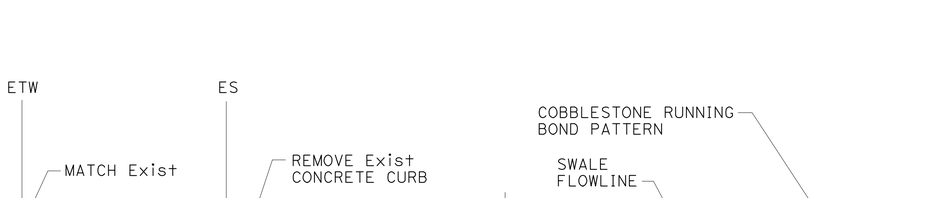

SECTION C-C
NO SCALE

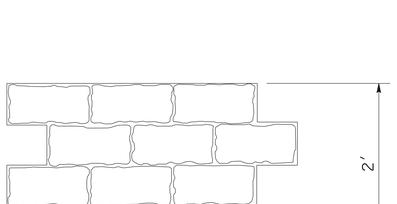

COBBLESTONE RUNNING BOND PATTERN

CONSTRUCTION DETAILS

SCALE: 1" = 20'

C-5

STATE OF CALIFORNIA - DEPARTMENT OF TRANSPORTATION
Caltrans
06-DESIGN

FUNCTIONAL SUPERVISOR: ERNIE PENUNA
CALCULATED-DESIGNED BY: JOSEPH VALDIVIA
CHECKED BY: ROTIMI ADEBAYO
REVISED BY
DATE REVISED

LAST REVISION 05-18-10
DATE PLOTTED => 08-SEP-2010
TIME PLOTTED => 13:41

Dist	COUNTY	ROUTE	POST MILES TOTAL PROJECT	SHEET No.	TOTAL SHEETS
10	Sta	99	15.1/17.0	38	176

REGISTERED CIVIL ENGINEER 05-24-10 DATE

9-7-10
PLANS APPROVAL DATE

REGISTERED PROFESSIONAL ENGINEER ROTIMI D. ADEBAYO No. 69102 Exp. 6/30/12 CIVIL STATE OF CALIFORNIA

THE STATE OF CALIFORNIA OR ITS OFFICERS OR AGENTS SHALL NOT BE RESPONSIBLE FOR THE ACCURACY OR COMPLETENESS OF SCANNED COPIES OF THIS PLAN SHEET.

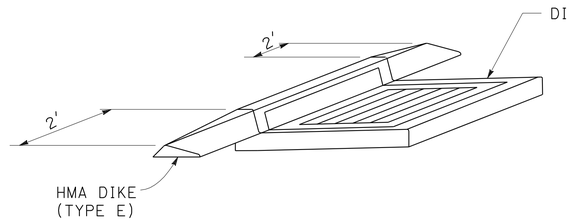

HMA DIKE TRANSITION

HMA DIKE (TYPE E) TO DI

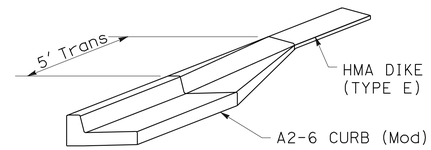

HMA DIKE TRANSITION

HMA DIKE (TYPE E) TO A2-6 CURB (Mod)

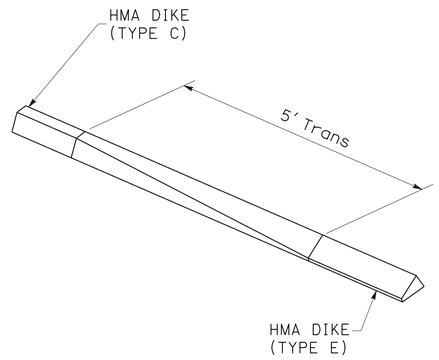

HMA DIKE TRANSITION

HMA DIKE (TYPE E) TO HMA DIKE (TYPE C)

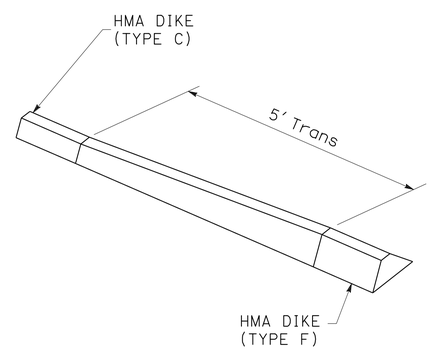

HMA DIKE TRANSITION

HMA DIKE (TYPE F) TO HMA DIKE (TYPE C)

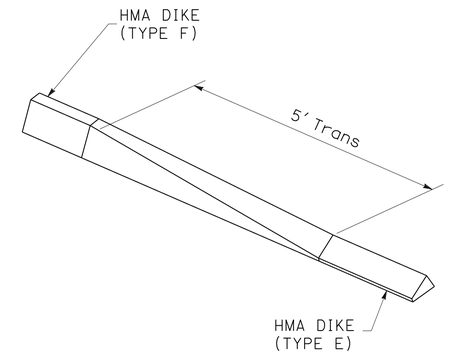

HMA DIKE TRANSITION

HMA DIKE (TYPE E) TO HMA DIKE (TYPE F)

CONSTRUCTION DETAILS

NO SCALE

C-6

STATE OF CALIFORNIA - DEPARTMENT OF TRANSPORTATION
Caltrans
06-DESIGN

FUNCTIONAL SUPERVISOR: ERNIE PENUNA
CALCULATED-DESIGNED BY: JOSEPH VALDIVIA
CHECKED BY: ROTIMI ADEBAYO
REVISED BY
DATE REVISED

LAST REVISION 04-05-10 | DATE PLOTTED => 08-SEP-2010 | TIME PLOTTED => 13:41

Dist	COUNTY	ROUTE	POST MILES TOTAL PROJECT	SHEET No.	TOTAL SHEETS
10	Sta	99	15.1/17.0	39	176

REGISTERED CIVIL ENGINEER 05-24-10 DATE

9-7-10
PLANS APPROVAL DATE

REGISTERED PROFESSIONAL ENGINEER ROTIMI D. ADEBAYO No. 69102 Exp. 6/30/12 CIVIL STATE OF CALIFORNIA

THE STATE OF CALIFORNIA OR ITS OFFICERS OR AGENTS SHALL NOT BE RESPONSIBLE FOR THE ACCURACY OR COMPLETENESS OF SCANNED COPIES OF THIS PLAN SHEET.

NOTES (THIS SHEET):

1. FOR TRANSITION PANEL AND REINFORCEMENT DETAILS, SEE MANUFACTURER'S DETAILS.
2. FOR ALL ACCESSORIES TO CRASH CUSHION (TYPE SMART SCI100GM) AS WELL AS ADDITIONAL DETAILS, SEE MANUFACTURER'S DETAILS.
3. FOR CONCRETE PAD REINFORCEMENTS, SEE MANUFACTURER'S DETAILS.
4. CROSS SLOPE AT TOP OF CONCRETE PAD NOT TO EXCEED 1:12, CROSS SLOPE SHOULD NOT VARY MORE THAN 1:48.

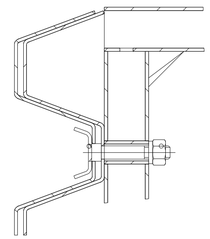

DETAIL B

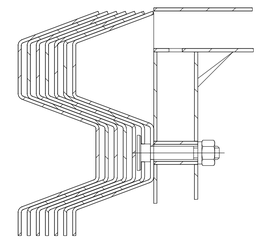

DETAIL A

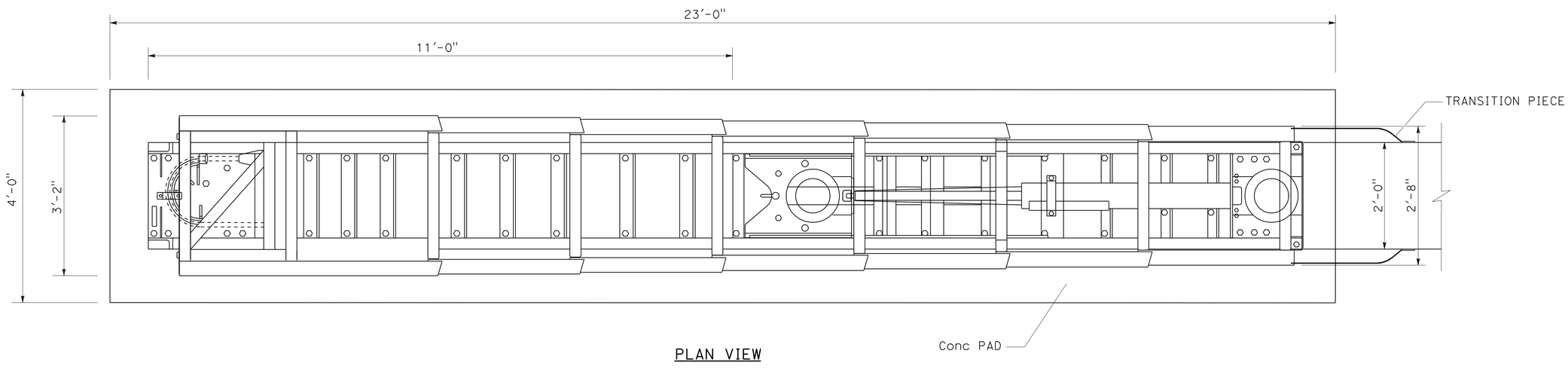

PLAN VIEW

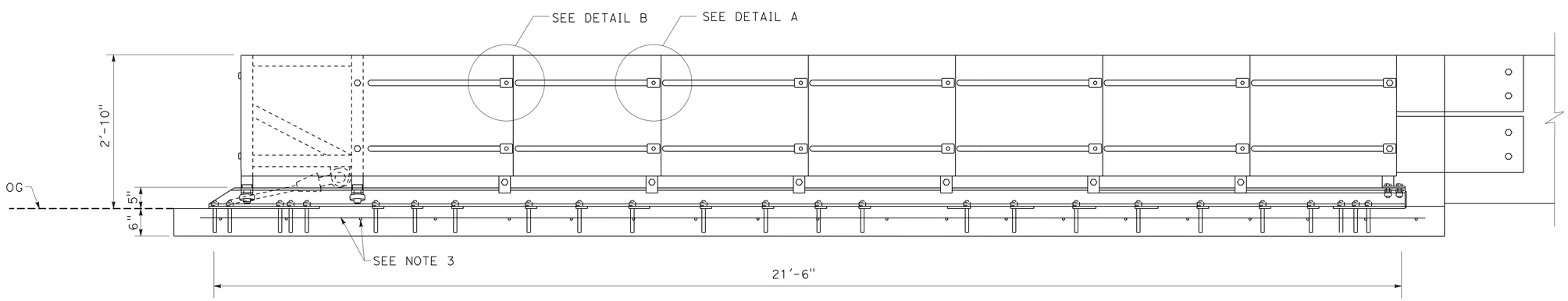

ELEVATION

CRASH CUSHION (TYPE SMART SCI100GM)

CONSTRUCTION DETAILS

NO SCALE

C-7

STATE OF CALIFORNIA - DEPARTMENT OF TRANSPORTATION
Caltrans 06-DESIGN

FUNCTIONAL SUPERVISOR: ERNIE PENUNA
CALCULATED-DESIGNED BY: JOSEPH VALDIVIA
CHECKED BY: ROTIMI ADEBAYO
REVISED BY
DATE REVISED

LAST REVISION 08-10-10
DATE PLOTTED => 08-SEP-2010
TIME PLOTTED => 13:41

Dist	COUNTY	ROUTE	POST MILES TOTAL PROJECT	SHEET No.	TOTAL SHEETS
10	Sta	99	15.1/17.0	40	176

REGISTERED CIVIL ENGINEER 05-24-10 DATE

9-7-10
PLANS APPROVAL DATE

REGISTERED PROFESSIONAL ENGINEER ROTIMI D. ADEBAYO No. 69102 Exp. 6/30/12 CIVIL STATE OF CALIFORNIA

THE STATE OF CALIFORNIA OR ITS OFFICERS OR AGENTS SHALL NOT BE RESPONSIBLE FOR THE ACCURACY OR COMPLETENESS OF SCANNED COPIES OF THIS PLAN SHEET.

NOTE (THIS SHEET):

INSTALLATION TO COMPLY WITH MANUFACTURER'S INSTRUCTIONS.
FOR ADDITIONAL INFORMATION AND ALL ACCESSORIES FOR TAU-II SYSTEM, SEE MANUFACTURER'S DETAILS. TO GET TO THE MANUFACTUERE'S WEB SITE, GO TO: HTTP://BARRIERSYSTEMSINC.COM/.

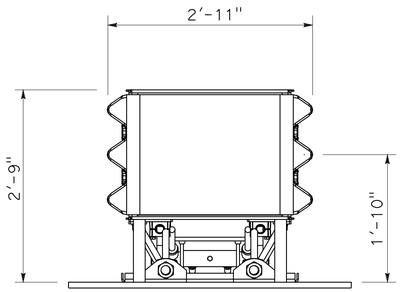

SECTION A-A

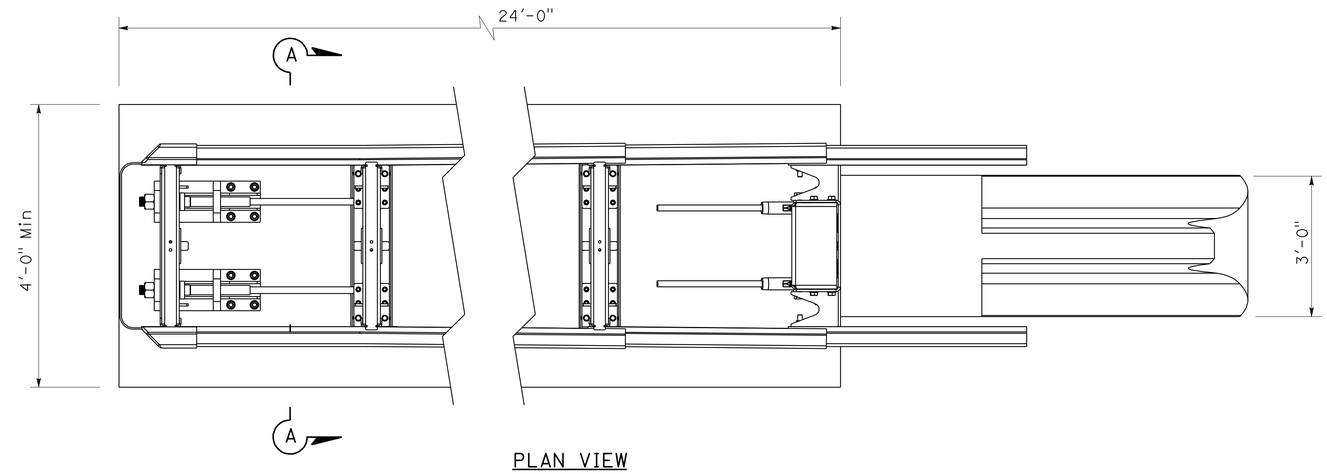

PLAN VIEW

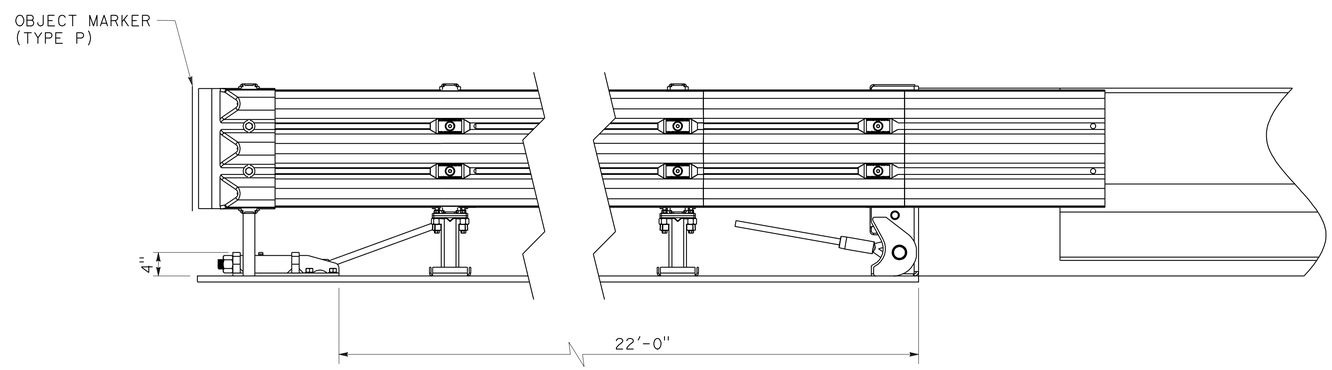

ELEVATION

CRASH CUSHION (TYPE TAU-II)

CONSTRUCTION DETAILS

NO SCALE

C-8

STATE OF CALIFORNIA - DEPARTMENT OF TRANSPORTATION
Caltrans®
06-DESIGN

FUNCTIONAL SUPERVISOR: ERNIE PENUNA
CALCULATED-DESIGNED BY: JOSEPH VALDIVIA
CHECKED BY: ROTIMI ADEBAYO
REVISED BY
DATE REVISED

LAST REVISION 08-10-10
DATE PLOTTED => 08-SEP-2010
TIME PLOTTED => 13:41

Dist	COUNTY	ROUTE	POST MILES TOTAL PROJECT	SHEET No.	TOTAL SHEETS
10	Sta	99	15.1/17.0	41	176

REGISTERED CIVIL ENGINEER 05-24-10 DATE

9-7-10
PLANS APPROVAL DATE

REGISTERED PROFESSIONAL ENGINEER ROTIMI D. ADEBAYO No. 69102 Exp. 6/30/12 CIVIL STATE OF CALIFORNIA

THE STATE OF CALIFORNIA OR ITS OFFICERS OR AGENTS SHALL NOT BE RESPONSIBLE FOR THE ACCURACY OR COMPLETENESS OF SCANNED COPIES OF THIS PLAN SHEET.

LEGEND:

- TEMPORARY EROSION CONTROL BLANKET
- TEMPORARY COVER
- FR — TEMPORARY FIBER ROLL
- DRAINAGE INLET PROTECTION

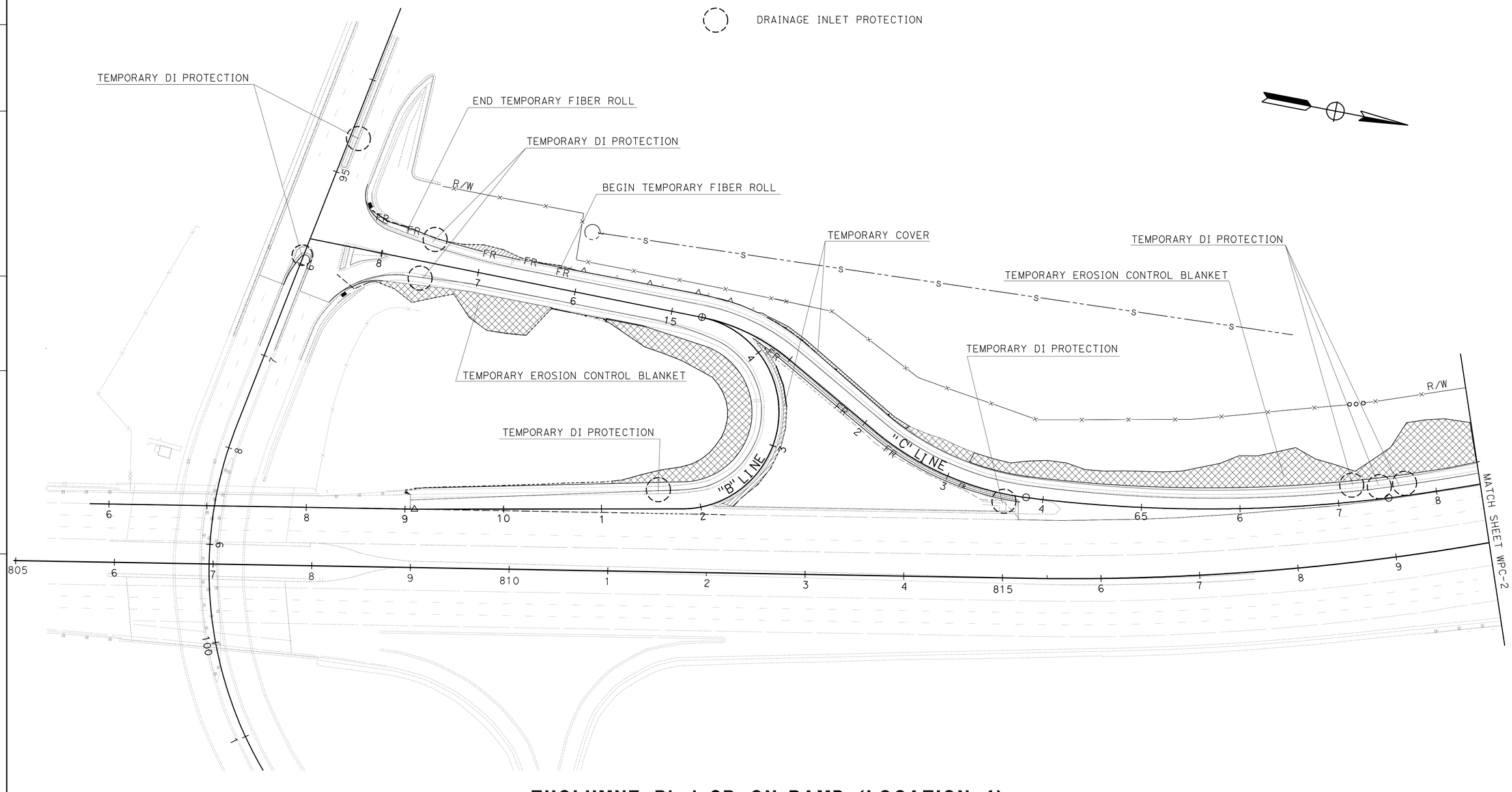

TUOLUMNE Blvd SB ON-RAMP (LOCATION 1)
TUOLUMNE Blvd SB OFF-RAMP (LOCATION 2)

WATER POLLUTION CONTROL PLAN

SCALE: 1" = 50'

WPC-1

THIS PLAN ACCURATE FOR WATER POLLUTION CONTROL INFORMATION ONLY

STATE OF CALIFORNIA - DEPARTMENT OF TRANSPORTATION
Caltrans
06-DESIGN

FUNCTIONAL SUPERVISOR: ERNIE PENUNA
CALCULATED-DESIGNED BY: RASAQ ATANDA
CHECKED BY: ROTIMI ADEBAYO
REVISED BY
DATE REVISED

LAST REVISION 05-19-10
DATE PLOTTED => 23-SEP-2010
TIME PLOTTED => 10:04

BORDER LAST REVISED 4/11/2008
RELATIVE BORDER SCALE IS IN INCHES 0 1 2 3
USERNAME => trmnguye
DGN FILE => a0A671gb001.dgn
CU 06253
EA 0A6711

Dist	COUNTY	ROUTE	POST MILES TOTAL PROJECT	SHEET No.	TOTAL SHEETS
10	Sta	99	15.1/17.0	42	176

REGISTERED CIVIL ENGINEER 05-24-10 DATE

9-7-10
PLANS APPROVAL DATE

REGISTERED PROFESSIONAL ENGINEER ROTIMI D. ADEBAYO No. 69102 Exp. 6/30/12 CIVIL STATE OF CALIFORNIA

THE STATE OF CALIFORNIA OR ITS OFFICERS OR AGENTS SHALL NOT BE RESPONSIBLE FOR THE ACCURACY OR COMPLETENESS OF SCANNED COPIES OF THIS PLAN SHEET.

NOTE:

FOR COMPLETE RIGHT OF WAY AND ACCURATE ACCESS DATA, CONTACT RIGHT OF WAY ENGINEERING AT THE DISTRICT OFFICE.

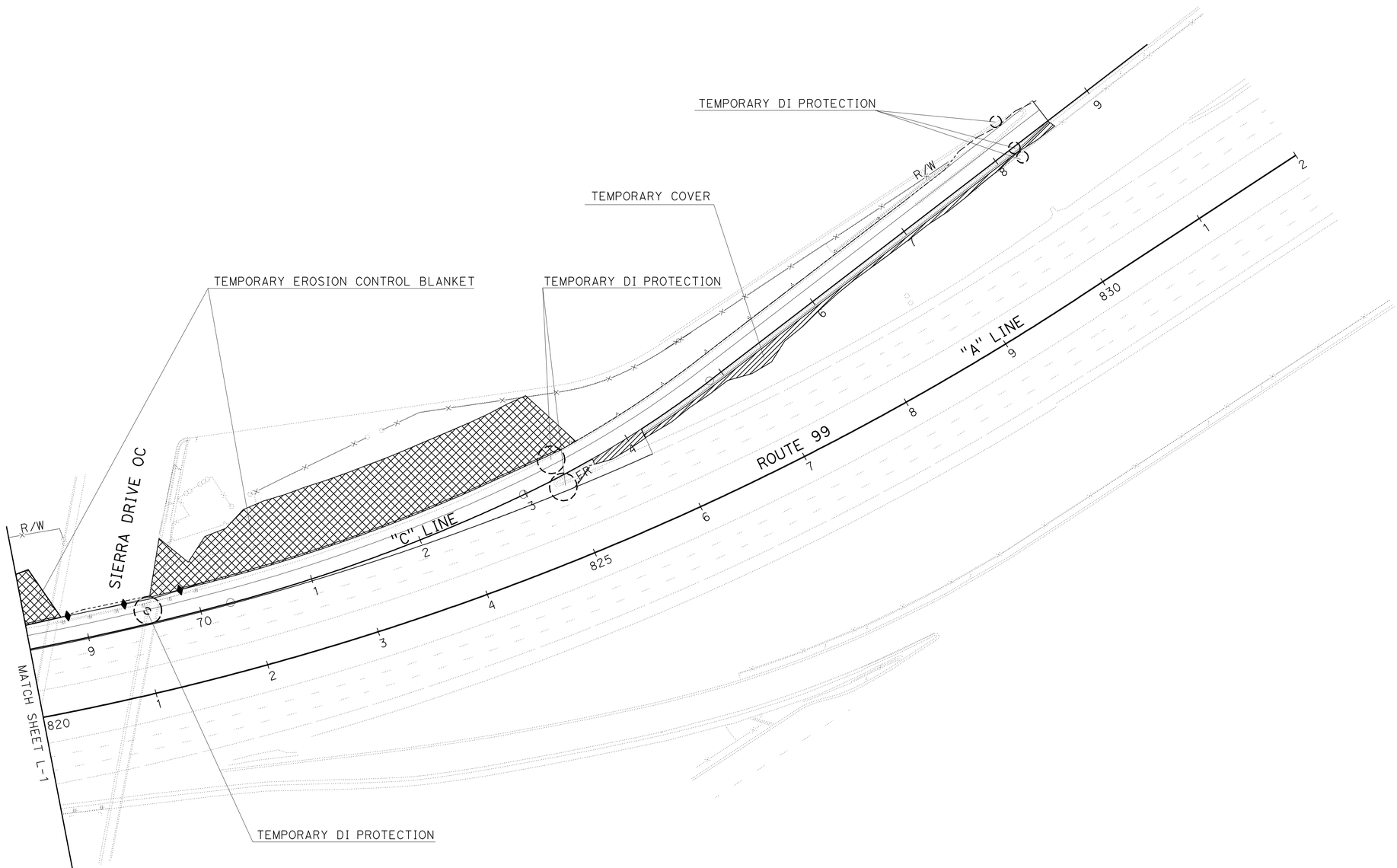

5th/G STREET SB ON-RAMP (LOCATION 3)

THIS PLAN ACCURATE FOR WATER POLLUTION CONTROL INFORMATION ONLY

WATER POLLUTION CONTROL PLAN

SCALE: 1" = 50'

WPC-2

STATE OF CALIFORNIA - DEPARTMENT OF TRANSPORTATION
Caltrans
06-DESIGN

FUNCTIONAL SUPERVISOR: ERNIE PENUNA
CALCULATED-DESIGNED BY: RASAQ ATANDA
CHECKED BY: ROTIMI ADEBAYO
REVISED BY
DATE REVISED

LAST REVISION 05-16-10 | DATE PLOTTED => 23-SEP-2010 | TIME PLOTTED => 10:04

Dist	COUNTY	ROUTE	POST MILES TOTAL PROJECT	SHEET No.	TOTAL SHEETS
10	Sta	99	15.1/17.0	43	176

REGISTERED CIVIL ENGINEER 05-24-10 DATE

9-7-10
PLANS APPROVAL DATE

REGISTERED PROFESSIONAL ENGINEER
ROTIMI D. ADEBAYO
No. 69102
Exp. 6/30/12
CIVIL
STATE OF CALIFORNIA

THE STATE OF CALIFORNIA OR ITS OFFICERS OR AGENTS SHALL NOT BE RESPONSIBLE FOR THE ACCURACY OR COMPLETENESS OF SCANNED COPIES OF THIS PLAN SHEET.

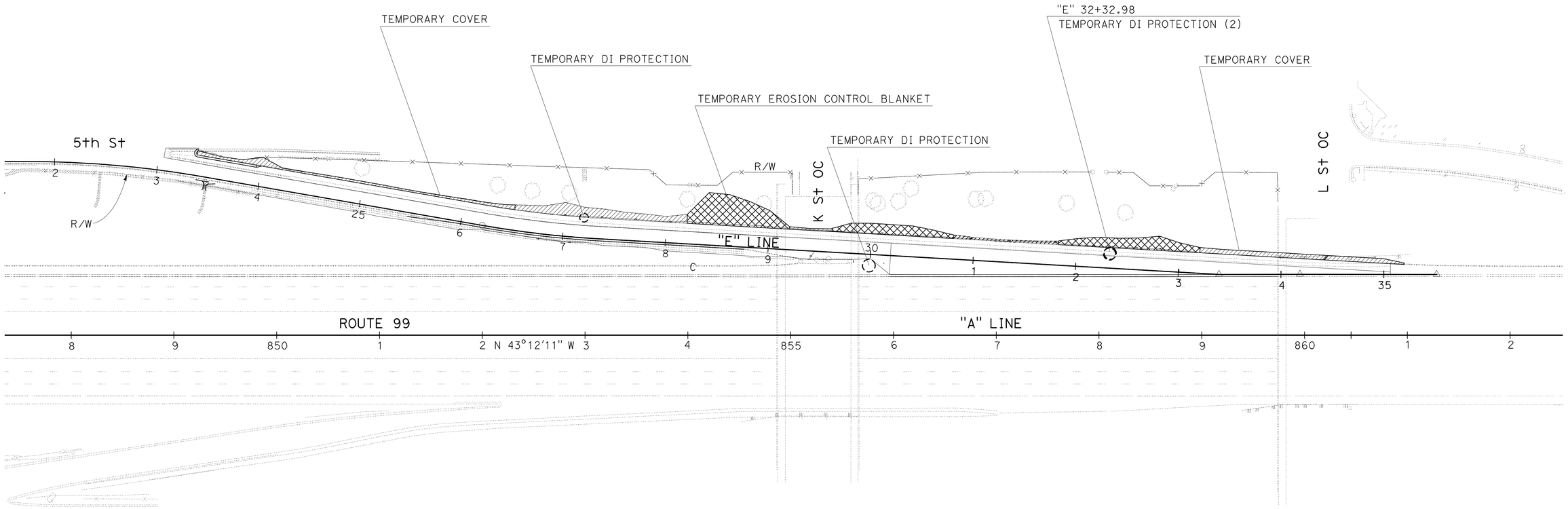

"I" STREET SOUTHBOUND OFF-RAMP (LOCATION 4)

WATER POLLUTION CONTROL PLAN

SCALE: 1" = 50'

WPC-3

THIS PLAN ACCURATE FOR WATER POLLUTION CONTROL INFORMATION ONLY

STATE OF CALIFORNIA - DEPARTMENT OF TRANSPORTATION
Caltrans
06-DESIGN

FUNCTIONAL SUPERVISOR: ERNIE PENUNA
CALCULATED-DESIGNED BY: RASAQ ATANDA
CHECKED BY: ROTIMI ADEBAYO
REVISED BY
DATE REVISED

LAST REVISION 05-16-10
DATE PLOTTED => 23-SEP-2010
TIME PLOTTED => 10:04

Dist	COUNTY	ROUTE	POST MILES TOTAL PROJECT	SHEET No.	TOTAL SHEETS
10	Sta	99	15.1/17.0	44	176

REGISTERED CIVIL ENGINEER 05-24-10 DATE

9-7-10
PLANS APPROVAL DATE

REGISTERED PROFESSIONAL ENGINEER ROTIMI D. ADEBAYO No. 69102 Exp. 6/30/12 CIVIL STATE OF CALIFORNIA

THE STATE OF CALIFORNIA OR ITS OFFICERS OR AGENTS SHALL NOT BE RESPONSIBLE FOR THE ACCURACY OR COMPLETENESS OF SCANNED COPIES OF THIS PLAN SHEET.

NOTE:

FOR COMPLETE RIGHT OF WAY AND ACCURATE ACCESS DATA, CONTACT RIGHT OF WAY ENGINEERING AT THE DISTRICT OFFICE.

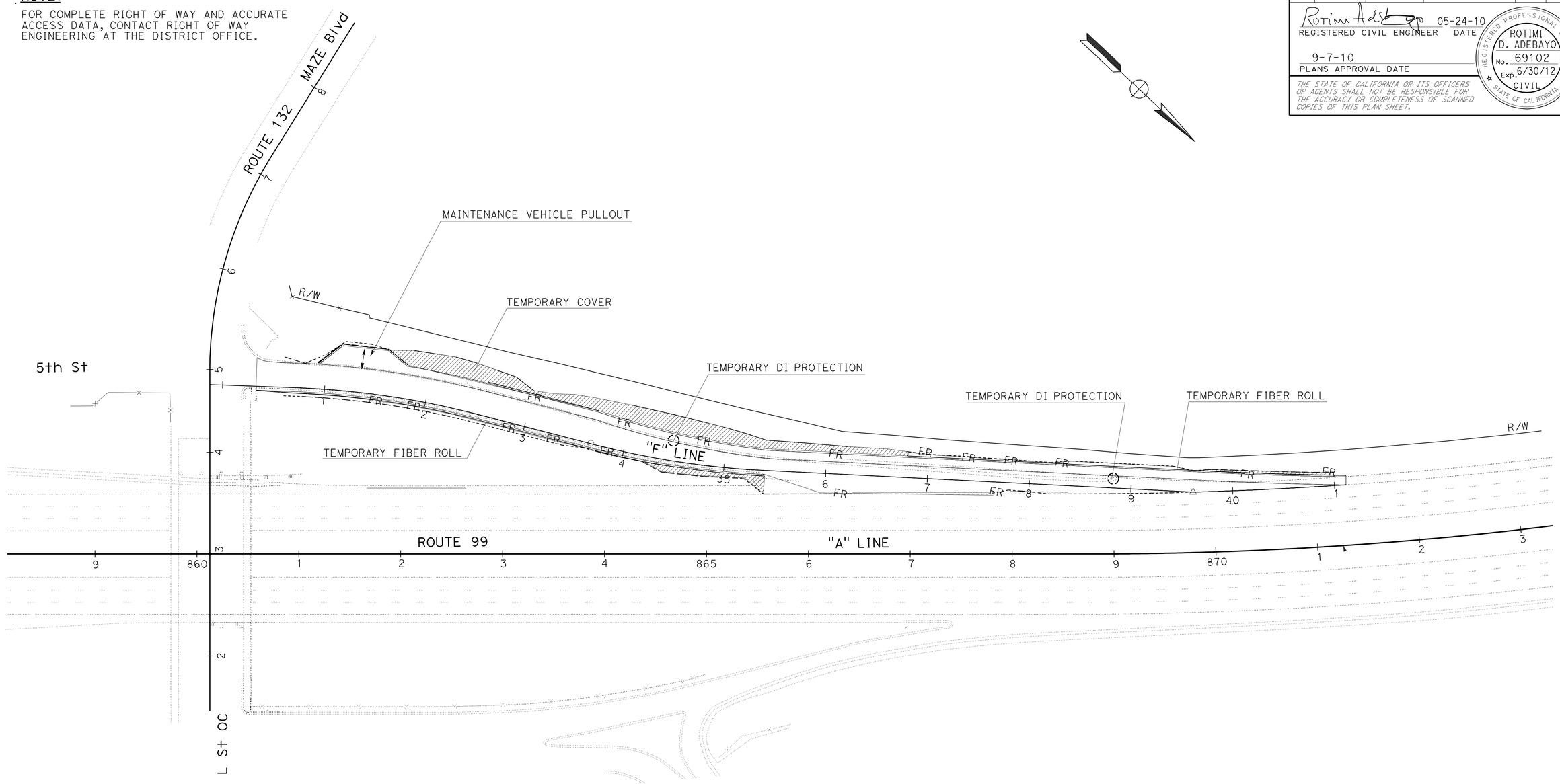

L St SB OFF-RAMP (LOCATION 5)

WATER POLLUTION CONTROL PLAN

SCALE: 1" = 50'

WPC-4

THIS PLAN ACCURATE FOR WATER POLLUTION CONTROL INFORMATION ONLY

STATE OF CALIFORNIA - DEPARTMENT OF TRANSPORTATION
Caltrans
06-DESIGN

FUNCTIONAL SUPERVISOR: ERNIE PENUNA
CALCULATED-DESIGNED BY: JOSEPH VALDIVIA
CHECKED BY: ROTIMI ADEBAYO
REVISED BY
DATE REVISED

LAST REVISION 05-16-10
DATE PLOTTED => 23-SEP-2010
TIME PLOTTED => 10:05

Dist	COUNTY	ROUTE	POST MILES TOTAL PROJECT	SHEET No.	TOTAL SHEETS
10	Sta	99	15.1/17.0	45	176

REGISTERED CIVIL ENGINEER 05-24-10 DATE

9-7-10
PLANS APPROVAL DATE

REGISTERED PROFESSIONAL ENGINEER ROTIMI D. ADEBAYO No. 69102 Exp. 6/30/12 CIVIL STATE OF CALIFORNIA

THE STATE OF CALIFORNIA OR ITS OFFICERS OR AGENTS SHALL NOT BE RESPONSIBLE FOR THE ACCURACY OR COMPLETENESS OF SCANNED COPIES OF THIS PLAN SHEET.

NOTE:

FOR COMPLETE RIGHT OF WAY AND ACCURATE ACCESS DATA, CONTACT RIGHT OF WAY ENGINEERING AT THE DISTRICT OFFICE.

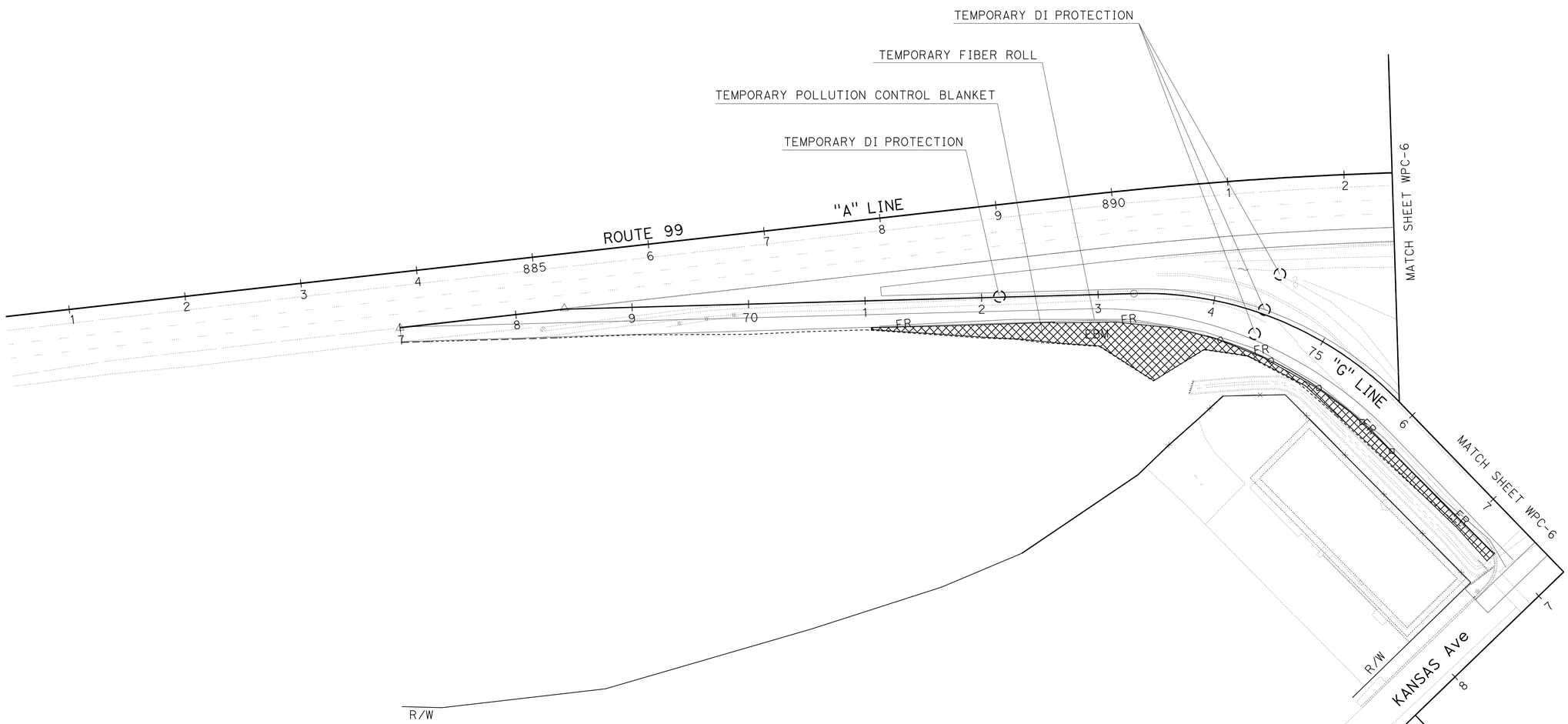

KANSAS AVENUE NB OFF-RAMP (LOCATION 6)

THIS PLAN ACCURATE FOR WATER POLLUTION CONTROL INFORMATION ONLY

WATER POLLUTION CONTROL PLAN

SCALE: 1" = 50'

WPC-5

REVISED BY	DATE REVISED

CALCULATED-DESIGNED BY	CHECKED BY
RASAQ ATANDA	ROTIMI ADEBAYO

FUNCTIONAL SUPERVISOR
ERNIE PENUNA

STATE OF CALIFORNIA - DEPARTMENT OF TRANSPORTATION

Caltrans®

06-DESIGN

LAST REVISION 05-16-10 | DATE PLOTTED => 23-SEP-2010 TIME PLOTTED => 10:05

BORDER LAST REVISED 4/11/2008 | RELATIVE BORDER SCALE IS IN INCHES 0 1 2 3 | USERNAME => trmnguye DGN FILE => a0A671gb005.dgn | CU 06253 | EA 0A6711

Dist	COUNTY	ROUTE	POST MILES TOTAL PROJECT	SHEET No.	TOTAL SHEETS
10	Sta	99	15.1/17.0	46	176

REGISTERED CIVIL ENGINEER 05-24-10 DATE

9-7-10
PLANS APPROVAL DATE

REGISTERED PROFESSIONAL ENGINEER ROTIMI D. ADEBAYO No. 69102 Exp. 6/30/12 CIVIL STATE OF CALIFORNIA

THE STATE OF CALIFORNIA OR ITS OFFICERS OR AGENTS SHALL NOT BE RESPONSIBLE FOR THE ACCURACY OR COMPLETENESS OF SCANNED COPIES OF THIS PLAN SHEET.

NOTE:

FOR COMPLETE RIGHT OF WAY AND ACCURATE ACCESS DATA, CONTACT RIGHT OF WAY ENGINEERING AT THE DISTRICT OFFICE.

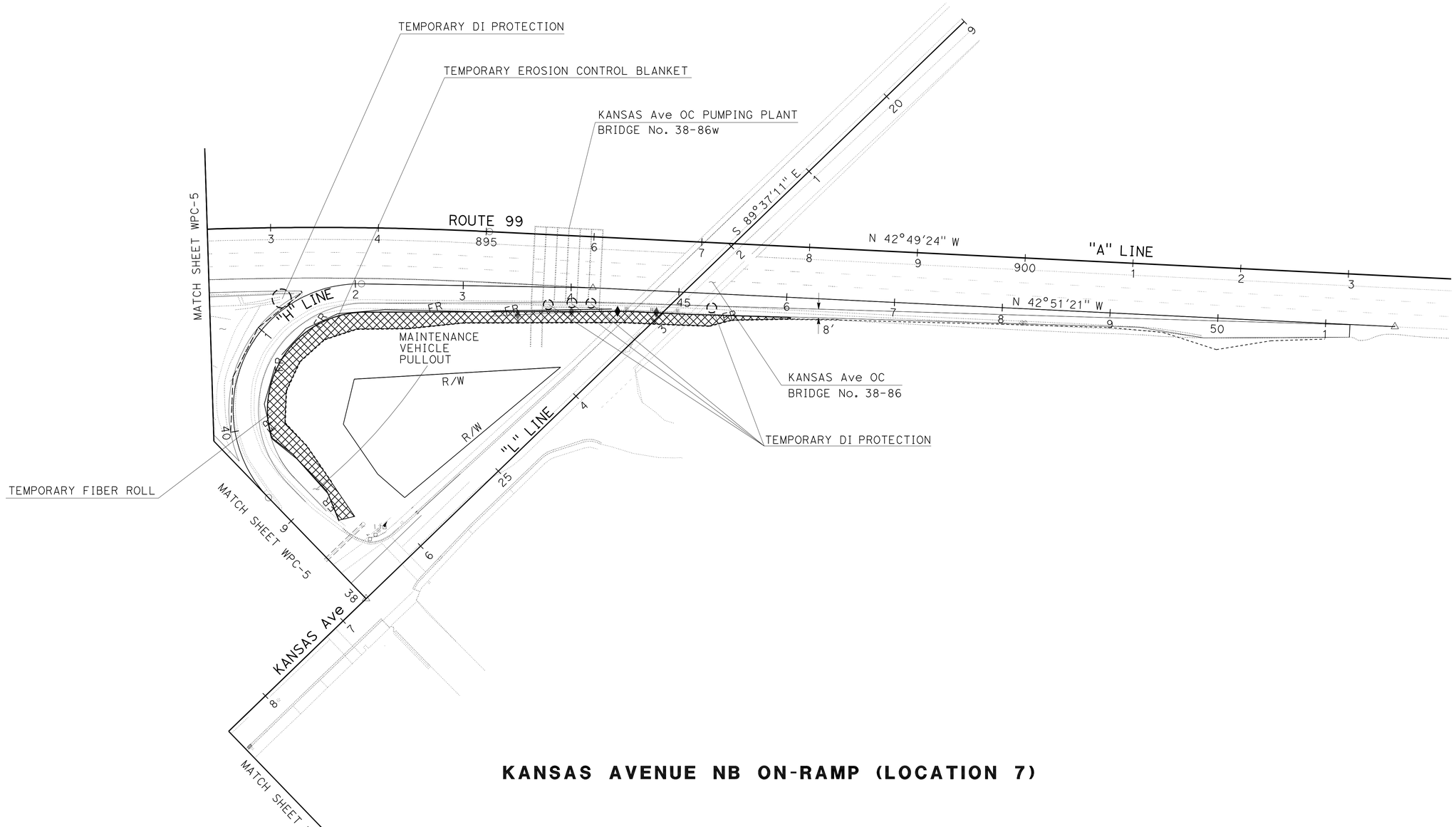

KANSAS AVENUE NB ON-RAMP (LOCATION 7)

THIS PLAN ACCURATE FOR WATER POLLUTION CONTROL INFORMATION ONLY

WATER POLLUTION CONTROL PLAN

SCALE: 1" = 50'

WPC-6

STATE OF CALIFORNIA - DEPARTMENT OF TRANSPORTATION
Caltrans
06-DESIGN

FUNCTIONAL SUPERVISOR: ERNIE PENUNA
CALCULATED-DESIGNED BY: RASAQ ATANDA
CHECKED BY: ROTIMI ADEBAYO
REVISED BY
DATE REVISED

LAST REVISION 05-16-10 | DATE PLOTTED => 23-SEP-2010 | TIME PLOTTED => 10:05

Dist	COUNTY	ROUTE	POST MILES TOTAL PROJECT	SHEET No.	TOTAL SHEETS
10	Sta	99	15.1/17.0	47	176

REGISTERED CIVIL ENGINEER 05-24-10 DATE

9-7-10
PLANS APPROVAL DATE

REGISTERED PROFESSIONAL ENGINEER ROTIMI D. ADEBAYO No. 69102 Exp. 6/30/12 CIVIL STATE OF CALIFORNIA

THE STATE OF CALIFORNIA OR ITS OFFICERS OR AGENTS SHALL NOT BE RESPONSIBLE FOR THE ACCURACY OR COMPLETENESS OF SCANNED COPIES OF THIS PLAN SHEET.

NOTE:

FOR COMPLETE RIGHT OF WAY AND ACCURATE ACCESS DATA, CONTACT RIGHT OF WAY ENGINEERING AT THE DISTRICT OFFICE.

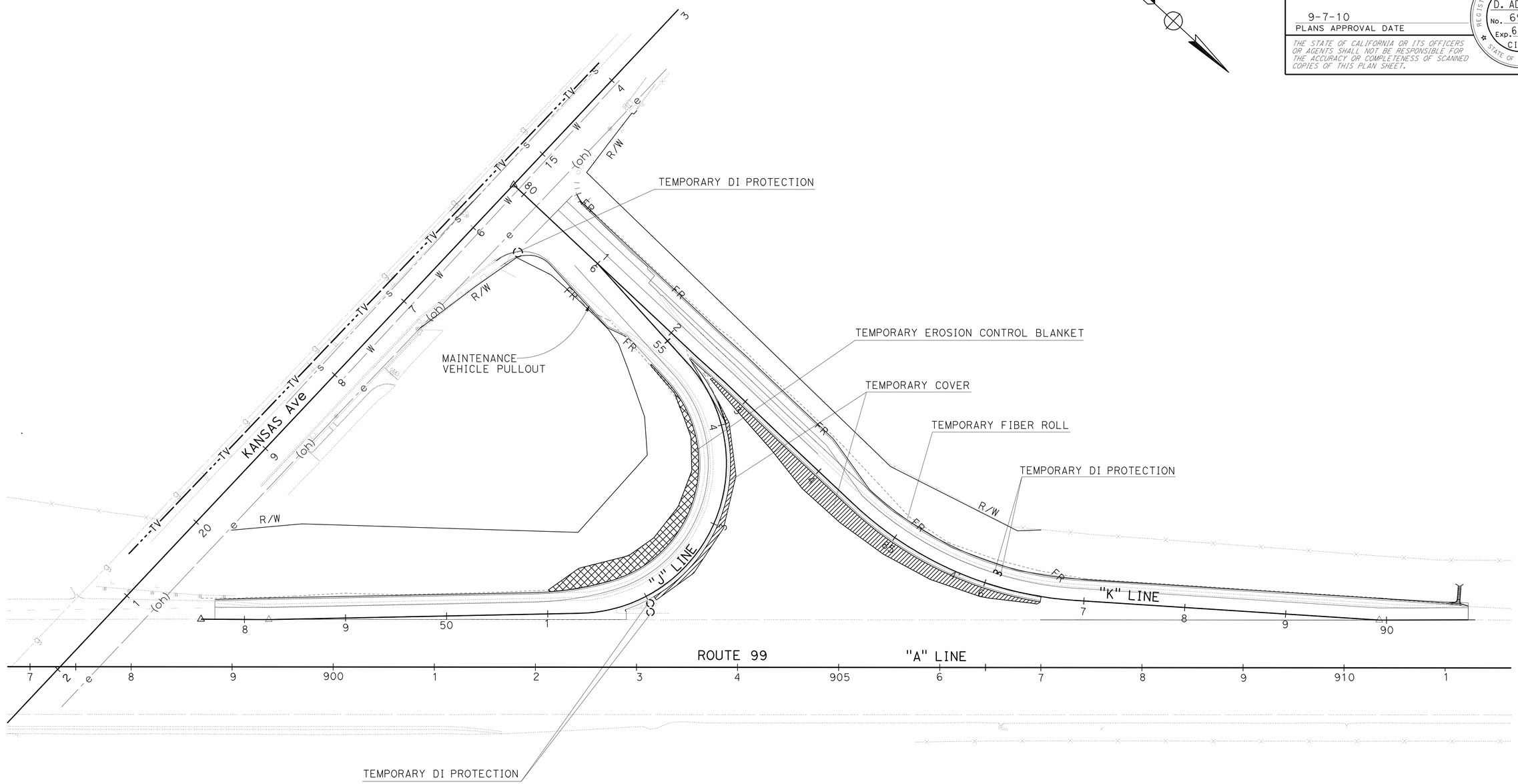

KANSAS Ave SB ON-RAMP(LOCATION 8)
KANSAS Ave SB OFF-RAMP (LOCATION 9)

WATER POLLUTION CONTROL PLAN

SCALE: 1" = 50'

WPC-7

THIS PLAN ACCURATE FOR WATER POLLUTION CONTROL INFORMATION ONLY

STATE OF CALIFORNIA - DEPARTMENT OF TRANSPORTATION
Caltrans
06-DESIGN

FUNCTIONAL SUPERVISOR: ERNIE PENUNA
CALCULATED-DESIGNED BY: RASAQ ATANDA
CHECKED BY: ROTIMI ADEBAYO
REVISED BY
DATE REVISED

LAST REVISION 05-16-10
DATE PLOTTED => 08-SEP-2010
TIME PLOTTED => 13:42

Dist	COUNTY	ROUTE	POST MILES TOTAL PROJECT	SHEET No.	TOTAL SHEETS
10	Sta	99	15.1/17.0	48	176

LICENSED LANDSCAPE ARCHITECT

9-7-10
PLANS APPROVAL DATE

LICENSED LANDSCAPE ARCHITECT
William Dutterra No. 3425
Signature
9/30/10
Renewal Date
5/18/10
Date
STATE OF CALIFORNIA

THE STATE OF CALIFORNIA OR ITS OFFICERS OR AGENTS SHALL NOT BE RESPONSIBLE FOR THE ACCURACY OR COMPLETENESS OF ELECTRONIC COPIES OF THIS PLAN SHEET.

NOTE:

FOR ACCURATE RIGHT OF WAY AND ACCESS DATA,
CONTACT RIGHT OF WAY ENGINEERING AT THE DISTRICT OFFICE.

LEGEND:

EROSION CONTROL (HYDROSEED)

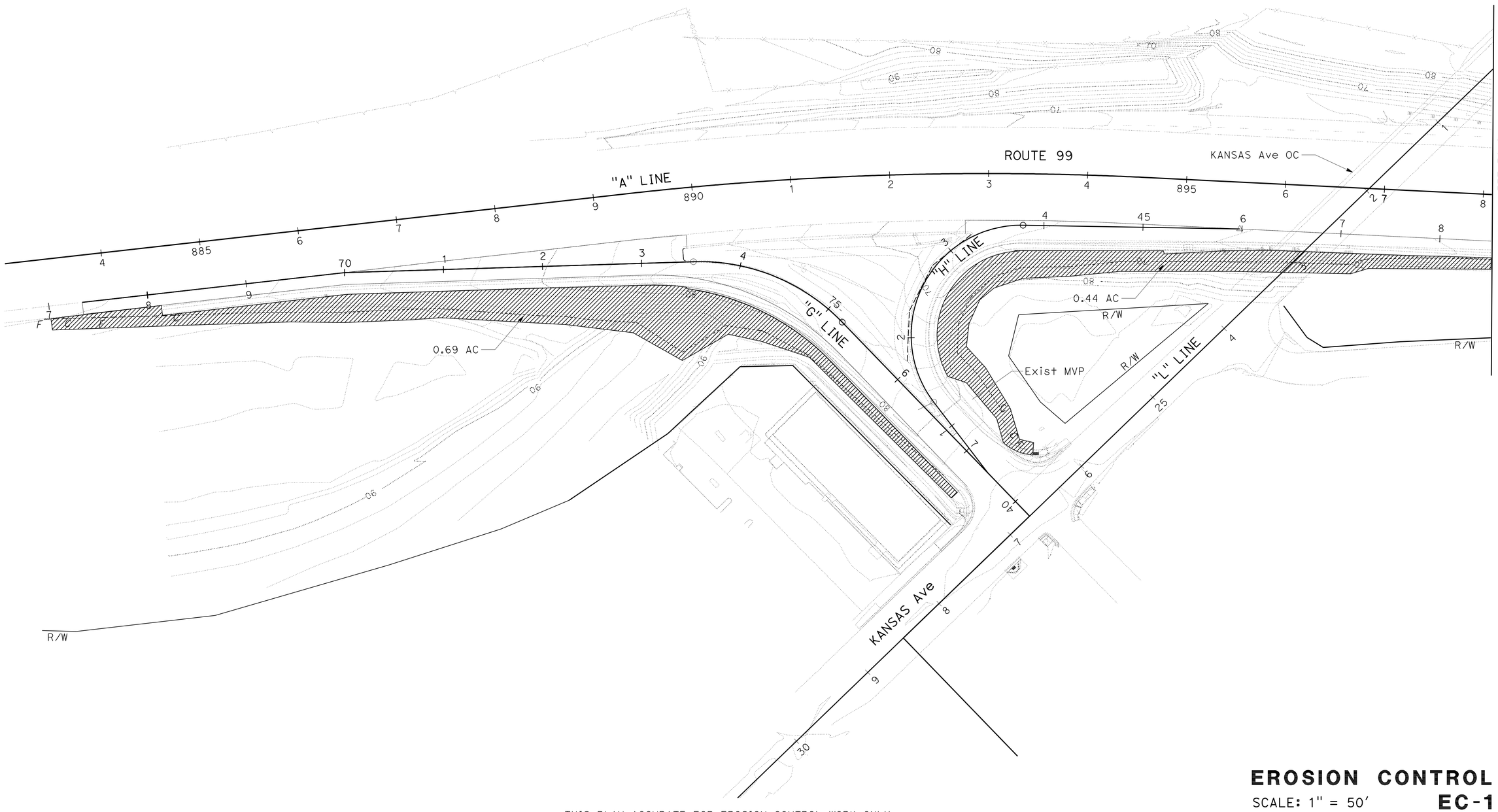

THIS PLAN ACCURATE FOR EROSION CONTROL WORK ONLY.

EROSION CONTROL

SCALE: 1" = 50′ **EC-1**

GE	05-18-10
REVISED BY	DATE REVISED
GUS ESCUTIA	WILLIAM DUTTERA
CALCULATED-DESIGNED BY	CHECKED BY
FUNCTIONAL SUPERVISOR	ELBERT COX

STATE OF CALIFORNIA - DEPARTMENT OF TRANSPORTATION
Caltrans LANDSCAPE ARCHITECTURE

LAST REVISION 05-18-10 | DATE PLOTTED => 08-SEP-2010 | TIME PLOTTED => 13:42

Dist	COUNTY	ROUTE	POST MILES TOTAL PROJECT	SHEET No.	TOTAL SHEETS
10	Sta	99	15.1/17.0	49	176

LICENSED LANDSCAPE ARCHITECT

9-7-10
PLANS APPROVAL DATE

LICENSED LANDSCAPE ARCHITECT
William Duttera No. 3425
Signature
9/30/10
Renewal Date
5/18/10
Date
STATE OF CALIFORNIA

THE STATE OF CALIFORNIA OR ITS OFFICERS OR AGENTS SHALL NOT BE RESPONSIBLE FOR THE ACCURACY OR COMPLETENESS OF ELECTRONIC COPIES OF THIS PLAN SHEET.

NOTE:

FOR ACCURATE RIGHT OF WAY AND ACCESS DATA,
CONTACT RIGHT OF WAY ENGINEERING AT THE DISTRICT OFFICE.

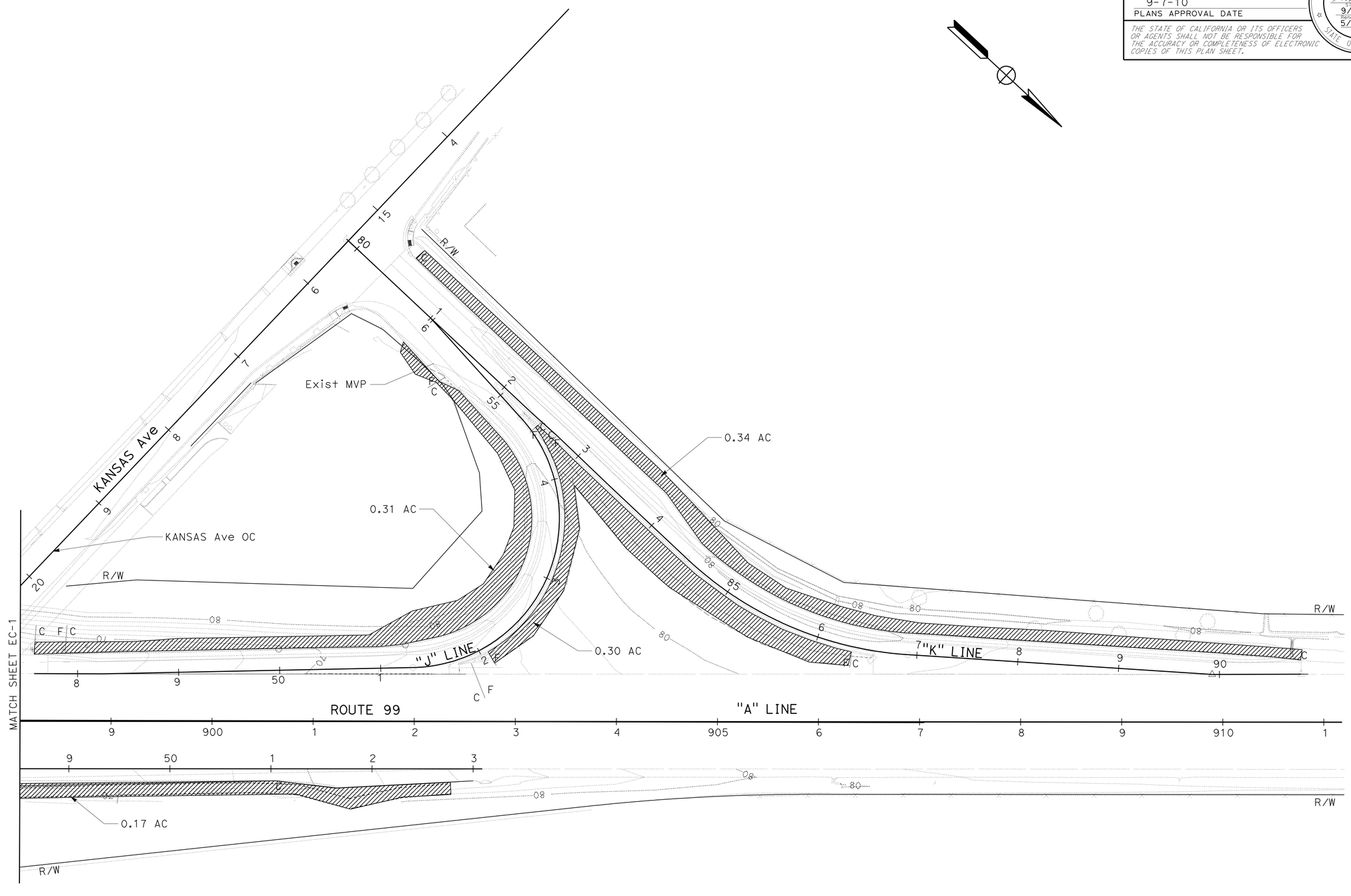

THIS PLAN ACCURATE FOR EROSION CONTROL WORK ONLY.

EROSION CONTROL

SCALE: 1" = 50′ **EC-2**

STATE OF CALIFORNIA - DEPARTMENT OF TRANSPORTATION
Caltrans® LANDSCAPE ARCHITECTURE

FUNCTIONAL SUPERVISOR: ELBERT COX

CALCULATED-DESIGNED BY: GUS ESCUTIA
CHECKED BY: WILLIAM DUTTERA

REVISED BY: GE
DATE REVISED: 05-18-10

LAST REVISION 05-18-10 | DATE PLOTTED => 08-SEP-2010 | TIME PLOTTED => 13:42

BORDER LAST REVISED 4/11/2008 | RELATIVE BORDER SCALE IS IN INCHES 0 1 2 3 | USERNAME => trstrk | DGN FILE => a0A6711td002.dgn | CU 06342 | EA 0A6711

Dist	COUNTY	ROUTE	POST MILES TOTAL PROJECT	SHEET No.	TOTAL SHEETS
10	Sta	99	15.1/17.0	50	176

LICENSED LANDSCAPE ARCHITECT

9-7-10
PLANS APPROVAL DATE

LICENSED LANDSCAPE ARCHITECT
William Dutterra No. 3432
Signature
9/30/10
Renewal Date
5/18/10
Date
STATE OF CALIFORNIA

THE STATE OF CALIFORNIA OR ITS OFFICERS OR AGENTS SHALL NOT BE RESPONSIBLE FOR THE ACCURACY OR COMPLETENESS OF ELECTRONIC COPIES OF THIS PLAN SHEET.

EROSION CONTROL (HYDROSEED)

LOCATION STATION TO STATION	SIDE		AREA	STRAW (N)	FIBER (N)	PURE LIVE SEED (N)	COMMERCIAL FERTILIZER (N)	TACKIFIER (N)
	Lt	Rt	ACRE	TON	lbs	lbs	lbs	lbs
"G" LINE 67+00 TO 77+30		X	.69	1.38	745	24	124	31
"H" LINE 40+20 TO 48+50		X	.44	.88	475	16	79	20
"H" LINE 48+50 TO 53+00		X	.17	.34	184	6	31	8
"J" LINE 47+60 TO 56+00	X		.31	.62	335	11	180	14
"J" LINE 58+08 TO 54+54		X	.30	.60	324	11	54	14
"K" LINE 80+45 TO 90+90	X		.34	.68	367	12	61	15
TOTAL			2.25					

(N) - NOT A SEPARATE PAY ITEM, FOR INFORMATION ONLY.

MULCH

LOCATION SHEET NUMBER	MULCH
	CY
PP-1	450
PP-2	8
TOTAL	458

EROSION CONTROL QUANTITIES
ECQ-1

STATE OF CALIFORNIA - DEPARTMENT OF TRANSPORTATION
Caltrans LANDSCAPE ARCHITECTURE

FUNCTIONAL SUPERVISOR: ELBERT COX
CALCULATED-DESIGNED BY: GUS ESCUTIA
CHECKED BY: WILLIAM DUTTERA
REVISED BY: GE
DATE REVISED: 05-18-10

LAST REVISION 05-18-10 | DATE PLOTTED => 08-SEP-2010 | TIME PLOTTED => 13:42

Dist	COUNTY	ROUTE	POST MILES TOTAL PROJECT	SHEET No.	TOTAL SHEETS
10	Sta	99	15.1/17.0	51	176

REGISTERED CIVIL ENGINEER DATE 05-24-10

9-7-10
PLANS APPROVAL DATE

REGISTERED PROFESSIONAL ENGINEER ROTIMI D. ADEBAYO No. 69102 Exp. 6/30/12 CIVIL STATE OF CALIFORNIA

THE STATE OF CALIFORNIA OR ITS OFFICERS OR AGENTS SHALL NOT BE RESPONSIBLE FOR THE ACCURACY OR COMPLETENESS OF SCANNED COPIES OF THIS PLAN SHEET.

NOTES:

1. FOR RIGHT OF WAY DATA, CONTACT RIGHT OF WAY ENGINEERING AT THE DISTRICT OFFICE.
2. TOP OF GRATE ELEVATIONS ARE TO FLOW LINE OF GRATE UNLESS OTHERWISE NOTED.
3. INLET GRATES SHALL BE HORIZONTAL (0% SLOPE) UNLESS OTHERWISE NOTED.

LEGEND:

DRAINAGE SYSTEM NUMBER

DRAINAGE SYSTEM UNIT

ABBREVIATION:

PP - PUMP PLANT

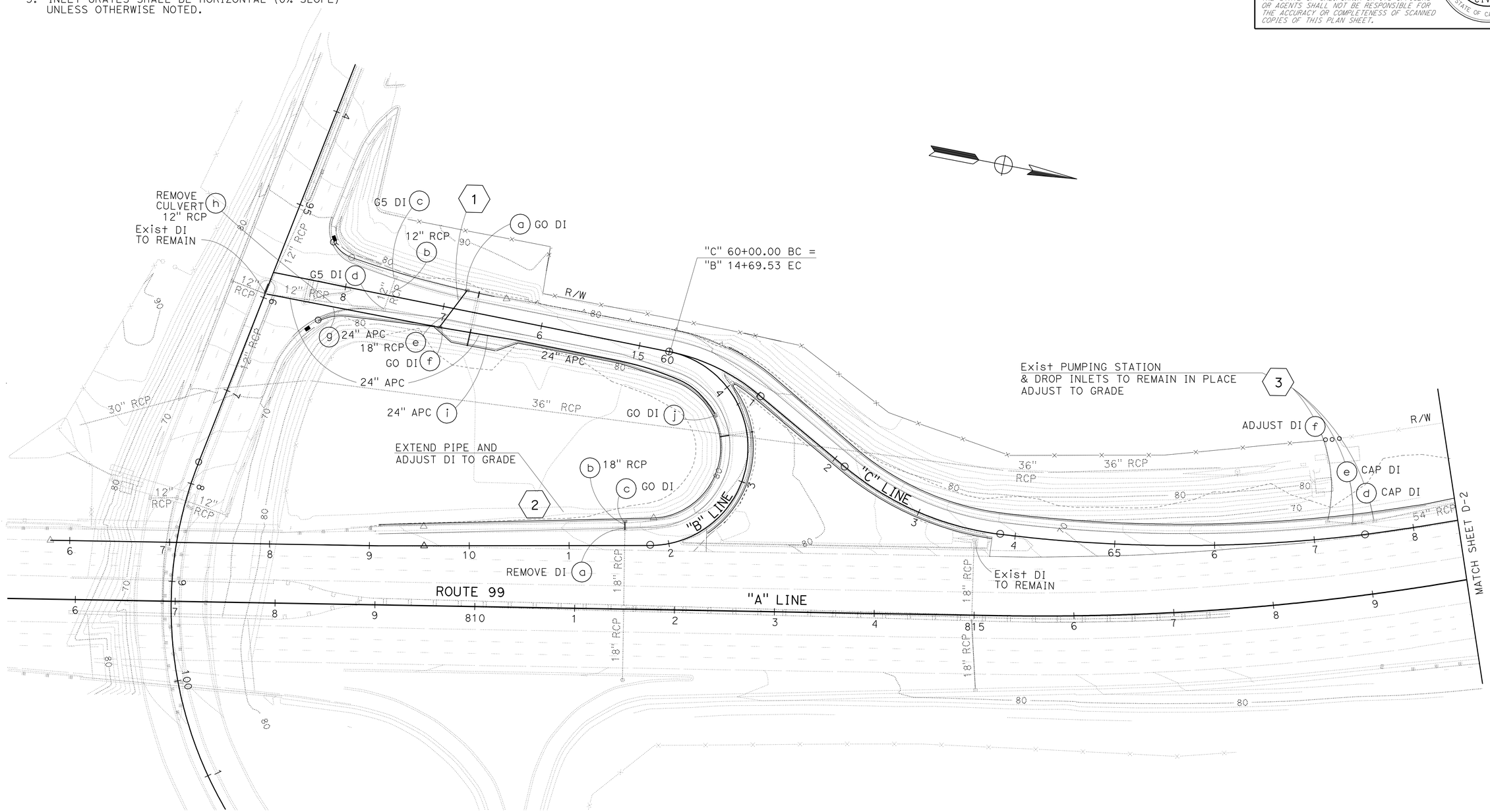

TUOLUMNE Blvd SB ON-RAMP (LOCATION 1)
TUOLUMNE Blvd SB OFF-RAMP (LOCATION 2)

THIS PLAN ACCURATE FOR DRAINAGE WORK ONLY

DRAINAGE PLAN

SCALE: 1" = 50'

D-1

STATE OF CALIFORNIA - DEPARTMENT OF TRANSPORTATION
Caltrans
06-DESIGN

FUNCTIONAL SUPERVISOR: ERNIE PENUNA
CALCULATED-DESIGNED BY: JOSEPH VALDIVIA
CHECKED BY: ROTIMI ADEBAYO
REVISED BY
DATE REVISED

LAST REVISION 05-19-10
DATE PLOTTED => 23-SEP-2010
TIME PLOTTED => 12:57

Dist	COUNTY	ROUTE	POST MILES TOTAL PROJECT	SHEET No.	TOTAL SHEETS
10	Sta	99	15.1/17.0	52	176

REGISTERED CIVIL ENGINEER 05-24-10 DATE

9-7-10
PLANS APPROVAL DATE

REGISTERED PROFESSIONAL ENGINEER ROTIMI D. ADEBAYO No. 69102 Exp. 6/30/12 CIVIL STATE OF CALIFORNIA

THE STATE OF CALIFORNIA OR ITS OFFICERS OR AGENTS SHALL NOT BE RESPONSIBLE FOR THE ACCURACY OR COMPLETENESS OF SCANNED COPIES OF THIS PLAN SHEET.

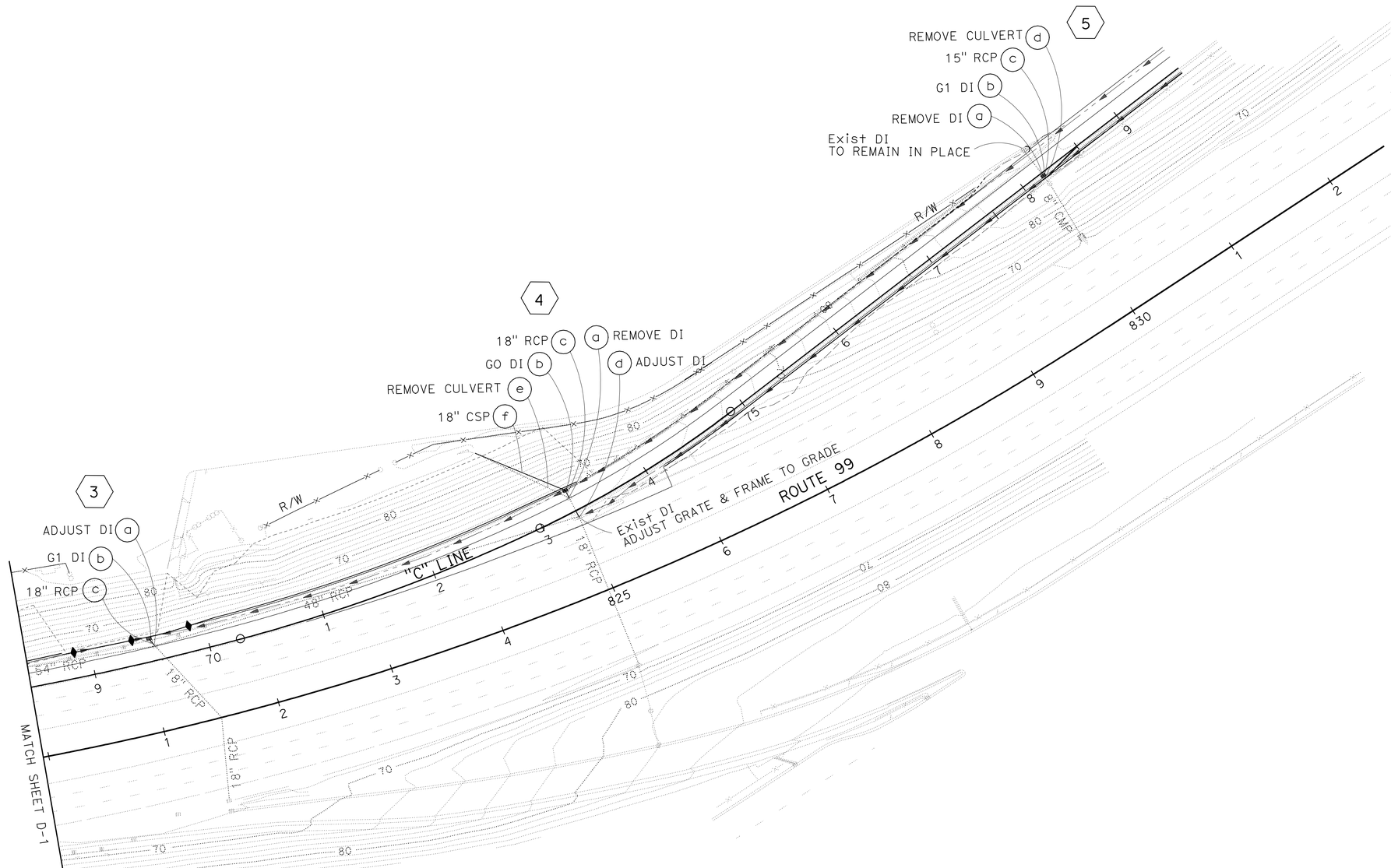

5th/F St SB ON-RAMP (LOCATION 3)

THIS PLAN ACCURATE FOR DRAINAGE WORK ONLY

DRAINAGE PLAN

SCALE: 1" = 50'

D-2

REVISED BY	DATE REVISED

CALCULATED-DESIGNED BY: JOSEPH VALDIVIA
CHECKED BY: ROTIMI ADEBAYO
FUNCTIONAL SUPERVISOR: ERNIE PENUNA

STATE OF CALIFORNIA - DEPARTMENT OF TRANSPORTATION
Caltrans
06-DESIGN

LAST REVISION 05-19-10
DATE PLOTTED => 23-SEP-2010
TIME PLOTTED => 12:35

Dist	COUNTY	ROUTE	POST MILES TOTAL PROJECT	SHEET No.	TOTAL SHEETS
10	Sta	99	15.1/17.0	53	176

REGISTERED CIVIL ENGINEER 05-24-10 DATE

9-7-10
PLANS APPROVAL DATE

REGISTERED PROFESSIONAL ENGINEER ROTIMI D. ADEBAYO No. 69102 Exp. 6/30/12 CIVIL STATE OF CALIFORNIA

THE STATE OF CALIFORNIA OR ITS OFFICERS OR AGENTS SHALL NOT BE RESPONSIBLE FOR THE ACCURACY OR COMPLETENESS OF SCANNED COPIES OF THIS PLAN SHEET.

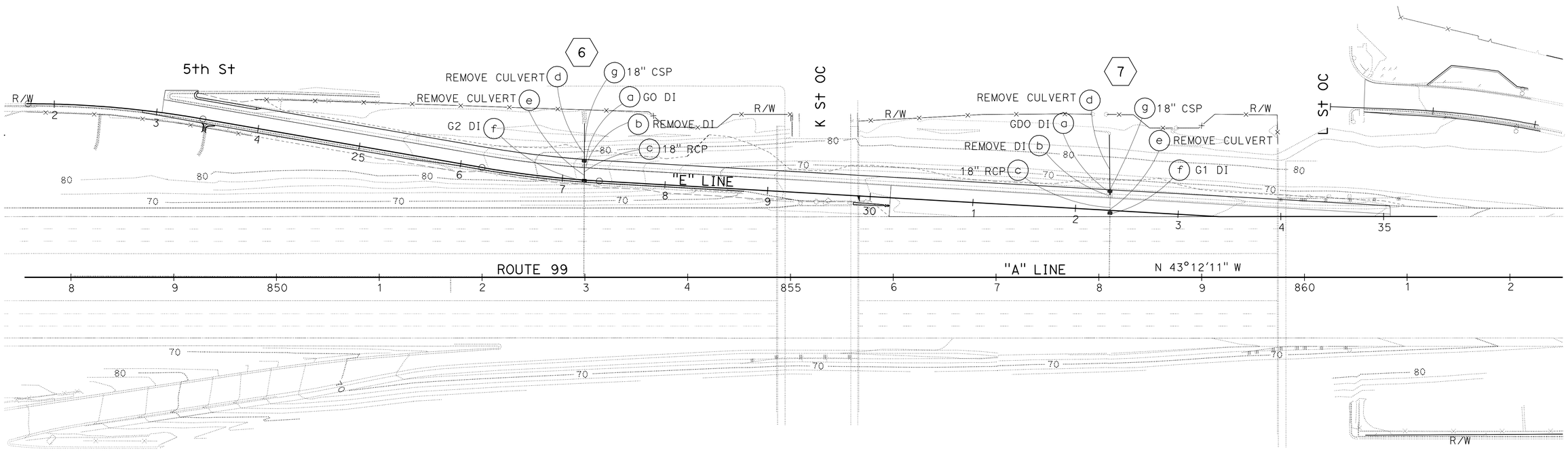

I St SB OFF-RAMP (LOCATION 4)

THIS PLAN ACCURATE FOR DRAINAGE WORK ONLY

DRAINAGE PLAN

SCALE: 1" = 50'

D-3

STATE OF CALIFORNIA - DEPARTMENT OF TRANSPORTATION
Caltrans®
06-DESIGN

FUNCTIONAL SUPERVISOR: ERNIE PENUNA
CALCULATED-DESIGNED BY: JOSEPH VALDIVIA
CHECKED BY: ROTIMI ADEBAYO
REVISED BY
DATE REVISED

LAST REVISION 05-18-10
DATE PLOTTED => 23-SEP-2010
TIME PLOTTED => 12:35

BORDER LAST REVISED 4/11/2008
RELATIVE BORDER SCALE IS IN INCHES 0 1 2 3
USERNAME => trstrk
DGN FILE => a0A6711a003.dgn
CU 06253
EA 0A6711

Dist	COUNTY	ROUTE	POST MILES TOTAL PROJECT	SHEET No.	TOTAL SHEETS
10	Sta	99	15.1/17.0	54	176

REGISTERED CIVIL ENGINEER 05-24-10 DATE

9-7-10
PLANS APPROVAL DATE

REGISTERED PROFESSIONAL ENGINEER ROTIMI D. ADEBAYO No. 69102 Exp. 6/30/12 CIVIL STATE OF CALIFORNIA

THE STATE OF CALIFORNIA OR ITS OFFICERS OR AGENTS SHALL NOT BE RESPONSIBLE FOR THE ACCURACY OR COMPLETENESS OF SCANNED COPIES OF THIS PLAN SHEET.

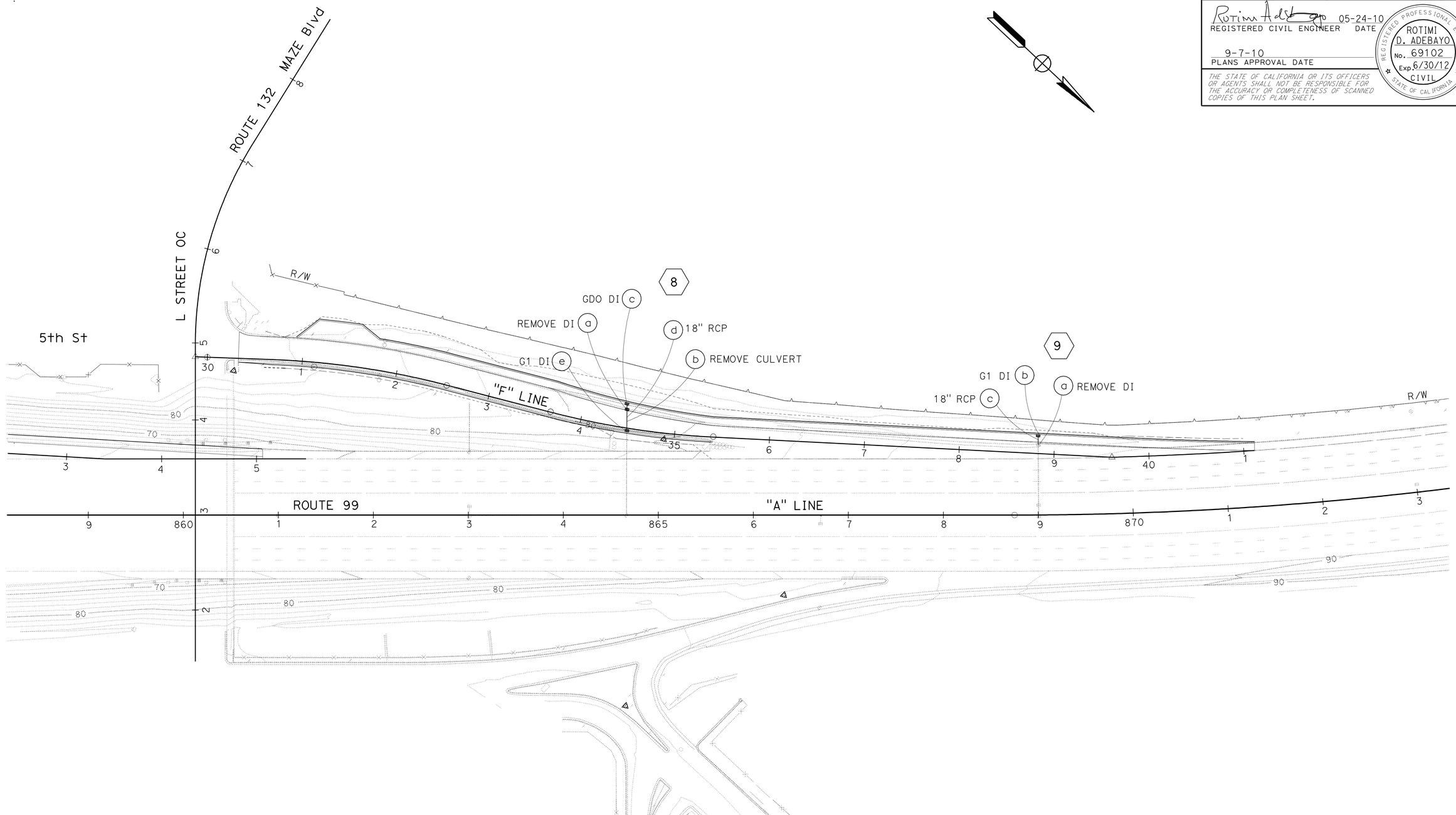

L St SB OFF-RAMP (LOCATION 5)

THIS PLAN ACCURATE FOR DRAINAGE WORK ONLY

DRAINAGE PLAN

SCALE: 1" = 50′ **D-4**

STATE OF CALIFORNIA - DEPARTMENT OF TRANSPORTATION
Caltrans
06-DESIGN

FUNCTIONAL SUPERVISOR: ERNIE PENUNA
CALCULATED-DESIGNED BY: JOSEPH VALDIVIA
CHECKED BY: ROTIMI ADEBAYO
REVISED BY
DATE REVISED

LAST REVISION 05-19-10 | DATE PLOTTED => 23-SEP-2010 | TIME PLOTTED => 12:35

Dist	COUNTY	ROUTE	POST MILES TOTAL PROJECT	SHEET No.	TOTAL SHEETS
10	Sta	99	15.1/17.0	55	176

REGISTERED CIVIL ENGINEER 05-24-10 DATE

9-7-10
PLANS APPROVAL DATE

REGISTERED PROFESSIONAL ENGINEER ROTIMI D. ADEBAYO No. 69102 Exp. 6/30/12 CIVIL STATE OF CALIFORNIA

THE STATE OF CALIFORNIA OR ITS OFFICERS OR AGENTS SHALL NOT BE RESPONSIBLE FOR THE ACCURACY OR COMPLETENESS OF SCANNED COPIES OF THIS PLAN SHEET.

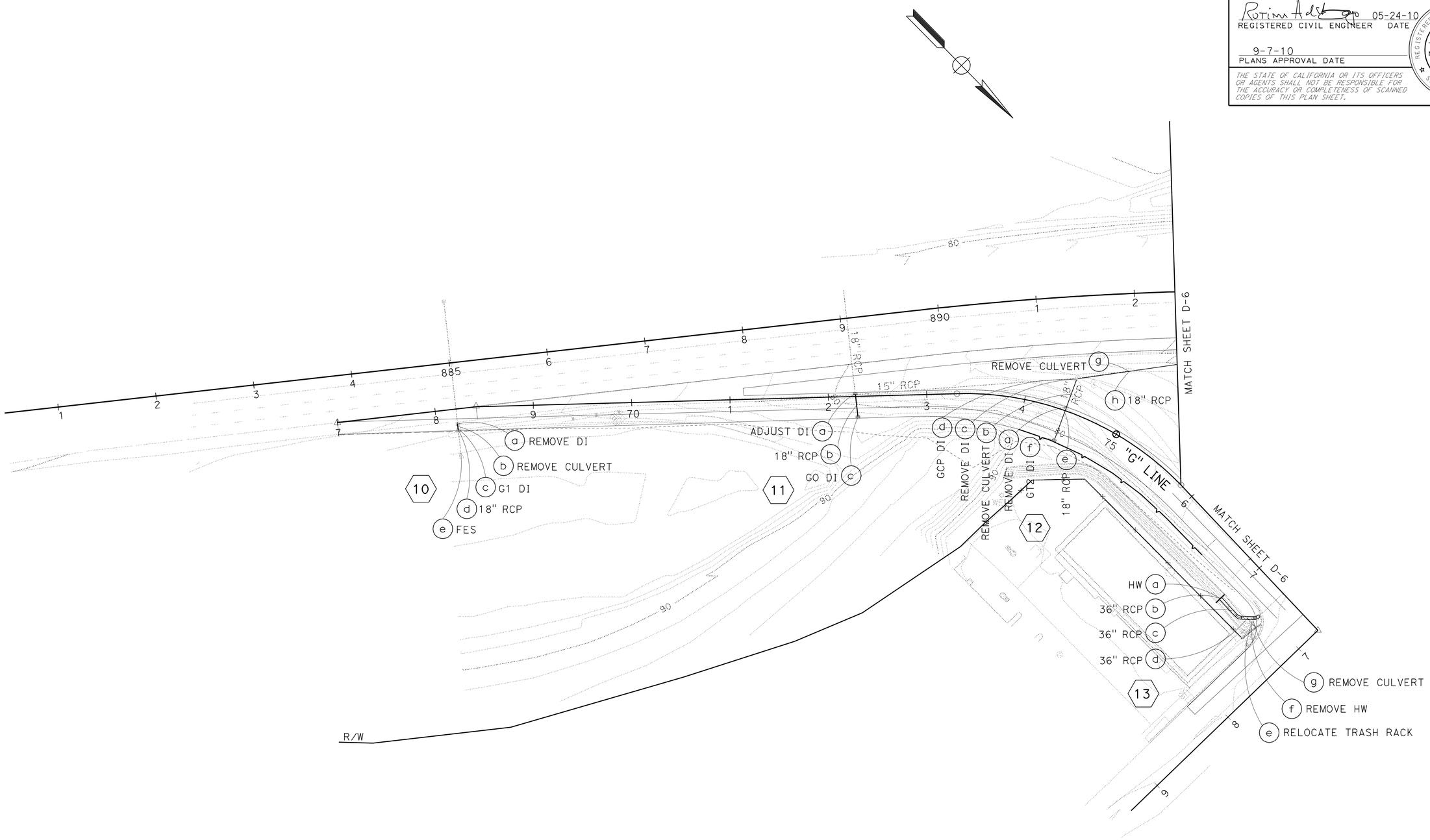

KANSAS Ave NB OFF-RAMP (LOCATION 6)

THIS PLAN ACCURATE FOR DRAINAGE WORK ONLY

DRAINAGE PLAN

SCALE: 1" = 50′ **D-5**

STATE OF CALIFORNIA - DEPARTMENT OF TRANSPORTATION
Caltrans
06-DESIGN

FUNCTIONAL SUPERVISOR: ERNIE PENUNA
CALCULATED-DESIGNED BY: JOSEPH VALDIVIA
CHECKED BY: ROTIMI ADEBAYO
REVISED BY
DATE REVISED

LAST REVISION 05-19-10
DATE PLOTTED => 23-SEP-2010
TIME PLOTTED => 13:03

Dist	COUNTY	ROUTE	POST MILES TOTAL PROJECT	SHEET No.	TOTAL SHEETS
10	Sta	99	15.1/17.0	56	176

REGISTERED CIVIL ENGINEER 05-24-10 DATE

9-7-10
PLANS APPROVAL DATE

REGISTERED PROFESSIONAL ENGINEER ROTIMI D. ADEBAYO No. 69102 Exp. 6/30/12 CIVIL STATE OF CALIFORNIA

THE STATE OF CALIFORNIA OR ITS OFFICERS OR AGENTS SHALL NOT BE RESPONSIBLE FOR THE ACCURACY OR COMPLETENESS OF SCANNED COPIES OF THIS PLAN SHEET.

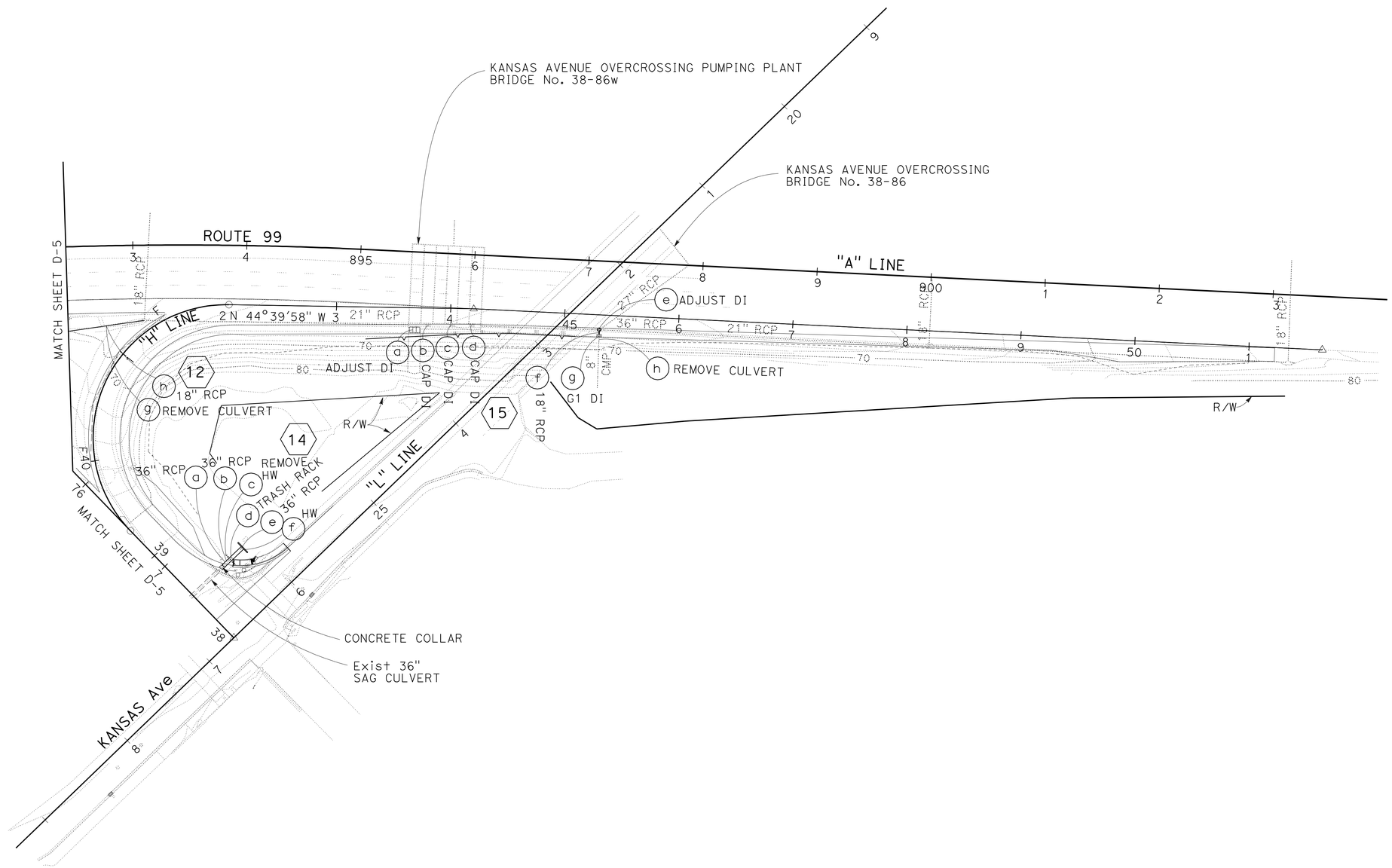

KANSAS Ave NB ON-RAMP (LOCATION 7)

THIS PLAN ACCURATE FOR DRAINAGE WORK ONLY

DRAINAGE PLAN

SCALE: 1" = 50'

D-6

STATE OF CALIFORNIA - DEPARTMENT OF TRANSPORTATION
Caltrans
06-DESIGN

FUNCTIONAL SUPERVISOR: ERNIE PENUNA
CALCULATED-DESIGNED BY: JOSEPH VALDIVIA
CHECKED BY: ROTIMI ADEBAYO
REVISED BY
DATE REVISED

LAST REVISION 05-18-10
DATE PLOTTED => 23-SEP-2010
TIME PLOTTED => 13:08

BORDER LAST REVISED 4/11/2008
RELATIVE BORDER SCALE IS IN INCHES 0 1 2 3
USERNAME => s135318
DGN FILE => a0A6711a006.dgn
CU 06253
EA 0A6711

Dist	COUNTY	ROUTE	POST MILES TOTAL PROJECT	SHEET No.	TOTAL SHEETS
10	Sta	99	15.1/17.0	57	176

REGISTERED CIVIL ENGINEER 05-24-10 DATE

9-7-10
PLANS APPROVAL DATE

REGISTERED PROFESSIONAL ENGINEER ROTIMI D. ADEBAYO No. 69102 Exp. 6/30/12 CIVIL STATE OF CALIFORNIA

THE STATE OF CALIFORNIA OR ITS OFFICERS OR AGENTS SHALL NOT BE RESPONSIBLE FOR THE ACCURACY OR COMPLETENESS OF SCANNED COPIES OF THIS PLAN SHEET.

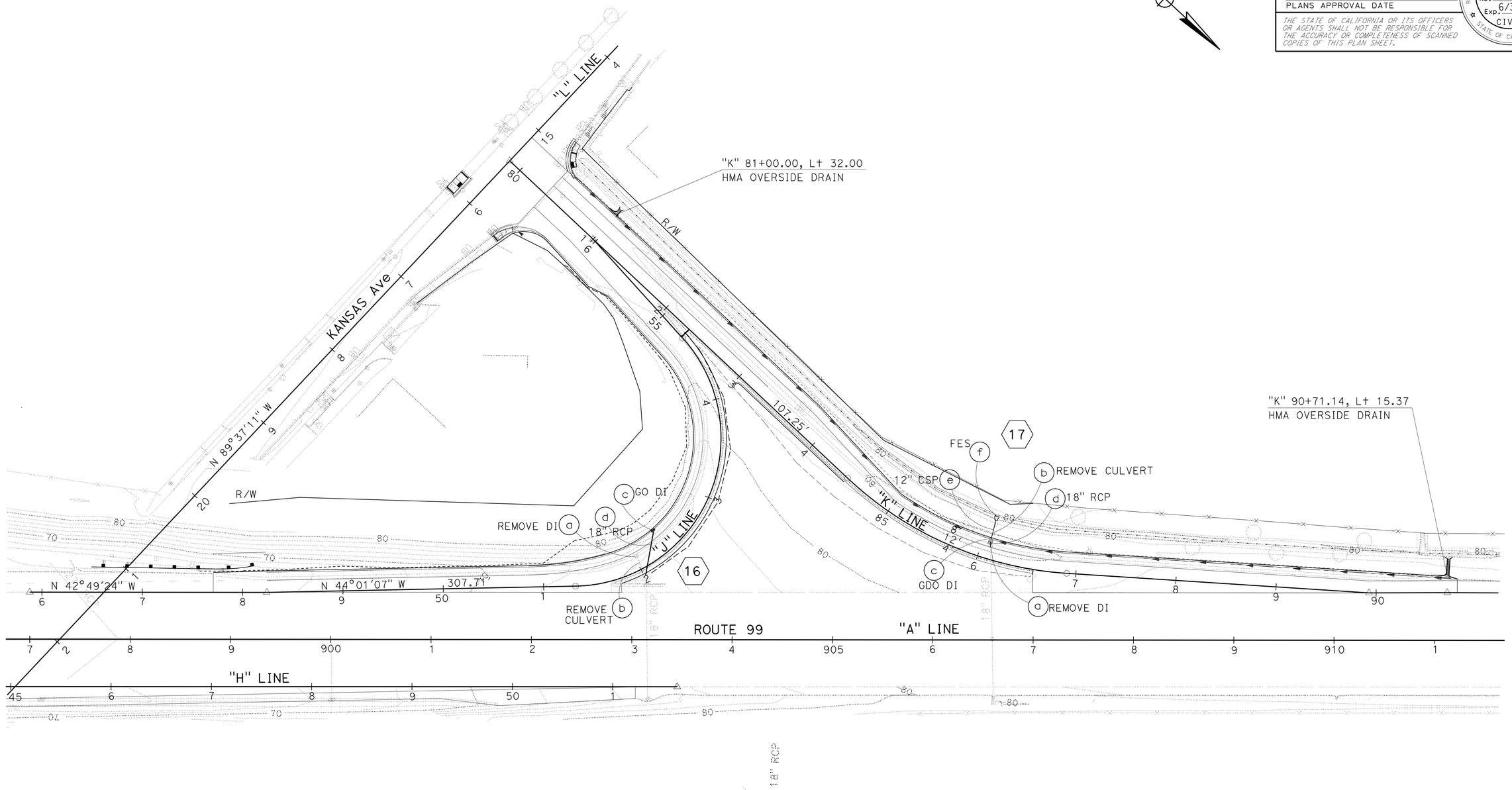

KANSAS Ave SB ON-RAMP (LOCATION 8)
KANSAS Ave SB OFF-RAMP (LOCATION 9)

THIS PLAN ACCURATE FOR DRAINAGE WORK ONLY

DRAINAGE PLAN

SCALE: 1" = 50′ **D-7**

STATE OF CALIFORNIA - DEPARTMENT OF TRANSPORTATION
Caltrans
06-DESIGN

FUNCTIONAL SUPERVISOR: ERNIE PENUNA
CALCULATED-DESIGNED BY: JOSEPH VALDIVIA
CHECKED BY: ROTIMI ADEBAYO
REVISED BY
DATE REVISED

LAST REVISION 05-19-10 | DATE PLOTTED => 23-SEP-2010 | TIME PLOTTED => 11:11

BORDER LAST REVISED 4/11/2008 | RELATIVE BORDER SCALE IS IN INCHES 0 1 2 3 | USERNAME => s135318 | DGN FILE => a0A6711ia007.dgn | CU 06253 | EA 0A6711

Dist	COUNTY	ROUTE	POST MILES TOTAL PROJECT	SHEET No.	TOTAL SHEETS
10	Sta	99	15.1/17.0	58	176

REGISTERED CIVIL ENGINEER 05-24-10 DATE

9-7-10
PLANS APPROVAL DATE

REGISTERED PROFESSIONAL ENGINEER ROTIMI D. ADEBAYO No. 69102 Exp. 6/30/12 CIVIL STATE OF CALIFORNIA

THE STATE OF CALIFORNIA OR ITS OFFICERS OR AGENTS SHALL NOT BE RESPONSIBLE FOR THE ACCURACY OR COMPLETENESS OF SCANNED COPIES OF THIS PLAN SHEET.

ABBREVIATIONS:

HDPE - HIGH DENSITY POLYETHYLENE PIPE

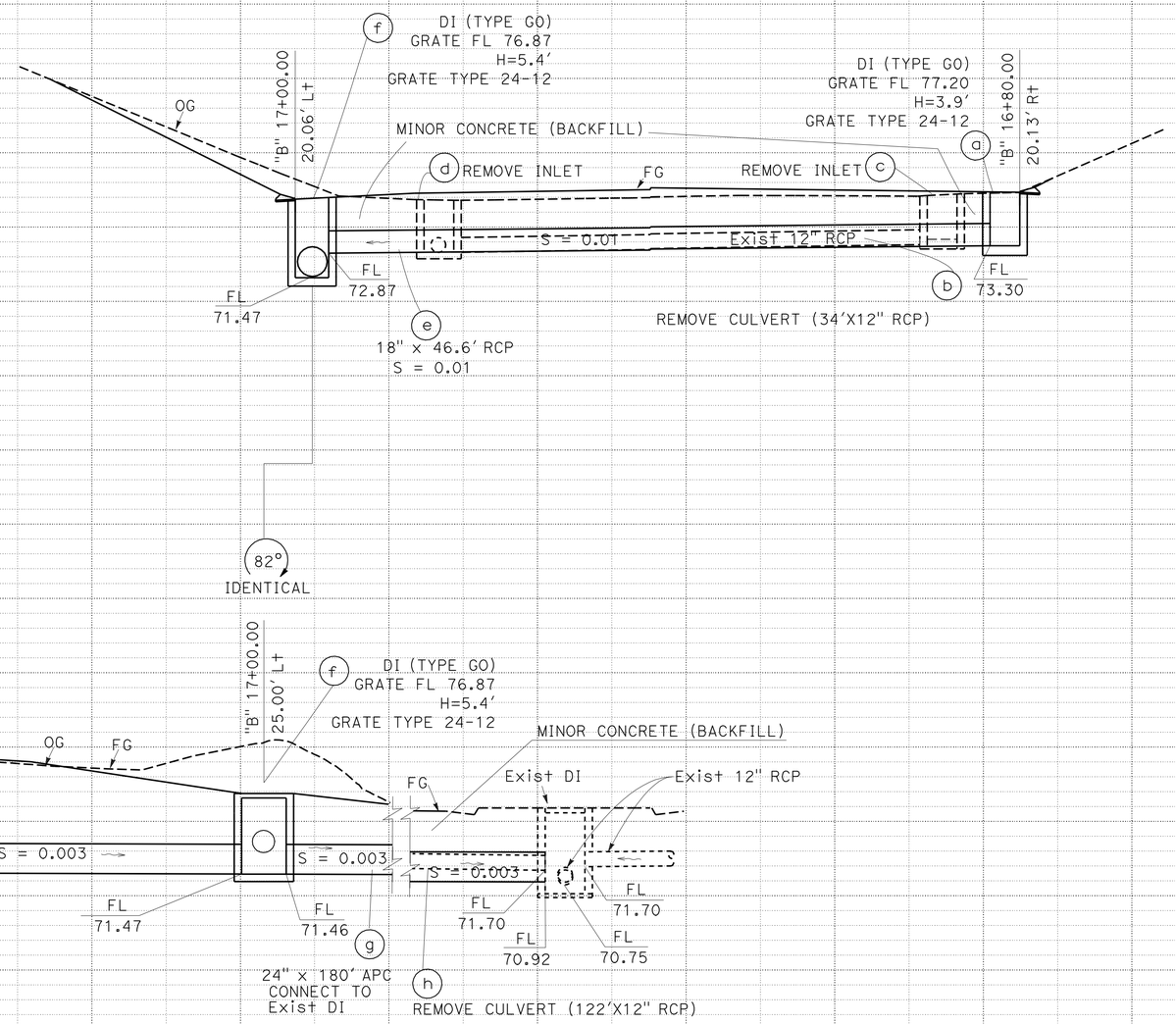

DRAINAGE SYSTEM No. 1

DRAINAGE PROFILES

SCALE: Horiz 1" = 5'
Vert 1" = 5'

DP-1

STATE OF CALIFORNIA - DEPARTMENT OF TRANSPORTATION
Caltrans
06-DESIGN

FUNCTIONAL SUPERVISOR: ERNIE PENUNA
CALCULATED-DESIGNED BY: JOSEPH VALDIVIA
CHECKED BY: ROTIMI ADEBAYO
REVISED BY
DATE REVISED

LAST REVISION 05-19-10 | DATE PLOTTED => 23-SEP-2010 | TIME PLOTTED => 11:11

Dist	COUNTY	ROUTE	POST MILES TOTAL PROJECT	SHEET No.	TOTAL SHEETS
10	Sta	99	15.1/17.0	59	176

REGISTERED CIVIL ENGINEER 05-24-10 DATE

9-7-10
PLANS APPROVAL DATE

REGISTERED PROFESSIONAL ENGINEER ROTIMI D. ADEBAYO No. 69102 Exp. 6/30/12 CIVIL STATE OF CALIFORNIA

THE STATE OF CALIFORNIA OR ITS OFFICERS OR AGENTS SHALL NOT BE RESPONSIBLE FOR THE ACCURACY OR COMPLETENESS OF SCANNED COPIES OF THIS PLAN SHEET.

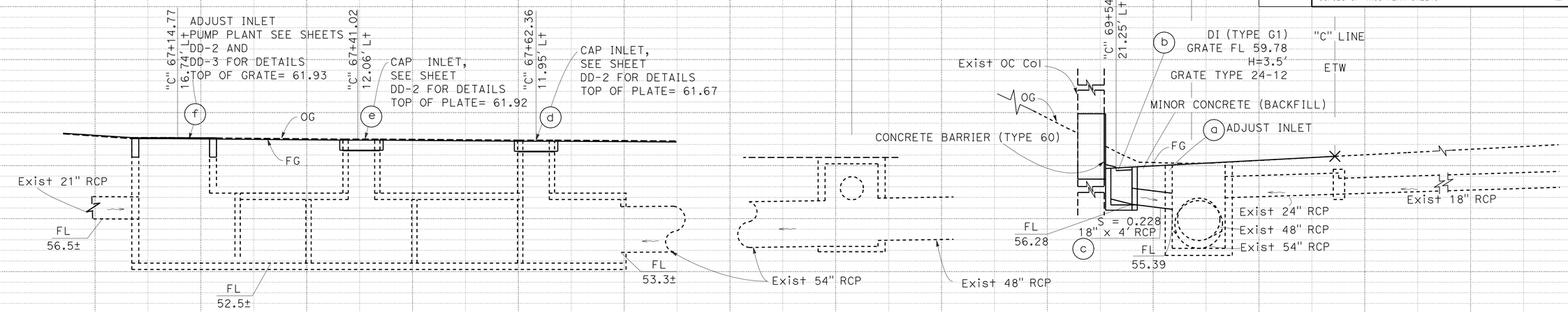

DRAINAGE SYSTEM No. 3

"C" LINE 69+54.92
"C" LINE 67+62.36
"C" LINE 67+41.02
"C" LINE 67+14.77

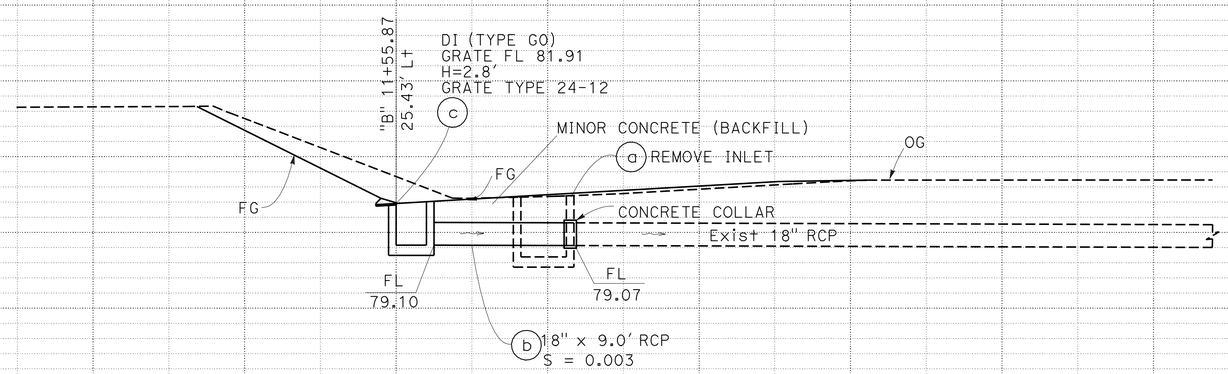

DRAINAGE SYSTEM No. 2

"B" LINE 11+55.87

DRAINAGE PROFILES

SCALE: Horiz 1" = 5'
Vert 1" = 5'

DP-2

STATE OF CALIFORNIA - DEPARTMENT OF TRANSPORTATION
Caltrans
06-DESIGN

FUNCTIONAL SUPERVISOR: ERNIE PENUNA
CALCULATED-DESIGNED BY: JOSEPH VALDIVIA
CHECKED BY: ROTIMI ADEBAYO
REVISED BY / DATE REVISED

LAST REVISION 05-19-10 | DATE PLOTTED => 08-SEP-2010 | TIME PLOTTED => 10:43

Dist	COUNTY	ROUTE	POST MILES TOTAL PROJECT	SHEET No.	TOTAL SHEETS
10	Sta	99	15.1/17.0	60	176

REGISTERED CIVIL ENGINEER 05-24-10 DATE

9-7-10
PLANS APPROVAL DATE

REGISTERED PROFESSIONAL ENGINEER ROTIMI D. ADEBAYO No. 69102 Exp. 6/30/12 CIVIL STATE OF CALIFORNIA

THE STATE OF CALIFORNIA OR ITS OFFICERS OR AGENTS SHALL NOT BE RESPONSIBLE FOR THE ACCURACY OR COMPLETENESS OF SCANNED COPIES OF THIS PLAN SHEET.

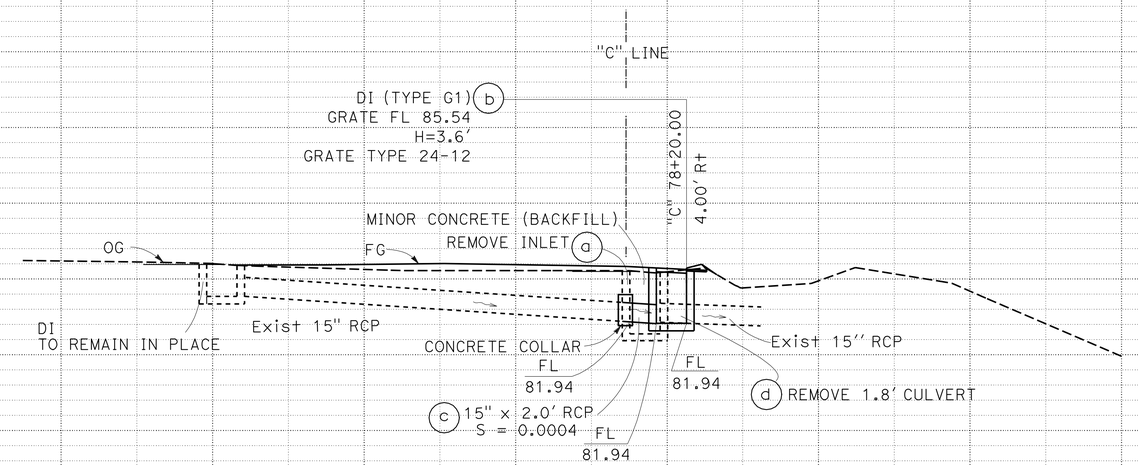

DRAINAGE SYSTEM No. 5

"C" LINE 78+20.00

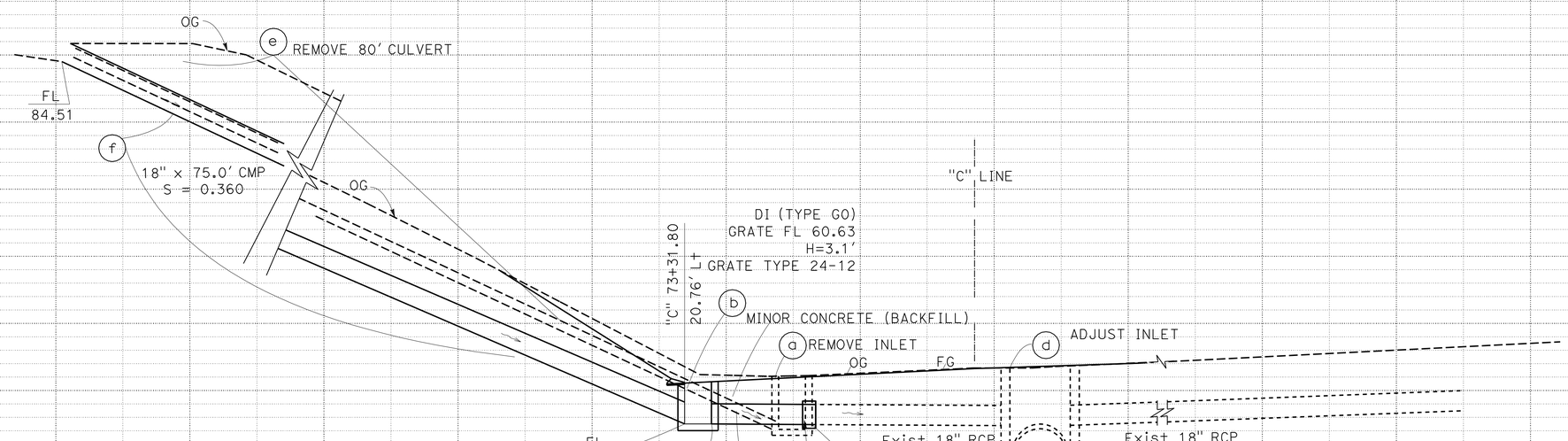

DRAINAGE SYSTEM No. 4

"C" LINE 73+31.80

DRAINAGE PROFILES

SCALE: Horiz 1" = 5'
Vert 1" = 5'

DP-3

STATE OF CALIFORNIA - DEPARTMENT OF TRANSPORTATION
Caltrans
06-DESIGN

FUNCTIONAL SUPERVISOR: ERNIE PENUNA
CALCULATED-DESIGNED BY: JOSEPH VALDIVIA
CHECKED BY: ROTIMI ADEBAYO
REVISED BY
DATE REVISED

LAST REVISION 05-19-10 | DATE PLOTTED => 08-SEP-2010 | TIME PLOTTED => 10:43

Dist	COUNTY	ROUTE	POST MILES TOTAL PROJECT	SHEET No.	TOTAL SHEETS
10	Sta	99	15.1/17.0	61	176

REGISTERED CIVIL ENGINEER 05-24-10 DATE

9-7-10
PLANS APPROVAL DATE

REGISTERED PROFESSIONAL ENGINEER ROTIMI D. ADEBAYO No. 69102 Exp. 6/30/12 CIVIL STATE OF CALIFORNIA

THE STATE OF CALIFORNIA OR ITS OFFICERS OR AGENTS SHALL NOT BE RESPONSIBLE FOR THE ACCURACY OR COMPLETENESS OF SCANNED COPIES OF THIS PLAN SHEET.

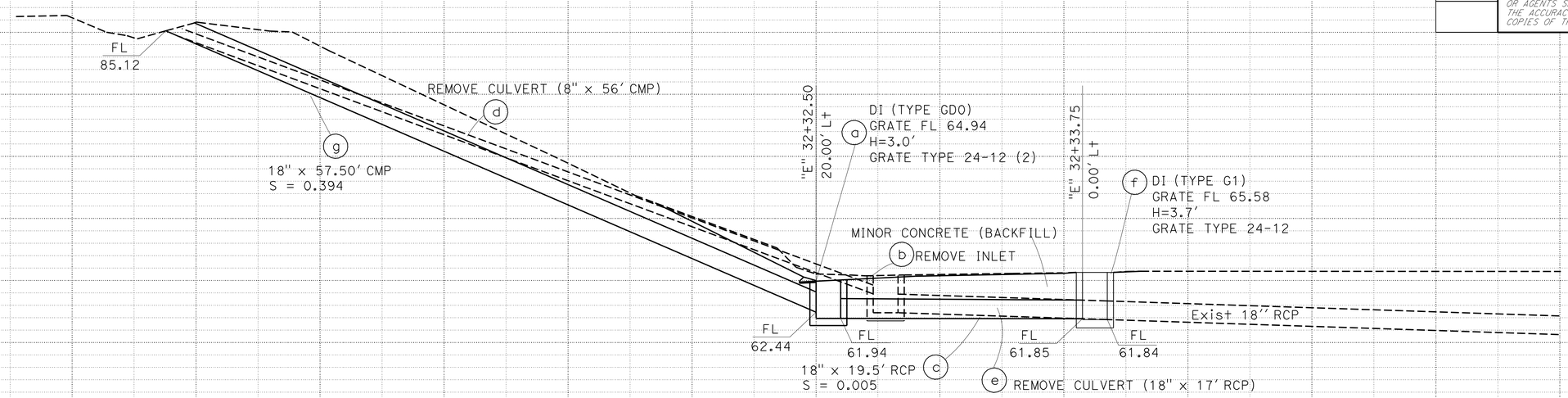

DRAINAGE SYSTEM No. 7

"E" LINE 32+32.50
"E" LINE 32+33.75

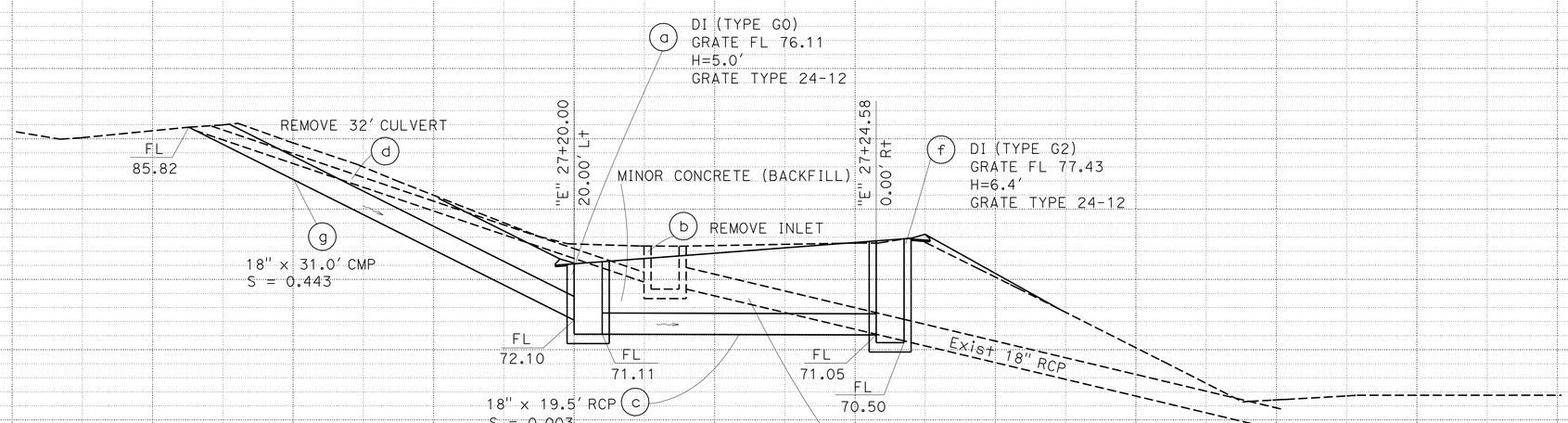

DRAINAGE SYSTEM No. 6

"E" LINE 27+20.00
"E" LINE 27+24.58

DRAINAGE PROFILES

SCALE: Horiz 1" = 5'
Vert 1" = 5'

DP-4

STATE OF CALIFORNIA - DEPARTMENT OF TRANSPORTATION
Caltrans
06-DESIGN

FUNCTIONAL SUPERVISOR: ERNIE PENUNA
CALCULATED-DESIGNED BY: JOSEPH VALDIVIA
CHECKED BY: ROTIMI ADEBAYO
REVISED BY
DATE REVISED

LAST REVISION 05-19-10 | DATE PLOTTED => 08-SEP-2010 | TIME PLOTTED => 10:43

BORDER LAST REVISED 4/11/2008 | RELATIVE BORDER SCALE IS IN INCHES 0 1 2 3 | USERNAME => trpierce | DGN FILE => a0A671ib004.dgn | CU 06253 | EA 0A6711

Dist	COUNTY	ROUTE	POST MILES TOTAL PROJECT	SHEET No.	TOTAL SHEETS
10	Sta	99	15.1/17.0	62	176

REGISTERED CIVIL ENGINEER 05-24-10 DATE

9-7-10
PLANS APPROVAL DATE

REGISTERED PROFESSIONAL ENGINEER ROTIMI D. ADEBAYO No. 69102 Exp. 6/30/12 CIVIL STATE OF CALIFORNIA

THE STATE OF CALIFORNIA OR ITS OFFICERS OR AGENTS SHALL NOT BE RESPONSIBLE FOR THE ACCURACY OR COMPLETENESS OF SCANNED COPIES OF THIS PLAN SHEET.

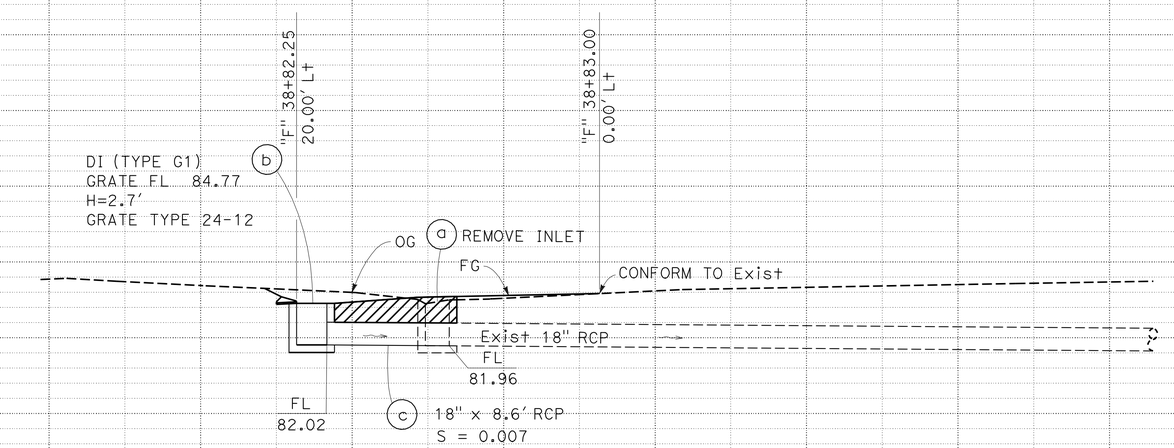

DRAINAGE SYSTEM No. 9

"F" LINE 38+82.25

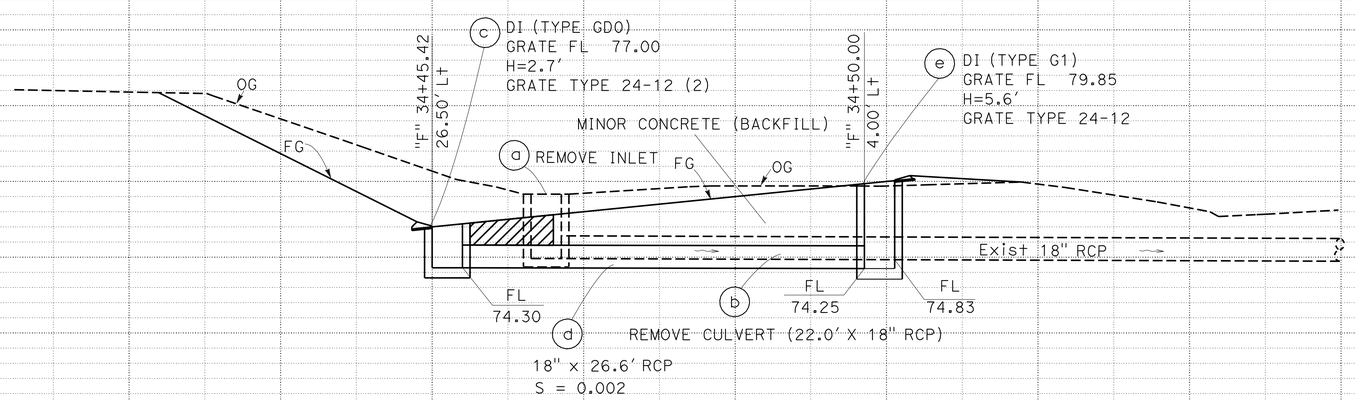

DRAINAGE SYSTEM No. 8

"F" LINE 34+45.42
"F" LINE 34+50.00

DRAINAGE PROFILES

SCALE: Horiz 1" = 5'
Vert 1" = 5'

DP-5

REVISED BY | DATE REVISED
JOSEPH VALDIVIA | ROTIMI ADEBAYO
CALCULATED-DESIGNED BY | CHECKED BY
FUNCTIONAL SUPERVISOR: ERNIE PENUNA

STATE OF CALIFORNIA - DEPARTMENT OF TRANSPORTATION
Caltrans
06-DESIGN

LAST REVISION 05-19-10 | DATE PLOTTED => 08-SEP-2010 | TIME PLOTTED => 10:43

Dist	COUNTY	ROUTE	POST MILES TOTAL PROJECT	SHEET No.	TOTAL SHEETS
10	Sta	99	15.1/17.0	63	176

REGISTERED CIVIL ENGINEER 05-24-10 DATE

9-7-10
PLANS APPROVAL DATE

REGISTERED PROFESSIONAL ENGINEER ROTIMI D. ADEBAYO No. 69102 Exp. 6/30/12 CIVIL STATE OF CALIFORNIA

THE STATE OF CALIFORNIA OR ITS OFFICERS OR AGENTS SHALL NOT BE RESPONSIBLE FOR THE ACCURACY OR COMPLETENESS OF SCANNED COPIES OF THIS PLAN SHEET.

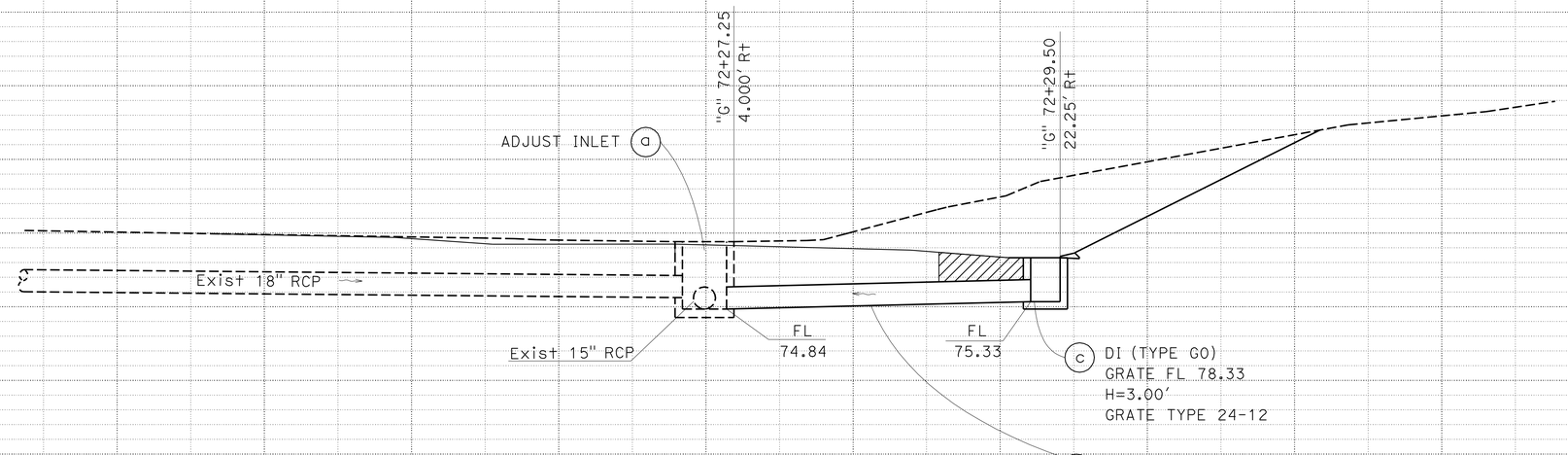

DRAINAGE SYSTEM No. 11
"G" LINE 72+29.50

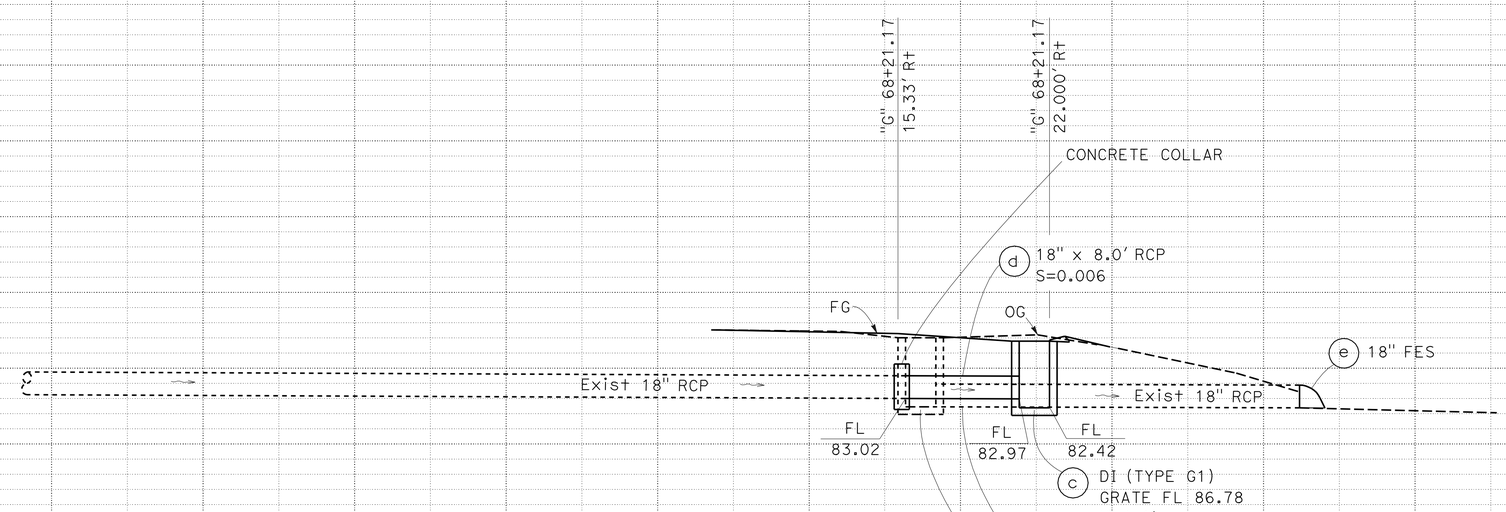

DRAINAGE SYSTEM No. 10
"G" LINE 68+21.17

DRAINAGE PROFILES

SCALE: Horiz 1" = 5'
Vert 1" = 5'

DP-6

STATE OF CALIFORNIA - DEPARTMENT OF TRANSPORTATION
Caltrans
06-DESIGN

FUNCTIONAL SUPERVISOR: ERNIE PENUNA
CALCULATED-DESIGNED BY: JOSEPH VALDIVIA
CHECKED BY: ROTIMI ADEBAYO
REVISED BY / DATE REVISED

LAST REVISION 05-19-10 | DATE PLOTTED => 08-SEP-2010 | TIME PLOTTED => 10:43

Dist	COUNTY	ROUTE	POST MILES TOTAL PROJECT	SHEET No.	TOTAL SHEETS
10	Sta	99	15.1/17.0	64	176

REGISTERED CIVIL ENGINEER 05-24-10 DATE

9-7-10
PLANS APPROVAL DATE

REGISTERED PROFESSIONAL ENGINEER ROTIMI D. ADEBAYO No. 69102 Exp. 6/30/12 CIVIL STATE OF CALIFORNIA

THE STATE OF CALIFORNIA OR ITS OFFICERS OR AGENTS SHALL NOT BE RESPONSIBLE FOR THE ACCURACY OR COMPLETENESS OF SCANNED COPIES OF THIS PLAN SHEET.

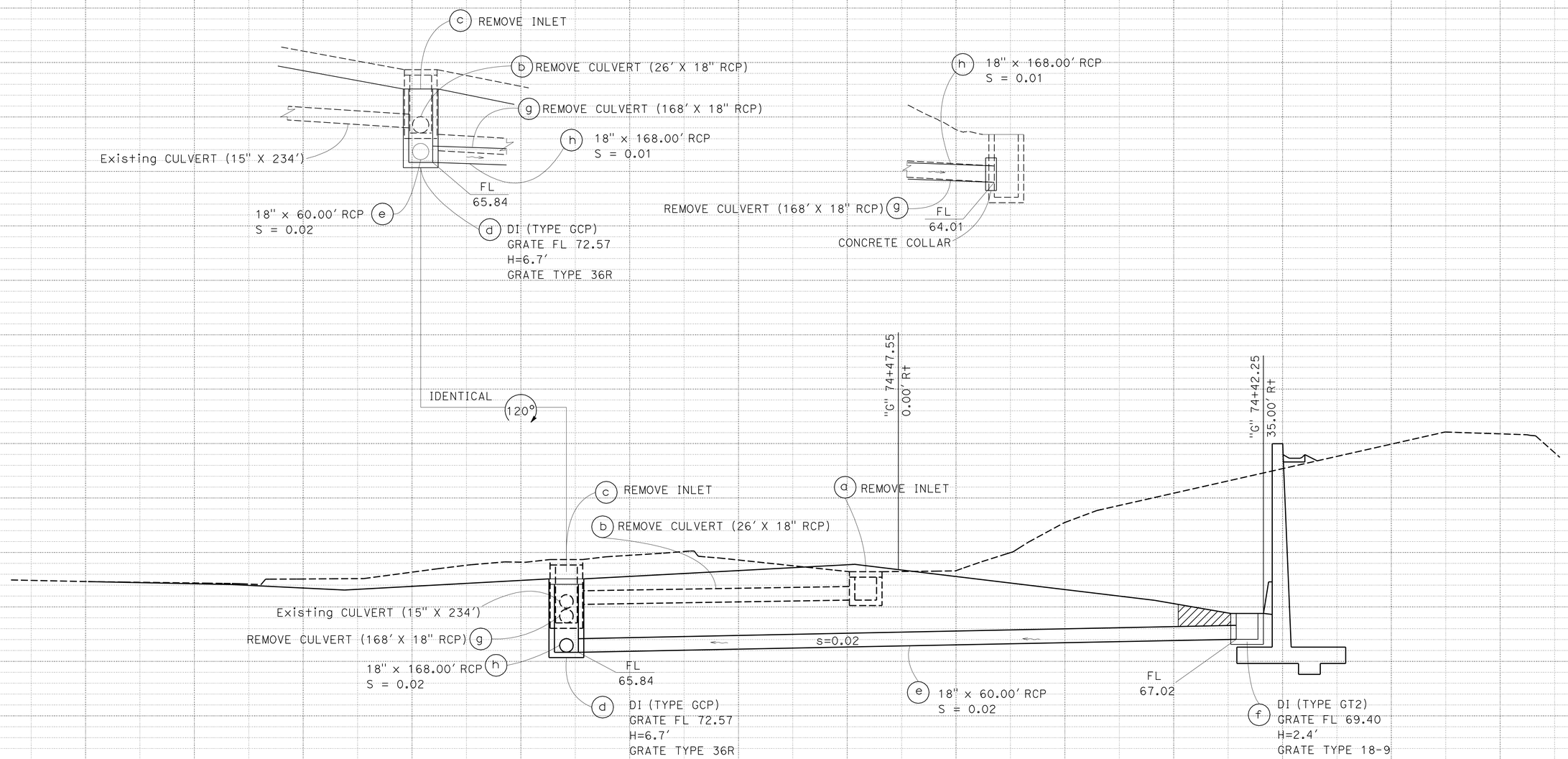

DRAINAGE SYSTEM No. 12

"G" LINE 74+42.25

DRAINAGE PROFILES

SCALE: Horiz 1" = 5'
Vert 1" = 5'

DP-7

STATE OF CALIFORNIA - DEPARTMENT OF TRANSPORTATION
Caltrans
06-DESIGN

FUNCTIONAL SUPERVISOR: ERNIE PENUNA
CALCULATED-DESIGNED BY: ROTIMI ADEBAYO
CHECKED BY
REVISED BY: JOSEPH VALDIVIA
DATE REVISED

LAST REVISION 05-19-10 | DATE PLOTTED => 08-SEP-2010 | TIME PLOTTED => 10:43

Dist	COUNTY	ROUTE	POST MILES TOTAL PROJECT	SHEET No.	TOTAL SHEETS
10	Sta	99	15.1/17.0	65	176

REGISTERED CIVIL ENGINEER 05-24-10 DATE

9-7-10
PLANS APPROVAL DATE

REGISTERED PROFESSIONAL ENGINEER ROTIMI D. ADEBAYO No. 69102 Exp. 6/30/12 CIVIL STATE OF CALIFORNIA

THE STATE OF CALIFORNIA OR ITS OFFICERS OR AGENTS SHALL NOT BE RESPONSIBLE FOR THE ACCURACY OR COMPLETENESS OF SCANNED COPIES OF THIS PLAN SHEET.

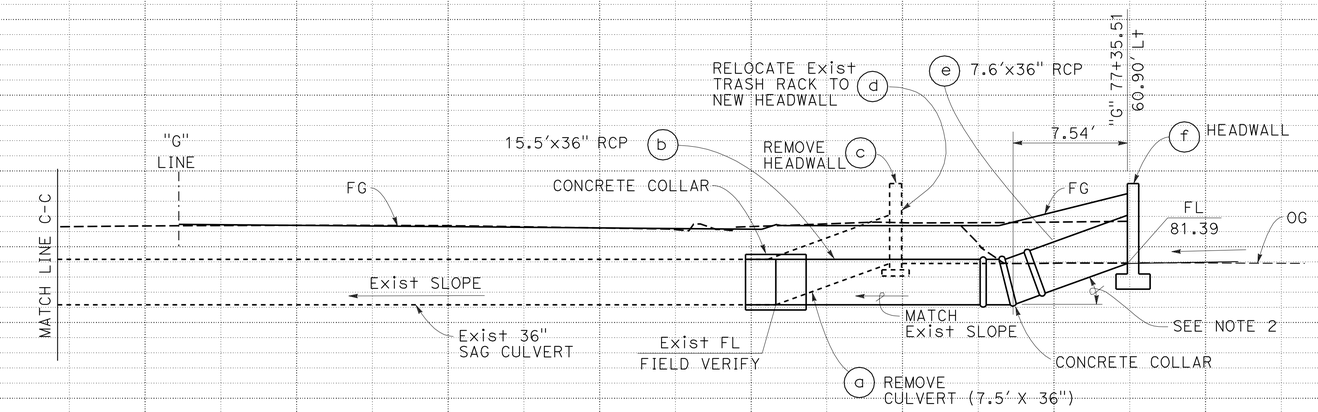

DRAINAGE SYSTEM No. 14

"G" LINE 77+35.51

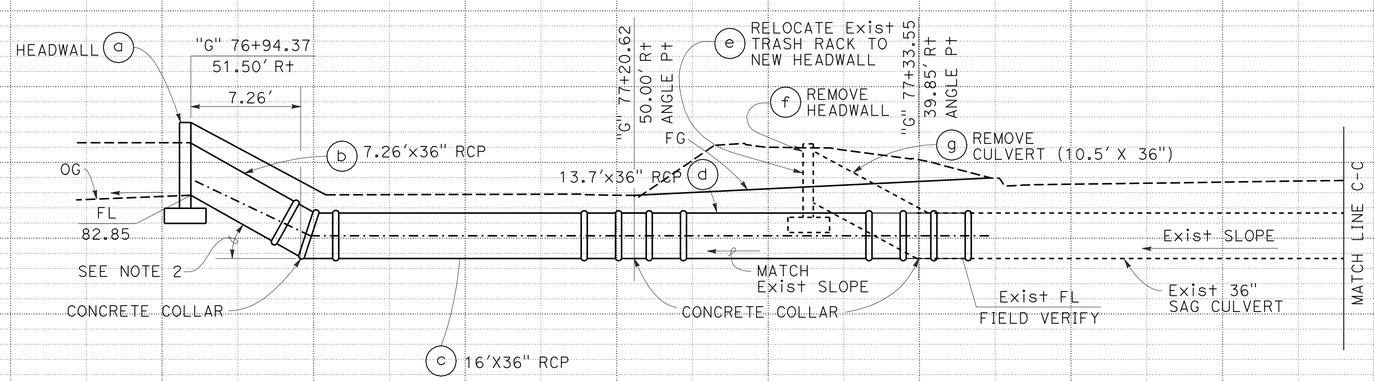

DRAINAGE SYSTEM No. 13

"G" LINE 76+94.37

DRAINAGE PROFILES

SCALE: Horiz 1" = 5'
Vert 1" = 5'

DP-8

STATE OF CALIFORNIA - DEPARTMENT OF TRANSPORTATION
Caltrans
06-DESIGN

FUNCTIONAL SUPERVISOR: ERNIE PENUNA
CALCULATED-DESIGNED BY: JOSEPH VALDIVIA
CHECKED BY: ROTIMI ADEBAYO
REVISED BY
DATE REVISED

LAST REVISION 05-19-10 | DATE PLOTTED => 08-SEP-2010 | TIME PLOTTED => 10:43

Dist	COUNTY	ROUTE	POST MILES TOTAL PROJECT	SHEET No.	TOTAL SHEETS
10	Sta	99	15.1/17.0	66	176

REGISTERED CIVIL ENGINEER 05-24-10 DATE

9-7-10
PLANS APPROVAL DATE

REGISTERED PROFESSIONAL ENGINEER ROTIMI D. ADEBAYO No. 69102 Exp. 6/30/12 CIVIL STATE OF CALIFORNIA

THE STATE OF CALIFORNIA OR ITS OFFICERS OR AGENTS SHALL NOT BE RESPONSIBLE FOR THE ACCURACY OR COMPLETENESS OF SCANNED COPIES OF THIS PLAN SHEET.

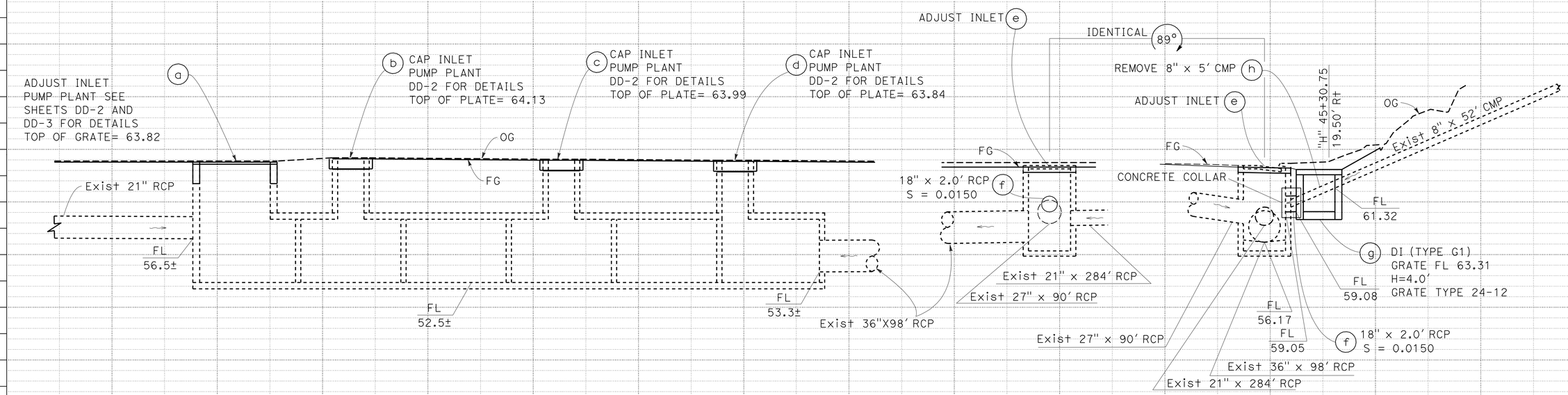

DRAINAGE SYSTEM No. 15

"H" LINE 45+30.75

DRAINAGE PROFILES

SCALE: Horiz 1" = 5'
Vert 1" = 5'

DP-9

STATE OF CALIFORNIA - DEPARTMENT OF TRANSPORTATION
Caltrans
06-DESIGN

FUNCTIONAL SUPERVISOR: ERNIE PENUNA
CALCULATED-DESIGNED BY: JOSEPH VALDIVIA
CHECKED BY: ROTIMI ADEBAYO
REVISED BY
DATE REVISED

LAST REVISION DATE PLOTTED => 08-SEP-2010
05-19-10 TIME PLOTTED => 10:43

Dist	COUNTY	ROUTE	POST MILES TOTAL PROJECT	SHEET No.	TOTAL SHEETS
10	Sta	99	15.1/17.0	67	176

REGISTERED CIVIL ENGINEER 05-24-10 DATE

9-7-10
PLANS APPROVAL DATE

REGISTERED PROFESSIONAL ENGINEER ROTIMI D. ADEBAYO No. 69102 Exp. 6/30/12 CIVIL STATE OF CALIFORNIA

THE STATE OF CALIFORNIA OR ITS OFFICERS OR AGENTS SHALL NOT BE RESPONSIBLE FOR THE ACCURACY OR COMPLETENESS OF SCANNED COPIES OF THIS PLAN SHEET.

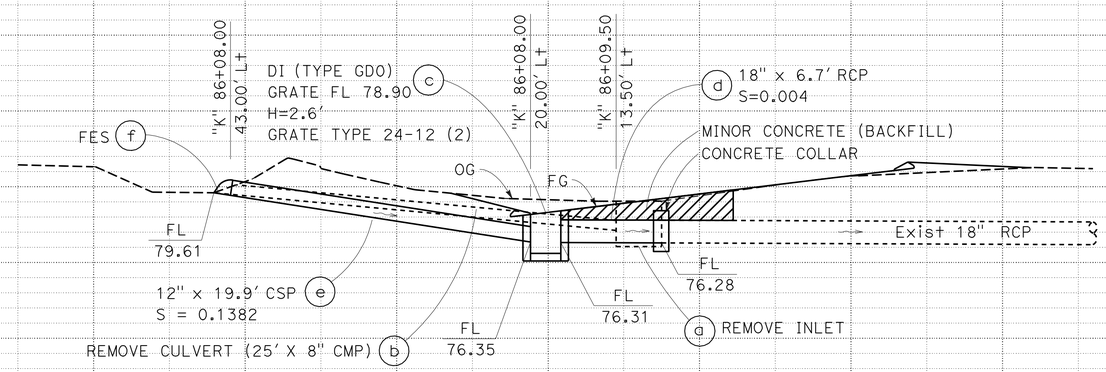

DRAINAGE SYSTEM No. 17

"K" LINE 86+08.00

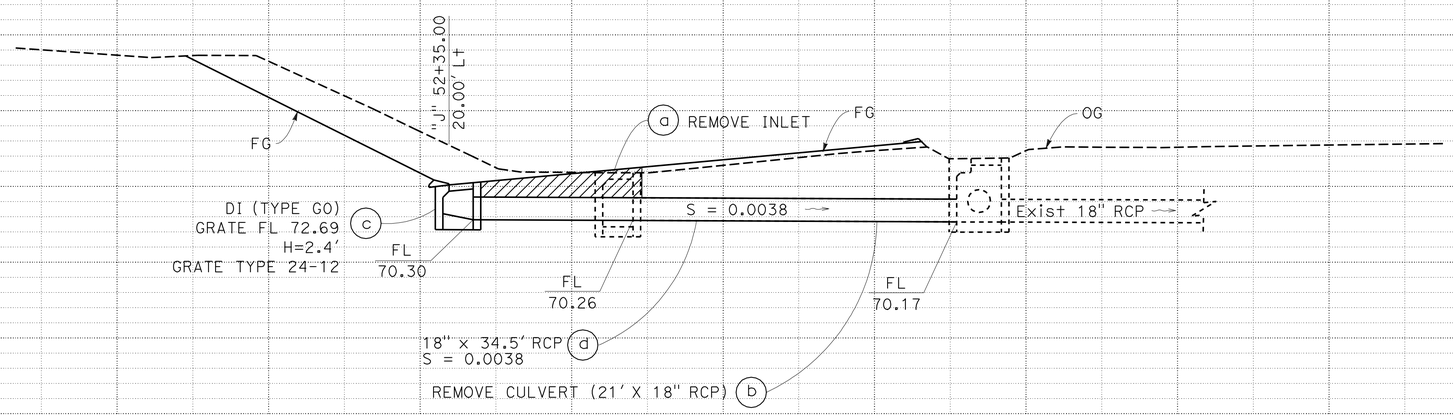

DRAINAGE SYSTEM No. 16

"J" LINE 52+24.00

DRAINAGE PROFILES

SCALE: Horiz 1" = 5'
Vert 1" = 5'

DP-10

STATE OF CALIFORNIA - DEPARTMENT OF TRANSPORTATION
Caltrans
06-DESIGN

FUNCTIONAL SUPERVISOR: ERNIE PENUNA
CALCULATED-DESIGNED BY: ROTIMI ADEBAYO
CHECKED BY
REVISED BY
DATE REVISED

LAST REVISION 05-19-10 | DATE PLOTTED => 08-SEP-2010 | TIME PLOTTED => 10:43

Dist	COUNTY	ROUTE	POST MILES TOTAL PROJECT	SHEET No.	TOTAL SHEETS
10	Sta	99	15.1/17.0	68	176

REGISTERED CIVIL ENGINEER 05-24-10 DATE

9-7-10
PLANS APPROVAL DATE

REGISTERED PROFESSIONAL ENGINEER ROTIMI D. ADEBAYO No. 69102 Exp. 6/30/12 CIVIL STATE OF CALIFORNIA

THE STATE OF CALIFORNIA OR ITS OFFICERS OR AGENTS SHALL NOT BE RESPONSIBLE FOR THE ACCURACY OR COMPLETENESS OF SCANNED COPIES OF THIS PLAN SHEET.

D	L	T	"a"
12"	1.0′	4"	@12"
24"	1.0′	6"	@12"
36"	1.5′	10"	@12"

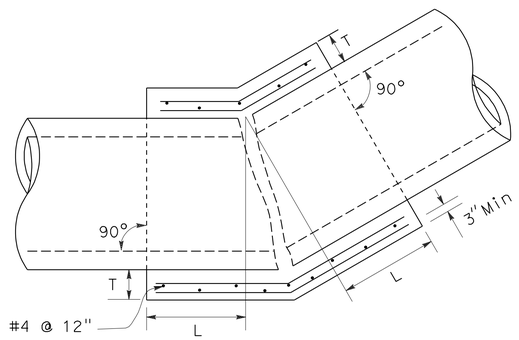

TYPICAL CONCRETE COLLAR FIELD BEND

13 14

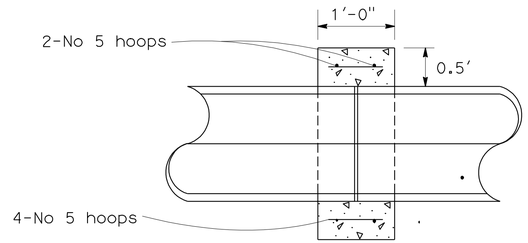

2 4 5 10 13 14 17

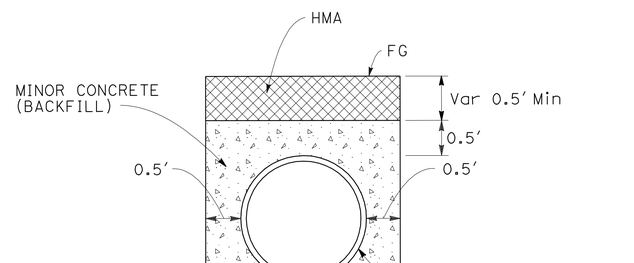

MINOR CONCRETE (BACKFILL)

1 g 2 b 3 c 4 c e 5 d 7 c

11 b 12 e 15 d

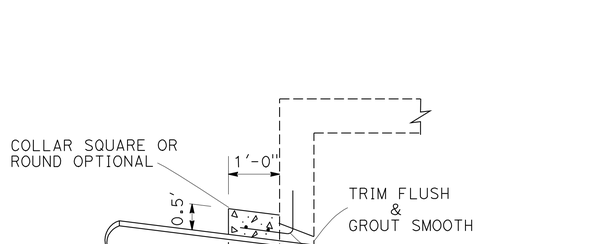

PIPE CONNECTION TO EXISTING INLET

1 h 3 c 11 b 12 h 15 f 16 b

DRAINAGE DETAILS

NO SCALE

DD-1

STATE OF CALIFORNIA - DEPARTMENT OF TRANSPORTATION
Caltrans
06-DESIGN

FUNCTIONAL SUPERVISOR: ERNIE PENUNA
CALCULATED-DESIGNED BY: JOSEPH VALDIVIA
CHECKED BY: ROTIMI ADEBAYO
REVISED BY
DATE REVISED

LAST REVISION 03-22-10
DATE PLOTTED => 23-SEP-2010
TIME PLOTTED => 11:11

DIST.	COUNTY	ROUTE	POST MILES TOTAL PROJECT	SHEET NO.	TOTAL SHEETS
10	Sta	99	15.1/17.0	69	176

REGISTERED CIVIL ENGINEER — DATE 07-08-09

REGISTERED PROFESSIONAL ENGINEER C. N. Bapat No. 46493 Exp. 6-30-11 CIVIL STATE OF CALIFORNIA

9-7-10
PLANS APPROVAL DATE

The State of California or its officers or agents shall not be responsible for the accuracy or completeness of electronic copies of this plan sheet.

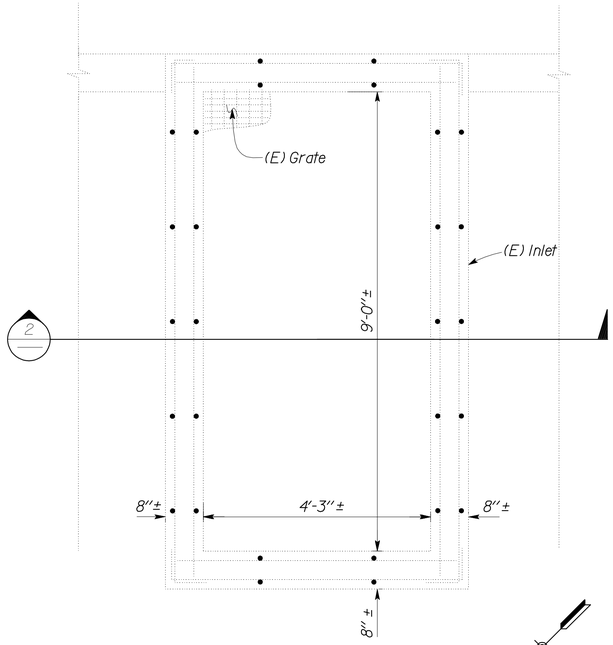

1 (E) ACCESS INLET PLAN
No Scale

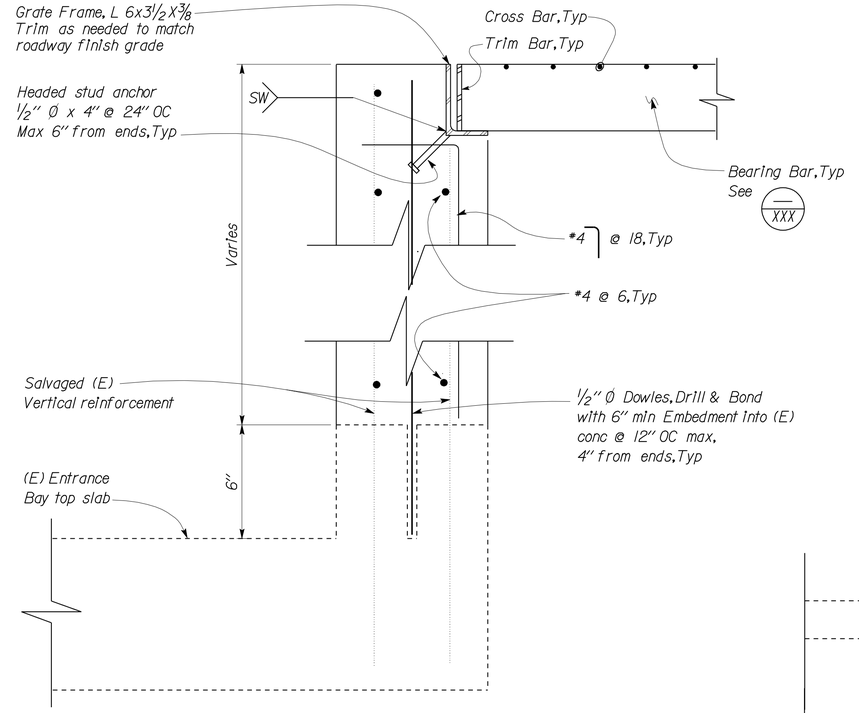

4 TRAFFIC RATED GRATE AND FRAME SECTION
Scale 3" = 1' - 0"

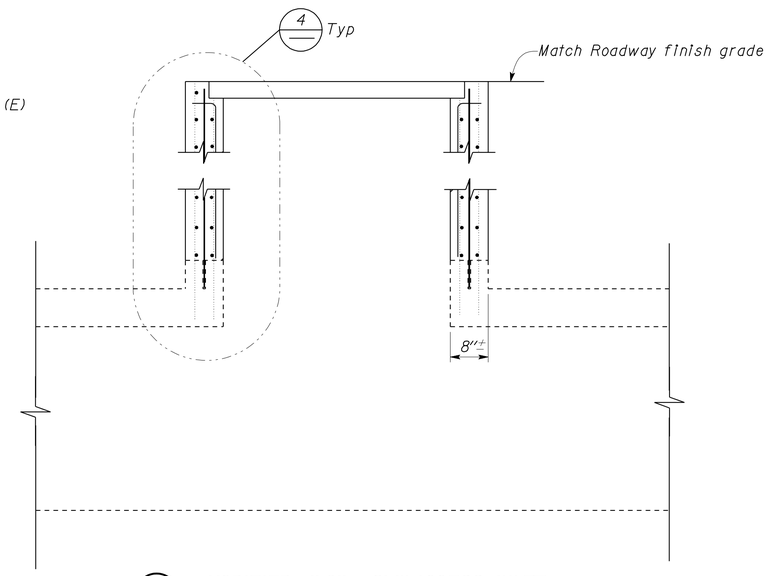

3 MODIFIED 4'-0" x 8'-1" ACCESS INLET
Scale ¾" = 1' - 0"

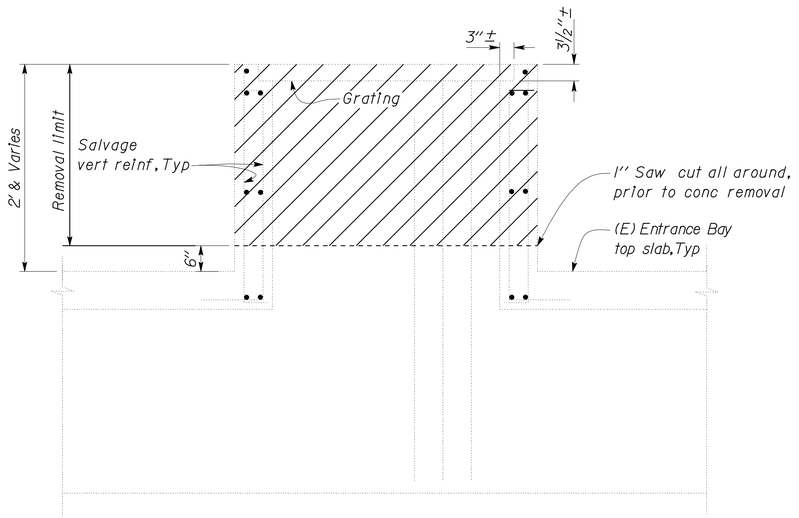

2 (E) 4'-0" x 8'-1" ACCESS INLET CONCRETE & GRATE REMOVAL
No Scale

NOTE
The Contractor shall verify all controlling field dimensions before ordering or fabricating any material.

See 3 For modified access inlet

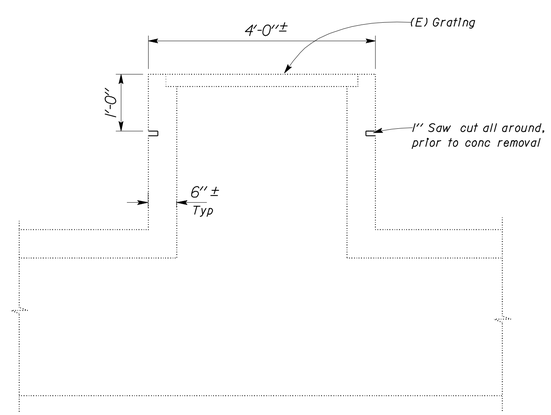

EXISTING

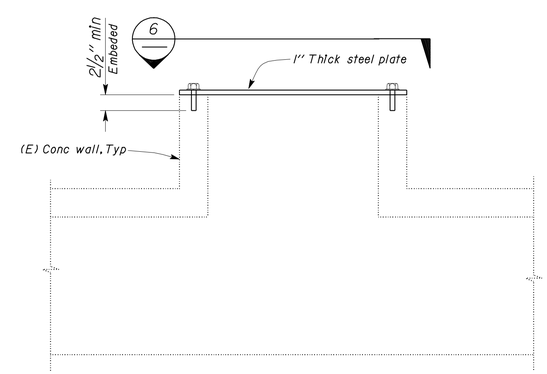

MODIFIED

5 (E) DROP INLET
Scale ¾" = 1' - 0"

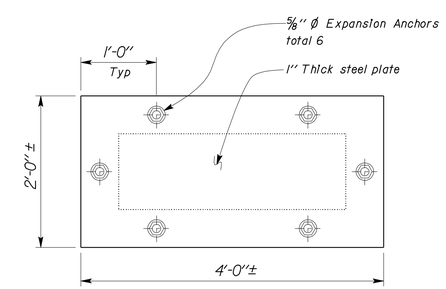

6 PLAN
Scale 1" = 1' - 0"

DESIGN	BY Chandra Bapat	CHECKED	
DETAILS	BY Andrew A. Lovato	CHECKED Chandra Babat	
QUANTITIES	BY	CHECKED	

STATE OF CALIFORNIA
DEPARTMENT OF TRANSPORTATION

DIVISION OF ENGINEERING SERVICES
ARCHITECTURAL AND STRUCTURAL DESIGN

BRIDGE NO.
POST MILE

TUOLUMNE BLVD SB OFF-RAMP AND KANSAS AVENUE OVERCROSSING PUMPING PLANT

DETAILS

SHEET **DD-2**

DOES SD Imperial Rev. 9/02

ORIGINAL SCALE IN INCHES FOR REDUCED PLANS 0 1 2 3

CU 10
EA 0A6711

DISREGARD PRINTS BEARING EARLIER REVISION DATES → 12-05-08 12-08-08 07-07-09

REVISION DATES (PRELIMINARY STAGE ONLY) SHEET OF

08-SEP-2010 10:44

a0A6711c002.dgn

DIST.	COUNTY	ROUTE	POST MILES TOTAL PROJECT	SHEET NO.	TOTAL SHEETS
10	Sta	99	15.1/17.0	70	176

NBapat 07-08-09
REGISTERED CIVIL ENGINEER DATE

REGISTERED PROFESSIONAL ENGINEER C. N. Bapat No. 46493 Exp. 6-30-11 CIVIL STATE OF CALIFORNIA

9-7-10
PLANS APPROVAL DATE

The State of California or its officers or agents shall not be responsible for the accuracy or completeness of electronic copies of this plan sheet.

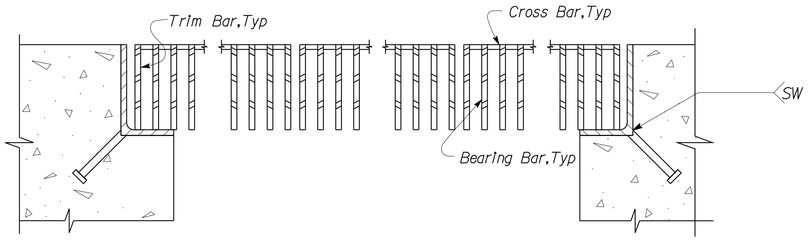

1 GRATE AND FRAME SECTION (TRAFFIC RATED)
No Scale

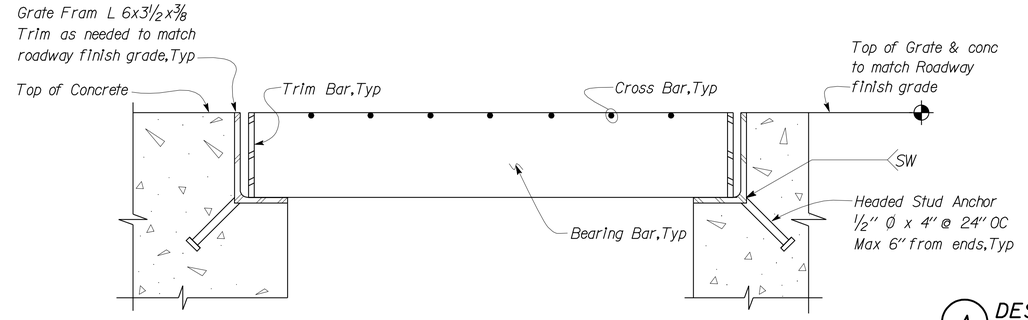

3 GRATE AND FRAME SECTION (TRAFFIC RATED)
No Scale

A DESIGN NOTES

1. Design : Bridge Design Specifications 1996 AASHTO with Interims and revisions by Caltrans.
2. Reinforced Concrete (Ultimate Strength Design) :
   $f'c$ = 3,500 psi
   f_y = 60,000 psi
3. Structural Steel (Working Stress Design) :
   f_y = 50,000 psi
4. Miscellanelous Metal (Working Stress Design) :
   f_y = 36,000 psi

B DETAIL NOTES

1. Metal Work Notes :
   a. Welded Steel Grate :
      Traffic Rated Grate :
      Bearing Bars 5" x⅜" @ 1⅞" C-C
      Cross Bars @ 4" C-C
      Trim Bars 5" x3/16" fillet welded to ends of Bearing Bars
      Direction of Bearing Bars is indicated by

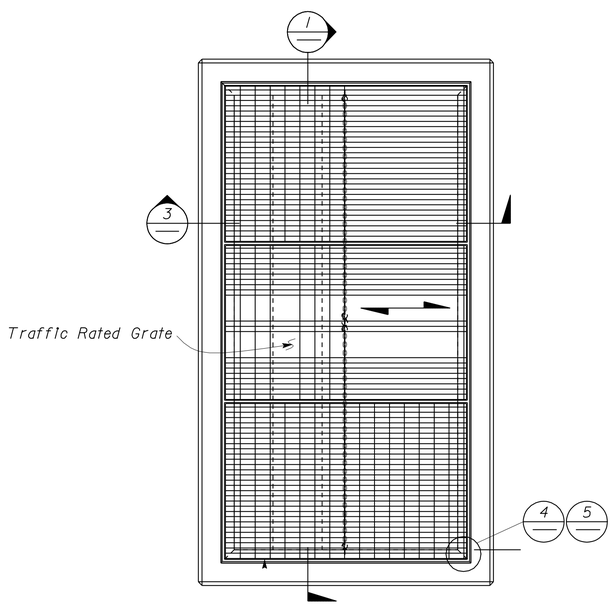

2 ACCESS INLET GRATE
No Scale

NOTE
The Contractor shall verify all controlling field dimensions before ordering or fabricating any material.

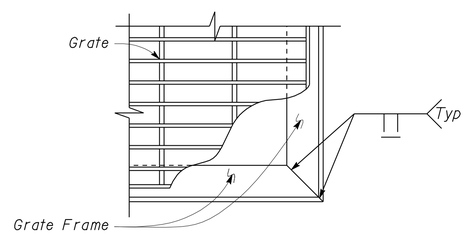

4 GRATE FRAME DETAIL
Scale 2" = 1' - 0"

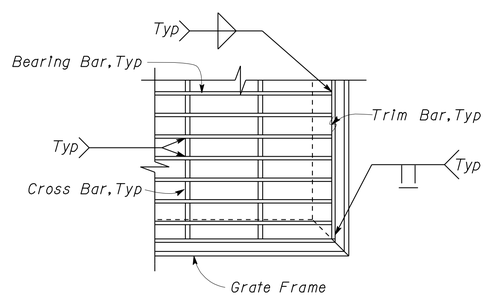

5 GRATE DETAIL
Scale 2" = 1' - 0"

DESIGN	BY Chandra Bapat	CHECKED	
DETAILS	BY Andrew A. Lovato	CHECKED Chandra Babat	
QUANTITIES	BY	CHECKED	

STATE OF CALIFORNIA DEPARTMENT OF TRANSPORTATION

DIVISION OF ENGINEERING SERVICES ARCHITECTURAL AND STRUCTURAL DESIGN

BRIDGE NO.
POST MILE

TUOLUMNE BLVD SB OFF-RAMP AND KANSAS AVENUE OVERCROSSING PUMPING PLANT

DETAILS

SHEET **DD-3**

DOES SD Imperial Rev. 9/02

ORIGINAL SCALE IN INCHES FOR REDUCED PLANS 0 1 2 3

CU 10
EA 0A6711

DISREGARD PRINTS BEARING EARLIER REVISION DATES → 12-05-08 12-08-08 07-07-09

REVISION DATES (PRELIMINARY STAGE ONLY) SHEET OF

08-SEP-2010 10:44

a0A6711c003.dgn

Dist	COUNTY	ROUTE	POST MILES TOTAL PROJECT	SHEET No.	TOTAL SHEETS
10	Sta	99	15.1/17.0	71	176

REGISTERED CIVIL ENGINEER 05-24-10 DATE

9-7-10
PLANS APPROVAL DATE

REGISTERED PROFESSIONAL ENGINEER ROTIMI D. ADEBAYO No. 69102 Exp. 6/30/12 CIVIL STATE OF CALIFORNIA

THE STATE OF CALIFORNIA OR ITS OFFICERS OR AGENTS SHALL NOT BE RESPONSIBLE FOR THE ACCURACY OR COMPLETENESS OF SCANNED COPIES OF THIS PLAN SHEET.

APC ALLOWABLE PIPE MATERIAL AND PROTECTION

DESIGNATION	RCP	CSP		PLASTIC PIPE
	SIZE	SIZE	THICKNESS (Min)	SIZE
	INCH	INCH	INCH	INCH
18" APC	18"	18"	0.064	18"

DRAINAGE QUANTITIES

DRAINAGE PLAN SHEET No.	DRAINAGE SYSTEM No	DRAINAGE UNIT No.	RCP 15"	RCP 18"	RCP 36"	CSP 12"	CSP 18"	24" APC	FES 18" CONCRETE	FES 12" STEEL	DRAINAGE STRUCTURES INLET TYPE GO (N)	GO1 (N)	G2 (N)	GCP (N)	GDO (N)	GT2 (N)	36R GRATE(N)	HEADWALL (N)	CONCRETE COLLAR (N)	FRAME GRATE AND COVER 18-9 GRATE (N)	24-12 GRATE (N)	REMOVE CULVERT	REMOVE HEADWALL	REMOVE INLET	ADJUST INLET	CAP INLET	RELOCATE TRASH RACK (N)	MINOR CONCRETE (MINOR STRUCTURE)	MINOR CONCRETE (BACKFILL)	MISCELLANEOUS IRON AND STEEL	HEIGHT OF INLET (N)	MAXIMUM COVER (N)	DESCRIPTION	STATION	DRAINAGE PLAN SHEET No.	DRAINAGE SYSTEM No.	DRAINAGE UNIT No.
			LF	LF	LF	LF	LF	LF	EA	EA	EA	EA	EA	EA	EA	EA	EA	EA	EA	EA	EA	LF	EA	EA	EA	EA	EA	CY	CY	LB	LF	LF				
D-1	1	a									1										1							1.26		326	3.9		DI (TYPE G0)	20.13′ R+ "B" 16+80.00	D-1	1	a
		b																				34											REMOVE CULVERT (12" RCP)	24.50′ R+ "B" 17+52.75			b
		c																						1									REMOVE INLET	19.11′ R+ "B" 17+52.83			c
		d																						1									REMOVE INLET	14.80′ L+ "B" 17+57.76			d
		e		46.6																												4.0	18" RCP	14.67′ L+ "B" 17+57.67			e
		f									1										1							1.78		326	5.4		DI (TYPE G0)	20.06′ L+ "B" 17+00.00			f
		g						180.0																								3.2	24" HDPE	25.00′ L+ "B" 17+59.08			g
		h																				122.0											REMOVE CULVERT (12" RCP)	14.67′ L+ "B" 17+57.67			h
		i						320.0																								6.0	24" HDPE	26.50′ L+ "B" 14+00.00			i
		j									1										1							1.34		326	3.1		DI (TYPE G0)	26.00′ L+ "B" 13+80.00			j
D-1	2	a																						1									REMOVE INLET	16.77′ L+ "B" 11+55.87	D-1	2	a
		b		9.0															1										0.90			1.8	18" RCP	16.77′ L+ "B" 11+55.87			b
		c									1										1							1.24		326	2.8		DI (TYPE G0)	25.43′ L+ "B" 11+55.87			c
D-1,2	3	a																							1								ADJUST INLET	12.02′ L+ "C" 69+54.91	D-1,2	3	a
		b										1									1							1.06		326	3.5		DI (TYPE G1)	21.25′ L+ "C" 69+54.91			b
		c		4.0																									0.62			2.8	18" RCP	21.25′ L+ "C" 69+54.91			c
D-3		d																								1							CAP INLET	11.95′ L+ "C" 67+62.36			d
		e																								1							CAP INLET	12.06′ L+ "C" 67+41.02			e
		f																							1								ADJUST INLET	16.74′ L+ "C" 67+14.77			f
D-2	4	a																						1									REMOVE INLET	12.24′ L+ "C" 73+31.80	D-2	4	a
		b									1										1							1.24		326	3.1		DI (TYPE G0)	20.76′ L+ "C" 73+31.80			b
		c		7.5															1										0.83			2.0	18" RCP	20.76′ L+ "C" 73+31.80			c
		d																							1								ADJUST INLET	6.27′ R+ "C" 73+31.80			d
		e																				80.0											REMOVE CULVERT (8"CMP)	12.27′ L+ "C" 73+31.80			e
		f					75.0																									3.5	18" CSP	20.75′ L+ "C" 73+31.58			f
SUB TOTAL				67.1			75.0	500.0														236.0		4	3	2		7.92	2.35	1956						

(N) - NOT A SEPARATE PAY ITEM, FOR INFORMATION ONLY.

DRAINAGE QUANTITIES
DQ-1

REVISED BY | DATE REVISED
JOSEPH VALDIVIA | ROTIMI ADEBAYO
CALCULATED-DESIGNED BY | CHECKED BY
FUNCTIONAL SUPERVISOR: ERNIE PENUNA

STATE OF CALIFORNIA - DEPARTMENT OF TRANSPORTATION
Caltrans
06-DESIGN

LAST REVISION | DATE PLOTTED => 23-SEP-2010 | TIME PLOTTED => 11:11
05-20-10

Dist	COUNTY	ROUTE	POST MILES TOTAL PROJECT	SHEET No.	TOTAL SHEETS
10	Sta	99	15.1/17.0	72	176

REGISTERED CIVIL ENGINEER 05-24-10 DATE

9-7-10
PLANS APPROVAL DATE

REGISTERED PROFESSIONAL ENGINEER ROTIMI D. ADEBAYO No. 69102 Exp. 6/30/12 CIVIL STATE OF CALIFORNIA

THE STATE OF CALIFORNIA OR ITS OFFICERS OR AGENTS SHALL NOT BE RESPONSIBLE FOR THE ACCURACY OR COMPLETENESS OF SCANNED COPIES OF THIS PLAN SHEET.

DRAINAGE QUANTITIES

DRAINAGE PLAN SHEET No.	DRAINAGE SYSTEM No.	DRAINAGE UNIT No.	RCP 15"	RCP 18"	RCP 36"	CSP 12"	CSP 18"	24" APC	FES 18" CONCRETE	FES 12" STEEL	DRAINAGE STRUCTURES INLET TYPE GO (N)	G1 (N)	G2 (N)	GCP (N)	GDO (N)	GT2 (N)	HEADWALL (N)	CONCRETE COLLAR (N)	FRAME GRATE AND COVER 36 R (N)	18-9 GRATE (N)	24-12 GRATE (N)	REMOVE CULVERT	REMOVE HEADWALL	REMOVE INLET	ADJUST INLET	CAP INLET	RELOCATE TRASH RACK (N)	MINOR CONCRETE (MINOR STRUCTURE)	MINOR CONCRETE (BACKFILL)	MISCELLANEOUS IRON AND STEEL	HEIGHT OF INLET (N)	MAXIMUM COVER (N)	DESCRIPTION	STATION	DRAINAGE PLAN SHEET No.	DRAINAGE SYSTEM No.	DRAINAGE UNIT No.
			LF	LF	LF	LF	LF	LF	EA	EA	EA	EA	EA	EA	EA	EA	EA	EA	EA	EA	EA	LF	EA	EA	EA	EA	EA	CY	CY	LB	LF	LF					
D-2	5	a																						1									REMOVE INLET	2.21′ R+ "C" 78+20.00	D-2	5	a
		b										1									1							1.08		326	3.6		DI (TYPE G1)	4.00′ R+ "C" 78+20.00			b
		c	2.0																1													2.4	15" RCP	4.00′ R+ "C" 78+20.00			c
		d																				1.8											REMOVE CULVERT (15" RCP)	4.00′ R+ "C" 78+20.00			d
D-3	6	a									1										1							1.24		326	5.0		DI (TYPE GO)	20.00′ L+ "E" 27+21.36	D-3	6	a
		b																						1									REMOVE INLET	13.75′ L+ "E" 27+20.33			b
		c		19.5																												5.2	18" RCP	13.75′ L+ "E" 27+20.33			c
		d																				32.0											REMOVE CULVERT (8" CMP)	15.75′ L+ "E" 27+20.33			d
		e																				16.0											REMOVE CULVERT (18" RCP)	13.75′ L+ "E" 27+20.33			e
		f											1								1							2.38		326	7.2		DI (TYPE G2)	2.00′ R+ "E" 27+21.50			f
		g					31.0																									2.2	18" CSP	20.00′ L+ "E" 27+20.00			g
D-3	7	a													1						2							1.62		634	3.0		DI (TYPE GDO)	20.00′ L+ "E" 32+32.79	D-3	7	a
		b																						1									REMOVE INLET	14.00′ L+ "E" 32+32.00			b
		c		19.5																									2.17			2.3	18" RCP	14.00′ L+ "E" 32+32.00			c
		d																				56.0											REMOVE CULVERT (8" CMP)	16.00′ L+ "E" 32+32.00			d
		e																				17.0											REMOVE CULVERT (18" RCP)	14.00′ L+ "E" 32+32.00			e
		f										1									1							1.13		326	3.8		DI (TYPE G1)	2.50′ R+ "E" 32+33.75			f
		g					57.5																									3.2	18" CSP	20.00′ L+ "E" 32+32.79			g
D-4	8	a																						1									REMOVE INLET	19.50′ L+ "F" 34+46.42	D-4	8	a
		b																				22											REMOVE CULVERT (18" RCP)	19.50′ L+ "F" 34+46.42			b
		c													1						2							1.52		634	2.7		DI (TYPE GDO)	26.50′ L+ "F" 34+45.42			c
		d		26.6																									0.67			4.0	18" RCP	26.50′ L+ "F" 34+45.42			d
		e										1									1							1.52		326	5.6		DI (TYPE G1)	4.00′ L+ "F" 34+50.00			e
D-4	9	a																						1									REMOVE INLET	9.33′ L+ "F" 38+82.83	D-4	9	a
		b										1									1							0.88		326	2.7		DI (TYPE G1)	20.00′ L+ "F" 38+82.25			b
		c		8.6																									0.81			1.7	18" RCP	20.00′ L+ "F" 38+82.25			c
D-4	10	a																						1									REMOVE INLET	15.33′ R+ "G" 68+21.17	D-4	10	a
		b																				8											REMOVE CULVERT (18" RCP)	15.33′ R+ "G" 68+21.17			b
		c										1									1							1.24		326	4.4		DI (TYPE GT2)	22.00′ R+ "G" 68+21.17			c
		d		8.0																												2.8	18" RCP	22.00′ R+ "G" 68+21.17			d
		e							1																								18" FES	46.00′ R+ "G" 68+21.17			e
SUB TOTAL			2.0	82.2			88.5		1										1			152.8		6				12.61	3.65	3550						

(N) - NOT A SEPARATE PAY ITEM, FOR INFORMATION ONLY.

DRAINAGE QUANTITIES

DQ-2

STATE OF CALIFORNIA - DEPARTMENT OF TRANSPORTATION
06-DESIGN
Caltrans

FUNCTIONAL SUPERVISOR: ERNIE PENUNA
CALCULATED-DESIGNED BY: JOSEPH VALDIVIA
CHECKED BY: ROTIMI ADEBAYO
REVISED BY
DATE REVISED

LAST REVISION 05-20-10
DATE PLOTTED => 23-SEP-2010
TIME PLOTTED => 10:20

Dist	COUNTY	ROUTE	POST MILES TOTAL PROJECT	SHEET No.	TOTAL SHEETS
10	Sta	99	15.1/17.0	73	176

REGISTERED CIVIL ENGINEER 05-24-10 DATE

9-7-10
PLANS APPROVAL DATE

REGISTERED PROFESSIONAL ENGINEER ROTIMI D. ADEBAYO No. 69102 Exp. 6/30/12 CIVIL STATE OF CALIFORNIA

THE STATE OF CALIFORNIA OR ITS OFFICERS OR AGENTS SHALL NOT BE RESPONSIBLE FOR THE ACCURACY OR COMPLETENESS OF SCANNED COPIES OF THIS PLAN SHEET.

DRAINAGE QUANTITIES

DRAINAGE PLAN SHEET No.	DRAINAGE SYSTEM NO. ⬡	DRAINAGE UNIT NO. ◯	RCP 15" LF	RCP 18" LF	RCP 36" LF	CSP 12" LF	CSP 18" LF	24" APC LF	FES 18" CONCRETE EA	FES 12" STEEL EA	DRAINAGE STRUCTURES INLET TYPE GO (N) EA	GO1 (N) EA	G2 (N) EA	GCP (N) EA	GDO (N) EA	GT2 (N) EA	HEADWALL (N) EA	CONCRETE COLLAR (N) EA	FRAME GRATE AND COVER 36R (N) EA	18-9 GRATE (N) EA	24-12 GRATE (N) EA	REMOVE CULVERT LF	REMOVE HEADWALL EA	REMOVE INLET EA	ADJUST INLET EA	CAP INLET EA	RELOCATE TRASH RACK (N) EA	MINOR CONCRETE (MINOR STRUCTURE) CY	MINOR CONCRETE (BACKFILL) CY	MISCELLANEOUS IRON AND STEEL LB	HEIGHT OF INLET (N) LF	MAXIMUM COVER (N) LF	DESCRIPTION	STATION	DRAINAGE PLAN SHEET No.	DRAINAGE SYSTEM NO. ⬡	DRAINAGE UNIT NO. ◯
D-5	11	a																							1								ADJUST INLET	4.00' L+ "G" 72+27.25	DP-5	11	a
		b		22.5																									0.67			3.1	18" RCP	22.25' R+ "G" 72+29.50			b
		c									1										1							1.24		326	3.0		DI (TYPE GO)	22.25' R+ "G" 72+29.50			c
D-5	12	a																						1									REMOVE INLET	3.00' L+ "G" 74+42.25	DP-5	12	a
		b																				26.0											REMOVE CULVERT (18' RCP)	3.00' L+ "G" 74+42.25			b
		c																						1									REMOVE INLET	35.25' L+ "G" 74+42.25			c
		d												1																236	6.7		DI (TYPE GCP)	35.25' L+ "G" 74+42.25			d
		e		60.0																									0.56			6.3	18" RCP	35.00' L+ "G" 74+42.25			e
		f														1				2								1.88		498	2.4		DI (TYPE GT2)	35.00' R+ "G" 74+42.25			f
		g																				168.0											REMOVE CULVERT (18" RCP)	35.00' L+ "G" 74+42.25			g
		h		168.0																												5.3	18" RCP	35.00' L+ "G" 74+42.25			h
D-5	13	a															1											1.95					HEADWALL	50.00' R+ "G" 76+95.50	DP-5	13	a
		b			7.3													1														1.4	36" RCP	50.00' R+ "G" 76+95.50			b
		c			16.0													1														1.2	36" RCP	48.75' R+ "G" 77+22.00			c
		d			13.7													1														1.9	36" RCP	43.33' R+ "G" 78+28.67			d
		e																								1							RELOCATE TRASH RACK	43.75' R+ "G" 77+35.50			e
		f																					1										REMOVE HEADWALL	43.75' R+ "G" 77+35.50			f
		g																				10.5											REMOVE CULVERT (36" RCP)	43.75' R+ "G" 77+35.50			g
D-6	14	a																				7.5											REMOVE CULVERT (36" RCP)	45.50' R+ "H" 38+51.75	DP-6	14	a
		b			15.5													1														2.2	36" RCP	45.50' R+ "H" 38+51.75			b
		c																					1										REMOVE HEADWALL	45.50' R+ "H" 38+51.75			c
		d																								1							RELOCATE TRASH RACK	45.50' R+ "H" 38+51.75			d
		e			7.6																											2.2	36" RCP	60.50' R+ "H" 38.51.75			e
		f															1											1.95					HEADWALL	60.50' R+ "H" 38+51.75			f
D-6	15	a																							1								ADJUST INLET	19.50' R+ "H" 43+68.50	DP-6	15	a
		b																								1							CAP INLET	14.75' R+ "H" 43+80.00			b
		c																								1							CAP INLET	14.75' R+ "H" 44+00.00			c
		d																								1							CAP INLET	14.50' R+ "H" 44+18.50			d
		e																							1								ADJUST INLET	12.83' R+ "H" 45+30.75			e
		f		2.0																									0.30			2.7	18" RCP	12.83' R+ "H" 45+30.75			f
		g										1									1							1.17		326	4.0		DI (TYPE G1)	19.50' R+ "H" 45+30.75			g
		h																				5.0											REMOVE CULVERT (8" CMP)	19.50' R+ "H" 45+30.75			h
SUB TOTAL				252.5	60.1																	217.0	2	2	3	3	2	8.19	1.53	1476						

(N) - NOT A SEPARATE PAY ITEM, FOR INFORMATION ONLY.

DRAINAGE QUANTITIES
DQ-3

STATE OF CALIFORNIA - DEPARTMENT OF TRANSPORTATION
Caltrans® 06-DESIGN

FUNCTIONAL SUPERVISOR: ERNIE PENUNA
CALCULATED-DESIGNED BY: JOSEPH VALDIVIA
CHECKED BY: ROTIMI ADEBAYO
REVISED BY / DATE REVISED

LAST REVISION 05-20-10
DATE PLOTTED => 23-SEP-2010
TIME PLOTTED => 10:21

Dist	COUNTY	ROUTE	POST MILES TOTAL PROJECT	SHEET No.	TOTAL SHEETS
10	Sta	99	15.1/17.0	74	176

REGISTERED CIVIL ENGINEER 05-24-10 DATE

9-7-10
PLANS APPROVAL DATE

REGISTERED PROFESSIONAL ENGINEER ROTIMI D. ADEBAYO No. 69102 Exp. 6/30/12 CIVIL STATE OF CALIFORNIA

THE STATE OF CALIFORNIA OR ITS OFFICERS OR AGENTS SHALL NOT BE RESPONSIBLE FOR THE ACCURACY OR COMPLETENESS OF SCANNED COPIES OF THIS PLAN SHEET.

DRAINAGE QUANTITIES

DRAINAGE PLAN SHEET No.	DRAINAGE SYSTEM No. ⬡	DRAINAGE UNIT No. ◯	RCP 15"	RCP 18"	RCP 36"	CSP 12"	CSP 18"	24" APC	FES 18" CONCRETE	FES 12" STEEL	DRAINAGE STRUCTURES INLET TYPE GO (N)	GO1 (N)	GO2 (N)	GCP (N)	GDO (N)	GDT2 (N)	HEADWALL (N)	CONCRETE COLLAR (N)	FRAME GRATE AND COVER G36R (N)	18-9 GRATE (N)	24-12 GRATE (N)	REMOVE CULVERT	REMOVE HEADWALL	REMOVE INLET	ADJUST INLET	CAP INLET	RELOCATE TRASH RACK (N)	MINOR CONCRETE (MINOR STRUCTURE)	MINOR CONCRETE (BACKFILL)	MISCELLANEOUS IRON AND STEEL	HEIGHT OF INLET (N)	MAXIMUM COVER (N)	DESCRIPTION	STATION	DRAINAGE PLAN SHEET No.	DRAINAGE SYSTEM No. ⬡	DRAINAGE UNIT No. ◯
			LF	LF	LF	LF	LF	LF	EA	EA	EA	EA	EA	EA	EA	EA	EA	EA	EA	EA	EA	LF	EA	EA	EA	EA	EA	CY	CY	LB	LF	LF					
D-7	16	a																						1									REMOVE INLET	14.07' L+ "J" 52+02.20	D-7	16	a
		b																				21.0											REMOVE CULVERT (18" RCP)	14.07' L+ "J" 52+02.20			b
		c									1										1							1.12		326	2.5		DI (TYPE GO)	26.00' L+ "J" 52+35.00			c
		d		34.5																									1.22			3.8	18" RCP	26.00' L+ "J" 52+35.00			d
D-7	17	a																						1									REMOVE INLET	13.50' L+ "K" 86+09.50	D-7	17	a
		b																				25.0											REMOVE CULVERT (8" CMP)	20.00' L+ "K" 86+08.00			b
		c													1						2							1.62		634	2.8		DI (TYPE GDO)	20.00' L+ "K" 86+08.00			c
		d		6.7														1											1.22			1.5	18" RCP	13.50' L+ "K" 86+09.50			d
		e				19.9																										2.0	12" CSP	43.00' L+ "K" 86+08.00			e
		f								1																							12" FES	43.00' L+ "K" 86+08.00			f
SUB TOTAL				41.2		19.9				1												46.0		2				2.74	2.44	960							

SUMMARY DRAINAGE QUANTITIES

DRAINAGE PLAN SHEET No.	DRAINAGE SYSTEM No. ⬡	DRAINAGE UNIT No. ◯	RCP 15"	RCP 18"	RCP 36"	CSP 12"	CSP 18"	24" APC	FES 18" CONCRETE	FES 12" STEEL	DRAINAGE STRUCTURES INLET TYPE GO (N)	GO1 (N)	GO2 (N)	GCP (N)	GDO (N)	GDT2 (N)	HEADWALL (N)	CONCRETE COLLAR (N)	FRAME GRATE AND COVER 36R (N)	18-9 GRATE (N)	24-12 GRATE (N)	REMOVE CULVERT	REMOVE HEADWALL	REMOVE INLET	ADJUST INLET	CAP INLET	RELOCATE TRASH RACK(N)	MINOR CONCRETE (MINOR STRUCTURE)	MINOR CONCRETE (BACKFILL)	MISCELLANEOUS IRON AND STEEL
			LF	LF	LF	LF	LF	LF	EA	EA	EA	EA	EA	EA	EA	EA	EA	EA	EA	EA	EA	LF	EA	EA	EA	EA	EA	CY	CY	LB
SUB TOTAL 1				67.1			75.0	500.0			5	1						2			6	236.0		4	3	2		7.92	2.35	1956
SUB TOTAL 2			2.0	82.2			88.5			1	1	5	1		2			1			11	152.8		6				12.61	3.65	3550
SUB TOTAL 3				252.5	60.0						1	1		1		1	2	4	1	2	2	217.0	2	2	3	3	2	8.19	1.53	1476
SUB TOTAL 4				41.2		19.9			1		1				1			1			3	46.0		2				2.74	2.44	960
GRAND TOTAL			2.0	443.0	60.0	19.9	163.5	500.0	1	1												651.8	2	14	6	5		31.46	9.97	7942

(N) - NOT A SEPARATE PAY ITEM, FOR INFORMATION ONLY.

DRAINAGE QUANTITIES
DQ-4

REVISED BY | DATE REVISED
JOSEPH VALDIVIA | ROTIMI ADEBAYO
CALCULATED-DESIGNED BY | CHECKED BY
FUNCTIONAL SUPERVISOR
ERNIE PENUNA

STATE OF CALIFORNIA - DEPARTMENT OF TRANSPORTATION
Caltrans®
06-DESIGN

LAST REVISION 05-20-10 | DATE PLOTTED => 23-SEP-2010 | TIME PLOTTED => 14:17

Dist	COUNTY	ROUTE	POST MILES TOTAL PROJECT	SHEET No.	TOTAL SHEETS
10	Sta	99	15.1/17.0	75	176

REGISTERED CIVIL ENGINEER 05-24-10 DATE

9-7-10
PLANS APPROVAL DATE

REGISTERED PROFESSIONAL ENGINEER ROTIMI D. ADEBAYO No. 69102 Exp. 6/30/12 CIVIL STATE OF CALIFORNIA

THE STATE OF CALIFORNIA OR ITS OFFICERS OR AGENTS SHALL NOT BE RESPONSIBLE FOR THE ACCURACY OR COMPLETENESS OF SCANNED COPIES OF THIS PLAN SHEET.

NOTES:

1. LOCATION OF UTILITY FACILITIES SHOWN ON THESE PLANS ARE APPROXIMATE AND SHALL BE VERIFIED BY THE CONTRACTOR PRIOR TO CONSTRUCTION.
2. UTILITY OWNERSHIP ON THIS PROJECT:
   GAS & ELECTRIC - PACIFIC GAS & ELECTRIC COMPANY (PG&E)
   GAS & ELCTRIC - MODESTO IRRIGATION DISTRICT
   TELECOMMUNICATION - AT&T
   TELECOMMUNICATION - COMCAST
   SEWER & WATER - CITY OF MODESTO
   SEWER & WATER - MODESTO IRRIGSTION DISTRICT (MID)
3. ALL ELEVATIONS SHOWN REFER TO THE TOP OF PIPE ELEVATION UNLESS OTHERWISE INDICATED.
4. FOR COMPLETE RIGHT OF WAY, AND ACCURATE ACCESS DATA, SEE RIGHT OF WAY RECORD MAPS AT DISTRICT OFFICE.

ABBREVIATIONS:

AT&T AMERICAN TELEPHONE & TELEGRAPH
HP HIGH PRESSURE
KV KILOVOLT
MID MODESTO IRRIGATION DISTRICT
PG&E PACIFIC GAS AND ELECTRIC COMPANY
UB UTILITY PULL BOX
UG UNDERGROUND

LEGEND:

(X) POTHOLE LOCATION

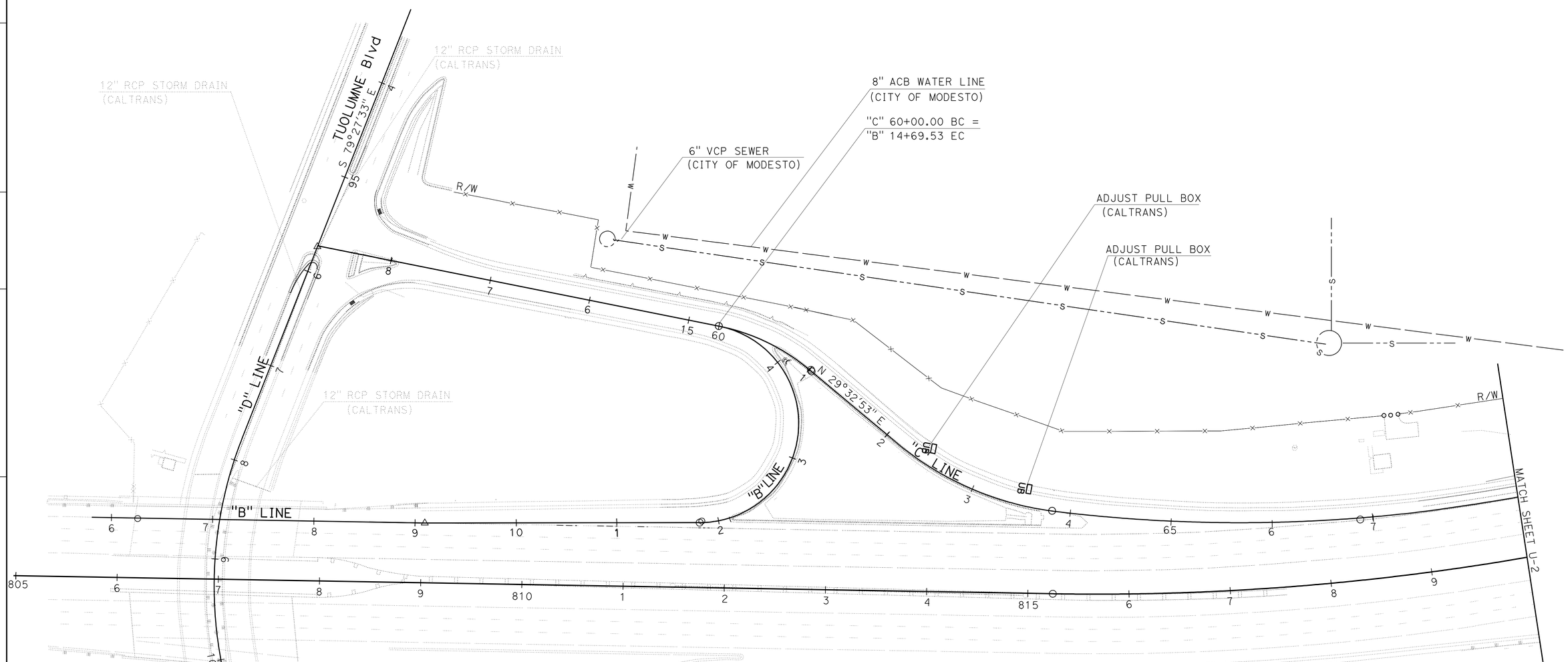

TUOLUMNE Blvd SB ON-RAMP (LOCATION 1)
TUOLUMNE Blvd SB OFF-RAMP (LOCATION 2)

THIS PLAN ACCURATE FOR UTILITY WORK ONLY

UTILITY PLAN

SCALE: 1" = 50'

U-1

STATE OF CALIFORNIA - DEPARTMENT OF TRANSPORTATION
Caltrans
06-DESIGN

FUNCTIONAL SUPERVISOR: ERNIE PENUNA
CALCULATED-DESIGNED BY: RASAQ ATANDA
CHECKED BY: ROTIMI ADEBAYO
REVISED BY
DATE REVISED

LAST REVISION 05-25-10 | DATE PLOTTED => 23-SEP-2010 | TIME PLOTTED => 10:21

BORDER LAST REVISED 4/11/2008 | RELATIVE BORDER SCALE IS IN INCHES 0 1 2 3 | USERNAME => trpierce | DGN FILE => a0A671ka001.dgn | CU 06253 | EA 0A6711

Dist	COUNTY	ROUTE	POST MILES TOTAL PROJECT	SHEET No.	TOTAL SHEETS
10	Sta	99	15.1/17.0	76	176

REGISTERED CIVIL ENGINEER 05-24-10 DATE

9-7-10
PLANS APPROVAL DATE

REGISTERED PROFESSIONAL ENGINEER ROTIMI D. ADEBAYO No. 69102 Exp. 6/30/12 CIVIL STATE OF CALIFORNIA

THE STATE OF CALIFORNIA OR ITS OFFICERS OR AGENTS SHALL NOT BE RESPONSIBLE FOR THE ACCURACY OR COMPLETENESS OF SCANNED COPIES OF THIS PLAN SHEET.

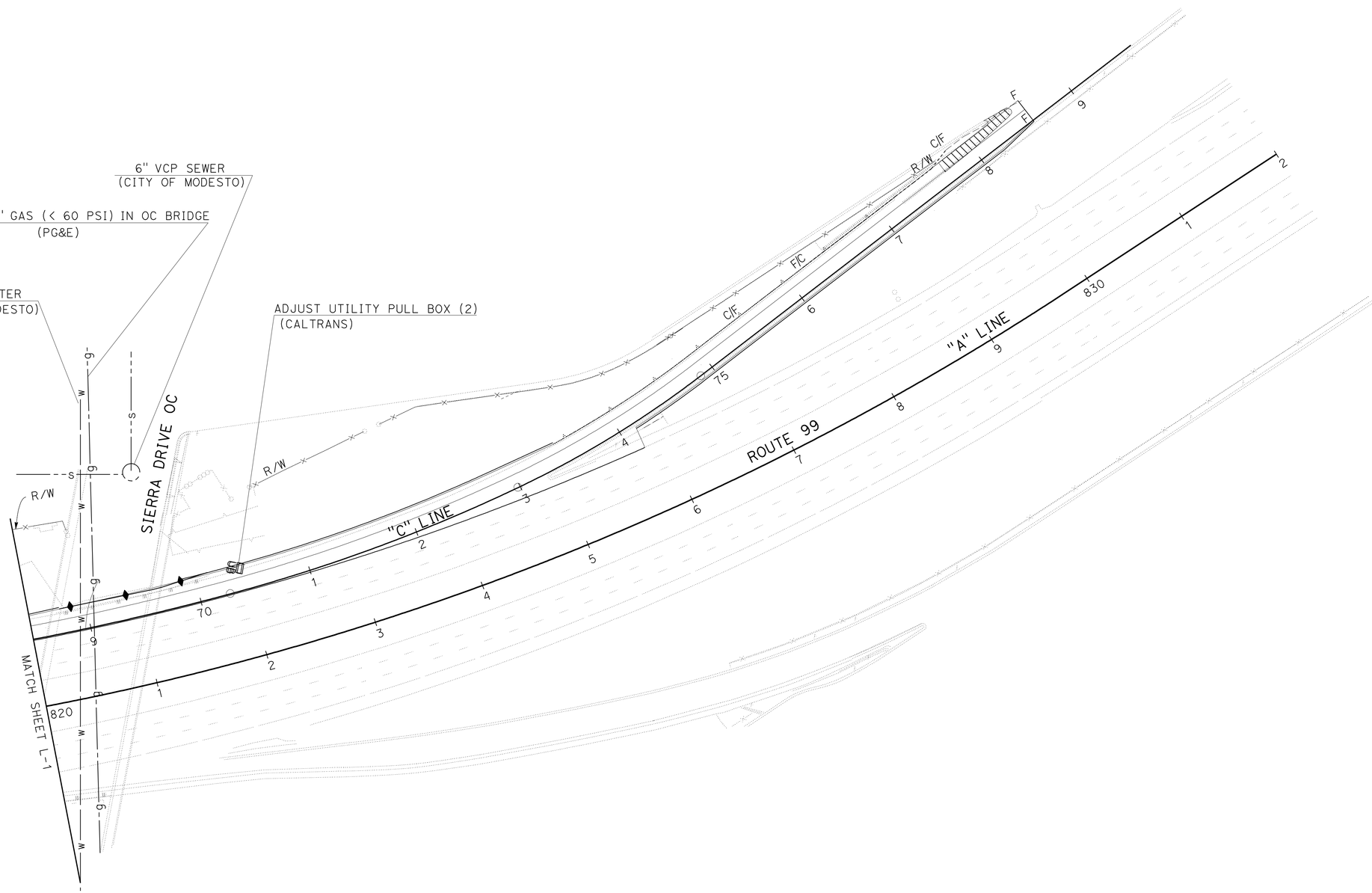

UTILITY PLAN

SCALE: 1" = 50′ **U-2**

5th/G St SB ON-RAMP (LOCATION 3)

THIS PLAN ACCURATE FOR UTILITY WORK ONLY

STATE OF CALIFORNIA - DEPARTMENT OF TRANSPORTATION
Caltrans
06-DESIGN

FUNCTIONAL SUPERVISOR: ERNIE PENUNA
CALCULATED-DESIGNED BY: RASAQ ATANDA
CHECKED BY: ROTIMI ADEBAYO
REVISED BY
DATE REVISED

LAST REVISION 05-25-10
DATE PLOTTED => 23-SEP-2010
TIME PLOTTED => 10:25

Dist	COUNTY	ROUTE	POST MILES TOTAL PROJECT	SHEET No.	TOTAL SHEETS
10	Sta	99	15.1/17.0	77	176

REGISTERED CIVIL ENGINEER 05-24-10 DATE

9-7-10
PLANS APPROVAL DATE

REGISTERED PROFESSIONAL ENGINEER ROTIMI D. ADEBAYO No. 69102 Exp. 6/30/12 CIVIL STATE OF CALIFORNIA

THE STATE OF CALIFORNIA OR ITS OFFICERS OR AGENTS SHALL NOT BE RESPONSIBLE FOR THE ACCURACY OR COMPLETENESS OF SCANNED COPIES OF THIS PLAN SHEET.

POTHOLE LOCATION TABLE

⊗	UTILITY	NORTHING	EASTING	UTILITY Elev	DEPTH
1	6" GAS	2054682.26	6415559.15	82.790	34"
2	TELEPHONE CONDUIT	2054880.01	6415427.31	80.835	58"

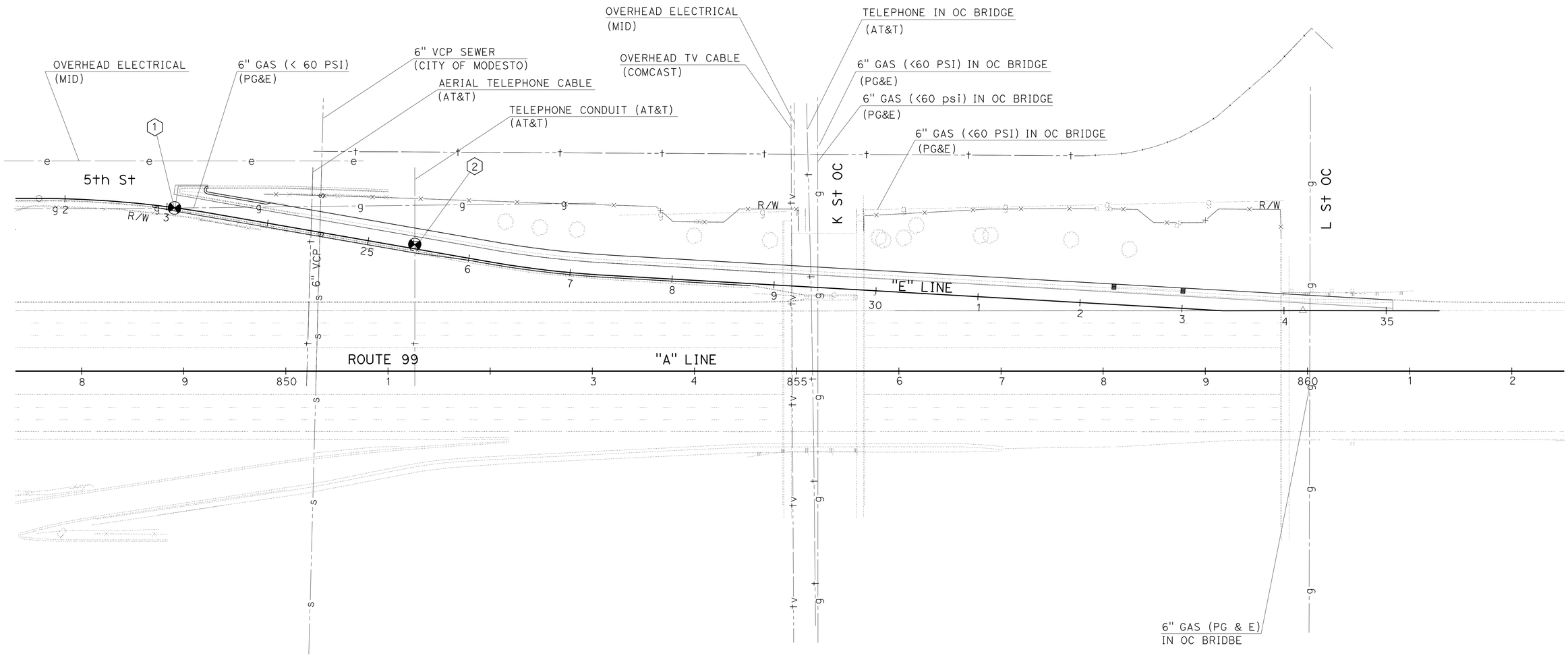

I St SB OFF-RAMP (LOCATION 4)

THIS PLAN ACCURATE FOR UTILITY WORK ONLY

UTILITY PLAN

SCALE: 1" = 50′ **U-3**

STATE OF CALIFORNIA - DEPARTMENT OF TRANSPORTATION
Caltrans 06-DESIGN

FUNCTIONAL SUPERVISOR: ERNIE PENUNA
CALCULATED-DESIGNED BY: RASAQ ATANDA
CHECKED BY: ROTIMI ADEBAYO
REVISED BY
DATE REVISED

LAST REVISION 05-25-10 | DATE PLOTTED => 23-SEP-2010 | TIME PLOTTED => 10:26

Dist	COUNTY	ROUTE	POST MILES TOTAL PROJECT	SHEET No.	TOTAL SHEETS
10	Sta	99	15.1/17.0	78	176

REGISTERED CIVIL ENGINEER 05-24-10 DATE

9-7-10
PLANS APPROVAL DATE

REGISTERED PROFESSIONAL ENGINEER ROTIMI D. ADEBAYO No. 69102 Exp. 6/30/12 CIVIL STATE OF CALIFORNIA

THE STATE OF CALIFORNIA OR ITS OFFICERS OR AGENTS SHALL NOT BE RESPONSIBLE FOR THE ACCURACY OR COMPLETENESS OF SCANNED COPIES OF THIS PLAN SHEET.

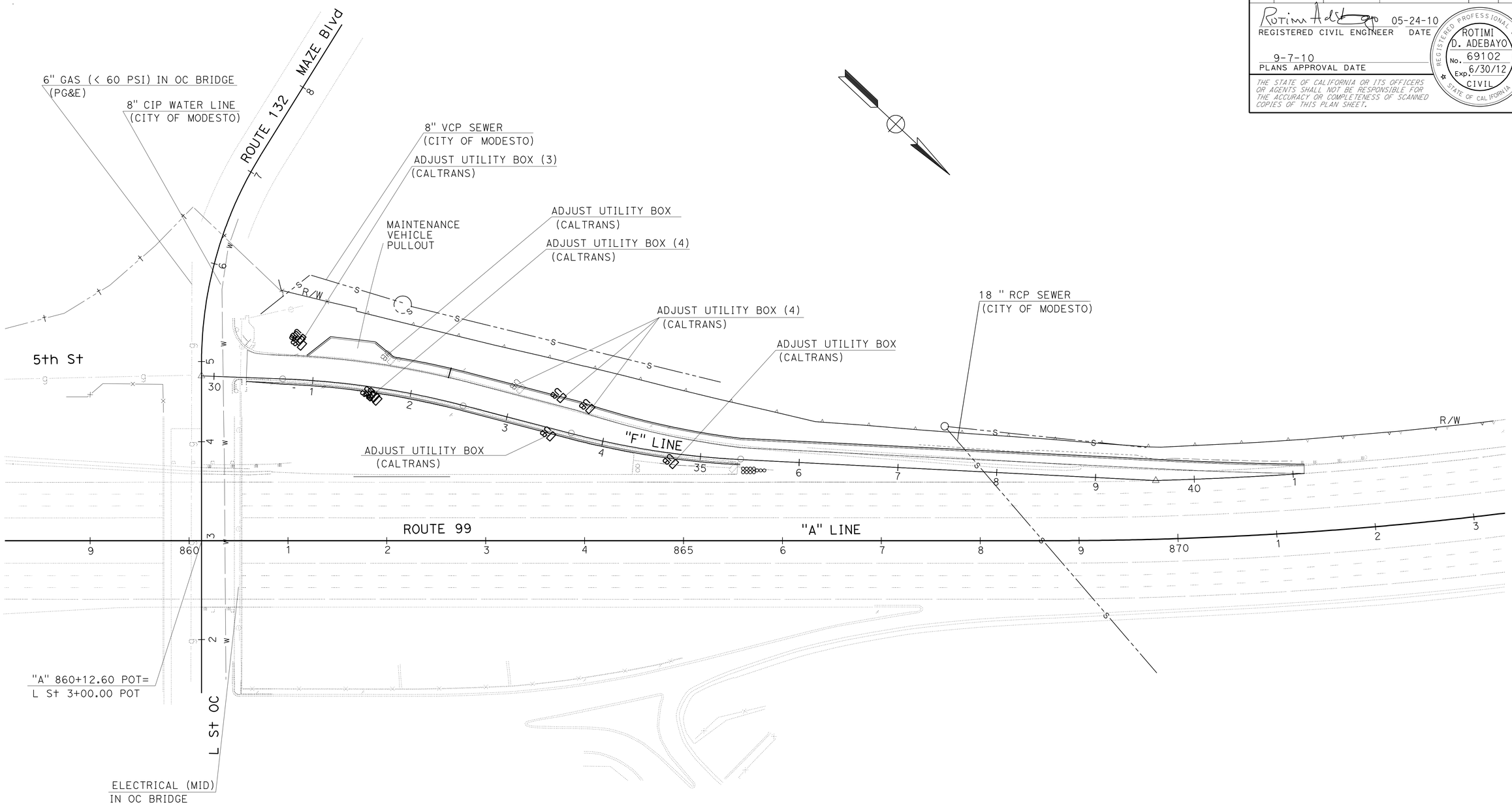

L St SB OFF-RAMP (LOCATION 5)

THIS PLAN ACCURATE FOR UTILITY WORK ONLY

UTILITY PLAN

SCALE: 1" = 50'

U-4

STATE OF CALIFORNIA - DEPARTMENT OF TRANSPORTATION
Caltrans
06-DESIGN

FUNCTIONAL SUPERVISOR: ERNIE PENUNA
CALCULATED-DESIGNED BY: RASAQ ATANDA
CHECKED BY: ROTIMI ADEBAYO
REVISED BY
DATE REVISED

LAST REVISION 05-25-10
DATE PLOTTED => 23-SEP-2010
TIME PLOTTED => 10:26

Dist	COUNTY	ROUTE	POST MILES TOTAL PROJECT	SHEET No.	TOTAL SHEETS
10	Sta	99	15.1/17.0	79	176

REGISTERED CIVIL ENGINEER DATE 05-24-10

PLANS APPROVAL DATE 9-7-10

REGISTERED PROFESSIONAL ENGINEER ROTIMI D. ADEBAYO No. 69102 Exp. 6/30/12 CIVIL STATE OF CALIFORNIA

THE STATE OF CALIFORNIA OR ITS OFFICERS OR AGENTS SHALL NOT BE RESPONSIBLE FOR THE ACCURACY OR COMPLETENESS OF SCANNED COPIES OF THIS PLAN SHEET.

POTHOLE LOCATION TABLE

⊗	UTILITY	NORTHING	EASTING	UTILITY Elev	DEPTH
3	1" GAS	2058057.08	6412691.77	82'	24"

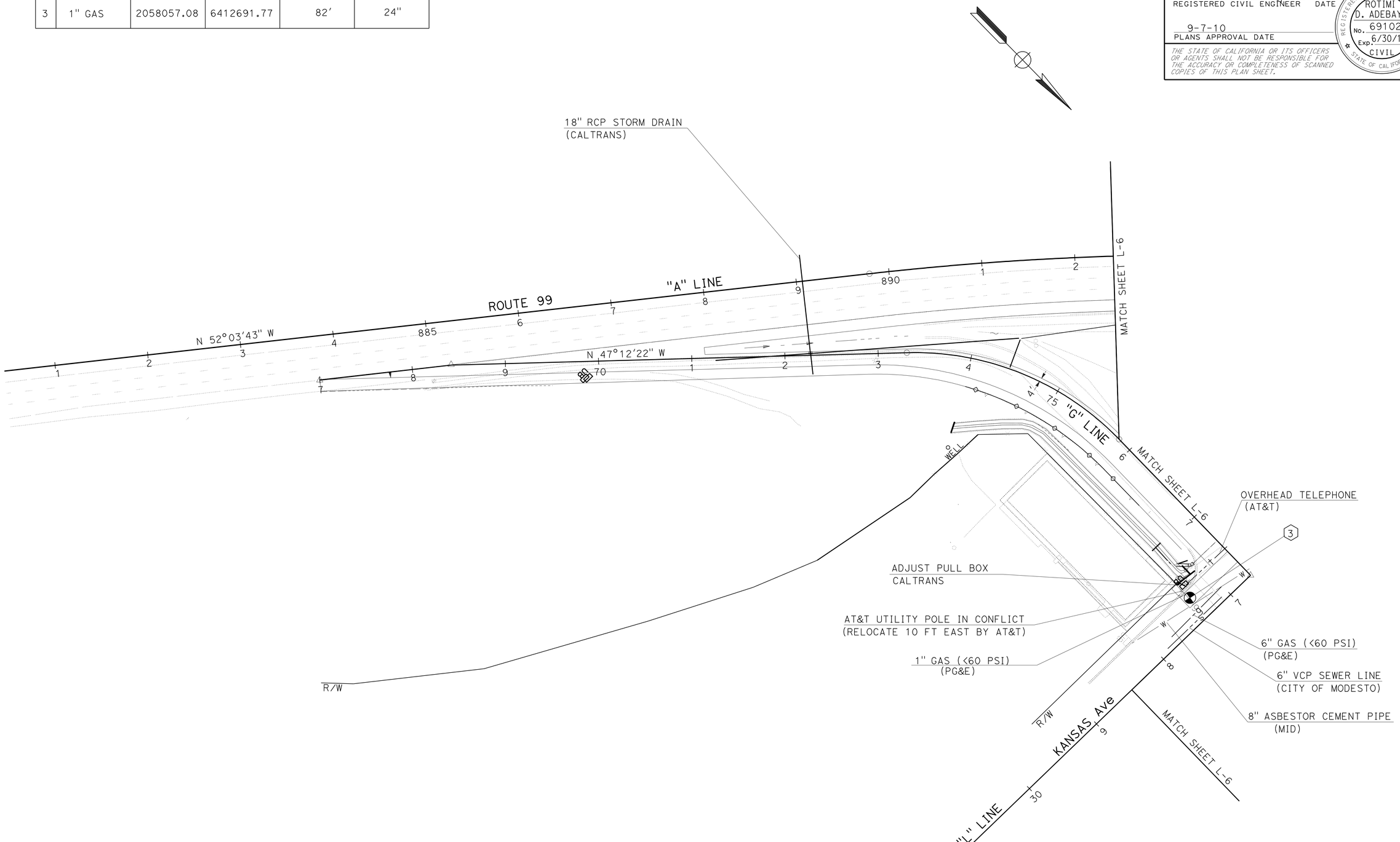

KANSAS Ave NB OFF-RAMP (LOCATION 6)

THIS PLAN ACCURATE FOR UTILITY WORK ONLY

SCALE: 1" = 50'

UTILITY PLAN

U-5

STATE OF CALIFORNIA - DEPARTMENT OF TRANSPORTATION

Caltrans 06-DESIGN

FUNCTIONAL SUPERVISOR: ERNIE PENUNA

CALCULATED-DESIGNED BY: RASAQ ATANDA

CHECKED BY: ROTIMI ADEBAYO

REVISED BY

DATE REVISED

LAST REVISION 05-25-10

DATE PLOTTED => 28-SEP-2010

TIME PLOTTED => 10:58

Dist	COUNTY	ROUTE	POST MILES TOTAL PROJECT	SHEET No.	TOTAL SHEETS
10	Sta	99	15.1/17.0	80	176

REGISTERED CIVIL ENGINEER 05-24-10 DATE

9-7-10
PLANS APPROVAL DATE

REGISTERED PROFESSIONAL ENGINEER ROTIMI D. ADEBAYO No. 69102 Exp. 6/30/12 CIVIL STATE OF CALIFORNIA

THE STATE OF CALIFORNIA OR ITS OFFICERS OR AGENTS SHALL NOT BE RESPONSIBLE FOR THE ACCURACY OR COMPLETENESS OF SCANNED COPIES OF THIS PLAN SHEET.

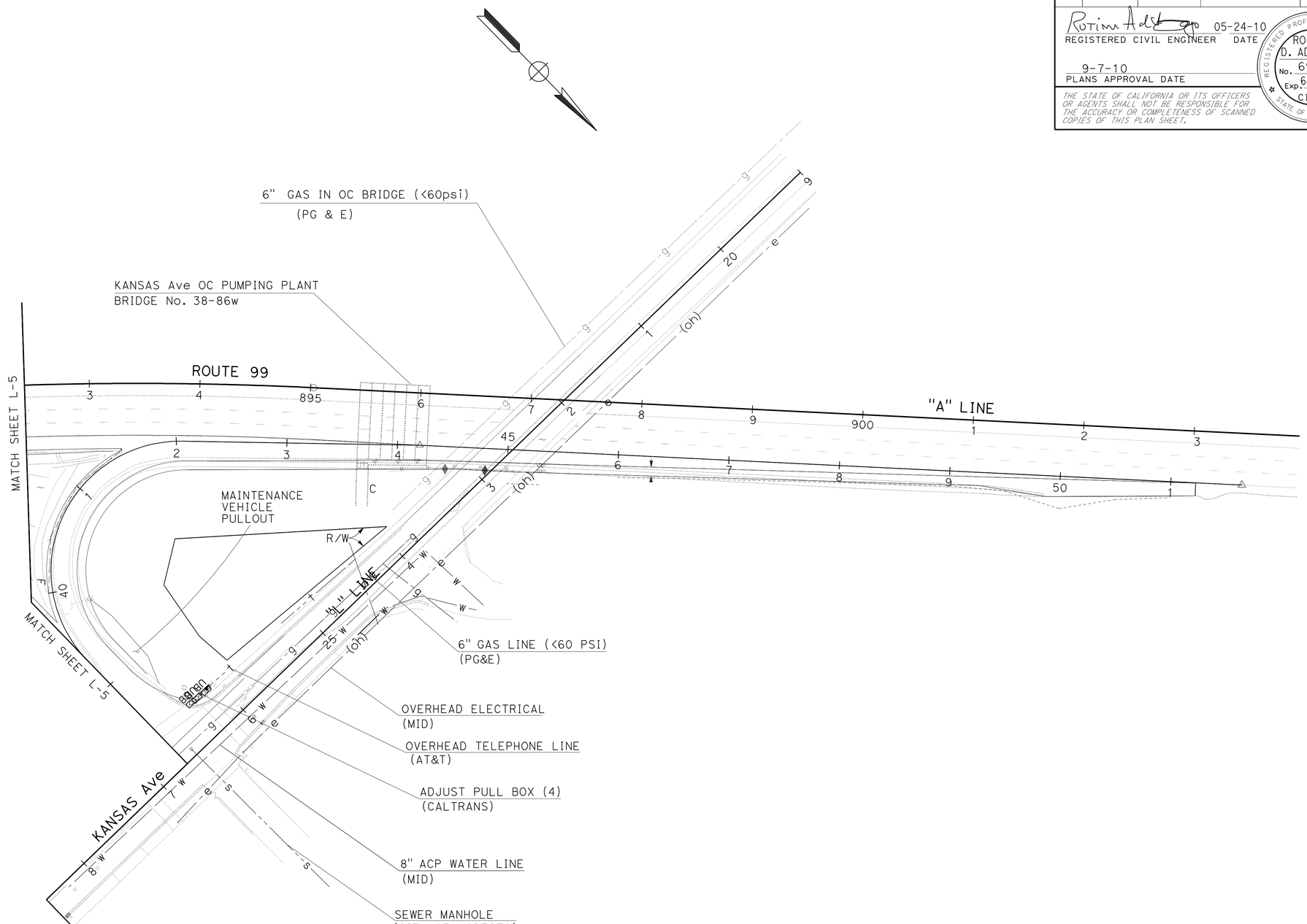

KANSAS Ave NB ON-RAMP (LOCATION 7)

THIS PLAN ACCURATE FOR UTILITY WORK ONLY

UTILITY PLAN

SCALE: 1" = 50' **U-6**

STATE OF CALIFORNIA - DEPARTMENT OF TRANSPORTATION
Caltrans 06-DESIGN

FUNCTIONAL SUPERVISOR: ERNIE PENUNA
CALCULATED-DESIGNED BY: RASAQ ATANDA
CHECKED BY: ROTIMI ADEBAYO
REVISED BY
DATE REVISED

LAST REVISION 05-25-10
DATE PLOTTED => 23-SEP-2010
TIME PLOTTED => 10:26

BORDER LAST REVISED 4/11/2008
RELATIVE BORDER SCALE IS IN INCHES 0 1 2 3
USERNAME => trmnguye
DGN FILE => a0A671ka006.dgn
CU 06253
EA 0A6711

Dist	COUNTY	ROUTE	POST MILES TOTAL PROJECT	SHEET No.	TOTAL SHEETS
10	Sta	99	15.1/17.0	81	176

REGISTERED CIVIL ENGINEER 05-24-10 DATE

9-7-10
PLANS APPROVAL DATE

REGISTERED PROFESSIONAL ENGINEER ROTIMI D. ADEBAYO No. 69102 Exp. 6/30/12 CIVIL STATE OF CALIFORNIA

THE STATE OF CALIFORNIA OR ITS OFFICERS OR AGENTS SHALL NOT BE RESPONSIBLE FOR THE ACCURACY OR COMPLETENESS OF SCANNED COPIES OF THIS PLAN SHEET.

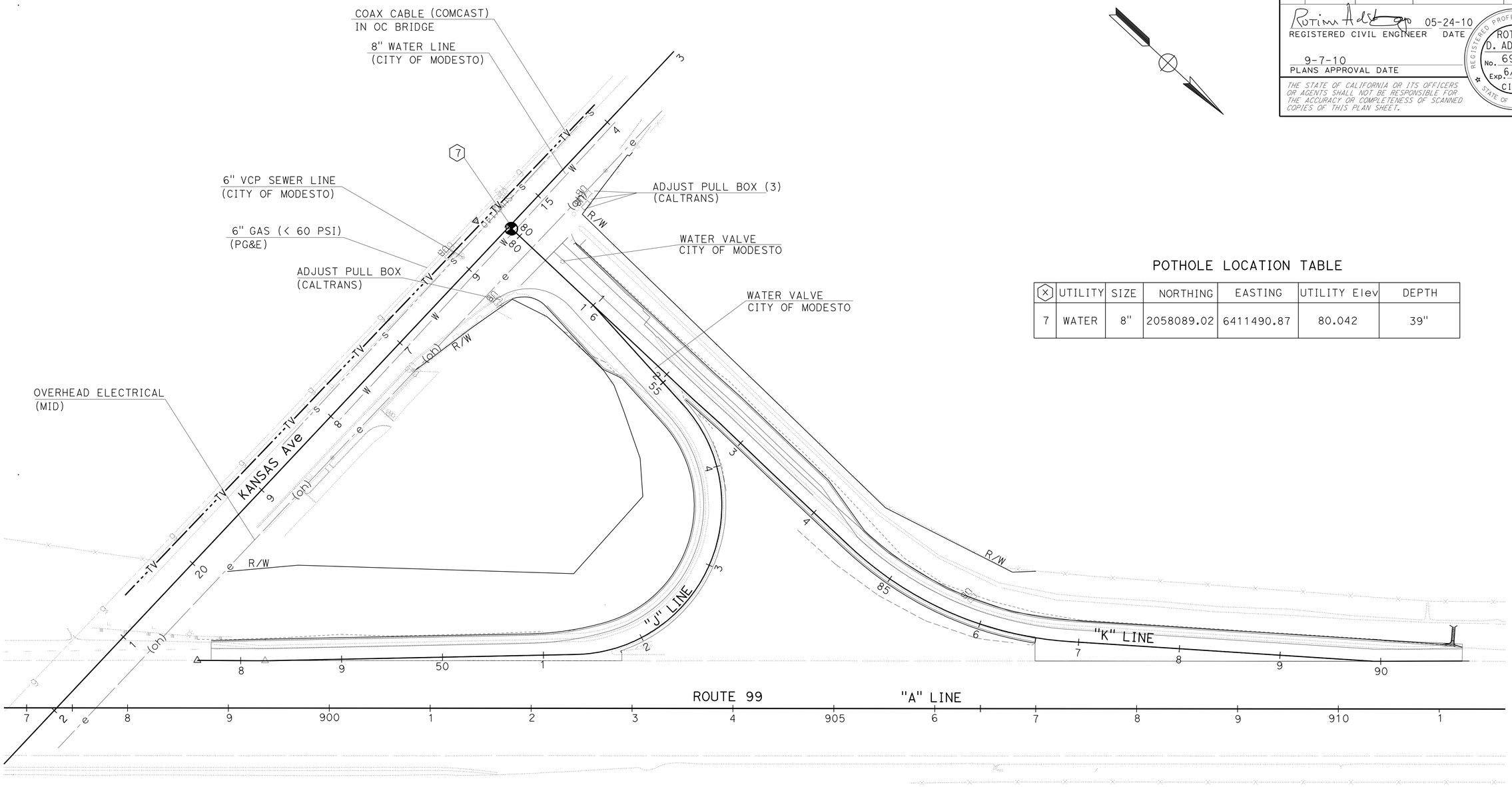

POTHOLE LOCATION TABLE

(X)	UTILITY	SIZE	NORTHING	EASTING	UTILITY Elev	DEPTH
7	WATER	8"	2058089.02	6411490.87	80.042	39"

KANSAS Ave SB ON-RAMP(LOCATION 8)
KANSAS Ave SB OFF-RAMP (LOCATION 9)

THIS PLAN ACCURATE FOR UTILITY WORK ONLY

UTILITY PLAN

SCALE: 1" = 50' **U-7**

STATE OF CALIFORNIA - DEPARTMENT OF TRANSPORTATION
Caltrans
06-DESIGN

FUNCTIONAL SUPERVISOR: ERNIE PENUNA
CALCULATED-DESIGNED BY: RASAQ ATANDA
CHECKED BY: ROTIMI ADEBAYO
REVISED BY
DATE REVISED

LAST REVISION 05-25-10
DATE PLOTTED => 23-SEP-2010
TIME PLOTTED => 10:48

Dist	COUNTY	ROUTE	POST MILES TOTAL PROJECT	SHEET No.	TOTAL SHEETS
10	Sta	99	15.1/17.0	82	176

Hassan Taha 05/24/10
REGISTERED CIVIL ENGINEER DATE

9-7-10
PLANS APPROVAL DATE

REGISTERED PROFESSIONAL ENGINEER HASSAN M. TAHA No. 60130 Exp. 06/30/10 CIVIL STATE OF CALIFORNIA

THE STATE OF CALIFORNIA OR ITS OFFICERS OR AGENTS SHALL NOT BE RESPONSIBLE FOR THE ACCURACY OR COMPLETENESS OF SCANNED COPIES OF THIS PLAN SHEET.

LEGEND

→ DIRECTION OF TRAVEL

NOTES:
1. EXACT SIGN LOCATIONS TO BE DETERMINED BY THE ENGINEER.
2. FOR ADDITIONAL CONSTRUCTION AREA SIGNS SEE CONSTRUCTION AREA SIGNS PLAN.
3. ALL CONSTRUCTION AREA SIGNS SHOWN ON TH-1 THRU TH-9 ARE STATIONARY MOUNTED EXCEPT FOR SIGN CODE (W), WHICH IS PORTABLE.

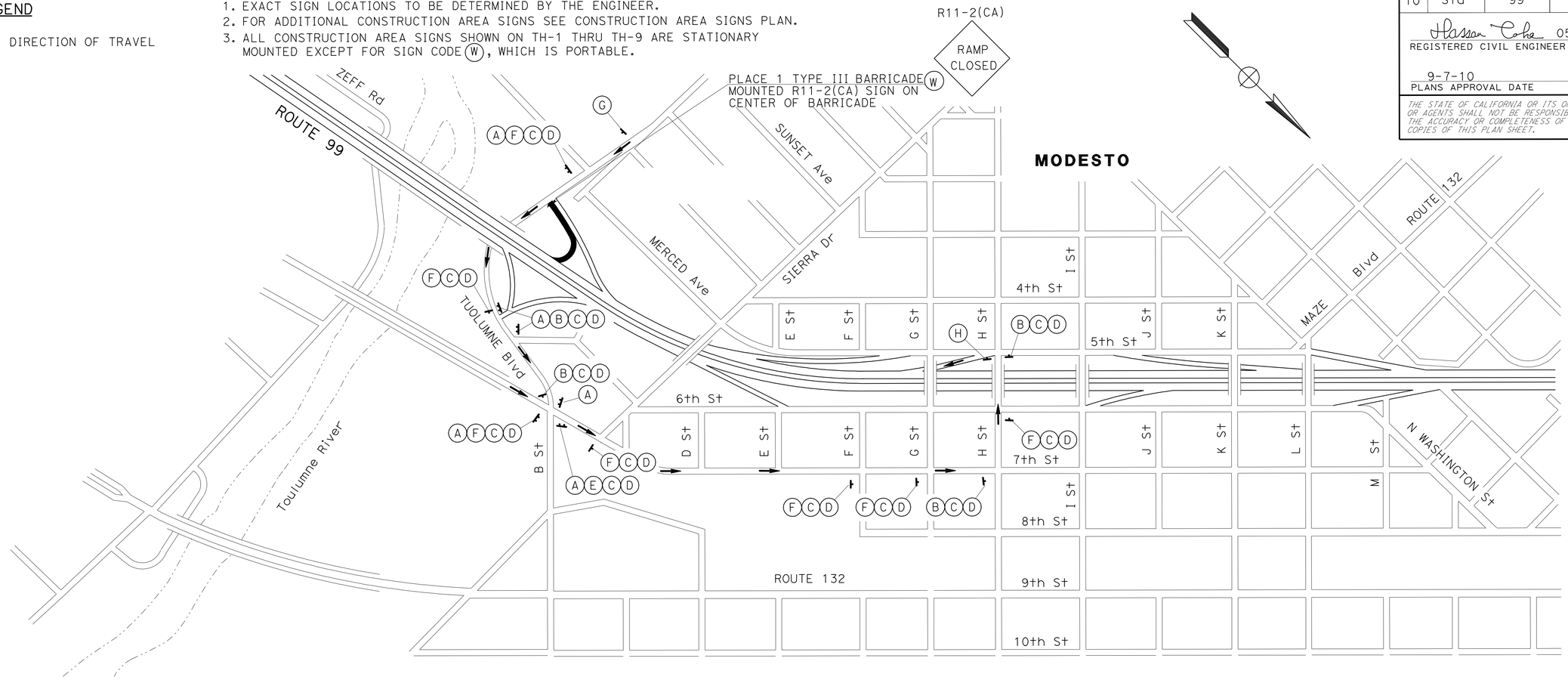

CONSTRUCTION AREA SIGNS

	SIGN CODE	PANEL SIZE	SIGN MESSAGE	No. OF POST AND SIZE	No. OF SIGNS
(A)	SC7 (CA) (SPECIAL)	84" x 54"	TUOLUMNE BLVD SOUTHBOUND ON-RAMP CLOSED USE H STREET	2 - 6" x 6"	5
(B)	M4-10 (Lt)	48" x 18"	DETOUR ARROW	1 - 4" x 4"	4
(C)	G28-1 (CA) (99)	25" x 25"	STATE ROUTE MARKER (99)	1 - 4" x 4"	12
(D)	M3-3	24" x 18"	SOUTH	1 - 4" x 4"	12
(E)	M4-10 (Rt)	48" x 18"	DETOUR ARROW	1 - 4" x 4"	1
(F)	SC3 (CA)	48" x 18"	DETOUR WITH ARROW	1 - 4" x 4"	7
(G)	W20-2	36" x 36"	DETOUR AHEAD	1 - 4" x 6"	1
(H)	M4-8a	24" x 18"	END DETOUR	1 - 4" x 4"	1
(W)	R11-2(CA)	48" x 30"	RAMP CLOSED	ON BARRICADE	1

SC7 (CA) (SPECIAL)

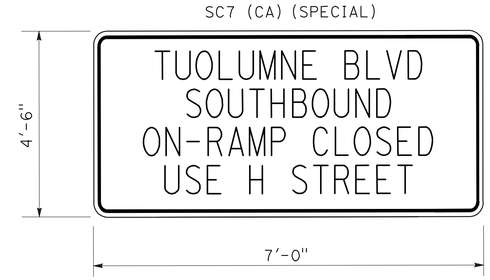

NOTES:
1. BLACK ON ORANGE
2. USE CALTRANS ALPHABET, SERIES C FOR LETTERING

TUOLUMNE Blvd SB ON-RAMP (LOCATION 1)

TRAFFIC HANDLING PLAN
(DETOUR LAYOUT FOR RAMP CLOSURE)
NO SCALE

TH-1

THIS PLAN ACCURATE FOR TRAFFIC HANDLING WORK ONLY

STATE OF CALIFORNIA - DEPARTMENT OF TRANSPORTATION
Caltrans® 06-TRAFFIC DESIGN

FUNCTIONAL SUPERVISOR: MOHAMMED QATAMI
CALCULATED-DESIGNED BY: FERNANDO LOPEZ
CHECKED BY: HASSAN TAHA
REVISED BY / DATE REVISED

LAST REVISION 05-24-10 | DATE PLOTTED => 27-SEP-2010 | TIME PLOTTED => 10:52

BORDER LAST REVISED 4/11/2008 | RELATIVE BORDER SCALE IS IN INCHES 0 1 2 3 | USERNAME => trmikesl | DGN FILE => a0A671md001.dgn | CU 06385 | EA 0A6711

Dist	COUNTY	ROUTE	POST MILES TOTAL PROJECT	SHEET No.	TOTAL SHEETS
10	Sta	99	15.1/17.0	83	176

Hassan Taha 05/24/10
REGISTERED CIVIL ENGINEER DATE

9-7-10
PLANS APPROVAL DATE

REGISTERED PROFESSIONAL ENGINEER HASSAN M. TAHA No. 60130 Exp 06/30/10 CIVIL STATE OF CALIFORNIA

THE STATE OF CALIFORNIA OR ITS OFFICERS OR AGENTS SHALL NOT BE RESPONSIBLE FOR THE ACCURACY OR COMPLETENESS OF SCANNED COPIES OF THIS PLAN SHEET.

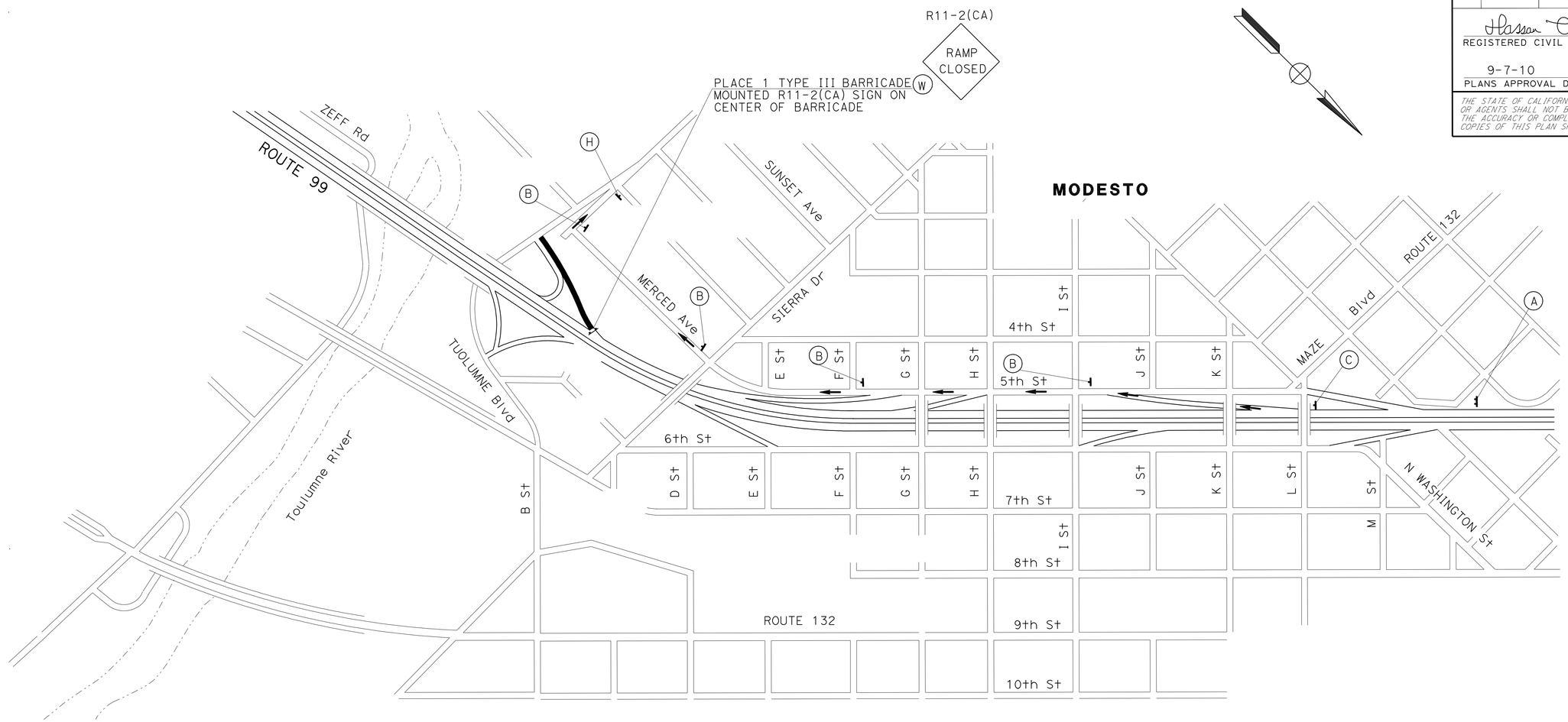

CONSTRUCTION AREA SIGNS

	SIGN CODE	PANEL SIZE	SIGN MESSAGE	No. OF POST AND SIZE	No. OF SIGNS
(A)	SC7 (CA) (SPECIAL)	84" x 54"	TUOLUMNE BLVD OFF-RAMP CLOSED USE 5th AND I STREET	2 - 6" x 6"	1
(B)	SC3 (CA)	48" x 18"	DETOUR WITH ARROW	1 - 4" x 4"	4
(C)	W20-2	36" x 36"	DETOUR AHEAD	1 - 4" x 6"	1
(D)	M4-8a	24" x 18"	END DETOUR	1 - 4" x 4"	1
(W)	R11-2(CA)	48" x 30"	RAMP CLOSED	ON BARRICADE	1

SC7 (CA) (SPECIAL)

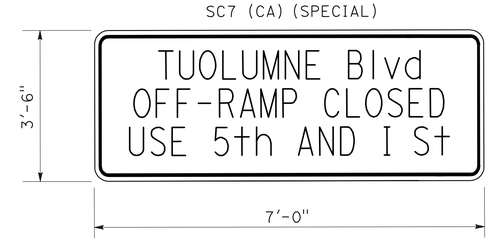

NOTES:

1. BLACK ON ORANGE
2. USE CALTRANS ALPHABET, SERIES C FOR LETTERING

TUOLUMNE Blvd SB OFF-RAMP (LOCATION 2)

TRAFFIC HANDLING PLAN
(DETOUR LAYOUT FOR RAMP CLOSURE)

NO SCALE

TH-2

THIS PLAN ACCURATE FOR TRAFFIC HANDLING WORK ONLY

STATE OF CALIFORNIA - DEPARTMENT OF TRANSPORTATION
Caltrans® 06-TRAFFIC DESIGN

FUNCTIONAL SUPERVISOR: MOHAMMED QATAMI
CALCULATED-DESIGNED BY: FERNANDO LOPEZ
CHECKED BY: HASSAN TAHA
REVISED BY / DATE REVISED

LAST REVISION 05-24-10 | DATE PLOTTED => 27-SEP-2010 | TIME PLOTTED => 10:52

BORDER LAST REVISED 4/11/2008 | RELATIVE BORDER SCALE IS IN INCHES 0 1 2 3 | USERNAME => trmikesl | DGN FILE => a0A671md002.dgn | CU 06385 | EA 0A6711

Dist	COUNTY	ROUTE	POST MILES TOTAL PROJECT	SHEET No.	TOTAL SHEETS
10	Sta	99	15.1/17.0	84	176

Hassan Taha 05/24/10
REGISTERED CIVIL ENGINEER DATE

9-7-10
PLANS APPROVAL DATE

REGISTERED PROFESSIONAL ENGINEER HASSAN M. TAHA No. 60130 Exp. 06/30/10 CIVIL STATE OF CALIFORNIA

THE STATE OF CALIFORNIA OR ITS OFFICERS OR AGENTS SHALL NOT BE RESPONSIBLE FOR THE ACCURACY OR COMPLETENESS OF SCANNED COPIES OF THIS PLAN SHEET.

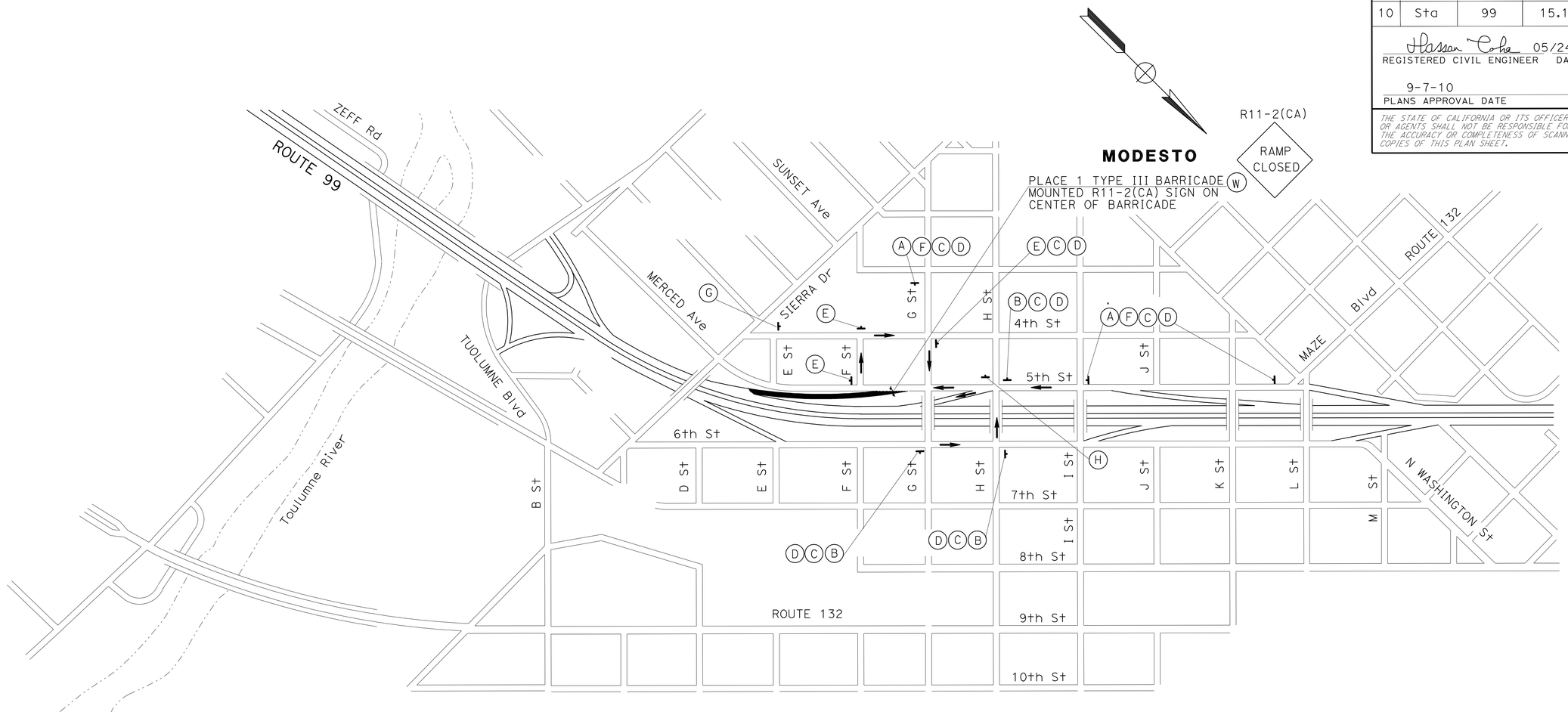

CONSTRUCTION AREA SIGNS

	SIGN CODE	PANEL SIZE	SIGN MESSAGE	No. OF POST AND SIZE	No. OF SIGNS
(A)	SC7 (CA) (SPECIAL)	84" x 54"	5TH/G STREET SOUTHBOUND ON-RAMP CLOSED USE H STREET	2 - 6" x 6"	3
(B)	M4-10 (Lt)	48" x 18"	DETOUR ARROW	1 - 4" x 4"	3
(C)	G28-1 (CA) (99)	25" x 25"	STATE ROUTE MARKER (99)	1 - 4" x 4"	7
(D)	M3-3	24" x 18"	SOUTH	1 - 4" x 4"	7
(E)	M4-10 (Rt)	48" x 18"	DETOUR ARROW	1 - 4" x 4"	3
(F)	SC3 (CA)	48" x 18"	DETOUR WITH ARROW	1 - 4" x 4"	3
(G)	W20-2	36" x 36"	DETOUR AHEAD	1 - 4" x 6"	1
(H)	M4-8a	24" x 18"	END DETOUR	1 - 4" x 4"	1
(W)	R11-2(CA)	48" x 30"	RAMP CLOSED	ON BARRICADE	1

SC7 (CA) (SPECIAL)

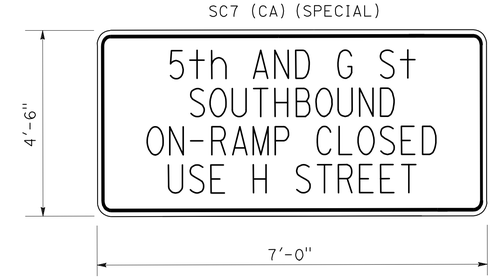

NOTES:
1. BLACK ON ORANGE
2. USE CALTRANS ALPHABET, SERIES C FOR LETTERING

5TH/G STREET SB ON-RAMP (LOCATION 3)

THIS PLAN ACCURATE FOR TRAFFIC HANDLING WORK ONLY

TRAFFIC HANDLING PLAN
(DETOUR LAYOUT FOR RAMP CLOSURE)

NO SCALE

TH-3

STATE OF CALIFORNIA - DEPARTMENT OF TRANSPORTATION
Caltrans® 06-TRAFFIC DESIGN

FUNCTIONAL SUPERVISOR: MOHAMMED QATAMI
CALCULATED-DESIGNED BY: FERNANDO LOPEZ
CHECKED BY: HASSAN TAHA
REVISED BY
DATE REVISED

LAST REVISION 05-24-10
DATE PLOTTED => 27-SEP-2010
TIME PLOTTED => 10:52

BORDER LAST REVISED 4/11/2008
RELATIVE BORDER SCALE IS IN INCHES 0 1 2 3
USERNAME => trmikesl
DGN FILE => a0A671md003.dgn
CU 06385
EA 0A6711

Dist	COUNTY	ROUTE	POST MILES TOTAL PROJECT	SHEET No.	TOTAL SHEETS
10	Sta	99	15.1/17.0	85	176

Hassan Taha 05/24/10
REGISTERED CIVIL ENGINEER DATE

9-7-10
PLANS APPROVAL DATE

REGISTERED PROFESSIONAL ENGINEER HASSAN M. TAHA No. 60130 Exp. 06/30/10 CIVIL STATE OF CALIFORNIA

THE STATE OF CALIFORNIA OR ITS OFFICERS OR AGENTS SHALL NOT BE RESPONSIBLE FOR THE ACCURACY OR COMPLETENESS OF SCANNED COPIES OF THIS PLAN SHEET.

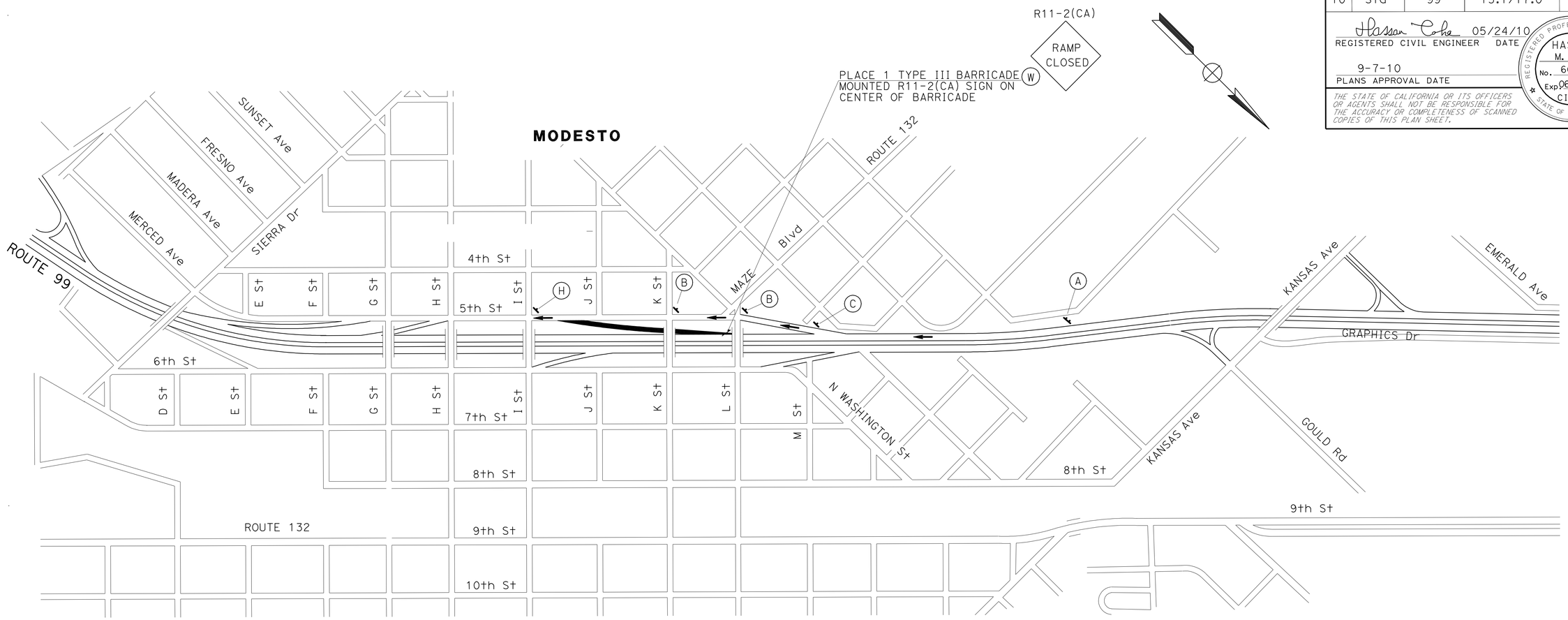

CONSTRUCTION AREA SIGNS

	SIGN CODE	PANEL SIZE	SIGN MESSAGE	No. OF POST AND SIZE	No. OF SIGNS
(A)	SC7 (CA) (SPECIAL)	84" x 42"	CENTRAL DISTRICT OFF-RAMP CLOSED USE MAZE BLVD	2 - 6" x 6"	1
(B)	SC3 (CA)	48" x 18"	DETOUR WITH ARROW	1 - 4" x 4"	2
(C)	W20-2	36" x 36"	DETOUR AHEAD	1 - 4" x 6"	1
(H)	M4-8a	24" x 18"	END DETOUR	1 - 4" x 4"	1
(W)	R11-2(CA)	48" x 30"	RAMP CLOSED	ON BARRICADE	1

SC7 (CA) (SPECIAL)

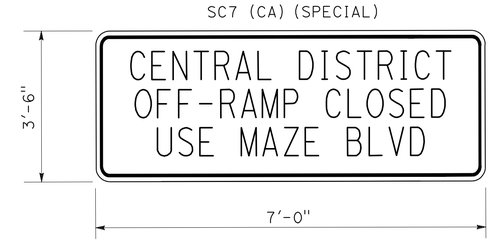

NOTES:
1. BLACK ON ORANGE
2. USE CALTRANS ALPHABET, SERIES C FOR LETTERING

"I" STREET SOUTHBOUND OFF-RAMP (LOCATION 4)

TRAFFIC HANDLING PLAN
(DETOUR LAYOUT FOR RAMP CLOSURE)

NO SCALE

TH-4

THIS PLAN ACCURATE FOR TRAFFIC HANDLING WORK ONLY

STATE OF CALIFORNIA - DEPARTMENT OF TRANSPORTATION
Caltrans® 06-TRAFFIC DESIGN

FUNCTIONAL SUPERVISOR: MOHAMMED QATAMI
CALCULATED-DESIGNED BY: FERNANDO LOPEZ
CHECKED BY: HASSAN TAHA
REVISED BY / DATE REVISED

LAST REVISION 05-24-10
DATE PLOTTED => 27-SEP-2010
TIME PLOTTED => 10:52

Dist	COUNTY	ROUTE	POST MILES TOTAL PROJECT	SHEET No.	TOTAL SHEETS
10	Sta	99	15.1/17.0	86	176

Hassan Taha 05/24/10
REGISTERED CIVIL ENGINEER DATE

9-7-10
PLANS APPROVAL DATE

REGISTERED PROFESSIONAL ENGINEER HASSAN M. TAHA No. 60130 Exp. 06/30/10 CIVIL STATE OF CALIFORNIA

THE STATE OF CALIFORNIA OR ITS OFFICERS OR AGENTS SHALL NOT BE RESPONSIBLE FOR THE ACCURACY OR COMPLETENESS OF SCANNED COPIES OF THIS PLAN SHEET.

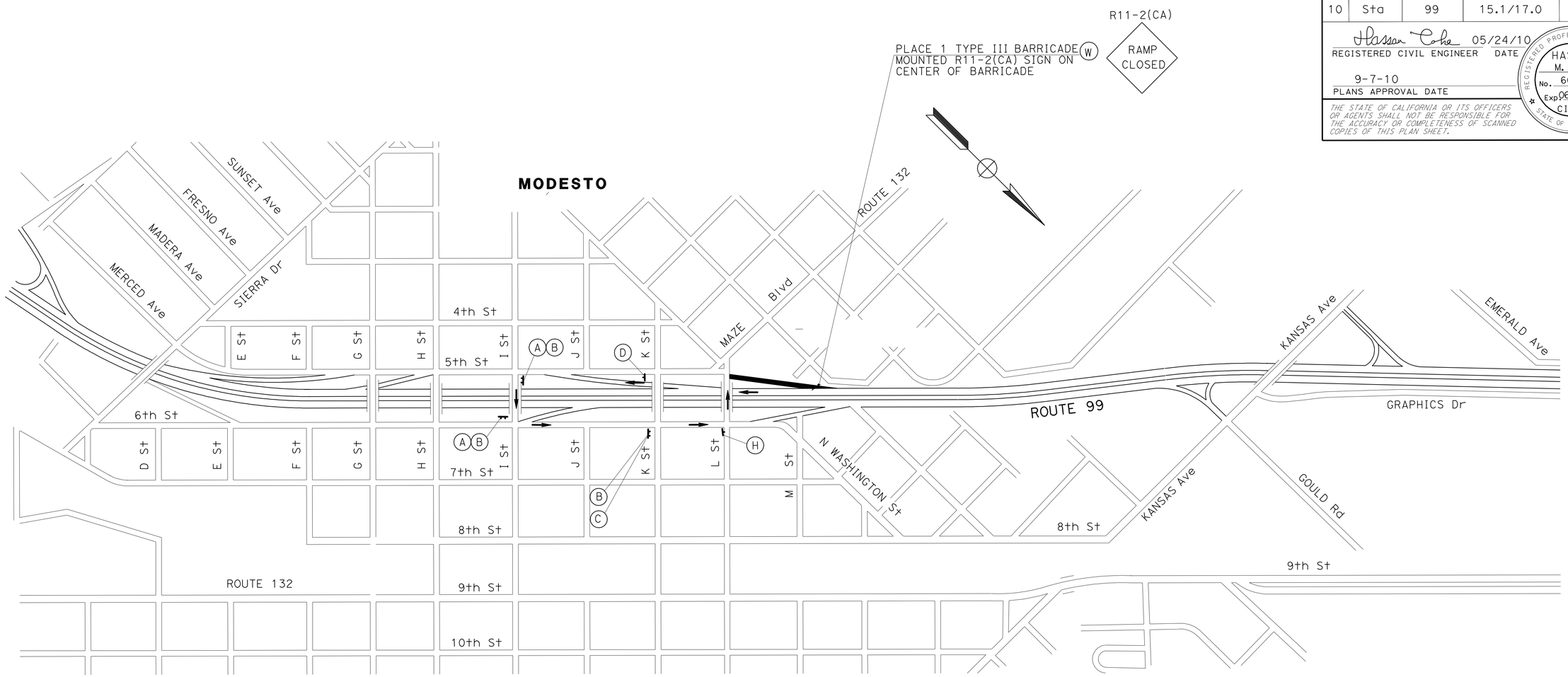

CONSTRUCTION AREA SIGNS

	SIGN CODE	PANEL SIZE	SIGN MESSAGE	No. OF POST AND SIZE	No. OF SIGNS
(A)	M4-10 (Lt)	48" x 18"	DETOUR ARROW	1 - 4" x 4"	2
(B)	G24-1 (CA)	66" x 48"	MAZE BLVD	2 - 4" x 6"	3
(C)	SC3 (CA)	48" x 18"	DETOUR WITH ARROW	1 - 4" x 4"	1
(D)	W20-2	36" x 36"	DETOUR AHEAD	1 - 4" x 6"	1
(H)	M4-8a	24" x 18"	END DETOUR	1 - 4" x 4"	1
(W)	R11-2(CA)	48" x 30"	RAMP CLOSED	ON BARRICADE	1

(B) G24-1 (CA)

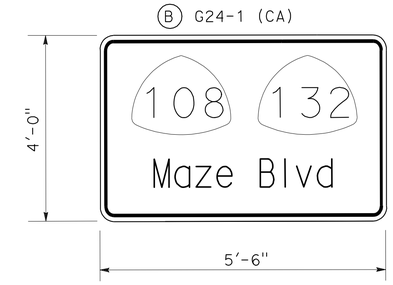

NOTES:
1. BLACK ON ORANGE
2. USE CALTRANS ALPHABET, SERIES C FOR LETTERING

"L" STREET SB OFF-RAMP (LOCATION 5)

TRAFFIC HANDLING PLAN
(DETOUR LAYOUT FOR RAMP CLOSURE)

NO SCALE

TH-5

THIS PLAN ACCURATE FOR TRAFFIC HANDLING WORK ONLY

STATE OF CALIFORNIA - DEPARTMENT OF TRANSPORTATION
Caltrans 06-TRAFFIC DESIGN

FUNCTIONAL SUPERVISOR: MOHAMMED QATAMI
CALCULATED-DESIGNED BY: FERNANDO LOPEZ
CHECKED BY: HASSAN TAHA
REVISED BY / DATE REVISED

LAST REVISION 05-24-10
DATE PLOTTED => 27-SEP-2010
TIME PLOTTED => 10:52

Dist	COUNTY	ROUTE	POST MILES TOTAL PROJECT	SHEET No.	TOTAL SHEETS
10	Sta	99	15.1/17.0	87	176

Hassan Taha 05/24/10
REGISTERED CIVIL ENGINEER DATE

9-7-10
PLANS APPROVAL DATE

REGISTERED PROFESSIONAL ENGINEER HASSAN M. TAHA No. 60130 Exp. 06/30/10 CIVIL STATE OF CALIFORNIA

THE STATE OF CALIFORNIA OR ITS OFFICERS OR AGENTS SHALL NOT BE RESPONSIBLE FOR THE ACCURACY OR COMPLETENESS OF SCANNED COPIES OF THIS PLAN SHEET.

CONSTRUCTION AREA SIGNS

	SIGN CODE	PANEL SIZE	SIGN MESSAGE	No. OF POST AND SIZE	No. OF SIGNS
(A)	SC7 (CA) (SPECIAL)	84" x 42"	CENTRAL DISTRICT OFF-RAMP CLOSED USE 6th STREET	2 - 6" x 6"	1
(B)	SC3 (CA)	48" x 18"	DETOUR WITH ARROW	1 - 4" x 4"	3
(C)	W20-2	36" x 36"	DETOUR AHEAD	1 - 4" x 6"	2
(D)	M4-10 (Rt)	48" x 18"	DETOUR ARROW	1 - 4" x 4"	1
(E)	M4-10 (Lt)	48" x 18"	DETOUR ARROW	1 - 4" x 4"	2
(H)	M4-8a	24" x 18"	END DETOUR	1 - 4" x 4"	1
(W)	R11-2(CA)	48" x 30"	RAMP CLOSED	ON BARRICADE	1

KANSAS Ave NB OFF-RAMP (LOCATION 6)

SC7 (CA) (SPECIAL)

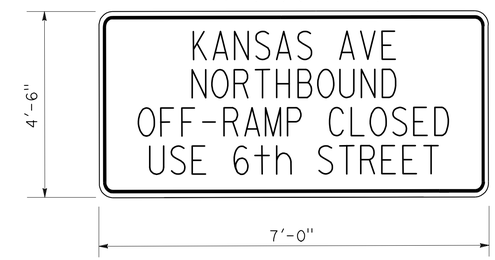

NOTES:
1. BLACK ON ORANGE.
2. USE CALTRANS ALPHABET, SERIES C FOR LETTERING.
3. KANSAS AVENUE RAMPS SHALL NOT BE CLOSED SIMULTANEOUSLY.

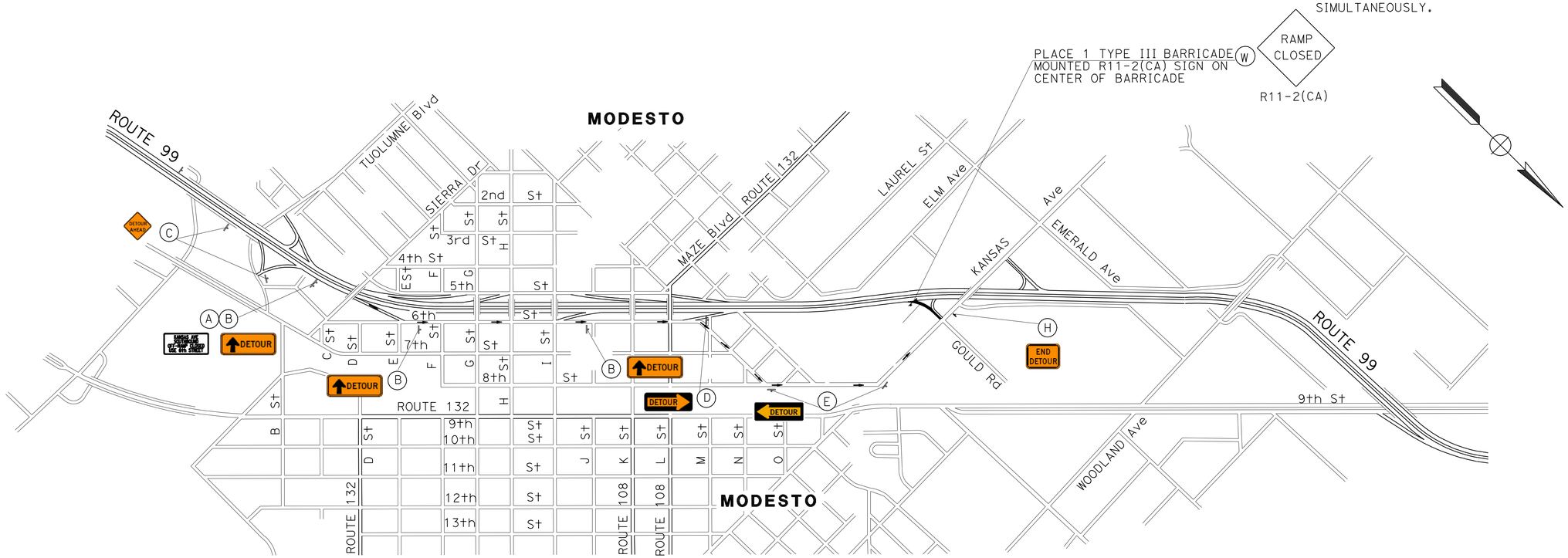

TRAFFIC HANDLING PLAN
(DETOUR LAYOUT FOR RAMP CLOSURE)

NO SCALE

TH-6

THIS PLAN ACCURATE FOR TRAFFIC HANDLING WORK ONLY

STATE OF CALIFORNIA - DEPARTMENT OF TRANSPORTATION
Caltrans® 06-TRAFFIC DESIGN

FUNCTIONAL SUPERVISOR: MOHAMMED QATAMI
CALCULATED-DESIGNED BY: FERNANDO LOPEZ
CHECKED BY: HASSAN TAHA
REVISED BY / DATE REVISED

LAST REVISION 05-24-10 | DATE PLOTTED => 27-SEP-2010 | TIME PLOTTED => 10:52

BORDER LAST REVISED 4/11/2008 | RELATIVE BORDER SCALE IS IN INCHES 0 1 2 3 | USERNAME => trmikesl | DGN FILE => a0A671md006.dgn | CU 06385 | EA 0A6711

Dist	COUNTY	ROUTE	POST MILES TOTAL PROJECT	SHEET No.	TOTAL SHEETS
10	Sta	99	15.1/17.0	88	176

REGISTERED CIVIL ENGINEER 05/24/10 DATE

9-7-10
PLANS APPROVAL DATE

REGISTERED PROFESSIONAL ENGINEER HASSAN M. TAHA No. 60130 Exp. 06/30/10 CIVIL STATE OF CALIFORNIA

THE STATE OF CALIFORNIA OR ITS OFFICERS OR AGENTS SHALL NOT BE RESPONSIBLE FOR THE ACCURACY OR COMPLETENESS OF SCANNED COPIES OF THIS PLAN SHEET.

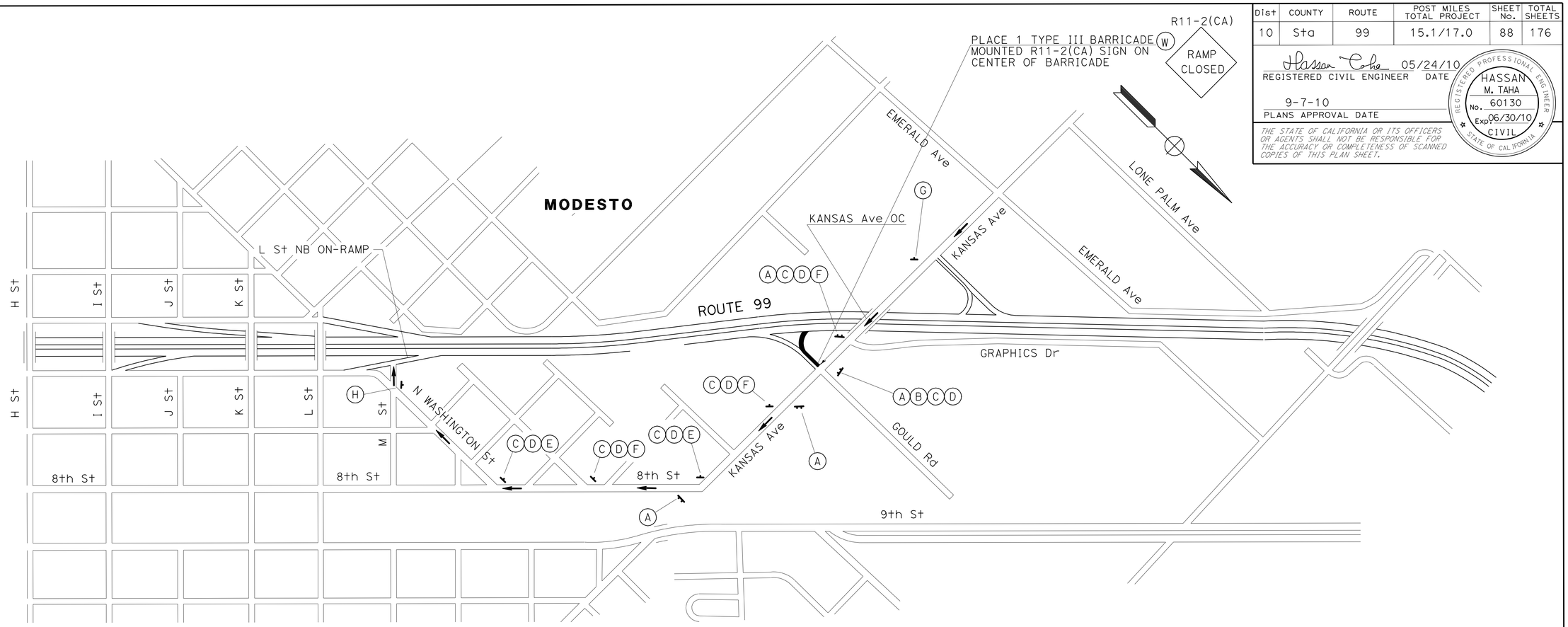

CONSTRUCTION AREA SIGNS

	SIGN CODE	PANEL SIZE	SIGN MESSAGE		No. OF POST AND SIZE	No. OF SIGNS
(A)	SC7 (CA) (SPECIAL)	84" x 54"	KANSAS AVE NORTHBOUND ON-RAMP CLOSED USE L STREET		2 - 6" x 6"	4
(B)	M4-10 (Lt)	48" x 18"	DETOUR	DETOUR ARROW	1 - 4" x 4"	1
(C)	G28-1 (CA) (99)	25" x 25"	99	STATE ROUTE MARKER (99)	1 - 4" x 4"	6
(D)	M3-1	24" x 18"	NORTH	NORTH	1 - 4" x 4"	6
(E)	M4-10 (Rt)	48" x 18"	DETOUR	DETOUR ARROW	1 - 4" x 4"	2
(F)	SC3 (CA)	48" x 18"	DETOUR	DETOUR WITH ARROW	1 - 4" x 4"	3
(G)	W20-2	36" x 36"	DETOUR AHEAD	DETOUR AHEAD	1 - 4" x 6"	1
(H)	M4-8a	24" x 18"	END DETOUR	END DETOUR	1 - 4" x 4"	1
(W)	R11-2(CA)	48" x 30"	RAMP CLOSED	RAMP CLOSED	ON BARRICADE	1

SC7 (CA) (SPECIAL)

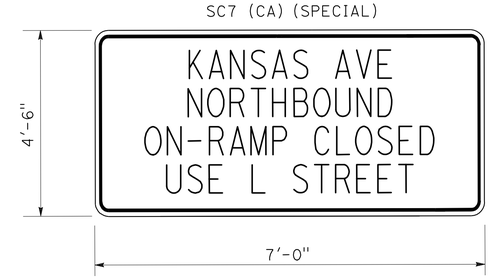

NOTES:
1. BLACK ON ORANGE.
2. USE CALTRANS ALPHABET, SERIES C FOR LETTERING.
3. KANSAS AVENUE RAMPS SHALL NOT BE CLOSED SIMULTANEOUSLY.

KANSAS AVENUE NB ON-RAMP (LOCATION 7)

THIS PLAN ACCURATE FOR TRAFFIC HANDLING WORK ONLY

TRAFFIC HANDLING PLAN
(DETOUR LAYOUT FOR RAMP CLOSURE)

NO SCALE

TH-7

STATE OF CALIFORNIA - DEPARTMENT OF TRANSPORTATION
Caltrans® 06-TRAFFIC DESIGN

FUNCTIONAL SUPERVISOR: MOHAMMED QATAMI
CALCULATED-DESIGNED BY: FERNANDO LOPEZ
CHECKED BY: HASSAN TAHA
REVISED BY
DATE REVISED

LAST REVISION 05-24-10
DATE PLOTTED => 27-SEP-2010
TIME PLOTTED => 10:52

Dist	COUNTY	ROUTE	POST MILES TOTAL PROJECT	SHEET No.	TOTAL SHEETS
10	Sta	99	15.1/17.0	89	176

REGISTERED CIVIL ENGINEER 05/24/10 DATE

9-7-10
PLANS APPROVAL DATE

REGISTERED PROFESSIONAL ENGINEER HASSAN M. TAHA No. 60130 Exp. 06/30/10 CIVIL STATE OF CALIFORNIA

THE STATE OF CALIFORNIA OR ITS OFFICERS OR AGENTS SHALL NOT BE RESPONSIBLE FOR THE ACCURACY OR COMPLETENESS OF SCANNED COPIES OF THIS PLAN SHEET.

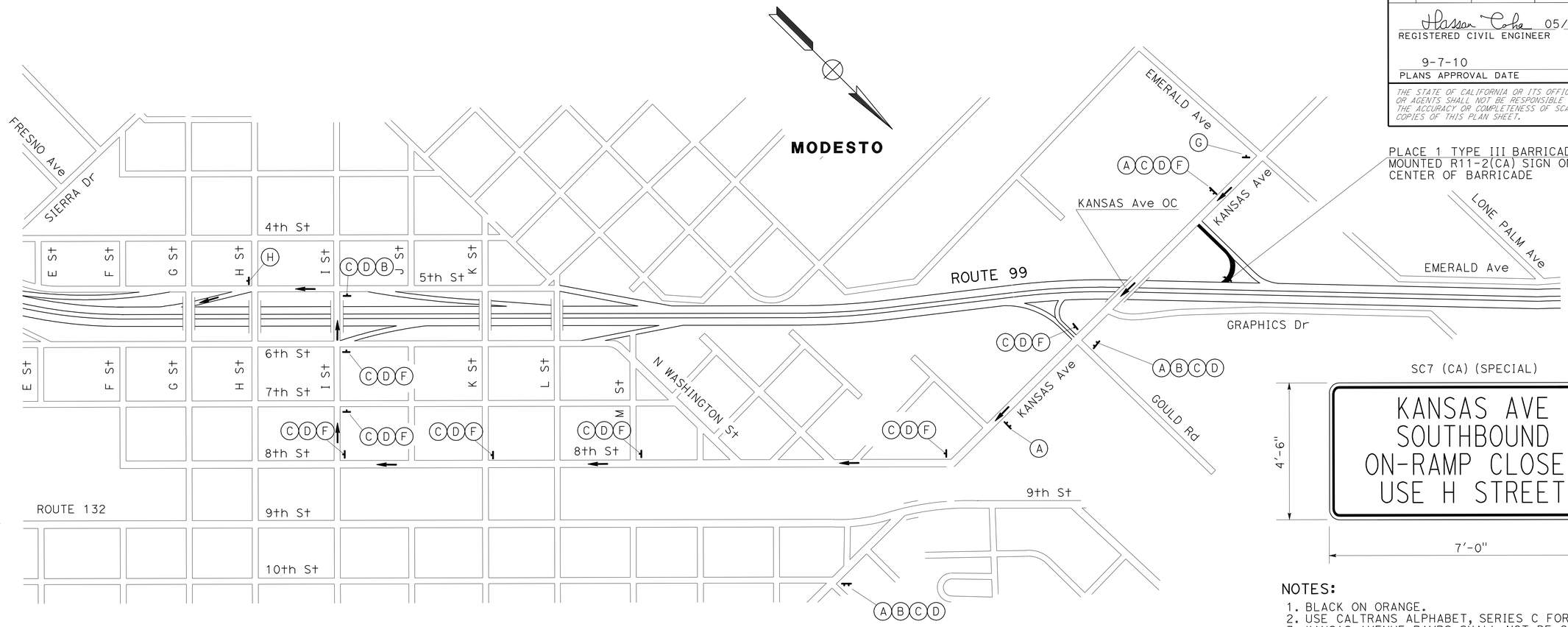

NOTES:

1. BLACK ON ORANGE.
2. USE CALTRANS ALPHABET, SERIES C FOR LETTERING.
3. KANSAS AVENUE RAMPS SHALL NOT BE CLOSED SIMULTANEOUSLY.

CONSTRUCTION AREA SIGNS

	SIGN CODE	PANEL SIZE	SIGN MESSAGE	No. OF POST AND SIZE	No. OF SIGNS
(A)	SC7 (CA) (SPECIAL)	84" x 54"	KANSAS AVE SOUTHBOUND ON-RAMP CLOSED USE H STREET	2 - 6" x 6"	3
(B)	M4-10 (Lt)	48" x 18"	DETOUR DETOUR ARROW	1 - 4" x 4"	2
(C)	G28-1 (CA) (99)	25" x 25"	99 STATE ROUTE MARKER (99)	1 - 4" x 4"	11
(D)	M3-3	24" x 18"	SOUTH SOUTH	1 - 4" x 4"	11
(E)	M4-10 (Rt)	48" x 18"	DETOUR DETOUR ARROW	1 - 4" x 4"	2
(F)	SC3 (CA)	48" x 18"	DETOUR DETOUR WITH ARROW	1 - 4" x 4"	7
(G)	W20-2	36" x 36"	DETOUR AHEAD DETOUR AHEAD	1 - 4" x 6"	1
(H)	M4-8a	24" x 18"	END DETOUR END DETOUR	1 - 4" x 4"	1
(W)	R11-2(CA)	48" x 30"	RAMP CLOSED RAMP CLOSED	ON BARRICADE	1

KANSAS AVE SB ON-RAMP (LOCATION 8)

THIS PLAN ACCURATE FOR TRAFFIC HANDLING WORK ONLY.

TRAFFIC HANDLING PLAN
(DETOUR LAYOUT FOR RAMP CLOSURE)

NO SCALE **TH-8**

STATE OF CALIFORNIA - DEPARTMENT OF TRANSPORTATION
Caltrans 06-TRAFFIC DESIGN

FUNCTIONAL SUPERVISOR: MOHAMMED QATAMI
CALCULATED-DESIGNED BY: FERNANDO LOPEZ
CHECKED BY: HASSAN TAHA
REVISED BY
DATE REVISED

LAST REVISION 05-24-10
DATE PLOTTED => 27-SEP-2010
TIME PLOTTED => 10:52

BORDER LAST REVISED 4/11/2008
RELATIVE BORDER SCALE IS IN INCHES 0 1 2 3
USERNAME => trmikesl
DGN FILE => a0A671md008.dgn
CU 06385
EA 0A6711

Dist	COUNTY	ROUTE	POST MILES TOTAL PROJECT	SHEET No.	TOTAL SHEETS
10	Sta	99	15.1/17.0	90	176

Hassan Taha 05/24/10
REGISTERED CIVIL ENGINEER DATE

9-7-10
PLANS APPROVAL DATE

REGISTERED PROFESSIONAL ENGINEER HASSAN M. TAHA No. 60130 Exp 06/30/10 CIVIL STATE OF CALIFORNIA

THE STATE OF CALIFORNIA OR ITS OFFICERS OR AGENTS SHALL NOT BE RESPONSIBLE FOR THE ACCURACY OR COMPLETENESS OF SCANNED COPIES OF THIS PLAN SHEET.

CONSTRUCTION AREA SIGNS

	SIGN CODE	PANEL SIZE	SIGN MESSAGE	No. OF POST AND SIZE	No. OF SIGNS
(A)	SC7 (CA) (SPECIAL)	84" x 42"	CENTRAL DISTRICT OFF-RAMP CLOSED USE 6th STREET	2 - 6" x 6"	1
(B)	SC3 (CA)	48" x 18"	DETOUR WITH ARROW	1 - 4" x 4"	3
(C)	W20-2	36" x 36"	DETOUR AHEAD	1 - 4" x 6"	1
(D)	M4-10 (Lt)	48" x 18"	DETOUR ARROW	1 - 4" x 4"	3
(H)	M4-8a	24" x 18"	END DETOUR	1 - 4" x 4"	1
(W)	R11-2(CA)	48" x 30"	RAMP CLOSED	ON BARRICADE	1

(A) SC7 (CA) (SPECIAL)

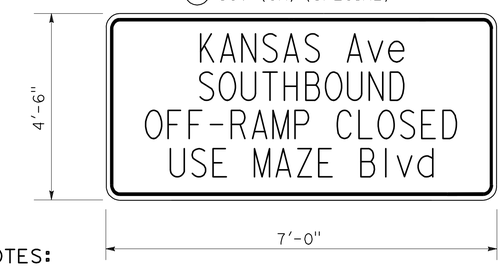

NOTES:
1. BLACK ON ORANGE.
2. USE CALTRANS ALPHABET, SERIES C FOR LETTERING.
3. KANSAS AVENUE RAMPS SHALL NOT BE CLOSED SIMULTANEOUSLY.

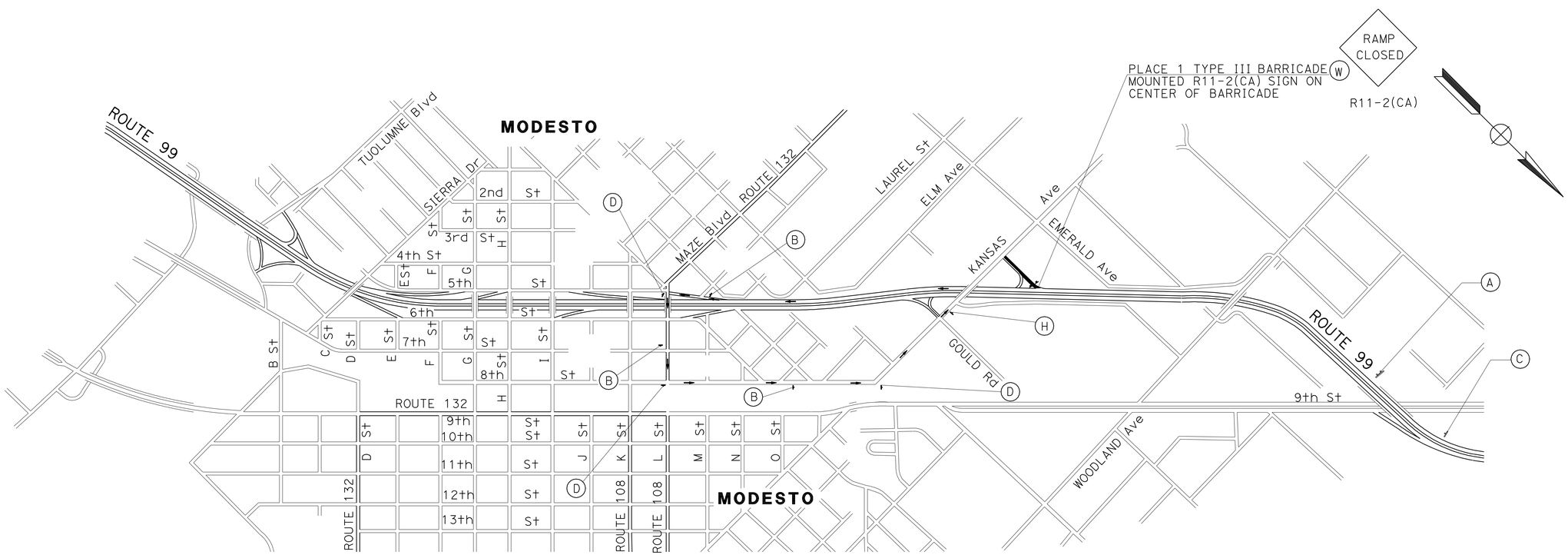

KANSAS Ave SB OFF-RAMP (LOCATION 9)

TRAFFIC HANDLING PLAN
(DETOUR LAYOUT FOR RAMP CLOSURE)

NO SCALE

TH-9

THIS PLAN ACCURATE FOR TRAFFIC HANDLING WORK ONLY.

STATE OF CALIFORNIA - DEPARTMENT OF TRANSPORTATION
Caltrans® 06-TRAFFIC DESIGN

FUNCTIONAL SUPERVISOR: MOHAMMED QATAMI
CALCULATED-DESIGNED BY: FERNANDO LOPEZ
CHECKED BY: HASSAN TAHA
REVISED BY
DATE REVISED

LAST REVISION 05-24-10
DATE PLOTTED => 27-SEP-2010
TIME PLOTTED => 10:53

Dist	COUNTY	ROUTE	POST MILES TOTAL PROJECT	SHEET No.	TOTAL SHEETS
10	Sta	99	15.1/17.0	91	176

REGISTERED CIVIL ENGINEER 05/24/10 DATE

9-7-10
PLANS APPROVAL DATE

REGISTERED PROFESSIONAL ENGINEER HASSAN M. TAHA No. 60130 Exp 06/30/10 CIVIL STATE OF CALIFORNIA

THE STATE OF CALIFORNIA OR ITS OFFICERS OR AGENTS SHALL NOT BE RESPONSIBLE FOR THE ACCURACY OR COMPLETENESS OF SCANNED COPIES OF THIS PLAN SHEET.

LEGEND

- ● Channelizer(surface mounted)
- ⊢ Temporary Sign

NOTES:

Unless otherwise specified in the special provisions, all temporary warning signs shall have black legend on orange background.

California code are designated by (CA). Otherwise, Federal (MUTCD) codes are shown.

The existing "EXIT" sign in the gore area shall be covered during ramp closures.

BARRICADES

SHEET No.	BARRICADE TYPE III EA
TH-1	3
TH-2	3
TH-3	3
TH-4	3
TH-5	3
TH-6	3
TH-7	3
TH-8	3
TH-9	3
TOTAL	27

CHANNELIZER (SURFACE MOUNTED)

LOCATION No.	CHANNELIZER (SURFACE MOUNTED) EA
1	3
2	16
3	3
4	16
5	16
6	3
7	3
8	3
9	16
TOTAL	79

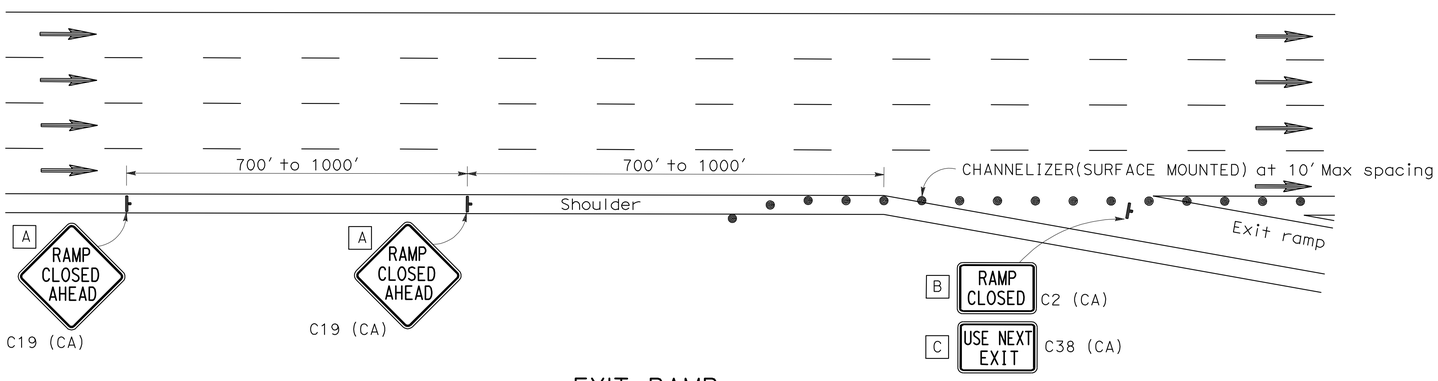

EXIT RAMP

LOCATION 2,4,5,6, AND 9

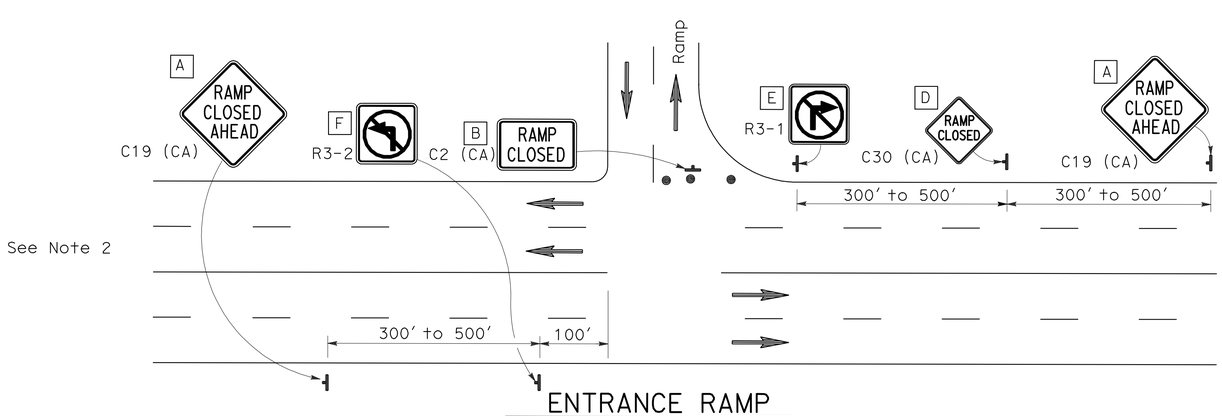

ENTRANCE RAMP

LOCATION 1,3,7 AND 8

STATIONARY MOUNTED CONSTRUCTION AREA SIGNS (TRAFFIC HANDLING)

	SIGN CODE	PANEL SIZE	SIGN MESSAGE	No. OF POST AND SIZE	No. OF SIGNS
A	C19 (CA)	48" x 48"	RAMP CLOSED AHEAD	1- 6" x 6"	18
B	C2 (CA)	48" x 30"	RAMP CLOSED	1 - 4" x 6"	9
C	C38 (CA)	30" x 30"	USE NEXT EXIT	1 - 4" x 4"	5
D	C30 (CA)	36" x 36"	RAMP CLOSED	1 - 4" x 4"	4
E	R3-1	30" x 30"	NO LEFT TURN	1 - 4" x 4"	4
F	R3-2	30" x 30"	NO RIGHT TURN	1 - 4" x 4"	4

TRAFFIC HANDLING PLAN AND QUANTYTIES
(TYPICAL RAMP CLOSURE)

NO SCALE

TH-10

THIS PLAN ACCURATE FOR TRAFFIC HANDLING WORK ONLY.

REVISED BY | DATE REVISED
FERNANDO LOPEZ | HASSAN TAHA
CALCULATED-DESIGNED BY | CHECKED BY
FUNCTIONAL SUPERVISOR: MOHAMMED QATAMI

STATE OF CALIFORNIA - DEPARTMENT OF TRANSPORTATION
Caltrans 06-TRAFFIC DESIGN

LAST REVISION 05-24-10 | DATE PLOTTED => 08-SEP-2010 | TIME PLOTTED => 11:18

Dist	COUNTY	ROUTE	POST MILES TOTAL PROJECT	SHEET No.	TOTAL SHEETS
10	Sta	99	15.1/17.0	92	176

Hassan Taha 05/24/10
REGISTERED CIVIL ENGINEER DATE

9-7-10
PLANS APPROVAL DATE

REGISTERED PROFESSIONAL ENGINEER HASSAN M. TAHA No. 60130 Exp. 06/30/10 CIVIL STATE OF CALIFORNIA

THE STATE OF CALIFORNIA OR ITS OFFICERS OR AGENTS SHALL NOT BE RESPONSIBLE FOR THE ACCURACY OR COMPLETENESS OF SCANNED COPIES OF THIS PLAN SHEET.

STATIONARY MOUNTED CONSTRUCTION AREA SIGNS

SIGN	SIGN CODE	PANEL SIZE	SIGN MESSAGE	No. OF POST AND SIZE	No. OF SIGNS
A	C40(CA)	108" x 48"	TRAFFIC FINES DOUBLED IN CONSTRUCTION ZONES	2 - 6" x 6"	2
B	W20-1	48" x 48"	ROAD WORK AHEAD	1 - 6" x 6"	6
C	G20-2	48" x 24"	END ROAD WORK	1 - 6" x 6"	2
D	W20-1	36" x 36"	ROAD WORK AHEAD	1 - 4" x 6"	14
E	G20-2	36" x 18"	END ROAD WORK	1 - 4" x 4"	15

NOTES

1. EXACT SIGN LOCATIONS TO BE DETERMINED BY THE ENGINEER.
2. FOR ADDITIONAL CONSTRUCTION AREA SIGNS SEE TRAFFIC HANDLING PLANS SHEETS.

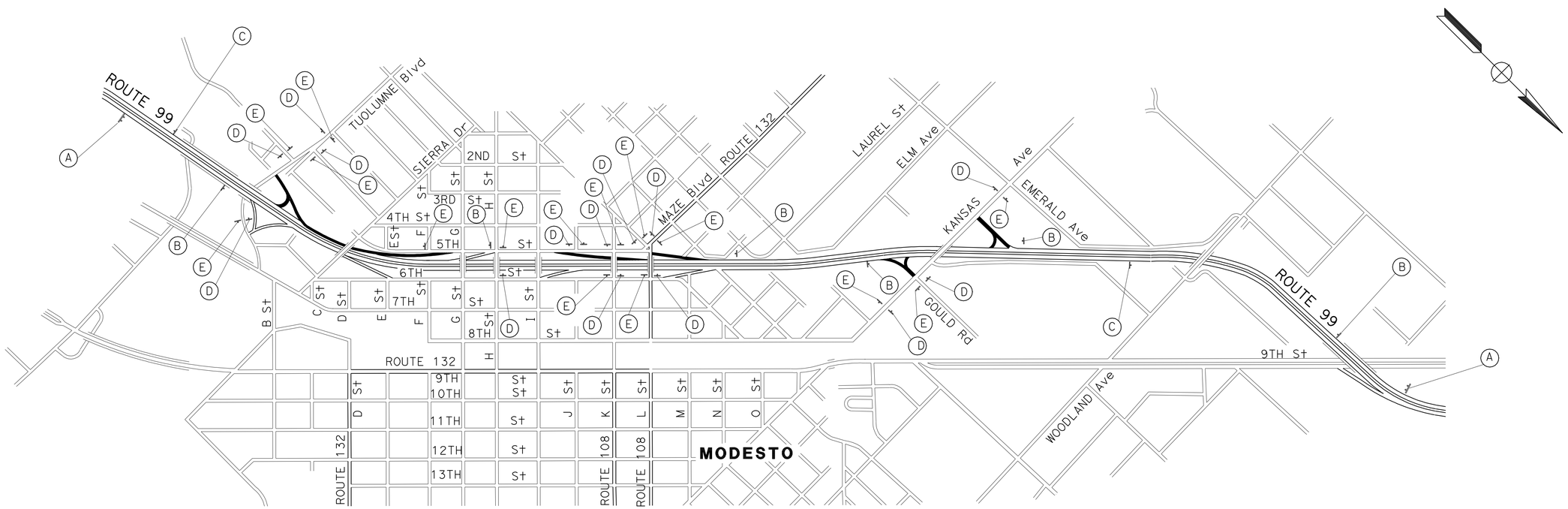

CONSTRUCTION AREA SIGNS

NO SCALE

CS-1

THIS PLAN ACCURATE FOR CONSTRUCTION AREA SIGN WORK ONLY

STATE OF CALIFORNIA - DEPARTMENT OF TRANSPORTATION
Caltrans 06-TRAFFIC DESIGN

FUNCTIONAL SUPERVISOR: MOHAMMED QATAMI
CALCULATED-DESIGNED BY: FERNANDO LOPEZ
CHECKED BY: HASSAN TAHA
REVISED BY / DATE REVISED

LAST REVISION 05-24-10
DATE PLOTTED => 27-SEP-2010
TIME PLOTTED => 10:53

BORDER LAST REVISED 4/11/2008
RELATIVE BORDER SCALE IS IN INCHES 0 1 2 3
USERNAME => trmikesl
DGN FILE => a0A6711a001.dgn
CU 06385
EA 0A6711

Dist	COUNTY	ROUTE	POST MILES TOTAL PROJECT	SHEET No.	TOTAL SHEETS
10	Sta	99	15.1/17.0	93	176

Hassan Taha 05/24/10
REGISTERED CIVIL ENGINEER DATE

9-7-10
PLANS APPROVAL DATE

REGISTERED PROFESSIONAL ENGINEER HASSAN M. TAHA No. 60130 Exp 06/30/10 CIVIL STATE OF CALIFORNIA

THE STATE OF CALIFORNIA OR ITS OFFICERS OR AGENTS SHALL NOT BE RESPONSIBLE FOR THE ACCURACY OR COMPLETENESS OF SCANNED COPIES OF THIS PLAN SHEET.

LEGEND:

- THERMOPLASTIC TRAFFIC STRIPE DETAIL No.
- THERMOPLASTIC PAVEMENT MARKING
- TYPE I(24') ARROW (THERMOPLASTIC PAVEMENT MARKING)
- TYPE III ARROW (THERMOPLASTIC PAVEMENT MARKING)
- TYPE II (R) ARROW (THERMOPLASTIC PAVEMENT MARKING)
- TYPE V ARROW (THERMOPLASTIC PAVEMENT MARKING)
- TYPE VI ARROW (THERMOPLASTIC PAVEMENT MARKING)
- E,F,G - DELINEATOR (CLASS I), TYPE AS SHOWN
- CHANGE OF PAVEMENT DELINEATION DETAIL
- DIRECTION OF TRAFFIC
- S = - DELINEATION SPACE
- P - OBJECT MARKER (TYPE AS SHOWN)
- GF - GUARD RAILING DELINEATOR (TYPE AS SHOWN)

- INSTALL OVERHEAD SIGN STRUCTURE
- ROADSIDE SIGN (ONE, TWO POST OR STELL POST)
- REMOVE OVERHEAD SIGN STRUCTURE
- RESET ROADSIDE SIGN
- REMOVE ROADSIDE SIGN
- No. OVERHEAD SIGN NUMBER
- No. ROADSIDE SIGN NUMBER
- No. LAMINATED WOOD POST ROADSIDE SIGNS

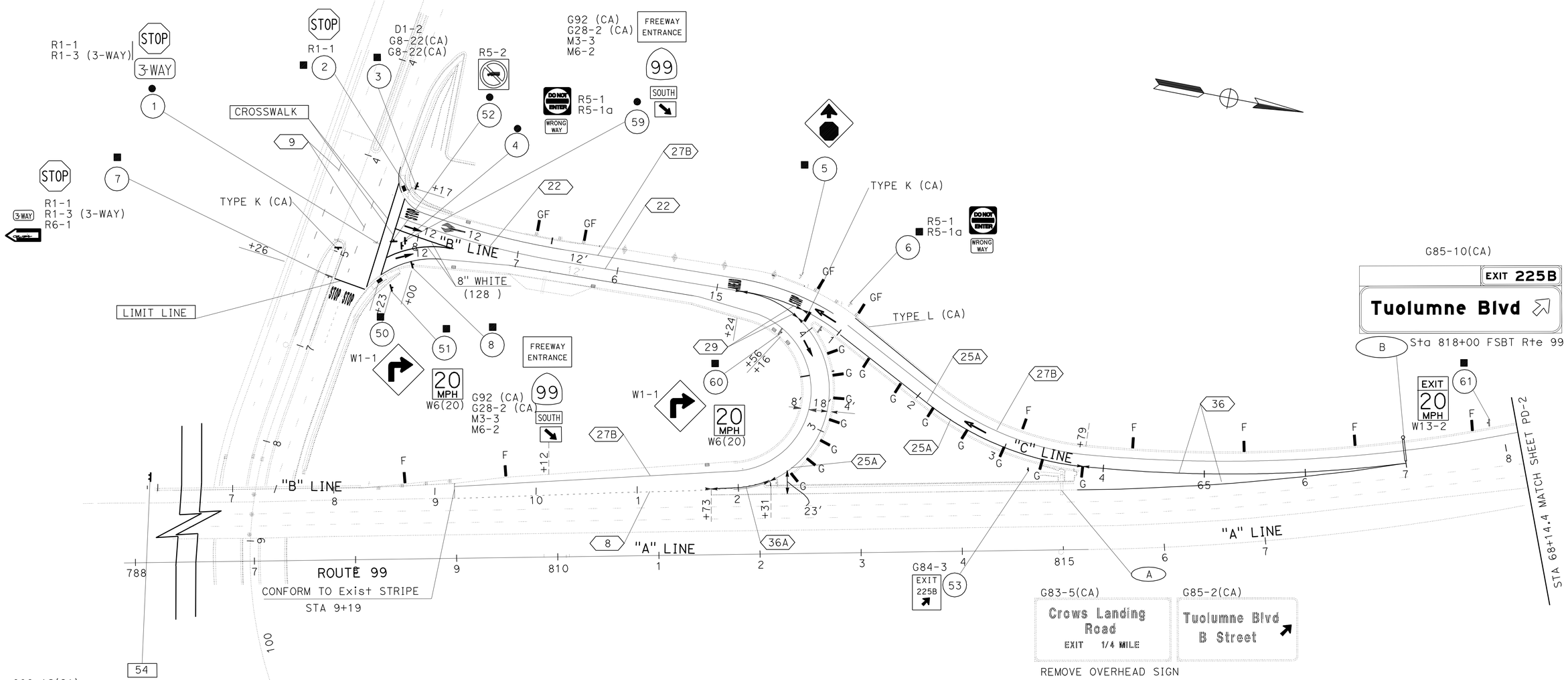

TUOLUMNE Blvd SB ON-RAMP (LOCATION 1)
TUOLUMNE Blvd SB OFF-RAMP (LOCATION 2)

PAVEMENT DELINEATION AND SIGNING PLAN

SCALE: 1" = 50'

PD-1

THIS PLAN ACCURATE FOR PAVEMENT DELINEATION AND SIGNING WORK ONLY.

STATE OF CALIFORNIA - DEPARTMENT OF TRANSPORTATION
Caltrans® 06-TRAFFIC DESIGN

FUNCTIONAL SUPERVISOR: MOHAMMED QATAMI
CALCULATED-DESIGNED BY: FERNANDO LOPEZ
CHECKED BY: HASSAN TAHA
REVISED BY / DATE REVISED

LAST REVISION: 05-24-10
DATE PLOTTED => 08-SEP-2010
TIME PLOTTED => 11:18

BORDER LAST REVISED 4/11/2008
RELATIVE BORDER SCALE IS IN INCHES 0 1 2 3
USERNAME => trmnguye
DGN FILE => a0A671na001.dgn
CU 06385
EA 0A6711

Dist	COUNTY	ROUTE	POST MILES TOTAL PROJECT	SHEET No.	TOTAL SHEETS
10	Sta	99	15.1/17.0	94	176

Hassan Taha 05/24/10
REGISTERED CIVIL ENGINEER DATE

9-7-10
PLANS APPROVAL DATE

REGISTERED PROFESSIONAL ENGINEER HASSAN M. TAHA No. 60130 Exp 06/30/10 CIVIL STATE OF CALIFORNIA

THE STATE OF CALIFORNIA OR ITS OFFICERS OR AGENTS SHALL NOT BE RESPONSIBLE FOR THE ACCURACY OR COMPLETENESS OF SCANNED COPIES OF THIS PLAN SHEET.

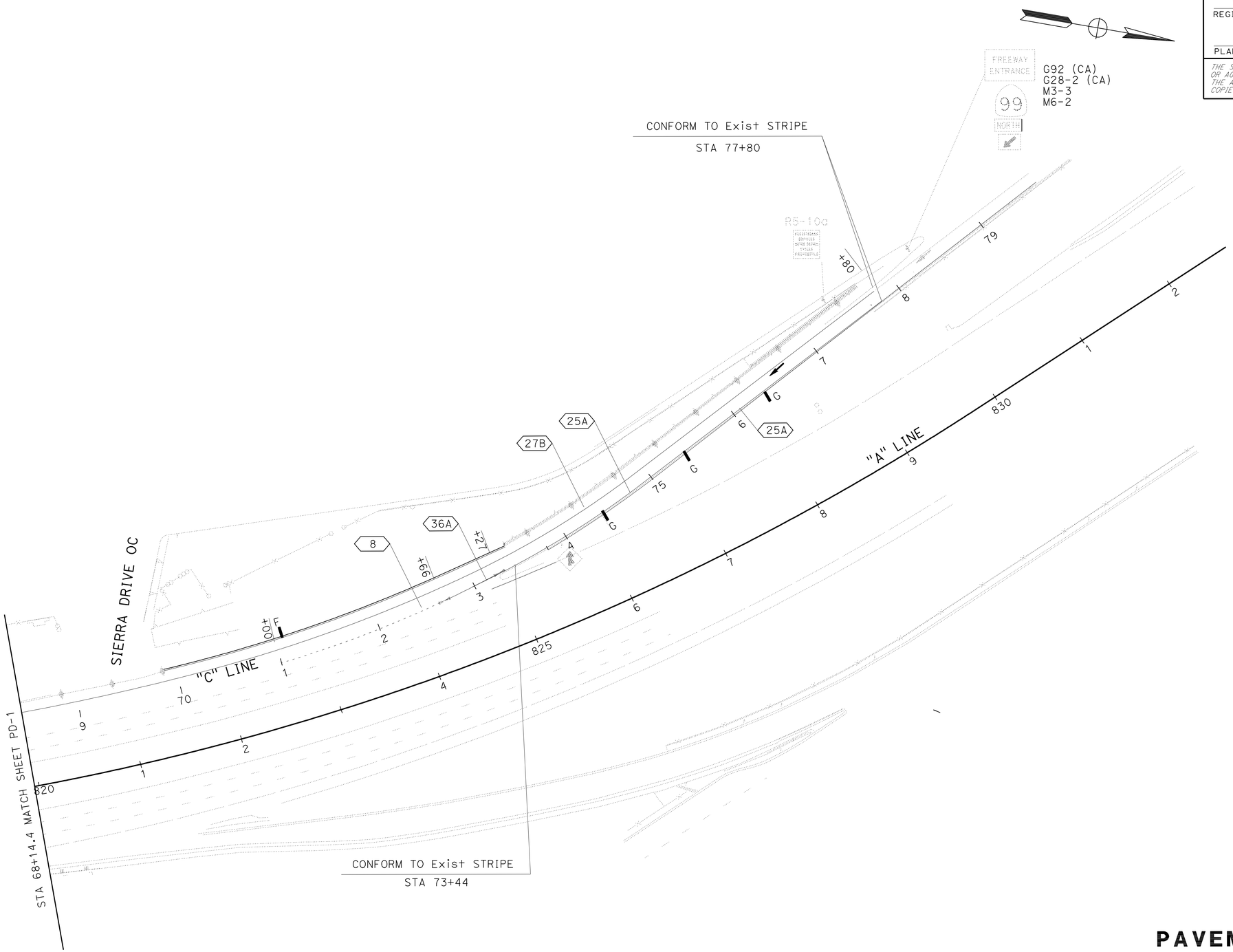

5TH/G STREET SB ON-RAMP (LOCATION 3)

THIS PLAN ACCURATE FOR PAVEMENT DELINEATION AND SIGNING WORK ONLY.

PAVEMENT DELINEATION AND SIGNING PLAN

SCALE: 1" = 50'

PD-2

REVISED BY	
DATE REVISED	
CALCULATED-DESIGNED BY	FERNANDO LOPEZ
CHECKED BY	HASSAN TAHA
FUNCTIONAL SUPERVISOR	MOHAMMED QATAMI

STATE OF CALIFORNIA - DEPARTMENT OF TRANSPORTATION
Caltrans® 06-TRAFFIC DESIGN

LAST REVISION 01-07-10 DATE PLOTTED => 08-SEP-2010 TIME PLOTTED => 11:18

Dist	COUNTY	ROUTE	POST MILES TOTAL PROJECT	SHEET No.	TOTAL SHEETS
10	Sta	99	15.1/17.0	95	176

Hassan Taha 05-13-10
REGISTERED CIVIL ENGINEER DATE

9-7-10
PLANS APPROVAL DATE

REGISTERED PROFESSIONAL ENGINEER HASSAN M. TAHA No. 60130 Exp 06/30/10 CIVIL STATE OF CALIFORNIA

THE STATE OF CALIFORNIA OR ITS OFFICERS OR AGENTS SHALL NOT BE RESPONSIBLE FOR THE ACCURACY OR COMPLETENESS OF SCANNED COPIES OF THIS PLAN SHEET.

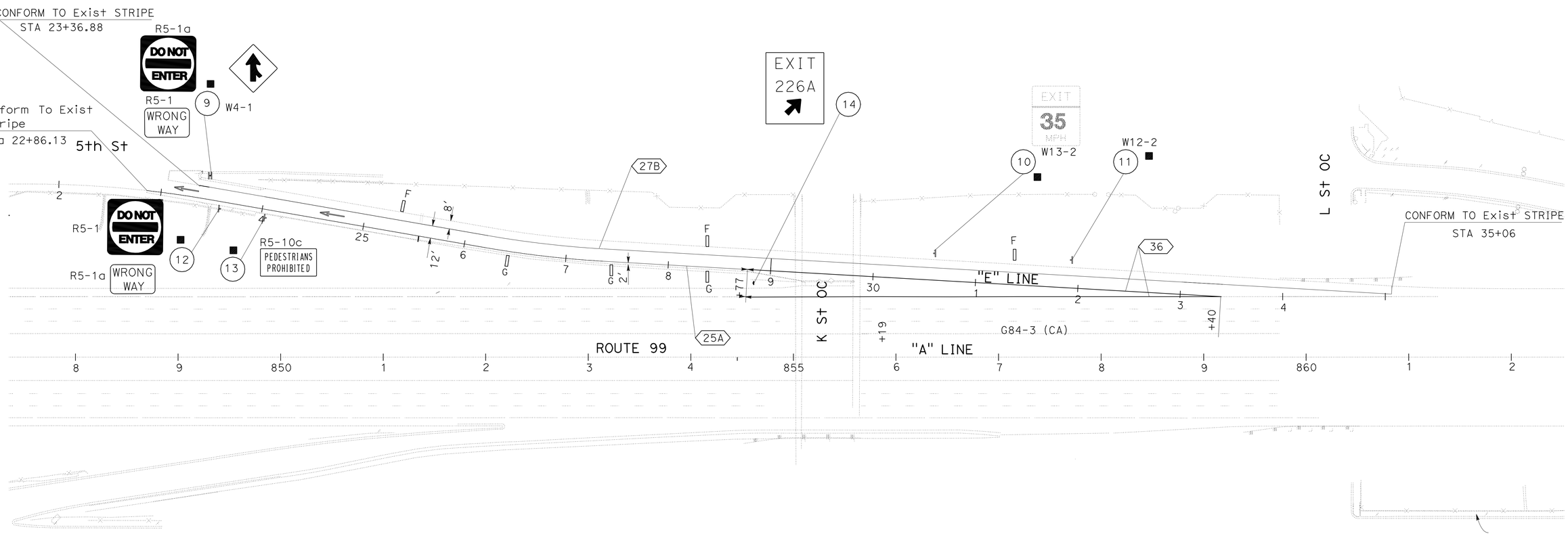

"I" STREET SOUTHBOUND OFF-RAMP (LOCATION 4)

THIS PLAN ACCURATE FOR PAVEMENT DELINEATION AND SIGNING WORK ONLY.

PAVEMENT DELINEATION AND SIGNING PLAN

SCALE: 1" = 50'

PD-3

REVISED BY	
DATE REVISED	
FERNANDO LOPEZ	HASSAN TAHA
CALCULATED-DESIGNED BY	CHECKED BY
FUNCTIONAL SUPERVISOR	MOHAMMED QATAMI

STATE OF CALIFORNIA - DEPARTMENT OF TRANSPORTATION
Caltrans
06-TRAFFIC DESIGN

LAST REVISION 05-24-10 | DATE PLOTTED => 08-SEP-2010 | TIME PLOTTED => 11:18

Dist	COUNTY	ROUTE	POST MILES TOTAL PROJECT	SHEET No.	TOTAL SHEETS
10	Sta	99	15.1/17.0	96	176

Hassan Taha 05-13-10
REGISTERED CIVIL ENGINEER DATE

9-7-10
PLANS APPROVAL DATE

REGISTERED PROFESSIONAL ENGINEER HASSAN M. TAHA No. 60130 Exp 06/30/10 CIVIL STATE OF CALIFORNIA

THE STATE OF CALIFORNIA OR ITS OFFICERS OR AGENTS SHALL NOT BE RESPONSIBLE FOR THE ACCURACY OR COMPLETENESS OF SCANNED COPIES OF THIS PLAN SHEET.

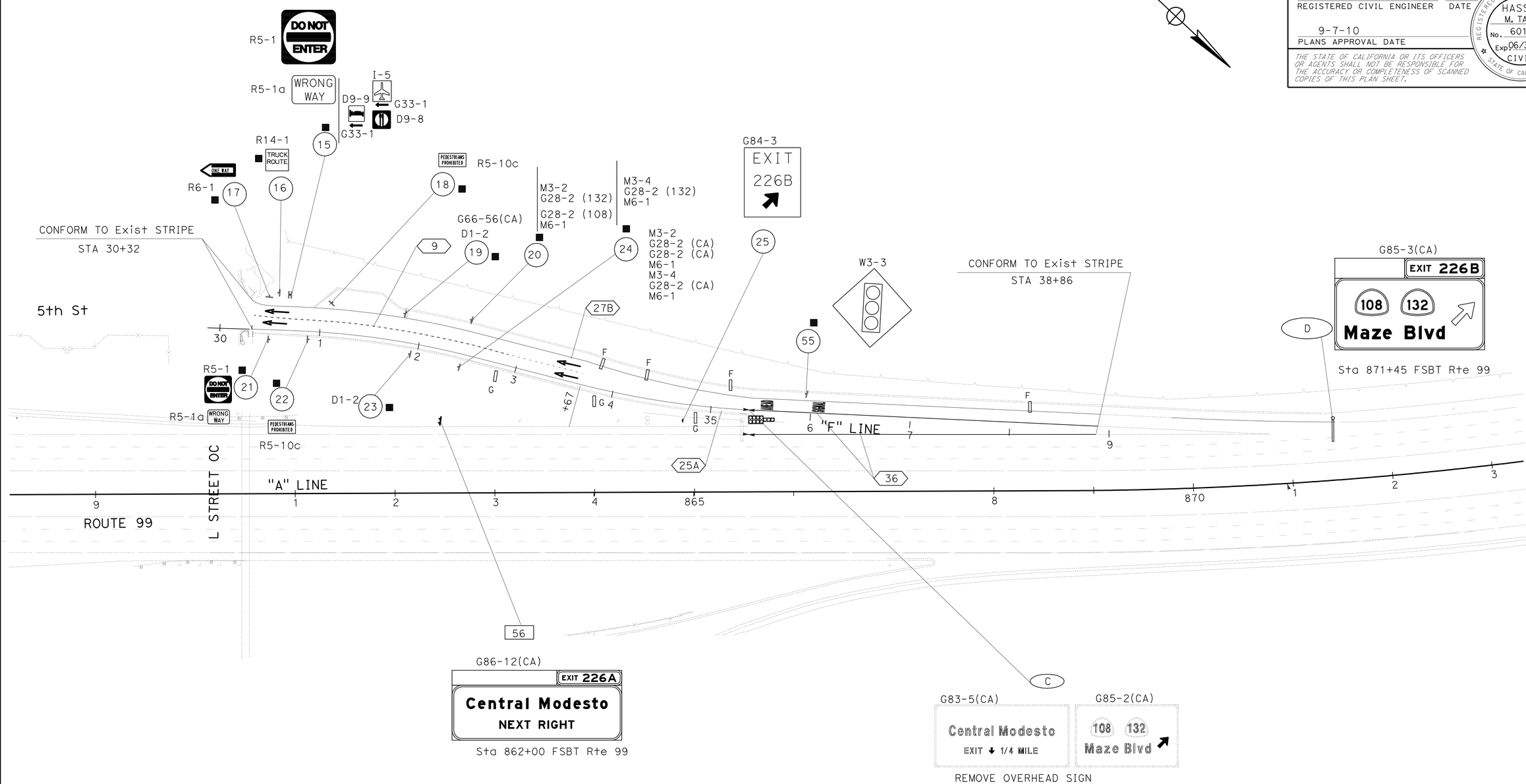

"L" STREET SB OFF-RAMP (LOCATION 5)

THIS PLAN ACCURATE FOR PAVEMENT DELINEATION AND SIGNING WORK ONLY.

PAVEMENT DELINEATION AND SIGNING PLAN

SCALE: 1" = 50'

PD-4

REVISED BY	DATE REVISED

CALCULATED-DESIGNED BY: FERNANDO LOPEZ
CHECKED BY: HASSAN TAHA
FUNCTIONAL SUPERVISOR: MOHAMMED QATAMI

STATE OF CALIFORNIA - DEPARTMENT OF TRANSPORTATION
Caltrans
06-TRAFFIC DESIGN

LAST REVISION 02-22-10
DATE PLOTTED => 08-SEP-2010
TIME PLOTTED => 11:18

Dist	COUNTY	ROUTE	POST MILES TOTAL PROJECT	SHEET No.	TOTAL SHEETS
10	Sta	99	15.1/17.0	97	176

REGISTERED CIVIL ENGINEER 05/24/10 DATE

9-7-10
PLANS APPROVAL DATE

REGISTERED PROFESSIONAL ENGINEER HASSAN M. TAHA No. 60130 Exp. 06/30/10 CIVIL STATE OF CALIFORNIA

THE STATE OF CALIFORNIA OR ITS OFFICERS OR AGENTS SHALL NOT BE RESPONSIBLE FOR THE ACCURACY OR COMPLETENESS OF SCANNED COPIES OF THIS PLAN SHEET.

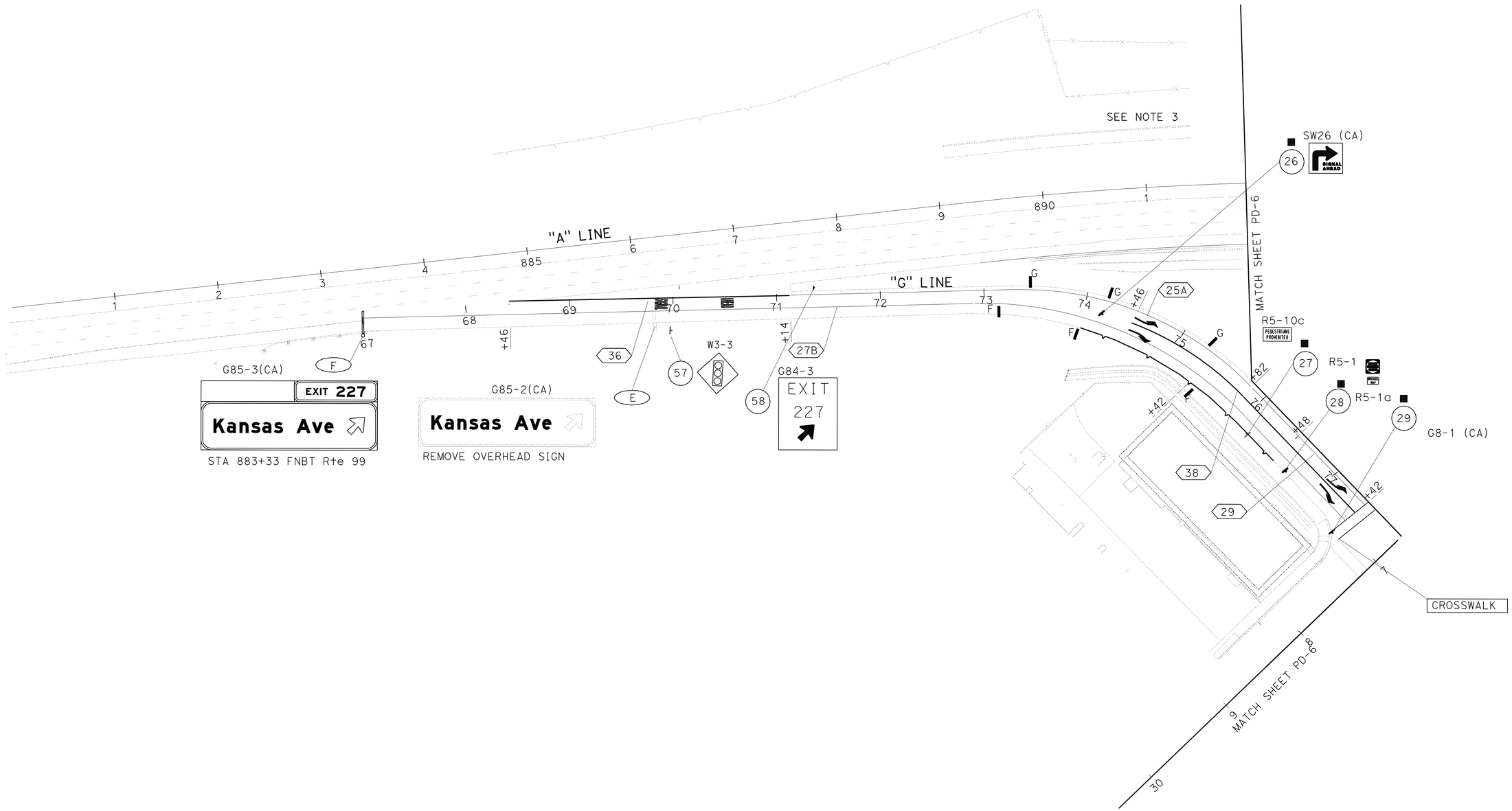

KANSAS AVENUE NB OFF-RAMP (LOCATION 6)

THIS PLAN ACCURATE FOR PAVEMENT DELINEATION AND SIGNING WORK ONLY.

PAVEMENT DELINEATION AND SIGNING PLAN

SCALE: 1" = 50'

PD-5

CALCULATED-DESIGNED BY	FERNANDO LOPEZ
CHECKED BY	HASSAN TAHA
FUNCTIONAL SUPERVISOR	MOHAMMED QATAMI
REVISED BY	
DATE REVISED	

STATE OF CALIFORNIA - DEPARTMENT OF TRANSPORTATION
Caltrans 06- TRAFFIC DESIGN

LAST REVISION 05-24-10
DATE PLOTTED => 08-SEP-2010
TIME PLOTTED => 11:18

Dist	COUNTY	ROUTE	POST MILES TOTAL PROJECT	SHEET No.	TOTAL SHEETS
10	Sta	99	15.1/17.0	98	176

REGISTERED CIVIL ENGINEER 05/24/10 DATE

9-7-10
PLANS APPROVAL DATE

REGISTERED PROFESSIONAL ENGINEER HASSAN M. TAHA No. 60130 Exp. 06/30/10 CIVIL STATE OF CALIFORNIA

THE STATE OF CALIFORNIA OR ITS OFFICERS OR AGENTS SHALL NOT BE RESPONSIBLE FOR THE ACCURACY OR COMPLETENESS OF SCANNED COPIES OF THIS PLAN SHEET.

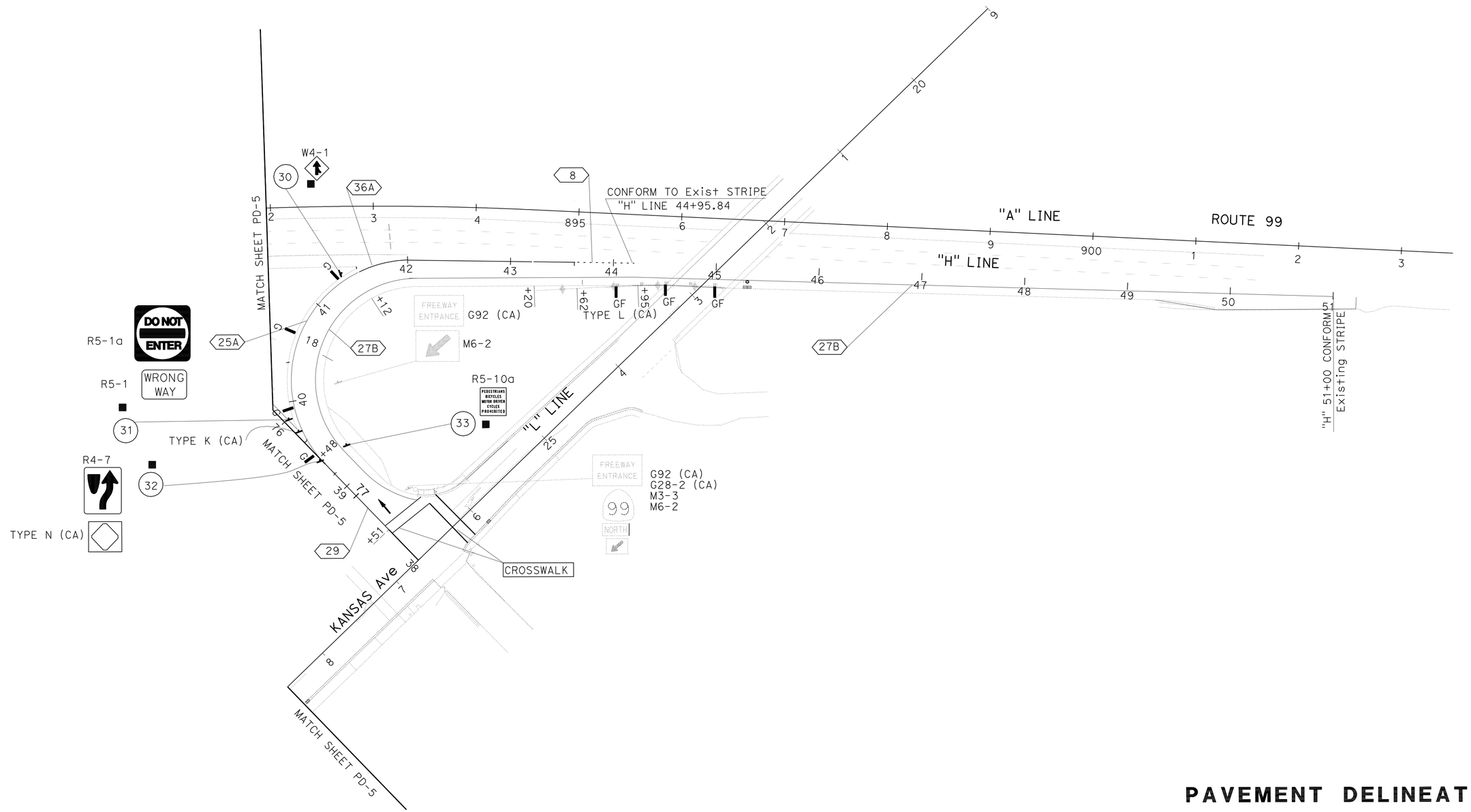

KANSAS AVENUE NB ON-RAMP (LOCATION 7)

THIS PLAN ACCURATE FOR PAVEMENT DELINEATION AND SIGNING WORK ONLY.

PAVEMENT DELINEATION AND SIGNING PLAN

SCALE: 1" = 50′ **PD-6**

REVISED BY	FERNANDO LOPEZ
DATE REVISED	MAZIN AL-ALI
CALCULATED-DESIGNED BY	FUNCTIONAL SUPERVISOR
CHECKED BY	MOHAMMED QATAMI

STATE OF CALIFORNIA - DEPARTMENT OF TRANSPORTATION
Caltrans 06-TRAFFIC DESIGN

LAST REVISION 02-24-10 | DATE PLOTTED => 08-SEP-2010 | TIME PLOTTED => 11:18

BORDER LAST REVISED 4/11/2008 | RELATIVE BORDER SCALE IS IN INCHES 0 1 2 3 | USERNAME => trmnguye | DGN FILE => a0A671na006.dgn | CU 06253 | EA 0A6711

Dist	COUNTY	ROUTE	POST MILES TOTAL PROJECT	SHEET No.	TOTAL SHEETS
10	Sta	99	15.1/17.0	99	176

REGISTERED CIVIL ENGINEER 05/24/10 DATE

9-7-10
PLANS APPROVAL DATE

REGISTERED PROFESSIONAL ENGINEER HASSAN M. TAHA No. 60130 Exp. 06/30/10 CIVIL STATE OF CALIFORNIA

THE STATE OF CALIFORNIA OR ITS OFFICERS OR AGENTS SHALL NOT BE RESPONSIBLE FOR THE ACCURACY OR COMPLETENESS OF SCANNED COPIES OF THIS PLAN SHEET.

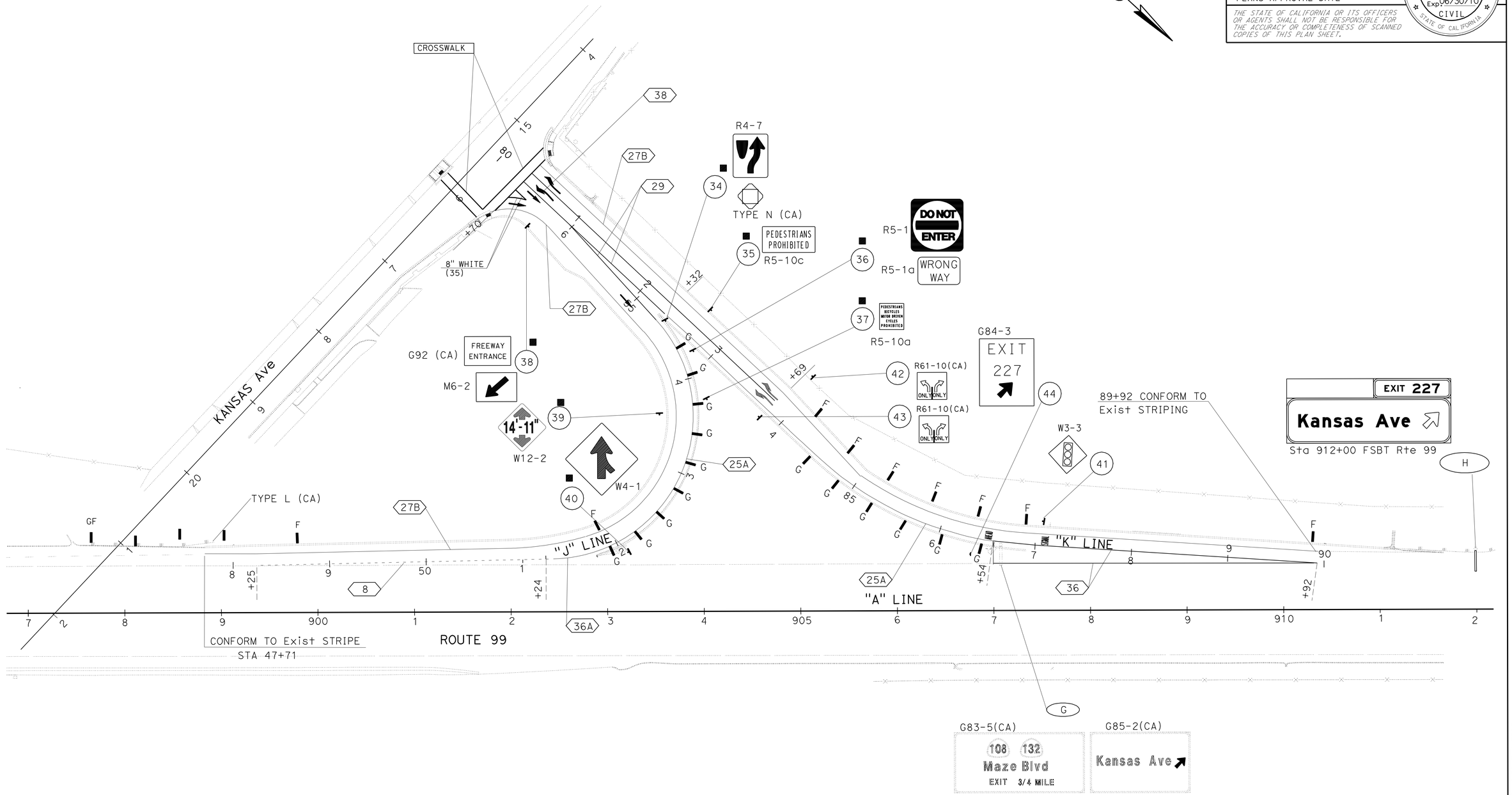

KANSAS Ave SB ON-RAMP(LOCATION 8)
KANSAS Ave SB OFF-RAMP (LOCATION 9)

THIS PLAN ACCURATE FOR PAVEMENT DELINEATION AND SIGNING WORK ONLY.

PAVEMENT DELINEATION AND SIGNING PLAN

SCALE: 1" = 50'

PD-7

STATE OF CALIFORNIA - DEPARTMENT OF TRANSPORTATION
Caltrans®
06-TRAFFIC DESIGN

FUNCTIONAL SUPERVISOR: MOHAMMED QATAMI
CALCULATED-DESIGNED BY: FERNANDO LOPEZ
CHECKED BY: HASSAN TAHA
REVISED BY
DATE REVISED

LAST REVISION 02-24-10
DATE PLOTTED => 08-SEP-2010
TIME PLOTTED => 11:19

BORDER LAST REVISED 4/11/2008
RELATIVE BORDER SCALE IS IN INCHES 0 1 2 3
USERNAME => trmnguye
DGN FILE => a0A671na007.dgn
CU 06253
EA 0A6711

Dist	COUNTY	ROUTE	POST MILES TOTAL PROJECT	SHEET No.	TOTAL SHEETS
10	Sta	99	15.1/17.0	100	176

Hassan Taha 05/24/10
REGISTERED CIVIL ENGINEER DATE

9-7-10
PLANS APPROVAL DATE

REGISTERED PROFESSIONAL ENGINEER HASSAN M. TAHA No. 60130 Exp. 06/30/10 CIVIL STATE OF CALIFORNIA

THE STATE OF CALIFORNIA OR ITS OFFICERS OR AGENTS SHALL NOT BE RESPONSIBLE FOR THE ACCURACY OR COMPLETENESS OF SCANNED COPIES OF THIS PLAN SHEET.

PAVEMENT DELINEATION QUANTITIES

SHEET No.	LOCATION	DETAIL No.	PAVEMENT MARKER (RETROREFLECTIVE) TYPE C	TYPE G	TYPE H	THERMOPLASTIC TRAFFIC STRIPE 8" SOLID	4" SOLID	4" BROKEN (36-12)	4" BROKEN (17-7)	THERMOPLASTIC PAVEMENT MARKING DESCRIPTION	SQFT
			EA	EA	EA	LF	LF	LF	LF		
PD-1	"B" 9+19 To 18+23	27B					904			1-CROSSWALK	185
	"B" 9+19 To 11+73	8							254	2-"STOP"	44
	"B" 14+16 To 15+24	36A		6		108				1-"AHEAD"	31
	"C 60+00 To 63+80	25A			17		380			3-TYPE I ARROW(24')	93
	"B" 9+19 To 18+23	27B					904			2-TYPE V ARROW	66
	"C" 60+00 To 68+14	27B					814			1-TYPE III (B) ARROW	73
	"B" 11+73 To 12+31	36A		3		58				8" WHITE(128)	128
	"B" 8+23 To 15+76	22	66				1506				
	"B" 2+31 To 4+16	25A			9		185				
	"B" 15+24 To 15+76	29	8				208				
	4+17 To 5+26	9		3					109		
	"C" 63+79 To 67+00	36		30		642	966				
							436				
PD-2	"C" 71+00 To 72+66	8							166		
	"C" 68+14 To 77+80	27B								2-TYPE I ARROW(24')	62
	"C" 72+66 To 73+27	36A		4		61					
	"C" 73+27 To 77+80	25A			20		453				
PD-3	"E" 23+37 To 35+06	27B					1169				
	"E" 22+86 To 28+77	25A			26		591				
	"E" 28+77 To 33+40	36		42		926					
PD-4	"F" 30+32 To 38+86	27B					854			4-TYPE I ARROW(24')	144
	"F" 30+32 To 35+37	25A			22		505			1-"SIGNAL"	32
	"F" 30+32 To 33+67	9		8					335	1-"AHEAD"	31
	"F" 36+37 To 38+86	36		24		498				1-CROSSWALK	88
PD-5	"G" 67+00 To 77+42	27B					1042			1-"SIGNAL"	
	"G" 67+46 To 71+14	36		34		736				1-"AHEAD"	31
	"G" 71+14 To 75+82	25A			21		468			4-TYPE III ARROW	126
	"G" 75+82 To 77+42	29	16				640				
	"G" 74+46 To 77+42	38		13		296					
PD-6	"H" 41+12 To 43+62	36		24		500				1-CROSSWALK	163
	"H" 43+62 To 44+95	8							133	1-TYPE I ARROW(24')	31
	"H" 38+51 To 51+00	27B					1249				
	"H" 38+51 To 39+48	29	12				388				
	"H" 39+48 To 21+12	25A									
PD-7	"J" 47+71 To 56+70	27B					899			2-CROSSWALK	280
	"J" 48+25 To 51+24	8							299	1-8" WHITE	24
	"J" 51+24 To 54+69	25A			15		345			4-TYPE III ARROW	168
	"J" 54+69 To 56+70	29	20				804			3-TYPE I ARROW(24')	93
	"J" 80+79 To 83+69	38		13		290				1-"SIGNAL"	32
	"J" 80+70 To 89+92	27B					922			1-"AHEAD"	31
SUBTOTAL			122	204	129	4115	16196		1296		1828
TOTAL				455		4115	16196		1296		1828

REVISED BY | DATE REVISED

FERNANDO LOPEZ | HASSAN TAHA

CALCULATED-DESIGNED BY | CHECKED BY

FUNCTIONAL SUPERVISOR: MOHAMMED QATAMI

STATE OF CALIFORNIA - DEPARTMENT OF TRANSPORTATION
Caltrans® 06-TRAFFIC DESIGN

PAVEMENT DELINEATION QUANTITIES

PDQ-1

LAST REVISION 05-24-10 | DATE PLOTTED => 08-SEP-2010 | TIME PLOTTED => 11:19