Dist	COUNTY	ROUTE	POST MILES TOTAL PROJECT	SHEET No.	TOTAL SHEETS
09	Mno	6	2.4/4.0	1	17

STATE OF CALIFORNIA **ACHSNH-P006(010)E**

DEPARTMENT OF TRANSPORTATION

PROJECT PLANS FOR CONSTRUCTION ON

STATE HIGHWAY

IN MONO COUNTY NEAR CHALFANT
FROM 0.3 MILE NORTH OF WHITE MOUNTAIN ESTATES ROAD
TO 0.4 MILE SOUTH OF HUNTER AVENUE

INDEX OF PLANS

SHEET No.	DESCRIPTION
1	TITLE AND LOCATION MAP
2	TYPICAL CROSS SECTIONS
3-5	LAYOUTS
6	CONSTRUCTION DETAILS
7	DRAINAGE PLAN AND PROFILE
8	CONSTRUCTION AREA SIGNS
9	PAVEMENT DELINEATION QUANTITIES
10-11	SIGN DETAILS
12	SIGN QUANTITIES
13	SUMMARY OF QUANTITIES
14-17	REVISED STANDARD PLANS

THE STANDARD PLANS LIST APPLICABLE TO THIS CONTRACT IS INCLUDED IN THE NOTICE TO BIDDERS AND SPECIAL PROVISIONS BOOK.

TO BE SUPPLEMENTED BY STANDARD PLANS DATED 2010

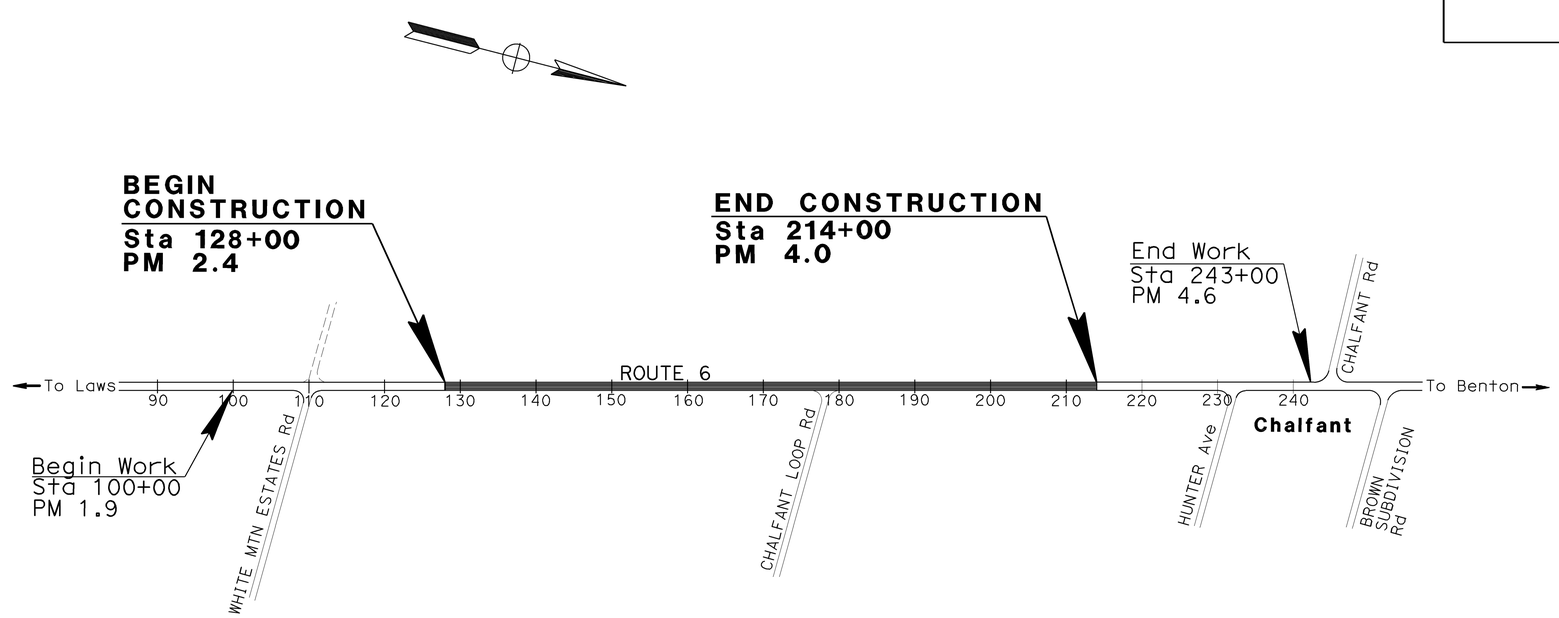

NO SCALE

THE CONTRACTOR SHALL POSSESS THE CLASS (OR CLASSES) OF LICENSE AS SPECIFIED IN THE "NOTICE TO BIDDERS."

Truman P. Denio 8-15-13
PROJECT ENGINEER DATE
REGISTERED CIVIL ENGINEER

REGISTERED PROFESSIONAL ENGINEER
TRUMAN DENIO
No. 34556
Exp. 9-30-15
CIVIL
STATE OF CALIFORNIA

August 19, 2013
PLANS APPROVAL DATE

THE STATE OF CALIFORNIA OR ITS OFFICERS OR AGENTS SHALL NOT BE RESPONSIBLE FOR THE ACCURACY OR COMPLETENESS OF SCANNED COPIES OF THIS PLAN SHEET.

CONTRACT No.	09-354304
PROJECT ID	0912000027

PROJECT MANAGER: BRIAN MC ELWAIN
DESIGN ENGINEER: TRUMAN DENIO

LAST REVISION 08-06-13 DATE PLOTTED => 24-OCT-2013 TIME PLOTTED => 14:44

Dist	COUNTY	ROUTE	POST MILES TOTAL PROJECT	SHEET No.	TOTAL SHEETS
09	Mno	6	2.4/4.0	2	17

Truman P. Denio 8-15-13
REGISTERED CIVIL ENGINEER DATE

8-19-13
PLANS APPROVAL DATE

REGISTERED PROFESSIONAL ENGINEER TRUMAN DENIO No. 34556 Exp 9-30-15 CIVIL STATE OF CALIFORNIA

THE STATE OF CALIFORNIA OR ITS OFFICERS OR AGENTS SHALL NOT BE RESPONSIBLE FOR THE ACCURACY OR COMPLETENESS OF SCANNED COPIES OF THIS PLAN SHEET.

NOTES:

1. DIMENSIONS OF THE PAVEMENT STRUCTURES (STRUCTURAL SECTIONS) ARE SUBJECT TO TOLERANCES SPECIFIED IN THE STANDARD SPECIFICATIONS.
2. SUPERELEVATIONS AS SHOWN OR AS DIRECTED BY THE ENGINEER.

ABBREVIATIONS:

SCL - SAWCUT LINE

TYPICAL STRUCTURAL SECTION

1 — 0.50′ HMA (TYPE A)
0.35′ Cl 2 AB

2 — 0.65′ HMA Typ

DESIGN DESIGNATION

ADT (2014) = 1910	D = 73.52%
ADT (2034) = 2110	TI_{20} = 10.5
DHV (2014) = 180	V = 65 mph
DHV (2034) = 190	T = 23%

PAVEMENT CLIMATE REGION

HIGH DESERT

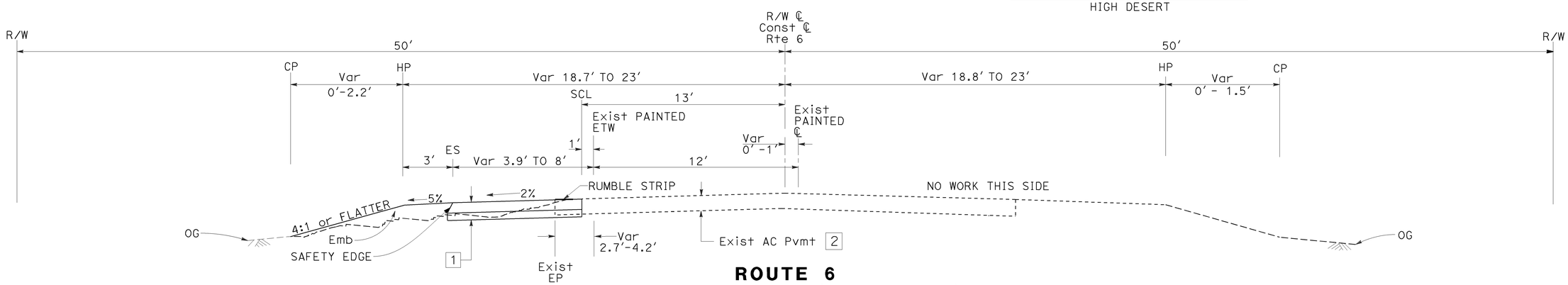

ROUTE 6
Sta 212+50 TO 214+00 (LEFT SIDE ONLY)
Sta 176+90 TO 178+76 (LEFT SIDE ONLY)

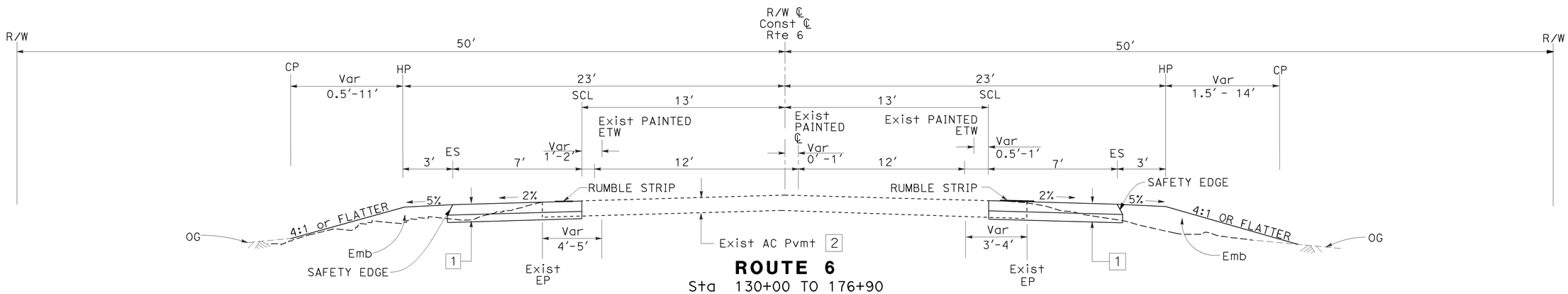

ROUTE 6
Sta 130+00 TO 176+90
Sta 178+76 TO 212+50

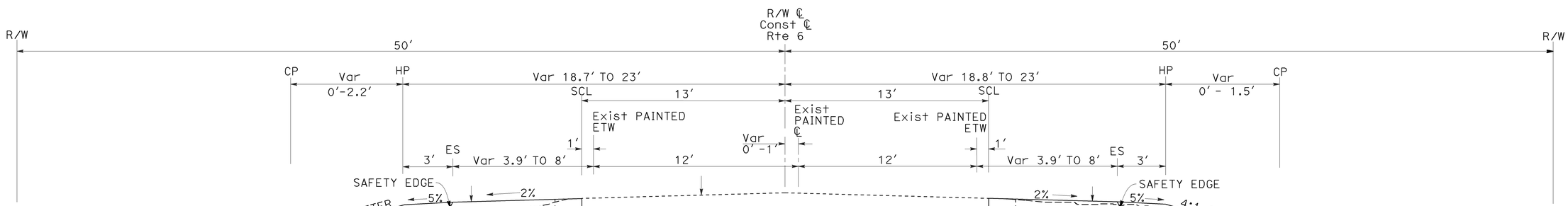

ROUTE 6
Sta 128+00 TO 130+00

TYPICAL CROSS SECTIONS X-1

NO SCALE

STATE OF CALIFORNIA - DEPARTMENT OF TRANSPORTATION
Caltrans® PROJECT COORDINATION
FUNCTIONAL SUPERVISOR: TRUMAN DENIO
CALCULATED-DESIGNED BY: KONSTANTIN GREKOV
CHECKED BY: TRUMAN DENIO
REVISED BY / DATE REVISED

LAST REVISION 08-19-13 | DATE PLOTTED => 23-SEP-2013 | TIME PLOTTED => 11:24

Dist	COUNTY	ROUTE	POST MILES TOTAL PROJECT	SHEET No.	TOTAL SHEETS
09	Mno	6	2.4/4.0	3	17

Truman P. Denio 8-15-13
REGISTERED CIVIL ENGINEER DATE

8-19-13
PLANS APPROVAL DATE

REGISTERED PROFESSIONAL ENGINEER
TRUMAN DENIO
No. 34556
Exp. 9-30-15
CIVIL
STATE OF CALIFORNIA

THE STATE OF CALIFORNIA OR ITS OFFICERS OR AGENTS SHALL NOT BE RESPONSIBLE FOR THE ACCURACY OR COMPLETENESS OF SCANNED COPIES OF THIS PLAN SHEET.

NOTE:
FOR ACCURATE RIGHT OF WAY DATA, CONTACT
RIGHT OF WAY ENGINEERING AT THE DISTRICT OFFICE.

LEGEND:
---------- - TRIM LINE

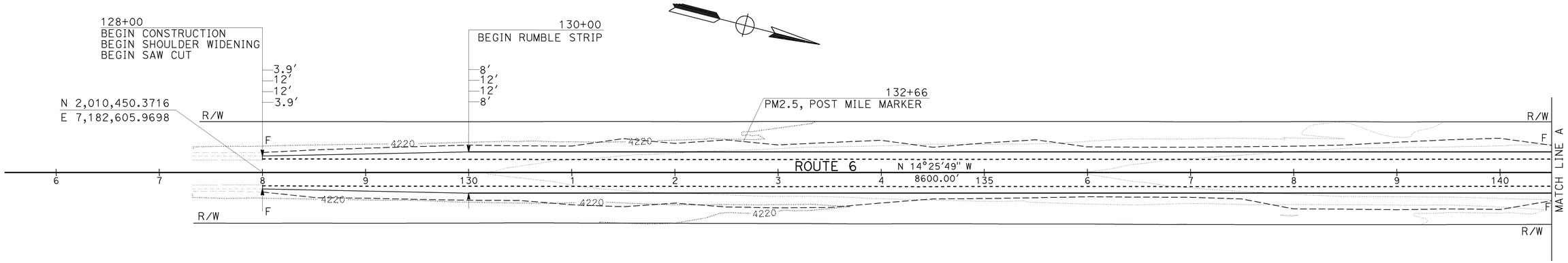

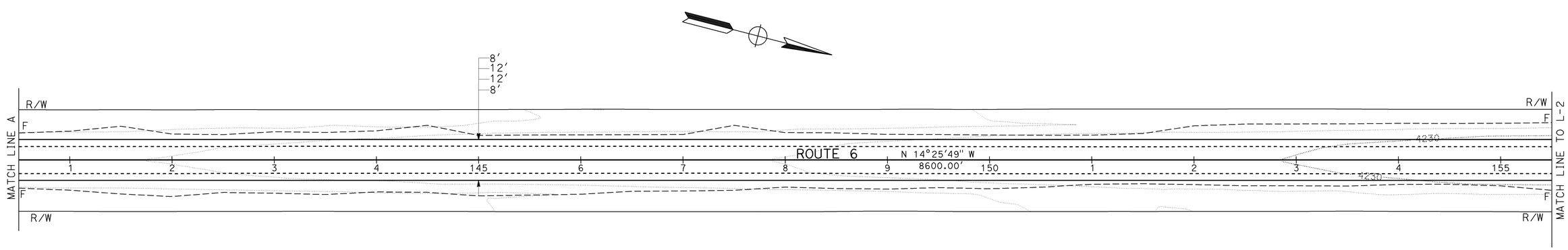

LAYOUT L-1
SCALE: 1" = 50′

STATE OF CALIFORNIA - DEPARTMENT OF TRANSPORTATION
Caltrans PROJECT COORDINATION

FUNCTIONAL SUPERVISOR: TRUMAN DENIO
CALCULATED-DESIGNED BY: KONSTANTIN GREKOV
CHECKED BY: TRUMAN DENIO
REVISED BY
DATE REVISED

LAST REVISION 08-06-13
DATE PLOTTED => 23-SEP-2013
TIME PLOTTED => 11:24

Dist	COUNTY	ROUTE	POST MILES TOTAL PROJECT	SHEET No.	TOTAL SHEETS
09	Mno	6	2.4/4.0	4	17

Truman P. Denio 8-15-13
REGISTERED CIVIL ENGINEER DATE

8-19-13
PLANS APPROVAL DATE

REGISTERED PROFESSIONAL ENGINEER
TRUMAN DENIO
No. 34556
Exp. 9-30-15
CIVIL
STATE OF CALIFORNIA

THE STATE OF CALIFORNIA OR ITS OFFICERS OR AGENTS SHALL NOT BE RESPONSIBLE FOR THE ACCURACY OR COMPLETENESS OF SCANNED COPIES OF THIS PLAN SHEET.

NOTE:
FOR ACCURATE RIGHT OF WAY DATA, CONTACT
RIGHT OF WAY ENGINEERING AT THE DISTRICT OFFICE.

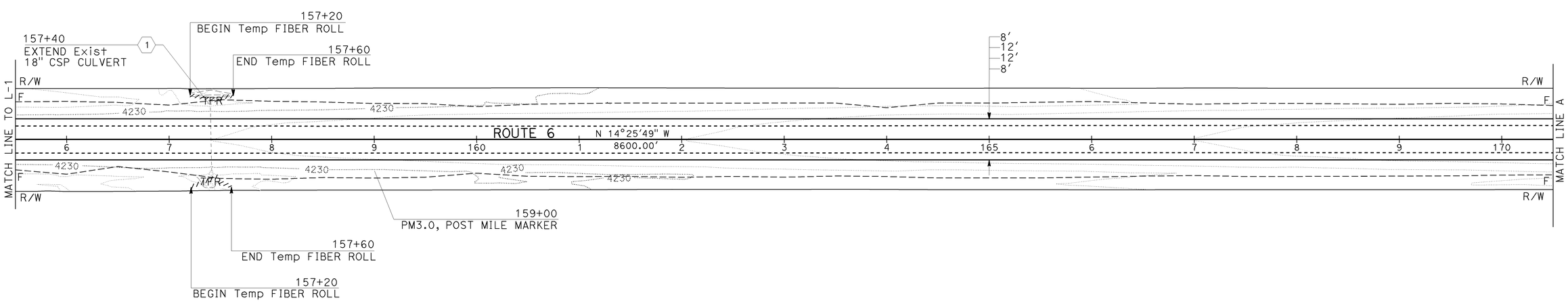

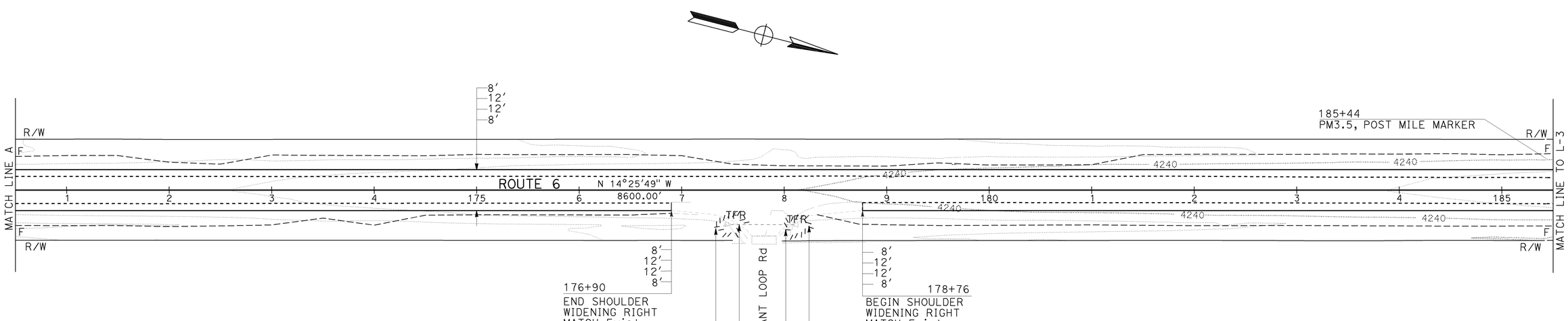

LAYOUT L-2
SCALE: 1" = 50′

STATE OF CALIFORNIA - DEPARTMENT OF TRANSPORTATION
Caltrans® PROJECT COORDINATION

FUNCTIONAL SUPERVISOR: TRUMAN DENIO
CALCULATED-DESIGNED BY: KONSTANTIN GREKOV
CHECKED BY: TRUMAN DENIO
REVISED BY / DATE REVISED

LAST REVISION 08-15-13
DATE PLOTTED => 23-SEP-2013
TIME PLOTTED => 11:24

Dist	COUNTY	ROUTE	POST MILES TOTAL PROJECT	SHEET No.	TOTAL SHEETS
09	Mno	6	2.4/4.0	5	17

Truman P. Denio 8-15-13
REGISTERED CIVIL ENGINEER DATE

8-19-13
PLANS APPROVAL DATE

REGISTERED PROFESSIONAL ENGINEER
TRUMAN DENIO
No. 34556
Exp. 9-30-15
CIVIL
STATE OF CALIFORNIA

THE STATE OF CALIFORNIA OR ITS OFFICERS OR AGENTS SHALL NOT BE RESPONSIBLE FOR THE ACCURACY OR COMPLETENESS OF SCANNED COPIES OF THIS PLAN SHEET.

NOTE:
FOR ACCURATE RIGHT OF WAY DATA, CONTACT
RIGHT OF WAY ENGINEERING AT THE DISTRICT OFFICE.

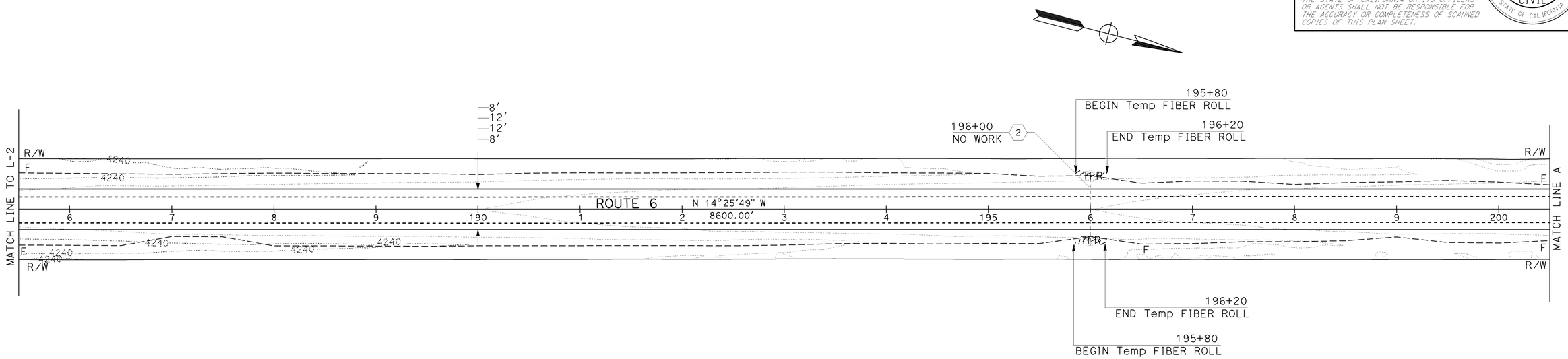

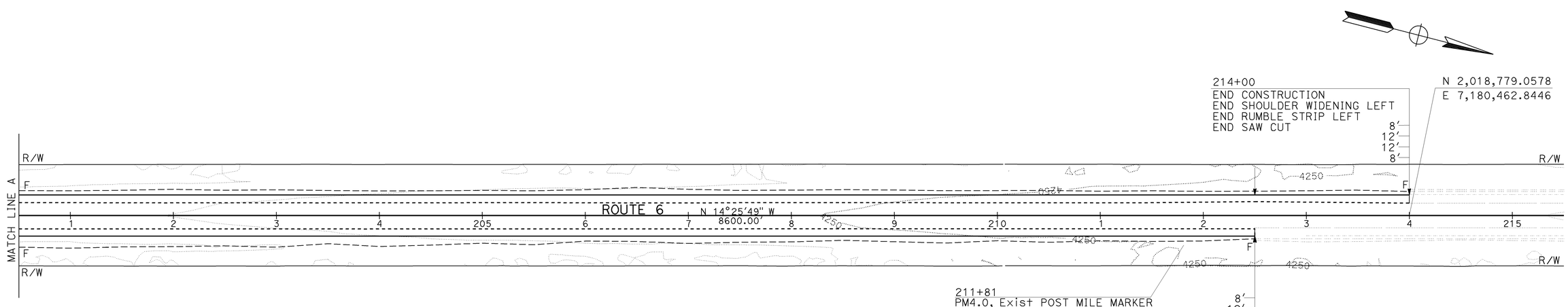

LAYOUT L-3
SCALE: 1" = 50′

STATE OF CALIFORNIA - DEPARTMENT OF TRANSPORTATION
Caltrans® PROJECT COORDINATION

FUNCTIONAL SUPERVISOR: TRUMAN DENIO
CALCULATED-DESIGNED BY: KONSTANTIN GREKOV
CHECKED BY: TRUMAN DENIO
REVISED BY
DATE REVISED

LAST REVISION 08-19-13
DATE PLOTTED => 23-SEP-2013
TIME PLOTTED => 11:24

Dist	COUNTY	ROUTE	POST MILES TOTAL PROJECT	SHEET No.	TOTAL SHEETS
09	Mno	6	2.4/4.0	6	17

Truman P. Denio 8-15-13
REGISTERED CIVIL ENGINEER DATE

8-19-13
PLANS APPROVAL DATE

REGISTERED PROFESSIONAL ENGINEER
TRUMAN DENIO
No. 34556
Exp. 9-30-15
CIVIL
STATE OF CALIFORNIA

THE STATE OF CALIFORNIA OR ITS OFFICERS OR AGENTS SHALL NOT BE RESPONSIBLE FOR THE ACCURACY OR COMPLETENESS OF SCANNED COPIES OF THIS PLAN SHEET.

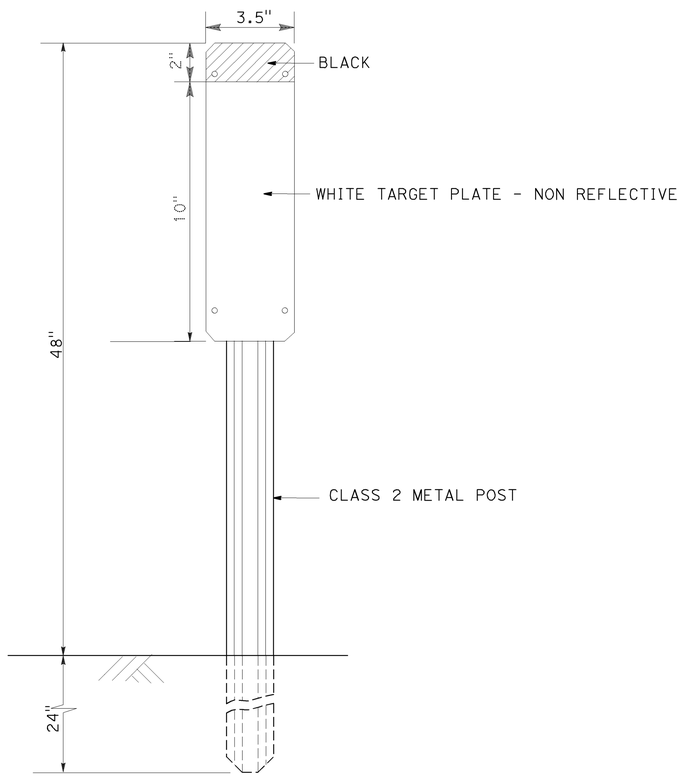

MARKER (CULVERT) PLATE AND POST DETAIL

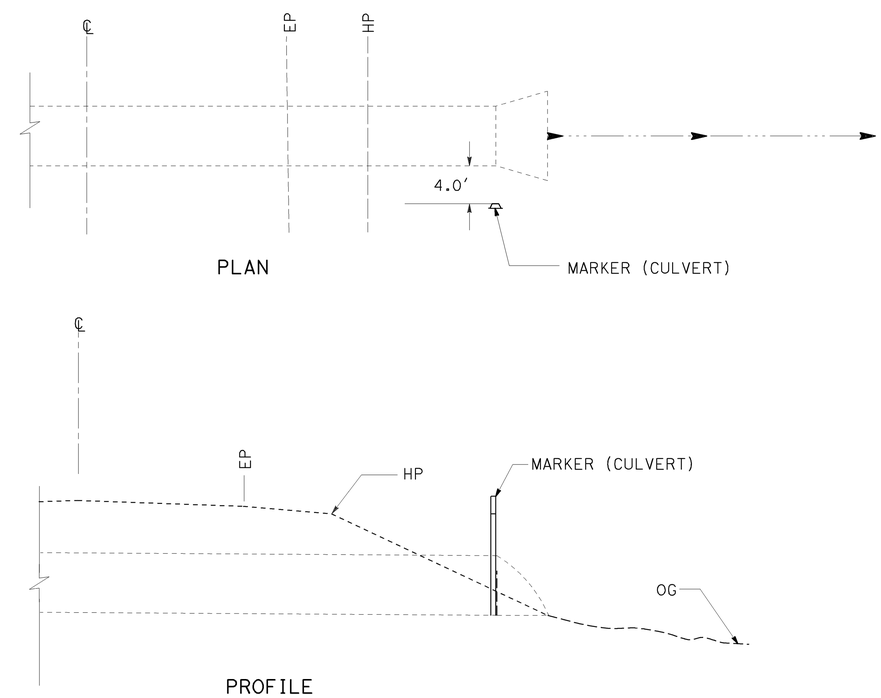

TYPICAL MARKER (CULVERT) PLACEMENT

CONSTRUCTION DETAILS
NO SCALE

C-1

STATE OF CALIFORNIA - DEPARTMENT OF TRANSPORTATION
PROJECT COORDINATION

FUNCTIONAL SUPERVISOR: TRUMAN DENIO
CALCULATED-DESIGNED BY: KONSTANTIN GREKOV
CHECKED BY: TRUMAN DENIO
REVISED BY
DATE REVISED

LAST REVISION 08-19-13
DATE PLOTTED => 23-SEP-2013
TIME PLOTTED => 11:24

Dist	COUNTY	ROUTE	POST MILES TOTAL PROJECT	SHEET No.	TOTAL SHEETS
09	Mno	6	2.4/4.0	7	17

REGISTERED CIVIL ENGINEER 8-15-13 DATE

8-19-13
PLANS APPROVAL DATE

REGISTERED PROFESSIONAL ENGINEER TRUMAN DENIO No. 34556 Exp. 9-30-15 CIVIL STATE OF CALIFORNIA

THE STATE OF CALIFORNIA OR ITS OFFICERS OR AGENTS SHALL NOT BE RESPONSIBLE FOR THE ACCURACY OR COMPLETENESS OF SCANNED COPIES OF THIS PLAN SHEET.

NOTES:

1. FOR COMPLETE RIGHT OF WAY DATA, SEE RIGHT OF WAY RECORD MAPS AT THE DISTRICT OFFICE

ABBREVIATIONS:

SCL - SAWCUT LINE

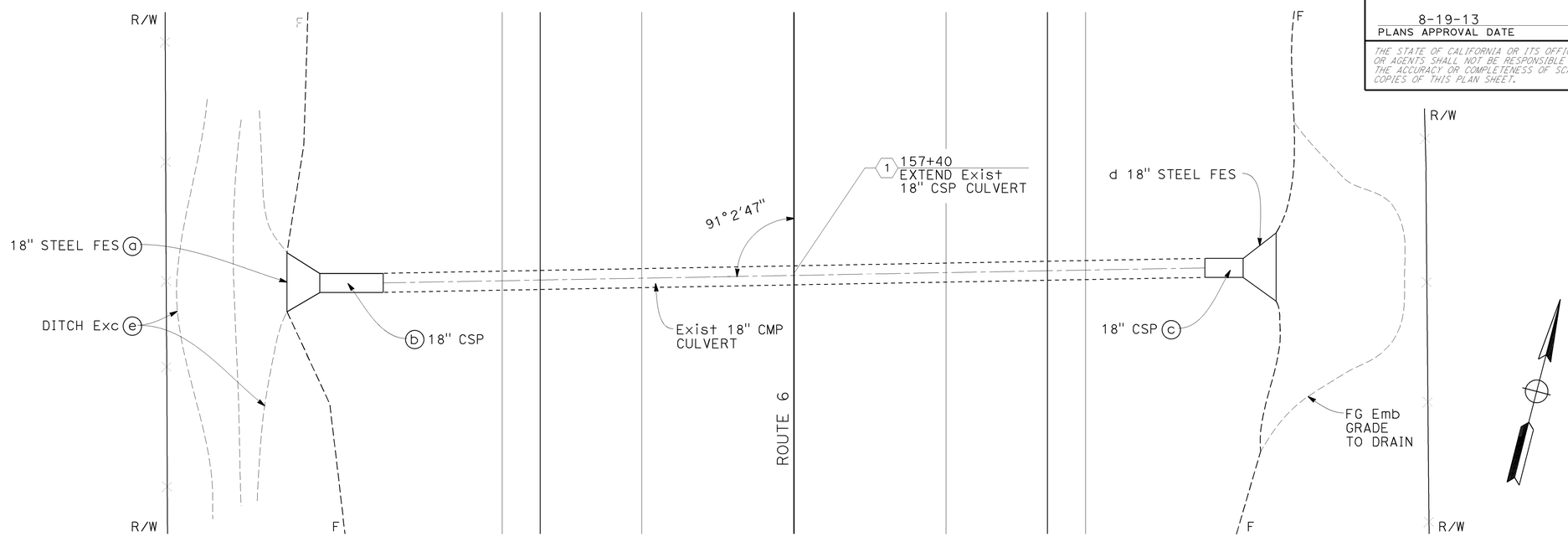

PLAN SCALE: 1"=5'

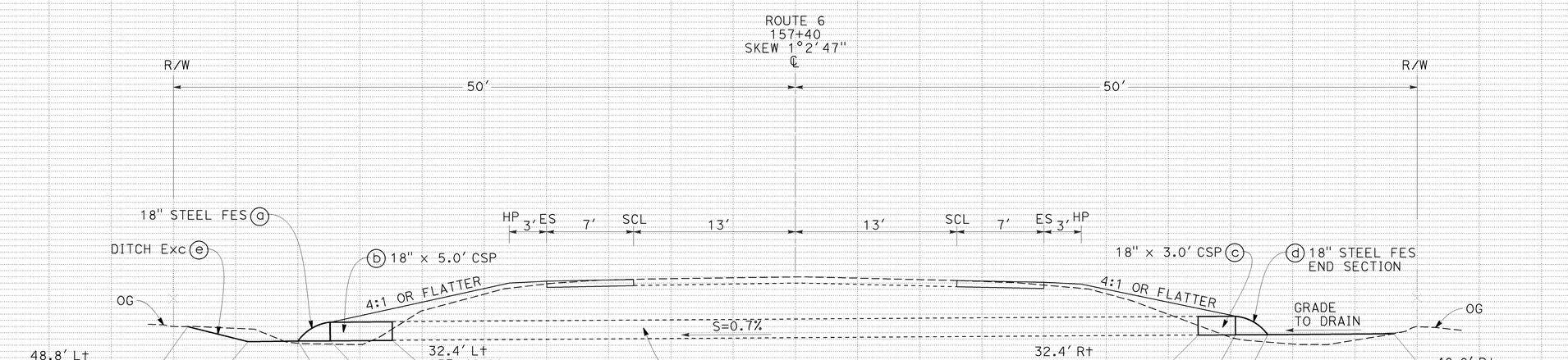

DRAINAGE SYSTEM No. (1)
157+40

APPROVED FOR DRAINAGE WORK ONLY

DRAINAGE PLAN AND PROFILE

SCALE: Horiz 1"=5' Vert 1"=5'

D-1

STATE OF CALIFORNIA - DEPARTMENT OF TRANSPORTATION
Caltrans® PROJECT COORDINATION

FUNCTIONAL SUPERVISOR: TRUMAN DENIO
CALCULATED-DESIGNED BY: KONSTANTIN GREKOV
CHECKED BY: TRUMAN DENIO
REVISED BY / DATE REVISED

LAST REVISION 08-19-13 DATE PLOTTED => 23-SEP-2013 TIME PLOTTED => 11:24

Dist	COUNTY	ROUTE	POST MILES TOTAL PROJECT	SHEET No.	TOTAL SHEETS
09	Mno	6	2.4/4.0	8	17

Truman P. Denio 8-15-13
REGISTERED CIVIL ENGINEER DATE

8-19-13
PLANS APPROVAL DATE

REGISTERED PROFESSIONAL ENGINEER
TRUMAN DENIO
No. 34556
Exp. 9-30-15
CIVIL
STATE OF CALIFORNIA

THE STATE OF CALIFORNIA OR ITS OFFICERS OR AGENTS SHALL NOT BE RESPONSIBLE FOR THE ACCURACY OR COMPLETENESS OF SCANNED COPIES OF THIS PLAN SHEET.

NOTES:

1. LOCATION AND POSITION OF CONSTRUCTION AREA SIGNS AND PORTABLE CHANGEABLE MESSAGE SIGNS ARE APPROXIMATE. EXACT LOCATION TO BE DETERMINED BY THE ENGINEER.

LEGEND:

(X) - PLACEMENT TYPE

- CONSTRUCTION AREA SIGNS (ONE POST)

- PORTABLE CHANGEABLE MESSAGE SIGN

(A)

W20-1
48" x 48"
ON 6" x 6" POST

SHOULDER WIDENING — C23B (CA)
42" x 18"

(B)

END ROAD WORK — G20-2
36" x 18"
4" x 4" POSTS

(C)

W20-1
36" x 36"
ON 6" x 6" POST

STATIONARY MOUNTED CONSTRUCTION AREA SIGNS		
PLACEMENT TYPE	NUMBER OF POSTS AND SIZE	NUMBER OF SIGNS
(A)	1 - 4" x 6"	2
(B)	1 - 4" x 4"	5
(C)	1 - 4" x 6"	3

PORTABLE CHANGEABLE MESSAGE SIGNS		
MESSAGING FOR ONE-WAY TRAFFIC CONTROL		
FIRST FRAME	SECOND FRAME	THIRD FRAME
FLAGGER AHEAD	REDUCE SPEED	EXPECT DELAYS

PORTABLE CHANGEABLE MESSAGE SIGN
No. OF SIGNS
2

NOTES:

1. PORTABLE CHANGEABLE MESSAGE SIGN LOCATIONS TO BE CONFIRMED BY THE ENGINEER BEFORE THE ACTUAL CLOSURE.
2. ALTERNATE MESSAGES MUST BE APPROVED BY THE ENGINEER.
3. MESSAGE MAY BE ALTERED BY THE ENGINEER.
4. WHEN CONSTRUCTION OPERATIONS ARE NOT ACTIVELY IN PROGRESS, PORTABLE CHANGEABLE MESSAGE SIGNS MUST NOT DISPLAY A MESSAGE UNLESS DIRECTED BY THE ENGINEER.

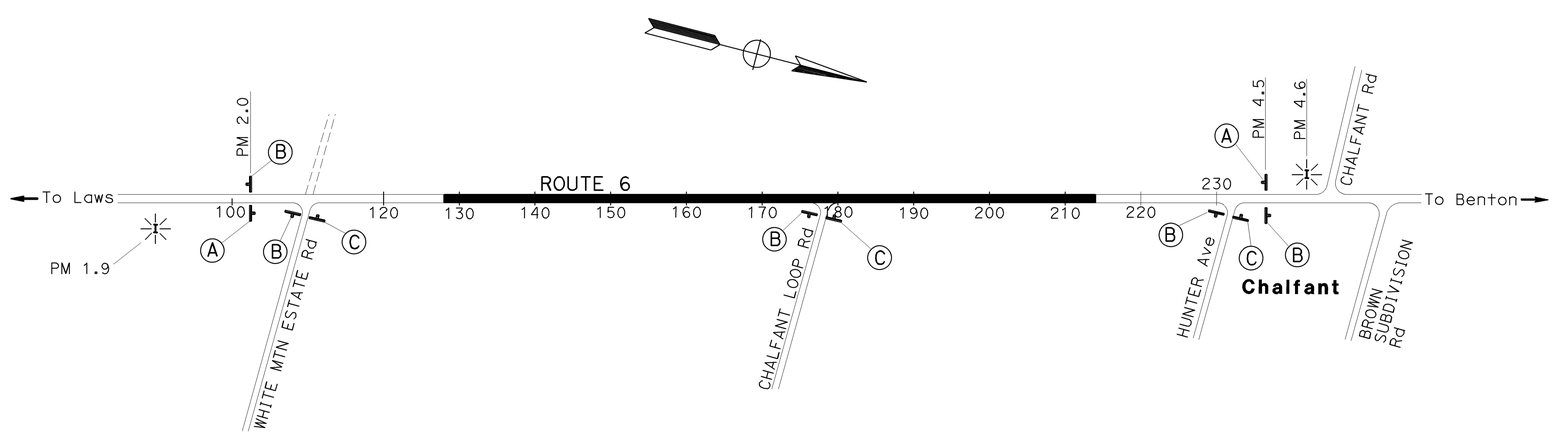

APPROVED FOR CONSTRUCTION AREA SIGN WORK ONLY.

CONSTRUCTION AREA SIGNS
NO SCALE

CS-1

STATE OF CALIFORNIA - DEPARTMENT OF TRANSPORTATION
Caltrans PROJECT COORDINATION

FUNCTIONAL SUPERVISOR: TRUMAN DENIIO
CALCULATED-DESIGNED BY: KONSTANTIN GREKOV
CHECKED BY: TRUMAN DENIIO
REVISED BY
DATE REVISED

LAST REVISION 08-19-13
DATE PLOTTED => 23-SEP-2013
TIME PLOTTED => 11:24

Dist	COUNTY	ROUTE	POST MILES TOTAL PROJECT	SHEET No.	TOTAL SHEETS
09	Mno	6	2.4/4.0	9	17

Truman P. Denio 8-15-13
REGISTERED CIVIL ENGINEER DATE

8-19-13
PLANS APPROVAL DATE

REGISTERED PROFESSIONAL ENGINEER
TRUMAN DENIO
No. 34556
Exp. 9-30-15
CIVIL
STATE OF CALIFORNIA

THE STATE OF CALIFORNIA OR ITS OFFICERS OR AGENTS SHALL NOT BE RESPONSIBLE FOR THE ACCURACY OR COMPLETENESS OF SCANNED COPIES OF THIS PLAN SHEET.

NOTES:
1. THIS PLAN ACCURATE FOR PAVEMENT DELINEATION WORK ONLY.
2. (N) NOT A SEPARATE ITEM, FOR INFORMATION ONLY.

PAINT TRAFFIC STRIPE (2-COAT)

STATION TO STATION (LOCATION)			LENGTH (N)	DETAIL No. 27B
			LF	LF
127+90	-	176+90	4,990	9,980
176+90	-	178+76	186	186
178+76	-	215+00	3,642	7,248
TOTAL				17,414

REMOVE DELINEATOR

STA TO STA	REMOVE DELINEATOR
	EA
128+00 TO 214+00	38
TOTAL	38

OBJECT MARKER (TYPE L-1)

STATION	L†	R†	OBJECT MARKER (TYPE L-1)
			EA
179+70	X		1
TOTAL			1

MILEPOST MARKER

STATION	L†	R†	MILEPOST MARKER	MESSAGE
			EA	
132+66	X		1	006 Mno 2.5
159+00		X	1	006 Mno 3.0
185+44	X		1	006 Mno 3.5
TOTAL			3	

MARKER (CULVERT)

STATION	L†	R†	MARKER (CULVERT)
			EA
157+40	X	X	2
160+00	X	X	2
TOTAL			4

DELINEATOR (CLASS 2)

STA	L†	R†	DELINEATOR (CLASS 2) TYPE E	TYPE F
			EA	EA
129+36	X	X	2	
134+64	X	X	2	
139+92	X	X	2	
145+20	X	X	2	
150+48	X	X	2	
155+76	X	X	2	
161+04	X	X	2	
166+32	X	X	2	
171+60	X	X	2	
174+24	X	X	2	
176+88	X	X	2	
176+90		X		1
177+40		X		1
178+10		X		1
178+46	X		1	
178+76		X		1
179+52	X	X	2	
182+16	X	X	2	
187+44	X	X	2	
192+72	X	X	2	
198+00	X	X	2	
203+28	X	X	2	
208+56	X	X	2	
SUBTOTAL			38	4
TOTAL			42	

PAVEMENT DELINEATION QUANTITIES
PDQ-1

STATE OF CALIFORNIA - DEPARTMENT OF TRANSPORTATION
Caltrans® PROJECT COORDINATION

FUNCTIONAL SUPERVISOR: TRUMAN DENIO
CALCULATED-DESIGNED BY: KONSTANTIN GREKOV
CHECKED BY: TRUMAN DENIO
REVISED BY
DATE REVISED

LAST REVISION 08-19-13
DATE PLOTTED => 23-SEP-2013
TIME PLOTTED => 11:24

Dist	COUNTY	ROUTE	POST MILES TOTAL PROJECT	SHEET No.	TOTAL SHEETS
09	Mno	6	2.4/4.0	10	17

Truman P. Denio 8-15-13
REGISTERED CIVIL ENGINEER DATE

8-19-13
PLANS APPROVAL DATE

REGISTERED PROFESSIONAL ENGINEER
TRUMAN DENIO
No. 34556
Exp. 9-30-15
CIVIL
STATE OF CALIFORNIA

THE STATE OF CALIFORNIA OR ITS OFFICERS OR AGENTS SHALL NOT BE RESPONSIBLE FOR THE ACCURACY OR COMPLETENESS OF SCANNED COPIES OF THIS PLAN SHEET.

NOTES:

1. EXACT LOCATION OF SIGN SHALL BE DETERMINED BY THE ENGINEER.
2. ALL PARTS SHALL BE PAINTED WITH ONE COAT OF RUST RESISTANT PRIMER AND TWO COATS OF YELLOW GLOSS ENAMEL.
3. HARDWARE TO BE SUPPLIED BY THE CONTRACTOR.
4. STANDARD 1/8" PIPE FITTING TO BE SUPPLIED BY THE CONTRACTOR (GREASE ZERK).
5. DRILL 59/64" HOLES AS NECESSARY TO MOUNT SIGN PANEL TO FRAME.

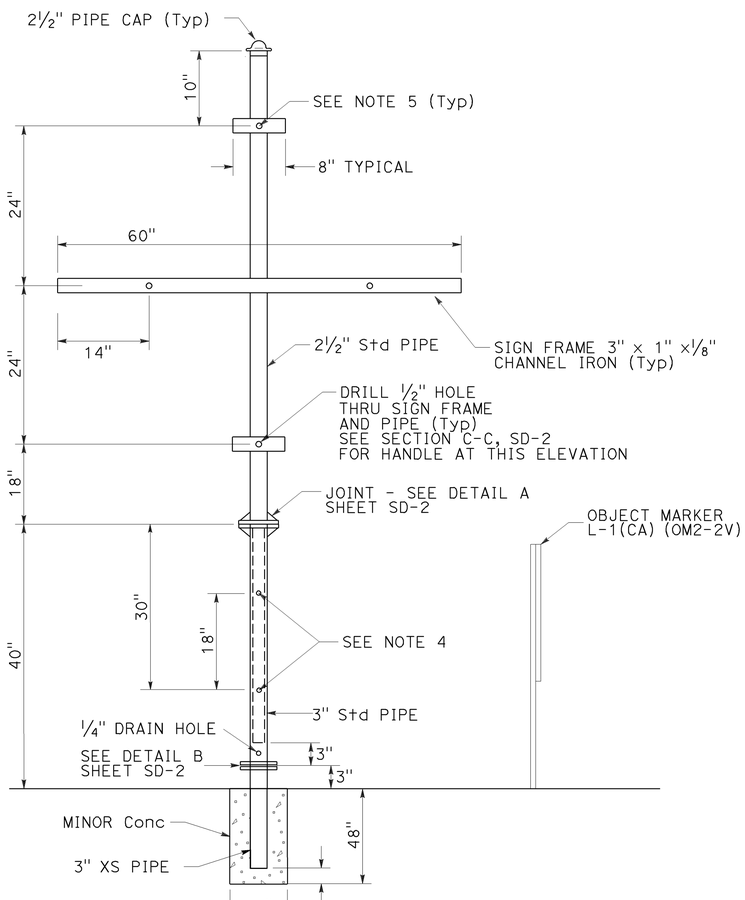

SIGN MAST
SLIPPERY WHEN WET
W8-5

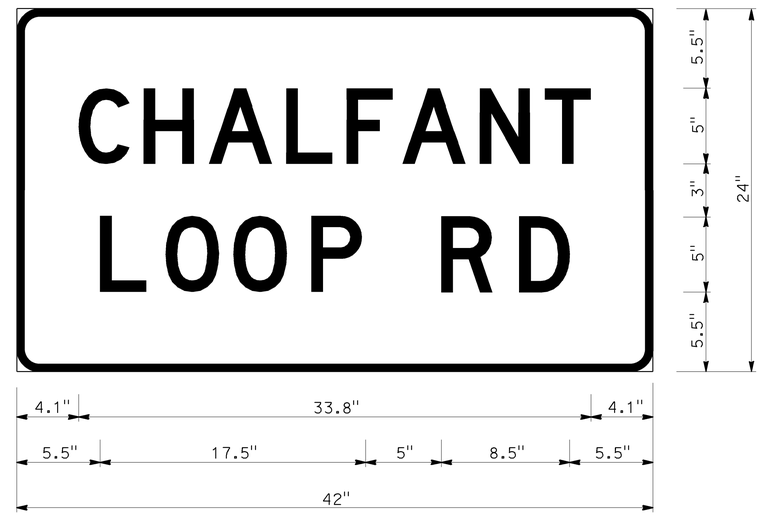

NOTES FOR W16-8:
BLACK ON YELLOW
5" UPPERCASE, D FONT
0.5" BORDER, 1.5" CORNER RADIUS
0.5" MARGIN, TRIMMED CORNERS

SIGN 1 4

SIGN DETAILS
NO SCALE **SD-1**

STATE OF CALIFORNIA - DEPARTMENT OF TRANSPORTATION
Caltrans PROJECT COORDINATION
FUNCTIONAL SUPERVISOR: TRUMAN DENIO
CALCULATED-DESIGNED BY: KONSTANTIN GREKOV
CHECKED BY: LIANNE TALBOT
REVISED BY
DATE REVISED

LAST REVISION 08-19-13
DATE PLOTTED => 23-SEP-2013
TIME PLOTTED => 11:24

Dist	COUNTY	ROUTE	POST MILES TOTAL PROJECT	SHEET No.	TOTAL SHEETS
09	Mno	6	2.4/4.0	11	17

Truman P. Denio 8-15-13
REGISTERED CIVIL ENGINEER DATE

8-19-13
PLANS APPROVAL DATE

REGISTERED PROFESSIONAL ENGINEER
TRUMAN DENIO
No. 34556
Exp. 9-30-15
CIVIL
STATE OF CALIFORNIA

THE STATE OF CALIFORNIA OR ITS OFFICERS OR AGENTS SHALL NOT BE RESPONSIBLE FOR THE ACCURACY OR COMPLETENESS OF SCANNED COPIES OF THIS PLAN SHEET.

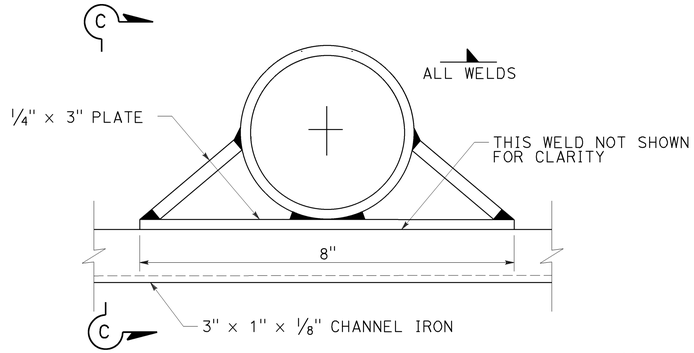

SIGN FRAME DETAIL (Typ)

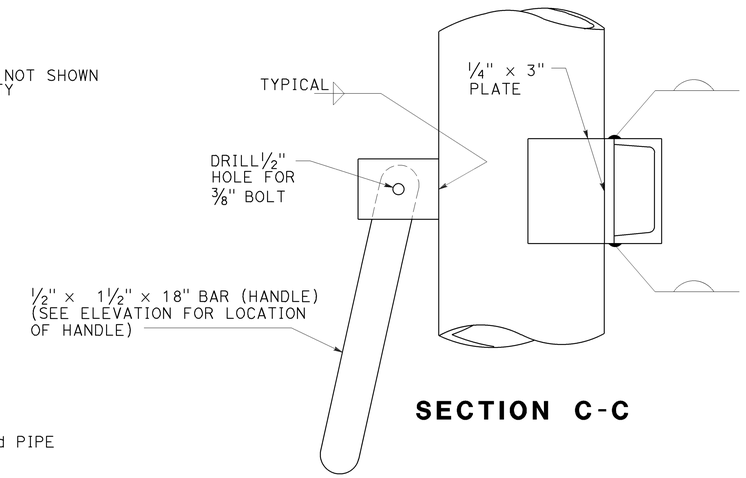

SECTION C-C

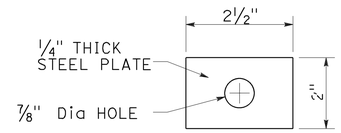

PLATE WASHER

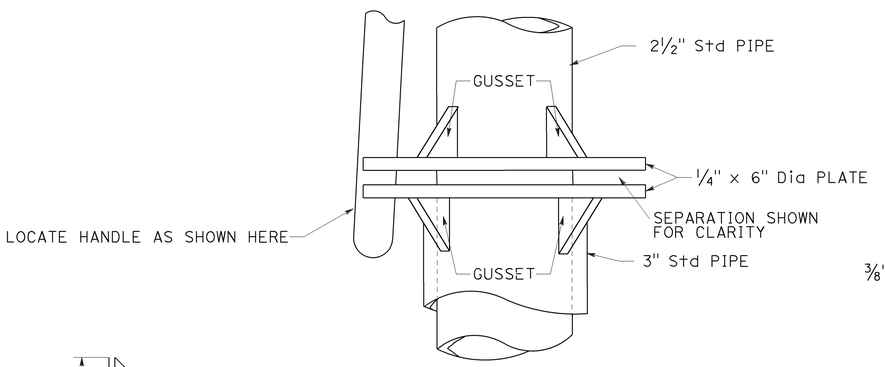

ELEVATION

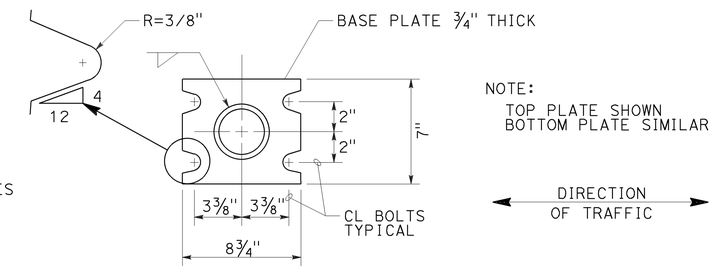

SECTION B-B
BREAKAWAY PLATE

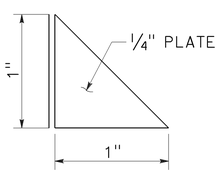

GUSSET

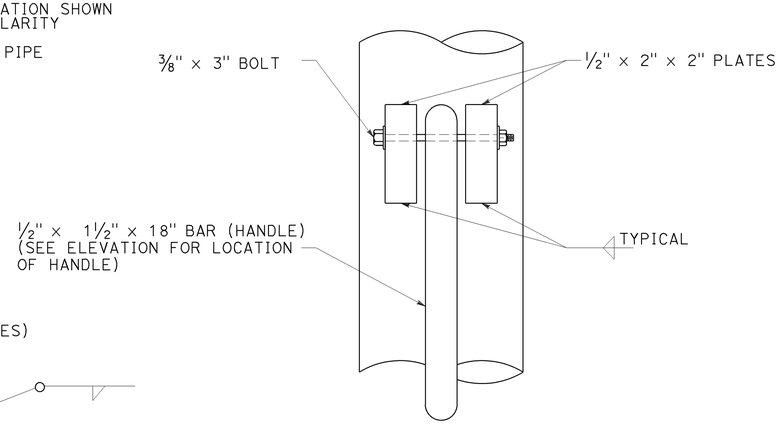

HANDLE DETAIL

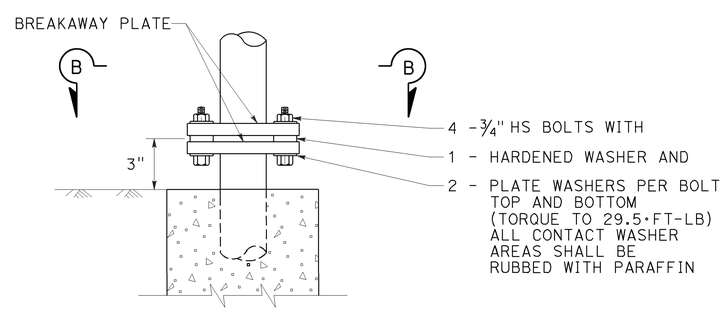

ELEVATION
DETAIL-B

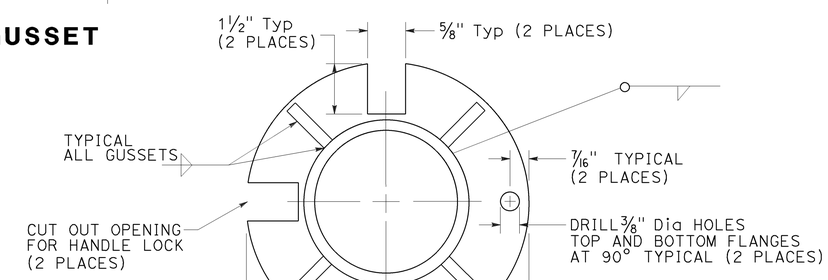

PLAN
LOCKING FLANGE
DETAIL A

SIGN DETAILS
NO SCALE **SD-2**

STATE OF CALIFORNIA - DEPARTMENT OF TRANSPORTATION
Caltrans® PROJECT COORDINATION

FUNCTIONAL SUPERVISOR: TRUMAN DENIO
CALCULATED-DESIGNED BY: KONSTANTIN GREKOV
CHECKED BY: TRUMAN DENIO
REVISED BY
DATE REVISED

LAST REVISION 08-19-13
DATE PLOTTED => 23-SEP-2013
TIME PLOTTED => 11:24

Dist	COUNTY	ROUTE	POST MILES TOTAL PROJECT	SHEET No.	TOTAL SHEETS
09	Mno	6	2.4/4.0	12	17

REGISTERED CIVIL ENGINEER 8-15-13 DATE

8-19-13
PLANS APPROVAL DATE

REGISTERED PROFESSIONAL ENGINEER TRUMAN DENIO No. 34556 Exp 9-30-15 CIVIL STATE OF CALIFORNIA

THE STATE OF CALIFORNIA OR ITS OFFICERS OR AGENTS SHALL NOT BE RESPONSIBLE FOR THE ACCURACY OR COMPLETENESS OF SCANNED COPIES OF THIS PLAN SHEET.

NOTE:

1. EXACT LOCATION OF ROADSIDE SIGNS TO BE DETERMINED BY THE ENGINEER.
2. EXISTING SIGN PANELS AND TURNABLE METAL POST SIGN MASTS SHALL BE REMOVED AND SALVAGED, INCLUDING THE STEEL PORTION OF THE FOUNDATION.
   THE CONCRETE PORTION OF THE FOUNDATION SHALL BE REMOVED AND DISPOSED OF.

SIGN SUMMARY

SIGN NUMBER	STATION	LEFT	RIGHT	CODE	MESSAGE	SIZE (L x D)	REMOVE ROADSIDE SIGN (EA)	ROADSIDE SIGN (ONE POST) (EA)	SALVAGE ROADSIDE SIGN (METAL POST) (EA)	ROADSIDE SIGN (TURNABLE METAL POST) (EA)	RESET ROADSIDE SIGN (ONE POST) (EA)	SIGN MATERIALS: FURNISH SINGLE SHEET ALUMINUM SIGN 0.063"-UNFRAMED (SQFT)	FURNISH SINGLE SHEET ALUMINUM SIGN 0.080"-UNFRAMED (SQFT)	SINGLE FACED	DOUBLE FACED	BACKGROUND SHEETING COLOR	BACKGROUND RETROREFLECTIVE ASTM TYPE	LEGEND SHEETING COLOR	LEGEND RETROREFLECTIVE ASTM TYPE	GRAFFITI FILM STANDARD	GRAFFITI FILM PREMIUM	POSTS SIZE	FNBT	FSBT	FEBT	FWBT	REMARKS
1	172+68		X	W2-2	INTERSECTION	36" x 36"	1	1				9.00		X		YELLOW	III	BLACK		X		4" x 6"	X				
				W16-8	CHALFANT LOOP RD	42" x 24"						7.00		X		YELLOW	III	BLACK		X			X				
2	178+11	X		W1-7	TWO-DIRECTION ARROW	48" x 24"	1	1				8.00		X		YELLOW	III	BLACK		X		4" x 6"				X	
				TYPE N-1(CA)	OBJECT MARKER (OM1-3)	18" x 18"						2.25		X		YELLOW	III	BLACK		X						X	
3	179+64	X		W8-5	SLIPPERY WHEN WET	48" x 48"			1	1			16.00	X		YELLOW	III	BLACK		X		TURNABLE		X			TURNABLE - SALVAGE ALL
4	183+56	X		W2-2	INTERSECTION	36" x 36"	1	1				9.00		X		YELLOW	III	BLACK		X		4" x 6"		X			
				W16-8	CHALFANT LOOP RD	42" x 24"						7.00		X		YELLOW	III	BLACK		X				X			
5	196+16		X	S32(CA)	ADOPT A HIGHWAY (THE DILLINGER GANG)	54" x 42"					1				X								X	X			RESET Exist
				S32-1(CA)	LITTER REMOVAL	15" x 18"									X								X	X			RESET Exist
6	201+80	X		R6-4(CA)	ALL VEHICLES WHEN TOWING 55 MAXIMUM	48" x 60"		1					20.00	X		WHITE	III	BLACK		X		4" x 6"		X			REPLACE Exist R6-1(CA)
7	209+31	X		R6-3(CA)	TRUCKS, 3 AXLES OR MORE 55 MAXIMUM	48" x 60"	1	1					20.00	X		WHITE	III	BLACK		X		4" x 6"		X			REPLACE Exist R6-1(CA)
						TOTAL	4	5	1	1	1	42.25	56.00														

SIGN QUANTITIES

NO SCALE **SQ-1**

REVISED BY | DATE REVISED

CALCULATED-DESIGNED BY: KONSTANTIN GREKOV | CHECKED BY: LIANNE TALBOT

FUNCTIONAL SUPERVISOR: TRUMAN DENIO

STATE OF CALIFORNIA - DEPARTMENT OF TRANSPORTATION
Caltrans PROJECT COORDINATION

LAST REVISION 09-25-13 | DATE PLOTTED => 25-SEP-2013 | TIME PLOTTED => 15:28

Dist	COUNTY	ROUTE	POST MILES TOTAL PROJECT	SHEET No.	TOTAL SHEETS
09	Mno	6	2.4/4.0	13	17

Truman P. Denio 8-15-13
REGISTERED CIVIL ENGINEER DATE

8-19-13
PLANS APPROVAL DATE

REGISTERED PROFESSIONAL ENGINEER
TRUMAN DENIO
No. 34556
Exp. 9-30-15
CIVIL
STATE OF CALIFORNIA

THE STATE OF CALIFORNIA OR ITS OFFICERS OR AGENTS SHALL NOT BE RESPONSIBLE FOR THE ACCURACY OR COMPLETENESS OF SCANNED COPIES OF THIS PLAN SHEET.

NOTE:
(N) - NOT A SEPARATE PAY ITEM, FOR INFORMATION ONLY.

ROADWAY QUANTITIES

STATION TO STATION /LOCATION	ROADWAY EXCAVATION	HMA (TYPE A)	TACK COAT	CLASS 2 AGGREGATE BASE	EMBANKMENT (N)
	CY	TON	TON	CY	CY
128+00 TO 214+00	3,400	4,200	2.1	1,450	2,400
SAFETY EDGE		300	0.2	220	
TOTAL	3,400	4,500	2.3	1,670	2,400

TREATED WOOD WASTE

REMOVE ROADSIDE SIGN Sta 128+00 TO 214+00	POSTS SIZE	POSTS WEIGHT
EA		LB
4	4"x6"	620
TOTAL		620

DRAINAGE QUANTITIES

DRAINAGE SHEET No.	DRAINAGE SYSTEM No. ⬡	DRAINAGE UNIT ○	Max HEIGHT OF COVER (N)	DITCH EXCAVATION	18" CSP (.079" THICK)	18" STEEL FES	DESCRIPTION	STATION	DRAINAGE SYSTEM No. ⬡	DRAINAGE UNIT ○
			LF	CY	LF	EA				
D-1	1	a				1	18" STEEL FLARED END SECTION	157+40	1	a
		b	1.5		5.0		18" CORRUGATED STEEL PIPE			b
		c	1.5		3.0		18" CORRUGATED STEEL PIPE			c
		d				1	18" STEEL FLARED END SECTION			d
		e		10			DITCH EXCAVATION			e
TOTAL				10	8.0	2				

(N) - NOT A SEPARATE PAY ITEM, FOR INFORMATION ONLY

RUMBLE STRIP

STATION TO STATION	LENGTH LF (N)	L+ Sta	R+ Sta
130+00 TO 176+90	4690	47.0	47.0
176+90 TO 178+76	186	2.0	
178+76 TO 212+50	3374	34.0	34.0
212+50 TO 214+00	150	1.5	
SUBTOTAL		84.5	81.0
TOTAL		165.5	

TEMPORARY FIBER ROLL

STATION TO STATION	L+	R+	TEMPORARY FIBER ROLL
			LF
157+20 TO 157+60	X	X	80
177+35 TO 177+55		X	40
178+00 TO 178+20		X	40
195+80 TO 196+20		X	40
TOTAL			200

SUMMARY OF QUANTITIES
Q-1

STATE OF CALIFORNIA - DEPARTMENT OF TRANSPORTATION
Caltrans PROJECT COORDINATION
FUNCTIONAL SUPERVISOR: TRUMAN DENIO
CALCULATED-DESIGNED BY: KONSTANTIN GREKOV
CHECKED BY: TRUMAN DENIO
REVISED BY
DATE REVISED

LAST REVISION 08-19-13
DATE PLOTTED => 23-SEP-2013
TIME PLOTTED => 11:24

DIST	COUNTY	ROUTE	POST MILES TOTAL PROJECT	SHEET No.	TOTAL SHEETS
09	Mno	6	2.4/4.0	14	17

REGISTERED CIVIL ENGINEER

January 20, 2012
PLANS APPROVAL DATE

REGISTERED PROFESSIONAL ENGINEER
Cornelis M. Hakim
No. C55610
Exp. 12-31-12
CIVIL
STATE OF CALIFORNIA

THE STATE OF CALIFORNIA OR ITS OFFICERS OR AGENTS SHALL NOT BE RESPONSIBLE FOR THE ACCURACY OR COMPLETENESS OF SCANNED COPIES OF THIS PLAN SHEET.

TO ACCOMPANY PLANS DATED 8-19-13

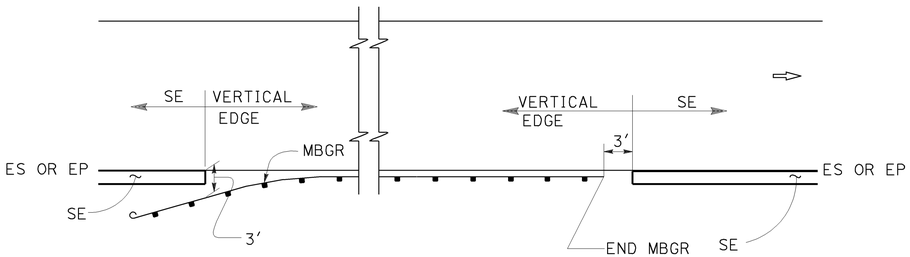

MBGR

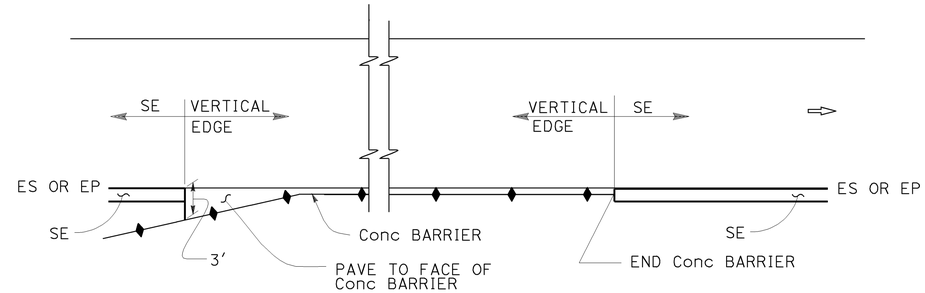

CONCRETE BARRIER

ABBREVIATIONS:

SE SAFETY EDGE

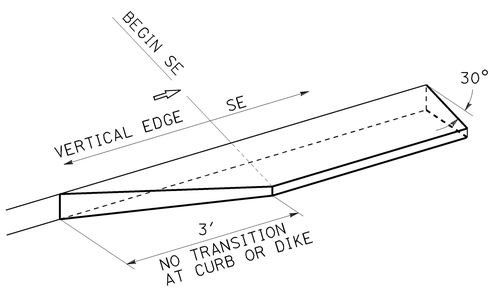

TRANSITION DETAIL FOR CONCRETE ONLY

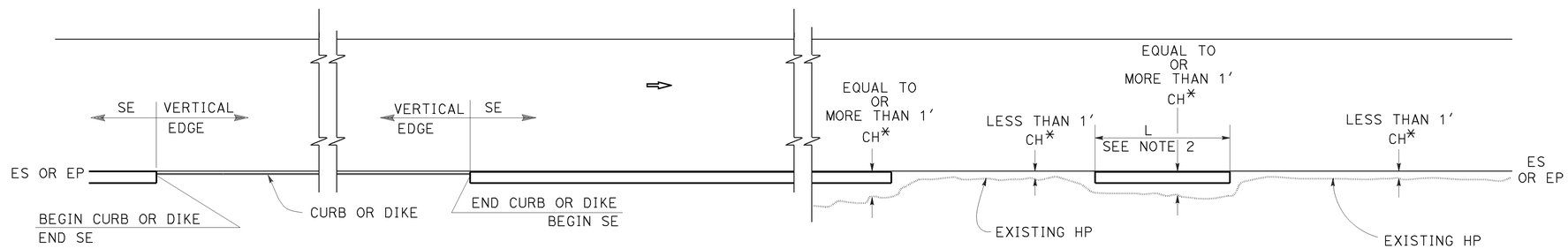

CURB OR DIKE

NARROW SIDE SLOPE

* CH = Distance from ES or EP to existing HP.

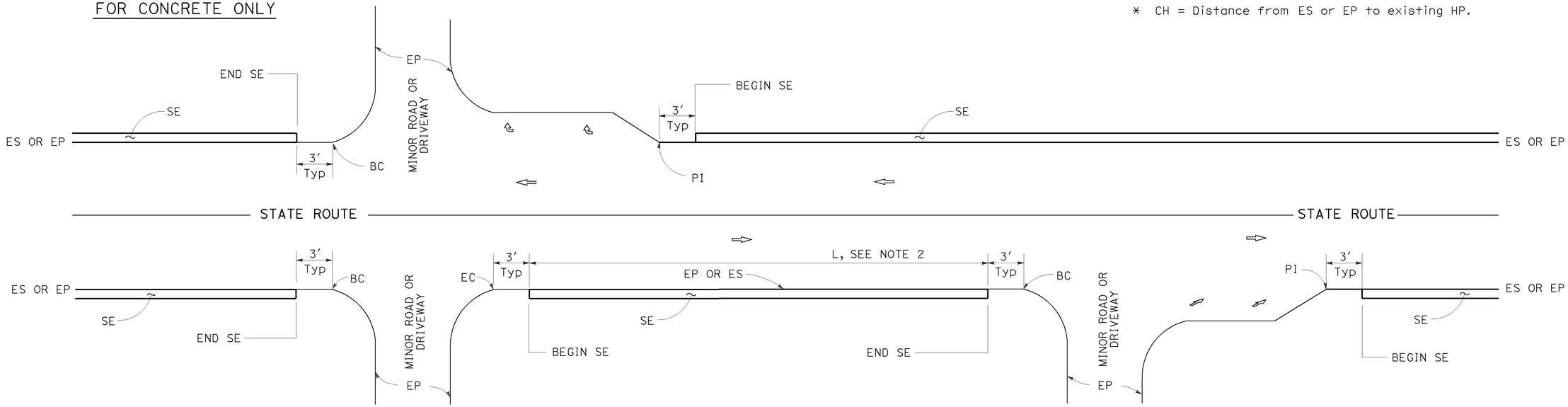

INTERSECTION

MINOR ROADWAY OR DRIVEWAY

DRIVEWAY AND INTERSECTION

NOTES:

1. For details not shown, see Revised Standard Plans RSP P75 and RSP P76.
2. Safety edge is optional when L is less than 30′.

STATE OF CALIFORNIA
DEPARTMENT OF TRANSPORTATION

PAVEMENT EDGE TREATMENTS

NO SCALE

RSP P74 DATED JANUARY 20, 2012 SUPPLEMENTS THE STANDARD PLANS BOOK DATED 2010.

REVISED STANDARD PLAN RSP P74

2010 REVISED STANDARD PLAN RSP P74

01-05-12

DIST	COUNTY	ROUTE	POST MILES TOTAL PROJECT	SHEET No.	TOTAL SHEETS
09	Mno	6	2.4/4.0	15	17

REGISTERED CIVIL ENGINEER

January 20, 2012
PLANS APPROVAL DATE

REGISTERED PROFESSIONAL ENGINEER
Cornelis M. Hakim
No. C55610
Exp. 12-31-12
CIVIL
STATE OF CALIFORNIA

THE STATE OF CALIFORNIA OR ITS OFFICERS OR AGENTS SHALL NOT BE RESPONSIBLE FOR THE ACCURACY OR COMPLETENESS OF SCANNED COPIES OF THIS PLAN SHEET.

TO ACCOMPANY PLANS DATED 8-19-13

LEGEND:

- HMA PAVEMENT
- HMA OR CONCRETE PAVEMENT
- CONCRETE PAVEMENT

ABBREVIATIONS:

SE SAFETY EDGE
TT TOTAL THICKNESS OF SE
HW HINGE WIDTH, DISTANCE FROM ES OR EP TO HP

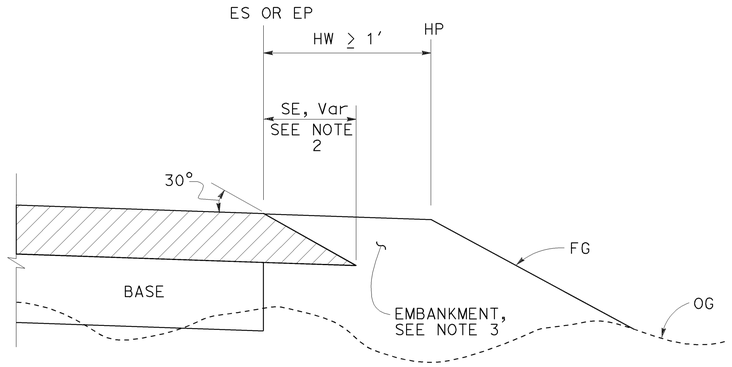

CASE K
Safety Edge - Fill Section, HW ≥ 1′

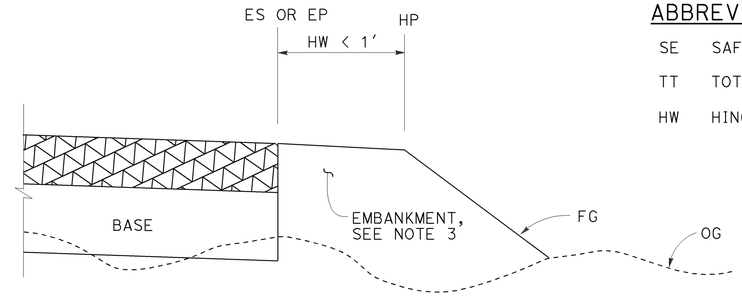

CASE L
Vertical Edge - Fill Section, HW < 1′

FILL SECTION

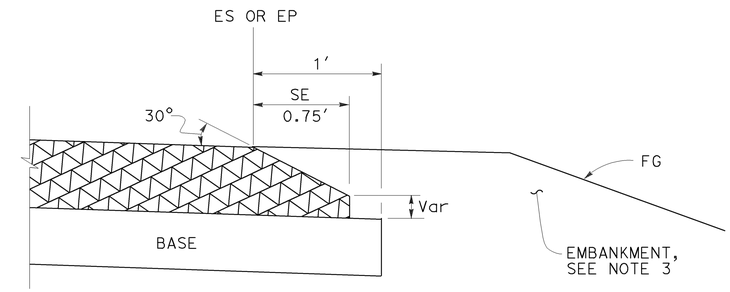

DETAIL "B"
For HMA pavement thickness more than 0.43′ or concrete pavement

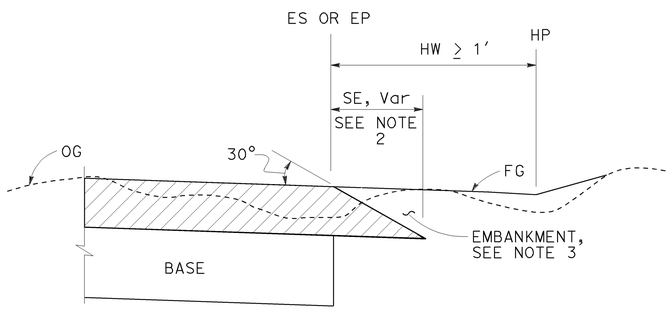

CASE M
Safety Edge - Cut Section, HW ≥ 1′

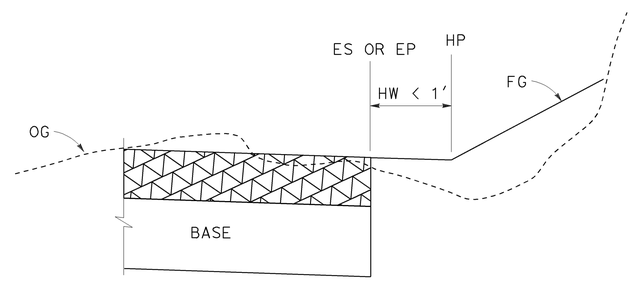

CASE N
Vertical Edge - Cut Section, HW < 1′

CUT SECTION

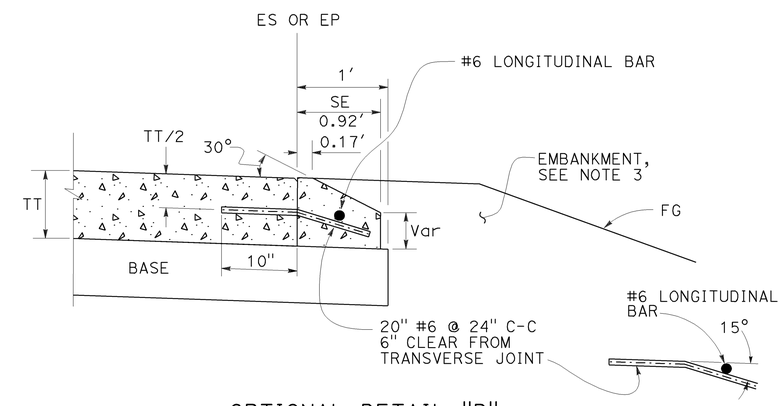

OPTIONAL DETAIL "B"
For concrete pavement
See Note 4

NOTES:

1. For limits of safety edge and vertical edge treatments, see Revised Standard Plan RSP P74
2. Details shown for HMA pavement thickness less than 0.43′. See Detail "B" for HMA pavement thickness more than 0.43′ or concrete pavement.
3. For locations and limits of embankment see project plans.
4. Safety edge transverse joint must match pavement transverse joint. End of #6 longitudinal bar must be 2" ±½" clear from transverse joint.
5. Safety edge is not needed in the area of MBGR, barrier, right turn lane and acceleration lane. See Revised Standard Plan RSP P74.

STATE OF CALIFORNIA
DEPARTMENT OF TRANSPORTATION

PAVEMENT EDGE TREATMENTS-NEW CONSTRUCTION

NO SCALE

RSP P76 DATED JANUARY 20, 2012 SUPPLEMENTS THE STANDARD PLANS BOOK DATED 2010.

REVISED STANDARD PLAN RSP P76

2010 REVISED STANDARD PLAN RSP P76

01-09-12

Dist	COUNTY	ROUTE	POST MILES TOTAL PROJECT	SHEET No.	TOTAL SHEETS
09	Mno	6	2.4/4.0	16	17

REGISTERED CIVIL ENGINEER

April 19, 2013
PLANS APPROVAL DATE

REGISTERED PROFESSIONAL ENGINEER
Gurinderpal Bhullar
No. C48815
Exp. 9-30-14
CIVIL
STATE OF CALIFORNIA

THE STATE OF CALIFORNIA OR ITS OFFICERS OR AGENTS SHALL NOT BE RESPONSIBLE FOR THE ACCURACY OR COMPLETENESS OF SCANNED COPIES OF THIS PLAN SHEET.

TO ACCOMPANY PLANS DATED 8-19-13

2010 REVISED STANDARD PLAN RSP T9

TABLE 1

TAPER LENGTH CRITERIA AND CHANNELIZING DEVICE SPACING

SPEED (S)	MINIMUM TAPER LENGTH * FOR WIDTH OF OFFSET 12 FEET (W)				MAXIMUM CHANNELIZING DEVICE SPACING		
					X	Y	Z **
	TANGENT 2L	MERGING L	SHIFTING L/2	SHOULDER L/3	TAPER	TANGENT	CONFLICT
mph	ft	ft	ft	ft	ft	ft	ft
20	160	80	40	27	20	40	10
25	250	125	63	42	25	50	12
30	360	180	90	60	30	60	15
35	490	245	123	82	35	70	17
40	640	320	160	107	40	80	20
45	1080	540	270	180	45	90	22
50	1200	600	300	200	50	100	25
55	1320	660	330	220	55	110	27
60	1440	720	360	240	60	120	30
65	1560	780	390	260	65	130	32
70	1680	840	420	280	70	140	35

* - For other offsets, use the following merging taper length formula for L:
For speed of 40 mph or less, $L = WS^2/60$
For speed of 45 mph or more, $L = WS$

Where: L = Taper length in feet
W = Width of offset in feet
S = Posted speed limit, off-peak 85th-percentile speed prior to work starting, or the anticipated operating speed in mph

** - Use for taper and tangent sections where there are no pavement markings or where there is a conflict between existing pavement markings and channelizers (CA).

TABLE 2

LONGITUDINAL BUFFER SPACE AND FLAGGER STATION SPACING

SPEED *	Min D **	DOWNGRADE Min D ***		
		-3%	-6%	-9%
mph	ft	ft	ft	ft
20	115	116	120	126
25	155	158	165	173
30	200	205	215	227
35	250	257	271	287
40	305	315	333	354
45	360	378	400	427
50	425	446	474	507
55	495	520	553	593
60	570	598	638	686
65	645	682	728	785
70	730	771	825	891

* - Speed is posted speed limit, off-peak 85th-percentile speed prior to work starting, or the anticipated operating speed in mph

** - Longitudinal buffer space or flagger station spacing

*** - Use on sustained downgrade steeper than -3 percent and longer than 1 mile.

TABLE 3

ADVANCE WARNING SIGN SPACING

ROAD TYPE	DISTANCE BETWEEN SIGNS *		
	A	B	C
	ft	ft	ft
URBAN - 25 mph OR LESS	100	100	100
URBAN - MORE THAN 25 mph TO 40 mph	250	250	250
URBAN - MORE THAN 40 mph	350	350	350
RURAL	500	500	500
EXPRESSWAY / FREEWAY	1000	1500	2640

* - The distances are approximate, are intended for guidance purposes only, and should be applied with engineering judgment. These distances should be adjusted by the Engineer for field conditions, if necessary, by increasing or decreasing the recommmended distances.

STATE OF CALIFORNIA
DEPARTMENT OF TRANSPORTATION

TRAFFIC CONTROL SYSTEM FOR LANE CLOSURE ON FREEWAYS AND EXPRESSWAYS

NO SCALE

RSP T9 DATED APRIL 19, 2013 SUPPLEMENTS THE STANDARD PLANS BOOK DATED 2010.

REVISED STANDARD PLAN RSP T9

1-23-13

Dist	COUNTY	ROUTE	POST MILES TOTAL PROJECT	SHEET No.	TOTAL SHEETS
09	Mno	6	2.4/4.0	17	17

REGISTERED CIVIL ENGINEER

April 19, 2013
PLANS APPROVAL DATE

REGISTERED PROFESSIONAL ENGINEER Gurinderpal Bhullar No. C48815 Exp. 9-30-14 CIVIL STATE OF CALIFORNIA

THE STATE OF CALIFORNIA OR ITS OFFICERS OR AGENTS SHALL NOT BE RESPONSIBLE FOR THE ACCURACY OR COMPLETENESS OF SCANNED COPIES OF THIS PLAN SHEET.

TO ACCOMPANY PLANS DATED 8-19-13

NOTES:

See Revised Standard Plan RSP T9 for tables.

Use cone spacing X for taper segment, Y for tangent segment or Z for conflict situations, as approriate, per Table 1, unless X, Y, or Z cone spacing is shown on this sheet.

Unless otherwise specified in the special provisions, all temporary warning signs shall have black legend on fluorescent orange background.

California codes are designated by (CA). Otherwise, Federal (MUTCD) codes are shown.

TYPICAL LANE CLOSURE WITH REVERSIBLE CONTROL

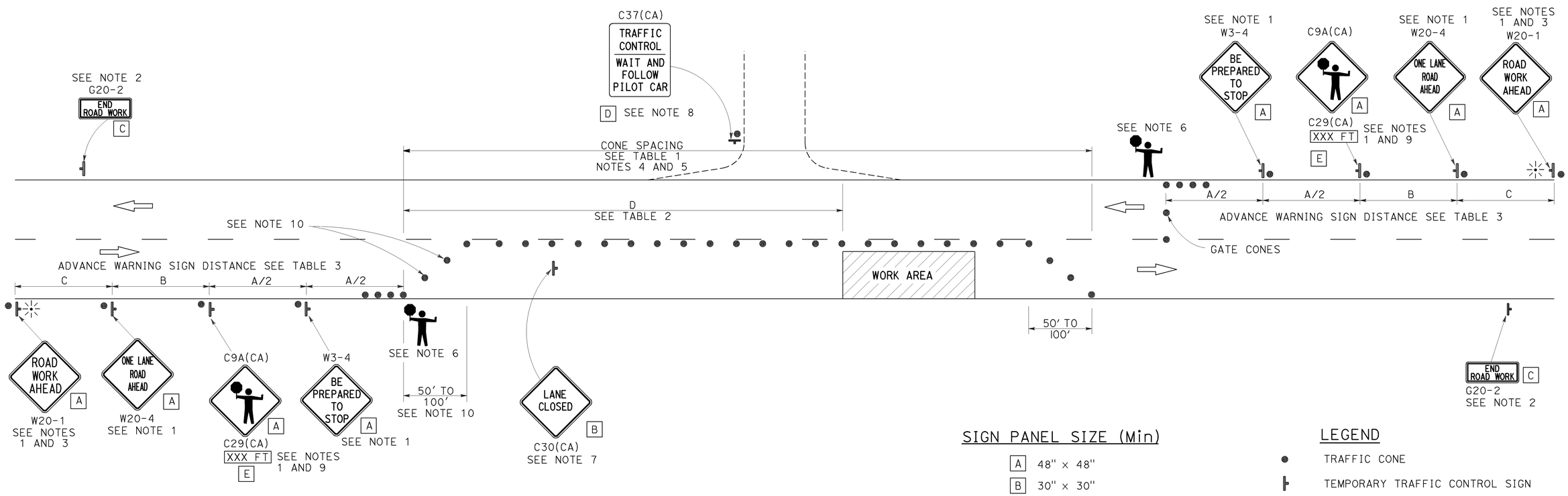

SIGN PANEL SIZE (Min)

A	48" × 48"
B	30" × 30"
C	36" × 18"
D	36" × 42"
E	20" × 7"

LEGEND

- TRAFFIC CONE
- TEMPORARY TRAFFIC CONTROL SIGN
- PORTABLE FLASHING BEACON
- FLAGGER

NOTES:

1. Each advance warning sign in each direction of travel shall be equipped with at least two flags for daytime closure. Each flag shall be at least 16" x 16" in size and shall be orange or fluorescent red-orange in color. Flashing beacons shall be placed at the locations indicated for lane closure during hours of darkness.
2. A G20-2 "END ROAD WORK" sign, as appropriate, shall be placed at the end of the lane control unless the end of work area is obvious, or ends within a larger project's limits.
3. If the W20-1 sign would follow within 2000' of a stationary W20-1 or G20-1 "ROAD WORK NEXT _____ MILES", use a W20-4 sign for the first advance warning sign.
4. All cones used for lane closures during the hours of darkness shall be fitted with retroreflective bands (or sleeves) as specified in the specifications.
5. Portable delineators, placed at one-half the spacing indicated for traffic cones, may be used instead of cones for daytime closures only.
6. Additional advance flaggers may be required. Flagger should stand in a conspicuous place, be visible to approaching traffic as well as approaching vehicles after the first vehicle has stopped. During the hours of darkness, the flagging-station and flagger shall be illuminated and clearly visible to approaching traffic. The illumination footprint of the lighting on the ground shall be at least 20' in diameter. Place a minimum of four cones at 50' intervals in advance of flagger station as shown.
7. Place C30(CA) "LANE CLOSED" sign at 500' to 1000' intervals throughout extended work areas. They are optional if the work area is visible from the flagger station.
8. When a pilot car is used, place a C37(CA) "TRAFFIC CONTROL-WAIT AND FOLLOW PILOT CAR" sign with black legend on white background at all intersections, driveways and alleys without a flagger within traffic control area. Signs shall be clean and visible at all times. Where traffic can not be effectively self-regulated, at least one flagger shall be used at each intersection within traffic control area.
9. An optional C29(CA) sign may be placed below the C9A(CA) sign.
10. Either traffic cones or barricades shall be placed on the taper. Barricades shall be Type I, II, or III.

STATE OF CALIFORNIA
DEPARTMENT OF TRANSPORTATION

TRAFFIC CONTROL SYSTEM FOR LANE CLOSURE ON TWO LANE CONVENTIONAL HIGHWAYS

NO SCALE

RSP T13 DATED APRIL 19, 2013 SUPERSEDES STANDARD PLAN T13 DATED MAY 20, 2011 - PAGE 241 OF THE STANDARD PLANS BOOK DATED 2010.

REVISED STANDARD PLAN RSP T13

2010 REVISED STANDARD PLAN RSP T13

4-2-13