Dist	COUNTY	ROUTE	POST MILES TOTAL PROJECT	SHEET No.	TOTAL SHEETS
09	Mno	158	2.5/2.9	1	34

STATE OF CALIFORNIA **ACSTP-S158(112)E**

DEPARTMENT OF TRANSPORTATION

PROJECT PLANS FOR CONSTRUCTION ON

STATE HIGHWAY

IN MONO COUNTY
AT JUNE LAKE FROM WEST BIG ROCK ROAD TO GULL LAKE ROAD

TO BE SUPPLEMENTED BY STANDARD PLANS DATED MAY 2006

INDEX OF PLANS

SHEET No.	DESCRIPTION
1	TITLE AND LOCATION MAP
2	TYPICAL CROSS SECTIONS
3-4	LAYOUTS
5-14	CONSTRUCTION DETAILS
15-18	DRAINAGE PLANS, PROFILES, DETAILS AND QUANTITIES
19	CONSTRUCTION AREA SIGNS
20-21	SUMMARY OF QUANTITIES
22-34	REVISED AND NEW STANDARD PLANS

THE STANDARD PLANS LIST APPLICABLE TO THIS CONTRACT IS INCLUDED IN THE NOTICE TO BIDDERS AND SPECIAL PROVISIONS BOOK.

LOCATION MAP

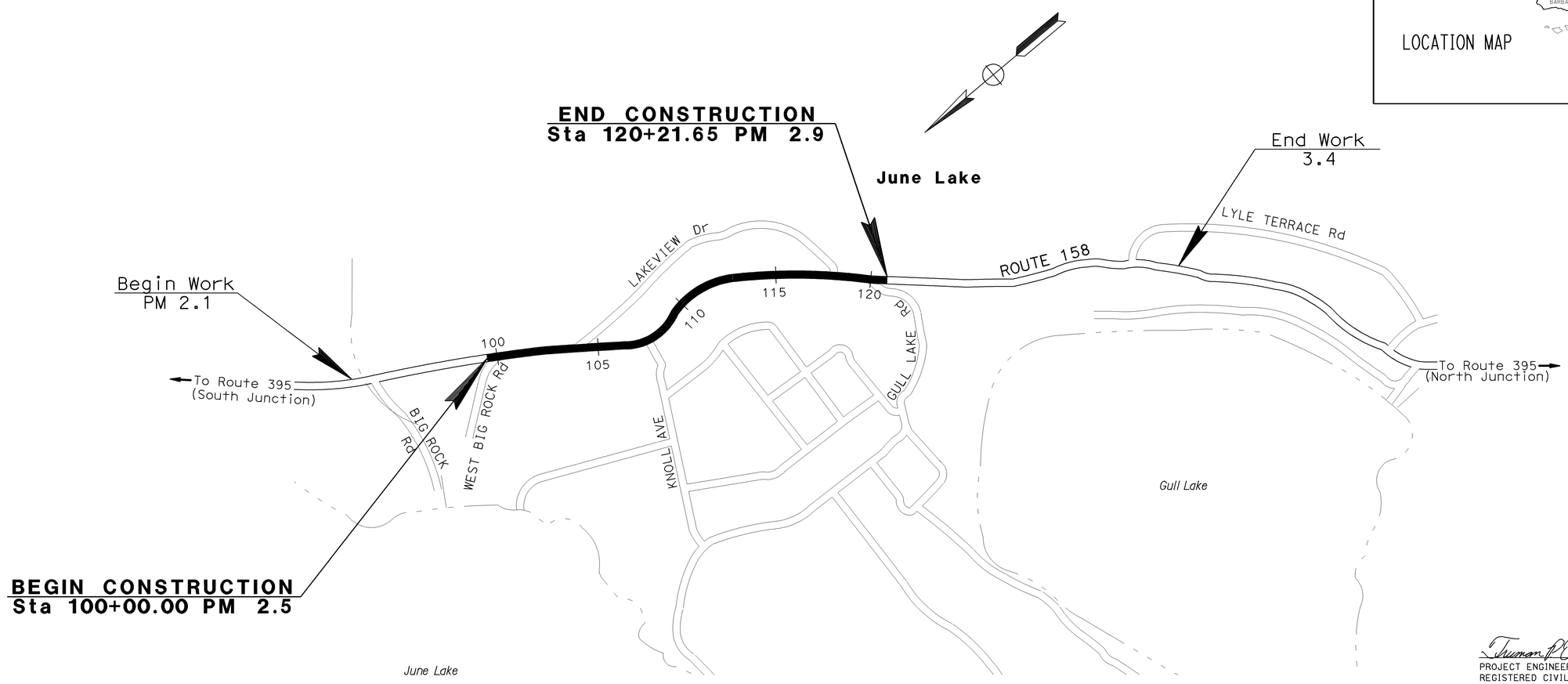

NO SCALE

THE CONTRACTOR SHALL POSSESS THE CLASS (OR CLASSES) OF LICENSE AS SPECIFIED IN THE "NOTICE TO BIDDERS."

PROJECT MANAGER: Brian McElwain

DESIGN ENGINEER: Truman Denio

Truman P Denio 12-9-11
PROJECT ENGINEER DATE
REGISTERED CIVIL ENGINEER

January 2, 2012
PLANS APPROVAL DATE

REGISTERED PROFESSIONAL ENGINEER — TRUMAN P DENIO — No. 34556 — Exp. 9-30-13 — CIVIL — STATE OF CALIFORNIA

THE STATE OF CALIFORNIA OR ITS OFFICERS OR AGENTS SHALL NOT BE RESPONSIBLE FOR THE ACCURACY OR COMPLETENESS OF SCANNED COPIES OF THIS PLAN SHEET.

CONTRACT No.	09-350104
PROJECT ID	0900000227

LAST REVISION 12-08-11 DATE PLOTTED => 07-FEB-2012 TIME PLOTTED => 11:27

Dist	COUNTY	ROUTE	POST MILES TOTAL PROJECT	SHEET No.	TOTAL SHEETS
09	Mno	158	2.5/2.9	2	34

REGISTERED CIVIL ENGINEER 12-9-11 DATE

1-2-12
PLANS APPROVAL DATE

REGISTERED PROFESSIONAL ENGINEER TRUMAN P DENIO No. 34556 Exp. 9-30-13 CIVIL STATE OF CALIFORNIA

THE STATE OF CALIFORNIA OR ITS OFFICERS OR AGENTS SHALL NOT BE RESPONSIBLE FOR THE ACCURACY OR COMPLETENESS OF SCANNED COPIES OF THIS PLAN SHEET.

NOTES:

1. DIMENSIONS OF THE PAVEMENT STRUCTURES (STRUCTURAL SECTIONS) ARE SUBJECT TO TOLERANCES SPECIFIED IN THE STANDARD SPECIFICATIONS.
2. Exist Conc SIDEWALK, DRIVEWAYS, RAMPS, AND WALLS CONTAIN STEEL REINFORCEMENT.
3. NEW Gtr FL = Exist GUTTER FL.

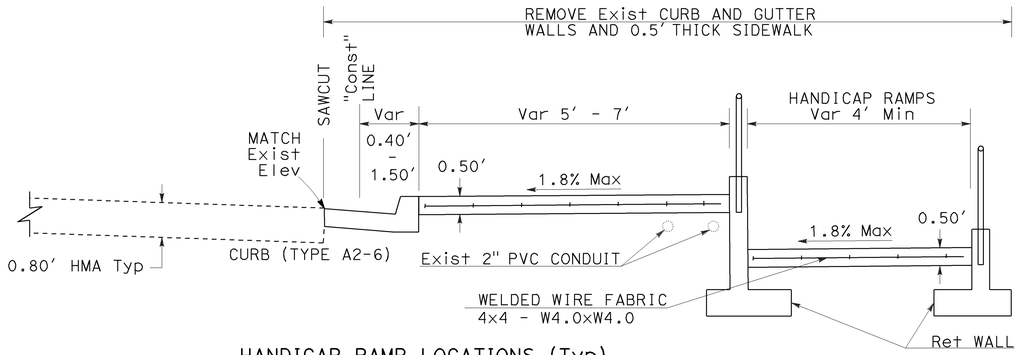

HANDICAP RAMP LOCATIONS (Typ)
Sta 105+92.84 TO Sta 106+52.99
Sta 106+83.70 TO Sta 107+48.61
Sta 117+28.49 TO Sta 117+91.64

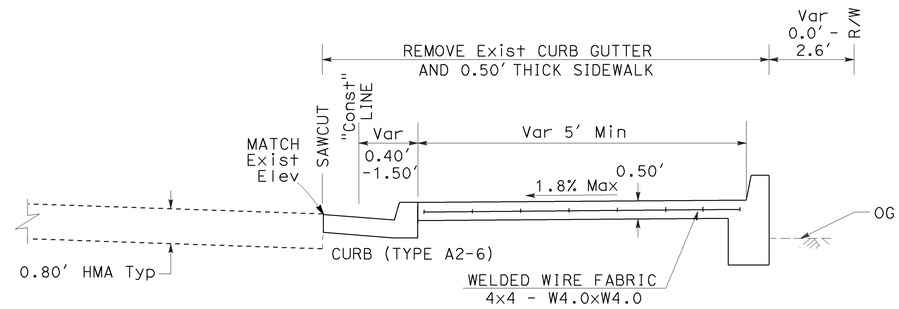

RETAINING CURB LOCATIONS (Typ)
Sta 106+52.99 TO Sta 106+58.53
Sta 116+50.27 TO Sta 116+91.34
Sta 118+25.00 TO Sta 119+03.01

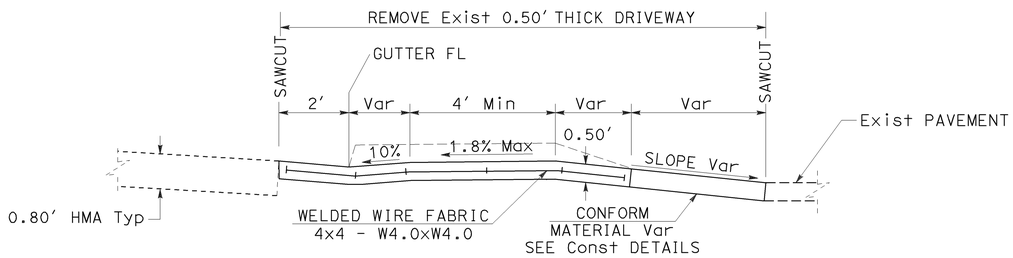

DRIVEWAY LOCATIONS
(Typ)

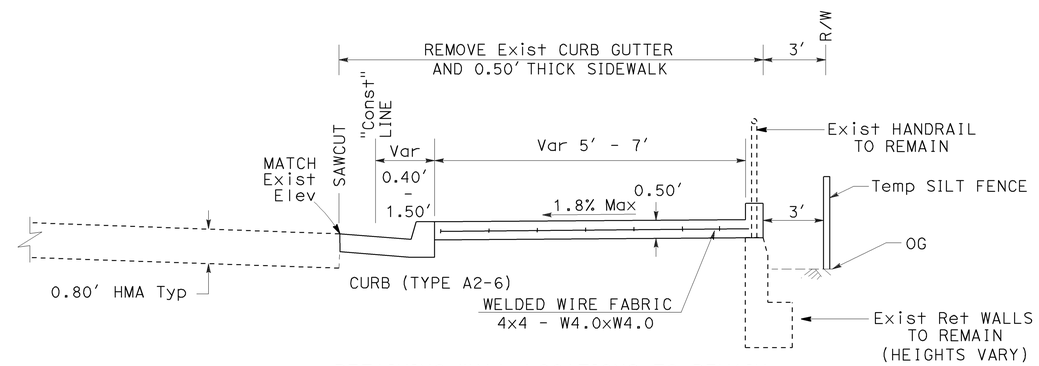

RETAINING WALL LOCATIONS TO REMAIN
Sta 104+16.52 TO Sta 104+69.71

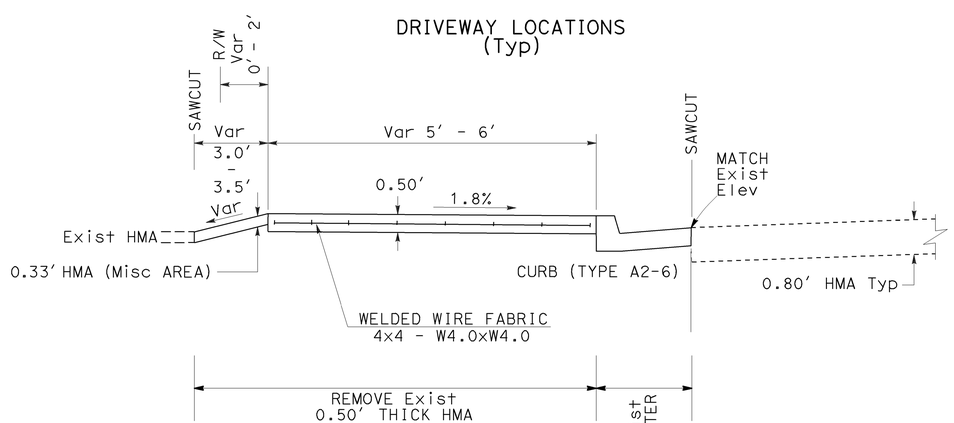

TYPICAL SIDEWALK LOCATION L+
Sta 104+24.47 TO 104+82.32

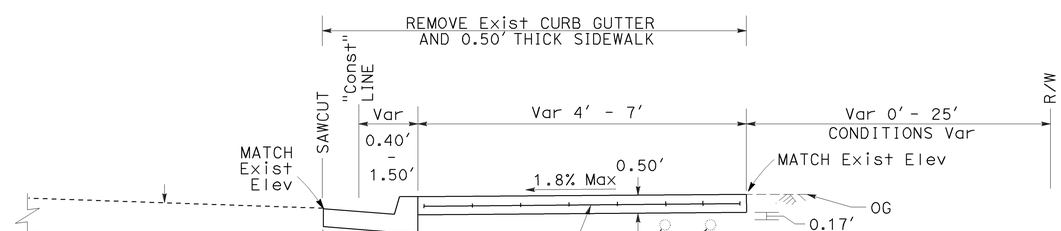

TYPICAL SIDEWALK LOCATION R+
Sta 100+00.00 TO 120+21.65

TYPICAL CROSS SECTIONS
NO SCALE

X-1

STATE OF CALIFORNIA - DEPARTMENT OF TRANSPORTATION
Caltrans PROJECT COORDINATION
FUNCTIONAL SUPERVISOR: TRUMAN DENIO
CALCULATED-DESIGNED BY: RICK KUYKENDALL
CHECKED BY: TRUMAN DENIO
REVISED BY
DATE REVISED

LAST REVISION 12-09-11
DATE PLOTTED => 07-FEB-2012
TIME PLOTTED => 11:27

Dist	COUNTY	ROUTE	POST MILES TOTAL PROJECT	SHEET No.	TOTAL SHEETS
09	Mno	158	2.5/2.9	3	34

Truman P. Denio 12-9-11
REGISTERED CIVIL ENGINEER DATE

1-2-12
PLANS APPROVAL DATE

REGISTERED PROFESSIONAL ENGINEER TRUMAN P DENIO No. 34556 Exp. 9-30-13 CIVIL STATE OF CALIFORNIA

THE STATE OF CALIFORNIA OR ITS OFFICERS OR AGENTS SHALL NOT BE RESPONSIBLE FOR THE ACCURACY OR COMPLETENESS OF SCANNED COPIES OF THIS PLAN SHEET.

LEGEND:

- CURB RAMPS
- DRIVEWAYS

ABBREVIATIONS:

UB - UTILITY BOX
TCE - Temp Const EASEMENT

NOTES:

1. FOR ACCURATE RIGHT OF WAY DATA CONTACT RIGHT OF WAY
2. STATION AND OFFSETS REFERENCED TO "Const" LINE.

CURB RETURN DATA

No. ⊕	R	Δ	T	L	RADIUS POINT N	RADIUS POINT E
A	45′	38°36′18"	15.71′	30.22′	2110264.53	6973736.51
B	29′	42°26′14"	11.26′	21.48′	2109842.01	6973613.20
C	27′	81°13′37"	23.47′	38.81′	2109593.84	6973333.80
D	48′	62°19′02"	29.07′	52.30′	2109498.63	6973300.93

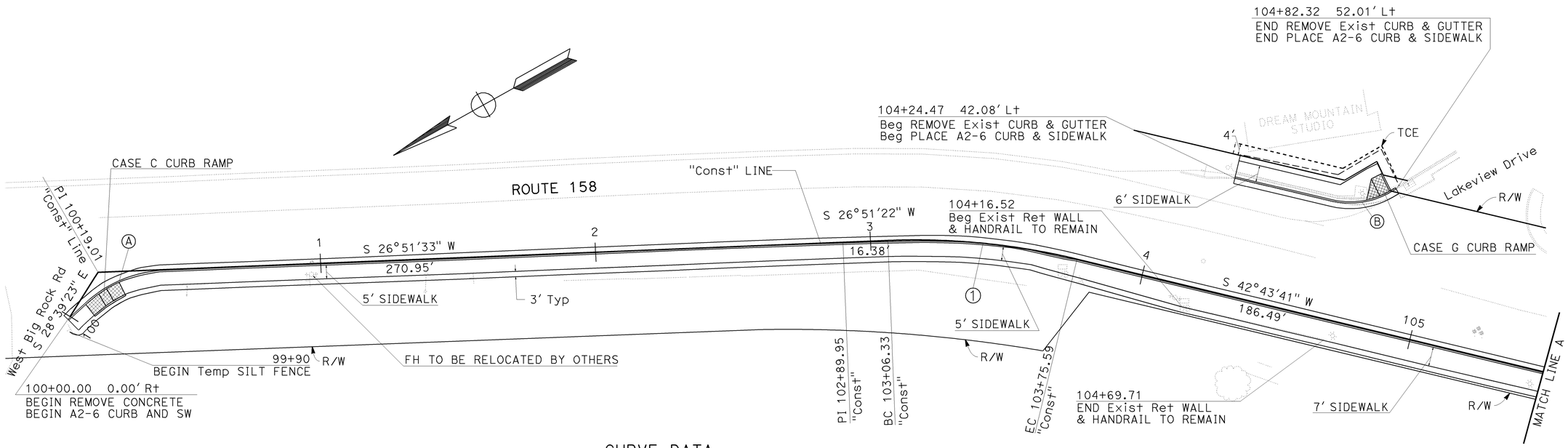

CURVE DATA

No. ⊕	R	Δ	T	L
1	250′	15°52′19"	34.85′	69.25′
2	300′	13°51′54"	36.48′	72.60′
3	265′	34°13′55"	81.61′	158.33′
4	265′	15°57′36"	37.15′	73.82′

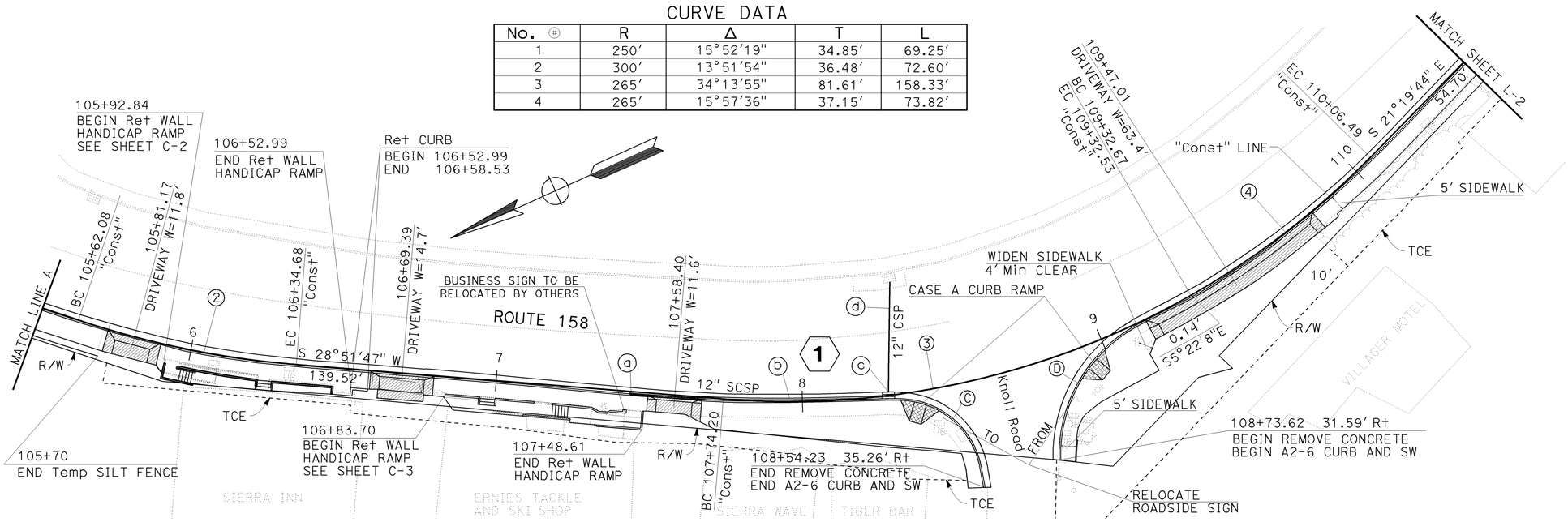

LAYOUT

SCALE: 1"=20′ **L-1**

STATE OF CALIFORNIA - DEPARTMENT OF TRANSPORTATION
Caltrans PROJECT COORDINATION

FUNCTIONAL SUPERVISOR: TRUMAN DENIO
CALCULATED-DESIGNED BY: RICK KUYKENDALL
CHECKED BY: TRUMAN DENIO
REVISED BY
DATE REVISED

LAST REVISION
DATE PLOTTED => 07-FEB-2012
TIME PLOTTED => 11:27
12-09-11

Dist	COUNTY	ROUTE	POST MILES TOTAL PROJECT	SHEET No.	TOTAL SHEETS
09	Mno	158	2.5/2.9	4	34

REGISTERED CIVIL ENGINEER 12-9-11 DATE

1-2-12
PLANS APPROVAL DATE

REGISTERED PROFESSIONAL ENGINEER TRUMAN P DENIO No. 34556 Exp. 9-30-13 CIVIL STATE OF CALIFORNIA

THE STATE OF CALIFORNIA OR ITS OFFICERS OR AGENTS SHALL NOT BE RESPONSIBLE FOR THE ACCURACY OR COMPLETENESS OF SCANNED COPIES OF THIS PLAN SHEET.

NOTES:

FOR ACCURATE RIGHT OF WAY DATA CONTACT RIGHT OF WAY ENGINEERING AT THE DISTRICT OFFICE.

CURVE DATA

No. ⊕	R	Δ	T	L
5	228′	42°46′40"	89.30′	170.23′
6	500′	18°12′35"	80.13′	158.91′
7	15′	38°8′00"	5.18′	9.98′

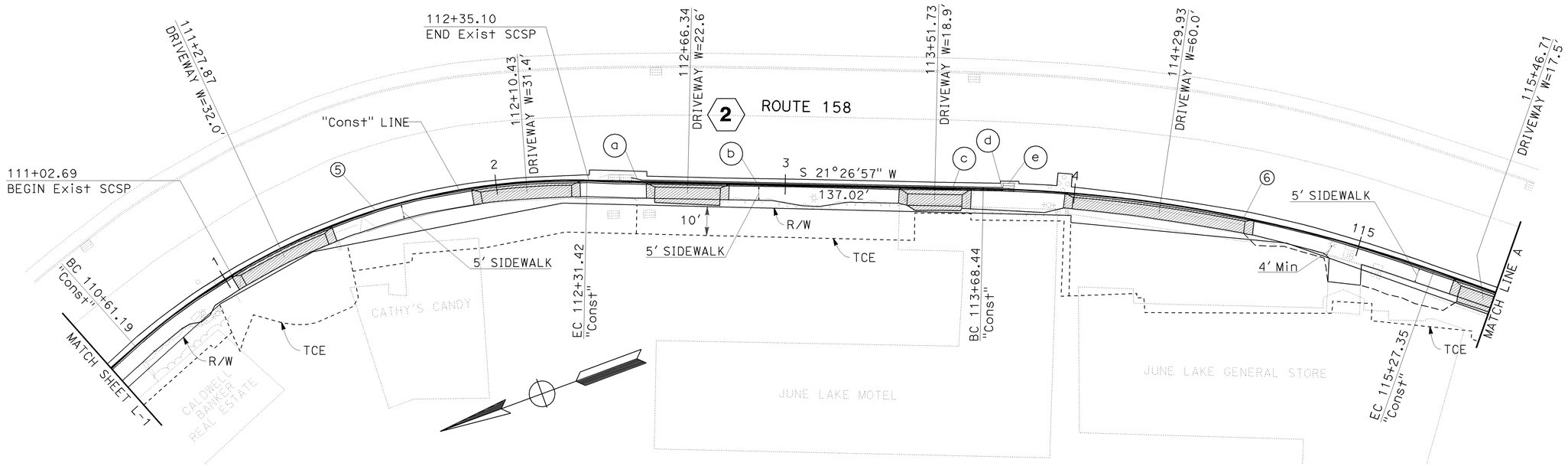

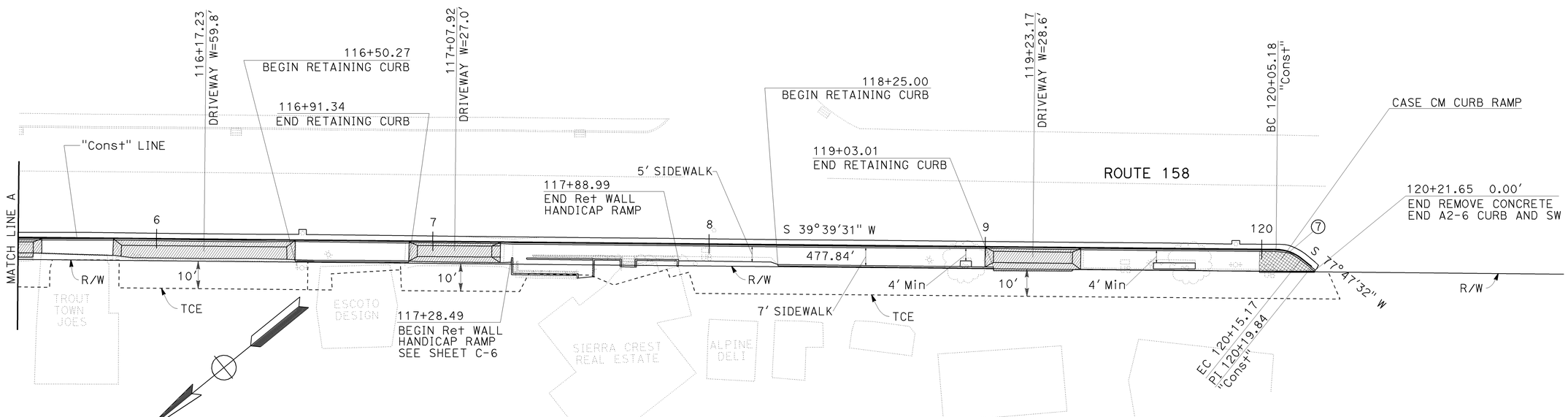

LAYOUT

SCALE: 1"=20′ **L-2**

STATE OF CALIFORNIA - DEPARTMENT OF TRANSPORTATION
Caltrans PROJECT COORDINATION

FUNCTIONAL SUPERVISOR: TRUMAN DENIO
CALCULATED-DESIGNED BY: RICK KUYKENDALL
CHECKED BY: TRUMAN DENIO
REVISED BY
DATE REVISED

LAST REVISION 12-09-11
DATE PLOTTED => 07-FEB-2012
TIME PLOTTED => 11:27

Dist	COUNTY	ROUTE	POST MILES TOTAL PROJECT	SHEET No.	TOTAL SHEETS
09	Mno	158	2.5/2.9	5	34

REGISTERED CIVIL ENGINEER 12-9-11 DATE

1-2-12
PLANS APPROVAL DATE

REGISTERED PROFESSIONAL ENGINEER TRUMAN P DENIO No. 34556 Exp. 9-30-13 CIVIL STATE OF CALIFORNIA

THE STATE OF CALIFORNIA OR ITS OFFICERS OR AGENTS SHALL NOT BE RESPONSIBLE FOR THE ACCURACY OR COMPLETENESS OF SCANNED COPIES OF THIS PLAN SHEET.

LEGEND:

- CURB RAMP

ABBREVIATIONS:

TCE - TEMPORARY CONSTRUCTION EASEMENT

UB - UTILITY BOX

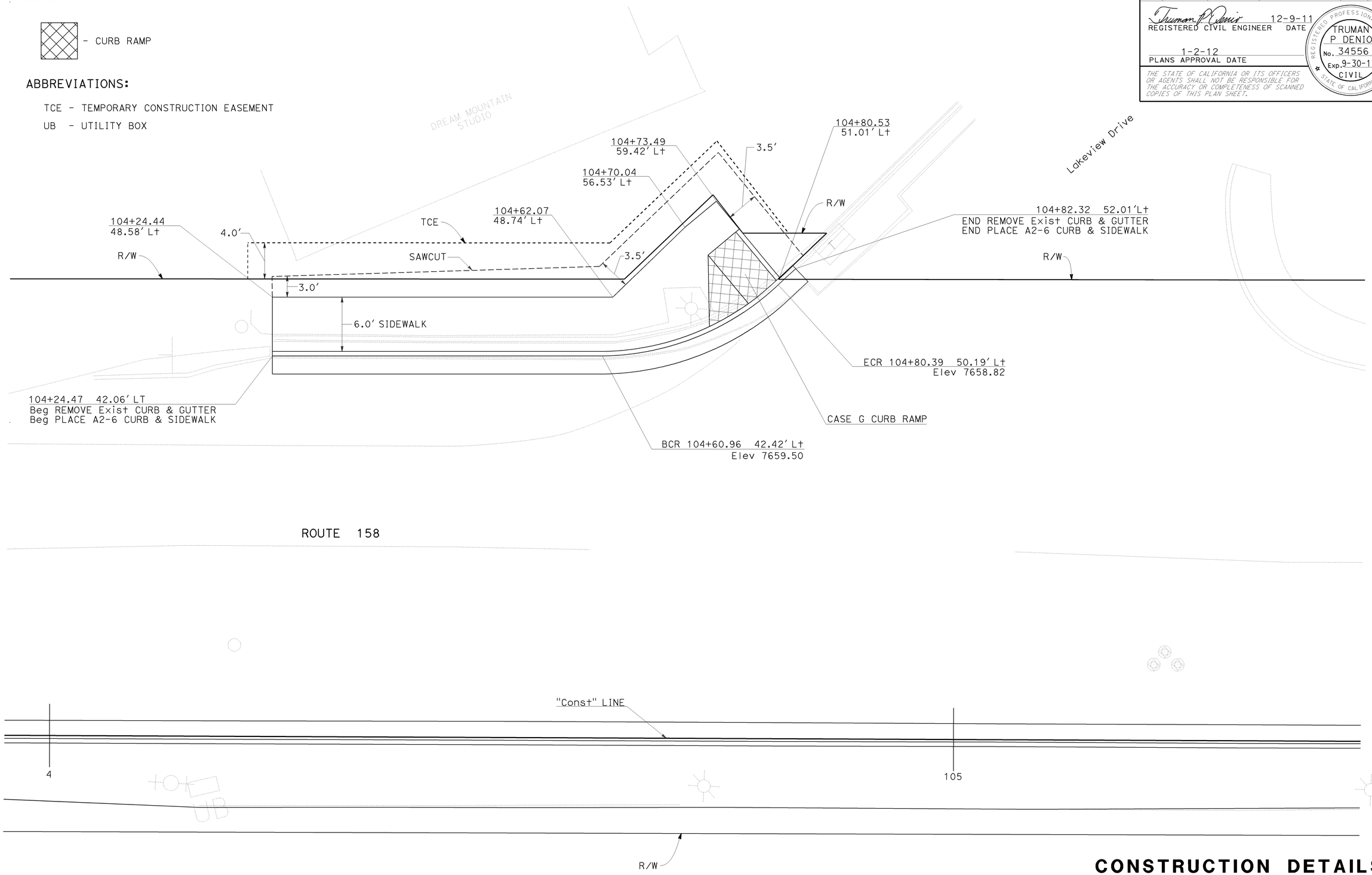

CONSTRUCTION DETAILS

NO SCALE

C-1

STATE OF CALIFORNIA - DEPARTMENT OF TRANSPORTATION
Caltrans PROJECT COORDINATION

FUNCTIONAL SUPERVISOR: TRUMAN DENIO

CALCULATED-DESIGNED BY: RICK KUYKENDALL
CHECKED BY: TRUMAN DENIO

REVISED BY
DATE REVISED

LAST REVISION 12-09-11
DATE PLOTTED => 07-FEB-2012
TIME PLOTTED => 11:27

Dist	COUNTY	ROUTE	POST MILES TOTAL PROJECT	SHEET No.	TOTAL SHEETS
09	Mno	158	2.5/2.9	6	34

REGISTERED CIVIL ENGINEER 12-9-11 DATE

1-2-12
PLANS APPROVAL DATE

REGISTERED PROFESSIONAL ENGINEER TRUMAN P DENIO No. 34556 Exp. 9-30-13 CIVIL STATE OF CALIFORNIA

THE STATE OF CALIFORNIA OR ITS OFFICERS OR AGENTS SHALL NOT BE RESPONSIBLE FOR THE ACCURACY OR COMPLETENESS OF SCANNED COPIES OF THIS PLAN SHEET.

NOTES:

1. SEE SHEET C-7 FOR RETAINING WALL TYPE AND DETAILS.
2. SEE SHEET C-8 FOR HANDRAILING DETAILS.
3. SEE SHEET C-9 FOR STEP DETAILS.
4. SEE SHEET C-10 FOR SIDEWALK LANDING DETAILS.
5. STATION AND OFFSETS REFERENCED TO "Const" LINE.

ABBREVIATIONS:

GB - GRADE BREAK

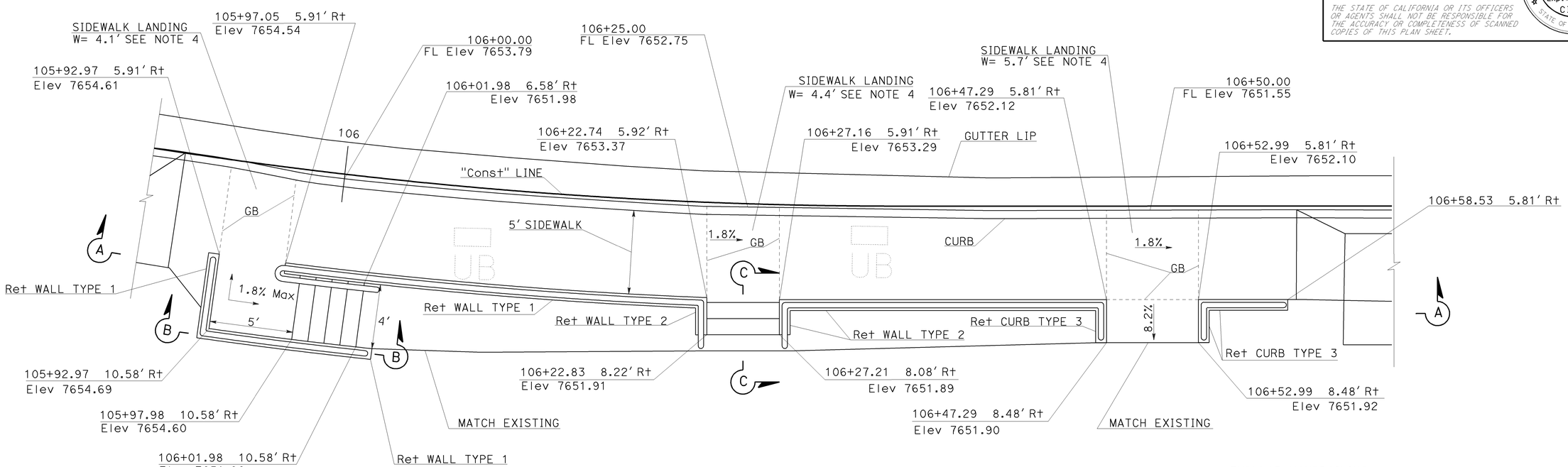

PLAN VIEW

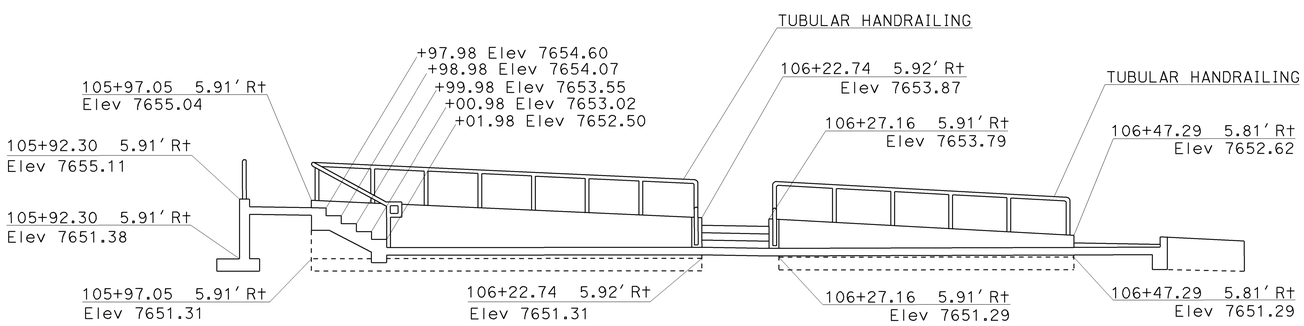

SECTION AND ELEVATION A-A

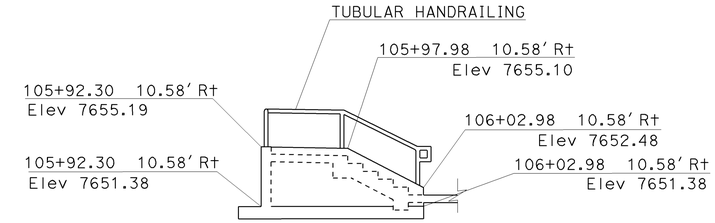

SECTION B-B

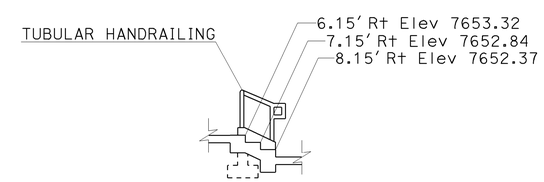

SECTION AND ELEVATION C-C

RETAINING WALLS AND HANDICAP RAMP
STA 105+92.84 TO STA 106+58.53

CONSTRUCTION DETAILS

NO SCALE

C-2

STATE OF CALIFORNIA - DEPARTMENT OF TRANSPORTATION
Caltrans PROJECT COORDINATION

FUNCTIONAL SUPERVISOR: TRUMAN DENIO
CALCULATED-DESIGNED BY: RICK KUYKENDALL
CHECKED BY: TRUMAN DENIO
REVISED BY
DATE REVISED

LAST REVISION 12-09-11
DATE PLOTTED => 07-FEB-2012
TIME PLOTTED => 11:27

Dist	COUNTY	ROUTE	POST MILES TOTAL PROJECT	SHEET No.	TOTAL SHEETS
09	Mno	158	2.5/2.9	7	34

REGISTERED CIVIL ENGINEER 12-9-11 DATE

1-2-12
PLANS APPROVAL DATE

REGISTERED PROFESSIONAL ENGINEER TRUMAN P DENIO No. 34556 Exp. 9-30-13 CIVIL STATE OF CALIFORNIA

THE STATE OF CALIFORNIA OR ITS OFFICERS OR AGENTS SHALL NOT BE RESPONSIBLE FOR THE ACCURACY OR COMPLETENESS OF SCANNED COPIES OF THIS PLAN SHEET.

NOTES:

1. SEE SHEET C-7 FOR RETAINING WALL TYPE AND DETAILS.
2. SEE SHEET C-8 FOR HANDRAILING DETAILS.
3. SEE SHEET C-9 FOR STEP DETAILS.
4. SEE SHEET C-10 FOR SIDEWALK LANDING DETAILS.
5. STATION AND OFFSETS REFERENCED TO "Const" LINE.

ABBREVIATIONS:

GB - GRADE BREAK

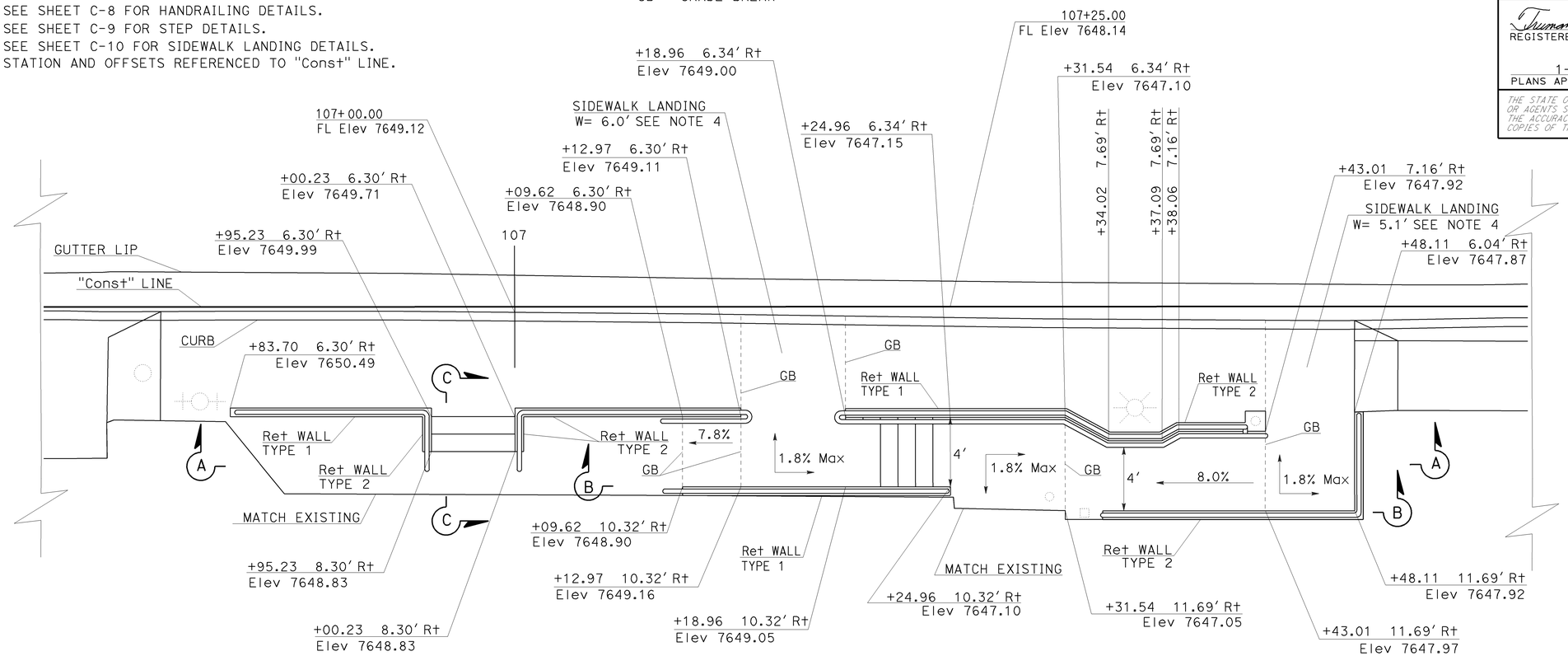

PLAN VIEW

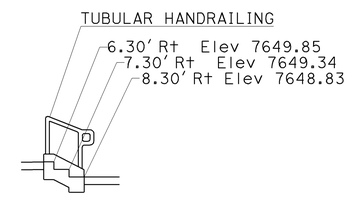

SECTION C-C

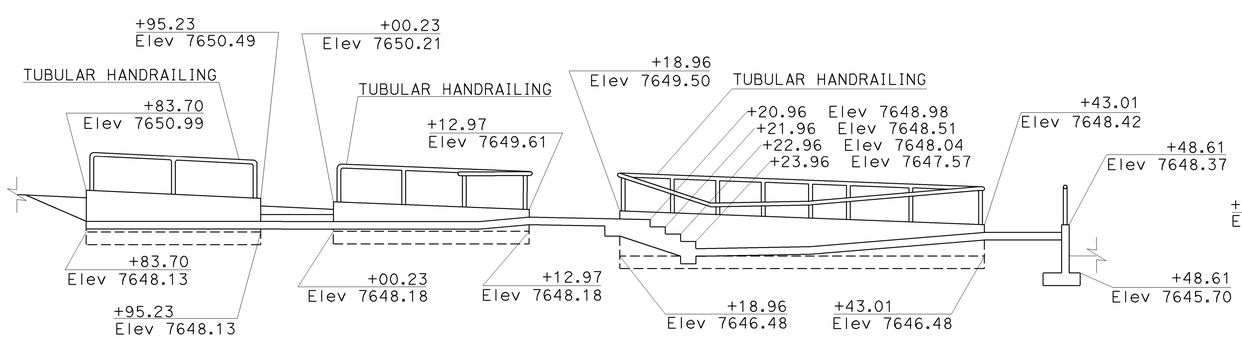

SECTION AND ELEVATION A-A

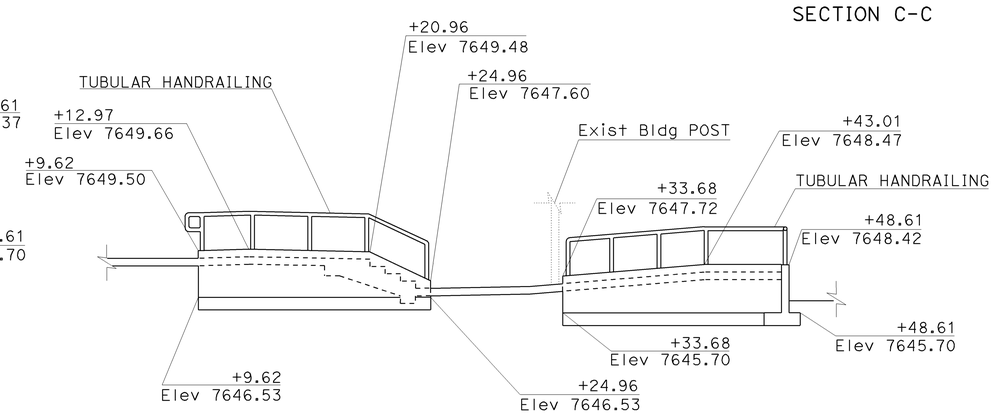

SECTION B-B

RETAINING WALL AND HANDICAP RAMP
STA 106+83.70 TO STA 107+48.61

CONSTRUCTION DETAILS
NO SCALE **C-3**

STATE OF CALIFORNIA - DEPARTMENT OF TRANSPORTATION
Caltrans PROJECT COORDINATION
FUNCTIONAL SUPERVISOR: TRUMAN DENIO
CALCULATED-DESIGNED BY: RICK KUYKENDALL
CHECKED BY: TRUMAN DENIO
REVISED BY / DATE REVISED

LAST REVISION 12-12-11
DATE PLOTTED => 07-FEB-2012
TIME PLOTTED => 11:27

Dist	COUNTY	ROUTE	POST MILES TOTAL PROJECT	SHEET No.	TOTAL SHEETS
09	Mno	158	2.5/2.9	8	34

REGISTERED CIVIL ENGINEER 12-9-11 DATE

1-2-12
PLANS APPROVAL DATE

REGISTERED PROFESSIONAL ENGINEER TRUMAN P DENIO No. 34556 Exp. 9-30-13 CIVIL STATE OF CALIFORNIA

THE STATE OF CALIFORNIA OR ITS OFFICERS OR AGENTS SHALL NOT BE RESPONSIBLE FOR THE ACCURACY OR COMPLETENESS OF SCANNED COPIES OF THIS PLAN SHEET.

LEGEND:

- REMOVE ASPHALT CONCRETE AND PLACE HMA (Misc AREA)

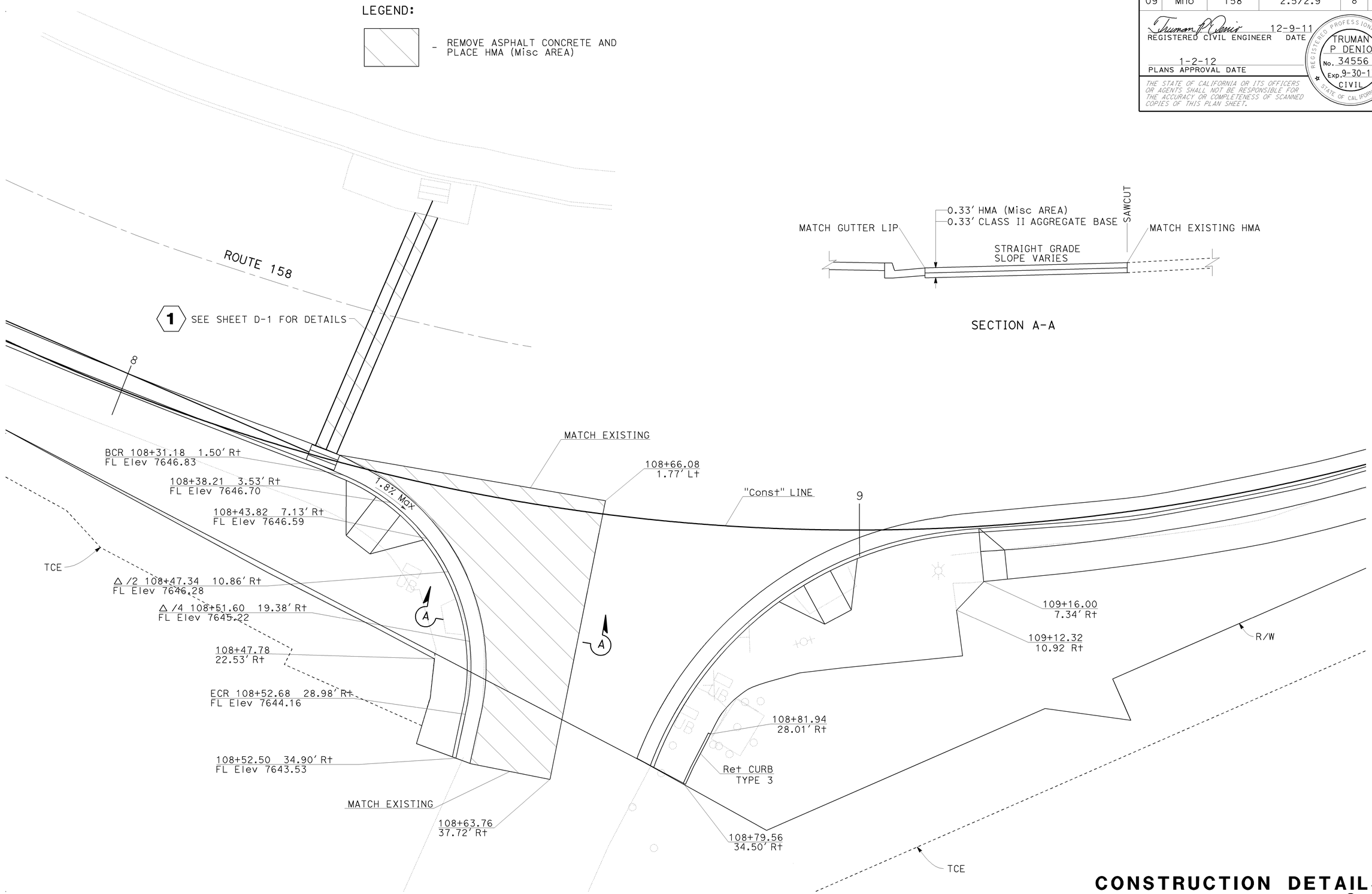

SECTION A-A

CONSTRUCTION DETAILS

NO SCALE

C-4

STATE OF CALIFORNIA - DEPARTMENT OF TRANSPORTATION
Caltrans® PROJECT COORDINATION

FUNCTIONAL SUPERVISOR: TRUMAN DENIO
CALCULATED-DESIGNED BY: RICK KUYKENDALL
CHECKED BY: TRUMAN DENIO
REVISED BY
DATE REVISED

LAST REVISION 12-12-11
DATE PLOTTED => 07-FEB-2012
TIME PLOTTED => 11:27

Dist	COUNTY	ROUTE	POST MILES TOTAL PROJECT	SHEET No.	TOTAL SHEETS
09	Mno	158	2.5/2.9	9	34

REGISTERED CIVIL ENGINEER 12-9-11 DATE

1-2-12
PLANS APPROVAL DATE

REGISTERED PROFESSIONAL ENGINEER TRUMAN P DENIO No. 34556 Exp. 9-30-13 CIVIL STATE OF CALIFORNIA

THE STATE OF CALIFORNIA OR ITS OFFICERS OR AGENTS SHALL NOT BE RESPONSIBLE FOR THE ACCURACY OR COMPLETENESS OF SCANNED COPIES OF THIS PLAN SHEET.

ABBREVIATION:

GB - GRADE BREAK

NOTE:

1. SEE SHEET C-9 FOR SIDEWALK LANDING DETAILS

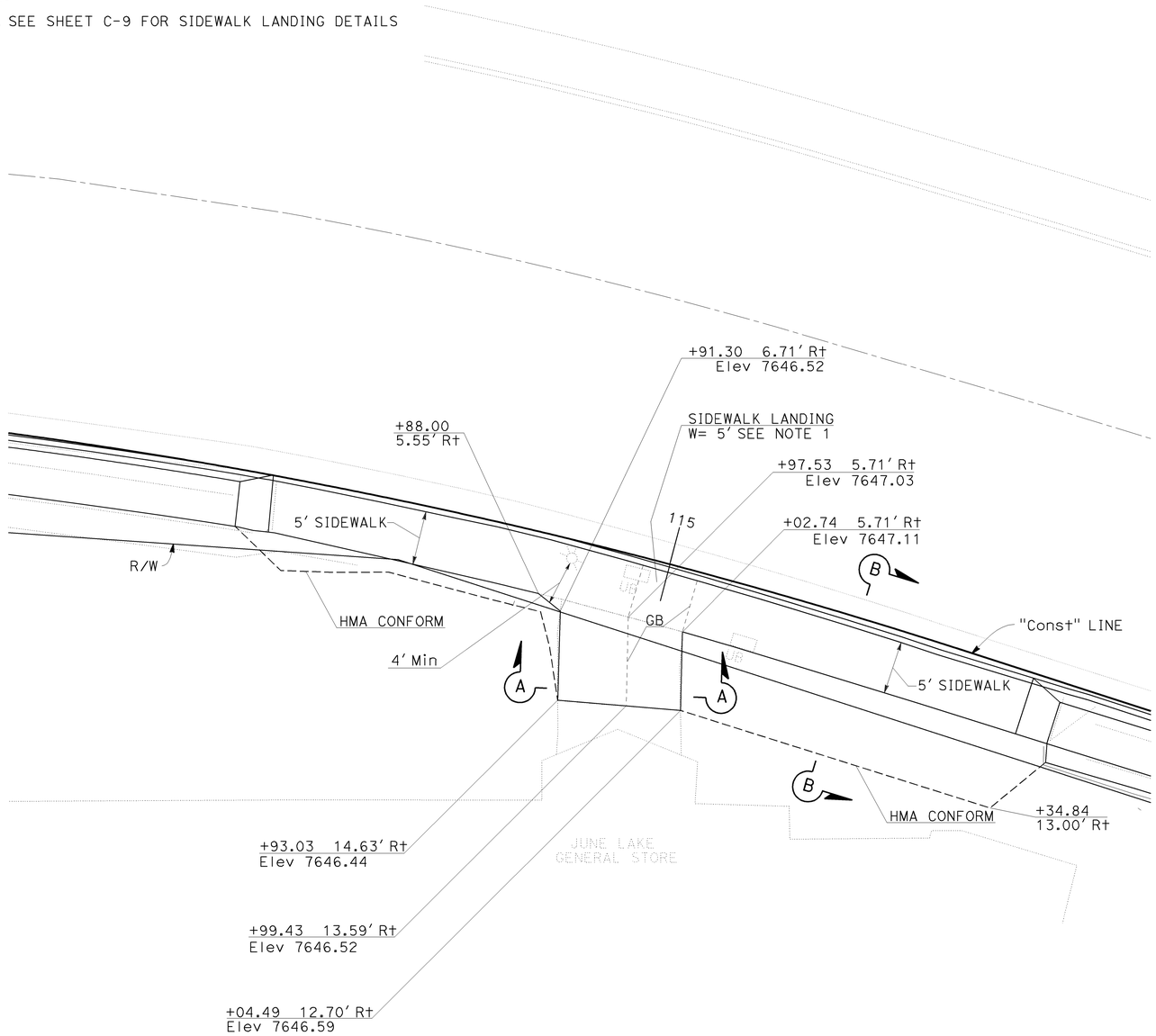

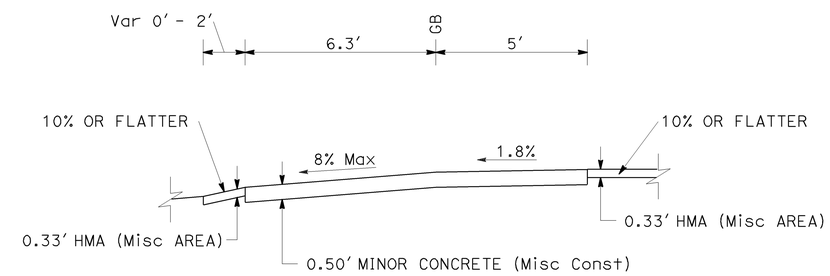

SECTION A-A

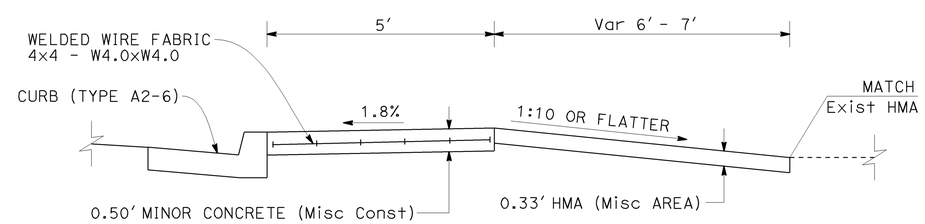

SECTION B-B

CONSTRUCTION DETAILS
NO SCALE

C-5

STATE OF CALIFORNIA - DEPARTMENT OF TRANSPORTATION
Caltrans PROJECT COORDINATION

FUNCTIONAL SUPERVISOR: TRUMAN DENIO
CALCULATED-DESIGNED BY: RICK KUYKENDALL
CHECKED BY: TRUMAN DENIO
REVISED BY
DATE REVISED

LAST REVISION 12-12-11
DATE PLOTTED => 07-FEB-2012
TIME PLOTTED => 11:27

Dist	COUNTY	ROUTE	POST MILES TOTAL PROJECT	SHEET No.	TOTAL SHEETS
09	Mno	158	2.5/2.9	10	34

Truman P. Denio 12-9-11
REGISTERED CIVIL ENGINEER DATE

1-2-12
PLANS APPROVAL DATE

REGISTERED PROFESSIONAL ENGINEER TRUMAN P DENIO No. 34556 Exp. 9-30-13 CIVIL STATE OF CALIFORNIA

THE STATE OF CALIFORNIA OR ITS OFFICERS OR AGENTS SHALL NOT BE RESPONSIBLE FOR THE ACCURACY OR COMPLETENESS OF SCANNED COPIES OF THIS PLAN SHEET.

NOTES:

1. SEE SHEET C-7 FOR RETAINING WALL TYPE AND DETAILS.
2. SEE SHEET C-8 FOR HANDRAILING DETAILS.
3. SEE SHEET C-9 FOR STEP DETAILS.
4. SEE SHEET C-10 FOR SIDEWALK LANDING DETAILS.
5. STATION AND OFFSETS REFERENCED TO "Const" LINE.

ABBREVIATION:

GB - GRADE BREAK

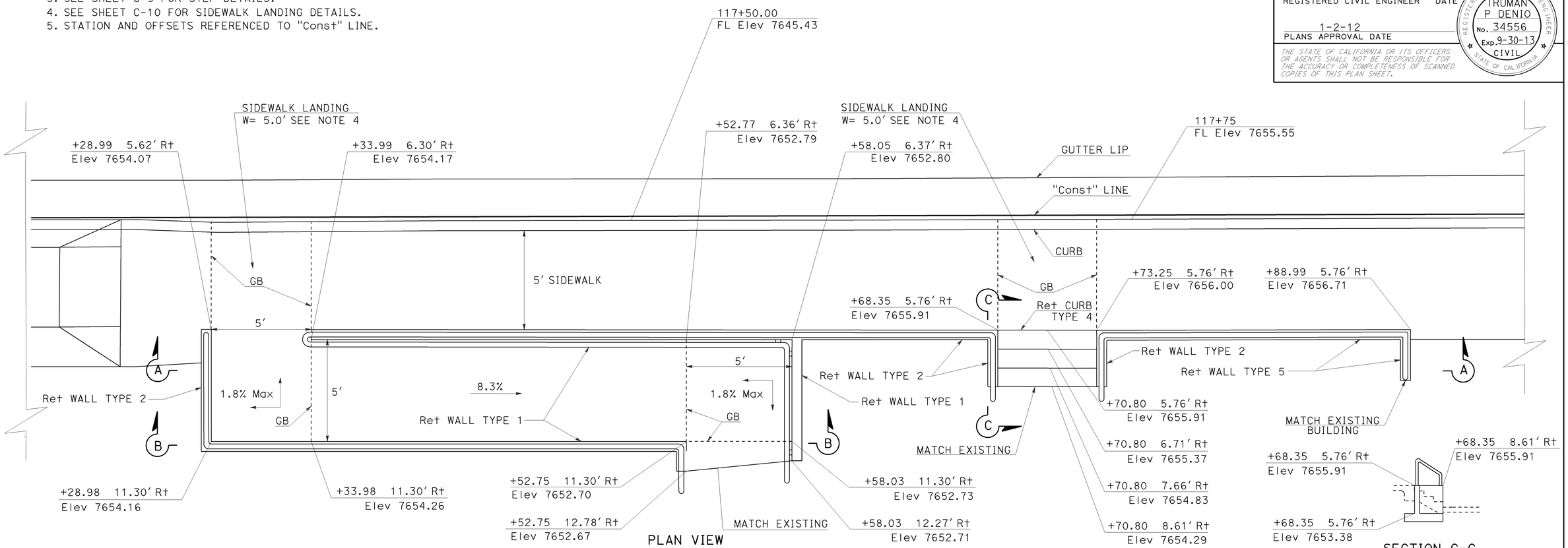

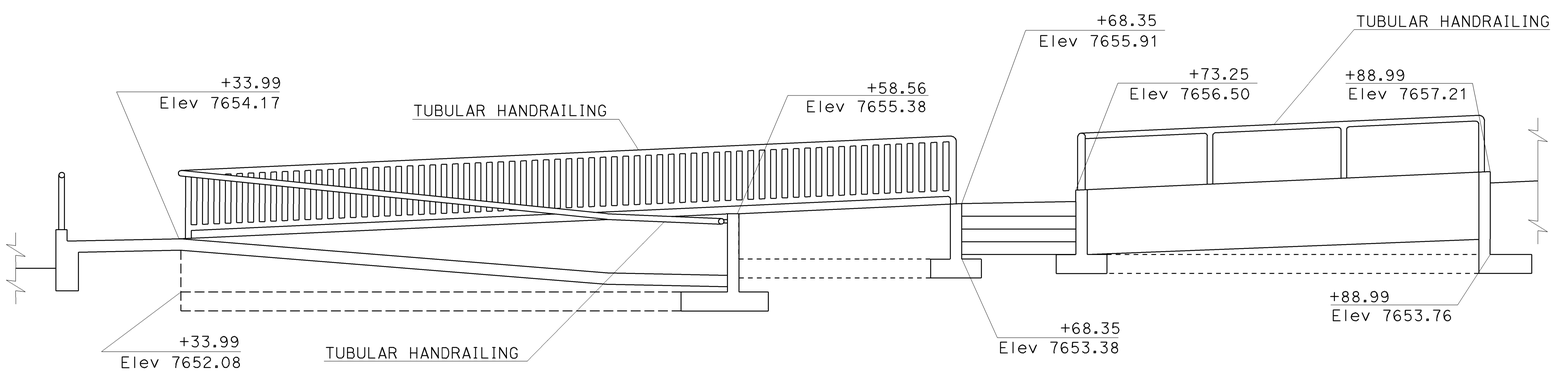

SECTION AND ELEVATION A-A

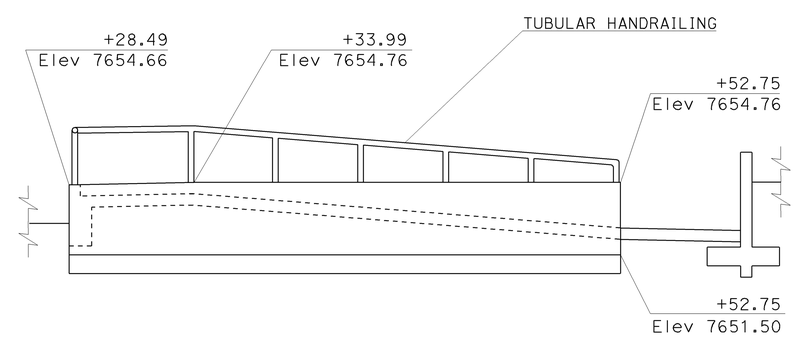

SECTION B-B

RETAINING WALL AND HANDICAP RAMP
STA 117+28.32 TO STA 117+88.99

CONSTRUCTION DETAILS
NO SCALE

C-6

STATE OF CALIFORNIA - DEPARTMENT OF TRANSPORTATION
Caltrans PROJECT COORDINATION

FUNCTIONAL SUPERVISOR: TRUMAN DENIO
CALCULATED-DESIGNED BY: RICK KUYKENDALL
CHECKED BY: TRUMAN DENIO
REVISED BY
DATE REVISED

LAST REVISION 12-22-11
DATE PLOTTED => 07-FEB-2012
TIME PLOTTED => 11:27

Dist	COUNTY	ROUTE	POST MILES TOTAL PROJECT	SHEET No.	TOTAL SHEETS
09	Mno	158	2.5/2.9	11	34

Truman P. Denio 12-9-11
REGISTERED CIVIL ENGINEER DATE

1-2-12
PLANS APPROVAL DATE

REGISTERED PROFESSIONAL ENGINEER TRUMAN P DENIO No. 34556 Exp. 9-30-13 CIVIL STATE OF CALIFORNIA

THE STATE OF CALIFORNIA OR ITS OFFICERS OR AGENTS SHALL NOT BE RESPONSIBLE FOR THE ACCURACY OR COMPLETENESS OF SCANNED COPIES OF THIS PLAN SHEET.

NOTE:

1. MINIMUM OF 0.1′ OF FILL OR ½″ EXPANSION JOINT MATERIAL BETWEEN FOOTING AND CONCRETE SIDEWALK.

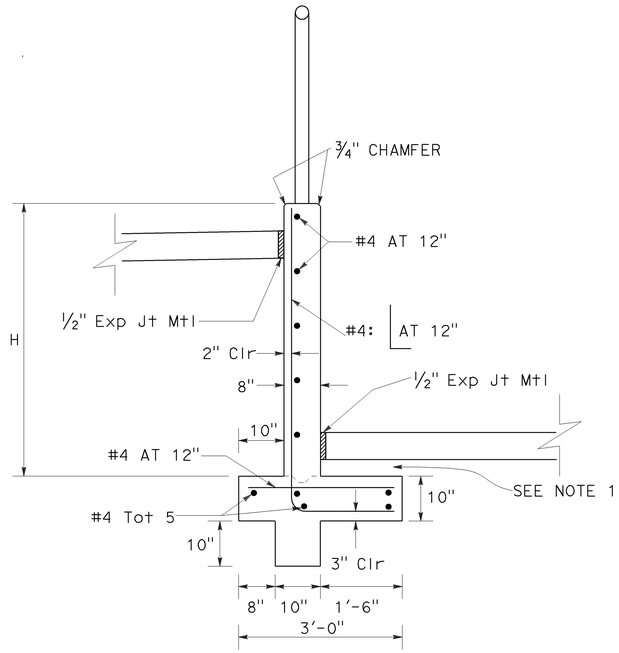

TYPE 1
H = 2.5′ TO 4.5′

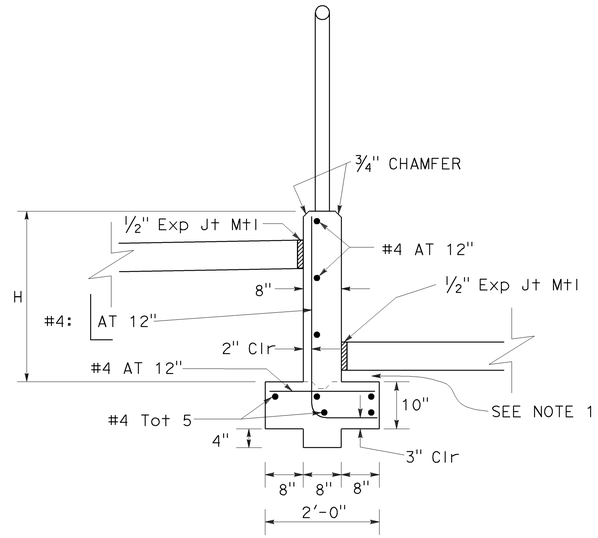

TYPE 2
H = 1.5′ TO 2.5′

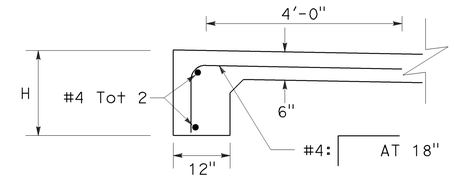

TYPE 4 (RETAINING CURB)
H = 0′ TO 1.5′

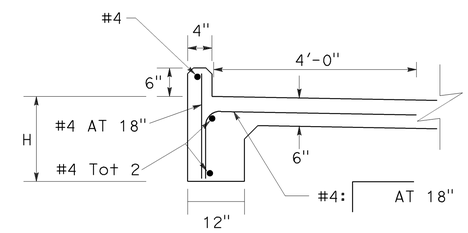

TYPE 3 (RETAINING CURB)
H = 0′ TO 1.5′

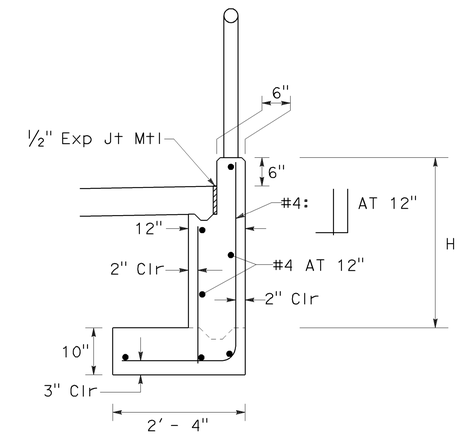

TYPE 5
H = 0.0′ TO 3.0′

RETAINING WALLS

STATION			STATION		LENGTH	BACK H	FORWARD H	TYPE	MINOR CONCRETE (MINOR Str)
									CY
105+92.30	5.91′ RT	TO	105+92.30	11.25′ RT	5.34′	3.73′	3.81′	1	1.13
105+92.30	11.25′ RT	TO	105+97.98	11.25′ RT	5.68′	3.81′	3.72′	1	1.20
105+97.05	5.91′ RT	TO	106+22.74	5.92′ RT	24.85′	3.73′	2.56′	1	4.88
105+97.98	11.25′ RT	TO	106+02.98	11.25′ RT	5.00′	3.72′	1.10′	1	0.89
106+22.74	5.92′ RT	TO	106+22.83	8.22′ RT	2.30′	2.56′	1.10′	2	0.27
106+27.16	5.91′ RT	TO	106+47.29	5.81′ RT	20.13′	2.50′	1.33′	2	2.37
106+27.16	5.91′ RT	TO	106+27.21	8.08′ RT	2.17′	2.50′	1.10′	2	0.25
106+47.29	5.81′ RT	TO	106+47.29	8.48′ RT	2.67′	1.50′	1.50′	3	0.16
106+52.99	5.81′ RT	TO	106+52.99	8.48′ RT	2.67′	1.50′	1.50′	3	0.16
106+52.99	5.81′ RT	TO	106+58.53	5.81′ RT	5.54′	1.50′	1.50′	3	0.34
106+83.70	6.30′ RT	TO	106+95.23	6.30′ RT	11.53′	2.85′	2.36′	1	2.11
106+95.23	6.30′ RT	TO	106+95.23	8.30′ RT	2.00′	2.36′	1.36′	2	0.23
107+00.23	6.30′ RT	TO	107+00.23	8.30′ RT	2.00′	2.03′	1.03′	2	0.22
107+00.23	6.30′ RT	TO	107+12.97	6.30′ RT	12.74′	2.03′	1.43′	2	1.44
107+09.62	10.32′ RT	TO	107+20.96	10.32′ RT	11.34′	2.97′	3.02′	1	2.18
107+18.96	6.34′ RT	TO	107+31.54	6.34′ RT	12.58′	3.02′	2.48′	1	2.34
107+20.96	10.32′ RT	TO	107+24.96	10.32′ RT	4.00′	3.02′	1.07′	1	0.68
107+31.54	6.34′ RT	TO	107+43.01	7.16′ RT	11.55′	2.48′	1.94′	2	1.44
107+33.68	11.69′ RT	TO	107+48.61	11.69′ RT	14.93′	2.02′	2.72′	2	1.92
107+48.61	6.04′ RT	TO	107+48.61	12.19′ RT	6.15′	2.67′	2.72′	2	0.84
108+79.56	34.50′ RT	TO	108+81.94	28.01′ RT	7.01′	1.50′	1.50′	3	0.43
116+50.27	7.18′ RT	TO	116+91.34	7.23′ RT	41.07′	1.50′	1.50′	3	2.53
117+28.32	11.30′ RT	TO	117+52.75	11.30′ RT	24.43′	3.26′	3.26′	1	4.86
117+28.99	5.62′ RT	TO	117+28.99	12.00′ RT	6.44′	2.16′	2.16′	2	0.80
117+33.99	6.30′ RT	TO	117+58.56	6.36′ RT	24.57′	2.09′	3.30′	1	4.55
117+52.75	11.30′ RT	TO	117+52.75	12.78′ RT	1.49′	2.68′	2.68′	1	0.28
117+58.05	6.37′ RT	TO	117+58.05	12.27′ RT	5.90′	3.80′	3.80′	1	1.25
117+58.56	6.37′ RT	TO	117+68.35	6.37′ RT	9.79′	2.00′	2.53′	2	1.24
117+68.35	5.76′ RT	TO	117+73.25	5.76′ RT	5.90′	1.50′	1.50′	4	0.33
117+68.35	5.76′ RT	TO	117+68.35	8.61′ RT	2.85′	2.53′	2.53′	2	0.38
117+73.25	5.76′ RT	TO	117+88.99	5.76′ RT	15.74′	2.74′	3.45′	5	3.23
117+73.25	5.76′ RT	TO	117+73.25	8.61′ RT	2.85′	2.74′	1.50′	2	0.35
117+88.99	5.76′ RT	TO	117+88.99	8.25′ RT	2.49′	3.45′	3.45′	5	0.54
118+25.00	7.20′ RT	TO	119+03.01	7.34′ RT	78.01′	1.50′	1.50′	4	4.33
								TOTAL	50.15

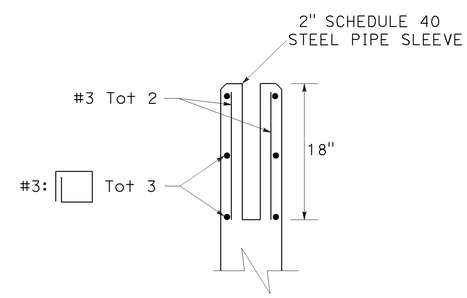

HANDRAILING
POST POCKET DETAIL

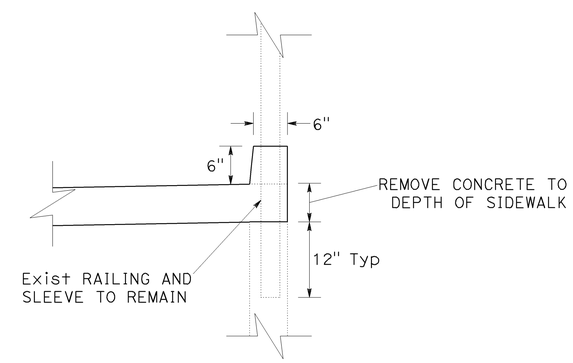

Exist Ret WALL
TO REMAIN

CONSTRUCTION DETAILS

NO SCALE **C-7**

STATE OF CALIFORNIA - DEPARTMENT OF TRANSPORTATION
PROJECT COORDINATION
FUNCTIONAL SUPERVISOR: TRUMAN DENIO
CALCULATED-DESIGNED BY: RICK KUYKENDALL
CHECKED BY: TRUMAN DENIO
REVISED BY / DATE REVISED

LAST REVISION 12-22-11
DATE PLOTTED => 07-FEB-2012
TIME PLOTTED => 11:27

Dist	COUNTY	ROUTE	POST MILES TOTAL PROJECT	SHEET No.	TOTAL SHEETS
09	Mno	158	2.5/2.9	12	34

REGISTERED CIVIL ENGINEER 12-9-11 DATE

1-2-12
PLANS APPROVAL DATE

REGISTERED PROFESSIONAL ENGINEER TRUMAN P DENIO No. 34556 Exp. 9-30-13 CIVIL STATE OF CALIFORNIA

THE STATE OF CALIFORNIA OR ITS OFFICERS OR AGENTS SHALL NOT BE RESPONSIBLE FOR THE ACCURACY OR COMPLETENESS OF SCANNED COPIES OF THIS PLAN SHEET.

NOTES:

1. GALVANIZE RAIL ASSEMBLY AFTER FABRICATION.
2. POST SHALL BE NORMAL TO RAILING.
3. TUBE SPLICES SHALL BE LOCATED IN THE TUBES SPANNING SIDEWALK EXPANSION JOINTS. INCREASE JOINT WIDTH IN TUBES TO MATCH EXPANSION JOINT WIDTH AND INCREASE SLEEVE LENGTH CORRESPONDINGLY.
4. TOP RAIL TUBE SHALL BE CONTINUOUS OVER NOT LESS THAN TWO POSTS.
5. SEE PROJECT PLANS FOR LIMITS OF TUBULAR HAND RAILING.

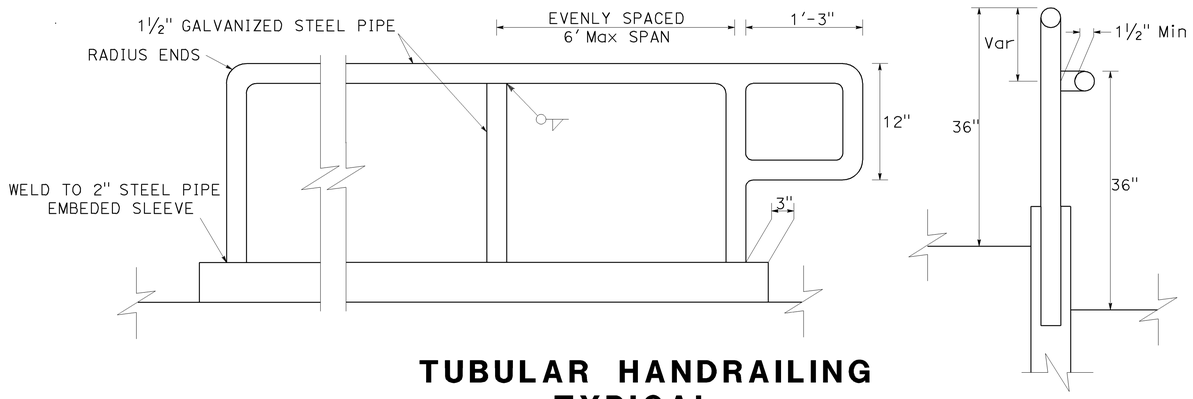

TUBULAR HANDRAILING TYPICAL

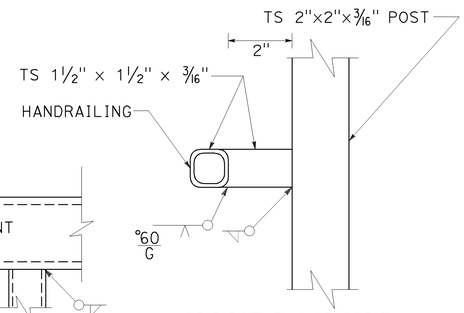

HANDRAILING CONNECTION

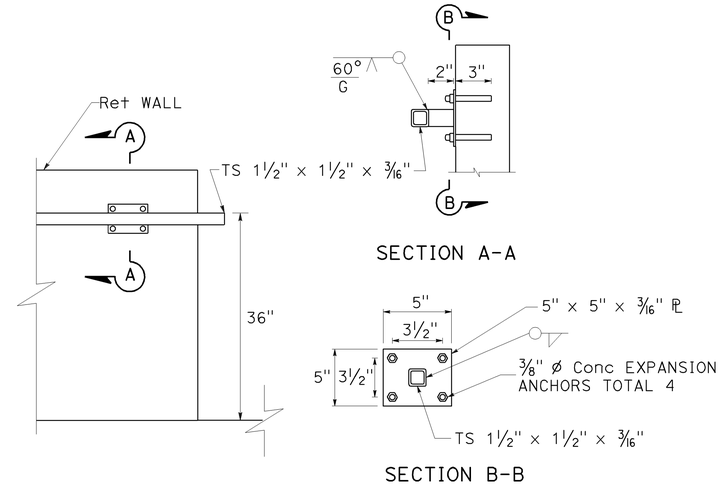

Ret WALL ANCHORAGE

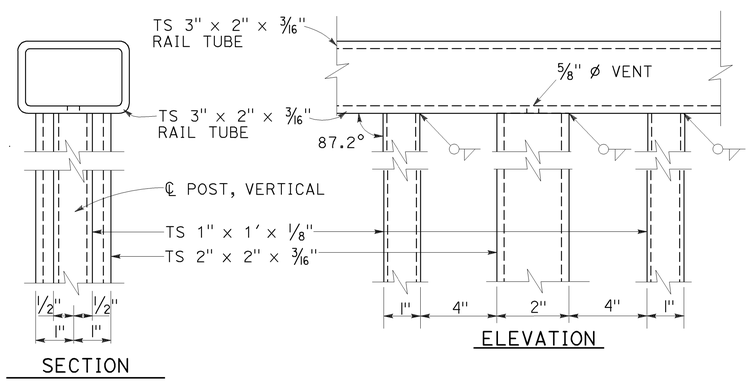

RAIL CONNECTION DETAILS

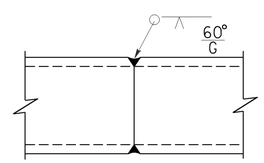

TUBE-WELDED SPLICE

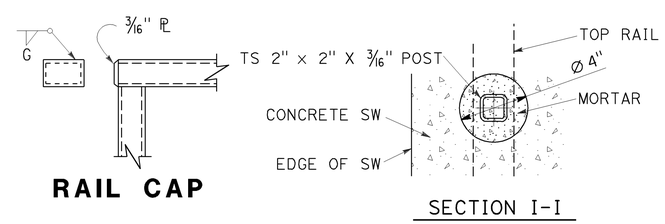

RAIL CAP

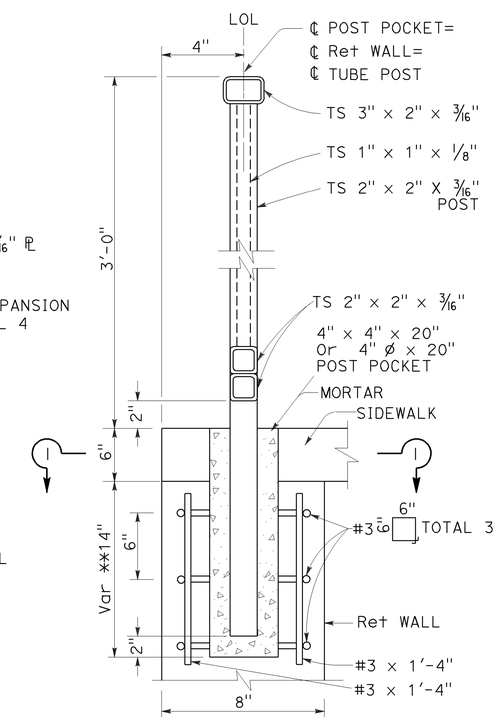

POST ANCHORAGE DETAIL

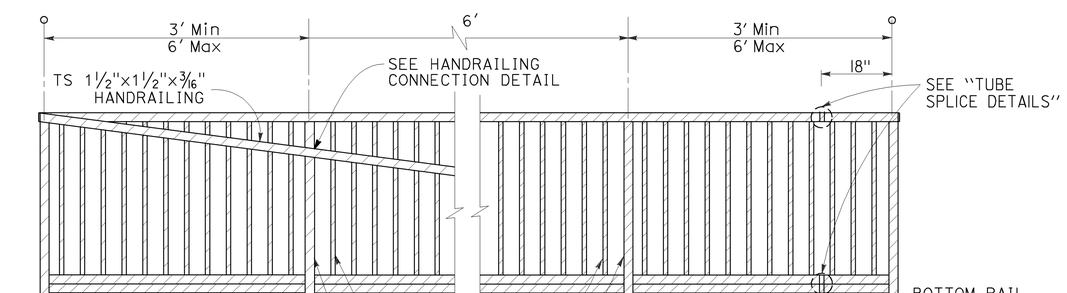

TUBULAR HANDRAILING FROM STA 117+33.99 TO STA 117+68.35

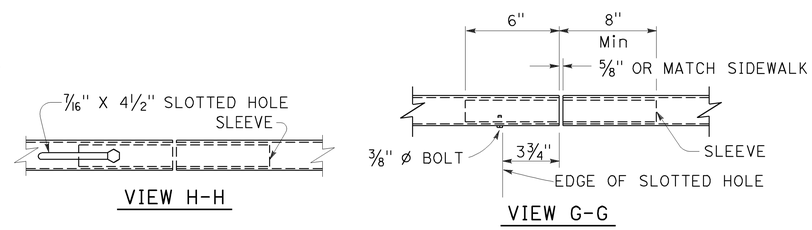

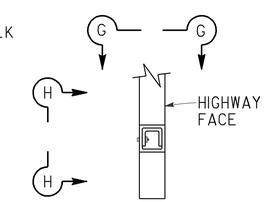

TACK WELD 3/8" ø NUT INSIDE OF SLEEVE FOR 3/8" ø HEX BOLT WITH LOCK WASHER

NOTE:

3/8" ø NUT TACK WELDED TO SLEEVE MAY BE REPLACED BY DRILLED AND TAPPED HOLE IN SLEEVE.

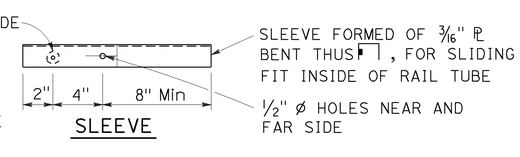

TUBE SPLICE DETAILS

CONSTRUCTION DETAILS

NO SCALE

C-8

STATE OF CALIFORNIA - DEPARTMENT OF TRANSPORTATION
Caltrans PROJECT COORDINATION

FUNCTIONAL SUPERVISOR: TRUMAN DENIO
CALCULATED-DESIGNED BY: RICK KUYKENDALL
CHECKED BY: TRUMAN DENIO
REVISED BY
DATE REVISED

LAST REVISION 12-12-11
DATE PLOTTED => 07-FEB-2012
TIME PLOTTED => 11:27

Dist	COUNTY	ROUTE	POST MILES TOTAL PROJECT	SHEET No.	TOTAL SHEETS
09	Mno	158	2.5/2.9	13	34

REGISTERED CIVIL ENGINEER 12-9-11 DATE

1-2-12
PLANS APPROVAL DATE

REGISTERED PROFESSIONAL ENGINEER TRUMAN P DENIO No. 34556 Exp. 9-30-13 CIVIL STATE OF CALIFORNIA

THE STATE OF CALIFORNIA OR ITS OFFICERS OR AGENTS SHALL NOT BE RESPONSIBLE FOR THE ACCURACY OR COMPLETENESS OF SCANNED COPIES OF THIS PLAN SHEET.

NOTE:
1: STAIR TREADS SHALL BE CONSTRUCTED IN THE SAME MANNER AS CURB RAMP BORDERS, SEE REVISED STANDARD PLAN A88A

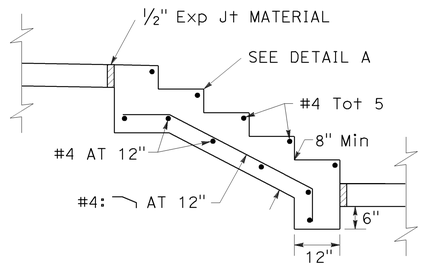

SECTION A-A

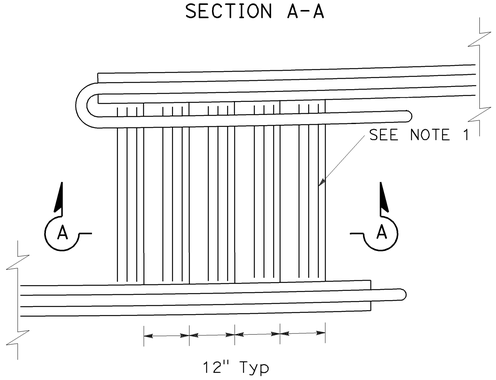

STATION 106+00

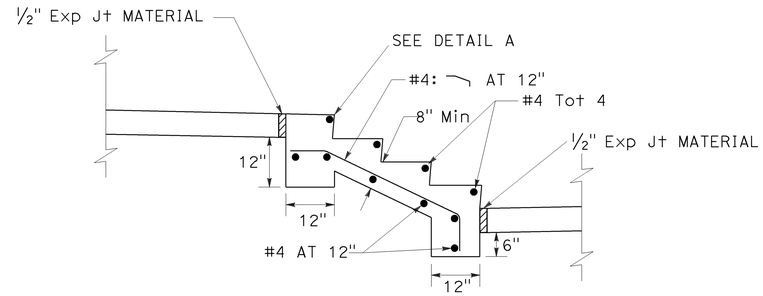

SECTION B-B

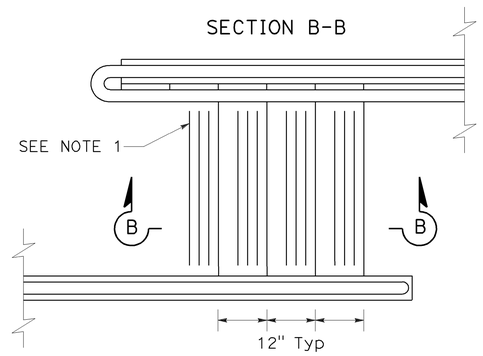

STATION 107+21

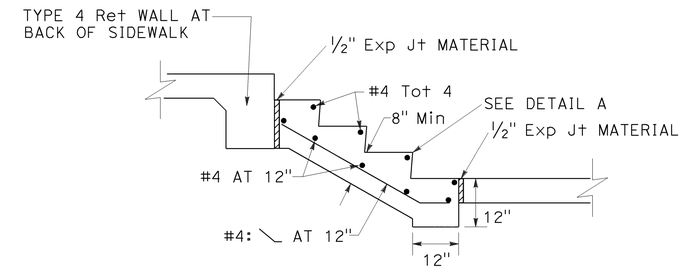

SECTION C-C

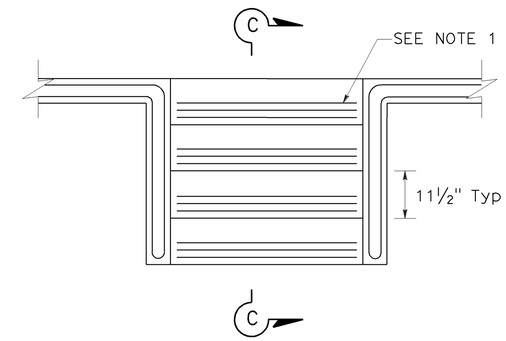

STATION 117+71

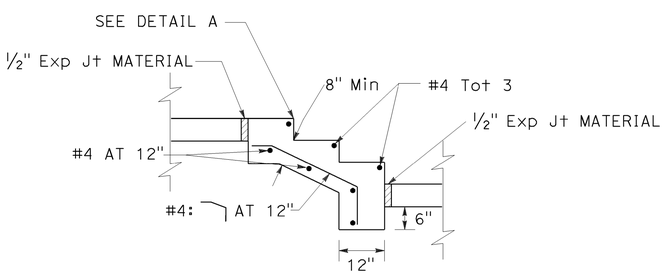

SECTION D-D

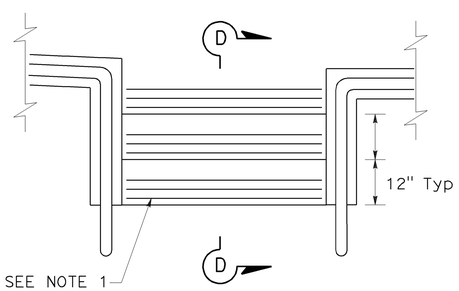

STATION 106+25

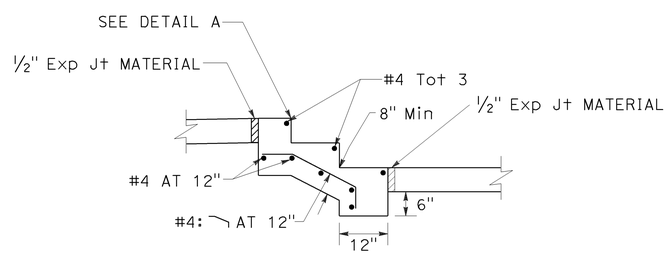

SECTION E-E

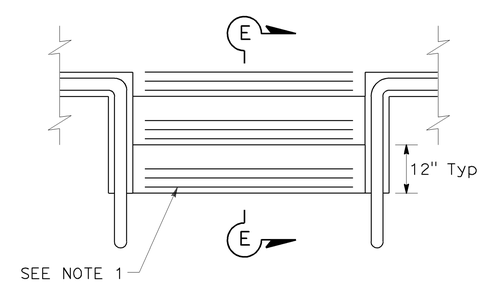

STATION 106+98

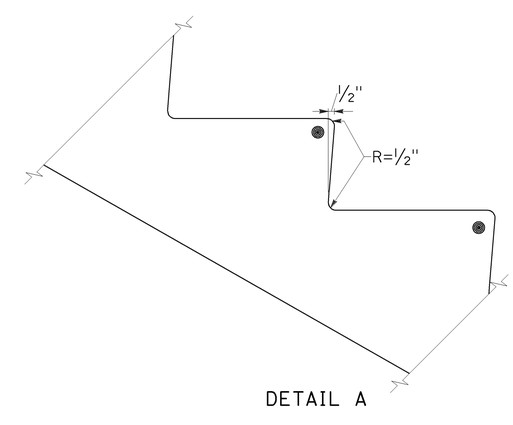

DETAIL A

STAIR DETAILS

CONSTRUCTION DETAILS
NO SCALE
C-9

STATE OF CALIFORNIA - DEPARTMENT OF TRANSPORTATION
Caltrans PROJECT COORDINATION

FUNCTIONAL SUPERVISOR: TRUMAN DENIO
CALCULATED-DESIGNED BY: RICK KUYKENDALL
CHECKED BY: TRUMAN DENIO
REVISED BY
DATE REVISED

LAST REVISION 12-22-11
DATE PLOTTED => 07-FEB-2012
TIME PLOTTED => 11:27

Dist	COUNTY	ROUTE	POST MILES TOTAL PROJECT	SHEET No.	TOTAL SHEETS
09	Mno	158	2.5/2.9	14	34

Truman P. Denio 12-9-11
REGISTERED CIVIL ENGINEER DATE

1-2-12
PLANS APPROVAL DATE

REGISTERED PROFESSIONAL ENGINEER TRUMAN P DENIO No. 34556 Exp. 9-30-13 CIVIL STATE OF CALIFORNIA

THE STATE OF CALIFORNIA OR ITS OFFICERS OR AGENTS SHALL NOT BE RESPONSIBLE FOR THE ACCURACY OR COMPLETENESS OF SCANNED COPIES OF THIS PLAN SHEET.

NOTES:

1. Exist Conc SIDEWALK, DRIVEWAYS, RAMPS, AND WALLS CONTAIN STEEL REINFORCEMENT
2. NEW Gtr FL = Exist GUTTER FL
3. FOR ADDITIONAL DRIVEWAY DETAILS SEE STANDARD PLAN A87A

ABBREVIATIONS:

GB - GRADE BREAK

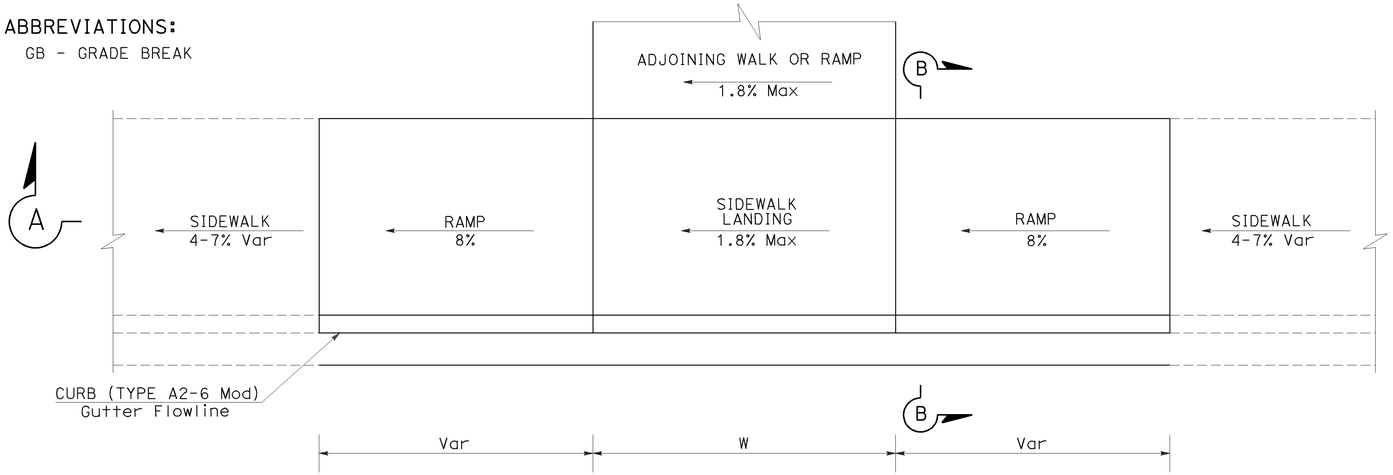

PLAN VIEW

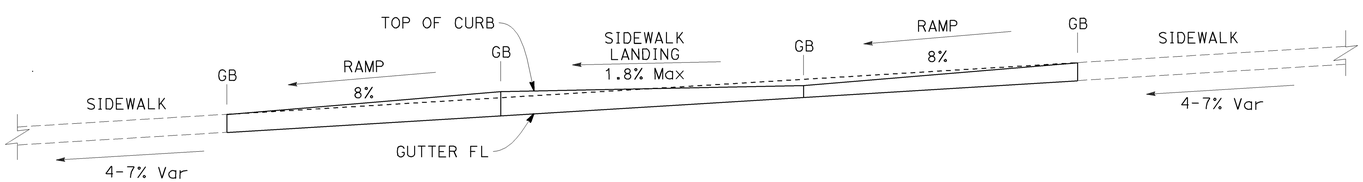

SECTION A-A

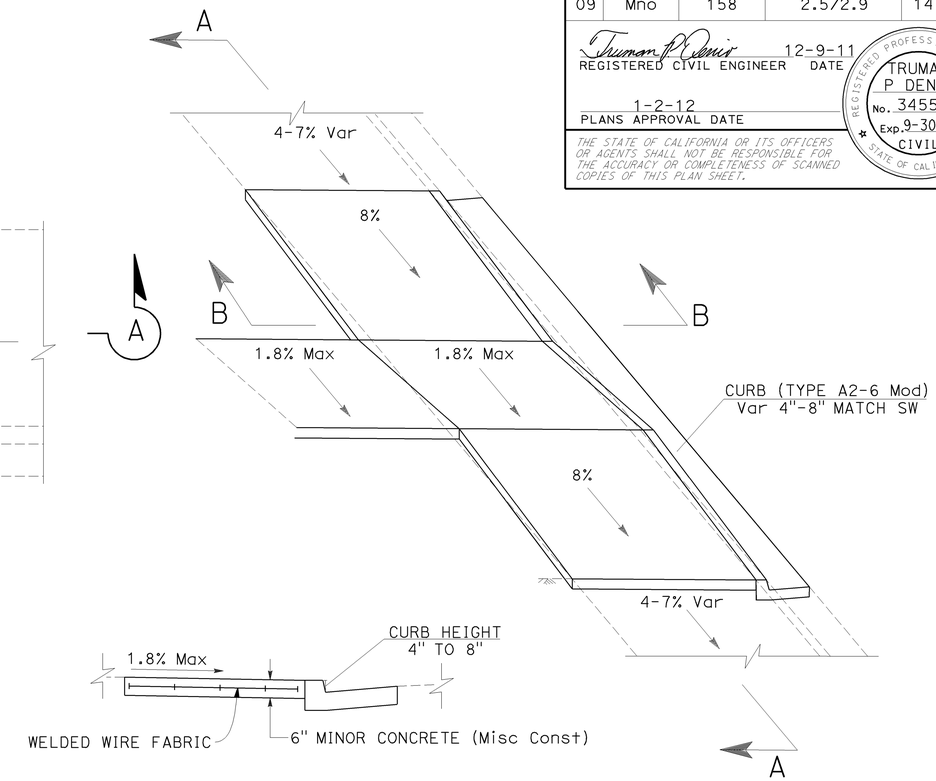

SECTION B-B

SIDEWALK LANDING DETAILS

DRIVEWAY CONFORMS

LOCATION	SIDE	L	WIDTH	MINOR HMA	PLACE HMA (Misc AREA)	CLASS 2 AB
		LF	LF	TON	SQYD	CY
105+81.17	Rt	1.0	11.8	—	—	0.3
106+69.39	Rt	1.0	14.7	0.6	2.8	0.3
107+58.40	Rt	1.0	11.6	0.5	2.4	0.3
109+47.01	Rt	2.0	63.4	3.6	16.2	1.8
111+27.87	Rt	1.0	32.0	1.3	6.0	0.7
112+10.43	Rt	1.0	31.4	1.0	4.7	0.5
112+66.34	Rt	7.0	22.6	5.7	25.7	2.8
113+51.73	Rt	1.0	18.9	0.7	3.2	0.4
114+29.93	Rt	1.0	60.0	1.7	7.8	0.9
115+46.71	Rt	1.0	17.5	0.7	3.1	0.3
116+17.23	Rt	3.0	59.8	—	—	2.6
117+07.92	Rt	8.0	27.0	7.3	32.9	3.6
119+23.17	Rt	3.0	28.6	2.9	13.0	1.4
		TOTALS		26.0	117.8	15.9

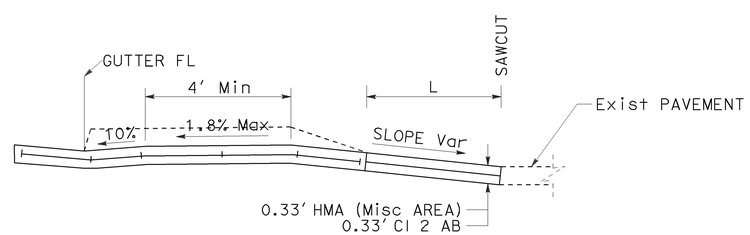

DRIVEWAY WITH Exist HMA SURFACE

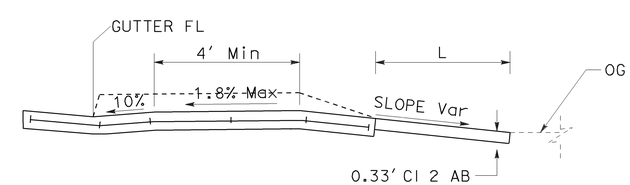

DRIVEWAY WITH Exist DIRT SURFACE

DRIVEWAY CONFORM DETAILS

CONSTRUCTION DETAILS

NO SCALE

C-10

STATE OF CALIFORNIA - DEPARTMENT OF TRANSPORTATION
Caltrans PROJECT COORDINATION

FUNCTIONAL SUPERVISOR: TRUMAN DENIO
CALCULATED-DESIGNED BY: RICK KUYKENDALL
CHECKED BY: TRUMAN DENIO
REVISED BY
DATE REVISED

LAST REVISION 12-12-11
DATE PLOTTED => 07-FEB-2012
TIME PLOTTED => 11:27

Dist	COUNTY	ROUTE	POST MILES TOTAL PROJECT	SHEET No.	TOTAL SHEETS
09	Mno	158	2.5/2.9	15	34

REGISTERED CIVIL ENGINEER 12-9-11 DATE

1-2-12
PLANS APPROVAL DATE

REGISTERED PROFESSIONAL ENGINEER TRUMAN P DENIO No. 34556 Exp. 9-30-13 CIVIL STATE OF CALIFORNIA

THE STATE OF CALIFORNIA OR ITS OFFICERS OR AGENTS SHALL NOT BE RESPONSIBLE FOR THE ACCURACY OR COMPLETENESS OF SCANNED COPIES OF THIS PLAN SHEET.

LEGEND:

- MINOR CONCRETE (BACKFILL)
- REMOVE ASPHALT CONCRETE AND PLACE HMA (Misc AREA)
- XXX - STRIPING DETAIL NUMBER
- X - DRAINAGE SYSTEM NUMBER
- x - DRAINAGE UNIT NUMBER

NOTES:

1. ALL ELEVATIONS ARE BASED ON NAVD 1988
2. ALL STATIONS, OFFSETS, AND CORRESPONDING SHOWN LEADER LINES ARE TO FLOW LINE AT CURB UNLESS OTHERWISE SHOWN
3. ALL DRAINAGE STRUCTURES ARE RADIAL TO THE REFERENCED ALIGNMENT UNLESS OTHERWISE SHOWN

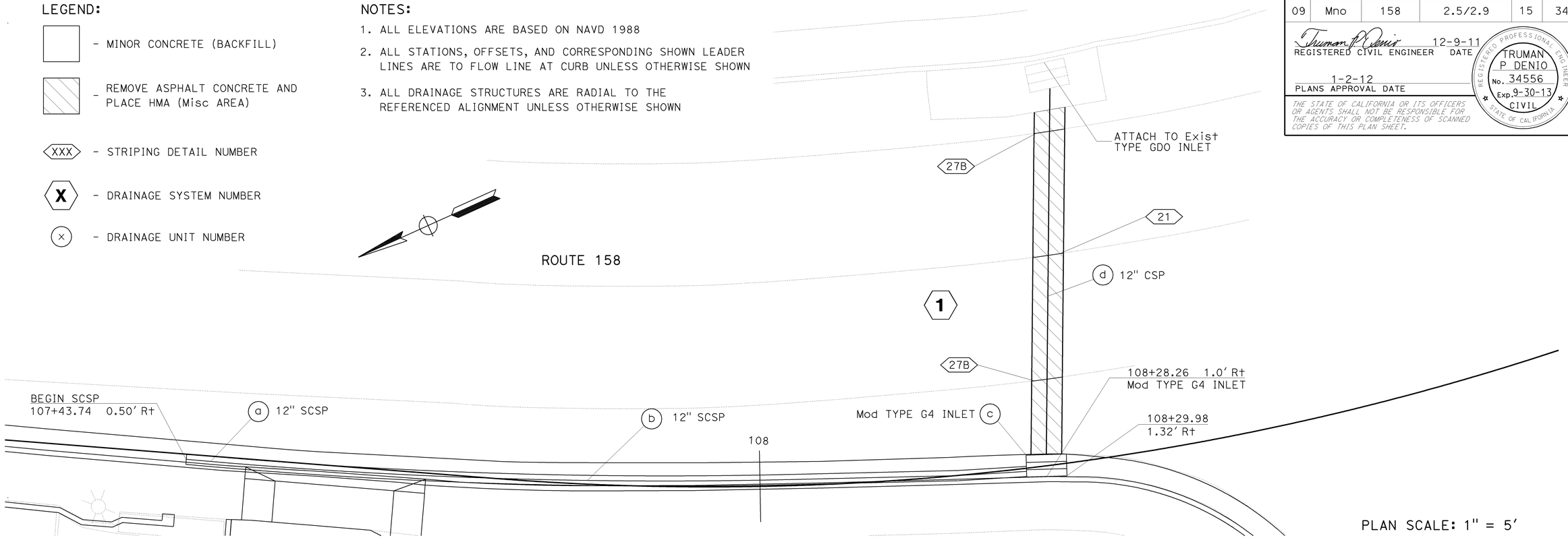

PLAN SCALE: 1" = 5'

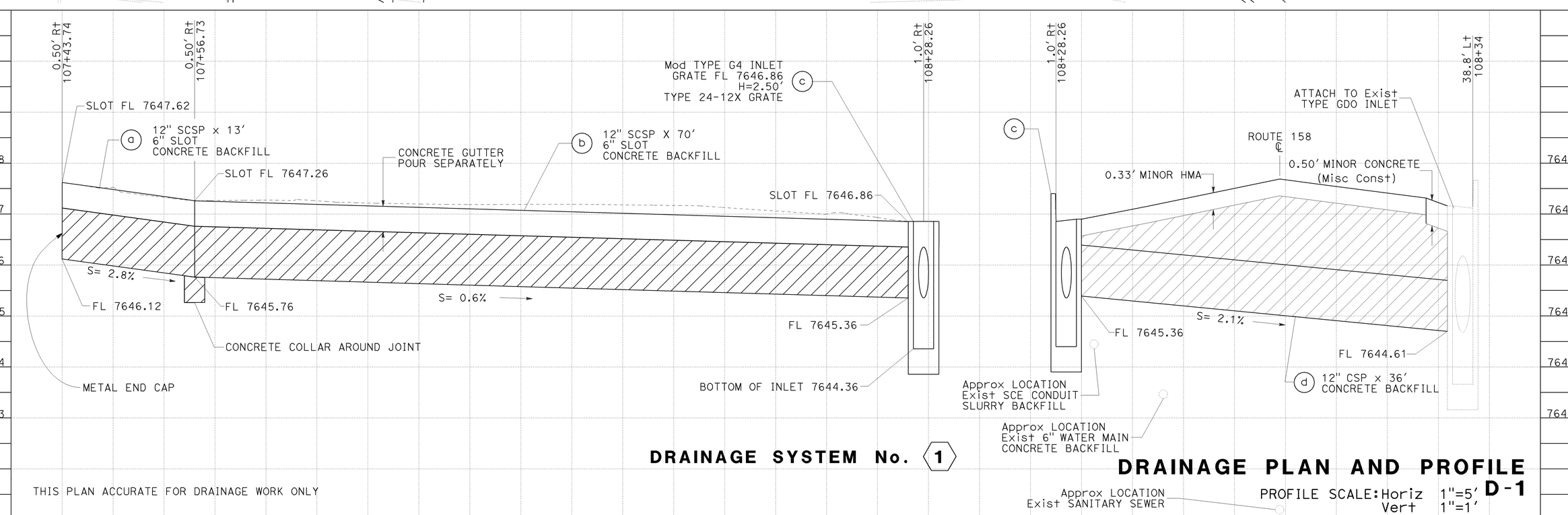

DRAINAGE SYSTEM No. 1

DRAINAGE PLAN AND PROFILE

PROFILE SCALE: Horiz 1"=5' Vert 1"=1'

D-1

THIS PLAN ACCURATE FOR DRAINAGE WORK ONLY

REVISED BY | DATE REVISED
RICK KUYKENDALL | TRUMAN DENIO
CALCULATED-DESIGNED BY | CHECKED BY
FUNCTIONAL SUPERVISOR | TRUMAN DENIO
STATE OF CALIFORNIA - DEPARTMENT OF TRANSPORTATION
Caltrans PROJECT COORDINATION

LAST REVISION 12-12-11 | DATE PLOTTED => 07-FEB-2012 | TIME PLOTTED => 11:27

Dist	COUNTY	ROUTE	POST MILES TOTAL PROJECT	SHEET No.	TOTAL SHEETS
09	Mno	158	2.5/2.9	16	34

Truman P. Denio 12-9-11
REGISTERED CIVIL ENGINEER DATE

1-2-12
PLANS APPROVAL DATE

REGISTERED PROFESSIONAL ENGINEER TRUMAN P DENIO No. 34556 Exp. 9-30-13 CIVIL STATE OF CALIFORNIA

THE STATE OF CALIFORNIA OR ITS OFFICERS OR AGENTS SHALL NOT BE RESPONSIBLE FOR THE ACCURACY OR COMPLETENESS OF SCANNED COPIES OF THIS PLAN SHEET.

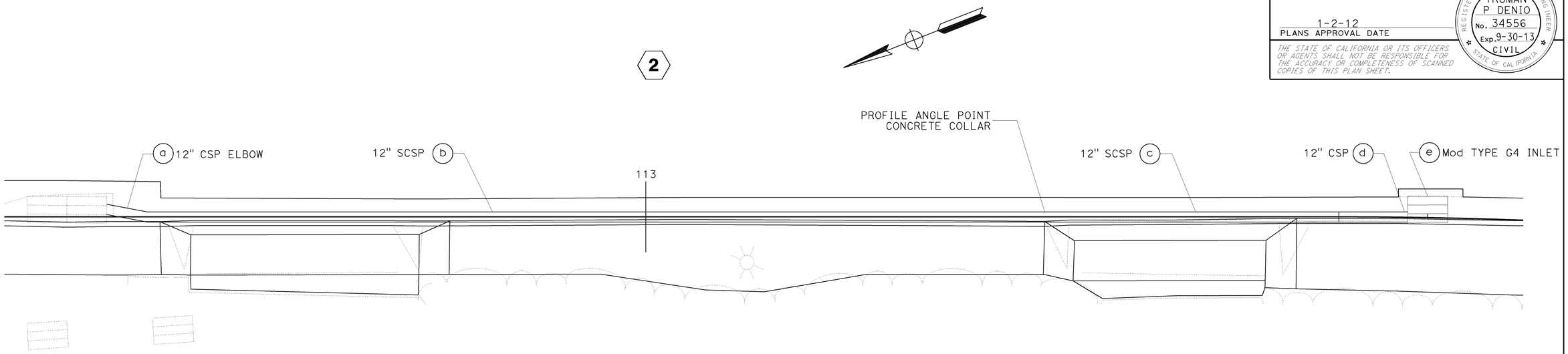

PLAN SCALE: 1" = 5'

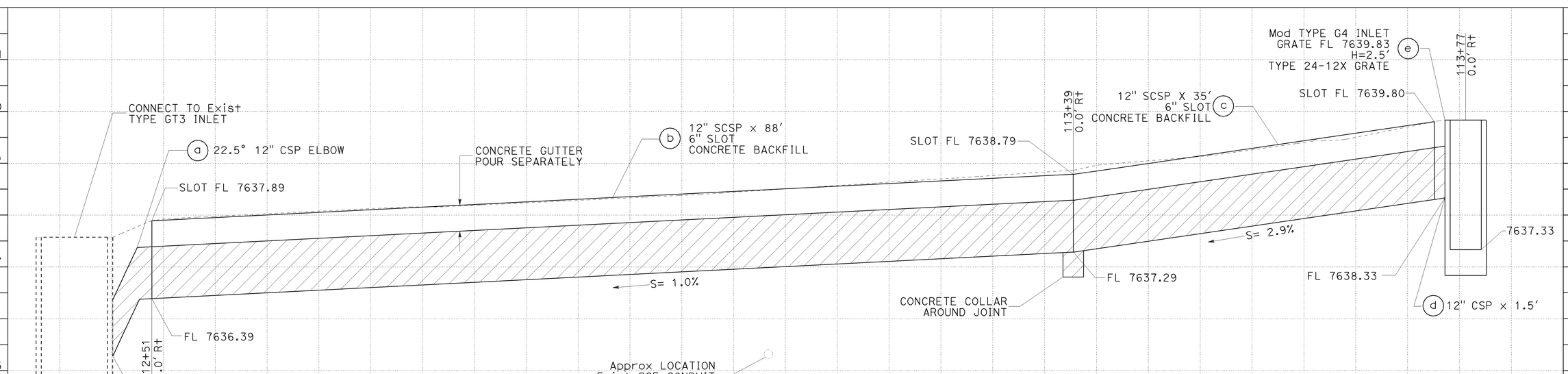

DRAINAGE SYSTEM No. 2

THIS PLAN ACCURATE FOR DRAINAGE WORK ONLY

DRAINAGE PLAN AND PROFILE

PROFILE SCALE: Horiz 1"=5'
Vert 1"=1'

D-2

REVISED BY | DATE REVISED
RICK KUYKENDALL | TRUMAN DENIO
CALCULATED-DESIGNED BY | CHECKED BY
FUNCTIONAL SUPERVISOR | TRUMAN DENIO
STATE OF CALIFORNIA - DEPARTMENT OF TRANSPORTATION
Caltrans® PROJECT COORDINATION

LAST REVISION 12-13-11 | DATE PLOTTED => 07-FEB-2012 | TIME PLOTTED => 11:27

Dist	COUNTY	ROUTE	POST MILES TOTAL PROJECT	SHEET No.	TOTAL SHEETS
09	Mno	158	2.5/2.9	17	34

REGISTERED CIVIL ENGINEER 12-9-11 DATE

1-2-12
PLANS APPROVAL DATE

REGISTERED PROFESSIONAL ENGINEER TRUMAN P DENIO No. 34556 Exp. 9-30-13 CIVIL STATE OF CALIFORNIA

THE STATE OF CALIFORNIA OR ITS OFFICERS OR AGENTS SHALL NOT BE RESPONSIBLE FOR THE ACCURACY OR COMPLETENESS OF SCANNED COPIES OF THIS PLAN SHEET.

LEGEND:

- MINOR CONCRETE (BACKFILL)

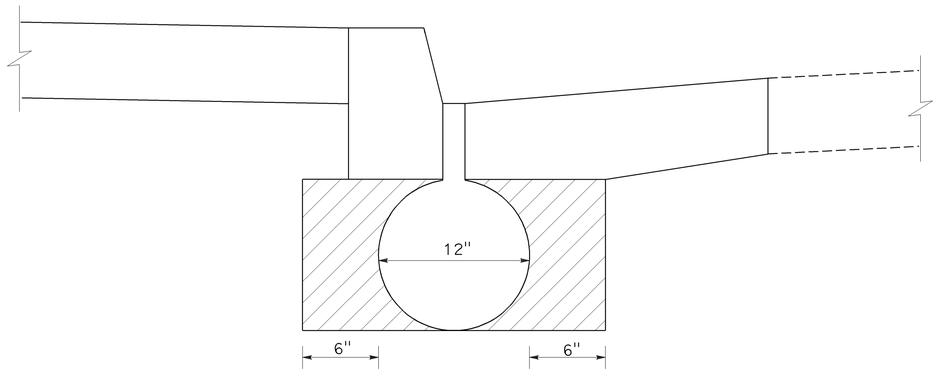

SCSP TYPICAL

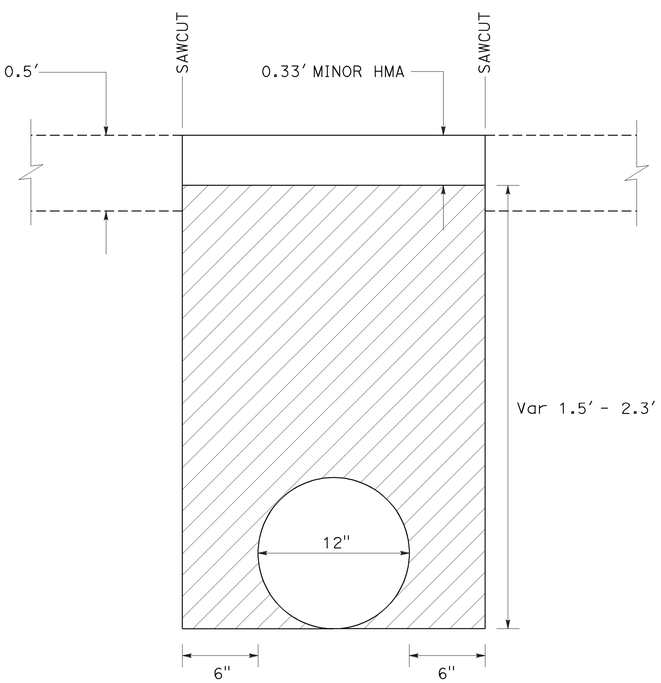

CSP 1 d

CONCRETE BACKFILL DETAILS

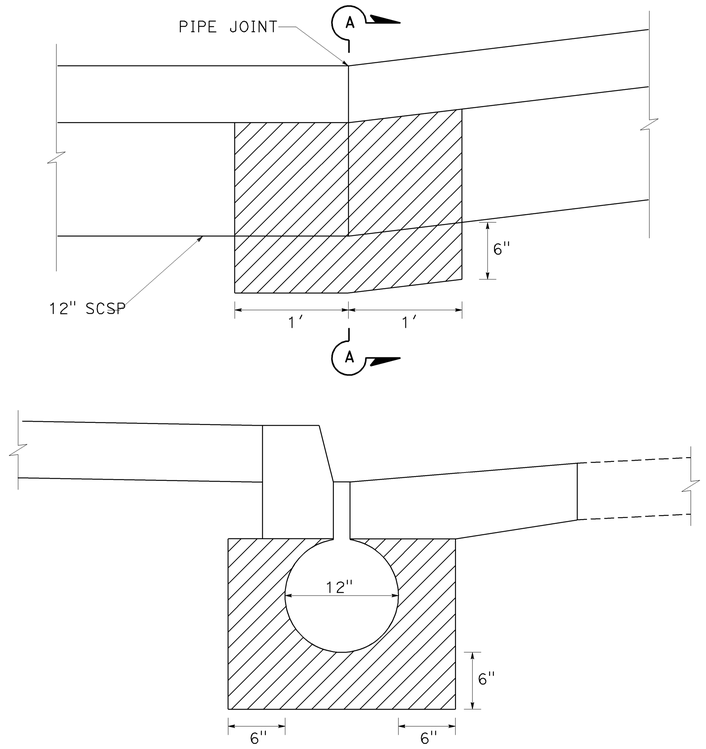

SECTION A-A

1 Sta 107+56.73 2 Sta 113+39.00

CONCRETE COLLAR DETAILS

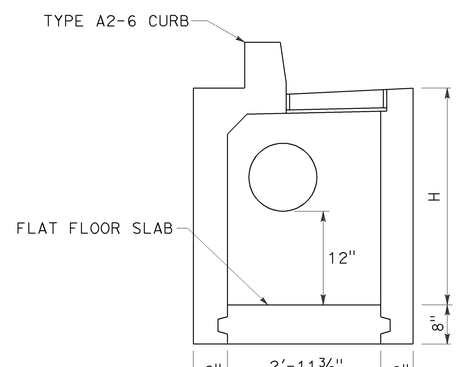

Mod TYPE G4 INLET

(FOR DETAILS NOT SHOWN SEE Std PLAN D73)

DRAINAGE DETAILS

NO SCALE **DD-1**

STATE OF CALIFORNIA - DEPARTMENT OF TRANSPORTATION
Caltrans® PROJECT COORDINATION

FUNCTIONAL SUPERVISOR: TRUMAN DENIO
CALCULATED-DESIGNED BY: RICK KUYKENDALL
CHECKED BY: TRUMAN DENIO
REVISED BY
DATE REVISED

LAST REVISION 12-12-11 DATE PLOTTED => 07-FEB-2012 TIME PLOTTED => 11:27

Dist	COUNTY	ROUTE	POST MILES TOTAL PROJECT	SHEET No.	TOTAL SHEETS
09	Mno	158	2.5/2.9	18	34

Truman P. Denio 12-9-11
REGISTERED CIVIL ENGINEER DATE

1-2-12
PLANS APPROVAL DATE

REGISTERED PROFESSIONAL ENGINEER TRUMAN P DENIO No. 34556 Exp. 9-30-13 CIVIL STATE OF CALIFORNIA

THE STATE OF CALIFORNIA OR ITS OFFICERS OR AGENTS SHALL NOT BE RESPONSIBLE FOR THE ACCURACY OR COMPLETENESS OF SCANNED COPIES OF THIS PLAN SHEET.

NOTES:

1. ALL JOINTS ARE STANDARD JOINT TYPES

(N) - NOT A SEPARATE PAY ITEM, FOR INFORMATION ONLY

DRAINAGE QUANTITIES

DRAINAGE SYSTEM No. ⬡	DRAINAGE UNIT ○	Max HEIGHT OF COVER (N) LF	12" CSP (0.079" THICK) LF	12" SLOTTED CSP (0.079" THICK) LF	MINOR CONCRETE (BACKFILL) CY	MINOR CONCRETE (MINOR STRUCTURE) CY	INLET GRATE (N) (TYPE 24-12X) EA	HEIGHT OF INLET (H) LF	MISCELLANEOUS IRON AND STEEL LB	REMOVE ASPHALT CONCRETE CY	PLACE HMA (Misc AREA) SQYD	MINOR HOT MIX ASPHALT TON	DESCRIPTION	STATION	SHEET No.	DRAINAGE SYSTEM No. ⬡	DRAINAGE UNIT ○
1	a	0.8		13									6" SLOT		D-1	1	a
	b	0.5		70									6" SLOT				b
	c					1.15	1	2.5	239				MODIFIED TYPE G4 INLET	108+28			c
	d	1.7	36		4.3					1.7	7.5	1.7	12" CSP	108+31			d
2	a	0.5											22.5° ELBOW (N)		D-2	2	a
	b	0.5		88									6" SLOT				b
	c	0.5		35									6" SLOT				c
	d	0.5											12" CSP (N)				d
	e					1.15	1	2.5	239				MODIFIED TYPE G4 INLET	113+77			e
TOTAL			36	206	4.3	2.30			478	1.7	7.5	1.7				TOTAL	

DRAINAGE QUANTITIES
DQ-1

STATE OF CALIFORNIA - DEPARTMENT OF TRANSPORTATION
Caltrans PROJECT COORDINATION

FUNCTIONAL SUPERVISOR: TRUMAN DENIO
CALCULATED-DESIGNED BY: RICK KUYKENDALL
CHECKED BY: TRUMAN DENIO
REVISED BY
DATE REVISED

LAST REVISION 12-13-11
DATE PLOTTED => 07-FEB-2012
TIME PLOTTED => 11:27

Dist	COUNTY	ROUTE	POST MILES TOTAL PROJECT	SHEET No.	TOTAL SHEETS
09	Mno	158	2.5/2.9	19	34

REGISTERED CIVIL ENGINEER 12-9-11 DATE

1-2-12
PLANS APPROVAL DATE

REGISTERED PROFESSIONAL ENGINEER TRUMAN P DENIO No. 34556 Exp. 9-30-13 CIVIL STATE OF CALIFORNIA

THE STATE OF CALIFORNIA OR ITS OFFICERS OR AGENTS SHALL NOT BE RESPONSIBLE FOR THE ACCURACY OR COMPLETENESS OF SCANNED COPIES OF THIS PLAN SHEET.

NOTES:

1. LOCATIONS OF CONSTRUCTION AREA SIGNS SHOWN ARE APPROXIMATE.
2. THIS PLAN ACCURATE FOR CONSTRUCTION AREA SIGN WORK ONLY.
3. EXACT LOCATION AND POSITION OF CONSTRUCTION AREA SIGNS TO BE DETERMINED BY THE ENGINEER.
4. SIGN R9-9 TO BE PLACED ONLY DURING ACTIVE CONSTRUCTION

LEGEND:

- CONSTRUCTION AREA SIGNS
- PORTABLE CHANGEABLE MESSAGE SIGN

ROAD WORK AHEAD — W20-1, 48" x 48" ON 4" x 6" POST — (A)

ROAD WORK AHEAD — W20-1, 36" x 36" ON 4" x 6" POST — (B)

END ROAD WORK — G20-2, 36" x 18" ON 4" x 4" POST — (C)

BUSINESSES OPEN DURING CONSTRUCTION — SPECIAL SIGN, 48" x 36" BLACK ON ORANGE ON TYPE III BARRICADE — (D)

SIDEWALK CLOSED — R9-9, 30" x 18" BLACK ON WHITE ON TYPE III BARRICADE — (E)

STATIONARY MOUNTED CONSTRUCTION AREA SIGNS

TYPE	No OF SIGNS
(A) W20-1	2
(B) W20-1	5
(C) G20-2	7
(D) SPECIAL	6
(E) R9-9	6

TYPE III BARRICADES

TYPE	EA
(D) SPECIAL	6
(E) R9-9	6
TOTAL	12

SPECIAL SIGN DETAILS

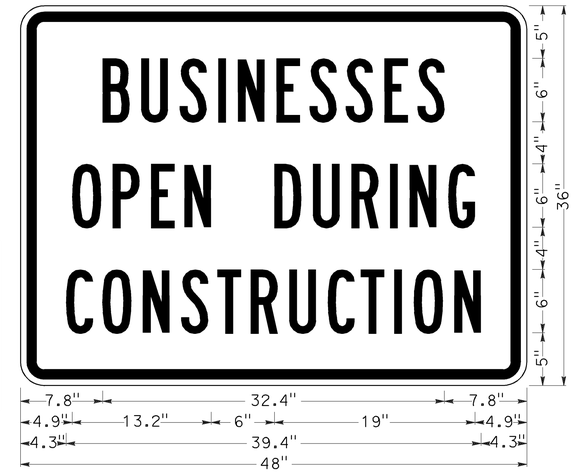

2.3" Radius, 0.9" Border, 0.6" Indent, Black on Orange; [BUSINESSES] B; [OPEN DURING] B; [CONSTRUCTION] B; Table of letter and object lefts.

B 7.8	U 11.5	S 15.1	I 18.8	N 20.6	E 24.3	S 27.4	S 30.9	E 34.5	S 37.7			
O 4.9	P 8.8	E 12.4	N 15.6	D 24.1	U 27.7	R 31.4	I 35.0	N 36.9	G 40.6			
C 4.3	O 7.8	N 11.6	S 15.3	T 18.7	R 21.8	U 25.5	C 29.1	T 32.3	I 35.4	O 37.3	N 41.1	

PORTABLE CHANGEABLE MESSAGE SIGNS

MESSAGING FOR ONE WAY TRAFFIC CONTROL		
FIRST FRAME	SECOND FRAME	THIRD FRAME
FLAGGER AHEAD	REDUCE SPEED	PREPARE TO STOP

NOTES:

1. PORTABLE CHANGEABLE MESSAGE SIGN LOCATIONS TO BE CONFIRMED BY THE ENGINEER BEFORE THE ACTUAL CLOSURE
2. ALTERNATE MESSAGES MUST BE APPROVED BY THE ENGINEER
3. MESSAGE MAY BE ALTERED BY THE ENGINEER
4. WHEN CONSTRUCTION OPERATIONS ARE NOT ACTIVELY IN PROGRESS, PORTABLE CHANGEABLE MESSAGE SIGNS SHALL NOT DISPLAY A MESSAGE UNLESS DIRECTED BY THE ENGINEER

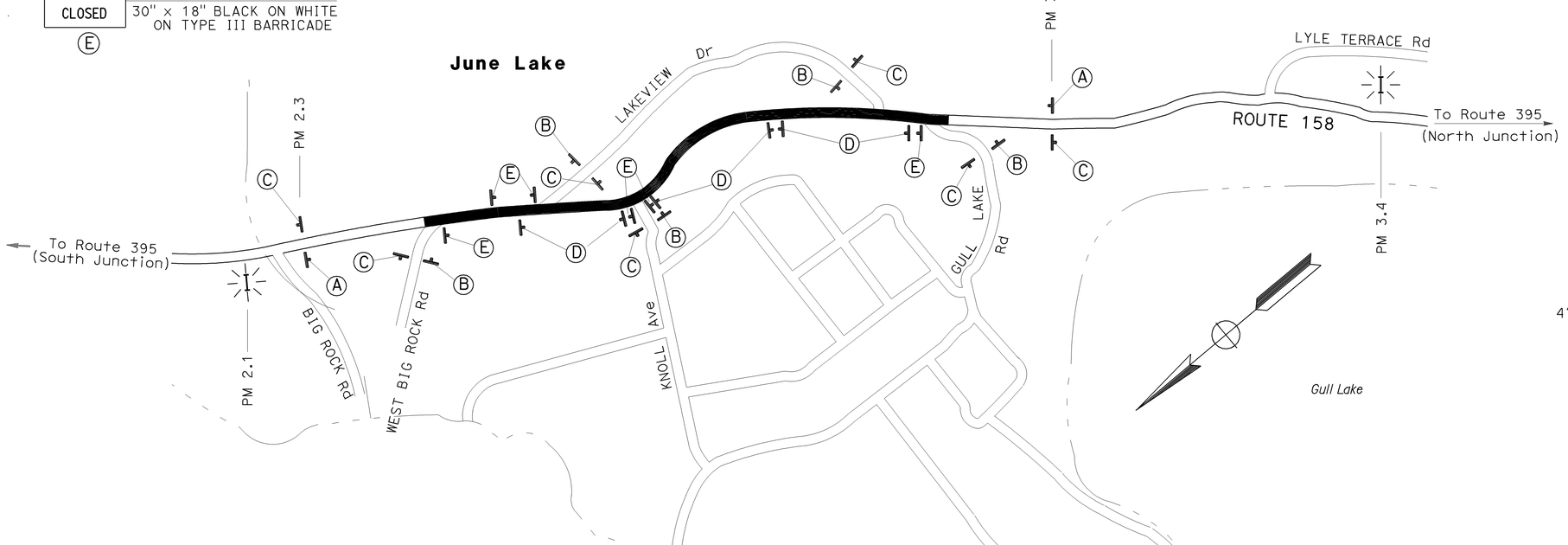

= ACTIVE CONSTRUCTION

= TYPE III BARRICADE

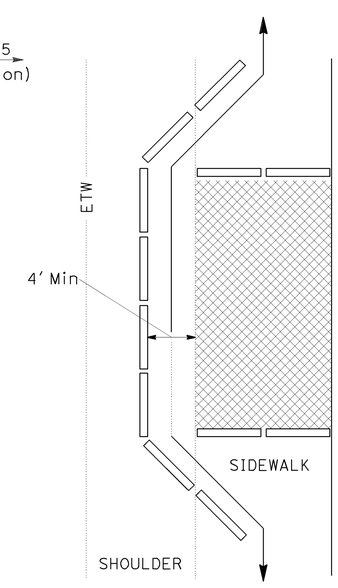

Typical Sidewalk Diversion

CONSTRUCTION AREA SIGNS
CS-1

NO SCALE

STATE OF CALIFORNIA - DEPARTMENT OF TRANSPORTATION
Caltrans® PROJECT COORDINATION

FUNCTIONAL SUPERVISOR: TRUMAN DENIO
CALCULATED-DESIGNED BY: RICK KUYKENDALL
CHECKED BY: TRUMAN DENIO
REVISED BY / DATE REVISED

LAST REVISION 12-12-11
DATE PLOTTED => 07-FEB-2012
TIME PLOTTED => 11:27

Dist	COUNTY	ROUTE	POST MILES TOTAL PROJECT	SHEET No.	TOTAL SHEETS
09	Mno	158	2.5/2.9	20	34

Truman P. Denio 12-9-11
REGISTERED CIVIL ENGINEER DATE

1-2-12
PLANS APPROVAL DATE

REGISTERED PROFESSIONAL ENGINEER TRUMAN P DENIO No. 34556 Exp. 9-30-13 CIVIL STATE OF CALIFORNIA

THE STATE OF CALIFORNIA OR ITS OFFICERS OR AGENTS SHALL NOT BE RESPONSIBLE FOR THE ACCURACY OR COMPLETENESS OF SCANNED COPIES OF THIS PLAN SHEET.

ROADWAY MATERIALS

LOCATION	SIDE	REMOVE ASPHALT CONCRETE	MINOR HOT MIX ASPHALT	PLACE HMA (Misc AREA)	CLASS 2 AGGREGATE BASE	IMPORTED BORROW
		CY	TON	SQYD	CY	CY
LAKEVIEW Dr	Lt	5.2	5.2	23.5		3.0
KNOLL Rd	Rt	14.7	14.7	65.8	7.3	
JUNE LAKE GENERAL STORE	Rt	3.5	7.2	32.2		
DRIVEWAY CONFORMS	Rt	26.3	26.0	117.8	15.9	
FROM SHEET DQ-1		1.7	1.7	7.5		
TOTAL		51.4	54.8	246.8	23.2	3.0

TUBULAR HANDRAILING

STATION			STATION		LENGTH
					LF
105+92.97	5.91′ Rt	TO	105+92.97	10.58′ Rt	4.7
105+92.97	10.58′ Rt	TO	106+02.98	10.58′ Rt	10.0
105+97.05	5.91′ Rt	TO	106+22.74	5.92′ Rt	25.7
106+22.74	5.92′ Rt	TO	106+22.83	8.22′ Rt	2.3
106+27.16	5.91′ Rt	TO	106+27.21	8.08′ Rt	2.2
106+27.16	5.91′ Rt	TO	106+47.29	5.81′ Rt	20.1
106+47.29	5.81′ Rt	TO	106+47.29	8.48′ Rt	2.7
106+52.99	4.98′ Rt	TO	106+52.99	8.48′ Rt	3.5
106+52.99	4.98′ Rt	TO	106+58.53	4.98′ Rt	5.5
106+83.70	6.30′ Rt	TO	106+95.23	6.30′ Rt	11.5
106+95.23	6.30′ Rt	TO	106+95.23	9.30′ Rt	3.0
107+00.23	6.30′ Rt	TO	107+00.23	9.30′ Rt	3.0
107+00.23	6.30′ Rt	TO	107+12.97	6.30′ Rt	12.7
107+09.62	10.32′ Rt	TO	107+24.96	10.32′ Rt	15.3
107+18.96	6.34′ Rt	TO	107+31.54	6.34′ Rt	12.6
107+31.54	6.34′ Rt	TO	107+34.02	7.69′ Rt	2.8
107+33.68	11.69′ Rt	TO	107+48.61	11.69′ Rt	14.9
107+34.02	7.69′ Rt	TO	107+37.09	7.69′ Rt	3.1
107+37.09	7.69′ Rt	TO	107+38.06	7.16′ Rt	1.1
107+38.06	7.16′ Rt	TO	107+43.01	7.16′ Rt	5.0
107+48.61	6.04′ Rt	TO	107+48.61	11.69′ Rt	5.7
117+27.49	11.30′ Rt	TO	117+52.75	11.30′ Rt	25.3
117+28.49	5.62′ Rt	TO	117+28.49	11.73′ Rt	6.1
117+33.99	6.30′ Rt	TO	117+68.35	6.36′ Rt	34.4
117+52.75	11.30′ Rt	TO	117+52.75	12.78′ Rt	1.5
117+58.05	6.37′ Rt	TO	117+58.03	12.27′ Rt	5.9
117+68.35	5.76′ Rt	TO	117+68.35	8.61′ Rt	2.9
117+73.25	5.76′ Rt	TO	117+73.25	8.61′ Rt	2.9
117+73.29	5.76′ Rt	TO	117+88.99	5.76′ Rt	15.7
117+88.99	5.76′ Rt	TO	117+88.99	8.25′ Rt	2.5
				TOTAL	264.6

CONCRETE QUANTITIES

STATION		STATION	SAWCUT (N)	REMOVE CONCRETE			MINOR CONCRETE (Misc Const)		MINOR CONCRETE (MINOR STRUCTURE)
			LF	CURB & Gtr	SIDEWALK	Ret WALLS	CURB & Gtr	SIDEWALK	Ret WALL, & STAIRS
				CY	CY	CY	CY	CY	CY
100+00.00 Rt	TO	103+59.00 Rt	351	20.7	31.2		20.7	31.2	
103+59.00 Rt	TO	104+16.00 Rt	57	3.4	6.1		3.4	6.1	
104+16.00 Rt	TO	105+90.00 Rt	174	10.3	21.9		10.3	21.9	
104+24.47 LT	TO	104+82.32 LT	135	3.8	7.1		3.8	7.1	
105+90.00 Rt	TO	106+83.70 Rt	240	5.6	16.7	2.6	5.6	16.7	13.1
106+83.70 Rt	TO	107+48.61 Rt	128	3.8	11.6	3.2	3.8	11.6	14.6
107+48.61 Rt	TO	108+54.23 Rt	210	6.2	23.3		6.2	23.3	
108+73.62 Rt	TO	109+16.00 Rt	114	3.4	9.2		3.4	9.2	
109+16.00 Rt	TO	109+86.00 Rt	140	4.1	7.9		4.1	7.9	
109+86.00 Rt	TO	115+55.00 Rt	1138	33.6	51.6		33.6	51.6	
115+55.00 Rt	TO	117+28.49 Rt	346	10.2	20.2		10.2	20.2	2.7
117+28.49 Rt	TO	117+58.56 Rt	60	1.8	5.3	2.9	1.8	5.3	11.7
117+58.56 Rt	TO	118+25.00 Rt	134	4.0	5.0		4.0	5.0	6.8
118+25.00 Rt	TO	120+21.65 Rt	394	11.6	25.5		11.6	25.5	4.3
DRAINAGE INLETS									2.3
			SUBTOTAL	122.5	242.6	8.7	122.5	242.6	
			TOTAL	373.8			365.1		55.5

(N) NOT A SEPARATE PAY ITEM, FOR INFORMATION ONLY

TEMPORARY SILT FENCE

LOCATION	LF
99+90 - 105+70	580
TOTAL	580

TEMPORARY DRAINAGE INLET PROTECTION

LOCATION	EA	COMMENTS
110+98	1	DROP INLET
111+02 - 112+35	1	SLOTTED DRAIN PIPE
112+43	1	DOUBLE DROP INLET
TOTAL	3	

SUMMARY OF QUANTITIES
Q-1

STATE OF CALIFORNIA - DEPARTMENT OF TRANSPORTATION
Caltrans PROJECT COORDINATION
FUNCTIONAL SUPERVISOR: TRUMAN DENIO
CALCULATED-DESIGNED BY: RICK KUYKENDALL
CHECKED BY: TRUMAN DENIO
REVISED BY
DATE REVISED

LAST REVISION 12-22-11
DATE PLOTTED => 07-FEB-2012
TIME PLOTTED => 11:27

Dist	COUNTY	ROUTE	POST MILES TOTAL PROJECT	SHEET No.	TOTAL SHEETS
09	Mno	158	2.5/2.9	21	34

Truman P. Denio 12-9-11
REGISTERED CIVIL ENGINEER DATE

1-2-12
PLANS APPROVAL DATE

REGISTERED PROFESSIONAL ENGINEER TRUMAN P DENIO No. 34556 Exp. 9-30-13 CIVIL STATE OF CALIFORNIA

THE STATE OF CALIFORNIA OR ITS OFFICERS OR AGENTS SHALL NOT BE RESPONSIBLE FOR THE ACCURACY OR COMPLETENESS OF SCANNED COPIES OF THIS PLAN SHEET.

ADJUST FRAME AND COVER TO GRADE

STATION	UTILITY BOXES	WATER VALVES	DRAINAGE INLETS
	EA	EA	EA
100+97 Lt		1	
103+71 Rt	1		
104+17 Rt	1		
106+08 Rt	1		
106+32 Rt	1		
106+78 Rt		1	
108+42 Rt	1		
108+77 Rt		2	
108+79 Rt	1		
108+83 Rt	1		
110+26 Rt	1		
110+84 Rt	1		
110+99 Rt			1
112+43 Rt			1
113+91 Lt		1	
113+95 Lt		1	
113+96 Lt		2	
113+97 Lt		1	
114+97 Rt	1		
115+08 Rt	1		
115+92 Rt		1	
115+94 Rt		1	
116+53 Lt		1	
117+99 Rt	1		
119+51 Rt	1		
119+91 Lt		1	
120+03 Rt	1		
SUBTOTAL	14	13	2
TOTAL	29		

RESET ROADSIDE SIGN

STATION	ONE POST	COMMENTS
	EA	
108+82	1	STOP SIGN
TOTAL	1	

RELOCATE ROADSIDE SIGN

FROM STATION	TO STATION	ONE POST	COMMENTS
		EA	
108+86	108+44	1	KNOLL AVE STREET SIGN
	TOTAL	1	

PAINT TRAFFIC STRIPE (2 COAT)

STATION TO STATION (LOCATION)	SIDE	DETAIL NUMBER 21	DETAIL NUMBER 27B
		LF	LF
100+40 - 108+39	Rt		799
108+29 - 108+33	Lt	4	
108+31 - 108+35	Lt		4
109+10 - 120+15	Rt		1105
SUBTOTAL		4	1908
TOTAL		1912	

PAINT CURB (2 COAT)*

START STA	END STA	SIDE	LENGTH
			LF
100+00	101+12	Rt	112
103+98	104+28	Rt	30
104+21	104+85	Lt	64
105+65	105+75	Rt	10
105+87	105+97	Rt	10
106+52	106+62	Rt	10
106+77	106+97	Rt	20
107+41	107+51	Rt	10
107+62	107+72	Rt	10
108+15	108+54	Rt	57
108+74	109+15	Rt	56
109+79	109+89	Rt	10
110+75	111+06	Rt	31
111+50	111+60	Rt	10
111+85	111+95	Rt	10
112+26	112+55	Rt	29
112+78	112+88	Rt	10
113+32	113+42	Rt	10
113+61	114+00	Rt	39
114+60	114+70	Rt	10
115+28	115+38	Rt	10
115+55	115+87	Rt	32
116+47	116+68	Rt	21
116+84	116+94	Rt	10
117+21	117+31	Rt	10
118+99	119+09	Rt	10
119+37	120+20	Rt	83
		TOTAL	724

*CONTRACTOR SUPPLIED PAINT

SUMMARY OF QUANTITIES
Q-2

STATE OF CALIFORNIA - DEPARTMENT OF TRANSPORTATION
Caltrans® PROJECT COORDINATION
FUNCTIONAL SUPERVISOR: TRUMAN DENIO
CALCULATED-DESIGNED BY: RICK KUYKENDALL
CHECKED BY: TRUMAN DENIO
REVISED BY
DATE REVISED

LAST REVISION 12-12-11
DATE PLOTTED => 07-FEB-2012
TIME PLOTTED => 11:27

DIST	COUNTY	ROUTE	POST MILES TOTAL PROJECT	SHEET NO.	TOTAL SHEETS
09	Mno	158	2.5/2.9	22	34

REGISTERED CIVIL ENGINEER

November 17, 2006
PLANS APPROVAL DATE

REGISTERED PROFESSIONAL ENGINEER Michael Janzen No. 44788 Exp. 03-31-08 CIVIL STATE OF CALIFORNIA

The State of California or its officers or agents shall not be responsible for the accuracy or completeness of electronic copies of this plan sheet.

To accompany plans dated 1-2-12

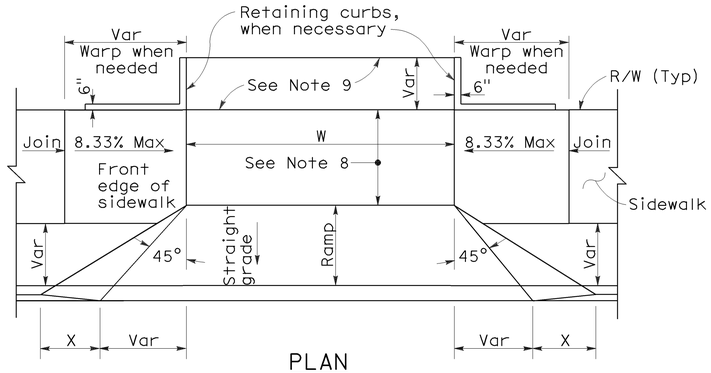

PLAN

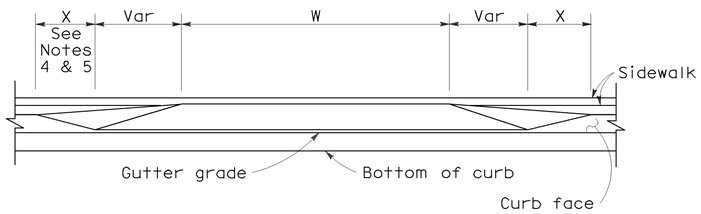

ELEVATION

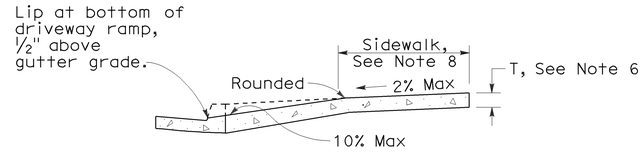

CASE A

Typical driveway, sidewalk not depressed

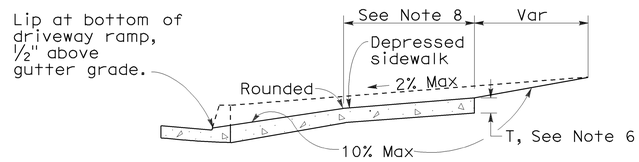

CASE B

Driveway with depressed sidewalk

SECTIONS

DRIVEWAYS

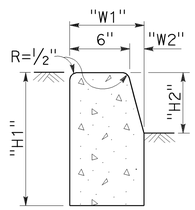

TYPE A1 CURBS

See Table A

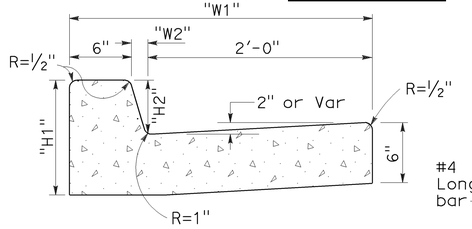

TYPE A2 CURBS

See Table A

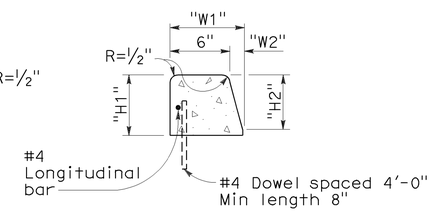

TYPE A3 CURBS

Superimposed on existing pavement
See Table A

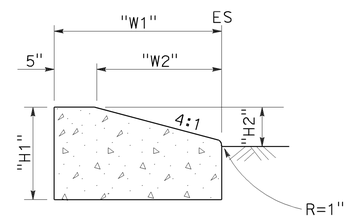

TYPE D CURBS

See Table A

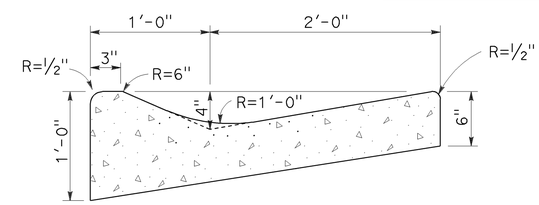

TYPE E CURB

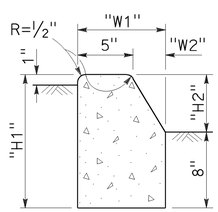

TYPE B1 CURBS

See Table A

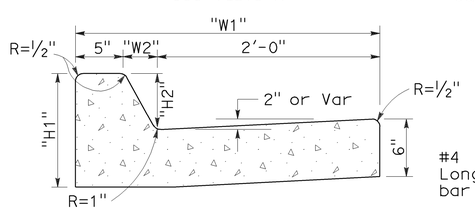

TYPE B2 CURBS

See Table A

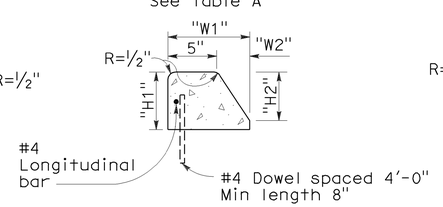

TYPE B3 CURBS

Superimposed on existing pavement
See Table A

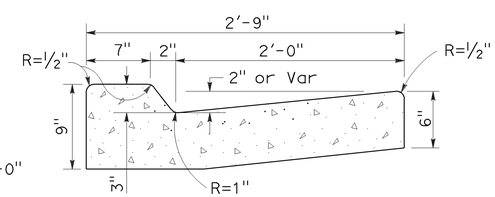

TYPE B4 CURBS

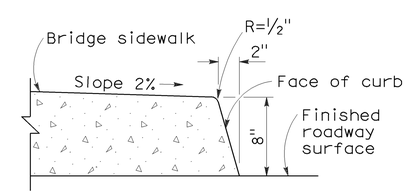

TYPE H CURB

On Bridges

CURB QUANTITIES

TYPE	CUBIC YARDS PER LINEAR FOOT
A1-6	0.02585
A1-8	0.03084
A2-6	0.05903
A2-8	0.06379
A3-6	0.01036
A3-8	0.01435
B1-4	0.02185
B1-6	0.02930
B2-4	0.05515
B2-6	0.06171
B3-4	0.00641
B3-6	0.01074
B4	0.05709
D-4	0.04083
D-6	0.06804
E	0.06661

TABLE A

CURB TYPE	DIMENSIONS "H1"	"H2"	"W1"	"W2"
A1-6	1'-2"	6"	7½"	1½"
A1-8	1'-4"	8"	8"	2"
A2-6	1'-0"	6"	2'-7½"	1½"
A2-8	1'-2"	8"	2'-8"	2"
A3-6	6"	5"	7¼"	1¼"
A3-8	8"	7"	7¾"	1¾"
B1-4	1'-0"	4"	7½"	2½"
B1-6	1'-2"	6"	9"	4"
B2-4	10"	4"	2'-7½"	2½"
B2-6	1'-0"	6"	2'-9"	4"
B3-4	4"	3"	7"	2"
B3-6	6"	5"	8½"	3½"
D-4	10"	4"	1'-6"	1'-1"
D-6	1'-0"	6"	2'-2"	1'-8"

NOTES:

1. Case A driveway section typically applies.
2. Use Case B driveway section when ramp slopes would exceed 10% in Case A.
3. Use Case B driveway section when sidewalk cross slope would exceed 2% in Case A.
4. X=3'-0" except for curb heights over 10" where 4:1 slopes shall be used on curb slope.
5. X is a variable when sidewalk is located where wheelchairs may traverse the surface. Slopes shall not exceed 8.33%.
6. Sidewalk and ramp thickness "T" at driveway shall be 4" for residental and 6" for commercial.
7. Difference in slope of the driveway ramp and the slope of a line between the gutter and a point on the roadway 5'-0" from gutter line shall not exceed 15%. Reduce driveway ramp slope, not gutter slope, where required.
8. Minimum width of clear passageway for sidewalk shall be 4'-0".
9. Retaining curbs and acquisition of construction easement may be necessary for narrow sidewalks or curb heights in excess of 6".
10. Across the pedestrian route at curb ramp locations, the gutter pan slope shall not exceed 1" of depth for each 2'-0" of width.

CURBS

STATE OF CALIFORNIA
DEPARTMENT OF TRANSPORTATION

CURBS AND DRIVEWAYS

NO SCALE

RSP A87A DATED NOVEMBER 17, 2006 SUPERSEDES STANDARD PLAN A87A DATED MAY 1, 2006 - PAGE 113 OF THE STANDARD PLANS BOOK DATED MAY 2006.

REVISED STANDARD PLAN RSP A87A

2006 REVISED STANDARD PLAN RSP A87A

10-25-06

DIST	COUNTY	ROUTE	POST MILES TOTAL PROJECT	SHEET NO.	TOTAL SHEETS
09	Mno	158	2.5/2.9	23	34

REGISTERED CIVIL ENGINEER

September 1, 2006
PLANS APPROVAL DATE

REGISTERED PROFESSIONAL ENGINEER Hector David Cordova No. C41957 Exp. 3-31-08 CIVIL STATE OF CALIFORNIA

The State of California or its officers or agents shall not be responsible for the accuracy or completeness of electronic copies of this plan sheet.

To accompany plans dated 1-2-12

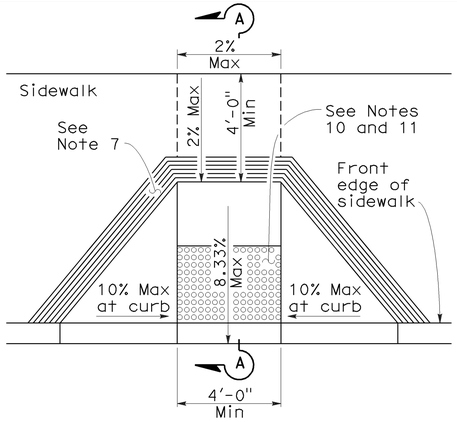

CASE A

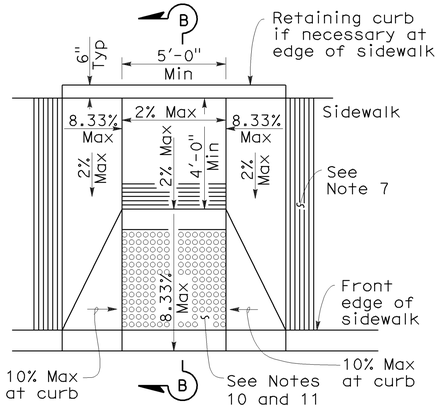

CASE B

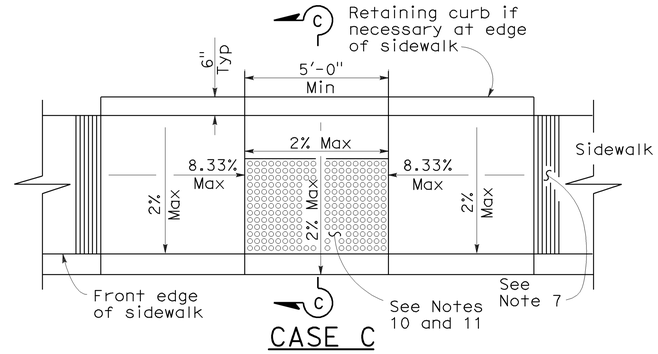

CASE C

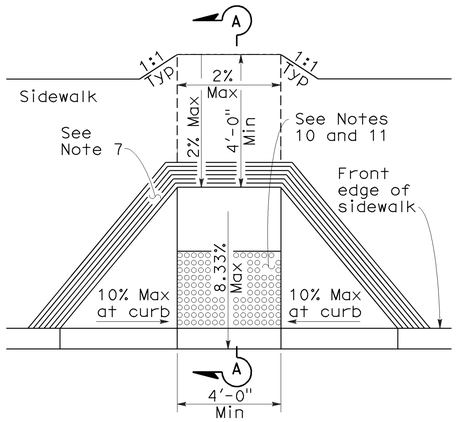

CASE D

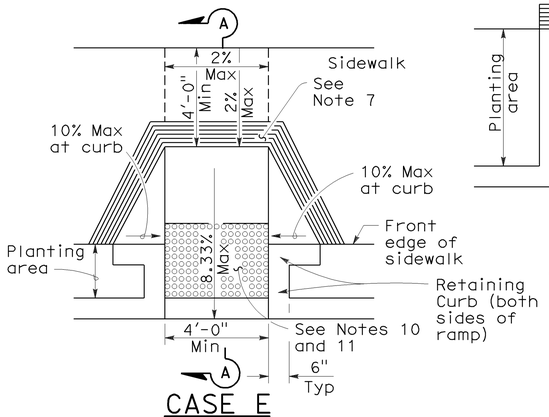

CASE E

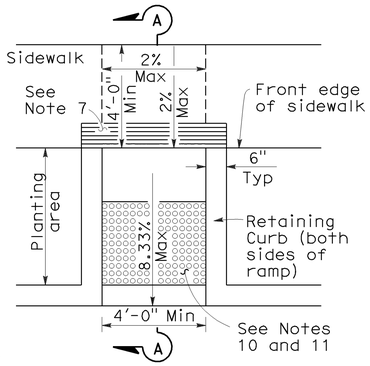

CASE F

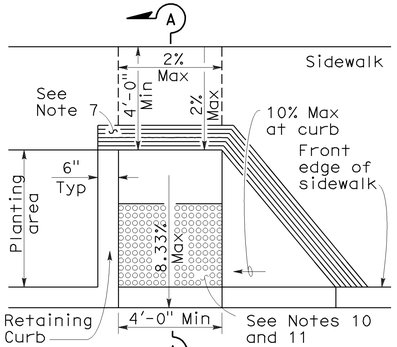

CASE G
See Note 4

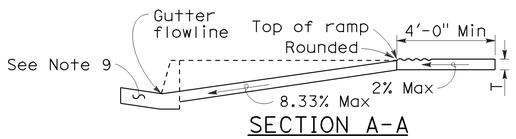

SECTION A-A

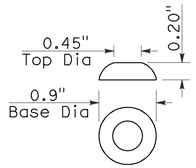

RAISED TRUNCATED DOME

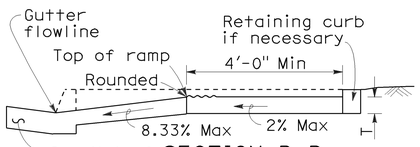

SECTION B-B

Depress entire sidewalk as required

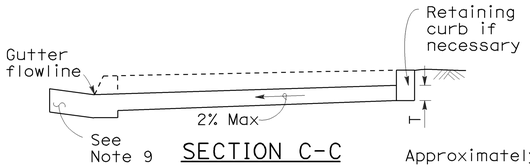

SECTION C-C

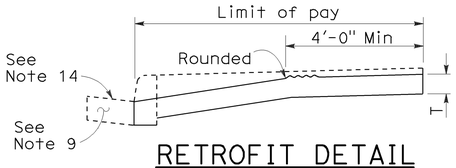

RETROFIT DETAIL
Existing curb and sidewalk

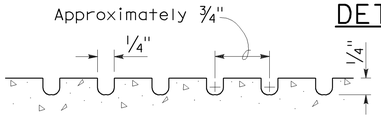

GROOVING DETAIL

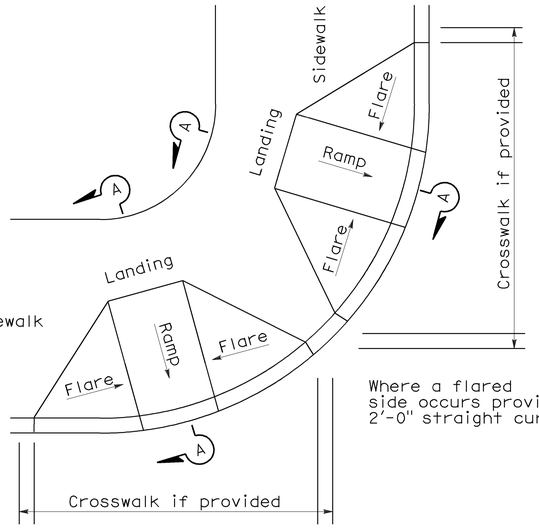

DETAIL A

TYPICAL TWO-RAMP CORNER INSTALLATION

See Note 1

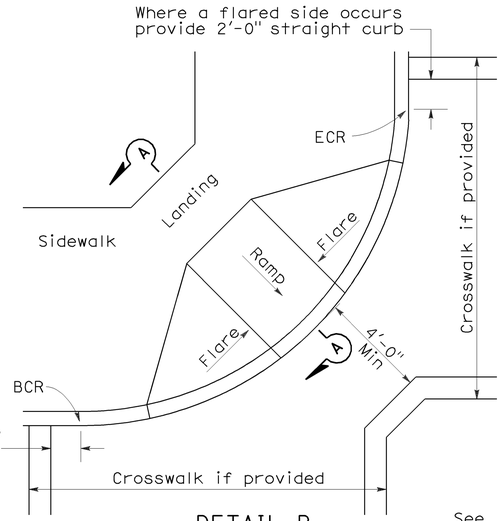

DETAIL B

TYPICAL ONE-RAMP CORNER INSTALLATION

See Notes 1 and 3

NOTES:

1. As site conditions dictate, Case A through Case G curb ramps may be used for corner installations similar to those shown in Detail A and Detail B. The case of curb ramps used in Detail A do not have to be the same. Case A through Case G curb ramps also may be used at mid block locations, as site conditions dictate.
2. If distance from curb to back of sidewalk is too short to accommodate ramp and 4'-0" platform (landing) as shown in Case A, the sidewalk may be depressed longitudinally as in Case B, or C or may be widened as in Case D.
3. When ramp is located in center of curb return, crosswalk configuration must be similar to that shown for Detail B.
4. As site conditions dictate, the retaining curb side and the flared side of the Case G ramp shall be constructed in reversed position.
5. If located on a curve, the sides of the ramp need not be parallel, but the minimum width of the ramp shall be 4'-0".
6. Side slope of ramp flares vary uniformly from a maximum of 10% at curb to conform with longitudinal sidewalk slope adjacent to top of the ramp, except in Case C and Case F.
7. The curb ramp shall be outlined, as shown, with a 1'-0" wide border with 1/4" grooves approximately 3/4" on center. See grooving detail.
8. Transitions from ramps and landing to walks, gutters or streets shall be flush and free of abrupt changes.
9. Maximum slopes of adjoining gutters, the road surface immediately adjacent to the curb ramp or accessible route shall not exceed 5 percent within 4'-0" of the top and bottom of the curb ramp.
10. Curb ramps shall have a detectable warning surface that extends the full width and 3'-0" depth of the ramp. Detectable Warning Surfaces shall conform to the details on this plan and the requirements in the Special Provisions.
11. The edge of the detectable warning surface nearest the street shall be between 6" and 8" from the gutter flowline.
12. Sidewalk and ramp thickness, "T", shall be 3½" minimum.
13. Utility pull boxes, manholes, vaults and all other utility facilities within the boundaries of the curb ramp will be relocated or adjusted to grade by the owner prior to, or in conjunction with, curb ramp construction.
14. For retrofit conditions, removal and replacement of curb apron will be at the Contractor's option, unless otherwise shown on project plans.

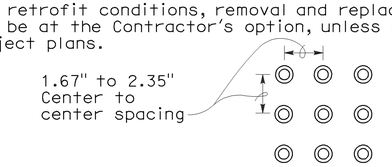

RAISED TRUNCATED DOME PATTERN (IN-LINE)

DETECTABLE WARNING SURFACE

See Note 10

STATE OF CALIFORNIA
DEPARTMENT OF TRANSPORTATION

CURB RAMP DETAILS

NO SCALE

RSP A88A DATED SEPTEMBER 1, 2006 SUPERSEDES STANDARD PLAN A88A DATED MAY 1, 2006 - PAGE 115 OF THE STANDARD PLANS BOOK DATED MAY 2006.

REVISED STANDARD PLAN RSP A88A

2006 REVISED STANDARD PLAN RSP A88A

8-3-06

DIST	COUNTY	ROUTE	POST MILES TOTAL PROJECT	SHEET NO.	TOTAL SHEETS
09	Mno	158	2.5/2.9	24	34

REGISTERED CIVIL ENGINEER

June 5, 2009
PLANS APPROVAL DATE

REGISTERED PROFESSIONAL ENGINEER Glenn DeCou No. C34547 Exp. 9-30-09 CIVIL STATE OF CALIFORNIA

The State of California or its officers or agents shall not be responsible for the accuracy or completeness of electronic copies of this plan sheet.

To accompany plans dated 1-2-12

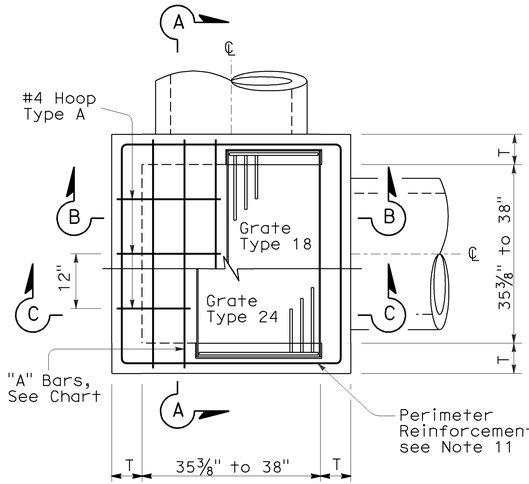

STANDARD TYPE G2 OR G4

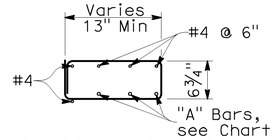

TYPICAL SECTION
(HOOP TYPE A)

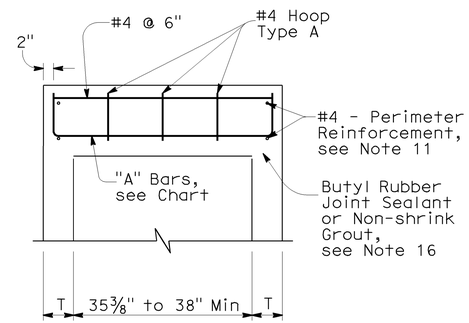

SECTION A-A

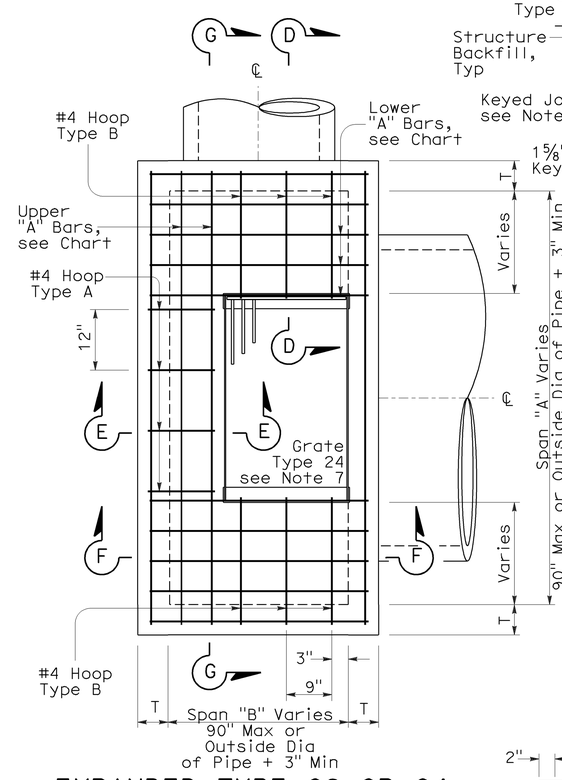

EXPANDED TYPE G2 OR G4
(Top Rebar Not Shown)

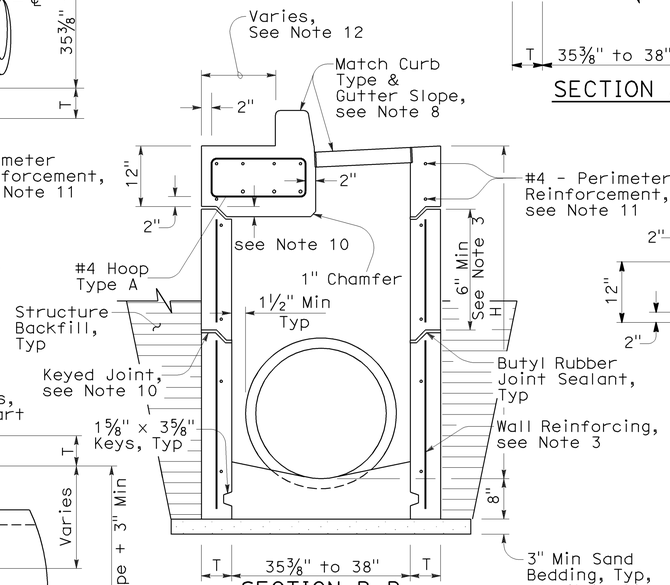

SECTION B-B
(with G4 Top)

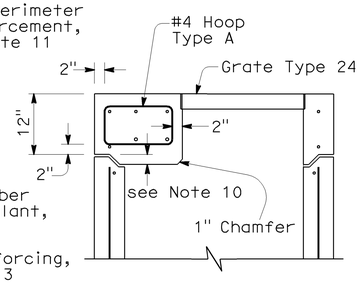

SECTION C-C
(with G2 Top)

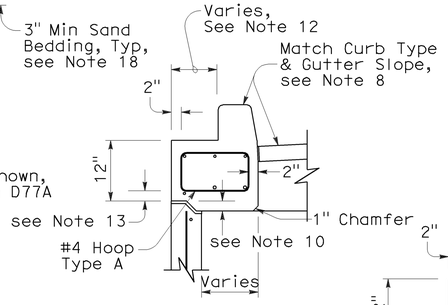

SECTION E-E
(with G4 Top)

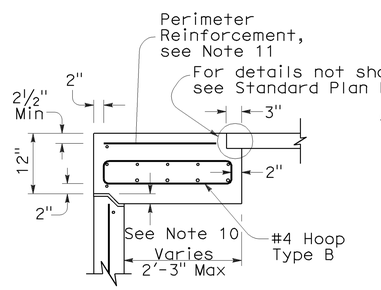

SECTION D-D

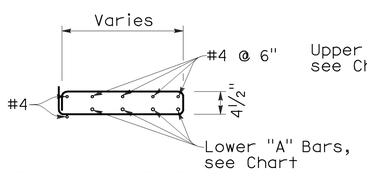

TYPICAL SECTION
(HOOP TYPE B)

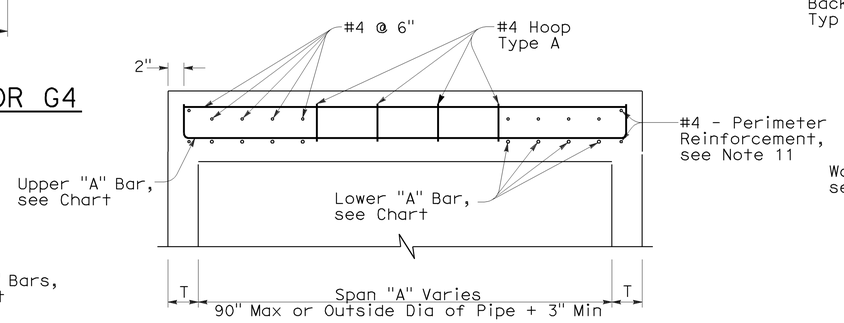

SECTION G-G

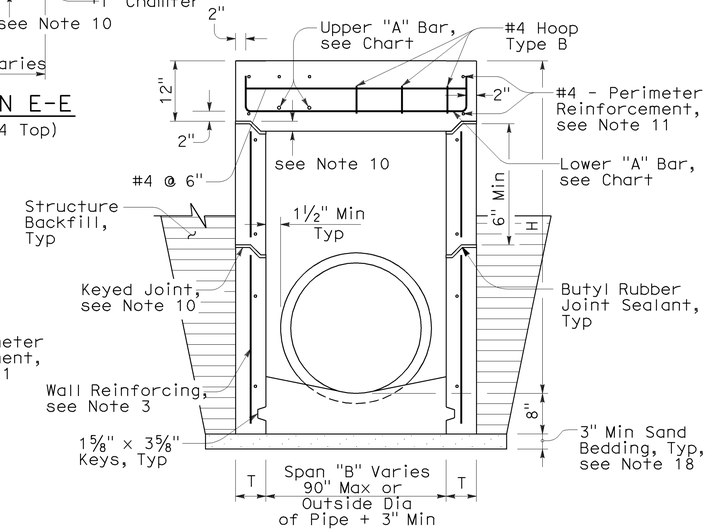

SECTION F-F
(with G2 Top)

NOTES:

1. "H" is the difference in elevation between the outlet pipe flow line and the normal gutter grade line undepressed.
2. For "T" wall thickness: T=6" when "H" is 8' or less. T=8" when "H" is over 8'.
3. Wall reinforcing not required when "H" is 8' or less and the unsupported width or length is 6'-0" or less. Reinforce wall exceeding these limits with #4 bars @ 1'-6" ± centers placed 2" clear to the inside of inlet unless otherwise shown. Short independent wall sections or height adjustment rings 6" to 24" high must have a minimum of two #4 horizontal bars.
4. Seal pre-cast inlets connection openings between wall and pipe with non-shrink grout or resilient connectors as specified in the Special Provisions.
5. Steps - None required where "H" is less than 2'-6". Where "H" is 2'-6" or more, install steps with lowest rung 1'-0" above the floor and highest rung not more than 6" below bottom of lid. The distance between steps must not exceed 1'-0" and be uniform throughout the length of the wall. Place steps in the wall without an opening. Steps inserts may be substituted for the bar steps. Step inserts must comply with State Industrial Safety Requirements. See Standard Plan D74C for step details.
6. Pipe(s) can be placed in any wall.
7. Set inlet so that grate bars are parallel to direction of principal surface flow.
8. Type G4 inlet can use Grate Type 18 or 24. Type G2 inlet uses Grate Type 24. See Revised Standard Plan RSP D77A and Standard Plan D77B for grate and frame details and weights of miscellaneous Iron and Steel.
9. G4 inlet details are the same as the G2 with the addition of a curb and sloped grate that matches the adjacent curb and gutter depression. See Standard Plans D78A & D78B for gutter and inlet depresssion details. See Revised Standard Plan RSP A87A & Standard Plan A87B for Curb and Dike Details.
10. Provide pre-cast inlets with separate top sections for final grade adjustment under Standard Specifcation Section 51-1.02. Provide keyed joints between the top and wall and multiple wall sections. Joint design may vary but must be 1" to 3" in depth.
11. Perimeter reinforcement serves as a rigid frame to position and attach the required structural reinforcement and may be tack welded at outer corners when using ASTM A706 weldable bars.
12. This dimension will vary with different grates, curbs types, box width and wall thickness.
13. 2" unless inlet is expanded in the Span "A" direction, then clearance is 2" plus the diameter of the lower "A" bar.
14. Place "A" Bars at an angle so hooked ends will maintain 2" clear coverage.
15. Refer to Standard Plan D73, Table A for concrete quantities.
16. Non-shrink grout can be used for upper most joint to facilitate final top grade adjustment.
17. Slope inlet floors 4:1 towards the outlet pipe. Pre-cast inlets may have monolithic sloped floors, flat floors, or no floors in which case a sloped floor must be cast in the field. Inlet floors do not require reinforcing.
18. Extend sand bedding under all structure backfill.

TOP REINFORCEMENT CHART

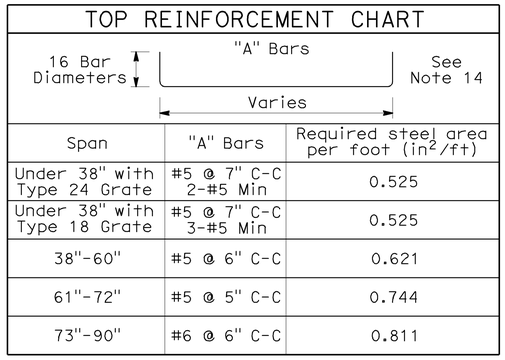

Span	"A" Bars	Required steel area per foot (in^2/ft)
Under 38" with Type 24 Grate	#5 @ 7" C-C 2-#5 Min	0.525
Under 38" with Type 18 Grate	#5 @ 7" C-C 3-#5 Min	0.525
38"-60"	#5 @ 6" C-C	0.621
61"-72"	#5 @ 5" C-C	0.744
73"-90"	#6 @ 6" C-C	0.811

STATE OF CALIFORNIA
DEPARTMENT OF TRANSPORTATION

DRAINAGE INLETS (PRECAST)

NO SCALE

NSP D73A DATED JUNE 5, 2009 SUPPLEMENTS THE STANDARD PLANS BOOK DATED MAY 2006.

NEW STANDARD PLAN NSP D73A

2006 NEW STANDARD PLAN NSP D73A

3-16-09

DIST	COUNTY	ROUTE	POST MILES TOTAL PROJECT	SHEET NO.	TOTAL SHEETS
09	Mno	158	2.5/2.9	25	34

Raymond Don Tsztoo
REGISTERED CIVIL ENGINEER

June 6, 2008
PLANS APPROVAL DATE

REGISTERED PROFESSIONAL ENGINEER
Raymond Don Tsztoo
No. C37332
Exp. 6-30-08
CIVIL
STATE OF CALIFORNIA

The State of California or its officers or agents shall not be responsible for the accuracy or completeness of electronic copies of this plan sheet.

To accompany plans dated 1-2-12

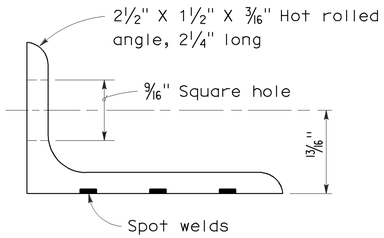

ANGLE

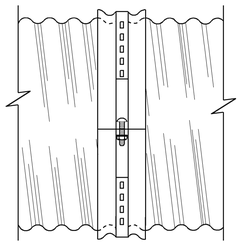

SIDE VIEW
ANGLE

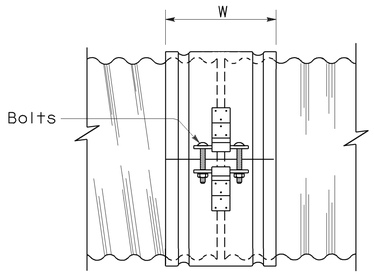

SIDE VIEW
SINGLE BAR AND STRAP

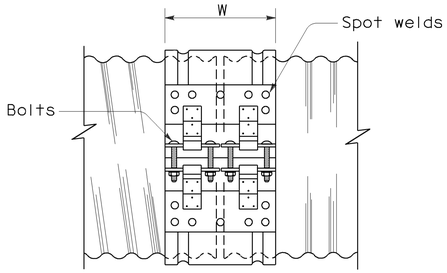

SIDE VIEW
DOUBLE BAR AND STRAP

NOTES:

1. All ferrous metal coupling band connection hardware shall be galvanized or electroplated in accordance with the Standard Specifications.
2. Dimensions and thicknesses shown are minimum.
3. Spot welds shall develop minimum required strength of strap.
4. Fillet welds of equivalent strength may be substituted for spot welds or rivets.
5. Dimension depends upon whether end condition is lips up or lips down.

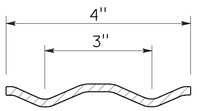

SECTION

H-4 HUGGER BAND

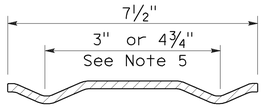

SECTION

H-7 HUGGER BAND

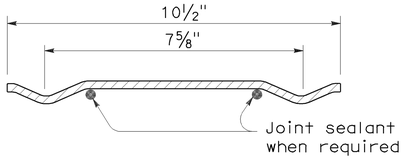

SECTION

H-10 HUGGER BAND

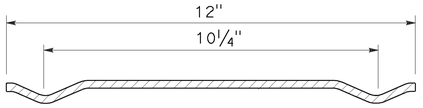

SECTION

H-12 HUGGER BAND

HUGGER COUPLING BANDS

STATE OF CALIFORNIA
DEPARTMENT OF TRANSPORTATION

CORRUGATED METAL PIPE COUPLING DETAILS No. 4 HUGGER COUPLING BANDS

NO SCALE

RSP D97D DATED JUNE 6, 2008 SUPERSEDES STANDARD PLAN D97D
DATED MAY 1, 2006 - PAGE 186 OF THE STANDARD PLANS BOOK DATED MAY 2006.

REVISED STANDARD PLAN RSP D97D

2006 REVISED STANDARD PLAN RSP D97D

3-24-08

DIST	COUNTY	ROUTE	POST MILES TOTAL PROJECT	SHEET NO.	TOTAL SHEETS
09	Mno	158	2.5/2.9	26	34

Raymond Don Tsztoo
REGISTERED CIVIL ENGINEER

June 6, 2008
PLANS APPROVAL DATE

REGISTERED PROFESSIONAL ENGINEER Raymond Don Tsztoo No. C37332 Exp. 6-30-08 CIVIL STATE OF CALIFORNIA

The State of California or its officers or agents shall not be responsible for the accuracy or completeness of electronic copies of this plan sheet.

ANNULAR AND HELICAL PROFILE

COUPLING TYPE	PIPE CORRUGATION	PIPE SIZE	W OR A	PIPE WALL THICKNESS CSP	PIPE WALL THICKNESS CAP	BAND THICKNESS CSP	BAND THICKNESS CAP	BAR AND STRAP (CSP ONLY) STRAP THICKNESS	BOLTS Dia	BAR Dia	BAR YIELD STRENGTH	ANGLE DIMENSIONS CSP	ANGLE DIMENSIONS CAP	BOLTS (No.- Dia) CSP	BOLTS (No.- Dia) CAP	RIVETS ANGLE TO BAND CSP	RIVETS ANGLE TO BAND CAP	SPOT WELDS ANGLE TO BAND CSP
TWO PIECE INTEGRAL FLANGE	1½′ × ¼"	6"-10"	7"	0.052"-0.079"	0.048"-0.060"	0.052"	0.060"							2-⅜"	2-⅜"			
		12"-18"	7"	0.052"-0.079"		0.064"								2-½"				
	2⅔" × ½"	12"-24"	7"	0.052"-0.079"	0.060"-0.105"	0.064"	0.060"							2-½"	2-½"			
UNIVERSAL	2⅔" × ½"	THROUGH 36"	12"	0.052"-0.138"	0.060"-0.135"	0.052"	0.060"					2" × 2" × 3/16"	2" × 2" × 3/16"	3-½"	3-½"	3-⅜"	3-⅜"	3-½"
		42"-60"	12"	0.052"-0.168"	0.075"-0.164"	0.052"	0.060"					2" × 2" × 3/16"	2" × 2" × 3/16"	3-½"	3-½"	3-⅜"	3-⅜"	5-½"
		THROUGH 72"	12"	0.052"-0.168"	0.164"	0.052"	0.105"	0.079"	½"	⅞"	32 ksi	2" × 2" × 3/16"	2" × 2" × 3/16"	3-½"	3-½"	3-⅜"	3-⅜"	5-½"
		78"-84"	16¼"	0.168"		0.079"		DOUBLE 0.079"	½"	⅞"	32 ksi							
ANNULAR	2⅔" × ½"	THROUGH 36"	7"	0.064"-0.138"	0.060"-0.135"	0.052"	0.060"	0.079"	½"	⅞"	32 ksi	2" × 2" × 3/16"	2" × 2" × 3/16"	2-½"	2-½"	3-⅜"	3-⅜"	3-½"
		42"-72"	12"	0.064"-0.168"	0.075"-0.164"	0.052"	0.105"	0.079"	½"	⅞"	32 ksi	2" × 2" × 3/16"	2" × 2" × 3/16"	3-½"	3-½"	3-⅜"	3-⅜"	5-½"
		78"-84"	12"	0.168"		0.079"		0.109"	½"	⅞"	45 ksi	2" × 2" × 3/16"		3-½"		3-⅜"		5-½"
	3" × 1"	48"-90"	14"	0.064"-0.109"		0.052"		0.079"	½"	⅞"	32 ksi	2" × 2" × 3/16"		3-½"		3-⅜"		5-½"
		96"-120"	14"	0.079"-0.109"		0.052"		0.109"	½"	⅞"	45 ksi	2" × 2" × 3/16"		3-½"		4-⅜"		
		42"-108"	14"		0.060"-0.135"		0.060"						2" × 2" × 3/16"		3-½"		3-⅜"	
HELICAL	2⅔" × ½"	THROUGH 36"	12"	0.052"-0.138"	0.060"-0.135"	0.052"	0.060"	0.079"	½"	⅞"	32 ksi	2" × 2" × 3/16"	2" × 2" × 3/16"	3-½"	3-½"	3-⅜"	3-⅜"	3-½"
		42"-72"	12"	0.052"-0.168"	0.075"-0.164"	0.052"	0.060"	0.079"	½"	⅞"	32 ksi	2" × 2" × 3/16"	2" × 2" × 3/16"	3-½"	3-½"	3-⅜"	3-⅜"	5-½"
		78"-84"	12"	0.168"		0.079"		0.109"	½"	⅞"	45 ksi	2" × 2" × 3/16"		3-½"		3-⅜"		5-½"
	3" × 1"	48"-90"	14"	0.064"-0.109"		0.052"		0.079"	½"	⅞"	32 ksi	2" × 2" × 3/16"		3-½"		3-⅜"		5-½"
		96"-120"	14"	0.079"-0.109"		0.052"		0.109"	½"	⅞"	45 ksi	2" × 2" × 3/16"		3-½"		4-⅜"		
		42"-108"	14"		0.060"-0.135"		0.060"						2" × 2" × 3/16"		3-½"		3-⅜"	
HUGGER	2⅔" × ½" REROLLED END	12"-54"	4"	0.052"-0.109"		0.052"						2½" × 1½" × 3/16"	2½" × 1½" × 3/16"	1-½"				3-½"
		60"-66"	4"	0.109"		0.064"						2½" × 1½" × 3/16"	2½" × 1½" × 3/16"	1-½"				3-½"
		36"-48"	4"	0.138"		0.064"						2½" × 1½" × 3/16"	2½" × 1½" × 3/16"	1-½"				3-½"
		THROUGH 72"	10½"	0.052"-0.168"		0.052"		0.079"	½"	⅞"	32 ksi							
		78"-84"	10½"	0.168"		0.079"		0.109"	½"	⅞"	45 ksi							
	3" × 1" REROLLED END	48"-90"	10½"	0.064"-0.109"		0.052"		0.079"	½"	⅞"	32 ksi							
		96"-120"	10½"	0.079"-0.109"		0.052"		0.109"	½"	⅞"	45 ksi							
	5" × 1" REROLLED END	48"-66"	7½"	0.064"-0.109"		0.064"		0.079"	½"	⅞"	32 ksi	2½" × 1½" × 3/16"	2½" × 1½" × 3/16"	1-½"				3-½"
		72"-90"	7½"	0.064"-0.079"		0.064"		0.079"	½"	⅞"	32 ksi	2½" × 1½" × 3/16"	2½" × 1½" × 3/16"	1-½"				3-½"
		48"-90"	7½"	0.064"-0.138"		0.064"		0.079"	½"	⅞"	32 ksi							
		48"-120"	12" SEE	0.064"-0.109"		0.064"		0.079"	½"	⅞"	32 ksi							
		48"-84"	12" NOTE	0.138"		0.064"		0.079"	½"	⅞"	32 ksi							
		90"-120"	12" 11	0.138"		0.064"		DOUBLE 0.079"	½"	⅞"	32 ksi							

SPIRAL RIB PROFILE

COUPLING TYPE	PIPE CORRUGATION	PIPE SIZE	W	PIPE WALL THICKNESS SSRP	PIPE WALL THICKNESS ASRP	BAND THICKNESS SSRP	BAND THICKNESS ASRP	BAR AND STRAP (SSRP ONLY) STRAP THICKNESS	BOLTS Dia	BAR Dia	BAR YIELD STRENGTH	ANGLE DIMENSIONS SSRP	ANGLE DIMENSIONS ASRP	BOLTS (No.- Dia) SSRP	BOLTS (No.- Dia) ASRP	RIVETS ANGLE TO BAND SSRP	RIVETS ANGLE TO BAND ASRP	SPOT WELDS ANGLE TO BAND SSRP
ANNULAR	2⅔" × ½" * REROLLED END	24"-36"	12"	0.064"-0.109"	0.060"-0.105"	0.052"	0.060"	0.079"	½"	⅞"	32 ksi	2" × 2" × 3/16"	2" × 2" × 3/16"	3-½"	3-½"	3-⅜"	3-⅜"	5-½"
		42"-60"	12"	0.064"-0.109"	0.075"-0.105"	0.052"	0.105"	0.079"	½"	⅞"	32 ksi	2" × 2" × 3/16"	2" × 2" × 3/16"	3-½"	3-½"	3-⅜"	3-⅜"	5-½"
		66"-72"	12"	0.064"-0.109"		0.052"		0.079"	½"	⅞"	32 ksi	2" × 2" × 3/16"	2" × 2" × 3/16"	3-½"	3-½"	3-⅜"	3-⅜"	5-½"
		78"-114"	12"	0.079"-0.109"		0.079"		0.109"	½"	⅞"	45 ksi	2" × 2" × 3/16"	2" × 2" × 3/16"	3-½"	3-½"	3-⅜"	3-⅜"	5-½"
HUGGER	2⅔" × ½" * REROLLED END	24"-72"	10½"	0.064"-0.109"		0.052"		0.079"	½"	⅞"	32 ksi							
		78"-84"	10½"	0.109"		0.079"		0.109"	½"	⅞"	45 ksi							

* See Note 14.

14. All profiles of Spiral Rib Pipe (¾" × ¾" ribs at 7½" pitch and ¾" × 1" ribs at 11½" pitch in both steel and aluminum and ¾" × 1" ribs at 8½" pitch in steel only) shall be manufactured with rerolled ends. Corrugation profile of the rerolled ends shall be 2⅔" × ½" annual corrugations with a minimum of two full corrugations at each end.

NOTES:

To accompany plans dated 1-2-12

1. All ferrous metal coupling band connection hardware shall be galvanized or electroplated in accordance with the Standard Specifications.
2. For helically corrugated coupling bands, the connection angles may be oriented parallel to the pipe axis, provided connecting holes are slotted lengthwise sufficiently to allow adjustment for the helix angle.
3. Tension strap may be connected to band with either spot welds or fillet welds that develop minimum required strength of strap.
4. Use 1¼" gage line dimension on attached angle leg for rivets and spot welds.
5. Band thickness shall not be less than:
   a. 3 standard thicknesses lighter than the thickness of the pipe for Corrugated Steel Pipe.
   b. 2 standard thicknesses lighter than the thickness of the pipe and in no case lighter than 0.060" for Corrugated Aluminum Pipe.
6. Dimensions, thicknesses and strengths shown are minimum.
7. For pipe arches use same width band as for round pipe of equal periphery.
8. Fillet welds of equivalent strenght may be substituted for spot welds or rivets.
9. Spot welds shall develop minimum required strength of strap.
10. Pipe with rerolled ends having at least two 2⅔" × ½" annular corrugations at each end with or without an upturned flange may be connected with any of the annular coupling bands shown for pipe of the same diameter and wall thickness and having 2⅔" × ½" corrugations.
11. In the case of H-12 huggerbands, two piece bands are required for diameters through 96" and three piece bands are required for diameters 102" through 120".
12. Two piece bands are required for pipes greater than 42" diameter.
13. The 2¼" × 2" × 0.109" thick galvanized die-formed angle connector may be used in lieu of the 2" × 2" × 3/16" angle connector for standard joints only on pipes through 72" diameter.

STATE OF CALIFORNIA
DEPARTMENT OF TRANSPORTATION

CORRUGATED METAL PIPE COUPLING DETAILS No. 5 STANDARD JOINT

NO SCALE

RSP D97E DATED JUNE 6, 2008 SUPERSEDES STANDARD PLAN D97E
DATED MAY 1, 2006 - PAGE 187 OF THE STANDARD PLANS BOOK DATED MAY 2006.

REVISED STANDARD PLAN RSP D97E

2006 REVISED STANDARD PLAN RSP D97E

4-2-08

DIST	COUNTY	ROUTE	POST MILES TOTAL PROJECT	SHEET NO.	TOTAL SHEETS
09	Mno	158	2.5/2.9	27	34

Randell D. Hiatt
REGISTERED CIVIL ENGINEER

June 6, 2008
PLANS APPROVAL DATE

REGISTERED PROFESSIONAL ENGINEER
Randell D. Hiatt
No. C50200
Exp. 6-30-09
CIVIL
STATE OF CALIFORNIA

The State of California or its officers or agents shall not be responsible for the accuracy or completeness of electronic copies of this plan sheet.

To accompany plans dated 1-2-12

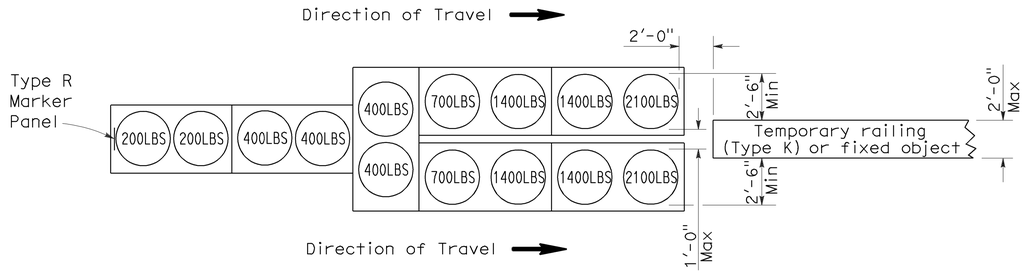

ARRAY 'TU14'

Approach speed 45 mph or more

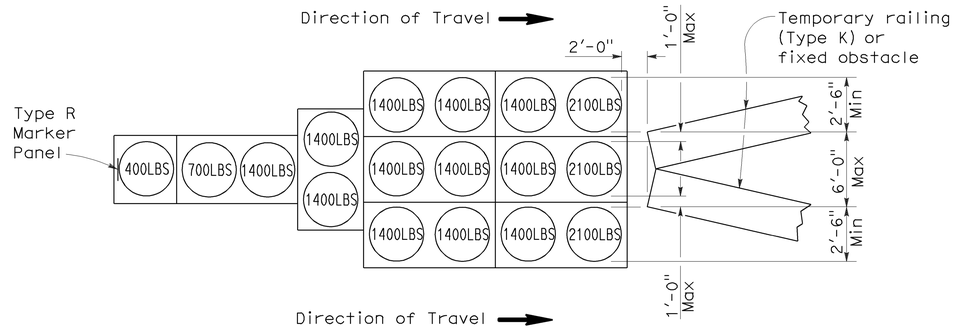

ARRAY 'TU17'

Approach speed less than 45 mph

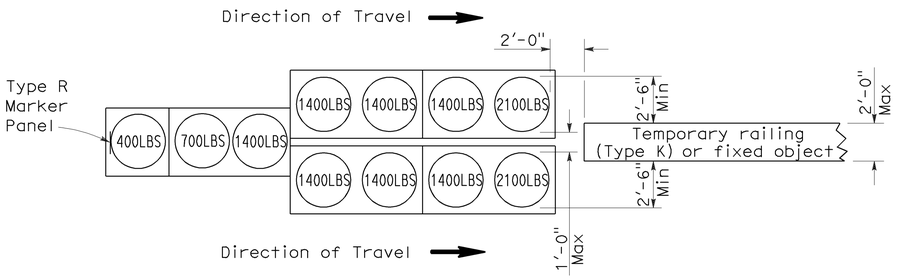

ARRAY 'TU11'

Approach speed less than 45 mph

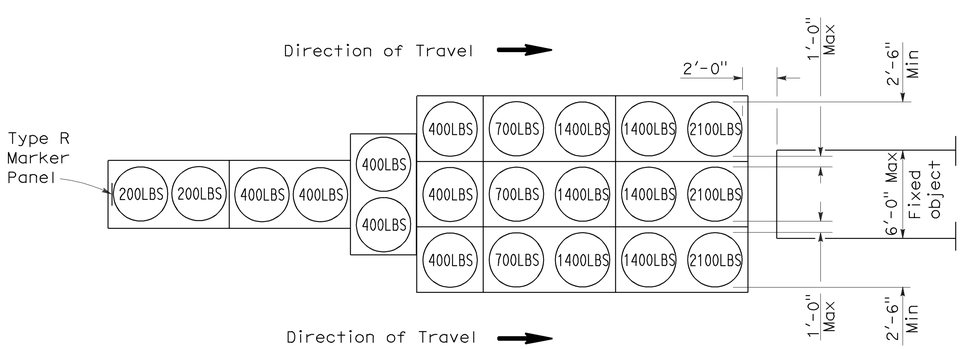

ARRAY 'TU21'

Approach speed 45 mph or more

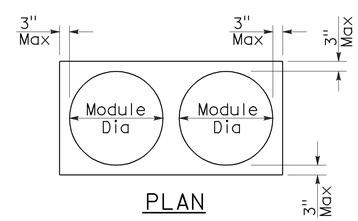

PLAN

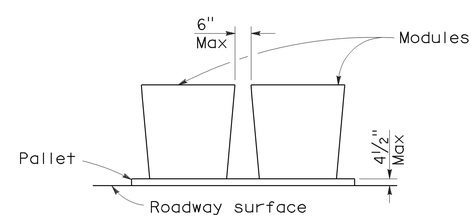

ELEVATION

CRASH CUSHION PALLET DETAIL

See Note 7

NOTES:

1. (XXX) Indicates sand filled module location and weight of sand in pounds for each module. Module spacing is based on the greater diameter of the module.
2. All sand weights are nominal.
3. Temporary crash cushion arrays shall not encroach on the traveled way.
4. Place the top of Type R marker panel 1" below the module lid.
5. Refer to Standard Plan A73B for marker details.
6. Approach speeds indicated conform to NCHRP 350 Report criteria.
7. Use of pallets is optional.

STATE OF CALIFORNIA
DEPARTMENT OF TRANSPORTATION

TEMPORARY CRASH CUSHION, SAND FILLED (UNIDIRECTIONAL)

NO SCALE

RSP T1A DATED JUNE 6, 2008 SUPERSEDES STANDARD PLAN T1A
DATED MAY 1, 2006 - PAGE 211 OF THE STANDARD PLANS BOOK DATED MAY 2006.

REVISED STANDARD PLAN RSP T1A

2006 REVISED STANDARD PLAN RSP T1A

5-15-08

DIST	COUNTY	ROUTE	POST MILES TOTAL PROJECT	SHEET NO.	TOTAL SHEETS
09	Mno	158	2.5/2.9	28	34

Randell D. Hiatt
REGISTERED CIVIL ENGINEER

June 6, 2008
PLANS APPROVAL DATE

REGISTERED PROFESSIONAL ENGINEER
Randell D. Hiatt
No. C50200
Exp. 6-30-09
CIVIL
STATE OF CALIFORNIA

The State of California or its officers or agents shall not be responsible for the accuracy or completeness of electronic copies of this plan sheet.

To accompany plans dated 1-2-12

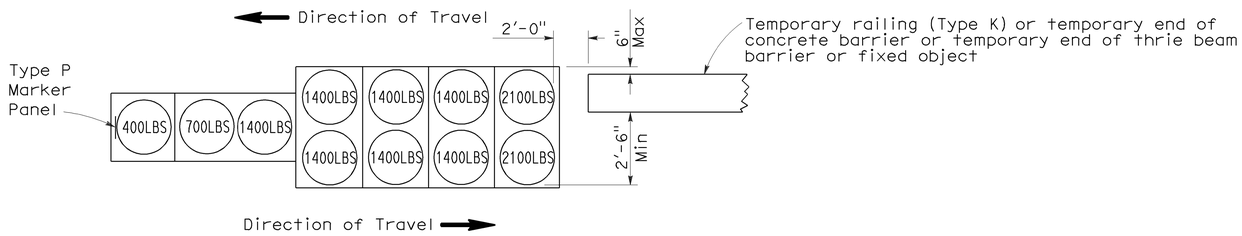

ARRAY 'TB11'

Approach speed less than 45 mph

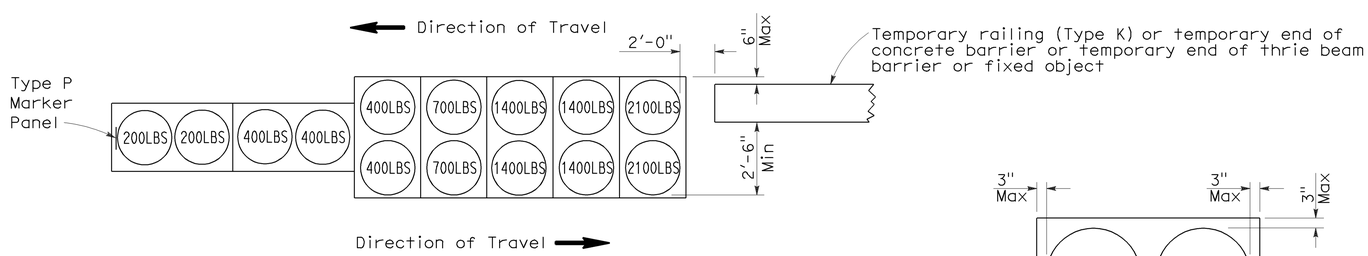

ARRAY 'TB14'

Approach speed 45 mph or more

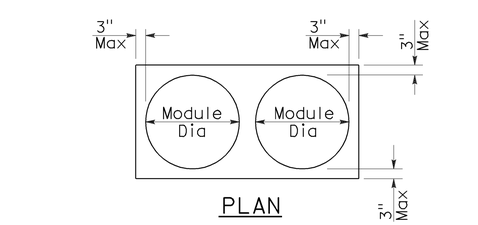

PLAN

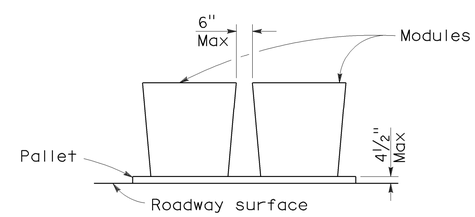

ELEVATION

CRASH CUSHION PALLET DETAIL

See Note 7

NOTES:

1. (XXX) Indicates sand filled module location and weight of sand in pounds for each module. Module spacing is based on the greater diameter of the module.
2. All sand weights are nominal.
3. Temporary crash cushion arrays shall not encroach on the traveled way.
4. Place the Type P marker panel so that the bottom of the panel rests upon the pallet.
5. Refer to Standard Plan A73B for marker details.
6. Approach speeds indicated conform to NCHRP 350 Report criteria.
7. Use of pallets is optional.

STATE OF CALIFORNIA
DEPARTMENT OF TRANSPORTATION

TEMPORARY CRASH CUSHION, SAND FILLED (BIDIRECTIONAL)

NO SCALE

RSP T1B DATED JUNE 6, 2008 SUPERSEDES STANDARD PLAN T1B
DATED MAY 1, 2006 - PAGE 212 OF THE STANDARD PLANS BOOK DATED MAY 2006.

REVISED STANDARD PLAN RSP T1B

2006 REVISED STANDARD PLAN RSP T1B

5-15-08

DIST	COUNTY	ROUTE	POST MILES TOTAL PROJECT	SHEET NO.	TOTAL SHEETS
09	Mno	158	2.5/2.9	29	34

Randell D. Hiatt
REGISTERED CIVIL ENGINEER

June 6, 2008
PLANS APPROVAL DATE

REGISTERED PROFESSIONAL ENGINEER
Randell D. Hiatt
No. C50200
Exp. 6-30-09
CIVIL
STATE OF CALIFORNIA

The State of California or its officers or agents shall not be responsible for the accuracy or completeness of electronic copies of this plan sheet.

To accompany plans dated 1-2-12

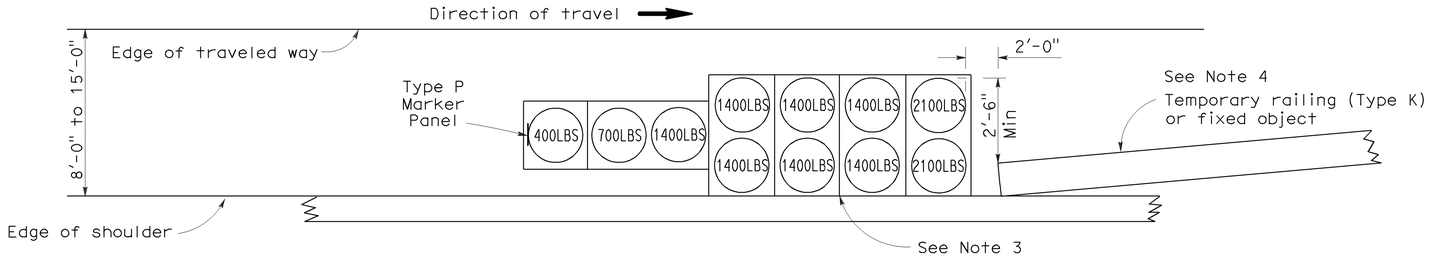

ARRAY 'TS11'

Approach speed less than 45 mph
See Note 9

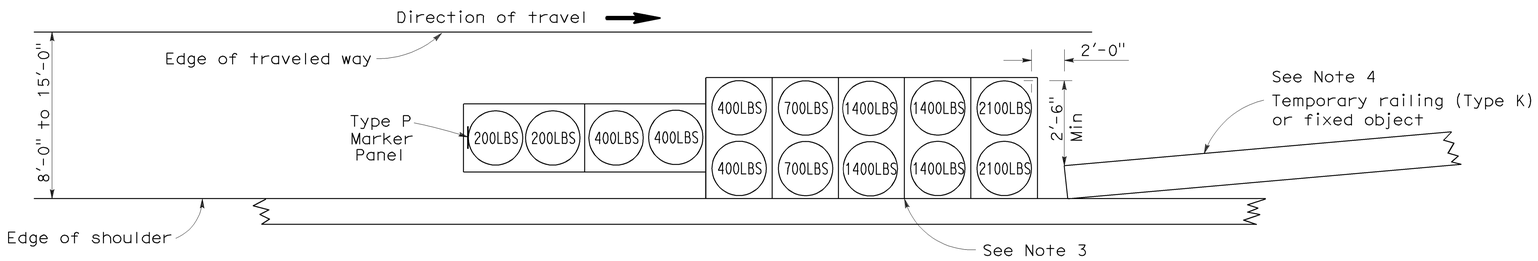

ARRAY 'TS14'

Approach speed 45 mph or more
See Note 9

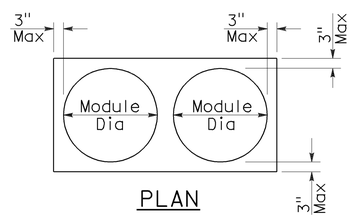

PLAN

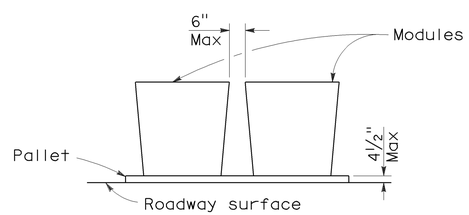

ELEVATION

CRASH CUSHION PALLET DETAIL

See Note 11

NOTES:

1. (XXX) Indicates sand filled module location and weight of sand in pounds for each module. Module spacing is based on the greater diameter of the module.
2. All sand weights are nominal.
3. The temporary crash cushion arrays shown on this plan shall be used only in locations where there will be traffic on one side of the temporary crash cushion array.
4. If the fixed object or approach end of the temporary railing is less than 15'-0" from the edge of traveled way, a temporary crash cushion is required in a construction or work zone.
5. Temporary crash cushion arrays shall not encroach on the traveled way.
6. Arrays for median shoulders shall conform to details shown on this plan for outside shoulders.
7. Place the Type P marker panel so that the bottom of the panel rests upon the pallet and faces traffic.
8. Refer to Standard Plan A73B for marker details.
9. For shoulder widths less than 8'-0", appropriate approved crash cushion protection, other than sand filled modules, shall be provided at fixed objects and at approach ends of temporary railing. The specific type of crash cushion shall be as shown on the project plans or as specified in the Special Provisions, or if not shown on the project plans or specified in the Special Provisions, shall be as approved by the Engineer.
10. Approach speeds indicated conform to NCHRP 350 Report criteria.
11. Use of pallets is optional.

STATE OF CALIFORNIA
DEPARTMENT OF TRANSPORTATION

TEMPORARY CRASH CUSHION, SAND FILLED (SHOULDER INSTALLATIONS)

NO SCALE

RSP T2 DATED JUNE 6, 2008 SUPERSEDES STANDARD PLAN T2
DATED MAY 1, 2006 - PAGE 213 OF THE STANDARD PLANS BOOK DATED MAY 2006.

REVISED STANDARD PLAN RSP T2

2006 REVISED STANDARD PLAN RSP T2

5-15-08

Dist	COUNTY	ROUTE	POST MILES TOTAL PROJECT	SHEET No.	TOTAL SHEETS
09	Mno	158	2.5/2.9	30	34

Randell D. Hiatt
REGISTERED CIVIL ENGINEER

May 20, 2011
PLANS APPROVAL DATE

REGISTERED PROFESSIONAL ENGINEER
Randell D. Hiatt
No. C50200
Exp. 6-30-11
CIVIL
STATE OF CALIFORNIA

The State of California or its officers or agents shall not be responsible for the accuracy or completeness of electronic copies of this plan sheet.

To accompany plans dated 1-2-12

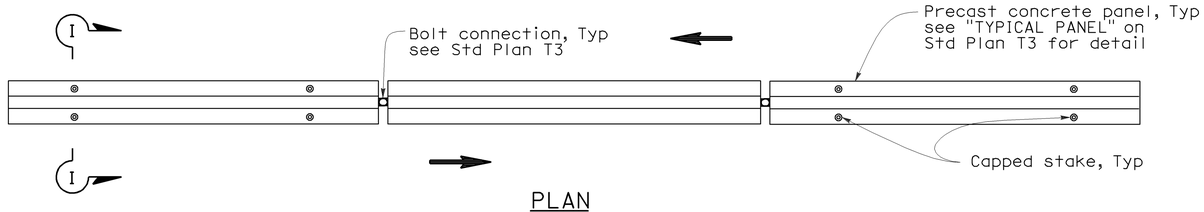

PLAN

RAILING STAKING CONFIGURATION FOR TWO-WAY TRAFFIC

See Note 1

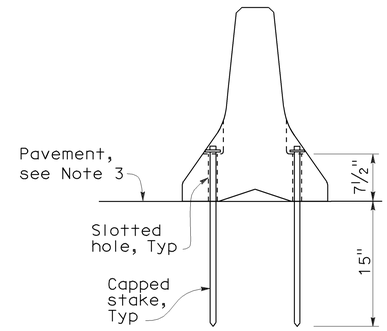

SECTION I-I

NOTES:

1. Where Type K Temporary Railing is placed as a temporary or long term barrier in two-way traffic on highways with less than 24" from the edge of traveled way, use four capped stakes per every other panel with end panels staked.
2. Where Type K Temporary Railing is placed 3" to 24" from the edge of an excavation on highways, use two capped stakes per panel along the traffic side.
3. Staked Type K Temporary Railing must be supported by at least 4" thick concrete, hot mix asphalt or existing asphalt concrete pavement.
4. The minimum yield strength for the washer must be 60,000 psi.
5. Direction of adjacent traffic indicated by ⟹.

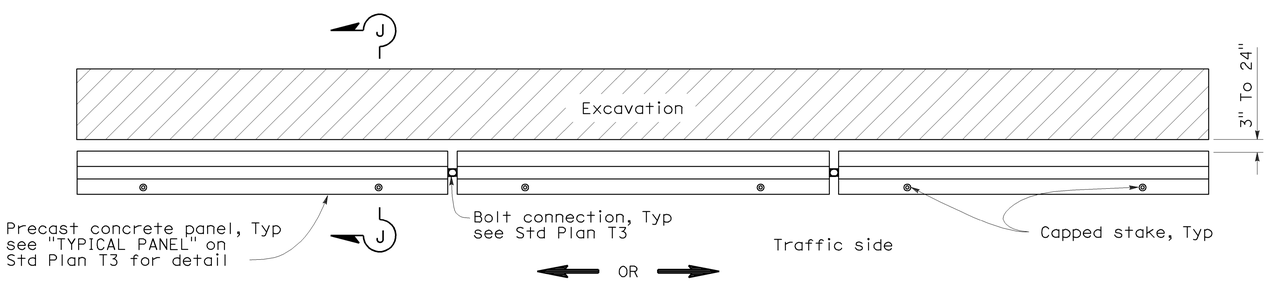

PLAN

RAILING STAKING CONFIGURATION ADJACENT TO AN EXCAVATION

See Note 2

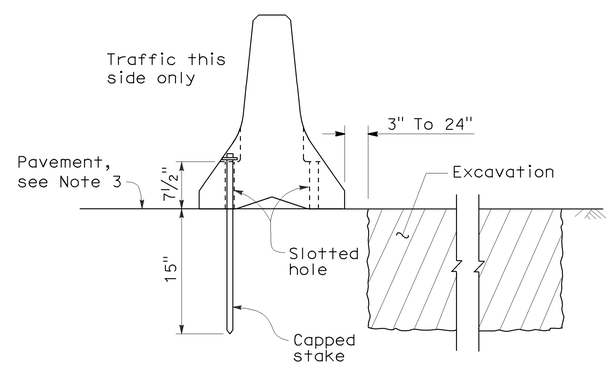

SECTION J-J

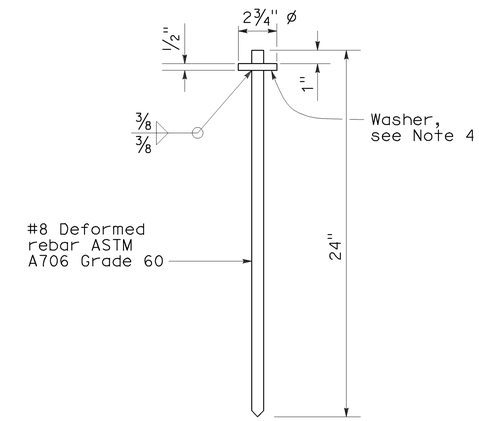

CAPPED STAKE DETAIL

STATE OF CALIFORNIA
DEPARTMENT OF TRANSPORTATION

TEMPORARY RAILING (TYPE K)

NO SCALE

NSP T3A DATED MAY 20, 2011 SUPPLEMENTS
THE STANDARD PLANS BOOK DATED MAY 2006.

NEW STANDARD PLAN NSP T3A

2006 NEW STANDARD PLAN NSP T3A

DIST	COUNTY	ROUTE	POST MILES TOTAL PROJECT	SHEET NO.	TOTAL SHEETS
09	Mno	158	2.5/2.9	31	34

Robert B Schott
LICENSED LANDSCAPE ARCHITECT

August 15, 2008
PLANS Approval DATE

LICENSED LANDSCAPE ARCHITECT
Robert B. Schott 3695
Signature
11-04-08
Renewal Date
08-11-08
Date
STATE OF CALIFORNIA

The State of California or its officers or agents shall not be responsible for the accuracy or completeness of electronic copies of this plan sheet.

To accompany plans dated 1-2-12

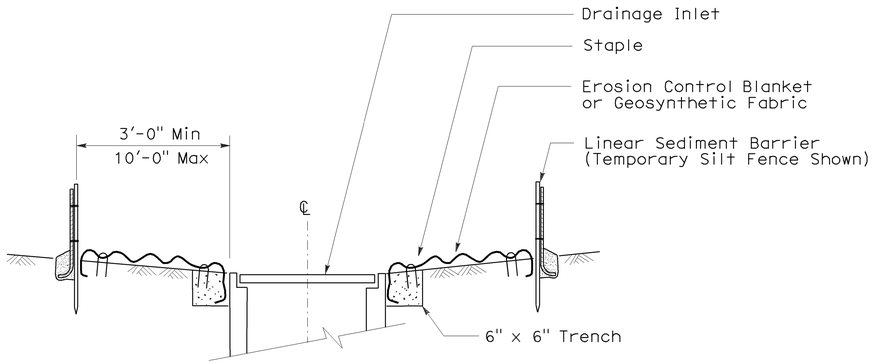

SECTION A-A

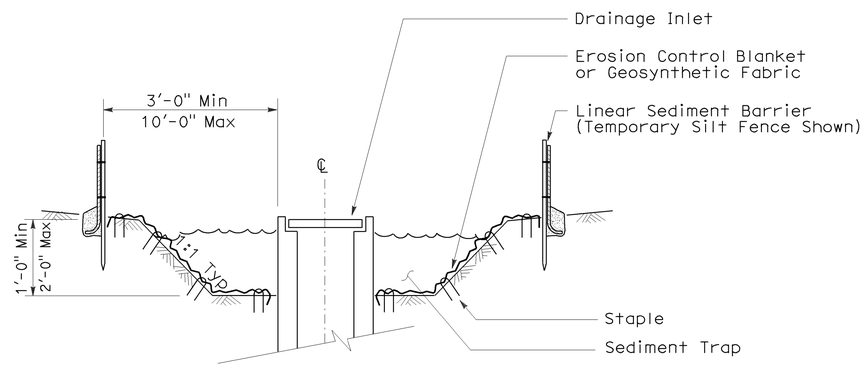

SECTION B-B

NOTES:

1. See Standard Plan T51 for Temporary Silt Fence.
2. Dimensions may vary to fit field conditions.

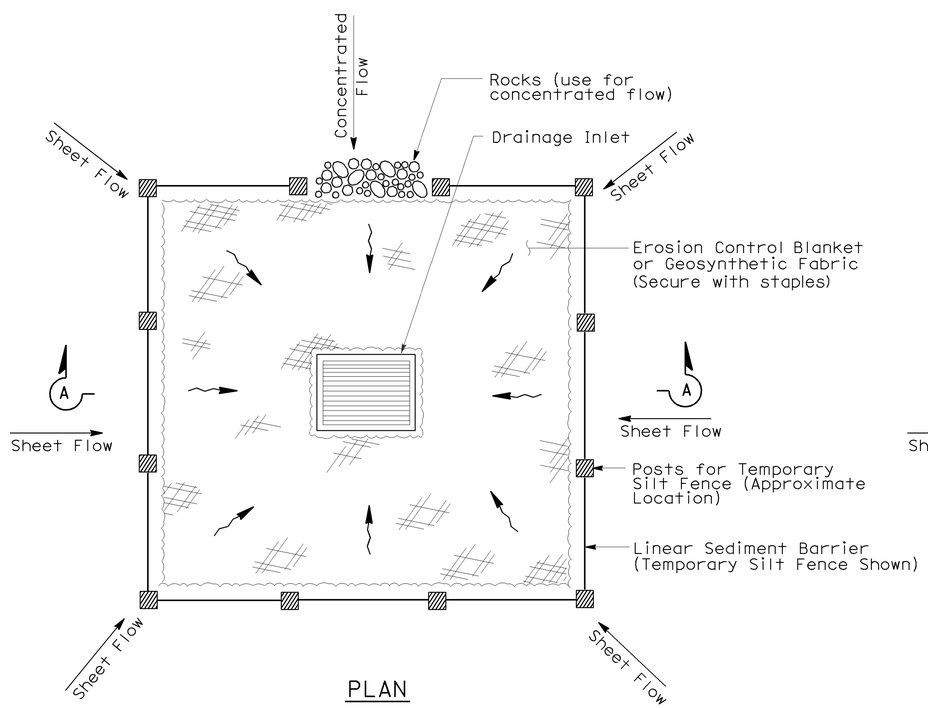

PLAN

TEMPORARY DRAINAGE INLET PROTECTION (TYPE 1)

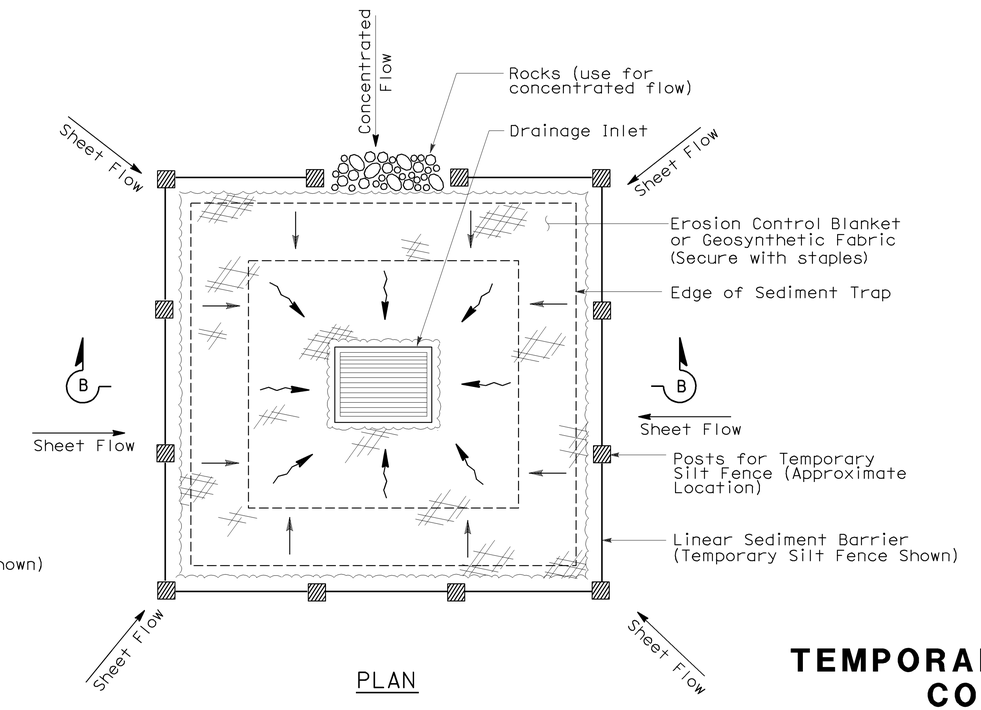

PLAN

TEMPORARY DRAINAGE INLET PROTECTION (TYPE 2) (EXCAVATED SEDIMENT TRAP)

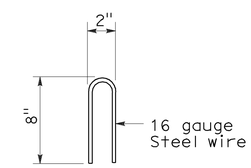

STAPLE DETAIL

STATE OF CALIFORNIA
DEPARTMENT OF TRANSPORTATION

TEMPORARY WATER POLLUTION CONTROL DETAILS (TEMPORARY DRAINAGE INLET PROTECTION)

NO SCALE

Nsp t61 dated august 15, 2008 supplements the standard plans book dated may 2006.

NEW STANDARD PLAN NSP T61

2006 NEW STANDARD PLAN NSP T61

7-11-08

DIST	COUNTY	ROUTE	POST MILES TOTAL PROJECT	SHEET NO.	TOTAL SHEETS
09	Mno	158	2.5/2.9	32	34

LICENSED LANDSCAPE ARCHITECT

August 15, 2008
PLANS APPROVAL DATE

LICENSED LANDSCAPE ARCHITECT — Robert B. Schott — Signature — 11-04-08 Renewal Date — 08-11-08 Date — STATE OF CALIFORNIA

The State of California or its officers or agents shall not be responsible for the accuracy or completeness of electronic copies of this plan sheet.

To accompany plans dated 1-2-12

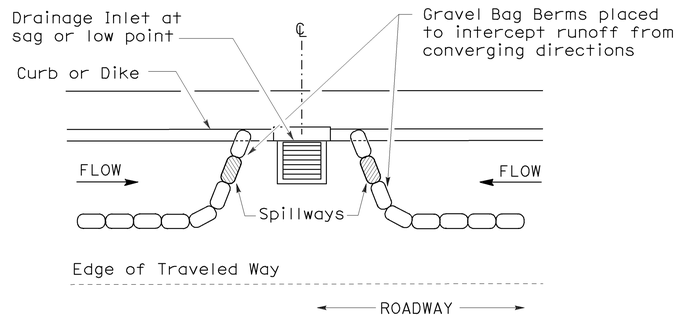

PLAN

CONFIGURATION FOR SAG POINT INLET (GRAVEL BAG BERM)

GRAVEL BAG BERM (TYPE 3A) SPACING TABLE

SLOPE OF ROADWAY (PERCENT)	1 to 3.9	4 to 5.9	6 to 7.9	8 to 10	10+
INTERVAL BETWEEN BERM	100′	75′	50′	25′	12′

For slope of less than 1%, install barriers only if erosion/sediment is prevalent

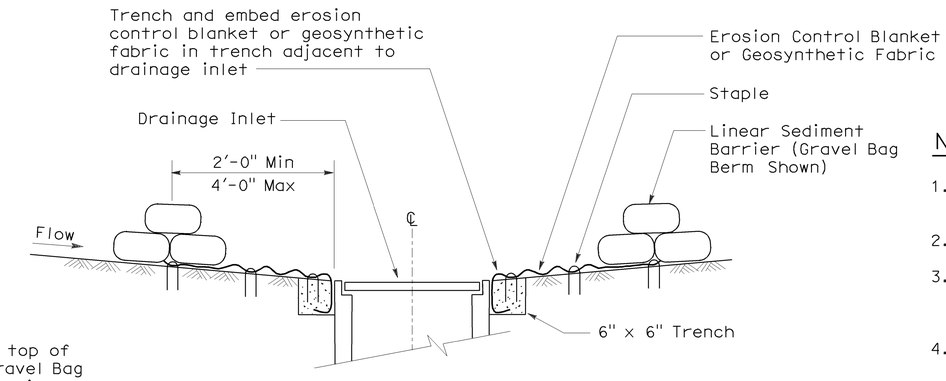

SECTION A-A

NOTES:

1. Place safety cones adjacent to drainage inlet protection.
2. Dimensions may vary to fit field conditions.
3. Install a minimum of 3 gravel bag berms upstream of each drainage inlet to be protected.
4. Position erosion control blanket or geosynthetic fabric at edge of concrete apron and secure in trench.
5. Erosion control blanket or geosynthetic fabric is not required if the area adjacent to the drainage inlet is vegetated or paved.

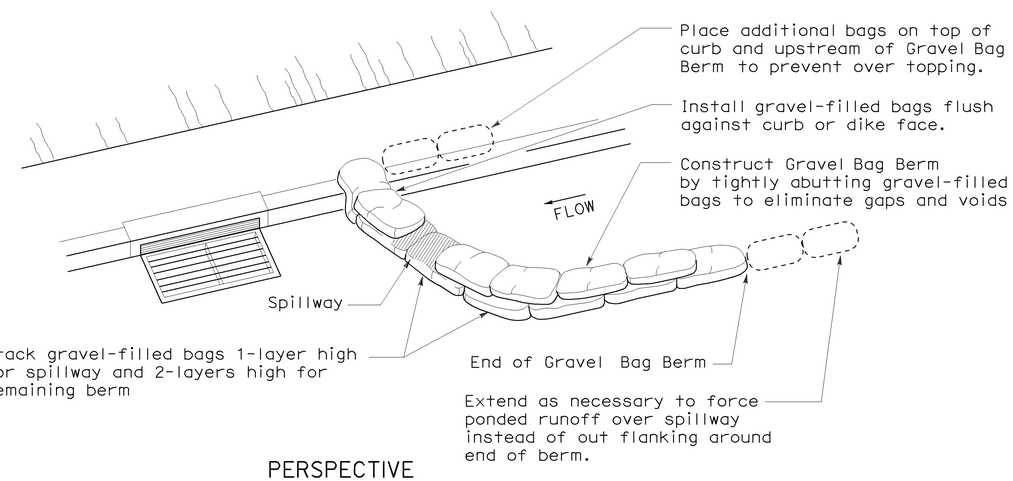

PERSPECTIVE

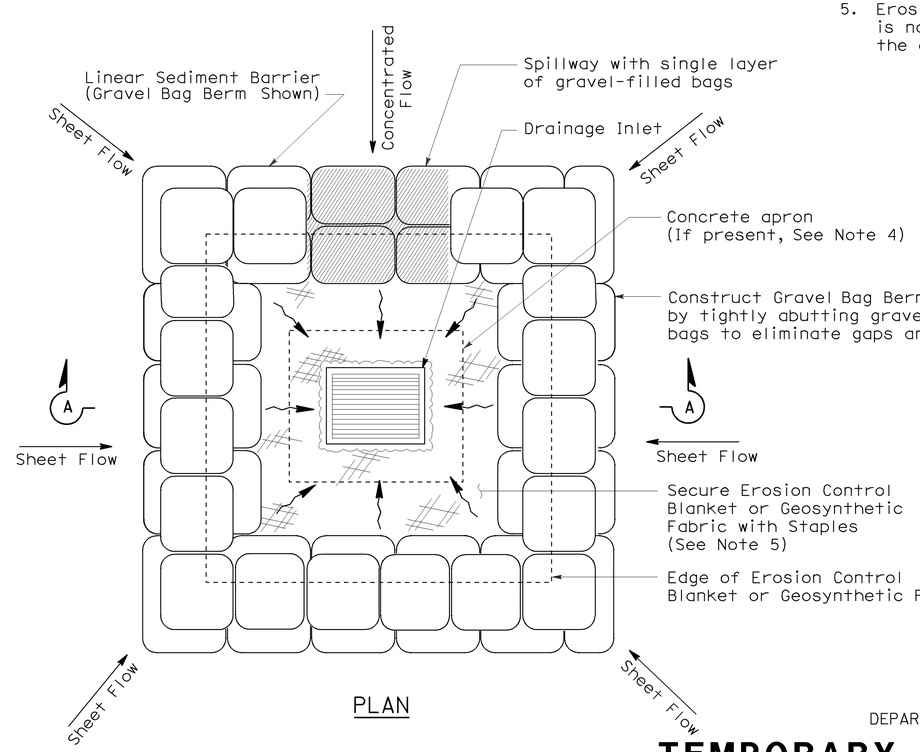

PLAN

TEMPORARY DRAINAGE INLET PROTECTION (TYPE 3B)

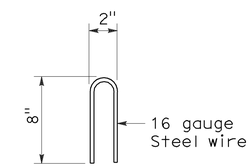

STAPLE DETAIL

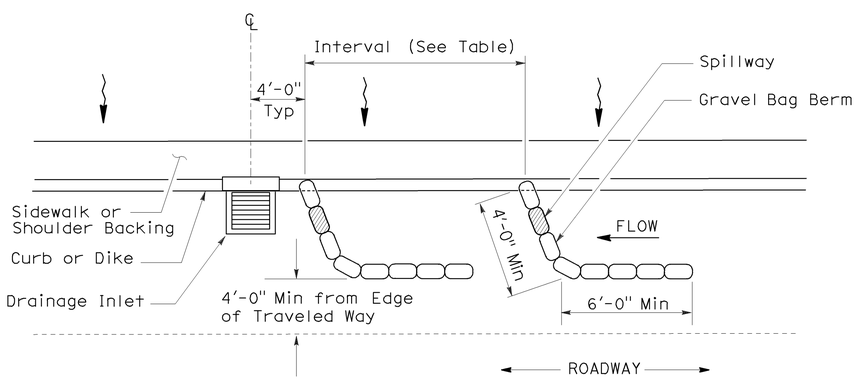

PLAN

TEMPORARY DRAINAGE INLET PROTECTION (TYPE 3A) (GRAVEL BAG BERM)

STATE OF CALIFORNIA
DEPARTMENT OF TRANSPORTATION

TEMPORARY WATER POLLUTION CONTROL DETAILS (TEMPORARY DRAINAGE INLET PROTECTION)

NO SCALE

NSP T62 DATED AUGUST 15, 2008 SUPPLEMENTS THE STANDARD PLANS BOOK DATED MAY 2006.

NEW STANDARD PLAN NSP T62

2006 NEW STANDARD PLAN NSP T62

7-11-08

DIST	COUNTY	ROUTE	POST MILES TOTAL PROJECT	SHEET NO.	TOTAL SHEETS
09	Mno	158	2.5/2.9	33	34

LICENSED LANDSCAPE ARCHITECT

August 15, 2008
PLANS APPROVAL DATE

The State of California or its officers or agents shall not be responsible for the accuracy or completeness of electronic copies of this plan sheet.

LICENSED LANDSCAPE ARCHITECT
Robert B. Schott 3695
Signature
11-04-08
Renewal Date
08-11-08
Date
STATE OF CALIFORNIA

To accompany plans dated 1-2-12

FLEXIBLE SEDIMENT BARRIER SPACING TABLE

SLOPE OF ROADWAY (PERCENT)	0 to 0.9	1 to 1.9	2 to 2.9	3 to 4	5+
INTERVAL BETWEEN BARRIERS	50′	35′	30′	25′	20′
ANGLE FROM FACE OF CURB	70°	70°	70°	45°	45°
SUGGESTED BARRIER LENGTH	6′	6′	6′	6′	6′

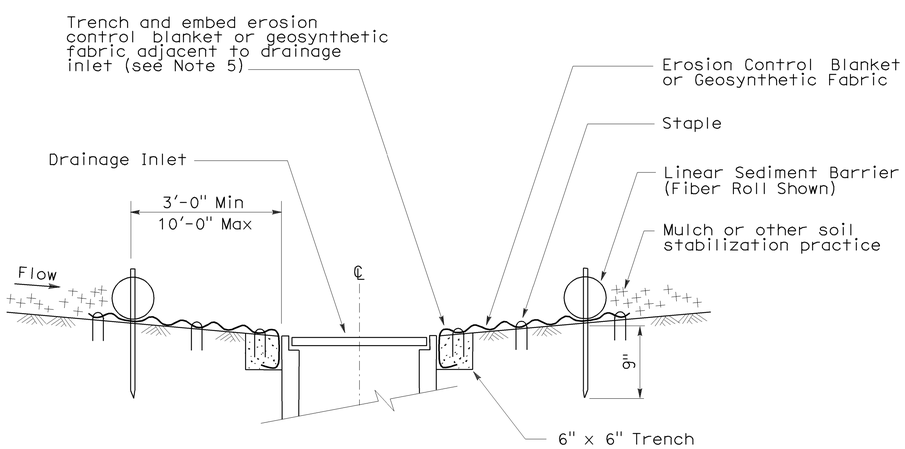

SECTION A-A

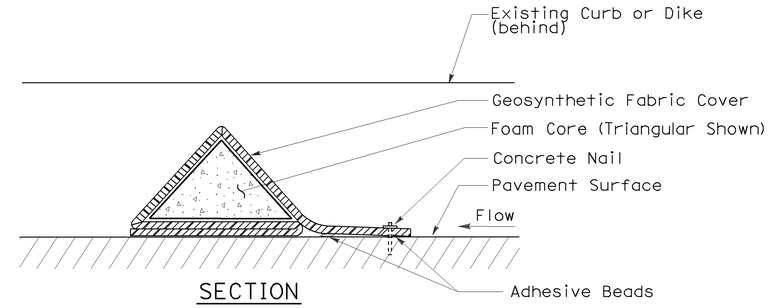

SECTION

FLEXIBLE SEDIMENT BARRIER DETAIL
(FOAM BARRIER SHOWN)

NOTES:

1. See Standard Plan T51 for Temporary Silt Fence.
2. Dimensions may vary to fit field conditions.
3. Install a minimum of 3 flexible sediment barriers upstream of each drainage inlet to be protected.
4. Position erosion control blanket or geosynthetic fabric at edge of concrete apron and secure in trench.
5. Erosion control blanket or geosynthetic fabric is not required if the area adjacent to the drainage inlet is vegetated.

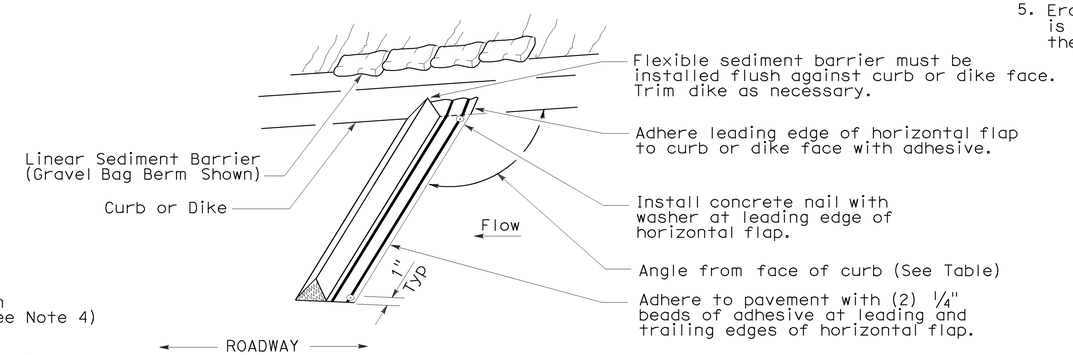

PERSPECTIVE

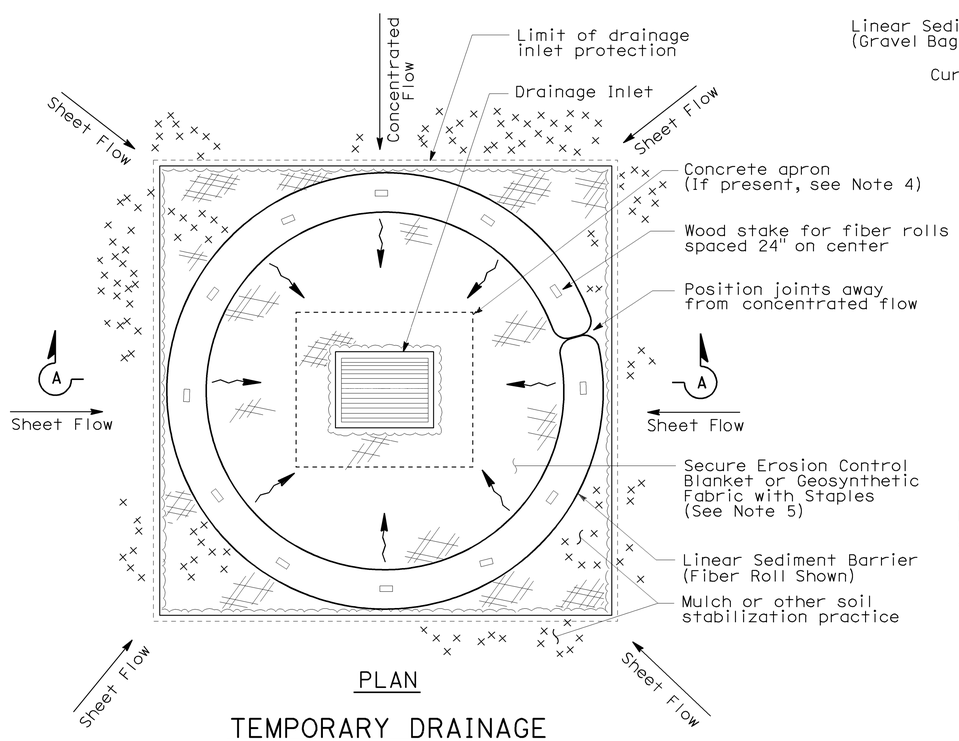

PLAN

TEMPORARY DRAINAGE
INLET PROTECTION (TYPE 4A)

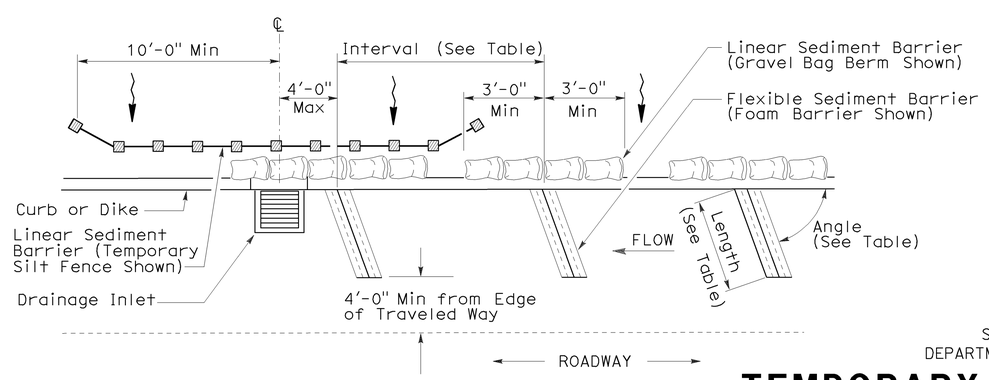

PLAN

TEMPORARY DRAINAGE
INLET PROTECTION (TYPE 4B)
FLEXIBLE SEDIMENT BARRIER

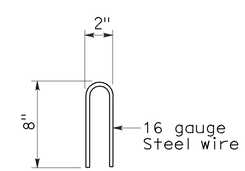

STAPLE DETAIL

STATE OF CALIFORNIA
DEPARTMENT OF TRANSPORTATION

TEMPORARY WATER POLLUTION CONTROL DETAILS (TEMPORARY DRAINAGE INLET PROTECTION)

NO SCALE

NSP T63 DATED AUGUST 15, 2008 SUPPLEMENTS
THE STANDARD PLANS BOOK DATED MAY 2006.

NEW STANDARD PLAN NSP T63

2006 NEW STANDARD PLAN NSP T63

7-11-08

DIST	COUNTY	ROUTE	POST MILES TOTAL PROJECT	SHEET NO.	TOTAL SHEETS
09	Mno	158	2.5/2.9	34	34

LICENSED LANDSCAPE ARCHITECT

August 15, 2008
PLANS APPROVAL DATE

LICENSED LANDSCAPE ARCHITECT
Robert B. Schott 3825
Signature
11-04-08
Renewal Date
08-11-08
Date
STATE OF CALIFORNIA

The State of California or its officers or agents shall not be responsible for the accuracy or completeness of electronic copies of this plan sheet.

To accompany plans dated 1-2-12

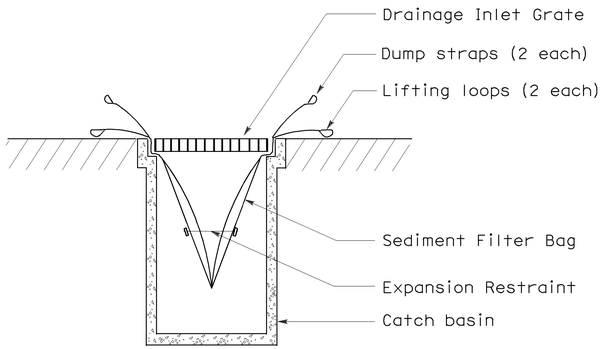

SECTION B-B

SEDIMENT FILTER BAG DETAIL

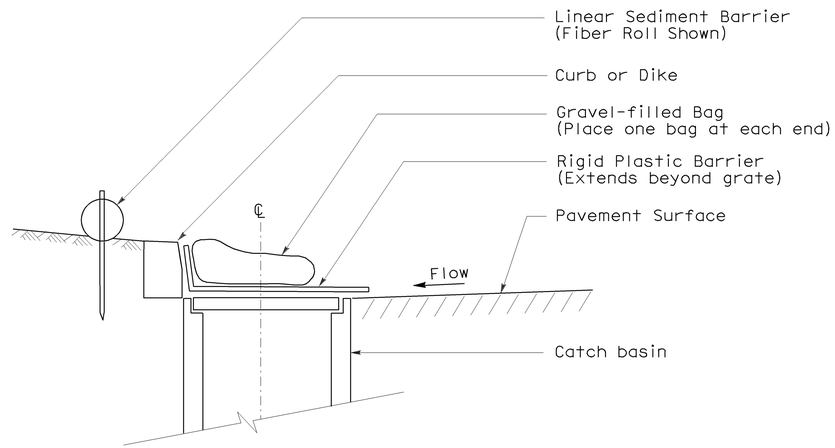

SECTION

TEMPORARY DRAINAGE INLET PROTECTION (TYPE 6A) (CATCH BASIN WITH GRATE)

NOTES:

1. See Standard Plan T51 for Temporary Silt Fence.
2. Dimensions may vary to fit field conditions.

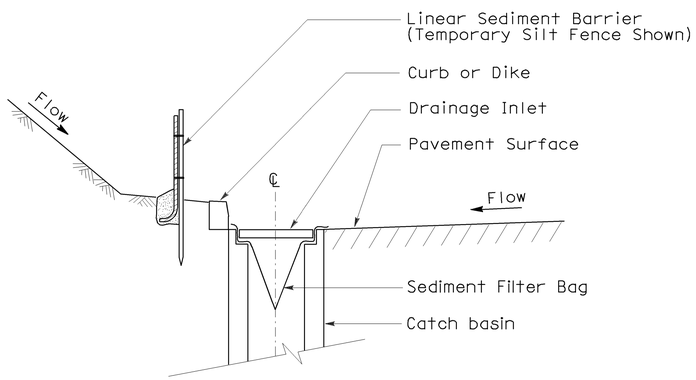

SECTION A-A

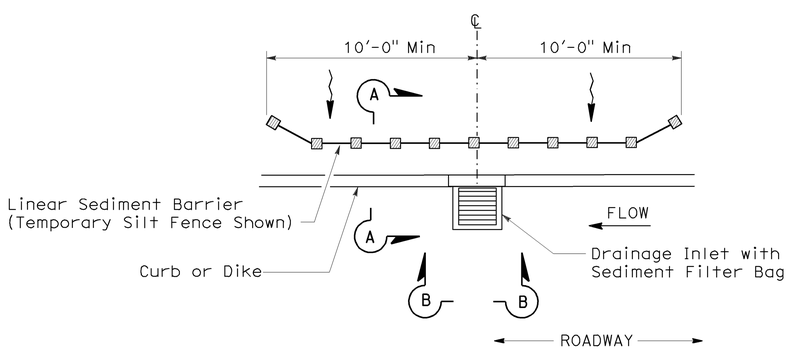

PLAN

TEMPORARY DRAINAGE INLET PROTECTION (TYPE 5) (SEDIMENT FILTER BAG)

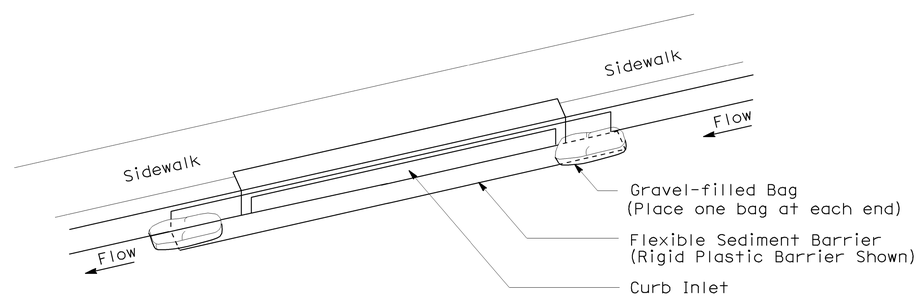

PERSPECTIVE

TEMPORARY DRAINAGE INLET PROTECTION (TYPE 6B) (CURB INLET WITHOUT GRATE)

STATE OF CALIFORNIA
DEPARTMENT OF TRANSPORTATION

TEMPORARY WATER POLLUTION CONTROL DETAILS (TEMPORARY DRAINAGE INLET PROTECTION)

NO SCALE

NSP T64 DATED AUGUST 15, 2008 SUPPLEMENTS
THE STANDARD PLANS BOOK DATED MAY 2006.

NEW STANDARD PLAN NSP T64

2006 NEW STANDARD PLAN NSP T64

7-11-08