Dist	COUNTY	ROUTE	POST MILES TOTAL PROJECT	SHEET No.	TOTAL SHEETS
09	Iny	127	0.1/16.2	1	32

INDEX OF PLANS

Sheet No.	
1	TITLE AND LOCATION MAP
2	CONSTRUCTION DETAIL
3-22	DRAINAGE PLAN AND PROFILE
23-25	DRAINAGE QUANITIES
26	CONSTRUCTION AREA SIGNS
27	SUMMARY OF QUANTITIES
28-32	REVISED AND NEW STANDARD PLANS

THE STANDARD PLANS LIST APPLICABLE TO THIS CONTRACT IS INCLUDED IN THE NOTICE TO BIDDERS AND SPECIAL PROVISIONS BOOK.

STATE OF CALIFORNIA

DEPARTMENT OF TRANSPORTATION

PROJECT PLANS FOR CONSTRUCTION ON

STATE HIGHWAY

IN INYO COUNTY AT AND NEAR SHOSHONE AT VARIOUS LOCATIONS

FROM 0.1 MILE NORTH OF SAN BERNARDINO COUNTY TO 0.2 MILE SOUTH OF NORTH JUNCTION ROUTE 178

TO BE SUPPLEMENTED BY STANDARD PLANS DATED MAY 2006

LOCATION MAP

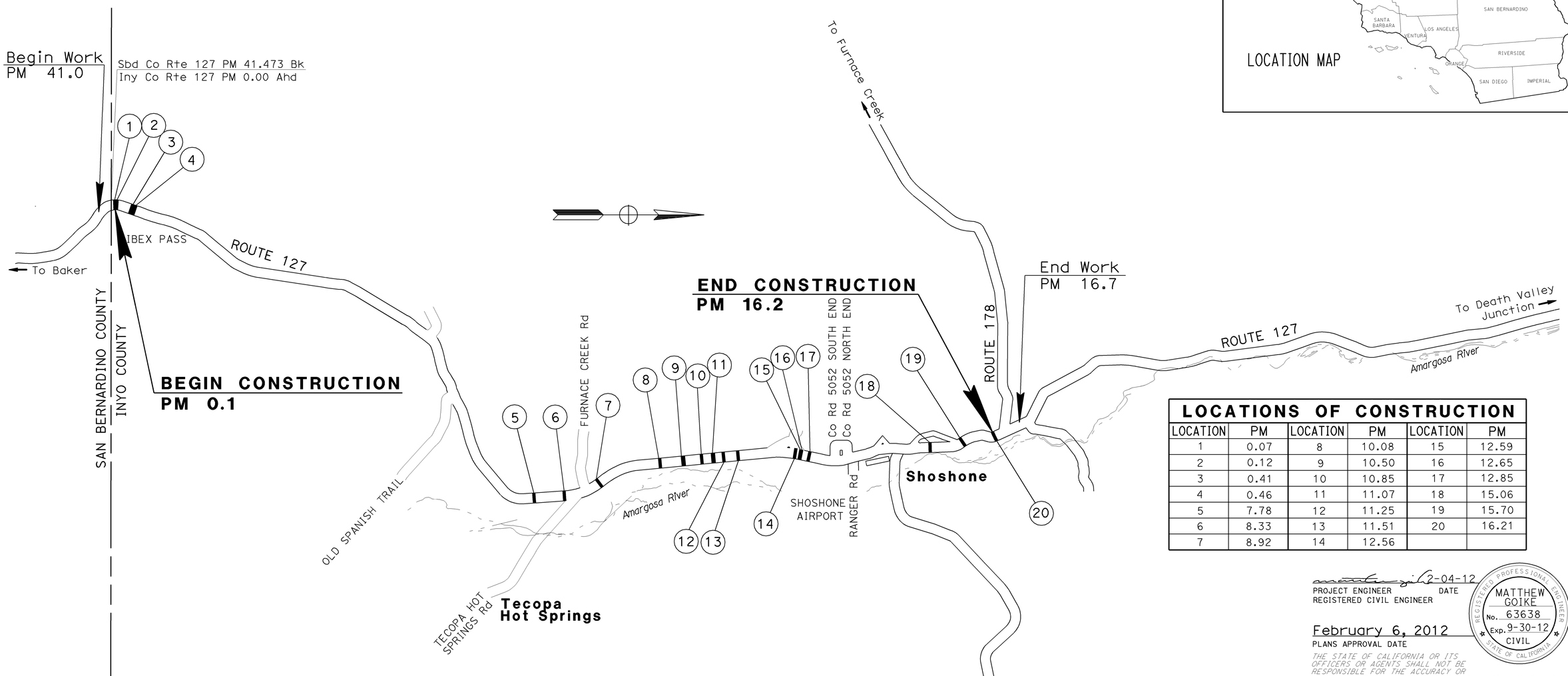

NO SCALE

LOCATIONS OF CONSTRUCTION					
LOCATION	PM	LOCATION	PM	LOCATION	PM
1	0.07	8	10.08	15	12.59
2	0.12	9	10.50	16	12.65
3	0.41	10	10.85	17	12.85
4	0.46	11	11.07	18	15.06
5	7.78	12	11.25	19	15.70
6	8.33	13	11.51	20	16.21
7	8.92	14	12.56		

2-04-12
PROJECT ENGINEER DATE
REGISTERED CIVIL ENGINEER

REGISTERED PROFESSIONAL ENGINEER
MATTHEW GOIKE
No. 63638
Exp. 9-30-12
CIVIL
STATE OF CALIFORNIA

February 6, 2012
PLANS APPROVAL DATE

THE STATE OF CALIFORNIA OR ITS OFFICERS OR AGENTS SHALL NOT BE RESPONSIBLE FOR THE ACCURACY OR COMPLETENESS OF SCANNED COPIES OF THIS PLAN SHEET.

THE CONTRACTOR SHALL POSSESS THE CLASS (OR CLASSES) OF LICENSE AS SPECIFIED IN THE "NOTICE TO BIDDERS."

PROJECT MANAGER JOHN FOX
DESIGN ENGINEER JOHN FOX

CONTRACT No.	09-348304
PROJECT ID	0900020096

LAST REVISION 02-04-12
DATE PLOTTED => 07-FEB-2012
TIME PLOTTED => 14:57

Dist	COUNTY	ROUTE	POST MILES TOTAL PROJECT	SHEET No.	TOTAL SHEETS
09	Iny	127	0.1/16.2	2	32

REGISTERED CIVIL ENGINEER 2-4-12 DATE

2-6-12
PLANS APPROVAL DATE

REGISTERED PROFESSIONAL ENGINEER MATTHEW GOIKE No. 63638 Exp. 9-30-12 CIVIL STATE OF CALIFORNIA

THE STATE OF CALIFORNIA OR ITS OFFICERS OR AGENTS SHALL NOT BE RESPONSIBLE FOR THE ACCURACY OR COMPLETENESS OF SCANNED COPIES OF THIS PLAN SHEET.

NOTES:

1. CONTROLLED LOW STRENGTH MATERIAL (SLURRY CEMENT BACKFILL) MAY BE USED IN PLACE OF MINOR CONCRETE (BACKFILL) EXCEPT FOR THE TOP OR OUTER 1'. SLURRY CEMENT BACKFILL THAT IS USED IN PLACE OF MINOR CONCRETE (BACKFILL) SHALL BE PAID FOR AS MINOR CONCRETE (BACKFILL).

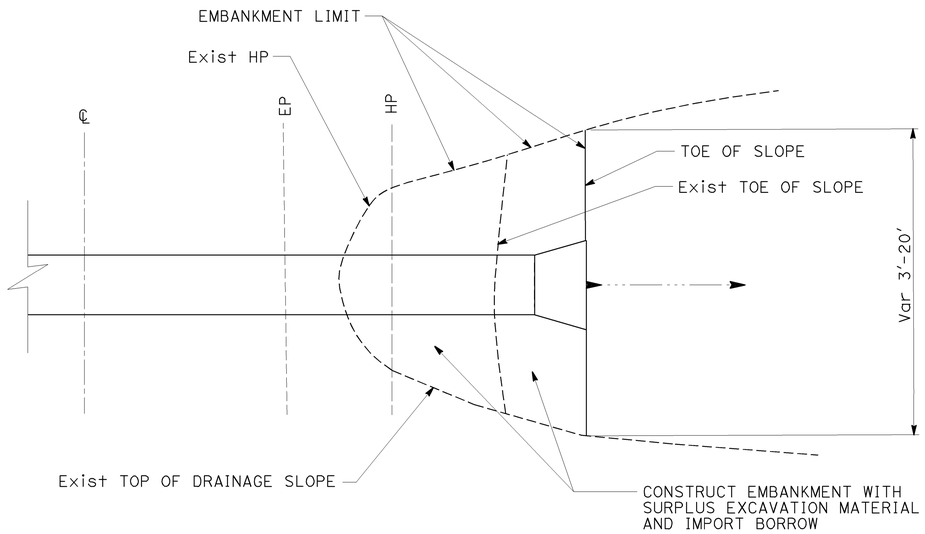

TYPICAL EMBANKMENT

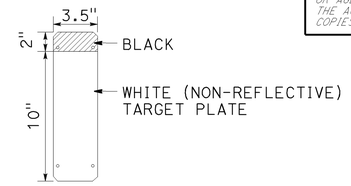

MARKER (CULVERT) PLATE

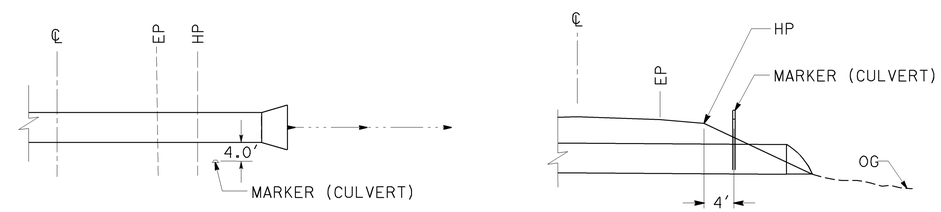

TYPICAL MARKER (CULVERT)

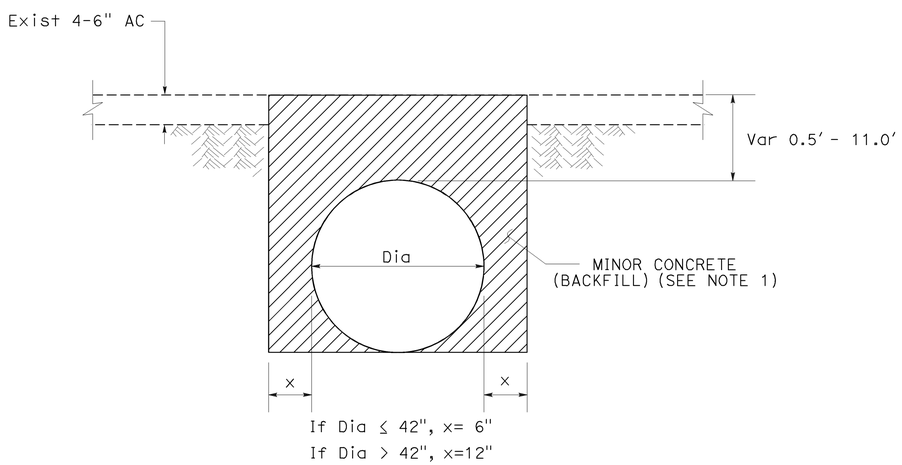

IN PAVED AREAS

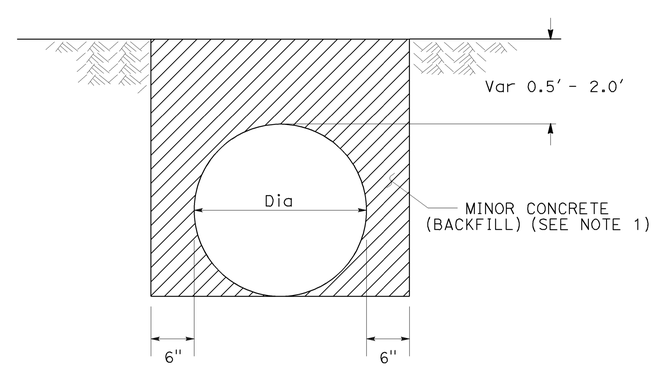

IN UNPAVED SHOULDER AREAS WITH LESS THAN 2' COVER AT ETW

MINOR CONCRETE (BACKFILL) DETAIL

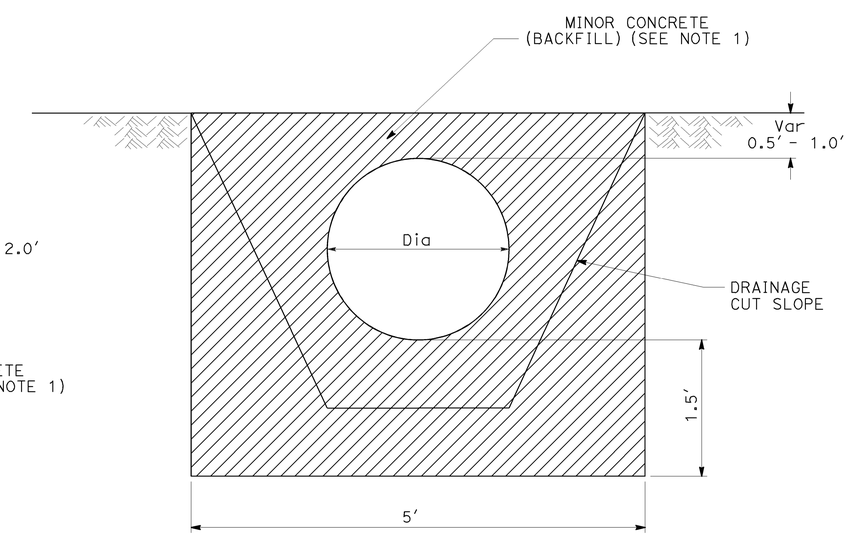

TYPICAL DRAINAGE ENTRANCE/EXIT FOR DRAINAGE SYSTEM NUMBERS 7, 8, 13, 20

CONSTRUCTION DETAILS

NO SCALE

C-1

STATE OF CALIFORNIA - DEPARTMENT OF TRANSPORTATION
Caltrans MAINTENANCE ENGINEERING

FUNCTIONAL SUPERVISOR: JOHN FOX
CALCULATED-DESIGNED BY: MATTHEW GOIKE
CHECKED BY: MALISSA REYNOLDS
REVISED BY: MG
DATE REVISED: 11-02-11

LAST REVISION 02-04-12
DATE PLOTTED => 07-FEB-2012
TIME PLOTTED => 10:31

Dist	COUNTY	ROUTE	POST MILES TOTAL PROJECT	SHEET No.	TOTAL SHEETS
09	Iny	127	0.1/16.2	3	32

REGISTERED CIVIL ENGINEER 2-4-12 DATE

2-6-12
PLANS APPROVAL DATE

REGISTERED PROFESSIONAL ENGINEER MATTHEW GOIKE No. 63638 Exp. 9-30-12 CIVIL STATE OF CALIFORNIA

THE STATE OF CALIFORNIA OR ITS OFFICERS OR AGENTS SHALL NOT BE RESPONSIBLE FOR THE ACCURACY OR COMPLETENESS OF SCANNED COPIES OF THIS PLAN SHEET.

NOTES:

1. FOR ACCURATE RIGHT OF WAY DATA, CONTACT RIGHT OF WAY ENGINEERING AT THE DISTRICT OFFICE.
2. ALL DRAINAGE STRUCTURES ARE RADIAL TO THE REFERENCED ALIGNMENT UNLESS OTHERWISE SHOWN.

LEGEND:

- MINOR CONCRETE (BACKFILL)
- 1 - DRAINAGE SYSTEM No.
- (a) - DRAINAGE UNIT

ABBREVIATION:

TBM - TEMPORARY BENCH MARK

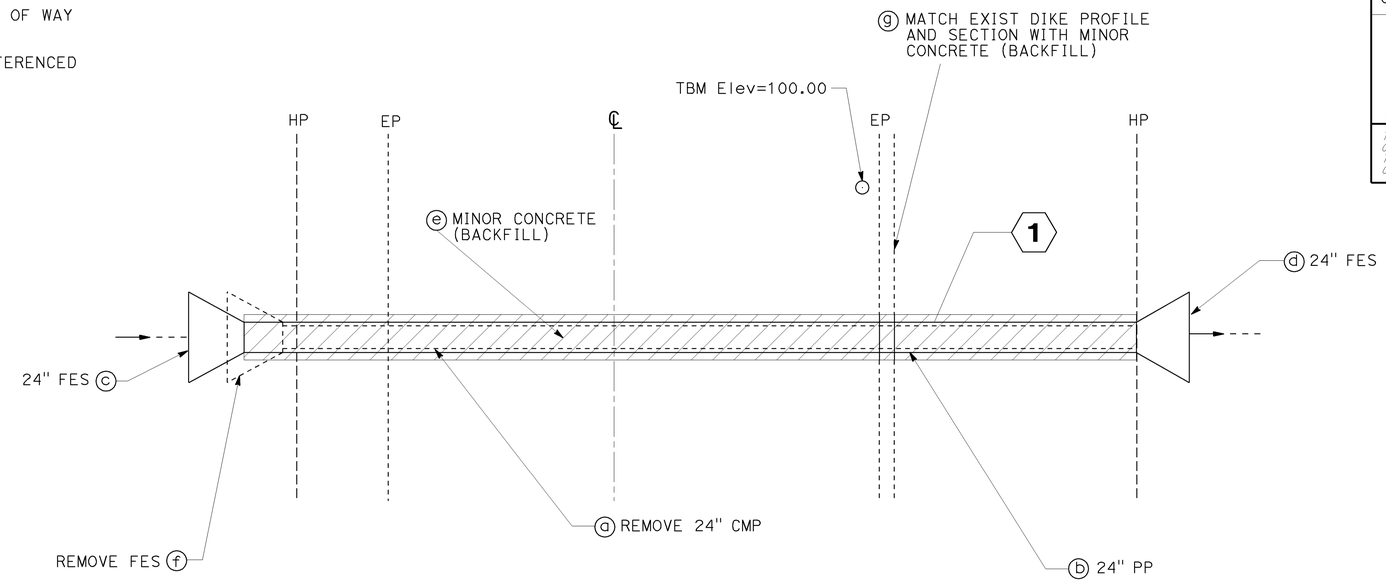

PLAN

SCALE: Horiz 1"=5'

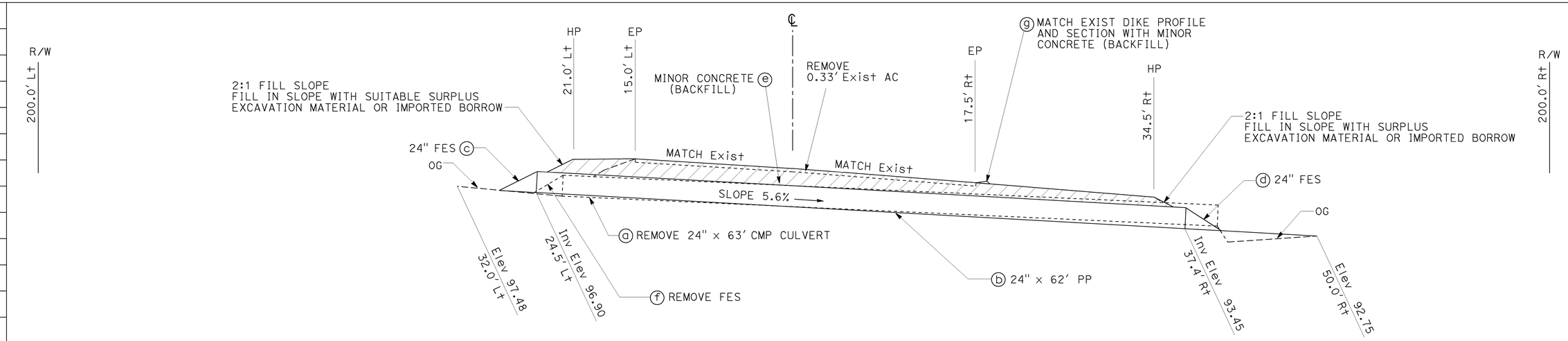

DRAINAGE SYSTEM No. 1

ROUTE 127 PM 0.07
LOCATION 1

THIS PLAN ACCURATE FOR DRAINAGE WORK ONLY.

DRAINAGE PLAN AND PROFILE

D-1

SCALE: Horiz 1"=5'
Vert 1"=5'

REVISED BY	DATE REVISED
MR	12-12-11
MG	05-18-11

CALCULATED-DESIGNED BY: MATTHEW GOIKE
CHECKED BY: MALISSA REYNOLDS
FUNCTIONAL SUPERVISOR: JOHN FOX

STATE OF CALIFORNIA - DEPARTMENT OF TRANSPORTATION
Caltrans® MAINTENANCE ENGINEERING

LAST REVISION 02-04-12
DATE PLOTTED => 07-FEB-2012
TIME PLOTTED => 10:31

Dist	COUNTY	ROUTE	POST MILES TOTAL PROJECT	SHEET No.	TOTAL SHEETS
09	Iny	127	0.1/16.2	4	32

REGISTERED CIVIL ENGINEER 2-4-12 DATE

2-6-12
PLANS APPROVAL DATE

REGISTERED PROFESSIONAL ENGINEER MATTHEW GOIKE No. 63638 Exp. 9-30-12 CIVIL STATE OF CALIFORNIA

THE STATE OF CALIFORNIA OR ITS OFFICERS OR AGENTS SHALL NOT BE RESPONSIBLE FOR THE ACCURACY OR COMPLETENESS OF SCANNED COPIES OF THIS PLAN SHEET.

NOTE:

FOR ACCURATE RIGHT OF WAY DATA, CONTACT RIGHT OF WAY ENGINEERING AT THE DISTRICT OFFICE.

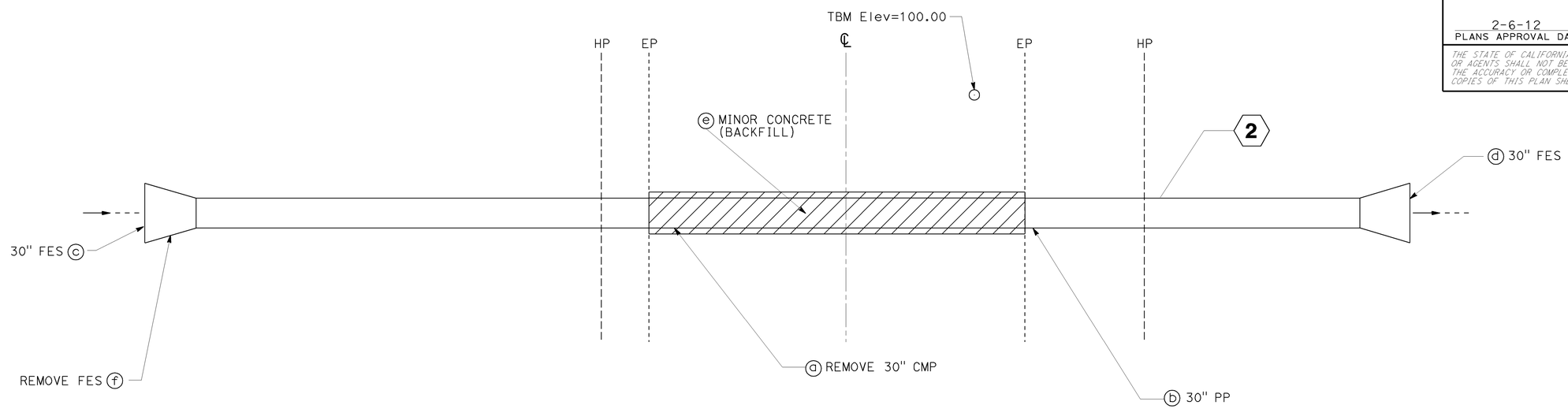

PLAN

SCALE: Horiz 1"=5'

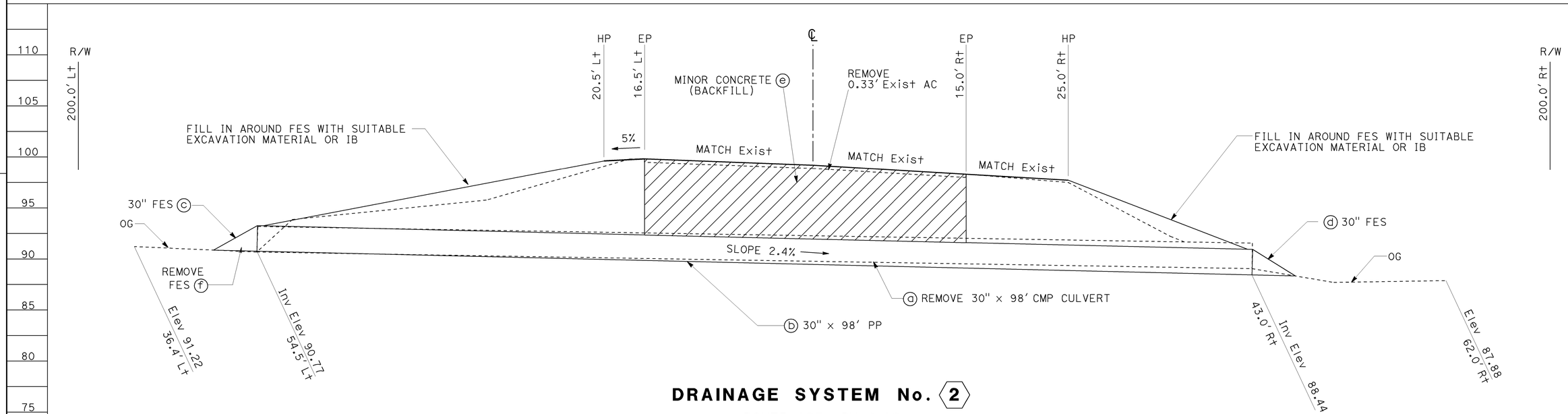

DRAINAGE SYSTEM No. 2

ROUTE 127 PM 0.12
LOCATION 2

THIS PLAN ACCURATE FOR DRAINAGE WORK ONLY.

DRAINAGE PLAN AND PROFILE D-2

SCALE: Horiz 1"=5'
Vert 1"=5'

STATE OF CALIFORNIA - DEPARTMENT OF TRANSPORTATION
Caltrans MAINTENANCE ENGINEERING

FUNCTIONAL SUPERVISOR: JOHN FOX
CALCULATED-DESIGNED BY: MATTHEW GOIKE
CHECKED BY: MALISSA REYNOLDS
REVISED BY: MG
DATE REVISED: 05-18-11
MR: 12-12-11

LAST REVISION 02-04-12
DATE PLOTTED => 07-FEB-2012
TIME PLOTTED => 10:31

Dist	COUNTY	ROUTE	POST MILES TOTAL PROJECT	SHEET No.	TOTAL SHEETS
09	Iny	127	0.1/16.2	5	32

REGISTERED CIVIL ENGINEER 2-4-12 DATE

2-6-12
PLANS APPROVAL DATE

REGISTERED PROFESSIONAL ENGINEER MATTHEW GOIKE No. 63638 Exp. 9-30-12 CIVIL STATE OF CALIFORNIA

THE STATE OF CALIFORNIA OR ITS OFFICERS OR AGENTS SHALL NOT BE RESPONSIBLE FOR THE ACCURACY OR COMPLETENESS OF SCANNED COPIES OF THIS PLAN SHEET.

NOTE:

FOR ACCURATE RIGHT OF WAY DATA, CONTACT RIGHT OF WAY ENGINEERING AT THE DISTRICT OFFICE.

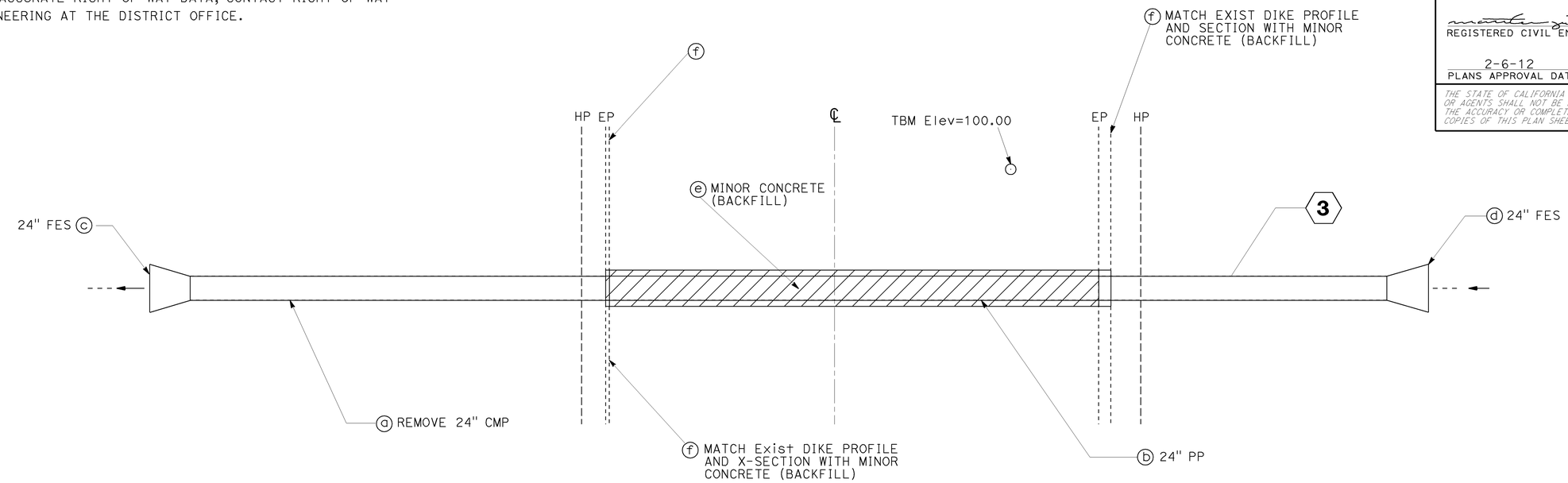

PLAN

SCALE: Horiz 1"=5'

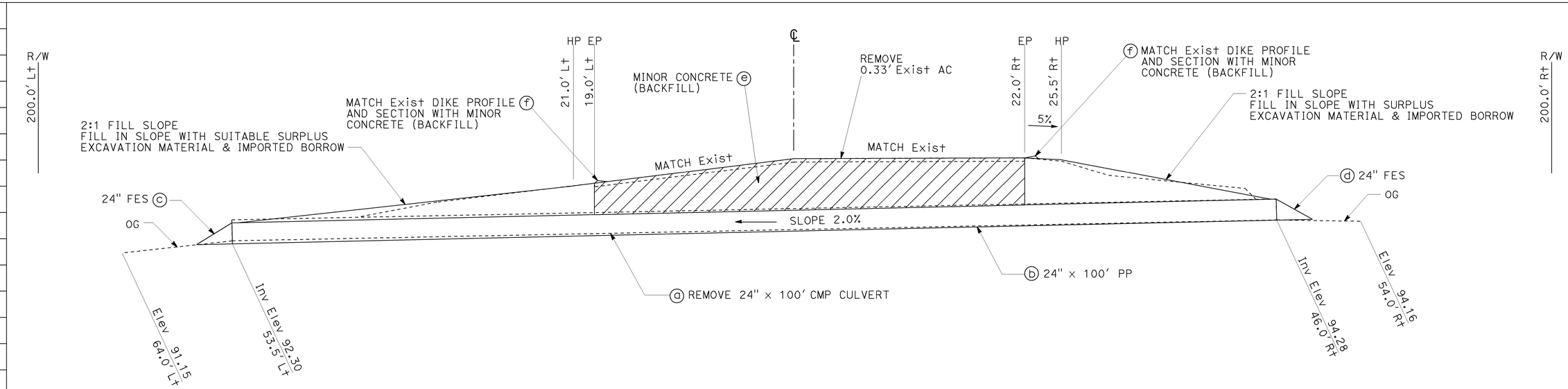

DRAINAGE SYSTEM No. 3

ROUTE 127 PM 0.41
LOCATION 3

THIS PLAN ACCURATE FOR DRAINAGE WORK ONLY.

DRAINAGE PLAN AND PROFILE D-3

SCALE: Horiz 1"=5'
Vert 1"=5'

STATE OF CALIFORNIA - DEPARTMENT OF TRANSPORTATION
Caltrans MAINTENANCE ENGINEERING

FUNCTIONAL SUPERVISOR: JOHN FOX
CALCULATED-DESIGNED BY: MATTHEW GOIKE
CHECKED BY: MALISSA REYNOLDS
REVISED BY: MG
DATE REVISED: 05-18-11 12-12-11
MR

LAST REVISION 02-06-12
DATE PLOTTED => 07-FEB-2012
TIME PLOTTED => 10:31

Dist	COUNTY	ROUTE	POST MILES TOTAL PROJECT	SHEET No.	TOTAL SHEETS
09	Iny	127	0.1/16.2	6	32

REGISTERED CIVIL ENGINEER 2-4-12 DATE

2-6-12
PLANS APPROVAL DATE

REGISTERED PROFESSIONAL ENGINEER MATTHEW GOIKE No. 63638 Exp. 9-30-12 CIVIL STATE OF CALIFORNIA

THE STATE OF CALIFORNIA OR ITS OFFICERS OR AGENTS SHALL NOT BE RESPONSIBLE FOR THE ACCURACY OR COMPLETENESS OF SCANNED COPIES OF THIS PLAN SHEET.

NOTE:

FOR ACCURATE RIGHT OF WAY DATA, CONTACT RIGHT OF WAY ENGINEERING AT THE DISTRICT OFFICE.

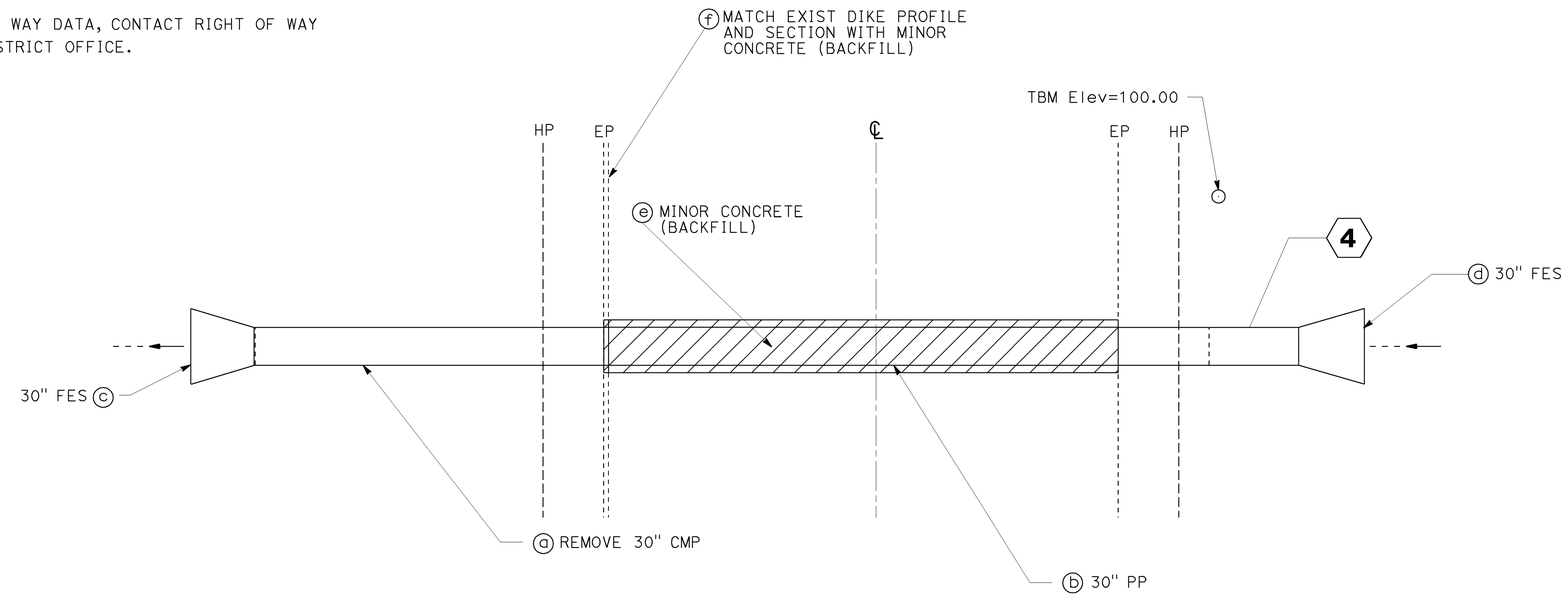

PLAN

SCALE: Horiz 1"=5'

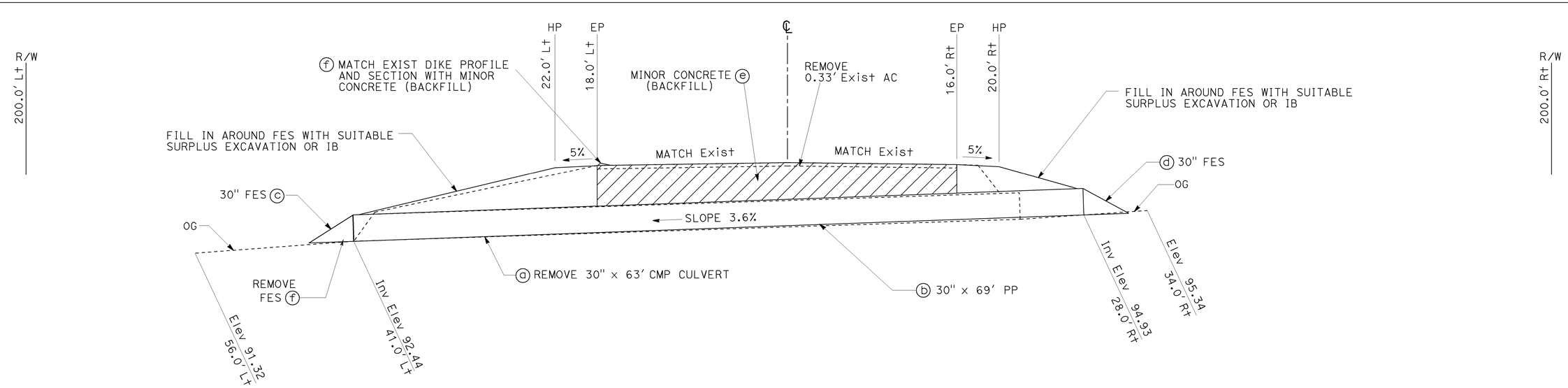

DRAINAGE SYSTEM No. 4

ROUTE 127 PM 0.46
LOCATION 4

THIS PLAN ACCURATE FOR DRAINAGE WORK ONLY.

DRAINAGE PLAN AND PROFILE D-4

SCALE: Horiz 1"=5'
Vert 1"=5'

REVISED BY	DATE REVISED
MR	12-12-11
MG	05-18-11

CALCULATED-DESIGNED BY: MATTHEW GOIKE
CHECKED BY: MALISSA REYNOLDS
FUNCTIONAL SUPERVISOR: JOHN FOX

STATE OF CALIFORNIA - DEPARTMENT OF TRANSPORTATION
Caltrans® MAINTENANCE ENGINEERING

LAST REVISION 02-04-12
DATE PLOTTED => 07-FEB-2012
TIME PLOTTED => 10:31

Dist	COUNTY	ROUTE	POST MILES TOTAL PROJECT	SHEET No.	TOTAL SHEETS
09	Iny	127	0.1/16.2	7	32

REGISTERED CIVIL ENGINEER 2-4-12 DATE

2-6-12
PLANS APPROVAL DATE

REGISTERED PROFESSIONAL ENGINEER MATTHEW GOIKE No. 63638 Exp. 9-30-12 CIVIL STATE OF CALIFORNIA

THE STATE OF CALIFORNIA OR ITS OFFICERS OR AGENTS SHALL NOT BE RESPONSIBLE FOR THE ACCURACY OR COMPLETENESS OF SCANNED COPIES OF THIS PLAN SHEET.

NOTE:

FOR ACCURATE RIGHT OF WAY DATA, CONTACT RIGHT OF WAY ENGINEERING AT THE DISTRICT OFFICE.

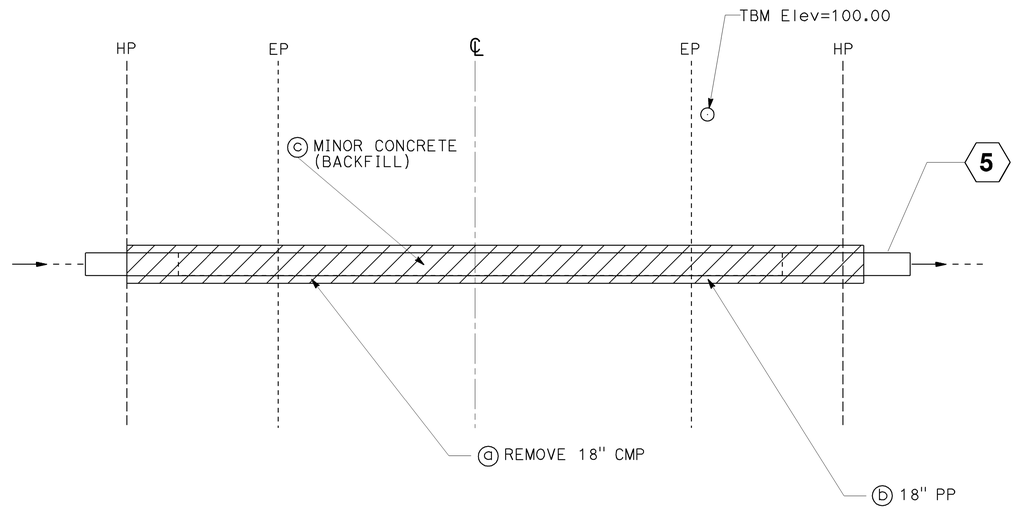

PLAN

SCALE: Horiz 1"=5'

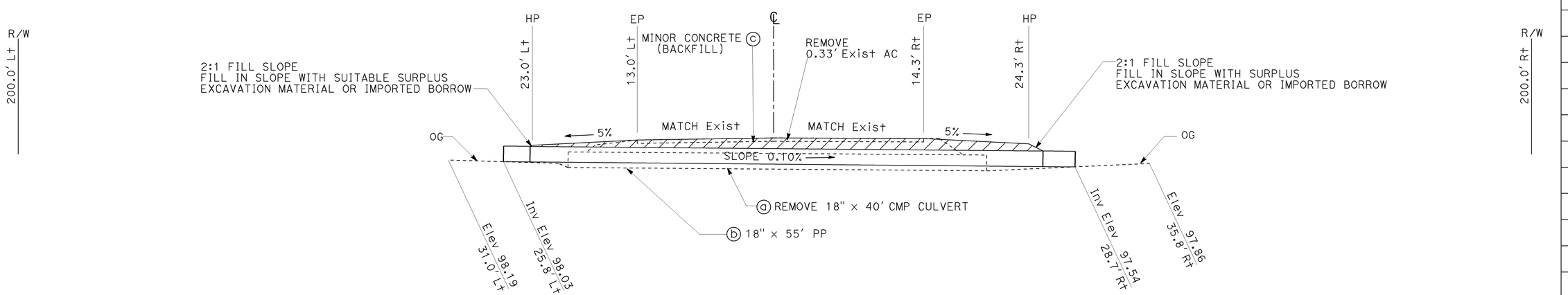

DRAINAGE SYSTEM No. 5

ROUTE 127 PM 7.78
LOCATION 5

THIS PLAN ACCURATE FOR DRAINAGE WORK ONLY.

DRAINAGE PLAN AND PROFILE

SCALE: Horiz 1"=5'
Vert 1"=5'

D-5

REVISED BY	DATE REVISED
MR	12-12-11
MG	05-18-11

CALCULATED-DESIGNED BY: MATTHEW GOIKE
CHECKED BY: MALISSA REYNOLDS

FUNCTIONAL SUPERVISOR: JOHN FOX

STATE OF CALIFORNIA - DEPARTMENT OF TRANSPORTATION
Caltrans® MAINTENANCE ENGINEERING

LAST REVISION 02-04-12
DATE PLOTTED => 07-FEB-2012
TIME PLOTTED => 10:32

Dist	COUNTY	ROUTE	POST MILES TOTAL PROJECT	SHEET No.	TOTAL SHEETS
09	Iny	127	0.1/16.2	8	32

REGISTERED CIVIL ENGINEER 2-4-12 DATE

2-6-12
PLANS APPROVAL DATE

REGISTERED PROFESSIONAL ENGINEER MATTHEW GOIKE No. 63638 Exp. 9-30-12 CIVIL STATE OF CALIFORNIA

THE STATE OF CALIFORNIA OR ITS OFFICERS OR AGENTS SHALL NOT BE RESPONSIBLE FOR THE ACCURACY OR COMPLETENESS OF SCANNED COPIES OF THIS PLAN SHEET.

NOTE:

FOR ACCURATE RIGHT OF WAY DATA, CONTACT RIGHT OF WAY ENGINEERING AT THE DISTRICT OFFICE.

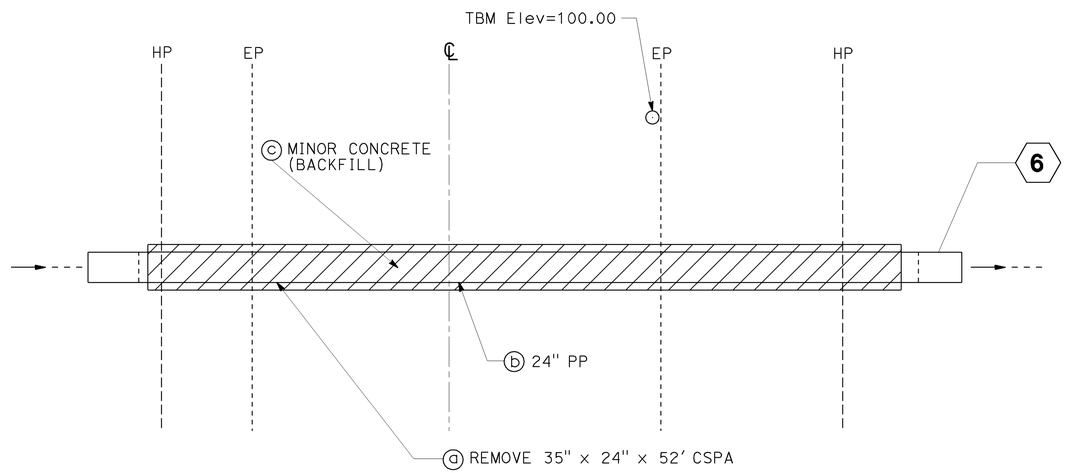

PLAN

SCALE: Horiz 1"=5'

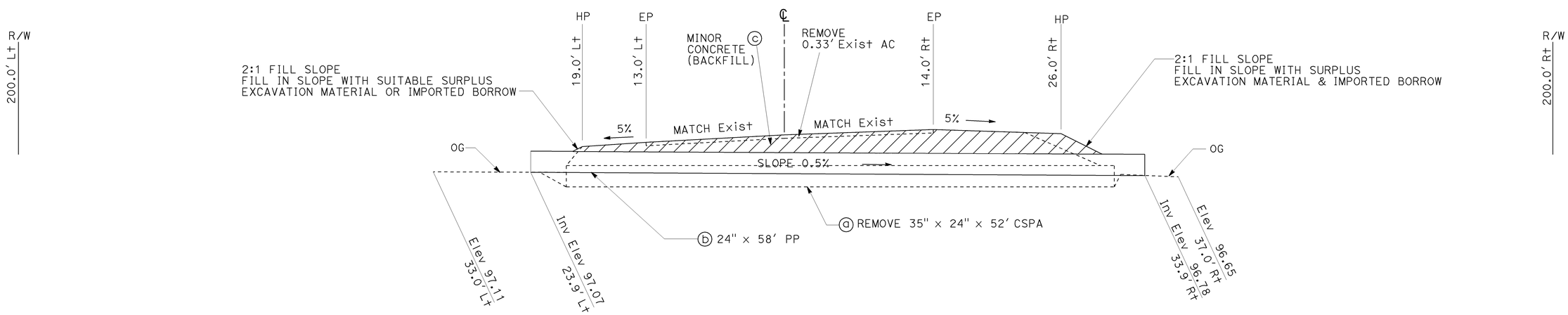

DRAINAGE SYSTEM No. 6

ROUTE 127 PM 8.33
LOCATION 6

THIS PLAN ACCURATE FOR DRAINAGE WORK ONLY.

DRAINAGE PLAN AND PROFILE

D-6

SCALE: Horiz 1"=5'
Vert 1"=5'

STATE OF CALIFORNIA - DEPARTMENT OF TRANSPORTATION
Caltrans® MAINTENANCE ENGINEERING

FUNCTIONAL SUPERVISOR: JOHN FOX
CALCULATED-DESIGNED BY: MATTHEW GOIKE
CHECKED BY: MALISSA REYNOLDS
REVISED BY: MG
DATE REVISED: 05-18-11
MR: 12-12-11

LAST REVISION 02-03-12
DATE PLOTTED => 07-FEB-2012
TIME PLOTTED => 10:32

Dist	COUNTY	ROUTE	POST MILES TOTAL PROJECT	SHEET No.	TOTAL SHEETS
09	Iny	127	0.1/16.2	9	32

REGISTERED CIVIL ENGINEER 2-6-12 DATE

2-6-12
PLANS APPROVAL DATE

REGISTERED PROFESSIONAL ENGINEER MATTHEW GOIKE No. 63638 Exp. 9-30-12 CIVIL STATE OF CALIFORNIA

THE STATE OF CALIFORNIA OR ITS OFFICERS OR AGENTS SHALL NOT BE RESPONSIBLE FOR THE ACCURACY OR COMPLETENESS OF SCANNED COPIES OF THIS PLAN SHEET.

NOTE:

FOR ACCURATE RIGHT OF WAY DATA, CONTACT RIGHT OF WAY ENGINEERING AT THE DISTRICT OFFICE.

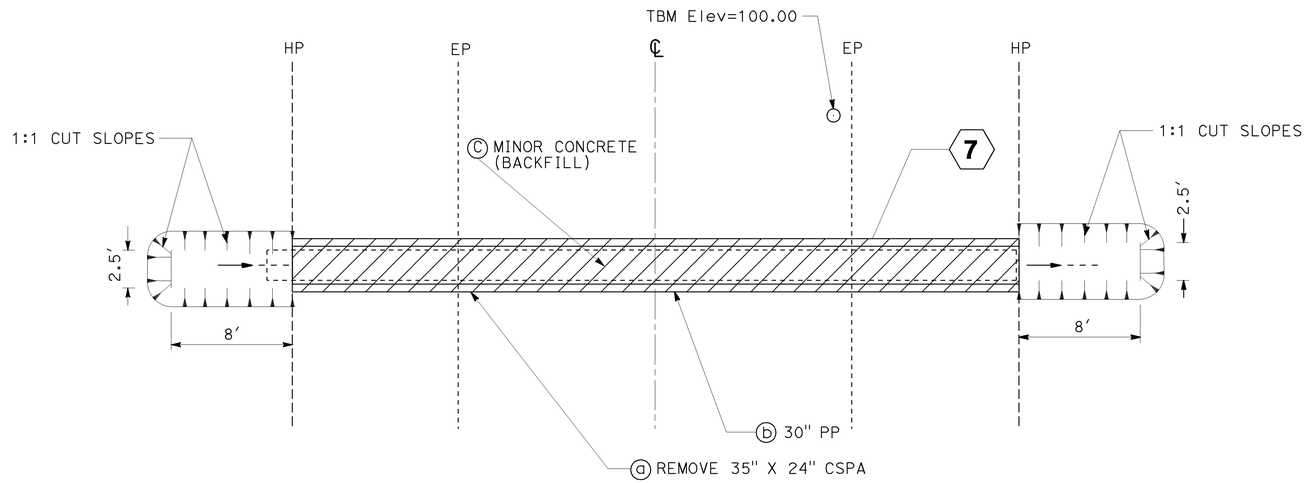

PLAN

SCALE: Horiz 1"=5'

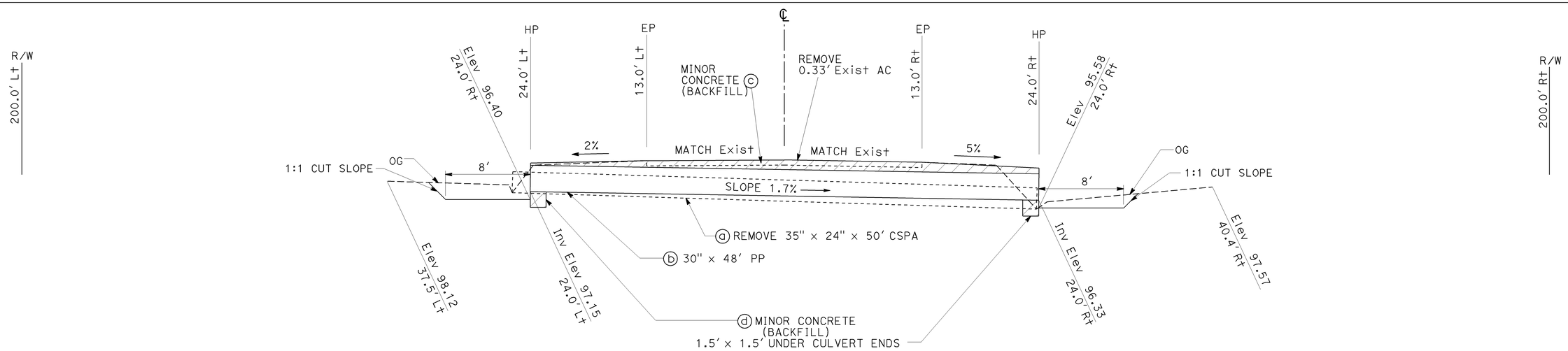

DRAINAGE SYSTEM No. 7

ROUTE 127 PM 8.92
LOCATION 7

THIS PLAN ACCURATE FOR DRAINAGE WORK ONLY.

DRAINAGE PLAN AND PROFILE D-7

SCALE: Horiz 1"=5'
Vert 1"=5'

STATE OF CALIFORNIA - DEPARTMENT OF TRANSPORTATION
Caltrans MAINTENANCE ENGINEERING

FUNCTIONAL SUPERVISOR: JOHN FOX
CALCULATED-DESIGNED BY: DAMON CHERENZIA
CHECKED BY: MALISSA REYNOLDS
REVISED BY: MG
DATE REVISED: 05-18-11
MR: 12-12-11

LAST REVISION 02-06-12
DATE PLOTTED => 07-FEB-2012
TIME PLOTTED => 10:32

Dist	COUNTY	ROUTE	POST MILES TOTAL PROJECT	SHEET No.	TOTAL SHEETS
09	Iny	127	0.1/16.2	10	32

REGISTERED CIVIL ENGINEER 2-4-12 DATE

2-6-12
PLANS APPROVAL DATE

REGISTERED PROFESSIONAL ENGINEER MATTHEW GOIKE No. 63638 Exp. 9-30-12 CIVIL STATE OF CALIFORNIA

THE STATE OF CALIFORNIA OR ITS OFFICERS OR AGENTS SHALL NOT BE RESPONSIBLE FOR THE ACCURACY OR COMPLETENESS OF SCANNED COPIES OF THIS PLAN SHEET.

NOTE:

FOR ACCURATE RIGHT OF WAY DATA, CONTACT RIGHT OF WAY ENGINEERING AT THE DISTRICT OFFICE.

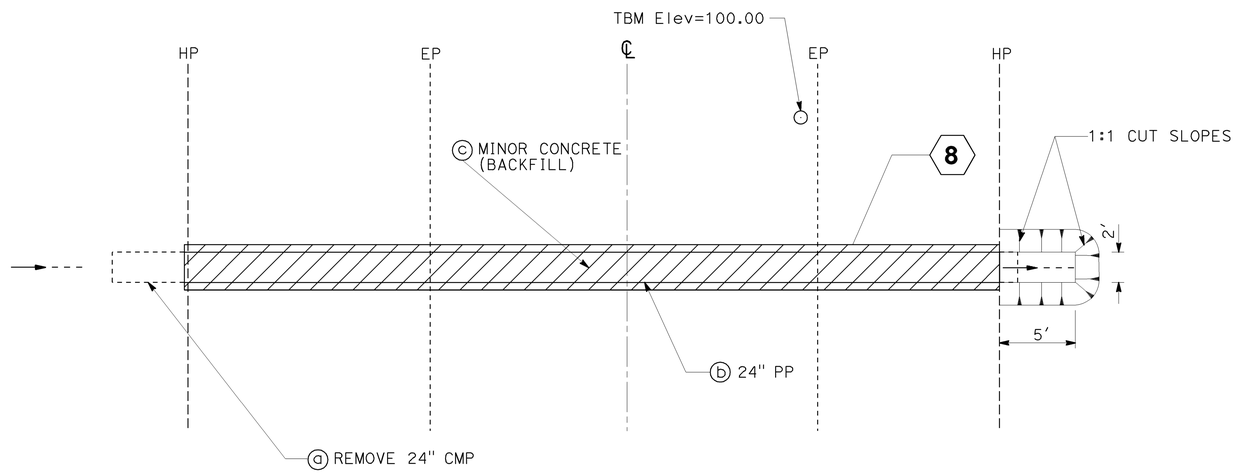

PLAN

SCALE: Horiz 1"=5'

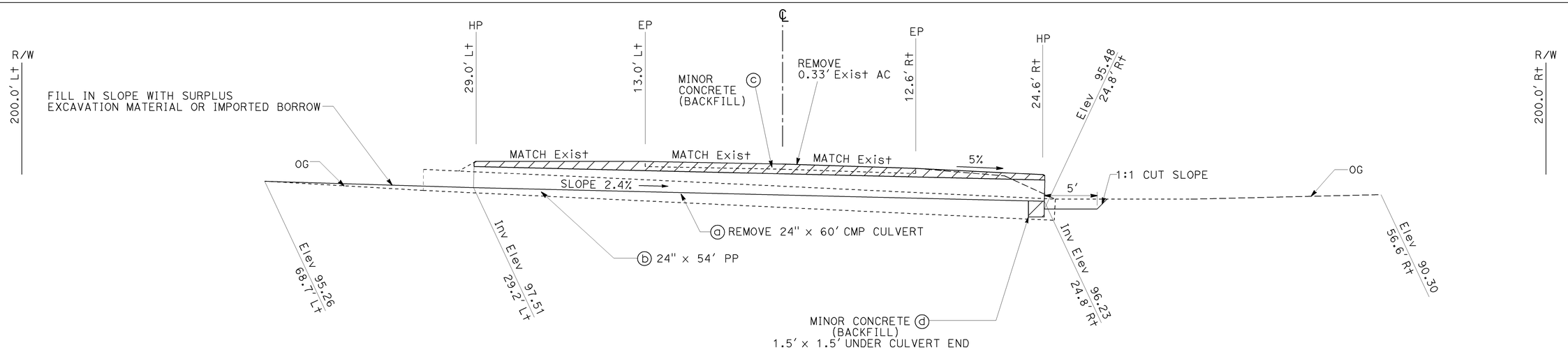

DRAINAGE SYSTEM No. 8

ROUTE 127 PM 10.08
LOCATION 8

THIS PLAN ACCURATE FOR DRAINAGE WORK ONLY.

DRAINAGE PLAN AND PROFILE

D-8

SCALE: Horiz 1"=5'
Vert 1"=5'

STATE OF CALIFORNIA - DEPARTMENT OF TRANSPORTATION
Caltrans MAINTENANCE ENGINEERING

FUNCTIONAL SUPERVISOR: JOHN FOX
CALCULATED-DESIGNED BY: DAMON CHERENZIA
CHECKED BY: MALISSA REYNOLDS
REVISED BY: MG
DATE REVISED: 05-18-11
MR: 12-12-11

LAST REVISION 12-12-11
DATE PLOTTED => 07-FEB-2012
TIME PLOTTED => 10:32

Dist	COUNTY	ROUTE	POST MILES TOTAL PROJECT	SHEET No.	TOTAL SHEETS
09	Iny	127	0.1/16.2	11	32

REGISTERED CIVIL ENGINEER 2-4-12 DATE

2-6-12
PLANS APPROVAL DATE

REGISTERED PROFESSIONAL ENGINEER MATTHEW GOIKE No. 63638 Exp. 9-30-12 CIVIL STATE OF CALIFORNIA

THE STATE OF CALIFORNIA OR ITS OFFICERS OR AGENTS SHALL NOT BE RESPONSIBLE FOR THE ACCURACY OR COMPLETENESS OF SCANNED COPIES OF THIS PLAN SHEET.

NOTE:

FOR ACCURATE RIGHT OF WAY DATA, CONTACT RIGHT OF WAY ENGINEERING AT THE DISTRICT OFFICE.

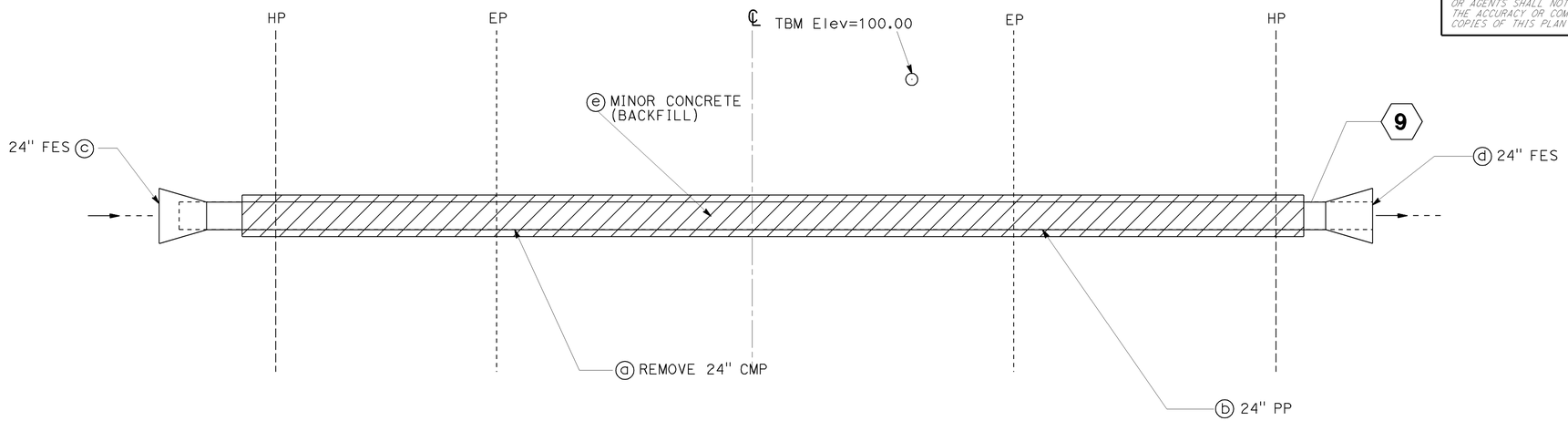

PLAN

SCALE: Horiz 1"=5'

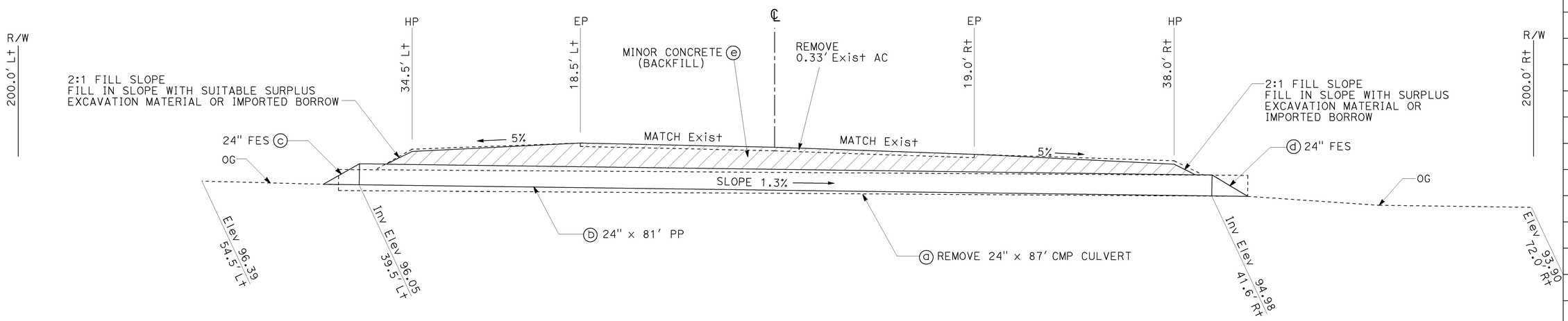

DRAINAGE SYSTEM No. 9

ROUTE 127 PM 10.50
LOCATION 9

THIS PLAN ACCURATE FOR DRAINAGE WORK ONLY.

DRAINAGE PLAN AND PROFILE

D-9

SCALE: Horiz 1"=5'
Vert 1"=5'

REVISED BY	DATE REVISED
MR	12-12-11
MG	05-18-11

CALCULATED-DESIGNED BY: MATTHEW GOIKE
CHECKED BY: MALISSA REYNOLDS

FUNCTIONAL SUPERVISOR: JOHN FOX

STATE OF CALIFORNIA - DEPARTMENT OF TRANSPORTATION
Caltrans® MAINTENANCE ENGINEERING

LAST REVISION 12-12-11
DATE PLOTTED => 07-FEB-2012
TIME PLOTTED => 10:32

Dist	COUNTY	ROUTE	POST MILES TOTAL PROJECT	SHEET No.	TOTAL SHEETS
09	Iny	127	0.1/16.2	12	32

REGISTERED CIVIL ENGINEER 2-4-12 DATE

2-6-12
PLANS APPROVAL DATE

REGISTERED PROFESSIONAL ENGINEER MATTHEW GOIKE No. 63638 Exp. 9-30-12 CIVIL STATE OF CALIFORNIA

THE STATE OF CALIFORNIA OR ITS OFFICERS OR AGENTS SHALL NOT BE RESPONSIBLE FOR THE ACCURACY OR COMPLETENESS OF SCANNED COPIES OF THIS PLAN SHEET.

NOTE:

FOR ACCURATE RIGHT OF WAY DATA, CONTACT RIGHT OF WAY ENGINEERING AT THE DISTRICT OFFICE.

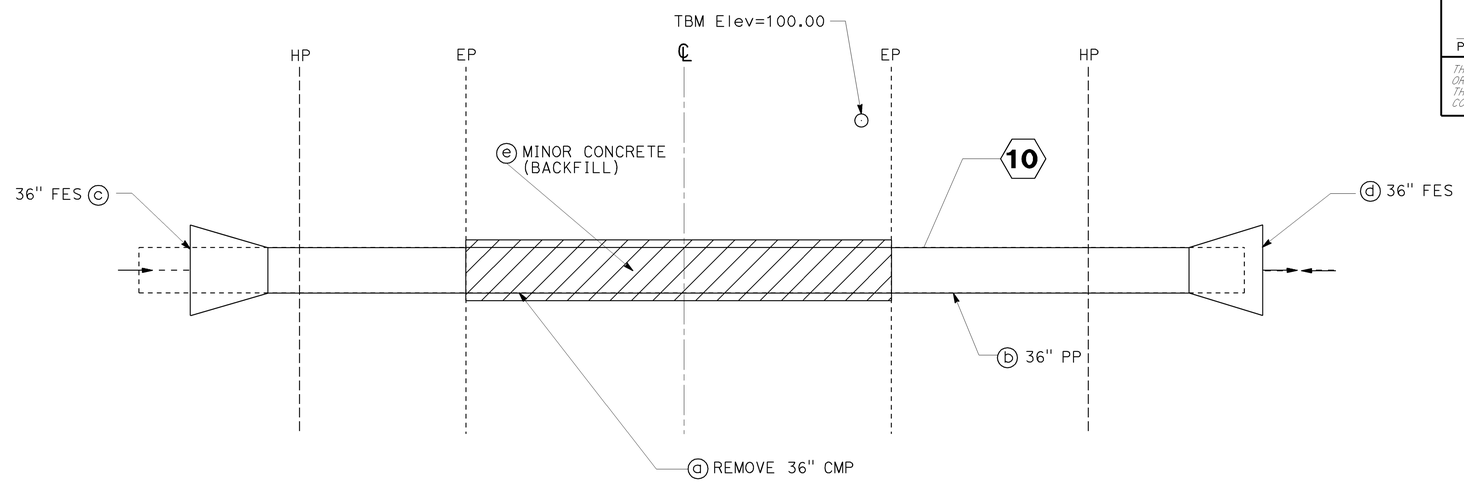

PLAN

SCALE: Horiz 1"=5'

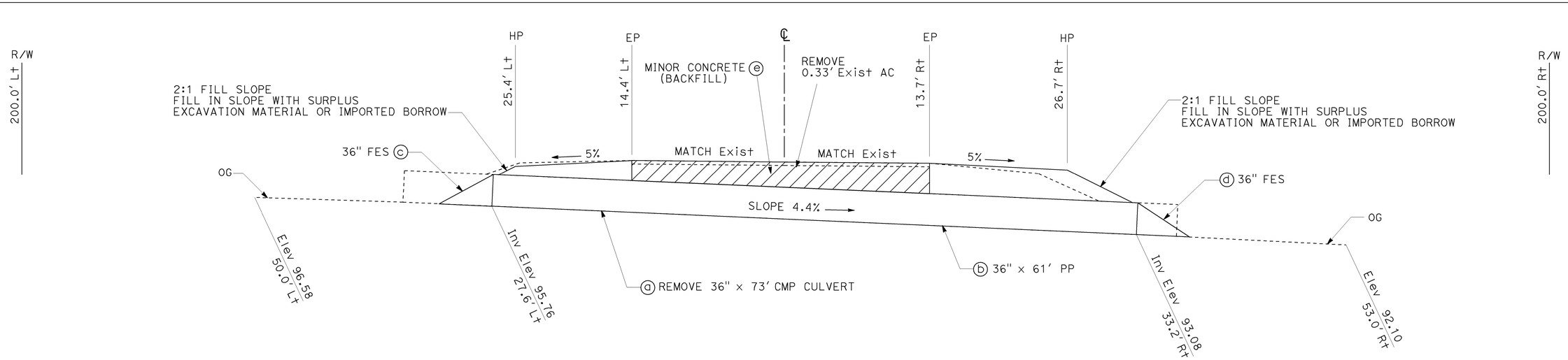

DRAINAGE SYSTEM No. 10

ROUTE 127 PM 10.85
LOCATION 10

THIS PLAN ACCURATE FOR DRAINAGE WORK ONLY.

DRAINAGE PLAN AND PROFILE

SCALE: Horiz 1"=5'
Vert 1"=5'

D-10

CALCULATED-DESIGNED BY	MATTHEW GOIKE	REVISED BY	MR
CHECKED BY	MALISSA REYNOLDS	DATE REVISED	12-12-11
			MG 05-18-11

FUNCTIONAL SUPERVISOR JOHN FOX

STATE OF CALIFORNIA - DEPARTMENT OF TRANSPORTATION
Caltrans® MAINTENANCE ENGINEERING

LAST REVISION 02-06-12 | DATE PLOTTED => 07-FEB-2012 | TIME PLOTTED => 10:32

Dist	COUNTY	ROUTE	POST MILES TOTAL PROJECT	SHEET No.	TOTAL SHEETS
09	Iny	127	0.1/16.2	13	32

REGISTERED CIVIL ENGINEER 2-4-12 DATE

2-6-12
PLANS APPROVAL DATE

REGISTERED PROFESSIONAL ENGINEER MATTHEW GOIKE No. 63638 Exp. 9-30-12 CIVIL STATE OF CALIFORNIA

THE STATE OF CALIFORNIA OR ITS OFFICERS OR AGENTS SHALL NOT BE RESPONSIBLE FOR THE ACCURACY OR COMPLETENESS OF SCANNED COPIES OF THIS PLAN SHEET.

NOTE:

FOR ACCURATE RIGHT OF WAY DATA, CONTACT RIGHT OF WAY ENGINEERING AT THE DISTRICT OFFICE.

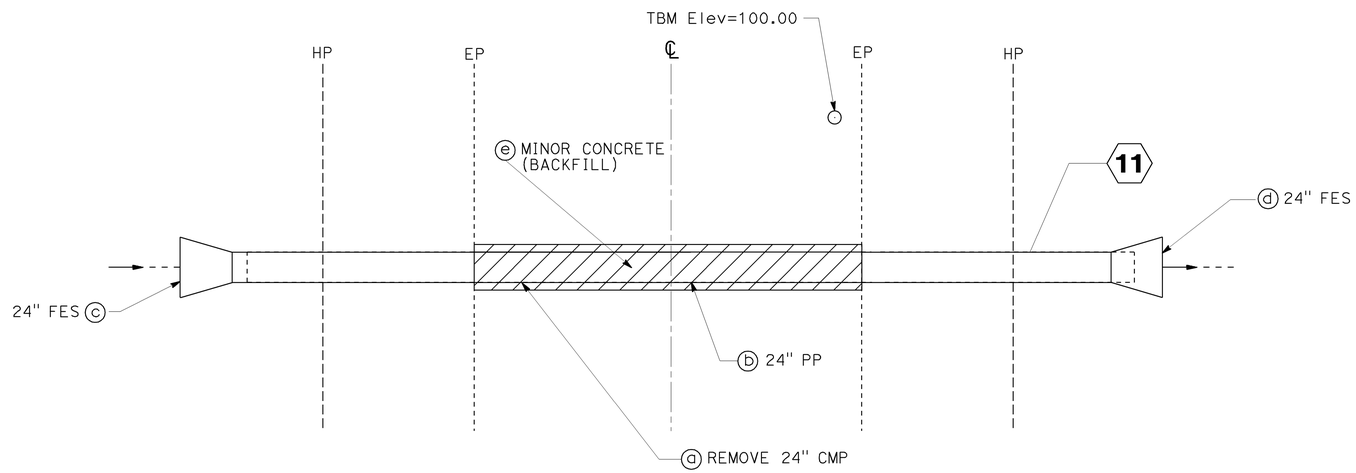

PLAN

SCALE: Horiz 1"=5'

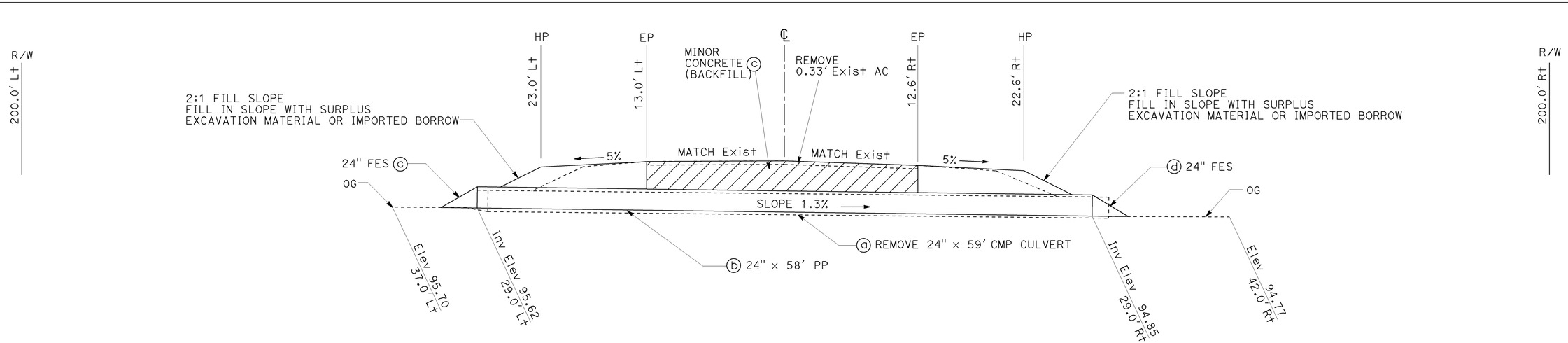

DRAINAGE SYSTEM No. 11

ROUTE 127 PM 11.07
LOCATION 11

THIS PLAN ACCURATE FOR DRAINAGE WORK ONLY.

DRAINAGE PLAN AND PROFILE

SCALE: Horiz 1"=5'
Vert 1"=5'

D-11

STATE OF CALIFORNIA - DEPARTMENT OF TRANSPORTATION
Caltrans MAINTENANCE ENGINEERING

FUNCTIONAL SUPERVISOR: JOHN FOX
CALCULATED-DESIGNED BY: MATTHEW GOIKE
CHECKED BY: MALISSA REYNOLDS
REVISED BY: MG
DATE REVISED: 05-18-11
MR: 12-12-11

LAST REVISION 02-06-12
DATE PLOTTED => 08-FEB-2012
TIME PLOTTED => 09:32

Dist	COUNTY	ROUTE	POST MILES TOTAL PROJECT	SHEET No.	TOTAL SHEETS
09	Iny	127	0.1/16.2	14	32

REGISTERED CIVIL ENGINEER 2-6-12 DATE

2-6-12
PLANS APPROVAL DATE

REGISTERED PROFESSIONAL ENGINEER MATTHEW GOIKE No. 63638 Exp. 9-30-12 CIVIL STATE OF CALIFORNIA

THE STATE OF CALIFORNIA OR ITS OFFICERS OR AGENTS SHALL NOT BE RESPONSIBLE FOR THE ACCURACY OR COMPLETENESS OF SCANNED COPIES OF THIS PLAN SHEET.

NOTE:

FOR ACCURATE RIGHT OF WAY DATA, CONTACT RIGHT OF WAY ENGINEERING AT THE DISTRICT OFFICE.

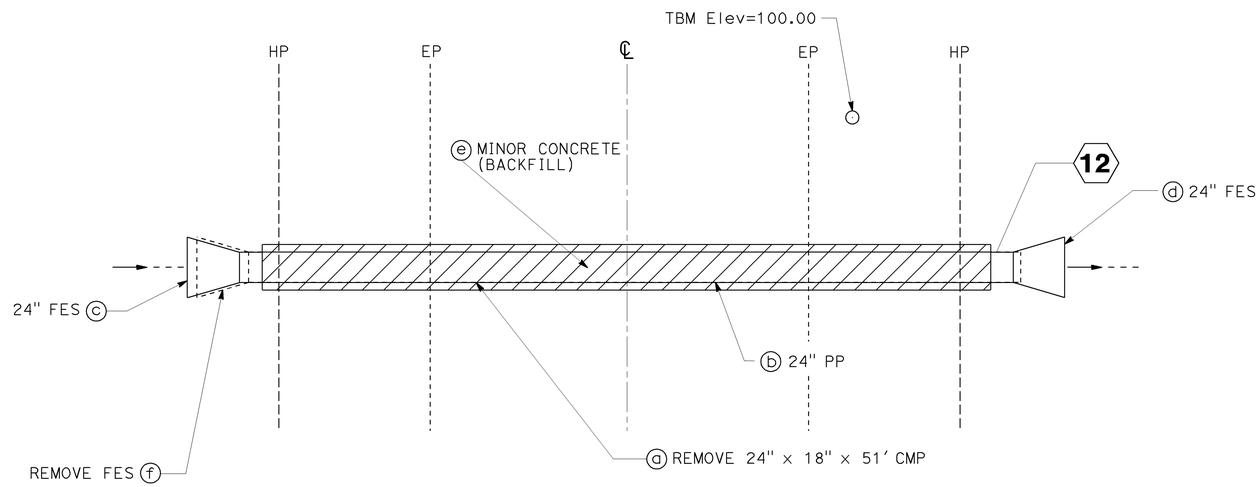

PLAN

SCALE: Horiz 1"=5'

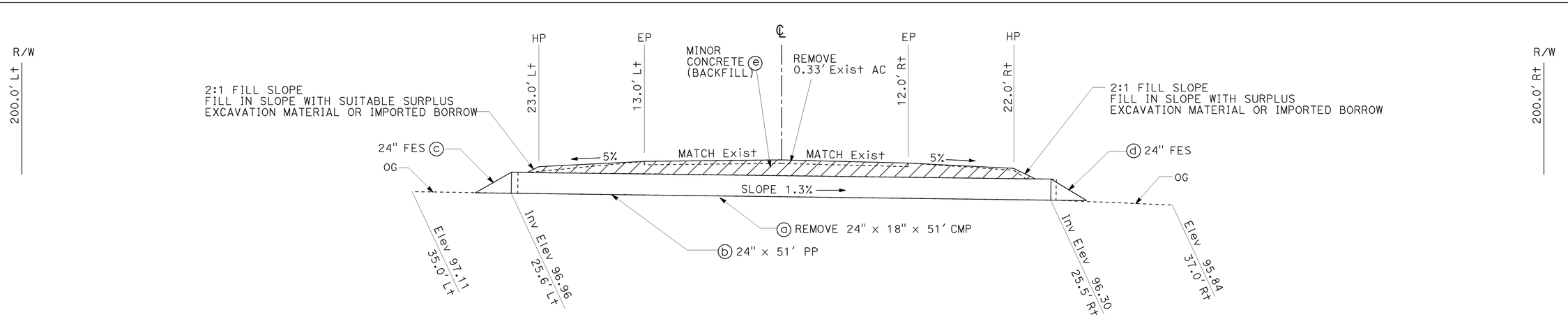

DRAINAGE SYSTEM No. 12

ROUTE 127 PM 11.25
LOCATION 12

THIS PLAN ACCURATE FOR DRAINAGE WORK ONLY.

DRAINAGE PLAN AND PROFILE D-12

SCALE: Horiz 1"=5'
Vert 1"=5'

STATE OF CALIFORNIA - DEPARTMENT OF TRANSPORTATION
Caltrans MAINTENANCE ENGINEERING

FUNCTIONAL SUPERVISOR: JOHN FOX
CALCULATED-DESIGNED BY: MATTHEW GOIKE
CHECKED BY: MALISSA REYNOLDS
REVISED BY: MG
DATE REVISED: 05-18-11
MR: 12-12-11

LAST REVISION 02-06-12
DATE PLOTTED => 07-FEB-2012
TIME PLOTTED => 14:57

Dist	COUNTY	ROUTE	POST MILES TOTAL PROJECT	SHEET No.	TOTAL SHEETS
09	Iny	127	0.1/16.2	15	32

REGISTERED CIVIL ENGINEER 2-6-12 DATE

2-6-12
PLANS APPROVAL DATE

REGISTERED PROFESSIONAL ENGINEER MATTHEW GOIKE No. 63638 Exp. 9-30-12 CIVIL STATE OF CALIFORNIA

THE STATE OF CALIFORNIA OR ITS OFFICERS OR AGENTS SHALL NOT BE RESPONSIBLE FOR THE ACCURACY OR COMPLETENESS OF SCANNED COPIES OF THIS PLAN SHEET.

NOTE:

FOR ACCURATE RIGHT OF WAY DATA, CONTACT RIGHT OF WAY ENGINEERING AT THE DISTRICT OFFICE.

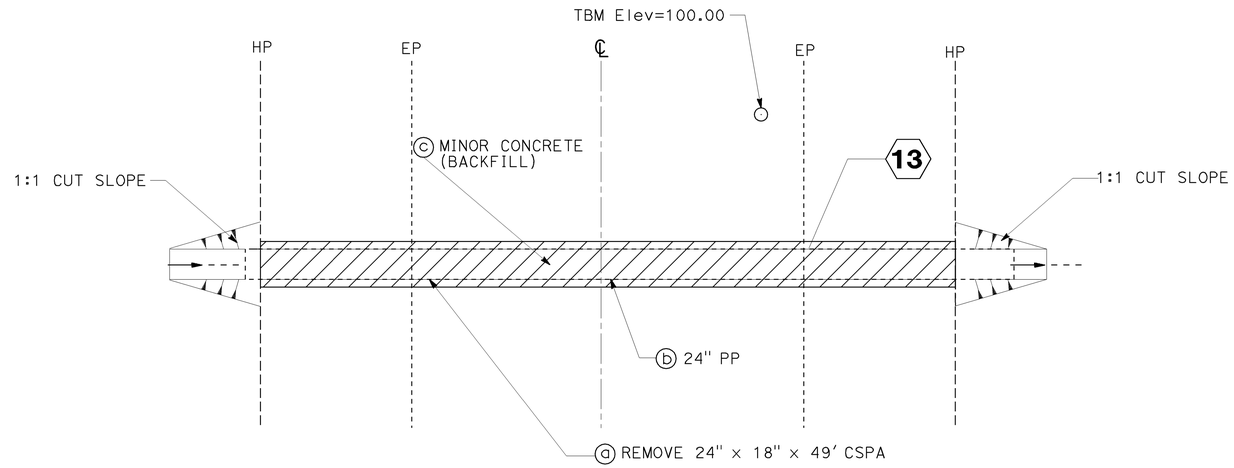

PLAN

SCALE: Horiz 1"=5'

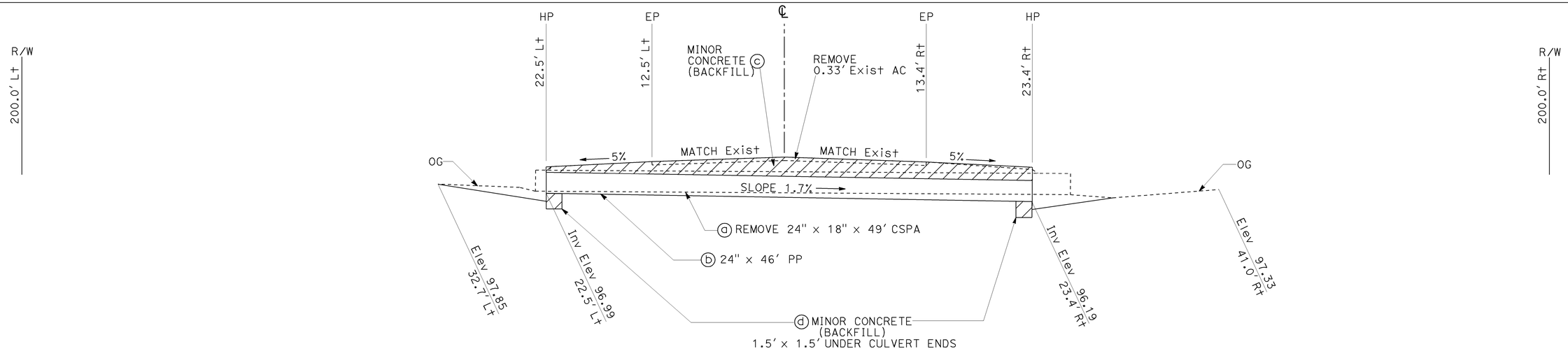

DRAINAGE SYSTEM No. 13

ROUTE 127 PM 11.51
LOCATION 13

THIS PLAN ACCURATE FOR DRAINAGE WORK ONLY.

DRAINAGE PLAN AND PROFILE D-13

SCALE: Horiz 1"=5'
Vert 1"=5'

STATE OF CALIFORNIA - DEPARTMENT OF TRANSPORTATION
Caltrans MAINTENANCE ENGINEERING

FUNCTIONAL SUPERVISOR: JOHN FOX
CALCULATED-DESIGNED BY: MATTHEW GOIKE
CHECKED BY: MALISSA REYNOLDS
REVISED BY: MG
DATE REVISED: 05-18-11
MR: 12-12-11

LAST REVISION 02-06-12
DATE PLOTTED => 07-FEB-2012
TIME PLOTTED => 14:58

Dist	COUNTY	ROUTE	POST MILES TOTAL PROJECT	SHEET No.	TOTAL SHEETS
09	Iny	127	0.1/16.2	16	32

REGISTERED CIVIL ENGINEER 2-4-12 DATE

2-6-12
PLANS APPROVAL DATE

REGISTERED PROFESSIONAL ENGINEER MATTHEW GOIKE No. 63638 Exp. 9-30-12 CIVIL STATE OF CALIFORNIA

THE STATE OF CALIFORNIA OR ITS OFFICERS OR AGENTS SHALL NOT BE RESPONSIBLE FOR THE ACCURACY OR COMPLETENESS OF SCANNED COPIES OF THIS PLAN SHEET.

NOTE:

FOR ACCURATE RIGHT OF WAY DATA, CONTACT RIGHT OF WAY ENGINEERING AT THE DISTRICT OFFICE.

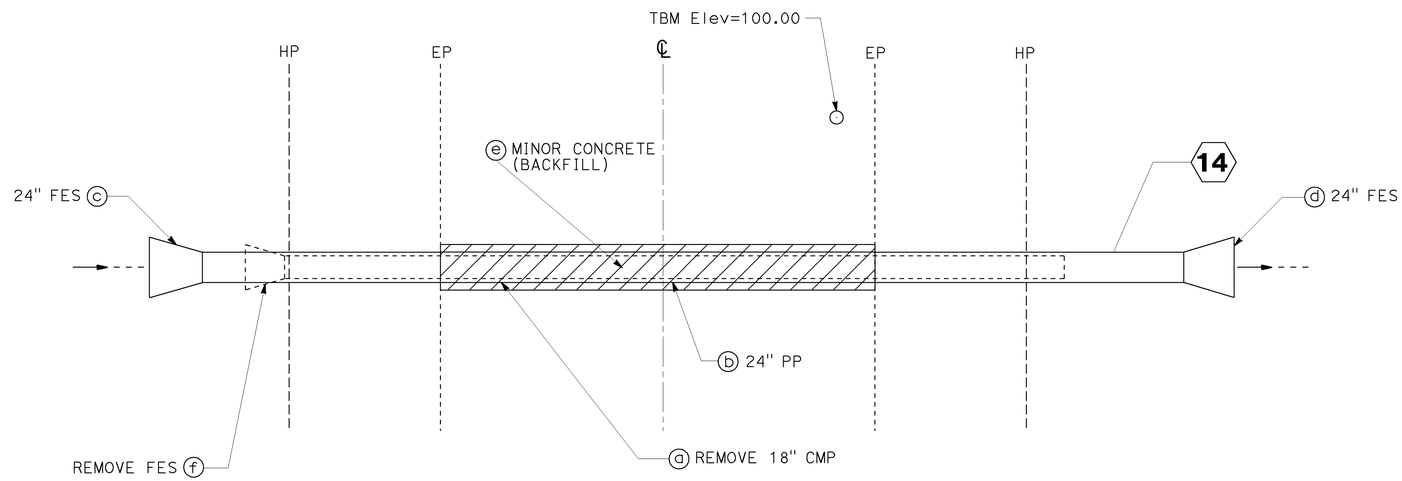

PLAN

SCALE: Horiz 1"=5'

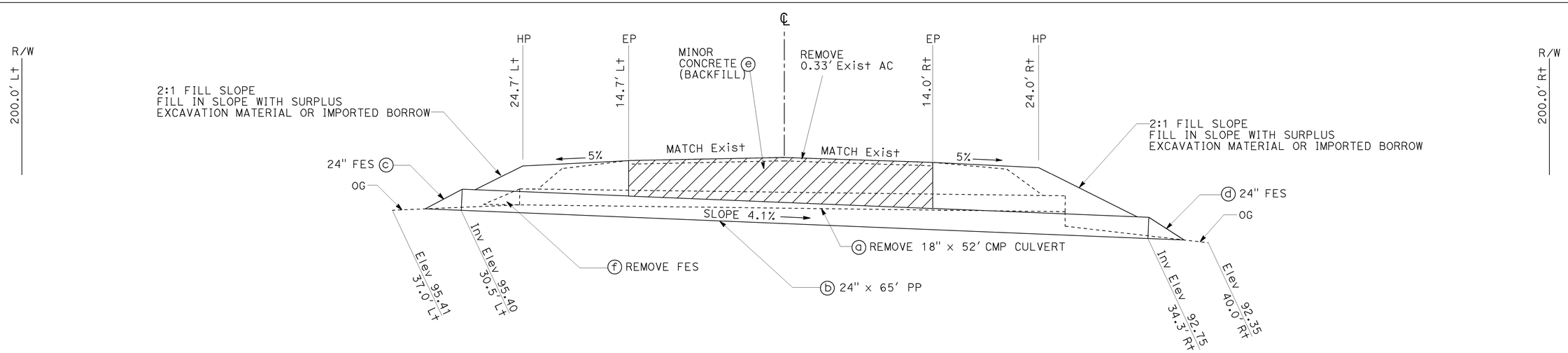

DRAINAGE SYSTEM No. 14

ROUTE 127 PM 12.56
LOCATION 14

THIS PLAN ACCURATE FOR DRAINAGE WORK ONLY.

DRAINAGE PLAN AND PROFILE D-14

SCALE: Horiz 1"=5'
Vert 1"=5'

STATE OF CALIFORNIA - DEPARTMENT OF TRANSPORTATION
Caltrans MAINTENANCE ENGINEERING

FUNCTIONAL SUPERVISOR: JOHN FOX
CALCULATED-DESIGNED BY: MATTHEW GOIKE
CHECKED BY: MALISSA REYNOLDS
REVISED BY: MG
DATE REVISED: 05-18-11
MR: 12-12-11

LAST REVISION 02-06-12
DATE PLOTTED => 07-FEB-2012
TIME PLOTTED => 10:32

Dist	COUNTY	ROUTE	POST MILES TOTAL PROJECT	SHEET No.	TOTAL SHEETS
09	Iny	127	0.1/16.2	17	32

REGISTERED CIVIL ENGINEER 2-4-12 DATE

2-6-12
PLANS APPROVAL DATE

REGISTERED PROFESSIONAL ENGINEER MATTHEW GOIKE No. 63638 Exp. 9-30-12 CIVIL STATE OF CALIFORNIA

THE STATE OF CALIFORNIA OR ITS OFFICERS OR AGENTS SHALL NOT BE RESPONSIBLE FOR THE ACCURACY OR COMPLETENESS OF SCANNED COPIES OF THIS PLAN SHEET.

NOTE:

FOR ACCURATE RIGHT OF WAY DATA, CONTACT RIGHT OF WAY ENGINEERING AT THE DISTRICT OFFICE.

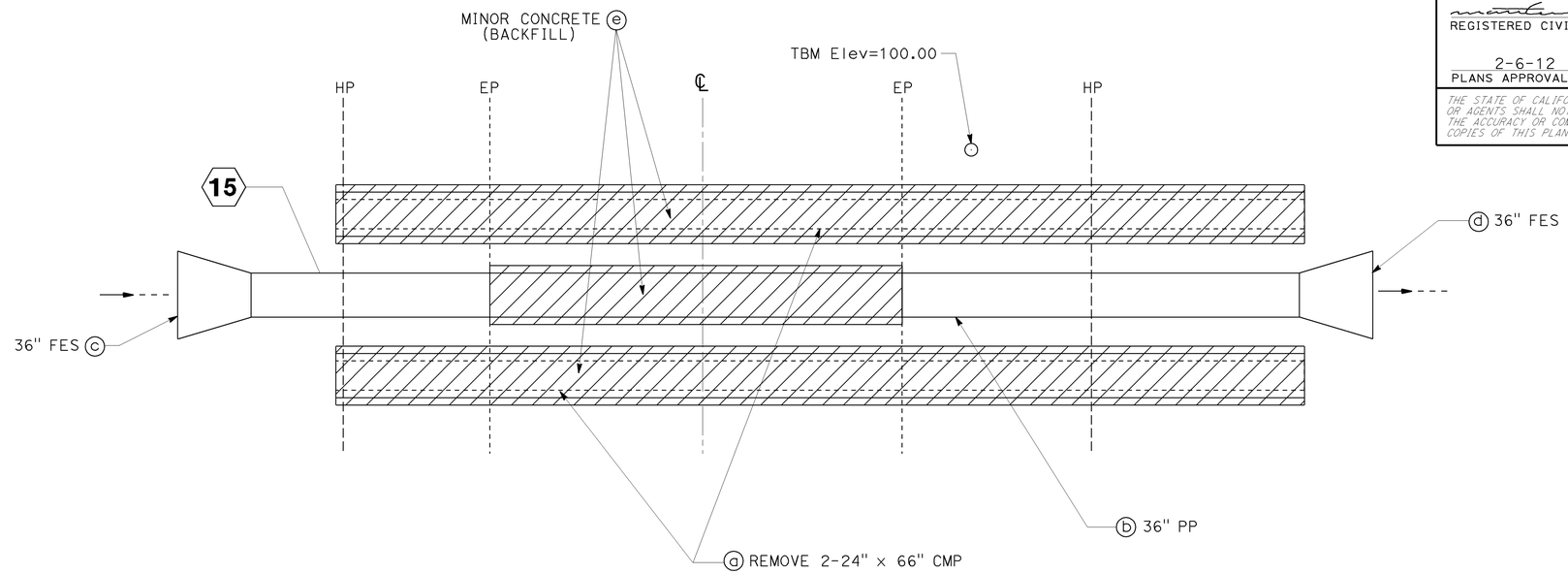

PLAN
SCALE: Horiz 1"=5'

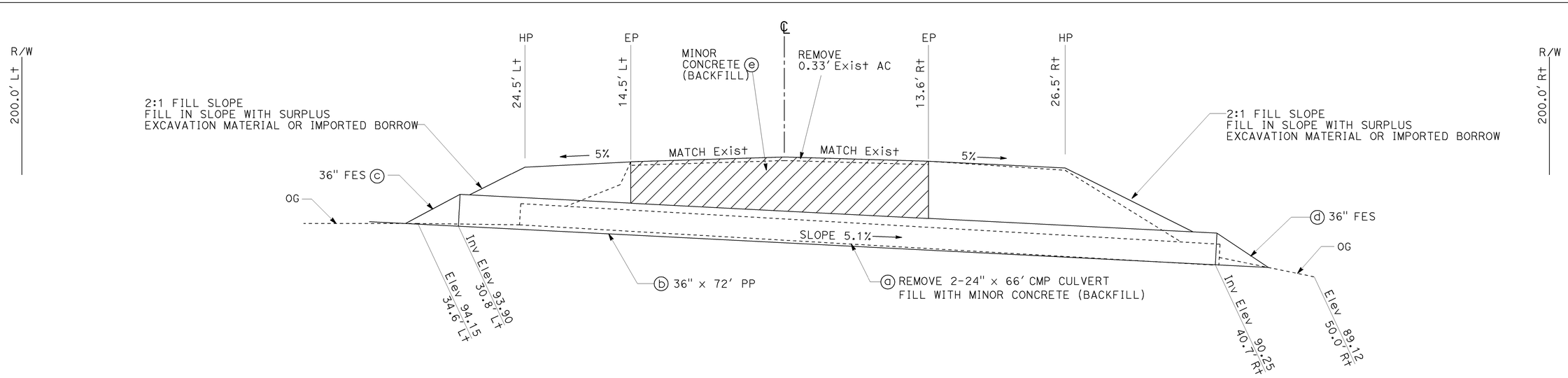

DRAINAGE SYSTEM No. 15

ROUTE 127 PM 12.59
LOCATION 15

THIS PLAN ACCURATE FOR DRAINAGE WORK ONLY.

DRAINAGE PLAN AND PROFILE
D-15

SCALE: Horiz 1"=5'
Vert 1"=5'

REVISED BY	DATE REVISED
MR	12-12-11
MG	05-18-11

CALCULATED-DESIGNED BY: MATTHEW GOIKE
CHECKED BY: MALISSA REYNOLDS

FUNCTIONAL SUPERVISOR: JOHN FOX

STATE OF CALIFORNIA - DEPARTMENT OF TRANSPORTATION
Caltrans® MAINTENANCE ENGINEERING

LAST REVISION 02-06-12
DATE PLOTTED => 07-FEB-2012
TIME PLOTTED => 10:32

Dist	COUNTY	ROUTE	POST MILES TOTAL PROJECT	SHEET No.	TOTAL SHEETS
09	Iny	127	0.1/16.2	18	32

REGISTERED CIVIL ENGINEER 2-4-12 DATE

2-6-12
PLANS APPROVAL DATE

REGISTERED PROFESSIONAL ENGINEER MATTHEW GOIKE No. 63638 Exp. 9-30-12 CIVIL STATE OF CALIFORNIA

THE STATE OF CALIFORNIA OR ITS OFFICERS OR AGENTS SHALL NOT BE RESPONSIBLE FOR THE ACCURACY OR COMPLETENESS OF SCANNED COPIES OF THIS PLAN SHEET.

NOTE:

FOR ACCURATE RIGHT OF WAY DATA, CONTACT RIGHT OF WAY ENGINEERING AT THE DISTRICT OFFICE.

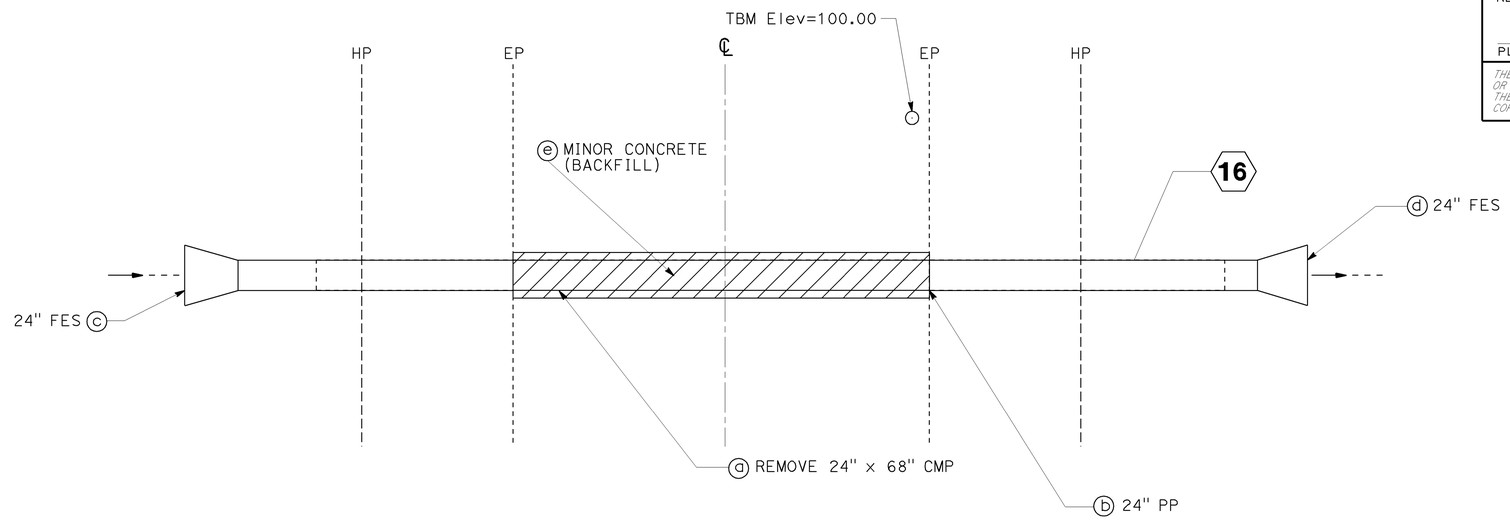

PLAN

SCALE: Horiz 1"=5'

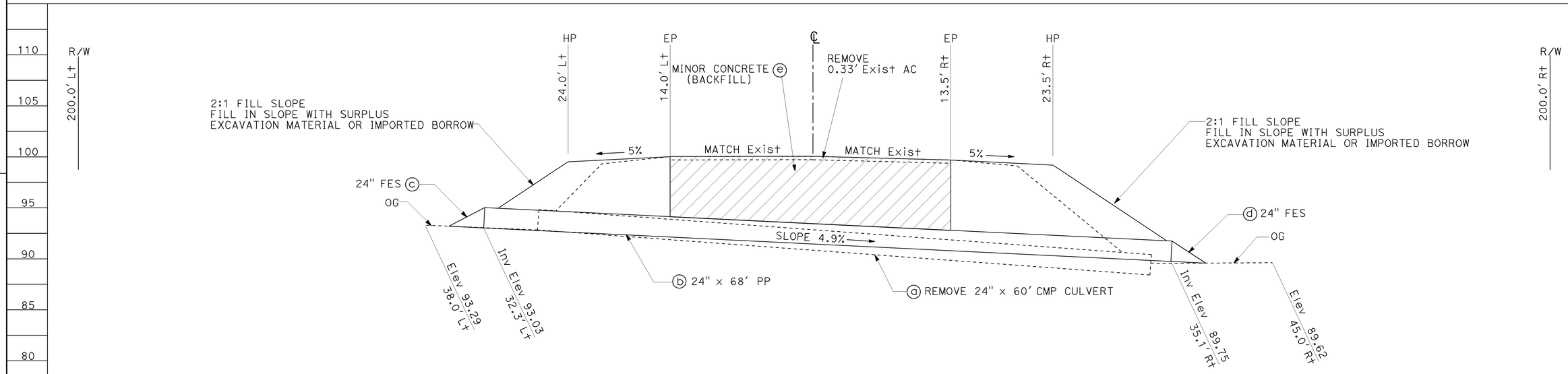

DRAINAGE SYSTEM No. 16

ROUTE 127 PM 12.65
LOCATION 16

THIS PLAN ACCURATE FOR DRAINAGE WORK ONLY.

DRAINAGE PLAN AND PROFILE D-16

SCALE: Horiz 1"=5'
Vert 1"=5'

REVISED BY	MG
DATE REVISED	05-18-11
MR	12-12-11
CALCULATED-DESIGNED BY	MATTHEW GOIKE
CHECKED BY	MALISSA REYNOLDS
FUNCTIONAL SUPERVISOR	JOHN FOX

STATE OF CALIFORNIA - DEPARTMENT OF TRANSPORTATION
Caltrans® MAINTENANCE ENGINEERING

LAST REVISION 12-12-11
DATE PLOTTED => 07-FEB-2012
TIME PLOTTED => 10:32

Dist	COUNTY	ROUTE	POST MILES TOTAL PROJECT	SHEET No.	TOTAL SHEETS
09	Iny	127	0.1/16.2	19	32

REGISTERED CIVIL ENGINEER 2-6-12 DATE

2-6-12
PLANS APPROVAL DATE

REGISTERED PROFESSIONAL ENGINEER MATTHEW GOIKE No. 63638 Exp. 9-30-12 CIVIL STATE OF CALIFORNIA

THE STATE OF CALIFORNIA OR ITS OFFICERS OR AGENTS SHALL NOT BE RESPONSIBLE FOR THE ACCURACY OR COMPLETENESS OF SCANNED COPIES OF THIS PLAN SHEET.

NOTE:

FOR ACCURATE RIGHT OF WAY DATA, CONTACT RIGHT OF WAY ENGINEERING AT THE DISTRICT OFFICE.

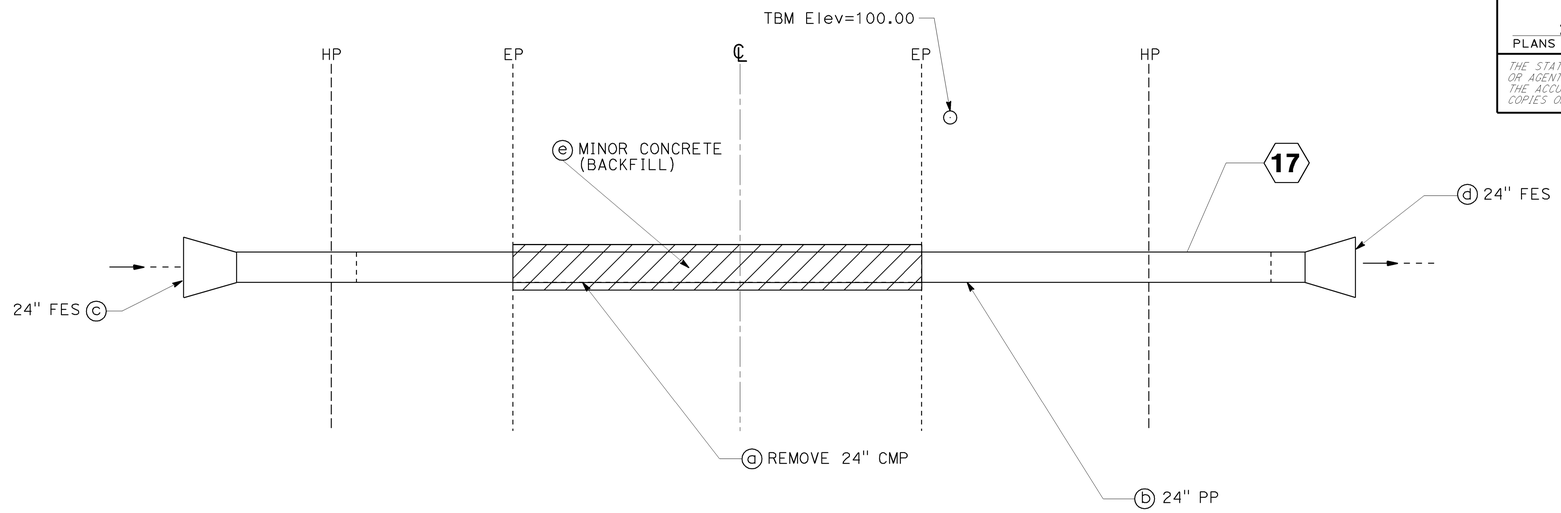

PLAN
SCALE: Horiz 1"=5'

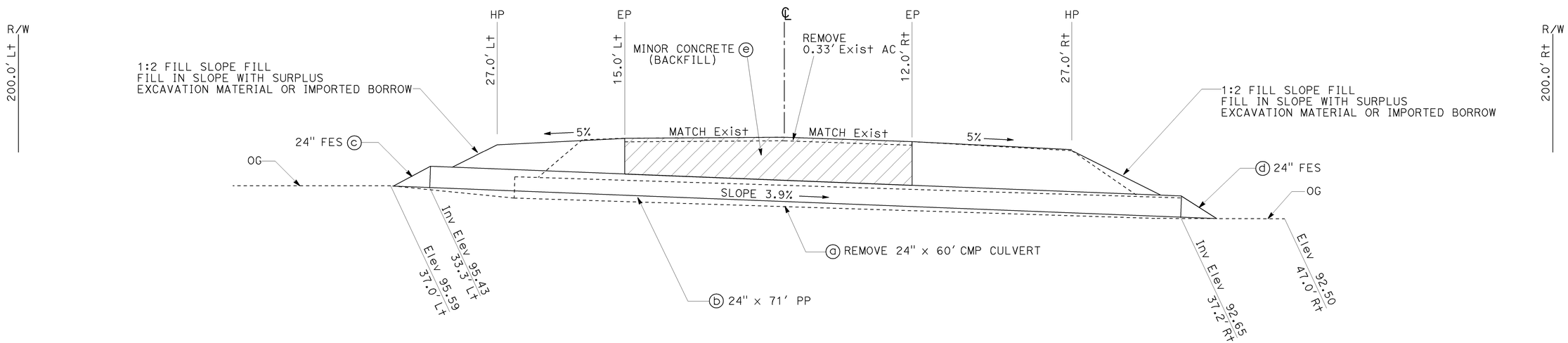

DRAINAGE SYSTEM No. 17

ROUTE 127 PM 12.85
LOCATION 17

THIS PLAN ACCURATE FOR DRAINAGE WORK ONLY.

DRAINAGE PLAN AND PROFILE
SCALE: Horiz 1"=5'
Vert 1"=5'

D-17

CALCULATED-DESIGNED BY	MATTHEW GOIKE	REVISED BY	MG
CHECKED BY	MALISSA REYNOLDS	DATE REVISED	05-18-11 12-12-11
FUNCTIONAL SUPERVISOR	JOHN FOX		

STATE OF CALIFORNIA - DEPARTMENT OF TRANSPORTATION
Caltrans® MAINTENANCE ENGINEERING

LAST REVISION 02-06-12
DATE PLOTTED => 07-FEB-2012
TIME PLOTTED => 10:32

Dist	COUNTY	ROUTE	POST MILES TOTAL PROJECT	SHEET No.	TOTAL SHEETS
09	Iny	127	0.1/16.2	20	32

REGISTERED CIVIL ENGINEER 2-4-12 DATE

2-6-12
PLANS APPROVAL DATE

REGISTERED PROFESSIONAL ENGINEER MATTHEW GOIKE No. 63638 Exp. 9-30-12 CIVIL STATE OF CALIFORNIA

THE STATE OF CALIFORNIA OR ITS OFFICERS OR AGENTS SHALL NOT BE RESPONSIBLE FOR THE ACCURACY OR COMPLETENESS OF SCANNED COPIES OF THIS PLAN SHEET.

NOTE:

FOR ACCURATE RIGHT OF WAY DATA, CONTACT RIGHT OF WAY ENGINEERING AT THE DISTRICT OFFICE.

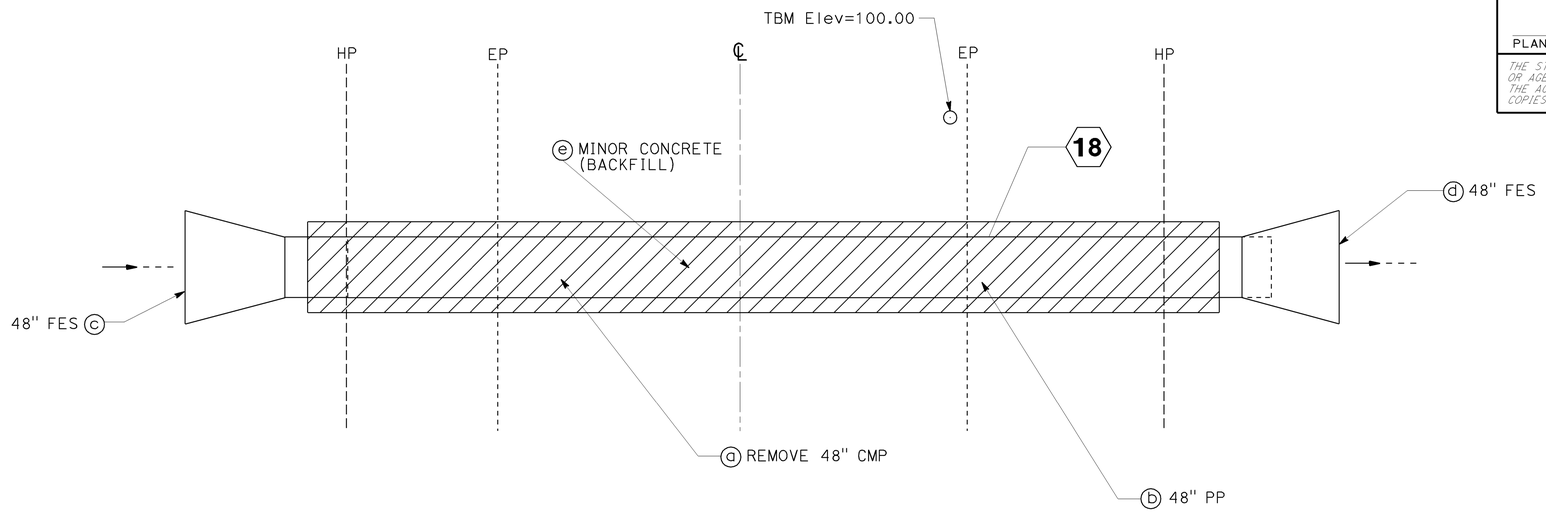

PLAN

SCALE: Horiz 1"=5'

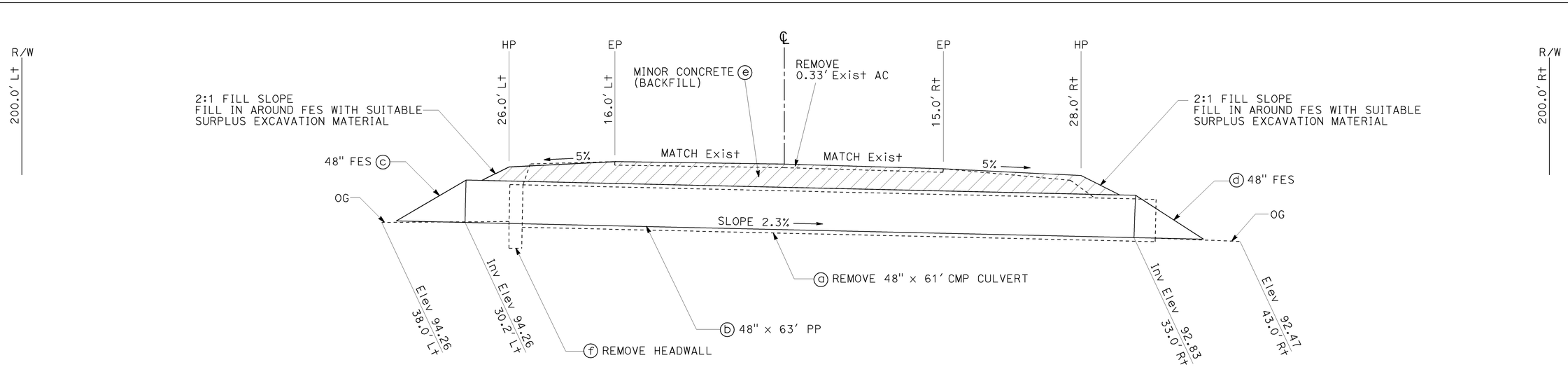

DRAINAGE SYSTEM No. 18

ROUTE 127 PM 15.06
LOCATION 18

THIS PLAN ACCURATE FOR DRAINAGE WORK ONLY.

DRAINAGE PLAN AND PROFILE D-18

SCALE: Horiz 1"=5'
Vert 1"=5'

REVISED BY	DATE REVISED
MG	12-12-11
MG	05-18-11

CALCULATED-DESIGNED BY: MATTHEW GOIKE
CHECKED BY: MALISSA REYNOLDS
FUNCTIONAL SUPERVISOR: JOHN FOX

STATE OF CALIFORNIA - DEPARTMENT OF TRANSPORTATION
Caltrans® MAINTENANCE ENGINEERING

LAST REVISION 02-06-12
DATE PLOTTED => 07-FEB-2012
TIME PLOTTED => 10:32

Dist	COUNTY	ROUTE	POST MILES TOTAL PROJECT	SHEET No.	TOTAL SHEETS
09	Iny	127	0.1/16.2	21	32

REGISTERED CIVIL ENGINEER 2-6-12 DATE

2-6-12
PLANS APPROVAL DATE

REGISTERED PROFESSIONAL ENGINEER MATTHEW GOIKE No. 63638 Exp. 9-30-12 CIVIL STATE OF CALIFORNIA

THE STATE OF CALIFORNIA OR ITS OFFICERS OR AGENTS SHALL NOT BE RESPONSIBLE FOR THE ACCURACY OR COMPLETENESS OF SCANNED COPIES OF THIS PLAN SHEET.

NOTE:

FOR ACCURATE RIGHT OF WAY DATA, CONTACT RIGHT OF WAY ENGINEERING AT THE DISTRICT OFFICE.

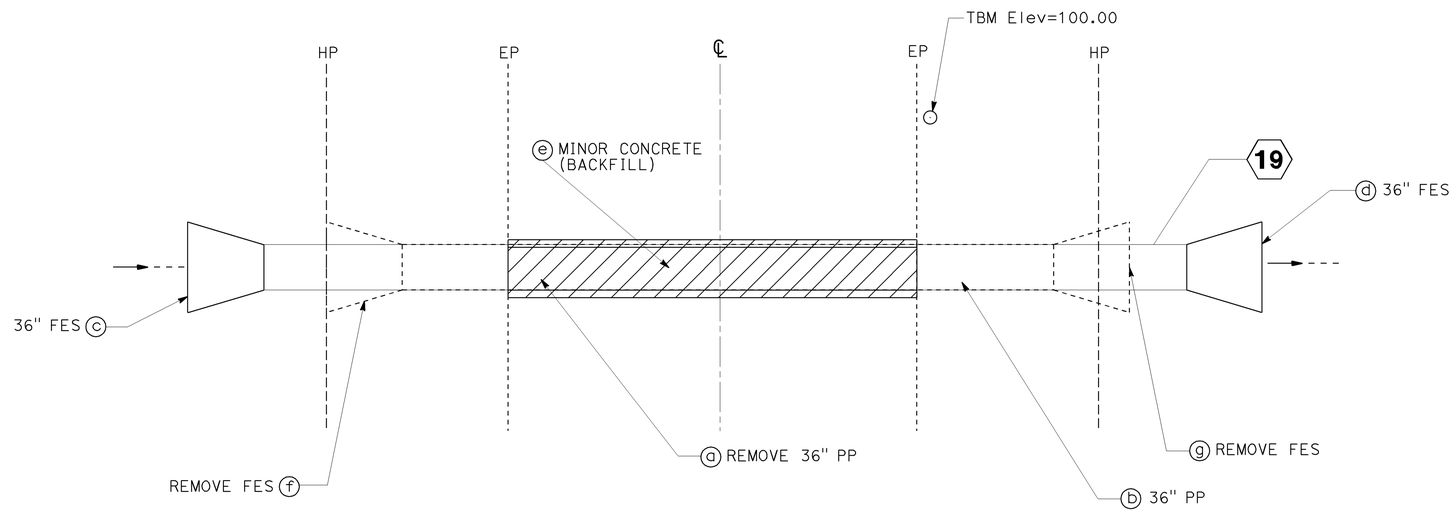

PLAN

SCALE: Horiz 1"=5'

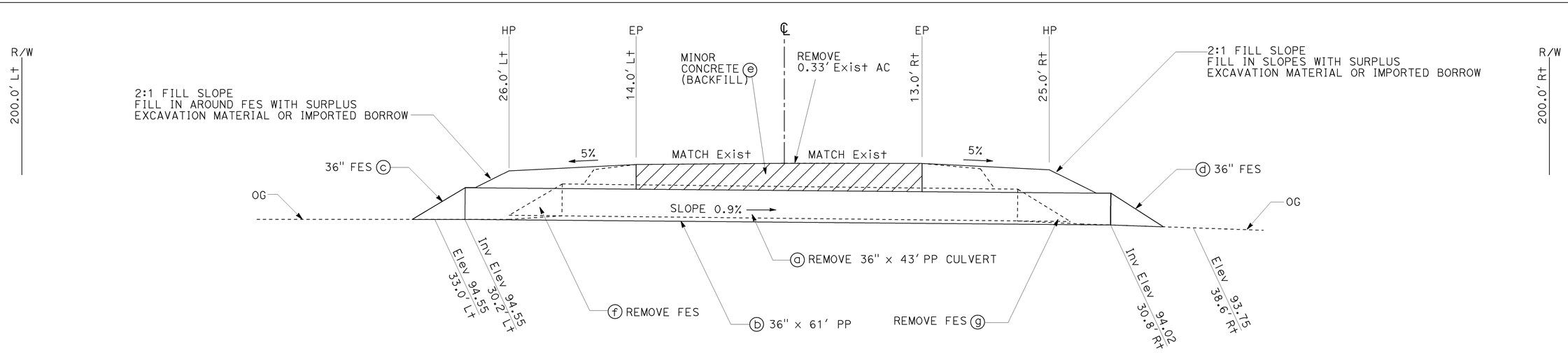

DRAINAGE SYSTEM No. 19

ROUTE 127 PM 15.70
LOCATION 19

THIS PLAN ACCURATE FOR DRAINAGE WORK ONLY.

DRAINAGE PLAN AND PROFILE

SCALE: Horiz 1"=5'
Vert 1"=5'

D-19

REVISED BY	DATE REVISED
MR	12-12-11
MG	05-18-11

CALCULATED-DESIGNED BY: MATTHEW GOIKE
CHECKED BY: MALISSA REYNOLDS
FUNCTIONAL SUPERVISOR: JOHN FOX

STATE OF CALIFORNIA - DEPARTMENT OF TRANSPORTATION
Caltrans® MAINTENANCE ENGINEERING

LAST REVISION 02-06-12
DATE PLOTTED => 07-FEB-2012
TIME PLOTTED => 10:32

Dist	COUNTY	ROUTE	POST MILES TOTAL PROJECT	SHEET No.	TOTAL SHEETS
09	Iny	127	0.1/16.2	22	32

REGISTERED CIVIL ENGINEER 2-4-12 DATE

2-6-12
PLANS APPROVAL DATE

REGISTERED PROFESSIONAL ENGINEER MATTHEW GOIKE No. 63638 Exp. 9-30-12 CIVIL STATE OF CALIFORNIA

THE STATE OF CALIFORNIA OR ITS OFFICERS OR AGENTS SHALL NOT BE RESPONSIBLE FOR THE ACCURACY OR COMPLETENESS OF SCANNED COPIES OF THIS PLAN SHEET.

NOTE:

FOR ACCURATE RIGHT OF WAY DATA, CONTACT RIGHT OF WAY ENGINEERING AT THE DISTRICT OFFICE.

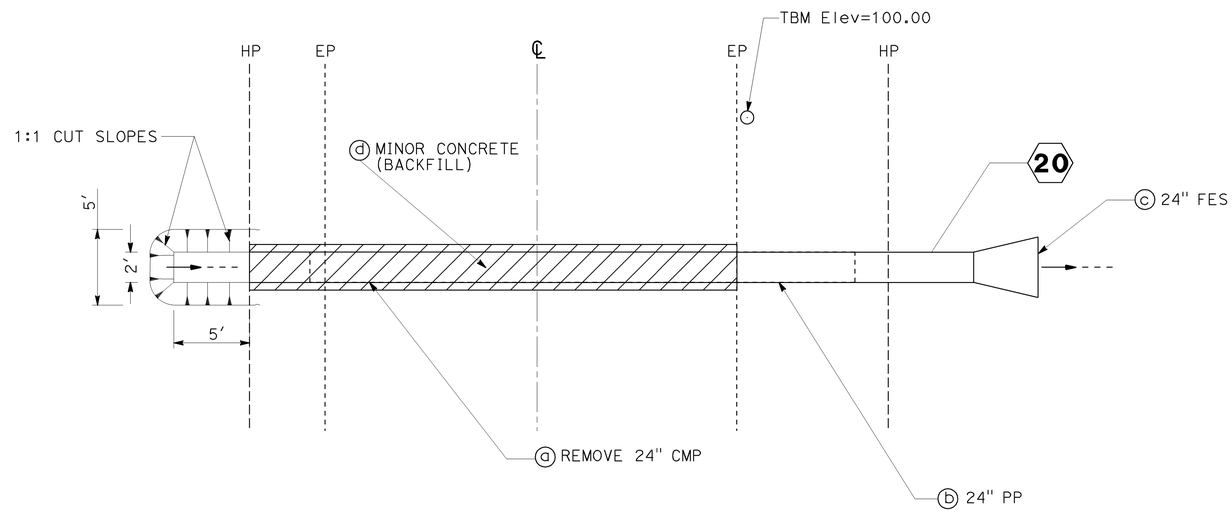

PLAN

SCALE: Horiz 1"=5'

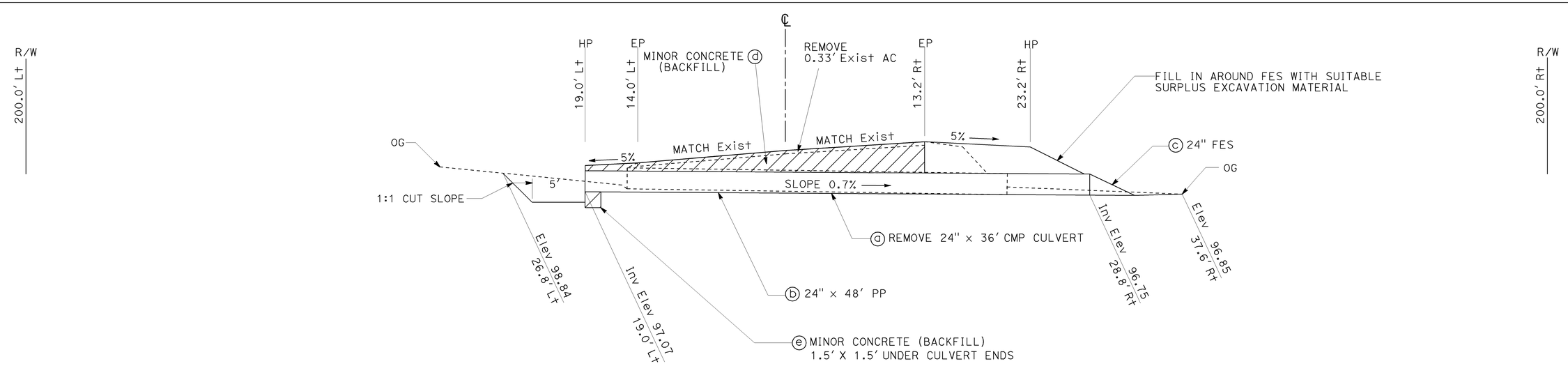

DRAINAGE SYSTEM No. 20

ROUTE 127 PM 16.21
LOCATION 20

THIS PLAN ACCURATE FOR DRAINAGE WORK ONLY.

DRAINAGE PLAN AND PROFILE D-20

SCALE: Horiz 1"=5'
Vert 1"=5'

STATE OF CALIFORNIA - DEPARTMENT OF TRANSPORTATION
Caltrans MAINTENANCE ENGINEERING

FUNCTIONAL SUPERVISOR: JOHN FOX
CALCULATED-DESIGNED BY: MATTHEW GOIKE
CHECKED BY: MALISSA REYNOLDS
REVISED BY: MG
DATE REVISED: 05-18-11
MR: 12-12-11

LAST REVISION 02-06-12
DATE PLOTTED => 07-FEB-2012
TIME PLOTTED => 10:32

Dist	COUNTY	ROUTE	POST MILES TOTAL PROJECT	SHEET No.	TOTAL SHEETS
09	Iny	127	0.1/16.2	23	32

REGISTERED CIVIL ENGINEER 2-6-12 DATE

2-6-12
PLANS APPROVAL DATE

REGISTERED PROFESSIONAL ENGINEER MATTHEW GOIKE No. 63638 Exp. 9-30-12 CIVIL STATE OF CALIFORNIA

THE STATE OF CALIFORNIA OR ITS OFFICERS OR AGENTS SHALL NOT BE RESPONSIBLE FOR THE ACCURACY OR COMPLETENESS OF SCANNED COPIES OF THIS PLAN SHEET.

DRAINAGE QUANTITIES

DRAINAGE PLAN SHEET No.	DRAINAGE SYSTEM No.	DRAINAGE UNIT	REMOVE PIPE (N) LF	REMOVE FES (N) EA	REMOVE HEADWALL (N) EA	18" PLASTIC PIPE LF	24" PLASTIC PIPE LF	30" PLASTIC PIPE LF	36" PLASTIC PIPE LF	48" PLASTIC PIPE LF	24" STEEL FES EA	30" STEEL FES EA	36" STEEL FES EA	48" STEEL FES EA	IMPORTED BORROW CY	MINOR CONCRETE (BACKFILL) CY	DESCRIPTION	LOCATION	DRAINAGE PLAN SHEET No.	DRAINAGE SYSTEM No.	DRAINAGE UNIT
D-1	1	a	63														REMOVE 24" x 63' CMP CULVERT	Rte 127, PM 0.07	D-1	1	a
		b					62								7.2		24" x 62' PLASTIC PIPE CULVERT				b
		c									1						24" STEEL FLARED END SECTION				c
		d									1						24" STEEL FLARED END SECTION				d
		e														15.3	MINOR CONCRETE (BACKFILL)				e
		f		1													REMOVE FES				f
		g														0.1	MATCH EXIST DIKE PROFILE AND SECTION				g
D-2	2	a	98														REMOVE 30" x 98' CMP CULVERT	Rte 127, PM 0.12	D-2	2	a
		b						98							21.3		30" x 98' PLASTIC PIPE CULVERT				b
		c										1					30" STEEL FLARED END SECTION				c
		d										1					30" STEEL FLARED END SECTION				d
		e														33.7	MINOR CONCRETE (BACKFILL)				e
D-3	3	a	100														REMOVE 24" x 100' CMP CULVERT	Rte 127, PM 0.41	D-3	3	a
		b					100								1.5		24" x 100' PLASTIC PIPE CULVERT				b
		c									1						24" STEEL FLARED END SECTION				c
		d									1						24" STEEL FLARED END SECTION				d
		e														24.2	MINOR CONCRETE (BACKFILL)				e
		f														0.1	MATCH EXIST DIKE PROFILE AND SECTION				f
D-4	4	a	63														REMOVE 30" x 63' CMP CULVERT	Rte 127, PM 0.46	D-4	4	a
		b						69							1.8		30" x 69' PLASTIC PIPE CULVERT				b
		c										1					30" STEEL FLARED END SECTION				c
		d										1					30" STEEL FLARED END SECTION				d
		e														19.8	MINOR CONCRETE (BACKFILL)				e
		f														0.1	MATCH EXIST DIKE PROFILE AND SECTION				f
D-5	5	a	40														REMOVE 18" x 40' CMP CULVERT	Rte 127, PM 7.78	D-5	5	a
		b				55									18.2		18" x 55' PLASTIC PIPE CULVERT				b
		c														7.2	MINOR CONCRETE (BACKFILL)				c
D-6	6	a	52														REMOVE 35" x 24" x 52' CSPA CULVERT	Rte 127, PM 8.33	D-6	6	a
		b					58								6.1		24" x 58' PLASTIC PIPE CULVERT				b
		c														13.8	MINOR CONCRETE (BACKFILL)				c
D-7	7	a	50														REMOVE 35" x 24" x 50' CSPA CULVERT	Rte 127, PM 8.92	D-7	7	a
		b						48									30" x 48' PLASTIC PIPE CULVERT				b
		c														11.2	MINOR CONCRETE (BACKFILL)				c
		d														0.6	1.5'x1.5' UNDER CULVERT ENDS				d
D-8	8	a	60														REMOVE 24" x 60' CMP CULVERT	Rte 127, PM 10.08	D-8	8	a
		b					54										24" x 54' PLASTIC PIPE CULVERT				b
		c														10.4	MINOR CONCRETE (BACKFILL)				c
		d														0.3	1.5'x1.5' UNDER CULVERT END				d
D-9	9	a	87														REMOVE 24" x 87' CMP CULVERT	Rte 127, PM 10.50	D-9	9	a
		b					81										24" x 81' PLASTIC PIPE CULVERT				b
		c									1						24" STEEL FLARED END SECTION				c
		d									1						24" STEEL FLARED END SECTION				d
		e														22.8	MINOR CONCRETE (BACKFILL)				e
SUBTOTAL			613	1		55	355	215			6	4			56.1	159.6					

NOTES:

1. (N) NOT A SEPARATE PAY ITEM, FOR INFORMATION ONLY.
2. FES SHALL BE STEEL.
3. ALL JOINTS SHALL BE STANDARD JOINT TYPE.
4. PLASTIC PIPE SHALL BE HDPE WITH A SMOOTH INTERIOR.

DRAINAGE QUANTITIES
DQ-1

REVISED BY	DATE REVISED
MR	12-12-11
MG	11-02-11

CALCULATED-DESIGNED BY: MATTHEW GOIKE
CHECKED BY: MALISSA REYNOLDS
FUNCTIONAL SUPERVISOR: JOHN FOX

STATE OF CALIFORNIA - DEPARTMENT OF TRANSPORTATION
Caltrans MAINTENANCE ENGINEERING

LAST REVISION 02-06-12 | DATE PLOTTED => 07-FEB-2012 | TIME PLOTTED => 10:32

Dist	COUNTY	ROUTE	POST MILES TOTAL PROJECT	SHEET No.	TOTAL SHEETS
09	Iny	127	0.1/16.2	24	32

REGISTERED CIVIL ENGINEER 2-6-12 DATE

2-6-12
PLANS APPROVAL DATE

REGISTERED PROFESSIONAL ENGINEER MATTHEW GOIKE No. 63638 Exp. 9-30-12 CIVIL STATE OF CALIFORNIA

THE STATE OF CALIFORNIA OR ITS OFFICERS OR AGENTS SHALL NOT BE RESPONSIBLE FOR THE ACCURACY OR COMPLETENESS OF SCANNED COPIES OF THIS PLAN SHEET.

DRAINAGE QUANTITIES (Cont.)

DRAINAGE PLAN SHEET No.	DRAINAGE SYSTEM No.	DRAINAGE UNIT	REMOVE PIPE (N)	REMOVE FES (N)	REMOVE HEADWALL (N)	18" PLASTIC PIPE	24" PLASTIC PIPE	30" PLASTIC PIPE	36" PLASTIC PIPE	48" PLASTIC PIPE	24" STEEL FES	30" STEEL FES	36" STEEL FES	48" STEEL FES	IMPORTED BORROW	MINOR CONCRETE (BACKFILL)	DESCRIPTION	LOCATION	DRAINAGE PLAN SHEET No.	DRAINAGE SYSTEM No.	DRAINAGE UNIT
			LF	EA	EA	LF	LF	LF	LF	LF	EA	EA	EA	EA	CY	CY					
D-10	10	a	73														REMOVE 36" x 73' CMP CULVERT	Rte 127, PM 10.85	D-10	10	a
		b							61						6.0		36" x 61' PLASTIC PIPE CULVERT				b
		c											1				36" STEEL FLARED END SECTION				c
		d											1				36" STEEL FLARED END SECTION				d
		e														15.1	MINOR CONCRETE (BACKFILL)				e
D-11	11	a	59														REMOVE 24" x 59' CMP CULVERT	Rte 127, PM 11.07	D-11	11	a
		b					58								6.2		24" x 58' PLASTIC PIPE CULVERT				b
		c									1						24" STEEL FLARED END SECTION				c
		d									1						24" STEEL FLARED END SECTION				d
		e														10.4	MINOR CONCRETE (BACKFILL)				e
D-12	12	a	51														REMOVE 24" x 18" x 51' CSPA CULVERT	Rte 127, PM 11.25	D-12	12	a
		b					51								9.2		24" x 51' PLASTIC PIPE CULVERT				b
		c									1						24" STEEL FLARED END SECTION				c
		d									1						24" STEEL FLARED END SECTION				d
		e														11.3	MINOR CONCRETE (BACKFILL)				e
D-13	13	a	49														REMOVE 24" x 18" x 49' CSPA CULVERT	Rte 127, PM 11.51	D-13	13	a
		b					46										24" x 46' PLASTIC PIPE CULVERT				b
		c														12.0	MINOR CONCRETE (BACKFILL)				c
		d														0.5	1.5'x1.5' UNDER CULVERT ENDS				d
D-14	14	a	52														REMOVE 18" x 52' CMP CULVERT	Rte 127, PM 12.56	D-14	14	a
		b					65								21.7		24" x 65' PLASTIC PIPE CULVERT				b
		c									1						24" STEEL FLARED END SECTION				c
		d									1						24" STEEL FLARED END SECTION				d
		e														15.9	MINOR CONCRETE (BACKFILL)				e
		f		1													REMOVE FES				f
D-15	15	a	132														REMOVE 2-24" x 66' CMP CULVERT	Rte 127, PM 12.59	D-15	15	a
		b							72						43.7		36" x 72' PLASTIC PIPE CULVERT				b
		c											1				36" STEEL FLARED END SECTION				c
		d											1				36" STEEL FLARED END SECTION				d
		e														91.6	MINOR CONCRETE (BACKFILL)				e
D-16	16	a	60														REMOVE 24" x 60' CMP CULVERT	Rte 127, PM 12.65	D-16	16	a
		b					68								22.5		24" x 68' PLASTIC PIPE CULVERT				b
		c									1						24" STEEL FLARED END SECTION				c
		d									1						24" STEEL FLARED END SECTION				d
		e														22.8	MINOR CONCRETE (BACKFILL)				e
D-17	17	a	60														REMOVE 24" x 60' CMP CULVERT	Rte 127, PM 12.85	D-17	17	a
		b					71								15.1		24" x 71' PLASTIC PIPE CULVERT				b
		c									1						24" STEEL FLARED END SECTION				c
		d									1						24" STEEL FLARED END SECTION				d
		e														14.5	MINOR CONCRETE (BACKFILL)				e
D-18	18	a	61														REMOVE 48" x 61' CMP CULVERT	Rte 127, PM 15.06	D-18	18	a
		b								63					8.3		48" x 63' PLASTIC PIPE CULVERT				b
		c												1			48" STEEL FLARED END SECTION				c
		d												1			48" STEEL FLARED END SECTION				d
		e														50.6	MINOR CONCRETE (BACKFILL)				e
		f			1												REMOVE HEADWALL				f
SUBTOTAL			597	1	1		359		133	63	10		4	2	132.7	244.7					

STATE OF CALIFORNIA - DEPARTMENT OF TRANSPORTATION
Caltrans MAINTENANCE ENGINEERING

FUNCTIONAL SUPERVISOR: JOHN FOX
CALCULATED-DESIGNED BY: MATTHEW GOIKE
CHECKED BY: MALISSA REYNOLDS
REVISED BY: MG — DATE REVISED: 11-02-11
MR — 12-12-11

DRAINAGE QUANTITIES DQ-2

LAST REVISION 02-06-12
DATE PLOTTED => 07-FEB-2012
TIME PLOTTED => 10:32

Dist	COUNTY	ROUTE	POST MILES TOTAL PROJECT	SHEET No.	TOTAL SHEETS
09	Iny	127	0.1/16.2	25	32

REGISTERED CIVIL ENGINEER 2-6-12 DATE

2-6-12
PLANS APPROVAL DATE

REGISTERED PROFESSIONAL ENGINEER MATTHEW GOIKE No. 63638 Exp. 9-30-12 CIVIL STATE OF CALIFORNIA

THE STATE OF CALIFORNIA OR ITS OFFICERS OR AGENTS SHALL NOT BE RESPONSIBLE FOR THE ACCURACY OR COMPLETENESS OF SCANNED COPIES OF THIS PLAN SHEET.

DRAINAGE QUANTITIES (Cont.)

DRAINAGE PLAN SHEET No.	DRAINAGE SYSTEM No. ⬡	DRAINAGE UNIT ○	REMOVE PIPE (N) LF	REMOVE FES (N) EA	REMOVE HEADWALL (N) EA	18" PLASTIC PIPE LF	24" PLASTIC PIPE LF	30" PLASTIC PIPE LF	36" PLASTIC PIPE LF	48" PLASTIC PIPE LF	24" STEEL FES EA	30" STEEL FES EA	36" STEEL FES EA	48" STEEL FES EA	IMPORTED BORROW CY	MINOR CONCRETE (BACKFILL) CY	DESCRIPTION	LOCATION	DRAINAGE PLAN SHEET No.	DRAINAGE SYSTEM No. ⬡	DRAINAGE UNIT ○
D-19	19	a	43														REMOVE 36" x 43' CMP CULVERT	Rte 127, PM 15.70	D-19	19	a
		b							61						50.5		36" x 61' PLASTIC PIPE CULVERT				b
		c											1				36" STEEL FLARED END SECTION				c
		d											1				36" STEEL FLARED END SECTION				d
		e														15.0	MINOR CONCRETE (BACKFILL)				e
		f		1													REMOVE FES				f
		g		1													REMOVE FES				g
D-20	20	a	36														REMOVE 24" x 36' CMP CULVERT	Rte 127, PM 16.21	D-20	20	a
		b					48								10.9		24" x 48' PLASTIC PIPE CULVERT				b
		c									1						24" STEEL FLARED END SECTION				c
		d														9.7	MINOR CONCRETE (BACKFILL)				d
		e														0.3	1.5'x1.5' UNDER CULVERT END				e
SUBTOTAL			79	2			48		61		1		2		61.4	25.0					
SUBTOTAL (DQ-1)			613	1		55	355	215			6	4			56.1	159.6					
SUBTOTAL (DQ-2)			597	1	1		359		133	63	10		4	2	132.7	244.7					
TOTAL			1289	4	1	55	762	215	194	63	17	4	6	2	250.2	429.3					

DRAINAGE QUANTITIES
DQ-3

CALCULATED-DESIGNED BY MATTHEW GOIKE
CHECKED BY MALISSA REYNOLDS
REVISED BY MG MR
DATE REVISED 11-02-11 12-12-11
FUNCTIONAL SUPERVISOR JOHN FOX

STATE OF CALIFORNIA - DEPARTMENT OF TRANSPORTATION
Caltrans MAINTENANCE ENGINEERING

LAST REVISION 02-06-12
DATE PLOTTED => 07-FEB-2012
TIME PLOTTED => 10:32

Dist	COUNTY	ROUTE	POST MILES TOTAL PROJECT	SHEET No.	TOTAL SHEETS
09	Iny	127	0.1/16.2	26	32

REGISTERED CIVIL ENGINEER 2-6-12 DATE

2-6-12
PLANS APPROVAL DATE

REGISTERED PROFESSIONAL ENGINEER MATTHEW GOIKE No. 63638 Exp. 9-30-12 CIVIL STATE OF CALIFORNIA

THE STATE OF CALIFORNIA OR ITS OFFICERS OR AGENTS SHALL NOT BE RESPONSIBLE FOR THE ACCURACY OR COMPLETENESS OF SCANNED COPIES OF THIS PLAN SHEET.

NOTES:

1. FOR SIGN INSTALLATION DETAILS AND DIMENSIONS NOT SHOWN SEE STANDARD PLANS.
2. SEE TABLE FOR PLACEMENT TYPE.
3. THIS PLAN ACCURATE FOR CONSTRUCTION AREA SIGN WORK ONLY.
4. SIGNS IN CONFLICT WITH ADJACENT, ON-GOING PROJECTS SHALL BE COVERED UPON INSTALLATION AS DIRECTED BY THE ENGINEER.
5. LOCATION OF CONSTRUCTION AREA SIGNS SHOWN ARE APPROXIMATE, EXACT LOCATIONS SHALL BE DETERMINED BY THE ENGINEER.

LEGEND:

→ - DIRECTION OF TRAVEL

STATIONARY MOUNTED CONSTRUCTION AREA SIGNS

ROUTE	PM	PLACEMENT	REMARKS
SBd 127	41.04	A	BEGIN WORK
Iny 127	0.96	A	END WORK
Iny 127	7.28	A	BEGIN WORK
Iny 127	9.49	B	TECOPA HOT SPRINGS Rd
Iny 127	13.68	B	RANGER Rd
Iny 127	14.75	A	ROUTE 178 (S) (PM 42.80)
Iny 127	14.93	B	COUNTY ROAD 5052 (S)
Iny 127	15.43	B	COUNTY ROAD 5052 (N)
Iny 127	16.43	A	ROUTE 178 (N) (PM 43.0)
Iny 127	16.71	A	END WORK

PORTABLE CHANGEABLE MESSAGE SIGNS

MESSAGE FOR 2 LANE SECTIONS		
EXPECT DELAYS	REDUCE SPEED	PREPARE TO STOP

1. PORTABLE CHANGEABLE MESSAGE SIGN LOCATIONS TO BE CONFIRMED BY THE ENGINEER BEFORE THE ACTUAL CLOSURE.
2. ALTERNATE MESSAGES MUST BE APPROVED BY THE ENGINEER.
3. MESSAGE MAY BE ALTERED BY THE ENGINEER.
4. PORTABLE CHANGEABLE MESSAGE SIGNS SHALL BE DISPLAYED DURING SWEEPING OPERATIONS AND WHEN CONSTRUCTION OPERATIONS ARE ACTIVELY IN PROGRESS UNLESS ORDERED OTHERWISE BY THE ENGINEER.

STATIONARY MOUNTED CONSTRUCTION AREA SIGN DETAILS

LAYOUT	TYPE	PANEL SIZE	SIGN MESSAGE	No. OF SIGNS	No. OF POSTS	POST SIZE
1	W20-1	48" x 48"	ROAD WORK AHEAD	6	6	6" x 6"
	C23B (CA)	60" x 24"	DRAINAGE IMPROVEMENTS	6		
2	W20-1	36" x 36"	ROAD WORK AHEAD	4	4	4" x 6"
3	G20-2	36" x 18"	END ROAD WORK	10	10	4" x 4"

MAINTAINING EXISTING TRAFFIC MANAGEMENT SYSTEM ELEMENTS DURING CONSTRUCTION

ROUTE	PM	No.	REMARKS
127	0.5	955	TRAFFIC COUNT Sta
127	6.5	954	TRAFFIC COUNT Sta
127	14.7	923	TRAFFIC COUNT Sta
127	14.8	935	TRAFFIC COUNT Sta
127	16.4	965	TRAFFIC COUNT Sta
127	16.5	956	TRAFFIC COUNT Sta
178	42.9	936	TRAFFIC COUNT Sta
178	42.9	937	TRAFFIC COUNT Sta

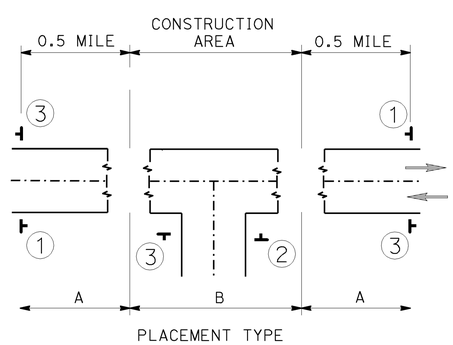

TYPICAL SIGN PLACEMENT FOR UNDIVIDED HIGHWAY

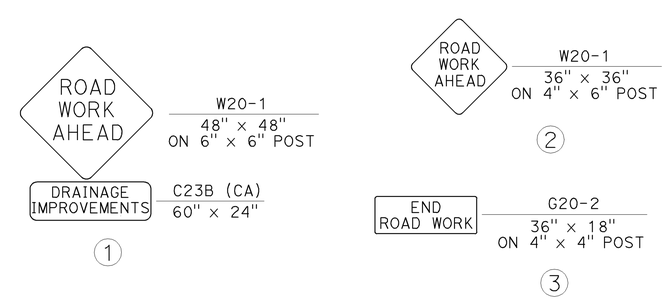

TYPICAL SIGN LAYOUT

CONSTRUCTION AREA SIGNS
NO SCALE

CS-1

STATE OF CALIFORNIA - DEPARTMENT OF TRANSPORTATION
Caltrans MAINTENANCE ENGINEERING

FUNCTIONAL SUPERVISOR: JOHN FOX

CALCULATED-DESIGNED BY: MATTHEW GOIKE
CHECKED BY: MALISSA REYNOLDS

REVISED BY: MG — DATE REVISED: 05-10-11
REVISED BY: MR — DATE REVISED: 12-12-11

LAST REVISION: 02-06-12
DATE PLOTTED => 08-FEB-2012
TIME PLOTTED => 09:32

Dist	COUNTY	ROUTE	POST MILES TOTAL PROJECT	SHEET No.	TOTAL SHEETS
09	Iny	127	0.1/16.2	27	32

REGISTERED CIVIL ENGINEER 2-6-12 DATE

2-6-12
PLANS APPROVAL DATE

REGISTERED PROFESSIONAL ENGINEER MATTHEW GOIKE No. 63638 Exp. 9-30-12 CIVIL STATE OF CALIFORNIA

THE STATE OF CALIFORNIA OR ITS OFFICERS OR AGENTS SHALL NOT BE RESPONSIBLE FOR THE ACCURACY OR COMPLETENESS OF SCANNED COPIES OF THIS PLAN SHEET.

NOTES:

1. (N) NOT A SEPARATE PAY ITEM, FOR INFORMATION ONLY.
2. THE TOP 6" OF THE EXISTING FILL SLOPE FROM THE HP TO THE TOE FOR THE WIDTH SHOWN IN THE TABLE (SELECTED MATERIAL) SHALL BE REMOVED AND PLACED BACK ON THE FILL IN A UNIFORM TOP LAYER. PAYMENT SHALL BE CONSIDERED AS INCLUDED IN PAYMENT FOR THE CULVERT.

MARKERS

DRAINAGE SYSTEM No.	LOCATION	MARKER (CULVERT)	OBJECT MARKER TYPE L-1 (CA)	REMOVE MARKER (CULVERT) (N)	REMOVE OBJECT MARKER TYPE L-2(CA) (N)	REMARKS
		EA	EA	EA	EA	
1	Rte 127, PM 0.07	2	1	2		USE CLASS 2 METAL POST
2	Rte 127, PM 0.12	2		2		USE CLASS 2 METAL POST
3	Rte 127, PM 0.41	2		2		USE CLASS 2 METAL POST
4	Rte 127, PM 0.46	2		2		USE CLASS 2 METAL POST
5	Rte 127, PM 7.78	2		2	2	USE CLASS 2 METAL POST
6	Rte 127, PM 8.33	2	1	2		USE CLASS 2 METAL POST
7	Rte 127, PM 8.92	2	2	2		USE CLASS 2 METAL POST
8	Rte 127, PM 10.08	2	2	2		USE CLASS 2 METAL POST
9	Rte 127, PM 10.50	2		2		USE CLASS 2 METAL POST
10	Rte 127, PM 10.85	2		2	1	USE CLASS 2 METAL POST
11	Rte 127, PM 11.07	2		2		USE CLASS 2 METAL POST
12	Rte 127, PM 11.25	2		2		USE CLASS 2 METAL POST
13	Rte 127, PM 11.51	2		2		USE CLASS 2 METAL POST
14	Rte 127, PM 12.56	2		2		USE CLASS 2 METAL POST
15	Rte 127, PM 12.59	2		2	1	USE CLASS 2 METAL POST
16	Rte 127, PM 12.65	2		2		USE CLASS 2 METAL POST
17	Rte 127, PM 12.85	2		2	1	USE CLASS 2 METAL POST
18	Rte 127, PM 15.06	2		2		USE CLASS 2 METAL POST
19	Rte 127, PM 15.70	2		2	2	USE CLASS 2 METAL POST
20	Rte 127, PM 16.21	2		2	2	USE CLASS 2 METAL POST
	TOTAL	40	6	40	9	

PAINT TRAFFIC STRIPE (2-COAT)

DRAINAGE SYSTEM No.	LOCATION	DETAIL 5	DETAIL 18	DETAIL 21	DETAIL 27B
		LF	LF	LF	LF
1	Rte 127, PM 0.07			10	20
2	Rte 127, PM 0.12		10		20
3	Rte 127, PM 0.41	10			20
4	Rte 127, PM 0.46		10		20
5	Rte 127, PM 7.78	10			20
6	Rte 127, PM 8.33			10	20
7	Rte 127, PM 8.92	10			20
8	Rte 127, PM 10.08	10			20
9	Rte 127, PM 10.50		10		20
10	Rte 127, PM 10.85	10			20
11	Rte 127, PM 11.07	10			20
12	Rte 127, PM 11.25	10			20
13	Rte 127, PM 11.51	10			20
14	Rte 127, PM 12.56	10			20
15	Rte 127, PM 12.59	20			40
16	Rte 127, PM 12.65	10			20
17	Rte 127, PM 12.85	10			20
18	Rte 127, PM 15.06	20			40
19	Rte 127, PM 15.70			10	20
20	Rte 127, PM 16.21			10	20
SUBTOTAL		150	30	40	440
TOTAL		660			

SELECTED MATERIAL AND EROSION CONTROL

DRAINAGE SYSTEM No.	LOCATION	FILL LENGTH HP TO TOE		AVERAGE FILL WIDTH		SELECTED MATERIAL AREA (N)	ROLLED EROSION CONTROL PRODUCT (BLANKET)
		Rt (LF)	Lt (LF)	Rt (LF)	Lt (FT)	SQFT	SQFT
1	Rte 127, PM 0.07	20	10	10	6	260	600
2	Rte 127, PM 0.12	30	40	15	11	890	1400
3	Rte 127, PM 0.41	20	35	8	12	207	1100
4	Rte 127, PM 0.46	15	25	9	10	385	800
5	Rte 127, PM 7.78	15	10	20	16	460	500
6	Rte 127, PM 8.33	20	10	12	20	440	600
7	Rte 127, PM 8.92	10	10	10	15	250	200
8	Rte 127, PM 10.08	13	12	15	10	315	250
9	Rte 127, PM 10.50	20	15	18	16	588	400
10	Rte 127, PM 10.85	20	15	20	18	670	700
11	Rte 127, PM 11.07	20	17	8	20	500	740
12	Rte 127, PM 11.25	15	15	20	20	600	300
13	Rte 127, PM 11.51	10	10	20	10	300	200
14	Rte 127, PM 12.56	15	20	15	15	525	700
15	Rte 127, PM 12.59	30	15	20	20	950	900
16	Rte 127, PM 12.65	25	20	12	10	620	900
17	Rte 127, PM 12.85	25	20	10	20	950	900
18	Rte 127, PM 15.06	20	15	20	20	700	400
19	Rte 127, PM 15.70	20	16	20	15	620	720
20	Rte 127, PM 16.21	15	5	10	0	75	350
TOTAL						10,305	12,660

SUMMARY OF QUANTITIES
Q-1

REVISED BY	DATE REVISED
MR	12-12-11
MG	07-18-11

MATTHEW GOIKE — CALCULATED-DESIGNED BY
MALISSA REYNOLDS — CHECKED BY
JOHN FOX — FUNCTIONAL SUPERVISOR

STATE OF CALIFORNIA - DEPARTMENT OF TRANSPORTATION
Caltrans MAINTENANCE ENGINEERING

LAST REVISION 02-06-12
DATE PLOTTED => 07-FEB-2012
TIME PLOTTED => 10:32

DIST	COUNTY	ROUTE	POST MILES TOTAL PROJECT	SHEET NO.	TOTAL SHEETS
09	Iny	127	0.1/16.2	28	32

LICENSED LANDSCAPE ARCHITECT

June 5, 2009
PLANS APPROVAL DATE

The State of California or its officers or agents shall not be responsible for the accuracy or completeness of electronic copies of this plan sheet.

LICENSED LANDSCAPE ARCHITECT — Gregory A. Balzer — 2879 — 09 Revision Date — 2-28-11 Renewal Date — 5-14-09 Date — STATE OF CALIFORNIA

To accompany plans dated 2-6-12

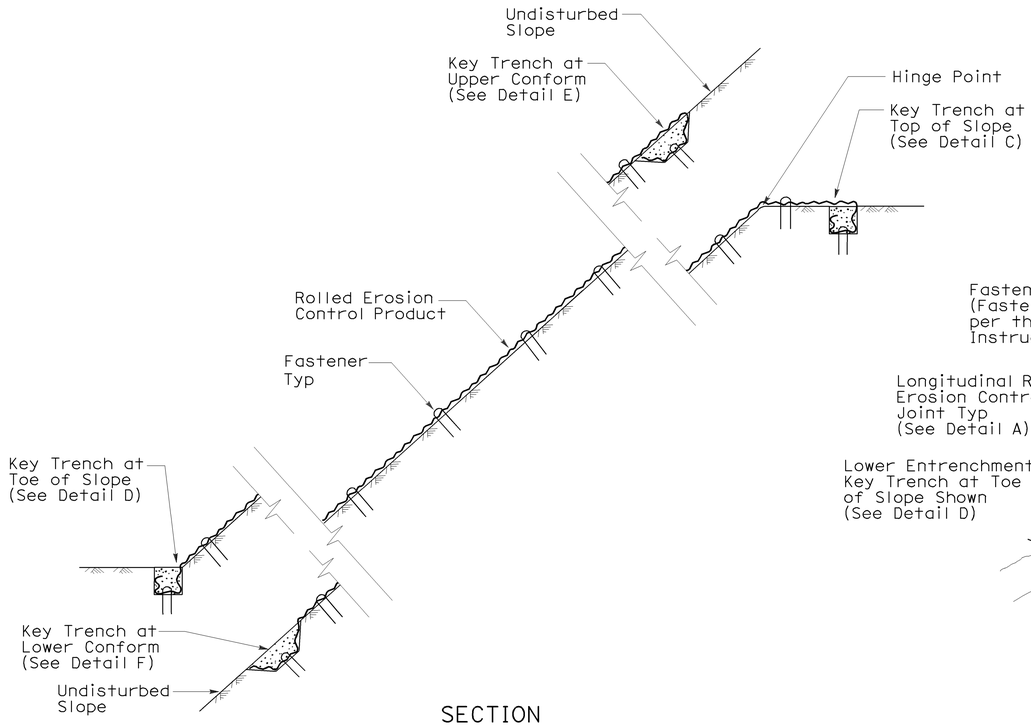

SECTION

ROLLED EROSION CONTROL PRODUCT ON SLOPE WITH VARIOUS KEY ENTRENCHMENTS

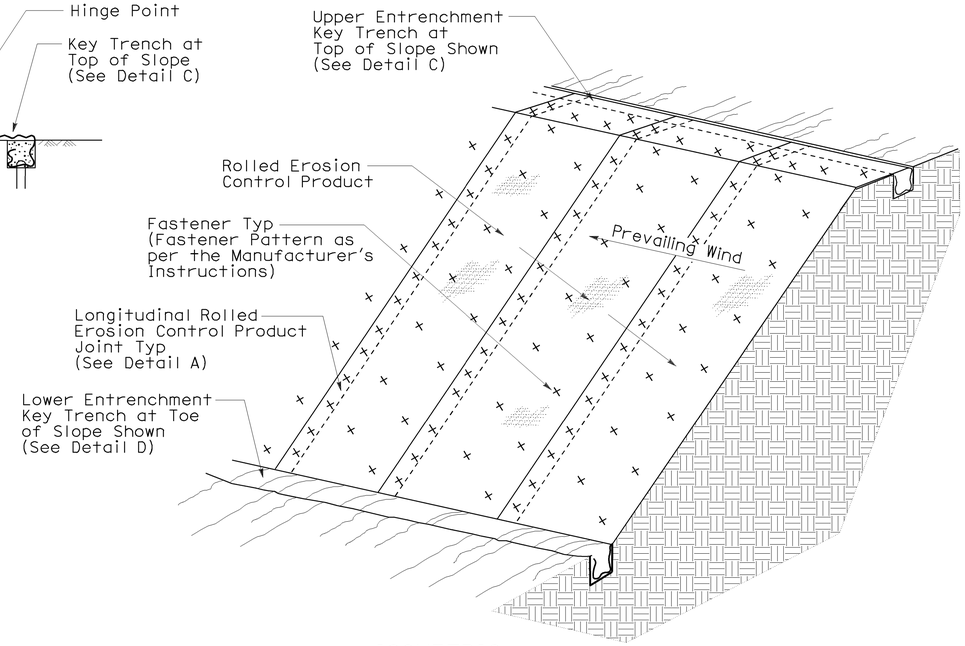

ISOMETRIC

ROLLED EROSION CONTROL PRODUCT ON SLOPE

NOTE:

1. Fiber Roll/Compost Sock shown for reference purposes only.
2. If transverse rolled erosion control product joints are required on slopes, see Detail B.

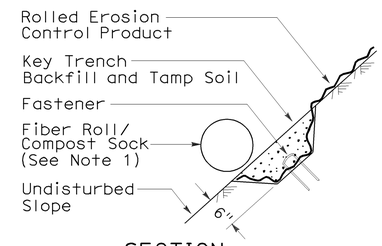

SECTION

DETAIL F
KEY TRENCH AT LOWER CONFORM

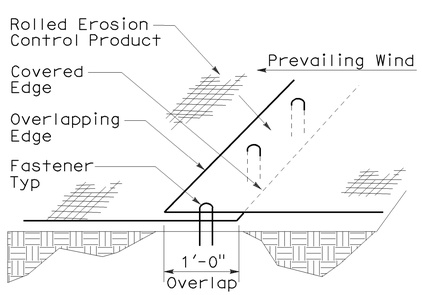

PERSPECTIVE

DETAIL A
LONGITUDINAL ROLLED EROSION CONTROL PRODUCT JOINT

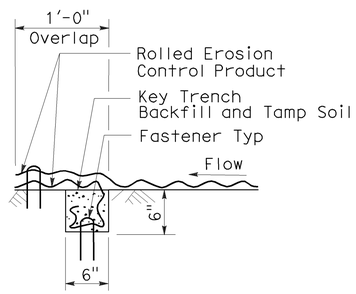

SECTION

DETAIL B
TRANSVERSE ROLLED EROSION CONTROL PRODUCT JOINT

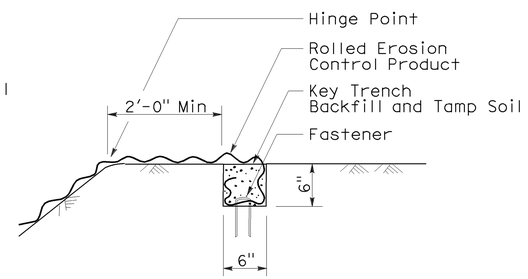

SECTION

DETAIL C
KEY TRENCH AT TOP OF SLOPE

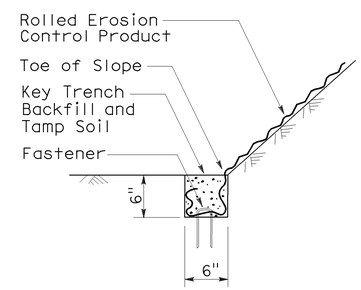

SECTION

DETAIL D
KEY TRENCH AT TOE OF SLOPE

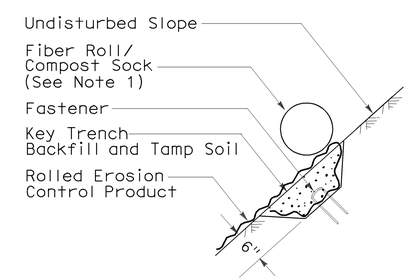

SECTION

DETAIL E
KEY TRENCH AT UPPER CONFORM

STATE OF CALIFORNIA
DEPARTMENT OF TRANSPORTATION

ROLLED EROSION CONTROL PRODUCT

NO SCALE

NSP H53 DATED JUNE 5, 2009 SUPPLEMENTS THE STANDARD PLANS BOOK DATED MAY 2006.

NEW STANDARD PLAN NSP H53

2006 NEW STANDARD PLAN NSP H53

3-4-09

DIST	COUNTY	ROUTE	POST MILES TOTAL PROJECT	SHEET NO.	TOTAL SHEETS
09	Iny	127	0.1/16.2	29	32

Randell D. Hiatt
REGISTERED CIVIL ENGINEER

June 6, 2008
PLANS APPROVAL DATE

REGISTERED PROFESSIONAL ENGINEER
Randell D. Hiatt
No. C50200
Exp. 6-30-09
CIVIL
STATE OF CALIFORNIA

The State of California or its officers or agents shall not be responsible for the accuracy or completeness of electronic copies of this plan sheet.

To accompany plans dated 2-6-12

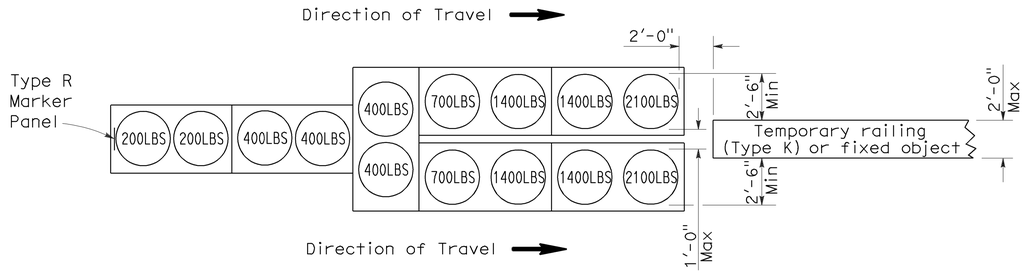

ARRAY 'TU14'

Approach speed 45 mph or more

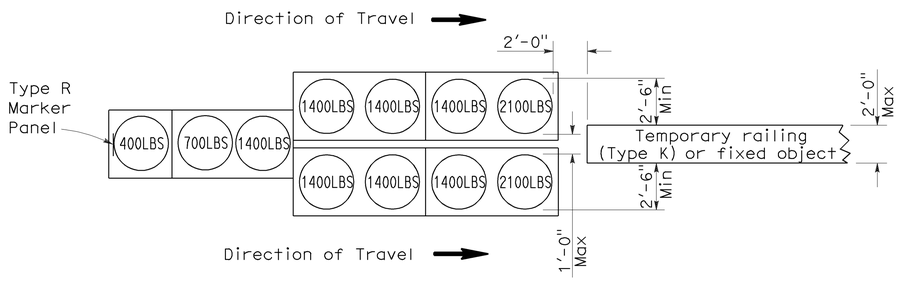

ARRAY 'TU11'

Approach speed less than 45 mph

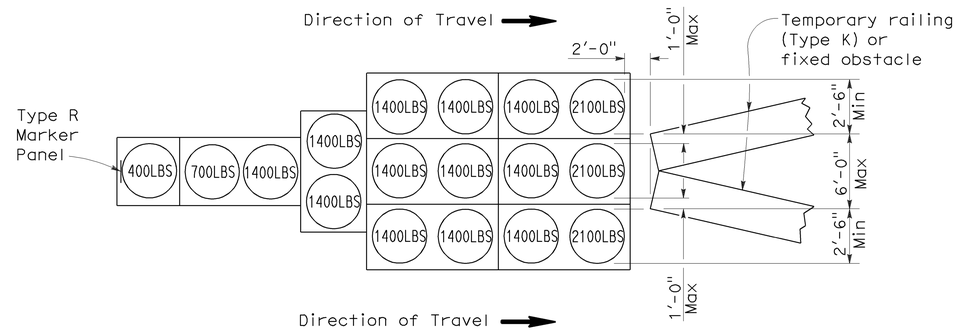

ARRAY 'TU17'

Approach speed less than 45 mph

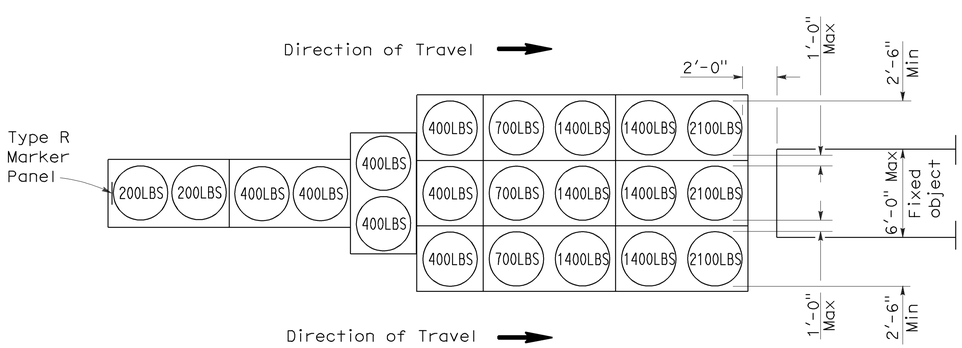

ARRAY 'TU21'

Approach speed 45 mph or more

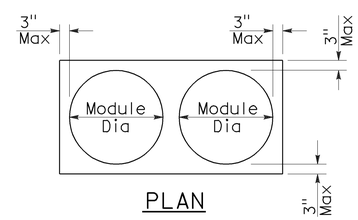

PLAN

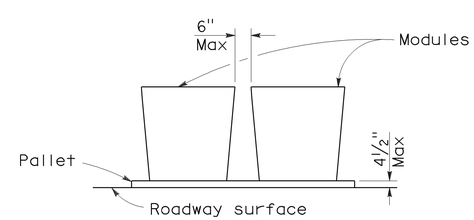

ELEVATION

CRASH CUSHION PALLET DETAIL

See Note 7

NOTES:

1. (XXX) Indicates sand filled module location and weight of sand in pounds for each module. Module spacing is based on the greater diameter of the module.
2. All sand weights are nominal.
3. Temporary crash cushion arrays shall not encroach on the traveled way.
4. Place the top of Type R marker panel 1" below the module lid.
5. Refer to Standard Plan A73B for marker details.
6. Approach speeds indicated conform to NCHRP 350 Report criteria.
7. Use of pallets is optional.

STATE OF CALIFORNIA
DEPARTMENT OF TRANSPORTATION

TEMPORARY CRASH CUSHION, SAND FILLED (UNIDIRECTIONAL)

NO SCALE

RSP T1A DATED JUNE 6, 2008 SUPERSEDES STANDARD PLAN T1A
DATED MAY 1, 2006 - PAGE 211 OF THE STANDARD PLANS BOOK DATED MAY 2006.

REVISED STANDARD PLAN RSP T1A

2006 REVISED STANDARD PLAN RSP T1A

5-15-08

DIST	COUNTY	ROUTE	POST MILES TOTAL PROJECT	SHEET NO.	TOTAL SHEETS
09	Iny	127	0.1/16.2	30	32

Randell D. Hiatt
REGISTERED CIVIL ENGINEER

June 6, 2008
PLANS APPROVAL DATE

REGISTERED PROFESSIONAL ENGINEER
Randell D. Hiatt
No. C50200
Exp. 6-30-09
CIVIL
STATE OF CALIFORNIA

The State of California or its officers or agents shall not be responsible for the accuracy or completeness of electronic copies of this plan sheet.

To accompany plans dated 2-6-12

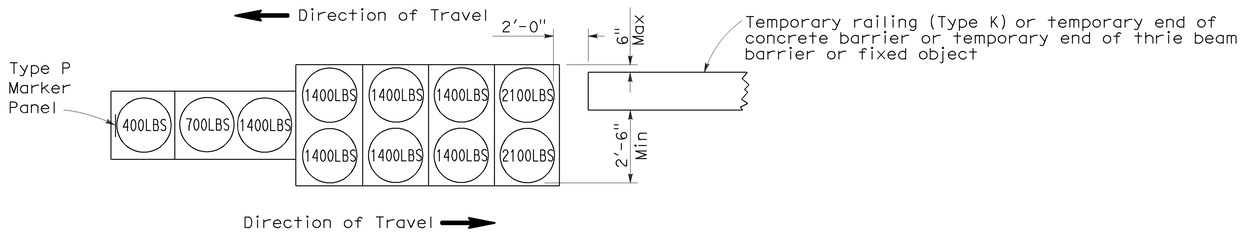

ARRAY 'TB11'

Approach speed less than 45 mph

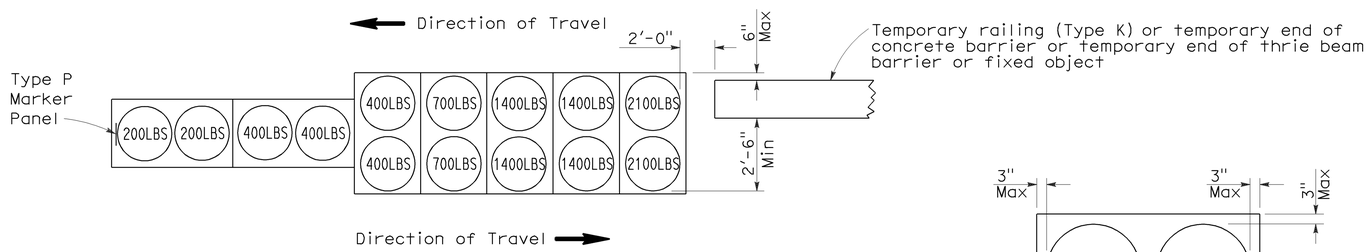

ARRAY 'TB14'

Approach speed 45 mph or more

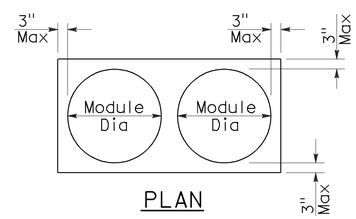

PLAN

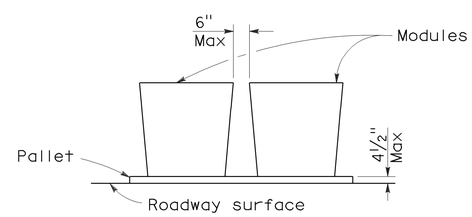

ELEVATION

CRASH CUSHION PALLET DETAIL

See Note 7

NOTES:

1. (XXX) Indicates sand filled module location and weight of sand in pounds for each module. Module spacing is based on the greater diameter of the module.
2. All sand weights are nominal.
3. Temporary crash cushion arrays shall not encroach on the traveled way.
4. Place the Type P marker panel so that the bottom of the panel rests upon the pallet.
5. Refer to Standard Plan A73B for marker details.
6. Approach speeds indicated conform to NCHRP 350 Report criteria.
7. Use of pallets is optional.

STATE OF CALIFORNIA
DEPARTMENT OF TRANSPORTATION

TEMPORARY CRASH CUSHION, SAND FILLED (BIDIRECTIONAL)

NO SCALE

RSP T1B DATED JUNE 6, 2008 SUPERSEDES STANDARD PLAN T1B
DATED MAY 1, 2006 - PAGE 212 OF THE STANDARD PLANS BOOK DATED MAY 2006.

REVISED STANDARD PLAN RSP T1B

2006 REVISED STANDARD PLAN RSP T1B

5-15-08

DIST	COUNTY	ROUTE	POST MILES TOTAL PROJECT	SHEET NO.	TOTAL SHEETS
09	Iny	127	0.1/16.2	31	32

Randell D. Hiatt
REGISTERED CIVIL ENGINEER

June 6, 2008
PLANS APPROVAL DATE

REGISTERED PROFESSIONAL ENGINEER
Randell D. Hiatt
No. C50200
Exp. 6-30-09
CIVIL
STATE OF CALIFORNIA

The State of California or its officers or agents shall not be responsible for the accuracy or completeness of electronic copies of this plan sheet.

To accompany plans dated 2-6-12

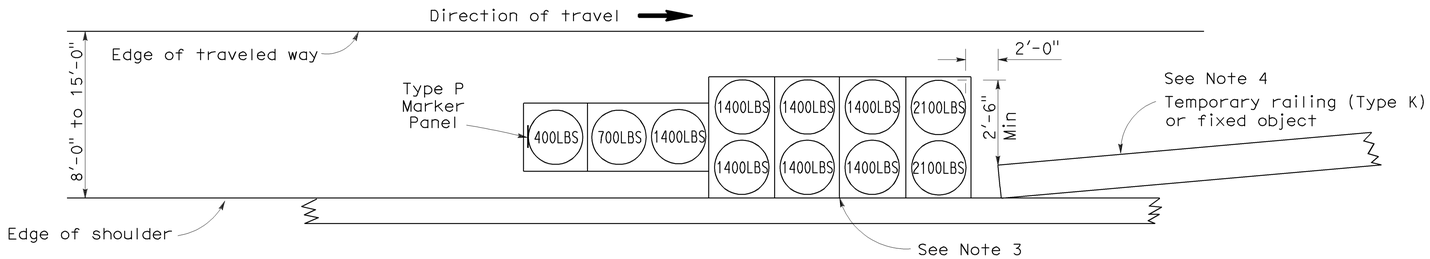

ARRAY 'TS11'

Approach speed less than 45 mph
See Note 9

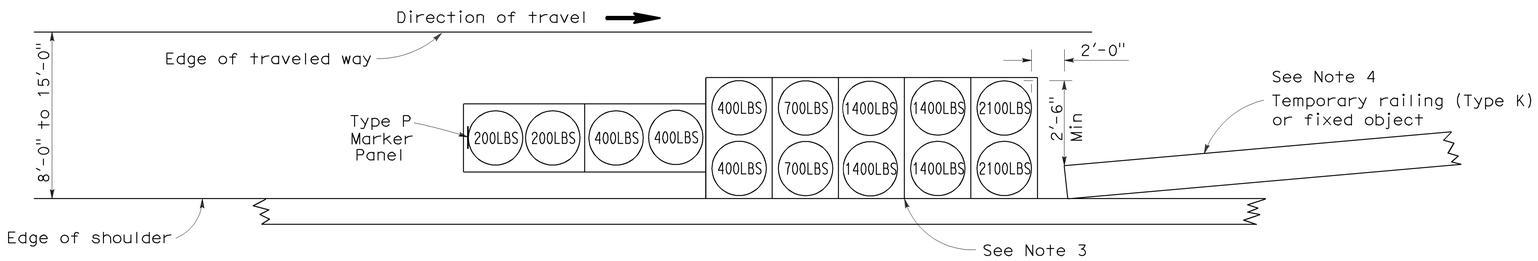

ARRAY 'TS14'

Approach speed 45 mph or more
See Note 9

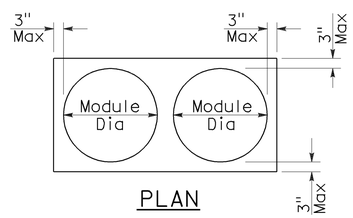

PLAN

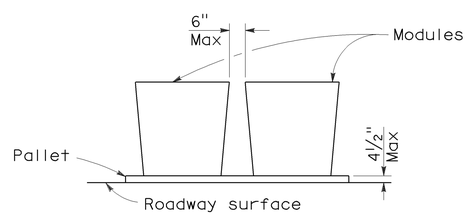

ELEVATION

CRASH CUSHION PALLET DETAIL

See Note 11

NOTES:

1. (XXX) Indicates sand filled module location and weight of sand in pounds for each module. Module spacing is based on the greater diameter of the module.
2. All sand weights are nominal.
3. The temporary crash cushion arrays shown on this plan shall be used only in locations where there will be traffic on one side of the temporary crash cushion array.
4. If the fixed object or approach end of the temporary railing is less than 15'-0" from the edge of traveled way, a temporary crash cushion is required in a construction or work zone.
5. Temporary crash cushion arrays shall not encroach on the traveled way.
6. Arrays for median shoulders shall conform to details shown on this plan for outside shoulders.
7. Place the Type P marker panel so that the bottom of the panel rests upon the pallet and faces traffic.
8. Refer to Standard Plan A73B for marker details.
9. For shoulder widths less than 8'-0", appropriate approved crash cushion protection, other than sand filled modules, shall be provided at fixed objects and at approach ends of temporary railing. The specific type of crash cushion shall be as shown on the project plans or as specified in the Special Provisions, or if not shown on the project plans or specified in the Special Provisions, shall be as approved by the Engineer.
10. Approach speeds indicated conform to NCHRP 350 Report criteria.
11. Use of pallets is optional.

STATE OF CALIFORNIA
DEPARTMENT OF TRANSPORTATION

TEMPORARY CRASH CUSHION, SAND FILLED (SHOULDER INSTALLATIONS)

NO SCALE

RSP T2 DATED JUNE 6, 2008 SUPERSEDES STANDARD PLAN T2
DATED MAY 1, 2006 - PAGE 213 OF THE STANDARD PLANS BOOK DATED MAY 2006.

REVISED STANDARD PLAN RSP T2

2006 REVISED STANDARD PLAN RSP T2

5-15-08

Dist	COUNTY	ROUTE	POST MILES TOTAL PROJECT	SHEET No.	TOTAL SHEETS
09	Iny	127	0.1/16.2	32	32

Randell D. Hiatt
REGISTERED CIVIL ENGINEER

May 20, 2011
PLANS APPROVAL DATE

REGISTERED PROFESSIONAL ENGINEER
Randell D. Hiatt
No. C50200
Exp. 6-30-11
CIVIL
STATE OF CALIFORNIA

The State of California or its officers or agents shall not be responsible for the accuracy or completeness of electronic copies of this plan sheet.

To accompany plans dated 2-6-12

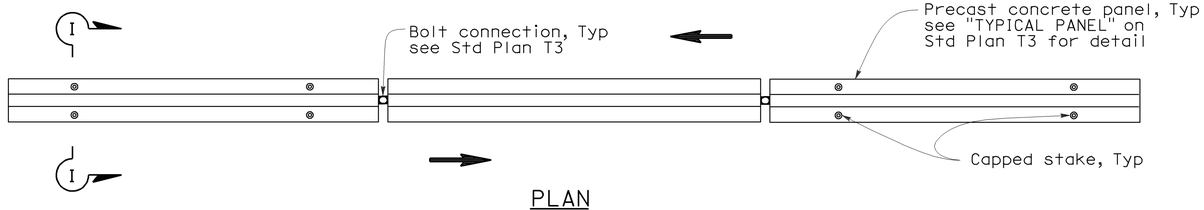

PLAN

RAILING STAKING CONFIGURATION FOR TWO-WAY TRAFFIC

See Note 1

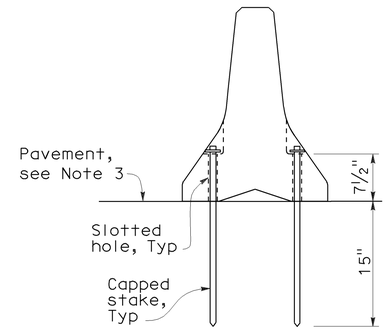

SECTION I-I

NOTES:

1. Where Type K Temporary Railing is placed as a temporary or long term barrier in two-way traffic on highways with less than 24" from the edge of traveled way, use four capped stakes per every other panel with end panels staked.
2. Where Type K Temporary Railing is placed 3" to 24" from the edge of an excavation on highways, use two capped stakes per panel along the traffic side.
3. Staked Type K Temporary Railing must be supported by at least 4" thick concrete, hot mix asphalt or existing asphalt concrete pavement.
4. The minimum yield strength for the washer must be 60,000 psi.
5. Direction of adjacent traffic indicated by ⟹.

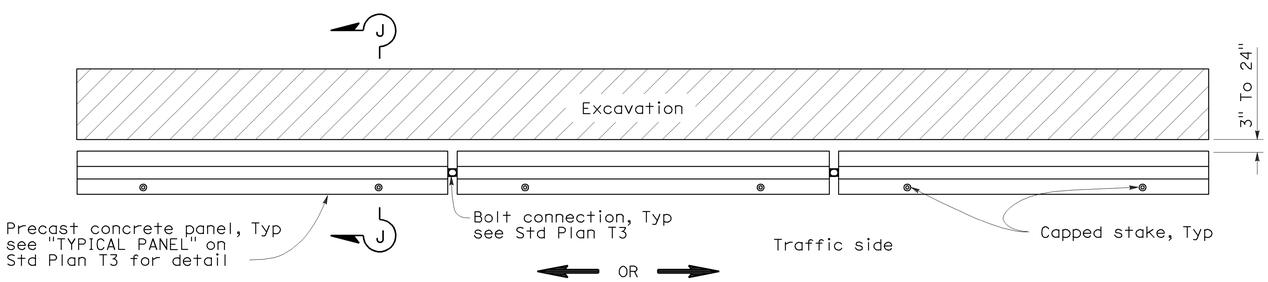

PLAN

RAILING STAKING CONFIGURATION ADJACENT TO AN EXCAVATION

See Note 2

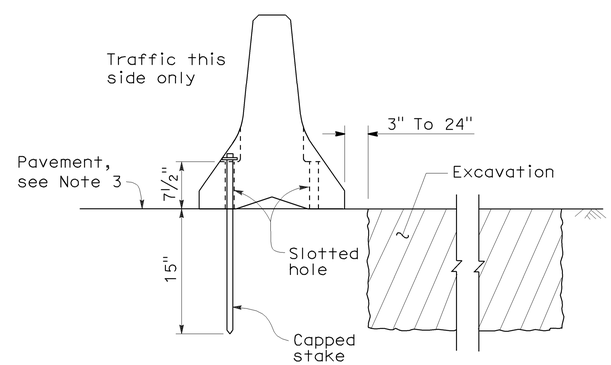

SECTION J-J

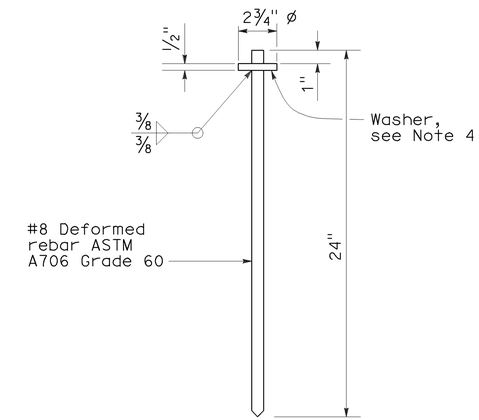

CAPPED STAKE DETAIL

STATE OF CALIFORNIA
DEPARTMENT OF TRANSPORTATION

TEMPORARY RAILING (TYPE K)

NO SCALE

NSP T3A DATED MAY 20, 2011 SUPPLEMENTS
THE STANDARD PLANS BOOK DATED MAY 2006.

NEW STANDARD PLAN NSP T3A

2006 NEW STANDARD PLAN NSP T3A

8-31-10