Dist	COUNTY	ROUTE	POST MILES TOTAL PROJECT	SHEET No.	TOTAL SHEETS
09	Mno	395	R12.6/35.3	1	17

STATE OF CALIFORNIA

DEPARTMENT OF TRANSPORTATION

ACNH-P395(233)E

PROJECT PLANS FOR CONSTRUCTION ON

STATE HIGHWAY

IN MONO COUNTY NEAR HILTON CREEK FROM 0.1 MILE NORTH OF CROOKED CREEK BRIDGE TO 1.0 MILE SOUTH OF OBSIDIAN DOME ROAD

TO BE SUPPLEMENTED BY STANDARD PLANS DATED MAY 2006

INDEX OF PLANS

SHEET No	DESCRIPTION
1	TITLE AND LOCATION MAP
2	TYPICAL CROSS SECTIONS
3-5	CONSTRUCTION DETAILS
6	WATER POLLUTION CONTROL PLANS
7	CONSTRUCTION AREA SIGNS
8-10	PAVEMENT DELINEATION QUANTITIES
11	SUMMARY OF QUANTITIES
12-17	REVISED AND NEW STANDARD PLANS

THE STANDARD PLANS LIST APPLICABLE TO THIS CONTRACT IS INCLUDED IN THE NOTICE TO CONTRACTORS AND SPECIAL PROVISIONS BOOK.

LOCATION MAP

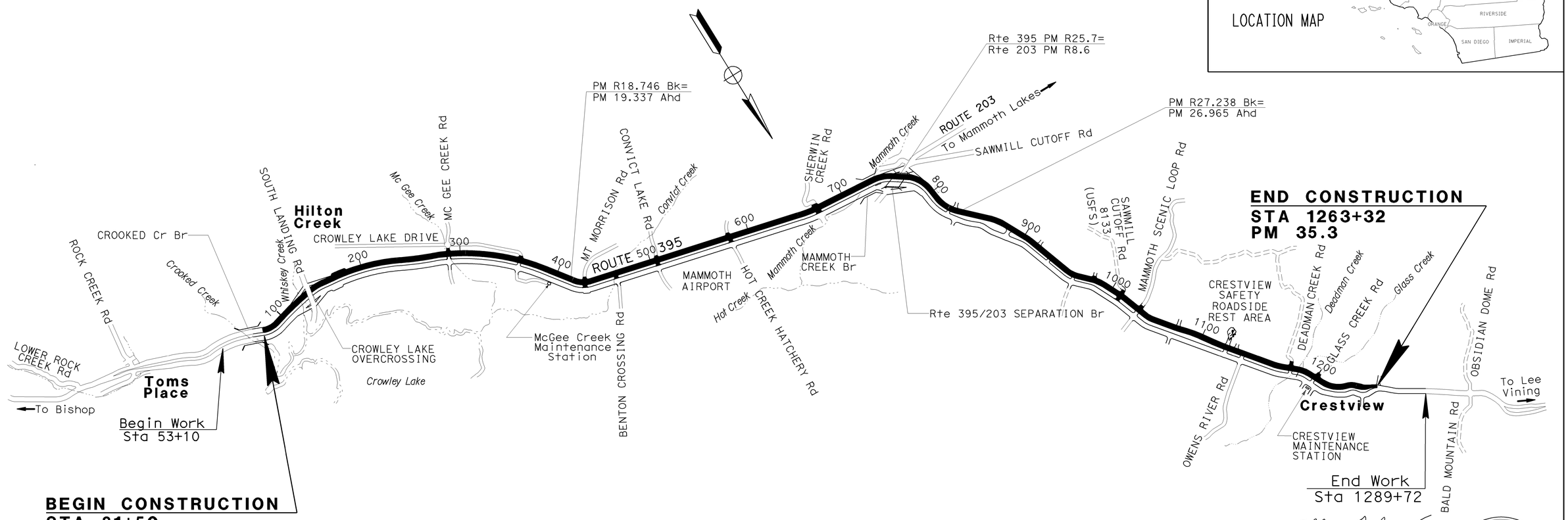

NO SCALE

THE CONTRACTOR SHALL POSSESS THE CLASS (OR CLASSES) OF LICENSE AS SPECIFIED IN THE "NOTICE TO BIDDERS."

PROJECT MANAGER: JOHN FOX

DESIGN ENGINEER: ALLEN TOBEY

Allen Tobey 7-19-10
PROJECT ENGINEER DATE
REGISTERED CIVIL ENGINEER

REGISTERED PROFESSIONAL ENGINEER ALLEN C. TOBEY No. 29764 Exp. 3-31-11 CIVIL STATE OF CALIFORNIA

August 9, 2010
PLANS APPROVAL DATE

THE STATE OF CALIFORNIA OR ITS OFFICERS OR AGENTS SHALL NOT BE RESPONSIBLE FOR THE ACCURACY OR COMPLETENESS OF SCANNED COPIES OF THIS PLAN SHEET.

CONTRACT No.	09-347404
PROJECT ID	0900000221

LAST REVISION 07-19-10 DATE PLOTTED => 17-NOV-2010 TIME PLOTTED => 17:28

Dist	COUNTY	ROUTE	POST MILES TOTAL PROJECT	SHEET No.	TOTAL SHEETS
09	Mno	395	R12.6/35.3	2	17

REGISTERED CIVIL ENGINEER 7-19-10 DATE

8-9-2010
PLANS APPROVAL DATE

REGISTERED PROFESSIONAL ENGINEER ALLEN C. TOBEY No. 29764 Exp. 03-31-11 CIVIL STATE OF CALIFORNIA

THE STATE OF CALIFORNIA OR ITS OFFICERS OR AGENTS SHALL NOT BE RESPONSIBLE FOR THE ACCURACY OR COMPLETENESS OF SCANNED COPIES OF THIS PLAN SHEET.

NOTES:

1. DIMENSIONS OF THE PAVEMENT STRUCTURES (STRUCTURAL SECTIONS) ARE SUBJECT TO TOLERANCES SPECIFIED IN THE STANDARD SPECIFICATIONS
2. SUPERELEVATION AS SHOWN OR AS DIRECTED BY THE ENGINEER
3. FOR ACCURATE RIGHT OF WAY AND ACCESS DATA, CONTACT RIGHT OF WAY ENGINEERING AT THE DISTRICT OFFICE.
4. STATIONING SHOWN IS FOR CONSTRUCTION PURPOSES ONLY.

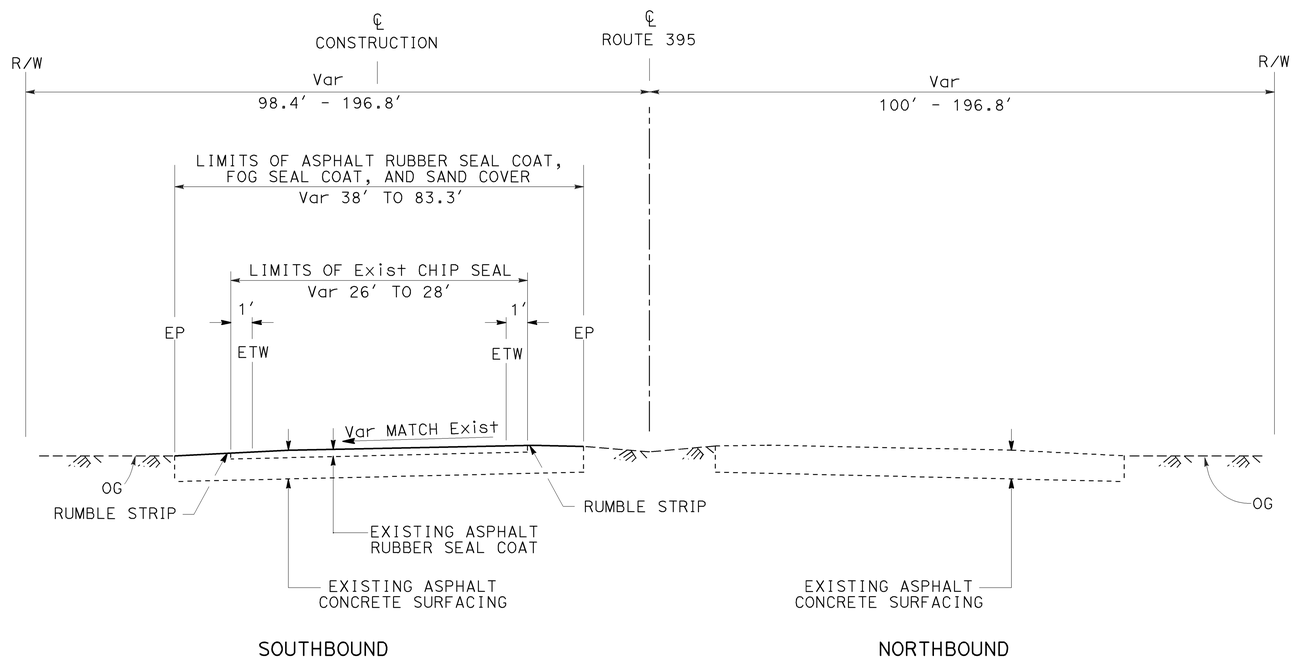

ROUTE 395

STA 81+50 TO STA 1263+32

EXISTING UTILITY FACILITIES HAVE NOT BEEN PLOTTED ON THESE PLANS

TYPICAL CROSS SECTIONS
NO SCALE
X-1

STATE OF CALIFORNIA - DEPARTMENT OF TRANSPORTATION
Caltrans MAINTENANCE ENGINEERING

FUNCTIONAL SUPERVISOR: JOHN FOX
CALCULATED-DESIGNED BY: BRAD LARSON
CHECKED BY: ALLEN TOBEY
REVISED BY
DATE REVISED

LAST REVISION 07-15-10
DATE PLOTTED => 09-AUG-2010
TIME PLOTTED => 16:12

Dist	COUNTY	ROUTE	POST MILES TOTAL PROJECT	SHEET No.	TOTAL SHEETS
09	Mno	395	R12.6/35.3	3	17

Allen Tobey 7-19-10
REGISTERED CIVIL ENGINEER DATE

8-9-2010
PLANS APPROVAL DATE

REGISTERED PROFESSIONAL ENGINEER
ALLEN C. TOBEY
No. 29764
Exp. 03-31-11
CIVIL
STATE OF CALIFORNIA

THE STATE OF CALIFORNIA OR ITS OFFICERS OR AGENTS SHALL NOT BE RESPONSIBLE FOR THE ACCURACY OR COMPLETENESS OF SCANNED COPIES OF THIS PLAN SHEET.

LEGEND

- LIMITS OF ASPHALT RUBBER SEAL COAT, SCREENINGS, FOG SEAL COAT, AND SAND COVER

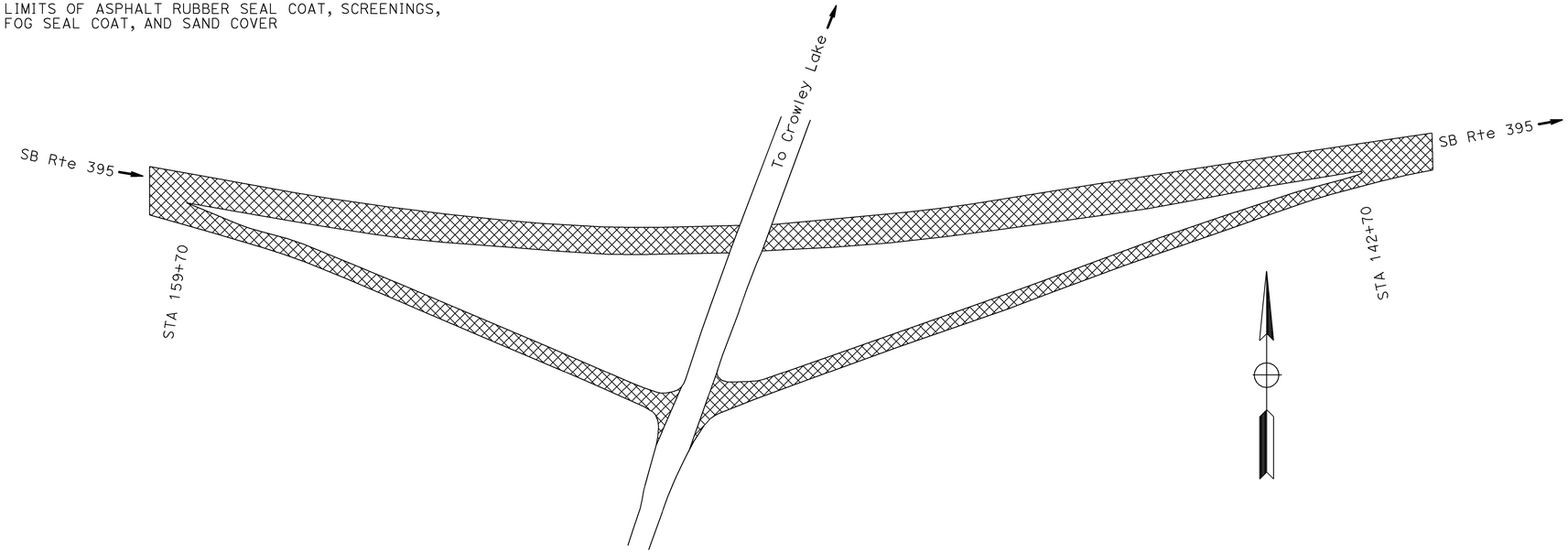

SB ON/OFF RAMP AT CROWLEY LAKE OVERCROSSING (No. 47-0048)

STA 142+70 TO STA 159+70

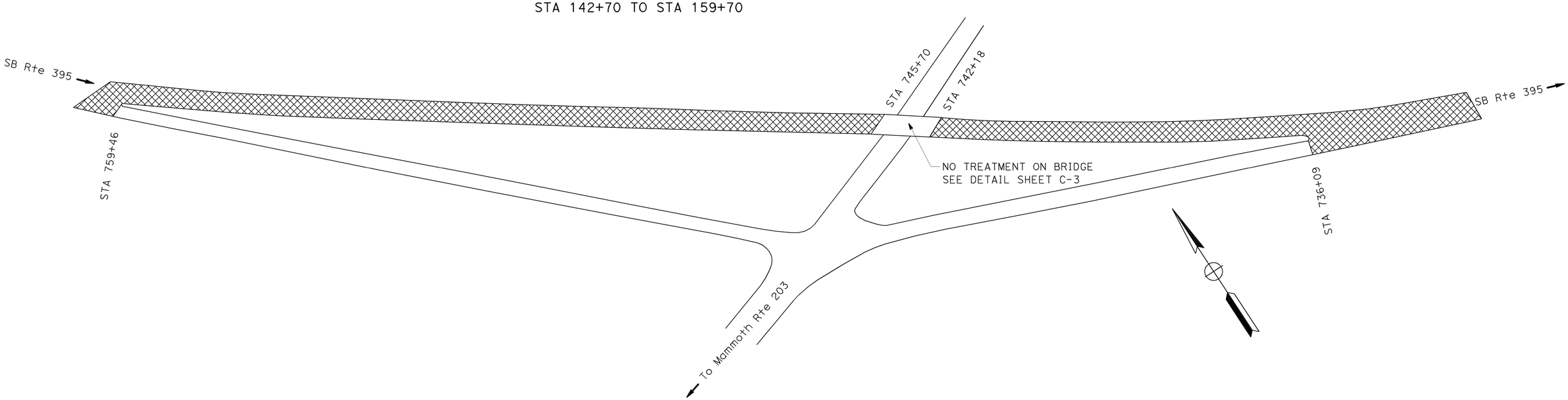

SB ON/OFF RAMP AT ROUTE 395/203 SEPARATION (No. 47-0050L)

STA 736+09 TO STA 759+46

EXISTING UTILITY FACILITIES HAVE NOT BEEN PLOTTED ON THESE PLANS

CONSTRUCTION DETAILS

NO SCALE

C-1

STATE OF CALIFORNIA - DEPARTMENT OF TRANSPORTATION
Caltrans MAINTENANCE ENGINEERING

FUNCTIONAL SUPERVISOR: JOHN FOX
CALCULATED-DESIGNED BY: BRAD LARSON
CHECKED BY: ALLEN TOBEY
REVISED BY
DATE REVISED

LAST REVISION 07-15-10
DATE PLOTTED => 09-AUG-2010
TIME PLOTTED => 16:12

Dist	COUNTY	ROUTE	POST MILES TOTAL PROJECT	SHEET No.	TOTAL SHEETS
09	Mno	395	R12.6/35.3	4	17

Allen Tobey 7-15-10
REGISTERED CIVIL ENGINEER DATE

8-9-2010
PLANS APPROVAL DATE

REGISTERED PROFESSIONAL ENGINEER ALLEN C. TOBEY No. 29764 Exp.03-31-11 CIVIL STATE OF CALIFORNIA

THE STATE OF CALIFORNIA OR ITS OFFICERS OR AGENTS SHALL NOT BE RESPONSIBLE FOR THE ACCURACY OR COMPLETENESS OF SCANNED COPIES OF THIS PLAN SHEET.

MEDIAN CROSSOVER LIMITS TABLE

STATION	PM	L†	R†	DISTANCE	DESCRIPTION
293+46	R16.62		X	38.0	MEDIAN CROSSOVER
367+77	R18.04		X	25.0	MEDIAN CROSSOVER
432+82	19.86		X	8.0	MEDIAN CROSSOVER
459+04	20.36		X	46.0	MEDIAN CROSSOVER
509+99	21.31		X	37.0	MEDIAN CROSSOVER
584+58	22.74		X	37.0	MEDIAN CROSSOVER
673+34	R24.40		X	39.0	MEDIAN CROSSOVER
811+95	R27.05		X	15.0	MEDIAN CROSSOVER
872+40	27.89		X	168.0	MEDIAN CROSSOVER
919+50	28.78		X	15.0	MEDIAN CROSSOVER
949+26	29.33		X	18.0	MEDIAN CROSSOVER
998+10	30.26		X	67.0	MEDIAN CROSSOVER
1019+42	30.66		X	65.0	MEDIAN CROSSOVER
1111+33	32.42		X	33.0	MEDIAN CROSSOVER
1128+56	32.74		X	30.0	MEDIAN CROSSOVER
1176+90	33.65		X	29.0	MEDIAN CROSSOVER
1200+59	34.10		X	45.0	MEDIAN CROSSOVER

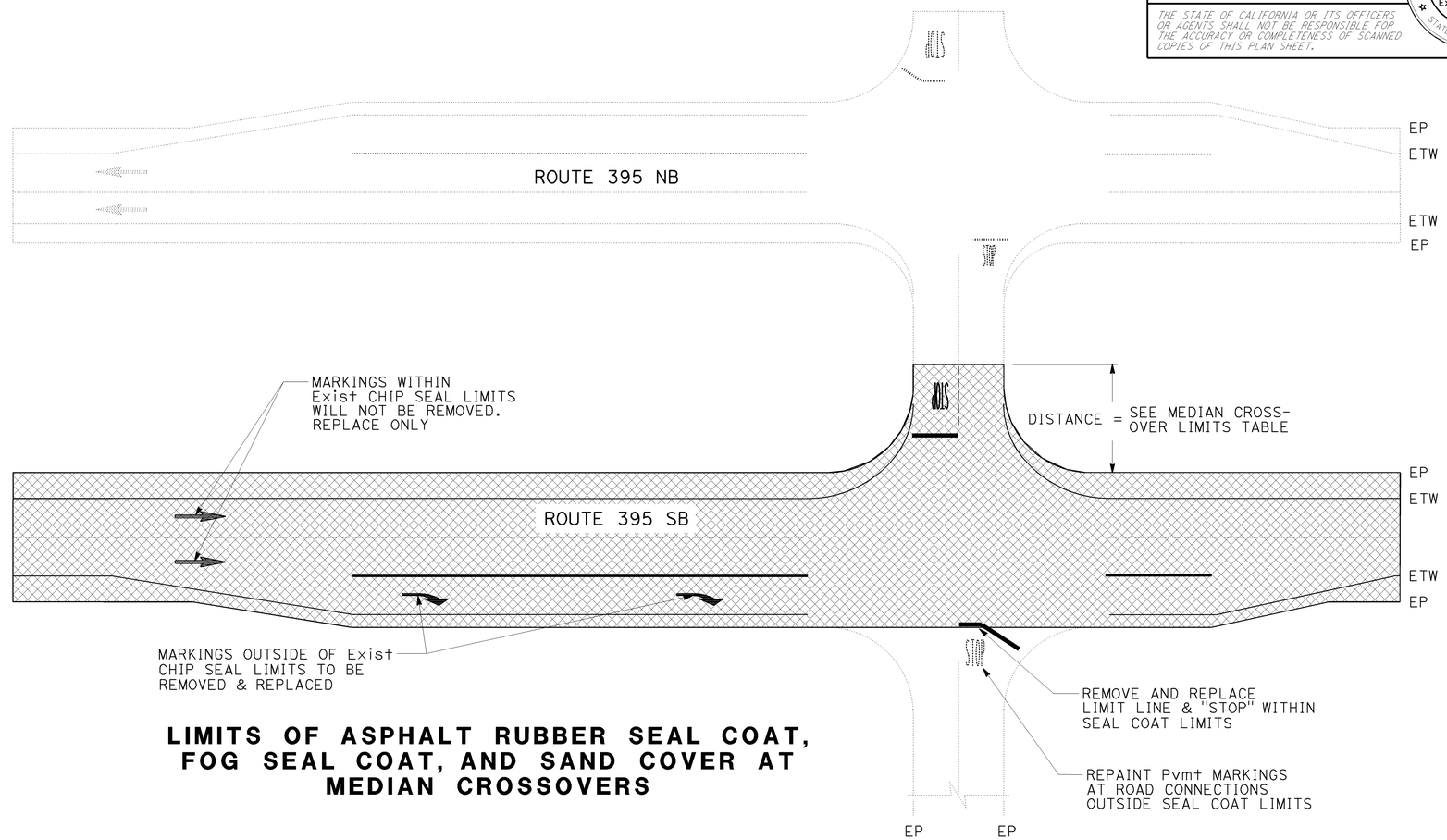

LIMITS OF ASPHALT RUBBER SEAL COAT, FOG SEAL COAT, AND SAND COVER AT MEDIAN CROSSOVERS

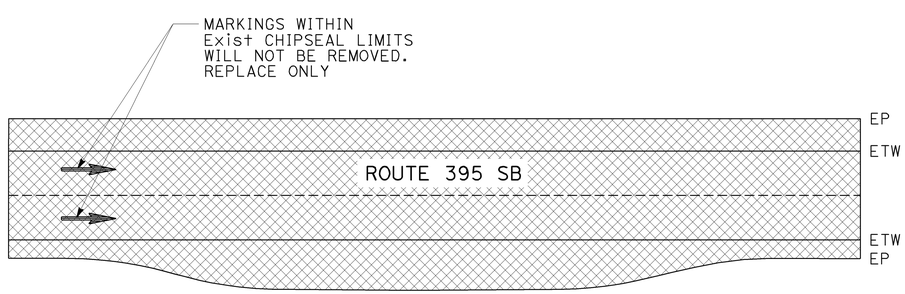

LIMITS OF ASPHALT RUBBER SEAL COAT, FOG SEAL COAT, AND SAND COVER AT PAVED TURN-OUTS (TYPICAL)

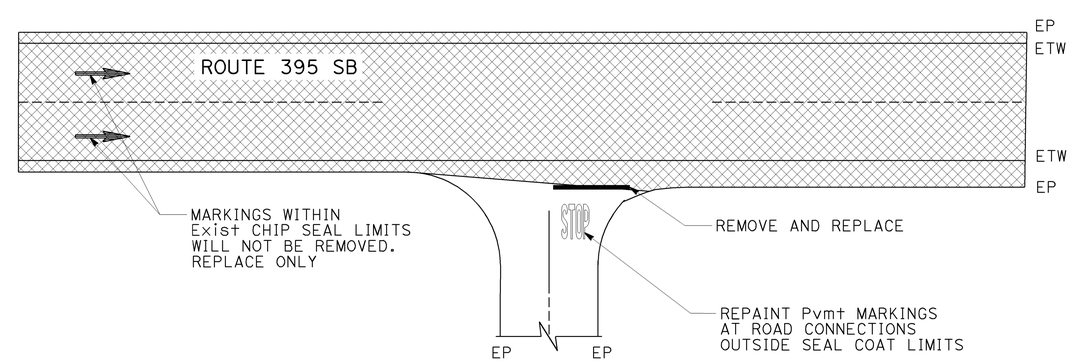

LIMITS OF ASPHALT RUBBER SEAL COAT, FOG SEAL COAT, AND SAND COVER AT ROAD CONNECTIONS

EXISTING UTILITY FACILITIES HAVE NOT BEEN PLOTTED ON THESE PLANS

CONSTRUCTION DETAILS C-2

NO SCALE

REVISED BY | DATE REVISED
BRAD LARSON | DAMON CHERENZIA
CALCULATED-DESIGNED BY | CHECKED BY
FUNCTIONAL SUPERVISOR | JOHN FOX

STATE OF CALIFORNIA - DEPARTMENT OF TRANSPORTATION
Caltrans MAINTENANCE ENGINEERING

LAST REVISION 07-15-10 | DATE PLOTTED => 09-AUG-2010 | TIME PLOTTED => 16:33

Dist	COUNTY	ROUTE	POST MILES TOTAL PROJECT	SHEET No.	TOTAL SHEETS
09	Mno	395	R12.6/35.3	5	17

Allen Tobey 7-19-10
REGISTERED CIVIL ENGINEER DATE

8-9-2010
PLANS APPROVAL DATE

REGISTERED PROFESSIONAL ENGINEER ALLEN C. TOBEY No. 29764 Exp. 03-31-11 CIVIL STATE OF CALIFORNIA

THE STATE OF CALIFORNIA OR ITS OFFICERS OR AGENTS SHALL NOT BE RESPONSIBLE FOR THE ACCURACY OR COMPLETENESS OF SCANNED COPIES OF THIS PLAN SHEET.

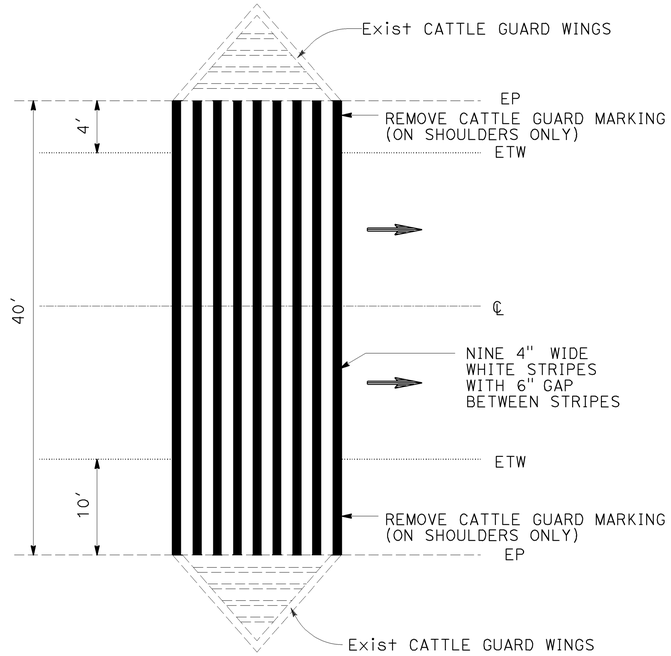

PAINTED CATTLE GUARD DETAIL

PM R26.62 (STA 816+62)

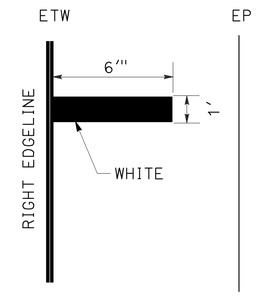

AIRCRAFT MARKING

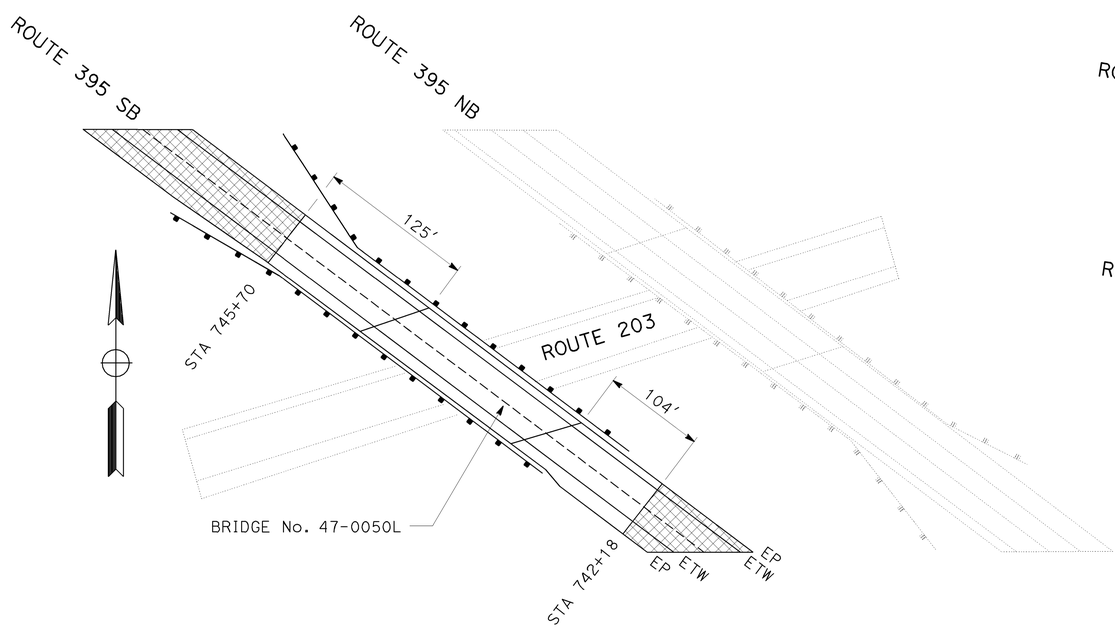

LIMITS OF ASPHALT RUBBER SEAL COAT AT ROUTE 395/203 GRADE Sep BRIDGE (47-0050L)

PM R25.75 (STA 743+94)

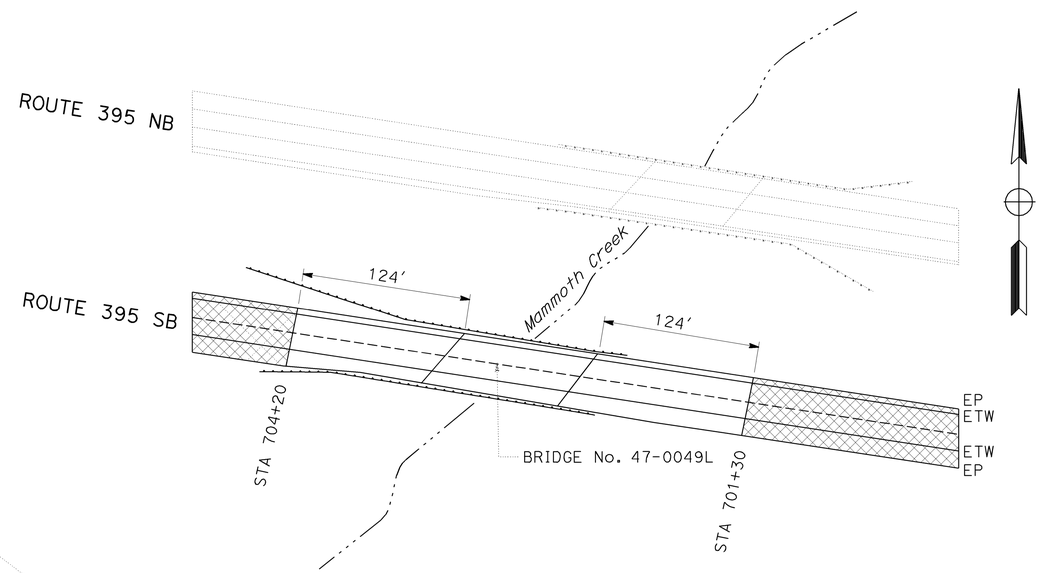

LIMITS OF ASPHALT RUBBER SEAL COAT AT MAMMOTH CREEK BRIDGE (47-0049L)

PM R24.97 (STA 702+78)

EXISTING UTILITY FACILITIES HAVE NOT BEEN PLOTTED ON THESE PLANS

CONSTRUCTION DETAILS

NO SCALE

C-3

STATE OF CALIFORNIA - DEPARTMENT OF TRANSPORTATION
Caltrans MAINTENANCE ENGINEERING

FUNCTIONAL SUPERVISOR: JOHN FOX
CALCULATED-DESIGNED BY: BRAD LARSON
CHECKED BY: DAMON CHERENZIA
REVISED BY / DATE REVISED

LAST REVISION 07-15-10 | DATE PLOTTED => 09-AUG-2010 | TIME PLOTTED => 16:12

Dist	COUNTY	ROUTE	POST MILES TOTAL PROJECT	SHEET No.	TOTAL SHEETS
09	Mno	395	R12.6/35.3	6	17

REGISTERED CIVIL ENGINEER 7-19-10 DATE

8-9-2010
PLANS APPROVAL DATE

REGISTERED PROFESSIONAL ENGINEER ALLEN C. TOBEY No. 29764 Exp. 03-31-11 CIVIL STATE OF CALIFORNIA

THE STATE OF CALIFORNIA OR ITS OFFICERS OR AGENTS SHALL NOT BE RESPONSIBLE FOR THE ACCURACY OR COMPLETENESS OF SCANNED COPIES OF THIS PLAN SHEET.

NOTES:
1. EXACT LOCATION AND POSITION OF TEMPORARY FIBER ROLL TO BE DETERMINED BY THE ENGINEER.
2. TEMPORARY DRAINAGE INLET PROTECTION SHALL BE TYPE 5 (SEDIMENT FILTER BAG).

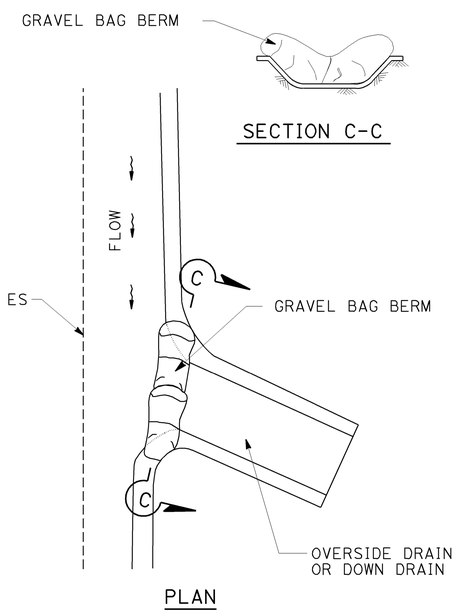

TEMPORARY GRAVEL BAG BERM OVERSIDE DRAIN AND DOWN DRAIN

TEMPORARY GRAVEL BAG BERM

STATION	LF	L†	R†	DESCRIPTION
85+43	4	X		OVERSIDE DRAIN
90+90	6	X		OVERSIDE DRAIN
120+50	6	X		OVERSIDE DRAIN
134+55	6	X		OVERSIDE DRAIN
159+60	6	X		DOWN DRAIN
163+64	8	X		OVERSIDE DRAIN
165+92	4	X		OVERSIDE DRAIN
193+75	6	X		OVERSIDE DRAIN
808+55	6	X		OVERSIDE DRAIN
817+35	6	X		DOWN DRAIN
829+00	8	X		OVERSIDE DRAIN
841+39	12	X		OVERSIDE DRAIN
849+14	24	X		OVERSIDE DRAIN
869+55	6	X		DOWN DRAIN
871+82	16	X		OVERSIDE DRAIN
885+05	6	X		OVERSIDE DRAIN
886+20	6		X	OVERSIDE DRAIN
903+58	6	X		OVERSIDE DRAIN
993+71	6	X		DOWN DRAIN
995+71	6		X	DOWN DRAIN
996+42	6		X	DOWN DRAIN
1013+11	6	X		DOWN DRAIN
1015+13	6	X		OVERSIDE DRAIN
1019+96	8	X		OVERSIDE DRAIN
1025+32	8	X		OVERSIDE DRAIN
1100+44	6	X		OVERSIDE DRAIN
1104+49	6	X		OVERSIDE DRAIN
1061+00	12	X		OVERSIDE DRAIN
1205+50	10		X	OVERSIDE DRAIN
1236+00	20		X	OVERSIDE DRAIN
1246+03	14		X	OVERSIDE DRAIN
TOTAL	256			

TEMPORARY DRAINAGE INLET PROTECTION

STATION	L†	R†	EA	DESCRIPTION
145+91	X		1	DRAINAGE INLET GRATE (24" X 42")
159+80	X		1	DRAINAGE INLET GRATE (36" Dia)
397+27	X		1	DRAINAGE INLET GRATE (24" X 42")
735+58	X		1	DRAINAGE INLET GRATE (24" X 42")
817+90	X		2	DRAINAGE INLET GRATE (24" X 42")
834+85	X		2	DRAINAGE INLET GRATE (24" X 42")
942+44	X		2	DRAINAGE INLET GRATE (24" X 42")
1158+35	X		2	DRAINAGE INLET GRATE (24" X 42")
1188+04		X	2	DRAINAGE INLET GRATE (24" X 42")
1207+76	X		2	DRAINAGE INLET GRATE (24" X 42")
1213+40	X		3	DRAINAGE INLET GRATE (24" X 42")
1219+92	X		2	DRAINAGE INLET GRATE (24" X 42")
1226+95	X		3	DRAINAGE INLET GRATE (24" X 42")
1235+74		X	2	DRAINAGE INLET GRATE (24" X 42")
1245+22	X		3	DRAINAGE INLET GRATE (24" X 42")
1245+42	X		1	DRAINAGE INLET GRATE (24" X 42")
1245+64		X	2	DRAINAGE INLET GRATE (24" X 42")
TOTAL			32	

(N) - NOT A SEPERATE PAY ITEM

TEMPORARY FIBER ROLL

STATION	LF	L†	R†	DESCRIPTION
171+00	160	X		CULVERT, LIVE WATER
171+00	100		X	CULVERT, LIVE WATER
172+28	100	X		CULVERT, LIVE WATER
172+28	100		X	CULVERT, LIVE WATER
283+90	100	X		CULVERT, LIVE WATER
285+27	100	X		CULVERT, LIVE WATER
291+18	100	X		MC GEE CREEK, LIVE WATER
702+55	190	X		MAMMOTH CREEK, LIVE WATER
702+55	190		X	MAMMOTH CREEK, LIVE WATER
TOTAL	1140			

TEMPORARY WATER POLLUTION CONTROL DETAILS WPCD-1

STATE OF CALIFORNIA - DEPARTMENT OF TRANSPORTATION
Caltrans MAINTENANCE ENGINEERING

FUNCTIONAL SUPERVISOR: JOHN FOX
CALCULATED-DESIGNED BY: BRAD LARSON
CHECKED BY: DAMON CHERENZIA
REVISED BY
DATE REVISED

LAST REVISION 07-15-10
DATE PLOTTED => 09-AUG-2010
TIME PLOTTED => 16:12

Dist	COUNTY	ROUTE	POST MILES TOTAL PROJECT	SHEET No.	TOTAL SHEETS
09	Mno	395	R12.6/35.3	7	17

Allen Tobey 7-19-10
REGISTERED CIVIL ENGINEER DATE

8-9-2010
PLANS APPROVAL DATE

REGISTERED PROFESSIONAL ENGINEER ALLEN C. TOBEY No. 29764 Exp. 03-31-11 CIVIL STATE OF CALIFORNIA

THE STATE OF CALIFORNIA OR ITS OFFICERS OR AGENTS SHALL NOT BE RESPONSIBLE FOR THE ACCURACY OR COMPLETENESS OF SCANNED COPIES OF THIS PLAN SHEET.

NOTES:

1. FOR SIGN INSTALLATION DETAILS AND DIMENSIONS NOT SHOWN SEE STANDARD PLANS.
2. SEE TABLE FOR PLACEMENT TYPE. EXACT LOCATION AND POSITION OF CONSTRUCTION AREA SIGNS TO BE DETERMINED BY THE ENGINEER.
3. THIS PLAN ACCURATE FOR CONSTRUCTION AREA SIGN WORK ONLY.
4. SIGNS IN CONFLICT WITH EXISTING PROJECTS SHALL BE COVERED UPON INSTALLATION.

PORTABLE CHANGEABLE MESSAGE SIGNS

LANE CLOSED AHEAD	REDUCE SPEED	LOOSE GRAVEL

1. PORTABLE CHANGEABLE MESSAGE SIGN LOCATIONS TO BE CONFIRMED BY THE ENGINEER BEFORE THE ACTUAL CLOSURE.
2. ALTERNATE MESSAGES MUST BE APPROVED BY THE ENGINEER.
3. MESSAGE MAY BE ALTERED BY THE ENGINEER.
4. PORTABLE CHANGEABLE MESSAGE SIGNS SHALL BE DISPLAYED DURING SWEEPING OPERATIONS AND WHEN CONSTRUCTION OPERATIONS ARE ACTIVELY IN PROGRESS.

STATIONARY MOUNTED CONSTRUCTION AREA SIGNS

STATION	PM	PLACEMENT	REMARKS
53+10	R12.10	G	BEGIN WORK SB LANES L†
149+00	R13.77	F	SB ON RAMP FROM CROWLEY LAKE DRIVE L†
293+46	R16.62	E	MEDIAN CROSSOVER R†, MC GEE CREEK ROAD L†
367+77	R18.04	E	MEDIAN CROSSOVER R†, CROWLEY LAKE DRIVE L†
432+82	19.86	E	MEDIAN CROSSOVER R†, MOUNT MORRISON ROAD L†
459+04	20.36	F	MEDIAN CROSSOVER R†
509+99	21.31	E	MEDIAN CROSSOVER R†, CONVICT LAKE ROAD L†
584+58	22.74	E	MEDIAN CROSSOVER R†, S INDUSTRIAL PARK CIRCLE L†
673+34	R24.40	E	MEDIAN CROSSOVER R†, SHERWIN CREEK ROAD L†
741+00	R25.63	F	SB ON RAMP FROM ROUTE 203 L†
811+95	R27.05	F	MEDIAN CROSSOVER R†
872+40	27.89	F	MEDIAN CROSSOVER R†
919+50	28.78	F	MEDIAN CROSSOVER R†
949+26	29.33	F	MEDIAN CROSSOVER R†
998+10	30.26	E	MEDIAN CROSSOVER R†, SAWMILL CUTOFF ROAD L†
1019+42	30.66	E	MEDIAN CROSSOVER R†, MAMMOTH SCENIC LOOP ROAD L†
1111+33	32.42	E	MEDIAN CROSSOVER R†, CRESTVIEW SAFETY ROADSIDE REST AREA L†
1128+56	32.74	F	MEDIAN CROSSOVER R†
1176+90	33.65	E	MEDIAN CROSSOVER R†, DEADMAN CREEK ROAD L†
1200+59	34.10	E	MEDIAN CROSSOVER R†, GLASS CREEK ROAD L†
1265+02	35.33	C	ROAD APPROACH L†
1289+72	35.8	A	END WORK L†

STATIONARY MOUNTED CONSTRUCTION AREA SIGN DETAILS

LAYOUT	TYPE	PANEL SIZE	SIGN MESSAGE	No. OF SIGNS	No. OF POSTS	POST SIZE
1	W20-1	48" x 48"	ROAD WORK AHEAD	1	1	6" x 6"
	C23B (CA)	60" x 24"	PAVEMENT MAINTENANCE	1		
2	W20-1	36" x 36"	ROAD WORK AHEAD	31	31	4" x 6"
3	G20-2	36" x 18"	END ROAD WORK	2	2	4" x 4"

MAINTAINING EXISTING TRAFFIC MANAGEMENT SYSTEM ELEMENTS DURING CONSTRUCTION

STATION	PM	No. (N)	REMARKS
158+48	R13.61	1	TRAFFIC COUNT STATION-CROWLEY LAKE ROAD
286+23	R16.50	1	TRAFFIC COUNT STATION-MCGEE CREEK ROAD
698+70	R24.88	1	TRAFFIC COUNT STATION-BEFORE ROUTE 203 JUNCTION
813+85	R26.80	1	TRAFFIC COUNT STATION-AFTER ROUTE 203 JUNCTION
1111+33	32.42	1	TRAFFIC COUNT STATION-CRESTVIEW REST AREA
TOTAL		5	

(N) NOT A SEPARATE PAY ITEM

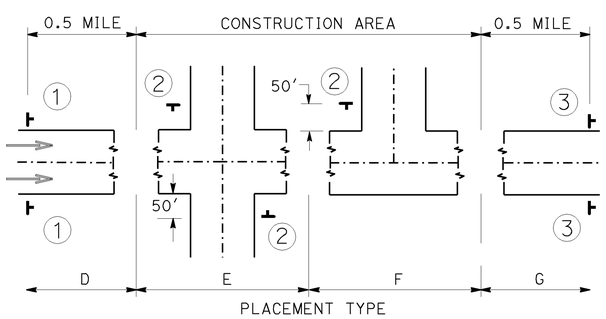

TYPICAL SIGN PLACEMENT FOR DIVIDED HIGHWAY WITH CONSTRUCTION IN ONE DIRECTION OF TRAVEL

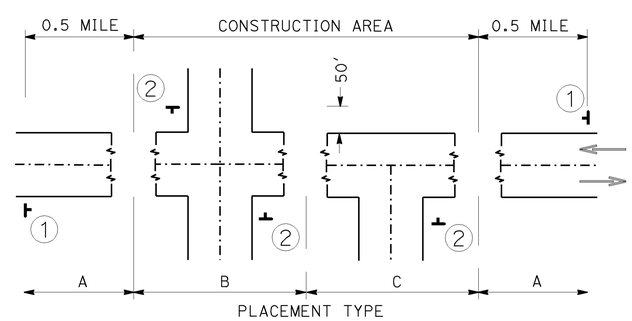

TYPICAL SIGN PLACEMENT FOR UNDIVIDED HIGHWAY

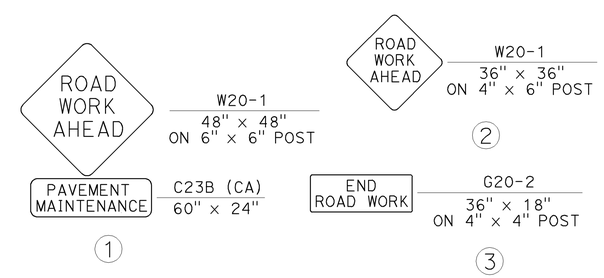

TYPICAL SIGN LAYOUT

EXISTING UTILITY FACILITIES HAVE NOT BEEN PLOTTED ON THESE PLANS

CONSTRUCTION AREA SIGNS
NO SCALE

CS-1

STATE OF CALIFORNIA - DEPARTMENT OF TRANSPORTATION
Caltrans MAINTENANCE ENGINEERING

FUNCTIONAL SUPERVISOR: JOHN FOX
CALCULATED-DESIGNED BY: BRAD LARSON
CHECKED BY: ALLEN TOBEY
REVISED BY
DATE REVISED

LAST REVISION 07-15-10
DATE PLOTTED => 09-AUG-2010
TIME PLOTTED => 16:12

Dist	COUNTY	ROUTE	POST MILES TOTAL PROJECT	SHEET No.	TOTAL SHEETS
09	Mno	395	R12.6/35.3	8	17

Allen Tobey 7-19-10
REGISTERED CIVIL ENGINEER DATE

8-9-2010
PLANS APPROVAL DATE

REGISTERED PROFESSIONAL ENGINEER ALLEN C. TOBEY No. 29764 Exp. 03-31-11 CIVIL STATE OF CALIFORNIA

THE STATE OF CALIFORNIA OR ITS OFFICERS OR AGENTS SHALL NOT BE RESPONSIBLE FOR THE ACCURACY OR COMPLETENESS OF SCANNED COPIES OF THIS PLAN SHEET.

PAINT PAVEMENT MARKING

STATION	L†	R†	TYPE I 10'-0" ARROW		TYPE I 24'-0" ARROW		TYPE III ARROW (LEFT)		TYPE III ARROW (RIGHT)		TYPE V ARROW		TYPE VI ARROW		LIMIT LINE (12" WIDE)		"STOP"		"AHEAD"		CATTLE GUARD		AIRCRAFT MARKING		REMARKS
			EA (N)	SQFT	EA (N)	SQFT	EA (N)	SQFT	EA (N)	SQFT	EA (N)	SQFT	EA (N)	SQFT	LF (N)	SQFT	EA (N)	SQFT	EA (N)	SQFT	EA (N)	SQFT	EA (N)	SQFT	
102+47	X																						1	6	
152+29	X				1	31																			CROWLEY LAKE ON RAMP
152+87	X														54	54									CROWLEY LAKE OFF RAMP
152+97	X																1	22							CROWLEY LAKE OFF RAMP
153+90	X										1	33													CROWLEY LAKE OFF RAMP
155+14	X										1	33													CROWLEY LAKE OFF RAMP
155+30	X																						1	6	
160+04	X																		1	31					CROWLEY LAKE OFF RAMP
160+50	X																1	22							CROWLEY LAKE OFF RAMP
190+22	X		1	14																					SCENIC PULLOUT
191+87	X		1	14																					SCENIC PULLOUT
193+59	X		1	14																					SCENIC PULLOUT
194+92	X		1	14																					SCENIC PULLOUT
207+77	X																						1	6	
260+30	X																						1	6	
293+46	X														39	39	1	22							MCGEE CREEK ROAD
293+46		X													48	48	1	22							MEDIAN CROSSOVER
294+56	X	X					1	42			2	66													
295+79	X	X									2	66													
312+50	X																						1	6	
359+89	X																						1	6	
367+77	X														28	28	1	22							CROWLEY LAKE DRIVE
368+71	X	X					1	42	1	42	2	66													
369+90	X	X									2	66													
432+82	X														30	30	1	22							MOUNT MORRISON ROAD
433+72	X	X									2	66													
434+93	X	X									2	66													
438+80	X																						1	6	
459+04		X													36	36	1	22							MEDIAN CROSSOVER
460+19	X	X					1	42			2	66													
461+41	X	X									2	66													
491+42	X																						1	6	
509+99	X														32	32	1	22							CONVICT LAKE ROAD
509+99		X													28	28	1	22							MEDIAN CROSSOVER
510+01	X	X					1	42			2	66													
511+24	X	X									2	66													
543+40	X																						1	6	
584+58	X														49	49	1	22							SOUTH INDUSTRIAL CIRCLE
584+58		X													29	29	1	22							MEDIAN CROSSOVER
584+95	X	X					1	42	1	42	2	66													
586+19	X	X									2	66													
587+15	X								1	42															
589+30	X								1	42															
596+18	X																						1	6	
SUBTOTAL				56		31		210		168		858				373		242		31				60	

(N) NOT A SEPARATE PAY ITEM, FOR INFORMATION ONLY

PAVEMENT DELINEATION QUANTITIES
PDQ-1

STATE OF CALIFORNIA - DEPARTMENT OF TRANSPORTATION
Caltrans MAINTENANCE ENGINEERING

FUNCTIONAL SUPERVISOR: JOHN FOX
CALCULATED-DESIGNED BY: DAMON CHERENZIA
CHECKED BY: BRAD LARSON
REVISED BY
DATE REVISED

LAST REVISION 07-15-10
DATE PLOTTED => 09-AUG-2010
TIME PLOTTED => 16:12

Dist	COUNTY	ROUTE	POST MILES TOTAL PROJECT	SHEET No.	TOTAL SHEETS
09	Mno	395	R12.6/35.3	9	17

Allen Tobey 7-19-10
REGISTERED CIVIL ENGINEER DATE

8-9-2010
PLANS APPROVAL DATE

REGISTERED PROFESSIONAL ENGINEER ALLEN C. TOBEY No. 29764 Exp. 03-31-11 CIVIL STATE OF CALIFORNIA

THE STATE OF CALIFORNIA OR ITS OFFICERS OR AGENTS SHALL NOT BE RESPONSIBLE FOR THE ACCURACY OR COMPLETENESS OF SCANNED COPIES OF THIS PLAN SHEET.

PAINT PAVEMENT MARKING

STATION	L†	R†	TYPE I 10'-0" ARROW		TYPE I 24'-0" ARROW		TYPE III ARROW (LEFT)		TYPE III ARROW (RIGHT)		TYPE V ARROW		TYPE VI ARROW		LIMIT LINE (12" WIDE)		"STOP"		"AHEAD"		CATTLE GUARD		AIRCRAFT MARKING		REMARKS
			EA (N)	SQFT	EA (N)	SQFT	EA (N)	SQFT	EA (N)	SQFT	EA (N)	SQFT	EA (N)	SQFT	LF (N)	SQFT	EA (N)	SQFT	EA (N)	SQFT	EA (N)	SQFT	EA (N)	SQFT	
673+34	X														44	44	1	22							SHERWIN CREEK ROAD
673+34		X													26	26	1	22							MEDIAN CROSSOVER
674+30	X	X					1	42			2	66													
675+52	X	X									2	66													
650+44	X																						1	6	
703+35	X																						1	6	
770+89	X																						1	6	
812+50	X	X					1	42			2	66													
813+75	X	X									2	66													
816+62	X	X																			1	180			
872+40		X													46	46	1	22							MEDIAN CROSSOVER
873+31	X	X					1	42			2	66													
874+51	X	X									2	66													
876+79	X																						1	6	
920+07	X	X					1	42			2	66													
921+27	X	X									2	66													
929+53	X																						1	6	
949+88	X	X					1	42			2	66													
951+10	X	X									2	66													
998+10	X														30	30	1	22							SAWMILL CUTOFF ROAD
998+10		X													34	34	1	22							MEDIAN CROSSOVER
998+84	X	X					1	42	1	42	2	66													
1000+08	X	X									2	66													
1019+42	X														29	29	1	22							MAMMOTH SCENIC LOOP ROAD
1019+42		X													37	37	1	22							MEDIAN CROSSOVER
1020+49	X	X					1	42	1	42	2	66													
1021+69	X	X									2	66													
1109+69	X												1	42											
1111+33	X														30	30	1	22							CRESTVIEW SAFETY ROADSIDE REST
1111+33		X													34	34	1	22							MEDIAN CROSSOVER
1112+68	X	X					1	42	1	42	2	66													
1113+92	X	X									2	66													
1128+56		X													35	35	1	22							MEDIAN CROSSOVER
1129+44	X	X					1	42			2	66													
1130+65	X	X									2	66													
1176+90	X														29	29	1	22							DEADMAN CREEK ROAD
1176+90		X													33	33	1	22							MEDIAN CROSSOVER
1177+52	X	X					1	42	1	42	2	66													
1178+68	X	X									2	66													
1200+59	X														32	32	1	22							GLASS CREEK ROAD
1200+59		X													30	30	1	22							MEDIAN CROSSOVER
1201+16	X	X					1	42			2	66													
1202+36	X	X									2	66													
SUBTOTAL								462		168		1452		42		469		308				180		30	
SUBTOTAL (FROM PDQ-1)				56		31		210		168		858				373		242		31				60	
TOTAL														5140											

(N) NOT A SEPARATE PAY ITEM, FOR INFORMATION ONLY

PAVEMENT DELINEATION QUANTITIES
PDQ-2

STATE OF CALIFORNIA - DEPARTMENT OF TRANSPORTATION
Caltrans® MAINTENANCE ENGINEERING

FUNCTIONAL SUPERVISOR: JOHN FOX
CALCULATED-DESIGNED BY: DAMON CHERENZIA
CHECKED BY: BRAD LARSON
REVISED BY / DATE REVISED

LAST REVISION 07-15-10
DATE PLOTTED => 09-AUG-2010
TIME PLOTTED => 16:12

Dist	COUNTY	ROUTE	POST MILES TOTAL PROJECT	SHEET No.	TOTAL SHEETS
09	Mno	395	R12.6/35.3	10	17

REGISTERED CIVIL ENGINEER 7-19-10 DATE

8-9-2010
PLANS APPROVAL DATE

REGISTERED PROFESSIONAL ENGINEER ALLEN C. TOBEY No. 29764 Exp. 03-31-11 CIVIL STATE OF CALIFORNIA

THE STATE OF CALIFORNIA OR ITS OFFICERS OR AGENTS SHALL NOT BE RESPONSIBLE FOR THE ACCURACY OR COMPLETENESS OF SCANNED COPIES OF THIS PLAN SHEET.

REMOVE PAVEMENT MARKING

STATION	L+	R+	TYPE I 10'-0" ARROW		TYPE III ARROW (LEFT)		TYPE III ARROW (RIGHT)		TYPE V ARROW		TYPE VI ARROW		LIMIT LINE (12" WIDE)		"STOP"		"AHEAD"		CATTLE GUARD		AIRCRAFT MARKING		DRAINAGE INLET		Det 38A 8" WHITE		REMARKS
			EA (N)	SQFT	EA (N)	SQFT	EA (N)	SQFT	EA (N)	SQFT	EA (N)	SQFT	LF (N)	SQFT	EA (N)	SQFT	EA (N)	SQFT	FT (N)	SQFT	EA (N)	SQFT	EA (N)	SQFT	LF (N)	SQFT	
102+47	X																				1	6					MARKING DETAIL 1
152+29	X		2	28																							CROWLEY LAKE ON RAMP
152+87	X												54	54													CROWLEY LAKE OFF RAMP
152+97	X														1	22											CROWLEY LAKE OFF RAMP
153+90	X								1	33																	CROWLEY LAKE OFF RAMP
155+14	X								1	33																	CROWLEY LAKE OFF RAMP
155+30	X																				1	6					MARKING DETAIL 1
160+04	X																1	31									CROWLEY LAKE OFF RAMP
160+50	X														1	22											CROWLEY LAKE OFF RAMP
190+22	X		1	14																							SCENIC PULLOUT
190+71	X																						1	6			
191+87	X		1	14																							SCENIC PULLOUT
193+59	X		1	14																							SCENIC PULLOUT
193+75	X																						2	12			
194+92	X		1	14																							SCENIC PULLOUT
207+77	X																				1	6					MARKING DETAIL 1
260+30	X																				1	10					MARKING DETAIL 2
293+46	X												39	39													MCGEE CREEK ROAD
293+46		X											48	48	1	22											
294+56		X			1	42																					
312+50	X																				1	6					MARKING DETAIL 1
359+89	X																				1	6					MARKING DETAIL 1
367+77	X												28	28													CROWLEY LAKE DRIVE
368+71	X	X			1	42	1	42																			
432+82	X												30	30	1	22											MOUNT MORRISON ROAD
438+80	X																				1	10					MARKING DETAIL 2
459+04		X											36	36	1	22											MEDIAN CROSSOVER
460+19		X			1	42																					
491+42	X																				1	6					MARKING DETAIL 1
509+99	X												32	32													CONVICT LAKE ROAD
509+99		X											28	28	1	22											MEDIAN CROSSOVER
510+01		X			1	42																					
543+40	X																				1	6					MARKING DETAIL 1
584+58	X												49	49	1	22									940	627	SOUTH INDUSTRIAL CIRCLE
584+58		X											29	29	1	22											MEDIAN CROSSOVER
584+95	X	X			1	42	1	42																			
587+15	X						1	42																			
589+30	X						1	42																			
596+18	X																				1	6					MARKING DETAIL 1
650+44	X																				1	6					MARKING DETAIL 1
673+34	X												44	44	1	22											SHERWIN CREEK ROAD
673+34		X											26	26	1	22											MEDIAN CROSSOVER
674+30		X			1	42																					
703+35	X																				1	6					MARKING DETAIL 1
770+89	X																				1	6					MARKING DETAIL 1
812+50		X			1	42																					
816+62	X	X																	14	64							SEE DETAIL SHEET C-3
872+40		X											46	46	1	22											MEDIAN CROSSOVER
873+31		X			1	42																					
876+79	X																				1	10					MARKING DETAIL 2
920+07		X			1	42																					
929+53	X																				1	6					MARKING DETAIL 1
949+88	X	X			1	42																					SAWMILL CUTOFF ROAD
998+10		X											34	34	1	22											MEDIAN CROSSOVER
998+84	X	X			1	42	1	42																			
1019+42	X												29	29													MAMMOTH SCENIC LOOP ROAD
1019+42		X											37	37	1	22											MEDIAN CROSSOVER
1020+49	X	X			1	42	1	42																			
1109+69	X										1	42															
1111+33	X												30	30													CRESTVIEW SAFETY ROADSIDE REST
1111+33		X											34	34	1	22											MEDIAN CROSSOVER
1112+68	X	X			1	42	1	42																			
1128+56													35	35	1	22											MEDIAN CROSSOVER
1129+44		X			1	42																					
1176+90		X											33	33	1	22											MEDIAN CROSSOVER
1177+52		X			1	42	1	42																			
1200+59	X												32	32	1	22											GLASS CREEK ROAD
1200+59		X											30	30	1	22											MEDIAN CROSSOVER
1201+16		X			1	42																					
SUBTOTAL			84		672		336		66		42		783		396		31		64		102		18		627		
TOTAL															3221												

(N) NOT A SEPARATE PAY ITEM, FOR INFORMATION ONLY

PAVEMENT DELINEATION QUANTITIES
PDQ-3

STATE OF CALIFORNIA - DEPARTMENT OF TRANSPORTATION
Caltrans MAINTENANCE ENGINEERING

FUNCTIONAL SUPERVISOR: JOHN FOX
CALCULATED-DESIGNED BY: DAMON CHERENZIA
CHECKED BY: BRAD LARSON
REVISED BY
DATE REVISED

LAST REVISION 07-15-10
DATE PLOTTED => 09-AUG-2010
TIME PLOTTED => 16:12

Dist	COUNTY	ROUTE	POST MILES TOTAL PROJECT	SHEET No.	TOTAL SHEETS
09	Mno	395	R12.6/35.3	11	17

REGISTERED CIVIL ENGINEER 7-19-10 DATE

8-9-2010
PLANS APPROVAL DATE

REGISTERED PROFESSIONAL ENGINEER ALLEN C. TOBEY No. 29764 Exp. 03-31-11 CIVIL STATE OF CALIFORNIA

THE STATE OF CALIFORNIA OR ITS OFFICERS OR AGENTS SHALL NOT BE RESPONSIBLE FOR THE ACCURACY OR COMPLETENESS OF SCANNED COPIES OF THIS PLAN SHEET.

NOTE:

1. DRAINAGE INLET MARKERS TO BE PREFABRICATED THERMOPLASTIC. DRAINAGE INLET MARKERS SHALL HAVE A LEGEND COLOR OF BLUE. MARKERS SHALL USE WAVES AND JUMPING TROUT GRAPHICS AS SHOWN. MARKERS SHALL USE LETTERING THAT READS "NO DUMPING DRAINS TO WATERWAY" AS SHOWN.

DRAINAGE INLET MARKER

STATION	EA
190+71 Lt	1
193+75 Lt	1
TOTAL	2

PAINT TRAFFIC STRIPE (2-COAT)

LOCATION	DETAIL NUMBER					
	8	11	21	24	27B	38A
STATION	LF	LF	LF	LF	LF	LF
81+50-1263+32	301	118,125	616	118,797	118,898	6972
TOTAL	363,709					

ROADWAY QUANTITIES

LOCATION	ASPHALT RUBBER BINDER	SCREENINGS (HOT-APPLIED)	SAND COVER	ASPHALTIC EMULSION (FOG SEAL COAT)
STATION	TON	TON	TON	TON
81+50 TO 1263+32	1455	9118	1710	72
TOTAL	1455	9118	1710	72

RUMBLE STRIP

STATION FROM	STATION TO	LEFT	RIGHT	STATIONS
81+50	132+81	X		51.3
143+01	159+53	X		16.5
165+00	187+71	X		22.7
197+87	292+41	X		94.5
294+42	366+52	X		72.1
372+10	431+89	X		59.8
433+81	508+09	X		74.3
510+64	583+15	X		72.5
590+93	671+84	X		80.9
674+39	701+30	X		26.9
704+20	727+46	X		23.3
736+06	742+18	X		6.1
745+70	759+50	X		13.8
763+86	996+04	X		232.2
999+91	1017+58	X		17.7
1023+35	1107+84	X		84.5
1116+43	1175+31	X		58.9
1179+49	1199+46	X		20.0
1201+87	1205+17	X		3.3
1205+17	1263+32	X		58.2
81+50	291+35		X	209.9
297+73	366+16		X	68.4
372+17	431+14		X	59.0
435+79	457+48		X	21.7
462+79	507+69		X	44.9
513+08	582+54		X	69.5
588+34	671+84		X	83.5
676+75	701+30		X	24.6
704+20	742+18		X	38.0
745+70	810+38		X	64.7
814+18	870+63		X	56.5
874+98	917+59		X	42.6
921+93	947+01		X	25.1
950+82	996+25		X	45.4
1000+47	1017+21		X	16.7
1021+74	1061+44		X	39.7
1069+45	1110+34		X	40.9
1114+62	1126+88		X	12.3
1131+12	1174+93		X	43.8
1179+20	1199+49		X	20.3
1205+17	1263+32		X	58.2
TOTAL				2175.2

SUMMARY OF QUANTITIES
Q-1

STATE OF CALIFORNIA - DEPARTMENT OF TRANSPORTATION
Caltrans MAINTENANCE ENGINEERING

FUNCTIONAL SUPERVISOR: JOHN FOX
CALCULATED-DESIGNED BY: BRAD LARSON
CHECKED BY: ALLEN TOBEY
REVISED BY
DATE REVISED

LAST REVISION 07-15-10 | DATE PLOTTED => 09-AUG-2010 | TIME PLOTTED => 16:12

DIST	COUNTY	ROUTE	POST MILES TOTAL PROJECT	SHEET NO.	TOTAL SHEETS
09	Mno	395	R12.6/35.3	12	17

Robert B Schott
LICENSED LANDSCAPE ARCHITECT

April 3, 2009
PLANS APPROVAL DATE

LICENSED LANDSCAPE ARCHITECT
Robert B. Schott 3695
Robert B Schott
Signature
11-30-10
Renewal Date
2-25-09
Date
STATE OF CALIFORNIA

The State of California or its officers or agents shall not be responsible for the accuracy or completeness of electronic copies of this plan sheet.

To accompany plans dated 8-9-2010

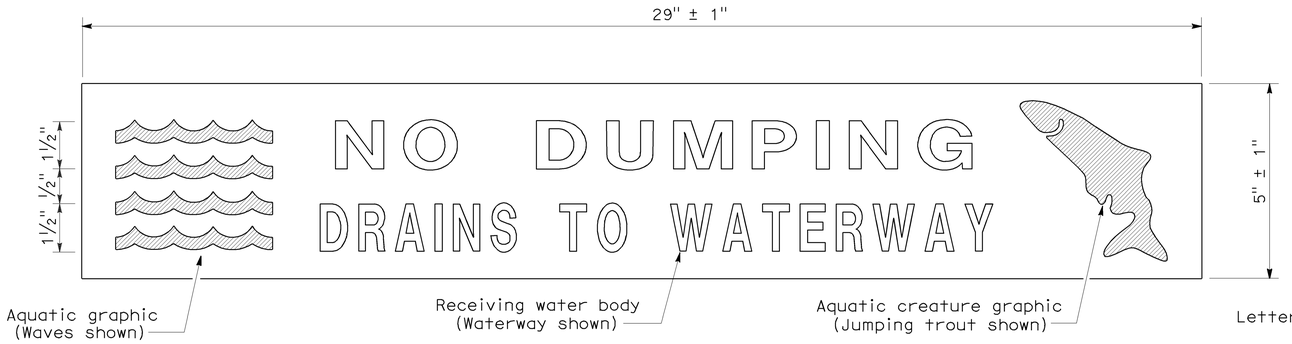

PLAN
DRAINAGE INLET MARKER
(PREFABRICATED THERMOPLASTIC)

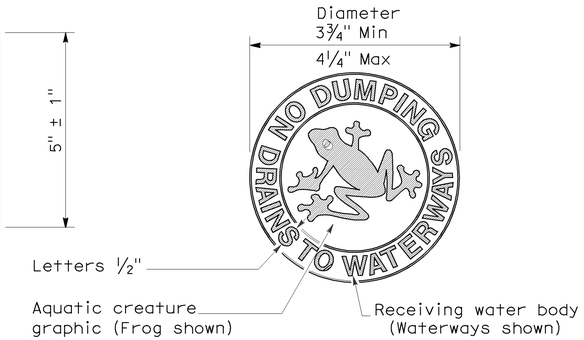

PLAN
DRAINAGE INLET MARKER
(MEDALLION)

PLAN
DRAINAGE INLET MARKER
(STAMPED CONCRETE IMPRINT)

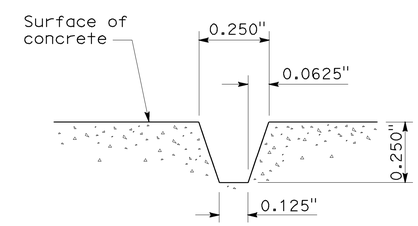

SECTION A-A
STAMPED CONCRETE
IMPRINT DETAIL

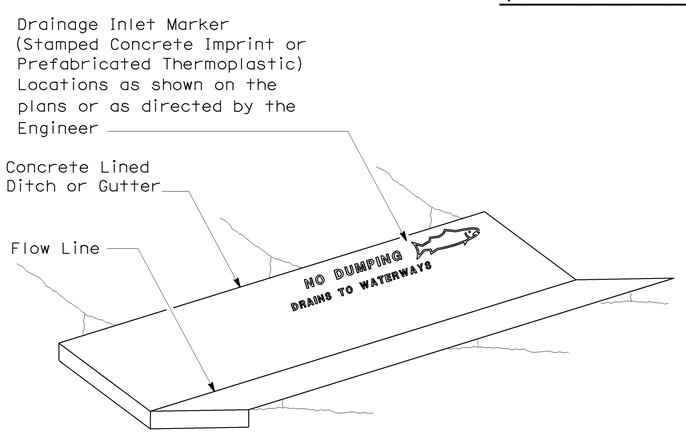

PERSPECTIVE
DRAINAGE INLET MARKER ON
CONCRETE LINED DITCH

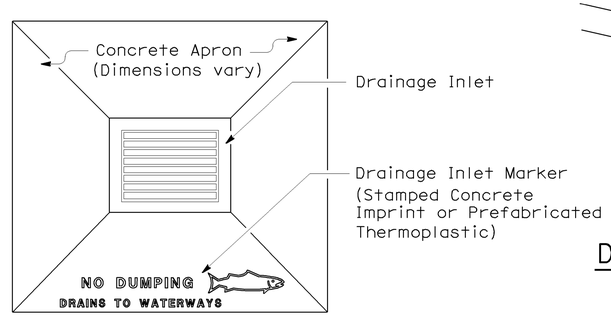

PLAN
DRAINAGE INLET MARKER ON
DRAINAGE INLET APRON

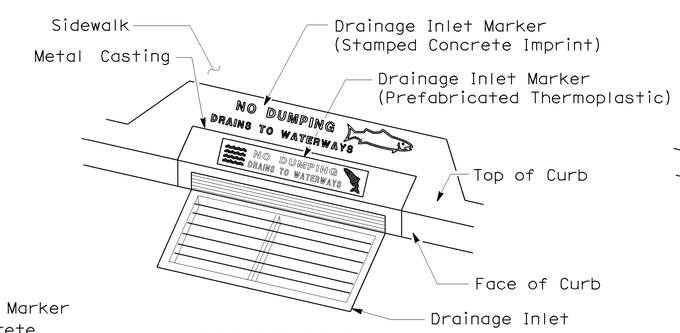

PERSPECTIVE
DRAINAGE INLET MARKER ON
DRAINAGE INLET

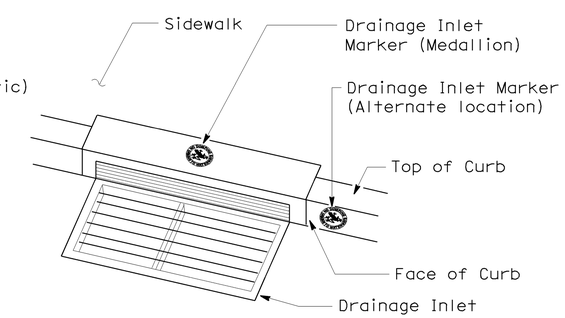

PERSPECTIVE
DRAINAGE INLET MARKER (MEDALLION)
ON DRAINAGE INLET

STATE OF CALIFORNIA
DEPARTMENT OF TRANSPORTATION

DRAINAGE INLET MARKERS

NO SCALE

NSP D71 DATED APRIL 3, 2009 SUPPLEMENTS
THE STANDARD PLANS BOOK DATED MAY 2006.

NEW STANDARD PLAN NSP D71

2006 NEW STANDARD PLAN NSP D71

7-24-08

DIST	COUNTY	ROUTE	POST MILES TOTAL PROJECT	SHEET NO.	TOTAL SHEETS
09	Mno	395	R12.6/35.3	13	17

Robert B Schott
LICENSED LANDSCAPE ARCHITECT

August 15, 2008
PLANS APPROVAL DATE

LICENSED LANDSCAPE ARCHITECT
Robert B. Schott 3695
Signature
11-04-08
Renewal Date
08-11-08
Date
STATE OF CALIFORNIA

The State of California or its officers or agents shall not be responsible for the accuracy or completeness of electronic copies of this plan sheet.

To accompany plans dated 8-9-2010

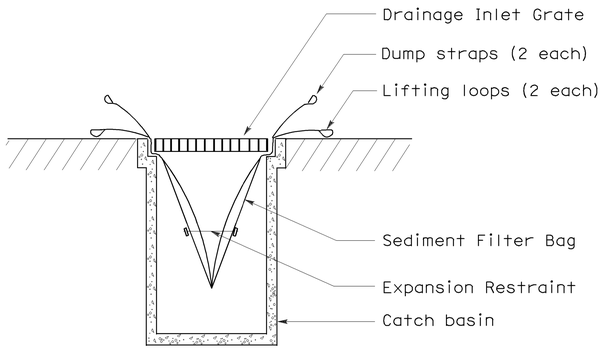

SECTION B-B

SEDIMENT FILTER BAG DETAIL

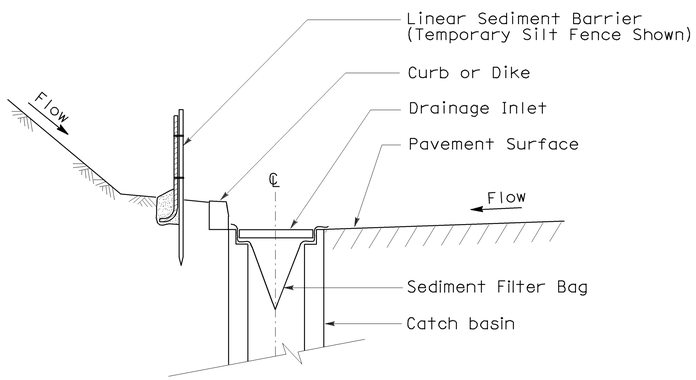

SECTION A-A

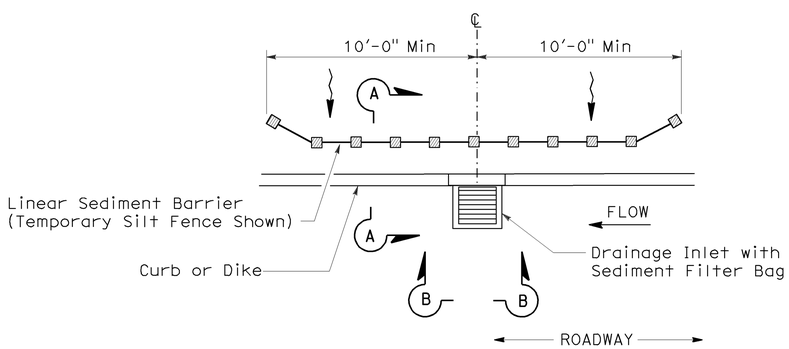

PLAN

TEMPORARY DRAINAGE INLET PROTECTION (TYPE 5) (SEDIMENT FILTER BAG)

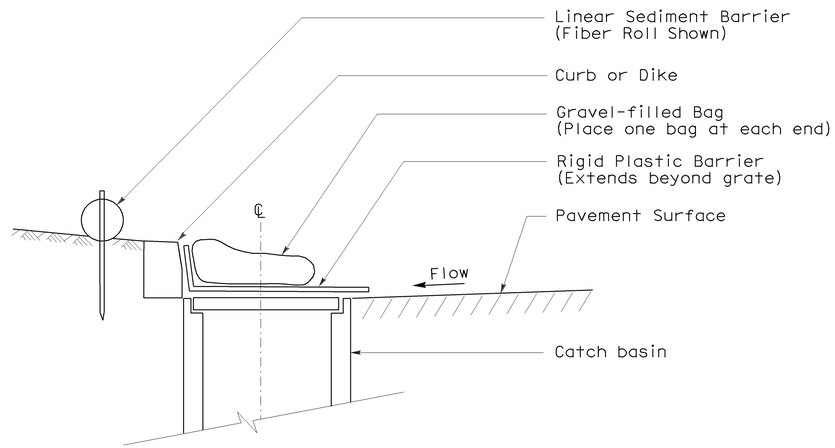

SECTION

TEMPORARY DRAINAGE INLET PROTECTION (TYPE 6A) (CATCH BASIN WITH GRATE)

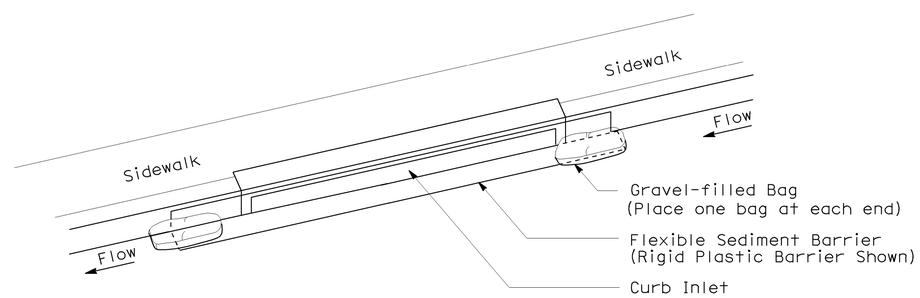

PERSPECTIVE

TEMPORARY DRAINAGE INLET PROTECTION (TYPE 6B) (CURB INLET WITHOUT GRATE)

NOTES:

1. See Standard Plan T51 for Temporary Silt Fence.
2. Dimensions may vary to fit field conditions.

STATE OF CALIFORNIA
DEPARTMENT OF TRANSPORTATION

TEMPORARY WATER POLLUTION CONTROL DETAILS (TEMPORARY DRAINAGE INLET PROTECTION)

NO SCALE

NSP T64 DATED AUGUST 15, 2008 SUPPLEMENTS
THE STANDARD PLANS BOOK DATED MAY 2006.

NEW STANDARD PLAN NSP T64

2006 NEW STANDARD PLAN NSP T64

7-11-08

DIST	COUNTY	ROUTE	POST MILES TOTAL PROJECT	SHEET NO.	TOTAL SHEETS
09	Mno	395	R12.6/35.3	14	17

Randell D. Hiatt
REGISTERED CIVIL ENGINEER

June 6, 2008
PLANS APPROVAL DATE

REGISTERED PROFESSIONAL ENGINEER
Randell D. Hiatt
No. C50200
Exp. 6-30-09
CIVIL
STATE OF CALIFORNIA

The State of California or its officers or agents shall not be responsible for the accuracy or completeness of electronic copies of this plan sheet.

To accompany plans dated 8-9-2010

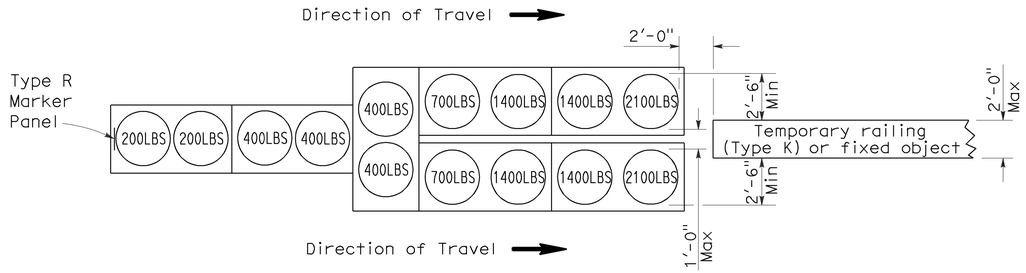

ARRAY 'TU14'

Approach speed 45 mph or more

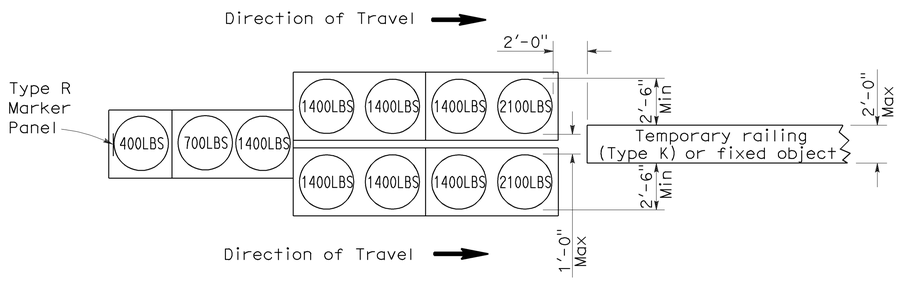

ARRAY 'TU11'

Approach speed less than 45 mph

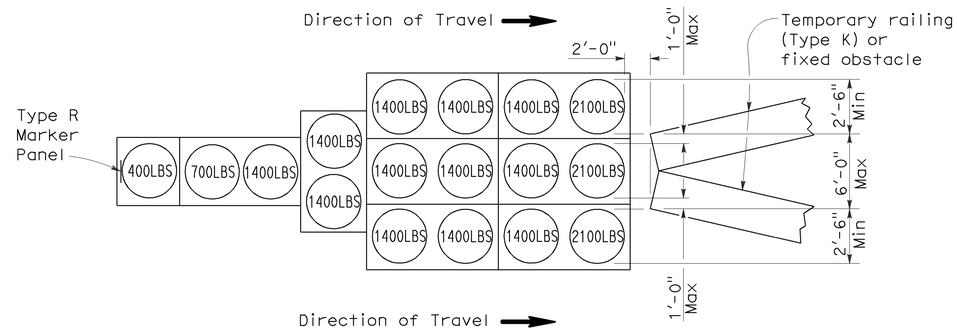

ARRAY 'TU17'

Approach speed less than 45 mph

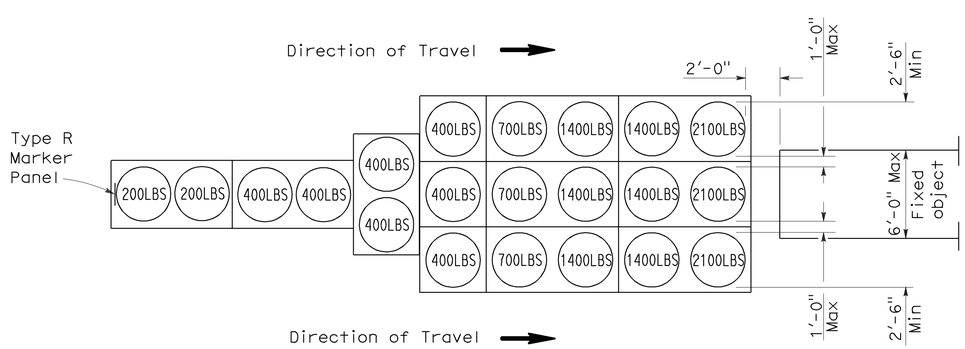

ARRAY 'TU21'

Approach speed 45 mph or more

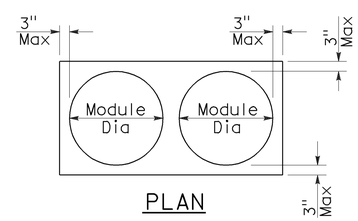

PLAN

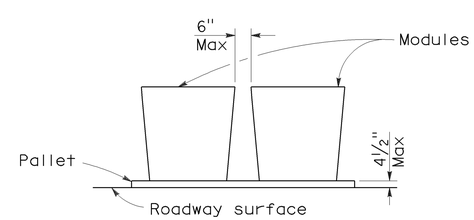

ELEVATION

CRASH CUSHION PALLET DETAIL

See Note 7

NOTES:

1. (XXX) Indicates sand filled module location and weight of sand in pounds for each module. Module spacing is based on the greater diameter of the module.
2. All sand weights are nominal.
3. Temporary crash cushion arrays shall not encroach on the traveled way.
4. Place the top of Type R marker panel 1" below the module lid.
5. Refer to Standard Plan A73B for marker details.
6. Approach speeds indicated conform to NCHRP 350 Report criteria.
7. Use of pallets is optional.

STATE OF CALIFORNIA
DEPARTMENT OF TRANSPORTATION

TEMPORARY CRASH CUSHION, SAND FILLED (UNIDIRECTIONAL)

NO SCALE

RSP T1A DATED JUNE 6, 2008 SUPERSEDES STANDARD PLAN T1A
DATED MAY 1, 2006 - PAGE 211 OF THE STANDARD PLANS BOOK DATED MAY 2006.

REVISED STANDARD PLAN RSP T1A

2006 REVISED STANDARD PLAN RSP T1A

5-15-08

DIST	COUNTY	ROUTE	POST MILES TOTAL PROJECT	SHEET NO.	TOTAL SHEETS
09	Mno	395	R12.6/35.3	15	17

Randell D. Hiatt
REGISTERED CIVIL ENGINEER

June 6, 2008
PLANS APPROVAL DATE

REGISTERED PROFESSIONAL ENGINEER
Randell D. Hiatt
No. C50200
Exp. 6-30-09
CIVIL
STATE OF CALIFORNIA

The State of California or its officers or agents shall not be responsible for the accuracy or completeness of electronic copies of this plan sheet.

To accompany plans dated 8-9-2010

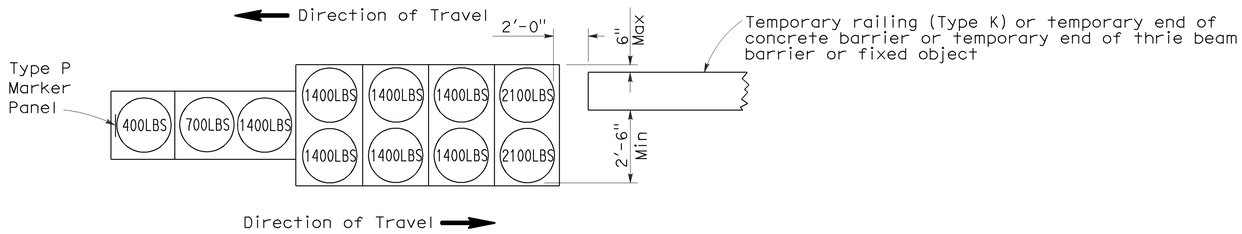

ARRAY 'TB11'

Approach speed less than 45 mph

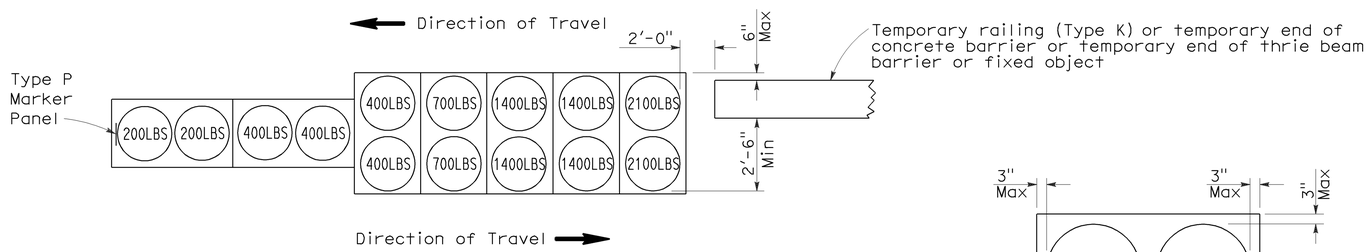

ARRAY 'TB14'

Approach speed 45 mph or more

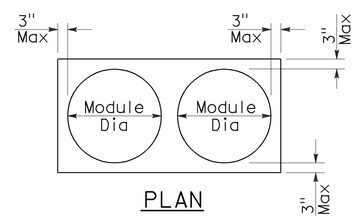

PLAN

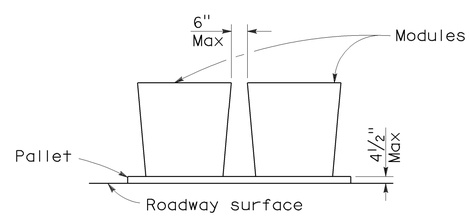

ELEVATION

CRASH CUSHION PALLET DETAIL

See Note 7

NOTES:

1. (XXX) Indicates sand filled module location and weight of sand in pounds for each module. Module spacing is based on the greater diameter of the module.
2. All sand weights are nominal.
3. Temporary crash cushion arrays shall not encroach on the traveled way.
4. Place the Type P marker panel so that the bottom of the panel rests upon the pallet.
5. Refer to Standard Plan A73B for marker details.
6. Approach speeds indicated conform to NCHRP 350 Report criteria.
7. Use of pallets is optional.

STATE OF CALIFORNIA
DEPARTMENT OF TRANSPORTATION

TEMPORARY CRASH CUSHION, SAND FILLED (BIDIRECTIONAL)

NO SCALE

RSP T1B DATED JUNE 6, 2008 SUPERSEDES STANDARD PLAN T1B
DATED MAY 1, 2006 - PAGE 212 OF THE STANDARD PLANS BOOK DATED MAY 2006.

REVISED STANDARD PLAN RSP T1B

2006 REVISED STANDARD PLAN RSP T1B

5-15-08

DIST	COUNTY	ROUTE	POST MILES TOTAL PROJECT	SHEET NO.	TOTAL SHEETS
09	Mno	395	R12.6/35.3	16	17

Randell D. Hiatt
REGISTERED CIVIL ENGINEER

June 6, 2008
PLANS APPROVAL DATE

REGISTERED PROFESSIONAL ENGINEER
Randell D. Hiatt
No. C50200
Exp. 6-30-09
CIVIL
STATE OF CALIFORNIA

The State of California or its officers or agents shall not be responsible for the accuracy or completeness of electronic copies of this plan sheet.

To accompany plans dated 8-9-2010

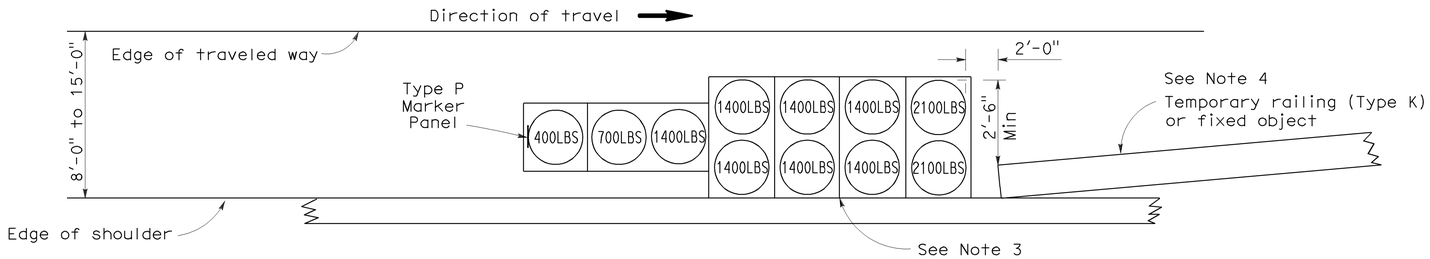

ARRAY 'TS11'

Approach speed less than 45 mph
See Note 9

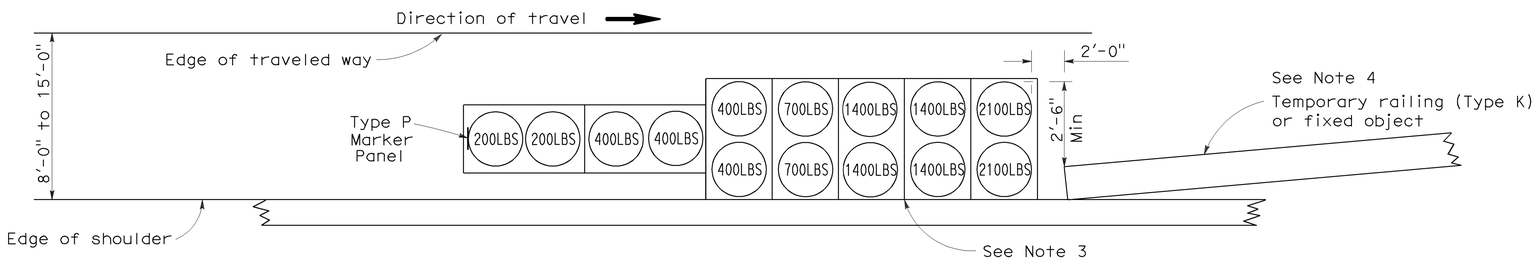

ARRAY 'TS14'

Approach speed 45 mph or more
See Note 9

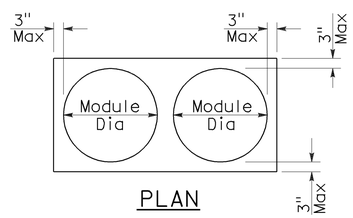

PLAN

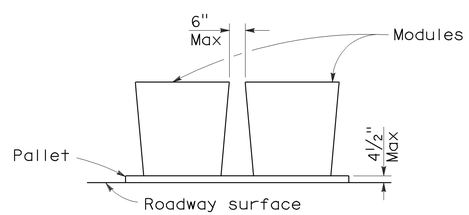

ELEVATION

CRASH CUSHION PALLET DETAIL

See Note 11

NOTES:

1. (XXX) Indicates sand filled module location and weight of sand in pounds for each module. Module spacing is based on the greater diameter of the module.
2. All sand weights are nominal.
3. The temporary crash cushion arrays shown on this plan shall be used only in locations where there will be traffic on one side of the temporary crash cushion array.
4. If the fixed object or approach end of the temporary railing is less than 15'-0" from the edge of traveled way, a temporary crash cushion is required in a construction or work zone.
5. Temporary crash cushion arrays shall not encroach on the traveled way.
6. Arrays for median shoulders shall conform to details shown on this plan for outside shoulders.
7. Place the Type P marker panel so that the bottom of the panel rests upon the pallet and faces traffic.
8. Refer to Standard Plan A73B for marker details.
9. For shoulder widths less than 8'-0", appropriate approved crash cushion protection, other than sand filled modules, shall be provided at fixed objects and at approach ends of temporary railing. The specific type of crash cushion shall be as shown on the project plans or as specified in the Special Provisions, or if not shown on the project plans or specified in the Special Provisions, shall be as approved by the Engineer.
10. Approach speeds indicated conform to NCHRP 350 Report criteria.
11. Use of pallets is optional.

STATE OF CALIFORNIA
DEPARTMENT OF TRANSPORTATION

TEMPORARY CRASH CUSHION, SAND FILLED (SHOULDER INSTALLATIONS)

NO SCALE

RSP T2 DATED JUNE 6, 2008 SUPERSEDES STANDARD PLAN T2
DATED MAY 1, 2006 - PAGE 213 OF THE STANDARD PLANS BOOK DATED MAY 2006.

REVISED STANDARD PLAN RSP T2

2006 REVISED STANDARD PLAN RSP T2

5-15-08

DIST	COUNTY	ROUTE	POST MILES TOTAL PROJECT	SHEET NO.	TOTAL SHEETS
09	Mno	395	R12.6/35.3	17	17

LICENSED LANDSCAPE ARCHITECT

April 3, 2009
PLANS APPROVAL DATE

The State of California or its officers or agents shall not be responsible for the accuracy or completeness of electronic copies of this plan sheet.

LICENSED LANDSCAPE ARCHITECT
Robert B. Schott 3695
Signature
11-30-10
Renewal Date
2-25-09
Date
STATE OF CALIFORNIA

To accompany plans dated 8-9-2010

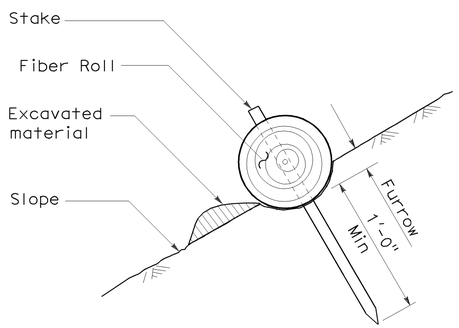

SECTION

TEMPORARY FIBER ROLL (TYPE 1)

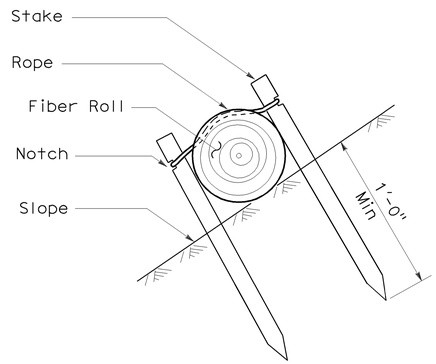

SECTION

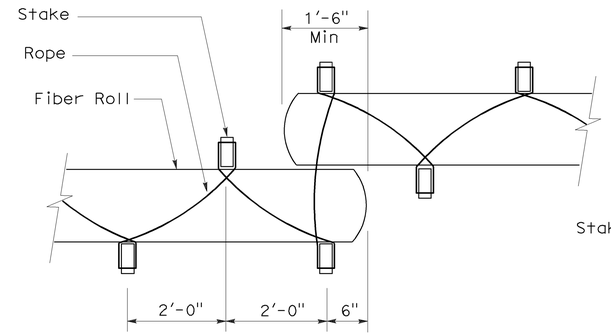

PLAN

TEMPORARY FIBER ROLL (TYPE 2)

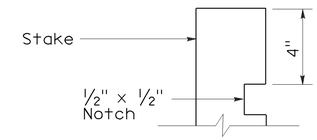

ELEVATION

STAKE NOTCH DETAIL

NOTES:

1. Temporary fiber roll spacing varies depending upon slope inclination.
2. Installations shown in the perspectives are for slope inclination of 10:1 and steeper.

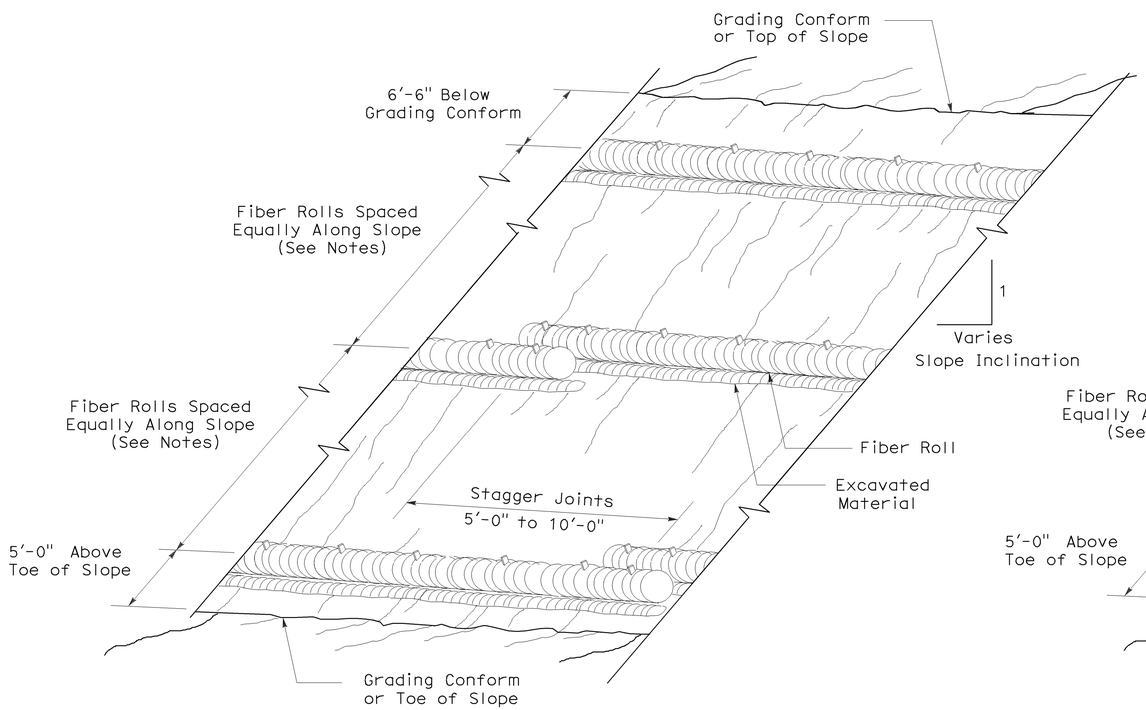

PERSPECTIVE

TEMPORARY FIBER ROLL (TYPE 1)

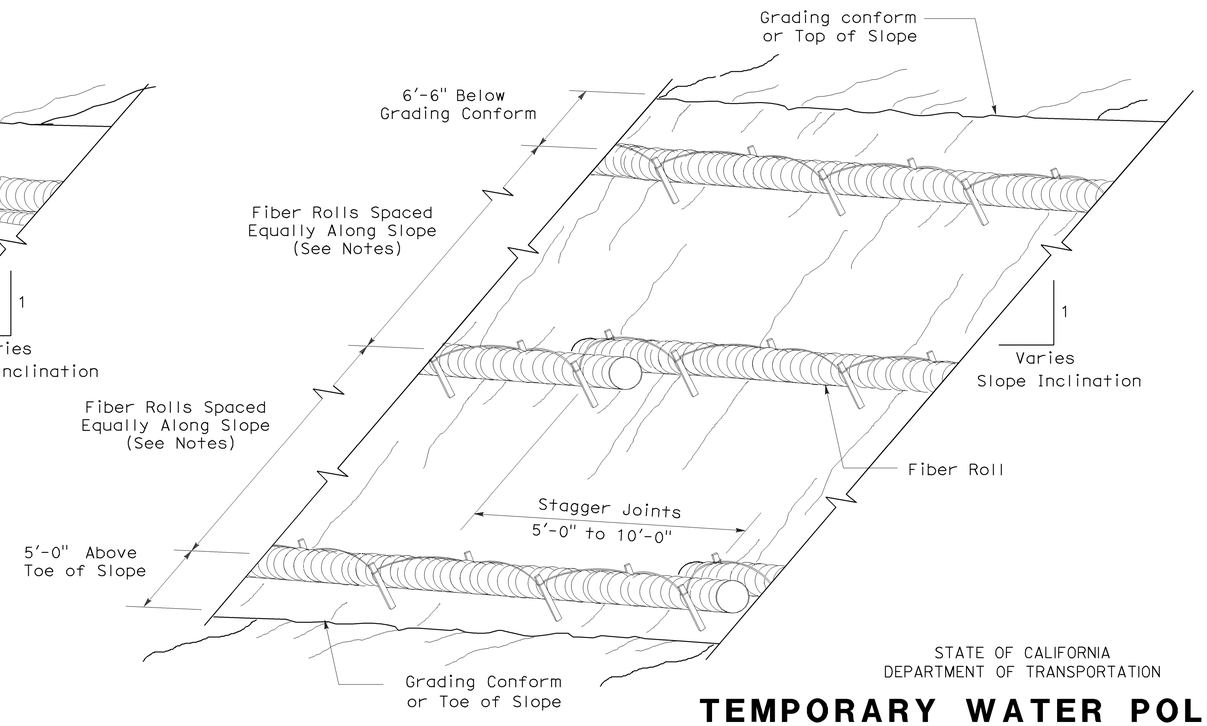

PERSPECTIVE

TEMPORARY FIBER ROLL (TYPE 2)

STATE OF CALIFORNIA
DEPARTMENT OF TRANSPORTATION

TEMPORARY WATER POLLUTION CONTROL DETAILS (TEMPORARY FIBER ROLL)

NO SCALE

RSP T56 DATED APRIL 3, 2009 SUPERSEDES STANDARD PLAN T56 DATED MAY 1, 2006 - PAGE 232 OF THE STANDARD PLANS BOOK DATED MAY 2006.

REVISED STANDARD PLAN RSP T56

2006 REVISED STANDARD PLAN RSP T56

2-23-09