Dist	COUNTY	ROUTE	POST MILES TOTAL PROJECT	SHEET No.	TOTAL SHEETS
09	Iny	168	13.5/15.0	1	32

SARRA-S168(053)E

STATE OF CALIFORNIA
DEPARTMENT OF TRANSPORTATION

PROJECT PLANS FOR CONSTRUCTION ON
STATE HIGHWAY
IN INYO COUNTY
NEAR BISHOP
FROM ED POWERS ROAD
TO RED HILL ROAD

TO BE SUPPLEMENTED BY STANDARD PLANS DATED MAY 2006

INDEX OF PLANS

SHEET No.	DESCRIPTION
1	TITLE AND LOCATION MAP
2	TYPICAL CROSS SECTIONS
3-11	LAYOUTS
12-16	CONSTRUCTION DETAILS
17	TEMPORARY WATER POLLUTION CONTROL DETAILS
18	CONSTRUCTION AREA SIGNS
19-20	PAVEMENT DELINEATION SIGN PLAN AND QUANTITIES
21	SUMMARY OF QUANTITIES
22-23	SIGN DETAILS AND QUANTITIES
24-32	REVISED AND NEW STANDARD PLANS

THE STANDARD PLANS LIST APPLICABLE TO THIS CONTRACT IS INCLUDED IN THE NOTICE TO BIDDERS AND SPECIAL PROVISIONS BOOK.

LOCATION MAP

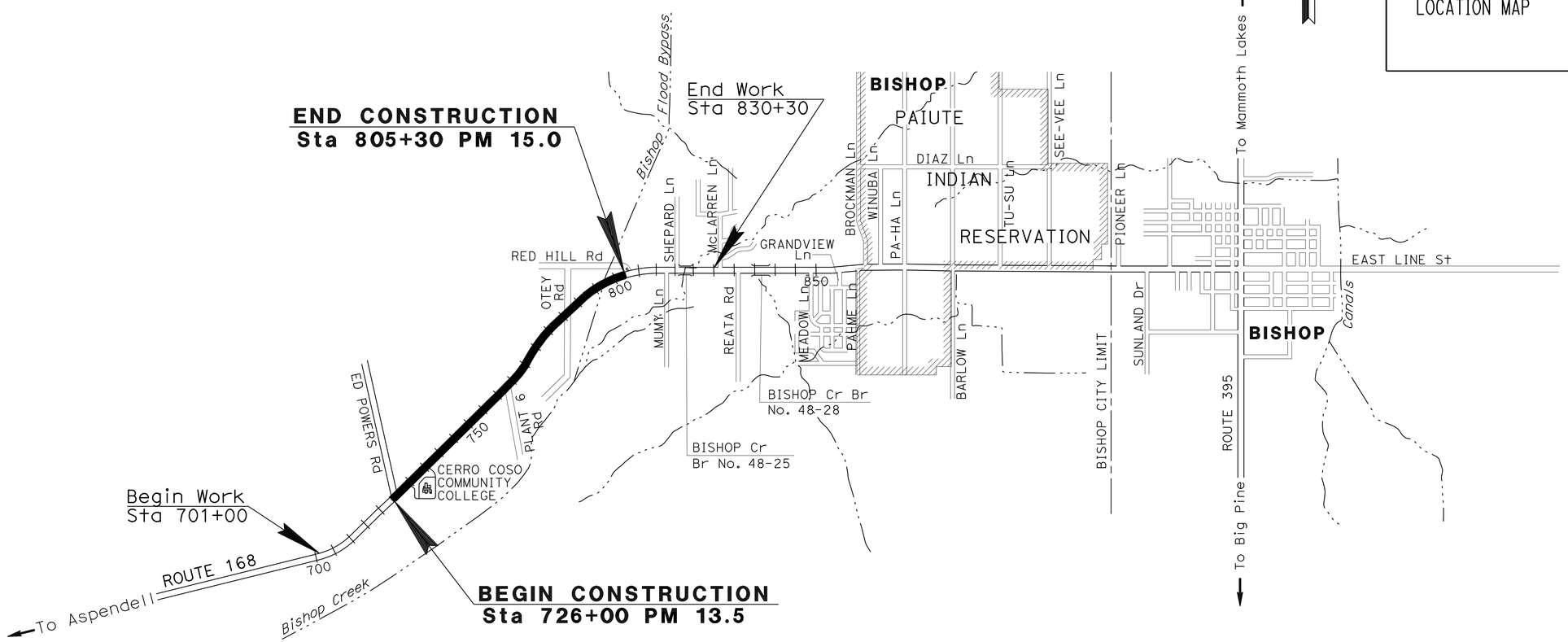

PROJECT MANAGER: TOM MEYERS

DESIGN ENGINEER: TRUMAN DENIO

THE CONTRACTOR SHALL POSSESS THE CLASS (OR CLASSES) OF LICENSE AS SPECIFIED IN THE "NOTICE TO BIDDERS."

NO SCALE

Grant Michael Krueger 7-1-09
PROJECT ENGINEER DATE
REGISTERED CIVIL ENGINEER

REGISTERED PROFESSIONAL ENGINEER Grant Michael Krueger No. 53379 Exp. 6-30-11 CIVIL STATE OF CALIFORNIA

November 16, 2009
PLANS APPROVAL DATE

THE STATE OF CALIFORNIA OR ITS OFFICERS OR AGENTS SHALL NOT BE RESPONSIBLE FOR THE ACCURACY OR COMPLETENESS OF SCANNED COPIES OF THIS PLAN SHEET.

LAST REVISION 08-06-09
DATE PLOTTED => 27-JAN-2010
TIME PLOTTED => 14:14

CONTRACT No. **09-345104**

Dist	COUNTY	ROUTE	POST MILES TOTAL PROJECT	SHEET No.	TOTAL SHEETS
09	Iny	168	13.5/15.0	2	32

Grant Michael Krueger 7-1-09
REGISTERED CIVIL ENGINEER DATE

11-16-09
PLANS APPROVAL DATE

REGISTERED PROFESSIONAL ENGINEER Grant Michael Krueger No. 53379 Exp 6-30-11 CIVIL STATE OF CALIFORNIA

THE STATE OF CALIFORNIA OR ITS OFFICERS OR AGENTS SHALL NOT BE RESPONSIBLE FOR THE ACCURACY OR COMPLETENESS OF SCANNED COPIES OF THIS PLAN SHEET.

DESIGN DESIGNATION (ROUTE 168)

AADT (2010) = 1220
AADT (2030) = 1810
DHV (2010) = 150
DHV (2030) = 230

D = 74.27%
T = 3.0%
V = 65 MPH
TI (2030) = 7.0

ABBREVIATIONS:

OGFC - OPEN GRADED FRICTION COURSE

NOTES:

1. DIMENSIONS OF THE PAVEMENT STRUCTURE (STRUCTURAL SECTIONS) ARE SUBJECT TO TOLERANCES SPECIFIED IN THE STANDARD SPECIFICATIONS.
2. SUPERELEVATION AS SHOWN OR AS DIRECTED BY THE ENGINEER.

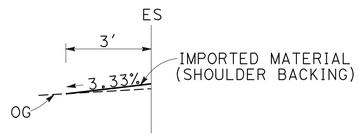

Sta 726+00 TO 727+32
Sta 728+36 TO 728+75

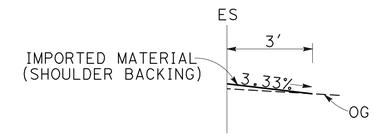

Sta 731+21 TO 732+55
Sta 733+36 TO 734+03
Sta 737+51 TO 738+67
Sta 739+43 TO 740+14
Sta 766+22 TO 766+46

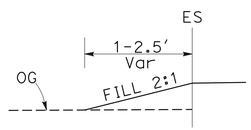

Sta 788+84 TO 789+01
Sta 798+25 TO 798+50
Sta 804+75 TO 805+00

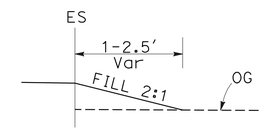

Sta 769+90 TO 770+10
Sta 798+25 TO 798+50
Sta 804+35 TO 804+65

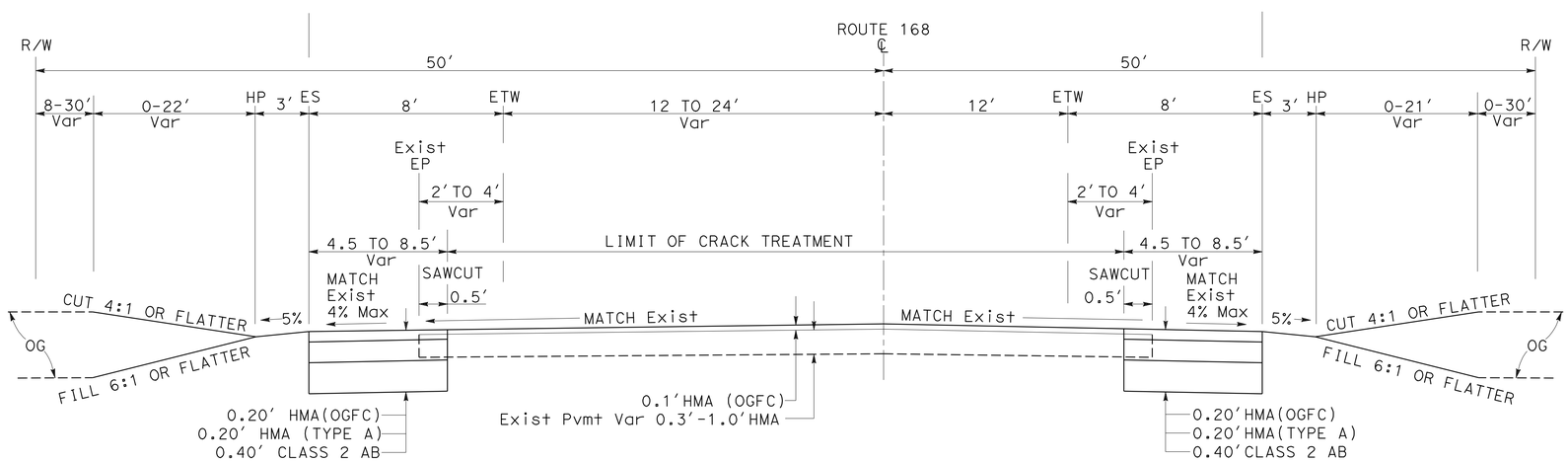

ROUTE 168

Sta 726+00 TO 805+30

TYPICAL CROSS SECTIONS

NO SCALE

X-1

STATE OF CALIFORNIA - DEPARTMENT OF TRANSPORTATION
Caltrans®
DESIGN

FUNCTIONAL SUPERVISOR: TRUMAN DENIO
CALCULATED-DESIGNED BY: KONSTANTIN GREKOV
CHECKED BY: TRUMAN DENIO
REVISED BY
DATE REVISED

LAST REVISION 08-06-09
DATE PLOTTED => 16-NOV-2009
TIME PLOTTED => 10:53

Dist	COUNTY	ROUTE	POST MILES TOTAL PROJECT	SHEET No.	TOTAL SHEETS
09	Iny	168	13.5/15.0	3	32

Grant Michael Krueger 7-1-09
REGISTERED CIVIL ENGINEER DATE

11-16-09
PLANS APPROVAL DATE

REGISTERED PROFESSIONAL ENGINEER Grant Michael Krueger No. 53379 Exp. 6-30-11 CIVIL STATE OF CALIFORNIA

THE STATE OF CALIFORNIA OR ITS OFFICERS OR AGENTS SHALL NOT BE RESPONSIBLE FOR THE ACCURACY OR COMPLETENESS OF SCANNED COPIES OF THIS PLAN SHEET.

NOTE:

1. FOR ACCURATE RIGHT OF WAY AND ACCESS DATA, CONTACT RIGHT OF WAY ENGINEERING AT DISTRICT OFFICE.

LEGEND:

TFR - Temp FIBER ROLL

TFESA - Temp FENCE (TYPE ESA)

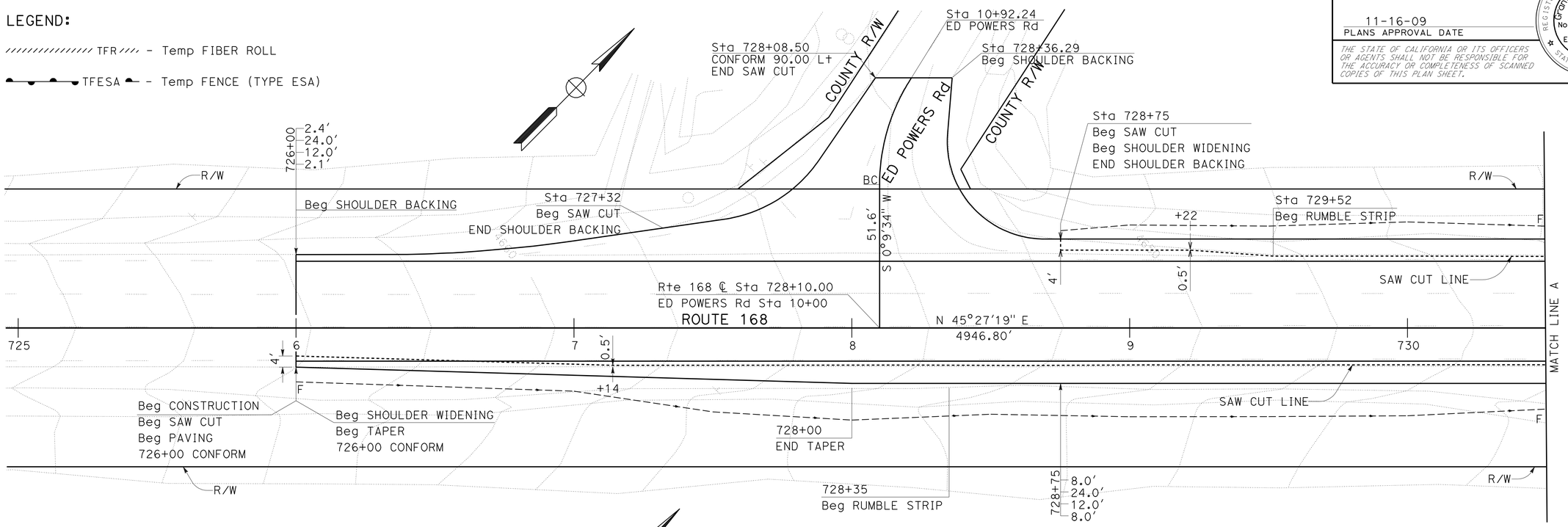

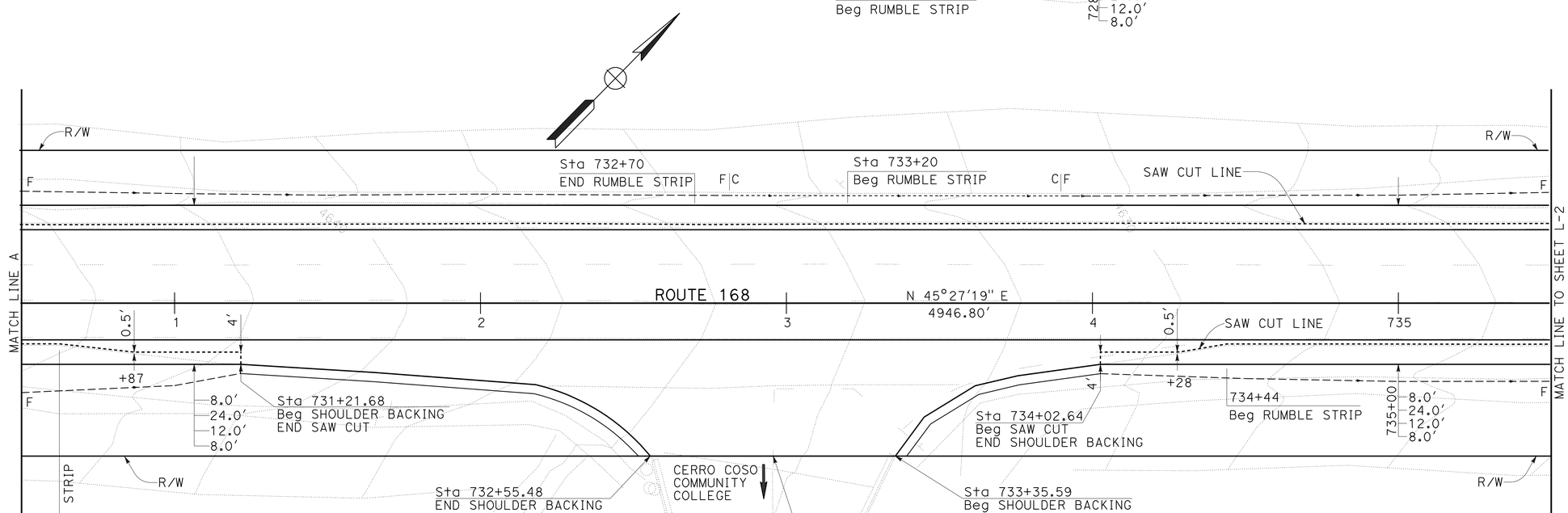

LAYOUT L-1

SCALE: 1"=20'

STATE OF CALIFORNIA - DEPARTMENT OF TRANSPORTATION
Caltrans
DESIGN

FUNCTIONAL SUPERVISOR: TRUMAN DENIO
CALCULATED-DESIGNED BY: KONSTANTIN GREKOV
CHECKED BY: TRUMAN DENIO
REVISED BY
DATE REVISED

LAST REVISION 08-06-09
DATE PLOTTED => 16-NOV-2009
TIME PLOTTED => 10:53

Dist	COUNTY	ROUTE	POST MILES TOTAL PROJECT	SHEET No.	TOTAL SHEETS
09	Iny	168	13.5/15.0	4	32

Grant Michael Krueger 7-1-09
REGISTERED CIVIL ENGINEER DATE

11-16-09
PLANS APPROVAL DATE

REGISTERED PROFESSIONAL ENGINEER Grant Michael Krueger No. 53379 Exp. 6-30-11 CIVIL STATE OF CALIFORNIA

THE STATE OF CALIFORNIA OR ITS OFFICERS OR AGENTS SHALL NOT BE RESPONSIBLE FOR THE ACCURACY OR COMPLETENESS OF SCANNED COPIES OF THIS PLAN SHEET.

NOTE:

1. FOR ACCURATE RIGHT OF WAY AND ACCESS DATA, CONTACT RIGHT OF WAY ENGINEERING AT DISTRICT OFFICE.

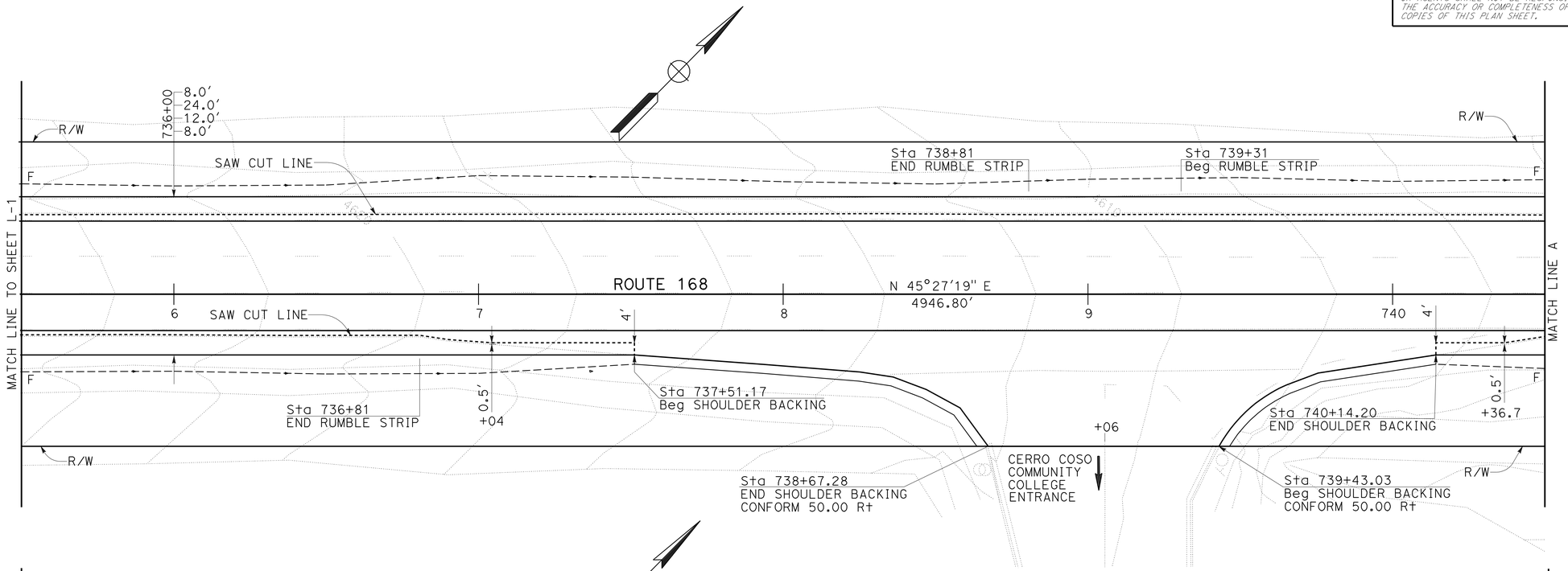

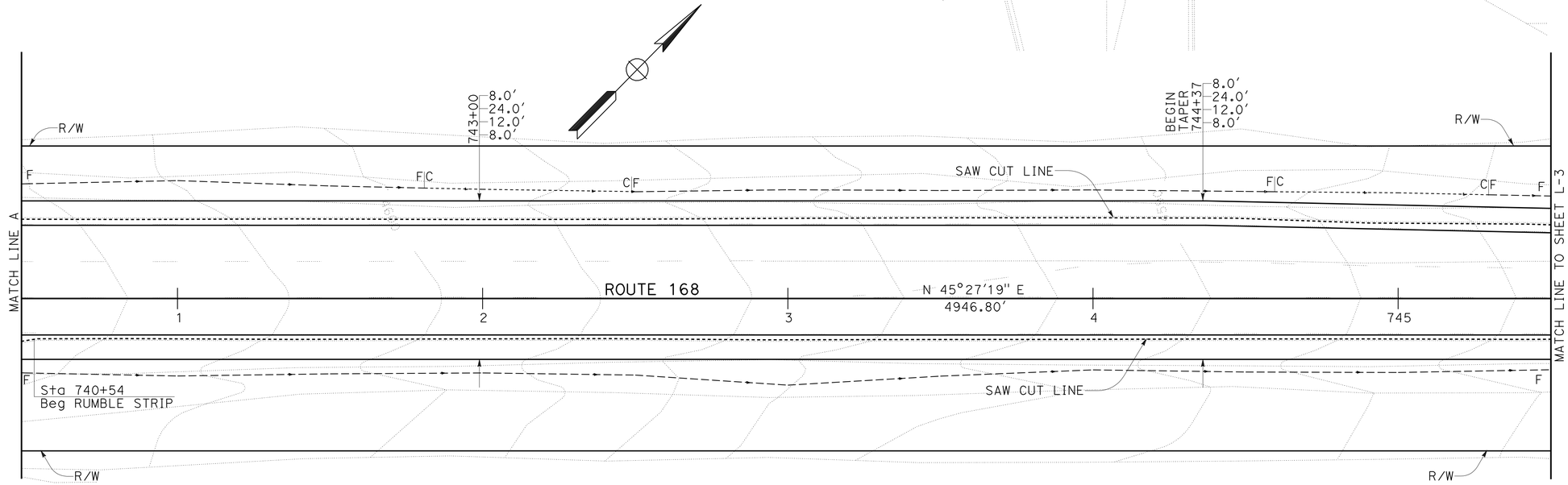

LAYOUT
SCALE: 1"=20′ **L-2**

STATE OF CALIFORNIA - DEPARTMENT OF TRANSPORTATION
Caltrans®
DESIGN

FUNCTIONAL SUPERVISOR: TRUMAN DENIO
CALCULATED-DESIGNED BY: KONSTANTIN GREKOV
CHECKED BY: TRUMAN DENIO
REVISED BY
DATE REVISED

LAST REVISION 08-06-09
DATE PLOTTED => 16-NOV-2009
TIME PLOTTED => 10:54

Dist	COUNTY	ROUTE	POST MILES TOTAL PROJECT	SHEET No.	TOTAL SHEETS
09	Iny	168	13.5/15.0	5	32

Grant Michael Krueger 7-1-09
REGISTERED CIVIL ENGINEER DATE

11-16-09
PLANS APPROVAL DATE

REGISTERED PROFESSIONAL ENGINEER Grant Michael Krueger No. 53379 Exp 6-30-11 CIVIL STATE OF CALIFORNIA

THE STATE OF CALIFORNIA OR ITS OFFICERS OR AGENTS SHALL NOT BE RESPONSIBLE FOR THE ACCURACY OR COMPLETENESS OF SCANNED COPIES OF THIS PLAN SHEET.

NOTE:

1. FOR ACCURATE RIGHT OF WAY AND ACCESS DATA, CONTACT RIGHT OF WAY ENGINEERING AT DISTRICT OFFICE.

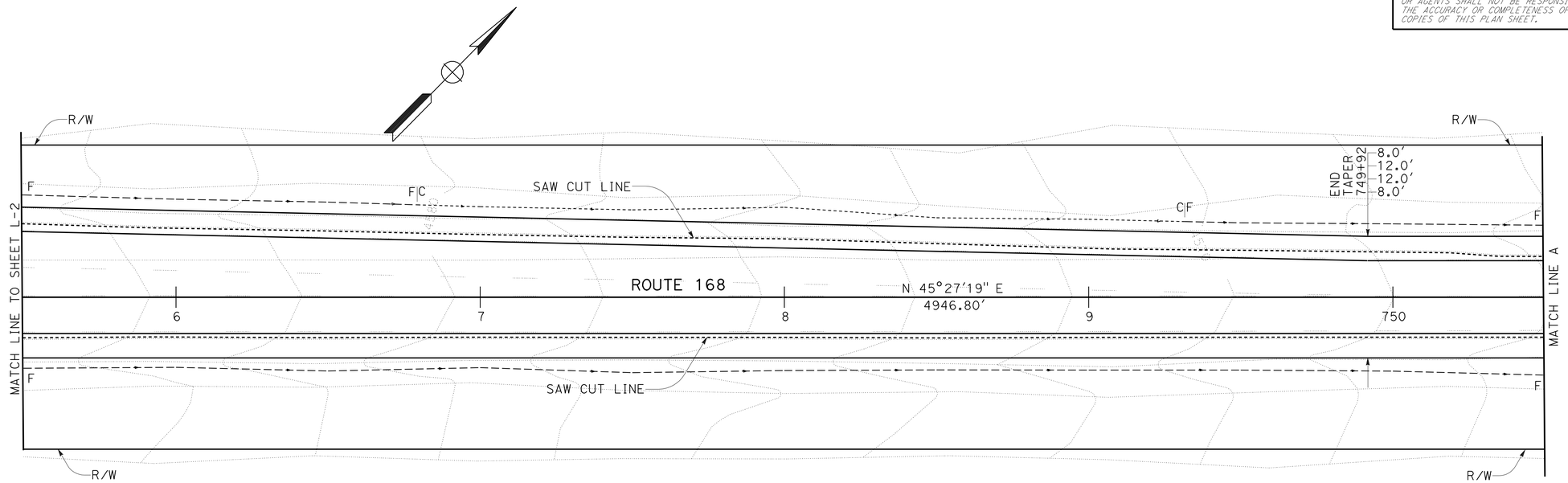

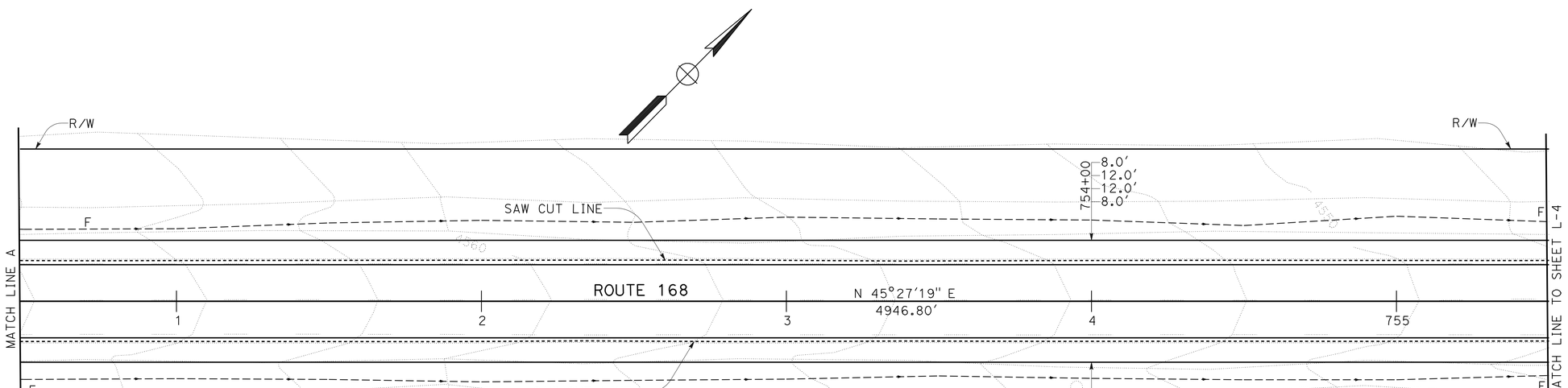

LAYOUT
SCALE: 1"=20′ **L-3**

STATE OF CALIFORNIA - DEPARTMENT OF TRANSPORTATION
Caltrans
DESIGN

FUNCTIONAL SUPERVISOR: TRUMAN DENIO
CALCULATED-DESIGNED BY: KONSTANTIN GREKOV
CHECKED BY: TRUMAN DENIO
REVISED BY
DATE REVISED

LAST REVISION 08-06-09
DATE PLOTTED => 16-NOV-2009
TIME PLOTTED => 10:54

Dist	COUNTY	ROUTE	POST MILES TOTAL PROJECT	SHEET No.	TOTAL SHEETS
09	Iny	168	13.5/15.0	6	32

Grant Michael Krueger 7-1-09
REGISTERED CIVIL ENGINEER DATE

11-16-09
PLANS APPROVAL DATE

REGISTERED PROFESSIONAL ENGINEER Grant Michael Krueger No. 53379 Exp 6-30-11 CIVIL STATE OF CALIFORNIA

THE STATE OF CALIFORNIA OR ITS OFFICERS OR AGENTS SHALL NOT BE RESPONSIBLE FOR THE ACCURACY OR COMPLETENESS OF SCANNED COPIES OF THIS PLAN SHEET.

NOTE:

1. FOR ACCURATE RIGHT OF WAY AND ACCESS DATA, CONTACT RIGHT OF WAY ENGINEERING AT DISTRICT OFFICE.

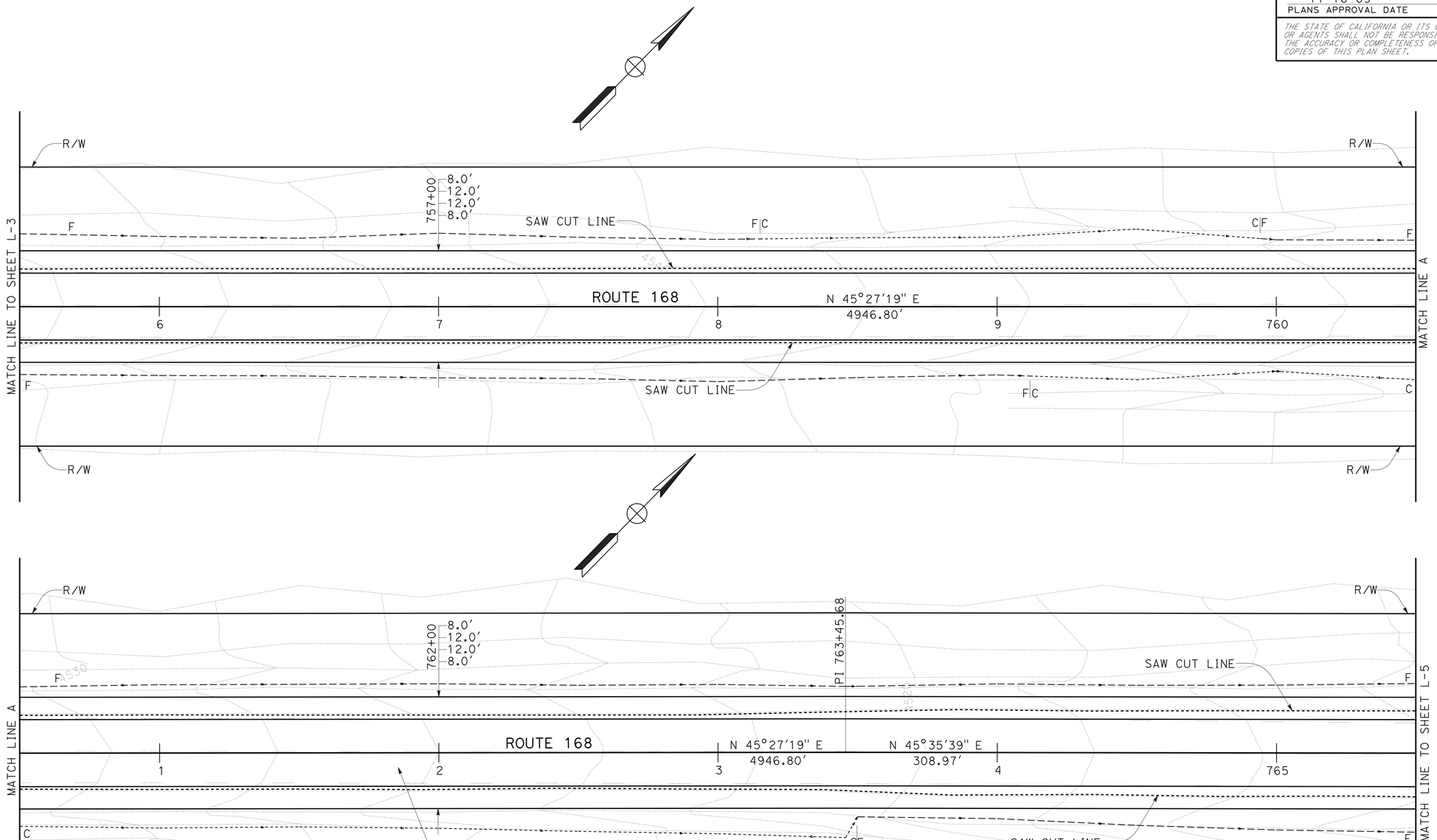

LAYOUT
SCALE: 1"=20′ **L-4**

STATE OF CALIFORNIA - DEPARTMENT OF TRANSPORTATION
Caltrans®
DESIGN

FUNCTIONAL SUPERVISOR: TRUMAN DENIO
CALCULATED-DESIGNED BY: KONSTANTIN GREKOV
CHECKED BY: TRUMAN DENIO
REVISED BY
DATE REVISED

LAST REVISION 08-06-09
DATE PLOTTED => 16-NOV-2009
TIME PLOTTED => 10:54

Dist	COUNTY	ROUTE	POST MILES TOTAL PROJECT	SHEET No.	TOTAL SHEETS
09	Iny	168	13.5/15.0	7	32

Grant Michael Krueger 7-1-09
REGISTERED CIVIL ENGINEER DATE

11-16-09
PLANS APPROVAL DATE

REGISTERED PROFESSIONAL ENGINEER Grant Michael Krueger No. 53379 Exp 6-30-11 CIVIL STATE OF CALIFORNIA

THE STATE OF CALIFORNIA OR ITS OFFICERS OR AGENTS SHALL NOT BE RESPONSIBLE FOR THE ACCURACY OR COMPLETENESS OF SCANNED COPIES OF THIS PLAN SHEET.

NOTE:

1. FOR ACCURATE RIGHT OF WAY AND ACCESS DATA, CONTACT RIGHT OF WAY ENGINEERING AT DISTRICT OFFICE.

Exist CURVE DATA

No.	R	Δ	T	L
1	2799.49′	11°59′29″	294.03′	585.90′

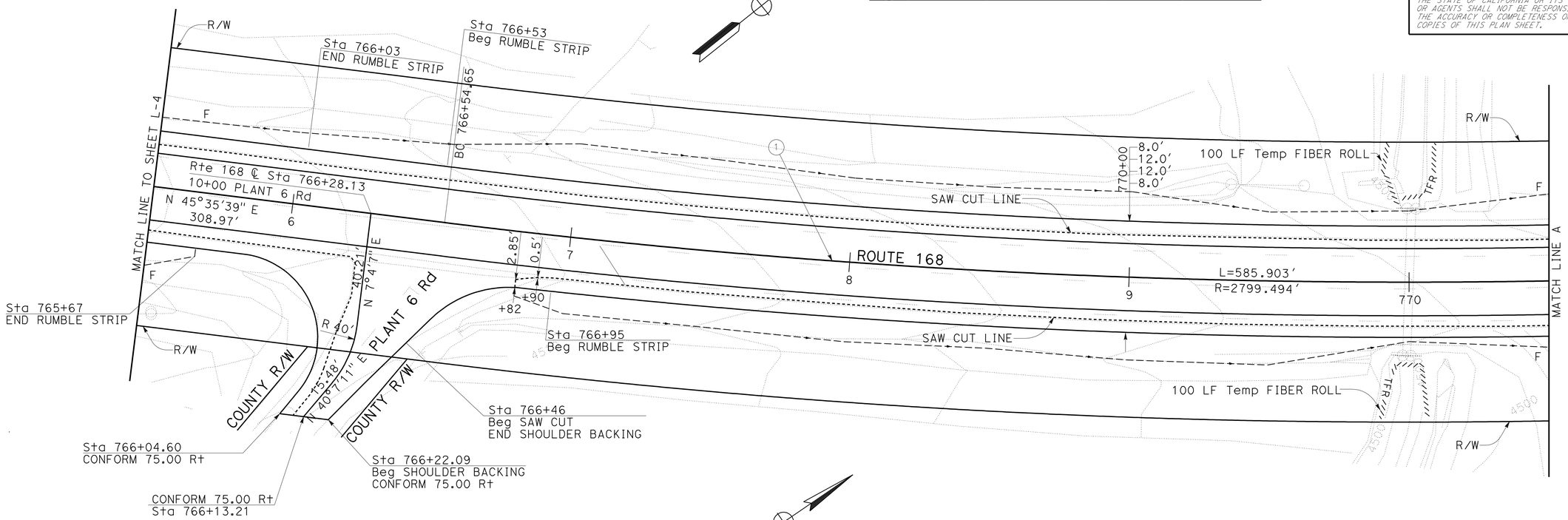

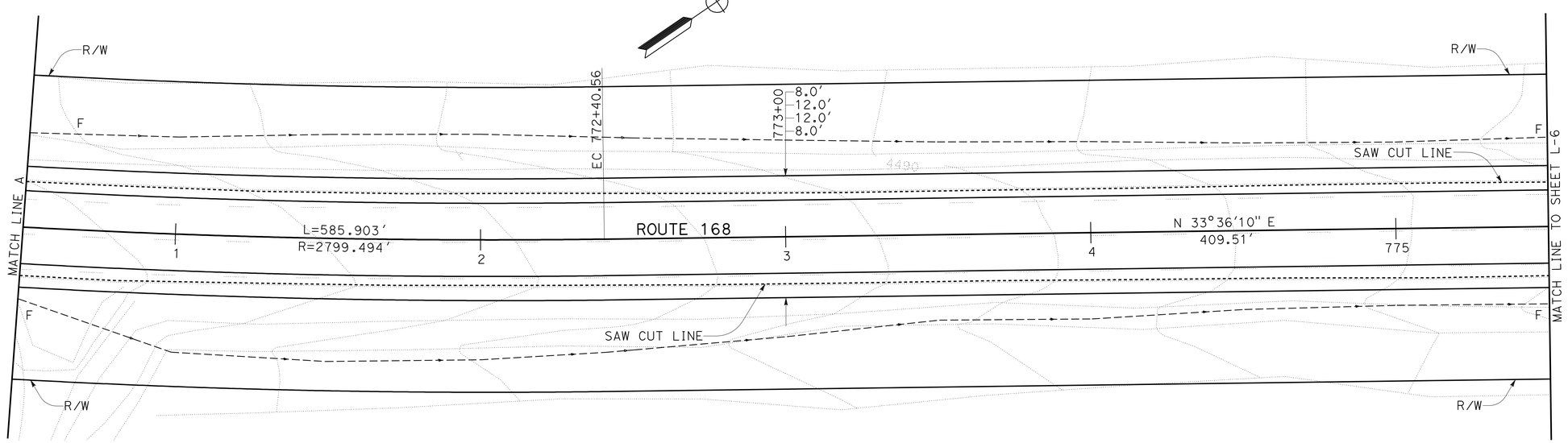

LAYOUT
SCALE: 1″=20′ **L-5**

STATE OF CALIFORNIA - DEPARTMENT OF TRANSPORTATION
Caltrans
DESIGN

FUNCTIONAL SUPERVISOR: TRUMAN DENIO
CALCULATED-DESIGNED BY: KONSTANTIN GREKOV
CHECKED BY: TRUMAN DENIO
REVISED BY
DATE REVISED

LAST REVISION 08-06-09
DATE PLOTTED => 16-NOV-2009
TIME PLOTTED => 10:55

Dist	COUNTY	ROUTE	POST MILES TOTAL PROJECT	SHEET No.	TOTAL SHEETS
09	Iny	168	13.5/15.0	8	32

Grant Michael Krueger 7-1-09
REGISTERED CIVIL ENGINEER DATE

11-16-09
PLANS APPROVAL DATE

REGISTERED PROFESSIONAL ENGINEER Grant Michael Krueger No. 53379 Exp. 6-30-11 CIVIL STATE OF CALIFORNIA

THE STATE OF CALIFORNIA OR ITS OFFICERS OR AGENTS SHALL NOT BE RESPONSIBLE FOR THE ACCURACY OR COMPLETENESS OF SCANNED COPIES OF THIS PLAN SHEET.

NOTE:

1. FOR ACCURATE RIGHT OF WAY AND ACCESS DATA, CONTACT RIGHT OF WAY ENGINEERING AT DISTRICT OFFICE.

Exist CURVE DATA

No.	R	Δ	T	L
2	3599.35′	9°27′35"	297.81′	594.26′

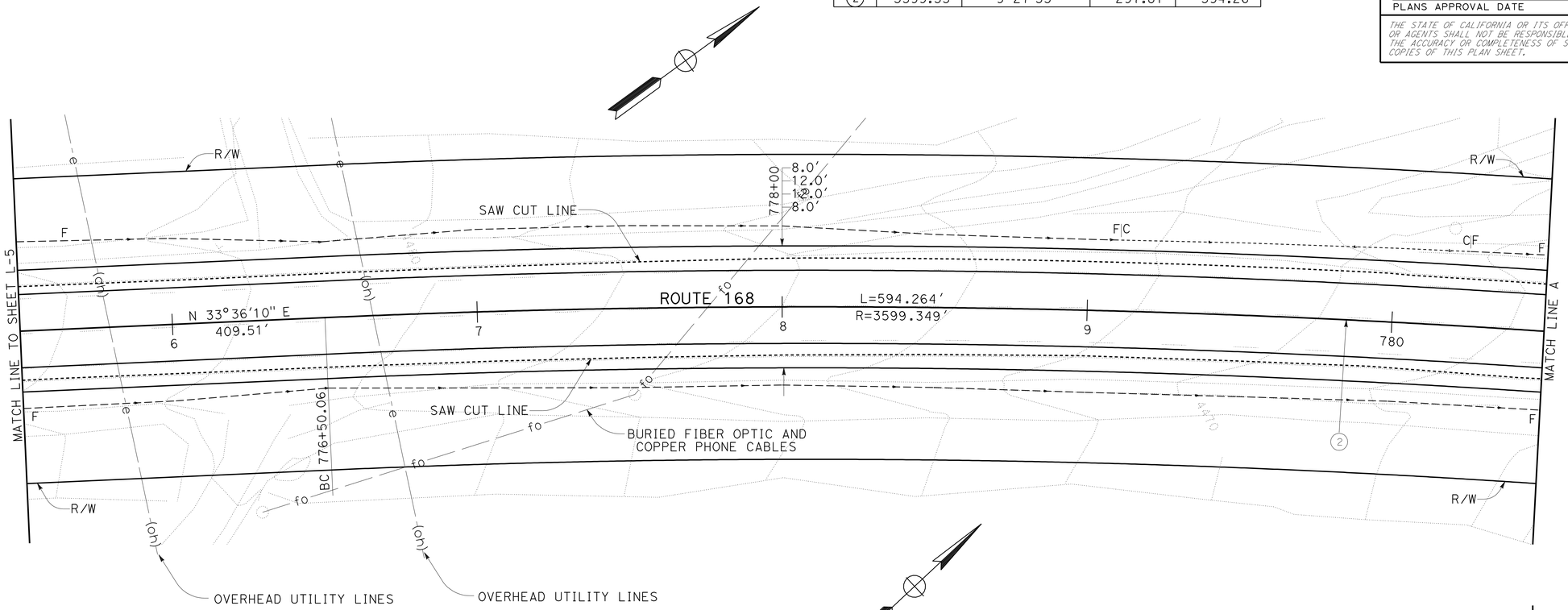

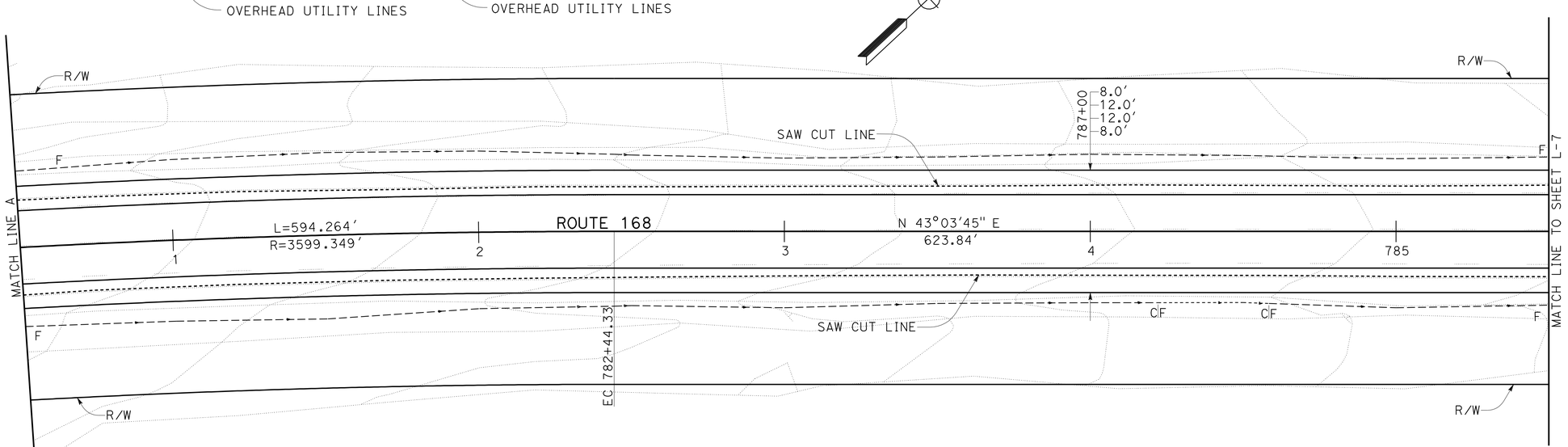

LAYOUT
SCALE: 1"=20′ **L-6**

STATE OF CALIFORNIA - DEPARTMENT OF TRANSPORTATION
Caltrans® **DESIGN**

FUNCTIONAL SUPERVISOR: TRUMAN DENIO
CALCULATED-DESIGNED BY: KONSTANTIN GREKOV
CHECKED BY: TRUMAN DENIO
REVISED BY
DATE REVISED

LAST REVISION 08-06-09 | DATE PLOTTED => 16-NOV-2009 | TIME PLOTTED => 10:55

Dist	COUNTY	ROUTE	POST MILES TOTAL PROJECT	SHEET No.	TOTAL SHEETS
09	Iny	168	13.5/15.0	9	32

Grant Michael Krueger 7-1-09
REGISTERED CIVIL ENGINEER DATE

11-16-09
PLANS APPROVAL DATE

REGISTERED PROFESSIONAL ENGINEER Grant Michael Krueger No. 53379 Exp 6-30-11 CIVIL STATE OF CALIFORNIA

THE STATE OF CALIFORNIA OR ITS OFFICERS OR AGENTS SHALL NOT BE RESPONSIBLE FOR THE ACCURACY OR COMPLETENESS OF SCANNED COPIES OF THIS PLAN SHEET.

NOTE:

1. FOR ACCURATE RIGHT OF WAY AND ACCESS DATA, CONTACT RIGHT OF WAY ENGINEERING AT DISTRICT OFFICE.

Exist CURVE DATA

No.	R	Δ	T	L
3	3599.35′	46°16′25"	1537.99′	2906.93′

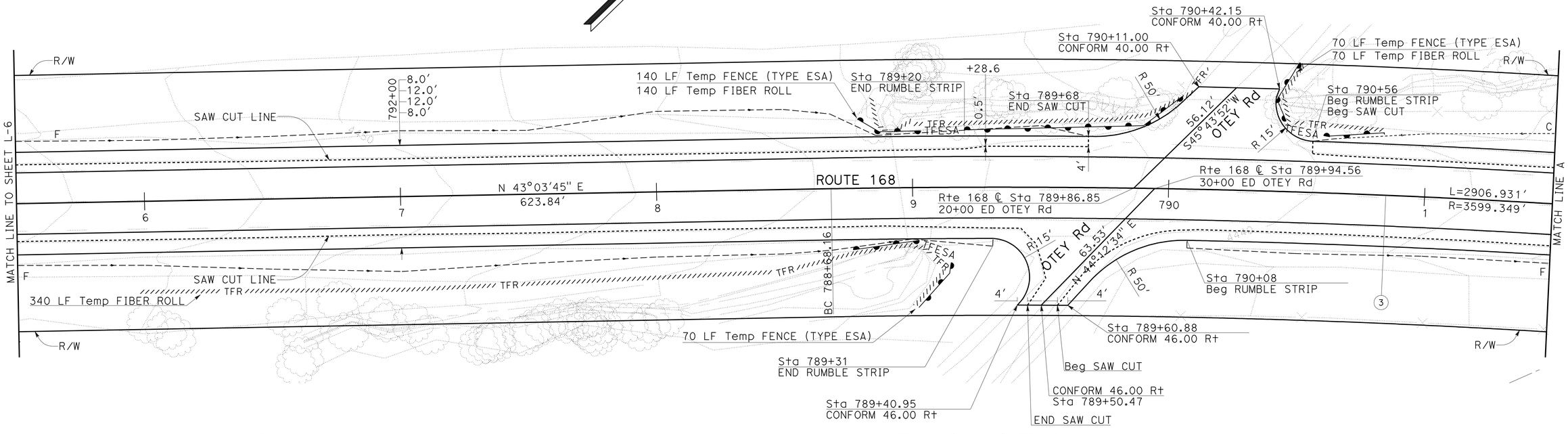

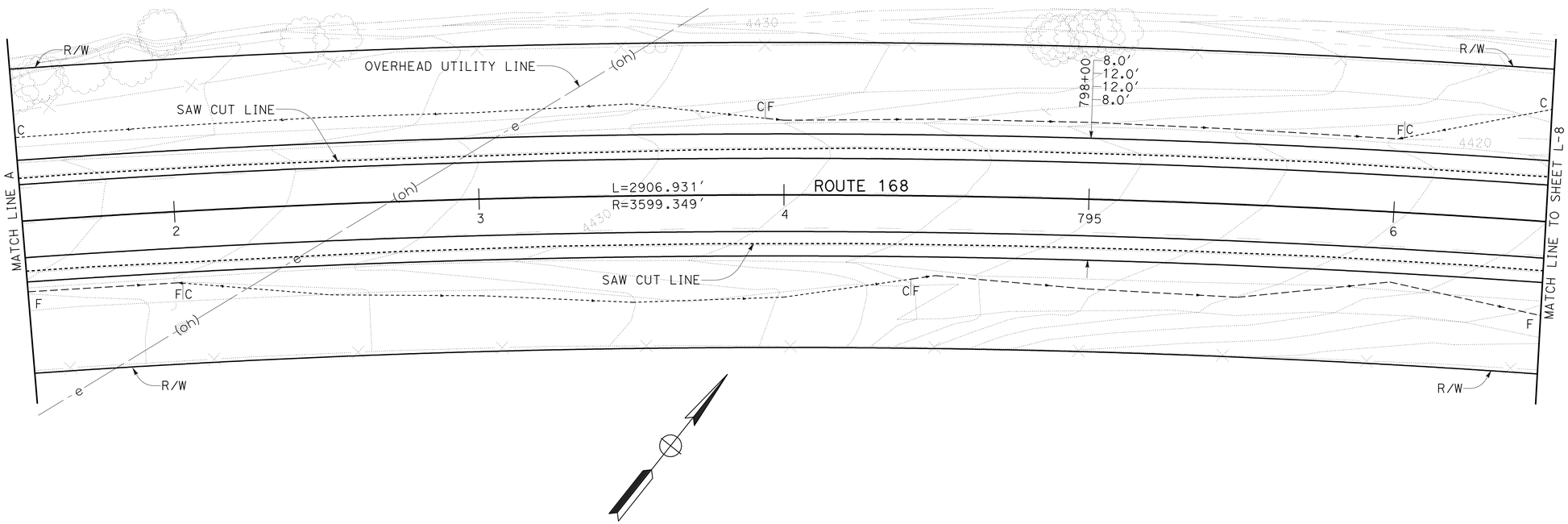

LAYOUT
SCALE: 1"=20′ **L-7**

STATE OF CALIFORNIA - DEPARTMENT OF TRANSPORTATION
Caltrans® **DESIGN**

FUNCTIONAL SUPERVISOR: TRUMAN DENIO
CALCULATED-DESIGNED BY: KONSTANTIN GREKOV
CHECKED BY: TRUMAN DENIO
REVISED BY
DATE REVISED

LAST REVISION 08-06-09 | DATE PLOTTED => 16-NOV-2009 | TIME PLOTTED => 10:55

Dist	COUNTY	ROUTE	POST MILES TOTAL PROJECT	SHEET No.	TOTAL SHEETS
09	Iny	168	13.5/15.0	10	32

Grant Michael Krueger 7-1-09
REGISTERED CIVIL ENGINEER DATE

11-16-09
PLANS APPROVAL DATE

REGISTERED PROFESSIONAL ENGINEER Grant Michael Krueger No. 53379 Exp 6-30-11 CIVIL STATE OF CALIFORNIA

THE STATE OF CALIFORNIA OR ITS OFFICERS OR AGENTS SHALL NOT BE RESPONSIBLE FOR THE ACCURACY OR COMPLETENESS OF SCANNED COPIES OF THIS PLAN SHEET.

NOTE:

1. FOR ACCURATE RIGHT OF WAY AND ACCESS DATA, CONTACT RIGHT OF WAY ENGINEERING AT DISTRICT OFFICE.

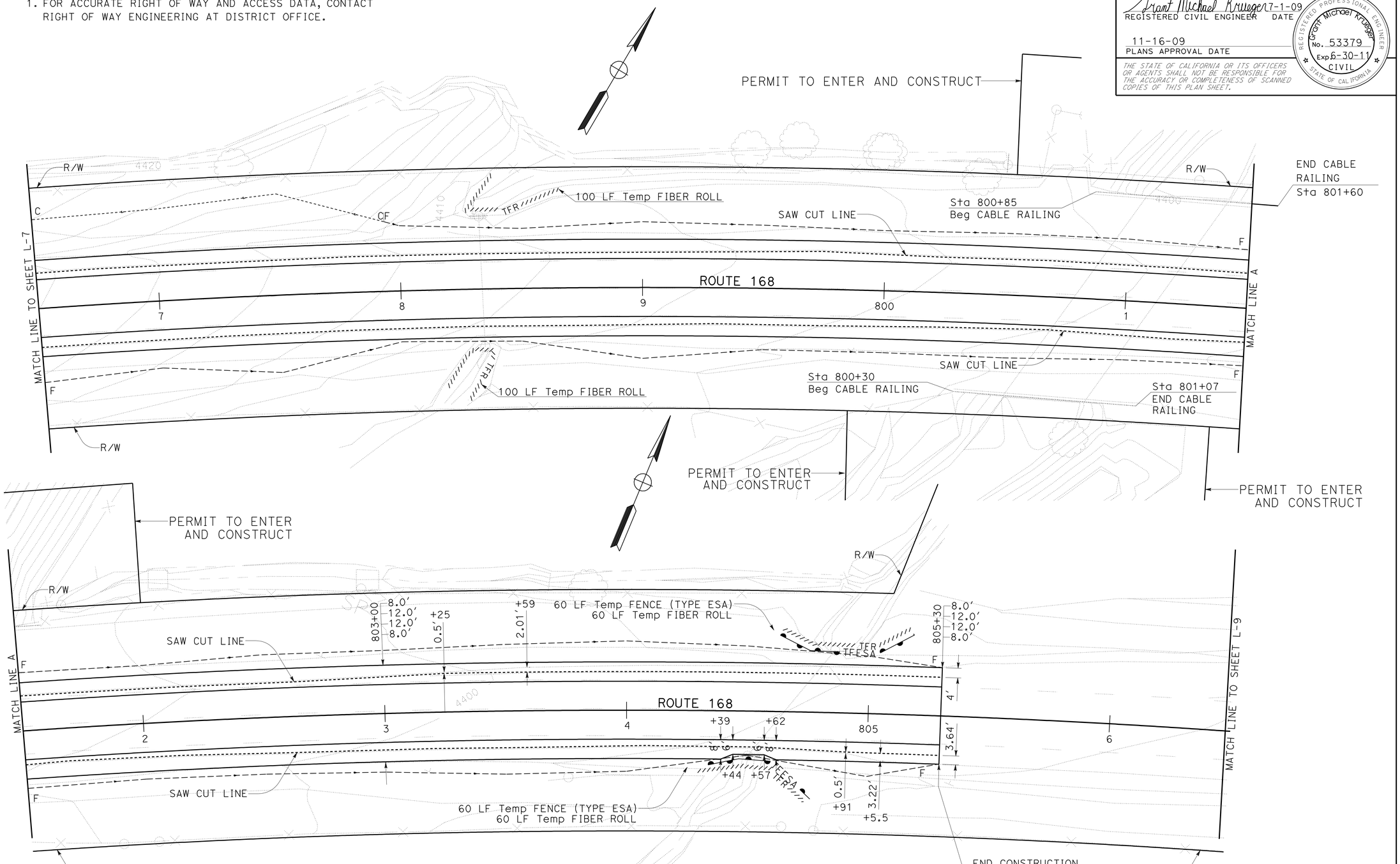

LAYOUT
SCALE: 1"=20' **L-8**

REVISED BY	DATE REVISED
KONSTANTIN GREKOV	TRUMAN DENIO
CALCULATED-DESIGNED BY	CHECKED BY
FUNCTIONAL SUPERVISOR	TRUMAN DENIO

STATE OF CALIFORNIA - DEPARTMENT OF TRANSPORTATION
Caltrans
DESIGN

LAST REVISION 08-06-09 | DATE PLOTTED => 16-NOV-2009 | TIME PLOTTED => 10:56

Dist	COUNTY	ROUTE	POST MILES TOTAL PROJECT	SHEET No.	TOTAL SHEETS
09	Iny	168	13.5/15.0	11	32

Grant Michael Krueger 7-1-09
REGISTERED CIVIL ENGINEER DATE

11-16-09
PLANS APPROVAL DATE

REGISTERED PROFESSIONAL ENGINEER Grant Michael Krueger No. 53379 Exp 6-30-11 CIVIL STATE OF CALIFORNIA

THE STATE OF CALIFORNIA OR ITS OFFICERS OR AGENTS SHALL NOT BE RESPONSIBLE FOR THE ACCURACY OR COMPLETENESS OF SCANNED COPIES OF THIS PLAN SHEET.

NOTES:

1. FOR ACCURATE RIGHT OF WAY AND ACCESS DATA, CONTACT RIGHT OF WAY ENGINEERING AT DISTRICT OFFICE.
2. TEMPORARY CONSTRUCTION STAGING AREA IS AVAILABLE FOR THE EXCLUSIVE USE OF THE CONTRACTOR.

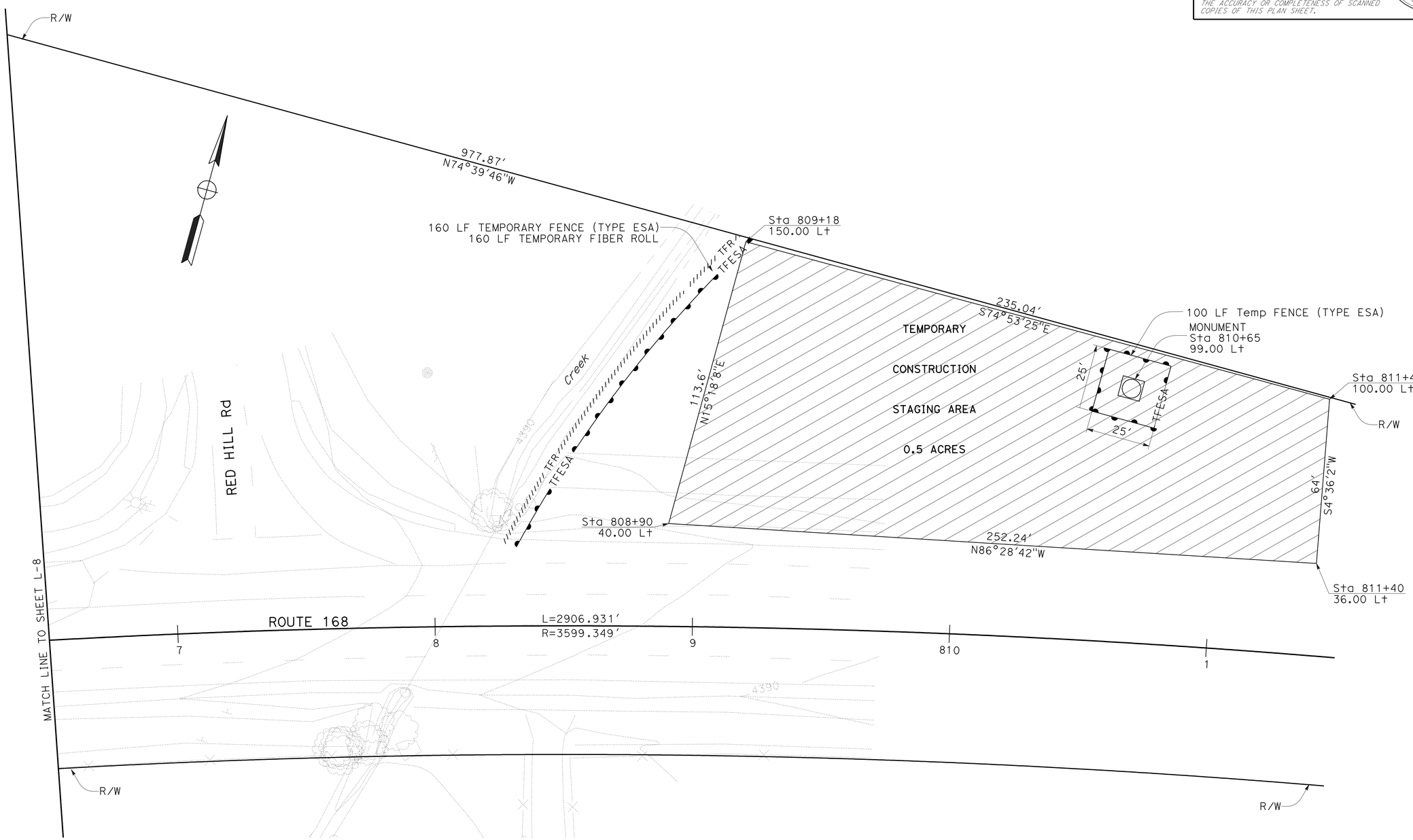

LAYOUT
SCALE: 1"=20' **L-9**

STATE OF CALIFORNIA - DEPARTMENT OF TRANSPORTATION
Caltrans® **DESIGN**

FUNCTIONAL SUPERVISOR: TRUMAN DENIO
CALCULATED-DESIGNED BY: KONSTANTIN GREKOV
CHECKED BY: TRUMAN DENIO
REVISED BY
DATE REVISED

LAST REVISION 08-06-09
DATE PLOTTED => 16-NOV-2009
TIME PLOTTED => 10:56

Dist	COUNTY	ROUTE	POST MILES TOTAL PROJECT	SHEET No.	TOTAL SHEETS
09	Iny	168	13.5/15.0	12	32

Grant Michael Krueger 7-1-09
REGISTERED CIVIL ENGINEER DATE

11-16-09
PLANS APPROVAL DATE

REGISTERED PROFESSIONAL ENGINEER Grant Michael Krueger No. 53379 Exp 6-30-11 CIVIL STATE OF CALIFORNIA

THE STATE OF CALIFORNIA OR ITS OFFICERS OR AGENTS SHALL NOT BE RESPONSIBLE FOR THE ACCURACY OR COMPLETENESS OF SCANNED COPIES OF THIS PLAN SHEET.

LEGEND:

- DUFF EXCAVATION
- DUFF PLACEMENT
- COLD PLANE AC PAVEMENT
- ROADWAY EXCAVATION

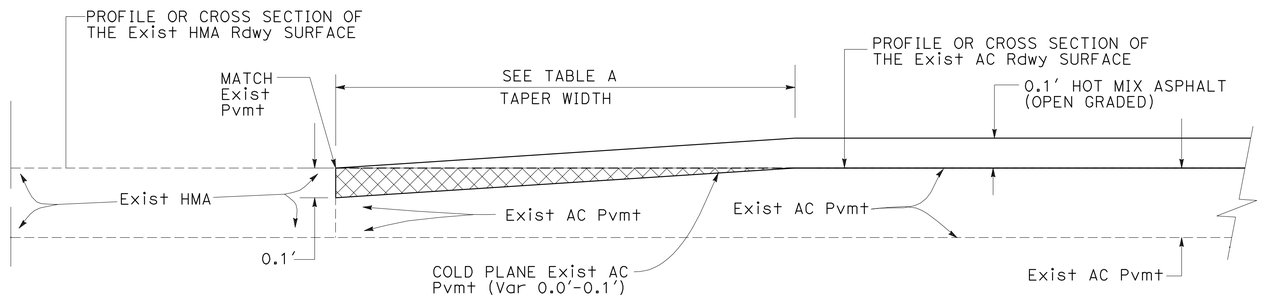

COLD PLANE TO CONFORM HMA PAVING TO MATCH THE Exist AC Rdwy SURFACE

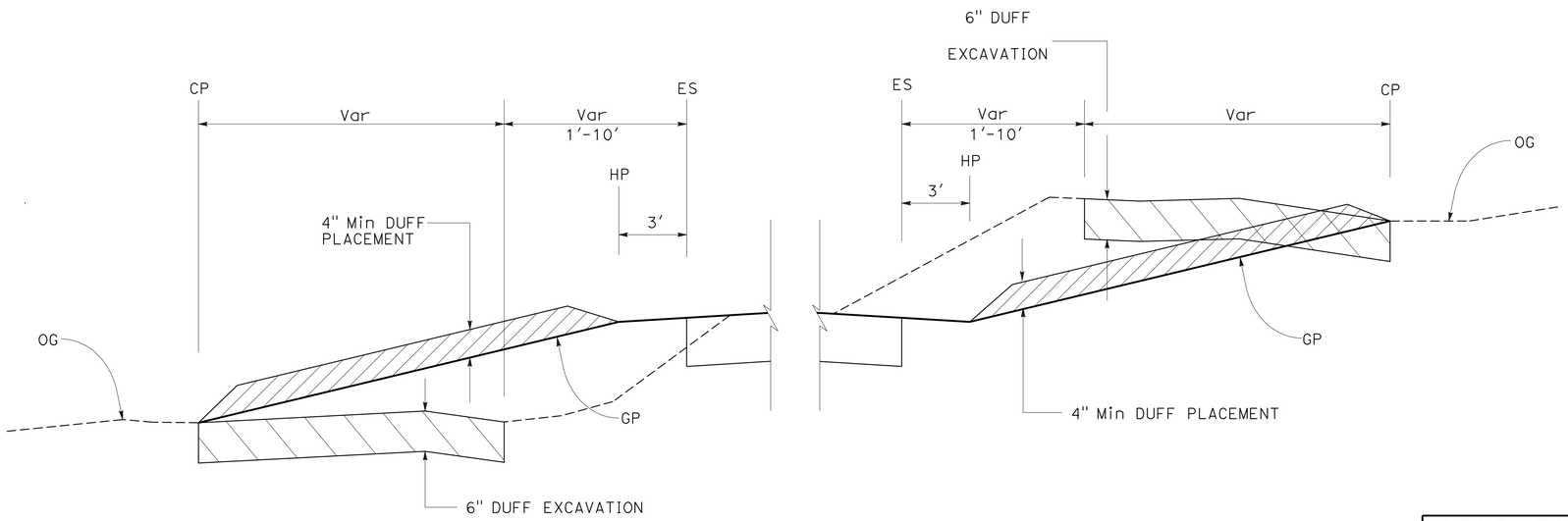

DUFF STRIPPING & PLACEMENT DETAILS
Sta 726+00 TO Sta 805+30

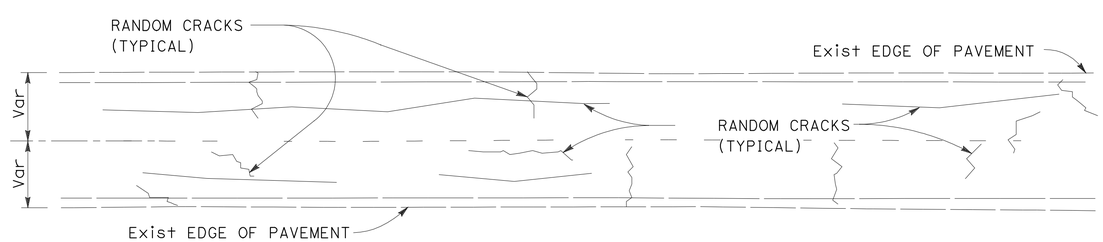

CRACK TREATMENT DETAIL

TABLE A

COLD PLANE ASPHALT CONCRETE PAVEMENT

STATION	DESCRIPTION	LENGTH	TAPER WIDTH	DEPTH	NOTES
726+00-726+20	CONFORM GRIND	40.5′	20.0′	0.1′	BEGIN CONSTRUCTION
728+10	CONFORM GRIND	27.6′	6.0′	0.1′	ED POWERS Rd, L†
733+00	CONFORM GRIND	80.0′	6.0′	0.1′	ROAD CONNECTION, R†
739+00	CONFORM GRIND	75.8′	6.0′	0.1′	ROAD CONNECTION, R†
766+30	CONFORM GRIND	17.5′	6.0′	0.1′	PLANT SIX Rd, R†
789+95	CONFORM GRIND	16.0′	6.0′	0.1′	OTEY Rd, R†
789+95	CONFORM GRIND	31.4′	6.0′	0.1′	OTEY Rd, L†
805+10-805+30	CONFORM GRIND	40.2′	20.0′	0.1′	END CONSTRUCTION

CONSTRUCTION DETAILS
NO SCALE

C-1

STATE OF CALIFORNIA - DEPARTMENT OF TRANSPORTATION
Caltrans® DESIGN
FUNCTIONAL SUPERVISOR TRUMAN DENIO
CALCULATED-DESIGNED BY KONSTANTIN GREKOV
CHECKED BY TRUMAN DENIO
REVISED BY
DATE REVISED

LAST REVISION 08-06-09
DATE PLOTTED => 16-NOV-2009
TIME PLOTTED => 10:56

Dist	COUNTY	ROUTE	POST MILES TOTAL PROJECT	SHEET No.	TOTAL SHEETS
09	Iny	168	13.5/15.0	13	32

Grant Michael Krueger 7-1-09
REGISTERED CIVIL ENGINEER DATE

11-16-09
PLANS APPROVAL DATE

REGISTERED PROFESSIONAL ENGINEER Grant Michael Krueger No. 53379 Exp. 6-30-11 CIVIL STATE OF CALIFORNIA

THE STATE OF CALIFORNIA OR ITS OFFICERS OR AGENTS SHALL NOT BE RESPONSIBLE FOR THE ACCURACY OR COMPLETENESS OF SCANNED COPIES OF THIS PLAN SHEET.

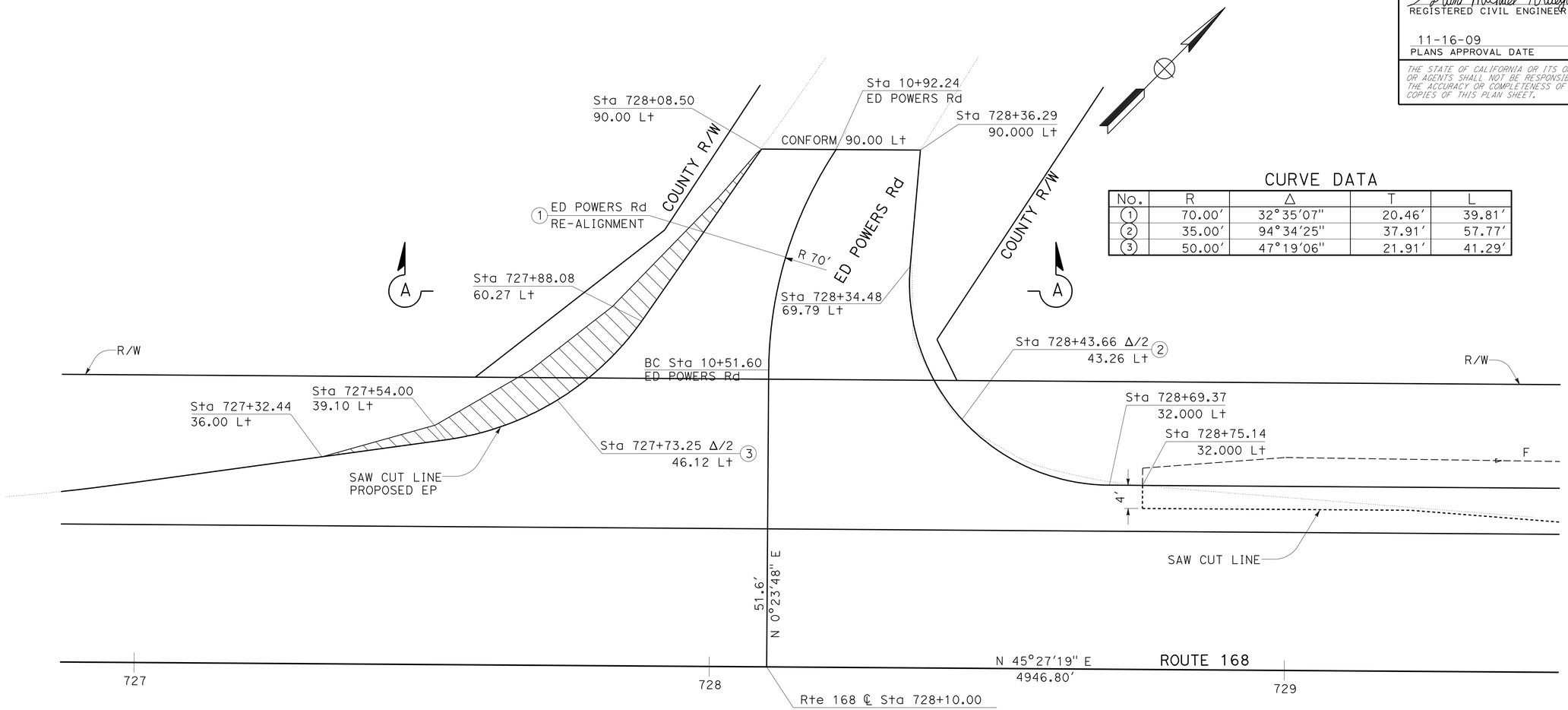

CURVE DATA

No.	R	Δ	T	L
1	70.00'	32°35'07"	20.46'	39.81'
2	35.00'	94°34'25"	37.91'	57.77'
3	50.00'	47°19'06"	21.91'	41.29'

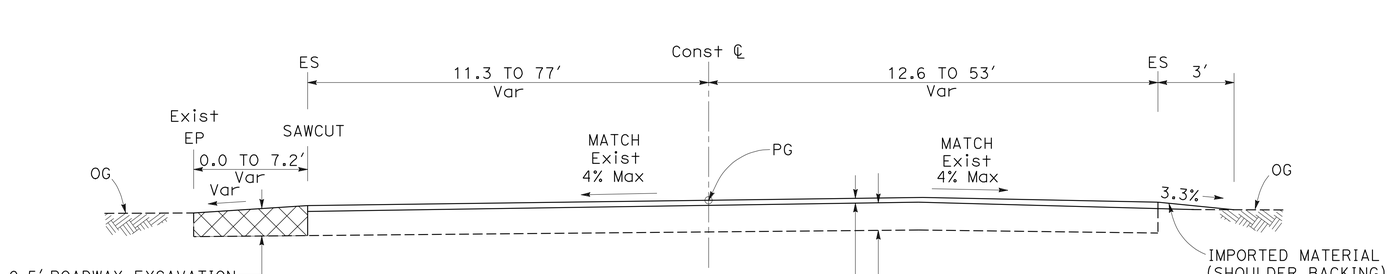

SECTION A-A

CONSTRUCTION DETAILS

SCALE: 1"=10'

C-2

STATE OF CALIFORNIA - DEPARTMENT OF TRANSPORTATION
Caltrans
DESIGN

FUNCTIONAL SUPERVISOR: TRUMAN DENIO
CALCULATED-DESIGNED BY: KONSTANTIN GREKOV
CHECKED BY: TRUMAN DENIO
REVISED BY
DATE REVISED

LAST REVISION 08-06-09
DATE PLOTTED => 16-NOV-2009
TIME PLOTTED => 10:57

Dist	COUNTY	ROUTE	POST MILES TOTAL PROJECT	SHEET No.	TOTAL SHEETS
09	Iny	168	13.5/15.0	14	32

Grant Michael Krueger 7-1-09
REGISTERED CIVIL ENGINEER DATE

11-16-09
PLANS APPROVAL DATE

REGISTERED PROFESSIONAL ENGINEER Grant Michael Krueger No. 53379 Exp. 6-30-11 CIVIL STATE OF CALIFORNIA

THE STATE OF CALIFORNIA OR ITS OFFICERS OR AGENTS SHALL NOT BE RESPONSIBLE FOR THE ACCURACY OR COMPLETENESS OF SCANNED COPIES OF THIS PLAN SHEET.

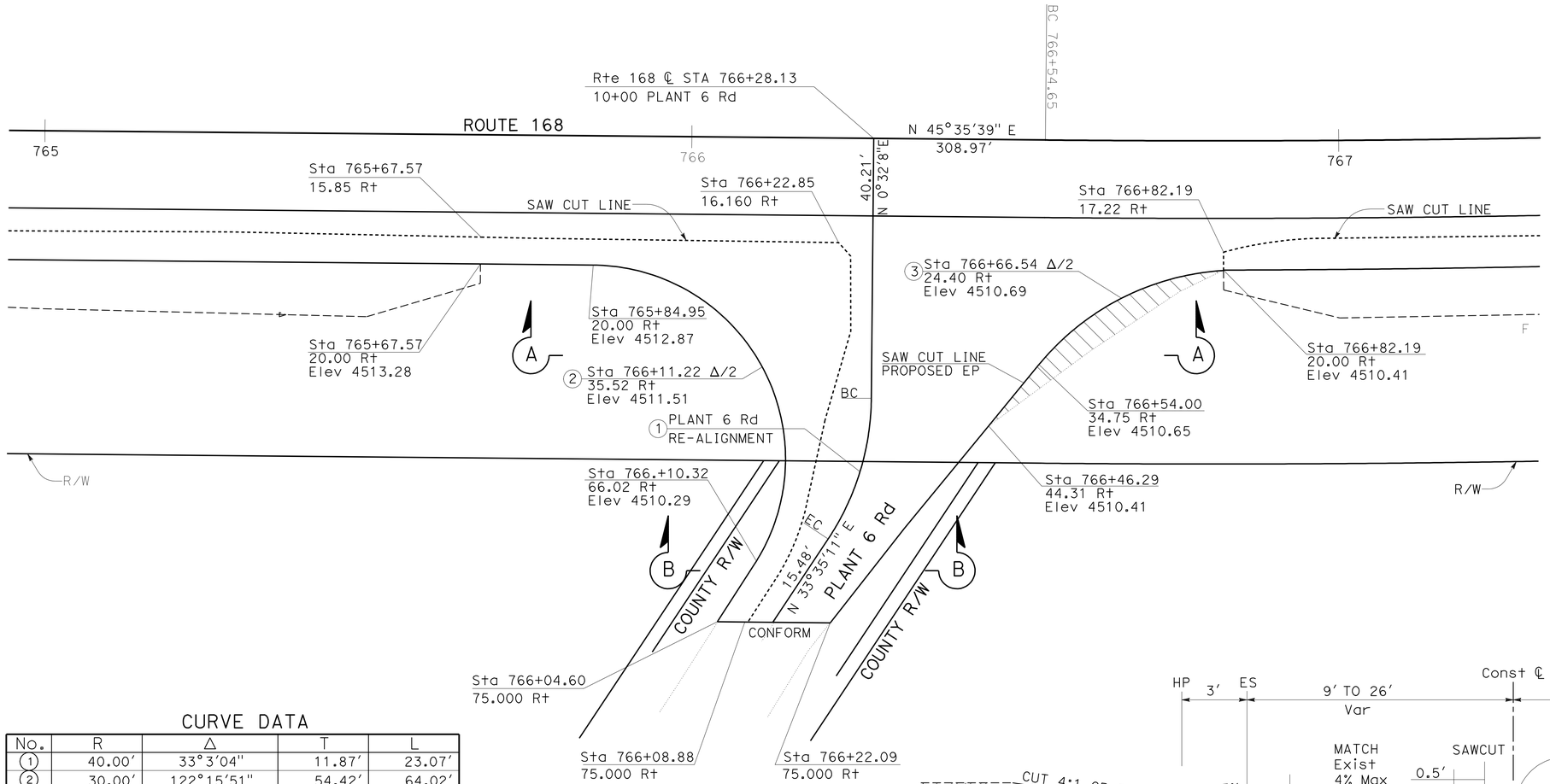

CURVE DATA

No.	R	Δ	T	L
1	40.00'	33°3'04"	11.87'	23.07'
2	30.00'	122°15'51"	54.42'	64.02'
3	40.00'	47°12'05"	17.48'	32.95'

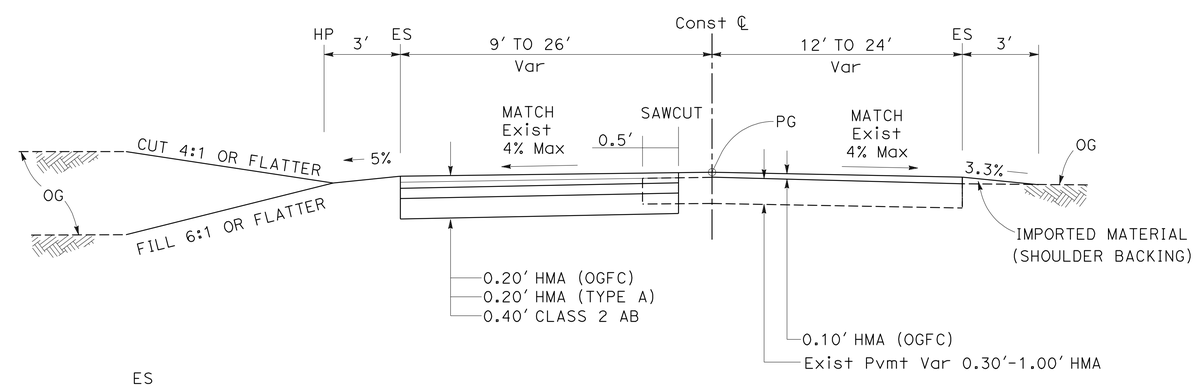

SECTION B-B

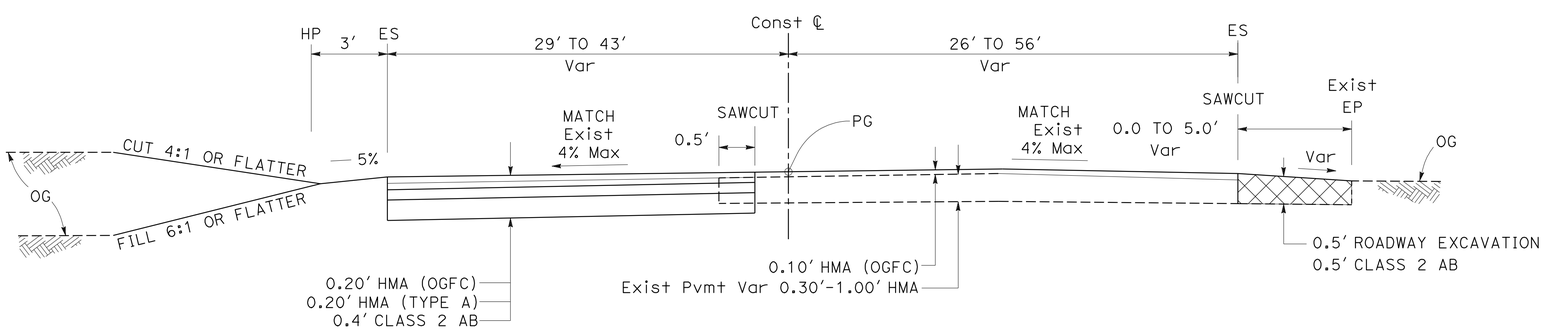

SECTION A-A

CONSTRUCTION DETAILS

SCALE: 1"=10'

C-3

STATE OF CALIFORNIA - DEPARTMENT OF TRANSPORTATION
Caltrans
DESIGN

FUNCTIONAL SUPERVISOR: TRUMAN DENIO
CALCULATED-DESIGNED BY: KONSTANTIN GREKOV
CHECKED BY: TRUMAN DENIO
REVISED BY
DATE REVISED

LAST REVISION 08-06-09
DATE PLOTTED => 16-NOV-2009
TIME PLOTTED => 10:57

NOTE: FOR INFORMATION NOT SHOWN SEE Std PLAN B11-47.

Dist	COUNTY	ROUTE	POST MILES TOTAL PROJECT	SHEET No.	TOTAL SHEETS
09	Iny	168	13.5/15.0	15	32

Grant Michael Krueger 7-1-09
REGISTERED CIVIL ENGINEER DATE

11-16-09
PLANS APPROVAL DATE

REGISTERED PROFESSIONAL ENGINEER Grant Michael Krueger No. 53379 Exp 6-30-11 CIVIL STATE OF CALIFORNIA

THE STATE OF CALIFORNIA OR ITS OFFICERS OR AGENTS SHALL NOT BE RESPONSIBLE FOR THE ACCURACY OR COMPLETENESS OF SCANNED COPIES OF THIS PLAN SHEET.

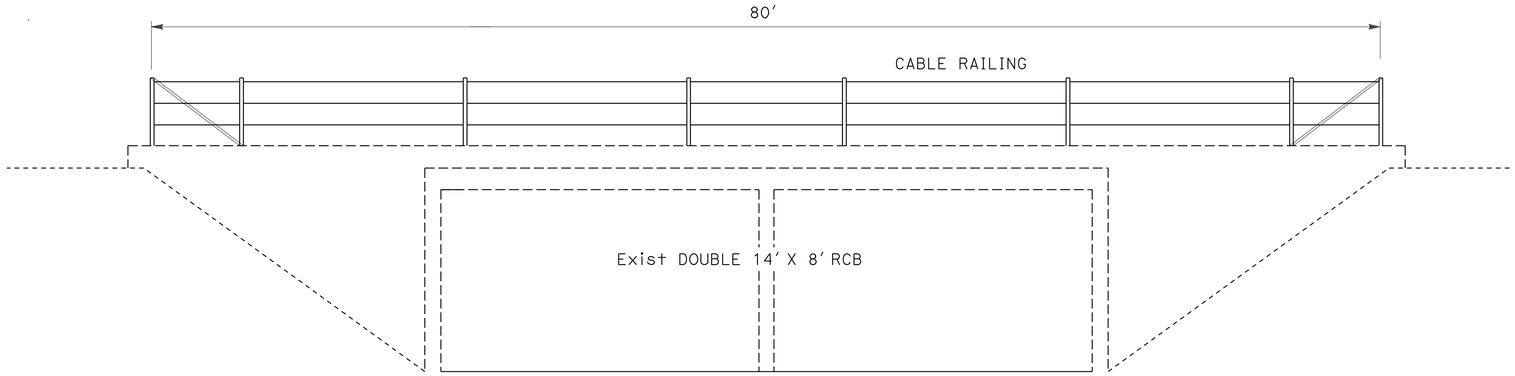

END ELEVATION - EXISTING RCB
CABLE RAILING - TYPICAL - BOTH ENDS
Sta 801+00

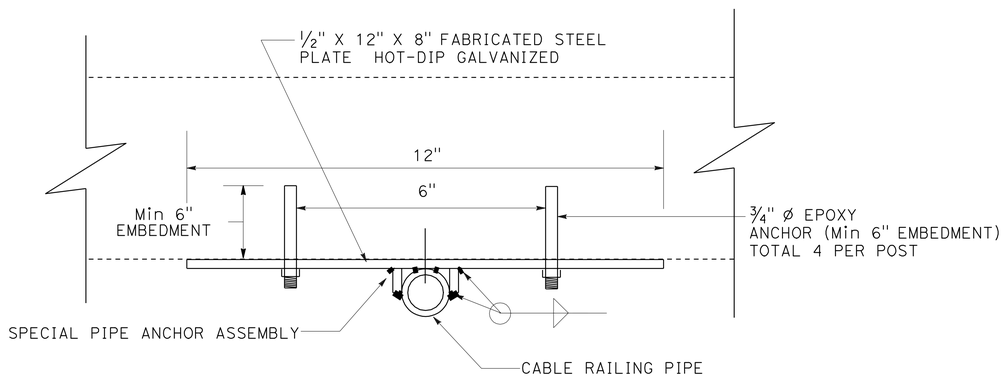

SECTION A-A

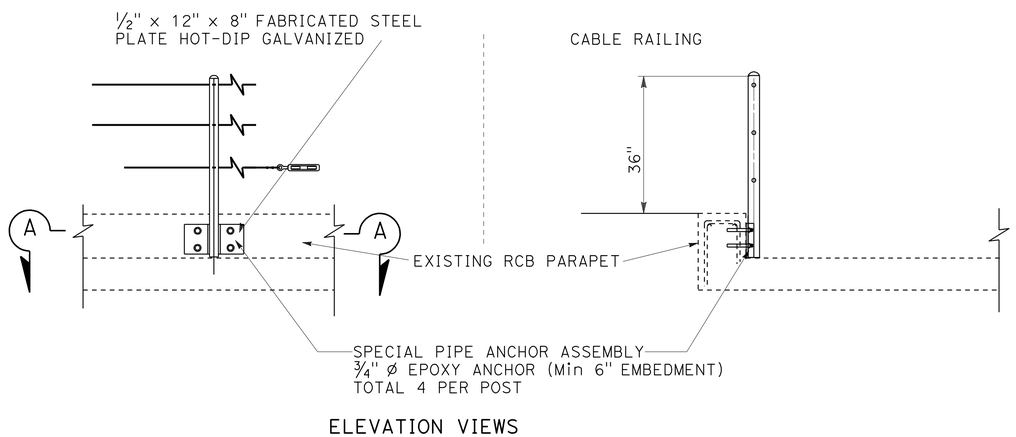

ELEVATION VIEWS

CABLE RAILING - SPECIAL POST ANCHOR DETAILS

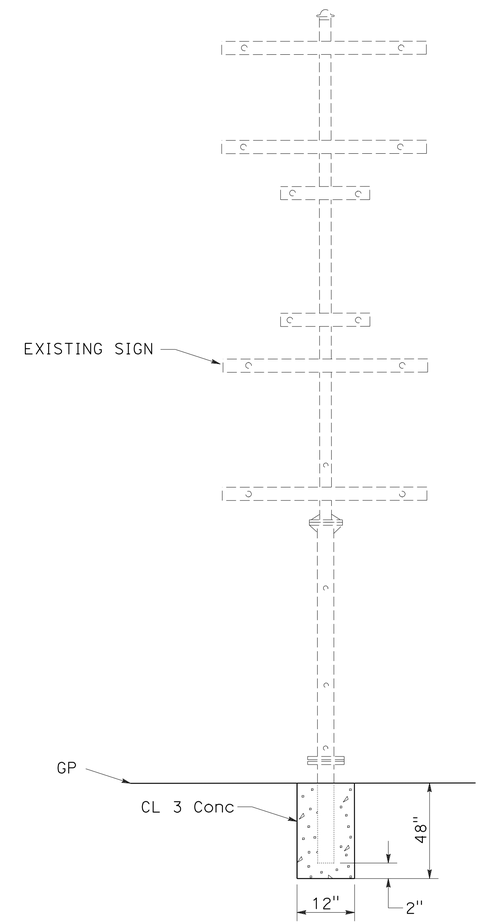

TURNABLE METAL POST FOUNDATION
LEFT OF Sta 776+00

CONSTRUCTION DETAILS
NO SCALE **C-4**

STATE OF CALIFORNIA - DEPARTMENT OF TRANSPORTATION
Caltrans® DESIGN

FUNCTIONAL SUPERVISOR: TRUMAN DENIO
CALCULATED-DESIGNED BY: KONSTANTIN GREKOV
CHECKED BY: TRUMAN DENIO
REVISED BY / DATE REVISED

LAST REVISION 08-06-09 | DATE PLOTTED => 16-NOV-2009 | TIME PLOTTED => 10:57

Dist	COUNTY	ROUTE	POST MILES TOTAL PROJECT	SHEET No.	TOTAL SHEETS
09	Iny	168	13.5/15.0	16	32

Grant Michael Krueger 7-1-09
REGISTERED CIVIL ENGINEER DATE

11-16-09
PLANS APPROVAL DATE

REGISTERED PROFESSIONAL ENGINEER Grant Michael Krueger No. 53379 Exp 6-30-11 CIVIL STATE OF CALIFORNIA

THE STATE OF CALIFORNIA OR ITS OFFICERS OR AGENTS SHALL NOT BE RESPONSIBLE FOR THE ACCURACY OR COMPLETENESS OF SCANNED COPIES OF THIS PLAN SHEET.

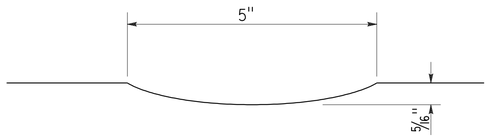

SECTION A-A

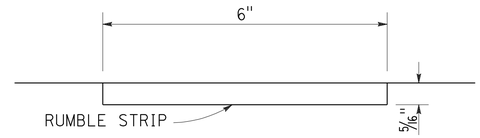

SECTION B-B

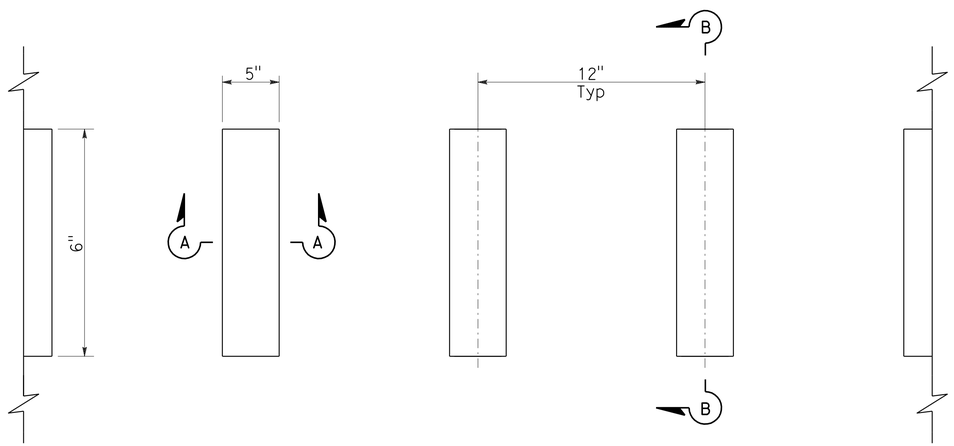

PLAN

GROUND-IN INDENTATIONS

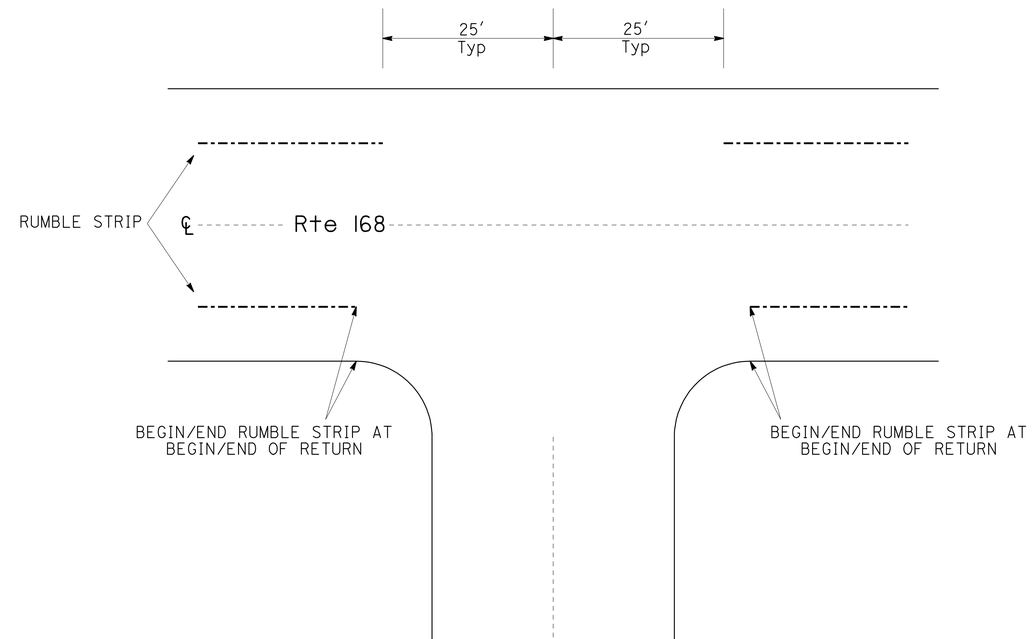

INTERSECTIONS

PLAN VIEW

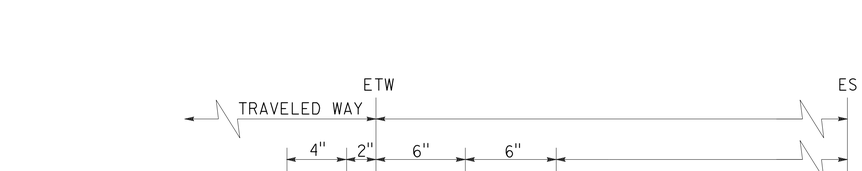

TYPICAL RUMBLE STRIP PLACEMENT
RIGHT OF DIRECTION OF TRAVEL

CONSTRUCTION DETAILS
NO SCALE **C-5**

STATE OF CALIFORNIA - DEPARTMENT OF TRANSPORTATION
Caltrans® **DESIGN**

FUNCTIONAL SUPERVISOR: TRUMAN DENIO
CALCULATED-DESIGNED BY: KONSTANTIN GREKOV
CHECKED BY: TRUMAN DENIO
REVISED BY
DATE REVISED

LAST REVISION 08-06-09 | DATE PLOTTED => 16-NOV-2009 | TIME PLOTTED => 10:57

Dist	COUNTY	ROUTE	POST MILES TOTAL PROJECT	SHEET No.	TOTAL SHEETS
09	Iny	168	13.5/15.0	17	32

Grant Michael Krueger 7-1-09
REGISTERED CIVIL ENGINEER DATE

11-16-09
PLANS APPROVAL DATE

REGISTERED PROFESSIONAL ENGINEER Grant Michael Krueger No. 53379 Exp 6-30-11 CIVIL STATE OF CALIFORNIA

THE STATE OF CALIFORNIA OR ITS OFFICERS OR AGENTS SHALL NOT BE RESPONSIBLE FOR THE ACCURACY OR COMPLETENESS OF SCANNED COPIES OF THIS PLAN SHEET.

NOTES:

1 - EXACT LOCATION AND POSITION OF TEMPORARY DRAINAGE PROTECTION TO BE DETERMINED BY THE ENGINEER.

2 - ALL TEMPORARY FIBER ROLL SHALL BE TYPE 1.

3 - TEMPORARY FIBER ROLL SHALL BE DOUBLED ACROSS DRY CREEKS.

4 - SINGLE FIBER ROLL ALLOWED WHEN PLACED ABOVE CULVERT ENDS AS SHOWN.

LEGEND

/// TFR /// - TEMPORARY FIBER ROLL

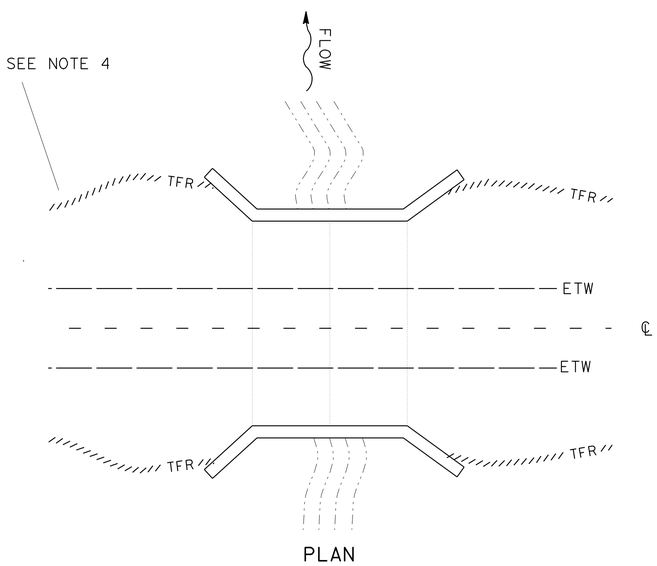

PLAN

TEMPORARY DRAINAGE PROTECTION BOX CULVERT (TYPICAL)

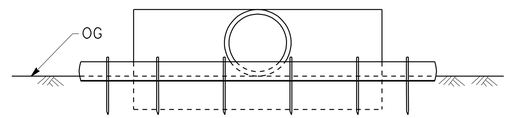

ELEVATION

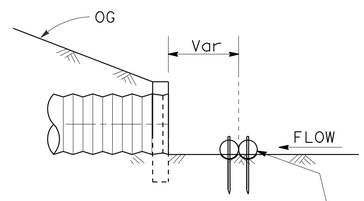

TYPICAL CROSS-SECTION

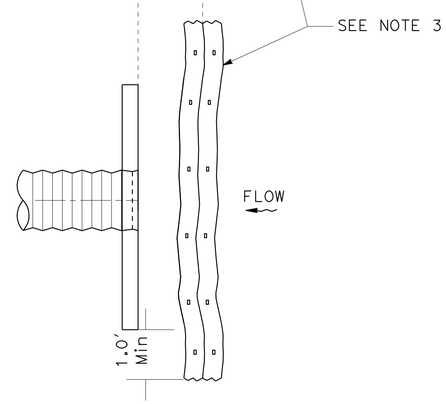

PLAN VIEW

TEMPORARY DRAINAGE PROTECTION DRY CULVERT INLET (TYPICAL)

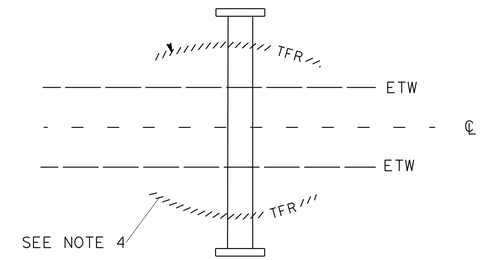

PLAN

TEMPORARY DRAINAGE PROTECTION CULVERT LIVE WATER (TYPICAL)

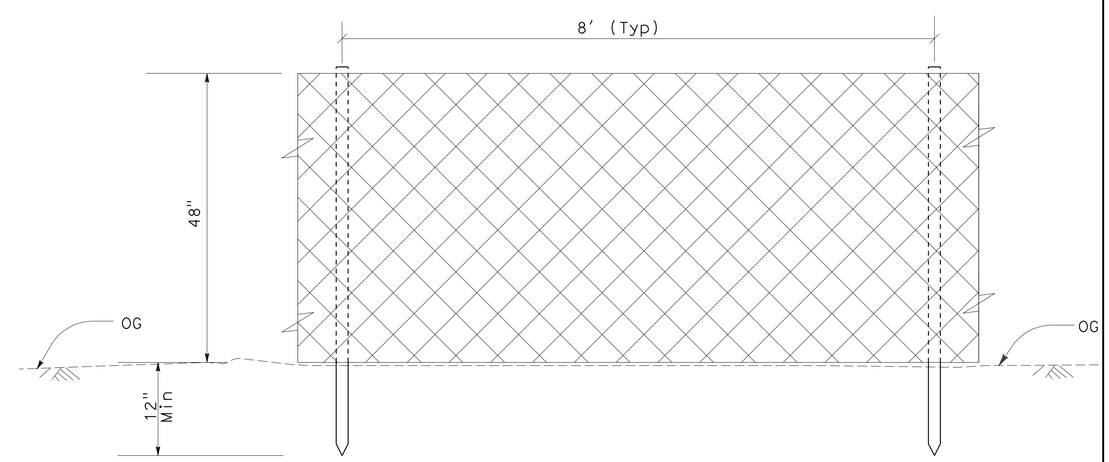

TEMPORARY ESA FENCE DETAIL (TYPICAL) (SELF SUPPORTING)

EXISTING UTILITY FACILITIES HAVE NOT BEEN PLOTTED ON THESE PLANS

TEMPORARY WATER POLLUTION CONTROL DETAILS

NO SCALE

WPCD-1

STATE OF CALIFORNIA - DEPARTMENT OF TRANSPORTATION
Caltrans
DESIGN
FUNCTIONAL SUPERVISOR TRUMAN DENIO
CALCULATED-DESIGNED BY KONSTANTIN GREKOV
CHECKED BY TRUMAN DENIO
REVISED BY
DATE REVISED

LAST REVISION 08-06-09
DATE PLOTTED => 16-NOV-2009
TIME PLOTTED => 10:58

Dist	COUNTY	ROUTE	POST MILES TOTAL PROJECT	SHEET No.	TOTAL SHEETS
09	Iny	168	13.5/15.0	18	32

Grant Michael Krueger 7-1-09
REGISTERED CIVIL ENGINEER DATE

11-16-09
PLANS APPROVAL DATE

REGISTERED PROFESSIONAL ENGINEER Grant Michael Krueger No. 53379 Exp. 6-30-11 CIVIL STATE OF CALIFORNIA

THE STATE OF CALIFORNIA OR ITS OFFICERS OR AGENTS SHALL NOT BE RESPONSIBLE FOR THE ACCURACY OR COMPLETENESS OF SCANNED COPIES OF THIS PLAN SHEET.

NOTES:

1. FOR SIGN INSTALLATION DETAILS AND DIMENSIONS NOT SHOWN SEE Std PLANS.
2. SEE TABLE FOR PLACEMENT TYPE. EXACT LOCATION AND POSITION OF CONSTRUCTION AREA SIGNS TO BE DETERMINED BY THE ENGINEER.
3. EXACT LOCATION AND POSITION OF CONSTRUCTION AREA SIGNS TO BE DETERMINED BY THE ENGINEER.

ABBREVIATION:

PCMS = PORTABLE CHANGEABLE MESSAGE SIGN

STATIONARY MOUNTED CONSTRUCTION AREA SIGNS

Approx PM	PLACEMENT TYPE	REMARKS
13.0	A	
R12.97	C	EAST BISHOP CREEK ROAD, R†
R13.48	C	ED POWERS ROAD, L†
14.30	C	PLANT #6 ROAD, R†
14.74	B	OTEY ROAD
15.08	C	RED HILL ROAD, L†
15.30	C	MUMY LANE, R†
15.36	C	SHEPARD LANE, L†
15.50	A	

PORTABLE CHANGEABLE MESSAGE SIGNS

EA	LOCATION(S)
2	PM 13.0 (FEBT) & PM 15.50 (FWBT)

PORTABLE CHANGEABLE MESSAGE SIGNS

MESSAGE FOR UNDIVIDED HIGHWAY		
USE CAUTION	PREPARE TO STOP	EXPECT 20 MINUTE DELAY

PCMS NOTES:

1. PORTABLE CHANGEABLE MESSAGE SIGN LOCATIONS TO BE CONFIRMED BY THE ENGINEER BEFORE THE ACTUAL CLOSURE.
2. ALTERNATE MESSAGES MUST BE APPROVED BY THE ENGINEER.
3. MESSAGE MAY BE ALTERED BY THE ENGINEER.
4. WHEN CONSTRUCTION OPERATIONS ARE NOT ACTIVELY IN PROGRESS, PORTABLE CHANGEABLE MESSAGE SIGNS SHALL NOT DISPLAY A MESSAGE UNLESS DIRECTED BY THE ENGINEER.

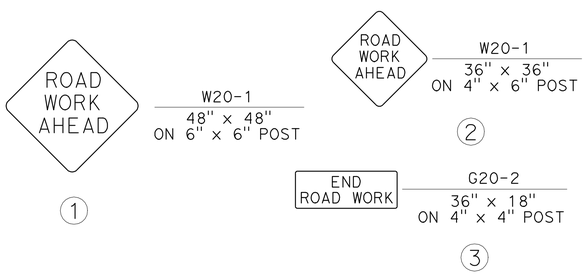

TYPICAL SIGN LAYOUT

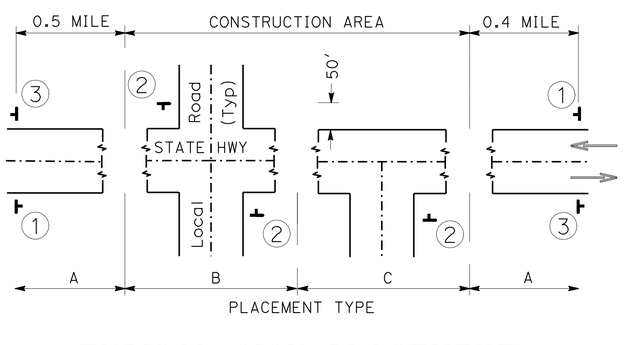

TYPICAL SIGN PLACEMENT FOR UNDIVIDED HIGHWAY

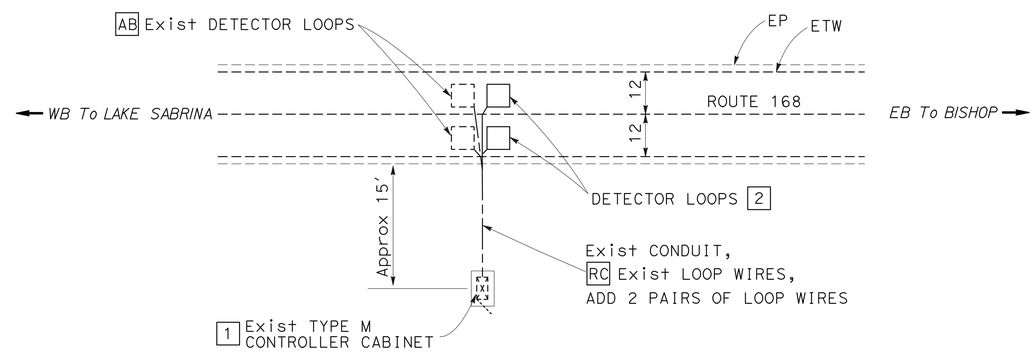

NOTES:

1 COIL 6' OF LOOP WIRE IN EXISTING TYPE M CABINET.

2 DETECTOR LOOPS SHALL BE INSTALLED WITH 4 TURNS.

DETECTOR LOOP

LOCATION	SIDE	EA
STA 761+68.15	L†	1
STA 761+68.15	R†	1
TOTAL		2

CONSTRUCTION AREA SIGNS

NO SCALE

CS-1

REVISED BY | DATE REVISED
KONSTANTIN GREKOV | TRUMAN DENIO
CALCULATED-DESIGNED BY | CHECKED BY
FUNCTIONAL SUPERVISOR: TRUMAN DENIO
STATE OF CALIFORNIA - DEPARTMENT OF TRANSPORTATION
Caltrans
DESIGN

LAST REVISION 08-06-09 | DATE PLOTTED => 16-NOV-2009 | TIME PLOTTED => 10:58

Dist	COUNTY	ROUTE	POST MILES TOTAL PROJECT	SHEET No.	TOTAL SHEETS
09	Iny	168	13.5/15.0	19	32

Grant Michael Krueger 7-1-09
REGISTERED CIVIL ENGINEER DATE

11-16-09
PLANS APPROVAL DATE

REGISTERED PROFESSIONAL ENGINEER Grant Michael Krueger No. 53379 Exp. 6-30-11 CIVIL STATE OF CALIFORNIA

THE STATE OF CALIFORNIA OR ITS OFFICERS OR AGENTS SHALL NOT BE RESPONSIBLE FOR THE ACCURACY OR COMPLETENESS OF SCANNED COPIES OF THIS PLAN SHEET.

NOTES:

1. EXACT LOCATION OF SIGNS TO BE DETERMINED BY THE ENGINEER.
2. PAVEMENT DELINEATION NOT SHOWN SHALL MATCH EXISTING DELINEATION.

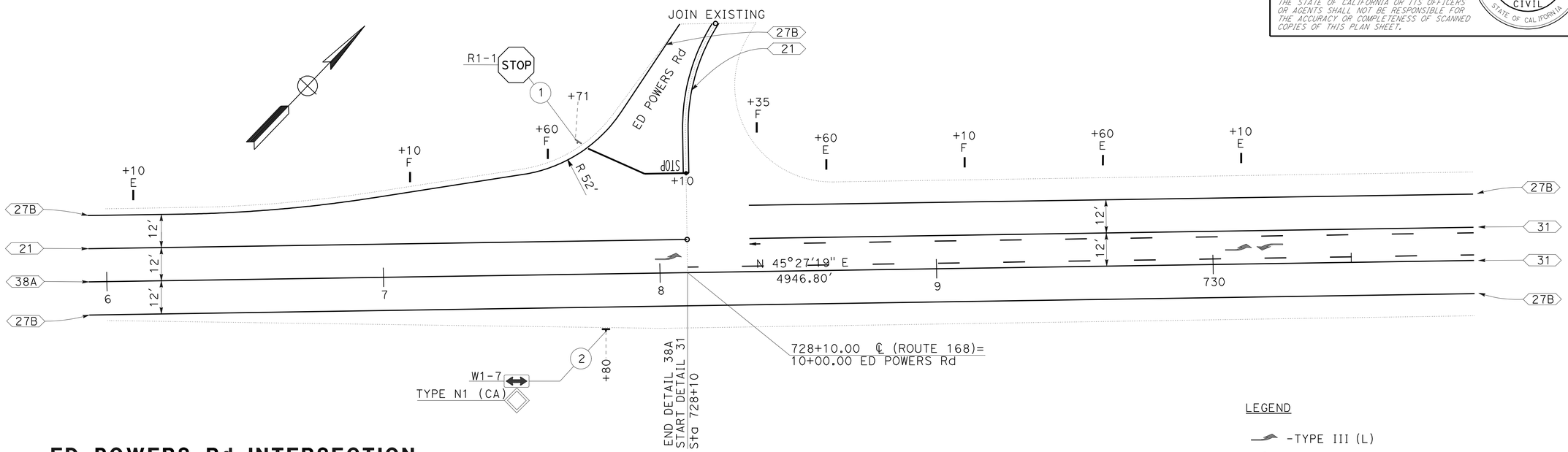

ED POWERS Rd INTERSECTION

LEGEND

- -TYPE III (L)
- -DELINEATOR, OBJECT MARKER
- XX -STRIPING DETAIL NUMBER
- -BEGIN/END STRIPING DETAIL
- -ROADSIDE SIGNS
- XX -SIGN NUMBER

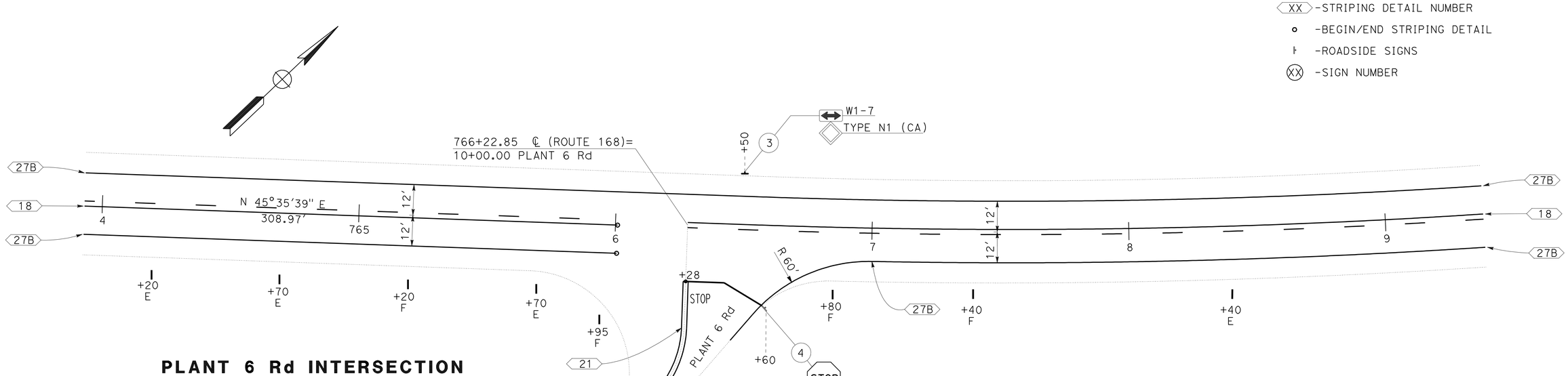

PLANT 6 Rd INTERSECTION

.THIS PLAN ACCURATE FOR PAVEMENT DELINEATION AND SIGN WORK ONLY.

PAVEMENT DELINEATION AND SIGN PLAN

SCALE: 1" = 20'

PD-1

STATE OF CALIFORNIA - DEPARTMENT OF TRANSPORTATION
Caltrans® DESIGN

FUNCTIONAL SUPERVISOR: TRUMAN DENIO
CALCULATED-DESIGNED BY: KONSTANTIN GREKOV
CHECKED BY: TRUMAN DENIO
REVISED BY
DATE REVISED

LAST REVISION DATE PLOTTED => 16-NOV-2009
TIME PLOTTED => 10:58
08-06-09

Dist	COUNTY	ROUTE	POST MILES TOTAL PROJECT	SHEET No.	TOTAL SHEETS
09	Iny	168	13.5/15.0	20	32

Grant Michael Krueger 7-1-09
REGISTERED CIVIL ENGINEER DATE

11-16-09
PLANS APPROVAL DATE

REGISTERED PROFESSIONAL ENGINEER Grant Michael Krueger No. 53379 Exp. 6-30-11 CIVIL STATE OF CALIFORNIA

THE STATE OF CALIFORNIA OR ITS OFFICERS OR AGENTS SHALL NOT BE RESPONSIBLE FOR THE ACCURACY OR COMPLETENESS OF SCANNED COPIES OF THIS PLAN SHEET.

THERMOPLASTIC PAVEMENT MARKING

STATION	LOCATION Lt	LOCATION MIDDLE	LOCATION Rt	WHITE PAVEMENT MARKINGS LIMIT LINE EA(N)	WHITE PAVEMENT MARKINGS LIMIT LINE SQFT	WHITE PAVEMENT MARKINGS "STOP" LETTERING EA(N)	WHITE PAVEMENT MARKINGS "STOP" LETTERING SQFT	PAVEMENT MARKINGS ARROWS TYPE III (Lt) EA(N)	PAVEMENT MARKINGS ARROWS TYPE III (Lt) SQFT	REMARKS
728 + 00 Rte 168	X			1	15					ED POWERS Rd
728 + 05 Rte 168	X					1	22			ED POWERS Rd
733 + 20 Rte 168			X	1	15					COLLEGE ENTRANCE WEST
733 + 25 Rte 168			X			1	22			COLLEGE ENTRANCE WEST
735 + 00 Rte 168		X						1	42	COLLEGE ENTRANCE WEST
			X	1	15					COLLEGE ENTRANCE EAST
739 + 05 Rte 168			X			1	22			COLLEGE ENTRANCE EAST
739 + 20 Rte 168			X			1	22			COLLEGE ENTRANCE EAST
740 + 00 Rte 168		X						1	42	COLLEGE ENTRANCE EAST
766 + 30 Rte 168			X	1	15					PLANT 6 Rd
766 + 35 Rte 168			X			1	22			PLANT 6 Rd
789 + 65 Rte 168	X			1	15					OTEY Rd - Lt
789 + 75 Rte 168	X					1	22			OTEY Rd - Lt
790 + 00 Rte 168			X	1	15					OTEY Rd - Rt
790 + 05 Rte 168			X			1	22			OTEY Rd - Rt
SUBTOTAL					90		154		84	
TOTAL	328									

(N) - NOT A SEPARATE PAY ITEM, FOR INFORMATION ONLY.

PAINT TRAFFIC STRIPE (2-COAT)

LOCATION STATION TO STATION	DETAIL NUMBER 5 LF	18 LF	21 LF	27B LF	28 LF	31 LF	38A LF
726+00.0 TO 728+69.0			269	538			269
728+69.0 TO 739+46.0				2154		2154	
739+46.0 TO 742+96.0			350	700			350
742+96.0 TO 743+76.0			80	160			
743+76.0 TO 750+36.0				1320	1320		
750+36.0 TO 762+50.4	1214			2429			
762+50.4 TO 776+65.4		1415		2830			
776+65.4 TO 786+15.8	950			1901			
786+15.8 TO 793+02.2		686		1373			
793+02.2 TO 803+58.2	1056			2112			
803+58.2 TO 805+30.0		172		344			
SUBTOTAL	3220	2273	699	15861	1320	2154	619
TOTAL	26146						

OBJECT MARKER (TYPE L-1 CA)

Sta	REMOVE EA	Lt EA	Rt EA
772+99	1		1
776+69	1	1	
788+83	1		1
793+06	1	1	
TOTAL	4	4	

REMOVE DELINEATOR

Sta	EA Lt	EA Rt
710+69		1
714+91		1
715+44	1	
716+50	1	
717+02	1	
718+08	1	
720+19		1
723+36	1	
726+53		1
729+70	1	
731+81		1
734+98	1	
736+56		1
739+73	1	
741+31		1
744+48	1	
746+06		1
748+18		1
749+23	1	1
750+29		1
752+40		1
753+98	1	1
755+57		1
757+68	1	
758+74	1	
759+79		1
763+49	1	
765+07		1
768+77	1	
769+30		1
771+41		1
772+46		1
774+58	1	1
775+63		1
776+69	1	
778+27	1	
779+33	1	1
782+50	1	
783+55		1
787+78	1	
792+00	1	
793+58	1	
794+64	1	
SUB-TOTALS	24	23
TOTAL	47	

SEE NOTE 1

DELINEATOR (CLASS 2)

Sta	Lt	Rt	TYPE E EA	TYPE F EA	REMARKS
715+00	X	X	2		
720+00	X	X	2		
725+00	X	X	2		
730+00	X	X	2		
731+00 TO 735+00	X		2	3	ED POWERS RD
735+00	X	X	2		
737+00 TO 742+00		X	2	3	COLLEGE ENTRANCE WEST
738+00 TO 741+00		X	2	3	COLLEGE ENTRANCE EAST
740+00	X	X	2		
745+00	X	X	2		
750+00	X	X	2		
755+00	X	X	2		
760+00	X	X	2		
765+00	X	X	2		
765+00 TO 768+00		X	2	3	PLANT 6 ROAD
770+00	X	X	2		
775+00	X	X	2		
780+00	X	X	2		
785+00	X	X	2		
753+00 TO 785+90		X	22		CURVE # 1
787+00 TO 792+00	X	X	4	6	OTEY RD
776+50 TO 790+00	X		22		CURVE # 2
775+00 TO 805+30	X		37		CURVE # 3
795+00	X	X	2		
800+00	X	X	2		
805+00	X	X	2		
SUB-TOTALS			129	18	
TOTAL			147		

SEE NOTE 1

NOTES:
1. STATIONS SHOWN ARE APPROXIMATE. EXACT LOCATION & POSITION OF ALL DELINEATORS SHALL BE DETERMINED BY THE ENGINEER.

PAVEMENT DELINEATION QUANTITIES
PDQ-1

STATE OF CALIFORNIA - DEPARTMENT OF TRANSPORTATION
Caltrans DESIGN
FUNCTIONAL SUPERVISOR TRUMAN DENIO
CALCULATED-DESIGNED BY KONSTANTIN GREKOV
CHECKED BY TRUMAN DENIO
REVISED BY
DATE REVISED

LAST REVISION 08-06-09
DATE PLOTTED => 16-NOV-2009
TIME PLOTTED => 10:59

Dist	COUNTY	ROUTE	POST MILES TOTAL PROJECT	SHEET No.	TOTAL SHEETS
09	Iny	168	13.5/15.0	21	32

Grant Michael Krueger 7-1-09
REGISTERED CIVIL ENGINEER DATE

11-9-09
PLANS APPROVAL DATE

REGISTERED PROFESSIONAL ENGINEER Grant Michael Krueger No. 53379 Exp. 6-30-11 CIVIL STATE OF CALIFORNIA

THE STATE OF CALIFORNIA OR ITS OFFICERS OR AGENTS SHALL NOT BE RESPONSIBLE FOR THE ACCURACY OR COMPLETENESS OF SCANNED COPIES OF THIS PLAN SHEET.

NOTE:
(N) - NOT A SEPARATE PAY ITEM, FOR INFORMATION ONLY.

ROADWAY QUANTITIES

STATION TO STATION /LOCATION	ROADWAY EXCAVATION	EMBANKMENT (N)	HMA (TYPE A)	TACK COAT (N)	HMA (OPEN GRADED)	CLASS 2 AGGREGATE BASE	IMPORTED MATERIAL (SHOULDER BACKING)
	CY	CY	TON	TON	TON	CY	TON
726+00 TO 805+30	2,000	1,200	1,580	3.2	3,160	1,720	10
TOTAL	2,000	1,200	1,580	3.2	3,160	1,720	10

TEMPORARY FENCE (TYPE ESA)

STATION	TEMPORARY FENCE (TYPE ESA) LF	L+	R+	DESCRIPTION
~789+00	70		X	OTEY Rd CULVERT, LIVE WATER
~790+00	210	X		OTEY Rd CULVERT, LIVE WATER
~804+50	60		X	CULVERT, LIVE WATER
~804+90	60	X		CULVERT, LIVE WATER
808+30-809+20	160	X		CREEK (Temp STAGING AREA)
~810+60	100	X		MONUMENT (Temp STAGING AREA)
TOTAL	660			

TEMPORARY FIBER ROLL

STATION	TEMPORARY FIBER ROLL LF	L+	R+	DESCRIPTION
~770+00	100	X		DRY CULVERT
~770+00	100		X	DRY CULVERT
786+00-789+11	340		X	CREEK & OTEY Rd CULVERT, LIVE WATER
~790+00	210	X		OTEY Rd CULVERT, LIVE WATER
~798+40	100	X		DRY CULVERT
~788+40	100		X	DRY CULVERT
~804+50	60		X	CULVERT, LIVE WATER
~804+90	60	X		CULVERT, LIVE WATER
808+30-809+20	160	X		CREEK (Temp STAGING AREA)
TOTAL	1,230			

SHOULDER RUMBLE STRIP (HMA, GROUND-IN INDENTATIONS)

LOCATION STATION TO STATION	SIDE	STA
729+52 - 732+70	L+	3.2
ROAD CONNECTION, R+		
733+20 - 738+81	L+	5.6
ROAD CONNECTION, R+		
739+31 - 766+03	L+	26.7
PLANT SIX Rd, R+		
766+53 - 789+20	L+	22.7
OTEY Rd, R+		
790+56 - 805+30	L+	14.7
728+35 - 730+62	R+	2.3
ROAD CONNECTION, R+		
734+44 - 736+81	R+	2.4
ROAD CONNECTION, R+		
740+54 - 765+67	R+	25.1
PLANT SIX Rd, R+		
766+95 - 789+31	R+	22.4
OTEY Rd, R+		
790+08 - 805+30	R+	15.2
TOTAL		140.3

CABLE RAILING

LOCATION STATION TO STATION	SIDE	LF
800+85 TO 801+60	L+	75
800+30 TO 801+07	R+	77
TOTAL		152

DUFF AND EROSION CONTROL

LOCATION STATION TO STATION	SIDE	DUFF	TYPE C
		SQYD	SQYD
726+00 TO 805+30	L+/R+	22,000	22,000
TOTAL		22,000	22,000

COLD PLANE ASPHALT CONCRETE PAVEMENT

STATION	DESCRIPTION	LENGTH	TAPER WIDTH	DEPTH	AREA SQYD	NOTES
726+00-726+20	CONFORM GRIND	40.5′	20.0′	0.1′	90.0	BEGIN CONSTRUCTION
728+10	CONFORM GRIND	27.6′	6.0′	0.1′	18.4	ED POWERS Rd, L+
732+96	CONFORM GRIND	80.0′	6.0′	0.1′	53.3	ROAD CONNECTION, R+
739+43	CONFORM GRIND	75.8′	6.0′	0.1′	50.5	ROAD CONNECTION, R+
766+28	CONFORM GRIND	17.5′	6.0′	0.1′	11.7	PLANT SIX Rd, R+
789+87	CONFORM GRIND	31.4′	6.0′	0.1′	20.9	OTEY Rd, L+
789+95	CONFORM GRIND	16.0′	6.0′	0.1′	10.7	OTEY Rd, R+
805+10-805+30	CONFORM GRIND	40.2′	20.0′	0.1′	89.3	END CONSTRUCTION
TOTAL					344.8	

SUMMARY OF QUANTITIES
NO SCALE
Q-1

STATE OF CALIFORNIA - DEPARTMENT OF TRANSPORTATION
Caltrans DESIGN
FUNCTIONAL SUPERVISOR TRUMAN DENIO
CALCULATED-DESIGNED BY KONSTANTIN GREKOV
CHECKED BY TRUMAN DENIO
REVISED BY
DATE REVISED

LAST REVISION 08-06-09 | DATE PLOTTED => 16-NOV-2009 | TIME PLOTTED => 10:59

Dist	COUNTY	ROUTE	POST MILES TOTAL PROJECT	SHEET No.	TOTAL SHEETS
09	Iny	168	13.5/15.0	22	32

Grant Michael Krueger 7-1-09
REGISTERED CIVIL ENGINEER DATE

11-9-09
PLANS APPROVAL DATE

REGISTERED PROFESSIONAL ENGINEER Grant Michael Krueger No. 53379 Exp 6-30-11 CIVIL STATE OF CALIFORNIA

THE STATE OF CALIFORNIA OR ITS OFFICERS OR AGENTS SHALL NOT BE RESPONSIBLE FOR THE ACCURACY OR COMPLETENESS OF SCANNED COPIES OF THIS PLAN SHEET.

SIGN PANEL SHALL CONFORM TO G14 (CA) SPECIFIACTIONS

G14 (CA)
SIGN NUMBER 25

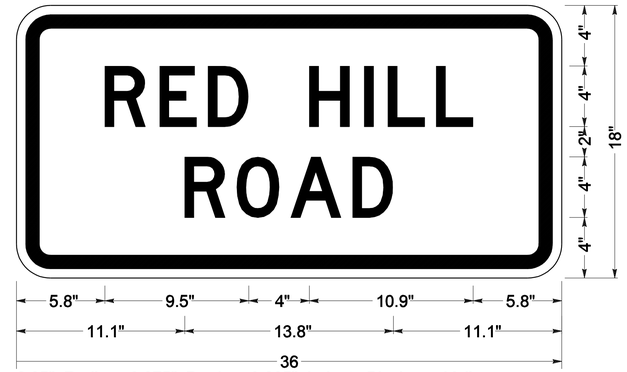

2.25" Radius, 0.875" Border, 0.625" Indent, Black on Yellow;
[RED HILL] D; [ROAD] D;
Table of letter and object lefts.

R	E	D	H	I	L	L
5.8	9.5	12.7	19.3	23.0	24.5	27.7

R	O	A	D
11.1	14.5	18.1	22.2

G7-2 (CA)
SIGN NUMBER 23

2.25" Radius, 0.875" Border, 0.625" Indent, Black on Yellow;
[OTEY] D; [ROAD] D;
Table of letter and object lefts.

O	T	E	Y
8.5	12.0	15.2	18.2

R	O	A	D
8.1	11.5	15.1	19.2

G7-2 (CA)
SIGN NUMBERS 13 AND 19

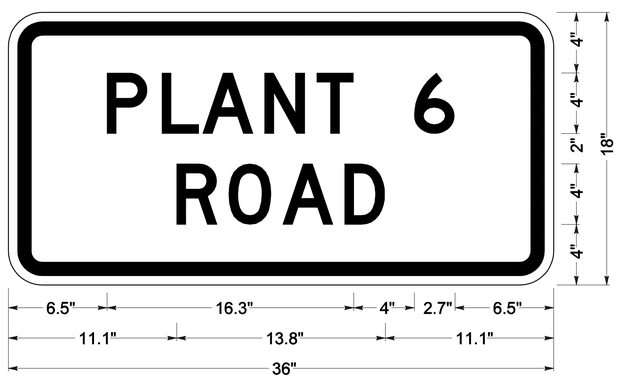

2.25" Radius, 0.875" Border, 0.625" Indent, Black on Yellow;
[PLANT 6] D; [ROAD] D;
Table of letter and object lefts.

P	L	A	N	T	6
6.5	10.1	12.8	16.9	20.4	26.8

R	O	A	D
11.1	14.5	18.1	22.2

G7-2 (CA)
SIGN NUMBER 8

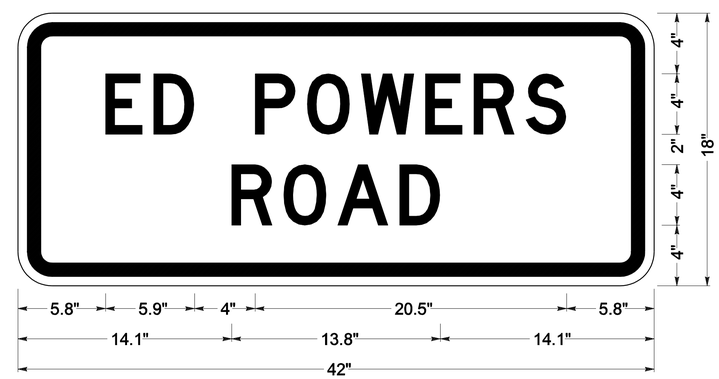

2.25" Radius, 0.875" Border, 0.625" Indent, Black on Yellow;
[ED POWERS] D; [ROAD] D;
Table of letter and object lefts.

E	D	P	O	W	E	R	S
5.8	9.0	15.7	19.1	22.7	26.9	30.1	33.5

R	O	A	D
14.1	17.5	21.1	25.2

G7-2 (CA)
SIGN NUMBER 4

SIGN DETAILS
SD-1

STATE OF CALIFORNIA - DEPARTMENT OF TRANSPORTATION
Caltrans® DESIGN
FUNCTIONAL SUPERVISOR TRUMAN DENIO
CALCULATED-DESIGNED BY KONSTANTIN GREKOV
CHECKED BY TRUMAN DENIO
REVISED BY
DATE REVISED

LAST REVISION 08-06-09
DATE PLOTTED => 16-NOV-2009
TIME PLOTTED => 10:59

Dist	COUNTY	ROUTE	POST MILES TOTAL PROJECT	SHEET No.	TOTAL SHEETS
09	Iny	168	13.5/15.0	23	32

Grant Michael Krueger 7-1-09
REGISTERED CIVIL ENGINEER DATE

11-9-09
PLANS APPROVAL DATE

REGISTERED PROFESSIONAL ENGINEER Grant Michael Krueger No. 53379 Exp. 6-30-11 CIVIL STATE OF CALIFORNIA

THE STATE OF CALIFORNIA OR ITS OFFICERS OR AGENTS SHALL NOT BE RESPONSIBLE FOR THE ACCURACY OR COMPLETENESS OF SCANNED COPIES OF THIS PLAN SHEET.

H - HEIGHT OF SIGN PANEL
W - WIDTH OF SIGN PANEL
ADV WARN - ADVANCED WARNING
F L R T - FACING LOCAL ROAD TRAFFIC
F W B T - FACING WEST BOUND TRAFFIC
F E B T - FACING EAST BOUND TRAFFIC
(N) - Not a Separate Pay Item. For information only.

SIGN SUMMARY

SIGN NUMBER	STATION	LEFT	RIGHT	SIGN CODE	MESSAGE	SEE DETAIL, SHEET SD-1	SIZE (H X W)	REMOVE ROADSIDE SIGN (EA)	ROADSIDE SIGN - ONE POST (EA)	RESET ROADSIDE SIGN (TURNABLE METAL POST) (EA)	FURNISH SINGLE SHEET ALUMINUM SIGN .063"-UNFRAMED (SQFT)	FURNISH SINGLE SHEET ALUMINUM SIGN .080"-UNFRAMED (SQFT)	SINGLE FACED	SIGN MATERIALS BACKGROUND SHEETING COLOR	SIGN MATERIALS BACKGROUND RETROREFLECTIVE ASTM TYPE	SIGN MATERIALS LEGEND SHEETING COLOR	SIGN MATERIALS LEGEND RETROREFLECTIVE ASTM TYPE	SIGN MATERIALS GRAFFITI FILM STANDARD	SIGN MATERIALS GRAFFITI FILM PREMIUM	SINGLE POST NOMINAL SIZE 4" X 6" (N)	SINGLE POST NOMINAL SIZE 6" X 6" (N)	DIRECTION F W B T	DIRECTION F E B T	DIRECTION F L R T	REMARKS
1	727+75	X		R1-1	STOP		36" X 36"	1	1		9.0		X	RED	VII	WHITE	VII	X		1				X	ED POWERS Rd
2	728+00		X	W1-7	DOUBLE HEADED ARROW		24" X 48"	1	1			8.0	X	YELLOW	III	BLACK	III	X						X	ED POWERS Rd
				N-1 (CA)	BLANK-YELLOW DIAMOND		18" X 18"				2.25			YELLOW	III	BLACK	III	X			1				
3	732+00	X		W2-2 (R+)	INTERSECTION SYMBOL		36" X 36"	1														X			ED POWERS Rd (Adv Warn)
4	732+00	X		W2-2 (R+)	INTERSECTION SYMBOL		36" X 36"		1		9.0		X	YELLOW	III	BLACK	III	X							ED POWERS Rd (Adv Warn)
				G7-2 (CA)	ED POWERS ROAD	X	18" X 36"				4.5			YELLOW	III	BLACK	III	X			1	X			
5	733+00	X		W1-7	DOUBLE HEADED ARROW		24" X 48"		1			8.0	X	YELLOW	III	BLACK	III	X						X	COLLEGE ENTRANCE WEST
				N-1 (CA)	BLANK-YELLOW DIAMOND		18" X 18"				2.25			YELLOW	III	BLACK	III	X			1				
6	739+00	X		W1-7	DOUBLE HEADED ARROW		24" X 48"		1			8.0	X	YELLOW	III	BLACK	III	X						X	COLLEGE ENTRANCE EAST
				N-1 (CA)	BLANK-YELLOW DIAMOND		18" X 18"				2.25			YELLOW	III	BLACK	III	X			1				
7	761+00		X	W2-2 (R+)	INTERSECTION SYMBOL		36" X 36"	1															X		PLANT 6 Rd (Adv Warn)
8	761+00		X	W2-2 (R+)	INTERSECTION SYMBOL		36" X 36"		1		9.0		X	YELLOW	III	BLACK	III	X					X		PLANT 6 Rd (Adv Warn)
				G7-2 (CA)	PLANT 6 ROAD	X	18" X 36"				4.5			YELLOW	III	BLACK	III	X			1				
9	766+50	X		W1-7	DOUBLE HEADED ARROW		24" X 48"	1	1			8.0	X	YELLOW	III	BLACK	III	X						X	PLANT 6 Rd
				N-1 (CA)	BLANK-YELLOW DIAMOND		18" X 18"				2.25			YELLOW	III	BLACK	III	X			1				
10	766+60		X	R1-1	STOP		36" X 36"	1	1		9.0		X	RED	VII	WHITE	VII	X		1				X	PLANT 6 Rd
11	776+00	X		Var	VAR - CHAIN RELATED		Var			1															TURNABLE CHAIN CONTROL SIGN
12	783+00		X	W2-1	INTERSECTION SYMBOL		36" X 36"	1															X		OTEY Rd (Adv Warn)
13	783+00		X	W2-1	INTERSECTION SYMBOL		36" X 36"		1		9.0		X	YELLOW	III	BLACK	III	X		1			X		OTEY Rd (Adv Warn)
				G7-2 (CA)	OTEY ROAD	X	18" X 36"				4.5			YELLOW	III	BLACK	III	X							
14	785+00		X	S3-1	SCHOOL BUS STOP		36" X 36"	1	1		9.0		X	YELLOW	III	BLACK	III	X		1			X		
15	786+00		X	W11-7	EQUESTRIAN SYMBOL		36" X 36"	1	1		9.0		X	YELLOW	III	BLACK	III	X		1			X		
16	789+60	X		R1-1	STOP		36" X 36"	1	1		9.0		X	RED	VII	WHITE	VII	X		1				X	OTEY Rd
17	789+80		X	R1-1	STOP		36" X 36"	1	1		9.0		X	RED	VII	WHITE	VII	X		1				X	OTEY Rd
18	793+00	X		W2-1	INTERSECTION SYMBOL		36" X 36"	1														X			
19	793+00	X		W2-1	INTERSECTION SYMBOL		36" X 36"		1		9.0		X	YELLOW	III	BLACK	III	X							OTEY Rd (Adv Warn)
				G7-2 (CA)	OTEY ROAD	X	18" X 36"				4.5			YELLOW	III	BLACK	III	X			1	X			
20	794+00	X		S3-1	SCHOOL BUS STOP		36" X 36"	1	1		9.0		X	YELLOW	III	BLACK	III	X		1		X			
21	802+75	X		G50 (CA)	WEST		9" X 21"	1	1		9.0		X	GREEN	III	WHITE	III	X		1		X			
				G28-2 (CA)	CA 168		25" X 24"	1	1		4.0		X	GREEN	III	WHITE	III	X		1		X			
				G-30 A (CA)	SCENIC HWY		18" X 12"	1	1		1.5		X	BLUE	III	VAR	III	X		1		X			
22	803+00		X	G7	RED HILL RD		36" X 36"	1	1		9.0		X	GREEN	III	WHITE	III	X		1			X		RE-SET AT SAME STATION
23	803+25		X	W2-2 (R+)	INTERSECTION SYMBOL		36" X 36"	1	1		9.0		X	YELLOW	III	BLACK	III	X		1			X		RED HILL Rd (Adv Warn)
				G7-2 (CA)	RED HILL RD	X	18" X 36"				4.5		X	YELLOW	III	BLACK	III	X							
24	803+50		X	R2-1	SPEED LIMIT 55 MPH		48" X 36"	1	1			12.0	X	WHITE	III	BLACK	III	X		1			X		
25	805+50		X	G14 (CA)	SAN FRANCIS RANCH	X	30" X 36"	1	1		7.5		X	CREAM	III	BROWN	III	X		1			X		
26	807+00		X	W1-7	DOUBLE HEADED ARROW		24" X 48"	1	1			8.0	X	YELLOW	III	BLACK	III	X						X	RED HILL Rd
				N-1 (CA)	BLANK-YELLOW DIAMOND		18" X 18"				2.25			YELLOW	III	BLACK	III	X			1				
27	807+00		X	M4-11	BEGIN		12" X 24"	1														X			
				D11-1	BIKE ROUTE		18" X 24"																		
28	726+00		X	D11-1	BIKE ROUTE		18" X 24"		1		3.0		X	GREEN	III	WHITE	III	X		1			X		SET AT NEW STATION 726+00
29	810+50	X		M4-11	END		12" X 24"	1	1		2.0		X	GREEN	III	WHITE	III	X		1		X			SET AT NEW STATION 726+00
				D11-1	BIKE ROUTE		18" X 24"				3.0		X	GREEN	III	WHITE	III	X							
	TOTALS							22	25	1	171.75	52.0								17	8				

SIGN QUANTITIES SQ-1

STATE OF CALIFORNIA - DEPARTMENT OF TRANSPORTATION
DESIGN
FUNCTIONAL SUPERVISOR TRUMAN DENIO
CALCULATED-DESIGNED BY KONSTANTIN GREKOV
CHECKED BY TRUMAN DENIO
REVISED BY
DATE REVISED

LAST REVISION 08-06-09
DATE PLOTTED => 16-NOV-2009
TIME PLOTTED => 10:59

DIST	COUNTY	ROUTE	POST MILES TOTAL PROJECT	SHEET NO.	TOTAL SHEETS
09	Iny	168	13.5/15.0	24	32

Randell D. Hiatt
REGISTERED CIVIL ENGINEER

June 6, 2008
PLANS APPROVAL DATE

REGISTERED PROFESSIONAL ENGINEER
Randell D. Hiatt
No. C50200
Exp. 6-30-09
CIVIL
STATE OF CALIFORNIA

The State of California or its officers or agents shall not be responsible for the accuracy or completeness of electronic copies of this plan sheet.

To accompany plans dated 11-16-09

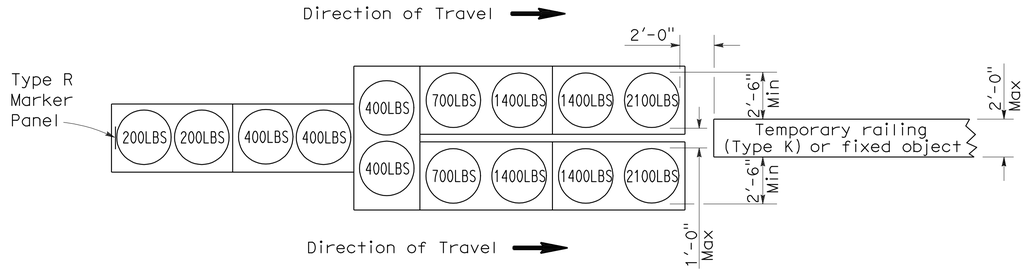

ARRAY 'TU14'

Approach speed 45 mph or more

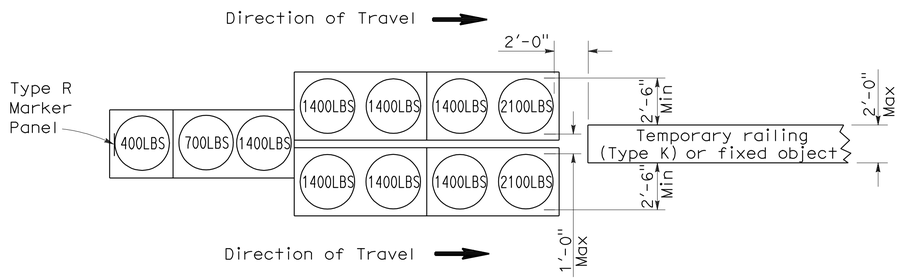

ARRAY 'TU11'

Approach speed less than 45 mph

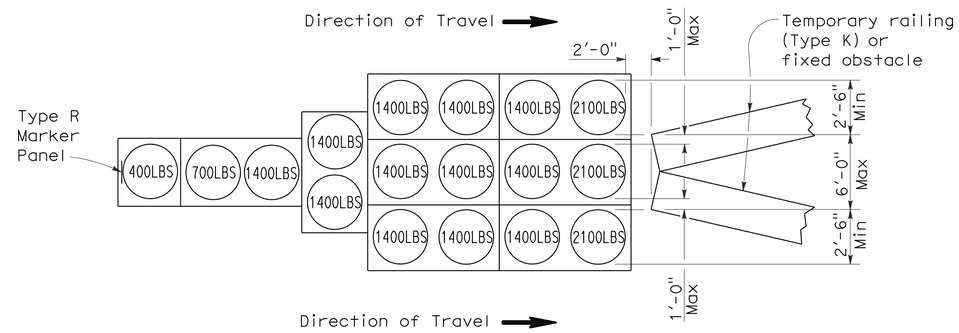

ARRAY 'TU17'

Approach speed less than 45 mph

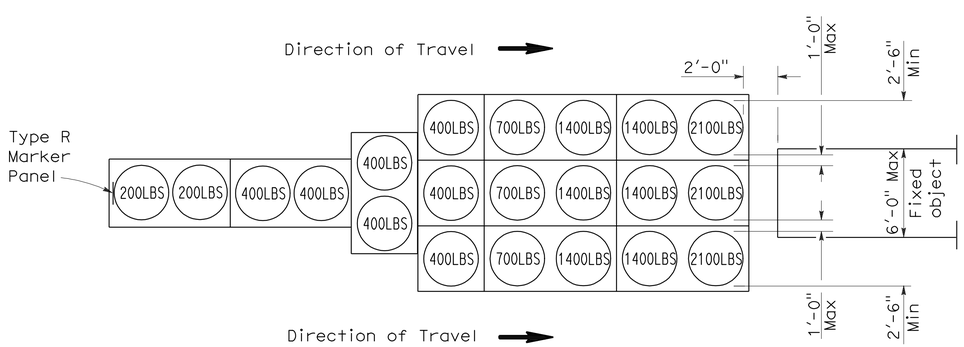

ARRAY 'TU21'

Approach speed 45 mph or more

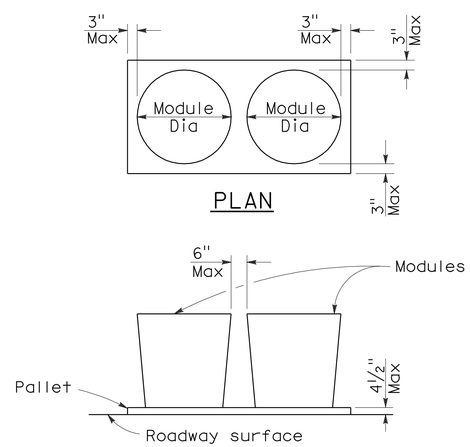

ELEVATION

CRASH CUSHION PALLET DETAIL

See Note 7

NOTES:

1. (XXX) Indicates sand filled module location and weight of sand in pounds for each module. Module spacing is based on the greater diameter of the module.
2. All sand weights are nominal.
3. Temporary crash cushion arrays shall not encroach on the traveled way.
4. Place the top of Type R marker panel 1" below the module lid.
5. Refer to Standard Plan A73B for marker details.
6. Approach speeds indicated conform to NCHRP 350 Report criteria.
7. Use of pallets is optional.

STATE OF CALIFORNIA
DEPARTMENT OF TRANSPORTATION

TEMPORARY CRASH CUSHION, SAND FILLED (UNIDIRECTIONAL)

NO SCALE

RSP T1A DATED JUNE 6, 2008 SUPERSEDES STANDARD PLAN T1A
DATED MAY 1, 2006 - PAGE 211 OF THE STANDARD PLANS BOOK DATED MAY 2006.

REVISED STANDARD PLAN RSP T1A

2006 REVISED STANDARD PLAN RSP T1A

5-15-08

DIST	COUNTY	ROUTE	POST MILES TOTAL PROJECT	SHEET NO.	TOTAL SHEETS
09	Iny	168	13.5/15.0	25	32

Randell D. Hiatt
REGISTERED CIVIL ENGINEER

June 6, 2008
PLANS APPROVAL DATE

REGISTERED PROFESSIONAL ENGINEER
Randell D. Hiatt
No. C50200
Exp. 6-30-09
CIVIL
STATE OF CALIFORNIA

The State of California or its officers or agents shall not be responsible for the accuracy or completeness of electronic copies of this plan sheet.

To accompany plans dated 11-16-09

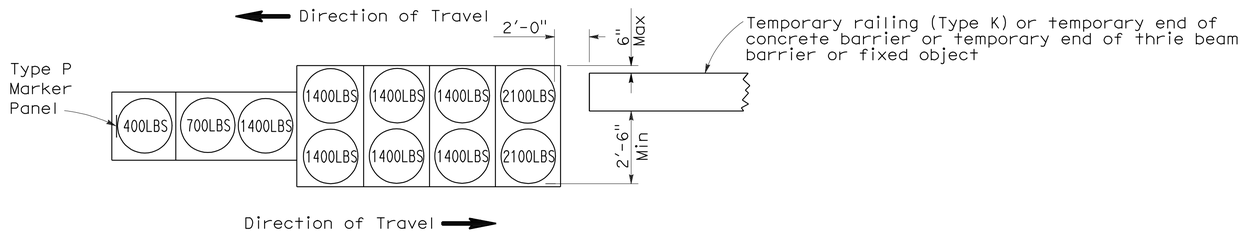

ARRAY 'TB11'

Approach speed less than 45 mph

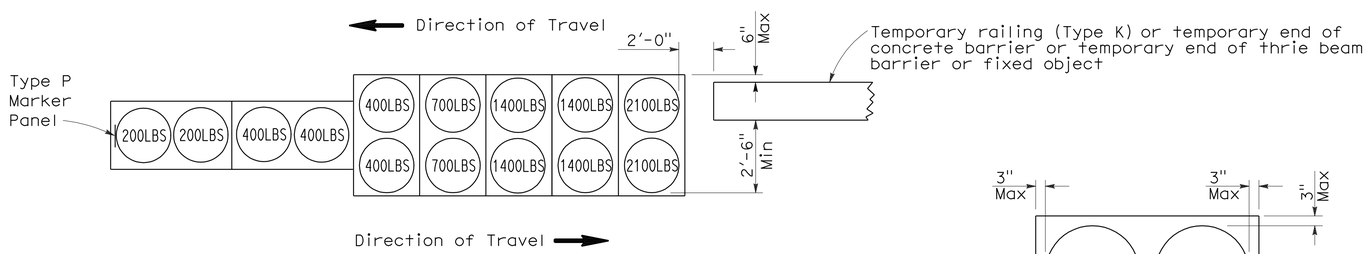

ARRAY 'TB14'

Approach speed 45 mph or more

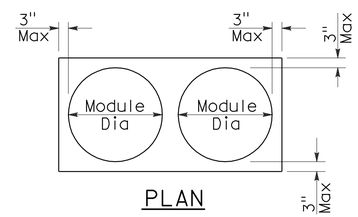

PLAN

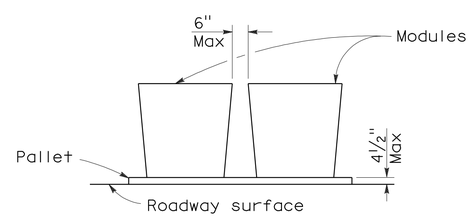

ELEVATION

CRASH CUSHION PALLET DETAIL

See Note 7

NOTES:

1. (XXX) Indicates sand filled module location and weight of sand in pounds for each module. Module spacing is based on the greater diameter of the module.
2. All sand weights are nominal.
3. Temporary crash cushion arrays shall not encroach on the traveled way.
4. Place the Type P marker panel so that the bottom of the panel rests upon the pallet.
5. Refer to Standard Plan A73B for marker details.
6. Approach speeds indicated conform to NCHRP 350 Report criteria.
7. Use of pallets is optional.

STATE OF CALIFORNIA
DEPARTMENT OF TRANSPORTATION

TEMPORARY CRASH CUSHION, SAND FILLED (BIDIRECTIONAL)

NO SCALE

RSP T1B DATED JUNE 6, 2008 SUPERSEDES STANDARD PLAN T1B
DATED MAY 1, 2006 - PAGE 212 OF THE STANDARD PLANS BOOK DATED MAY 2006.

REVISED STANDARD PLAN RSP T1B

2006 REVISED STANDARD PLAN RSP T1B

5-15-08

DIST	COUNTY	ROUTE	POST MILES TOTAL PROJECT	SHEET NO.	TOTAL SHEETS
09	Iny	168	13.5/15.0	26	32

Randell D. Hiatt
REGISTERED CIVIL ENGINEER

June 6, 2008
PLANS APPROVAL DATE

REGISTERED PROFESSIONAL ENGINEER
Randell D. Hiatt
No. C50200
Exp. 6-30-09
CIVIL
STATE OF CALIFORNIA

The State of California or its officers or agents shall not be responsible for the accuracy or completeness of electronic copies of this plan sheet.

To accompany plans dated 11-16-09

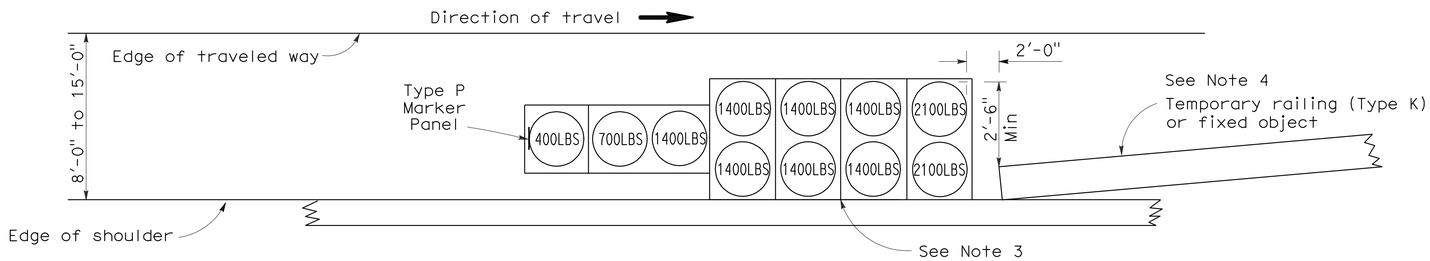

ARRAY 'TS11'

Approach speed less than 45 mph
See Note 9

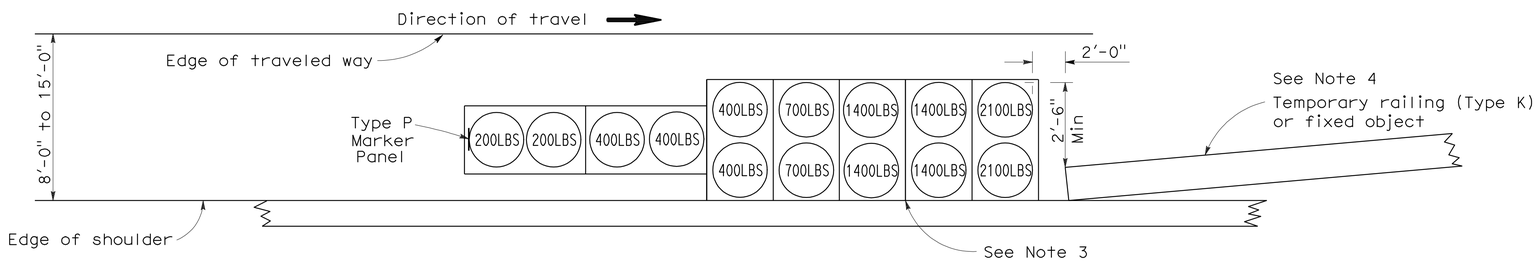

ARRAY 'TS14'

Approach speed 45 mph or more
See Note 9

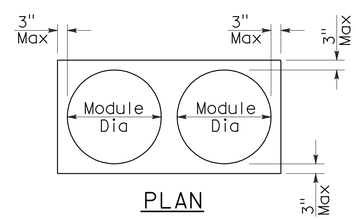

PLAN

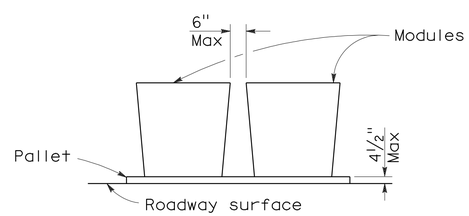

ELEVATION

CRASH CUSHION PALLET DETAIL

See Note 11

NOTES:

1. (XXX) Indicates sand filled module location and weight of sand in pounds for each module. Module spacing is based on the greater diameter of the module.
2. All sand weights are nominal.
3. The temporary crash cushion arrays shown on this plan shall be used only in locations where there will be traffic on one side of the temporary crash cushion array.
4. If the fixed object or approach end of the temporary railing is less than 15'-0" from the edge of traveled way, a temporary crash cushion is required in a construction or work zone.
5. Temporary crash cushion arrays shall not encroach on the traveled way.
6. Arrays for median shoulders shall conform to details shown on this plan for outside shoulders.
7. Place the Type P marker panel so that the bottom of the panel rests upon the pallet and faces traffic.
8. Refer to Standard Plan A73B for marker details.
9. For shoulder widths less than 8'-0", appropriate approved crash cushion protection, other than sand filled modules, shall be provided at fixed objects and at approach ends of temporary railing. The specific type of crash cushion shall be as shown on the project plans or as specified in the Special Provisions, or if not shown on the project plans or specified in the Special Provisions, shall be as approved by the Engineer.
10. Approach speeds indicated conform to NCHRP 350 Report criteria.
11. Use of pallets is optional.

STATE OF CALIFORNIA
DEPARTMENT OF TRANSPORTATION

TEMPORARY CRASH CUSHION, SAND FILLED (SHOULDER INSTALLATIONS)

NO SCALE

RSP T2 DATED JUNE 6, 2008 SUPERSEDES STANDARD PLAN T2
DATED MAY 1, 2006 - PAGE 213 OF THE STANDARD PLANS BOOK DATED MAY 2006.

REVISED STANDARD PLAN RSP T2

2006 REVISED STANDARD PLAN RSP T2

5-15-08

DIST	COUNTY	ROUTE	POST MILES TOTAL PROJECT	SHEET NO.	TOTAL SHEETS
09	Iny	168	13.5/15.0	27	32

Robert B Schott
LICENSED LANDSCAPE ARCHITECT

April 3, 2009
PLANS APPROVAL DATE

LICENSED LANDSCAPE ARCHITECT
Robert B. Schott 3695
Signature
11-30-10
Renewal Date
2-25-09
Date
STATE OF CALIFORNIA

The State of California or its officers or agents shall not be responsible for the accuracy or completeness of electronic copies of this plan sheet.

To accompany plans dated 11-16-09

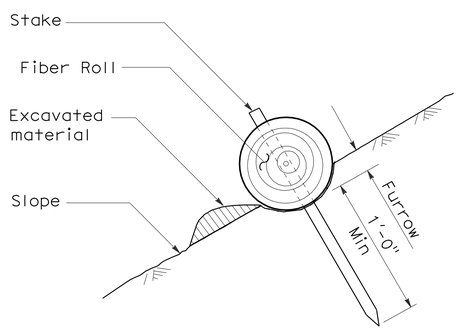

SECTION

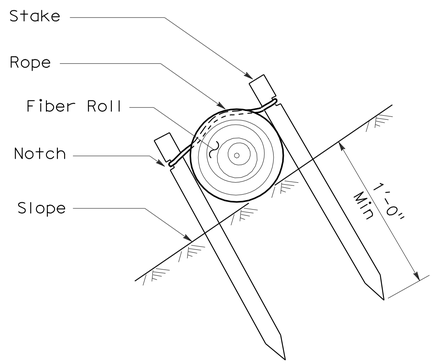

SECTION

TEMPORARY FIBER ROLL (TYPE 1)

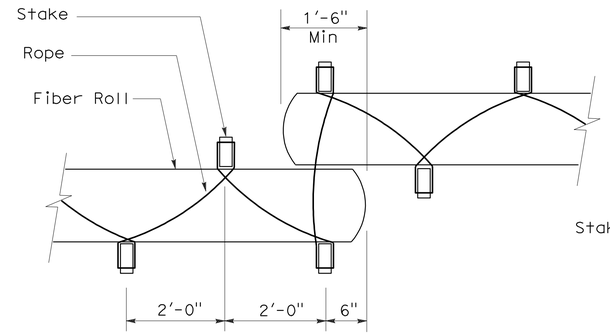

PLAN

TEMPORARY FIBER ROLL (TYPE 2)

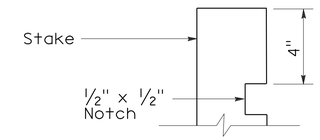

ELEVATION

STAKE NOTCH DETAIL

NOTES:

1. Temporary fiber roll spacing varies depending upon slope inclination.
2. Installations shown in the perspectives are for slope inclination of 10:1 and steeper.

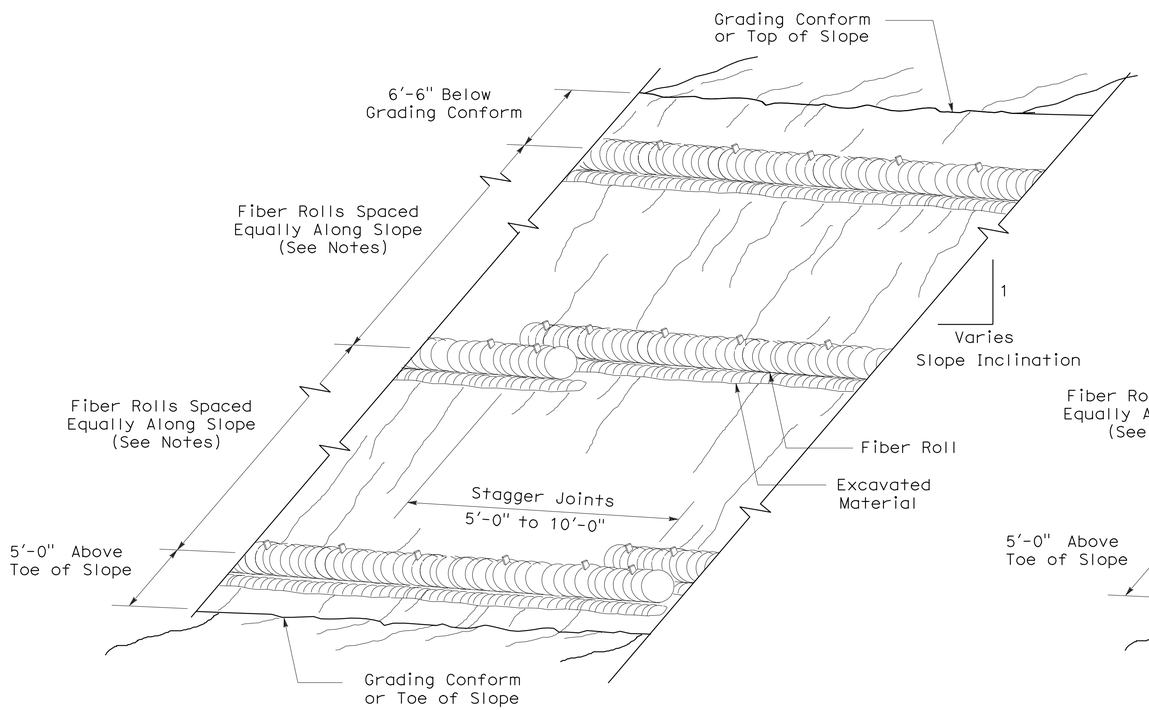

PERSPECTIVE

TEMPORARY FIBER ROLL (TYPE 1)

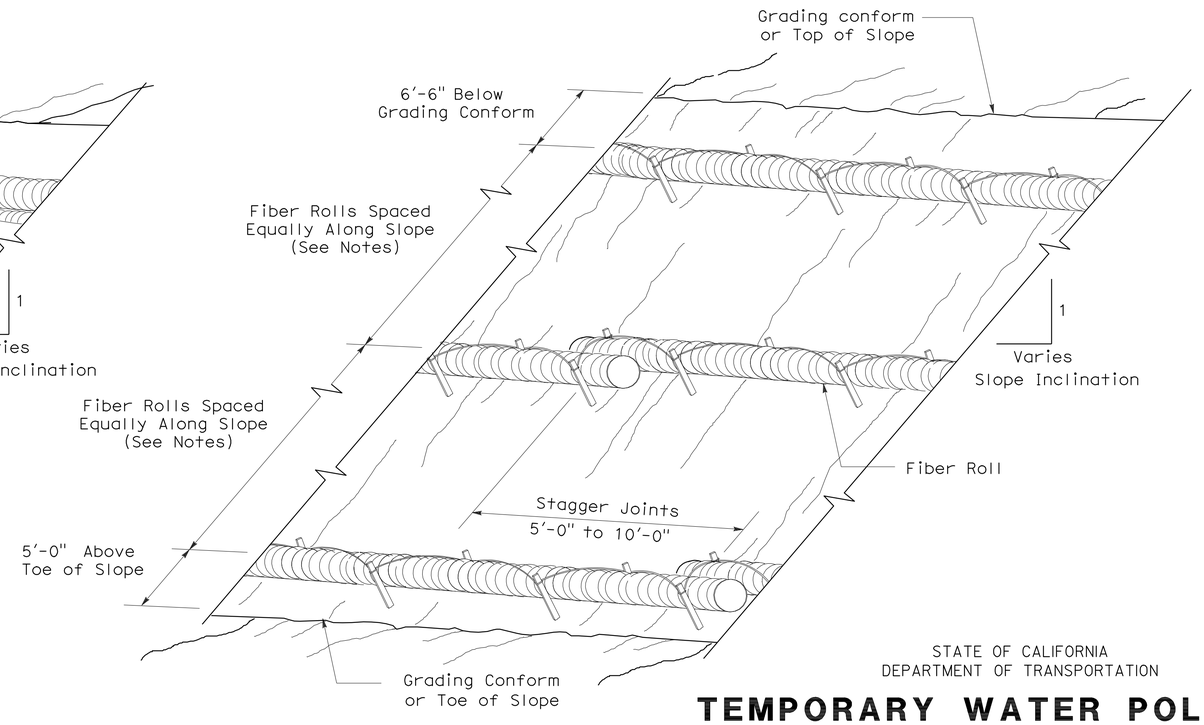

PERSPECTIVE

TEMPORARY FIBER ROLL (TYPE 2)

STATE OF CALIFORNIA
DEPARTMENT OF TRANSPORTATION

TEMPORARY WATER POLLUTION CONTROL DETAILS (TEMPORARY FIBER ROLL)

NO SCALE

RSP T56 DATED APRIL 3, 2009 SUPERSEDES STANDARD PLAN T56 DATED MAY 1, 2006 - PAGE 232 OF THE STANDARD PLANS BOOK DATED MAY 2006.

REVISED STANDARD PLAN RSP T56

2006 REVISED STANDARD PLAN RSP T56

2-23-09

DIST	COUNTY	ROUTE	POST MILES TOTAL PROJECT	SHEET NO.	TOTAL SHEETS
09	Iny	168	13.5/15.0	28	32

LICENSED LANDSCAPE ARCHITECT

April 3, 2009
PLANS APPROVAL DATE

LICENSED LANDSCAPE ARCHITECT Robert B. Schott 3625 Signature 11-30-10 Renewal Date 2-25-09 Date STATE OF CALIFORNIA

The State of California or its officers or agents shall not be responsible for the accuracy or completeness of electronic copies of this plan sheet.

To accompany plans dated 11-16-09

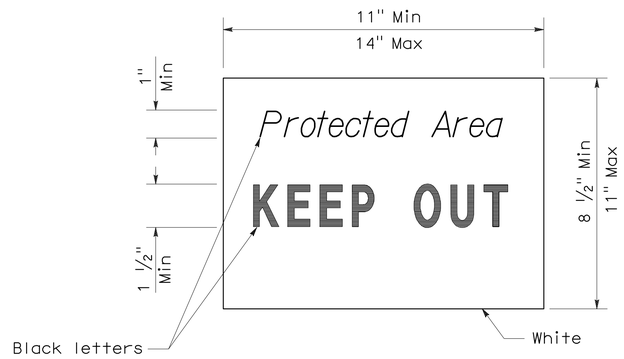

SIGN DETAIL

NOTE:

1. Temporary silt fence and temporary straw bale barrier shown for reference purposes only.

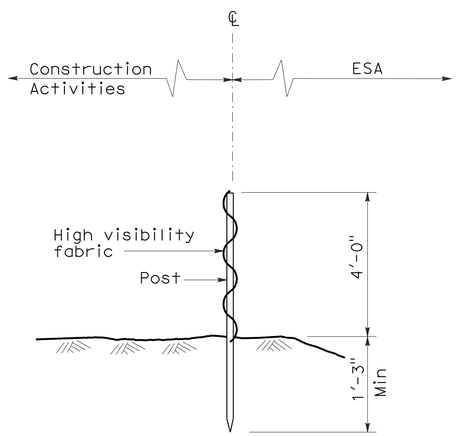

SECTION
TEMPORARY FENCE (TYPE ESA)

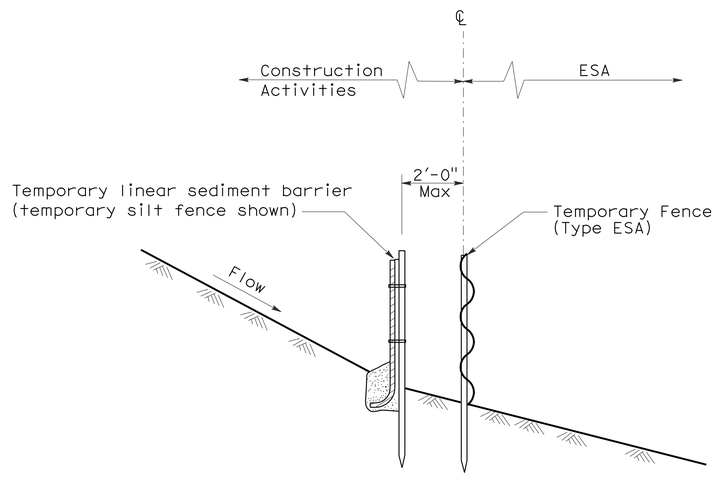

SECTION
PLACEMENT DETAIL
FOR TEMPORARY LINEAR SEDIMENT BARRIER
USED WITH TEMPORARY
FENCE (TYPE ESA)
(See Note 1)

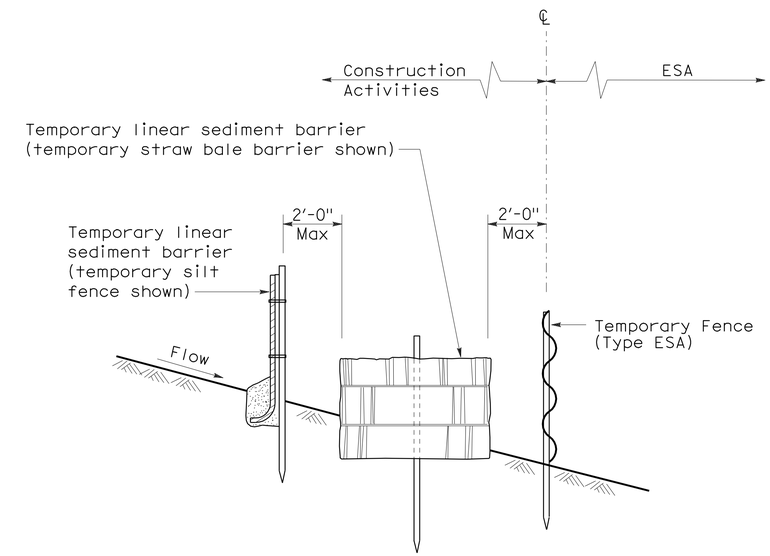

SECTION
PLACEMENT DETAIL
FOR TEMPORARY SILT FENCE
AND TEMPORARY STRAW BALE BARRIER
USED WITH TEMPORARY FENCE (TYPE ESA)
(See Note 1)

STATE OF CALIFORNIA
DEPARTMENT OF TRANSPORTATION

TEMPORARY WATER POLLUTION CONTROL DETAILS [TEMPORARY FENCE (TYPE ESA)]

NO SCALE

NSP T65 DATED APRIL 3, 2009 SUPPLEMENTS
THE STANDARD PLANS BOOK DATED MAY 2006.

NEW STANDARD PLAN NSP T65

2006 NEW STANDARD PLAN NSP T65

DIST	COUNTY	ROUTE	POST MILES TOTAL PROJECT	SHEET NO.	TOTAL SHEETS
09	Iny	168	13.5/15.0	29	32

REGISTERED ELECTRICAL ENGINEER

October 5, 2007
PLANS APPROVAL DATE

REGISTERED PROFESSIONAL ENGINEER Jeffery G. McRae No. E14512 Exp. 6-30-08 ELECTRICAL STATE OF CALIFORNIA

The State of California or its officers or agents shall not be responsible for the accuracy or completeness of electronic copies of this plan sheet.

To accompany plans dated 11-16-09

ELECTROLIERS

STANDARD TYPES
15, 15D
15 STRUCTURE
21, 21D STRUCTURE
30
31
32
35
36-20A

High mast light pole

Double Arm lighting standard

Existing electrolier

Electrolier foundation (Future installation)

NOTES:

1. Luminaires shall be 310 W HPS when installed on Type 21, 21D, 30, 31, 32, 35 and 36-20A Standards, unless otherwise specified. Luminaires shall be 200 W HPS when installed on other type standards or poles, unless otherwise specified.
2. Luminaires shall be the cutoff type, ANSI Type III medium cutoff lighting distribution, unless otherwise specified.
3. Variations noted adjacent to symbol on project plans.

Electrolier (see project notes or project plans)

Luminaire on wood pole

STANDARD NOTES:

- AB — Abandon. If applied to conduit, remove conductors.
- BC — Install pull box in existing conduit run.
- BP — Pedestrian barricade, type as indicated on plan.
- CB — Install conduit into existing pull box.
- CC — Connect new and existing conduit. Remove existing conductors and install conductors as indicated.
- CF — Conduit to remain for future use. Remove conductors. Install pull wire or rope.
- DH — Detector handhole.
- FA — Foundation to be abandoned.
- IS — Install sign on signal mast arm.
- NS — No slip base on standard.
- PEC — Photoelectric control.
- PEU — Photoelectric unit.
- RC — Equipment or material to be removed and become the property of the Contractor.
- RE — Remove electrolier, fuses and ballast. Tape ends of conductors.
- RL — Relocate equipment.
- RR — Remove and reuse equipment.
- RS — Remove and salvage equipment.
- SC — Splice new to existing conductors.
- SD — Service disconnect.
- SF — Standard to remain for future use. Remove luminaire, pole conductors, fuses and ballast.
- TSP — Telephone service point.

ABBREVIATIONS AND EQUIPMENT DESIGNATIONS

PROPOSED	EXISTING	
BBS	bbs	Battery backup system
BC	bc	Bolt circle
C	C	Conduit
CCTV	cctv	Closed circuit television
CKT	ckt	Circuit
CMS	cms	Changeable message sign
DLC	dlc	Loop detector lead-in cable
EMS	ems	Extinguishable message sign
EVC	evc	Emergency vehicle cable
EVD	evd	Emergency vehicle detector
FB	fb	Flashing beacon
FBCA	fbca	Flashing beacon control assembly
FBS	fbs	Flashing beacon with slip base
FO	fo	Fiber optic
G	G	Ground (Equipment Grounding Conductor)
GFCI	GFCI	Ground fault circuit interrupt
HAR	har	Highway advisory radio
HEX	hex	Hexagonal
HPS	hps	High pressure sodium
IISNS	iisns	Internally illuminated street name sign
ISL	isl	Induction sign lighting
LED	led	Light emitting diode
LMA	lma	Luminaire mast arm
LPS	lps	Low pressure sodium
LTG	ltg	Lighting
LUM	lum	Luminaire
MAT	mat	Mast arm mounting vehicle signal faces, top attachment
MAS	mas	Mast arm mounting vehicle signal faces, side attachment
MAS-4A	mas-4A	Mast arm mounting vehicle signal faces, side attachment - 4 signal section
MAS-4B	mas-4B	
MAS-4C	mas-4C	
MAS-5A	mas-5A	Mast arm mounting vehicle signal faces, side attachment - 5 signal section
MAS-5B	mas-5B	
MC	mc	Mercury contactor
M/M	m/m	Multiple to multiple transformer
MT	mt	Conduit with pull wire or rope only
MTG	mtg	Mounting
	mv	Mercury vapor lighting fixture
N	N	Neutral (Grounded Conductor)
NC	NC	Normally closed
NO	NO	Normally open
PB	pb	Pull box
PEC	pec	Photoelectric control (Type I, II, III, IV or V as shown)
PED	ped	Pedestrian
PEU	peu	Photoelectric unit
PPB	ppb	Pedestrian push button
RL		Relocated equipment
RM	rm	Ramp metering
SB	sb	Slip base
SIC	sic	Signal interconnect cable
SIG	sig	Signal
SMA	sma	Signal mast arm
SNS	sns	Street name sign
SP	sp	Service point
TDC	tdc	Telephone demarcation cabinet
TMS	tms	Traffic monitoring station
TOS	tos	Traffic Operations System
VEH	veh	Vehicle
XFMR	xfmr	Transformer
COMM	comm	Communication
RWIS	rwis	Roadway weather information system

SOFFIT AND WALL MOUNTED LUMINAIRES

Pendant, 70 W HPS unless otherwise specified.

Flush, 70 W HPS unless otherwise specified.

Wall surface, 70 W HPS unless otherwise specified.

Existing soffit or wall luminaire to remain unmodified.

Existing soffit or wall luminaire to be modified as specified.

NOTE:

Arrow indicates "street side" of luminaire.

STATE OF CALIFORNIA
DEPARTMENT OF TRANSPORTATION

ELECTRICAL SYSTEMS (SYMBOLS AND ABBREVIATIONS)

NO SCALE

RSP ES-1A DATED OCTOBER 5, 2007 SUPERSEDES STANDARD PLAN ES-1A DATED MAY 1, 2006 - PAGE 400 OF THE STANDARD PLANS BOOK DATED MAY 2006.

REVISED STANDARD PLAN RSP ES-1A

2006 REVISED STANDARD PLAN RSP ES-1A

DIST	COUNTY	ROUTE	POST MILES TOTAL PROJECT	SHEET NO.	TOTAL SHEETS
09	Iny	168	13.5/15.0	30	32

REGISTERED ELECTRICAL ENGINEER

October 5, 2007
PLANS APPROVAL DATE

REGISTERED PROFESSIONAL ENGINEER Jeffery G. McRae No. E14512 Exp. 6-30-08 ELECTRICAL STATE OF CALIFORNIA

The State of California or its officers or agents shall not be responsible for the accuracy or completeness of electronic copies of this plan sheet.

To accompany plans dated 11-16-09

CONDUIT

PROPOSED	EXISTING	
		Lighting Conduit, unless otherwise indicated or noted
		Traffic signal conduit
C	c	Communication conduit
T	t	Telephone conduit
F	f	Fire alarm conduit
FO	fo	Fiber optic conduit
		Conduit termination (RSP ES-9A C)
R	r	Conduit riser in/on structure or service pole

SERVICE EQUIPMENT

PROPOSED	EXISTING	
OH	oh	Overhead lines
U	U	Wood pole "U" indicates utility owned
		Pole guy with anchor
		Utility transformer - ground mounted
III		Service equipment enclosure type
		Service equipment enclosure door indicates front of enclosure
T	t	Telephone demarcation cabinet

POLE-MOUNTED SERVICE DESIGNATION

Type of installation

TYPE H SERVICE - 28'-10" ← Pole height above grade

ILLUMINATED OVERHEAD SIGN

PROPOSED	EXISTING	
		Overhead sign - Single post
		Overhead sign - Two post
		Overhead sign - Mounted on structure
		Overhead sign with electrolier

SIGNAL EQUIPMENT

PROPOSED	EXISTING	
		Pedestrian signal face
		Pedestrian push button post
		Pedestrian barricade
		Vehicle signal face (with backplate, 3-Section: red, yellow and green)
		Vehicle signal face with angle visors
PV	PV	Modifications of basic symbols: "L" indicates all non-arrow sections louvered "LG" indicates louvered green section only "PV" indicates 12" programmed visibility sections "8" indicates all 8" sections (only when specified)
		Type 15TS and Vehicle signal face
		Vehicle signal face with red, yellow and green left arrow sections
		Vehicle signal face with red and yellow sections and up green arrow
		Vehicle signal face (5 Section) with red, yellow and green sections and yellow and green right arrows
		Type 1 Standard and attached vehicle signal faces
		Standard with signal mast arm only and attached vehicle signal faces and internally illuminated street name sign
		Type 33 Standard, Left-turn vehicle signal face and sign
		Standard with luminaire and signal mast arms and attached vehicle signal faces
		Cantilever flashing beacon Type 9 Frame, with a sign unless otherwise specified or indicated
		Type 15-FBS Standard with two vehicle signal face sections with lens, backplate and visor with a sign
R	Y	Flashing beacon. One vehicle signal face section with lens, backplate and visor. "R" indicates red indication, "Y" indicates yellow indication
		Controller assembly. Door indicates front of cabinet

SIGNAL EQUIPMENT Cont

PROPOSED	EXISTING	
		Guard post
		Type 1 Standard with "Meter On" sign
		Emergency Vehicle detector

NOTES:

1. All signal sections shall be 12" unless shown otherwise.
2. Signal heads shall be provided with backplates unless shown otherwise.
3. Signal indication shall be LED.

STATE OF CALIFORNIA
DEPARTMENT OF TRANSPORTATION

ELECTRICAL SYSTEMS (SYMBOLS AND ABBREVIATIONS)

NO SCALE

RSP ES-1B DATED OCTOBER 5, 2007 SUPERCEDES STANDARD PLAN ES-1B DATED MAY 1, 2006 - PAGE 401 OF THE STANDARD PLANS BOOK DATED MAY 2006.

REVISED STANDARD PLAN RSP ES-1B

2006 REVISED STANDARD PLAN RSP ES-1B

7-10-07

DIST	COUNTY	ROUTE	POST MILES TOTAL PROJECT	SHEET NO.	TOTAL SHEETS
09	Iny	168	13.5/15.0	31	32

REGISTERED ELECTRICAL ENGINEER

October 5, 2007
PLANS APPROVAL DATE

REGISTERED PROFESSIONAL ENGINEER
Jeffery G. McRae
No. E14512
Exp. 6-30-08
ELECTRICAL
STATE OF CALIFORNIA

The State of California or its officers or agents shall not be responsible for the accuracy or completeness of electronic copies of this plan sheet.

To accompany plans dated 11-16-09

EQUIPMENT IDENTIFICATION

ILLUMINATED SIGN IDENTIFICATION NUMBER:

Sign No. 12345
10 ISL SCI 1.0

- Sign number - Place on post or structure
- Transformer rating (kVA)
- Lighting control type
- Number and type of fixtures

Do NOT place on standard or structure

ELECTROLIER OR EQUIPMENT IDENTIFICATION NUMBER:

12345 - 15'-0"

- Mast arm length, if shown. Do not place on standard or structure.
- Equipment number - Place on standard or structure. Existing equipment numbers are shown in parenthesis

CONDUIT AND CONDUCTOR IDENTIFICATION:

1½"C, 2#10, 15#14, 2 DLC

- Number and size of conductors and cables
- Size of conduit in inches

Ø1, Ø2, Ø2P, etc.	Traffic phase identification for signal faces, detectors and phase diagrams
1 2 3	Project note numbers
A B C	Equipment description, installation or item numbers
1 2 3	Conduit run numbers

SIGNAL AND LIGHTING STANDARD (TYPICAL DESIGNATION):

19A - 3 - 100

- Wind velocity = 100 mph
- Case 3 arm loading
- Standard type
- Standard Plan sheet number
- Detail number or letter

MISCELLANEOUS EQUIPMENT

PROPOSED	EXISTING	
CMS	cms	Changeable message sign
		Closed circuit television camera
		Highway advisory radio pole and antenna
EMS	ems	Extinguishable message sign
M V	m v	Detection device M = Microwave sensor V = Video image sensor

WIRING DIAGRAM LEGEND

P	Pole
CB	Circuit breaker
A	Ampere
V	Volt
M	Metered
UM	Unmetered
NB	Neutral bus
GB	Ground bus
G	Equipment grounding conductor
N	Grounded conductor (Neutral)

- External conductor
- Conductor or bus
- Tie point
- Contactor coil
- Contactor, Contact NO
- Terminal blocks
- Contactor, Contact NC
- Enclosure bond
- Grounding electrode
- Circuit breaker
- Receptacle

PULL BOXES

PROPOSED EXISTING

Pull box-No. 5 unless otherwise indicated or noted.

3 9A(21)

Pull box-Additional designations or descriptions

3	= No. 3½ pull box
5	= No. 5 pull box
6	= No. 6 pull box
7	= No. 7 (Ceiling pull box)
8	= No. 8 (Pendant soffit pull box)
9	= No. 9 pull box
9A	= No. 9A pull box

(C) = Communications pull box
(E) = Pull box with extension
(S) = Sprinkler control pull box
(21) = Anchor bolts and conduit for future installation of Type 21 Standard
(T) = Traffic pull box

VEHICLE DETECTORS

5 J 9 U

- Vehicle detector designation
- U = Upper
- L = Lower
- Slot number in input file
- Input file (I or J)
- Phase

PROPOSED EXISTING

	Type A detector loop. Outline of sawcut shown.
	Type B detector loop. Outline of sawcut shown.
	Type C detector loop. Outline of sawcut shown.
	Type D detector loop. Outline of sawcut shown.
	Type E detector loop. Outline of sawcut shown.
	Type Q detector loop. Outline of sawcut shown.
	Magnetic detector
DH dh	Detector handhole
	Microwave or video detection zone

STATE OF CALIFORNIA
DEPARTMENT OF TRANSPORTATION

ELECTRICAL SYSTEMS (SYMBOLS AND ABBREVIATIONS)

NO SCALE

RSP ES-1C DATED OCTOBER 5, 2007 SUPERCEDES STANDARD PLAN ES-1C DATED MAY 1, 2006 - PAGE 402 OF THE STANDARD PLANS BOOK DATED MAY 2006.

REVISED STANDARD PLAN RSP ES-1C

2006 REVISED STANDARD PLAN RSP ES-1C

7-10-07

DIST	COUNTY	ROUTE	POST MILES TOTAL PROJECT	SHEET NO.	TOTAL SHEETS
09	Iny	168	13.5/15.0	32	32

REGISTERED ELECTRICAL ENGINEER

October 5, 2007
PLANS APPROVAL DATE

REGISTERED PROFESSIONAL ENGINEER Jeffery G. McRae No. E14512 Exp. 6-30-08 ELECTRICAL STATE OF CALIFORNIA

The State of California or its officers or agents shall not be responsible for the accuracy or completeness of electronic copies of this plan sheet.

To accompany plans dated 11-16-09

LOOP INSTALLATION PROCEDURE

1. Loops shall be centered in lanes.
2. Saw slots in pavement for loop conductors as shown in details.
3. Distance between side of loop and a lead-in saw cut from adjacent detectors shall be 2'-0" minimum. Distance between lead-in saw cuts shall be 6" minimum.
4. Bottom of saw slot shall be smooth with no sharp edges.
5. Slots shall be washed until clean, blown out and thoroughly dried before installing loop conductors.
6. Adjacent loops on the same sensor unit channel shall be wound in opposite directions.
7. Identify and tag loop circuit pairs in the pull box with loop number, start (S) and finish (F) of conductor. Identify and tag lead-in-cable with sensor number and phase.
8. Install loop conductor in slot using a 3/16" to 1/4" thick wood paddle. Hold loop conductors with wood paddles (at the bottom of the sawed slot) during sealant placement.
9. No more than 2 twisted pairs shall be installed in one sawed slot.
10. Allow additional 5'-0" of slack length of conductor for the lead-in run to pull box.
11. The additional length of each conductor for each loop shall be twisted together into a pair (6 turns per 3'-4" minimum) before being placed in the slot and conduit leading to pull box.
12. Test each loop circuit for continuity, circuit resistance and insulation resistance at the pull box before filling slots.
13. Fill slots as shown in details.
14. Splice loop conductors to lead-in-cable. Splices shall be soldered.
15. End of lead-in-cable and Type 2 loop conductor shall be waterproofed prior to installing in conduit to prevent moisture from entering the cable.
16. Lead-in-cable shall not be spliced between the pull box and the controller cabinet terminals.
17. Test each loop circuit for continuity, circuit resistance and insulation resistance at the controller cabinet location.
18. Where loop conductors are not to be spliced to a lead-in-cable, the ends of the conductors shall be taped and waterproofed with electrical insulating coating.

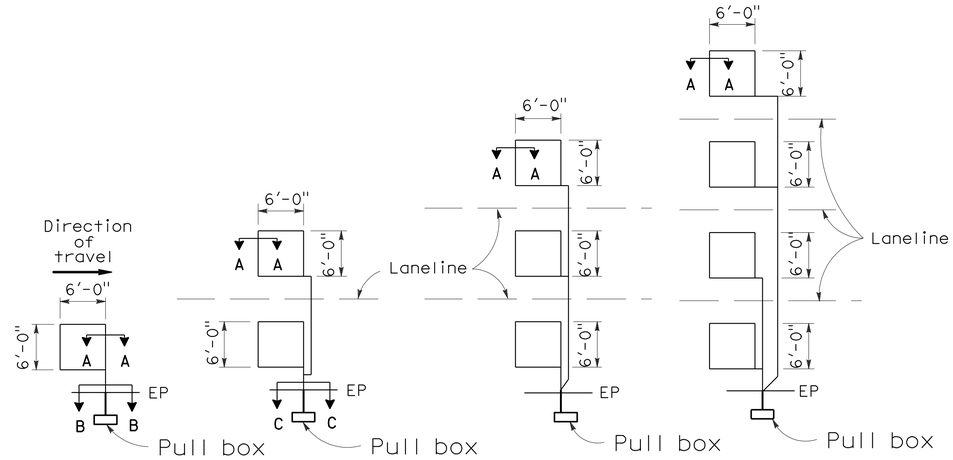

TYPE 1A INSTALLATION | TYPE 2A INSTALLATION | TYPE 3A INSTALLATION | TYPE 4A INSTALLATION

SAWCUT DETAILS

(Type A loop detector configurations illustrated)

1. 1A thru 4A = 1 Type A loop configuration in each lane.
2. 1B thru 4B = 1 Type B loop configuration in each lane.
3. 1C = 1 Type C loop configuration entering lanes as required.
4. 1D thru 4D = 1 Type D loop configuration in each lane.
5. 1E thru 4E = 1 Type E loop configuration in each lane.
6. 1Q thru 4Q = 1 Type Q loop configuration in each lane. (Use Type A, B, C, D, E or Q loop detector configurations only when specified or shown on plans)

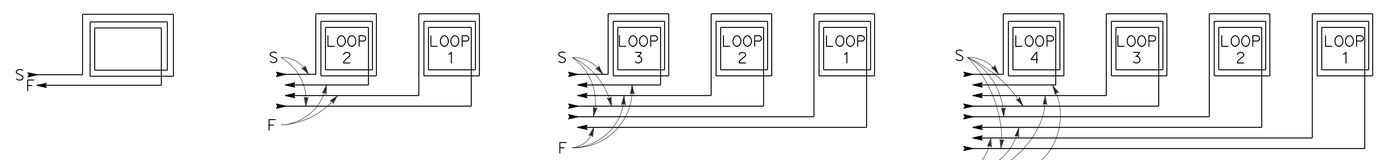

WINDING DETAILS

See Notes 6 and 7

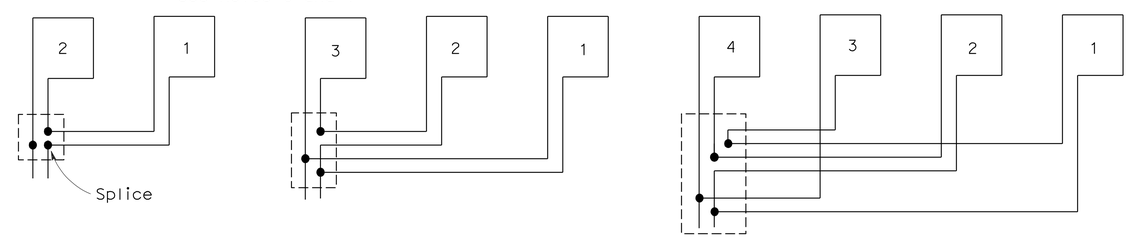

TYPICAL LOOP CONNECTIONS

(Dashed lines represent the pull box)

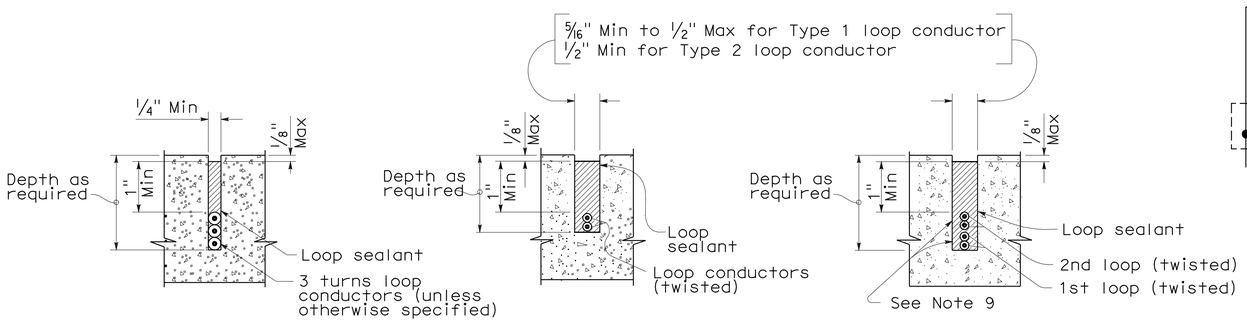

SECTION A-A | SECTION B-B | SECTION C-C

SLOT DETAILS - TYPE 1 AND TYPE 2 LOOP CONDUCTOR

STATE OF CALIFORNIA
DEPARTMENT OF TRANSPORTATION

ELECTRICAL SYSTEMS (DETECTORS)

NO SCALE

RSP ES-5A DATED OCTOBER 5, 2007 SUPERCEDES STANDARD PLAN ES-5A DATED MAY 1, 2006 - PAGE 423 OF THE STANDARD PLANS BOOK DATED MAY 2006.

REVISED STANDARD PLAN RSP ES-5A

2006 REVISED STANDARD PLAN RSP ES-5A

8-17-07