Dist	COUNTY	ROUTE	POST MILES TOTAL PROJECT	SHEET No.	TOTAL SHEETS
09	Mno	182, 395	Var	1	17

STATE OF CALIFORNIA **ACNH-ACSTP-X051(026)E**

DEPARTMENT OF TRANSPORTATION

PROJECT PLANS FOR CONSTRUCTION ON

STATE HIGHWAY

IN MONO COUNTY AT VARIOUS LOCATIONS

TO BE SUPPLEMENTED BY STANDARD PLANS DATED MAY 2006

INDEX OF PLANS

SHEET No.	DESCRIPTION
1	TITLE AND LOCATION MAP
2-3	TYPICAL CROSS SECTIONS
4-10	CONSTRUCTION DETAILS
11	CONSTRUCTION AREA SIGNS
12	SUMMARY OF QUANTITIES
13-17	REVISED AND NEW STANDARD PLANS

THE STANDARD PLANS LIST APPLICABLE TO THIS CONTRACT IS INCLUDED IN THE NOTICE TO BIDDERS AND SPECIAL PROVISIONS BOOK.

LOCATION MAP

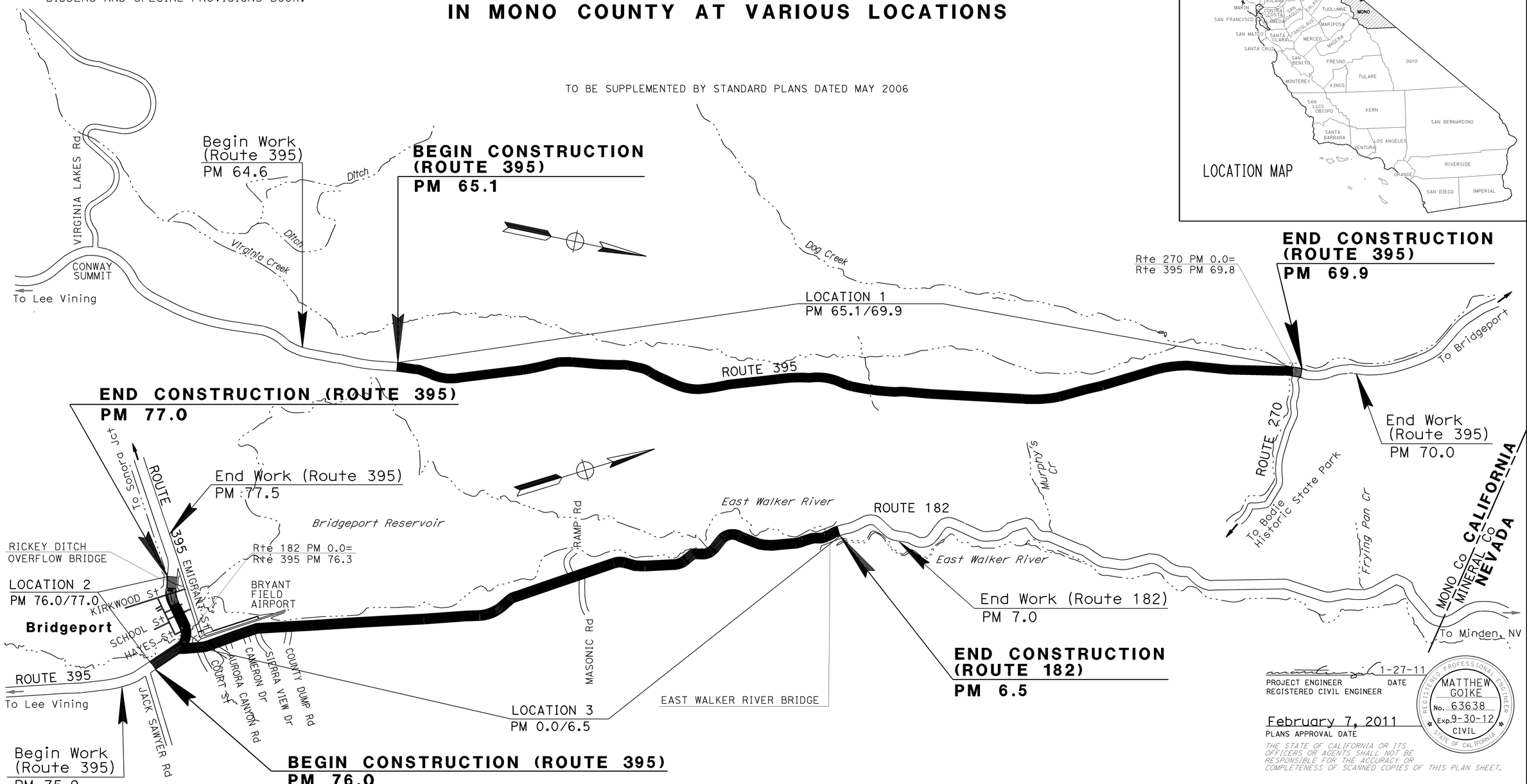

NO SCALE

THE CONTRACTOR SHALL POSSESS THE CLASS (OR CLASSES) OF LICENSE AS SPECIFIED IN THE "NOTICE TO BIDDERS."

PROJECT MANAGER: JOHN FOX

DESIGN ENGINEER: MATTHEW GOIKE

1-27-11
PROJECT ENGINEER REGISTERED CIVIL ENGINEER — DATE

REGISTERED PROFESSIONAL ENGINEER MATTHEW GOIKE No. 63638 Exp. 9-30-12 CIVIL STATE OF CALIFORNIA

February 7, 2011
PLANS APPROVAL DATE

THE STATE OF CALIFORNIA OR ITS OFFICERS OR AGENTS SHALL NOT BE RESPONSIBLE FOR THE ACCURACY OR COMPLETENESS OF SCANNED COPIES OF THIS PLAN SHEET.

CONTRACT No.	09-343204
PROJECT ID	0900020026

LAST REVISION 02-07-11

DATE PLOTTED => 15-FEB-2011
TIME PLOTTED => 14:55

Dist	COUNTY	ROUTE	POST MILES TOTAL PROJECT	SHEET No.	TOTAL SHEETS
09	Mno	182, 395	Var	2	17

REGISTERED CIVIL ENGINEER 1-27-11 DATE

2-7-11
PLANS APPROVAL DATE

REGISTERED PROFESSIONAL ENGINEER MATTHEW GOIKE No. 63638 Exp. 09-30-12 CIVIL STATE OF CALIFORNIA

THE STATE OF CALIFORNIA OR ITS OFFICERS OR AGENTS SHALL NOT BE RESPONSIBLE FOR THE ACCURACY OR COMPLETENESS OF SCANNED COPIES OF THIS PLAN SHEET.

NOTES:

1. DIMENSIONS OF THE PAVEMENT STRUCTURES (STRUCTURAL SECTIONS) ARE SUBJECT TO TOLERANCES SPECIFIED IN THE STANDARD SPECIFICATIONS
2. SUPERELEVATION AS SHOWN OR AS DIRECTED BY THE ENGINEER
3. FOR ACCURATE RIGHT OF WAY DATA, CONTACT RIGHT OF WAY ENGINEERING AT THE DISTRICT OFFICE.

ABBREVIATION:

HMA-A-W HOT MIX ASPHALT (TYPE A) WITH WARM MIX ADDITIVE

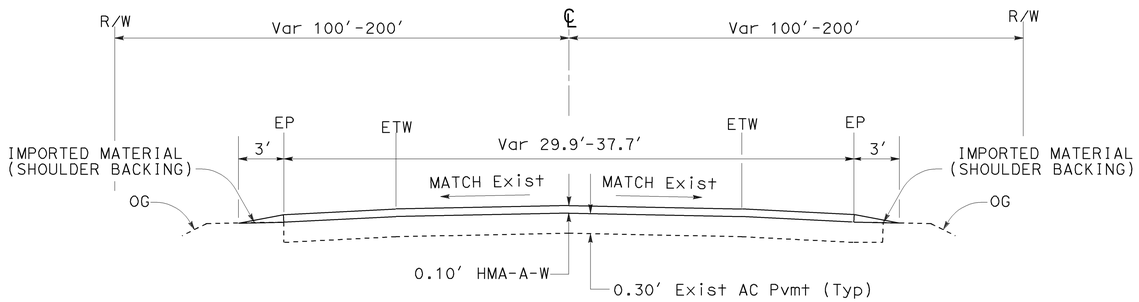

LOCATION 1
ROUTE 395
PM 66.1 TO 67.9

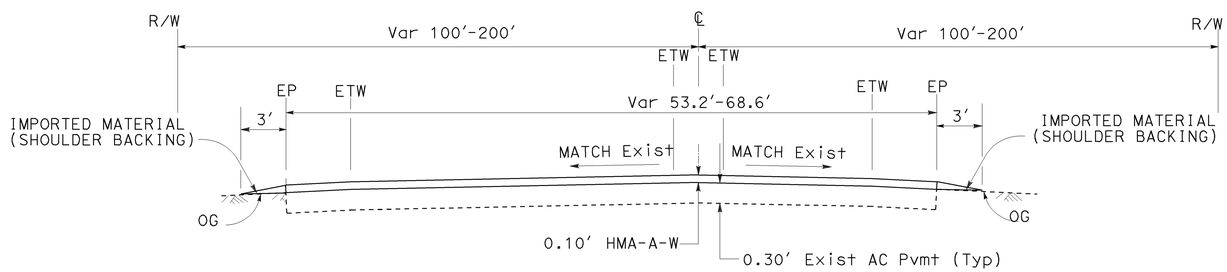

LOCATION 1
ROUTE 395
68.5 TO 69.9

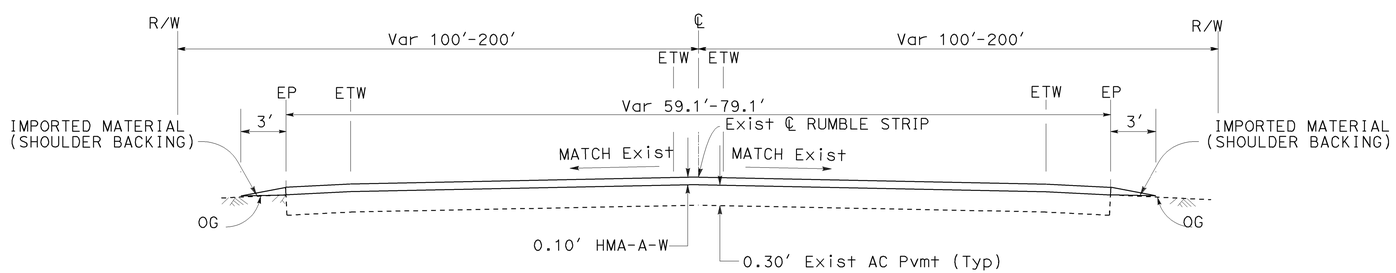

LOCATION 1
ROUTE 395
PM 65.1 TO 66.1
PM 67.9 TO 68.5

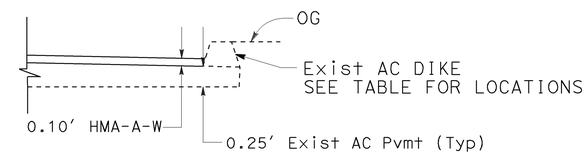

EXISTING AC DIKE

Rte 395 PM	Lt	Rt
65.17-65.48	X	
65.93-66.00	X	
66.88-66.95	X	
67.21-67.30	X	
67.50-67.66	X	
68.70-69.50		X

EXISTING UTILITY FACILITIES HAVE NOT BEEN PLOTTED ON THESE PLANS

TYPICAL CROSS SECTIONS
NO SCALE
X-1

STATE OF CALIFORNIA - DEPARTMENT OF TRANSPORTATION
Caltrans® MAINTENANCE ENGINEERING

FUNCTIONAL SUPERVISOR: JOHN FOX
CALCULATED-DESIGNED BY: MATTHEW GOIKE
CHECKED BY: MALISSA REYNOLDS
REVISED BY: MR
DATE REVISED: 12-31-10

LAST REVISION 02-07-11
DATE PLOTTED => 07-FEB-2011
TIME PLOTTED => 14:21

Dist	COUNTY	ROUTE	POST MILES TOTAL PROJECT	SHEET No.	TOTAL SHEETS
09	Mno	182, 395	Var	3	17

REGISTERED CIVIL ENGINEER 1-27-11 DATE

PLANS APPROVAL DATE 2-7-11

REGISTERED PROFESSIONAL ENGINEER MATTHEW GOIKE No. 63638 Exp. 09-30-12 CIVIL STATE OF CALIFORNIA

THE STATE OF CALIFORNIA OR ITS OFFICERS OR AGENTS SHALL NOT BE RESPONSIBLE FOR THE ACCURACY OR COMPLETENESS OF SCANNED COPIES OF THIS PLAN SHEET.

ABBREVIATION:

HMA-A-W HOT MIX ASPHALT WITH WARM MIX ADDITIVE

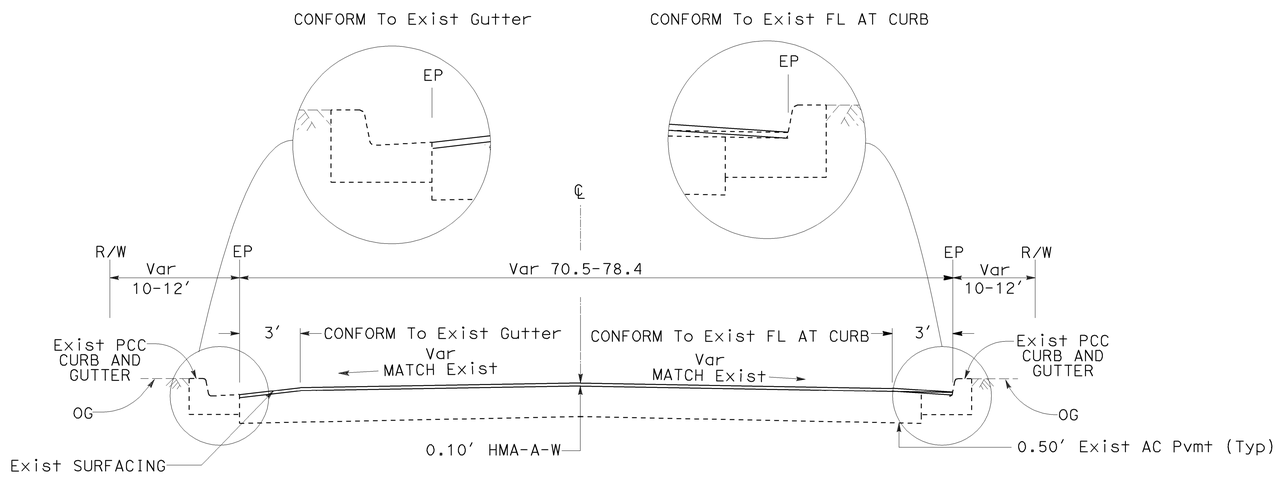

LOCATION 2
ROUTE 395
PM 76.5-76.8

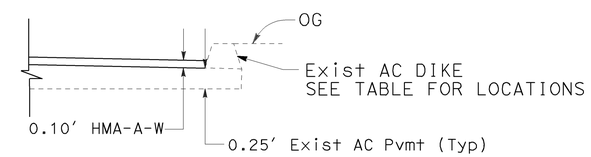

EXISTING AC DIKE

Rte 182 PM	Lt	Rt
2.28-3.01	X	
4.26-4.36	X	
6.34-6.35		X
6.34-6.39	X	

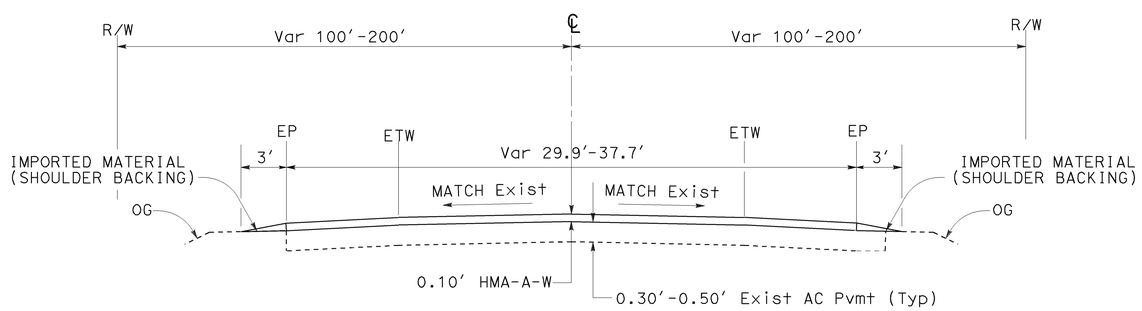

LOCATION 3
ROUTE 182
PM 0.0-6.5

LOCATION 2
ROUTE 395
PM 76.0-76.5, 76.8-77.0

EXISTING UTILITY FACILITIES HAVE NOT BEEN PLOTTED ON THESE PLANS

TYPICAL CROSS SECTIONS
NO SCALE

X-2

STATE OF CALIFORNIA - DEPARTMENT OF TRANSPORTATION
Caltrans MAINTENANCE ENGINEERING

FUNCTIONAL SUPERVISOR: JOHN FOX
CALCULATED-DESIGNED BY: MATTHEW GOIKE
CHECKED BY: MALISSA REYNOLDS
REVISED BY: MR
DATE REVISED: 12-31-10

LAST REVISION 02-07-11
DATE PLOTTED => 07-FEB-2011
TIME PLOTTED => 14:21

Dist	COUNTY	ROUTE	POST MILES TOTAL PROJECT	SHEET No.	TOTAL SHEETS
09	Mno	182, 395	Var	4	17

1-27-11
REGISTERED CIVIL ENGINEER DATE

2-7-11
PLANS APPROVAL DATE

REGISTERED PROFESSIONAL ENGINEER
MATTHEW GOIKE
No. 63638
Exp. 09-30-12
CIVIL
STATE OF CALIFORNIA

THE STATE OF CALIFORNIA OR ITS OFFICERS OR AGENTS SHALL NOT BE RESPONSIBLE FOR THE ACCURACY OR COMPLETENESS OF SCANNED COPIES OF THIS PLAN SHEET.

ABBREVIATION:

HMA-A-W HOT MIX ASPHALT WITH WARM MIX ADDITIVE

NOTES:

1. DIGOUT POSTMILE LIMITS REFERENCE PM PADDLE MARKER 76.0.
2. AVOID LOOP DETECTOR AT PM 0.25.

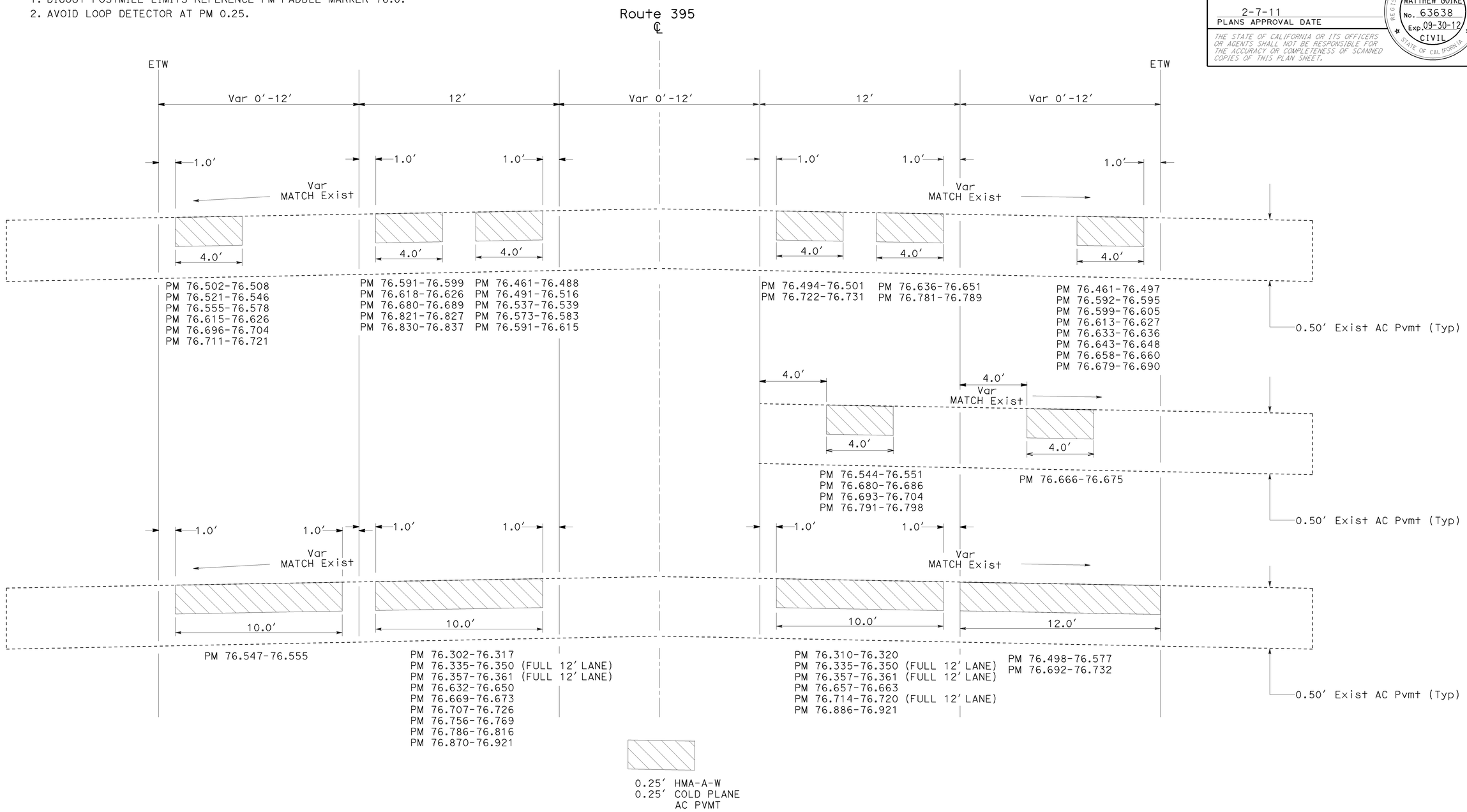

NOTE: AVOID DETECTOR LOOPS AT PM 76.67.

LOCATION 2
ROUTE 395
PM 76.3-77.0

EXISTING UTILITY FACILITIES HAVE NOT BEEN PLOTTED ON THESE PLANS

CONSTRUCTION DETAILS
NO SCALE
C-1

STATE OF CALIFORNIA - DEPARTMENT OF TRANSPORTATION
Caltrans MAINTENANCE ENGINEERING

FUNCTIONAL SUPERVISOR: JOHN FOX
CALCULATED-DESIGNED BY / CHECKED BY: MATTHEW GOIKE / MALISSA REYNOLDS
REVISED BY: MR
DATE REVISED: 12-31-10

LAST REVISION 01-27-11
DATE PLOTTED => 07-FEB-2011
TIME PLOTTED => 14:21

Dist	COUNTY	ROUTE	POST MILES TOTAL PROJECT	SHEET No.	TOTAL SHEETS
09	Mno	182, 395	Var	5	17

REGISTERED CIVIL ENGINEER 1-27-11 DATE

2-7-11
PLANS APPROVAL DATE

REGISTERED PROFESSIONAL ENGINEER MATTHEW GOIKE No. 63638 Exp. 09-30-12 CIVIL STATE OF CALIFORNIA

THE STATE OF CALIFORNIA OR ITS OFFICERS OR AGENTS SHALL NOT BE RESPONSIBLE FOR THE ACCURACY OR COMPLETENESS OF SCANNED COPIES OF THIS PLAN SHEET.

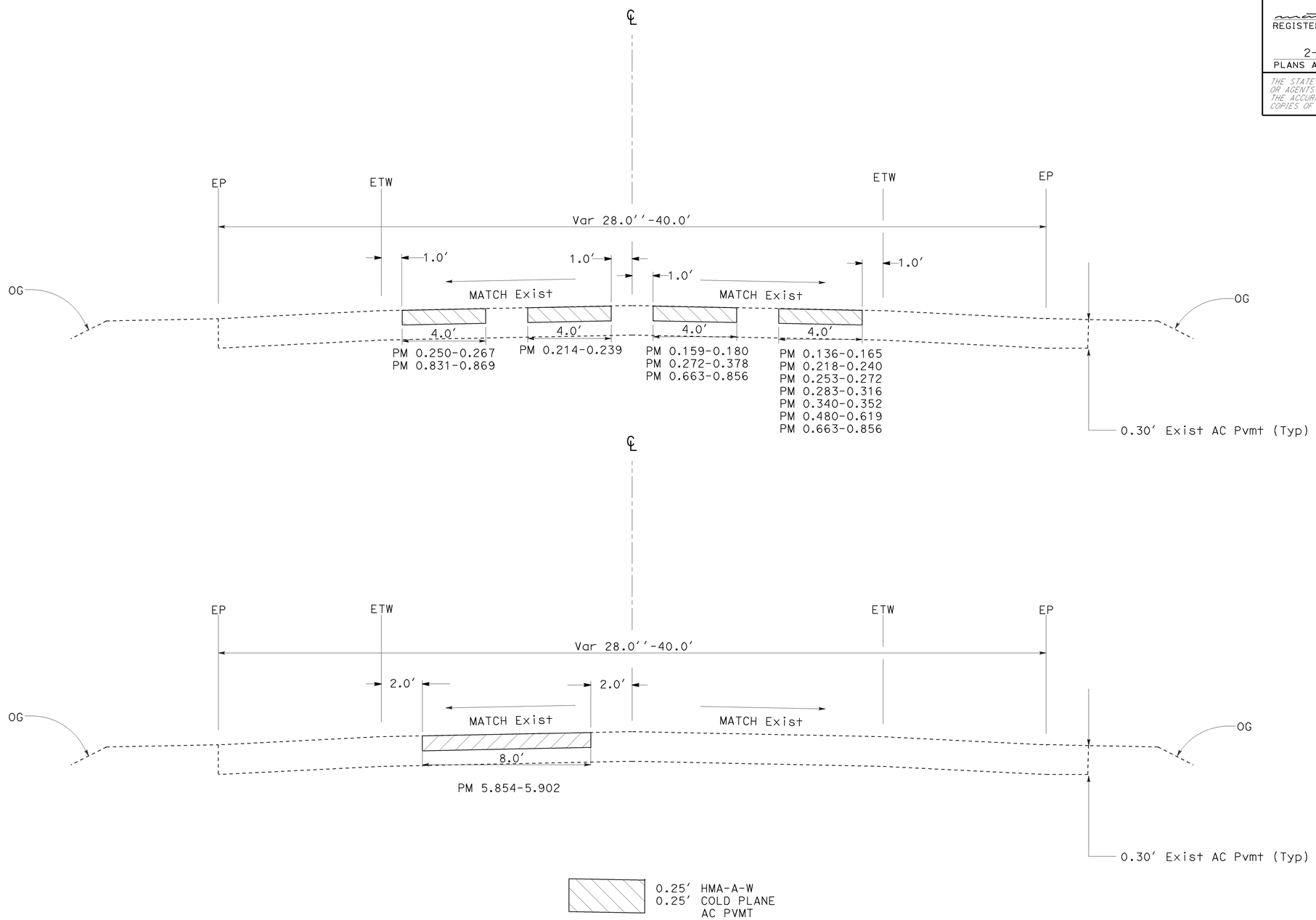

LOCATION 3

Rte 182 PM 0.1-5.9

EXISTING UTILITY FACILITIES HAVE NOT BEEN PLOTTED ON THESE PLANS

CONSTRUCTION DETAILS

NO SCALE

C-2

STATE OF CALIFORNIA - DEPARTMENT OF TRANSPORTATION
Caltrans MAINTENANCE ENGINEERING

FUNCTIONAL SUPERVISOR: JOHN FOX

CALCULATED-DESIGNED BY: MATTHEW GOIKE
CHECKED BY: MALISSA REYNOLDS

REVISED BY: MR
DATE REVISED: 12-31-10

LAST REVISION DATE PLOTTED => 07-FEB-2011
TIME PLOTTED => 14:21
02-07-11

Dist	COUNTY	ROUTE	POST MILES TOTAL PROJECT	SHEET No.	TOTAL SHEETS
09	Mno	182, 395	Var	6	17

REGISTERED CIVIL ENGINEER 1-27-11 DATE

2-7-11
PLANS APPROVAL DATE

REGISTERED PROFESSIONAL ENGINEER MATTHEW GOIKE No. 63638 Exp. 09-30-12 CIVIL STATE OF CALIFORNIA

THE STATE OF CALIFORNIA OR ITS OFFICERS OR AGENTS SHALL NOT BE RESPONSIBLE FOR THE ACCURACY OR COMPLETENESS OF SCANNED COPIES OF THIS PLAN SHEET.

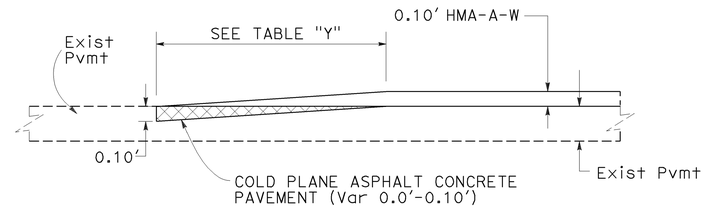

SECTION A-A

TYPICAL CONFORM GRIND DETAIL

0-0.10' Var COLD PLANE ASPHALT CONCRETE PAVEMENT 0.10' HMA-A-W

0.10' HMA-A-W

ROAD CONNECTION/DRIVEWAY PAVING LIMITS

LOCATION	PM	Lt	Rt	"X"	"Y"	"Z"	DESCRIPTION	DETAIL
1	69.85		X	102.0'	17.2'	24.9'	Rte 270	2
2	75.91		X	128.0'	3.0'		JACK SAWYER Rd	1
	76.42	X		54.1'	19.7'	31.1'	HAYES St	1
	76.42		X	218.2'	38.1'	52.5'	BRIDGE St	2
	76.59	X		70.5'	14.1'	39.7'	SINCLAIR St	1
	76.59		X	59.7'	12.8'	39.4'	SINCLAIR St	1
	76.65	X		107.3'	42.7'	43.0'	TWIN LAKES Rd	1
	76.65		X	54.8'	24.6'	28.5'	KIRKWOOD St	1
	76.66	X		59.7'	20.3'	39.7'	SCHOOL St	1
	76.66		X	60.0'	21.3'	39.0'	SCHOOL St	1
3	0.23	X		120.0'	23.0'	43.0'	COURT St	2
	0.23		X	130.0'	22.0'	32.0'	COURT St	2
	0.28		X	58.0'	3.0'		PRIVATE DRIVEWAY	1
	0.33		X	58.0'	3.0'		PRIVATE DRIVEWAY	1
	0.35		X	154.0'	26.0'	53.0'	AURORA CANYON Rd	2
	0.44		X	67.0'	30.0'	32.0'	CAMERON Dr	2
	0.50		X	92.0'	26.0'	38.0'	SIERRA VIEW Dr	2
	0.80		X	334'	3.0'		SAGEBRUSH DRIVE	1
	0.85		X	110.0'	3.0'		PRIVATE DRIVEWAY	1
	1.11		X	62.0'	3.0'	54.0'	DUMP Rd	1
	1.14		X	158.0'	3.0'		PRIVATE DRIVEWAY	1
	1.87	X		127.0'	3.0'		PRIVATE DRIVEWAY	1
	2.39	X		21.0'	3.0'		PRIVATE DRIVEWAY	1
	2.41		X	216.0'	3.0'		PRIVATE DRIVEWAY	1
	2.41	X		21.0'	3.0'		PRIVATE DRIVEWAY	1
	2.43	X		21.0'	3.0'		PRIVATE DRIVEWAY	1
	2.48	X		26.0'	3.0'		PRIVATE DRIVEWAY	1
	2.49	X		15.0'	3.0'		PRIVATE DRIVEWAY	1
	2.57	X		106.0'	3.0'		PRIVATE DRIVEWAY	1
	2.63	X		16.0'	3.0'		PRIVATE DRIVEWAY	1
	2.64	X		21.0'	3.0'		PRIVATE DRIVEWAY	1
	2.71	X		26.0'	3.0'		PRIVATE DRIVEWAY	1
	2.72	X		26.0'	3.0'		PRIVATE DRIVEWAY	1
	3.40		X	158.0'	3.0'		PRIVATE DRIVEWAY	1
	3.79	X		21.0'	3.0'		PRIVATE DRIVEWAY	1
	3.88		X	137.0'	3.0'		PRIVATE DRIVEWAY	1
	5.15	X		185.0'	3.0'		PRIVATE DRIVEWAY	1
	5.33	X		80.0'	3.0'		PRIVATE DRIVEWAY	1

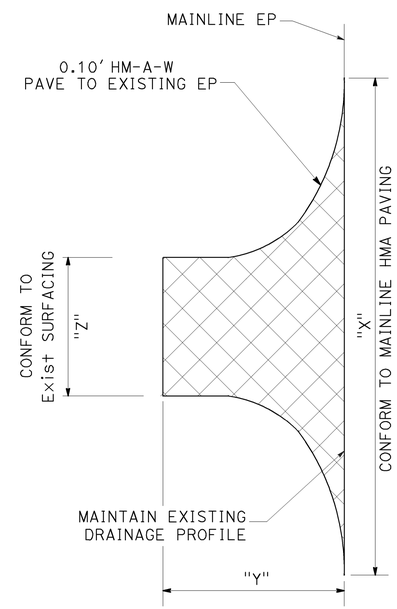

TYPICAL ROAD CONNECTION HMA PAVING LIMITS DETAIL 1

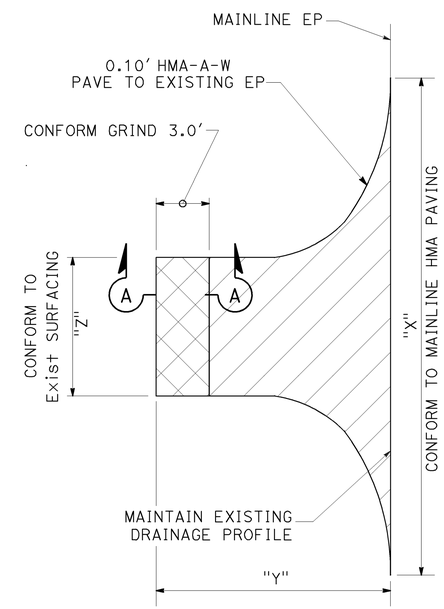

TYPICAL ROAD CONNECTION HMA PAVING LIMITS DETAIL 2

EXISTING UTILITY FACILITIES HAVE NOT BEEN PLOTTED ON THESE PLANS

CONSTRUCTION DETAILS

NO SCALE

C-3

STATE OF CALIFORNIA - DEPARTMENT OF TRANSPORTATION
Caltrans MAINTENANCE ENGINEERING

FUNCTIONAL SUPERVISOR: JOHN FOX
CALCULATED-DESIGNED BY: MATTHEW GOIKE
CHECKED BY: MALISSA REYNOLDS
REVISED BY: MR
DATE REVISED: 12-31-10

LAST REVISION 02-07-11
DATE PLOTTED => 07-FEB-2011
TIME PLOTTED => 14:21

Dist	COUNTY	ROUTE	POST MILES TOTAL PROJECT	SHEET No.	TOTAL SHEETS
09	Mno	182, 395	Var	7	17

REGISTERED CIVIL ENGINEER 1-27-11 DATE

2-7-11
PLANS APPROVAL DATE

REGISTERED PROFESSIONAL ENGINEER MATTHEW GOIKE No. 63638 Exp. 09-30-12 CIVIL STATE OF CALIFORNIA

THE STATE OF CALIFORNIA OR ITS OFFICERS OR AGENTS SHALL NOT BE RESPONSIBLE FOR THE ACCURACY OR COMPLETENESS OF SCANNED COPIES OF THIS PLAN SHEET.

ABBREVIATION:

HMA-A-W HOT MIX ASPHALT WITH WARM MIX ADDITIVE

COLD PLANE ASPHALT CONCRETE PAVEMENT

LOCATION	POSTMILE	DESCRIPTION	LENGTH	WIDTH	DEPTH	NOTES
1	65.10	CONFORM GRIND	25.0′	79.1′	0.10′	BEGIN CONSTRUCTION
	69.85	CONFORM GRIND	3.0′	24.9′	0.10′	Rte 270
	69.90	CONFORM GRIND	25.0′	68.6′	0.10′	END CONSTRUCTION
2	76.00	CONFORM GRIND	25.0′	40.4′	0.10′	BEGIN CONSTRUCTION
	76.00	CONFORM GRIND	3.0′	127.7′	0.10′	JACK SAWYER Rd
	76.31	COLD PLANE	210.0′	31.0′	0.10′	BRIDGE
	76.35	CONFORM GRIND	3.0′	2006.4′	0.10′	CONFORM AT CURB, RIGHT (SEE DETAIL)
	76.36	CONFORM GRIND	3.0′	2006.4′	0.10′	CONFORM AT GUTTER, LEFT (SEE DETAIL)
	76.42	COLD PLANE	ROAD		0.10′	HAYES St
	76.42	COLD PLANE			0.10′	BRIDGE St
	76.59	COLD PLANE	CONNECTION		0.10′	SINCLAIR ST (LEFT)
	76.59	COLD PLANE			0.10′	SINCLAIR St (RIGHT)
	76.65	COLD PLANE	HMA LIMITS		0.10′	TWIN LAKES Rd
	76.65	COLD PLANE			0.10′	KIRKWOOD St
	76.66	COLD PLANE	SEE SHEET C-3		0.10′	SCHOOL St (LEFT)
	76.66	COLD PLANE			0.10′	SCHOOL St (RIGHT)
	76.75	CONFORM GRIND	3.0′	105.6′	0.10′	CONFORM AT CURB, RIGHT (SEE DETAIL)
	76.89	COLD PLANE	180.0′	40.0′	0.10	BRIDGE
	77.04	CONFORM GRIND	25.0′	30.8′	0.10′	END CONSTRUCTION
3	0.23	CONFORM GRIND	3.0′	43.0′	0.10′	COURT St (LEFT)
	0.23	CONFORM GRIND	3.0′	32.0′	0.10′	COURT St (RIGHT)
	0.28	CONFORM GRIND	3.0′	58.0′	0.10	PRIVATE DRIVEWAY (RIGHT)
	0.33	CONFORM GRIND	3.0′	58.0′	0.10′	PRIVATE DRIVEWAY (RIGHT)
	0.35	CONFORM GRIND	3.0′	53.0′	0.10′	AURORA CANYON Rd
	0.44	CONFORM GRIND	3.0′	32.0′	0.10′	CAMERON Dr
	0.50	CONFORM GRIND	3.0′	38.0′	0.10′	SIERRA VIEW Dr
	0.80	CONFORM GRIND	3.0′	334.0′	0.10′	SAGE BRUSH Dr
	0.85	CONFORM GRIND	3.0′	110.0′	0.10′	PRIVATE DRIVEWAY (RIGHT)
	1.11	CONFORM GRIND	3.0′	28.0′	0.10′	DUMP Rd
	1.14	CONFORM GRIND	3.0′	158.0′	0.10′	PRIVATE DRIVEWAY (RIGHT)
	1.87	CONFORM GRIND	3.0′	127.0′	0.10′	PRIVATE DRIVEWAY (LEFT)
	2.39	CONFORM GRIND	3.0′	21.0′	0.10′	PRIVATE DRIVEWAY (LEFT)
	2.41	CONFORM GRIND	3.0′	216.0′	0.10′	PRIVATE DRIVEWAY (RIGHT)
	2.41	CONFORM GRIND	3.0′	21.0′	0.10′	PRIVATE DRIVEWAY (LEFT)
	2.43	CONFORM GRIND	3.0′	21.0′	0.10′	PRIVATE DRIVEWAY (LEFT)
	2.48	CONFORM GRIND	3.0′	26.0′	0.10′	PRIVATE DRIVEWAY (LEFT)
	2.49	CONFORM GRIND	3.0′	15.0′	0.10′	PRIVATE DRIVEWAY (LEFT)
	2.57	CONFORM GRIND	3.0′	106.0′	0.10′	PRIVATE DRIVEWAY (LEFT)
	2.63	CONFORM GRIND	3.0′	16.0′	0.10′	PRIVATE DRIVEWAY (LEFT)
	2.64	CONFORM GRIND	3.0′	21.0′	0.10′	PRIVATE DRIVEWAY (LEFT)
	2.71	CONFORM GRIND	3.0′	26.0′	0.10′	PRIVATE DRIVEWAY (LEFT)
	2.72	CONFORM GRIND	3.0′	26.0′	0.10′	PRIVATE DRIVEWAY (LEFT)
	3.40	CONFORM GRIND	3.0′	158.0′	0.10′	PRIVATE DRIVEWAY (RIGHT)
	3.79	CONFORM GRIND	3.0′	21.0′	0.10′	PRIVATE DRIVEWAY (LEFT)
	3.88	CONFORM GRIND	3.0′	137.0′	0.10′	PRIVATE DRIVEWAY (RIGHT)
	5.15	CONFORM GRIND	3.0′	185.0′	0.10′	PRIVATE DRIVEWAY (LEFT)
	5.33	CONFORM GRIND	3.0′	80.0′	0.10′	PRIVATE DRIVEWAY (LEFT)
	6.30	COLD PLANE	320.0′	40.0′	0.10′	BRIDGE
	6.50	CONFORM GRIND	25.0′	28.0′	0.10′	END CONSTRUCTION

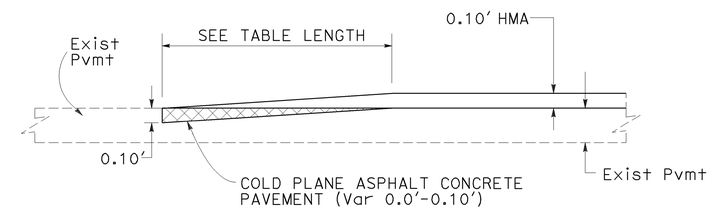

TYPICAL CONFORM GRIND DETAIL

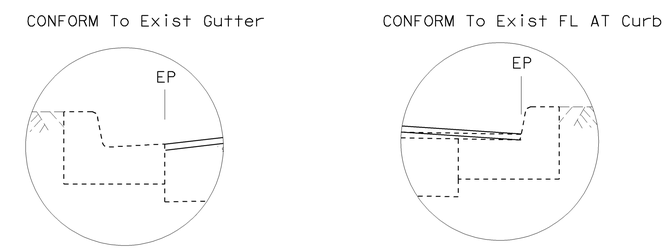

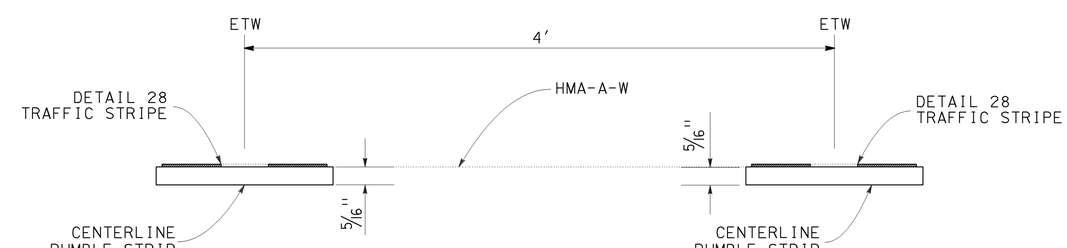

RUMBLE STRIP AT BAY TAPER

EXISTING UTILITY FACILITIES HAVE NOT BEEN PLOTTED ON THESE PLANS

CONSTRUCTION DETAILS C-4

NO SCALE

STATE OF CALIFORNIA - DEPARTMENT OF TRANSPORTATION
Caltrans MAINTENANCE ENGINEERING

FUNCTIONAL SUPERVISOR: JOHN FOX
CALCULATED-DESIGNED BY: MATTHEW GOIKE
CHECKED BY: MALISSA REYNOLDS
REVISED BY: MR
DATE REVISED: 12-31-10

LAST REVISION 02-07-11
DATE PLOTTED => 07-FEB-2011
TIME PLOTTED => 16:25

Dist	COUNTY	ROUTE	POST MILES TOTAL PROJECT	SHEET No.	TOTAL SHEETS
09	Mno	182, 395	Var	8	17

REGISTERED CIVIL ENGINEER 1-27-11 DATE

PLANS APPROVAL DATE 2-7-11

REGISTERED PROFESSIONAL ENGINEER MATTHEW GOIKE No. 63638 Exp. 09-30-12 CIVIL STATE OF CALIFORNIA

THE STATE OF CALIFORNIA OR ITS OFFICERS OR AGENTS SHALL NOT BE RESPONSIBLE FOR THE ACCURACY OR COMPLETENESS OF SCANNED COPIES OF THIS PLAN SHEET.

ADJUST FRAME AND COVER TO GRADE

LOCATION	PM	LEFT	RIGHT	ADJUST TO GRADE EA	DESCRIPTION
2	75.900			1	24" SEWER COVER OFF EP (JACK SAWYER Rd)
	75.975		X	1	24" SEWER COVER ON EP
	75.992		X	1	24" SEWER COVER ON EP
	75.992	X		1	24" SEWER COVER ON EP
	76.053		X	1	24" SEWER COVER ON EP
	76.111		X	1	24" SEWER COVER ON EP
	76.168		X	1	24" SEWER COVER ON EP
	76.225		X	1	24" SEWER COVER ON EP
	76.282		X	1	24" SEWER COVER ON EP
	76.402	X		1	12" WATER VALVE 8' OFF EP (HAYES St)
	76.410		X	4	12" WATER VALVE 3' OFF EP (BRIDGE St)
	76.605		X	2	12" WATER VALVE 3' OFF EP (SINCLAIR St)
	76.557		X	1	12" WATER VALVE 3' OFF EP (SINCLAIR St)
	76.626		X	1	12" WATER VALVE (SCHOOL St N)
	76.628	X		1	12" WATER VALVE (SCHOOL St S)
	76.648		X	1	12" SEWER COVER 3' OFF ETW
	76.649	X		1	6" MONITORING WELL COVER
	76.709		X	1	12" SEWER COVER 3' OFF ETW
	76.760		X	1	12" SEWER COVER 3' OFF ETW
	76.897	X		1	12" WATER VALVE
TOTAL				24	

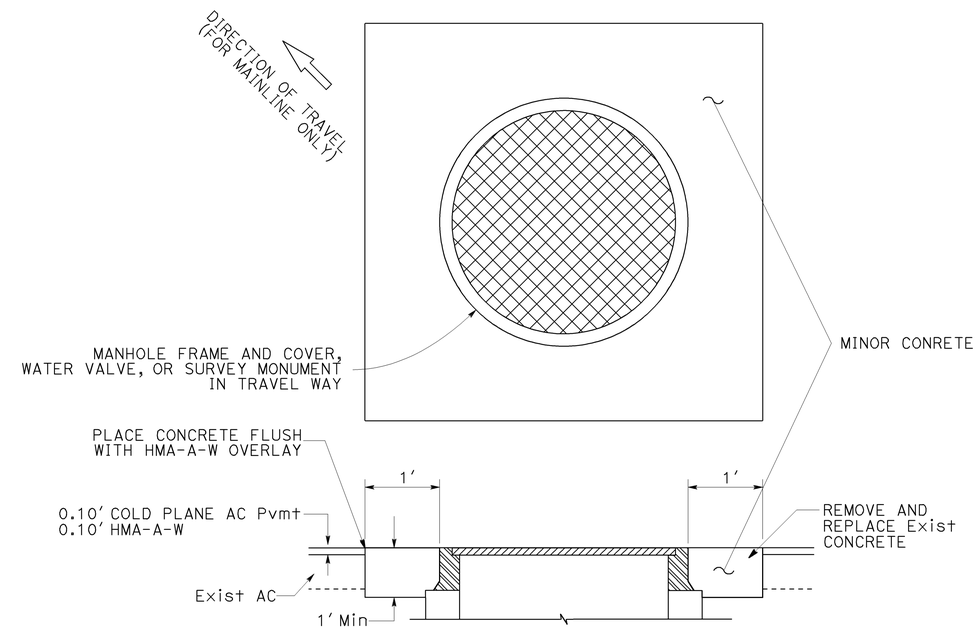

ADJUST FRAME AND COVER TO GRADE

24" ROUND SEWER MANHOLE COVER IN TRAVEL WAY
WATER VALVE IN TRAVEL WAY
SURVEY MONUMENT IN TRAVEL WAY

MAINTAINING EXISTING TRAFFIC MANAGEMENT ELEMENTS DURING CONSTRUCTION EXISTING INDUCTIVE LOOP DETECTORS

LOCATION	ROUTE/POST MILE	NB	SB	DESCRIPTION
3	182/0.25	1	1	LOOP DETECTORS
3	182/6.04	1	1	LOOP DETECTORS
2	395/76.675	1	1	LOOP DETECTORS
1	270/0.0	1 (EB)	1 (WB)	LOOP DETECTORS

EXISTING UTILITY FACILITIES HAVE NOT BEEN PLOTTED ON THESE PLANS

CONSTRUCTION DETAILS C-5

NO SCALE

STATE OF CALIFORNIA - DEPARTMENT OF TRANSPORTATION
Caltrans MAINTENANCE ENGINEERING

FUNCTIONAL SUPERVISOR: JOHN FOX
CALCULATED-DESIGNED BY: MATTHEW GOIKE
CHECKED BY: MALISSA REYNOLDS
REVISED BY: MR
DATE REVISED: 12-31-10

LAST REVISION 01-27-11
DATE PLOTTED => 07-FEB-2011
TIME PLOTTED => 14:21

Dist	COUNTY	ROUTE	POST MILES TOTAL PROJECT	SHEET No.	TOTAL SHEETS
09	Mno	182, 395	Var	9	17

REGISTERED CIVIL ENGINEER 1-27-11 DATE

2-7-11
PLANS APPROVAL DATE

REGISTERED PROFESSIONAL ENGINEER MATTHEW GOIKE No. 63638 Exp. 09-30-12 CIVIL STATE OF CALIFORNIA

THE STATE OF CALIFORNIA OR ITS OFFICERS OR AGENTS SHALL NOT BE RESPONSIBLE FOR THE ACCURACY OR COMPLETENESS OF SCANNED COPIES OF THIS PLAN SHEET.

NOTES:

1. EXACT LOCATION AND POSITION OF TEMPORARY FIBER ROLL TO BE DETERMINED BY THE ENGINEER.
2. TEMPORARY DRAINAGE INLET PROTECTION SHALL BE TYPE 5 (SEDIMENT FILTER BAG). SLOT DRAIN TO BE PROTECTED BY COVERING WITH TAPE. SLOT DRAIN PROTECTION WILL NOT BE A SEPERATE PAY ITEM.

ABBREVIATION:

HMA-A-W HOT MIX ASPHALT WITH WARM MIX ADDITIVE

TEMPORARY GRAVEL BAG BERM

LOCATION	PM	LF	L†	R†	DESCRIPTION
3	6.22	4	X		OVERSIDE DRAIN
	6.39	4	X		OVERSIDE DRAIN
TOTAL		8			

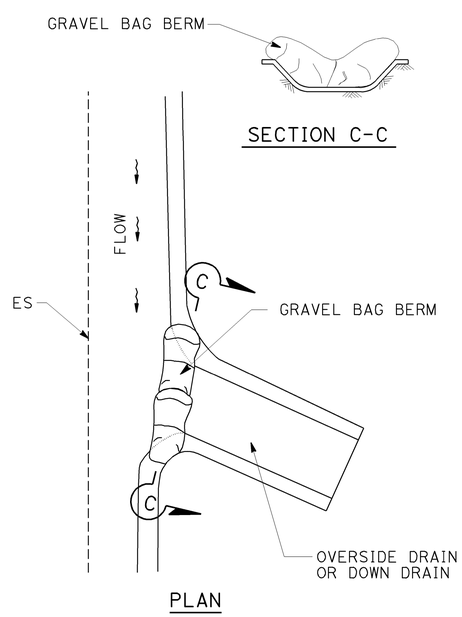

TEMPORARY GRAVEL BAG BERM OVERSIDE DRAIN AND DOWN DRAIN

TEMPORARY DRAINAGE INLET PROTECTION

LOCATION	PM	L†	R†	EA	DESCRIPTION
1	67.00		X	1	DRAINAGE INLET GRATE (24" X 42")
	67.50		X	1	DRAINAGE INLET GRATE (36" Dia)
	67.55		X	1	DRAINAGE INLET GRATE (24" X 42")
	67.74		X	1	DRAINAGE INLET GRATE (24" X 42")
	68.55		X	1	DRAINAGE INLET GRATE (24" X 42")
	68.68		X	1	DRAINAGE INLET GRATE (20' SLOT DRAIN)
	68.80		X	1	DRAINAGE INLET GRATE (24" X 42")
	68.89		X	1	DRAINAGE INLET GRATE (20' SLOT DRAIN)
	68.96		X	1	DRAINAGE INLET GRATE (24" X 42")
	69.00		X	1	DRAINAGE INLET GRATE (24" X 42")
	69.11		X	1	DRAINAGE INLET GRATE (20' SLOT DRAIN)
	69.19		X	1	DRAINAGE INLET GRATE (24" X 42")
	69.35		X	1	DRAINAGE INLET GRATE (24" X 42")
	69.45		X	1	DRAINAGE INLET GRATE (24" X 42")
	69.53		X	1	DRAINAGE INLET GRATE (24" X 42")
2	76.40			1	DRAINAGE INLET GRATE (24" X 42")
	76.54			1	DRAINAGE INLET GRATE (20' SLOT DRAIN)
TOTAL				17	

TEMPORARY FIBER ROLL

LOCATION	POSTMILE	LF	L†	R†	DESCRIPTION
2	76.3	40	X		BRIDGE, LIVE WATER
	76.3	40		X	BRIDGE, LIVE WATER
	76.8	40	X		BRIDGE, LIVE WATER
	76.8	40		X	BRIDGE, LIVE WATER
3	6.3	40	X		BRIDGE, LIVE WATER
	6.3	40		X	BRIDGE, LIVE WATER
TOTAL		240			

EXISTING UTILITY FACILITIES HAVE NOT BEEN PLOTTED ON THESE PLANS

CONSTRUCTION DETAILS
NO SCALE

C-6

STATE OF CALIFORNIA - DEPARTMENT OF TRANSPORTATION
Caltrans MAINTENANCE ENGINEERING

FUNCTIONAL SUPERVISOR: JOHN FOX
CALCULATED-DESIGNED BY: MATTHEW GOIKE
CHECKED BY: MALISSA REYNOLDS
REVISED BY: MR
DATE REVISED: 12-31-10

LAST REVISION 02-07-11
DATE PLOTTED => 10-FEB-2011
TIME PLOTTED => 09:57

Dist	COUNTY	ROUTE	POST MILES TOTAL PROJECT	SHEET No.	TOTAL SHEETS
09	Mno	182, 395	Var	10	17

REGISTERED CIVIL ENGINEER 1-27-11 DATE

2-7-11
PLANS APPROVAL DATE

REGISTERED PROFESSIONAL ENGINEER MATTHEW GOIKE No. 63638 Exp. 09-30-12 CIVIL STATE OF CALIFORNIA

THE STATE OF CALIFORNIA OR ITS OFFICERS OR AGENTS SHALL NOT BE RESPONSIBLE FOR THE ACCURACY OR COMPLETENESS OF SCANNED COPIES OF THIS PLAN SHEET.

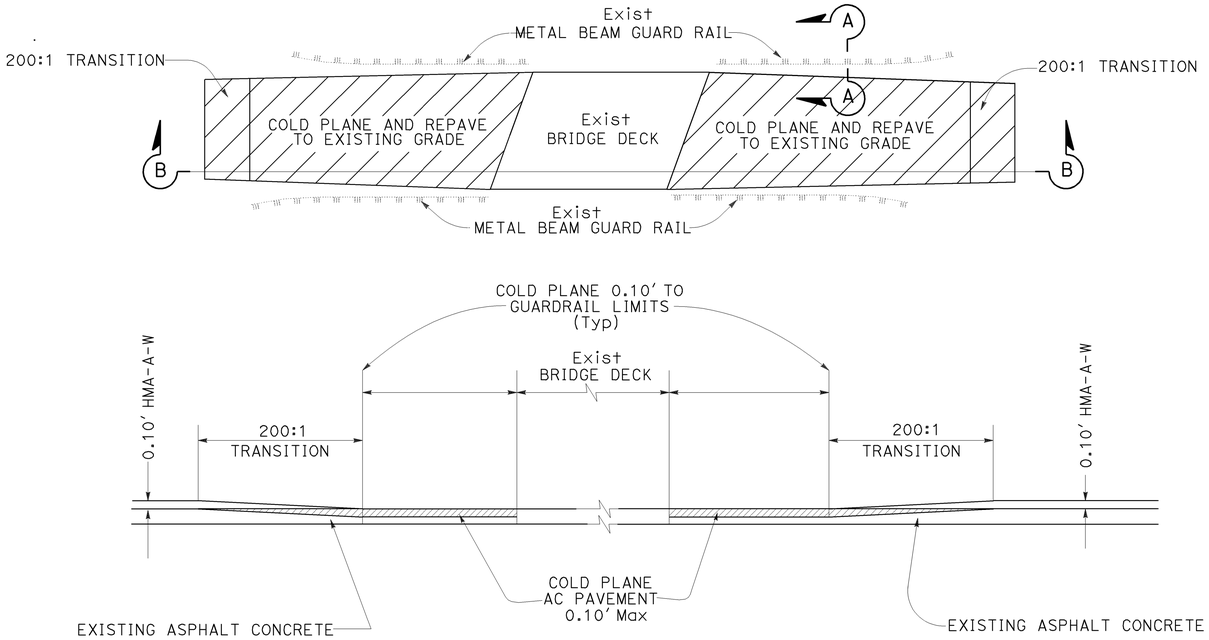

SECTION B-B
COLD PLANE VERTICAL PAVEMENT TRANSITION
LOCATION 3 PM 6.30

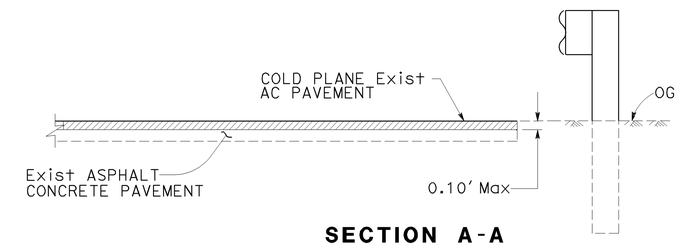

SECTION A-A
(TYPICAL BOTH SIDES)
ASPHALT CONCRETE SURFACING ADJACENT TO EXIST MBGR

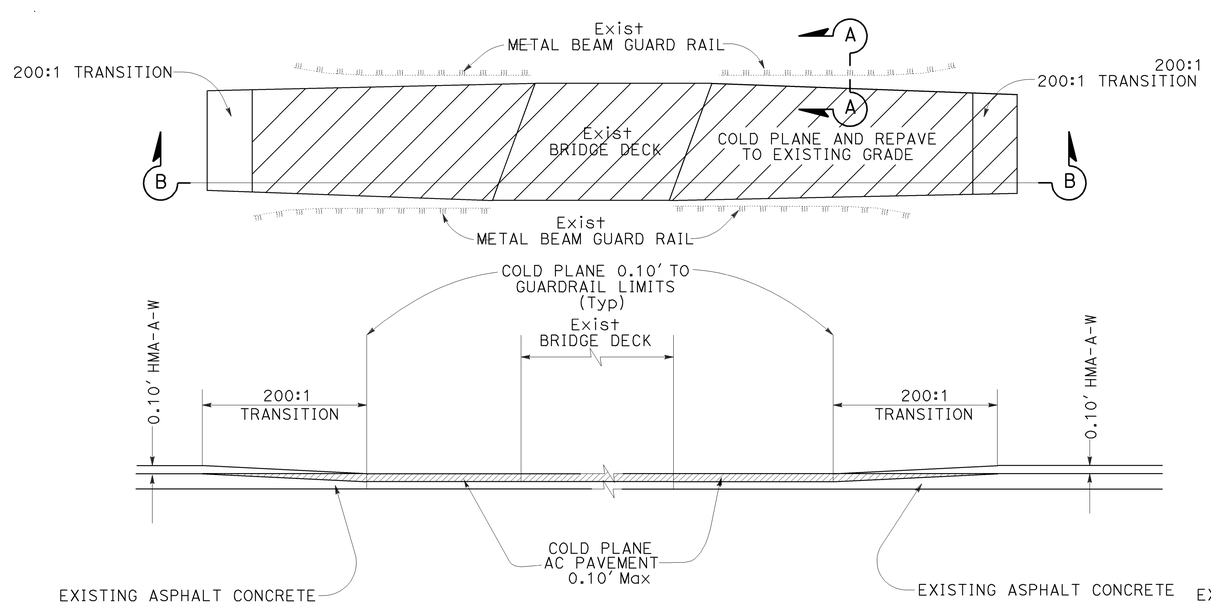

SECTION B-B
COLD PLANE VERTICAL PAVEMENT TRANSITION
LOCATION 2 PM 76.31

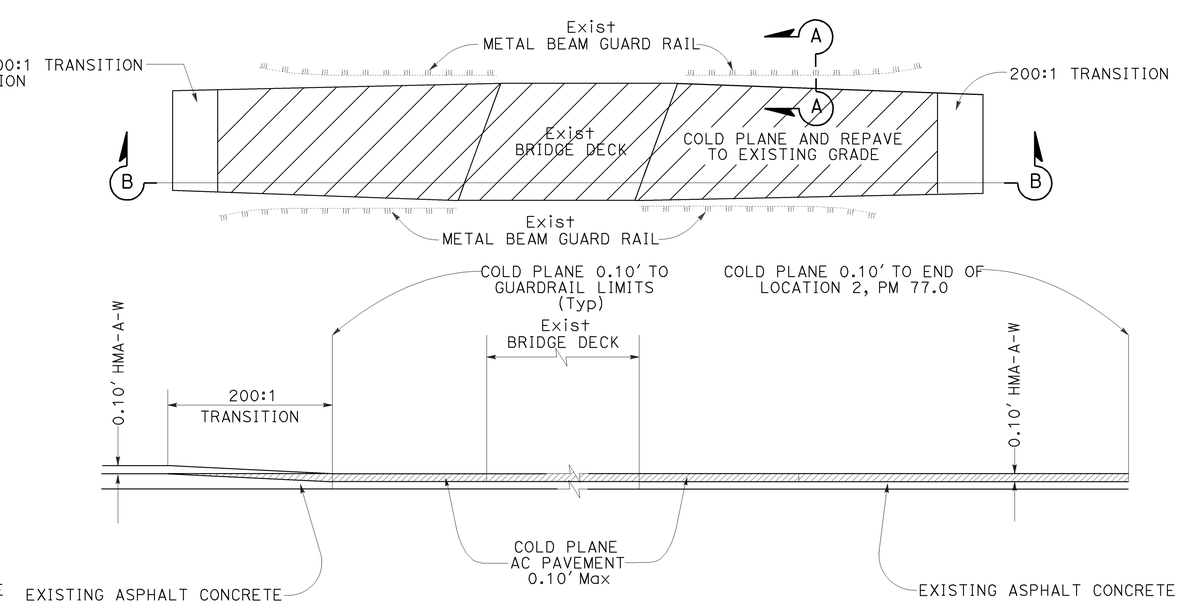

SECTION B-B
COLD PLANE VERTICAL PAVEMENT TRANSITION
LOCATION 2 PM 76.89

CONSTRUCTION DETAILS
NO SCALE **C-7**

STATE OF CALIFORNIA - DEPARTMENT OF TRANSPORTATION
Caltrans MAINTENANCE ENGINEERING
FUNCTIONAL SUPERVISOR: JOHN FOX
CALCULATED-DESIGNED BY: MATTHEW GOIKE
CHECKED BY: MALISSA REYNOLDS
REVISED BY
DATE REVISED

LAST REVISION 02-07-11
DATE PLOTTED => 07-FEB-2011
TIME PLOTTED => 14:21

Dist	COUNTY	ROUTE	POST MILES TOTAL PROJECT	SHEET No.	TOTAL SHEETS
09	Mno	182, 395	Var	11	17

REGISTERED CIVIL ENGINEER 1-27-11 DATE

2-7-11
PLANS APPROVAL DATE

REGISTERED PROFESSIONAL ENGINEER MATTHEW GOIKE No. 63638 Exp. 09-30-12 CIVIL STATE OF CALIFORNIA

THE STATE OF CALIFORNIA OR ITS OFFICERS OR AGENTS SHALL NOT BE RESPONSIBLE FOR THE ACCURACY OR COMPLETENESS OF SCANNED COPIES OF THIS PLAN SHEET.

NOTES:

1. FOR SIGN INSTALLATION DETAILS AND DIMENSIONS NOT SHOWN SEE STANDARD PLANS.
2. SEE TABLE FOR PLACEMENT TYPE. EXACT LOCATION AND POSITION OF CONSTRUCTION AREA SIGNS TO BE DETERMINED BY THE ENGINEER.
3. SIGNS MAY BE PLACED ON TYPE III BARRICADES AT ROAD CONNECTIONS WHEN APPROVED BY THE ENGINEER.
4. EXISTING UTILITY FACILITIES HAVE NOT BEEN PLOTTED ON THESE PLANS.
5. WHEN TRAFFIC IS ALLOWED ON COLD PLANE SURFACE USE W8-8 (ROUGH ROAD) CONSTRUCTION AREA SIGN. PLACEMENT SHALL BE DETERMINED BY THE ENGINEER.
6. PLACE TWO "BUSINESS IS OPEN DURING CONSTRUCTION" SIGNS IN EACH DIRECTION OF TRAVEL. PLACEMENT SHALL BE DETERMINED BY THE ENGINEER.

STATIONARY MOUNTED CONSTRUCTION AREA SIGNS

LOCATION	ROUTE	PM	PLACEMENT	REMARKS
1	395	64.60	A	BEGIN WORK
	395	69.85	C	JUNCTION WITH ROUTE 270, R†
	395	70.10	A	END WORK
2	395	75.75	A	BEGIN WORK
	395	75.91	C	JACK SAWYER ROAD, R†
	395	76.42	C	HAYES STREET, L†
	395	76.42	C	BRIDGE STREET, R†
	395	76.59	B	SINCLAIR STREET, L†, R†
	395	76.65	C	TWIN LAKES ROAD, L†
	395	76.66	B	SCHOOL STREET, L†, R†
	395	76.78	B	KIRKWOOD STREET, L†, R†
	395	77.10	C	EMIGRANT STREET, R†
	395	77.50	A	END WORK
3	182	0.23	B	COURT STREET, L†, R†
	182	0.35	C	AURORA CANYON ROAD, R†
	182	0.44	C	CAMERON DRIVE, R†
	182	0.50	C	SIERRA VIEW DRIVE, R†
	182	1.11	C	GARBAGE PIT ROAD, R†
	182	3.82	C	RAMP ROAD, L†
	182	3.82	C	MASONIC ROAD, R†
	182	7.00	A	END WORK

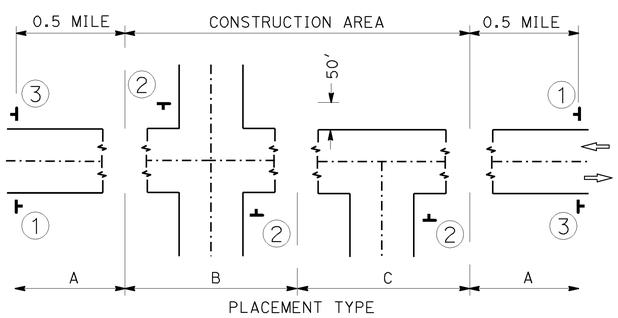

TYPICAL SIGN PLACEMENT FOR UNDIVIDED HIGHWAY

PORTABLE CHANGEABLE MESSAGE SIGNS

MESSAGE FOR 2 LANE SECTIONS		
EXPECT DELAYS	REDUCE SPEED	LOOSE GRAVEL
MESSAGE FOR MULTI-LANE SECTIONS		
LANE CLOSED AHEAD	REDUCE SPEED	LOOSE GRAVEL

1. PORTABLE CHANGEABLE MESSAGE SIGN LOCATIONS TO BE CONFIRMED BY THE ENGINEER BEFORE THE ACTUAL CLOSURE.
2. ALTERNATE MESSAGES MUST BE APPROVED BY THE ENGINEER.
3. MESSAGE MAY BE ALTERED BY THE ENGINEER.
4. WHEN CONSTRUCTION OPERATIONS ARE NOT ACTIVELY IN PROGRESS, PORTABLE CHANGEABLE MESSAGE SIGNS SHALL NOT DISPLAY A MESSAGE UNLESS DIRECTED BY THE ENGINEER.

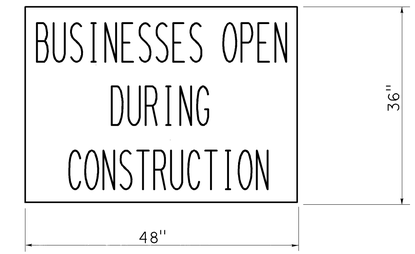

NOTES:

1. BORDER AND LEGEND: BLACK
2. BACKGROUND: ORANGE REFLECTIVE
3. SIGN SHALL BE MOUNTED TO A TYPE III BARRICADE

SPECIAL SIGN

STATIONARY MOUNTED CONSTRUCTION AREA SIGN DETAILS

LAYOUT	TYPE	PANEL SIZE	SIGN MESSAGE	No. OF SIGNS	No. OF POSTS	POST SIZE
1	W20-1	48" x 48"	ROAD WORK AHEAD	2	2	6" x 6"
	C23B (CA)	60" x 24"	PAVEMENT MAINTENANCE	2		
2	W20-1	36" x 36"	ROAD WORK AHEAD	20	20	4" x 6"
3	G20-2	36" x 18"	END ROAD WORK	3	3	4" x 4"

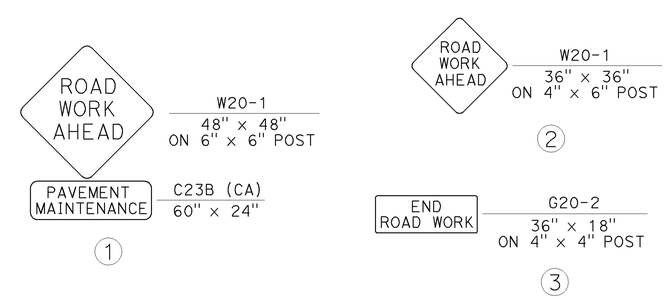

TYPICAL SIGN LAYOUT

EXISTING UTILITY FACILITIES HAVE NOT BEEN PLOTTED ON THESE PLANS

CONSTRUCTION AREA SIGNS

NO SCALE

CS-1

STATE OF CALIFORNIA - DEPARTMENT OF TRANSPORTATION
Caltrans MAINTENANCE ENGINEERING

FUNCTIONAL SUPERVISOR: JOHN FOX
CALCULATED-DESIGNED BY: MATTHEW GOIKE
CHECKED BY: MALISSA REYNOLDS
REVISED BY: MR
DATE REVISED: 12-31-10

LAST REVISION DATE PLOTTED => 07-FEB-2011
02-07-11 TIME PLOTTED => 14:21

Dist	COUNTY	ROUTE	POST MILES TOTAL PROJECT	SHEET No.	TOTAL SHEETS
09	Mno	182, 395	Var	12	17

REGISTERED CIVIL ENGINEER 1-27-11 DATE

2-7-11
PLANS APPROVAL DATE

REGISTERED PROFESSIONAL ENGINEER MATTHEW GOIKE No. 63638 Exp. 09-30-12 CIVIL STATE OF CALIFORNIA

THE STATE OF CALIFORNIA OR ITS OFFICERS OR AGENTS SHALL NOT BE RESPONSIBLE FOR THE ACCURACY OR COMPLETENESS OF SCANNED COPIES OF THIS PLAN SHEET.

ROADWAY ITEMS

LOCATION	HOT MIX (TYPE A) WITH WARM MIX ASPHALT ADDITIVE	COLD PLANE AC PAVEMENT	IMPORTED MATERIAL (SHOULDER BACKING)	TACK COAT
	TON	SQYD	TON	TON
1	10,811	419	975	61
2	3,058	5,367	115	17
3	8,917	12,016	1338	49
TOTAL	22,786	17,802	2428	127

PAINT PAVEMENT MARKING (2-COAT)

LOCATION	CROSSWALK WHITE (N)		CROSSWALK YELLOW (N)		TYPE I ARROW 18'-0"		TYPE III ARROW (LEFT)		TYPE III ARROW (RIGHT)		TYPE VI ARROW (RIGHT)		TYPE VI ARROW (LEFT)		"SLOW" YELLOW		"SCHOOL" YELLOW		"XING" YELLOW		"PED" WHITE		"XING" WHITE		LIMIT LINE 1 ft (N)		"STOP" WHITE		"AHEAD" WHITE		YIELD LINE	
	LF	SQFT	LF	SQFT	No.	SQFT	No.	SQFT	No.	SQFT	No.	SQFT	No.	SQFT	No.	SQFT	No.	SQFT	No.	SQFT	No.	SQFT	No.	SQFT	LF	SQFT	No.	SQFT	No.	SQFT	No.	SQFT
1							1	42	2	84	6	252	3	126											35	35	1	22				
2	300	300	305	305	1	25	9	378	1	42	6	252			4	92	4	140	4	84	4	72	4	84	129	129	8	176			6	108
3					1	25	1	42	1	42															714	714	8	176	1	31		
SUBTOTAL	300		305		50		462		84		420		126		92		140		84		72		84		878		374		31		108	
TOTAL	3778																															

(N) - NOT A SEPARATE PAY ITEM, FOR INFORMATION ONLY.

PAINT TRAFFIC STRIPE (2-COAT)

LOCATION	DETAIL NUMBER							
	5	18	11	21	27B	28	38A	31
	LF	LF	LF	LF	LF	LF	LF	LF
1			22,344	16,175	48,361	18,056	131	
2	730	570	3,062		10,718	600	400	1350
3	9,346	11,300		13,000	68,534	150	570	
	10,076	11,870	25,406	29,175	127,613	18,806	1,101	
TOTAL	224,047							

CENTERLINE RUMBLE STRIP (AC, GROUND-IN INDENTATIONS)

LOCATION	PM	LEFT	MEDIAN	RIGHT	CENTER LINE	DISTANCE STA
1	65.1 TO 66.04		X			50
	68.048 TO 68.616		X			30
		TOTAL				80

ADJUST METAL BEAM GUARD RAILING

LOCATION	BEGIN PM	LEFT	RIGHT	LF
1	65.17	X		640
	65.91	X		530
	66.07	X		1,795
	66.50	X		530
	66.57		X	580
	66.87	X		4,170
	66.87		X	420
	67.14	X		2,430
	68.72	X		2,640
	69.30	X		740
	69.80	X		110
3	4.30	X		210
	4.98	X		580
	6.44		X	275
TOTAL				15,650

ADJUST FRAME AND COVER TO GRADE

LOCATION	EA
2	24
TOTAL	24

EXISTING UTILITY FACILITIES HAVE NOT BEEN PLOTTED ON THESE PLANS

SUMMARY OF QUANTITIES

NO SCALE

Q-1

STATE OF CALIFORNIA - DEPARTMENT OF TRANSPORTATION
Caltrans MAINTENANCE ENGINEERING

FUNCTIONAL SUPERVISOR: JOHN FOX
CALCULATED-DESIGNED BY: MATTHEW GOIKE
CHECKED BY: MALISSA REYNOLDS
REVISED BY: MR
DATE REVISED: 12-31-10

LAST REVISION 02-07-11
DATE PLOTTED => 07-FEB-2011
TIME PLOTTED => 14:21

DIST	COUNTY	ROUTE	POST MILES TOTAL PROJECT	SHEET NO.	TOTAL SHEETS
09	Mno	182, 395	Var	13	17

Randell D. Hiatt
REGISTERED CIVIL ENGINEER

June 6, 2008
PLANS APPROVAL DATE

REGISTERED PROFESSIONAL ENGINEER
Randell D. Hiatt
No. C50200
Exp. 6-30-09
CIVIL
STATE OF CALIFORNIA

The State of California or its officers or agents shall not be responsible for the accuracy or completeness of electronic copies of this plan sheet.

To accompany plans dated 2-7-11

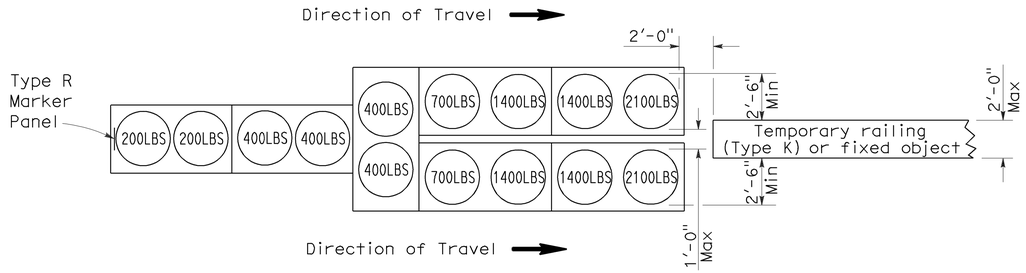

ARRAY 'TU14'

Approach speed 45 mph or more

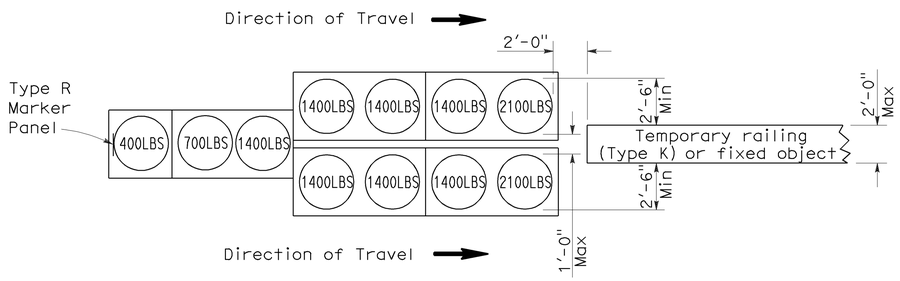

ARRAY 'TU11'

Approach speed less than 45 mph

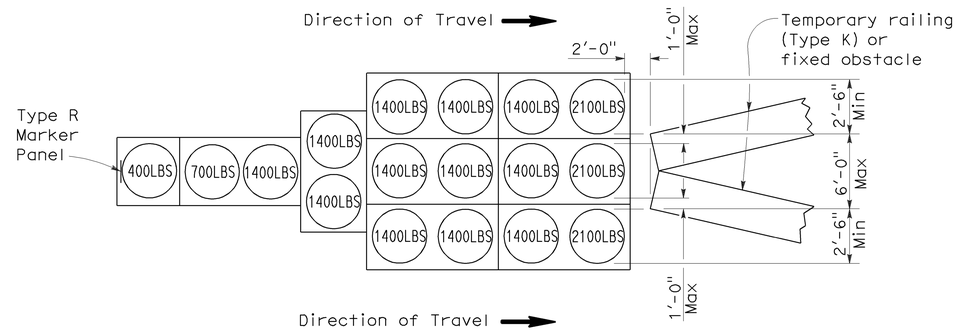

ARRAY 'TU17'

Approach speed less than 45 mph

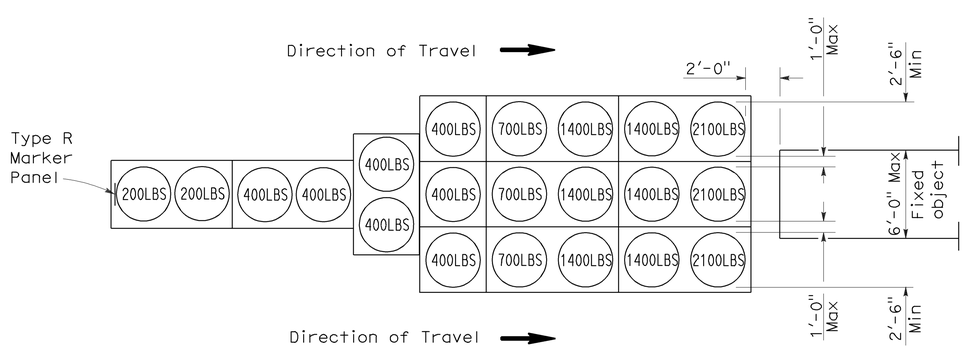

ARRAY 'TU21'

Approach speed 45 mph or more

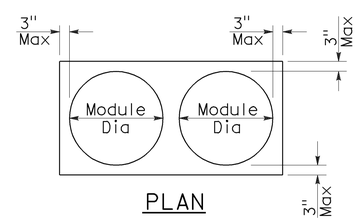

PLAN

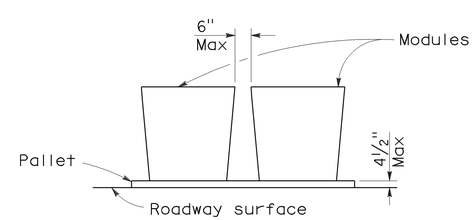

ELEVATION

CRASH CUSHION PALLET DETAIL

See Note 7

NOTES:

1. (XXX) Indicates sand filled module location and weight of sand in pounds for each module. Module spacing is based on the greater diameter of the module.
2. All sand weights are nominal.
3. Temporary crash cushion arrays shall not encroach on the traveled way.
4. Place the top of Type R marker panel 1" below the module lid.
5. Refer to Standard Plan A73B for marker details.
6. Approach speeds indicated conform to NCHRP 350 Report criteria.
7. Use of pallets is optional.

STATE OF CALIFORNIA
DEPARTMENT OF TRANSPORTATION

TEMPORARY CRASH CUSHION, SAND FILLED (UNIDIRECTIONAL)

NO SCALE

RSP T1A DATED JUNE 6, 2008 SUPERSEDES STANDARD PLAN T1A
DATED MAY 1, 2006 - PAGE 211 OF THE STANDARD PLANS BOOK DATED MAY 2006.

REVISED STANDARD PLAN RSP T1A

2006 REVISED STANDARD PLAN RSP T1A

5-15-08

DIST	COUNTY	ROUTE	POST MILES TOTAL PROJECT	SHEET NO.	TOTAL SHEETS
09	Mno	182, 395	Var	14	17

Randell D. Hiatt
REGISTERED CIVIL ENGINEER

June 6, 2008
PLANS APPROVAL DATE

REGISTERED PROFESSIONAL ENGINEER
Randell D. Hiatt
No. C50200
Exp. 6-30-09
CIVIL
STATE OF CALIFORNIA

The State of California or its officers or agents shall not be responsible for the accuracy or completeness of electronic copies of this plan sheet.

To accompany plans dated 2-7-11

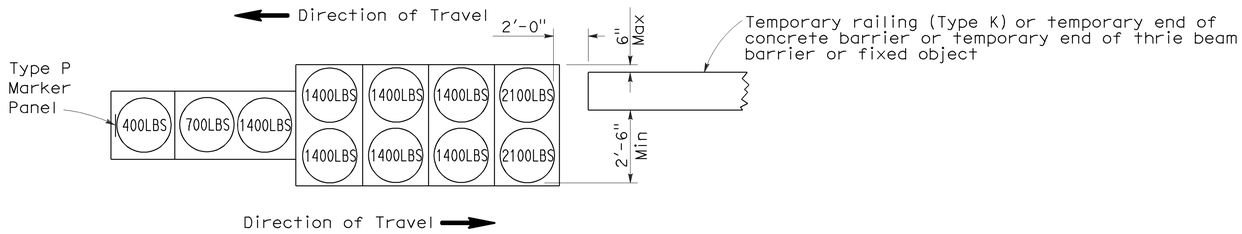

ARRAY 'TB11'

Approach speed less than 45 mph

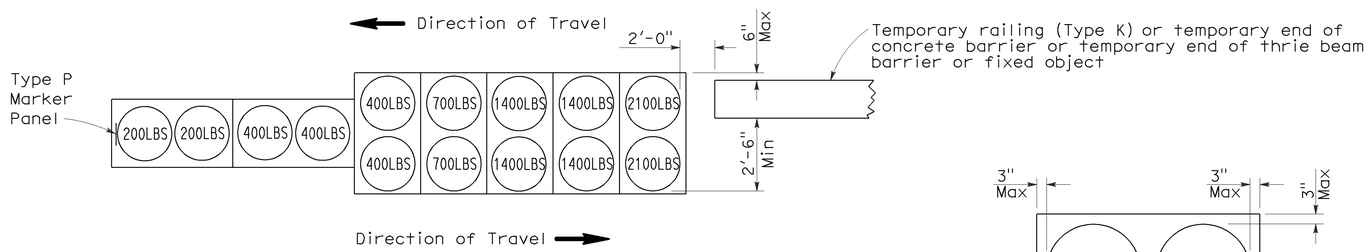

ARRAY 'TB14'

Approach speed 45 mph or more

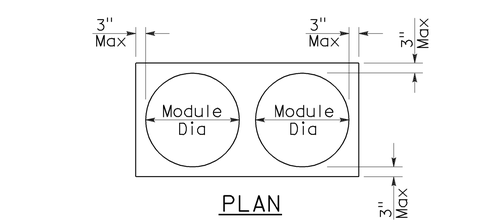

PLAN

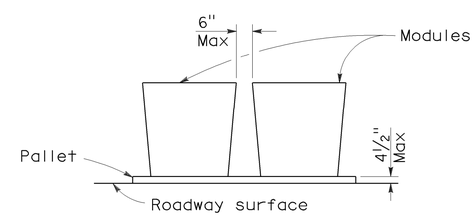

ELEVATION

CRASH CUSHION PALLET DETAIL

See Note 7

NOTES:

1. (XXX) Indicates sand filled module location and weight of sand in pounds for each module. Module spacing is based on the greater diameter of the module.
2. All sand weights are nominal.
3. Temporary crash cushion arrays shall not encroach on the traveled way.
4. Place the Type P marker panel so that the bottom of the panel rests upon the pallet.
5. Refer to Standard Plan A73B for marker details.
6. Approach speeds indicated conform to NCHRP 350 Report criteria.
7. Use of pallets is optional.

STATE OF CALIFORNIA
DEPARTMENT OF TRANSPORTATION

TEMPORARY CRASH CUSHION, SAND FILLED (BIDIRECTIONAL)

NO SCALE

RSP T1B DATED JUNE 6, 2008 SUPERSEDES STANDARD PLAN T1B
DATED MAY 1, 2006 - PAGE 212 OF THE STANDARD PLANS BOOK DATED MAY 2006.

REVISED STANDARD PLAN RSP T1B

2006 REVISED STANDARD PLAN RSP T1B

5-15-08

DIST	COUNTY	ROUTE	POST MILES TOTAL PROJECT	SHEET NO.	TOTAL SHEETS
09	Mno	182, 395	Var	15	17

Randell D. Hiatt
REGISTERED CIVIL ENGINEER

June 6, 2008
PLANS APPROVAL DATE

REGISTERED PROFESSIONAL ENGINEER
Randell D. Hiatt
No. C50200
Exp. 6-30-09
CIVIL
STATE OF CALIFORNIA

The State of California or its officers or agents shall not be responsible for the accuracy or completeness of electronic copies of this plan sheet.

To accompany plans dated 2-7-11

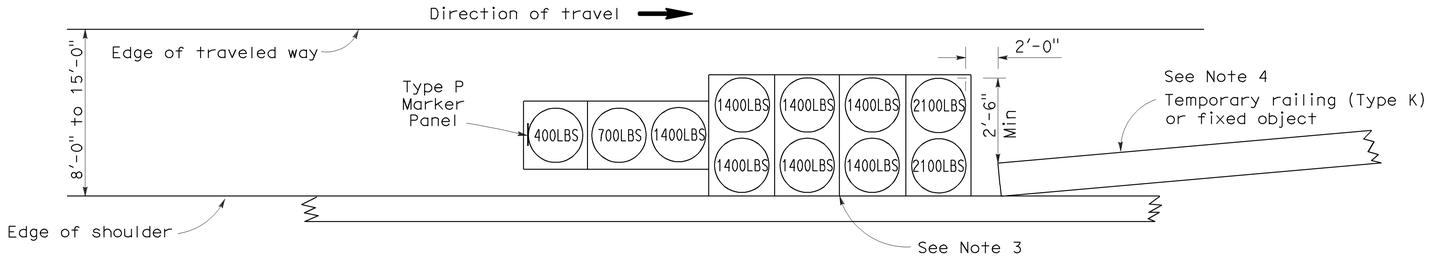

ARRAY 'TS11'

Approach speed less than 45 mph
See Note 9

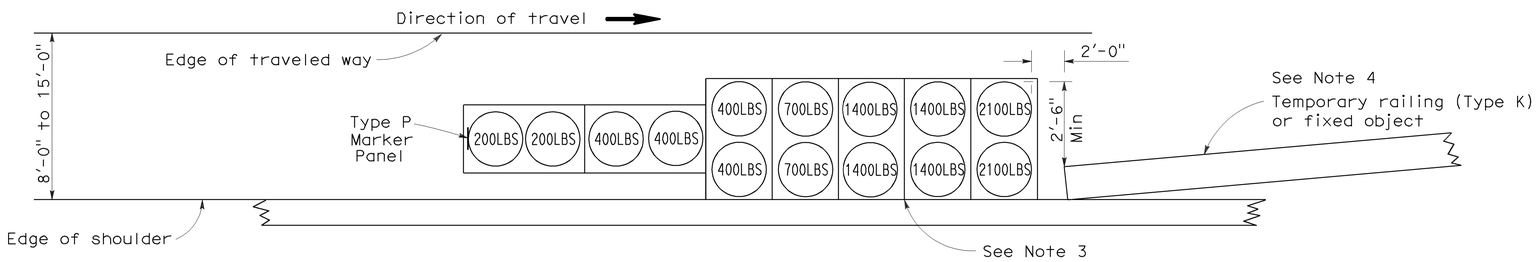

ARRAY 'TS14'

Approach speed 45 mph or more
See Note 9

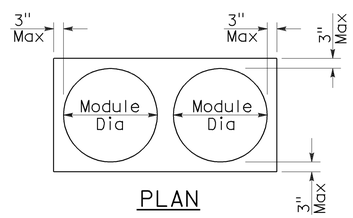

PLAN

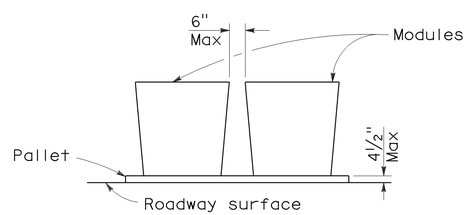

ELEVATION

CRASH CUSHION PALLET DETAIL

See Note 11

NOTES:

1. (XXX) Indicates sand filled module location and weight of sand in pounds for each module. Module spacing is based on the greater diameter of the module.
2. All sand weights are nominal.
3. The temporary crash cushion arrays shown on this plan shall be used only in locations where there will be traffic on one side of the temporary crash cushion array.
4. If the fixed object or approach end of the temporary railing is less than 15'-0" from the edge of traveled way, a temporary crash cushion is required in a construction or work zone.
5. Temporary crash cushion arrays shall not encroach on the traveled way.
6. Arrays for median shoulders shall conform to details shown on this plan for outside shoulders.
7. Place the Type P marker panel so that the bottom of the panel rests upon the pallet and faces traffic.
8. Refer to Standard Plan A73B for marker details.
9. For shoulder widths less than 8'-0", appropriate approved crash cushion protection, other than sand filled modules, shall be provided at fixed objects and at approach ends of temporary railing. The specific type of crash cushion shall be as shown on the project plans or as specified in the Special Provisions, or if not shown on the project plans or specified in the Special Provisions, shall be as approved by the Engineer.
10. Approach speeds indicated conform to NCHRP 350 Report criteria.
11. Use of pallets is optional.

STATE OF CALIFORNIA
DEPARTMENT OF TRANSPORTATION

TEMPORARY CRASH CUSHION, SAND FILLED (SHOULDER INSTALLATIONS)

NO SCALE

RSP T2 DATED JUNE 6, 2008 SUPERSEDES STANDARD PLAN T2
DATED MAY 1, 2006 - PAGE 213 OF THE STANDARD PLANS BOOK DATED MAY 2006.

REVISED STANDARD PLAN RSP T2

2006 REVISED STANDARD PLAN RSP T2

5-15-08

DIST	COUNTY	ROUTE	POST MILES TOTAL PROJECT	SHEET NO.	TOTAL SHEETS
09	Mno	182, 395	Var	16	17

LICENSED LANDSCAPE ARCHITECT

April 3, 2009
PLANS APPROVAL DATE

The State of California or its officers or agents shall not be responsible for the accuracy or completeness of electronic copies of this plan sheet.

LICENSED LANDSCAPE ARCHITECT
Robert B. Schott 3695
Signature
11-30-10
Renewal Date
2-25-09
Date
STATE OF CALIFORNIA

To accompany plans dated 2-7-11

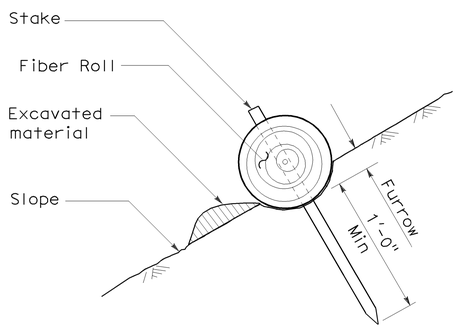

SECTION

TEMPORARY FIBER ROLL (TYPE 1)

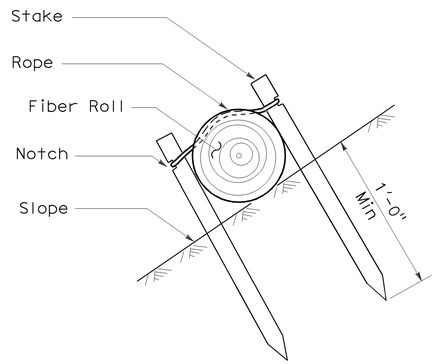

SECTION

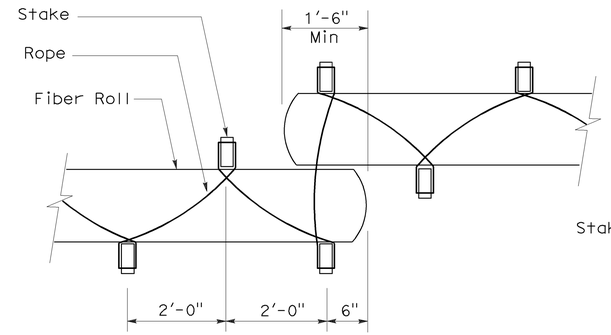

PLAN

TEMPORARY FIBER ROLL (TYPE 2)

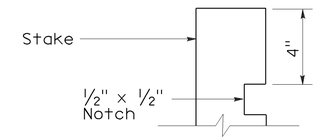

ELEVATION

STAKE NOTCH DETAIL

NOTES:

1. Temporary fiber roll spacing varies depending upon slope inclination.
2. Installations shown in the perspectives are for slope inclination of 10:1 and steeper.

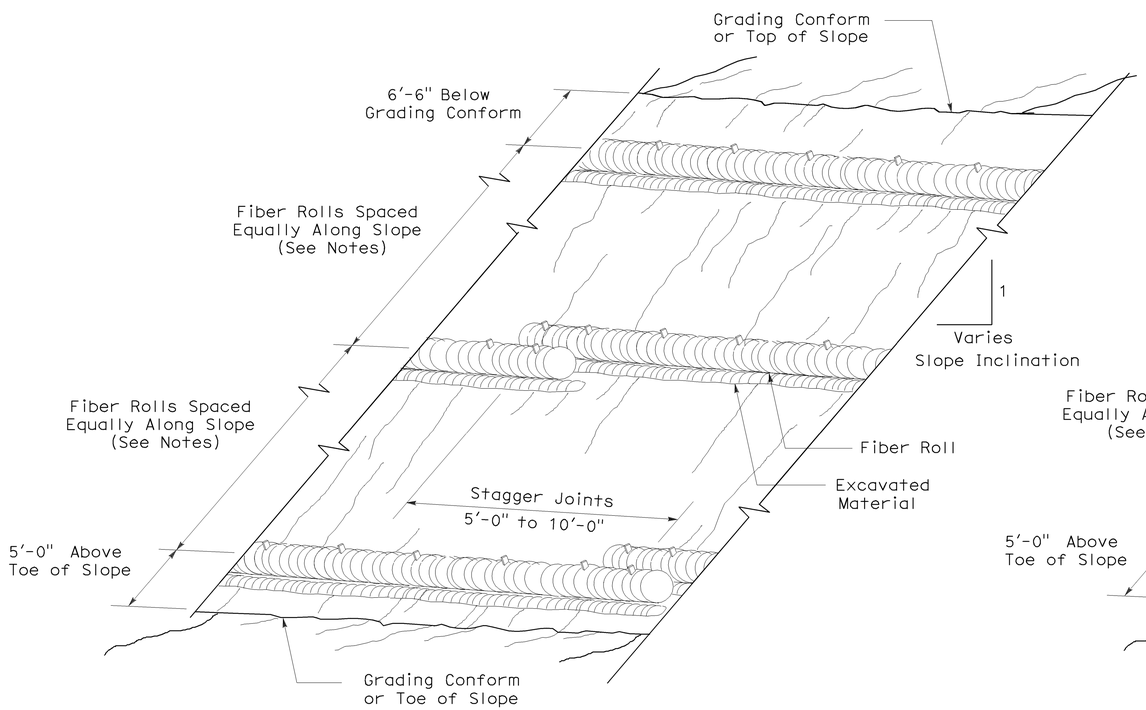

PERSPECTIVE

TEMPORARY FIBER ROLL (TYPE 1)

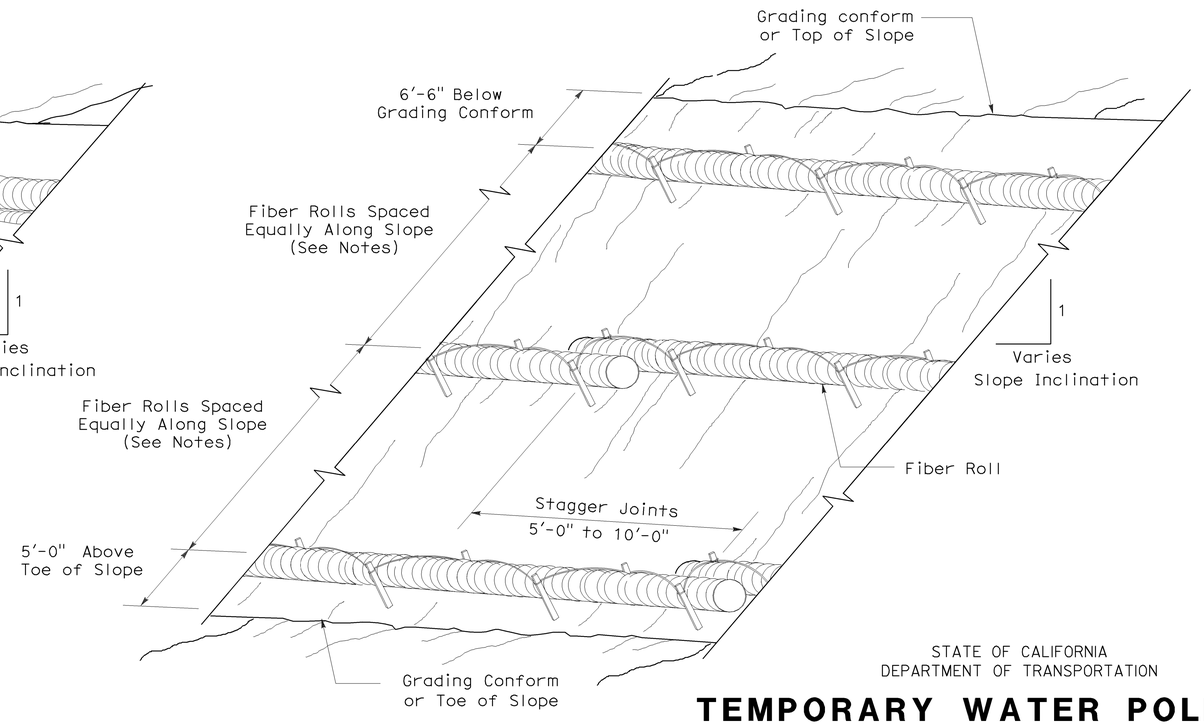

PERSPECTIVE

TEMPORARY FIBER ROLL (TYPE 2)

STATE OF CALIFORNIA
DEPARTMENT OF TRANSPORTATION

TEMPORARY WATER POLLUTION CONTROL DETAILS (TEMPORARY FIBER ROLL)

NO SCALE

RSP T56 DATED APRIL 3, 2009 SUPERSEDES STANDARD PLAN T56 DATED MAY 1, 2006 - PAGE 232 OF THE STANDARD PLANS BOOK DATED MAY 2006.

REVISED STANDARD PLAN RSP T56

2006 REVISED STANDARD PLAN RSP T56

2-23-09

DIST	COUNTY	ROUTE	POST MILES TOTAL PROJECT	SHEET NO.	TOTAL SHEETS
09	Mno	182, 395	Var	17	17

LICENSED LANDSCAPE ARCHITECT

August 15, 2008
PLANS APPROVAL DATE

LICENSED LANDSCAPE ARCHITECT
Robert B. Schott 3695
Signature
11-04-08
Renewal Date
08-11-08
Date
STATE OF CALIFORNIA

The State of California or its officers or agents shall not be responsible for the accuracy or completeness of electronic copies of this plan sheet.

To accompany plans dated 2-7-11

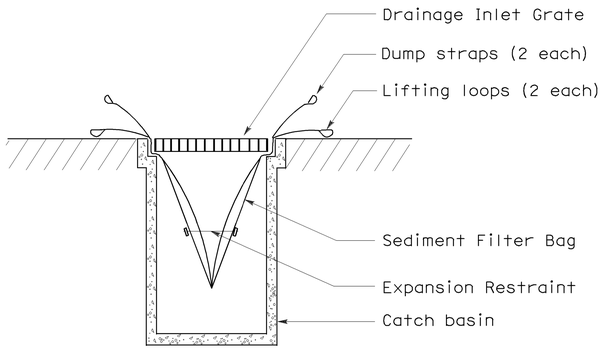

SECTION B-B

SEDIMENT FILTER BAG DETAIL

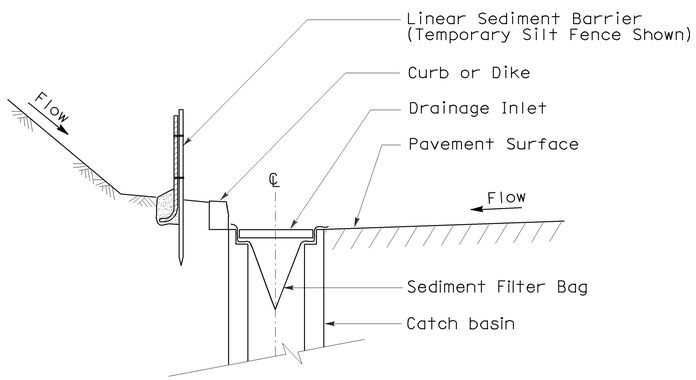

SECTION A-A

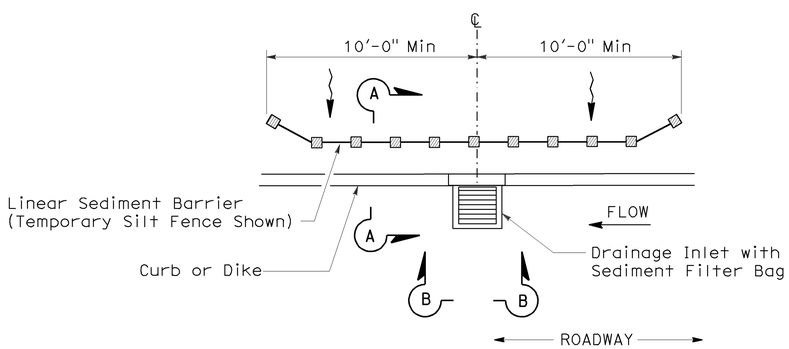

PLAN

TEMPORARY DRAINAGE INLET PROTECTION (TYPE 5) (SEDIMENT FILTER BAG)

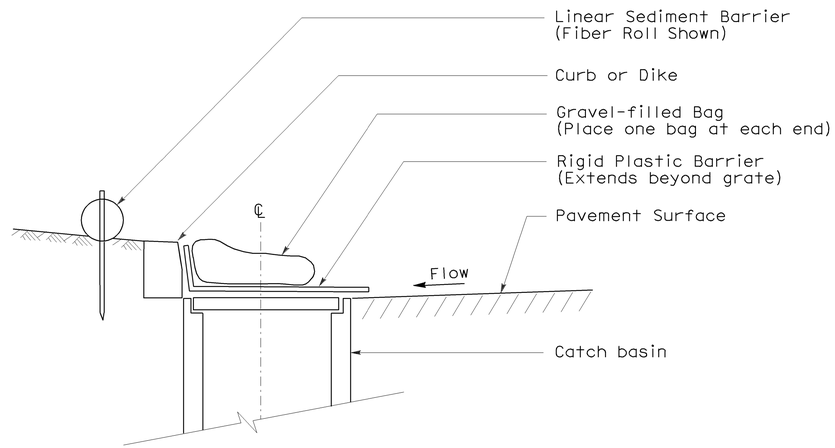

SECTION

TEMPORARY DRAINAGE INLET PROTECTION (TYPE 6A) (CATCH BASIN WITH GRATE)

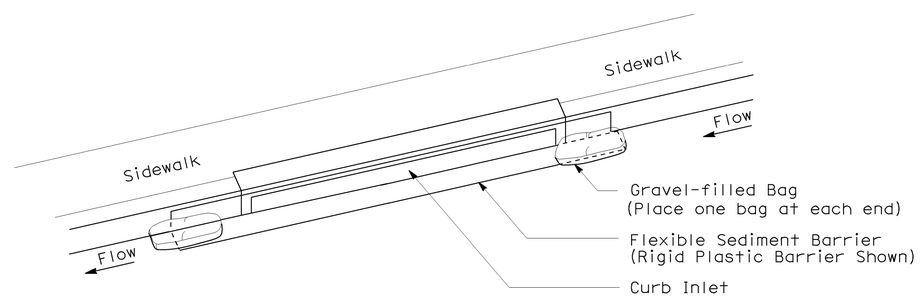

PERSPECTIVE

TEMPORARY DRAINAGE INLET PROTECTION (TYPE 6B) (CURB INLET WITHOUT GRATE)

NOTES:

1. See Standard Plan T51 for Temporary Silt Fence.
2. Dimensions may vary to fit field conditions.

STATE OF CALIFORNIA
DEPARTMENT OF TRANSPORTATION

TEMPORARY WATER POLLUTION CONTROL DETAILS (TEMPORARY DRAINAGE INLET PROTECTION)

NO SCALE

NSP T64 DATED AUGUST 15, 2008 SUPPLEMENTS
THE STANDARD PLANS BOOK DATED MAY 2006.

NEW STANDARD PLAN NSP T64

2006 NEW STANDARD PLAN NSP T64

7-11-08