Dist	COUNTY	ROUTE	POST MILES TOTAL PROJECT	SHEET No.	TOTAL SHEETS
09	Mno	270	0.0/9.8	1	32

STATE OF CALIFORNIA

DEPARTMENT OF TRANSPORTATION

ACSTP-S270(001)E

PROJECT PLANS FOR CONSTRUCTION ON

STATE HIGHWAY

IN MONO COUNTY
ABOUT 6 MILES SOUTH OF BRIDGEPORT
FROM ROUTE 395 TO 9.8 MILES EAST
OF ROUTE 395

TO BE SUPPLEMENTED BY STANDARD PLANS DATED MAY 2006

INDEX OF PLANS

SHEET No	DESCRIPTION
1	TITLE AND LOCATION MAP
2	TYPICAL CROSS SECTIONS
3-10	CONSTRUCTION DETAILS
11	TEMPORARY WATER POLLUTION CONTROL QUANTITIES
12	CONSTRUCTION AREA SIGNS
13-15	PAVEMENT DELINEATION QUANTITIES
16-19	SIGN DETAILS
20-22	SIGN QUANTITIES
23	SUMMARY OF QUANTITIES
24	DETECTOR LOOP
25-32	REVISED AND NEW STANDARD PLANS

THE STANDARD PLANS LIST APPLICABLE TO THIS CONTRACT IS INCLUDED IN THE NOTICE TO BIDDERS AND SPECIAL PROVISIONS BOOK.

LOCATION MAP

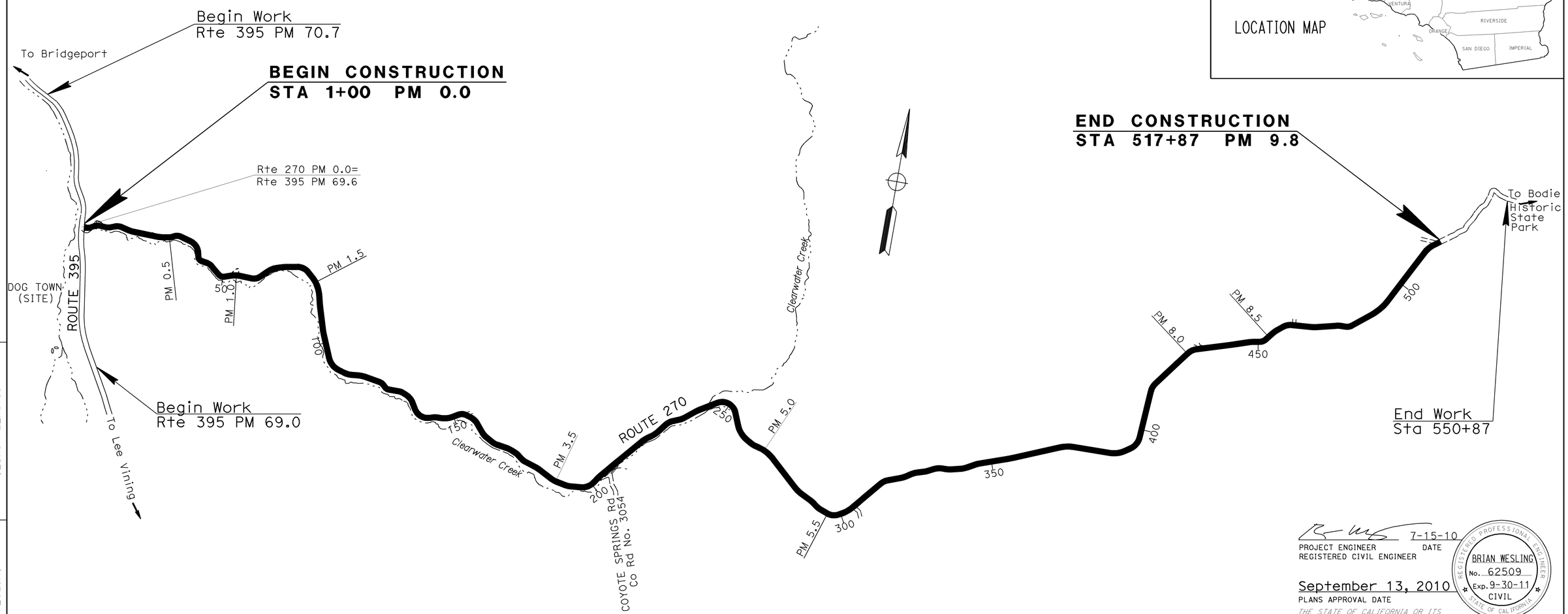

NO SCALE

THE CONTRACTOR SHALL POSSESS THE CLASS (OR CLASSES) OF LICENSE AS SPECIFIED IN THE "NOTICE TO BIDDERS."

7-15-10
PROJECT ENGINEER DATE
REGISTERED CIVIL ENGINEER

September 13, 2010
PLANS APPROVAL DATE

REGISTERED PROFESSIONAL ENGINEER
BRIAN WESLING
No. 62509
Exp. 9-30-11
CIVIL
STATE OF CALIFORNIA

THE STATE OF CALIFORNIA OR ITS OFFICERS OR AGENTS SHALL NOT BE RESPONSIBLE FOR THE ACCURACY OR COMPLETENESS OF SCANNED COPIES OF THIS PLAN SHEET.

CONTRACT No.	09-338104
PROJECT ID	0900020014

PROJECT MANAGER: CEDRIK ZEMITIS
DESIGN ENGINEER: BRAIN WESLING

LAST REVISION 09-13-10 DATE PLOTTED => 09-NOV-2010 TIME PLOTTED => 10:15

Dist	COUNTY	ROUTE	POST MILES TOTAL PROJECT	SHEET No.	TOTAL SHEETS
09	Mno	270	0.0/9.8	2	32

REGISTERED CIVIL ENGINEER 7-15-10 DATE

9-13-10
PLANS APPROVAL DATE

REGISTERED PROFESSIONAL ENGINEER BRIAN WESLING No. 62509 Exp. 9-30-11 CIVIL STATE OF CALIFORNIA

THE STATE OF CALIFORNIA OR ITS OFFICERS OR AGENTS SHALL NOT BE RESPONSIBLE FOR THE ACCURACY OR COMPLETENESS OF SCANNED COPIES OF THIS PLAN SHEET.

NOTES:

1. DIMENSIONS OF PAVEMENT STRUCTURES (STRUCTURAL SECTIONS) ARE SUBJECT TO TOLERANCES SPECIFIED IN THE STANDARD SPECIFICATIONS.
2. SUPERELEVATION AS SHOWN OR AS DIRECTED BY THE ENGINEER.

ABBREVIATIONS:

CP - CATCH POINT
CFIPR - COLD FOAM IN-PLACE RECYCLE
(N) - NOT A SEPARATE PAY ITEM, FOR INFORMATION ONLY

DESIGN DESIGNATION

2011 AADT = 450	D = 85.5%
2021 AADT = 490	T = 15.0%
DHV 2011 = 160	V = 55 mph
	TI(20) = 7.0

EXISTING STRUCTURAL SECTION:

1 — Var 0.17' to 0.75' ASPHALT CONCRETE
Var 0.35' to 0.58' CLASS 2 AGGREGATE BASE

LOCATIONS OF SHOULDER BACKING CONSTRICTIONS (2' SHOULDER BACKING WIDTH)

STATION (LOCATION)	Lt	Rt
STA 154+43 TO 159+80	X	
STA 122+04 TO 122+50	X	
STA 126+20 TO 128+02	X	
STA 153+18 TO 153+84	X	
STA 185+80 TO 186+14	X	
STA 243+85 TO 245+42	X	
STA 484+92 TO 486+97	X	
STA 504+75 TO 508+40	X	
STA 4+14 TO 4+82		X
STA 6+07 TO 6+56		X
STA 7+10 TO 7+58		X
STA 8+11 TO 8+78		X
STA 18+12 TO 18+75		X
STA 26+00 TO 26+77		X
STA 34+46 TO 35+27		X
STA 36+60 TO 37+60		X
STA 38+84 TO 47+75		X
STA 48+22 TO 49+12		X
STA 62+80 TO 63+55		X
STA 66+05 TO 66+77		X
STA 67+75 TO 68+48		X
STA 69+60 TO 70+18		X
STA 92+15 TO 92+82		X
STA 100+48 TO 101+65		X
STA 105+55 TO 107+05		X
STA 108+62 TO 112+88		X
STA 114+70 TO 116+38		X
STA 121+95 TO 124+25		X
STA 125+30 TO 126+54		X
STA 128+85 TO 130+22		X
STA 133+00 TO 134+52		X
STA 136+20 TO 143+78		X
STA 152+80 TO 153+10		X
STA 161+60 TO 170+32		X
STA 172+72 TO 173+54		X
STA 181+05 TO 182+20		X
STA 187+22 TO 195+42		X
STA 248+78 TO 250+80		X
STA 255+42 TO 258+45		X
STA 265+00 TO 266+15		X
STA 493+40 TO 497+40		X
STA 502+52 TO 504+02		X

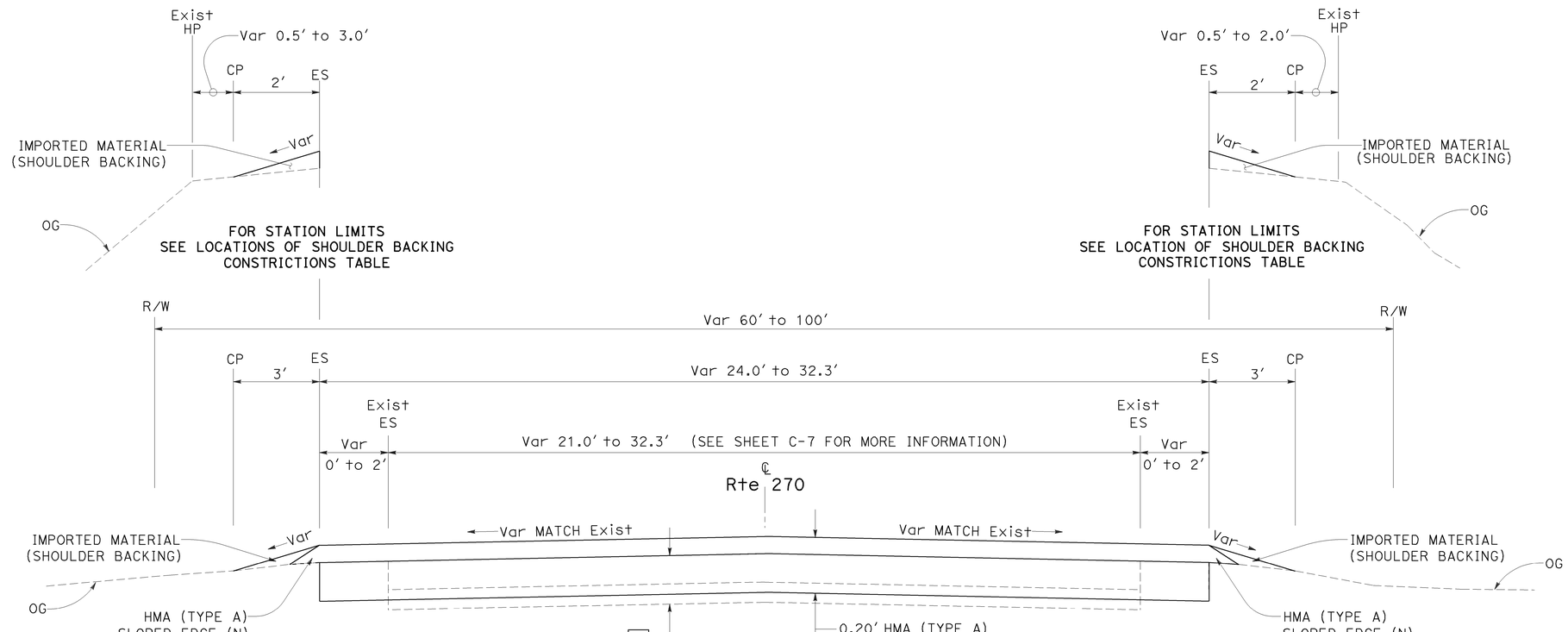

ROUTE 270
STA 1+00 TO 517+87

TYPICAL CROSS SECTIONS

NO SCALE

X-1

STATE OF CALIFORNIA - DEPARTMENT OF TRANSPORTATION
Caltrans
DESIGN

FUNCTIONAL SUPERVISOR: RORY QUINCE
CALCULATED-DESIGNED BY: BRIAN P WESLING
CHECKED BY: MIGUEL PEREZ
REVISED BY
DATE REVISED

LAST REVISION 09-13-10
DATE PLOTTED => 15-SEP-2010
TIME PLOTTED => 16:34

Dist	COUNTY	ROUTE	POST MILES TOTAL PROJECT	SHEET No.	TOTAL SHEETS
09	Mno	270	0.0/9.8	3	32

REGISTERED CIVIL ENGINEER 7-15-10 DATE

9-13-10
PLANS APPROVAL DATE

REGISTERED PROFESSIONAL ENGINEER BRIAN WESLING No. 62509 Exp. 9-30-11 CIVIL STATE OF CALIFORNIA

THE STATE OF CALIFORNIA OR ITS OFFICERS OR AGENTS SHALL NOT BE RESPONSIBLE FOR THE ACCURACY OR COMPLETENESS OF SCANNED COPIES OF THIS PLAN SHEET.

NOTES:

1. 30° ANGLE IS MEASURED FROM PLANE OF ADJACENT HMA OVERLAY

ABBREVIATIONS:

CP - CATCH POINT

LEGEND:

- = HMA (TYPE A)
- TFR - TEMPORARY FIBER ROLL
- DIRECTION OF TRAVEL
- AREA FOR CONTRACTOR'S STAGING
- IMPORTED MATERIAL (SHOULDER BACKING) * AS SHOWN
- REMOVE CONCRETE & BACKFILL WITH CI 2 AB

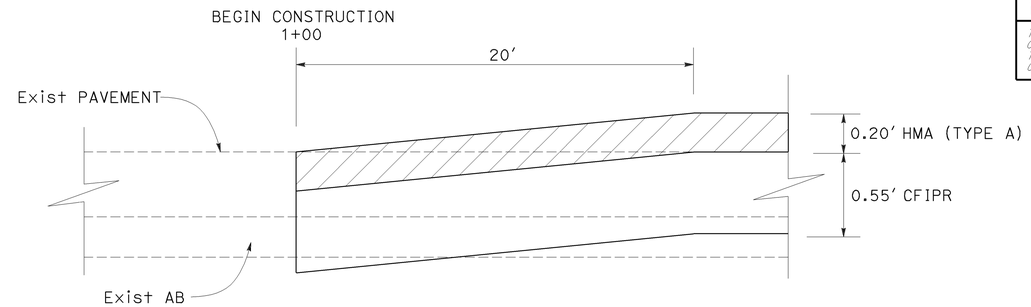

LONGITUDINAL CONFORM TAPER

LIMITS OF NO SLOPED EDGE

Lt	Rt	STATION LIMITS A	STATION LIMITS B
X		154+43	159+80
X		122+04	122+50
X		126+20	128+02
X		153+18	153+84
X		185+80	186+14
X		243+85	245+42
X		484+92	486+97
X		504+75	508+40
	X	4+14	4+82
	X	6+07	6+56
	X	7+10	7+58
	X	8+11	8+78
	X	18+12	18+75
	X	26+00	26+77
	X	34+46	35+27
	X	36+60	37+60
	X	38+84	47+75
	X	48+22	49+12
	X	62+80	63+55
	X	66+05	66+77
	X	67+75	68+48
	X	69+60	70+18
	X	92+15	92+82
	X	100+48	101+65
	X	105+55	107+05
	X	108+62	112+88
	X	114+70	116+38
	X	121+95	124+25
	X	125+30	126+54
	X	128+85	130+22
	X	133+00	134+52
	X	136+20	143+78
	X	152+80	153+10
	X	161+60	170+32
	X	172+72	173+54
	X	181+05	182+20
	X	187+22	195+42
	X	248+78	250+80
	X	255+42	258+45
	X	265+00	266+15
	X	493+40	497+40
	X	502+52	504+02

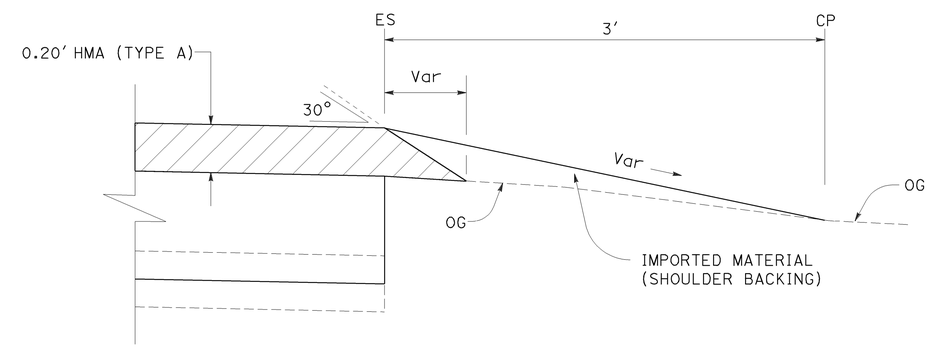

SLOPED EDGE / SHOULDER BACKING DETAIL

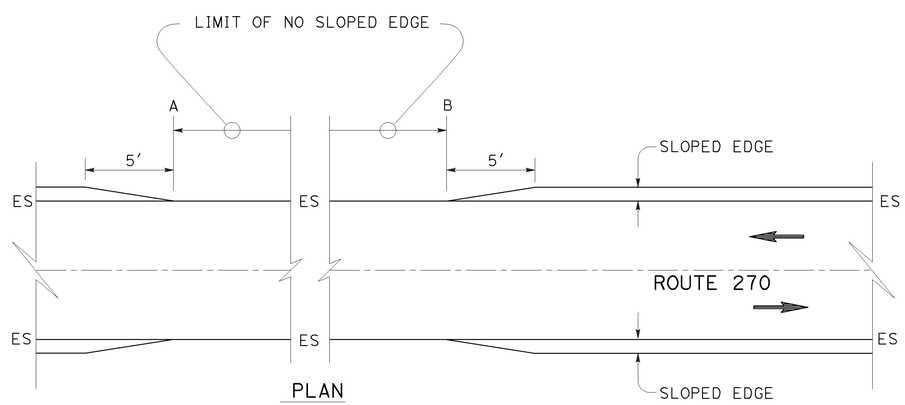

SLOPED EDGE TRANSITION DETAIL

CONSTRUCTION DETAILS

NO SCALE

C-1

STATE OF CALIFORNIA - DEPARTMENT OF TRANSPORTATION

Caltrans DESIGN

FUNCTIONAL SUPERVISOR: RORY QUINCE

CALCULATED-DESIGNED BY: BRIAN P WESLING

CHECKED BY: MIGUEL PEREZ

REVISED BY / DATE REVISED

LAST REVISION 09-13-10 | DATE PLOTTED => 15-SEP-2010 | TIME PLOTTED => 16:34

Dist	COUNTY	ROUTE	POST MILES TOTAL PROJECT	SHEET No.	TOTAL SHEETS
09	Mno	270	0.0/9.8	4	32

REGISTERED CIVIL ENGINEER 7-15-10 DATE

9-13-10
PLANS APPROVAL DATE

REGISTERED PROFESSIONAL ENGINEER BRIAN WESLING No. 62509 Exp. 9-30-11 CIVIL STATE OF CALIFORNIA

THE STATE OF CALIFORNIA OR ITS OFFICERS OR AGENTS SHALL NOT BE RESPONSIBLE FOR THE ACCURACY OR COMPLETENESS OF SCANNED COPIES OF THIS PLAN SHEET.

NOTES:

1. EXACT LOCATION AND POSITION OF TEMPORARY DRAINAGE PROTECTION TO BE DETERMINED BY THE ENGINEER.

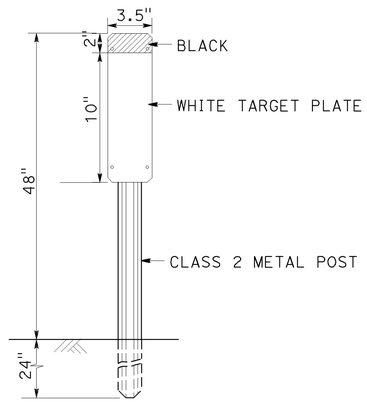

MARKER (CULVERT) PLATE AND POST DETAIL

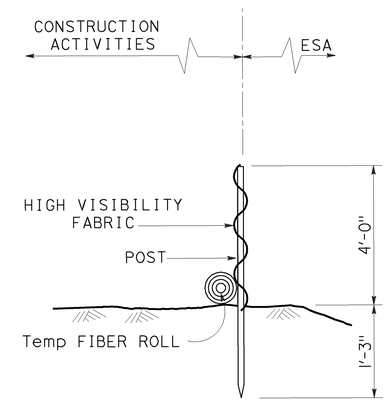

TEMPORARY FENCE (TYPE ESA) WITH FIBER ROLL

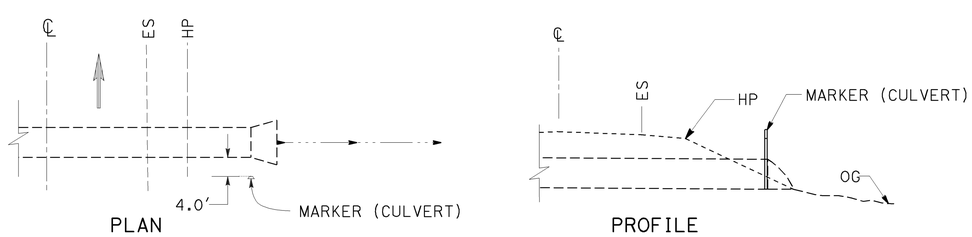

TYPICAL MARKER (CULVERT) PLACEMENT

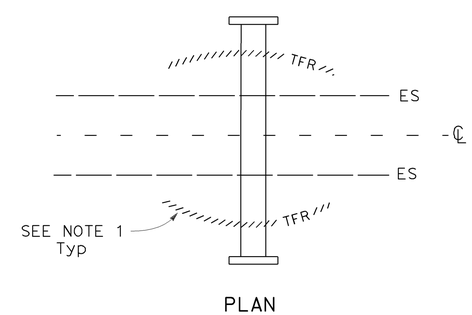

TEMPORARY DRAINAGE PROTECTION CULVERT LIVE WATER (TYPICAL)

CONSTRUCTION DETAILS

NO SCALE

C-2

STATE OF CALIFORNIA - DEPARTMENT OF TRANSPORTATION
Caltrans
DESIGN

FUNCTIONAL SUPERVISOR: RORY QUINCE
CALCULATED-DESIGNED BY: BRIAN P WESLING
CHECKED BY: MIGUEL PEREZ
REVISED BY
DATE REVISED

LAST REVISION 08-31-10
DATE PLOTTED => 15-SEP-2010
TIME PLOTTED => 16:34

Dist	COUNTY	ROUTE	POST MILES TOTAL PROJECT	SHEET No.	TOTAL SHEETS
09	Mno	270	0.0/9.8	5	32

REGISTERED CIVIL ENGINEER 7-15-10 DATE

9-13-10
PLANS APPROVAL DATE

REGISTERED PROFESSIONAL ENGINEER BRIAN WESLING No. 62509 Exp. 9-30-11 CIVIL STATE OF CALIFORNIA

THE STATE OF CALIFORNIA OR ITS OFFICERS OR AGENTS SHALL NOT BE RESPONSIBLE FOR THE ACCURACY OR COMPLETENESS OF SCANNED COPIES OF THIS PLAN SHEET.

TABLE A

ROAD CONNECTIONS / HMA PAVING LIMITS

LOCATION	STATION	DESCRIPTION	DIMENSION A	DIMENSION B	DIMENSION C	NOTES
1	203+67	ROAD APPROACH	40.0′	10.0′	45.0′	SKEWED APPROACH
2	207+16	ROAD APPROACH	55.0′	10.0′	55.0′	SKEWED APPROACH
3	251+20	ROAD APPROACH	60.0′	12.0′	40.0′	-
4	304+45	ROAD APPROACH	26.0′	10.0′	40.0′	-
5	351+40	ROAD APPROACH	195.0′	25.0′	40.0′	-
6	352+02	ROAD APPROACH	32.0′	12.0′	35.0′	-
7	390+00	ROAD APPROACH	35.0′	11.0′	40.0′	-
8	395+12	ROAD APPROACH	38.0′	12.0′	40.0′	-
9	462+26	ROAD APPROACH	35.0′	10.0′	40.0′	-
10	504+50	ROAD APPROACH	31.0′	12.0′	20.0′	REMOVE/REPLACE Exist Pvmt (See Rdwy Exc Qty)

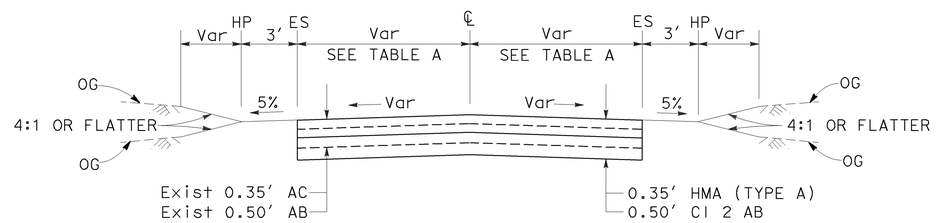

TYPICAL DRIVEWAY AND ROAD CONNECTION STRUCTURAL SECTION

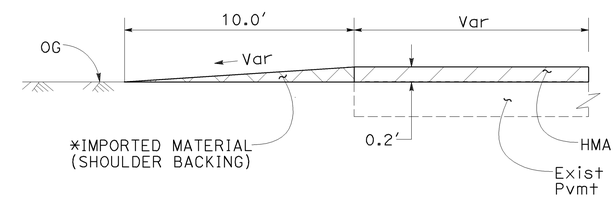

SECTION A-A

LOCATION 10
STA 504+50

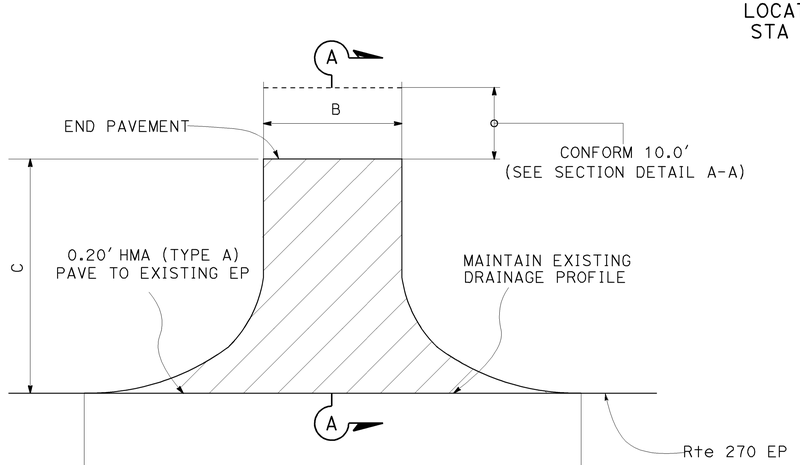

SR 270 ROAD CONNECTION HMA PAVING LIMITS

LOCATIONS 3,4,5,6,7,8,9,10

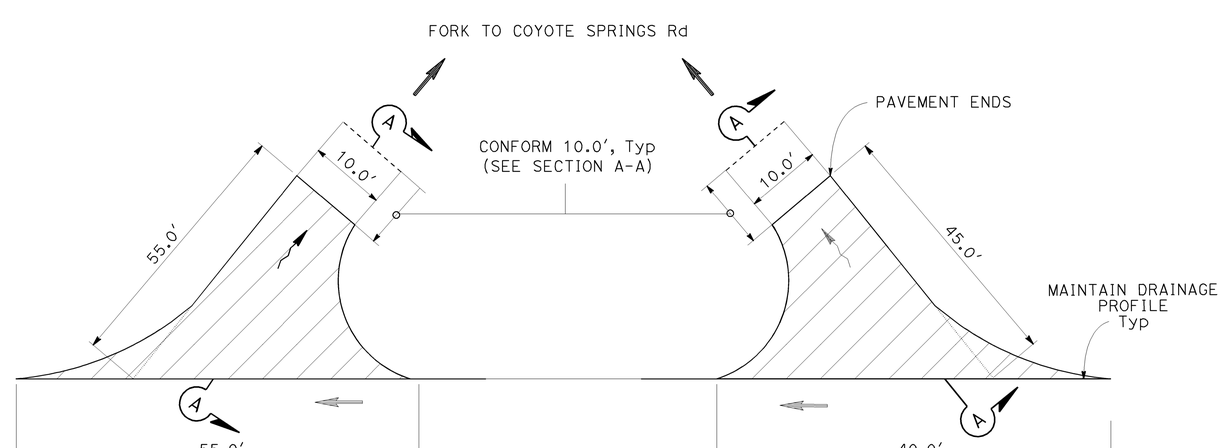

LOCATION 2 STA 207+16

LOCATION 1 STA 203+67

SR 270 ROAD CONNECTION HMA PAVING LIMITS

LOCATIONS 1 & 2

CONSTRUCTION DETAILS

NO SCALE

C-3

REVISED BY | DATE REVISED
MIGUEL A PEREZ | BRIAN P WESLING
CALCULATED-DESIGNED BY | CHECKED BY
FUNCTIONAL SUPERVISOR
RORY QUINCE

STATE OF CALIFORNIA - DEPARTMENT OF TRANSPORTATION
DESIGN
Caltrans

LAST REVISION 09-13-10 | DATE PLOTTED => 16-SEP-2010 | TIME PLOTTED => 15:19

Dist	COUNTY	ROUTE	POST MILES TOTAL PROJECT	SHEET No.	TOTAL SHEETS
09	Mno	270	0.0/9.8	6	32

REGISTERED CIVIL ENGINEER 7-15-10 DATE

9-13-10
PLANS APPROVAL DATE

REGISTERED PROFESSIONAL ENGINEER BRIAN WESLING No. 62509 Exp. 9-30-11 CIVIL STATE OF CALIFORNIA

THE STATE OF CALIFORNIA OR ITS OFFICERS OR AGENTS SHALL NOT BE RESPONSIBLE FOR THE ACCURACY OR COMPLETENESS OF SCANNED COPIES OF THIS PLAN SHEET.

NOTES:

1. FOR ACCURATE RIGHT OF WAY CONTACT RIGHT OF WAY ENGINEERING AT THE DISTRICT OFFICE.
2. DISTURB NO VEGETATION. AVOID GRASSY AREAS.

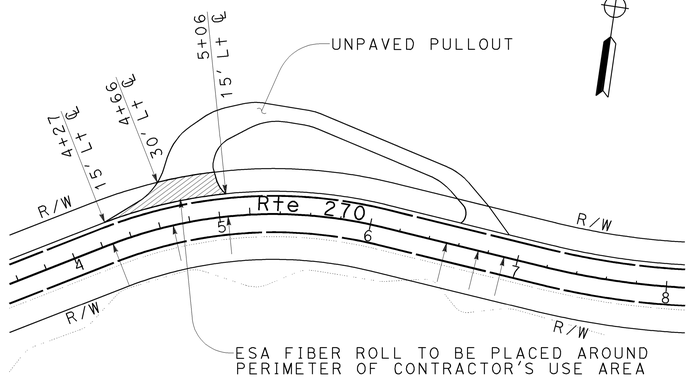

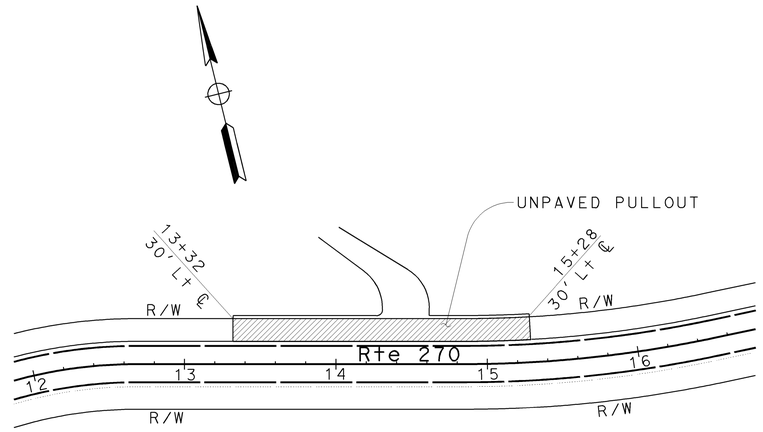

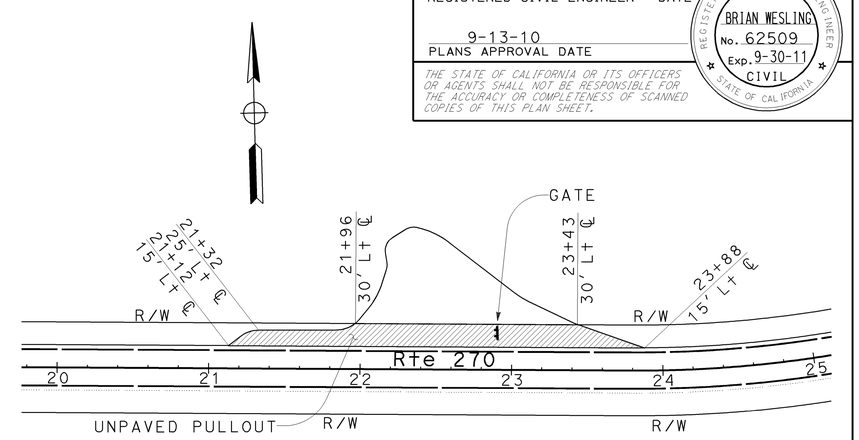

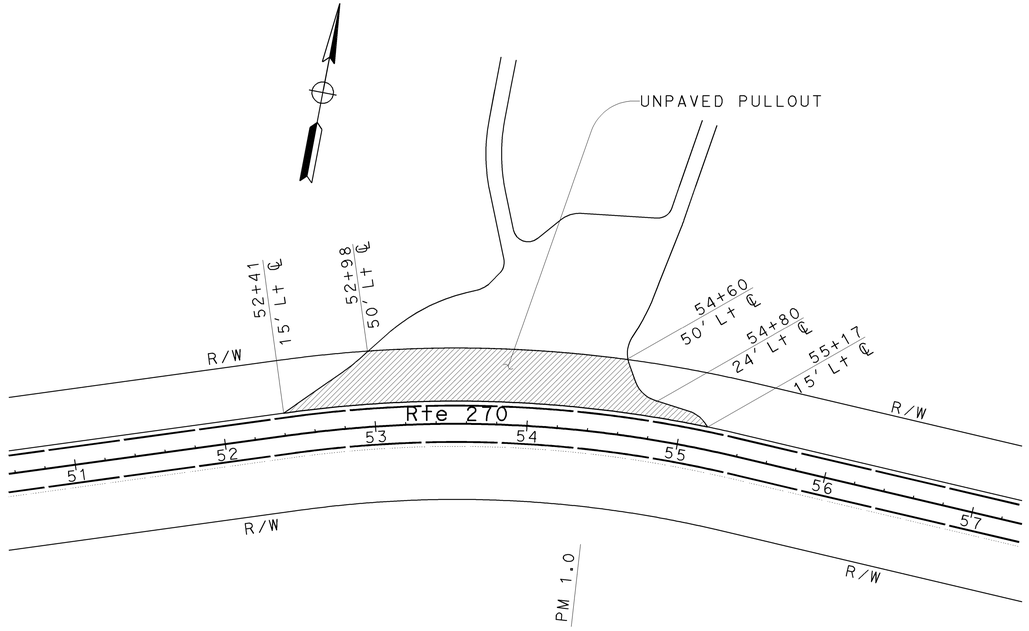

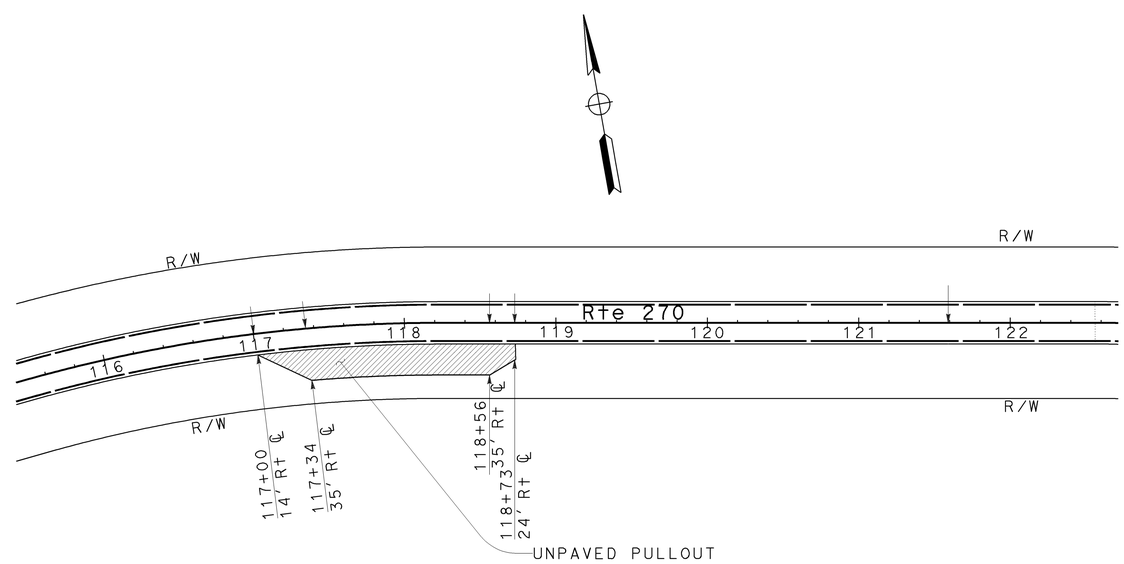

CONTRACTOR'S STAGING AREAS

CONSTRUCTION DETAILS

SCALE 1"=50'

C-4

STATE OF CALIFORNIA - DEPARTMENT OF TRANSPORTATION

Caltrans®

DESIGN

FUNCTIONAL SUPERVISOR: RORY QUINCE

CALCULATED-DESIGNED BY: YVONNE FROILAND

CHECKED BY: BRIAN WESLING

REVISED BY / DATE REVISED

LAST REVISION 09-13-10 | DATE PLOTTED => 15-SEP-2010 | TIME PLOTTED => 16:34

Dist	COUNTY	ROUTE	POST MILES TOTAL PROJECT	SHEET No.	TOTAL SHEETS
09	Mno	270	0.0/9.8	7	32

REGISTERED CIVIL ENGINEER 7-15-10 DATE

9-13-10
PLANS APPROVAL DATE

REGISTERED PROFESSIONAL ENGINEER
BRIAN WESLING
No. 62509
Exp. 9-30-11
CIVIL
STATE OF CALIFORNIA

THE STATE OF CALIFORNIA OR ITS OFFICERS OR AGENTS SHALL NOT BE RESPONSIBLE FOR THE ACCURACY OR COMPLETENESS OF SCANNED COPIES OF THIS PLAN SHEET.

NOTES:
1. FOR ACCURATE RIGHT OF WAY CONTACT RIGHT OF WAY ENGINEERING AT THE DISTRICT OFFICE.
2. DISTURB NO VEGETATION. AVOID GRASSY AREAS.

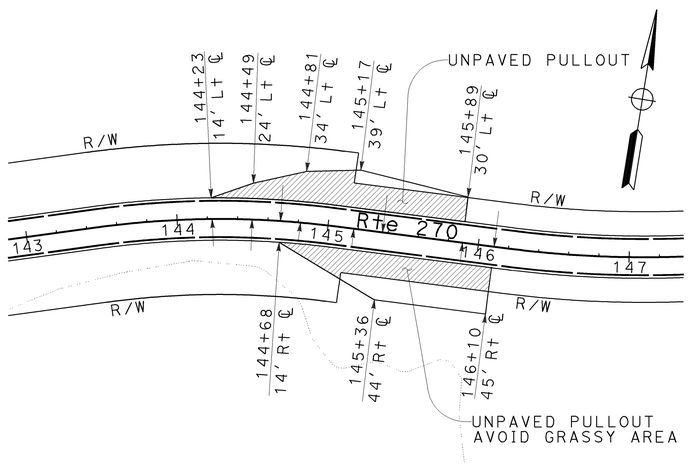

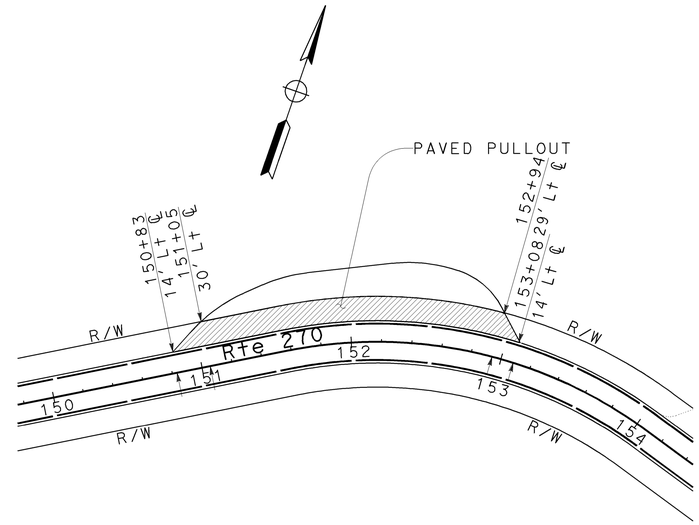

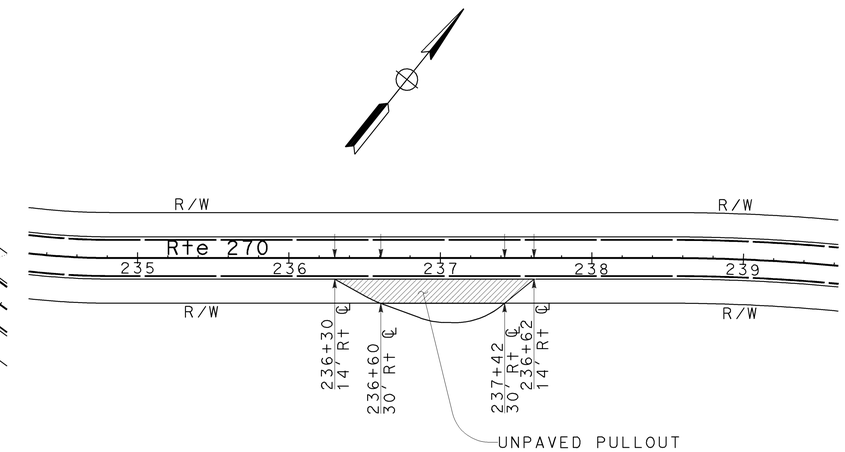

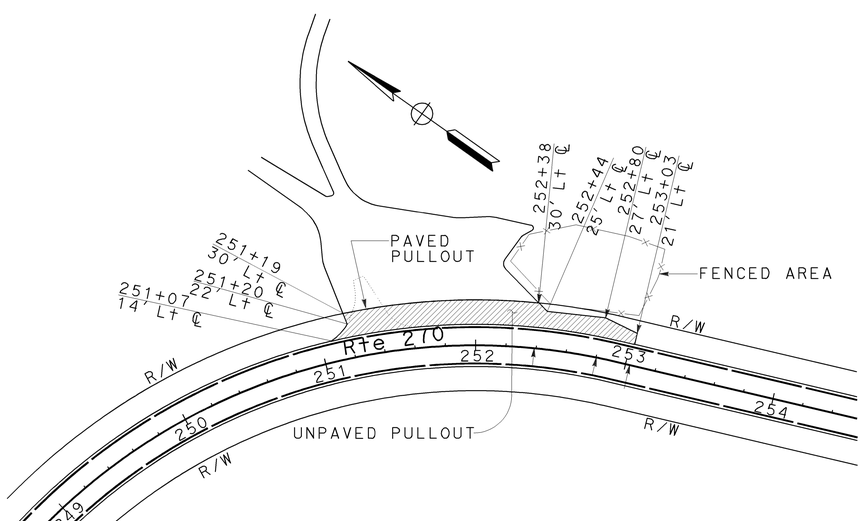

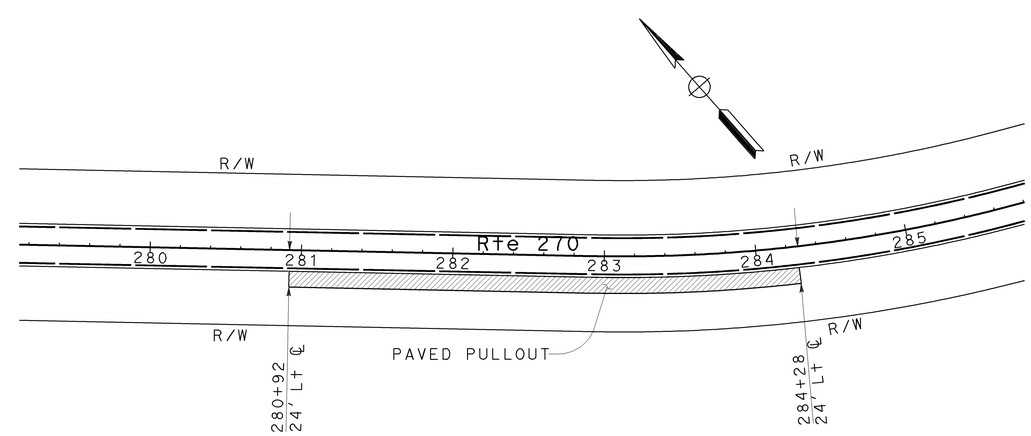

CONTRACTOR'S STAGING AREAS

CONSTRUCTION DETAILS
SCALE 1"=50'
C-5

STATE OF CALIFORNIA - DEPARTMENT OF TRANSPORTATION
Caltrans®
DESIGN

FUNCTIONAL SUPERVISOR: RORY QUINCE
CALCULATED-DESIGNED BY: YVONNE FROILAND
CHECKED BY: BRIAN WESLING
REVISED BY
DATE REVISED

LAST REVISION 08-12-10
DATE PLOTTED => 15-SEP-2010
TIME PLOTTED => 16:34

Dist	COUNTY	ROUTE	POST MILES TOTAL PROJECT	SHEET No.	TOTAL SHEETS
09	Mno	270	0.0/9.8	8	32

REGISTERED CIVIL ENGINEER 7-15-10 DATE

9-13-10
PLANS APPROVAL DATE

REGISTERED PROFESSIONAL ENGINEER BRIAN WESLING No. 62509 Exp. 9-30-11 CIVIL STATE OF CALIFORNIA

THE STATE OF CALIFORNIA OR ITS OFFICERS OR AGENTS SHALL NOT BE RESPONSIBLE FOR THE ACCURACY OR COMPLETENESS OF SCANNED COPIES OF THIS PLAN SHEET.

NOTES:
1. FOR ACCURATE RIGHT OF WAY CONTACT RIGHT OF WAY ENGINEERING AT THE DISTRICT OFFICE.
2. DISTURB NO VEGETATION. AVOID GRASSY AREAS.

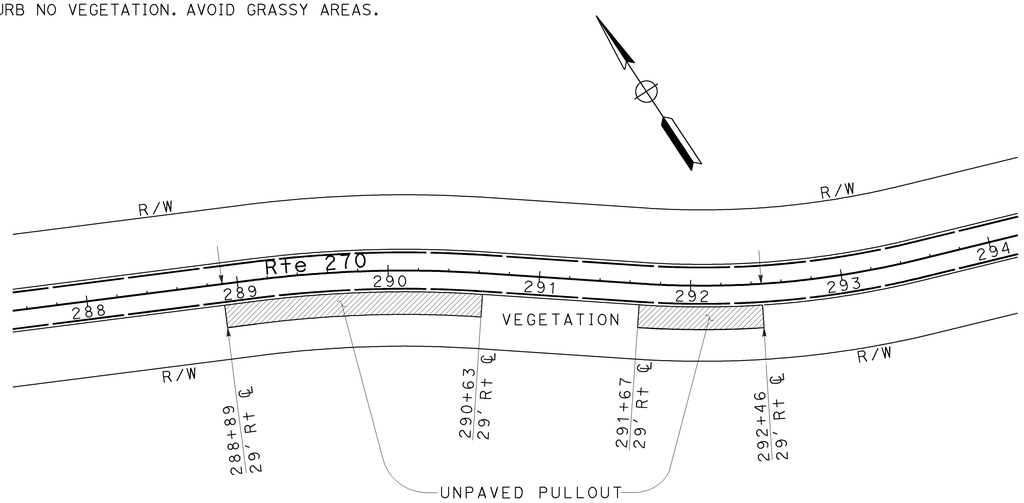

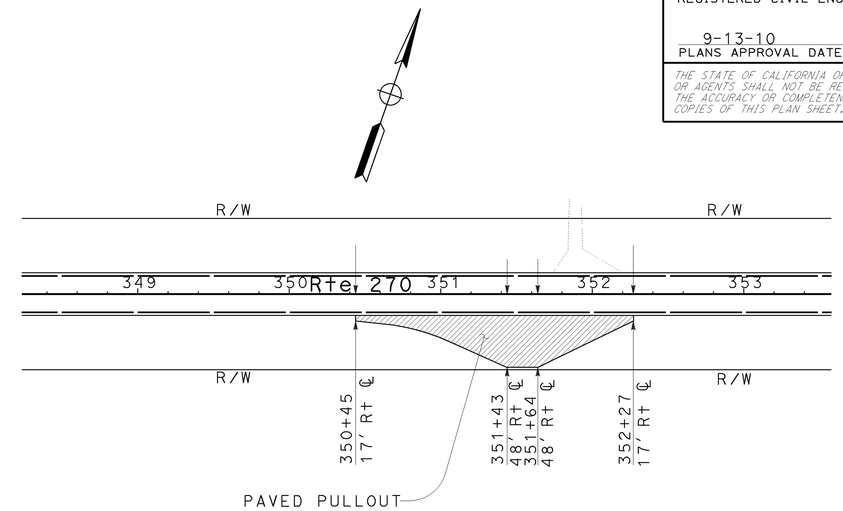

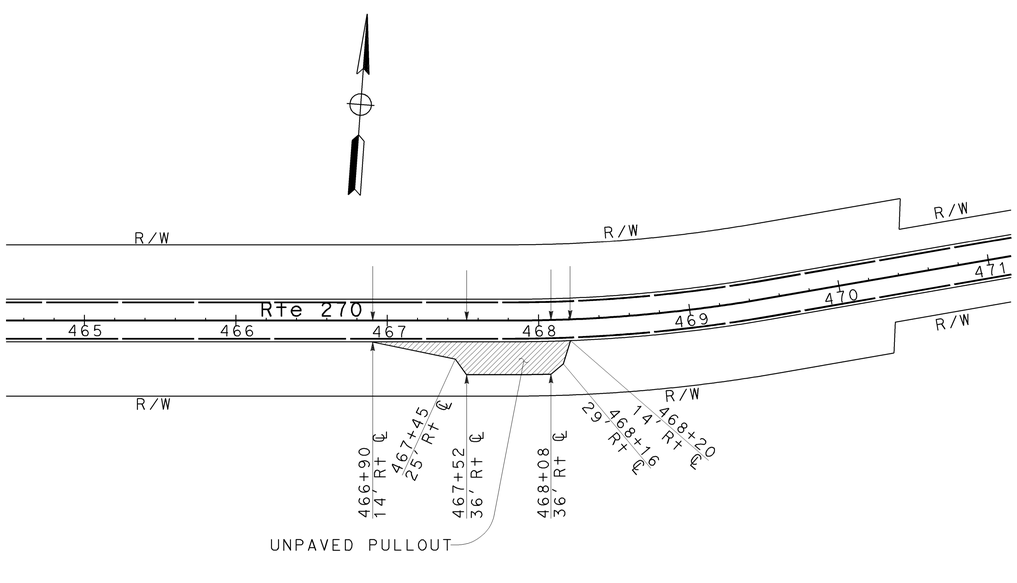

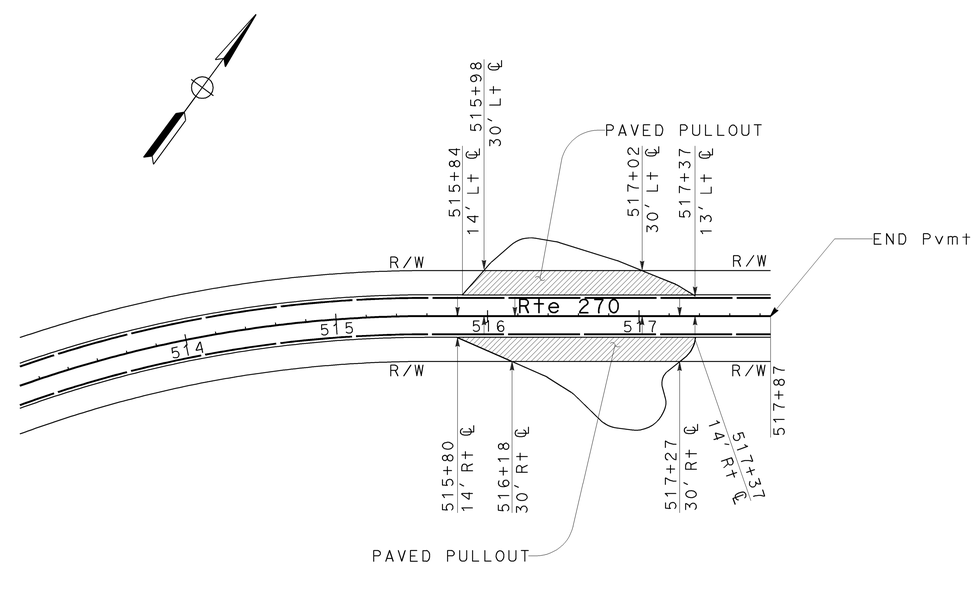

CONTRACTOR'S STAGING AREAS

CONSTRUCTION DETAILS
SCALE 1"=50'

C-6

STATE OF CALIFORNIA - DEPARTMENT OF TRANSPORTATION
Caltrans
DESIGN

FUNCTIONAL SUPERVISOR: RORY QUINCE
CALCULATED-DESIGNED BY: YVONNE FROILAND
CHECKED BY: BRIAN WESLING
REVISED BY
DATE REVISED

LAST REVISION 09-13-10
DATE PLOTTED => 15-SEP-2010
TIME PLOTTED => 16:34

Dist	COUNTY	ROUTE	POST MILES TOTAL PROJECT	SHEET No.	TOTAL SHEETS
09	Mno	270	0.0/9.8	9	32

REGISTERED CIVIL ENGINEER 7-15-10 DATE

9-13-10
PLANS APPROVAL DATE

REGISTERED PROFESSIONAL ENGINEER BRIAN WESLING No. 62509 Exp. 9-30-11 CIVIL STATE OF CALIFORNIA

THE STATE OF CALIFORNIA OR ITS OFFICERS OR AGENTS SHALL NOT BE RESPONSIBLE FOR THE ACCURACY OR COMPLETENESS OF SCANNED COPIES OF THIS PLAN SHEET.

Exist CMP COVER DEPTHS

CMP LOCATION	DEPTH OF COVER AT ES "A"	DEPTH OF COVER AT CL "B"
	(FT)	(FT)
21+00	0.65 L†	NOT KNOWN-OK
60+66	1.45 L†	1.9
87+70	0.75 L†	2.5
296+90	0.90 R†	2.67
475+20	1.2 L†	1.1

NOTES:

1. DEPTHS SHOWN ARE FROM THE TOP OF EXISTING PAVEMENT TO THE TOP OF THE CMP. DEPTHS HAVE BEEN FIELD-MEASURED AND ARE APPROXIMATE. CONTRACTOR IS URGED TO USE CAUTION CONSIDERING THE DEPTH OF PAVEMENT RECYCLING TO AVOID THE EXISTING CMPS
2. SKEW SHOWN IS NOT TYPICAL, ACTUAL SKEWS WILL VARY.

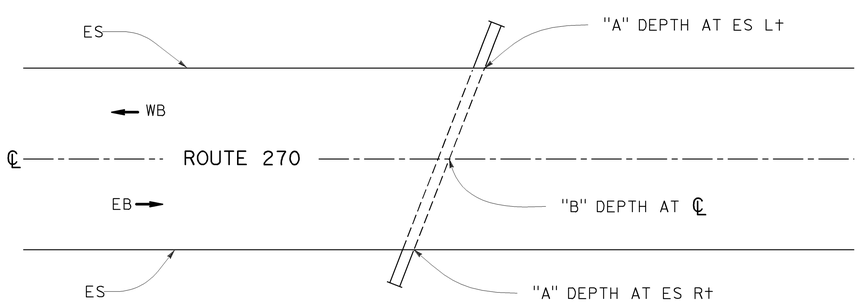

Exist CMP COVER DEPTHS
SHALLOW CULVERT LOCATIONS

EXISTING PAVEMENT WIDTHS

STATION	WIDTH (Ft)	STATION	WIDTH (Ft)	STATION	WIDTH (Ft)
1+00	31.3	50+00	24.1	251+20	23
1+59	21	52+00	23	260+00	23.8
2+87	21.3	53+43	25.3	270+00	23.7
4+00	21	55+00	22.5	250+50	23.3
5+00	21.9	61+61	23.5	280+88	32.3
6+00	22.1	65+00	22.9	284+20	32.3
7+18	22.2	75+00	22.9	284+56	23.3
8+50	22.6	85+00	23.3	290+37	22.8
9+64	22.5	90+00	21.9	305+00	22.9
10+50	22.5	105+00	22.6	320+00	22.8
12+67	22.8	115+46	22.8	330+00	22.7
15+00	22.5	119+00	23.8	341+50	23
16+51	22.8	121+70	25	350+40	23
18+00	22.7	122+64	24	365+40	23.2
22+00	23.2	128+50	23	370+00	23.2
24+00	23	129+38	24	379+00	24
25+00	23.3	140+50	21.9	379+80	28
26+00	24	145+00	24	382+00	27.6
27+15	23	148+00	24	385+00	27.2
28+00	23.3	149+80	23.6	395+20	27.2
29+00	23.1	150+00	24	399+00	26
30+00	23.5	150+90	24	420+70	26.3
31+24	23.2	153+70	24	437+90	26
33+50	22.5	165+35	23.4	446+00	26
34+00	21.5	181+40	2.5	446+10	24.3
35+00	23.1	190+00	23.9	450+15	23.2
37+50	23.6	203+43	24	463+31	22.8
38+66	23.3	205+00	24.5	472+29	22.9
40+00	23.8	215+00	23.5	483+80	22.8
41+50	23.8	225+00	24.3	490+50	22.7
42+00	23	230+00	23.8	504+50	23
43+50	23	237+00	22.5	515+65	24.2
45+00	22.8	240+00	22.8	517+20	24.2
47+00	22.9	245+00	22.5	517+87	23.2
49+00	22.9	246+00	24		

FOR INFORMATION ONLY
EXISTING PAVEMENT WIDTH MEASURED FROM ES TO ES

CONSTRUCTION DETAILS
NO SCALE **C-7**

STATE OF CALIFORNIA - DEPARTMENT OF TRANSPORTATION
Caltrans® **DESIGN**

FUNCTIONAL SUPERVISOR: RORY QUINCE
CALCULATED-DESIGNED BY: YVONNE FROILAND
CHECKED BY: BRIAN WESLING
REVISED BY
DATE REVISED

LAST REVISION 09-13-10
DATE PLOTTED => 15-SEP-2010
TIME PLOTTED => 16:34

Dist	COUNTY	ROUTE	POST MILES TOTAL PROJECT	SHEET No.	TOTAL SHEETS
09	Mno	270	0.0/9.8	10	32

REGISTERED CIVIL ENGINEER 7-15-10 DATE

9-13-10
PLANS APPROVAL DATE

REGISTERED PROFESSIONAL ENGINEER BRIAN WESLING No. 62509 Exp. 9-30-11 CIVIL STATE OF CALIFORNIA

THE STATE OF CALIFORNIA OR ITS OFFICERS OR AGENTS SHALL NOT BE RESPONSIBLE FOR THE ACCURACY OR COMPLETENESS OF SCANNED COPIES OF THIS PLAN SHEET.

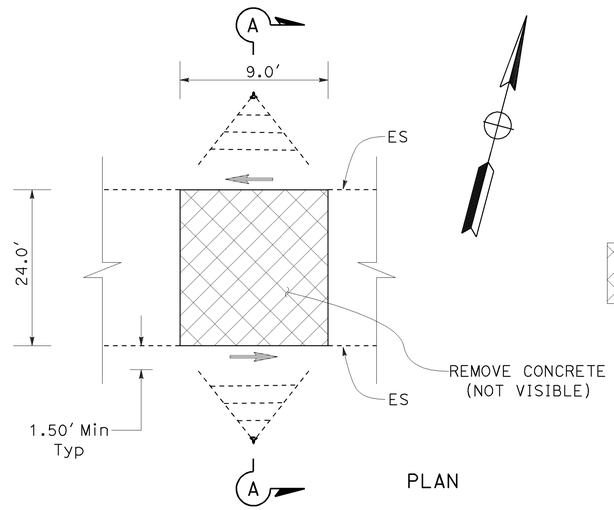

PLAN

- REMOVE CONCRETE & BACKFILL WITH CI 2 AB

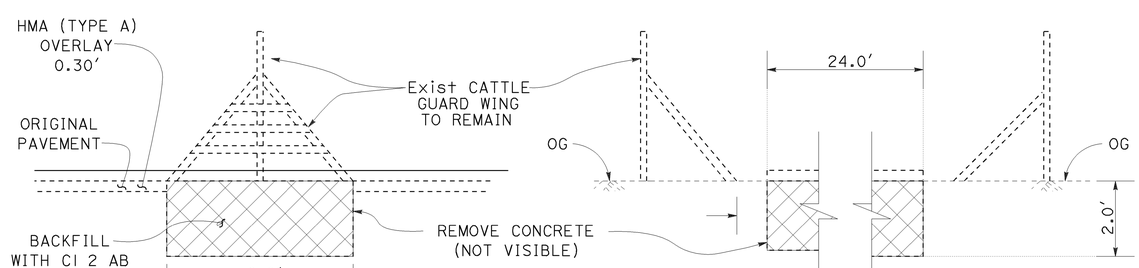

PROFILE

SECTION A-A

REMOVE CONCRETE

Rte 270 STA 51+49
(EXISTING METAL CATTLE GUARD)

CONSTRUCTION DETAILS

NO SCALE

C-8

STATE OF CALIFORNIA - DEPARTMENT OF TRANSPORTATION
Caltrans
DESIGN

FUNCTIONAL SUPERVISOR: RORY QUINCE
CALCULATED-DESIGNED BY: MIGUEL PEREZ
CHECKED BY: BRIAN WESLING
REVISED BY
DATE REVISED

LAST REVISION 09-13-10 | DATE PLOTTED => 15-SEP-2010 | TIME PLOTTED => 16:34

Dist	COUNTY	ROUTE	POST MILES TOTAL PROJECT	SHEET No.	TOTAL SHEETS
09	Mno	270	0.0/9.8	11	32

REGISTERED CIVIL ENGINEER 7-15-10 DATE

9-13-10
PLANS APPROVAL DATE

REGISTERED PROFESSIONAL ENGINEER BRIAN WESLING No. 62509 Exp. 9-30-11 CIVIL STATE OF CALIFORNIA

THE STATE OF CALIFORNIA OR ITS OFFICERS OR AGENTS SHALL NOT BE RESPONSIBLE FOR THE ACCURACY OR COMPLETENESS OF SCANNED COPIES OF THIS PLAN SHEET.

TEMPORARY WATER POLLUTION CONTROL QUANTITIES

STA TO STA (LOCATION)			SIDE		TEMP FIBER ROLL	TEMP FENCE (TYPE ESA)	TEMP SILT FENCE	REMARKS
			L†	R†	LF	LF	LF	
0+00	-	2+50		X	250			
4+14	-	4+82		X	68	68		
5+05			X	X	80			*CMP
6+00	-	6+56		X	56	56		
6+56	-	7+10		X	54			
7+10	-	7+58		X	48	48		
7+58	-	8+11		X	53			
8+11	-	8+78		X	67	67		
8+78	-	10+76		X	198			
10+84			X	X	80			*CMP
17+00	-	19+00		X			200	
20+00	-	22+50		X			250	
20+87			X	X	80			*CMP
25+18	-	30+00		X			482	
31+50	-	34+50		X	300			
34+50	-	35+27		X	77	77		
35+27	-	36+60		X	133			
36+60	-	37+60		X	100	100		
37+60	-	38+84		X	124			
38+84	-	47+75		X	891	891		
47+75	-	48+22	X		47			
48+22	-	49+12		X	90	90		
49+12	-	50+00		X	88			
50+84			X		40		40	CMP
50+84				X	40			CMP
60+66			X	X	80			*CMP
62+00	-	62+80		X	80			
62+80	-	63+55		X	75	75		
63+55	-	66+05		X	250			
66+05	-	66+77		X	72	72		
66+77	-	67+75		X	98			
67+75	-	68+48		X	73	83		
68+48	-	69+60		X	112			
69+60	-	70+18		X	58	58		
70+18	-	70+50		X	32			
70+31			X				40	CMP
70+31				X	40			CMP
76+79			X	X	80			*CMP
82+23			X	X	80			*CMP
87+65			X	X	80			*CMP
90+00	-	92+15		X	215			
92+15	-	92+82		X	67	67		
92+82	-	95+00		X	218			
93+12			X	X	80			*CMP
100+00	-	100+48		X	48			
100+48	-	101+65		X	117	117		
SUBTOTAL COLUMN 1					4919	1869	1012	

STA TO STA (LOCATION)			SIDE		TEMP FIBER ROLL	TEMP FENCE (TYPE ESA)	TEMP SILT FENCE	REMARKS
			L†	R†	LF	LF	LF	
101+65	-	103+00		X	135			
102+18				X	80			*CMP
105+00	-	105+55		X	55			
105+55	-	107+05		X	150	150		
107+05	-	108+62		X	157			
108+62	-	112+88		X	426	426		
112+88	-	114+70		X	182			
114+70	-	116+38		X	168	168		
116+38	-	117+00		X	62			
116+50				X	80			*CMP
119+00	-	121+95		X	295			
121+95	-	124+25		X	230	230		
122+04	-	122+50	X		46	46		
124+25	-	125+30		X	105			
125+30	-	126+54		X	124	124		
126+10				X	80			*CMP
126+20	-	128+02	X		182	182		
126+54	-	128+85		X	231			
128+85	-	130+22		X	137	137		
130+22	-	133+00		X	278			
133+00	-	134+52		X	152	152		
134+52	-	136+20		X	168			
136+20	-	143+78		X	758	758		
143+60				X	80			*CMP
143+78	-	145+00		X	122			
152+80	-	153+10		X	30	30		
153+18	-	153+84	X		66	66		
153+50				X	80			*CMP
154+43	-	159+80	X		537	537		
161+00	-	180+00		X			1900	
178+00				X	80			*CMP
180+00	-	181+05		X	105			
181+05	-	182+20		X	115	115		
182+20	-	187+22		X	502			
185+70				X	80			*CMP
185+80	-	186+14	X		34	34		
187+22	-	195+42		X	820	820		
201+00	-	225+00		X	2400			
210+05					80			*CMP
212+10				X	80			*CMP
217+64					80			*CMP
218+20				X	80			*CMP
SUBTOTAL COLUMN 2					9652	3975	1900	

STA TO STA (LOCATION)			SIDE		TEMP FIBER ROLL	TEMP FENCE (TYPE ESA)	TEMP SILT FENCE	REMARKS
			L†	R†	LF	LF	LF	
226+00	-	233+00		X	700			
227+70			X	X	80			*CMP
235+00	-	237+00	X		200			
235+00	-	237+00		X	200			
235+25			X	X	80			*CMP
238+00	-	248+78		X	1078			
243+07			X		80			*CMP
243+85	-	245+42	X		157	157		
244+20			X	X	80			*CMP
245+42	-	247+00	X		158			
248+78	-	250+80		X	202	202		
250+80	-	251+00		X	20			
254+00	-	255+42		X	142			
255+42	-	258+45		X	303			
265+00	-	266+15		X	115	115		
266+00			X	X	80			*CMP
280+63			X	X	80			*CMP
292+70			X	X	80			*CMP
296+90			X	X	80			*CMP
305+50			X	X	80			*CMP
322+60			X	X	80			*CMP
328+76			X	X	80			*CMP
340+50			X	X	80			*CMP
360+00			X	X	80			*CMP
369+80			X	X	80			*CMP
376+90			X	X	80			*CMP
398+00			X	X	80			*CMP
448+50			X	X	80			*CMP
466+13			X	X	80			*CMP
475+20			X	X	80			*CMP
484+92	-	486+97	X		205	205		
493+40	-	497+40		X	400	400		
497+40			X	X	80			*CMP
502+52	-	504+02		X	150	150		
504+75	-	508+40	X		365	365		
504+80			X	X	80			*CMP
514+65			X	X	80			*CMP
SUBTOTAL COLUMN 3					6155	1594	0	
SUBTOTAL COLUMN 1					4919	1869	1012	
SUBTOTAL COLUMN 2					9652	3975	1900	
TOTAL					20,726	7438	2912	

* 40 LF OF Temp FIBER ROLL APPLIED TO EACH SIDE.

TEMPORARY WATER POLLUTION CONTROL QUANTITIES

NO SCALE

WPCQ-1

STATE OF CALIFORNIA - DEPARTMENT OF TRANSPORTATION

Caltrans

DESIGN

FUNCTIONAL SUPERVISOR: RORY QUINCE

CALCULATED-DESIGNED BY: TOM WATERS

CHECKED BY: BRIAN P WESLING

REVISED BY

DATE REVISED

LAST REVISION 09-13-10 | DATE PLOTTED => 15-SEP-2010 | TIME PLOTTED => 16:34

Dist	COUNTY	ROUTE	POST MILES TOTAL PROJECT	SHEET No.	TOTAL SHEETS
09	Mno	270	0.0/9.8	12	32

REGISTERED CIVIL ENGINEER 7-15-10 DATE

9-13-10
PLANS APPROVAL DATE

REGISTERED PROFESSIONAL ENGINEER BRIAN WESLING No. 62509 Exp. 9-30-11 CIVIL STATE OF CALIFORNIA

THE STATE OF CALIFORNIA OR ITS OFFICERS OR AGENTS SHALL NOT BE RESPONSIBLE FOR THE ACCURACY OR COMPLETENESS OF SCANNED COPIES OF THIS PLAN SHEET.

NOTES:

1. FOR SIGN INSTALLATION DETAILS AND DIMENSIONS NOT SHOWN SEE Std PLANS
2. EXACT SIGN LOCATIONS TO BE DETERMINED BY THE ENGINEER.
3. ALTERNATE MESSAGES MUST BE APPROVED BY THE ENGINEER.
4. MESSAGE MAY BE ALTERED BY THE ENGINEER.
5. WHEN CONSTRUCTION OPERATIONS ARE NOT ACTIVELY IN PROGRESS, PORTABLE CHANGEABLE MESSAGE SIGNS SHALL NOT DISPLAY A MESSAGE UNLESS DIRECTED BY THE ENGINEER.

LEGEND:

- PORTABLE CHANGEABLE MESSAGE SIGN (PCMS)

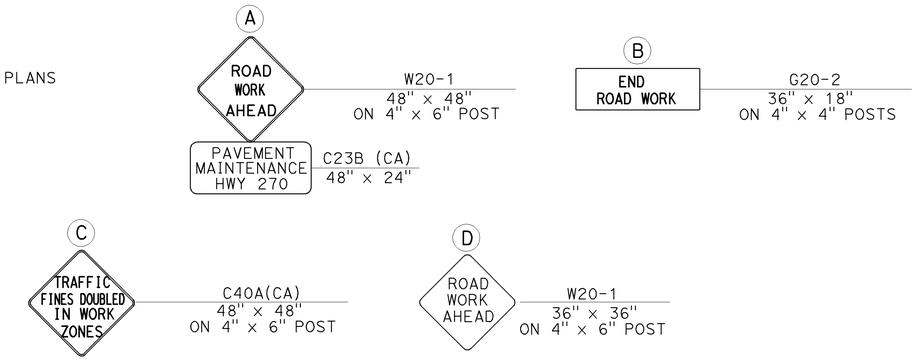

TYPICAL SIGN LAYOUT

PORTABLE CHANGEABLE MESSAGE SIGNS
No. OF SIGNS
2

STATIONARY MOUNTED CONSTRUCTION AREA SIGNS	
TYPE	No. OF SIGNS
A W20-1	2
B G20-2	4
C C40A(CA)	3
D W20-1	2

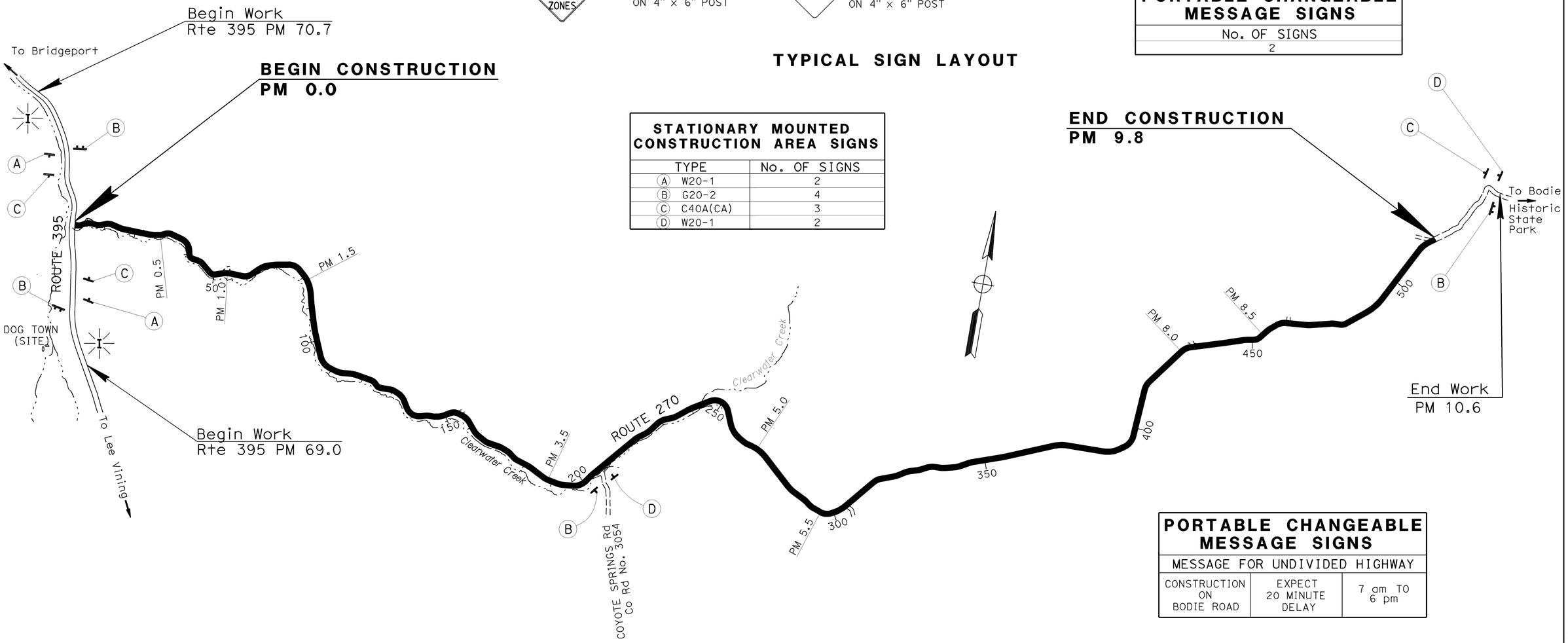

PORTABLE CHANGEABLE MESSAGE SIGNS		
MESSAGE FOR UNDIVIDED HIGHWAY		
CONSTRUCTION ON BODIE ROAD	EXPECT 20 MINUTE DELAY	7 am TO 6 pm

THIS PLAN IS ACCURATE FOR CONSTRUCTION AREA SIGN WORK ONLY

CONSTRUCTION AREA SIGNS
NO SCALE

CS-1

STATE OF CALIFORNIA - DEPARTMENT OF TRANSPORTATION
Caltrans
DESIGN

FUNCTIONAL SUPERVISOR: RORY QUINCE
CALCULATED-DESIGNED BY: MIGUEL A PEREZ
CHECKED BY: BRIAN P WESLING
REVISED BY
DATE REVISED

LAST REVISION 09-13-10
DATE PLOTTED => 16-SEP-2010
TIME PLOTTED => 17:13

Dist	COUNTY	ROUTE	POST MILES TOTAL PROJECT	SHEET No.	TOTAL SHEETS
09	Mno	270	0.0/9.8	13	32

REGISTERED CIVIL ENGINEER DATE 7-15-10

9-13-10
PLANS APPROVAL DATE

REGISTERED PROFESSIONAL ENGINEER Teresa Erlwein No. 61355 Exp 6-30-2011 CIVIL STATE OF CALIFORNIA

THE STATE OF CALIFORNIA OR ITS OFFICERS OR AGENTS SHALL NOT BE RESPONSIBLE FOR THE ACCURACY OR COMPLETENESS OF SCANNED COPIES OF THIS PLAN SHEET.

DELINEATORS

STA	L†	R†	TYPE E EA	STA	L†	R†	TYPE E EA	STA	L†	R†	TYPE E EA	STA	L†	R†	TYPE E EA	STA	L†	R†	TYPE E EA	STA	L†	R†	TYPE E EA	STA	L†	R†	TYPE E EA
0+91		X	1	27+15		X	1	49+11		X	1	74+13	X		1	108+47		X	1	132+58	X		1	153+36	X		1
1+59		X	1	27+47		X	1	49+39		X	1	74+49	X		1	108+85		X	1	132+95	X		1	153+72	X		1
1+93		X	1	27+79		X	1	49+67		X	1	74+86	X		1	109+23		X	1	133+33	X		1	154+08	X		1
2+27		X	1	28+10		X	1	49+95		X	1	75+00		X	1	109+61		X	1	133+71	X		1	154+79	X		1
2+61		X	1	28+29	X		1	50+23		X	1	75+22	X		1	110+00	X		1	134+08	X		1	155+00		X	1
2+95		X	1	29+03	X		1	50+80		X	1	75+59	X		1	110+37		X	1	134+46	X		1	155+45	X		1
3+50	X		1	29+40	X		1	50+97	X		1	75+95	X		1	111+47		X	1	134+84	X		1	155+81	X		1
3+63		X	1	29+77	X		1	51+64		X	1	76+32	X		1	111+85		X	1	135+27		X	1	156+16	X		1
4+24	X		1	30+00		X	1	52+44	X		1	76+69	X		1	112+22		X	1	135+59	X		1	156+52	X		1
4+61	X		1	30+14	X		1	53+18	X		1	77+05	X		1	112+59		X	1	136+40		X	1	156+88	X		1
4+97	X		1	30+51	X		1	53+33		X	1	77+42	X		1	112+97		X	1	136+72	X		1	157+24	X		1
5+00		X	1	30+88	X		1	53+91	X		1	78+15	X		1	113+34		X	1	137+15		X	1	157+59	X		1
5+34	X		1	31+25	X		1	54+65	X		1	79+18	X		1	113+63	X		1	137+53		X	1	157+95	X		1
5+71	X		1	31+98	X		1	55+38	X		1	80+00		X	1	113+71		X	1	137+91		X	1	158+31	X		1
6+08	X		1	33+65	X		1	56+85	X		1	80+05	X		1	114+46		X	1	138+28		X	1	159+02	X		1
6+48		X	1	34+42	X		1	56+88		X	1	80+92	X		1	115+46	X		1	138+66		X	1	159+59		X	1
6+81	X		1	34+80	X		1	57+98		X	1	81+79	X		1	115+58		X	1	139+04		X	1	160+09	X		1
7+18		X	1	35+00		X	1	58+70		X	1	82+66	X		1	116+38	X		1	139+41		X	1	160+69		X	1
7+53		X	1	35+19	X		1	59+07		X	1	83+53	X		1	117+30	X		1	139+79		X	1	161+43		X	1
7+89		X	1	35+58	X		1	59+43		X	1	84+40	X		1	118+22	X		1	140+00	X		1	161+79		X	1
8+24		X	1	35+96	X		1	59+79		X	1	85+00		X	1	119+18	X		1	140+17		X	1	162+16		X	1
8+59		X	1	36+35	X		1	60+00	X		1	85+27	X		1	120+00		X	1	140+54		X	1	162+53		X	1
8+94		X	1	36+73	X		1	60+16		X	1	86+13		X	1	121+07	X		1	140+92		X	1	162+90		X	1
9+29		X	1	37+12	X		1	60+52		X	1	87+01	X		1	121+55		X	1	141+30		X	1	163+27		X	1
9+64		X	1	37+50	X		1	60+89		X	1	87+96		X	1	122+01	X		1	141+67		X	1	164+00		X	1
10+00		X	1	37+89	X		1	61+25		X	1	88+87		X	1	122+64	X		1	142+05		X	1	164+72		X	1
10+00	X		1	38+28	X		1	61+61		X	1	89+62	X		1	122+95	X		1	142+43		X	1	165+00	X		1
10+34		X	1	38+66	X		1	62+34		X	1	89+78		X	1	123+27	X		1	142+68	X		1	165+44		X	1
10+76	X		1	39+37		X	1	62+51	X		1	91+61		X	1	123+35		X	1	143+18		X	1	165+79		X	1
11+15	X		1	39+43	X		1	63+43		X	1	92+62	X		1	123+58	X		1	143+47	X		1	166+15		X	1
11+53	X		1	39+97		X	1	63+58	X		1	93+86		X	1	123+90	X		1	143+86	X		1	166+51		X	1
11+91	X		1	40+26		X	1	64+30	X		1	95+00	X		1	124+24		X	1	144+25	X		1	166+86		X	1
12+29	X		1	40+56		X	1	64+66	X		1	95+70		X	1	124+52	X		1	144+65	X		1	167+22		X	1
12+67	X		1	40+85		X	1	65+00		X	1	96+62		X	1	124+84		X	1	144+82		X	1	167+40	X		1
13+43	X		1	41+15		X	1	65+01	X		1	97+54		X	1	125+14		X	1	145+04	X		1	167+58		X	1
13+73		X	1	41+44		X	1	65+37	X		1	100+00	X		1	125+44		X	1	145+83	X		1	168+29		X	1
14+84		X	1	41+74		X	1	65+73	X		1	100+48		X	1	125+47	X		1	146+21		X	1	169+15	X		1
15+00	X		1	42+33		X	1	66+09	X		1	102+76		X	1	125+74		X	1	146+90		X	1	169+36		X	1
15+40		X	1	42+70	X		1	66+45	X		1	103+90		X	1	126+04		X	1	147+60		X	1	170+32	X		1
15+95		X	1	43+49	X		1	66+80	X		1	104+66		X	1	126+63		X	1	148+29		X	1	170+90	X		1
16+51		X	1	43+88	X		1	67+16	X		1	105+00	X		1	127+35	X		1	148+99		X	1	171+48	X		1
17+62		X	1	44+28	X		1	67+88	X		1	105+04		X	1	128+72	X		1	149+68		X	1	172+07	X		1
19+29		X	1	44+67	X		1	68+39	X		1	105+42		X	1	129+38	X		1	149+79	X		1	172+83	X		1
20+00	X		1	45+07	X		1	69+39	X		1	105+80		X	1	129+71	X		1	150+86	X		1	SUBTOTAL Col 7			43
22+40		X	1	45+72		X	1	70+00		X	1	106+18		X	1	130+04	X		1	151+07		X	1	SUBTOTAL Col 1			50
23+79		X	1	45+86	X		1	70+38	X		1	106+56		X	1	130+37	X		1	151+58	X		1	SUBTOTAL Col 2			50
24+49		X	1	47+04	X		1	72+38	X		1	106+95		X	1	130+70	X		1	151+93	X		1	SUBTOTAL Col 3			50
25+00	X		1	47+41		X	1	72+66	X		1	107+33		X	1	131+03	X		1	152+29	X		1	SUBTOTAL Col 4			50
25+18		X	1	48+26		X	1	73+39	X		1	107+71		X	1	131+82	X		1	152+65	X		1	SUBTOTAL Col 5			50
26+51		X	1	48+82		X	1	73+76	X		1	108+09		X	1	132+20	X		1	153+00	X		1	SUBTOTAL Col 6			50
SUBTOTAL Col 1			50	SUBTOTAL Col 2			50	SUBTOTAL Col 3			50	SUBTOTAL Col 4			50	SUBTOTAL Col 5			50	SUBTOTAL Col 6			50	TOTAL SHEET PDQ-1			343

PAVEMENT DELINEATION QUANTITIES

NO SCALE

PDQ-1

STATE OF CALIFORNIA - DEPARTMENT OF TRANSPORTATION
Caltrans® TRAFFIC OPERATIONS

FUNCTIONAL SUPERVISOR: TERRY ERLWEIN
CALCULATED-DESIGNED BY: JOEL NASH
CHECKED BY: TERRY ERLWEIN
REVISED BY / DATE REVISED

LAST REVISION 09-13-10
DATE PLOTTED => 15-SEP-2010
TIME PLOTTED => 16:34

Dist	COUNTY	ROUTE	POST MILES TOTAL PROJECT	SHEET No.	TOTAL SHEETS
09	Mno	270	0.0/9.8	14	32

Teresa Erlwein PE 7-15-10
REGISTERED CIVIL ENGINEER DATE

9-13-10
PLANS APPROVAL DATE

REGISTERED PROFESSIONAL ENGINEER
Teresa Erlwein
No. 61355
Exp 6-30-2011
CIVIL
STATE OF CALIFORNIA

THE STATE OF CALIFORNIA OR ITS OFFICERS OR AGENTS SHALL NOT BE RESPONSIBLE FOR THE ACCURACY OR COMPLETENESS OF SCANNED COPIES OF THIS PLAN SHEET.

DELINEATORS

STA	L+	R+	TYPE E EA	STA	L+	R+	TYPE E EA	STA	L+	R+	TYPE E EA	STA	L+	R+	TYPE E EA	STA	L+	R+	TYPE E EA	STA	L+	R+	TYPE E EA	STA	L+	R+	TYPE E EA
173+47	X		1	201+66		X	1	240+00		X	1	268+41	X		1	311+05	X		1	341+60		X	1	394+15		X	1
173+79	X		1	202+00	X		1	240+09	X		1	269+30	X		1	311+68		X	1	342+33		X	1	394+53		X	1
174+11	X		1	202+80		X	1	241+76	X		1	270+00		X	1	313+38	X		1	342+97	X		1	394+91		X	1
174+43	X		1	202+83	X		1	244+07	X		1	270+20	X		1	314+54	X		1	343+80		X	1	395+00	X		1
174+75	X		1	203+67	X		1	245+00		X	1	271+09	X		1	315+00		X	1	344+70	X		1	395+29		X	1
175+39	X		1	205+00		X	1	245+23	X		1	271+99	X		1	315+32	X		1	345+56	X		1	395+68		X	1
175+44		X	1	205+35	X		1	246+00	X		1	273+78	X		1	315+71	X		1	346+43	X		1	396+06		X	1
176+13		X	1	207+86	X		1	246+38	X		1	281+50		X	1	316+10	X		1	348+16	X		1	396+44		X	1
176+48		X	1	210+00		X	1	246+77	X		1	282+92		X	1	316+48	X		1	348+94		X	1	396+82		X	1
176+82		X	1	210+86	X		1	247+15	X		1	283+63		X	1	316+87	X		1	350+75	X		1	397+20		X	1
177+17		X	1	213+63	X		1	247+54	X		1	284+34		X	1	317+26	X		1	351+94		X	1	397+58		X	1
177+52		X	1	215+00		X	1	247+92	X		1	285+00	X		1	317+65	X		1	353+75	X		1	398+34		X	1
178+21		X	1	216+63	X		1	248+30	X		1	285+05		X	1	318+43	X		1	354+21		X	1	399+49		X	1
179+25		X	1	218+62	X		1	248+69	X		1	285+76		X	1	319+59	X		1	355+00		X	1	400+00	X		1
179+37	X		1	219+95	X		1	249+07	X		1	287+55	X		1	319+94		X	1	355+35		X	1	401+77		X	1
180+74	X		1	220+00		X	1	249+46	X		1	289+09	X		1	321+43		X	1	356+49		X	1	405+00	X	X	2
181+42	X		1	220+61	X		1	249+84	X		1	289+87	X		1	322+17		X	1	358+76		X	1	407+89	X		1
182+10	X		1	221+27	X		1	250+00		X	1	290+00	X		1	322+91		X	1	360+00	X		1	410+00		X	1
182+78	X		1	221+94	X		1	250+23	X		1	290+64	X		1	323+65		X	1	361+76		X	1	410+06	X		1
183+71		X	1	223+02		X	1	250+61	X		1	290+94		X	1	324+93	X		1	364+03	X		1	411+15	X		1
184+15	X		1	223+27	X		1	251+00	X		1	291+68		X	1	325+71	X		1	364+76		X	1	411+87	X		1
185+68		X	1	223+80		X	1	251+38	X		1	292+04		X	1	326+48	X		1	367+03	X		1	412+23	X		1
186+20	X		1	224+57		X	1	251+77	X		1	292+41		X	1	327+25		X	1	369+54	X		1	412+60	X		1
186+99		X	1	225+35		X	1	252+15	X		1	292+78		X	1	327+26	X		1	370+00		X	1	412+96	X		1
187+65		X	1	226+13		X	1	252+54	X		1	293+14		X	1	328+76		X	1	371+22	X		1	413+32	X		1
188+30		X	1	226+74	X		1	252+92	X		1	293+51		X	1	328+81	X		1	372+06	X		1	413+68	X		1
188+96		X	1	227+68		X	1	253+18		X	1	294+25		X	1	329+52		X	1	372+90	X		1	414+05	X		1
190+00	X		1	227+89	X		1	253+69	X		1	295+00	X		1	330+27		X	1	373+74	X		1	414+41	X		1
190+27		X	1	228+65	X		1	254+85	X		1	295+09		X	1	331+29	X		1	374+58	X		1	414+77	X		1
191+24		X	1	229+04	X		1	255+47		X	1	295+85		X	1	331+79		X	1	375+00		X	1	415+00		X	1
191+92		X	1	229+42	X		1	257+00		X	1	296+22		X	1	332+00	X		1	375+42	X		1	415+49	X		1
192+61		X	1	229+80	X		1	257+16	X		1	296+60		X	1	332+35	X		1	377+10	X		1	416+58	X		1
193+29		X	1	230+19	X		1	257+76		X	1	296+98		X	1	332+70	X		1	379+62	X		1	418+76	X		1
194+66		X	1	230+57	X		1	258+52		X	1	297+36		X	1	333+05	X		1	379+63		X	1	420+00		X	1
195+00	X		1	230+95	X		1	259+29		X	1	297+73		X	1	333+40	X		1	382+62	X		1	423+82	X		1
195+59		X	1	231+34	X		1	260+00	X		1	298+11		X	1	333+75	X		1	382+63		X	1	425+00		X	1
196+35		X	1	231+60		X	1	260+05		X	1	298+49		X	1	334+10	X		1	384+96		X	1	426+18	X		1
196+73		X	1	232+10	X		1	260+81		X	1	298+87		X	1	334+45	X		1	385+00	X		1	427+37	X		1
197+11		X	1	232+68		X	1	261+57		X	1	299+24		X	1	334+81	X		1	386+51		X	1	428+15	X		1
197+49		X	1	233+25	X		1	262+34		X	1	300+00		X	1	335+24		X	1	387+28		X	1	428+55	X		1
197+87		X	1	233+40		X	1	262+89		X	1	300+00	X		1	335+51	X		1	388+06		X	1	428+94	X		1
198+25		X	1	233+76		X	1	263+69		X	1	300+38		X	1	335+92		X	1	388+83		X	1	429+34	X		1
198+63		X	1	234+12		X	1	264+08		X	1	301+30		X	1	336+26		X	1	389+60		X	1	429+73	X		1
199+01		X	1	234+48		X	1	264+48		X	1	302+22		X	1	336+61		X	1	390+00	X		1	SUBTOTAL Col 7			44
199+39		X	1	234+84		X	1	264+88		X	1	303+15		X	1	336+95		X	1	390+38		X	1	SUBTOTAL Col 1			50
199+77		X	1	235+56		X	1	265+00	X		1	304+07		X	1	337+29		X	1	391+15		X	1	SUBTOTAL Col 2			50
200+00	X		1	236+65		X	1	265+28		X	1	305+00	X		1	337+97		X	1	392+25		X	1	SUBTOTAL Col 3			50
200+15		X	1	236+97	X		1	266+07		X	1	305+91		X	1	340+00	X		1	393+01		X	1	SUBTOTAL Col 4			50
200+52		X	1	238+53	X		1	266+62	X		1	308+68		X	1	340+14		X	1	393+39		X	1	SUBTOTAL Col 5			50
200+90		X	1	239+31	X		1	267+51	X		1	310+00	X		1	340+87		X	1	393+77		X	1	SUBTOTAL Col 6			50
SUBTOTAL Col 1			50	SUBTOTAL Col 2			50	SUBTOTAL Col 3			50	SUBTOTAL Col 4			50	SUBTOTAL Col 5			50	SUBTOTAL Col 6			50	TOTAL SHEET PDQ-2			344

PAVEMENT DELINEATION QUANTITIES
NO SCALE

PDQ-2

STATE OF CALIFORNIA - DEPARTMENT OF TRANSPORTATION
Caltrans TRAFFIC OPERATIONS

FUNCTIONAL SUPERVISOR: TERRY ERLWEIN
CALCULATED-DESIGNED BY: JOEL NASH
CHECKED BY: TERRY ERLWEIN
REVISED BY / DATE REVISED

LAST REVISION 09-15-10 | DATE PLOTTED => 15-SEP-2010 | TIME PLOTTED => 16:35

Dist	COUNTY	ROUTE	POST MILES TOTAL PROJECT	SHEET No.	TOTAL SHEETS
09	Mno	270	0.0/9.8	15	32

REGISTERED CIVIL ENGINEER 7-15-10 DATE

9-13-10
PLANS APPROVAL DATE

REGISTERED PROFESSIONAL ENGINEER Teresa Erlwein No. 61355 Exp 6-30-2011 CIVIL STATE OF CALIFORNIA

THE STATE OF CALIFORNIA OR ITS OFFICERS OR AGENTS SHALL NOT BE RESPONSIBLE FOR THE ACCURACY OR COMPLETENESS OF SCANNED COPIES OF THIS PLAN SHEET.

NOTE:
1. THIS PLAN ACCURATE FOR PAVEMENT DELINEATION WORK ONLY
2. (N) NOT A SEPARATE PAY ITEM, FOR INFORMATION ONLY.

DELINEATORS

STA	L†	R†	TYPE E EA	STA	L†	R†	TYPE E EA
430+00		X	1	472+16	X		1
430+12	X		1	473+82		X	1
430+52	X		1	474+02	X		1
430+91	X		1	475+26	X		1
431+31	X		1	475+88	X		1
432+09	X		1	476+50	X		1
433+28	X		1	477+12	X		1
435+00		X	1	477+53		X	1
435+64	X		1	478+20		X	1
440+00	X	X	2	478+53		X	1
444+88	X		1	478+86		X	1
445+00		X	1	479+20		X	1
446+87	X		1	479+53		X	1
447+87	X		1	479+87		X	1
448+86	X		1	480+00	X		1
450+00	X		1	480+20		X	1
450+39		X	1	480+87		X	1
450+75		X	1	481+88		X	1
451+12		X	1	483+89		X	1
451+48		X	1	484+86		X	1
451+84		X	1	485+00	X		1
452+21		X	1	487+06		X	1
452+57		X	1	488+16		X	1
453+30		X	1	489+26		X	1
453+50	X		1	490+00	X		1
454+39		X	1	490+36		X	1
455+00	X		1	491+46		X	1
455+74	X		1	492+56		X	1
456+49	X		1	493+66		X	1
457+24	X		1	495+00	X		1
458+09	X		1	495+86		X	1
458+86	X		1	498+86		X	1
459+24	X		1	500+00	X		1
459+62	X		1	501+86		X	1
460+00		X	1	505+00		X	1
460+01	X		1	505+23	X		1
460+39	X		1	508+23	X		1
460+77	X		1	510+00		X	1
461+15	X		1	510+44	X		1
461+54	X		1	511+91	X		1
461+92	X		1	512+64	X		1
462+68	X		1	513+38	X		1
463+50		X	1	514+11	X		1
463+83	X		1	514+85	X		1
466+08		X	1	515+00		X	1
466+12	X		1	515+58	X		1
467+80		X	1	517+05	X		1
468+66		X	1	SUBTOTAL Col 2			47
469+52		X	1	SUBTOTAL Col 1			51
471+24		X	1	TOTAL SHEET PDQ-3			98
SUBTOTAL Col 1			51	TOTAL SHEET PDQ-1			343
				TOTAL SHEET PDQ-2			344
				TOTAL			785

PAINT TRAFFIC STRIPE (2-COAT)

STATION TO STATION			LENGTH (N)	DETAIL No. 5	18*	18**	21	27B
			LF	LF	LF	LF	LF	LF
00+28	-	77+63	7735				7735	15,526
77+63	-	85+00	737		737			1474
85+00	-	99+38	1438	1438				2876
99+38	-	106+55	717			717		1434
106+55	-	202+32	9577				9577	19,154
202+32		207+33	501		501			1002
207+33	-	218+98	1165	1165				2330
218+98	-	225+08	610			610		1220
225+08	-	233+40	832				832	1664
233+40	-	240+47	707		707			1414
240+47		242+19	172	172				344
242+19	-	249+63	744			744		1488
249+63	-	270+30	2067				2067	4134
270+30	-	274+92	462		462			924
274+92	-	280+00	508	508				1016
280+00		287+38	738			738		1476
287+38	-	295+74	836				836	1672
295+74	-	303+61	787		787			1574
303+61	-	305+40	179	179				358
305+40	-	311+14	574			574		1148
311+14		348+66	3752				3752	7504
348+66	-	354+85	619		619			1238
354+85	-	366+23	1138	1138				2276
366+23	-	372+48	625			625		1250
372+48	-	378+90	642		642			1284
378+90	-	404+61	2571	2571				5142
404+61	-	412+06	745			745		1490
412+06	-	417+88	582				582	1164
417+88	-	420+72	284		284			568
420+72	-	423+80	308	308				616
423+80	-	429+41	561			561		1122
429+41	-	493+90	6449				6449	12,898
493+90	-	500+71	681		681			1362
500+71	-	505+91	520	520				1040
505+91	-	512+11	620			620		1240
512+11	-	517+86	575				575	1178
SUBTOTAL				7999	5420	5934	32,405	103,600
TOTAL				155,358				

* THIS COLUMN DENOTES EASTBOUND PASSING ALLOWED, NO WEST BOUND PASSING.
** THIS COLUMN DENOTES WESTBOUND PASSING ALLOWED, NO EAST BOUND PASSING.

PAINT PAVEMENT MARKINGS (2-COAT)

STATION	L†	R†	LIMIT LINE SQFT	WORDS "STOP" EA (N)	"STOP" SQFT	"AHEAD" EA (N)	"AHEAD" SQFT
0+51	X		36				
0+59	X			1	22		
4+80	X					1	31
5+20	X			1	22		
SUBTOTAL			36		44		31
TOTAL			111				

OBJECT MARKERS

STA	L†	R†	TYPE L-2 EA
10+84	X	X	2
49+38	X	X	2
52+02	X	X	2
60+47	X	X	2
70+50	X	X	2
76+84	X	X	2
82+12	X	X	2
92+68	X	X	2
101+66	X	X	2
116+44	X	X	2
126+47	X	X	2
143+37	X	X	2
153+40	X	X	2
178+22	X	X	2
186+14	X	X	2
210+42	X	X	2
217+82	X	X	2
243+69	X	X	2
280+12	X	X	2
292+79	X	X	2
297+02	X	X	2
305+99	X	X	2
322+89	X	X	2
329+22	X	X	2
340+84	X	X	2
359+85	X	X	2
370+41	X	X	2
377+27	X	X	2
399+45	X	X	2
449+08	X	X	2
466+50	X	X	2
475+48	X	X	2
497+13	X	X	2
504+52	X	X	2
515+08	X	X	2
TOTAL			70

NOTE:
EXACT LOCATION OF OBJECT MARKERS TO BE DETERMINED BY THE ENGINEER.

PAVEMENT DELINEATION QUANTITIES
PDQ-3

STATE OF CALIFORNIA - DEPARTMENT OF TRANSPORTATION
Caltrans TRAFFIC OPERATIONS

FUNCTIONAL SUPERVISOR: TERRY ERLWEIN
CALCULATED-DESIGNED BY: JOEL NASH
CHECKED BY: TERRY ERLWEIN
REVISED BY
DATE REVISED

LAST REVISION 09-15-10
DATE PLOTTED => 15-SEP-2010
TIME PLOTTED => 16:35

Dist	COUNTY	ROUTE	POST MILES TOTAL PROJECT	SHEET No.	TOTAL SHEETS
09	Mno	270	0.0/9.8	16	32

Teresa Erlwein PE 7-15-10
REGISTERED CIVIL ENGINEER DATE

9-13-10
PLANS APPROVAL DATE

REGISTERED PROFESSIONAL ENGINEER Teresa Erlwein No. 61355 Exp 6-30-2011 CIVIL STATE OF CALIFORNIA

THE STATE OF CALIFORNIA OR ITS OFFICERS OR AGENTS SHALL NOT BE RESPONSIBLE FOR THE ACCURACY OR COMPLETENESS OF SCANNED COPIES OF THIS PLAN SHEET.

NOTE:
1. THIS PLAN ACCURATE FOR PAVEMENT DELINEATION WORK ONLY
2. (N) NOT A SEPARATE PAY ITEM, FOR INFORMATION ONLY.

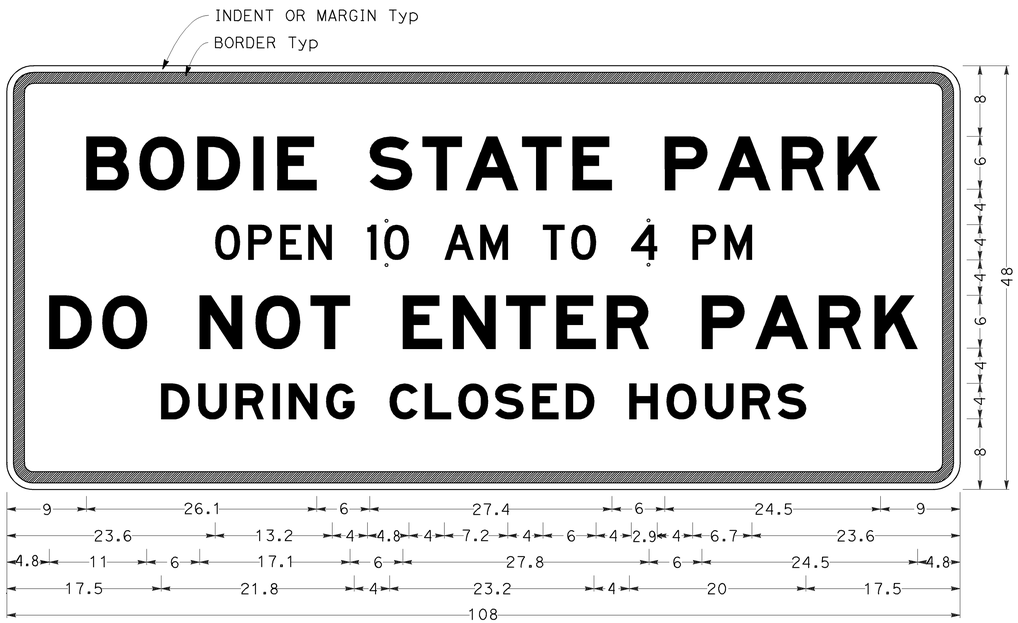

NOTES FOR SR A PANEL:

BLACK ON WHITE BACKGROUND
LINE 1 - 6 E MODIFIED
LINE 2 - 4 D
LINE 3 - 6 E MODIFIED
LINE 4 - 4 D
3" CORNER RADIUS WITH TRIMMED CORNERS
¾" INDENT OR MARGIN
1.25" BORDER

SIGN (9)
CODE SR A

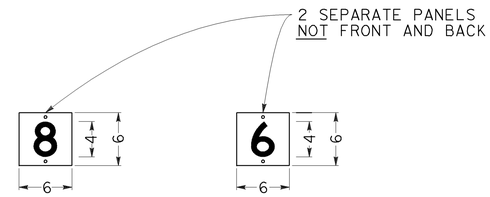

NOTES FOR SR B AND SR C PANELS

BLACK ON WHITE BACKGROUND
LINE 1 - 4 D
SHARP CORNERS
NO INDENT OR MARGIN
NO BORDER
THESE "SWITCH" PANELS SHALL BE CONSTRUCTED TO FIT ONTO THE SR A PANEL IN ORDER TO CHANGE THE NUMERIC HOURS. SEE "SWITCH" PANEL DETAIL THIS SHEET.

SIGN (9)
CODE SR B

SIGN (9)
CODE SR C

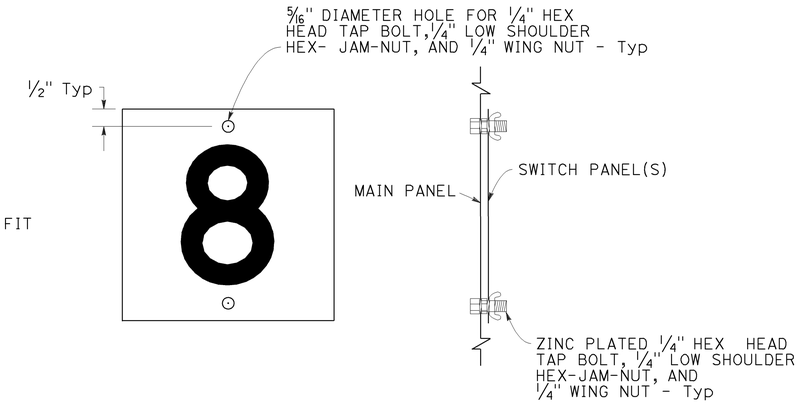

FRONT

SIDE VIEW - INSTALLED

"SWITCH" PANEL DETAIL

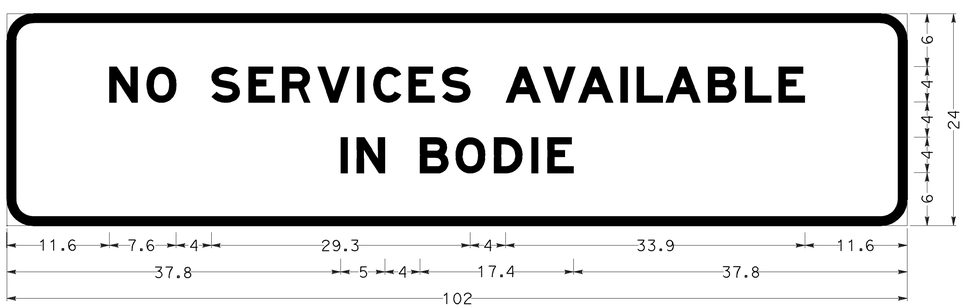

NOTES FOR SG A PANEL:

WHITE ON BLUE BACKGROUND
LINE 1 - 4E MODIFIED
LINE 2 - 4E MODIFIED
3" CORNER RADIUS WITH SHARP CORNERS
NO INDENT OR MARGIN
1" BORDER

SIGN (12)
CODE SG A

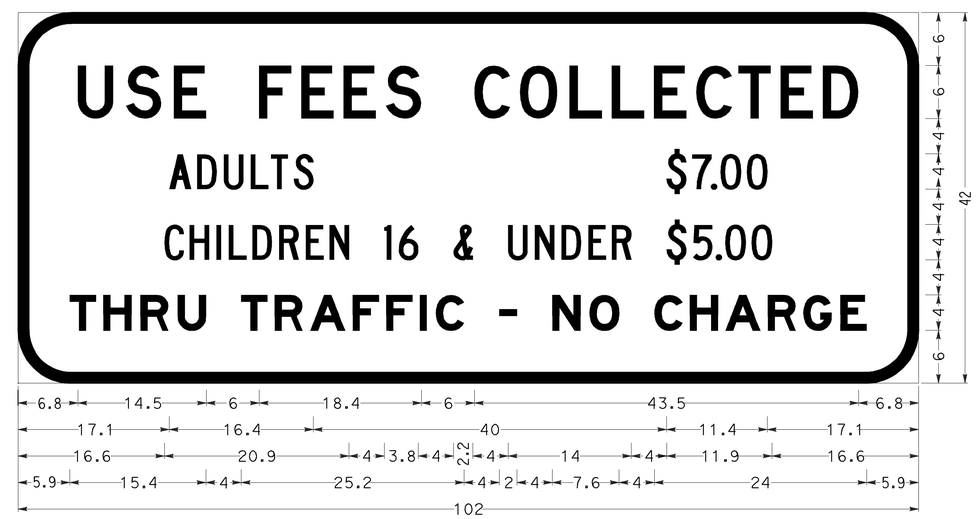

NOTES FOR SG B PANEL:

WHITE ON BROWN BACKGROUND
LINE 1 - 6 D
LINE 2 - 4 C
LINE 3 - 4 C
LINE 4 - 4 E MODIFIED
6" CORNER RADIUS WITH SHARP CORNERS
NO " INDENT OR MARGIN
1.25" BORDER

SIGN (12)
CODE SG B

ALL DIMENSIONS ARE IN INCHES UNLESS OTHERWISE SHOWN

SIGN DETAILS
NO SCALE **SD-1**

STATE OF CALIFORNIA - DEPARTMENT OF TRANSPORTATION
Caltrans® TRAFFIC OPERATIONS

FUNCTIONAL SUPERVISOR: TERRY ERLWEIN
CALCULATED-DESIGNED BY: JOEL NASH
CHECKED BY: TERRY ERLWEIN
REVISED BY
DATE REVISED

LAST REVISION 09-15-10
DATE PLOTTED => 15-SEP-2010
TIME PLOTTED => 16:35

Dist	COUNTY	ROUTE	POST MILES TOTAL PROJECT	SHEET No.	TOTAL SHEETS
09	Mno	270	0.0/9.8	17	32

Teresa Erlwein PE 7-15-10
REGISTERED CIVIL ENGINEER DATE

9-13-10
PLANS APPROVAL DATE

REGISTERED PROFESSIONAL ENGINEER Teresa Erlwein No. 61355 Exp 6-30-2011 CIVIL STATE OF CALIFORNIA

THE STATE OF CALIFORNIA OR ITS OFFICERS OR AGENTS SHALL NOT BE RESPONSIBLE FOR THE ACCURACY OR COMPLETENESS OF SCANNED COPIES OF THIS PLAN SHEET.

NOTE:
1. THIS PLAN ACCURATE FOR PAVEMENT DELINEATION WORK ONLY
2. (N) NOT A SEPARATE PAY ITEM, FOR INFORMATION ONLY.

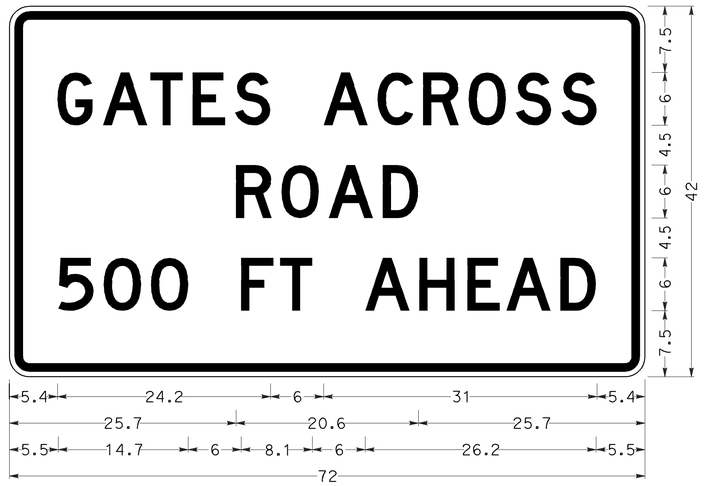

NOTES FOR SW A PANEL:

BLACK ON YELLOW BACKGROUND
LINE 1 - 6 D
LINE 2 - 6 D
LINE 3 - 6 D
2¼" CORNER RADIUS WITH TRIMMED CORNERS
⅝" INDENT OR MARGIN
⅛" BORDER

SIGN 11 15
CODE SW A

NOTES FOR G13 (CA) PANEL:

FOR ALL DETAILS NOT SHOWN CONFORM TO THE PUBLISHED G13 (CA) SPECIFICATION.

SIGN 50
CODE G13 (CA)

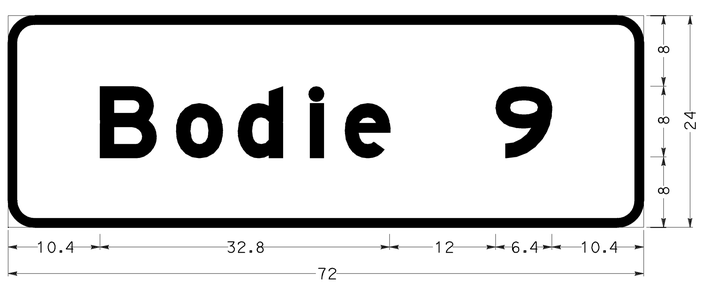

NOTES FOR G5 (CA) PANEL:

WHITE ON GREEN BACKGROUND
LINE 1 - 8" UPPERCASE, 6" LOWERCASE E MODIFIED
3" CORNER RADIUS WITH SHARP CORNERS
NO INDENT OR MARGIN
1" BORDER

SIGN 30
CODE G5 (CA)

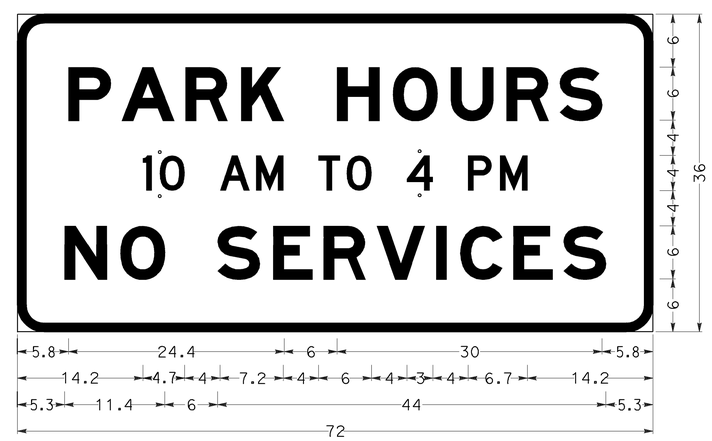

NOTES FOR SG C PANEL:

WHITE ON BROWN BACKGROUND
LINE 1 - 6 E MODIFIED
LINE 2 - 4 D
LINE 3 - 6 E MODIFIED
3" CORNER RADIUS WITH SHARP CORNERS
NO INDENT OR MARGIN
1" BORDER

SIGN 50
CODE SG C

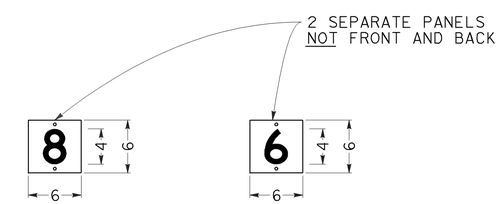

NOTES FOR SG D AND SG E PANEL:

WHITE ON BROWN BACKGROUND
LINE 1 - 4 D
SHARP CORNERS
NO INDENT OR MARGIN
NO BORDER
THESE "SWITCH" PANELS SHALL BE CONSTRUCTED TO FIT ONTO THE SG C PANEL IN ORDER TO CHANGE THE NUMERIC HOURS. SEE DETAIL "SWITCH" PANEL DETAIL - SHEET SD-1

SIGN 50
CODE SG D

SIGN 50
CODE SG E

ALL DIMENSIONS ARE IN INCHES UNLESS OTHERWISE SHOWN

SIGN DETAILS
NO SCALE **SD-2**

STATE OF CALIFORNIA - DEPARTMENT OF TRANSPORTATION
Caltrans® TRAFFIC OPERATIONS

FUNCTIONAL SUPERVISOR: TERRY ERLWEIN
CALCULATED-DESIGNED BY: JOEL NASH
CHECKED BY: TERRY ERLWEIN
REVISED BY / DATE REVISED

LAST REVISION 09-15-10 | DATE PLOTTED => 15-SEP-2010 | TIME PLOTTED => 16:35

Dist	COUNTY	ROUTE	POST MILES TOTAL PROJECT	SHEET No.	TOTAL SHEETS
09	Mno	270	0.0/9.8	18	32

REGISTERED CIVIL ENGINEER 7-15-10 DATE

9-13-10
PLANS APPROVAL DATE

REGISTERED PROFESSIONAL ENGINEER Teresa Erlwein No. 61355 Exp 6-30-2011 CIVIL STATE OF CALIFORNIA

THE STATE OF CALIFORNIA OR ITS OFFICERS OR AGENTS SHALL NOT BE RESPONSIBLE FOR THE ACCURACY OR COMPLETENESS OF SCANNED COPIES OF THIS PLAN SHEET.

NOTES:

1. EXACT LOCATION OF SIGN SHALL BE DETERMINED BY THE ENGINEER.
2. ALL PARTS SHALL BE PAINTED WITH ONE COAT OF RUST RESISTANT PRIMER AND TWO COATS OF YELLOW GLOSS ENAMEL.
3. HARDWARE TO BE SUPPLIED BY THE CONTRACTOR.
4. STANDARD 1/8" PIPE FITTING TO BE SUPPLIED BY THE CONTRACTOR (GREASE ZERK).
5. DRILL 1/2" HOLES AS NECESSARY TO MOUNT SIGN PANEL TO FRAME.

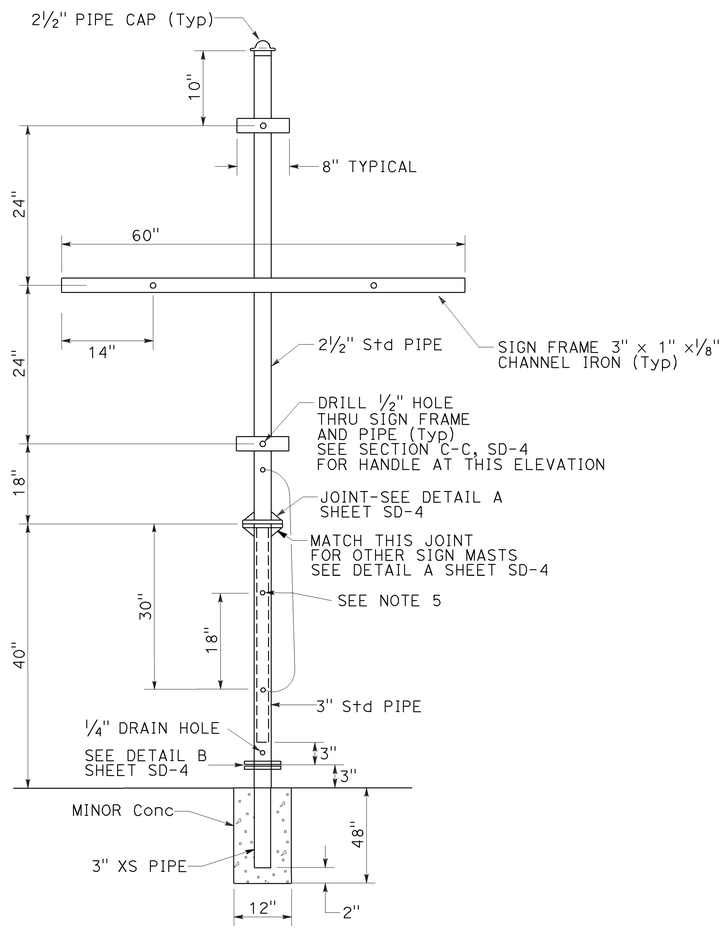

SIGN MAST
SLIPPERY WHEN WET
W8-5

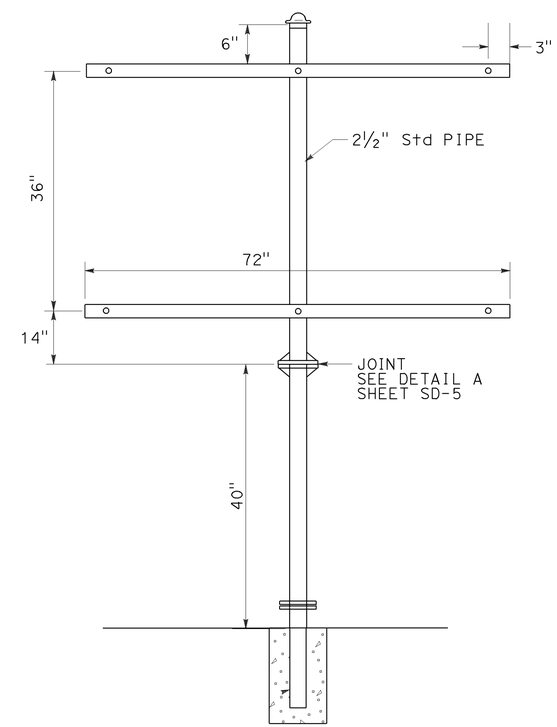

SIGN MAST
GATES ACROSS ROAD 500 FT
SW-A

SIGN DETAILS
NO SCALE **SD-3**

STATE OF CALIFORNIA - DEPARTMENT OF TRANSPORTATION
Caltrans® TRAFFIC OPERATIONS

FUNCTIONAL SUPERVISOR: TERRY ERLWEIN
CALCULATED-DESIGNED BY: JOEL NASH
CHECKED BY: TERRY ERLWEIN
REVISED BY
DATE REVISED

LAST REVISION 09-15-10
DATE PLOTTED => 15-SEP-2010
TIME PLOTTED => 16:35

Dist	COUNTY	ROUTE	POST MILES TOTAL PROJECT	SHEET No.	TOTAL SHEETS
09	Mno	270	0.0/9.8	19	32

Teresa Erlwein PE 7-15-10
REGISTERED CIVIL ENGINEER DATE

9-13-10
PLANS APPROVAL DATE

REGISTERED PROFESSIONAL ENGINEER Teresa Erlwein No. 61355 Exp 6-30-2011 CIVIL STATE OF CALIFORNIA

THE STATE OF CALIFORNIA OR ITS OFFICERS OR AGENTS SHALL NOT BE RESPONSIBLE FOR THE ACCURACY OR COMPLETENESS OF SCANNED COPIES OF THIS PLAN SHEET.

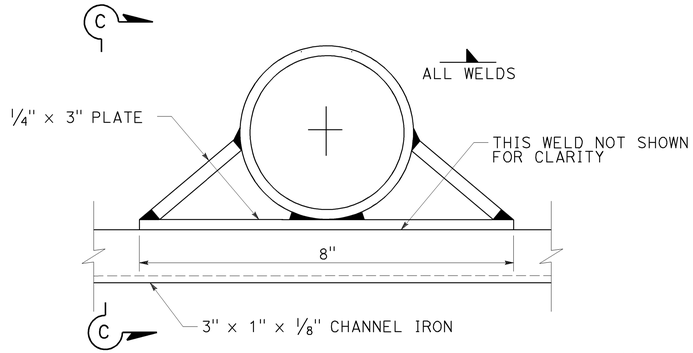

SIGN FRAME DETAIL (Typ)

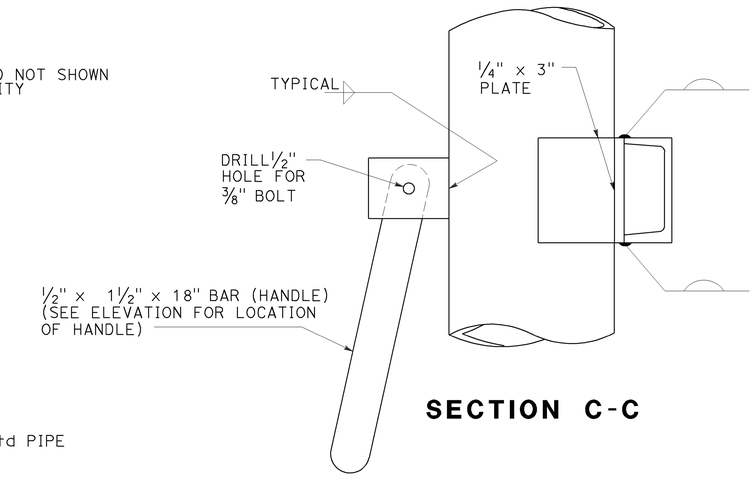

SECTION C-C

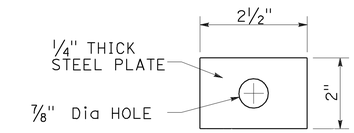

PLATE WASHER

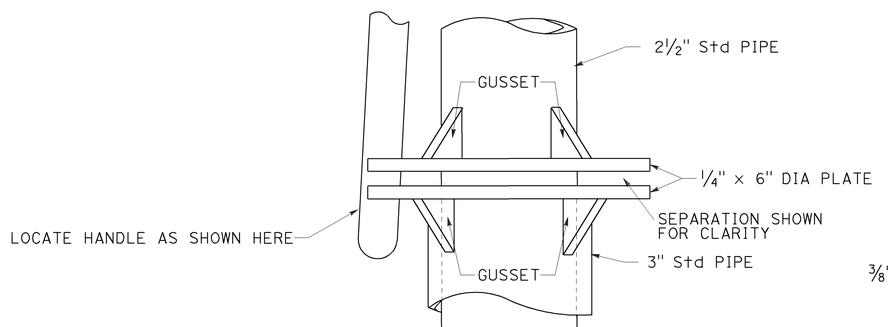

ELEVATION

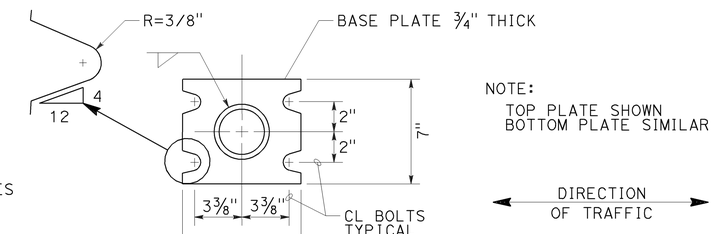

SECTION B-B
BREAKAWAY PLATE

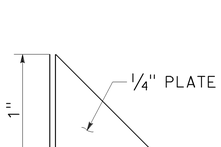

GUSSET

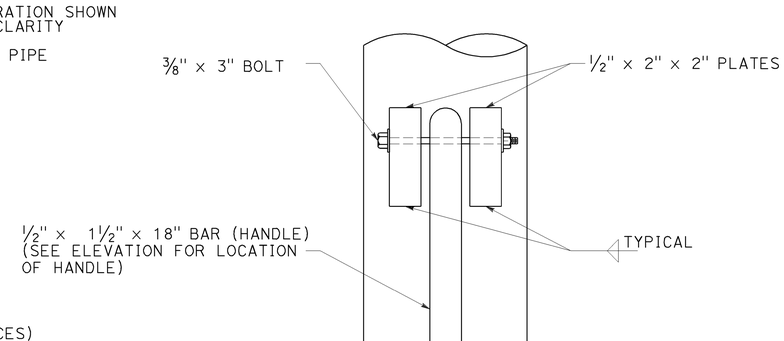

HANDLE DETAIL

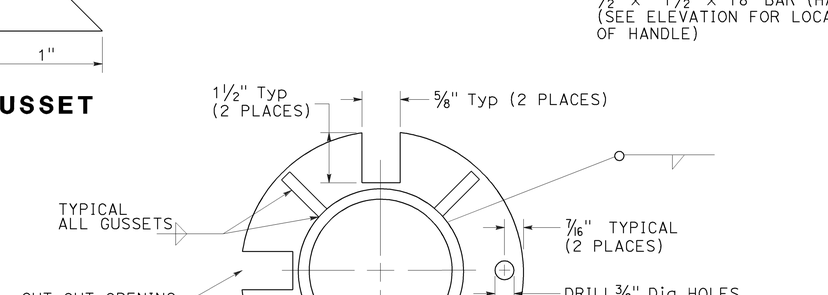

PLAN
LOCKING FLANGE
DETAIL A

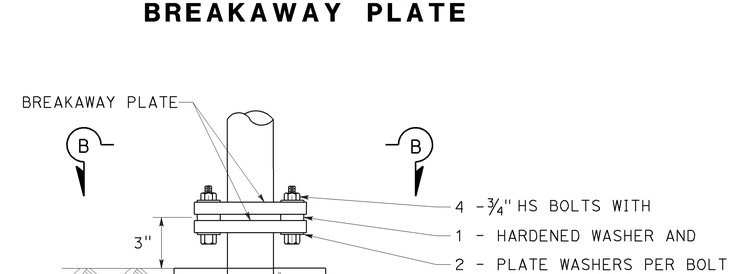

ELEVATION
DETAIL-B

SIGN DETAILS

NO SCALE **SD-4**

STATE OF CALIFORNIA - DEPARTMENT OF TRANSPORTATION
Caltrans® TRAFFIC OPERATIONS

FUNCTIONAL SUPERVISOR: TERRY ERLWEIN
CALCULATED-DESIGNED BY: JOEL NASH
CHECKED BY: TERRY ERLWEIN
REVISED BY
DATE REVISED

LAST REVISION 09-15-10
DATE PLOTTED => 15-SEP-2010
TIME PLOTTED => 16:35

Dist	COUNTY	ROUTE	POST MILES TOTAL PROJECT	SHEET No.	TOTAL SHEETS
09	Mno	270	0.0/9.8	20	32

Teresa Erlwein PE 7-15-10
REGISTERED CIVIL ENGINEER DATE

9-13-10
PLANS APPROVAL DATE

REGISTERED PROFESSIONAL ENGINEER Teresa Erlwein No. 61355 Exp 6-30-2011 CIVIL STATE OF CALIFORNIA

THE STATE OF CALIFORNIA OR ITS OFFICERS OR AGENTS SHALL NOT BE RESPONSIBLE FOR THE ACCURACY OR COMPLETENESS OF SCANNED COPIES OF THIS PLAN SHEET.

NOTES:

1. EXACT LOCATION OF ROADSIDE SIGNS TO BE DETERMINED BY THE ENGINEER.
2. EXISTING SIGN PANELS AND TURNABLE SIGN MASTS AND STEEL PORTION OF FOUNDATION TO BE REMOVED SHALL BE SALVAGED.

SIGN SUMMARY

SIGN NUMBER	STATION	LEFT	RIGHT	CODE	MESSAGE	SIZE (L x D)	REMOVE ROADSIDE SIGN	ROADSIDE SIGN (ONE POST)	ROADSIDE SIGN (TWO POST)	ROADSIDE SIGN (TURNABLE METAL POST)	SIGN MATERIALS: FURNISH SINGLE SHEET ALUMINUM SIGN: 0.063"-UNFRAMED	0.080"-UNFRAMED	0.063"-FRAMED	0.080"-FRAMED	SINGLE FACED	DOUBLE FACED	BACKGROUND: SHEETING COLOR	RETROREFLECTIVE ASTM TYPE	LEGEND: SHEETING COLOR	RETROREFLECTIVE ASTM TYPE	GRAFFITI FILM: STANDARD	PREMIUM	POSTS: SIZE	FNBT	FSBT	FEBT	FWBT	REMARK
							EA	EA	EA	EA	SQFT	SQFT	SQFT	SQFT														
1	00+51		X	R1-1	STOP	36" x 36"	1	1			9				X		RED	IX	WHITE	IX		X	4" x 6"				X	
2	01+00		X	SW48 (CA)	30' KPRA	48" x 36"	1	1				12			X		YELLOW	III	BLACK		X		6" x 6"			X		
3	01+80		X	W8-3	PAVEMENT ENDS	36" x 36"	1	1			9				X		YELLOW	III	BLACK		X		4" x 6"			X		
				W34A (CA)	10 MILES AHEAD	36" x 36"					7.5				X		YELLOW	III	BLACK		X					X		
4	02+36		X	SR20-1 (CA)	SNOW NOT REMOVED	48" x 30"	1	1				10			X		WHITE	III	BLACK			X	6" x 6"			X		
5	03+88		X	W1-5	WINDY ROAD	36" x 36"	1	1			9				X		YELLOW	III	BLACK		X		6" x 6"			X		
				W7-3A	NEXT 10 MILES	24" x 18"					3				X		YELLOW	III	BLACK		X					X		
6	05+29	X		W3-1	STOP AHEAD	48 x 48	1	1				16			X		YELLOW	IX	RED-BLACK	IX		X	6" x 6"				X	
7	06+90		X	W8-5	SLIPPERY WHEN WET	48 x 48	1			1		16			X		YELLOW	III	BLACK		X		TURNABLE			X		
8	08+29		X	W11-4	COW	36" x 36"	1	1			9				X		YELLOW	III	BLACK		X		4" x 6"			X		
9	10+22		X	SR A	BODIE 10AM - 4PM	108" x 48"	1		1					36	X		WHITE	III	BLACK			X	6" x 6"			X		SEE SHEET SD-1
				SR B	8	6" x 6"					0.25				X		WHITE	III	BLACK			X				X		SEE SHEET SD-1
				SRC	6	6" x 6"					0.25				X		WHITE	III	BLACK			X				X		SEE SHEET SD-1
10	13+43		X	R2-1	SPEED LIMIT 55	36" x 48"	1	1				12			X		WHITE	III	BLACK		X		6" x 6"			X		
11	16+07		X	SW A	GATES ACROSS ROAD	72" x 42"	1			1		21			X		YELLOW	III	BLACK			X	TURNABLE			X		SEE SHEET SD-2
12	20+81		X	SG A	NO SERVICES	102" x 24"	1		1				17		X		BLUE	III	WHITE	III		X	6" x 6"			X		SEE SHEET SD-1
				SG B	USE FEES COLLECTED	102" x 48"	1							34	X		BROWN	III	WHITE	III		X				X		SEE SHEET SD-1
13	22+60		X	W8-5	SLIPPERY WHEN WET	48" x 48"	1			1		16			X		YELLOW	III	BLACK		X		TURNABLE			X		
14	22+84	X		SR20-1 (CA)	SNOW NOT REMOVED	48" x 30"	1	1				10			X		WHITE	III	BLACK			X	ON GATE			X		
				TYPE N	RED DIAMOND	18" x 18"					2.25				X		RED	IX	BLACK			X					X	
15	29+73	X		SW A	GATES ACROSS ROAD	72" x 42"	1			1		21			X		YELLOW	III	BLACK			X	TURNABLE				X	SEE SHEET SD-2
16	37+93		X	W1-1 L†	LEFT TURN	36" x 36"	1	1			9				X		YELLOW	III	BLACK		X		6" x 6"			X		
				W13-1	20 MPH	24" x 24"					4				X		YELLOW	III	BLACK		X					X		
17	40+56		X	W1-6 L†	ARROW LEFT	36" x 18"	1	1			4.5				X		YELLOW	III	BLACK		X		4" x 6"			X		
				N1	YELLOW DIAMOND	18" x 18"					2.25				X		YELLOW	III	BLACK		X					X		
18	40+81		X	W1-6 R†	ARROW RIGHT	36" x 18"	1	1			4.5				X		YELLOW	III	BLACK		X		4" x 6"				X	
				N1	YELLOW DIAMOND	18" x 18"					2.25				X		YELLOW	III	BLACK		X						X	
19	43+44	X		W1-1 R†	RIGHT TURN	36" x 36"	1	1			9				X		YELLOW	III	BLACK		X		6" x 6"				X	
				W13-1	20 MPH	24" x 24"					4				X		YELLOW	III	BLACK		X						X	
20	46+68		X	W1-1 L†	LEFT TURN	36" x 36"	1	1			9				X		YELLOW	III	BLACK		X		6" x 6"			X		
				W13-1	20 MPH	24" x 24"					4				X		YELLOW	III	BLACK		X					X		
21	49+21		X	W1-6 L†	ARROW LEFT	36" x 18"	1	1			4.5				X		YELLOW	III	BLACK		X		4" x 6"			X		
				N1	YELLOW DIAMOND	18" x 18"					2.25				X		YELLOW	III	BLACK		X					X		
22	49+36		X	W1-6 R†	ARROW RIGHT	36" x 18"	1	1			4.5				X		YELLOW	III	BLACK		X		4" x 6"				X	
				N1	YELLOW DIAMOND	18" x 18"					2.25				X		YELLOW	III	BLACK		X						X	
23	52+19	X		W1-1 R†	RIGHT TURN	36" x 36"	1	1			9				X		YELLOW	III	BLACK		X		6" x 6"				X	
				W13-1	20 MPH	24" x 24"					4				X		YELLOW	III	BLACK		X						X	
24	70+84	X		G17 (CA)	ELEVATION 7000	36" x 18"	1	1			4.5				X		GREEN	III	WHITE	IV	X		4" x 6"				X	
				G17 (CA)	ELEVATION 7000	36" x 18"					4.5						GREEN	III	WHITE	IV	X					X		
					SUBTOTAL SHEET SQ-1		24	18	2	4	137.25	134	17	70														

SIGN QUANTITIES SQ-1

STATE OF CALIFORNIA - DEPARTMENT OF TRANSPORTATION
Caltrans® TRAFFIC OPERATIONS

FUNCTIONAL SUPERVISOR: TERRY ERLWEIN
CALCULATED-DESIGNED BY: JOEL NASH
CHECKED BY: TERRY ERLWEIN
REVISED BY
DATE REVISED

LAST REVISION 09-15-10 | DATE PLOTTED => 15-SEP-2010 | TIME PLOTTED => 16:35

Dist	COUNTY	ROUTE	POST MILES TOTAL PROJECT	SHEET No.	TOTAL SHEETS
09	Mno	270	0.0/9.8	21	32

Teresa Erlwein PE 7-15-10
REGISTERED CIVIL ENGINEER DATE

9-13-10
PLANS APPROVAL DATE

REGISTERED PROFESSIONAL ENGINEER Teresa Erlwein No. 61355 Exp 6-30-2011 CIVIL STATE OF CALIFORNIA

THE STATE OF CALIFORNIA OR ITS OFFICERS OR AGENTS SHALL NOT BE RESPONSIBLE FOR THE ACCURACY OR COMPLETENESS OF SCANNED COPIES OF THIS PLAN SHEET.

NOTES:
1. EXACT LOCATION OF ROADSIDE SIGNS TO BE DETERMINED BY THE ENGINEER.
2. EXISTING SIGN PANELS AND TURNABLE SIGN MASTS AND STEEL PORTION OF FOUNDATION TO BE REMOVED SHALL BE SALVAGED.

SIGN SUMMARY

SIGN NUMBER	STATION	LEFT	RIGHT	CODE	MESSAGE	SIZE (L x D)	REMOVE ROADSIDE SIGN	ROADSIDE SIGN (ONE POST)	ROADSIDE SIGN (TWO POST)	ROADSIDE SIGN (TURNABLE METAL POST)	SIGN MATERIALS: FURNISH SINGLE SHEET ALUMINUM SIGN: 0.063"-UNFRAMED	0.080"-UNFRAMED	0.063"-FRAMED	0.080"-FRAMED	SINGLE FACED	DOUBLE FACED	BACKGROUND: SHEETING COLOR	RETROREFLECTIVE ASTM TYPE	LEGEND: SHEETING COLOR	RETROREFLECTIVE ASTM TYPE	GRAFFITI FILM: STANDARD	PREMIUM	POSTS: SIZE	FNBT	FSBT	FEBT	FWBT	REMARK
							EA	EA	EA	EA	SQFT	SQFT	SQFT	SQFT														
25	95+88		X	W8-5	SLIPPERY WHEN WET	48" x 48"	1			1		16			X		YELLOW	III	BLACK		X		TURNABLE			X		
				W7-3A	NEXT 3 MILES	24" x 18"					3				X		YELLOW	III	BLACK		X					X		
26	120+51		X	W1-3 R†	REVERSE TURN RIGHT	36" x 36"	1	1			9				X		YELLOW	III	BLACK		X		6" x 6"			X		
				W13-1	25 MPH	24" x 24"					4				X		YELLOW	III	BLACK		X					X		
27	127+95	X		W1-3 R†	REVERSE TURN RIGHT	36" x 36"	1	1			9				X		YELLOW	III	BLACK		X		6" x 6"				X	
				W13-1	25 MPH	24" x 24"					4				X		YELLOW	III	BLACK		X						X	
28	152+88	X		W8-5	SLIPPERY WHEN WET	48" x 48"	1			1		16			X		YELLOW	III	BLACK		X		TURNABLE				X	
29	203+00	X		W1-2 R†	CURVE RIGHT	36" x 36"	1	1			9				X		YELLOW	III	BLACK		X		6" x 6"				X	
				W13-1	35 MPH	24" x 24"					4				X		YELLOW	III	BLACK		X						X	
30	216+75		X	G5 (CA)	BODIE 9	72" x 24"	1		1				12		X		GREEN	III	WHITE	IV		X	6" x 6"			X		SEE SHEET SD-2
31	237+52	X		W11-4	COW	36" x 36"	1	1			9				X		YELLOW	III	BLACK		X		4" x 6"				X	
				W11-4	COW	36" x 36"					9				X		YELLOW	III	BLACK		X					X		
32	241+26	X		W1-5	WINDY ROAD	36" x 36"	1	1			9				X		YELLOW	III	BLACK		X		6" x 6"				X	
				W7-3A	NEXT 5 MILES	24" x 18"					3				X		YELLOW	III	BLACK		X						X	
33	241+27		X	W1-2 R†	CURVE RIGHT	36" x 36"	1	1			9				X		YELLOW	III	BLACK		X		6" x 6"			X		
				W13-1	35 MPH	24" x 24"					4				X		YELLOW	III	BLACK		X					X		
34	254+16		X	W1-5	WINDY ROAD	36" x 36"	1	1			9				X		YELLOW	III	BLACK		X		6" x 6"				X	
				W7-3A	NEXT 5 MILES	24" x 18"					3				X		YELLOW	III	BLACK		X						X	
35	254+18	X		W1-2 L†	CURVE LEFT	36" x 36"	1	1			9				X		YELLOW	III	BLACK		X		6" x 6"				X	
				W13-1	35 MPH	24" x 24"					4				X		YELLOW	III	BLACK		X						X	
36	256+68	X		W8-5	SLIPPERY WHEN WET	48" x 48"	1			1		16			X		YELLOW	III	BLACK		X		TURNABLE				X	
				W7-3A	NEXT 3 MILES	24" x 18"					3				X		YELLOW	III	BLACK		X						X	
37	301+19	X		W1-1 R†	RIGHT TURN	36" x 36"	1	1			9				X		YELLOW	III	BLACK		X		6" x 6"				X	
				W13-1	30 MPH	24" x 24"					4				X		YELLOW	III	BLACK		X						X	
38	350+83	X		W7-1B	GRADE 7%	36" x 36"	1	1			9				X		YELLOW	III	BLACK		X		4" x 6"				X	
39	358+18	X		G17 (CA)	ELEVATION 8000	36" x 18"	1	1			4.5				X		GREEN	III	WHITE	IV	X		4" x 6"				X	
				G17 (CA)	ELEVATION 8000	36" x 18"					4.5				X		GREEN	III	WHITE	IV	X					X		
40	448+62		X	W1-1 L†	LEFT TURN	36" x 36"	1	1			9				X		YELLOW	III	BLACK		X		6" x 6"			X		
				W13-1	30 MPH	24" x 24"					4				X		YELLOW	III	BLACK		X					X		
41	469+56		X	G17 (CA)	ELEVATION 8000	36" x 18"					4.5				X		GREEN	III	WHITE	IV	X		4" x 6"			X		
				G17 (CA)	ELEVATION 8000	36" x 18"					4.5				X		GREEN	III	WHITE	IV	X						X	
42	471+46	X		W1-5	WINDY ROAD	36" x 36"	1	1			9				X		YELLOW	III	BLACK		X		6" x 6"				X	
				W7-3A	NEXT 9 MILES	24" x 18"					3				X		YELLOW	III	BLACK		X						X	
43	477+07		X	W1-1 L†	LEFT TURN	36" x 36"	1	1			9				X		YELLOW	III	BLACK		X		6" x 6"			X		
				W13-1	30 MPH	24" x 24"					4				X		YELLOW	III	BLACK		X					X		
44	483+79	X		W1-1 R†	RIGHT TURN	36" x 36"	1	1			9				X		YELLOW	III	BLACK		X		6" x 6"				X	
				W13-1	30 MPH	24" x 24"					4				X		YELLOW	III	BLACK		X						X	
					SUBTOTAL SHEET SQ-2		19	15	1	3	204	48	12	0														

SIGN QUANTITIES
SQ-2

STATE OF CALIFORNIA - DEPARTMENT OF TRANSPORTATION
Caltrans® TRAFFIC OPERATIONS

FUNCTIONAL SUPERVISOR: TERRY ERLWEIN
JOEL NASH
TERRY ERLWEIN
CALCULATED-DESIGNED BY
CHECKED BY
REVISED BY
DATE REVISED

LAST REVISION 09-15-10
DATE PLOTTED => 15-SEP-2010
TIME PLOTTED => 16:35

Dist	COUNTY	ROUTE	POST MILES TOTAL PROJECT	SHEET No.	TOTAL SHEETS
09	Mno	270	0.0/9.8	22	32

REGISTERED CIVIL ENGINEER 7-15-10 DATE

9-13-10
PLANS APPROVAL DATE

REGISTERED PROFESSIONAL ENGINEER Teresa Erlwein No. 61355 Exp 6-30-2011 CIVIL STATE OF CALIFORNIA

THE STATE OF CALIFORNIA OR ITS OFFICERS OR AGENTS SHALL NOT BE RESPONSIBLE FOR THE ACCURACY OR COMPLETENESS OF SCANNED COPIES OF THIS PLAN SHEET.

NOTES:
1. EXACT LOCATION OF ROADSIDE SIGNS TO BE DETERMINED BY THE ENGINEER.
2. EXISTING SIGN PANELS AND TURNABLE SIGN MASTS AND STEEL PORTION OF FOUNDATION TO BE REMOVED SHALL BE SALVAGED.

SIGN SUMMARY

SIGN NUMBER	STATION	LEFT	RIGHT	CODE	MESSAGE	SIZE (L x D)	REMOVE ROADSIDE SIGN	ROADSIDE SIGN (ONE POST)	ROADSIDE SIGN (TWO POST)	ROADSIDE SIGN (TURNABLE METAL POST)	SIGN MATERIALS: FURNISH SINGLE SHEET ALUMINUM SIGN: 0.063"-UNFRAMED	0.080"-UNFRAMED	0.063"-FRAMED	0.080"-FRAMED	SINGLE FACED	DOUBLE FACED	BACKGROUND: SHEETING COLOR	RETROREFLECTIVE ASTM TYPE	LEGEND: SHEETING COLOR	RETROREFLECTIVE ASTM TYPE	GRAFFITI FILM: STANDARD	PREMIUM	POSTS: SIZE	FNBT	FSBT	FEBT	FWBT	REMARK
							EA	EA		EA	SQFT	SQFT																
45	510+63	X		W8-5	SLIPPERY WHEN WET	48" x 48"	1			1		16			X		YELLOW	III	BLACK		X		TURNABLE				X	
46	512+75		X	W8-8	ROUGH ROAD	36" x 36"		1			9				X		YELLOW	III	BLACK		X		4" x 6"			X		
47	513+07	X		R2-1	SPEED LIMIT 55	36" x 48"	1	1				12			X		WHITE	III	BLACK		X		6" x 6"				X	
48	515+55	X		W7-1B	GRADE 8%	36" x 36"	1	1			9				X		YELLOW	III	BLACK		X		4" x 6"				X	
49	515+75		X	W8-3	PAVEMENT ENDS	36" x 36"	1	1			9				X		YELLOW	III	BLACK		X		4" x 6"			X		
50	517+35		X	G13 (CA)	BODIE	72" x 60"	1		1					30	X		CREAM	II	BROWN			X	6" x 8"			X		SEE SHEET SD-2
				SG C	PARK HOURS	72" x 36"							18		X		BROWN	III	WHITE	IV		X				X		SEE SHEET SD-2
				SG D	8	6" x 6"					0.25				X		WHITE	III	BLACK			X				X		SEE SHEET SD-2
				SG E	6	6" x 6"					0.25				X		WHITE	III	BLACK			X				X		SEE SHEET SD-2
51	517+44	X		W1-5	WINDY ROAD	36" x 36"	1	1			9				X		YELLOW	III	BLACK		X		6" x 6"				X	
				W7-3A	NEXT 10 MILES	24" x 18"					3				X		YELLOW	III	BLACK		X		6" x 6"				X	
52	518+88	X		G50 (CA)	WEST	21" x 9"	1	1			1.3				X		GREEN	III	WHITE	IV	X						X	
				G28-1	STATE ROUTE 270	24" x 21"					3.5				X		GREEN	III	WHITE	IV	X						X	
					SUBTOTAL SHEET SQ-3		7	6	1	1	44.3	28	18	30														
					SUBTOTAL SHEET SQ-1		24	18	2	4	137.25	134	17	70														
					SUBTOTAL SHEET SQ-2		19	15	1	3	204	48	12	0														
					TOTAL		50	39	4	8	385.55	210	47	100														

SIGN QUANTITIES
SQ-3

JOEL NASH — REVISED BY
TERRY ERLWEIN — DATE REVISED
CALCULATED-DESIGNED BY
CHECKED BY
FUNCTIONAL SUPERVISOR
TERRY ERLWEIN

STATE OF CALIFORNIA - DEPARTMENT OF TRANSPORTATION
Caltrans TRAFFIC OPERATIONS

LAST REVISION 09-15-10 | DATE PLOTTED => 15-SEP-2010 | TIME PLOTTED => 16:35

Dist	COUNTY	ROUTE	POST MILES TOTAL PROJECT	SHEET No.	TOTAL SHEETS
09	Mno	270	0.0/9.8	23	32

REGISTERED CIVIL ENGINEER 7-15-10 DATE

9-13-10
PLANS APPROVAL DATE

REGISTERED PROFESSIONAL ENGINEER BRIAN WESLING No. 62509 Exp. 9-30-11 CIVIL STATE OF CALIFORNIA

THE STATE OF CALIFORNIA OR ITS OFFICERS OR AGENTS SHALL NOT BE RESPONSIBLE FOR THE ACCURACY OR COMPLETENESS OF SCANNED COPIES OF THIS PLAN SHEET.

NOTES:

1. (N) - NOT A SEPARATE PAY ITEM, FOR INFORMATION ONLY
2. QUANTITIES OF TEMPORARY PAVEMENT MARKINGS (PAINT) AND TEMPORARY TRAFFIC STRIPE (PAINT) APPLY TO TEMPORARY DELINEATION PLACED ON COLD FOAM IN-PLACE RECYCLED MATERIAL ONLY.

ROADWAY QUANTITIES

STATION TO STATION LOCATION	HOT MIX ASPHALT	CLASS 2 AGGREGATE BASE	COLD FOAM IN-PLACE RECYCLING (CFIPR)	STABILIZING AGENT (FOAMING ASPHALT)	STABILIZING AGENT (CEMENTITIOUS MATERIAL)	ROADWAY EXCAVATION	ASPHALTIC EMULSION	IMPORTED MATERIAL (SHOULDER BACKING)
	TON	CY	SQYD	TON	TON	CY	TON	STA
1+00 to 517.87	18,599		140,260	1260	1007		144	1040
ROAD APPROACHES 1-9	190		-	-			1	
ROAD APPROACH 504+50	11	8	-	-		14	1	
Exist 24' WIDE METAL CATTLE GUARD		16						
TOTAL	18,800	24	140,260	1260	1007	14	146	1040

DETECTOR LOOP

LOCATION	EACH
STA 1+00	2
TOTAL	2

REMOVE CONCRETE

DESCRIPTION	STATION	CY
Exist 24' WIDE METAL CATTLE GUARD	51+72	16
	TOTAL	16

REMOVE MARKERS AND DELINEATORS

REMOVE DELINEATOR	REMOVE MARKER
EA	EA
299	75

MARKER (CULVERT)

	EA
CULVERT MARKERS	84
TOTAL	84

TEMPORARY PAVEMENT MARKINGS (PAINT) SEE NOTE 2.

STATION	Lt	Rt	LIMIT LINE	WORDS "STOP"		WORDS "AHEAD"	
			SQFT	EA (N)	SQ FT	EA (N)	SQ FT
0+51	X		36				
0+59	X			1	22		
4+80	X					1	31
5+20	X			1	22		
SUBTOTAL			36		44		31
TOTAL			111				

TEMPORARY TRAFFIC STRIPE (PAINT) SEE NOTE 2.

STATION TO STATION			LENGTH (N)	DETAIL No. 5	18*	18**	21	27B
			LF	LF	LF	LF	LF	LF
00+28	-	77+63	7735				7735	15,526
77+63	-	85+00	737		737			1474
85+00	-	99+38	1438	1438				2876
99+38	-	106+55	717			717		1434
106+55	-	202+32	9577				9577	19,154
202+32		207+33	501		501			1002
207+33	-	218+98	1165	1165				2330
218+98	-	225+08	610			610		1220
225+08	-	233+40	832				832	1664
233+40	-	240+47	707		707			1414
240+47		242+19	172	172				344
242+19	-	249+63	744			744		1488
249+63	-	270+30	2067				2067	4134
270+30	-	274+92	462		462			924
274+92	-	280+00	508	508				1016
280+00		287+38	738			738		1476
287+38	-	295+74	836				836	1672
295+74	-	303+61	787		787			1574
303+61	-	305+40	179	179				358
305+40	-	311+14	574			574		1148
311+14		348+66	3752				3752	7504
348+66	-	354+85	619		619			1238
354+85	-	366+23	1138	1138				2276
366+23	-	372+48	625			625		1250
372+48	-	378+90	642		642			1284
378+90	-	404+61	2571	2571				5142
404+61	-	412+06	745			745		1490
412+06	-	417+88	582				582	1164
417+88	-	420+72	284		284			568
420+72	-	423+80	308	308				616
423+80	-	429+41	561			561		1122
429+41	-	493+90	6449				6449	12,898
493+90	-	500+71	681		681			1362
500+71	-	505+91	520	520				1040
505+91	-	512+11	620			620		1240
512+11	-	517+86	575				575	1178
SUBTOTAL				7999	5420	5934	32,405	103,600
TOTAL				155,358				

* THIS COLUMN DENOTES EASTBOUND PASSING ALLOWED, NO WEST BOUND PASSING.
** THIS COLUMN DENOTES WESTBOUND PASSING ALLOWED, NO EAST BOUND PASSING.

SUMMARY OF QUANTITIES

NO SCALE

Q-1

STATE OF CALIFORNIA - DEPARTMENT OF TRANSPORTATION
Caltrans DESIGN
FUNCTIONAL SUPERVISOR: RORY QUINCE
CALCULATED-DESIGNED BY: ENRICO DE JESUS
CHECKED BY: BRIAN P WESLING
REVISED BY
DATE REVISED

LAST REVISION 09-15-10
DATE PLOTTED => 15-SEP-2010
TIME PLOTTED => 16:35

Dist	COUNTY	ROUTE	POST MILES TOTAL PROJECT	SHEET No.	TOTAL SHEETS
09	Mno	270	0.0/9.8	24	32

8-13-10
REGISTERED ELECTRICAL ENGINEER DATE

9-13-10
PLANS APPROVAL DATE

REGISTERED PROFESSIONAL ENGINEER MITCHELL NGO No. 18920 Exp. 12-01-11 ELECTRICAL STATE OF CALIFORNIA

THE STATE OF CALIFORNIA OR ITS OFFICERS OR AGENTS SHALL NOT BE RESPONSIBLE FOR THE ACCURACY OR COMPLETENESS OF SCANNED COPIES OF THIS PLAN SHEET.

NOTES:

1. COIL 6′ OF LOOP CONDUCTORS IN Exist TYPE M CABINET.
2. DETECTOR LOOPS SHALL BE INSTALLED WITH 4 TURNS OF LOOP WIRE.

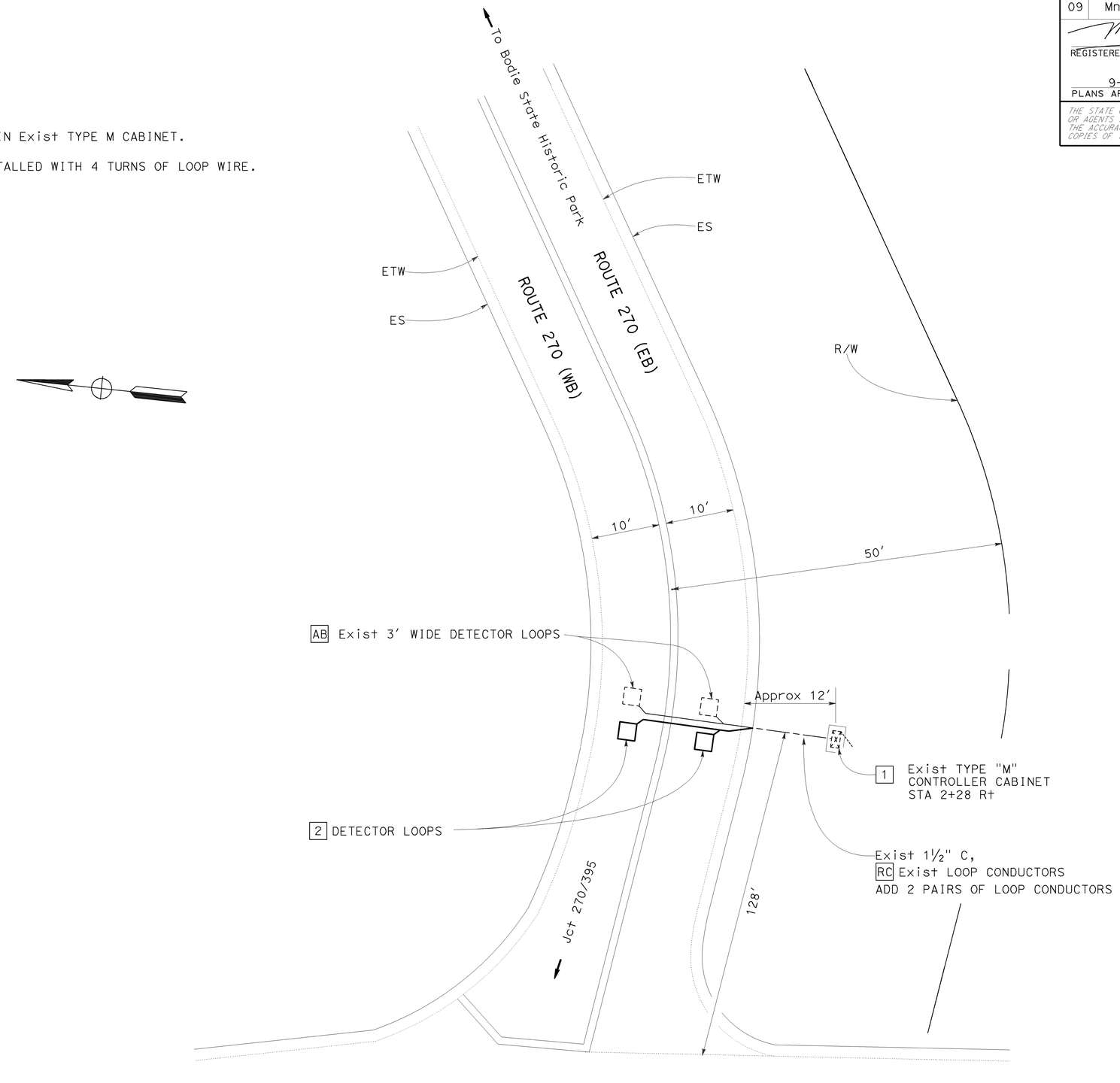

THIS PLAN IS ACCURATE FOR ELECTRICAL WORK ONLY.

DETECTOR LOOP

NO SCALE **E-1**

STATE OF CALIFORNIA - DEPARTMENT OF TRANSPORTATION
Caltrans® **DESIGN**

FUNCTIONAL SUPERVISOR: RORY QUINCE

CALCULATED-DESIGNED BY: BRIAN P WESLING
CHECKED BY: MITCHELL NGO
REVISED BY
DATE REVISED

LAST REVISION 09-15-10
DATE PLOTTED => 15-SEP-2010
TIME PLOTTED => 16:35

DIST	COUNTY	ROUTE	POST MILES TOTAL PROJECT	SHEET NO.	TOTAL SHEETS
09	Mno	270	0.0/9.8	25	32

Randell D. Hiatt
REGISTERED CIVIL ENGINEER

June 6, 2008
PLANS APPROVAL DATE

REGISTERED PROFESSIONAL ENGINEER
Randell D. Hiatt
No. C50200
Exp. 6-30-09
CIVIL
STATE OF CALIFORNIA

The State of California or its officers or agents shall not be responsible for the accuracy or completeness of electronic copies of this plan sheet.

To accompany plans dated 09-13-10

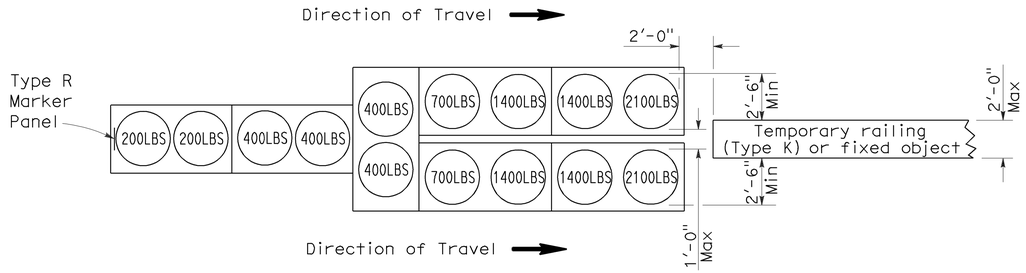

ARRAY 'TU14'

Approach speed 45 mph or more

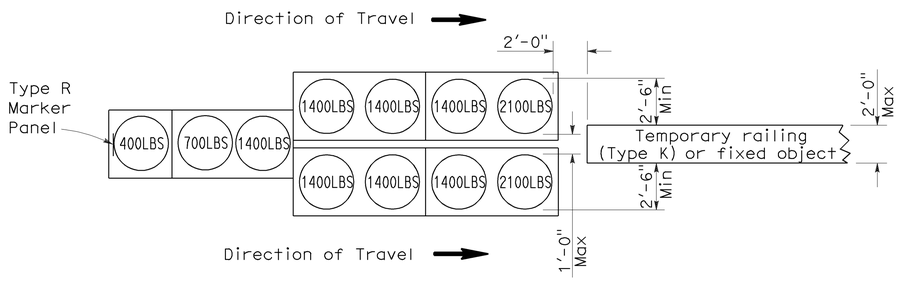

ARRAY 'TU11'

Approach speed less than 45 mph

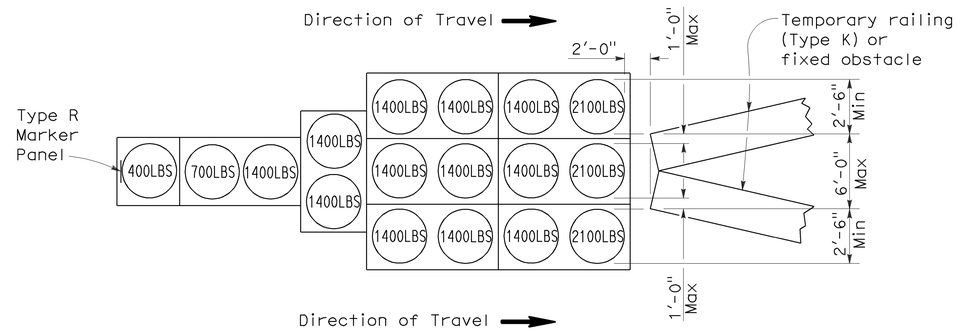

ARRAY 'TU17'

Approach speed less than 45 mph

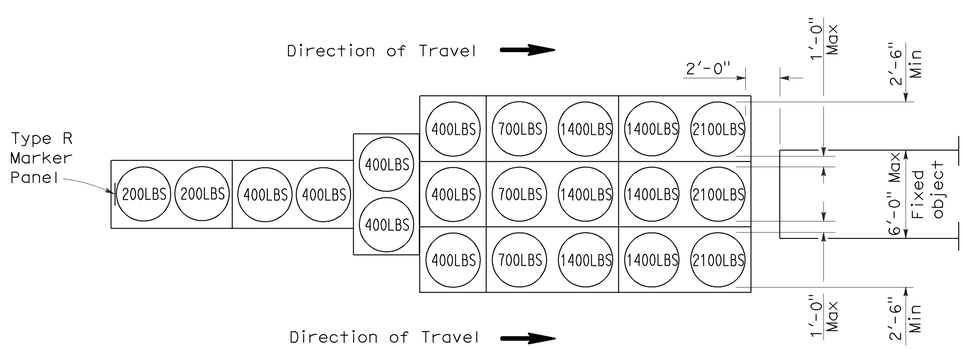

ARRAY 'TU21'

Approach speed 45 mph or more

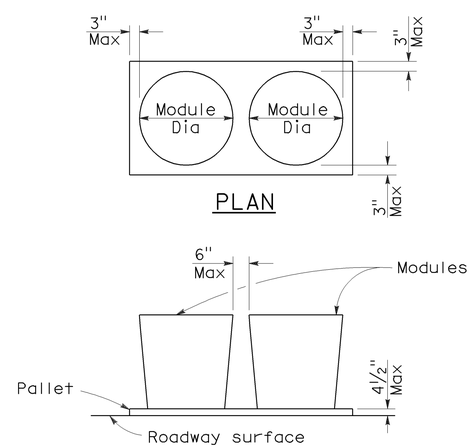

ELEVATION

CRASH CUSHION PALLET DETAIL

See Note 7

NOTES:

1. (XXX) Indicates sand filled module location and weight of sand in pounds for each module. Module spacing is based on the greater diameter of the module.
2. All sand weights are nominal.
3. Temporary crash cushion arrays shall not encroach on the traveled way.
4. Place the top of Type R marker panel 1" below the module lid.
5. Refer to Standard Plan A73B for marker details.
6. Approach speeds indicated conform to NCHRP 350 Report criteria.
7. Use of pallets is optional.

STATE OF CALIFORNIA
DEPARTMENT OF TRANSPORTATION

TEMPORARY CRASH CUSHION, SAND FILLED (UNIDIRECTIONAL)

NO SCALE

RSP T1A DATED JUNE 6, 2008 SUPERSEDES STANDARD PLAN T1A
DATED MAY 1, 2006 - PAGE 211 OF THE STANDARD PLANS BOOK DATED MAY 2006.

REVISED STANDARD PLAN RSP T1A

2006 REVISED STANDARD PLAN RSP T1A

5-15-08

DIST	COUNTY	ROUTE	POST MILES TOTAL PROJECT	SHEET NO.	TOTAL SHEETS
09	Mno	270	0.0/9.8	26	32

Randell D. Hiatt
REGISTERED CIVIL ENGINEER

June 6, 2008
PLANS APPROVAL DATE

REGISTERED PROFESSIONAL ENGINEER
Randell D. Hiatt
No. C50200
Exp. 6-30-09
CIVIL
STATE OF CALIFORNIA

The State of California or its officers or agents shall not be responsible for the accuracy or completeness of electronic copies of this plan sheet.

To accompany plans dated 09-13-10

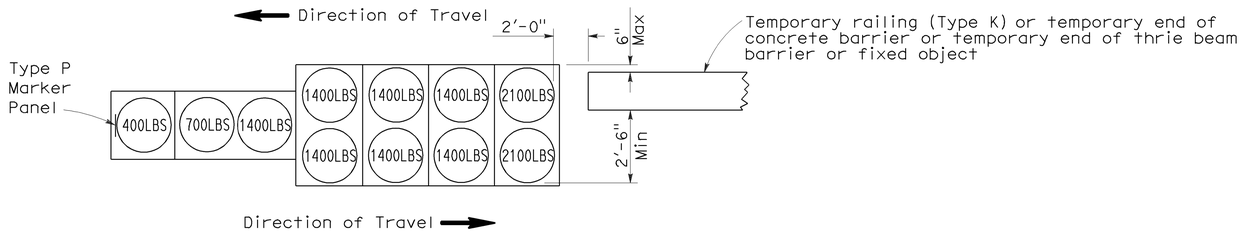

ARRAY 'TB11'

Approach speed less than 45 mph

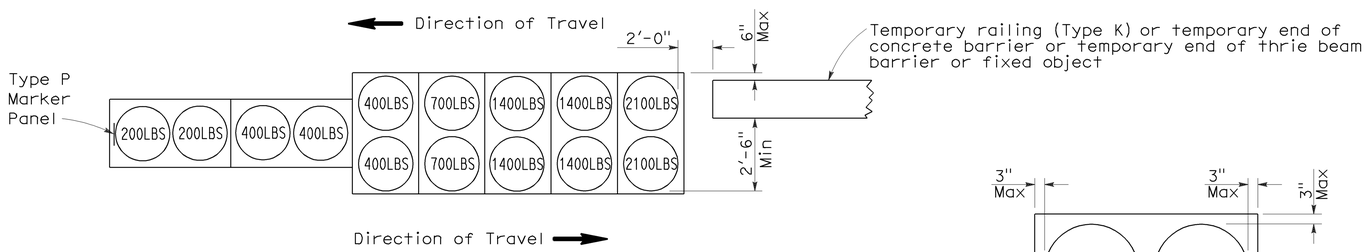

ARRAY 'TB14'

Approach speed 45 mph or more

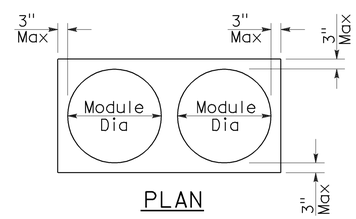

PLAN

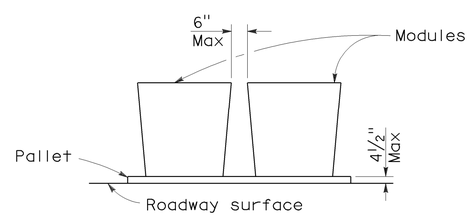

ELEVATION

CRASH CUSHION PALLET DETAIL

See Note 7

NOTES:

1. (XXX) Indicates sand filled module location and weight of sand in pounds for each module. Module spacing is based on the greater diameter of the module.
2. All sand weights are nominal.
3. Temporary crash cushion arrays shall not encroach on the traveled way.
4. Place the Type P marker panel so that the bottom of the panel rests upon the pallet.
5. Refer to Standard Plan A73B for marker details.
6. Approach speeds indicated conform to NCHRP 350 Report criteria.
7. Use of pallets is optional.

STATE OF CALIFORNIA
DEPARTMENT OF TRANSPORTATION

TEMPORARY CRASH CUSHION, SAND FILLED (BIDIRECTIONAL)

NO SCALE

RSP T1B DATED JUNE 6, 2008 SUPERSEDES STANDARD PLAN T1B
DATED MAY 1, 2006 - PAGE 212 OF THE STANDARD PLANS BOOK DATED MAY 2006.

REVISED STANDARD PLAN RSP T1B

2006 REVISED STANDARD PLAN RSP T1B

5-15-08

DIST	COUNTY	ROUTE	POST MILES TOTAL PROJECT	SHEET NO.	TOTAL SHEETS
09	Mno	270	0.0/9.8	27	32

Randell D. Hiatt
REGISTERED CIVIL ENGINEER

June 6, 2008
PLANS APPROVAL DATE

REGISTERED PROFESSIONAL ENGINEER
Randell D. Hiatt
No. C50200
Exp. 6-30-09
CIVIL
STATE OF CALIFORNIA

The State of California or its officers or agents shall not be responsible for the accuracy or completeness of electronic copies of this plan sheet.

To accompany plans dated 09-13-10

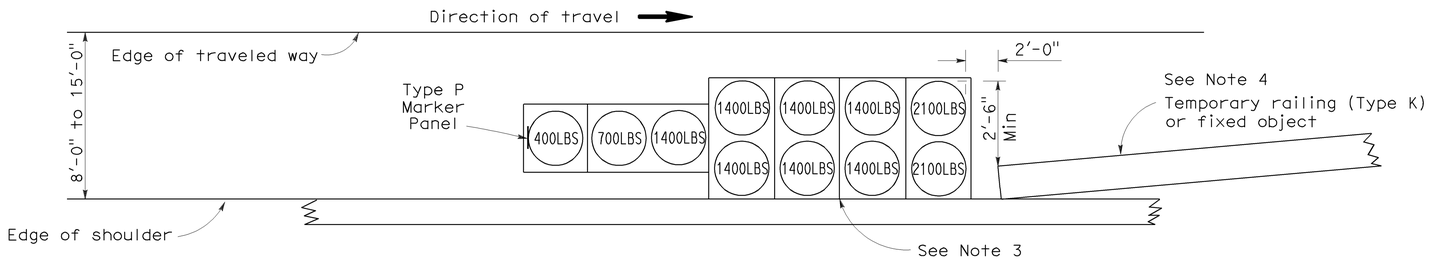

ARRAY 'TS11'

Approach speed less than 45 mph
See Note 9

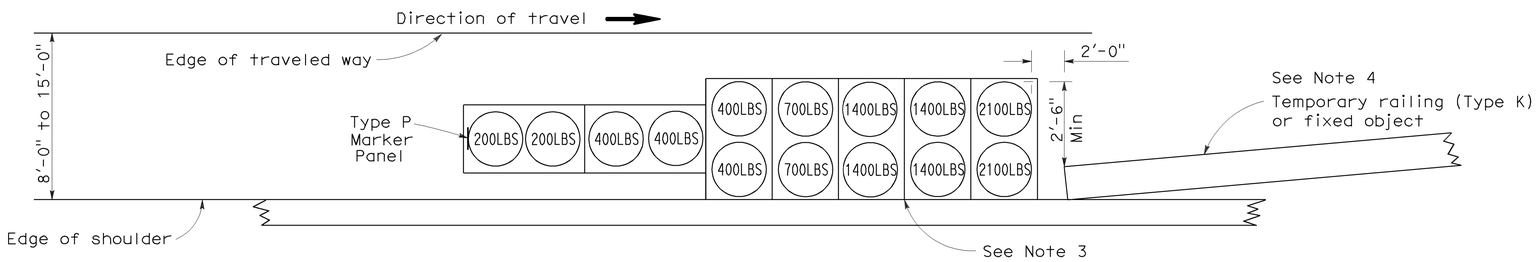

ARRAY 'TS14'

Approach speed 45 mph or more
See Note 9

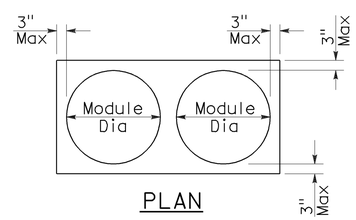

PLAN

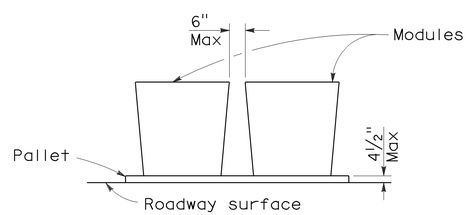

ELEVATION

CRASH CUSHION PALLET DETAIL

See Note 11

NOTES:

1. (XXX) Indicates sand filled module location and weight of sand in pounds for each module. Module spacing is based on the greater diameter of the module.
2. All sand weights are nominal.
3. The temporary crash cushion arrays shown on this plan shall be used only in locations where there will be traffic on one side of the temporary crash cushion array.
4. If the fixed object or approach end of the temporary railing is less than 15'-0" from the edge of traveled way, a temporary crash cushion is required in a construction or work zone.
5. Temporary crash cushion arrays shall not encroach on the traveled way.
6. Arrays for median shoulders shall conform to details shown on this plan for outside shoulders.
7. Place the Type P marker panel so that the bottom of the panel rests upon the pallet and faces traffic.
8. Refer to Standard Plan A73B for marker details.
9. For shoulder widths less than 8'-0", appropriate approved crash cushion protection, other than sand filled modules, shall be provided at fixed objects and at approach ends of temporary railing. The specific type of crash cushion shall be as shown on the project plans or as specified in the Special Provisions, or if not shown on the project plans or specified in the Special Provisions, shall be as approved by the Engineer.
10. Approach speeds indicated conform to NCHRP 350 Report criteria.
11. Use of pallets is optional.

STATE OF CALIFORNIA
DEPARTMENT OF TRANSPORTATION

TEMPORARY CRASH CUSHION, SAND FILLED (SHOULDER INSTALLATIONS)

NO SCALE

RSP T2 DATED JUNE 6, 2008 SUPERSEDES STANDARD PLAN T2
DATED MAY 1, 2006 - PAGE 213 OF THE STANDARD PLANS BOOK DATED MAY 2006.

REVISED STANDARD PLAN RSP T2

2006 REVISED STANDARD PLAN RSP T2

5-15-08

DIST	COUNTY	ROUTE	POST MILES TOTAL PROJECT	SHEET NO.	TOTAL SHEETS
09	Mno	270	0.0/9.8	28	32

LICENSED LANDSCAPE ARCHITECT

April 3, 2009
PLANS APPROVAL DATE

LICENSED LANDSCAPE ARCHITECT
Robert B. Schott 3695
Signature
11-30-10
Renewal Date
2-25-09
Date
STATE OF CALIFORNIA

The State of California or its officers or agents shall not be responsible for the accuracy or completeness of electronic copies of this plan sheet.

To accompany plans dated 09-13-10

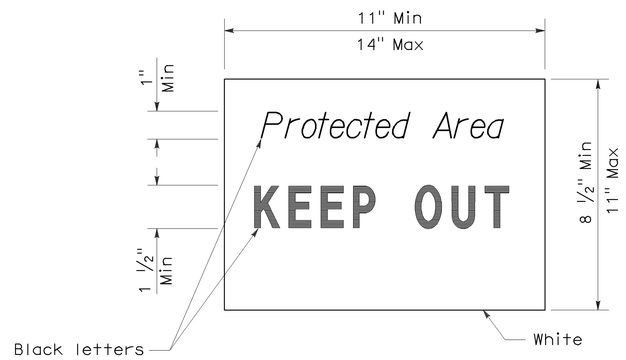

SIGN DETAIL

NOTE:

1. Temporary silt fence and temporary straw bale barrier shown for reference purposes only.

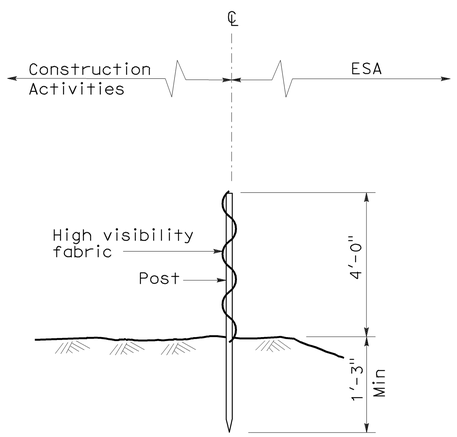

SECTION
TEMPORARY FENCE (TYPE ESA)

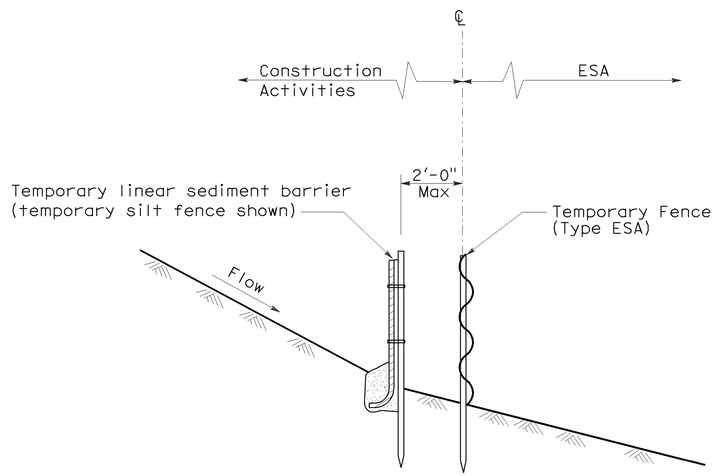

SECTION
PLACEMENT DETAIL
FOR TEMPORARY LINEAR SEDIMENT BARRIER
USED WITH TEMPORARY
FENCE (TYPE ESA)
(See Note 1)

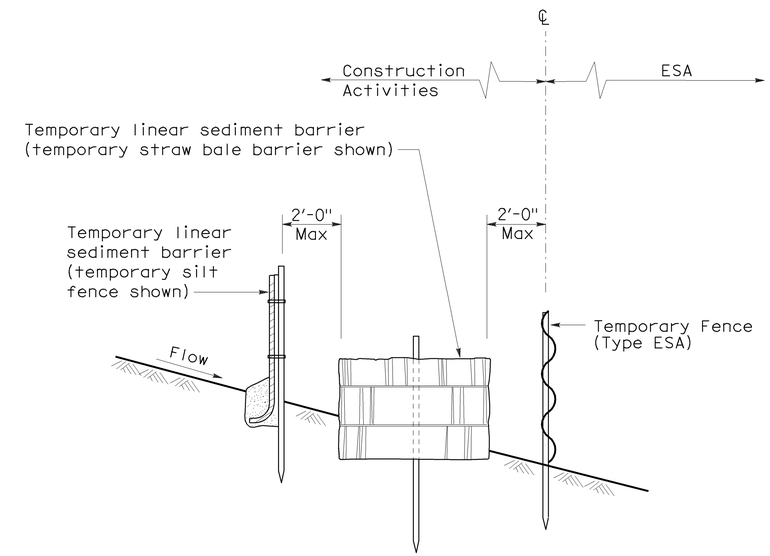

SECTION
PLACEMENT DETAIL
FOR TEMPORARY SILT FENCE
AND TEMPORARY STRAW BALE BARRIER
USED WITH TEMPORARY FENCE (TYPE ESA)
(See Note 1)

STATE OF CALIFORNIA
DEPARTMENT OF TRANSPORTATION

TEMPORARY WATER POLLUTION CONTROL DETAILS [TEMPORARY FENCE (TYPE ESA)]

NO SCALE

NSP T65 DATED APRIL 3, 2009 SUPPLEMENTS
THE STANDARD PLANS BOOK DATED MAY 2006.

NEW STANDARD PLAN NSP T65

2006 NEW STANDARD PLAN NSP T65

1-7-09

DIST	COUNTY	ROUTE	POST MILES TOTAL PROJECT	SHEET NO.	TOTAL SHEETS
09	Mno	270	0.0/9.8	29	32

REGISTERED ELECTRICAL ENGINEER

October 5, 2007
PLANS APPROVAL DATE

REGISTERED PROFESSIONAL ENGINEER Jeffery G. McRae No. E14512 Exp. 6-30-08 ELECTRICAL STATE OF CALIFORNIA

The State of California or its officers or agents shall not be responsible for the accuracy or completeness of electronic copies of this plan sheet.

To accompany plans dated 09-13-10

ELECTROLIERS

STANDARD TYPES
15, 15D
15 STRUCTURE
21, 21D STRUCTURE
30
31
32
35
36-20A

High mast light pole

Double Arm lighting standard

Existing electrolier

Electrolier foundation (Future installation)

NOTES:

1. Luminaires shall be 310 W HPS when installed on Type 21, 21D, 30, 31, 32, 35 and 36-20A Standards, unless otherwise specified. Luminaires shall be 200 W HPS when installed on other type standards or poles, unless otherwise specified.
2. Luminaires shall be the cutoff type, ANSI Type Ⅲ medium cutoff lighting distribution, unless otherwise specified.
3. Variations noted adjacent to symbol on project plans.

Electrolier (see project notes or project plans)

Luminaire on wood pole

STANDARD NOTES:

- AB Abandon. If applied to conduit, remove conductors.
- BC Install pull box in existing conduit run.
- BP Pedestrian barricade, type as indicated on plan.
- CB Install conduit into existing pull box.
- CC Connect new and existing conduit. Remove existing conductors and install conductors as indicated.
- CF Conduit to remain for future use. Remove conductors. Install pull wire or rope.
- DH Detector handhole.
- FA Foundation to be abandoned.
- IS Install sign on signal mast arm.
- NS No slip base on standard.
- PEC Photoelectric control.
- PEU Photoelectric unit.
- RC Equipment or material to be removed and become the property of the Contractor.
- RE Remove electrolier, fuses and ballast. Tape ends of conductors.
- RL Relocate equipment.
- RR Remove and reuse equipment.
- RS Remove and salvage equipment.
- SC Splice new to existing conductors.
- SD Service disconnect.
- SF Standard to remain for future use. Remove luminaire, pole conductors, fuses and ballast.
- TSP Telephone service point.

ABBREVIATIONS AND EQUIPMENT DESIGNATIONS

PROPOSED	EXISTING	
BBS	bbs	Battery backup system
BC	bc	Bolt circle
C	C	Conduit
CCTV	cctv	Closed circuit television
CKT	ckt	Circuit
CMS	cms	Changeable message sign
DLC	dlc	Loop detector lead-in cable
EMS	ems	Extinguishable message sign
EVC	evc	Emergency vehicle cable
EVD	evd	Emergency vehicle detector
FB	fb	Flashing beacon
FBCA	fbca	Flashing beacon control assembly
FBS	fbs	Flashing beacon with slip base
FO	fo	Fiber optic
G	G	Ground (Equipment Grounding Conductor)
GFCI	GFCI	Ground fault circuit interrupt
HAR	har	Highway advisory radio
HEX	hex	Hexagonal
HPS	hps	High pressure sodium
IISNS	iisns	Internally illuminated street name sign
ISL	isl	Induction sign lighting
LED	led	Light emitting diode
LMA	lma	Luminaire mast arm
LPS	lps	Low pressure sodium
LTG	ltg	Lighting
LUM	lum	Luminaire
MAT	mat	Mast arm mounting vehicle signal faces, top attachment
MAS	mas	Mast arm mounting vehicle signal faces, side attachment
MAS-4A	mas-4A	Mast arm mounting vehicle signal faces, side attachment - 4 signal section
MAS-4B	mas-4B	
MAS-4C	mas-4C	
MAS-5A	mas-5A	Mast arm mounting vehicle signal faces, side attachment - 5 signal section
MAS-5B	mas-5B	
MC	mc	Mercury contactor
M/M	m/m	Multiple to multiple transformer
MT	mt	Conduit with pull wire or rope only
MTG	mtg	Mounting
	mv	Mercury vapor lighting fixture
N	N	Neutral (Grounded Conductor)
NC	NC	Normally closed
NO	NO	Normally open
PB	pb	Pull box
PEC	pec	Photoelectric control (Type Ⅰ, Ⅱ, Ⅲ, Ⅳ or Ⅴ as shown)
PED	ped	Pedestrian
PEU	peu	Photoelectric unit
PPB	ppb	Pedestrian push button
RL		Relocated equipment
RM	rm	Ramp metering
SB	sb	Slip base
SIC	sic	Signal interconnect cable
SIG	sig	Signal
SMA	sma	Signal mast arm
SNS	sns	Street name sign
SP	sp	Service point
TDC	tdc	Telephone demarcation cabinet
TMS	tms	Traffic monitoring station
TOS	tos	Traffic Operations System
VEH	veh	Vehicle
XFMR	xfmr	Transformer
COMM	comm	Communication
RWIS	rwis	Roadway weather information system

SOFFIT AND WALL MOUNTED LUMINAIRES

Pendant, 70 W HPS unless otherwise specified.

Flush, 70 W HPS unless otherwise specified.

Wall surface, 70 W HPS unless otherwise specified.

Existing soffit or wall luminaire to remain unmodified.

Existing soffit or wall luminaire to be modified as specified.

NOTE:

Arrow indicates "street side" of luminaire.

STATE OF CALIFORNIA
DEPARTMENT OF TRANSPORTATION

ELECTRICAL SYSTEMS (SYMBOLS AND ABBREVIATIONS)

NO SCALE

RSP ES-1A DATED OCTOBER 5, 2007 SUPERSEDES STANDARD PLAN ES-1A DATED MAY 1, 2006 - PAGE 400 OF THE STANDARD PLANS BOOK DATED MAY 2006.

REVISED STANDARD PLAN RSP ES-1A

2006 REVISED STANDARD PLAN RSP ES-1A

DIST	COUNTY	ROUTE	POST MILES TOTAL PROJECT	SHEET NO.	TOTAL SHEETS
09	Mno	270	0.0/9.8	30	32

REGISTERED ELECTRICAL ENGINEER

October 5, 2007
PLANS APPROVAL DATE

REGISTERED PROFESSIONAL ENGINEER Jeffery G. McRae No. E14512 Exp. 6-30-08 ELECTRICAL STATE OF CALIFORNIA

The State of California or its officers or agents shall not be responsible for the accuracy or completeness of electronic copies of this plan sheet.

To accompany plans dated 09-13-10

CONDUIT

PROPOSED	EXISTING	
		Lighting Conduit, unless otherwise indicated or noted
		Traffic signal conduit
C	c	Communication conduit
T	t	Telephone conduit
F	f	Fire alarm conduit
FO	fo	Fiber optic conduit
		Conduit termination (RSP ES-9A C)
R	r	Conduit riser in/on structure or service pole

SERVICE EQUIPMENT

PROPOSED	EXISTING	
OH	oh	Overhead lines
U	U	Wood pole "U" indicates utility owned
		Pole guy with anchor
		Utility transformer - ground mounted
III		Service equipment enclosure type
		Service equipment enclosure door indicates front of enclosure
T	t	Telephone demarcation cabinet

POLE-MOUNTED SERVICE DESIGNATION

Type of installation

TYPE H SERVICE - 28'-10" ← Pole height above grade

ILLUMINATED OVERHEAD SIGN

PROPOSED	EXISTING	
		Overhead sign - Single post
		Overhead sign - Two post
		Overhead sign - Mounted on structure
		Overhead sign with electrolier

SIGNAL EQUIPMENT

PROPOSED	EXISTING	
		Pedestrian signal face
		Pedestrian push button post
		Pedestrian barricade
		Vehicle signal face (with backplate, 3-Section: red, yellow and green)
		Vehicle signal face with angle visors
PV	PV	Modifications of basic symbols: "L" indicates all non-arrow sections louvered "LG" indicates louvered green section only "PV" indicates 12" programmed visibility sections "8" indicates all 8" sections (only when specified)
		Type 15TS and Vehicle signal face
		Vehicle signal face with red, yellow and green left arrow sections
		Vehicle signal face with red and yellow sections and up green arrow
		Vehicle signal face (5 Section) with red, yellow and green sections and yellow and green right arrows
		Type 1 Standard and attached vehicle signal faces
		Standard with signal mast arm only and attached vehicle signal faces and internally illuminated street name sign
		Type 33 Standard, Left-turn vehicle signal face and sign
		Standard with luminaire and signal mast arms and attached vehicle signal faces
		Cantilever flashing beacon Type 9 Frame, with a sign unless otherwise specified or indicated
		Type 15-FBS Standard with two vehicle signal face sections with lens, backplate and visor with a sign
R	Y	Flashing beacon. One vehicle signal face section with lens, backplate and visor. "R" indicates red indication, "Y" indicates yellow indication
		Controller assembly. Door indicates front of cabinet

SIGNAL EQUIPMENT Cont

PROPOSED	EXISTING	
		Guard post
		Type 1 Standard with "Meter On" sign
		Emergency Vehicle detector

NOTES:

1. All signal sections shall be 12" unless shown otherwise.
2. Signal heads shall be provided with backplates unless shown otherwise.
3. Signal indication shall be LED.

STATE OF CALIFORNIA
DEPARTMENT OF TRANSPORTATION

ELECTRICAL SYSTEMS (SYMBOLS AND ABBREVIATIONS)

NO SCALE

RSP ES-1B DATED OCTOBER 5, 2007 SUPERCEDES STANDARD PLAN ES-1B DATED MAY 1, 2006 - PAGE 401 OF THE STANDARD PLANS BOOK DATED MAY 2006.

REVISED STANDARD PLAN RSP ES-1B

2006 REVISED STANDARD PLAN RSP ES-1B

7-10-07

DIST	COUNTY	ROUTE	POST MILES TOTAL PROJECT	SHEET NO.	TOTAL SHEETS
09	Mno	270	0.0/9.8	31	32

REGISTERED ELECTRICAL ENGINEER

October 5, 2007
PLANS APPROVAL DATE

REGISTERED PROFESSIONAL ENGINEER Jeffery G. McRae No. E14512 Exp. 6-30-08 ELECTRICAL STATE OF CALIFORNIA

The State of California or its officers or agents shall not be responsible for the accuracy or completeness of electronic copies of this plan sheet.

To accompany plans dated 09-13-10

EQUIPMENT IDENTIFICATION

ILLUMINATED SIGN IDENTIFICATION NUMBER:

Sign No. 12345
10 ISL SCI 1.0

- Sign number - Place on post or structure
- Transformer rating (kVA)
- Lighting control type
- Number and type of fixtures

Do NOT place on standard or structure

ELECTROLIER OR EQUIPMENT IDENTIFICATION NUMBER:

12345 - 15'-0"

- Mast arm length, if shown. Do not place on standard or structure.
- Equipment number - Place on standard or structure. Existing equipment numbers are shown in parenthesis

CONDUIT AND CONDUCTOR IDENTIFICATION:

1½"C, 2#10, 15#14, 2 DLC

- Number and size of conductors and cables
- Size of conduit in inches

ø1, ø2, ø2P, etc.	Traffic phase identification for signal faces, detectors and phase diagrams
1 2 3	Project note numbers
A B C	Equipment description, installation or item numbers
1 2 3	Conduit run numbers

SIGNAL AND LIGHTING STANDARD (TYPICAL DESIGNATION):

19A - 3 - 100

- Wind velocity = 100 mph
- Case 3 arm loading
- Standard type
- Standard Plan sheet number
- Detail number or letter

MISCELLANEOUS EQUIPMENT

PROPOSED	EXISTING	
CMS	cms	Changeable message sign
		Closed circuit television camera
		Highway advisory radio pole and antenna
EMS	ems	Extinguishable message sign
M V	m v	Detection device M = Microwave sensor V = Video image sensor

WIRING DIAGRAM LEGEND

P	Pole
CB	Circuit breaker
A	Ampere
V	Volt
M	Metered
UM	Unmetered
NB	Neutral bus
GB	Ground bus
G	Equipment grounding conductor
N	Grounded conductor (Neutral)

- External conductor
- Conductor or bus
- Tie point
- Contactor coil
- Contactor, Contact NO
- Terminal blocks
- Contactor, Contact NC
- Enclosure bond
- Grounding electrode
- Circuit breaker
- Receptacle

PULL BOXES

PROPOSED EXISTING

Pull box-No. 5 unless otherwise indicated or noted.

3 9A(21)

Pull box-Additional designations or descriptions

3 = No. 3½ pull box
5 = No. 5 pull box
6 = No. 6 pull box
7 = No. 7 (Ceiling pull box)
8 = No. 8 (Pendant soffit pull box)
9 = No. 9 pull box
9A = No. 9A pull box

(C) = Communications pull box
(E) = Pull box with extension
(S) = Sprinkler control pull box
(21) = Anchor bolts and conduit for future installation of Type 21 Standard
(T) = Traffic pull box

VEHICLE DETECTORS

5 J 9 U

- Vehicle detector designation
- U = Upper
  L = Lower
- Slot number in input file
- Input file (I or J)
- Phase

PROPOSED	EXISTING	
		Type A detector loop. Outline of sawcut shown.
		Type B detector loop. Outline of sawcut shown.
		Type C detector loop. Outline of sawcut shown.
		Type D detector loop. Outline of sawcut shown.
		Type E detector loop. Outline of sawcut shown.
		Type Q detector loop. Outline of sawcut shown.
		Magnetic detector
DH	dh	Detector handhole
		Microwave or video detection zone

STATE OF CALIFORNIA
DEPARTMENT OF TRANSPORTATION

ELECTRICAL SYSTEMS (SYMBOLS AND ABBREVIATIONS)

NO SCALE

RSP ES-1C DATED OCTOBER 5, 2007 SUPERCEDES STANDARD PLAN ES-1C DATED MAY 1, 2006 - PAGE 402 OF THE STANDARD PLANS BOOK DATED MAY 2006.

REVISED STANDARD PLAN RSP ES-1C

2006 REVISED STANDARD PLAN RSP ES-1C

7-10-07

DIST	COUNTY	ROUTE	POST MILES TOTAL PROJECT	SHEET NO.	TOTAL SHEETS
09	Mno	270	0.0/9.8	32	32

REGISTERED ELECTRICAL ENGINEER

October 5, 2007
PLANS APPROVAL DATE

REGISTERED PROFESSIONAL ENGINEER Jeffery G. McRae No. E14512 Exp. 6-30-08 ELECTRICAL STATE OF CALIFORNIA

The State of California or its officers or agents shall not be responsible for the accuracy or completeness of electronic copies of this plan sheet.

To accompany plans dated 09-13-10

LOOP INSTALLATION PROCEDURE

1. Loops shall be centered in lanes.
2. Saw slots in pavement for loop conductors as shown in details.
3. Distance between side of loop and a lead-in saw cut from adjacent detectors shall be 2'-0" minimum. Distance between lead-in saw cuts shall be 6" minimum.
4. Bottom of saw slot shall be smooth with no sharp edges.
5. Slots shall be washed until clean, blown out and thoroughly dried before installing loop conductors.
6. Adjacent loops on the same sensor unit channel shall be wound in opposite directions.
7. Identify and tag loop circuit pairs in the pull box with loop number, start (S) and finish (F) of conductor. Identify and tag lead-in-cable with sensor number and phase.
8. Install loop conductor in slot using a 3/16" to 1/4" thick wood paddle. Hold loop conductors with wood paddles (at the bottom of the sawed slot) during sealant placement.
9. No more than 2 twisted pairs shall be installed in one sawed slot.
10. Allow additional 5'-0" of slack length of conductor for the lead-in run to pull box.
11. The additional length of each conductor for each loop shall be twisted together into a pair (6 turns per 3'-4" minimum) before being placed in the slot and conduit leading to pull box.
12. Test each loop circuit for continuity, circuit resistance and insulation resistance at the pull box before filling slots.
13. Fill slots as shown in details.
14. Splice loop conductors to lead-in-cable. Splices shall be soldered.
15. End of lead-in-cable and Type 2 loop conductor shall be waterproofed prior to installing in conduit to prevent moisture from entering the cable.
16. Lead-in-cable shall not be spliced between the pull box and the controller cabinet terminals.
17. Test each loop circuit for continuity, circuit resistance and insulation resistance at the controller cabinet location.
18. Where loop conductors are not to be spliced to a lead-in-cable, the ends of the conductors shall be taped and waterproofed with electrical insulating coating.

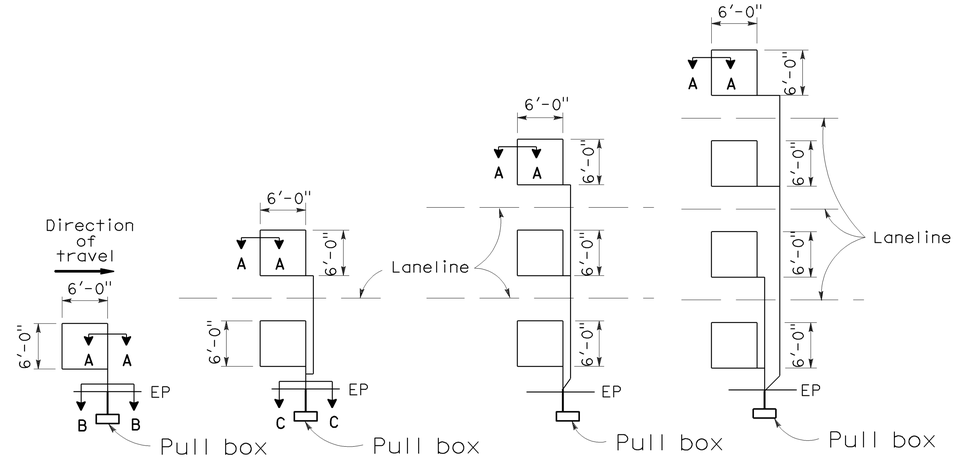

TYPE 1A INSTALLATION | TYPE 2A INSTALLATION | TYPE 3A INSTALLATION | TYPE 4A INSTALLATION

SAWCUT DETAILS

(Type A loop detector configurations illustrated)

1. 1A thru 4A = 1 Type A loop configuration in each lane.
2. 1B thru 4B = 1 Type B loop configuration in each lane.
3. 1C = 1 Type C loop configuration entering lanes as required.
4. 1D thru 4D = 1 Type D loop configuration in each lane.
5. 1E thru 4E = 1 Type E loop configuration in each lane.
6. 1Q thru 4Q = 1 Type Q loop configuration in each lane. (Use Type A, B, C, D, E or Q loop detector configurations only when specified or shown on plans)

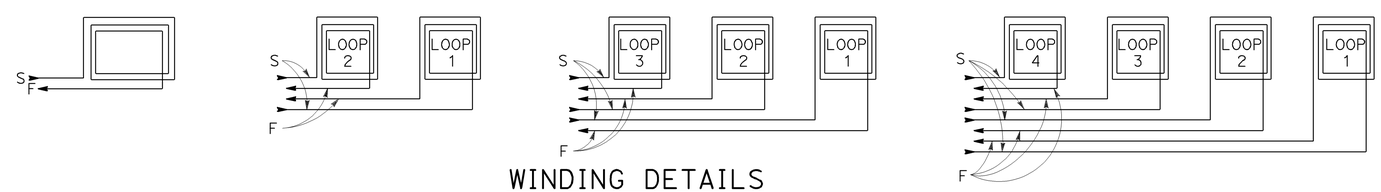

WINDING DETAILS

See Notes 6 and 7

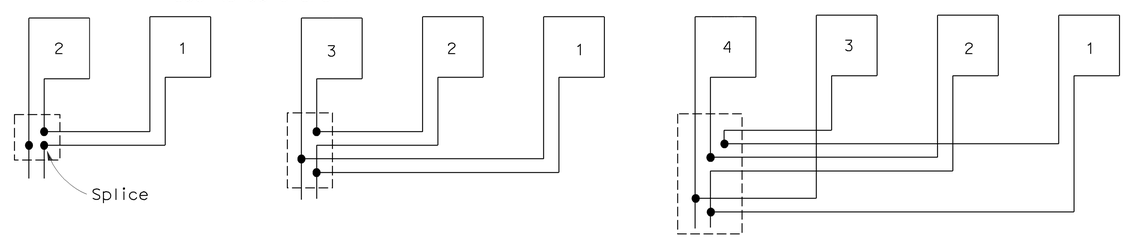

TYPICAL LOOP CONNECTIONS

(Dashed lines represent the pull box)

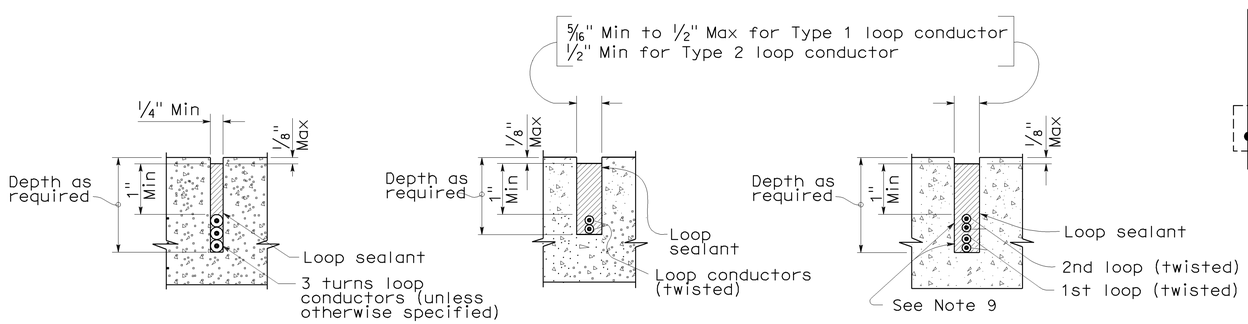

SECTION A-A | SECTION B-B | SECTION C-C

SLOT DETAILS - TYPE 1 AND TYPE 2 LOOP CONDUCTOR

STATE OF CALIFORNIA
DEPARTMENT OF TRANSPORTATION

ELECTRICAL SYSTEMS (DETECTORS)

NO SCALE

RSP ES-5A DATED OCTOBER 5, 2007 SUPERCEDES STANDARD PLAN ES-5A DATED MAY 1, 2006 - PAGE 423 OF THE STANDARD PLANS BOOK DATED MAY 2006.

REVISED STANDARD PLAN RSP ES-5A

2006 REVISED STANDARD PLAN RSP ES-5A

8-17-07