Dist	COUNTY	ROUTE	POST MILES TOTAL PROJECT	SHEET No.	TOTAL SHEETS
09	Mno	395	R24.5/R26.3	1	52

NH-BHNH-P395(231)E

STATE OF CALIFORNIA
DEPARTMENT OF TRANSPORTATION

PROJECT PLANS FOR CONSTRUCTION ON
STATE HIGHWAY

IN MONO COUNTY NEAR MAMMOTH LAKES
FROM 0.4 MILE SOUTH OF MAMMOTH CREEK
BRIDGE TO 0.6 MILE NORTH OF ROUTE 395/203 SEP

TO BE SUPPLEMENTED BY STANDARD PLANS DATED MAY 2006

INDEX OF PLANS

SHEET No.	DESCRIPTION
1	TITLE AND LOCATION MAP
2-3	TYPICAL CROSS SECTIONS
4-5	LAYOUTS
6	CONSTRUCTION DETAILS
7	CONSTRUCTION AREA SIGNS
8-27	STAGE CONSTRUCTION PLANS, DETAILS AND QUANTITIES
28	PAVEMENT DELINEATION QUANTITIES
29-30	SIGN PLAN, DETAILS AND QUANTITIES
31-32	SUMMARY OF QUANTITIES
33-46	REVISED STANDARD PLANS

STRUCTURE PLANS

47-49	MAMMOTH CREEK BRIDGE Br No. 47-0049RL
50-52	ROUTE 395203 SEPARATION (WIDEN) Br No. 47-0050RL

THE STANDARD PLANS LIST APPLICABLE TO THIS CONTRACT IS INCLUDED IN THE NOTICE TO BIDDERS AND SPECIAL PROVISIONS BOOK.

LOCATION MAP

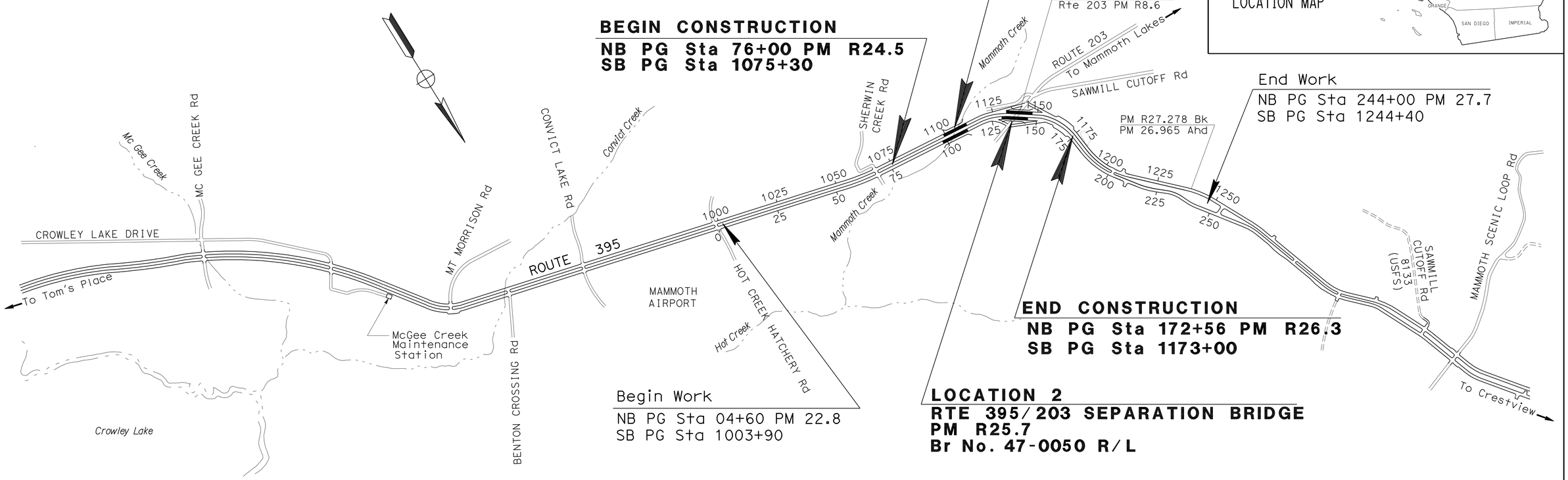

NO SCALE

THE CONTRACTOR SHALL POSSESS THE CLASS (OR CLASSES) OF LICENSE AS SPECIFIED IN THE "NOTICE TO BIDDERS."

PROJECT MANAGER: CEDRIK ZEMITIS
DESIGN ENGINEER: STEPHEN WINZENREAD

3-9-10
PROJECT ENGINEER REGISTERED CIVIL ENGINEER — DATE

May 24, 2010
PLANS APPROVAL DATE

REGISTERED PROFESSIONAL ENGINEER — Baljinder Brar — No. 67847 — Exp. 06-30-11 — CIVIL — STATE OF CALIFORNIA

THE STATE OF CALIFORNIA OR ITS OFFICERS OR AGENTS SHALL NOT BE RESPONSIBLE FOR THE ACCURACY OR COMPLETENESS OF SCANNED COPIES OF THIS PLAN SHEET.

CONTRACT No.	09-337704
PROJECT ID	0900000109

LAST REVISION 03-22-10 — DATE PLOTTED => 30-JUL-2010 — TIME PLOTTED => 13:19

Dist	COUNTY	ROUTE	POST MILES TOTAL PROJECT	SHEET No.	TOTAL SHEETS
09	Iny	395	R24.5/R26.3	2	52

REGISTERED CIVIL ENGINEER 3-9-10 DATE

5-24-10
PLANS APPROVAL DATE

REGISTERED PROFESSIONAL ENGINEER Baljinder Brar No. C67847 Exp. 06-30-11 CIVIL STATE OF CALIFORNIA

THE STATE OF CALIFORNIA OR ITS OFFICERS OR AGENTS SHALL NOT BE RESPONSIBLE FOR THE ACCURACY OR COMPLETENESS OF SCANNED COPIES OF THIS PLAN SHEET.

NOTES:

1. DIMENSIONS OF THE PAVEMENT STRUCTURES (STRUCTURAL SECTIONS) ARE SUBJECT TO TOLERANCES SPECIFIED IN THE STANDARD SPECIFICATIONS.
2. SUPERELEVATION AS SHOWN OR AS DIRECTED BY THE ENGINEER.
3. EXACT LOCATIONS AND TYPES OF MBGR, HMA DIKE ARE SHOWN ON THE LAYOUTS AND SUMMARY OF QUANTITIES SHEETS.

TYPICAL EXISTING STRUCTURAL SECTIONS

1: 0.20′-0.40′ AC / 0.50′ AB
2: 0.40′ AC / 0.50′ AB
3: 0.40′-0.20′ AC / 0.50′ AB

DESIGN DESIGNATION (ROUTE 395):

ADT (2010) =	8,810	D =	86.28%
ADT (2030) =	15,900	T =	11.5%
DHV =	1,700	V =	80 MPH
ESAL =	6,525,720	TI_{20} =	11

LEGEND:

IMPORTED MATERIAL
Shld BACKING

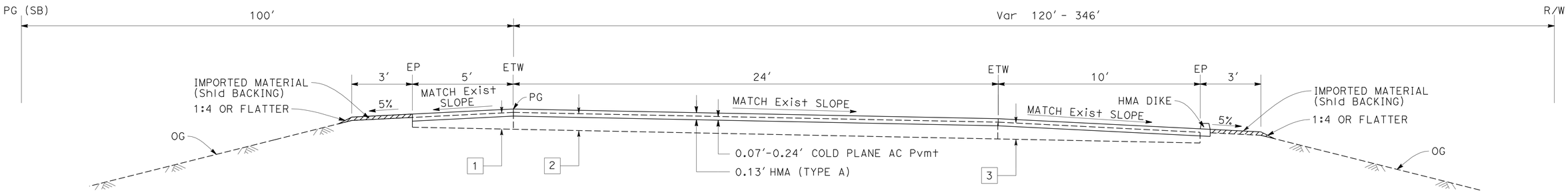

Sta 100+53.20 TO 101+80.50
Sta 141+52.40 TO 142+80.90

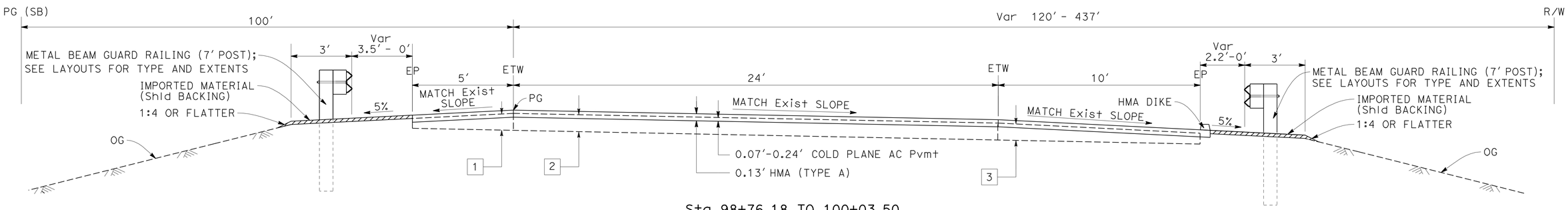

Sta 98+76.18 TO 100+03.50
Sta 139+24.00 TO 140+52.64

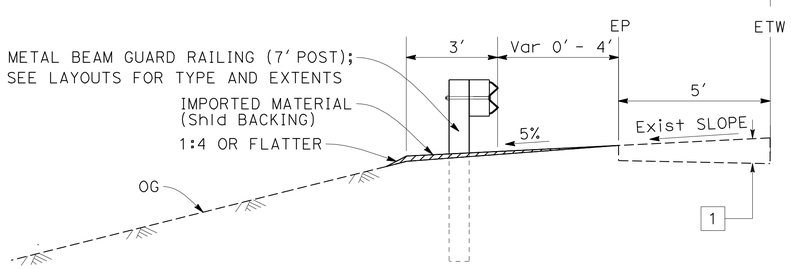

Sta 98+17.00 TO 98+76.18
Sta 138+54.20 TO 139+24.00

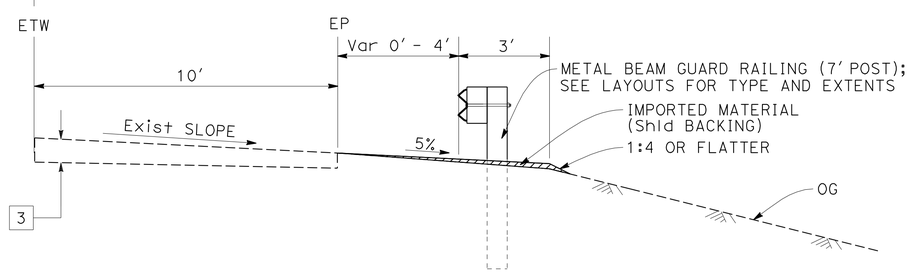

Sta 98+14.75 TO 98+76.18
Sta 138+60.10 TO 139+24.00

ROUTE 395 (NORTHBOUND)

TYPICAL CROSS SECTIONS X-1

NO SCALE

STATE OF CALIFORNIA - DEPARTMENT OF TRANSPORTATION
DESIGN
Caltrans
FUNCTIONAL SUPERVISOR: STEPHEN WINZENREAD
CALCULATED-DESIGNED BY: BALJINDER BRAR
CHECKED BY: STEPHEN WINZENREAD
REVISED BY
DATE REVISED

LAST REVISION 03-22-10
DATE PLOTTED => 25-MAY-2010
TIME PLOTTED => 13:48

Dist	COUNTY	ROUTE	POST MILES TOTAL PROJECT	SHEET No.	TOTAL SHEETS
09	Iny	395	R24.5/R26.3	3	52

REGISTERED CIVIL ENGINEER 3-9-10 DATE

5-24-10
PLANS APPROVAL DATE

REGISTERED PROFESSIONAL ENGINEER Baljinder Brar No. C67847 Exp. 06-30-11 CIVIL STATE OF CALIFORNIA

THE STATE OF CALIFORNIA OR ITS OFFICERS OR AGENTS SHALL NOT BE RESPONSIBLE FOR THE ACCURACY OR COMPLETENESS OF SCANNED COPIES OF THIS PLAN SHEET.

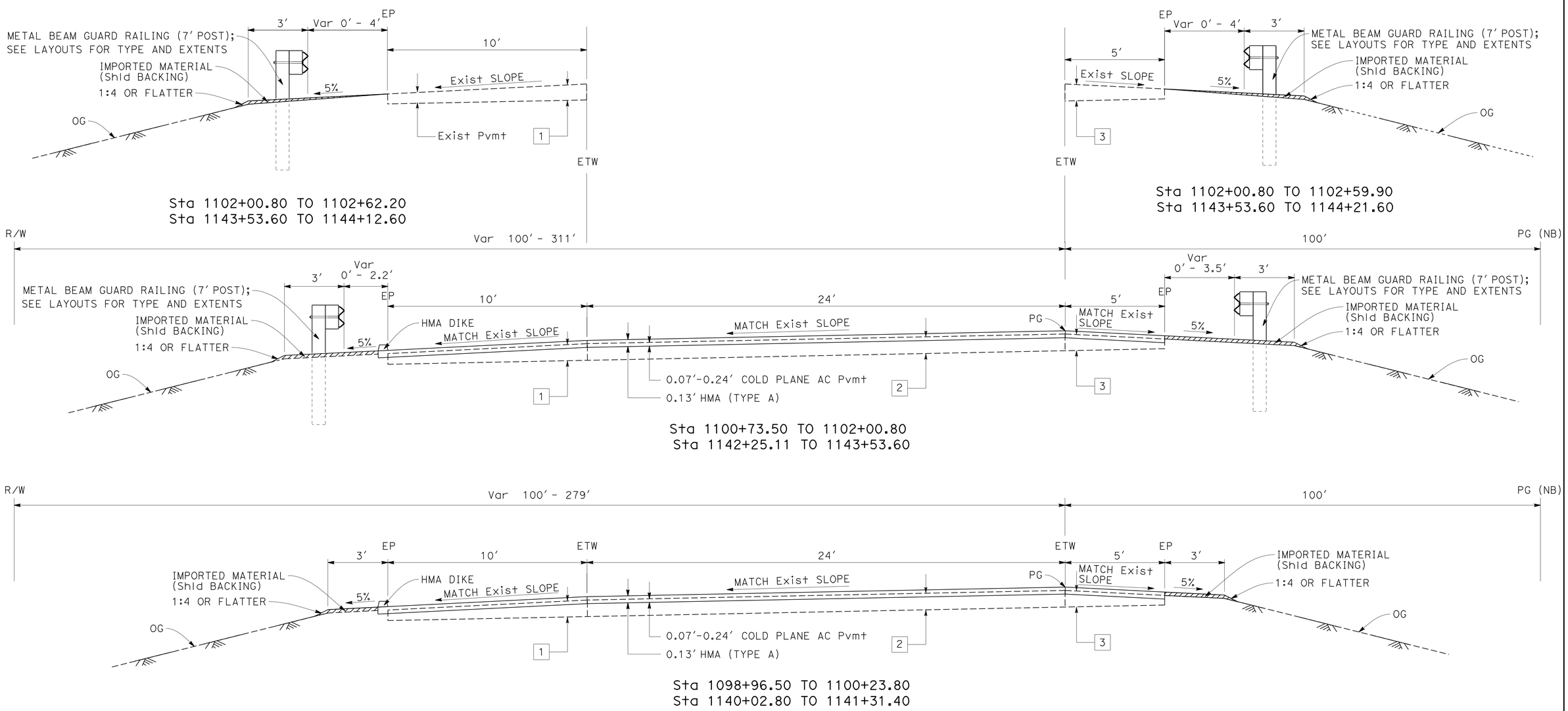

ROUTE 395 (SOUTHBOUND)

TYPICAL CROSS SECTIONS X-2

NO SCALE

STATE OF CALIFORNIA - DEPARTMENT OF TRANSPORTATION
Caltrans
DESIGN

FUNCTIONAL SUPERVISOR: STEPHEN WINZENREAD
CALCULATED-DESIGNED BY: BALJINDER BRAR
CHECKED BY: STEPHEN WINZENREAD
REVISED BY
DATE REVISED

LAST REVISION 03-22-10
DATE PLOTTED => 25-MAY-2010
TIME PLOTTED => 13:48

Dist	COUNTY	ROUTE	POST MILES TOTAL PROJECT	SHEET No.	TOTAL SHEETS
09	Iny	395	R24.5/R26.3	4	52

REGISTERED CIVIL ENGINEER 3-9-10 DATE

5-24-10
PLANS APPROVAL DATE

REGISTERED PROFESSIONAL ENGINEER Baljinder Brar No. C67847 Exp. 06-30-11 CIVIL STATE OF CALIFORNIA

THE STATE OF CALIFORNIA OR ITS OFFICERS OR AGENTS SHALL NOT BE RESPONSIBLE FOR THE ACCURACY OR COMPLETENESS OF SCANNED COPIES OF THIS PLAN SHEET.

NOTE:

1. FOR ACCURATE RIGHT OF WAY AND ACCESS DATA, CONTACT RIGHT OF WAY ENGINEERING AT THE DISTRICT OFFICE.

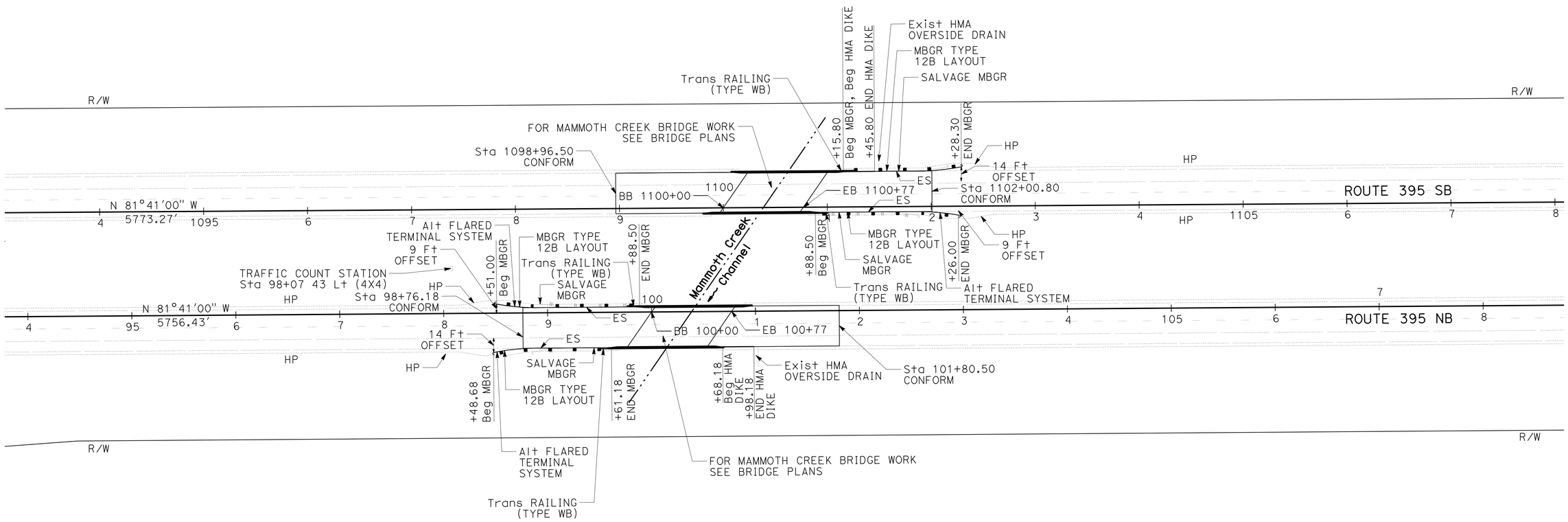

LAYOUT

SCALE: 1" = 50' **L-1**

STATE OF CALIFORNIA - DEPARTMENT OF TRANSPORTATION
Caltrans® DESIGN

FUNCTIONAL SUPERVISOR: STEPHEN WINZENREAD
CALCULATED-DESIGNED BY: BALJINDER BRAR
CHECKED BY: STEPHEN WINZENREAD
REVISED BY: YKF
DATE REVISED: 3-09-10

LAST REVISION 03-09-10 | DATE PLOTTED => 25-MAY-2010 | TIME PLOTTED => 13:48

Dist	COUNTY	ROUTE	POST MILES TOTAL PROJECT	SHEET No.	TOTAL SHEETS
09	Iny	395	R24.5/R26.3	5	52

REGISTERED CIVIL ENGINEER 3-9-10 DATE

5-24-10
PLANS APPROVAL DATE

REGISTERED PROFESSIONAL ENGINEER Baljinder Brar No. C67847 Exp. 06-30-11 CIVIL STATE OF CALIFORNIA

THE STATE OF CALIFORNIA OR ITS OFFICERS OR AGENTS SHALL NOT BE RESPONSIBLE FOR THE ACCURACY OR COMPLETENESS OF SCANNED COPIES OF THIS PLAN SHEET.

NOTE:

1. FOR ACCURATE RIGHT OF WAY AND ACCESS DATA, CONTACT RIGHT OF WAY ENGINEERING AT THE DISTRICT OFFICE.

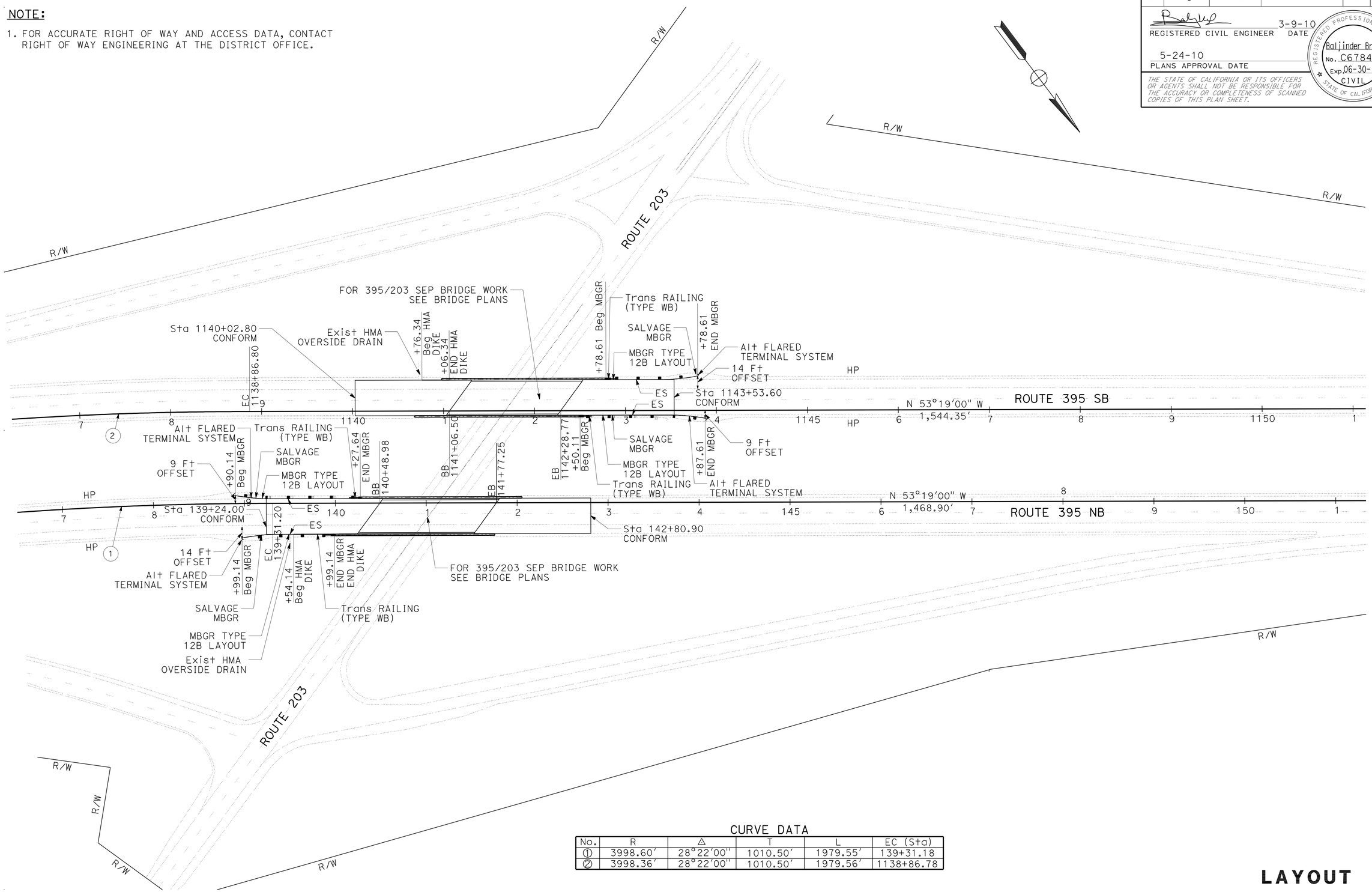

CURVE DATA

No.	R	Δ	T	L	EC (Sta)
①	3998.60′	28°22′00″	1010.50′	1979.55′	139+31.18
②	3998.36′	28°22′00″	1010.50′	1979.56′	1138+86.78

LAYOUT

SCALE: 1" = 50′ **L-2**

STATE OF CALIFORNIA - DEPARTMENT OF TRANSPORTATION
Caltrans® **DESIGN**

FUNCTIONAL SUPERVISOR: STEPHEN WINZENREAD
CALCULATED-DESIGNED BY: BALJINDER BRAR
CHECKED BY: STEPHEN WINZENREAD
REVISED BY: YKF
DATE REVISED: 3-09-10

LAST REVISION 02-09-10
DATE PLOTTED => 25-MAY-2010
TIME PLOTTED => 13:48

Dist	COUNTY	ROUTE	POST MILES TOTAL PROJECT	SHEET No.	TOTAL SHEETS
09	Mno	395	R24.5/R26.3	6	52

REGISTERED CIVIL ENGINEER 3-9-10 DATE

5-24-10
PLANS APPROVAL DATE

REGISTERED PROFESSIONAL ENGINEER Baljinder Brar No. C67847 Exp. 06-30-11 CIVIL STATE OF CALIFORNIA

THE STATE OF CALIFORNIA OR ITS OFFICERS OR AGENTS SHALL NOT BE RESPONSIBLE FOR THE ACCURACY OR COMPLETENESS OF SCANNED COPIES OF THIS PLAN SHEET.

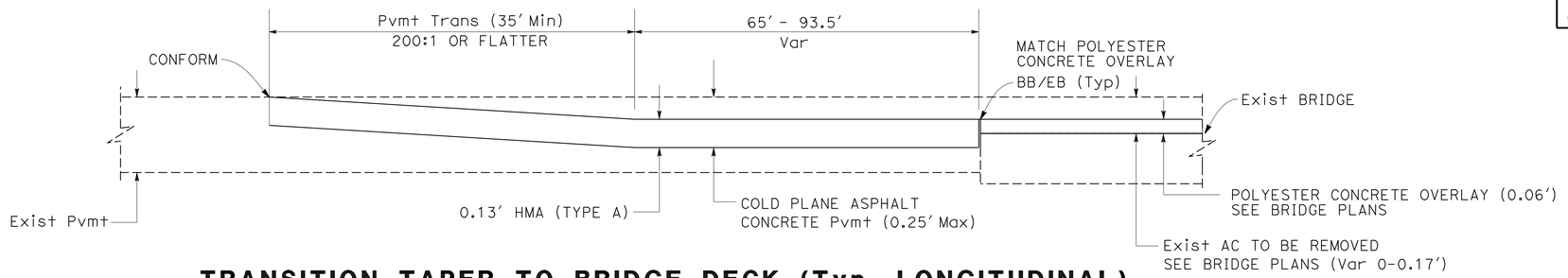

TRANSITION TAPER TO BRIDGE DECK (Typ, LONGITUDINAL)

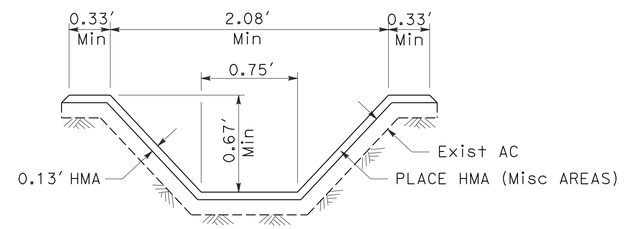

OVERSIDE DRAIN SECTION

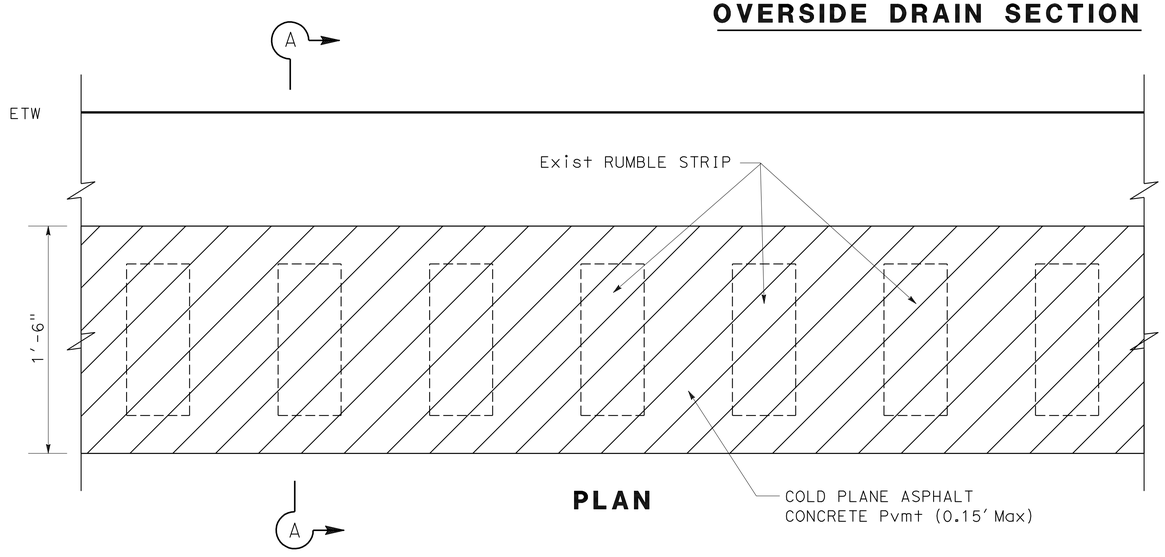

PLAN

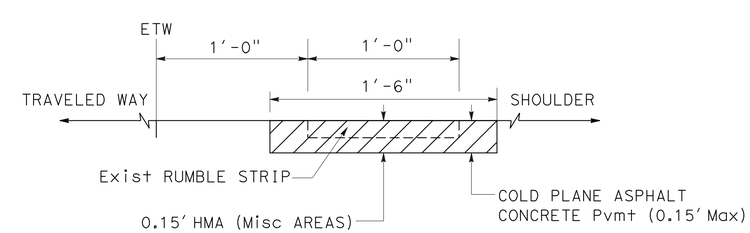

SECTION A-A

REMOVE RUMBLE STRIP

CONSTRUCTION DETAILS

NO SCALE

C-1

REVISED BY	DATE REVISED

CALCULATED-DESIGNED BY	BALJINDER BRAR
CHECKED BY	STEPHEN WINZENREAD
FUNCTIONAL SUPERVISOR	STEPHEN WINZENREAD

STATE OF CALIFORNIA - DEPARTMENT OF TRANSPORTATION

Caltrans® DESIGN

LAST REVISION 03-10-10 | DATE PLOTTED => 25-MAY-2010 | TIME PLOTTED => 14:05

Dist	COUNTY	ROUTE	POST MILES TOTAL PROJECT	SHEET No.	TOTAL SHEETS
09	Mno	395	R24.5/R26.3	7	52

REGISTERED CIVIL ENGINEER 3-9-10 DATE

5-24-10
PLANS APPROVAL DATE

REGISTERED PROFESSIONAL ENGINEER Baljinder Brar No. C67847 Exp. 06-30-11 CIVIL STATE OF CALIFORNIA

THE STATE OF CALIFORNIA OR ITS OFFICERS OR AGENTS SHALL NOT BE RESPONSIBLE FOR THE ACCURACY OR COMPLETENESS OF SCANNED COPIES OF THIS PLAN SHEET.

NOTES:

1. EXACT LOCATION AND POSITION OF CONSTRUCTION AREA SIGNS TO BE DETERMINED BY THE ENGINEER.
2. SEE STAGE CONSTRUCTION PLANS FOR ADDITIONAL CONSTRUCTION AREA SIGNS.

LEGEND:

- PORTABLE CHANGEABLE MESSAGE SIGNS
- CONSTRUCTION AREA SIGNS
- PORTABLE FLASHING BEACON

A
ROAD CONSTRUCTION NEXT 5 MILES — G20-1
BRIDGE REHABILITATION — C23B (CA)
48" x 24"
ON 2 - 4" x 6" POSTS

B
ROAD WORK AHEAD — W20-1
36" x 36"
ON 4" x 6" WOOD POST

C
END ROAD WORK — G20-2
48" x 24"
ON 2 - 4" x 4" WOOD POSTS

D
TRAFFIC FINES DOUBLED IN CONSTRUCTION ZONES — C40 (CA)
144" x 60"
ON 2 - 6" x 8" POSTS

E
ROAD WORK AHEAD — W20-1
48" x 48"
ON 6" x 6" WOOD POST

F
ROAD WORK AHEAD — W20-1
48" x 48"
ON 6" x 6" WOOD POST

STATIONARY MOUNTED CONSTRUCTION AREA SIGNS

TYPE	No. OF SIGNS
A G20-1 & C23B	4
B W20-1	2
C G20-2	6
D C40	2
E W20-1	4
F W20-1	2

FLASHING BEACON (PORTABLE)

LOCATION	EA
24+60	2
1224+40	2
TOTAL	4

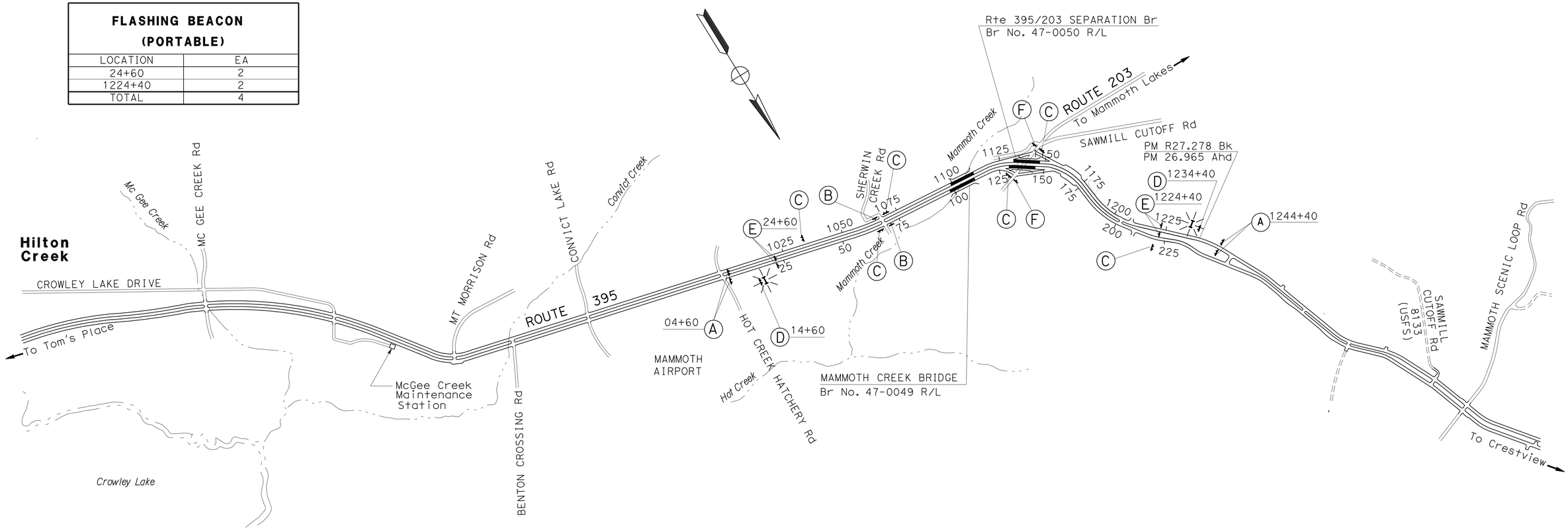

THIS PLAN ACCURATE FOR CONSTRUCTION AREA SIGN WORK ONLY

CONSTRUCTION AREA SIGNS

NO SCALE

CS-1

STATE OF CALIFORNIA - DEPARTMENT OF TRANSPORTATION
Caltrans
DESIGN

FUNCTIONAL SUPERVISOR: STEPHEN WINZENREAD
CALCULATED-DESIGNED BY: BALJINDER BRAR
CHECKED BY: STEPHEN WINZENREAD
REVISED BY
DATE REVISED

LAST REVISION 03-10-10
DATE PLOTTED => 25-MAY-2010
TIME PLOTTED => 14:05

Dist	COUNTY	ROUTE	POST MILES TOTAL PROJECT	SHEET No.	TOTAL SHEETS
09	Mno	395	R24.5/R26.3	8	52

REGISTERED CIVIL ENGINEER 3-9-10 DATE

5-24-10
PLANS APPROVAL DATE

REGISTERED PROFESSIONAL ENGINEER Baljinder Brar No. C67847 Exp. 06-30-11 CIVIL STATE OF CALIFORNIA

THE STATE OF CALIFORNIA OR ITS OFFICERS OR AGENTS SHALL NOT BE RESPONSIBLE FOR THE ACCURACY OR COMPLETENESS OF SCANNED COPIES OF THIS PLAN SHEET.

LEGEND:

- CONSTRUCTION THIS STAGE
- DIRECTION OF TRAFFIC FLOW
- CHANNELIZER (SURFACE MOUNTED) 50 FT SPACING (Typ)
- TYPE III BARRICADE
- (No) CONSTRUCTION AREA SIGN No.
- STOP PAVEMENT MARKING
- PAVEMENT MARKERS AND TRAFFIC LINES DETAILS
- TYPE V1 ARROW
- CONSTRUCTION AREA SIGNS
- EXISTING TYPE III ARROW
- EXISTING TYPE V ARROW
- EXISTING TYPE V1 ARROW
- FLASHING ARROW SIGN
- FLASHING BEACON (PORTABLE)

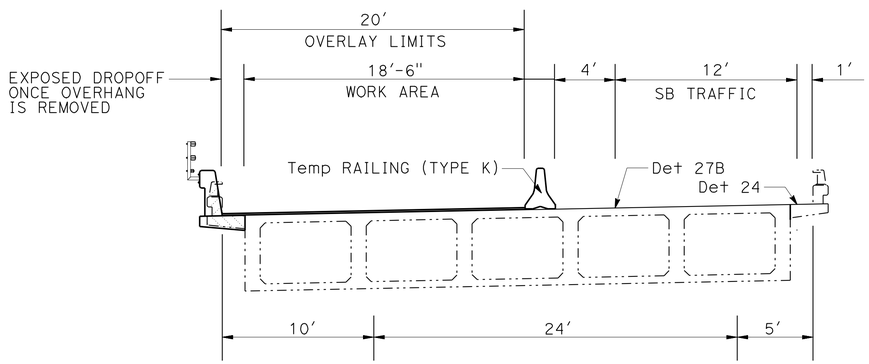

TYPICAL SECTIONS SB
MAMMOTH CREEK BRIDGE
395/203 SEPARATION BRIDGE

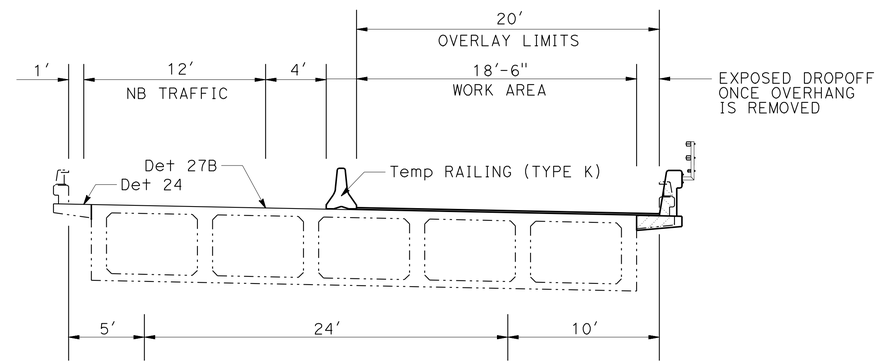

TYPICAL SECTIONS NB
MAMMOTH CREEK BRIDGE
395/203 SEPARATION BRIDGE

STAGE 1

1. INSTALL STAGE 1 TRAFFIC HANDLING
2. REMOVE OUTER OVERHANG
3. REPLACE OUTER BARRIER
4. OVERLAY DECK'S OUTER HALF
5. COLD PLANE & PAVE OUTER HALF TO CONFORM
6. INSTALL OUTER MBGR
7. REMOVE STAGE 1 Temp STRIPING, CHANNELIZERS, AND Temp RAILING (TYPE K)

STAGE CONSTRUCTION AND TRAFFIC HANDLING PLAN (STAGE 1)

NO SCALE

SC-1

STATE OF CALIFORNIA - DEPARTMENT OF TRANSPORTATION
Caltrans® **DESIGN**

FUNCTIONAL SUPERVISOR: STEPHEN WINZENREAD

CALCULATED-DESIGNED BY: BALJINDER BRAR
CHECKED BY: STEPHEN WINZENREAD

REVISED BY | DATE REVISED

LAST REVISION 03-10-10 | DATE PLOTTED => 25-MAY-2010 | TIME PLOTTED => 14:06

Dist	COUNTY	ROUTE	POST MILES TOTAL PROJECT	SHEET No.	TOTAL SHEETS
09	Mno	395	R24.5/R26.3	9	52

REGISTERED CIVIL ENGINEER 3-9-10 DATE

5-24-10
PLANS APPROVAL DATE

REGISTERED PROFESSIONAL ENGINEER
Baljinder Brar
No. C67847
Exp. 06-30-11
CIVIL
STATE OF CALIFORNIA

THE STATE OF CALIFORNIA OR ITS OFFICERS OR AGENTS SHALL NOT BE RESPONSIBLE FOR THE ACCURACY OR COMPLETENESS OF SCANNED COPIES OF THIS PLAN SHEET.

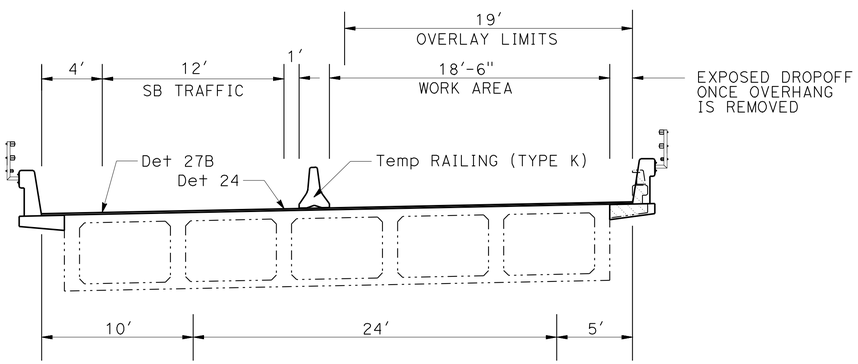

TYPICAL SECTIONS SB
MAMMOTH CREEK BRIDGE
395/203 SEPARATION BRIDGE

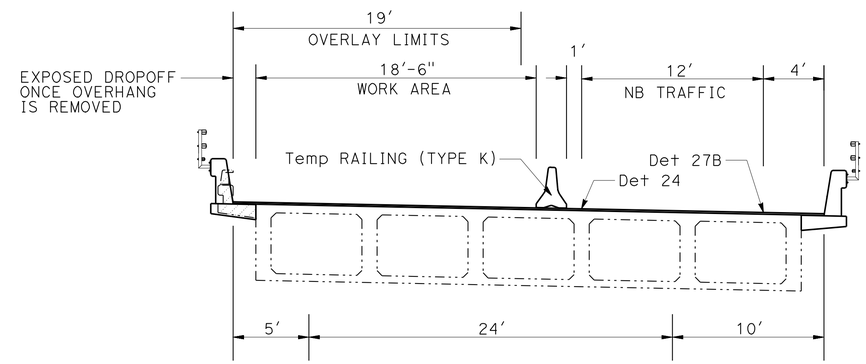

TYPICAL SECTIONS NB
MAMMOTH CREEK BRIDGE
395/203 SEPARATION BRIDGE

STAGE 2

1. INSTALL STAGE 2 TRAFFIC HANDLING
2. REMOVE INNER OVERHANG
3. REPLACE INNER BARRIER
4. OVERLAY DECK'S INNER HALF
5. COLD PLANE & PAVE INNER HALF TO CONFORM
6. INSTALL INNER MBGR
7. REMOVE STAGE 2 Temp STRIPING, CHANNELIZERS, AND Temp RAILING (TYPE K)
8. PLACE FINAL STRIPING
9. REMOVE STAGE 2 TRAFFIC HANDLING

STAGE CONSTRUCTION AND TRAFFIC HANDLING PLAN (STAGE 2)

NO SCALE

SC-2

STATE OF CALIFORNIA - DEPARTMENT OF TRANSPORTATION
Caltrans
DESIGN

FUNCTIONAL SUPERVISOR: STEPHEN WINZENREAD
CALCULATED-DESIGNED BY: BALJINDER BRAR
CHECKED BY: STEPEHN WINZENREAD
REVISED BY
DATE REVISED

LAST REVISION 03-10-10
DATE PLOTTED => 25-MAY-2010
TIME PLOTTED => 14:06

Dist	COUNTY	ROUTE	POST MILES TOTAL PROJECT	SHEET No.	TOTAL SHEETS
09	Mno	395	R24.5/R26.3	10	52

REGISTERED CIVIL ENGINEER 3-9-10 DATE

5-24-10
PLANS APPROVAL DATE

REGISTERED PROFESSIONAL ENGINEER Baljinder Brar No. C67847 Exp. 06-30-11 CIVIL STATE OF CALIFORNIA

THE STATE OF CALIFORNIA OR ITS OFFICERS OR AGENTS SHALL NOT BE RESPONSIBLE FOR THE ACCURACY OR COMPLETENESS OF SCANNED COPIES OF THIS PLAN SHEET.

NOTE:

1. FOR ACCURATE RIGHT OF WAY AND ACCESS DATA, CONTACT RIGHT OF WAY ENGINEERING AT THE DISTRICT OFFICE.

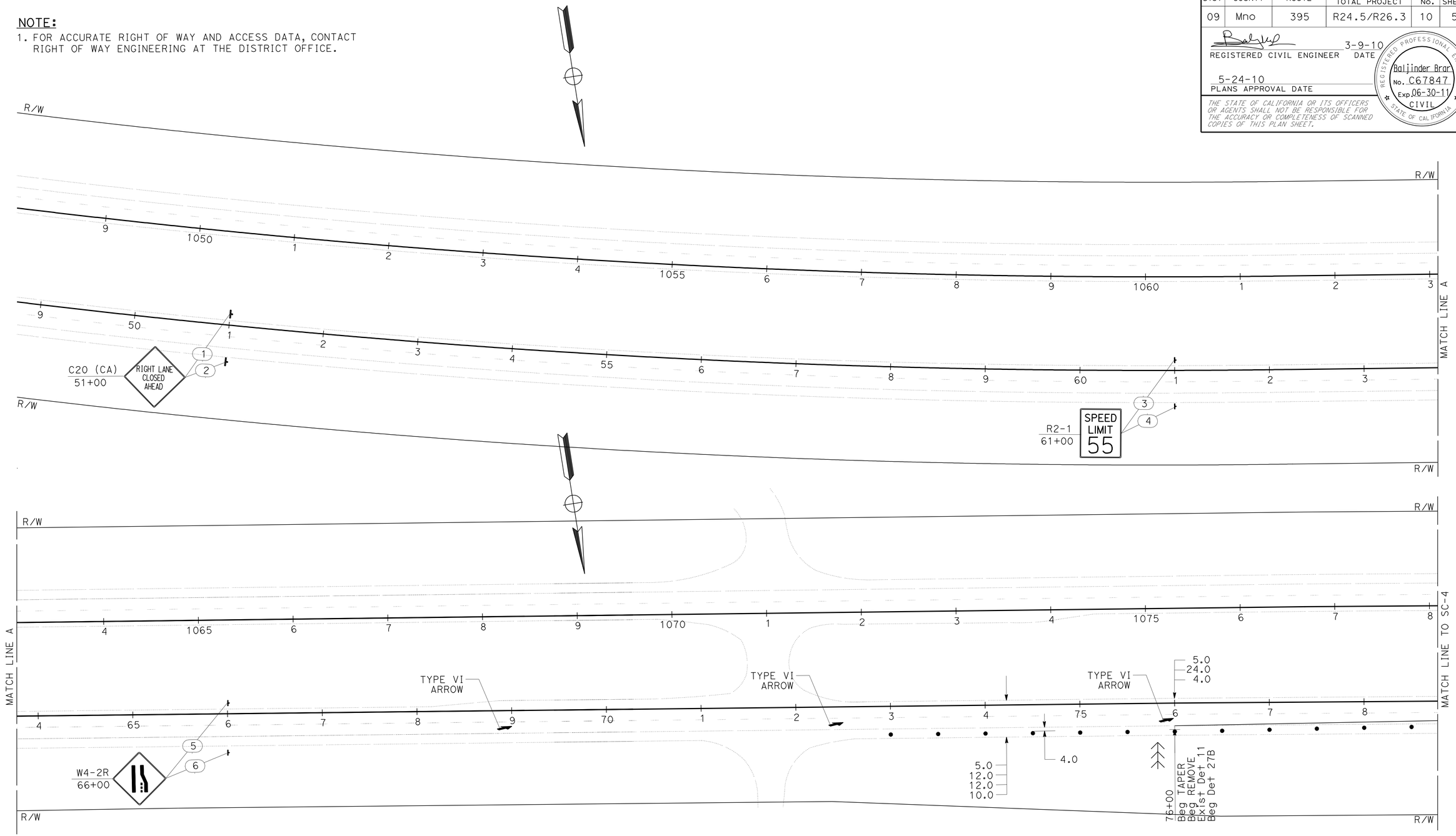

THIS PLAN ACCURATE FOR STAGE CONSTRUCTION AND TRAFFIC HANDLING WORK ONLY

STAGE CONSTRUCTION AND TRAFFIC HANDLING PLAN (STAGE 1)

SCALE: 1" = 50'

SC- 3

STATE OF CALIFORNIA - DEPARTMENT OF TRANSPORTATION

DESIGN

Caltrans

FUNCTIONAL SUPERVISOR: STEPHEN WINZENREAD

CALCULATED-DESIGNED BY: BALJINDER BRAR

CHECKED BY: STEPHEN WINZENREAD

REVISED BY: YKF

DATE REVISED: 3-09-10

LAST REVISION 03-10-10

DATE PLOTTED => 25-MAY-2010

TIME PLOTTED => 14:06

Dist	COUNTY	ROUTE	POST MILES TOTAL PROJECT	SHEET No.	TOTAL SHEETS
09	Mno	395	R24.5/R26.3	11	52

REGISTERED CIVIL ENGINEER 3-9-10 DATE

5-24-10
PLANS APPROVAL DATE

REGISTERED PROFESSIONAL ENGINEER Baljinder Brar No. C67847 Exp. 06-30-11 CIVIL STATE OF CALIFORNIA

THE STATE OF CALIFORNIA OR ITS OFFICERS OR AGENTS SHALL NOT BE RESPONSIBLE FOR THE ACCURACY OR COMPLETENESS OF SCANNED COPIES OF THIS PLAN SHEET.

NOTE:

1. FOR ACCURATE RIGHT OF WAY AND ACCESS DATA, CONTACT RIGHT OF WAY ENGINEERING AT THE DISTRICT OFFICE.

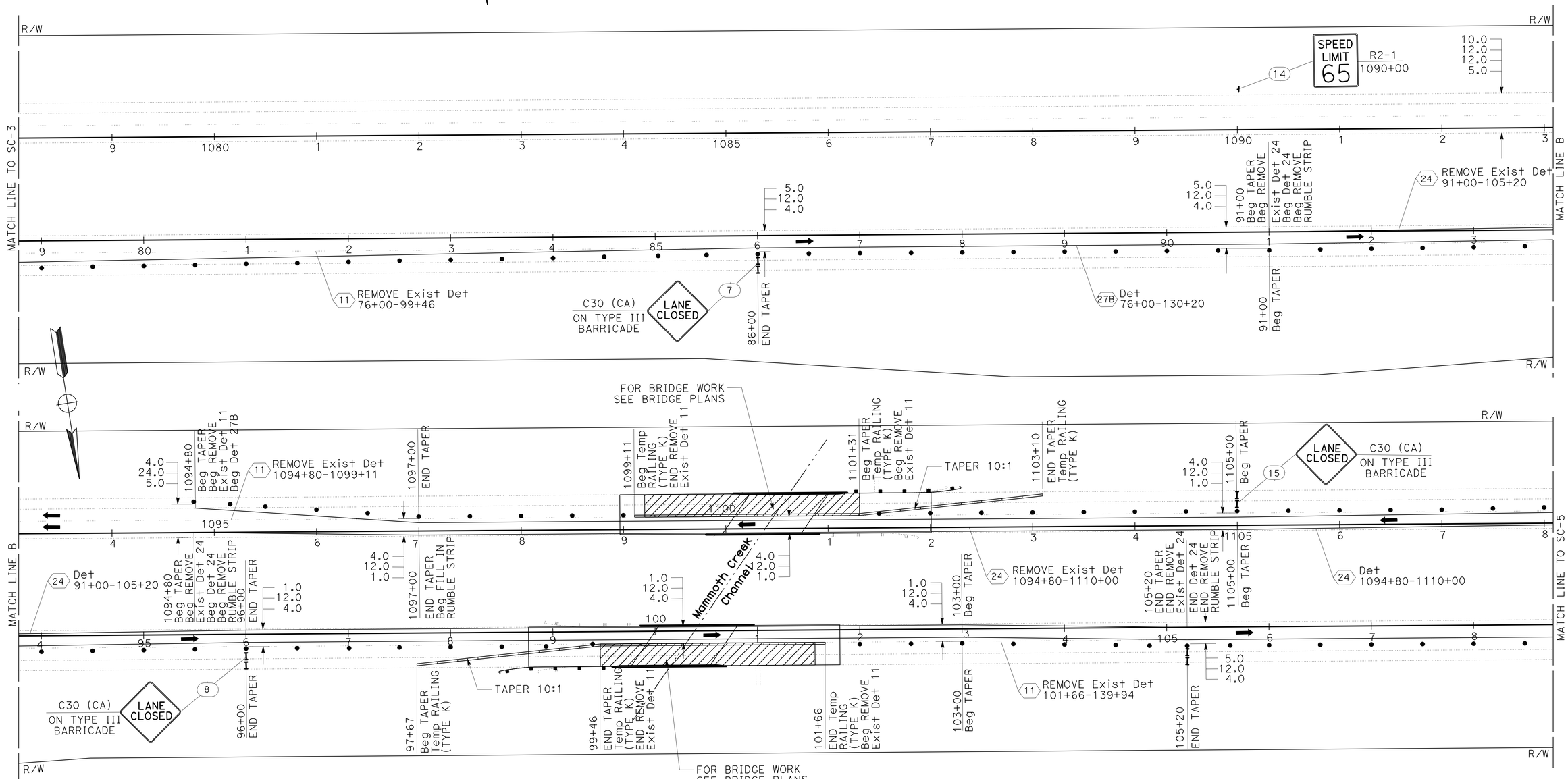

THIS PLAN ACCURATE FOR STAGE CONSTRUCTION AND TRAFFIC HANDLING WORK ONLY

STAGE CONSTRUCTION AND TRAFFIC HANDLING PLAN (STAGE 1)

SCALE: 1" = 50'

SC-4

REVISED BY	DATE REVISED
YKF	3-09-10

CALCULATED-DESIGNED BY: BALJINDER BRAR
CHECKED BY: STEPHEN WINZENREAD
FUNCTIONAL SUPERVISOR: STEPHEN WINZENREAD

STATE OF CALIFORNIA - DEPARTMENT OF TRANSPORTATION
Caltrans
DESIGN

LAST REVISION 03-09-10 | DATE PLOTTED => 25-MAY-2010 TIME PLOTTED => 14:06

Dist	COUNTY	ROUTE	POST MILES TOTAL PROJECT	SHEET No.	TOTAL SHEETS
09	Mno	395	R24.5/R26.3	12	52

REGISTERED CIVIL ENGINEER 3-9-10 DATE

5-24-10
PLANS APPROVAL DATE

REGISTERED PROFESSIONAL ENGINEER Baljinder Brar No. C67847 Exp. 06-30-11 CIVIL STATE OF CALIFORNIA

THE STATE OF CALIFORNIA OR ITS OFFICERS OR AGENTS SHALL NOT BE RESPONSIBLE FOR THE ACCURACY OR COMPLETENESS OF SCANNED COPIES OF THIS PLAN SHEET.

NOTE:

1. FOR ACCURATE RIGHT OF WAY AND ACCESS DATA, CONTACT RIGHT OF WAY ENGINEERING AT THE DISTRICT OFFICE.

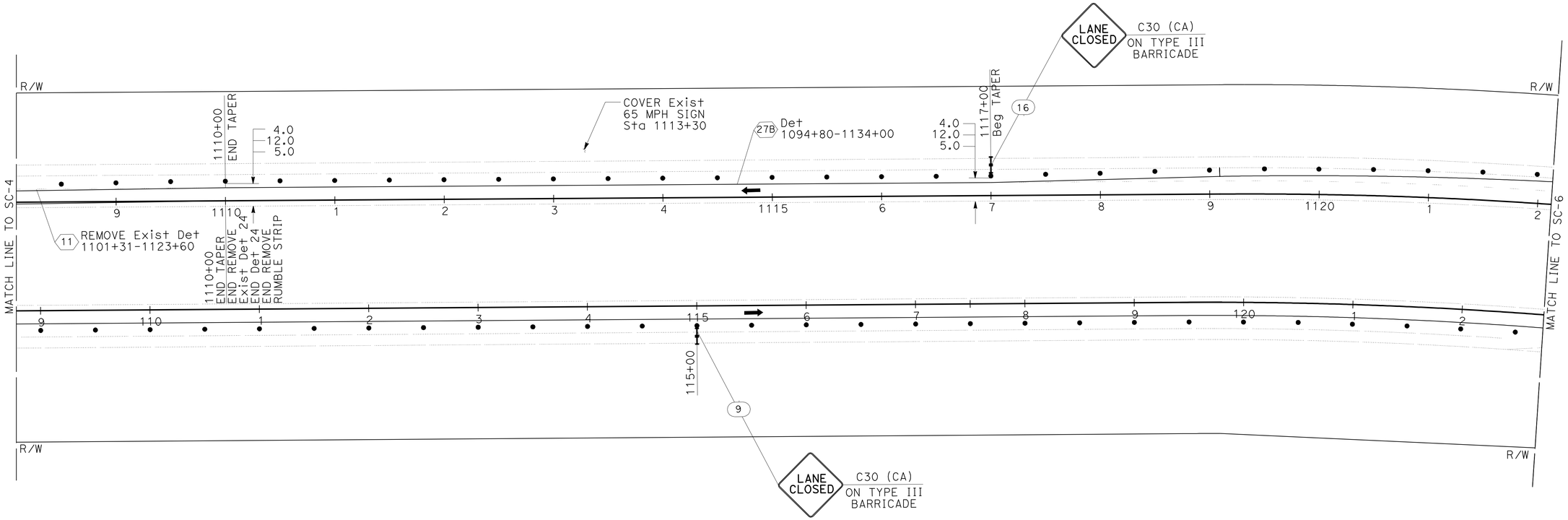

THIS PLAN ACCURATE FOR STAGE CONSTRUCTION AND TRAFFIC HANDLING WORK ONLY

STAGE CONSTRUCTION AND TRAFFIC HANDLING PLAN (STAGE 1)

SCALE: 1" = 50′

SC-5

STATE OF CALIFORNIA - DEPARTMENT OF TRANSPORTATION
Caltrans DESIGN

FUNCTIONAL SUPERVISOR: STEPHEN WINZENREAD
CALCULATED-DESIGNED BY: BALJINDER BRAR
CHECKED BY: STEPHEN WINZENREAD
REVISED BY: YKF
DATE REVISED: 3-09-10

LAST REVISION 03-10-10
DATE PLOTTED => 25-MAY-2010
TIME PLOTTED => 14:06

Dist	COUNTY	ROUTE	POST MILES TOTAL PROJECT	SHEET No.	TOTAL SHEETS
09	Mno	395	R24.5/R26.3	13	52

REGISTERED CIVIL ENGINEER 3-9-10 DATE

5-24-10
PLANS APPROVAL DATE

REGISTERED PROFESSIONAL ENGINEER Baljinder Brar No. C67847 Exp. 06-30-11 CIVIL STATE OF CALIFORNIA

THE STATE OF CALIFORNIA OR ITS OFFICERS OR AGENTS SHALL NOT BE RESPONSIBLE FOR THE ACCURACY OR COMPLETENESS OF SCANNED COPIES OF THIS PLAN SHEET.

NOTE:

1. FOR ACCURATE RIGHT OF WAY AND ACCESS DATA, CONTACT RIGHT OF WAY ENGINEERING AT THE DISTRICT OFFICE.

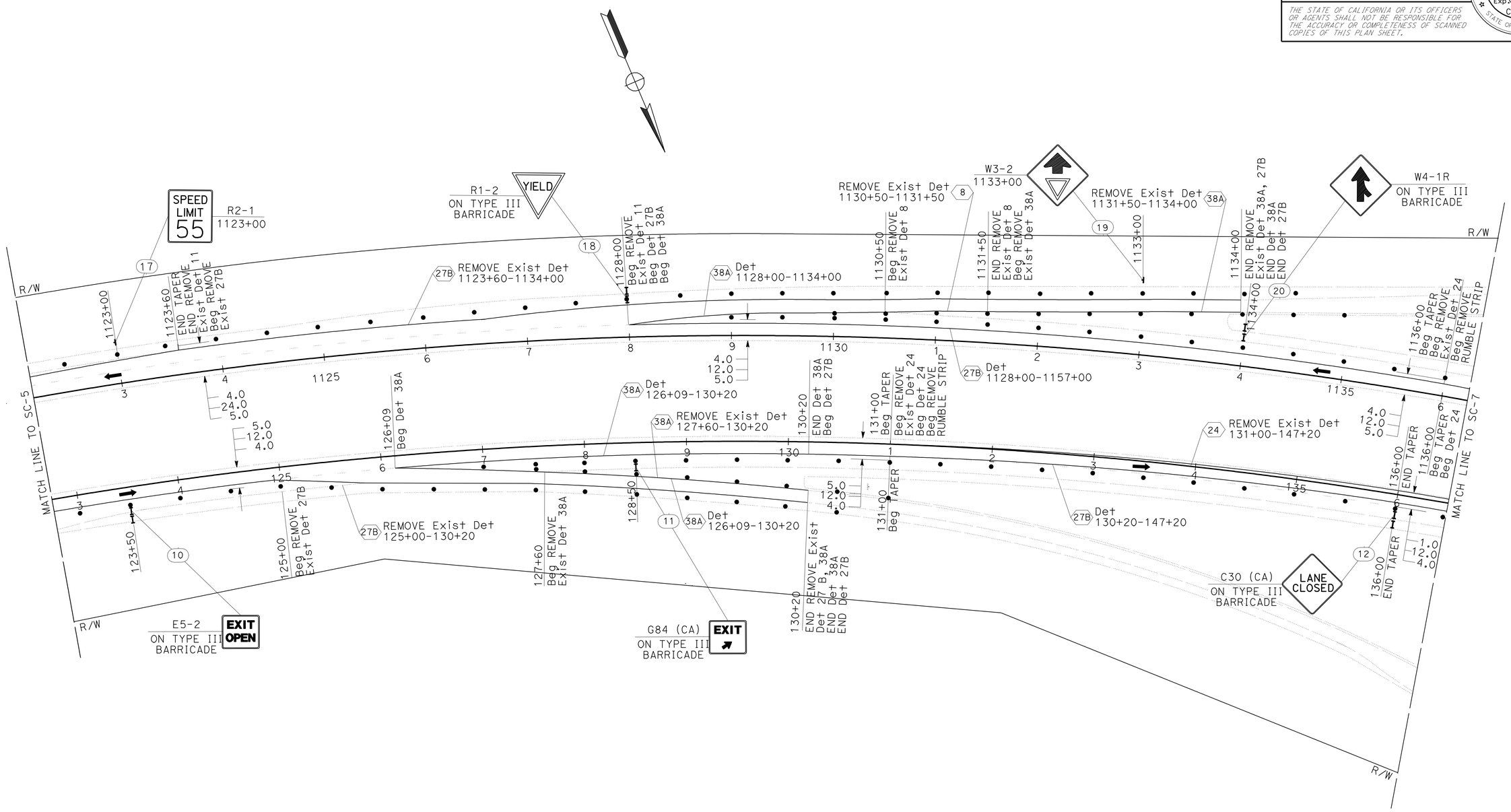

THIS PLAN ACCURATE FOR STAGE CONSTRUCTION AND TRAFFIC HANDLING WORK ONLY

STAGE CONSTRUCTION AND TRAFFIC HANDLING PLAN (STAGE 1)

SCALE: 1" = 50'

SC-6

STATE OF CALIFORNIA - DEPARTMENT OF TRANSPORTATION

Caltrans® **DESIGN**

FUNCTIONAL SUPERVISOR: STEPHEN WINZENREAD

CALCULATED-DESIGNED BY: BALJINDER BRAR

CHECKED BY: STEPHEN WINZENREAD

REVISED BY: YKF

DATE REVISED: 3-09-10

LAST REVISION DATE PLOTTED => 25-MAY-2010 TIME PLOTTED => 14:06

03-10-10

Dist	COUNTY	ROUTE	POST MILES TOTAL PROJECT	SHEET No.	TOTAL SHEETS
09	Mno	395	R24.5/R26.3	14	52

REGISTERED CIVIL ENGINEER 3-9-10 DATE

5-24-10
PLANS APPROVAL DATE

REGISTERED PROFESSIONAL ENGINEER Baljinder Brar No. C67847 Exp. 06-30-11 CIVIL STATE OF CALIFORNIA

THE STATE OF CALIFORNIA OR ITS OFFICERS OR AGENTS SHALL NOT BE RESPONSIBLE FOR THE ACCURACY OR COMPLETENESS OF SCANNED COPIES OF THIS PLAN SHEET.

NOTE:

1. FOR ACCURATE RIGHT OF WAY AND ACCESS DATA, CONTACT RIGHT OF WAY ENGINEERING AT THE DISTRICT OFFICE.

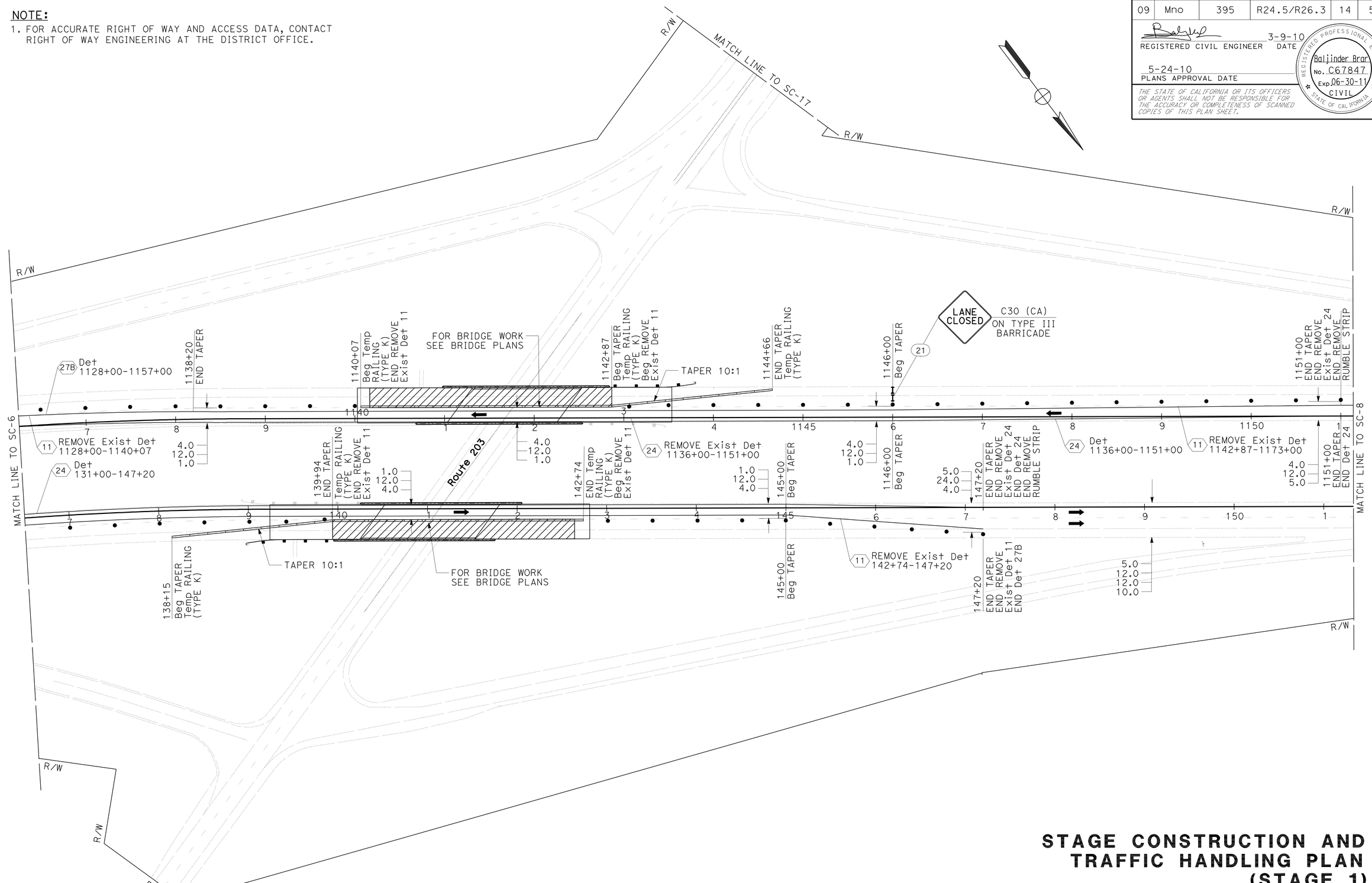

THIS PLAN ACCURATE FOR STAGE CONSTRUCTION AND TRAFFIC HANDLING WORK ONLY

STAGE CONSTRUCTION AND TRAFFIC HANDLING PLAN (STAGE 1)

SCALE: 1" = 50′

SC-7

STATE OF CALIFORNIA - DEPARTMENT OF TRANSPORTATION	Caltrans® DESIGN
FUNCTIONAL SUPERVISOR	STEPHEN WINZENREAD
CALCULATED-DESIGNED BY	BALJINDER BRAR
CHECKED BY	STEPHEN WINZENREAD
REVISED BY	YKF
DATE REVISED	3-09-10

LAST REVISION 03-23-10 | DATE PLOTTED => 25-MAY-2010 | TIME PLOTTED => 14:06

Dist	COUNTY	ROUTE	POST MILES TOTAL PROJECT	SHEET No.	TOTAL SHEETS
09	Mno	395	R24.5/R26.3	15	52

REGISTERED CIVIL ENGINEER 3-9-10 DATE

5-24-10
PLANS APPROVAL DATE

REGISTERED PROFESSIONAL ENGINEER Baljinder Brar No. C67847 Exp. 06-30-11 CIVIL STATE OF CALIFORNIA

THE STATE OF CALIFORNIA OR ITS OFFICERS OR AGENTS SHALL NOT BE RESPONSIBLE FOR THE ACCURACY OR COMPLETENESS OF SCANNED COPIES OF THIS PLAN SHEET.

NOTE:

1. FOR ACCURATE RIGHT OF WAY AND ACCESS DATA, CONTACT RIGHT OF WAY ENGINEERING AT THE DISTRICT OFFICE.

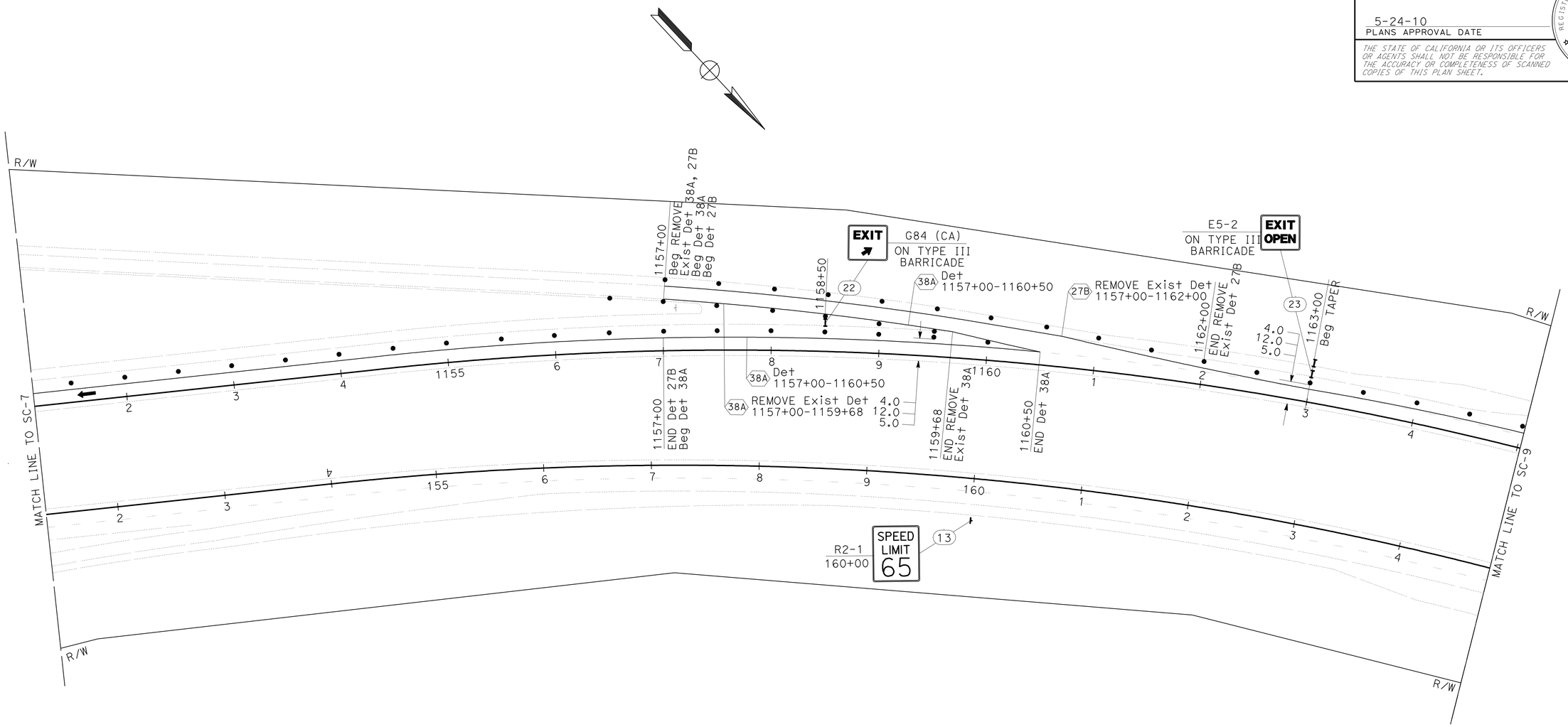

THIS PLAN ACCURATE FOR STAGE CONSTRUCTION AND TRAFFIC HANDLING WORK ONLY

STAGE CONSTRUCTION AND TRAFFIC HANDLING PLAN (STAGE 1)

SCALE: 1" = 50′

SC-8

STATE OF CALIFORNIA - DEPARTMENT OF TRANSPORTATION
Caltrans
DESIGN

FUNCTIONAL SUPERVISOR: STEPHEN WINZENREAD
CALCULATED-DESIGNED BY: BALJINDER BRAR
CHECKED BY: STEPHEN WINZENREAD
REVISED BY: YKF
DATE REVISED: 3-09-10

LAST REVISION 03-09-10 | DATE PLOTTED => 25-MAY-2010 | TIME PLOTTED => 14:06

Dist	COUNTY	ROUTE	POST MILES TOTAL PROJECT	SHEET No.	TOTAL SHEETS
09	Mno	395	R24.5/R26.3	16	52

REGISTERED CIVIL ENGINEER 3-9-10 DATE

5-24-10
PLANS APPROVAL DATE

REGISTERED PROFESSIONAL ENGINEER Baljinder Brar No. C67847 Exp. 06-30-11 CIVIL STATE OF CALIFORNIA

THE STATE OF CALIFORNIA OR ITS OFFICERS OR AGENTS SHALL NOT BE RESPONSIBLE FOR THE ACCURACY OR COMPLETENESS OF SCANNED COPIES OF THIS PLAN SHEET.

NOTE:

1. FOR ACCURATE RIGHT OF WAY AND ACCESS DATA, CONTACT RIGHT OF WAY ENGINEERING AT THE DISTRICT OFFICE.

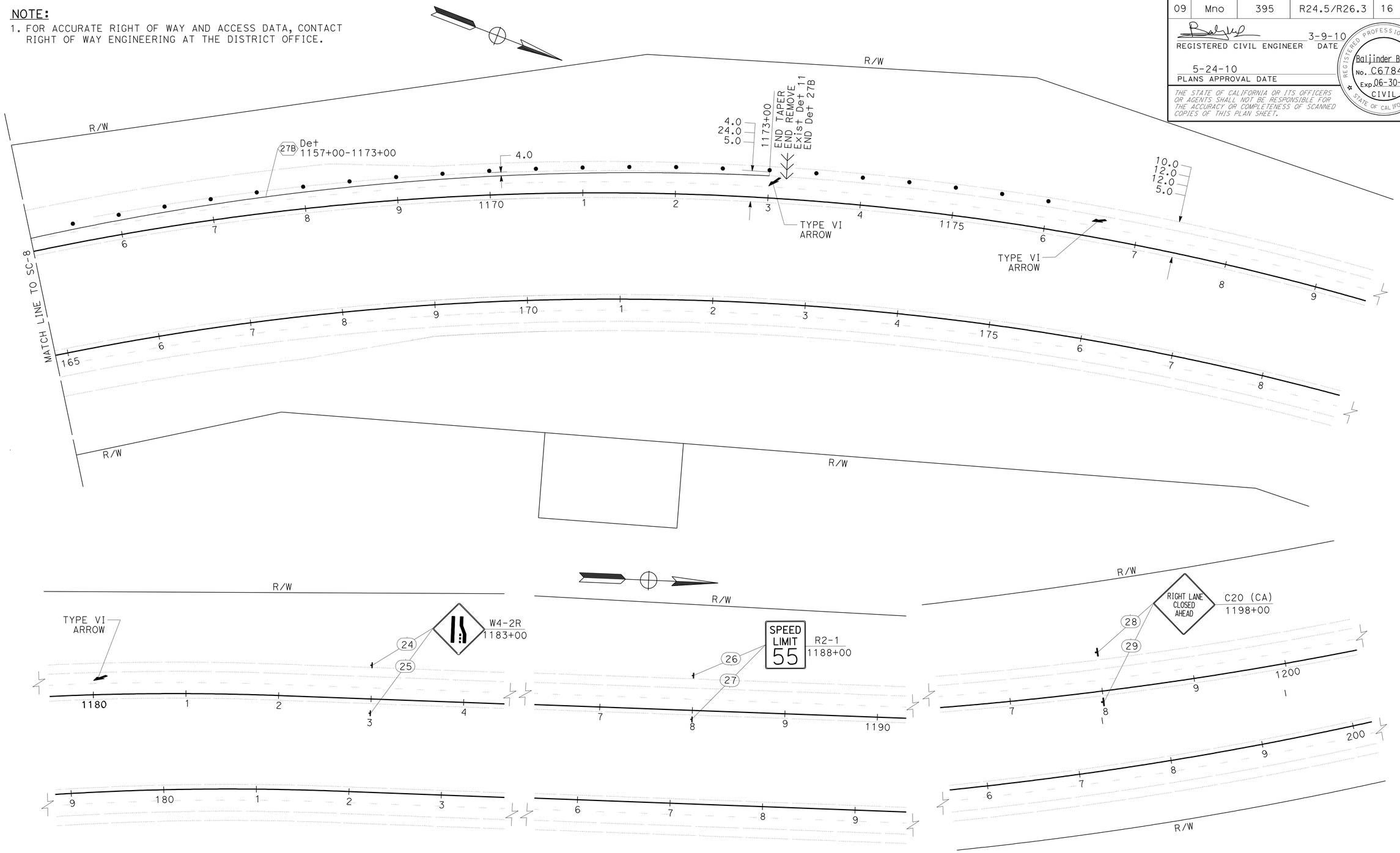

THIS PLAN ACCURATE FOR STAGE CONSTRUCTION AND TRAFFIC HANDLING WORK ONLY

STAGE CONSTRUCTION AND TRAFFIC HANDLING PLAN (STAGE 1)

SCALE: 1" = 50'

SC-9

REVISED BY	DATE REVISED
YKF	3-09-10

CALCULATED-DESIGNED BY: BALJINDER BRAR
CHECKED BY: STEPHEN WINZENREAD
FUNCTIONAL SUPERVISOR: STEPHEN WINZENREAD

STATE OF CALIFORNIA - DEPARTMENT OF TRANSPORTATION
Caltrans
DESIGN

LAST REVISION 02-10-10 | DATE PLOTTED => 25-MAY-2010 | TIME PLOTTED => 14:08

Dist	COUNTY	ROUTE	POST MILES TOTAL PROJECT	SHEET No.	TOTAL SHEETS
09	Mno	395	R24.5/R26.3	17	52

REGISTERED CIVIL ENGINEER 3-9-10 DATE

5-24-10
PLANS APPROVAL DATE

REGISTERED PROFESSIONAL ENGINEER
Baljinder Brar
No. C67847
Exp. 06-30-11
CIVIL
STATE OF CALIFORNIA

THE STATE OF CALIFORNIA OR ITS OFFICERS OR AGENTS SHALL NOT BE RESPONSIBLE FOR THE ACCURACY OR COMPLETENESS OF SCANNED COPIES OF THIS PLAN SHEET.

NOTE:

1. FOR ACCURATE RIGHT OF WAY AND ACCESS DATA, CONTACT RIGHT OF WAY ENGINEERING AT THE DISTRICT OFFICE.

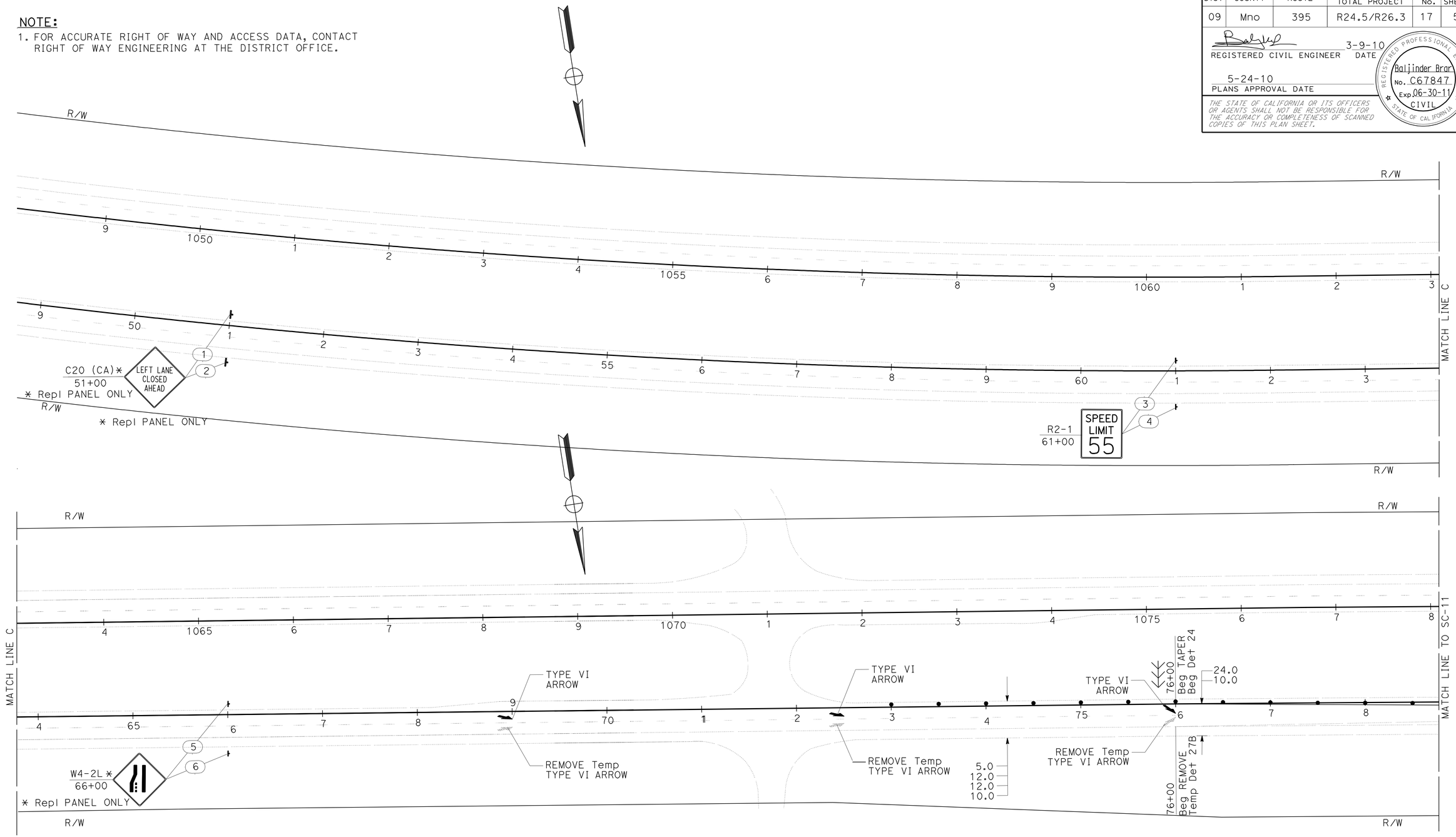

THIS PLAN ACCURATE FOR STAGE CONSTRUCTION AND TRAFFIC HANDLING WORK ONLY

STAGE CONSTRUCTION AND TRAFFIC HANDLING PLAN (STAGE 2)

SCALE: 1" = 50'

SC-10

REVISED BY	DATE REVISED
YKF	3-09-10

CALCULATED-DESIGNED BY: BALJINDER BRAR
CHECKED BY: STEPHEN WINZENREAD
FUNCTIONAL SUPERVISOR: STEPHEN WINZENREAD

STATE OF CALIFORNIA - DEPARTMENT OF TRANSPORTATION
Caltrans
DESIGN

LAST REVISION 03-09-10
DATE PLOTTED => 25-MAY-2010
TIME PLOTTED => 14:08

Dist	COUNTY	ROUTE	POST MILES TOTAL PROJECT	SHEET No.	TOTAL SHEETS
09	Mno	395	R24.5/R26.3	18	52

REGISTERED CIVIL ENGINEER 3-9-10 DATE

5-24-10
PLANS APPROVAL DATE

REGISTERED PROFESSIONAL ENGINEER Baljinder Brar No. C67847 Exp. 06-30-11 CIVIL STATE OF CALIFORNIA

THE STATE OF CALIFORNIA OR ITS OFFICERS OR AGENTS SHALL NOT BE RESPONSIBLE FOR THE ACCURACY OR COMPLETENESS OF SCANNED COPIES OF THIS PLAN SHEET.

NOTE:

1. FOR ACCURATE RIGHT OF WAY AND ACCESS DATA, CONTACT RIGHT OF WAY ENGINEERING AT THE DISTRICT OFFICE.

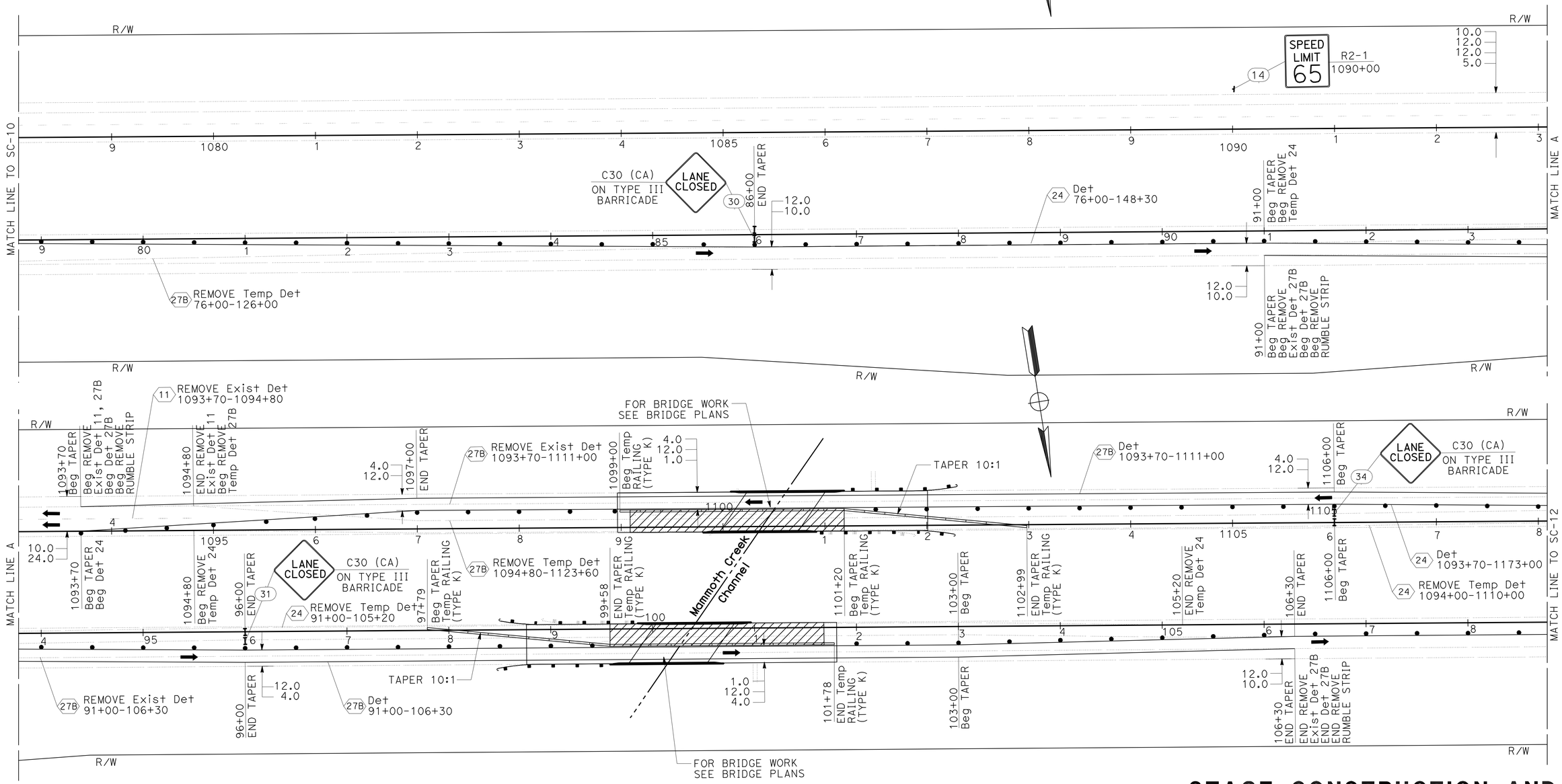

THIS PLAN ACCURATE FOR STAGE CONSTRUCTION AND TRAFFIC HANDLING WORK ONLY

STAGE CONSTRUCTION AND TRAFFIC HANDLING PLAN (STAGE 2)

SCALE: 1" = 50'

SC-11

REVISED BY	DATE REVISED
YKF	3-09-10

CALCULATED-DESIGNED BY: BALJINDER BRAR
CHECKED BY: STEPHEN WINZENREAD
FUNCTIONAL SUPERVISOR: STEPHEN WINZENREAD

STATE OF CALIFORNIA - DEPARTMENT OF TRANSPORTATION
Caltrans
DESIGN

LAST REVISION 03-09-10
DATE PLOTTED => 25-MAY-2010
TIME PLOTTED => 14:08

Dist	COUNTY	ROUTE	POST MILES TOTAL PROJECT	SHEET No.	TOTAL SHEETS
09	Mno	395	R24.5/R26.3	19	52

REGISTERED CIVIL ENGINEER 3-9-10 DATE

5-24-10
PLANS APPROVAL DATE

REGISTERED PROFESSIONAL ENGINEER Baljinder Brar No. C67847 Exp. 06-30-11 CIVIL STATE OF CALIFORNIA

THE STATE OF CALIFORNIA OR ITS OFFICERS OR AGENTS SHALL NOT BE RESPONSIBLE FOR THE ACCURACY OR COMPLETENESS OF SCANNED COPIES OF THIS PLAN SHEET.

NOTE:

1. FOR ACCURATE RIGHT OF WAY AND ACCESS DATA, CONTACT RIGHT OF WAY ENGINEERING AT THE DISTRICT OFFICE.

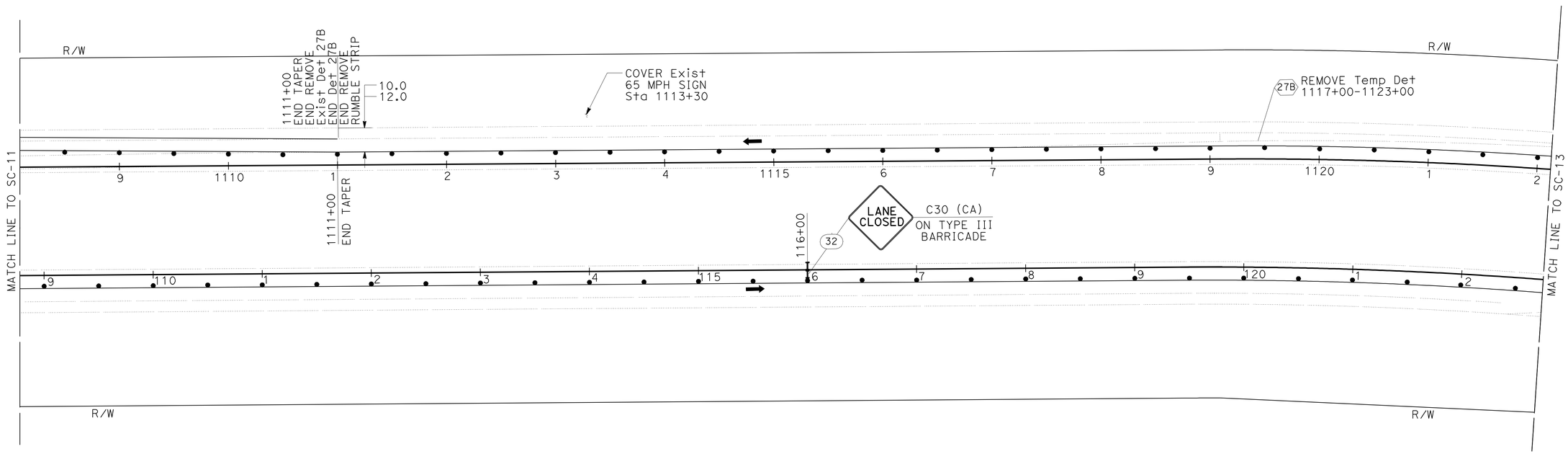

THIS PLAN ACCURATE FOR STAGE CONSTRUCTION AND TRAFFIC HANDLING WORK ONLY

STAGE CONSTRUCTION AND TRAFFIC HANDLING PLAN (STAGE 2)

SCALE: 1" = 50′ **SC-12**

STATE OF CALIFORNIA - DEPARTMENT OF TRANSPORTATION
Caltrans® **DESIGN**

FUNCTIONAL SUPERVISOR: STEPHEN WINZENREAD

CALCULATED-DESIGNED BY: BALJINDER BRAR
CHECKED BY: STEPHEN WINZENREAD

REVISED BY: YKF
DATE REVISED: 3-09-10

LAST REVISION 02-10-10 | DATE PLOTTED => 25-MAY-2010 | TIME PLOTTED => 14:08

Dist	COUNTY	ROUTE	POST MILES TOTAL PROJECT	SHEET No.	TOTAL SHEETS
09	Mno	395	R24.5/R26.3	20	52

REGISTERED CIVIL ENGINEER 3-9-10 DATE

5-24-10
PLANS APPROVAL DATE

REGISTERED PROFESSIONAL ENGINEER Baljinder Brar No. C67847 Exp. 06-30-11 CIVIL STATE OF CALIFORNIA

THE STATE OF CALIFORNIA OR ITS OFFICERS OR AGENTS SHALL NOT BE RESPONSIBLE FOR THE ACCURACY OR COMPLETENESS OF SCANNED COPIES OF THIS PLAN SHEET.

NOTE:

1. FOR ACCURATE RIGHT OF WAY AND ACCESS DATA, CONTACT RIGHT OF WAY ENGINEERING AT THE DISTRICT OFFICE.

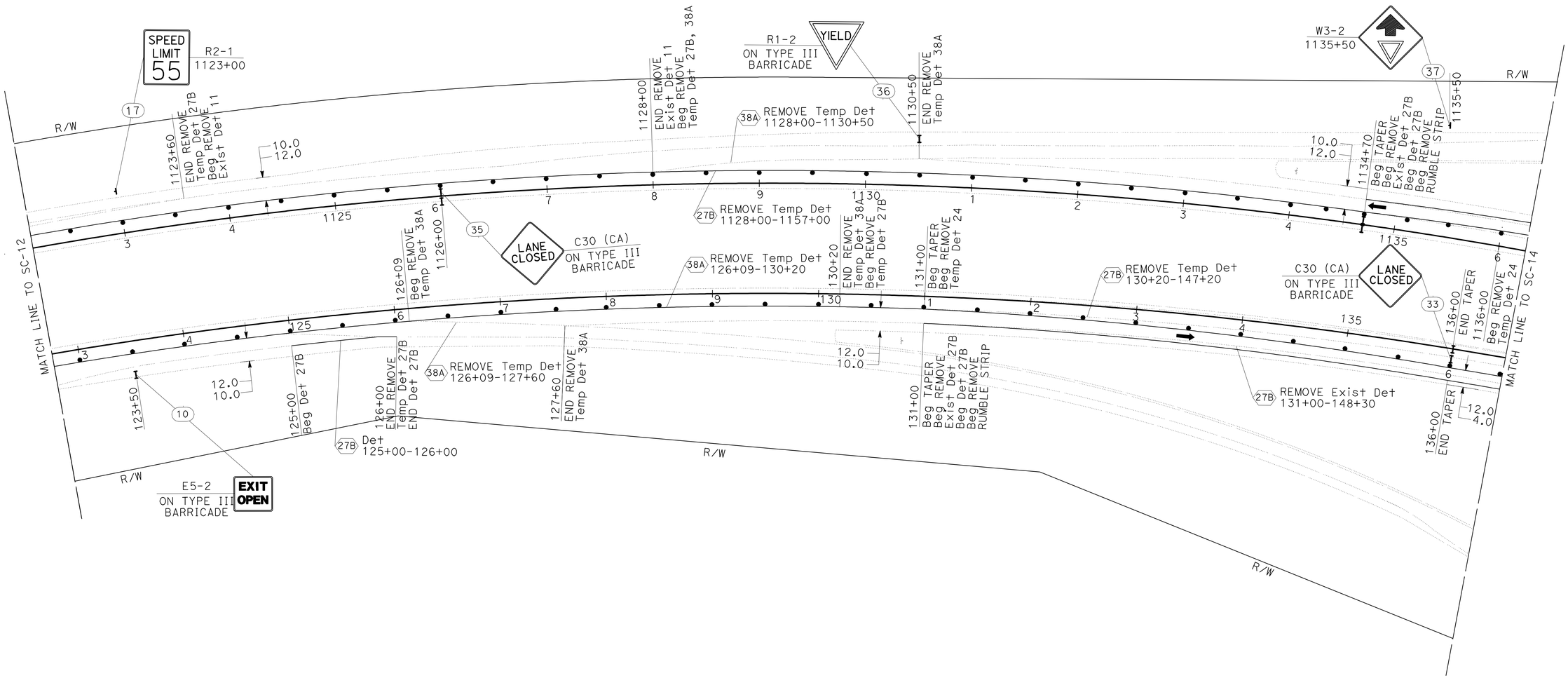

THIS PLAN ACCURATE FOR STAGE CONSTRUCTION AND TRAFFIC HANDLING WORK ONLY

STAGE CONSTRUCTION AND TRAFFIC HANDLING PLAN (STAGE 2)

SCALE: 1" = 50'

SC-13

CALCULATED-DESIGNED BY	BALJINDER BRAR
CHECKED BY	STEPHEN WINZENREAD
REVISED BY	YKF
DATE REVISED	3-09-10
FUNCTIONAL SUPERVISOR	STEPHEN WINZENREAD

STATE OF CALIFORNIA - DEPARTMENT OF TRANSPORTATION

Caltrans® DESIGN

LAST REVISION 03-09-10 | DATE PLOTTED => 25-MAY-2010 | TIME PLOTTED => 14:08

Dist	COUNTY	ROUTE	POST MILES TOTAL PROJECT	SHEET No.	TOTAL SHEETS
09	Mno	395	R24.5/R26.3	21	52

REGISTERED CIVIL ENGINEER 3-9-10 DATE

5-24-10
PLANS APPROVAL DATE

REGISTERED PROFESSIONAL ENGINEER Baljinder Brar No. C67847 Exp. 06-30-11 CIVIL STATE OF CALIFORNIA

THE STATE OF CALIFORNIA OR ITS OFFICERS OR AGENTS SHALL NOT BE RESPONSIBLE FOR THE ACCURACY OR COMPLETENESS OF SCANNED COPIES OF THIS PLAN SHEET.

NOTE:
1. FOR ACCURATE RIGHT OF WAY AND ACCESS DATA, CONTACT RIGHT OF WAY ENGINEERING AT THE DISTRICT OFFICE.

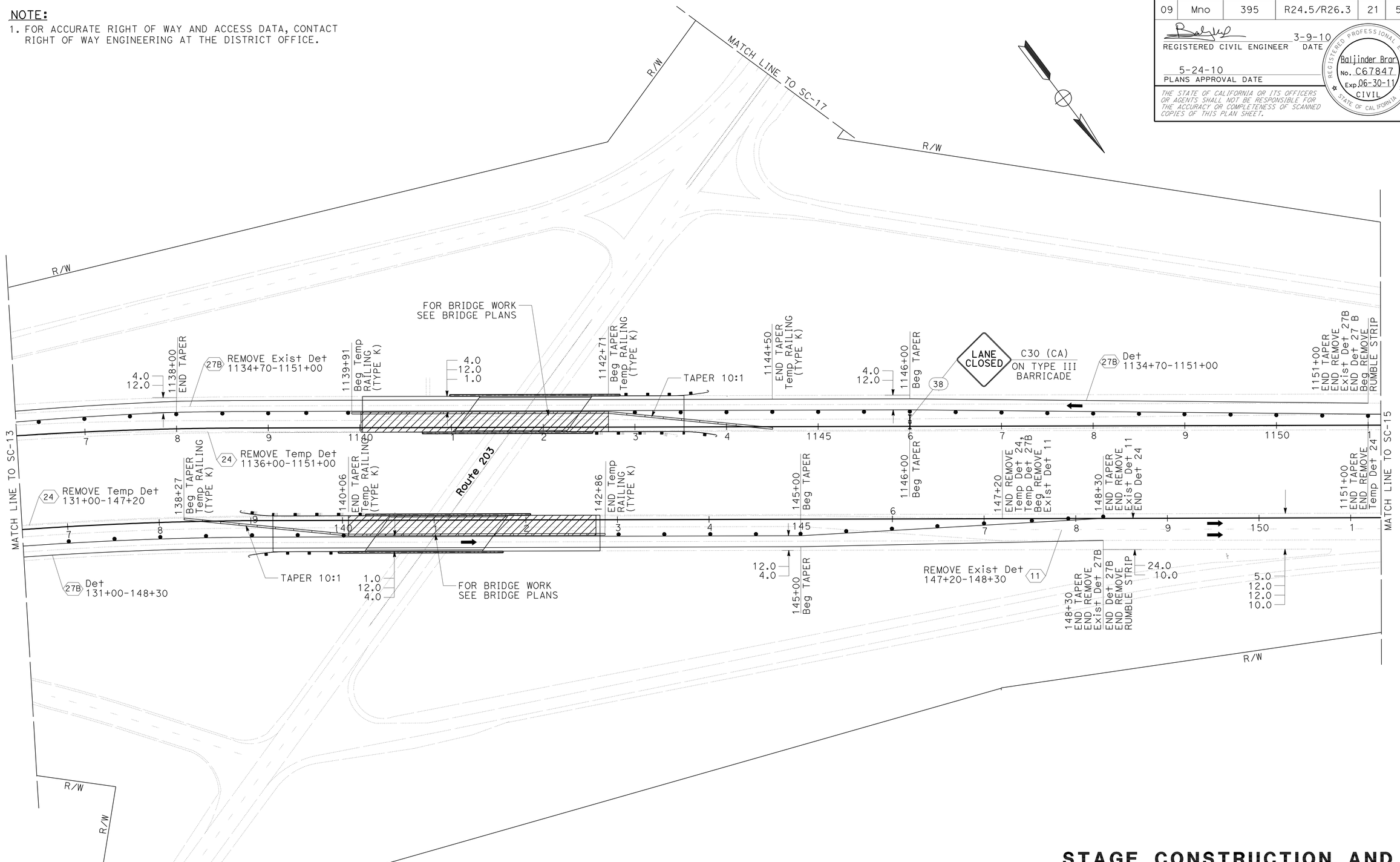

THIS PLAN ACCURATE FOR STAGE CONSTRUCTION AND TRAFFIC HANDLING WORK ONLY

STAGE CONSTRUCTION AND TRAFFIC HANDLING PLAN (STAGE 2)

SCALE: 1" = 50′ **SC-14**

STATE OF CALIFORNIA - DEPARTMENT OF TRANSPORTATION
Caltrans® **DESIGN**

FUNCTIONAL SUPERVISOR: STEPHEN WINZENREAD
CALCULATED-DESIGNED BY: BALJINDER BRAR
CHECKED BY: STEPHEN WINZENREAD
REVISED BY: YKF
DATE REVISED: 3-09-10

LAST REVISION 03-23-10 | DATE PLOTTED => 25-MAY-2010 | TIME PLOTTED => 13:48

Dist	COUNTY	ROUTE	POST MILES TOTAL PROJECT	SHEET No.	TOTAL SHEETS
09	Mno	395	R24.5/R26.3	22	52

REGISTERED CIVIL ENGINEER 3-9-10 DATE

5-24-10
PLANS APPROVAL DATE

REGISTERED PROFESSIONAL ENGINEER
Baljinder Brar
No. C67847
Exp. 06-30-11
CIVIL
STATE OF CALIFORNIA

THE STATE OF CALIFORNIA OR ITS OFFICERS OR AGENTS SHALL NOT BE RESPONSIBLE FOR THE ACCURACY OR COMPLETENESS OF SCANNED COPIES OF THIS PLAN SHEET.

NOTE:

1. FOR ACCURATE RIGHT OF WAY AND ACCESS DATA, CONTACT RIGHT OF WAY ENGINEERING AT THE DISTRICT OFFICE.

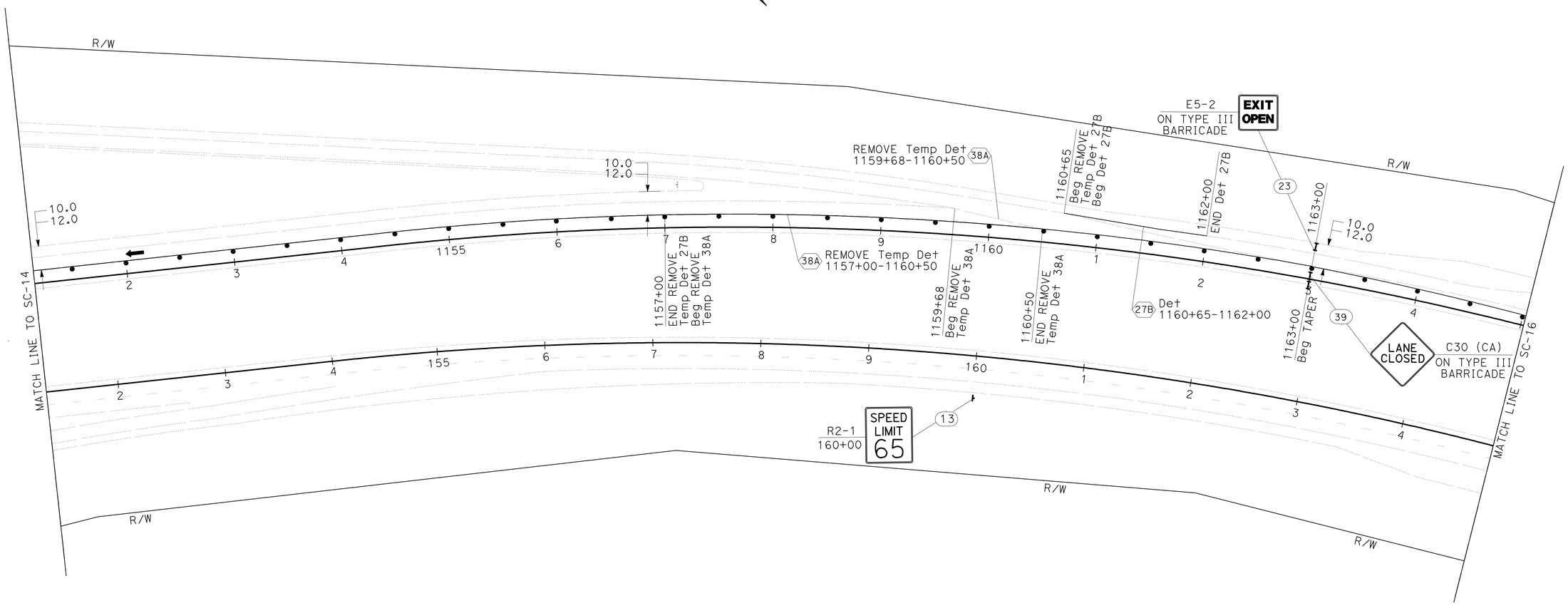

THIS PLAN ACCURATE FOR STAGE CONSTRUCTION AND TRAFFIC HANDLING WORK ONLY

STAGE CONSTRUCTION AND TRAFFIC HANDLING PLAN (STAGE 2)

SCALE: 1" = 50′ **SC-15**

REVISED BY	YKF
DATE REVISED	3-09-10
CALCULATED-DESIGNED BY	BALJINDER BRAR
CHECKED BY	STEPHEN WINZENREAD
FUNCTIONAL SUPERVISOR	STEPHEN WINZENREAD

STATE OF CALIFORNIA - DEPARTMENT OF TRANSPORTATION
Caltrans
DESIGN

LAST REVISION 03-10-10
DATE PLOTTED => 25-MAY-2010
TIME PLOTTED => 13:48

Dist	COUNTY	ROUTE	POST MILES TOTAL PROJECT	SHEET No.	TOTAL SHEETS
09	Mno	395	R24.5/R26.3	23	52

REGISTERED CIVIL ENGINEER 3-9-10 DATE

5-24-10
PLANS APPROVAL DATE

REGISTERED PROFESSIONAL ENGINEER
Baljinder Brar
No. C67847
Exp. 06-30-11
CIVIL
STATE OF CALIFORNIA

THE STATE OF CALIFORNIA OR ITS OFFICERS OR AGENTS SHALL NOT BE RESPONSIBLE FOR THE ACCURACY OR COMPLETENESS OF SCANNED COPIES OF THIS PLAN SHEET.

NOTE:

1. FOR ACCURATE RIGHT OF WAY AND ACCESS DATA, CONTACT RIGHT OF WAY ENGINEERING AT THE DISTRICT OFFICE.

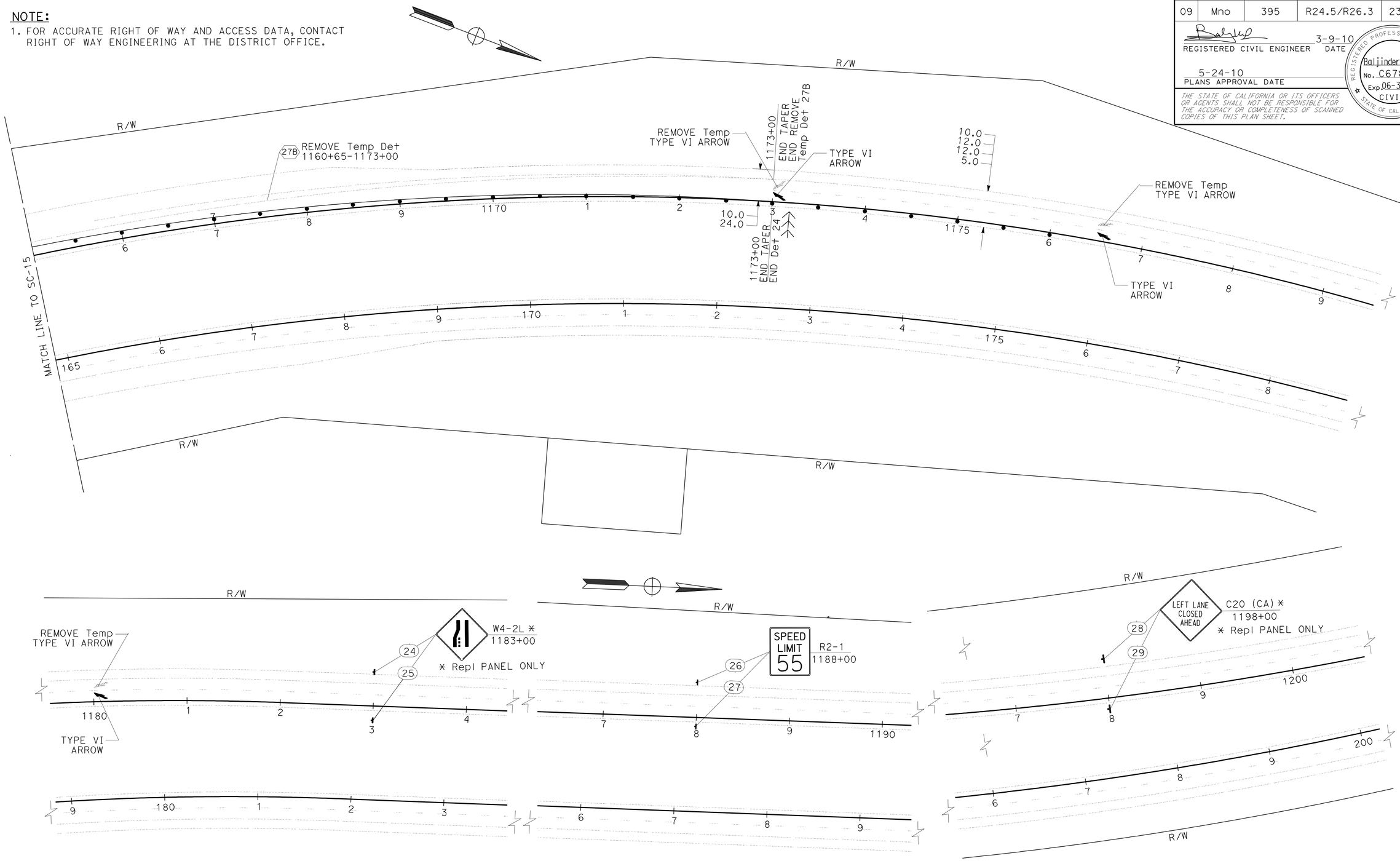

THIS PLAN ACCURATE FOR STAGE CONSTRUCTION AND TRAFFIC HANDLING WORK ONLY

STAGE CONSTRUCTION AND TRAFFIC HANDLING PLAN (STAGE 2)

SCALE: 1" = 50'

SC-16

REVISED BY	DATE REVISED
YKF	3-09-10

CALCULATED-DESIGNED BY: BALJINDER BRAR
CHECKED BY: STEPHEN WINZENREAD
FUNCTIONAL SUPERVISOR: STEPHEN WINZENREAD

STATE OF CALIFORNIA - DEPARTMENT OF TRANSPORTATION
Caltrans
DESIGN

LAST REVISION 03-10-10 | DATE PLOTTED => 25-MAY-2010 | TIME PLOTTED => 13:48

Dist	COUNTY	ROUTE	POST MILES TOTAL PROJECT	SHEET No.	TOTAL SHEETS
09	Mno	395	R24.5/R26.3	24	52

REGISTERED CIVIL ENGINEER 3-9-10 DATE

5-24-10
PLANS APPROVAL DATE

REGISTERED PROFESSIONAL ENGINEER
Baljinder Brar
No. C67847
Exp. 06-30-11
CIVIL
STATE OF CALIFORNIA

THE STATE OF CALIFORNIA OR ITS OFFICERS OR AGENTS SHALL NOT BE RESPONSIBLE FOR THE ACCURACY OR COMPLETENESS OF SCANNED COPIES OF THIS PLAN SHEET.

NOTE:

1. FOR ACCURATE RIGHT OF WAY AND ACCESS DATA, CONTACT RIGHT OF WAY ENGINEERING AT THE DISTRICT OFFICE.

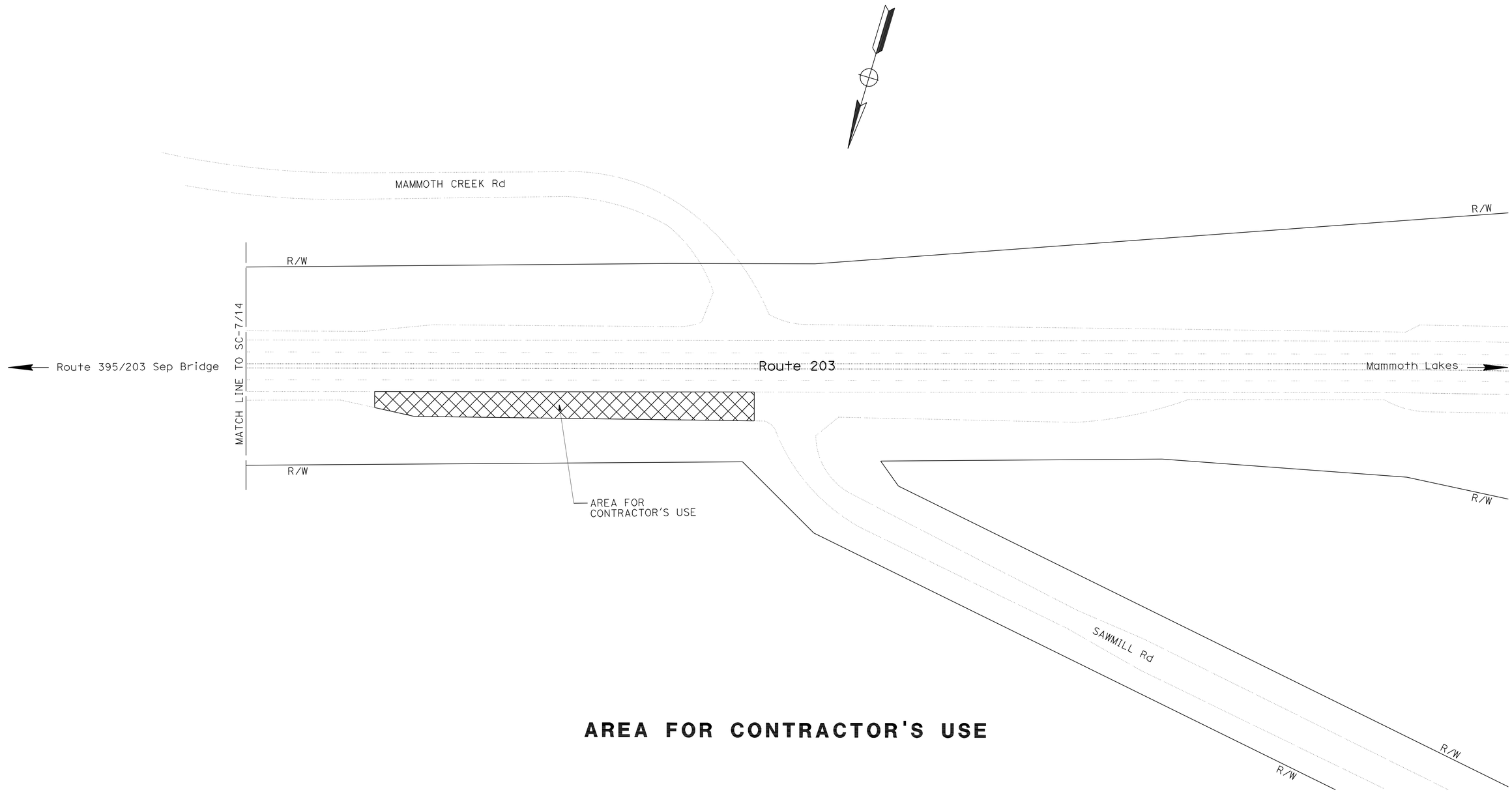

AREA FOR CONTRACTOR'S USE

THIS PLAN ACCURATE FOR STAGE CONSTRUCTION AND TRAFFIC HANDLING WORK ONLY

STAGE CONSTRUCTION AND TRAFFIC HANDLING PLAN

SCALE: 1" = 50'

SC-17

STATE OF CALIFORNIA - DEPARTMENT OF TRANSPORTATION
Caltrans
DESIGN

FUNCTIONAL SUPERVISOR: STEPHEN WINZENREAD

CALCULATED-DESIGNED BY: BALJINDER BRAR
CHECKED BY: STEPHEN WINZENREAD

REVISED BY: YKF
DATE REVISED: 3-09-10

LAST REVISION: DATE PLOTTED => 25-MAY-2010
03-23-10 TIME PLOTTED => 13:48

Dist	COUNTY	ROUTE	POST MILES TOTAL PROJECT	SHEET No.	TOTAL SHEETS
09	Mno	395	R24.5/R26.3	25	52

REGISTERED CIVIL ENGINEER 3-9-10 DATE

5-24-10
PLANS APPROVAL DATE

REGISTERED PROFESSIONAL ENGINEER Baljinder Brar No. C67847 Exp. 06-30-11 CIVIL STATE OF CALIFORNIA

THE STATE OF CALIFORNIA OR ITS OFFICERS OR AGENTS SHALL NOT BE RESPONSIBLE FOR THE ACCURACY OR COMPLETENESS OF SCANNED COPIES OF THIS PLAN SHEET.

(N) NOT A SEPARATE PAY ITEM, FOR INFORMATION ONLY

STAGE CONSTRUCTION TEMPORARY DELINEATION

Temp TRAFFIC STRIPE (TAPE)

STATION TO STATION (LOCATION)		SIDE	LENGTH (N)	DETAIL No. 24	27B	38A	8
			LF	LF	LF	LF	LF
STAGE 1 *							
76+00	126+00	NB	5000		5000		
91+00	105+20	NB	1420	1420			
126+09	127+60	NB	151			151	
126+09	130+20	NB	411			411	
130+20	147+20	NB	1700		1700		
131+00	147+20	NB	1620	1620			
1094+80	1110+00	SB	1520	1520			
1094+80	1123+60	SB	2880		2880		
1127+50	1131+50	SB	400			400	
1128+00	1157+00	SB	2900		2900		
1136+00	1151+00	SB	1500	1500			
1157+00	1160+50	SB	350			350	
1159+68	1160+50	SB	82			82	
1160+65	1173+00	SB	1235		1235		
STAGE 1 **							
126+00	130+20	NB	420		420		
127+60	130+20	NB	260			260	
1123+60	1134+00	SB	1040		1040		
1131+50	1134+00	SB	250			250	
1157+00	1159+68	SB	268			268	
1157+00	1160+65	SB	365		365		
STAGE 1 SUBTOTAL			23,772	6,060	15,540	2,172	-
STAGE 2 **							
76+00	148+30	NB	7230	7230			
91+00	106+30	NB	1530		1530		
125+00	126+00	NB	100		100		
131+00	148+30	NB	1730		1730		
1093+70	1111+00	SB	1730		1730		
1093+70	1173+00	SB	7930	7930			
1130+50	1131+50	SB	100				100
1134+70	1151+00	SB	1630		1630		
1160+65	1162+00	SB	135		135		
STAGE 2 SUBTOTAL			22,115	15,160	6,855		
SUBTOTAL				21,220	22,395	2,172	100
TOTAL				45,887			

REMOVE PAINTED TRAFFIC STRIPE

STATION TO STATION (LOCATION)		SIDE	LENGTH (N)	DETAIL No. 11	24	27B	38A	8
			LF	LF	LF	LF	LF	LF
STAGE 1								
76+00	99+46	NB	2346	587				
91+00	105+20	NB	1420		1420			
101+66	139+94	NB	3828	957				
125+00	130+20	NB	520			520		
127+60	130+20	NB	260				520	
131+00	147+20	NB	1620		1620			
142+74	147+20	NB	446	112				
1094+80	1099+11	SB	431	108				
1094+80	1110+00	SB	1520		1520			
1101+31	1123+60	SB	2229	558				
1123+60	1134+00	SB	1040			1040		
1127+50	1140+07	SB	1257	315				
1130+50	1131+50	SB	100					30
1131+50	1134+00	SB	250				500	
1136+00	1151+00	SB	1500		1500			
1142+87	1173+00	SB	3013	754				
1157+00	1159+68	SB	268				536	
1157+00	1162+00	SB	500			500		
STAGE 1 SUBTOTAL			22,548	3391	6060	2060	1556	30
STAGE 2								
91+00	106+30	NB	1530			1530		
131+00	148+30	NB	1730			1730		
147+20	148+30	NB	110	28				
1093+70	1094+80	SB	110	28				
1093+70	1111+00	SB	1730			1730		
1123+60	1127+50	SB	390	98				
1134+70	1151+00	SB	1630			1630		
STAGE 2 SUBTOTAL			7230	154		6620		
SUBTOTAL				3545	6060	8680	1556	30
TOTAL				19,871				

1. * REMOVE Temp TRAFFIC STRIPE (TAPE) UPON COMPLETION OF STAGE 1,
2. ** REMOVE Temp TRAFFIC STRIPE (TAPE) UPON COMPLETION OF STAGE 2.

TEMPORARY PAVEMENT MARKING (TAPE)

STATION (LOCATION)	SIDE	PAVEMENT MARKING ARROWS TYPE VI (R+) EA(N)	SQFT	TYPE VI (L+) EA(N)	SQFT
STAGE 1 *					
69+00	NB			1	42
72+50	NB			1	42
76+00	NB			1	42
1173+00	SB			1	42
1176+50	SB			1	42
1180+00	SB			1	42
SUBTOTAL				6	252
STAGE 2 **					
69+00	NB	1	42		
72+50	NB	1	42		
76+00	NB	1	42		
1173+00	SB	1	42		
1176+50	SB	1	42		
1180+00	SB	1	42		
SUBTOTAL		6	252		
SUBTOTAL			252		252
TOTAL		504			

1. * REMOVE Temp PAVEMENT MARKIMG (TAPE) UPON COMPLETION OF STAGE 1,
2. ** REMOVE Temp PAVEMENT MARKIMG (TAPE) UPON COMPLETION OF STAGE 2.

STAGE CONSTRUCTION TEMPORARY PAVEMENT DELINEATION ITEMS

STATION TO STATION (LOCATION)		SIDE	CHANNELIZER (SURFACE MOUNTED) EA	TYPE III BARRICADE EA	FLASHING ARROW SIGN EA	TEMPORARY RAILING (TYPE K) LF	COMMENT
STAGE 1							
51+00	160+00	NB	158	13	1	860	
1090+00	1198+00	SB	192	13	1	860	
SUBTOTAL			350	26	2	1720	
STAGE 2							
51+00	160+00	NB	143	9	1	860	CHANNELIZERS, BARRICADES TYPE III, RAILINGS TYPE K, FLASHING BEACONS, AND FLASHING ARROW SIGN REUSE FROM STAGE 1
1090+00	1198+00	SB	158	14	1	860	
SUBTOTAL			301	23	2	1720	
TOTAL			651	49	4	3440	

STAGE CONSTRUCTION QUANTITIES
SCQ-1

STATE OF CALIFORNIA - DEPARTMENT OF TRANSPORTATION
DESIGN
Caltrans
FUNCTIONAL SUPERVISOR STEPHEN WINZENREAD
CALCULATED-DESIGNED BY BALJINDER BRAR
CHECKED BY STEPHEN WINZENREAD
REVISED BY
DATE REVISED

LAST REVISION 03-23-10 | DATE PLOTTED => 25-MAY-2010 | TIME PLOTTED => 13:48

Dist	COUNTY	ROUTE	POST MILES TOTAL PROJECT	SHEET No.	TOTAL SHEETS
09	Mno	395	R24.5/R26.3	26	52

REGISTERED CIVIL ENGINEER 3-9-10 DATE

5-24-10
PLANS APPROVAL DATE

REGISTERED PROFESSIONAL ENGINEER Baljinder Brar No. C67847 Exp. 06-30-11 CIVIL STATE OF CALIFORNIA

THE STATE OF CALIFORNIA OR ITS OFFICERS OR AGENTS SHALL NOT BE RESPONSIBLE FOR THE ACCURACY OR COMPLETENESS OF SCANNED COPIES OF THIS PLAN SHEET.

NOTES:

1. LOCATIONS OF CONSTRUCTION AREA SIGNS SHOWN ARE APPROXIMATE, EXACT LOCATIONS TO BE DETERMINED BY THE ENGINEER.
2. SEE CONSTRUCTION AREA SIGN PLAN FOR ADDITIONAL CONSTRUCTION AREA SIGNS.
3. TYPE III BARRICADES ARE SUMMARIZED ON THE STAGE CONSTRUCTION QUANTITIES SHEET SCQ-1.

CONSTRUCTION AREA SIGN SUMMARY

	SIGN NUMBER	STATION (LOCATION)	LEFT	RIGHT	SIGN PANEL: SIGN CODE	SIGN PANEL: SIZE	SIGN PANEL: MESSAGE	POSTS: SIZE	POSTS: SINGLE	POSTS: DOUBLE	NORTHBOUTN (FNBT)	SOUTHBOUND (FSBT)	EASTBOUNB (FEBT)	WESTBOUNT (FWBT)	MOUNTED ON TYPE III BARRICADE	REMARKS	
STAGE 1	1	51+00	X		C20 (CA)	48" X 48"	RIGHT LANE CLOSED AHEAD	6" X 6"	X		X						STAGE 1
	2	51+00		X	C20 (CA)	48" X 48"	RIGHT LANE CLOSED AHEAD	6" X 6"	X		X						
	3	61+00	X		R2-1	36" X 48"	SPEED LIMIT 55	4" X 6"	X		X						
	4	61+00		X	R2-1	36" X 48"	SPEED LIMIT 55	4" X 6"	X		X						
	5	66+00	X		W4-2R	48" X 48"	RIGHT LANE ENDS SYMBOL	6" X 6"	X		X						
	6	66+00		X	W4-2R	48" X 48"	RIGHT LANE ENDS SYMBOL	6" X 6"	X		X						
	7	86+00		X	C30 (CA)	48" X 48"	LANE CLOSED				X				X		
	8	96+00		X	C30 (CA)	48" X 48"	LANE CLOSED				X				X		
	9	115+00		X	C30 (CA)	48" X 48"	LANE CLOSED				X				X		
	10	123+50		X	E5-2	48" X 36"	EXIT OPEN				X				X		
	11	128+50		X	G84 (CA)	48" X 48"	EXIT				X				X		
	12	136+00		X	C30 (CA)	48" X 48"	LANE CLOSED				X				X		
	13	160+00		X	R2-1	36" X 48"	SPEED LIMIT 65	4" X 6"	X		X						
	14	1090+00	X		R2-1	36" X 48"	SPEED LIMIT 65	4" X 6"	X			X					
	15	1105+00	X		C30 (CA)	48" X 48"	LANE CLOSED					X			X		
	16	1117+00	X		C30 (CA)	48" X 48"	LANE CLOSED					X			X		
	17	1123+00	X		R2-1	36" X 48"	SPEED LIMIT 55	4" X 6"	X			X					
	18	1128+00	X		R1-2	48"x48" x48"	YIELD					X			X		
	19	1133+00	X		W3-2	48" X 48"	YIELD AHEAD SYMBOL	6" X 6"	X			X					
	20	1134+00	X		W4-1R	48" X 48"	MERGING TRAFFIC					X			X		
	21	1146+00	X		C30 (CA)	48" X 48"	LANE CLOSED					X			X		
	22	1158+50	X		G84 (CA)	48" X 48"	EXIT					X			X		
	23	1163+00	X		E5-2	48" X 36"	EXIT OPEN					X			X		
	24	1183+00	X		W4-2R	48" X 48"	RIGHT LANE ENDS SYMBOL	6" X 6"	X			X					
	25	1183+00		X	W4-2R	48" X 48"	RIGHT LANE ENDS SYMBOL	6" X 6"	X			X					
	26	1188+00	X		R2-1	36" X 48"	SPEED LIMIT 55	4" X 6"	X			X					
	27	1188+00		X	R2-1	36" X 48"	SPEED LIMIT 55	4" X 6"	X			X					
	28	1198+00	X		C20 (CA)	48" X 48"	RIGHT LANE CLOSED AHEAD	6" X 6"	X			X					
	29	1198+00		X	C20 (CA)	48" X 48"	RIGHT LANE CLOSED AHEAD	6" X 6"	X			X					

STAGE CONSTRUCTION QUANTITIES
SCQ-2

STATE OF CALIFORNIA - DEPARTMENT OF TRANSPORTATION
Caltrans® DESIGN

FUNCTIONAL SUPERVISOR: STEPHEN WINZENREAD
CALCULATED-DESIGNED BY: BALJINDER BRAR
CHECKED BY: STEPHEN WINZENREAD
REVISED BY: YKF
DATE REVISED: 3-09-10

LAST REVISION 03-23-10
DATE PLOTTED => 25-MAY-2010
TIME PLOTTED => 13:48

Dist	COUNTY	ROUTE	POST MILES TOTAL PROJECT	SHEET No.	TOTAL SHEETS
09	Mno	395	R24.5/R26.3	27	52

REGISTERED CIVIL ENGINEER 3-9-10 DATE

5-24-10
PLANS APPROVAL DATE

REGISTERED PROFESSIONAL ENGINEER Baljinder Brar No. C67847 Exp. 06-30-11 CIVIL STATE OF CALIFORNIA

THE STATE OF CALIFORNIA OR ITS OFFICERS OR AGENTS SHALL NOT BE RESPONSIBLE FOR THE ACCURACY OR COMPLETENESS OF SCANNED COPIES OF THIS PLAN SHEET.

NOTES:

1. LOCATIONS OF CONSTRUCTION AREA SIGNS SHOWN ARE APPROXIMATE, EXACT LOCATIONS TO BE DETERMINED BY THE ENGINEER.
2. SEE CONSTRUCTION AREA SIGN PLAN FOR ADDITIONAL CONSTRUCTION AREA SIGNS.

CONSTRUCTION AREA SIGN SUMMARY

					SIGN PANEL			POSTS									
	SIGN NUMBER	STATION (LOCATION)	LEFT	RIGHT	SIGN CODE	SIZE	MESSAGE	SIZE	SINGLE	DOUBLE	NORTHBOUTN (FNBT)	SOUTHBOUND (FSBT)	EASTBOUNB (FEBT)	WESTBOUNT (FWBT)	MOUNTED ON TYPE III BARRICADE	REMARKS	
STAGE 2	1	51+00	X		C20 (CA)	48" x 48"	LEFT LANE CLOSED AHEAD	6" x 6"	X		X					REUSE POSTS FROM STAGE 1, REPLACE PANEL ONLY	STAGE 2
	2	51+00		X	C20 (CA)	48" x 48"	LEFT LANE CLOSED AHEAD	6" x 6"	X		X					REUSE POSTS FROM STAGE 1, REPLACE PANEL ONLY	
	3	61+00	X		R2-1	36" x 48"	SPEED LIMIT 55	4" x 6"	X		X					THE SAME AS SIGN No. 3 IN STAGE 1	
	4	61+00		X	R2-1	36" x 48"	SPEED LIMIT 55	4" x 6"	X		X					THE SAME AS SIGN No. 4 IN STAGE 1	
	5	66+00	X		W4-2L	48" x 48"	LEFT LANE ENDS SYMBOL	6" x 6"	X		X					REUSE POSTS FROM STAGE 1, REPLACE PANEL ONLY	
	6	66+00		X	W4-2L	48" x 48"	LEFT LANE ENDS SYMBOL	6" x 6"	X		X					REUSE POSTS FROM STAGE 1, REPLACE PANEL ONLY	
	30	86+00	X		C30 (CA)	48" x 48"	LANE CLOSED				X				X	REUSE FROM STAGE 1	
	31	96+00	X		C30 (CA)	48" x 48"	LANE CLOSED				X				X	REUSE FROM STAGE 1	
	32	116+00	X		C30 (CA)	48" x 48"	LANE CLOSED				X				X	REUSE FROM STAGE 1	
	10	123+50		X	E5-2	48" x 36"	EXIT OPEN				X				X	THE SAME AS SIGN No. 10 IN STAGE 1	
	33	136+00	X		C30 (CA)	48" x 48"	LANE CLOSED				X				X	REUSE FROM STAGE 1	
	13	160+00		X	R2-1	36" x 48"	SPEED LIMIT 65	4" x 6"	X		X					THE SAME AS SIGN No. 13 IN STAGE 1	
	14	1090+00	X		R2-1	36" x 48"	SPEED LIMIT 65	4" x 6"	X			X				THE SAME AS SIGN No. 14 IN STAGE 1	
	34	1106+00		X	C30 (CA)	48" x 48"	LANE CLOSED					X			X	REUSE FROM STAGE 1	
	17	1123+00	X		R2-1	36" x 48"	SPEED LIMIT 55	4" x 6"	X			X				THE SAME AS SIGN No. 17 IN STAGE 1	
	35	1126+00		X	C30 (CA)	48" x 48"	LANE CLOSED					X			X	REUSE FROM STAGE 1	
	36	1130+50	X		R1-2	48"x48" x48"	YIELD					X			X	THE SAME AS SIGN No. 18 IN STAGE 1	
	37	1135+50	X		W3-2	48" x 48"	YIELD AHEAD SYMBOL	6" x 6"	X			X				THE SAME AS SIGN No. 19 IN STAGE 1	
	38	1146+00		X	C30 (CA)	48" x 48"	LANE CLOSED					X			X	REUSE FROM STAGE 1	
	23	1163+00		X	E5-2	48" x 36"	EXIT OPEN					X			X	THE SAME AS SIGN No. 23 IN STAGE 1	
	39	1163+00		X	C30 (CA)	48" x 48"	LANE CLOSED					X			X	REUSE FROM STAGE 1	
	24	1183+00	X		W4-2L	48" x 48"	LEFT LANE ENDS SYMBOL	6" x 6"	X			X				REUSE POSTS FROM STAGE 1, REPLACE PANEL ONLY	
	25	1183+00		X	W4-2L	48" x 48"	LEFT LANE ENDS SYMBOL	6" x 6"	X			X				REUSE POSTS FROM STAGE 1, REPLACE PANEL ONLY	
	26	1188+00	X		R2-1	36" x 48"	SPEED LIMIT 55	4" x 6"	X			X				THE SAME AS SIGN No. 24 IN STAGE 1	
	27	1188+00		X	R2-1	36" x 48"	SPEED LIMIT 55	4" x 6"	X			X				THE SAME AS SIGN No. 25 IN STAGE 1	
	28	1198+00	X		C20 (CA)	48" x 48"	LEFT LANE CLOSED AHEAD	6" x 6"	X			X				REUSE POSTS FROM STAGE 1, REPLACE PANEL ONLY	
	29	1198+00		X	C20 (CA)	48" x 48"	LEFT LANE CLOSED AHEAD	6" x 6"	X			X				REUSE POSTS FROM STAGE 1, REPLACE PANEL ONLY	

STAGE CONSTRUCTION QUANTITIES
SCQ-3

STATE OF CALIFORNIA - DEPARTMENT OF TRANSPORTATION
Caltrans® DESIGN

FUNCTIONAL SUPERVISOR: STEPHEN WINZENREAD
CALCULATED-DESIGNED BY: BALJINDER BRAR
CHECKED BY: STEPHEN WINZENREAD
REVISED BY: YKF
DATE REVISED: 3-09-10

LAST REVISION 03-23-10 | DATE PLOTTED => 25-MAY-2010 | TIME PLOTTED => 13:48

Dist	COUNTY	ROUTE	POST MILES TOTAL PROJECT	SHEET No.	TOTAL SHEETS
09	Mno	395	R24.5/R26.3	28	52

REGISTERED CIVIL ENGINEER 3-9-10 DATE

5-24-10
PLANS APPROVAL DATE

REGISTERED PROFESSIONAL ENGINEER Baljinder Brar No. C67847 Exp. 06-30-11 CIVIL STATE OF CALIFORNIA

THE STATE OF CALIFORNIA OR ITS OFFICERS OR AGENTS SHALL NOT BE RESPONSIBLE FOR THE ACCURACY OR COMPLETENESS OF SCANNED COPIES OF THIS PLAN SHEET.

(N) NOT A SEPARATE PAY ITEM, FOR INFORMATION ONLY

PAINT TRAFFIC STRIPE (2-COAT)

STATION TO STATION (LOCATION)		SIDE	LENGTH (N)	DETAIL No. 11	24	27B	38A	8
			LF	LF	LF	LF	LF	LF
72+00	173+00	NB	10100	10100	10100			
72+00	130+20	NB	5820			5820		
127+60	130+20	NB	260				260	
127+60	130+20	NB	260				260	
130+20	154+00	NB	2380			2380		
150+50	173+00	NB	2250			2250		
150+50	153+00	NB	250				250	
153+00	154+00	NB	100					100
1071+30	1173+50	SB	10220	10220	10220			
1071+30	1134+00	SB	6270			6270		
1130+50	1157+00	SB	2650			2650		
1130+50	1131+50	SB	100					100
1131+50	1134+00	SB	250				250	
1157+00	1159+68	SB	268				268	
1157+00	1159+68	SB	268				268	
1157+00	1173+50	SB	1650			1650		
SUBTOTAL				20,320	20,320	21,020	1,556	200
TOTAL				63,416				

HIGHWAY POST MARKERS

STATION (LOCATION)	SIDE	L†	R†	MILEPOST MARKER (CLASS 2)	REMARKS
				EA	POST MILE
102+11	NB		X	1	395 MNO R 25.00
128+35	NB	X		1	395 MNO R 25.50
1101+58	SB	X		1	395 MNO R 25.00
1127+87	SB		X	1	395 MNO R 25.50
TOTAL				4	

REMOVE MARKERS AND DELINEATORS

STATION TO STATION (LOCATION)		SIDE	MARKER TYPE L	MARKER MILEPOST	DELINEATOR TYPE F	DELINEATOR TYPE G
			EA	EA	EA	EA
98+96	101+12	NB	2	1	2	2
139+57	142+11	NB	2	-	1	1
1099+78	1102+37	SB	1	1	4	4
1140+47	1143+21	SB	2	1	1	1
SUBTOTAL			7	3	8	8
TOTAL			10		16	

OBJECT MARKERS AND DELINEATORS

STATION (LOCATION)	SIDE	L†	R†	OBJECT MARKER TYPE L-1	DELINEATORS (CLASS 2) TYPE F	TYPE G
				EA	EA	EA
98+86	NB		X	1	-	-
98+89	NB	X		1	-	-
98+96	NB		X	-	1	-
99+12	NB	X		-	-	1
100+82	NB		X	-	1	-
101+12	NB	X		-	-	1
139+28	NB	X		1	-	-
139+37	NB		X	1	-	-
141+80	NB		X	-	1	-
142+11	NB	X		-	-	1
1099+78	SB		X	-	-	1
1099+84	SB	X		-	1	-
1100+91	SB		X	-	-	1
1101+09	SB		X	-	-	1
1101+19	SB	X		-	1	-
1101+37	SB	X		-	1	-
1101+86	SB		X	1	-	-
1101+91	SB	X		1	-	-
1102+27	SB		X	-	-	1
1102+37	SB	X		-	1	-
1140+64	SB		X	-	-	1
1140+95	SB	X		-	1	-
1143+41	SB	X	X	1	-	-
1143+50	SB		X	1	-	-
SUBTOTAL				8	8	8
TOTAL				8	16	

PAVEMENT DELINEATION QUANTITIES
PDQ-1

STATE OF CALIFORNIA - DEPARTMENT OF TRANSPORTATION
Caltrans DESIGN

FUNCTIONAL SUPERVISOR: STEPHEN WINZENREAD
CALCULATED-DESIGNED BY: BALJINDER BRAR
CHECKED BY: STEPHEN WINZENREAD
REVISED BY
DATE REVISED

LAST REVISION 03-23-10
DATE PLOTTED => 25-MAY-2010
TIME PLOTTED => 13:50

Dist	COUNTY	ROUTE	POST MILES TOTAL PROJECT	SHEET No.	TOTAL SHEETS
09	Mno	395	R24.5/R26.3	29	52

REGISTERED CIVIL ENGINEER 3-9-10 DATE

5-24-10
PLANS APPROVAL DATE

REGISTERED PROFESSIONAL ENGINEER Baljinder Brar No. C67847 Exp. 06-30-11 CIVIL STATE OF CALIFORNIA

THE STATE OF CALIFORNIA OR ITS OFFICERS OR AGENTS SHALL NOT BE RESPONSIBLE FOR THE ACCURACY OR COMPLETENESS OF SCANNED COPIES OF THIS PLAN SHEET.

NOTES:
1. DIMENSIONS WITH A LETTER SUFFIX DENOTE THE FEDERAL STANDARD ALPHABET SERIES TO BE USED.
2. WHITE BACKGROUND WITH BLACK BORDER. LEGEND & SYMBOL NON-REFLECTORIZED BACKGROUND.

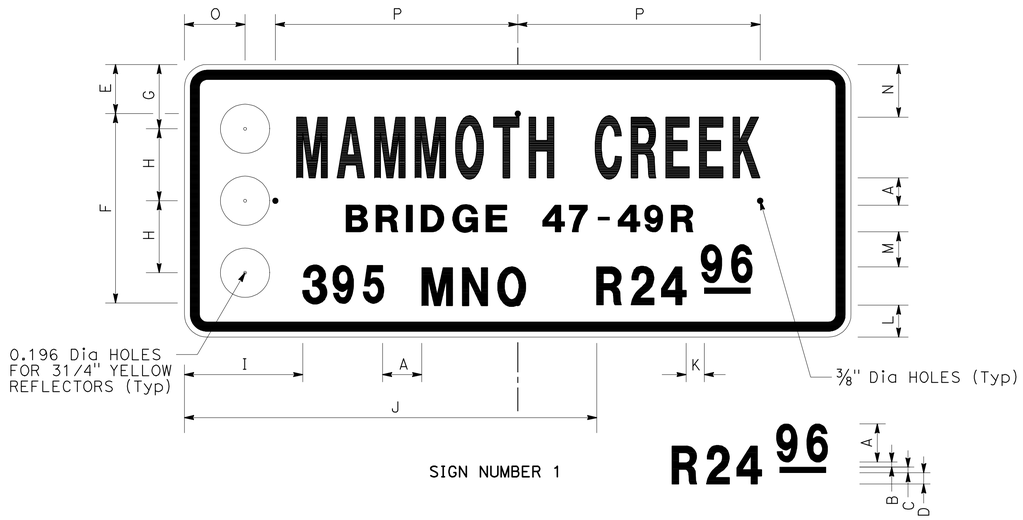

SIGN NUMBER 1 R24 96

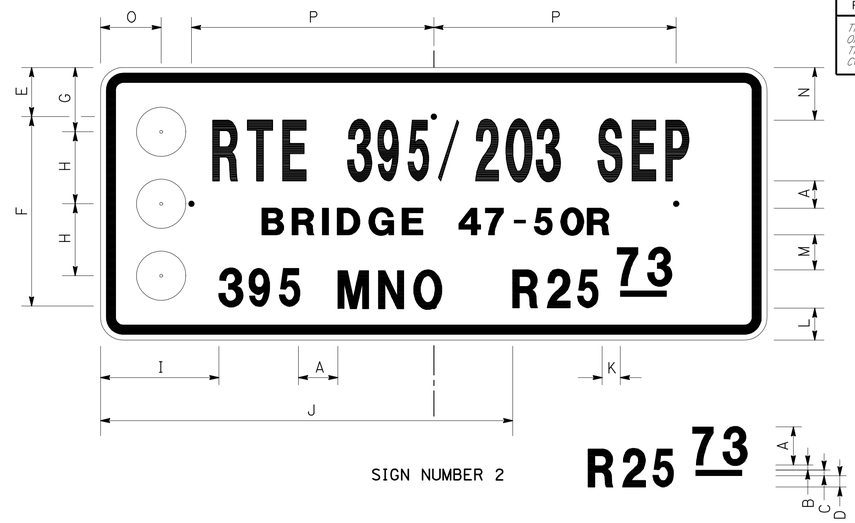

SIGN NUMBER 2 R25 73

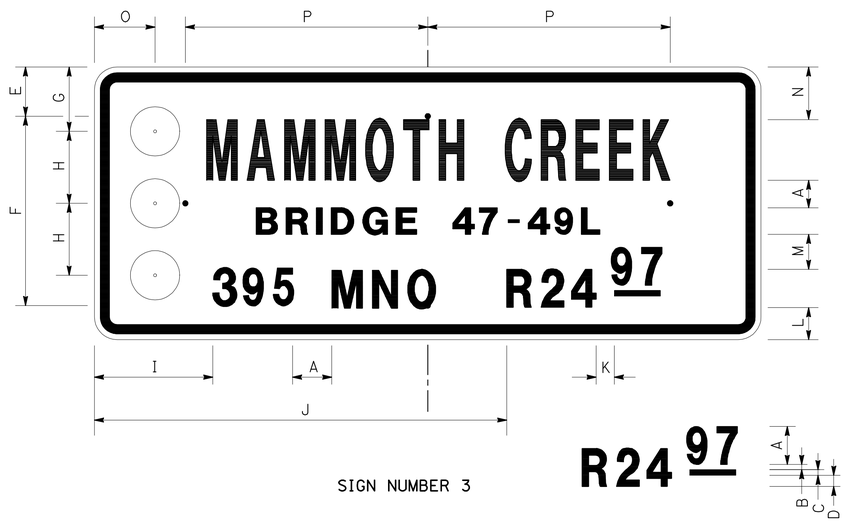

SIGN NUMBER 3 R24 97

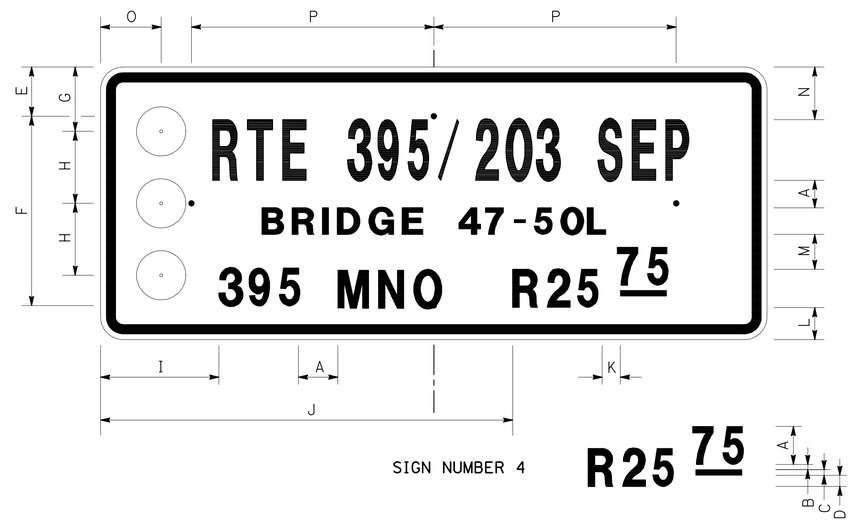

SIGN NUMBER 4 R25 75

G11-4.1 (CA)

SIZE	BORDER WIDTH	MARGIN WIDTH	LETTER SIZE, SERIES & STROKE WIDTH			CORNER RADIUS
			LINE 1	LINE 2	LINE 3	
44X18	5/8	3/8	4D-.72*	13/4D-.32	2 1/2-.45	1 1/2

A	B	C	D	E	F	G	H
2 1/2	1/2	3/8	1	3	12	4 1/4	4 3/4

I	J	K	L	M	N	O	P
8	27 1/2	1 1/2	2 1/4	1 3/4	3 1/4	4	16

* USE SERIES C OR B LETTERS IN LINE 1 FOR LONGER NAMES

SIGN NUMBER 1-4

ALL DIMENSIONS ARE IN INCHES UNLESS OTHERWISE SHOWN

SIGN DETAILS SD-1

STATE OF CALIFORNIA - DEPARTMENT OF TRANSPORTATION
Caltrans DESIGN

FUNCTIONAL SUPERVISOR: STEPHEN WINZENREAD
CALCULATED-DESIGNED BY: BALJINDER BRAR
CHECKED BY: STEPHEN WINZENREAD
REVISED BY
DATE REVISED

LAST REVISION 03-09-10 | DATE PLOTTED => 25-MAY-2010 | TIME PLOTTED => 13:50

Dist	COUNTY	ROUTE	POST MILES TOTAL PROJECT	SHEET No.	TOTAL SHEETS
09	Mno	395	R24.5/R26.3	30	52

REGISTERED CIVIL ENGINEER 3-9-10 DATE

5-24-10
PLANS APPROVAL DATE

REGISTERED PROFESSIONAL ENGINEER Baljinder Brar No. C67847 Exp. 06-30-11 CIVIL STATE OF CALIFORNIA

THE STATE OF CALIFORNIA OR ITS OFFICERS OR AGENTS SHALL NOT BE RESPONSIBLE FOR THE ACCURACY OR COMPLETENESS OF SCANNED COPIES OF THIS PLAN SHEET.

NOTES:
1. L - LENGTH OF SIGN
   D - DEPTH OF SIGN
2. CALIFORNIA SIGN CODES ARE DESIGNATED BY (CA). OTHERWISE, FEDERAL SIGN CODES ARE SHOWN.

SIGN SUMMARY

SIGN NUMBER	STATION	LEFT	RIGHT	CODE	MESSAGE	SIZE (L X D)	REMOVE ROADSIDE SIGN (WOOD POST)		ROADSIDE SIGN (ONE POST)	SIGN MATERIALS: FURNISH SINGLE SHEET ALUMINUM SIGN (0.080"-FRAMED)	SINGLE FACED	BACKGROUND: SHEETING COLOR	BACKGROUND: RETROREFLECTIVE ASTM TYPE	LEGEND: SHEETING COLOR	LEGEND: RETROREFLECTIVE ASTM TYPE	GRAFFITI FILM: STANDARD	GRAFFITI FILM: PREMIUM	POSTS: SIZE (WOOD POST)	FNBT	FSBT	REMARK
							EA		EA	SQFT											
1	99+56		X	G11-4.1(CA)	MAMMOTH CREEK	44" x 18"	1		1	5.5	X	WHITE	-	BLACK	-	X		4" x 6"	X		
					BRIDGE 47-49R																
					395 MNO R24 96																
2	140+04		X	G11-4.1(CA)	RTE 395/203 SEP	44" x 18"	1		1	5.5	X	WHITE	-	BLACK	-	X		4" x 6"	X		
					BRIDGE 47-50R																
					395 MNO R25 73																
3	1101+21	X		G11-4.1(CA)	MAMMOTH CREEK	44" x 18"	1		1	5.5	X	WHITE	-	BLACK	-	X		4" x 6"		X	
					BRIDGE 47-49L																
					395 MNO R24 97																
4	1142+74	X		G11-4.1(CA)	RTE 395/203 SEP	44" x 18"	1		1	5.5	X	WHITE	-	BLACK	-	X		4" x 6"		X	
					BRIDGE 47-50L																
					395 MNO R25 75																
					TOTAL		4		4	22.0											

SIGN QUANTITIES
SQ-1

STATE OF CALIFORNIA - DEPARTMENT OF TRANSPORTATION
Caltrans DESIGN

FUNCTIONAL SUPERVISOR: STEPHEN WINZENREAD
CALCULATED-DESIGNED BY: BALJINDER BRAR
CHECKED BY: STEPHEN WINZENREAD
REVISED BY
DATE REVISED

LAST REVISION: DATE PLOTTED => 25-MAY-2010 TIME PLOTTED => 13:50
03-23-10

Dist	COUNTY	ROUTE	POST MILES TOTAL PROJECT	SHEET No.	TOTAL SHEETS
09	Mno	395	R24.5/R26.3	31	52

REGISTERED CIVIL ENGINEER 3-9-10 DATE

5-24-10
PLANS APPROVAL DATE

REGISTERED PROFESSIONAL ENGINEER Baljinder Brar No. C67847 Exp. 06-30-11 CIVIL STATE OF CALIFORNIA

THE STATE OF CALIFORNIA OR ITS OFFICERS OR AGENTS SHALL NOT BE RESPONSIBLE FOR THE ACCURACY OR COMPLETENESS OF SCANNED COPIES OF THIS PLAN SHEET.

(N) NOT A SEPARATE PAY ITEM, FOR INFORMATION ONLY

ROADWAY QUANTITIES

STATION TO STATION		HOT MIX ASPHALT (TYPE A)	COLD PLANE AC PAVEMENT	IMPORTED MATERIAL (Shld BACKING)	TACK COAT	REMARKS
		TON	SQYD	TON	TON	
98+14 TO 100+04		42	493	61	0.23	COLD PLANE 0.24' Max
100+53 TO 101+81		41	493	14	0.23	COLD PLANE 0.24' Max
138+54 TO 140+53		42	495	61	0.23	COLD PLANE 0.24' Max
141+52 TO 142+81		42	495	14	0.23	COLD PLANE 0.24' Max
1098+96 TO 1100+24		42	493	14	0.23	COLD PLANE 0.24' Max
1100+73 TO 1102+01		41	493	61	0.23	COLD PLANE 0.24' Max
1140+02 TO 1141+31		42	495	14	0.23	COLD PLANE 0.24' Max
1142+25 TO 1143+54		42	495	61	0.23	COLD PLANE 0.24' Max
DIKE, OVERSIDE DRAINS		5	-	-	-	
RUMBLE STRIP	91+00 TO 105+20	23	224	-	0.10	COLD PLANE 0.15' Max
	91+00 TO 106+30	25	242	-	0.11	COLD PLANE 0.15' Max
	131+00 TO 147+20	25	249	-	0.11	COLD PLANE 0.15' Max
	131+00 TO 148+30	27	267	-	0.12	COLD PLANE 0.15' Max
	1094+80 TO 1110+00	24	241	-	0.11	COLD PLANE 0.15' Max
	1093+70 TO 1111+00	28	276	-	0.13	COLD PLANE 0.15' Max
	1136+00 TO 1151+00	23	229	-	0.10	COLD PLANE 0.15' Max
	1134+70 TO 1151+00	25	250	-	0.11	COLD PLANE 0.15' Max
TOTAL		539	5,930	300	2.73	

HOT MIX ASPHALT DIKE

STATION TO STATION	SIDE		TYPE F
	L†	R†	LF
100+68.18 TO 100+98.18	-	X	30
139+54.14 TO 139+99.14	-	X	45
1101+15.80 TO 1101+45.80	X	-	30
1140+76.34 TO 1141+06.34	X	-	30
	TOTAL		135

* HOT MIX ASPHALT (TYPE A) SUMMARIZED IN ROADWAY QUANTITIES TABLE

HOT MIX ASPHALT (Misc AREAS)

LOCATION	SIDE		HOT MIX ASPHALT (TYPE A)*	PLACE HOT MIX ASPHALT (Misc AREA)	REMARKS
	L†	R†	TON	SQYD	
101+00.2	-	X	0.6	7.3	HMA OVERSIDE DRAIN (20 LF)
139+52.1	-	X	0.6	7.3	HMA OVERSIDE DRAIN (20 LF)
1100+47.8	X	-	0.6	7.3	HMA OVERSIDE DRAIN (20 LF)
1140+74.3	X	-	0.6	7.3	HMA OVERSIDE DRAIN (20 LF)
91+00 TO 105+20	X	-	22.7	223.8	REMOVE RUMBLE STRIP
91+00 TO 106+30	-	X	24.5	242.2	REMOVE RUMBLE STRIP
131+00 TO 147+20	X	-	25.2	248.7	REMOVE RUMBLE STRIP
131+00 TO 148+30	-	X	27.0	267.0	REMOVE RUMBLE STRIP
1094+80 TO 1110+00	-	X	24.4	240.5	REMOVE RUMBLE STRIP
1093+70 TO 1111+00	X	-	27.9	275.5	REMOVE RUMBLE STRIP
1136+00 TO 1151+00	-	X	23.2	228.7	REMOVE RUMBLE STRIP
1134+70 TO 1151+00	X	-	25.3	250.3	REMOVE RUMBLE STRIP
	TOTAL		202.6	2,005.9	

* HOT MIX ASPHALT (TYPE A) SUMMARIZED IN ROADWAY QUANTITIES TABLE

RUMBLE STRIP *

STATION TO STATION	SIDE		LENGTH	STATION TO STATION	SIDE		LENGTH
	L†	R†	STA		L†	R†	STA
91+00 TO 105+20	X		13.5	1094+80 TO 1110+00		X	14.5
91+00 TO 106+30		X	14.6	1093+70 TO 1111+00	X		16.6
131+00 TO 147+20	X		15.0	1136+00 TO 1151+00		X	13.8
131+00 TO 148+30		X	16.1	1134+70 TO 1151+00	X		15.1
SUB TOTAL			59.2				60.0
TOTAL			119.2				

* RUMBLE STRIP SHOULD NOT BE CONSTRUCTED ON DECK/APPROACH SLABS

SUMMARY OF QUANTITIES
Q-1

STATE OF CALIFORNIA - DEPARTMENT OF TRANSPORTATION
Caltrans DESIGN

FUNCTIONAL SUPERVISOR: STEPHEN WINZENREAD
CALCULATED-DESIGNED BY: BALJINDER BRAR
CHECKED BY: STEPHEN WINZENREAD
REVISED BY / DATE REVISED

LAST REVISION 03-24-10
DATE PLOTTED => 02-AUG-2010
TIME PLOTTED => 08:09

Dist	COUNTY	ROUTE	POST MILES TOTAL PROJECT	SHEET No.	TOTAL SHEETS
09	Mno	395	R24.5/R26.3	32	52

REGISTERED CIVIL ENGINEER 3-9-10 DATE

5-24-10
PLANS APPROVAL DATE

REGISTERED PROFESSIONAL ENGINEER
Baljinder Brar
No. C67847
Exp. 06-30-11
CIVIL
STATE OF CALIFORNIA

THE STATE OF CALIFORNIA OR ITS OFFICERS OR AGENTS SHALL NOT BE RESPONSIBLE FOR THE ACCURACY OR COMPLETENESS OF SCANNED COPIES OF THIS PLAN SHEET.

(N) NOT A SEPARATE PAY ITEM, FOR INFORMATION ONLY

SALVAGE METAL BEAM GUARD RAILING

STATION TO STATION	SIDE		MBGR (7' POST)	FLARED END (N) SECTION
	L†	R†	LF	EA
98+61.18 TO 99+61.18	-	X	100.0	1
98+88.50 TO 99+88.50	X	-	100.0	1
138+90.14 TO 140+27.64	X	-	137.5	1
138+99.14 TO 139+99.14	-	X	100.0	1
1100+88.50 TO 1101+88.50	-	X	100.0	1
1101+15.80 TO 1102+15.80	X	-	100.0	1
1142+50.11 TO 1143+50.11	-	X	100.0	1
1142+78.61 TO 1143+78.61	X	-	100.0	1
		TOTAL	837.5	8

WATER POLLUTION CONTROL

LOCATION	SIDE		Temp FIBER ROLL
	L†	R†	LF
97+95 TO 102+00		X	405
97+97 TO 102+00	X		403
1098+77 TO 1102+80		X	403
1098+77 TO 1102+82	X		405
TOTAL			1616

METAL BEAM GUARD RAILING

STATION TO STATION	SIDE		MBGR (7' POST)	ALTERNATIVE FLARED TERMINAL SYSTEM	TRANSITION RAILING (TYPE WB)	REMARKS
	L†	R†	LF	EA	EA	
98+48.68 TO 99+61.18	-	X	50.0	1	1	TYPE 12B LAYOUT
98+51.00 TO 99+88.50	X	-	75.0	1	1	TYPE 12B LAYOUT
138+90.14 TO 140+27.64	X	-	75.0	1	1	TYPE 12B LAYOUT
138+99.14 TO 139+99.14	-	X	37.5	1	1	TYPE 12B LAYOUT
1100+88.50 TO 1102+26.00	-	X	75.0	1	1	TYPE 12B LAYOUT
1101+15.80 TO 1102+28.30	X	-	50.0	1	1	TYPE 12B LAYOUT
1142+50.11 TO 1143+87.61	-	X	75.0	1	1	TYPE 12B LAYOUT
1142+78.61 TO 1143+78.61	X	-	37.5	1	1	TYPE 12B LAYOUT
		TOTAL	475.0	8	8	

SUMMARY OF QUANTITIES
Q-2

REVISED BY | DATE REVISED
BALJINDER BRAR | STEPHEN WINZENREAD
CALCULATED-DESIGNED BY | CHECKED BY
FUNCTIONAL SUPERVISOR
STEPHEN WINZENREAD
STATE OF CALIFORNIA - DEPARTMENT OF TRANSPORTATION
Caltrans
DESIGN

LAST REVISION 03-24-10
DATE PLOTTED => 25-MAY-2010
TIME PLOTTED => 13:50

DIST	COUNTY	ROUTE	POST MILES TOTAL PROJECT	SHEET NO.	TOTAL SHEETS
09	Mno	395	R24.5/R26.3	33	52

Randell D. Hiatt
REGISTERED CIVIL ENGINEER

June 6, 2008
PLANS APPROVAL DATE

REGISTERED PROFESSIONAL ENGINEER
Randell D. Hiatt
No. C50200
Exp. 6-30-09
CIVIL
STATE OF CALIFORNIA

The State of California or its officers or agents shall not be responsible for the accuracy or completeness of electronic copies of this plan sheet.

To accompany plans dated 5-24-10

NOTES:

1. When necessary to place dike in front of face of guard railing, only Type C dike may be used. For dike details, see Standard Plan A87B.
2. For standard railing post embedment, see Standard Plans A77C3.
3. Guard railing delineation to be used where shown on the Project Plans.
4. When dike or curb is placed under guard railing, the maximum height of the dike or curb shall be 4". Mountable dike should not be used. For dike and curb details, see Revised Standard Plans RSP A87A and Standard Plan A87B.
5. For details of typical distance between the face of rail and hinge point, see Standard Plan A77C3.

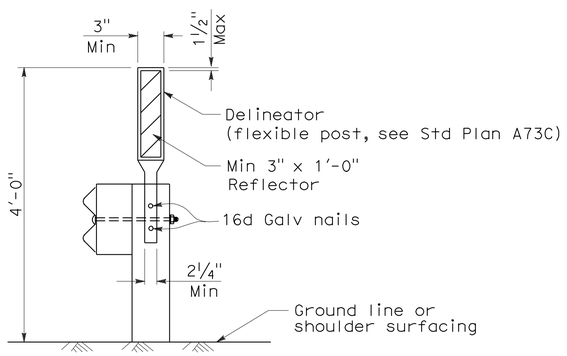

GUARD RAILING DELINEATION

See Note 3

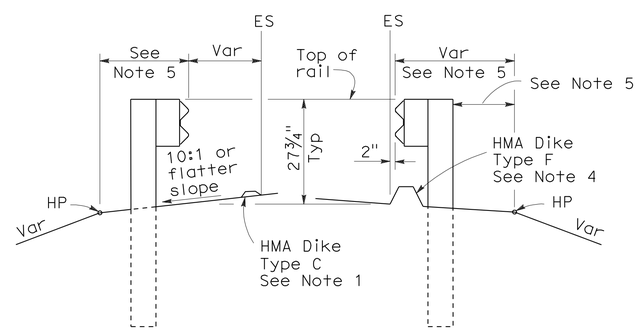

DIKE POSITIONING

See Note 1

STATE OF CALIFORNIA
DEPARTMENT OF TRANSPORTATION

METAL BEAM GUARD RAILING TYPICAL RAILING DELINEATION AND DIKE POSITIONING DETAILS

NO SCALE

RSP A77C4 DATED JUNE 6, 2008 SUPERSEDES STANDARD PLAN A77C4
DATED MAY 1, 2006 - PAGE 47 OF THE STANDARD PLANS BOOK DATED MAY 2006.

REVISED STANDARD PLAN RSP A77C4

2006 REVISED STANDARD PLAN RSP A77C4

12-10-07

DIST	COUNTY	ROUTE	POST MILES TOTAL PROJECT	SHEET NO.	TOTAL SHEETS
09	Mno	395	R24.5/R26.3	34	52

Randell D. Hiatt
REGISTERED CIVIL ENGINEER

June 6, 2008
PLANS APPROVAL DATE

REGISTERED PROFESSIONAL ENGINEER
Randell D. Hiatt
No. C50200
Exp. 6-30-09
CIVIL
STATE OF CALIFORNIA

The State of California or its officers or agents shall not be responsible for the accuracy or completeness of electronic copies of this plan sheet.

To accompany plans dated 5-24-10

2006 REVISED STANDARD PLAN RSP A77F1

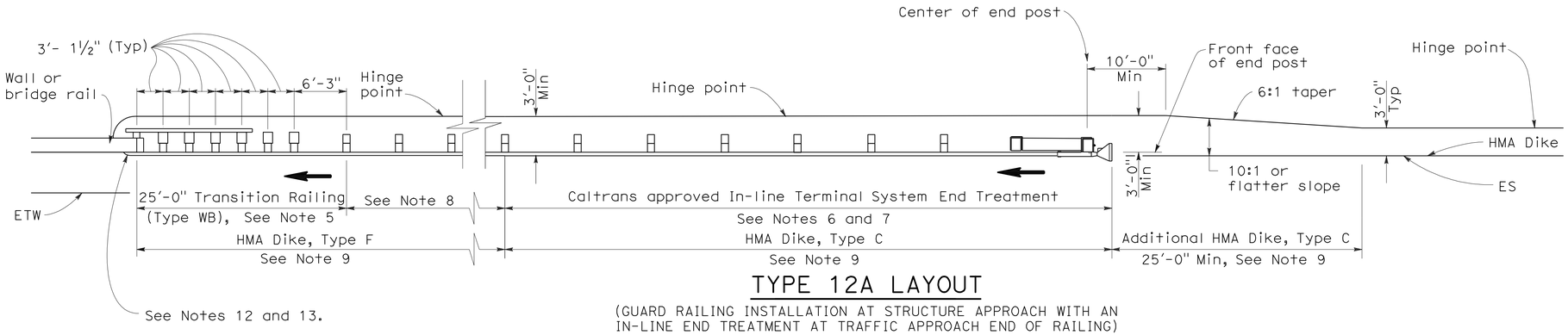

TYPE 12A LAYOUT

(GUARD RAILING INSTALLATION AT STRUCTURE APPROACH WITH AN IN-LINE END TREATMENT AT TRAFFIC APPROACH END OF RAILING)
See Notes 10

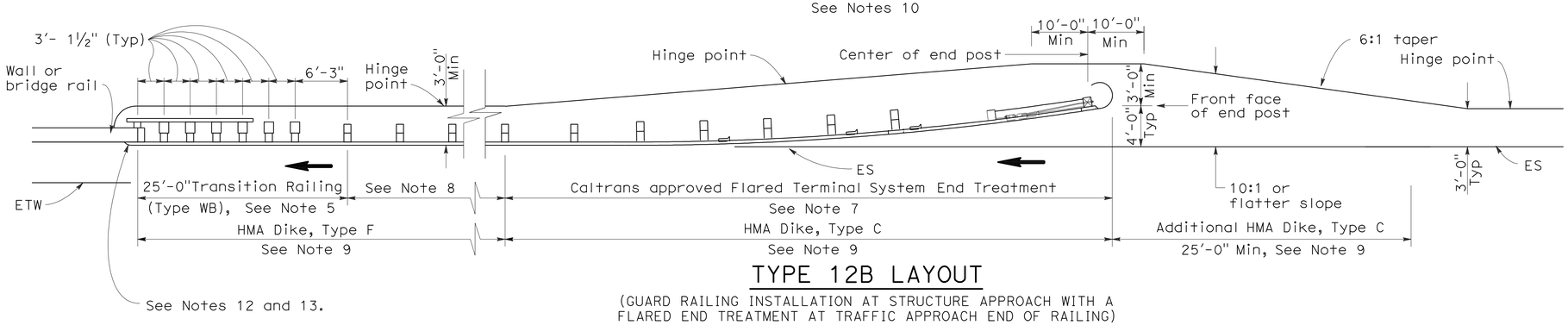

TYPE 12B LAYOUT

(GUARD RAILING INSTALLATION AT STRUCTURE APPROACH WITH A FLARED END TREATMENT AT TRAFFIC APPROACH END OF RAILING)
See Notes 10

NOTES:

1. Line post, blocks and hardware to be used are shown on Standard Plans A77A1, A77A2, A77B1, A77C1 and A77C2.
2. Guard rail post spacing to be 6'-3" center to center, except as otherwise noted.
3. Except as noted, line posts are 6" x 8" x 6'-0" wood with 6" x 8" x 1'-2" wood blocks. W6 x 9 steel posts, 6'-0" in length, with 6" x 8" x 1'-2" notched wood blocks or plastic blocks may be used for 6" x 8" x 6'-0" wood posts with 6" x 8" x 1'-2" wood blocks where applicable and when specified.
4. Direction of adjacent traffic indicated by ➡.
5. For Transition Railing (Type WB) details for Types 12A and 12B Layouts, see Standard Plan A77J4.
6. In-line Terminal System End Treatments are used where site conditions will not accommodate a flared end treatment.
7. The type of terminal system end treatment to be used will be shown on the Project Plans.
8. Dependent on site conditions (embankment height, side slopes, or other fixed objects), it may be advisable to construct additional guard railing (a length equal to multiples of 12'-6" with 6'-3" post spacing) between the transition railing and end treatment.
9. Where placement of dike is required with guard railing installations, see Revised Standard Plan RSP A77C4 for dike positioning details.
10. Type 12A or Type 12B Layouts are typically used:
    a. To the right of approaching traffic, at the end of a structure, on two-lane conventional highway where the roadbed width across the structure is less than 40 feet.
    b. To the left of approaching traffic, at the end of a structure, on two-lane conventional highway where the roadbed width across the structure is less than 40 feet.
    c. To the right of approaching traffic at the end of each structure on multilane freeways or expressways with separate adjacent or parallel bridges.
    d. To the right of approaching traffic at the end of the structure on multilane freeways or expressways with decked median on the bridge.
11. See Revised Standard Plan RSP A77F3 for typical layout used left of approaching traffic at the ends of each structure on multilane freeways or expressways with separate adjacent or parallel bridges.
12. For additional details of typical connections to bridge rail, see Connection Detail AA on Revised Standard Plans RSP A77J1 and RSP A77J2 and Connection Detail FF on Standard Plans A77K1 and A77K2.
13. For additional details of a typical connection to walls or abutments, see Standard Plan A77J3.

STATE OF CALIFORNIA
DEPARTMENT OF TRANSPORTATION

METAL BEAM GUARD RAILING TYPICAL LAYOUTS FOR STRUCTURE APPROACH

NO SCALE

RSP A77F1 DATED JUNE 6, 2008 SUPERSEDES STANDARD PLAN A77F1
DATED MAY 1, 2006 - PAGE 54 OF THE STANDARD PLANS BOOK DATED MAY 2006.

REVISED STANDARD PLAN RSP A77F1

12-10-07

DIST	COUNTY	ROUTE	POST MILES TOTAL PROJECT	SHEET NO.	TOTAL SHEETS
09	Mno	395	R24.5/R26.3	35	52

Randell D. Hiatt
REGISTERED CIVIL ENGINEER

June 6, 2008
PLANS APPROVAL DATE

REGISTERED PROFESSIONAL ENGINEER
Randell D. Hiatt
No. C50200
Exp. 6-30-09
CIVIL
STATE OF CALIFORNIA

The State of California or its officers or agents shall not be responsible for the accuracy or completeness of electronic copies of this plan sheet.

To accompany plans dated 5-24-10

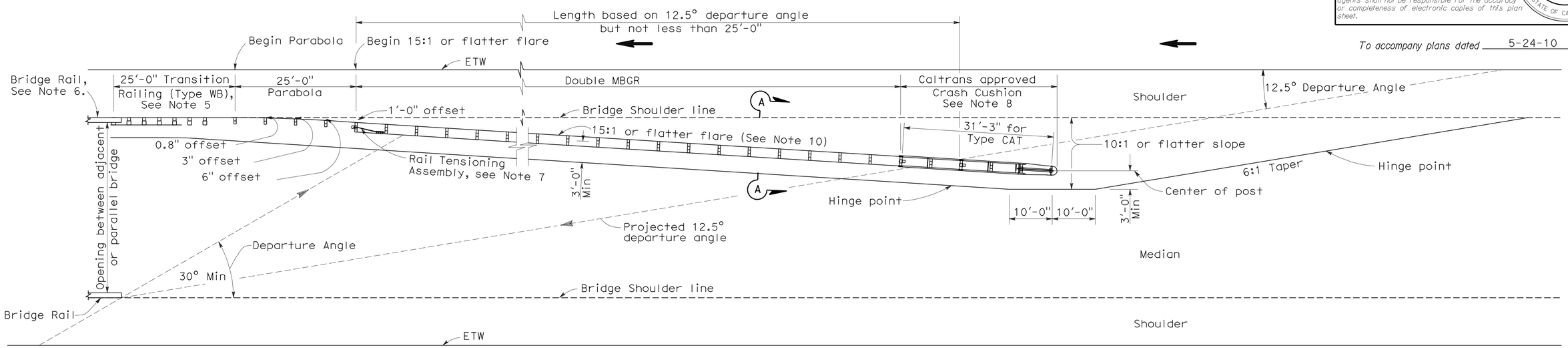

TYPE 12E LAYOUT

See Note 10

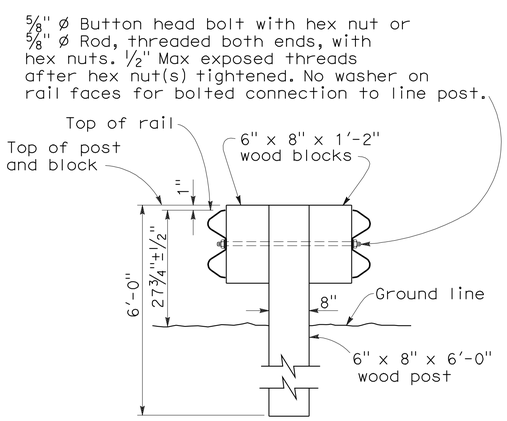

SECTION A-A

TYPICAL DOUBLE METAL BEAM GUARD RAILING

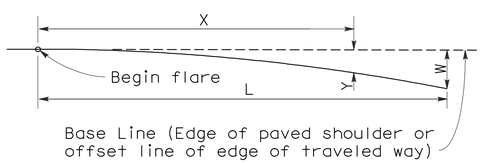

$$Y = \frac{WX^2}{L^2}$$

Y = Offset from base line
W = Maximum offset
X = Distance along base line
L = Length of flare

PARABOLIC FLARE OFFSETS

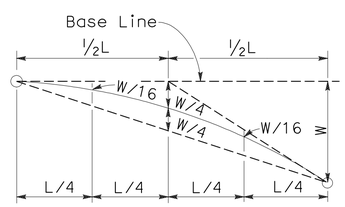

TYPICAL PARABOLIC LAYOUT

NOTES:

1. Line post, blocks and hardware to be used are shown on Standard Plans A77A1, A77A2, A77B1, A77C1 and A77C2.
2. Guard railing post spacing to be 6'-3" center to center, except as otherwise noted.
3. Except as noted, line posts are 6" x 8" x 6'-0" wood with 6" x 8" x 1'-2" wood blocks. W6 x 9 steel posts, 6'-0" in length, with 6" x 8" x 1'-2" notched wood blocks or notched recycled plastic blocks may be used for 6" x 8" x 6'-0" wood line posts with 6" x 8" x 1'-2" wood blocks where applicable and when specified.
4. Direction of adjacent traffic indicated by ⟶.
5. For Transition Railing (Type WB) details, see Standard Plan A77J4.
6. For additional details of a typical connection to bridge rail, see Connection Detail AA on Revised Standard Plan RSP A77J1.
7. For Rail Tensioning Assembly details, see Standard Plan A77H2.
8. The type of Crash Cushion to be used will be shown on the Project Plans.
9. Type 12E Layout is typically used left of approaching traffic at the end of each structure on multilane freeways or expressways where a median type barrier is not constructed between separated roadbeds.
10. The 15:1 or flatter flare is measured off of the edge of traveled way.

STATE OF CALIFORNIA
DEPARTMENT OF TRANSPORTATION

METAL BEAM GUARD RAILING TYPICAL LAYOUTS FOR STRUCTURE APPROACH

NO SCALE

RSP A77F3 DATED JUNE 6, 2008 SUPERSEDES STANDARD PLAN A77F3
DATED MAY 1, 2006 - PAGE 56 OF THE STANDARD PLANS BOOK DATED MAY 2006.

REVISED STANDARD PLAN RSP A77F3

2006 REVISED STANDARD PLAN RSP A77F3

12-10-07

DIST	COUNTY	ROUTE	POST MILES TOTAL PROJECT	SHEET NO.	TOTAL SHEETS
09	Mno	395	R24.5/R26.3	36	52

Randell D. Hiatt
REGISTERED CIVIL ENGINEER

June 6, 2008
PLANS APPROVAL DATE

REGISTERED PROFESSIONAL ENGINEER
Randell D. Hiatt
No. C50200
Exp. 6-30-09
CIVIL
STATE OF CALIFORNIA

The State of California or its officers or agents shall not be responsible for the accuracy or completeness of electronic copies of this plan sheet.

To accompany plans dated 5-24-10

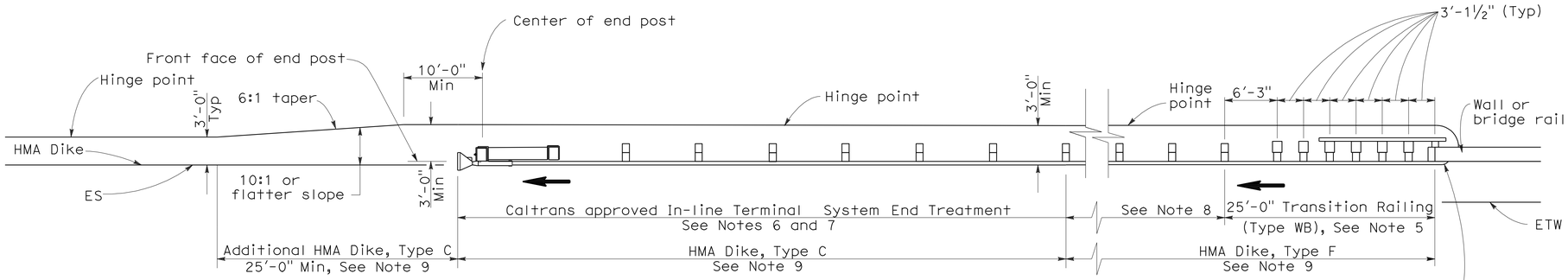

TYPE 12AA LAYOUT

(GUARD RAILING INSTALLATION AT STRUCTURE DEPARTURE WITH AN IN-LINE END TREATMENT AT TRAILING END OF RAILING)
See Notes 9 and 10

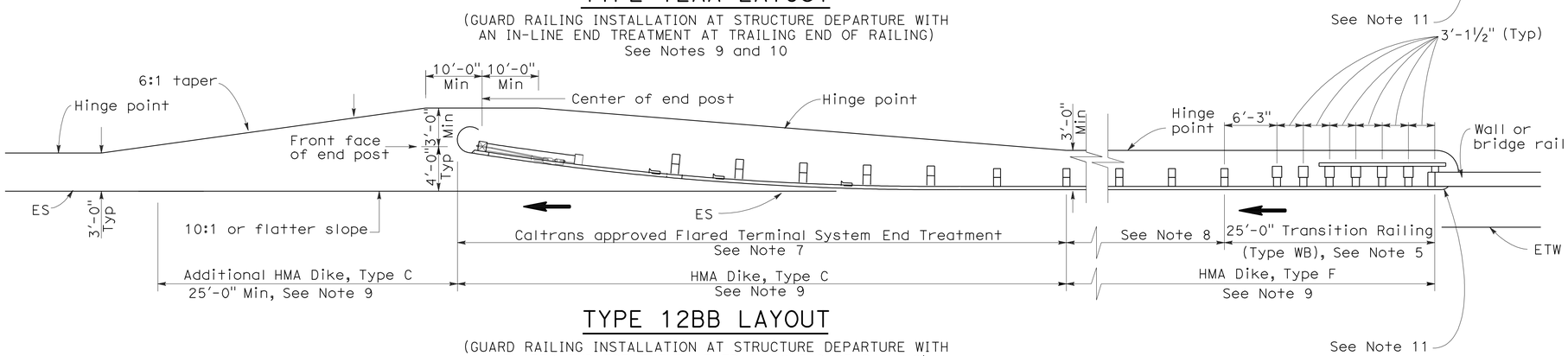

TYPE 12BB LAYOUT

(GUARD RAILING INSTALLATION AT STRUCTURE DEPARTURE WITH A FLARED END TREATMENT AT TRAILING END OF RAILING)
See Notes 9 and 10

NOTES:

1. Line post, blocks and hardware to be used are shown on Standard Plans A77A1, A77A2, A77B1, A77C1 and A77C2.
2. Guard rail post spacing to be 6'-3" center to center, except as otherwise noted.
3. Except as noted, line posts are 6" x 8" x 6'-0" wood with 6" x 8" x 1'-2" wood blocks. W6 x 9 steel posts, 6'-0" in length, with 6" x 8" x 1-2" notched wood blocks or notched recycled plastic blocks may be used for 6" x 8" x 6'-0" wood posts with 6" x 8" x 1'-2" wood blocks where applicable and when specified.
4. Direction of adjacent traffic indicated by ➡.
5. For Transition Railing (Type WB) details for Types 12AA and 12BB Layouts, see Standard Plan A77J4.
6. In-line Terminal System Treatments are used where site conditions will not accommodate a flared end treatment.
7. The type of terminal system to be used will be shown on the Project Plans.
8. Dependent on site conditions (embankment height, side slopes, other fixed objects), it may be advisable to construct additional guard railing (a length equal to multiples of 12'-6" with 6'-3" post spacing) between the transition railing and end treatments.
9. Where placement of dike is required with guard railing installations, see Revised Standard Plan RSP A77C4 for dike positioning details.
10. Type 12AA or Type 12BB Layouts are typically used to the right of traffic departing a structure on two-way conventional highways where the roadbed width across the structure is less than 40 feet.
11. For additional details of typical connections to bridge rail, see Connection Detail CC on Revised Standard Plan RSP A77J2 and Connection Detail HH on Standard Plans A77k2.

STATE OF CALIFORNIA
DEPARTMENT OF TRANSPORTATION

METAL BEAM GUARD RAILING TYPICAL LAYOUTS FOR STRUCTURE DEPARTURE

NO SCALE

RSP A77F4 DATED JUNE 6, 2008 SUPERSEDES STANDARD PLAN A77F4
DATED MAY 1, 2006 - PAGE 57 OF THE STANDARD PLANS BOOK DATED MAY 2006.

REVISED STANDARD PLAN RSP A77F4

2006 REVISED STANDARD PLAN RSP A77F4

12-10-07

DIST	COUNTY	ROUTE	POST MILES TOTAL PROJECT	SHEET NO.	TOTAL SHEETS
09	Mno	395	R24.5/R26.3	37	52

Randell D. Hiatt
REGISTERED CIVIL ENGINEER

June 6, 2008
PLANS APPROVAL DATE

REGISTERED PROFESSIONAL ENGINEER
Randell D. Hiatt
No. C50200
Exp. 6-30-09
CIVIL
STATE OF CALIFORNIA

The State of California or its officers or agents shall not be responsible for the accuracy or completeness of electronic copies of this plan sheet.

To accompany plans dated 5-24-10

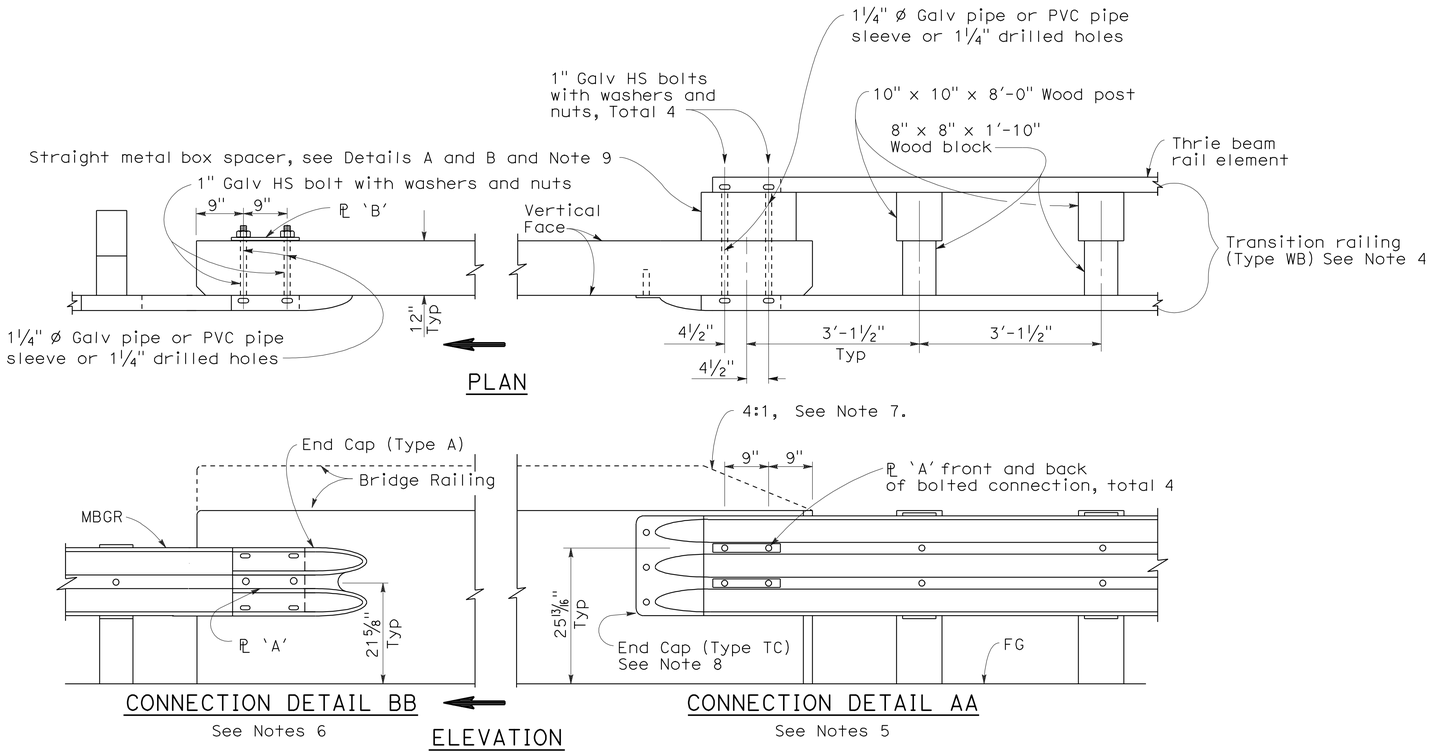

GUARD RAILING CONNECTION TO BRIDGE RAILING WITHOUT SIDEWALK

NOTES:

1. See Revised Standard Plan RSP A77J2 for additional connection details to bridges without sidewalks.
2. Additional details of posts, blocks and hardware are shown on Standard Plan A77B1, A77C1 and A77C2.
3. Direction of adjacent traffic indicated by ➡.
4. For additional details of Transition Railing (Type WB), see Standard Plan A77J4. Transition Railing (Type WB) transitions the 12 gage w-beam standard railing section of guard railing to a heavier gage nested thrie beam railing section which is connected to the concrete bridge railing.
5. For typical use of Connection Detail AA, see Layout Types 12A and 12B on Revised Standard Plan RSP A77F1, Layout Types 12C and 12D on Standard Plan A77F2, and Layout Type 12E on Revised Standard Plan RSP A77F3.
6. For typical use of Connection Detail BB, see Layout Type 12D (structure departure railing connection) on Standard Plan A77F2 and Layout Type 12DD on Standard Plan A77F5.
7. Where the height of the bridge railing exceeds the height of the thrie beam railing by more than 1" at Connection Detail AA, taper the top of the end of the bridge railing at 4:1 to match the top elevation of the thrie beam rail.
8. For details of End Cap (Type TC), see Standard Plan A77J4.
9. See Standard Plan A77J4 for additional details regarding depth dimension for straight metal box spacer.

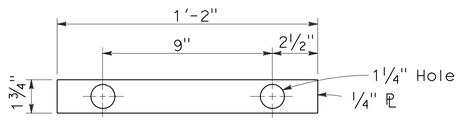

PLATE 'A'

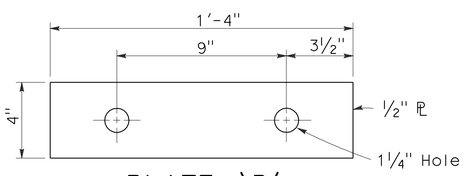

PLATE 'B'
(For backside of connection BB)

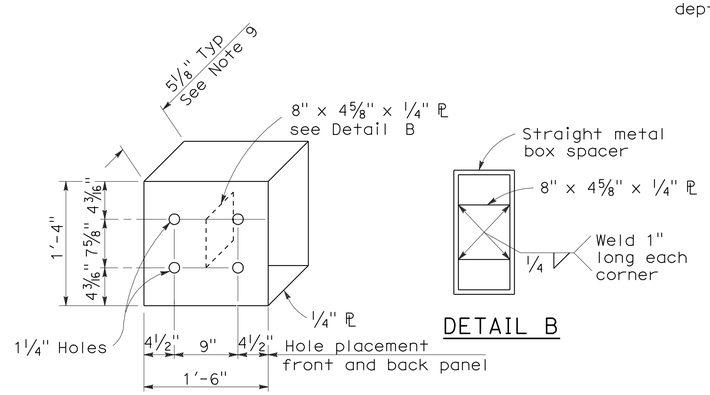

DETAIL B

DETAIL A

STRAIGHT METAL BOX SPACER

STATE OF CALIFORNIA
DEPARTMENT OF TRANSPORTATION

METAL BEAM GUARD RAILING CONNECTIONS TO BRIDGE RAILINGS WITHOUT SIDEWALKS DETAILS No.1

NO SCALE

RSP A77J1 DATED JUNE 6, 2008 SUPERSEDES STANDARD PLAN A77J1 DATED MAY 1, 2006 - PAGE 72 OF THE STANDARD PLANS BOOK DATED MAY 2006.

REVISED STANDARD PLAN RSP A77J1

2006 REVISED STANDARD PLAN RSP A77J1

DIST	COUNTY	ROUTE	POST MILES TOTAL PROJECT	SHEET NO.	TOTAL SHEETS
09	Mno	395	R24.5/R26.3	38	52

Randell D. Hiatt
REGISTERED CIVIL ENGINEER

June 6, 2008
PLANS APPROVAL DATE

REGISTERED PROFESSIONAL ENGINEER
Randell D. Hiatt
No. C50200
Exp. 6-30-09
CIVIL
STATE OF CALIFORNIA

The State of California or its officers or agents shall not be responsible for the accuracy or completeness of electronic copies of this plan sheet.

To accompany plans dated 5-24-10

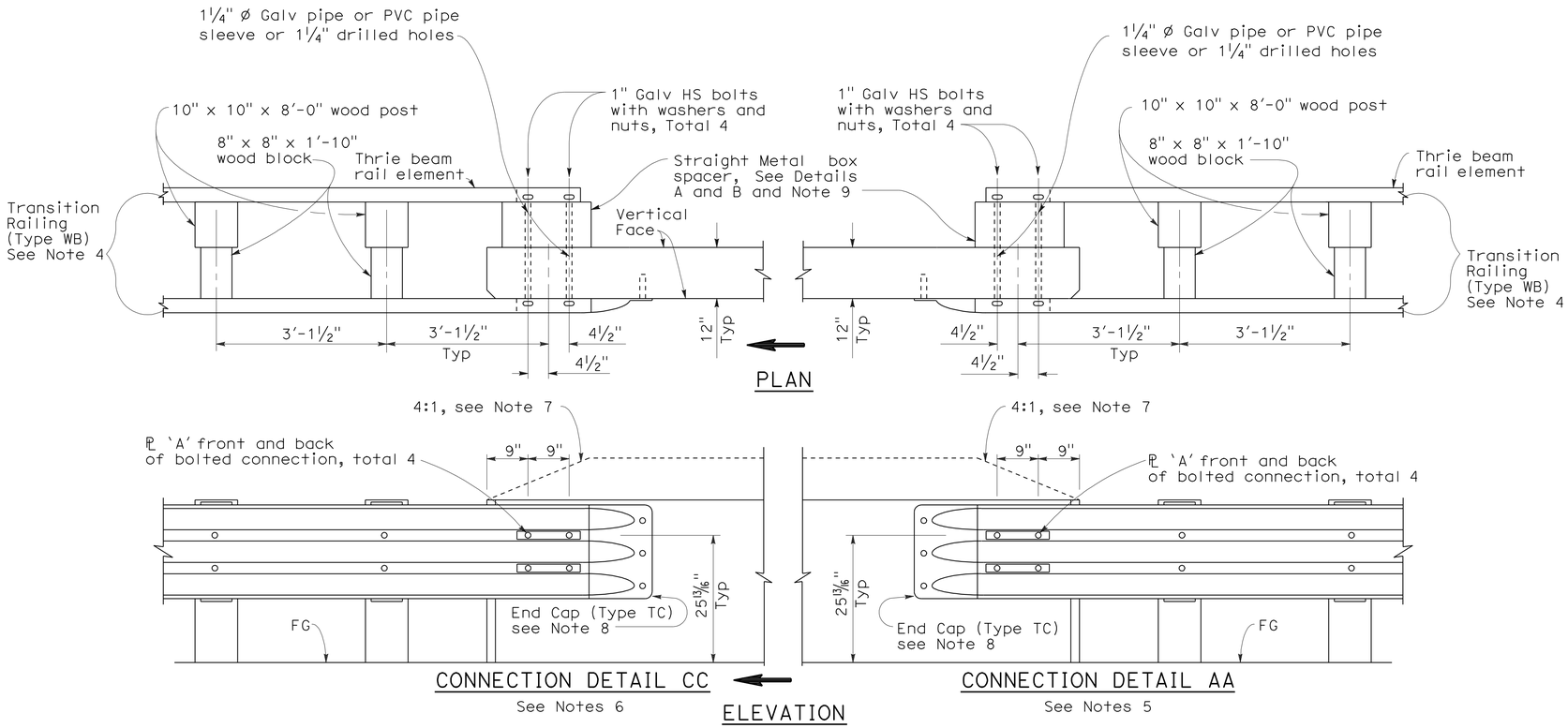

GUARD RAILING CONNECTION TO BRIDGE RAILING WITHOUT SIDEWALK

NOTES:

1. See Revised Standard Plan RSP A77J1 for additional connection details to bridges without sidewalks.
2. Additional details of posts, blocks and hardware are shown on Standard Plan A77B1, A77C1 and A77C2.
3. Direction of adjacent traffic indicated by ⟹.
4. For additional details of Transition Railing (Type WB), see Standard Plan A77J4. Transition Railing (Type WB) transitions the 12 gage w-beam standard railing section of guard railing to a heavier gage nested thrie beam railing section which is connected to the concrete bridge railing.
5. For typical use of Connection Detail AA, see Layout Types 12A and 12B on Revised Standard Plan RSP A77F1, Layout Types 12C and 12D on Standard Plan A77F2, and Layout Type 12E on Revised Standard Plan RSP A77F3.
6. For typical use of Connection Detail CC, see Layout Types 12AA and 12BB on Standard Plan A77F4 and Layout Type 12CC on Standard Plan A77F5.
7. Where the height of the bridge railing exceeds the height of the thrie beam railing by more than 1" at Connection Detail AA and connection Detail CC, taper the top of the end of the bridge railing at 4:1 to match the top elevation of the thrie beam railing.
8. For details of End Cap (Type TC), see Standard Plans A77J4.
9. See Standard Plans A77J4 for additional details regarding depth dimension for straight metal box spacer.

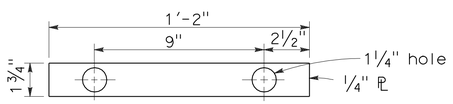

PLATE 'A'

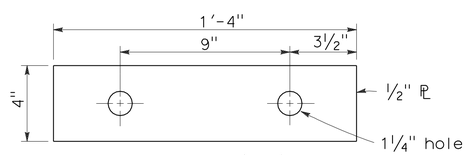

PLATE 'B'
(For backside of connection BB)

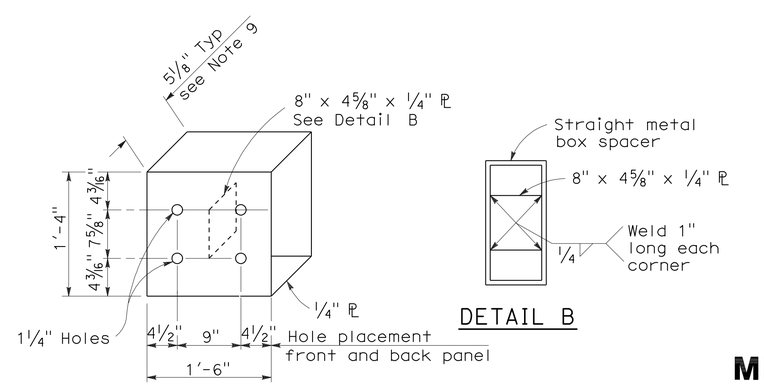

DETAIL A

DETAIL B

STRAIGHT METAL BOX SPACER

STATE OF CALIFORNIA
DEPARTMENT OF TRANSPORTATION

METAL BEAM GUARD RAILING CONNECTIONS TO BRIDGE RAILINGS WITHOUT SIDEWALKS DETAILS No.2

NO SCALE

RSP A77J2 DATED JUNE 6, 2008 SUPERSEDES STANDARD PLAN A77J2 DATED MAY 1, 2006 - PAGE 73 OF THE STANDARD PLANS BOOK DATED MAY 2006.

REVISED STANDARD PLAN RSP A77J2

2006 REVISED STANDARD PLAN RSP A77J2

12-10-07

DIST	COUNTY	ROUTE	POST MILES TOTAL PROJECT	SHEET NO.	TOTAL SHEETS
09	Mno	395	R24.5/R26.3	39	52

Randell D. Hiatt
REGISTERED CIVIL ENGINEER

June 5, 2009
PLANS APPROVAL DATE

REGISTERED PROFESSIONAL ENGINEER
Randell D. Hiatt
No. C50200
Exp. 6-30-09
CIVIL
STATE OF CALIFORNIA

The State of California or its officers or agents shall not be responsible for the accuracy or completeness of electronic copies of this plan sheet.

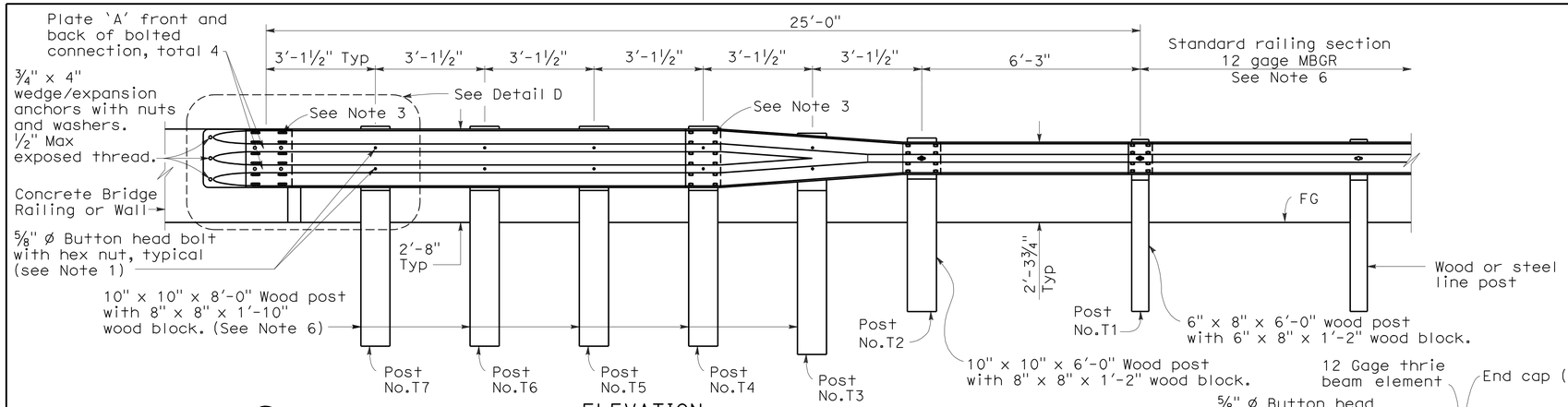

ELEVATION

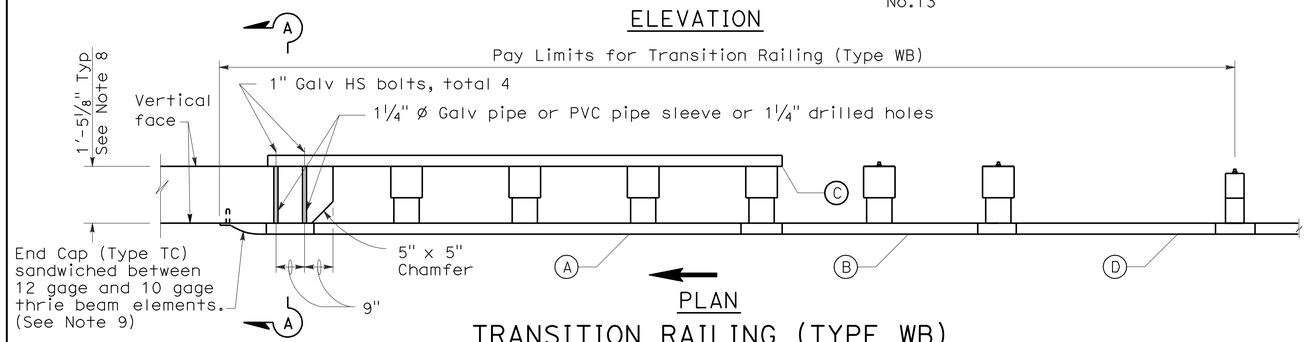

PLAN

TRANSITION RAILING (TYPE WB)

(No Blockout Attachment)

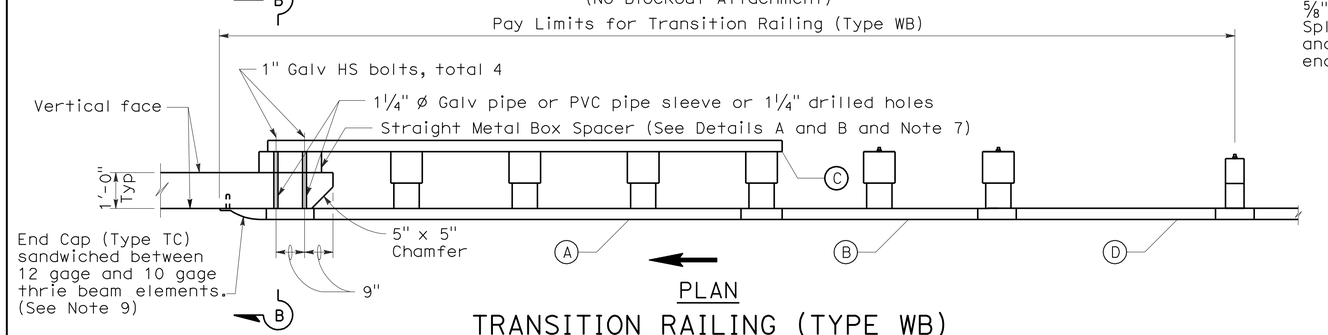

PLAN

TRANSITION RAILING (TYPE WB)

(Blockout Attachment)

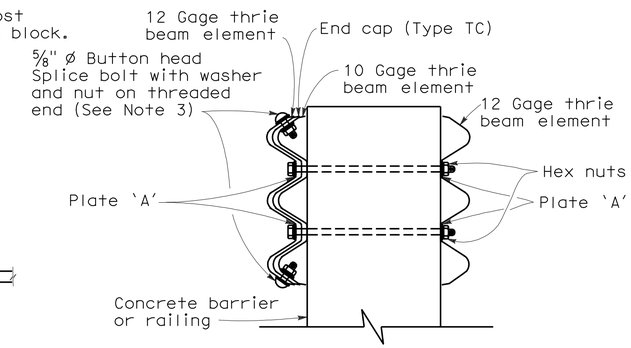

SECTION A-A

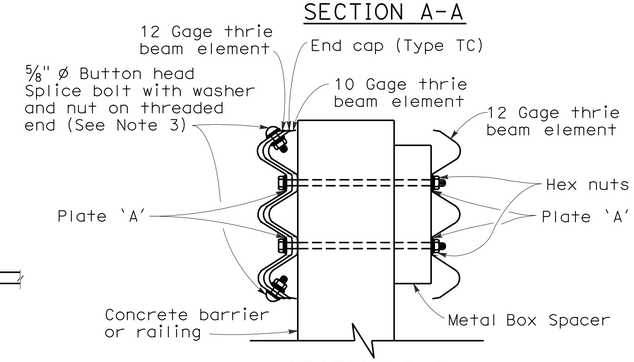

SECTION B-B

LEGEND

(A) Nested thrie beam elements (one 12 gage element nested over one 10 gage element).

(B) One 10 gage "W" beam to thrie beam element.

(C) One 12 gage thrie beam element.

(D) One 10 gage "W" beam rail element (7'-3½" length)

10 gage = 0.135" thick

12 gage = 0.108" thick

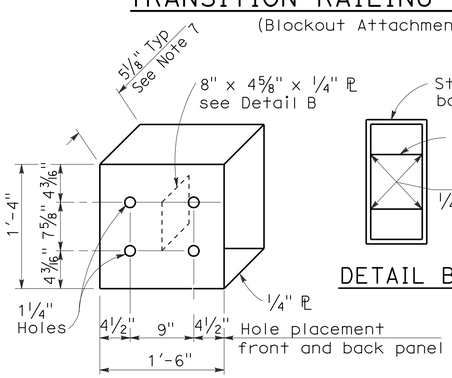

DETAIL A

STRAIGHT METAL BOX SPACER

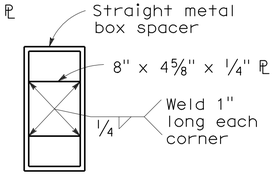

DETAIL B

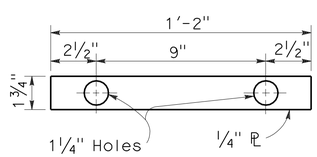

DETAIL C

PLATE 'A'

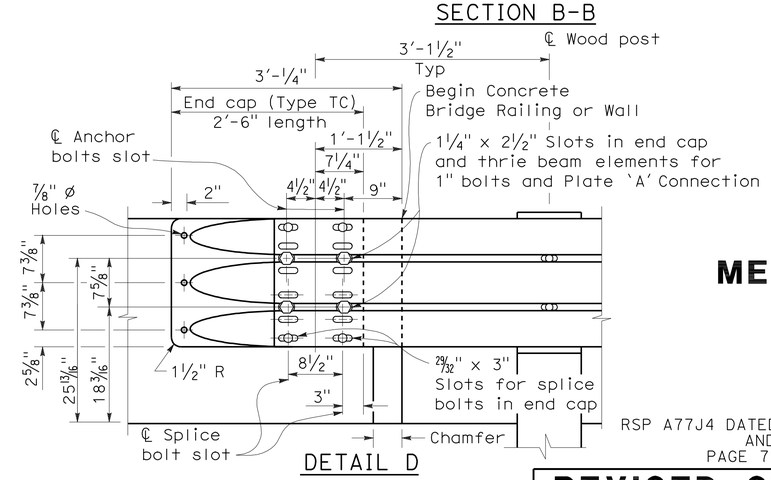

DETAIL D

NOTES:

To accompany plans dated 5-24-10

1. Use 5/8 " ø Button head bolts and hex nuts for connections to posts. No washer on rail face for bolted connections to post.
2. The nested rail elements, end cap, and 'W' beam to thrie beam element may be spliced together prior to bolting the elements to the wood post and concrete barrier or railing.
3. Exterior splice bolt holes for rail element splices at Post No.T4 and the connection to the concrete barrier or railing shall be the standard 29/32 " x 1 1/8 " slot size. Interior splice bolt holes at these locations may be increased up to 1 1/4 " ø. Only the top 2 and the bottom 2 splice bolts with washers and nuts are required for rail splices at Post No.T4 and the connection to the concrete barrier or railing.
4. Direction of adjacent traffic indicated by →.
5. The top elevation of Post Nos.T2 through T7 shall not project more than 1" above the top elevation of the rail element.
6. Typically, the railing connected to Transition Railing (Type WB) will be either standard railing section of metal beam guard railing or an approved Caltrans end treatment attached to Post No.T1.
7. The depth of the metal box spacer varies from the 5 1/8 " to 1 1/2 " and is dependent on the width of the concrete railing or wall. The combined dimension for the depth of the metal box spacer plus the width of railing or wall is typically 17 1/8 ". Where the space between the backside of the concrete railing or wall and the rear thrie beam element is less than 1 1/2 ", metal plates similar to Plate 'A' are to be used as spacers.
8. Where the width of the concrete railing or wall is greater than 17 1/8 ", wood blocks are to be used to fill the space created between the backside of Posts No.4 through No.7 and the rear thrie beam element. These wood blocks shall be 8" in width and 1'-2" in length. The dimension between the front thrie beam element and the rear thrie beam element is to match the width of the concrete railing or wall.
9. End cap may be installed over 12 gage and 10 gage thrie beam elements where transition railing is installed on the departure end of bridge railing.

STATE OF CALIFORNIA
DEPARTMENT OF TRANSPORTATION

METAL BEAM GUARD RAILING TRANSITION RAILING (TYPE WB)

NO SCALE

RSP A77J4 DATED JUNE 5, 2009 SUPERSEDES RSP A77J4 DATED JUNE 6, 2008 AND STANDARD PLAN A77J4 DATED MAY 1, 2006 - PAGE 75 OF THE STANDARD PLANS BOOK DATED MAY 2006.

REVISED STANDARD PLAN RSP A77J4

2006 REVISED STANDARD PLAN RSP A77J4

5-14-09

DIST	COUNTY	ROUTE	POST MILES TOTAL PROJECT	SHEET NO.	TOTAL SHEETS
09	Mno	395	R24.5/R26.3	40	52

Randell D. Hiatt
REGISTERED CIVIL ENGINEER

June 6, 2008
PLANS APPROVAL DATE

REGISTERED PROFESSIONAL ENGINEER
Randell D. Hiatt
No. C50200
Exp. 6-30-09
CIVIL
STATE OF CALIFORNIA

The State of California or its officers or agents shall not be responsible for the accuracy or completeness of electronic copies of this plan sheet.

To accompany plans dated 5-24-10

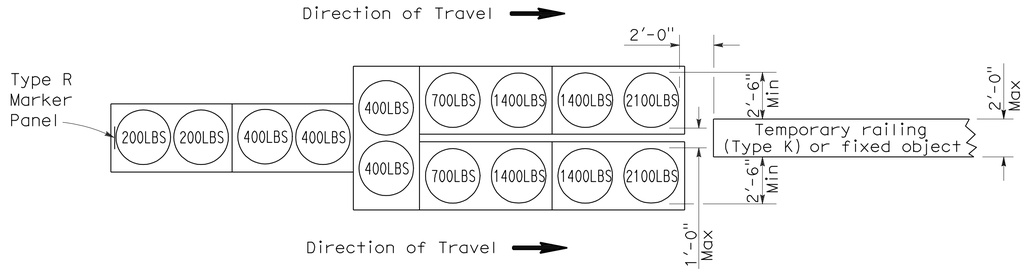

ARRAY 'TU14'

Approach speed 45 mph or more

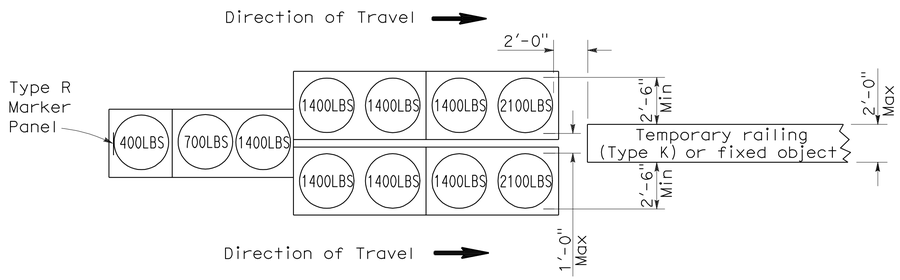

ARRAY 'TU11'

Approach speed less than 45 mph

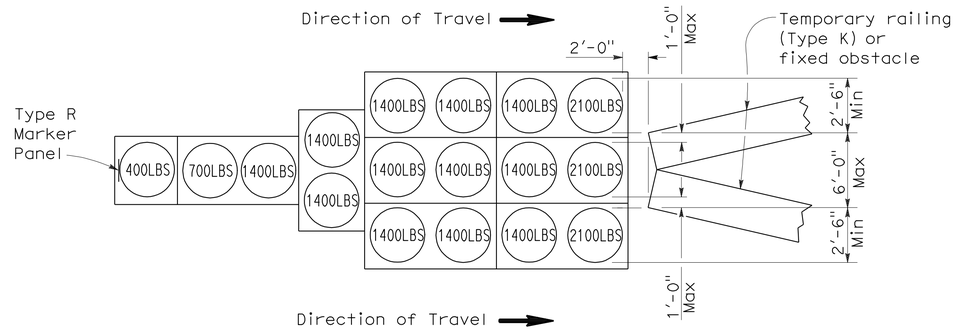

ARRAY 'TU17'

Approach speed less than 45 mph

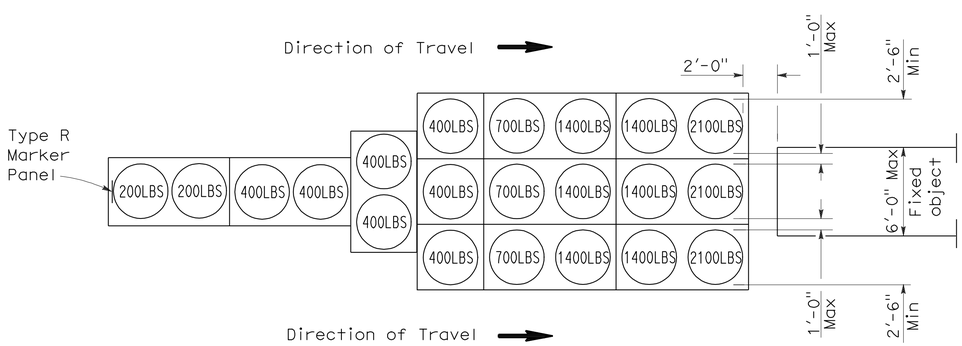

ARRAY 'TU21'

Approach speed 45 mph or more

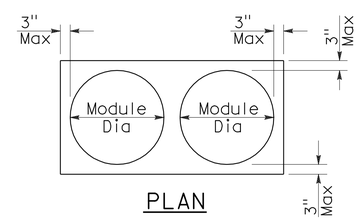

PLAN

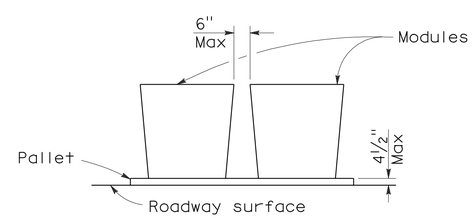

ELEVATION

CRASH CUSHION PALLET DETAIL

See Note 7

NOTES:

1. (XXX) Indicates sand filled module location and weight of sand in pounds for each module. Module spacing is based on the greater diameter of the module.
2. All sand weights are nominal.
3. Temporary crash cushion arrays shall not encroach on the traveled way.
4. Place the top of Type R marker panel 1" below the module lid.
5. Refer to Standard Plan A73B for marker details.
6. Approach speeds indicated conform to NCHRP 350 Report criteria.
7. Use of pallets is optional.

STATE OF CALIFORNIA
DEPARTMENT OF TRANSPORTATION

TEMPORARY CRASH CUSHION, SAND FILLED (UNIDIRECTIONAL)

NO SCALE

RSP T1A DATED JUNE 6, 2008 SUPERSEDES STANDARD PLAN T1A
DATED MAY 1, 2006 - PAGE 211 OF THE STANDARD PLANS BOOK DATED MAY 2006.

REVISED STANDARD PLAN RSP T1A

2006 REVISED STANDARD PLAN RSP T1A

DIST	COUNTY	ROUTE	POST MILES TOTAL PROJECT	SHEET NO.	TOTAL SHEETS
09	Mno	395	R24.5/R26.3	41	52

Randell D. Hiatt
REGISTERED CIVIL ENGINEER

June 6, 2008
PLANS APPROVAL DATE

REGISTERED PROFESSIONAL ENGINEER
Randell D. Hiatt
No. C50200
Exp. 6-30-09
CIVIL
STATE OF CALIFORNIA

The State of California or its officers or agents shall not be responsible for the accuracy or completeness of electronic copies of this plan sheet.

To accompany plans dated 5-24-10

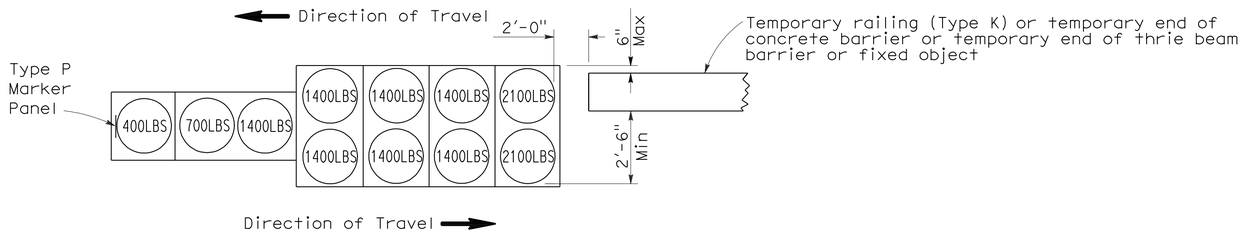

ARRAY 'TB11'

Approach speed less than 45 mph

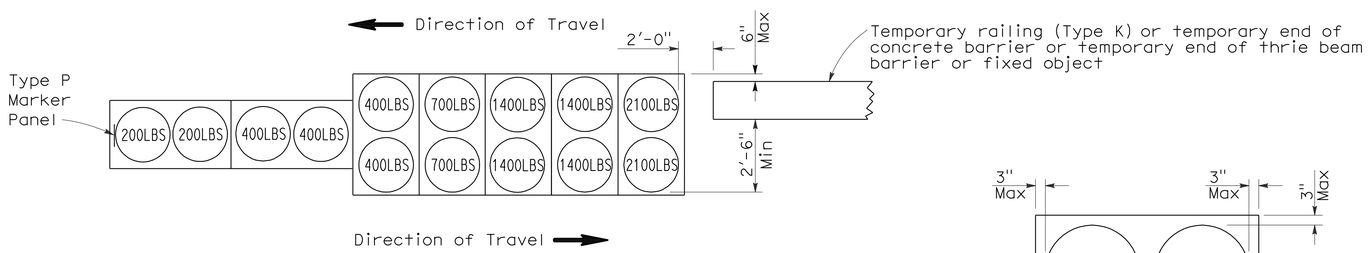

ARRAY 'TB14'

Approach speed 45 mph or more

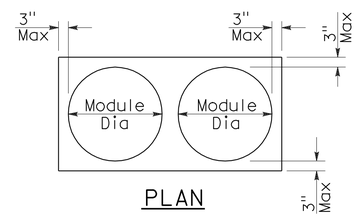

PLAN

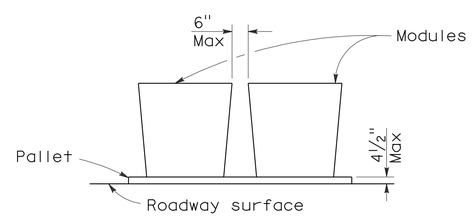

ELEVATION

CRASH CUSHION PALLET DETAIL

See Note 7

NOTES:

1. (XXX) Indicates sand filled module location and weight of sand in pounds for each module. Module spacing is based on the greater diameter of the module.
2. All sand weights are nominal.
3. Temporary crash cushion arrays shall not encroach on the traveled way.
4. Place the Type P marker panel so that the bottom of the panel rests upon the pallet.
5. Refer to Standard Plan A73B for marker details.
6. Approach speeds indicated conform to NCHRP 350 Report criteria.
7. Use of pallets is optional.

STATE OF CALIFORNIA
DEPARTMENT OF TRANSPORTATION

TEMPORARY CRASH CUSHION, SAND FILLED (BIDIRECTIONAL)

NO SCALE

RSP T1B DATED JUNE 6, 2008 SUPERSEDES STANDARD PLAN T1B
DATED MAY 1, 2006 - PAGE 212 OF THE STANDARD PLANS BOOK DATED MAY 2006.

REVISED STANDARD PLAN RSP T1B

2006 REVISED STANDARD PLAN RSP T1B

5-15-08

DIST	COUNTY	ROUTE	POST MILES TOTAL PROJECT	SHEET NO.	TOTAL SHEETS
09	Mno	395	R24.5/R26.3	42	52

Randell D. Hiatt
REGISTERED CIVIL ENGINEER

June 6, 2008
PLANS APPROVAL DATE

REGISTERED PROFESSIONAL ENGINEER
Randell D. Hiatt
No. C50200
Exp. 6-30-09
CIVIL
STATE OF CALIFORNIA

The State of California or its officers or agents shall not be responsible for the accuracy or completeness of electronic copies of this plan sheet.

To accompany plans dated 5-24-10

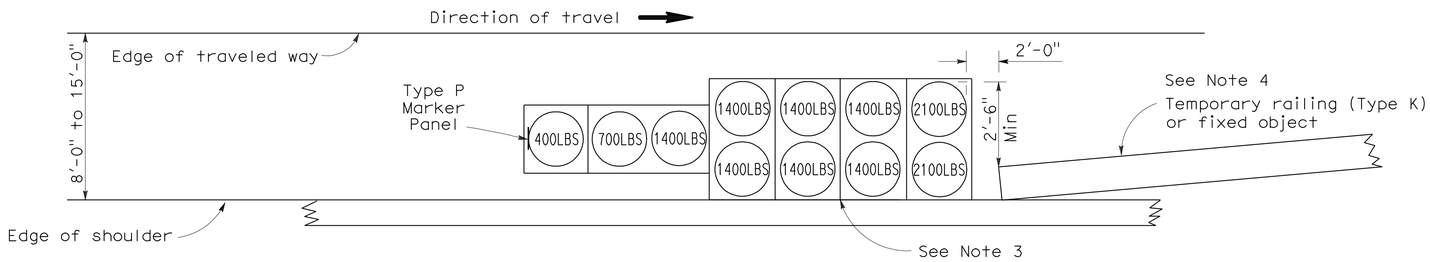

ARRAY 'TS11'

Approach speed less than 45 mph
See Note 9

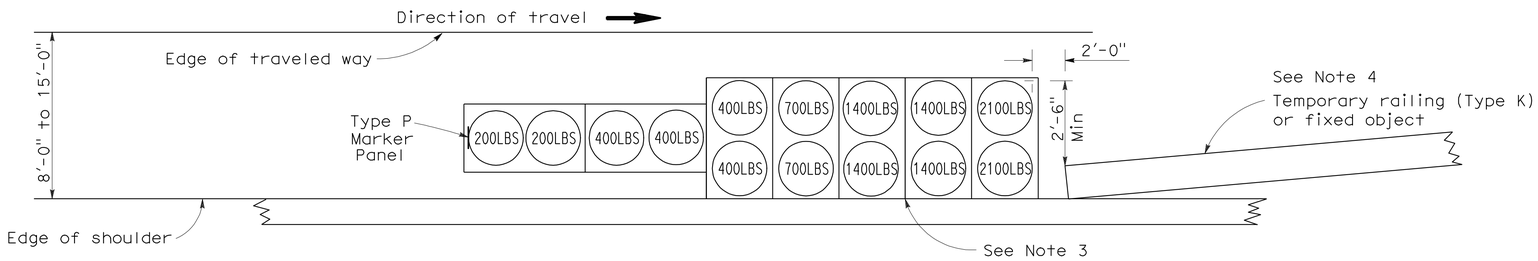

ARRAY 'TS14'

Approach speed 45 mph or more
See Note 9

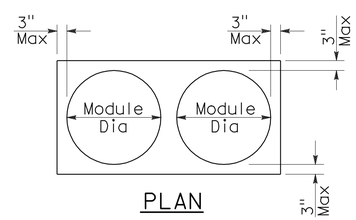

PLAN

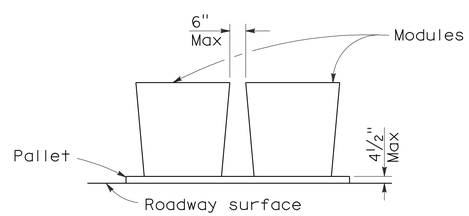

ELEVATION

CRASH CUSHION PALLET DETAIL

See Note 11

NOTES:

1. (XXX) Indicates sand filled module location and weight of sand in pounds for each module. Module spacing is based on the greater diameter of the module.
2. All sand weights are nominal.
3. The temporary crash cushion arrays shown on this plan shall be used only in locations where there will be traffic on one side of the temporary crash cushion array.
4. If the fixed object or approach end of the temporary railing is less than 15'-0" from the edge of traveled way, a temporary crash cushion is required in a construction or work zone.
5. Temporary crash cushion arrays shall not encroach on the traveled way.
6. Arrays for median shoulders shall conform to details shown on this plan for outside shoulders.
7. Place the Type P marker panel so that the bottom of the panel rests upon the pallet and faces traffic.
8. Refer to Standard Plan A73B for marker details.
9. For shoulder widths less than 8'-0", appropriate approved crash cushion protection, other than sand filled modules, shall be provided at fixed objects and at approach ends of temporary railing. The specific type of crash cushion shall be as shown on the project plans or as specified in the Special Provisions, or if not shown on the project plans or specified in the Special Provisions, shall be as approved by the Engineer.
10. Approach speeds indicated conform to NCHRP 350 Report criteria.
11. Use of pallets is optional.

STATE OF CALIFORNIA
DEPARTMENT OF TRANSPORTATION

TEMPORARY CRASH CUSHION, SAND FILLED (SHOULDER INSTALLATIONS)

NO SCALE

RSP T2 DATED JUNE 6, 2008 SUPERSEDES STANDARD PLAN T2
DATED MAY 1, 2006 - PAGE 213 OF THE STANDARD PLANS BOOK DATED MAY 2006.

REVISED STANDARD PLAN RSP T2

2006 REVISED STANDARD PLAN RSP T2

DIST	COUNTY	ROUTE	POST MILES TOTAL PROJECT	SHEET NO.	TOTAL SHEETS
09	Mno	395	R24.5/R26.3	43	52

REGISTERED CIVIL ENGINEER

November 17, 2006
PLANS APPROVAL DATE

REGISTERED PROFESSIONAL ENGINEER
Greg W. Edwards
No. C36386
Exp. 6-30-08
CIVIL
STATE OF CALIFORNIA

The State of California or its officers or agents shall not be responsible for the accuracy or completeness of electronic copies of this plan sheet.

To accompany plans dated 5-24-10

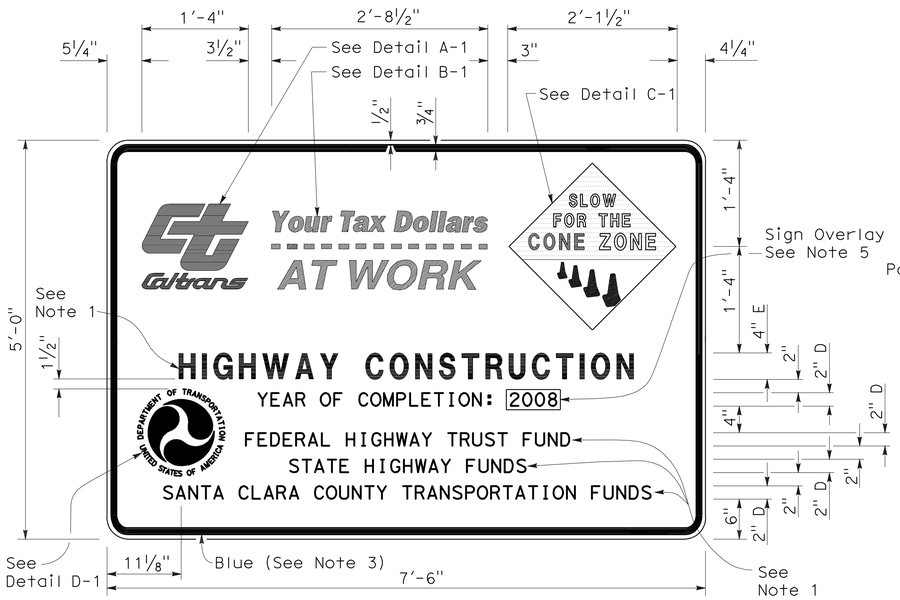

TYPE 1

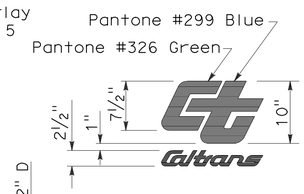

DETAIL A-1

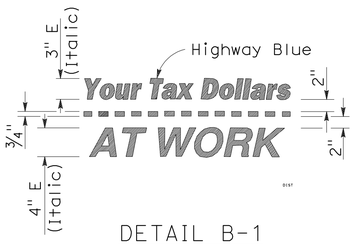

DETAIL B-1
(See Note 3)

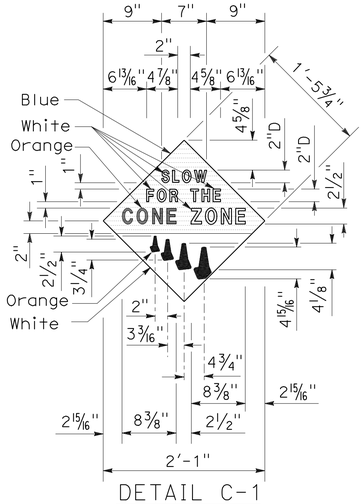

DETAIL C-1
(See Note 4)

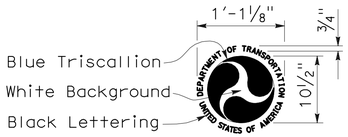

DETAIL D-1
(See Note 6)

NOTES:

1. The sign messages shown for type of project and fund types are examples only. See the Special Provisions for the applicable type of project and fund type messages to be used.
2. Except as otherwise shown, the legend of sign shall be black on a white background (non-reflective).
3. The border of the signs and details "B-1" and "B-2" shall be blue (non-reflective).
4. The diamond in details "C-1" and "C-2" shall be blue for the background of message, " SLOW FOR THE CONE ZONE", and white background for the orange cones. The color and type of font for the "SLOW FOR THE CONE ZONE" message shall be: "SLOW" white D; "FOR THE" white D; "CONE" orange Arial font; "ZONE" white Arial font.
5. Year of completion of project construction shown on the overlay is an example only. See the Special Provisions.
6. Use when the Project involves Federal Highway Trust Fund.

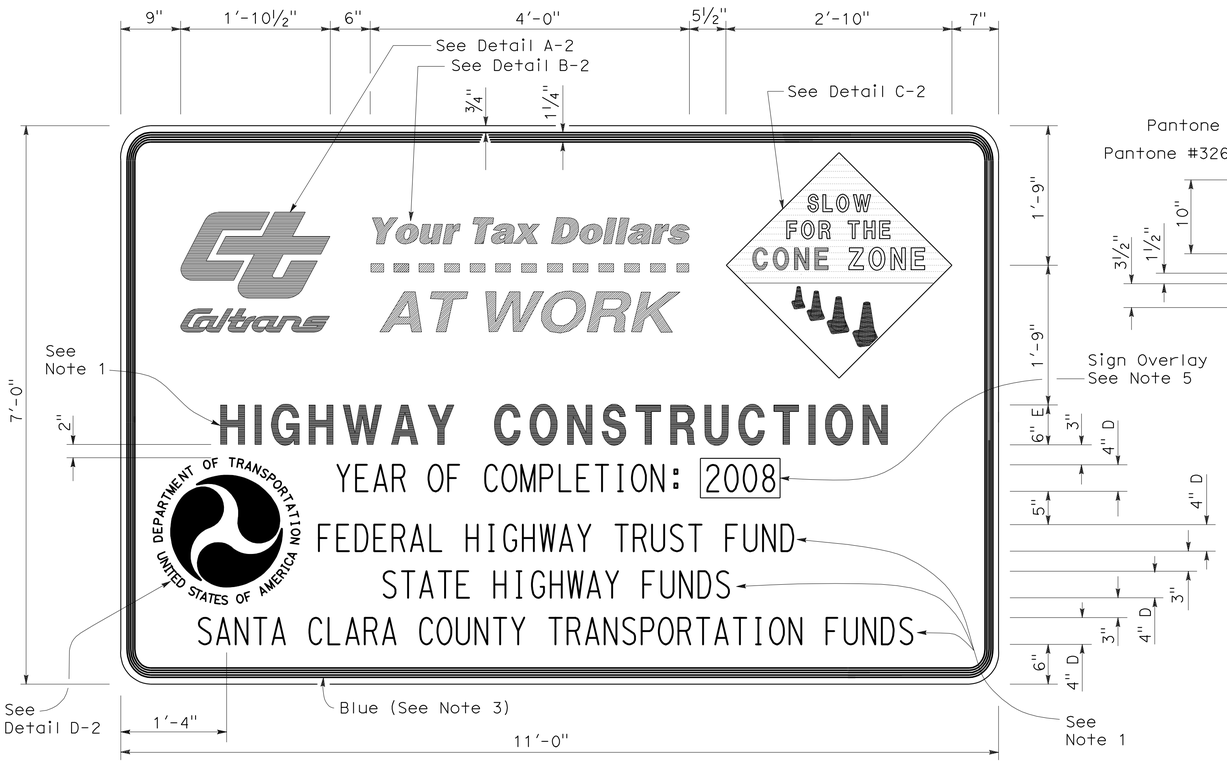

TYPE 2

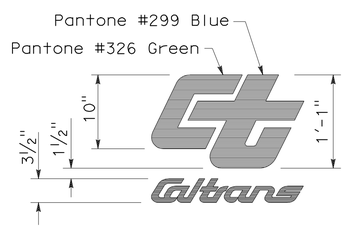

DETAIL A-2

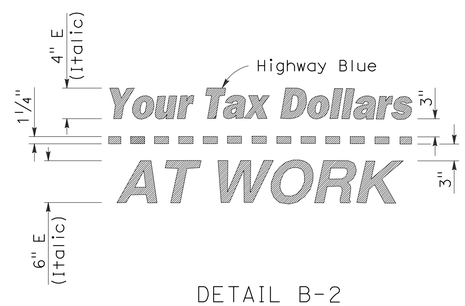

DETAIL B-2
(See Note 3)

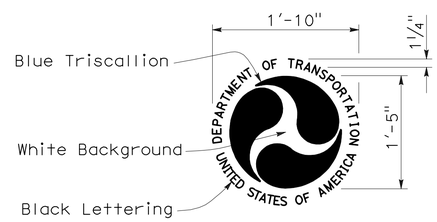

DETAIL D-2
(See Note 6)

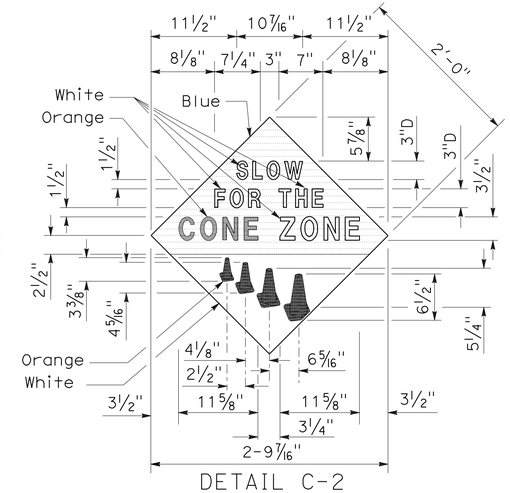

DETAIL C-2
(See Note 4)

STATE OF CALIFORNIA
DEPARTMENT OF TRANSPORTATION

CONSTRUCTION PROJECT FUNDING IDENTIFICATION SIGNS

NO SCALE

RSP T7 DATED NOVEMBER 17, 2006 SUPERSEDES STANDARD PLAN T7
DATED MAY 1, 2006 - PAGE 217 OF THE STANDARD PLANS BOOK DATED MAY 2006.

REVISED STANDARD PLAN RSP T7

2006 REVISED STANDARD PLAN RSP T7

5-15-08

DIST	COUNTY	ROUTE	POST MILES TOTAL PROJECT	SHEET NO.	TOTAL SHEETS
09	Mno	395	R24.5/R26.3	44	52

LICENSED LANDSCAPE ARCHITECT

April 3, 2009
PLANS APPROVAL DATE

The State of California or its officers or agents shall not be responsible for the accuracy or completeness of electronic copies of this plan sheet.

LICENSED LANDSCAPE ARCHITECT — Robert B. Schott — Signature — 11-30-10 Renewal Date — 2-25-09 Date — STATE OF CALIFORNIA

To accompany plans dated 5-24-10

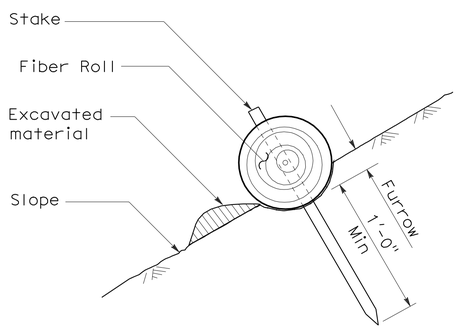

SECTION

TEMPORARY FIBER ROLL (TYPE 1)

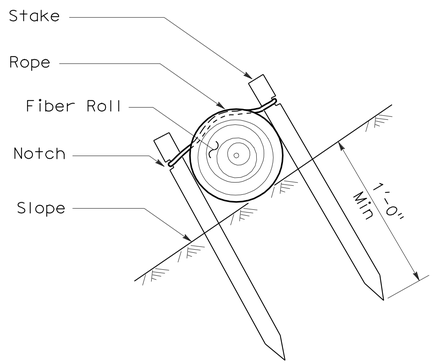

SECTION

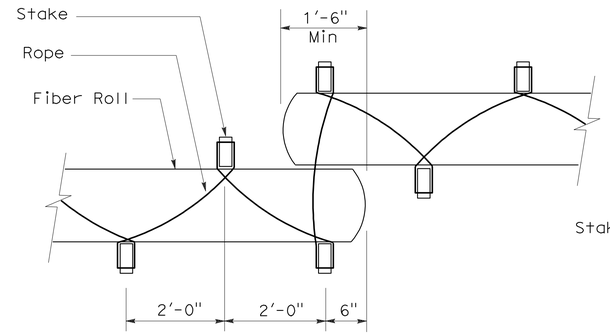

PLAN

TEMPORARY FIBER ROLL (TYPE 2)

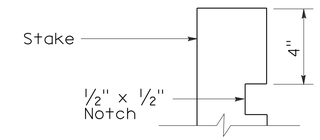

ELEVATION

STAKE NOTCH DETAIL

NOTES:

1. Temporary fiber roll spacing varies depending upon slope inclination.
2. Installations shown in the perspectives are for slope inclination of 10:1 and steeper.

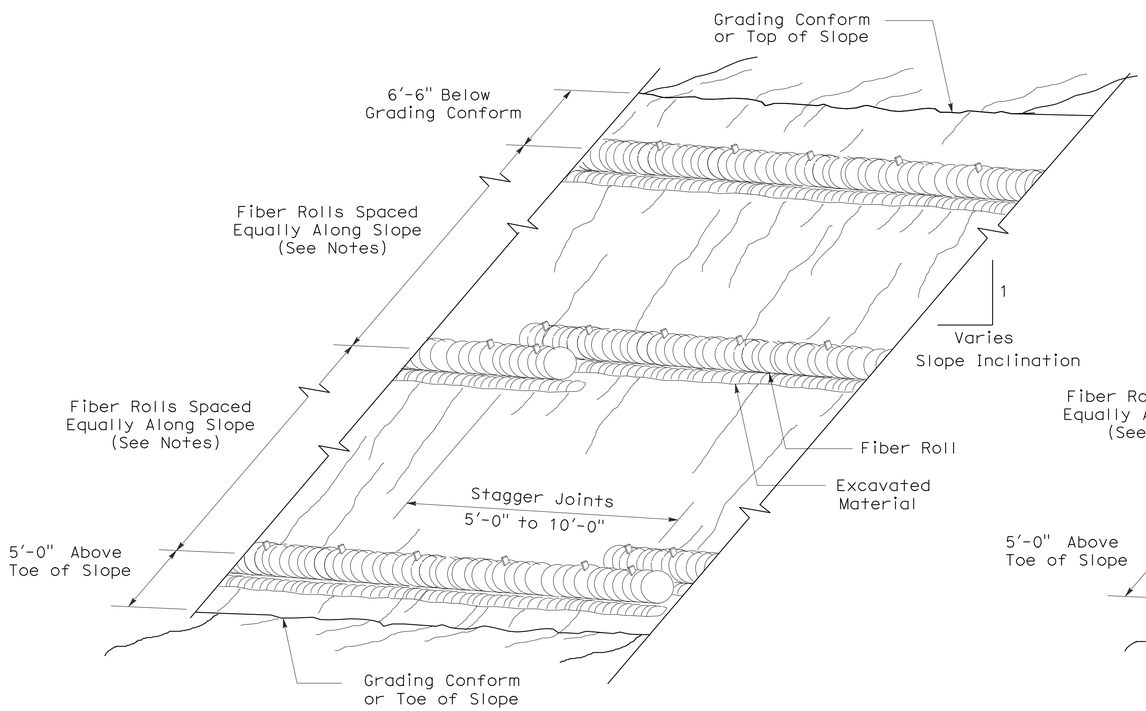

PERSPECTIVE

TEMPORARY FIBER ROLL (TYPE 1)

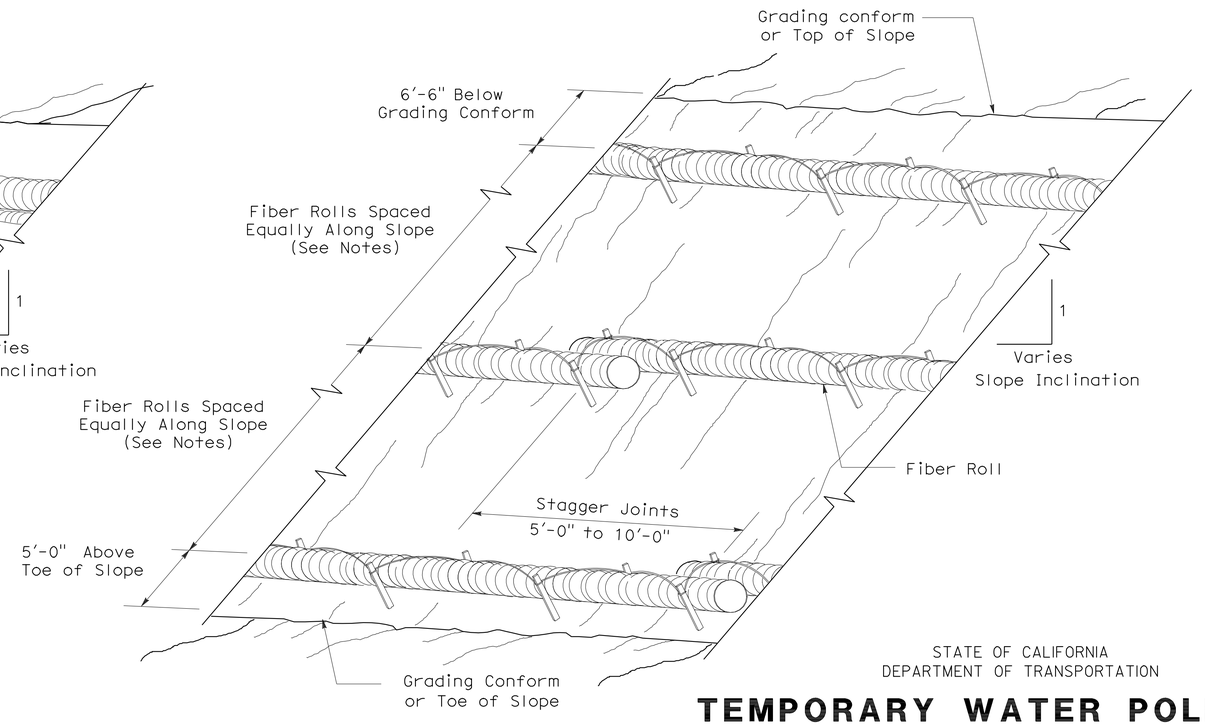

PERSPECTIVE

TEMPORARY FIBER ROLL (TYPE 2)

STATE OF CALIFORNIA
DEPARTMENT OF TRANSPORTATION

TEMPORARY WATER POLLUTION CONTROL DETAILS (TEMPORARY FIBER ROLL)

NO SCALE

RSP T56 DATED APRIL 3, 2009 SUPERSEDES STANDARD PLAN T56
DATED MAY 1, 2006 - PAGE 232 OF THE STANDARD PLANS BOOK DATED MAY 2006.

REVISED STANDARD PLAN RSP T56

2006 REVISED STANDARD PLAN RSP T56

DIST	COUNTY	ROUTE	POST MILES TOTAL PROJECT	SHEET NO.	TOTAL SHEETS
09	Mno	395	R24.5/R26.3	45	52

REGISTERED CIVIL ENGINEER

January 18, 2008
PLANS APPROVAL DATE

REGISTERED PROFESSIONAL ENGINEER
Tillat Satter
No. C42892
Exp. 03-31-08
CIVIL
STATE OF CALIFORNIA

The State of California or its officers or agents shall not be responsible for the accuracy or completeness of electronic copies of this plan sheet.

To accompany plans dated 5-24-10

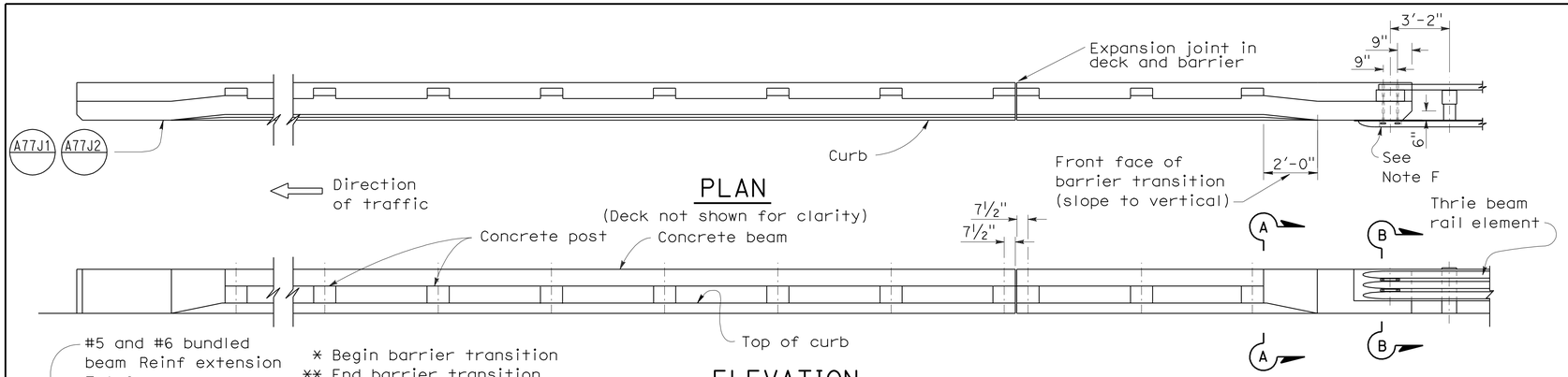

PLAN

(Deck not shown for clarity)

ELEVATION

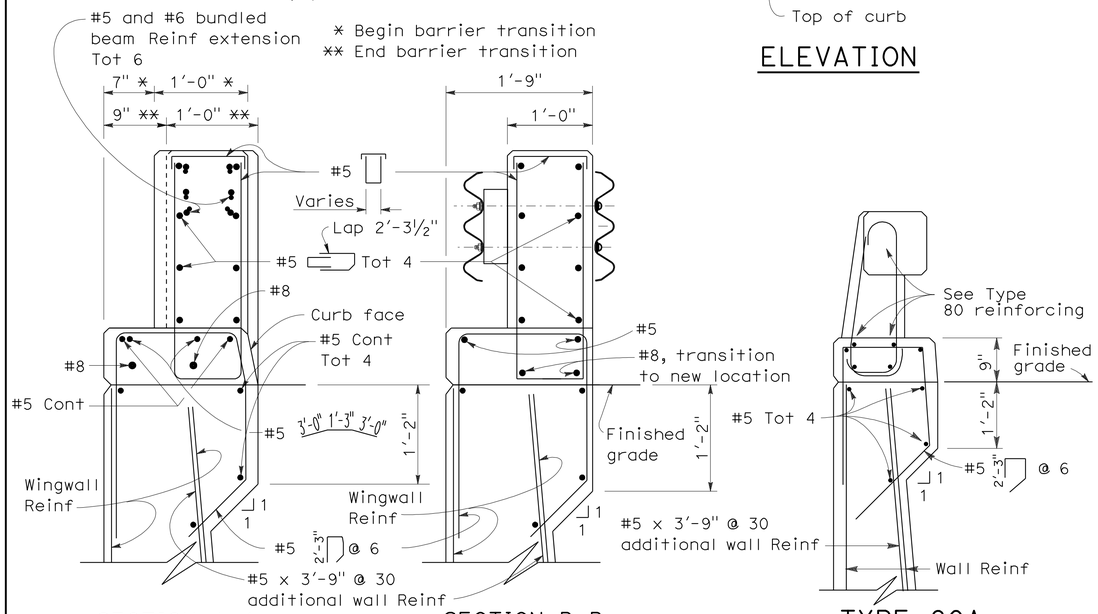

SECTION A-A

SECTION B-B

TYPE 80A

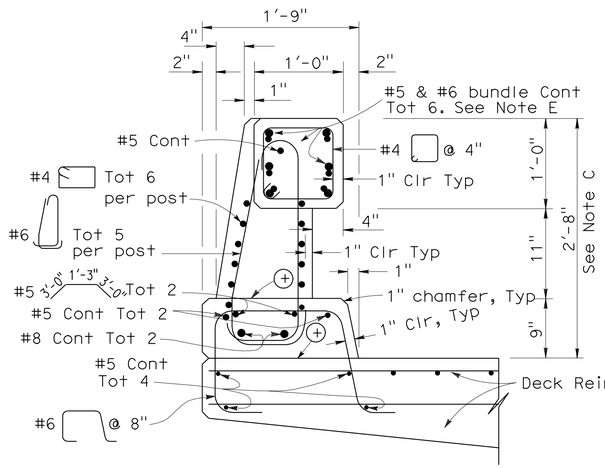

TYPE 80

⊕ Construction joint

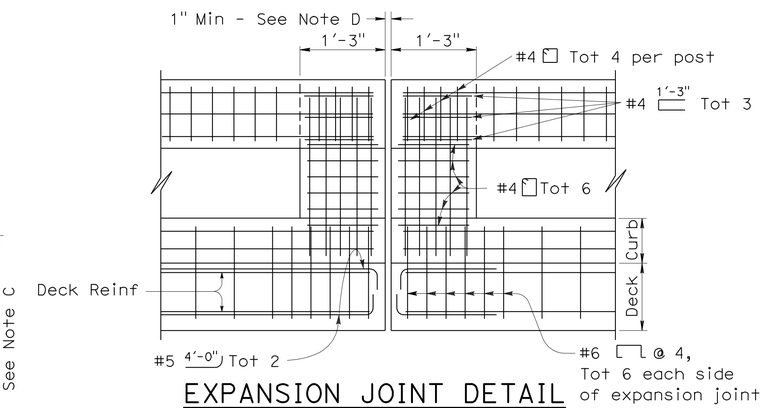

EXPANSION JOINT DETAIL

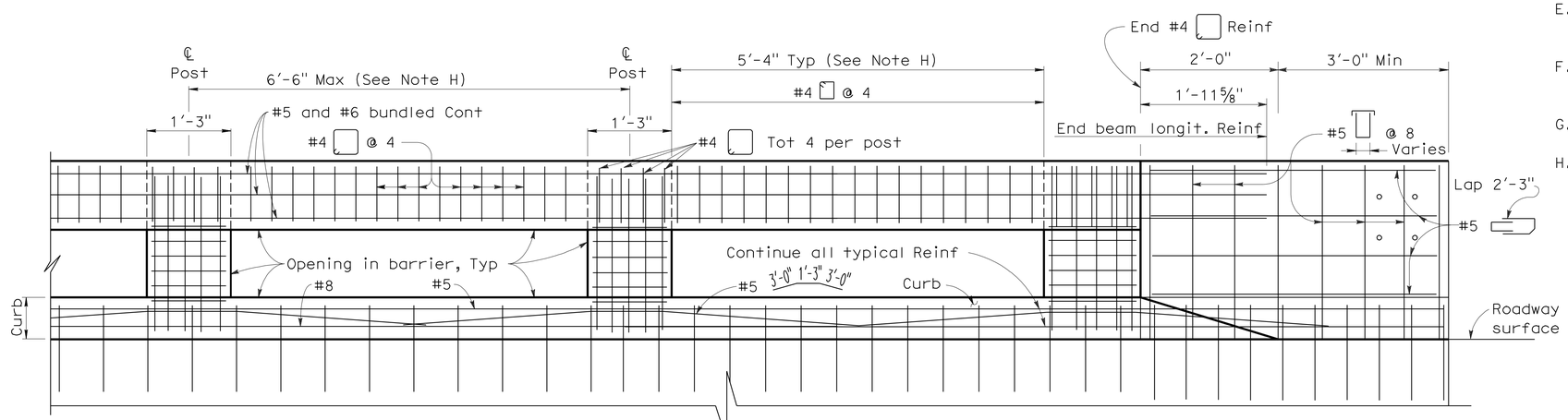

LONGITUDINAL SECTION

(Deck or wingwall reinforcing not shown)

NOTES:

A. Walls are to be backfilled before the barrier is placed.

B. Longitudinal reinforcing steel to stop at all expansion joints.

C. The front face dimensions are to be constant above the finish roadway profile, but the overall height will vary with certain thicknesses of surfacing and roadway slopes.

D. Expansion joint to match deck joint.

E. No lap splicing allowed on the longitudinal rail reinforcing. Splicing shall be staggered.

F. For typical metal railing connection details not shown, see Standard Plans A77J1 and A77J2.

G. Chain link railing is not allowed on Type 80 Barriers.

H. Post to be spaced equally, typically 6'-6" spacing. Post spacing may be reduced where location of hinges or expansion joints or the length of wingwalls will not accommodate the 6'-6" spacing. Maximum see-through availability is to be strived for, where 6'-6" post spacing can not be achieved.

STATE OF CALIFORNIA
DEPARTMENT OF TRANSPORTATION

CONCRETE BARRIER TYPE 80 (SHEET 1 OF 2)

NO SCALE

RSP B11-60 DATED JANUARY 18, 2008 SUPERSEDES STANDARD PLAN B11-60 DATED MAY 1, 2006 - PAGE 276 OF THE STANDARD PLANS BOOK DATED MAY 2006.

REVISED STANDARD PLAN RSP B11-60

2006 REVISED STANDARD PLAN RSP B11-60

10-22-07

DIST	COUNTY	ROUTE	POST MILES TOTAL PROJECT	SHEET NO.	TOTAL SHEETS
09	Mno	395	R24.5/R26.3	46	52

REGISTERED CIVIL ENGINEER

October 5, 2007
PLANS APPROVAL DATE

REGISTERED PROFESSIONAL ENGINEER
Tillat Satter
No. C42892
Exp. 03-31-08
CIVIL
STATE OF CALIFORNIA

The State of California or its officers or agents shall not be responsible for the accuracy or completeness of electronic copies of this plan sheet.

To accompany plans dated 5-24-10

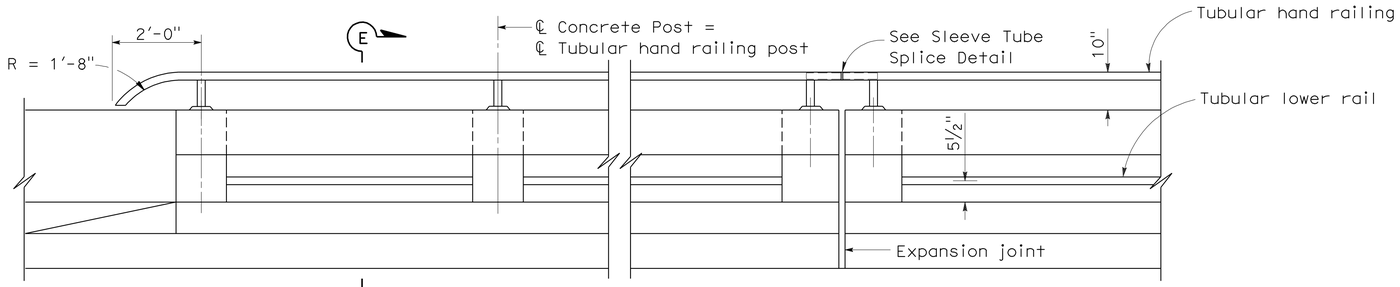

ELEVATION

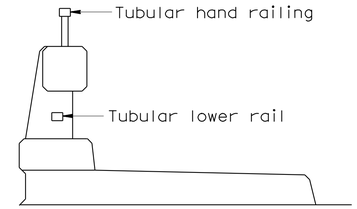

SECTION E-E

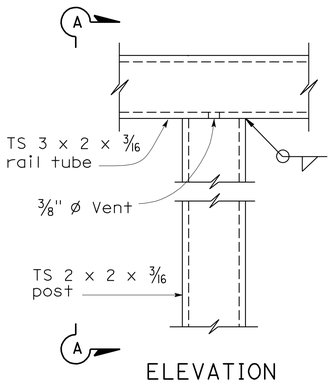

ELEVATION

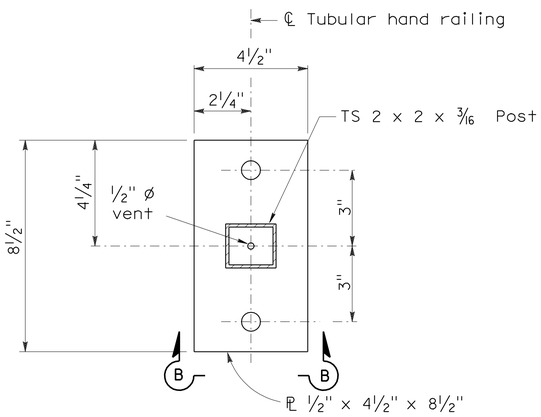

PLAN

This plate detail is restricted to Tubular hand railing (TS 2 x 2 x 3/16 post)

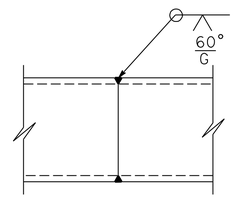

TUBE - WELDED SPLICE

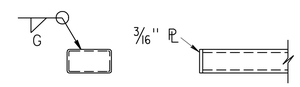

RAIL CAP

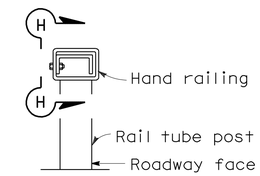

ELEVATION

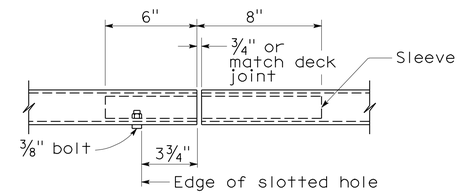

VIEW G-G

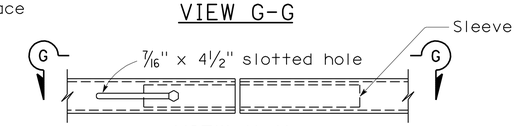

VIEW H-H

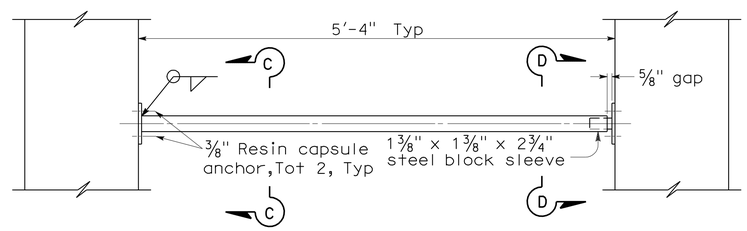

LOWER RAIL DETAIL

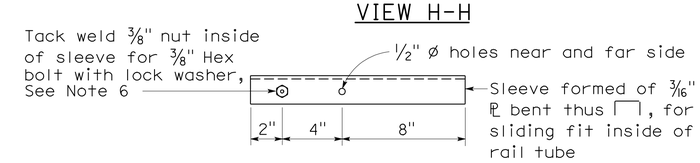

SLEEVE TUBE SPLICE DETAIL

NOTES:

1. Galvanize rail assembly after fabrication.
2. Posts shall be normal to railing.
3. Tube splices shall be located in the tubes spanning deck or wall joints. Increase joint width in tubes to match expansion joint width and increase sleeve length accordingly.
4. Top rail tube shall be continuous over not less than two posts except a short length is permitted near deck or wall joints, electroliers, or other rail discontinuities.
5. See project plans for limits of Tubular Hand railing.
6. 3/8" nut tack welded to sleeve may be replaced by drilled and tapped hole in sleeve.

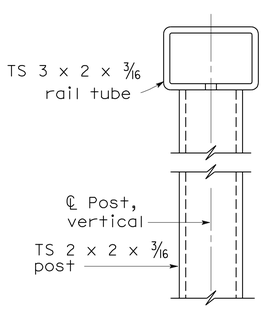

SECTION A-A

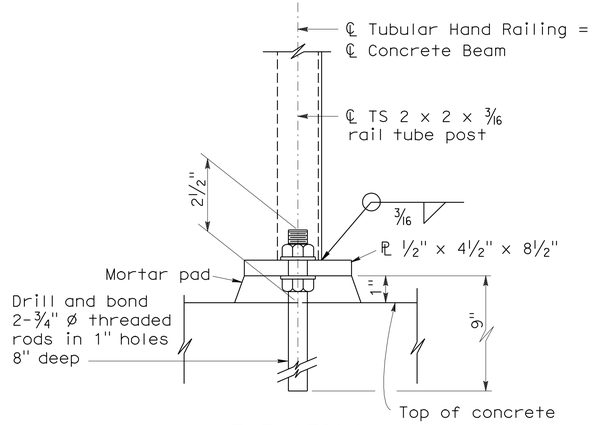

ELEVATION
SECTION B-B

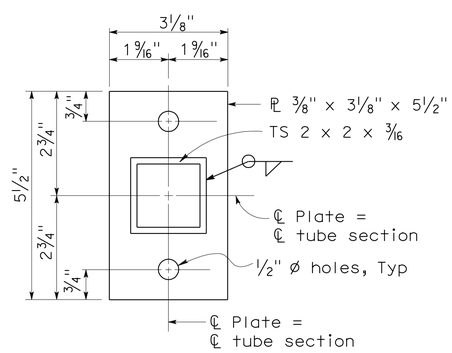

SECTION C-C

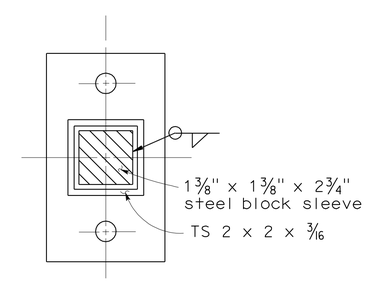

SECTION D-D

See Section C-C for details not shown

TUBULAR RAILING CONNECTION DETAILS

STATE OF CALIFORNIA
DEPARTMENT OF TRANSPORTATION

CONCRETE BARRIER TYPE 80SW (SHEET 3 OF 3)

NO SCALE

RSP B11-64 DATED OCTOBER 5, 2007 SUPERSEDES STANDARD PLAN B11-64 DATED MAY 1, 2006 - PAGE 280 OF THE STANDARD PLANS BOOK DATED MAY 2006.

REVISED STANDARD PLAN RSP B11-64

2006 REVISED STANDARD PLAN RSP B11-64

8-9-07

DIST	COUNTY	ROUTE	POST MILES TOTAL PROJECT	SHEET No	TOTAL SHEETS
09	Mno	395	R24.5/R26.3	47	52

REGISTERED CIVIL ENGINEER 03-09-10 DATE

5-24-10
PLANS APPROVAL DATE

REGISTERED PROFESSIONAL ENGINEER Ramon Reyes No. C63767 Exp. 09-30-2010 CIVIL STATE OF CALIFORNIA

The State of California or its officers or agents shall not be responsible for the accuracy or completeness of electronic copies of this plan sheet.

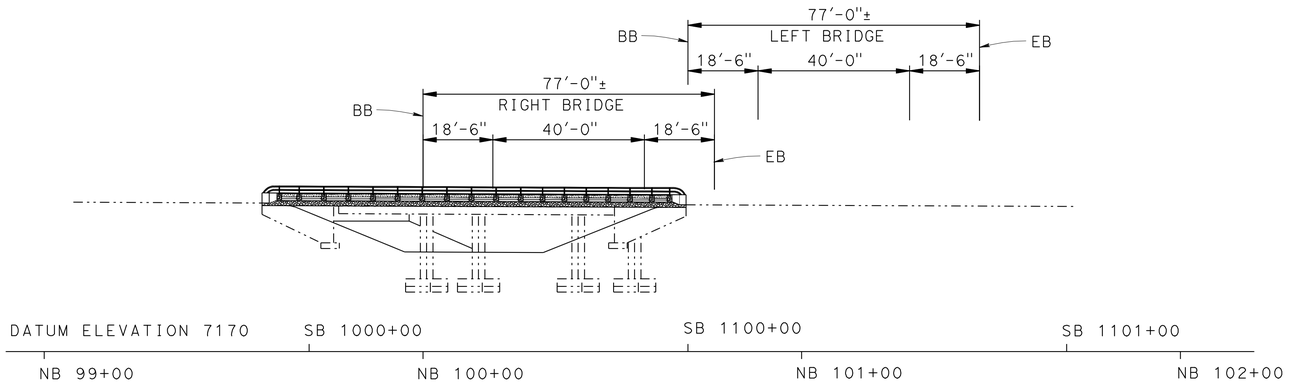

ELEVATION
1" = 20'-0"

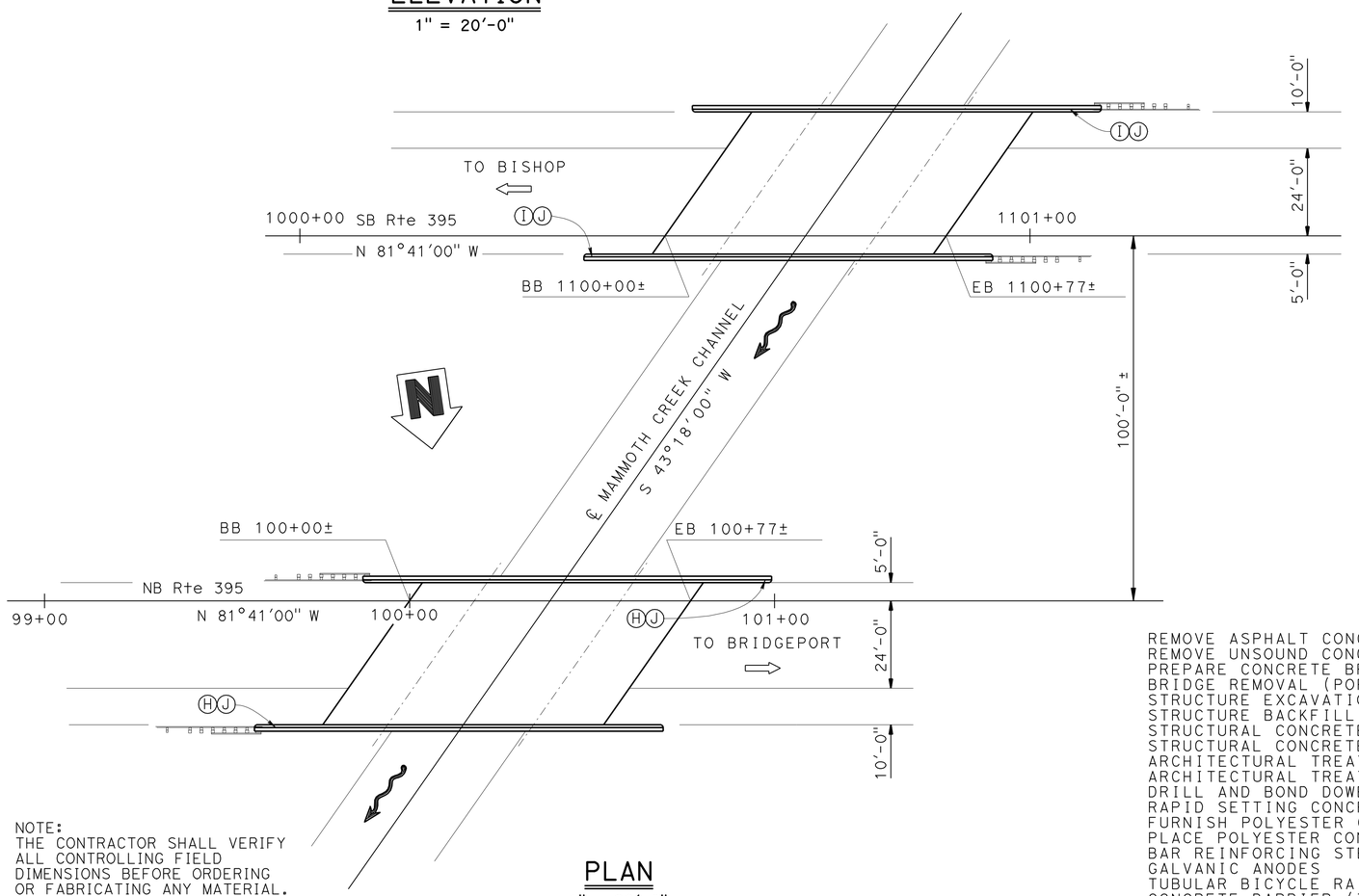

NOTE:
THE CONTRACTOR SHALL VERIFY ALL CONTROLLING FIELD DIMENSIONS BEFORE ORDERING OR FABRICATING ANY MATERIAL.

PLAN
1" = 20'-0"

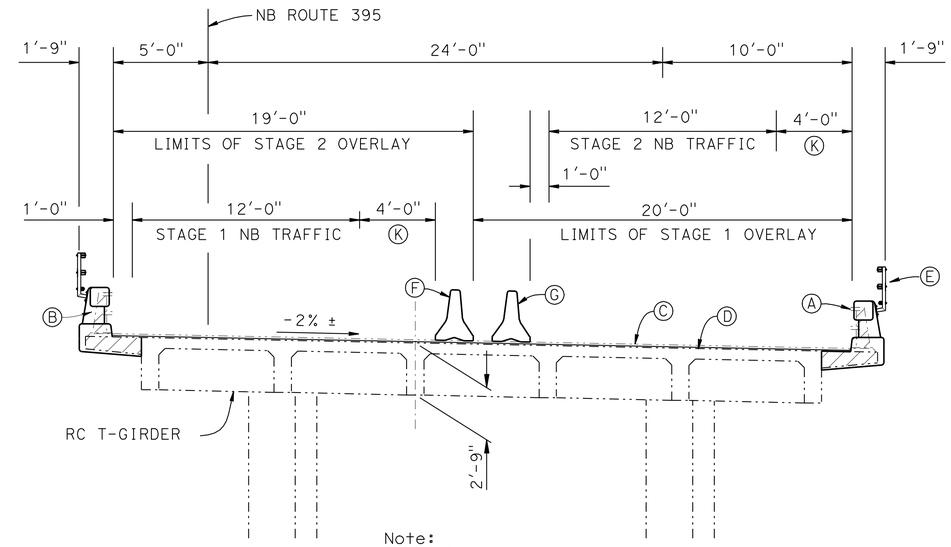

Note:
Right bridge shown, left bridge similar

TYPICAL SECTION
¼" = 1'-0"

QUANTITIES

REMOVE ASPHALT CONCRETE SURFACING	6,006 SQFT
REMOVE UNSOUND CONCRETE	300 CF
PREPARE CONCRETE BRIDGE DECK SURFACE	6,006 SQFT
BRIDGE REMOVAL (PORTION), LOCATION A	LUMP SUM
STRUCTURE EXCAVATION (BRIDGE)	26 CY
STRUCTURE BACKFILL (BRIDGE)	26 CY
STRUCTURAL CONCRETE	46 CY
STRUCTURAL CONCRETE, BRIDGE FOOTING	21 CY
ARCHITECTURAL TREATMENT WOOD GRAIN	1,720 SQFT
ARCHITECTURAL TREATMENT RIVER ROCK	672 SQFT
DRILL AND BOND DOWEL	72 LF
RAPID SETTING CONCRETE (PATCH)	300 CF
FURNISH POLYESTER CONCRETE OVERLAY	450 CF
PLACE POLYESTER CONCRETE OVERLAY	6,006 SQFT
BAR REINFORCING STEEL (EPOXY COATED) (BRIDGE)	12,380 LB
GALVANIC ANODES	360 EA
TUBULAR BICYCLE RAILING	452 LF
CONCRETE BARRIER (TYPE 80 MODIFIED)	308 LF
CONCRETE BARRIER (TYPE 80A MODIFIED)	144 LF

Notes:

- (A) Remove existing Type 8 barrier, Typ
- (B) Concrete Barrier Type 80 (MOD), Typ
- (C) Remove existing AC overlay and membrane
- (D) Place ¾" polyester concrete overlay
- (E) Painted Tubular Bicycle Railing, Typ
- (F) Stage 1 Temporary Railing, Type K (District)
- (G) Stage 2 Temporary Railing, Type K (District)
- (H) Paint "Br No. 47-0049R"
- (I) Paint "Br No. 47-0049L"
- (J) Paint "Mammoth Creek Bridge"
- (K) Temporary Shoulder
- -·-·- Denotes existing structure
- ▨ Denotes structure removal

X
DESIGN ENGINEER

	BY	CHECKED
DESIGN	Ramon Reyes	Rod Simmons
DETAILS	Craig Schellenger	Ramon Reyes
QUANTITIES	Ramon Reyes	Craig Schellenger

LOAD & RESISTANCE FACTOR DESIGN — LIVE LOADING: HL93 W/"LOW-BOY"; PERMIT DESIGN VEHICLE

	BY	CHECKED
LAYOUT	Ramon Reyes	Craig Schellenger
SPECIFICATIONS	Rebecca Franti	PLANS AND SPECS COMPARED X

ORIGINAL SCALE IN INCHES FOR REDUCED PLANS 0 1 2 3

STATE OF CALIFORNIA
DEPARTMENT OF TRANSPORTATION

DIVISION OF ENGINEERING SERVICES
STRUCTURE DESIGN
DESIGN BRANCH 17

CU 09
EA 337701

BRIDGE NO. 47-0049RL
POST MILE R24.9

MAMMOTH CREEK BRIDGE
GENERAL PLAN

DISREGARD PRINTS BEARING EARLIER REVISION DATES

REVISION DATES: 7-23-09 8-10-09 8-14-09 10-15-09 10-30-09 12-31-09 02-17-10

SHEET 1 OF 6

USERNAME => trcarol DATE PLOTTED => 25-MAY-2010 TIME PLOTTED => 13:53

STRUCTURES DESIGN GENERAL PLAN SHEET (ENGLISH) (REV.07-24-06)

FILE => 47-0049rl-a-gp.dgn

DIST	COUNTY	ROUTE	POST MILES TOTAL PROJECT	SHEET No	TOTAL SHEETS
09	Mno	395	R24.5/R26.3	48	52

REGISTERED CIVIL ENGINEER 03-09-10 DATE

5-24-10
PLANS APPROVAL DATE

REGISTERED PROFESSIONAL ENGINEER Ramon Reyes No. C63767 Exp 09-30-2010 CIVIL STATE OF CALIFORNIA

The State of California or its officers or agents shall not be responsible for the accuracy or completeness of electronic copies of this plan sheet.

LEGEND

ECR denotes Epoxy Coated Reinforcement

Denotes existing structure

Denotes structure removal

Denotes architectural treatment

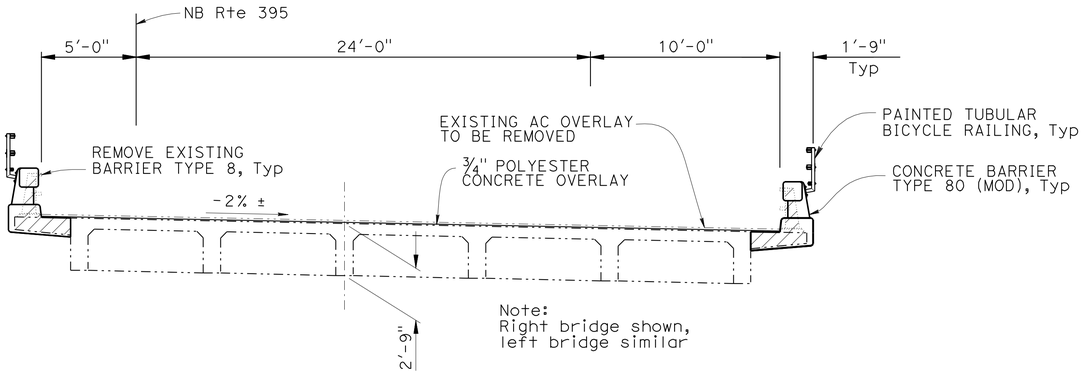

TYPICAL SECTION

1/4" = 1'-0"

Note:
The Contractor shall verify all controlling field dimensions before ordering or fabricating any material.

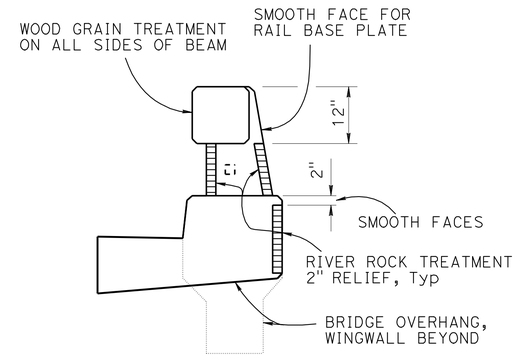

SECTION

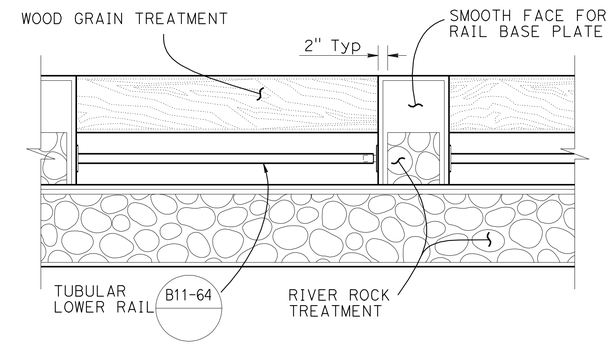

ELEVATION

ARCHITECTURAL TREATMENT

3/4" = 1'-0"

Painted Tubular Bicycle Railing omitted for clarity

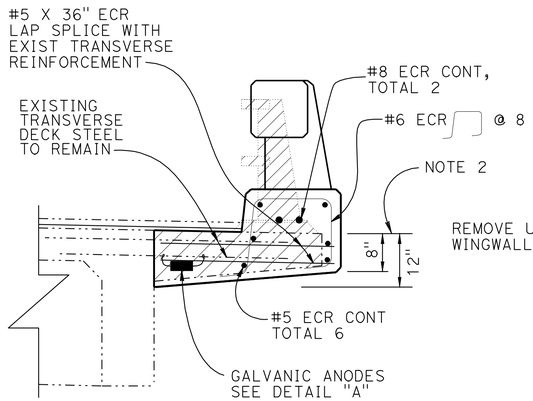

PART TYPICAL SECTION

3/4" = 1'-0"

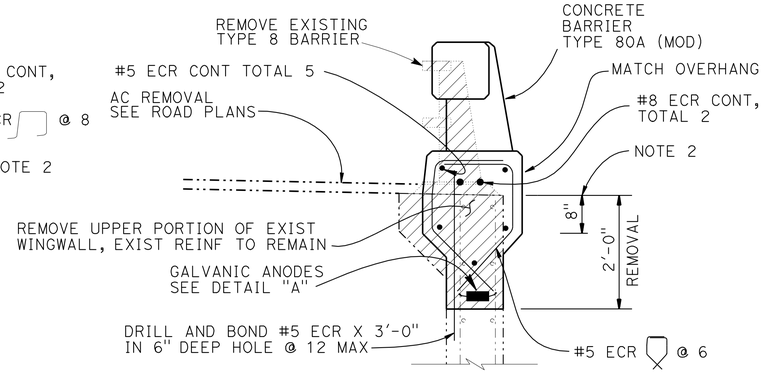

WINGWALL SECTION

3/4" = 1'-0"

NOTES:
1. Architectural details and metal railing omitted for clarity, typ
2. No construction joint between barrier curb and overhang/wingwall
3. Barrier reinforcement to be in place prior to overhang/wingwall concrete placement

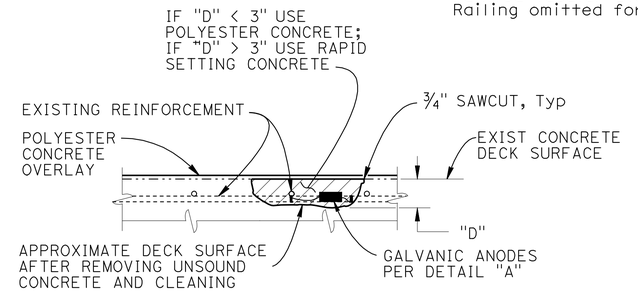

DECK REPAIR DETAIL

NO SCALE

Deck Repair Notes:

1. Approximately 20 percent of existing deck area will require repair
2. Repairs are approximately 3" deep
3. Repair locations determined by the Engineer
4. Install galvanic anodes when existing reinf is encountered. Quantity and locations shall be determined by the Engineer
5. Existing overlay omitted for clarity

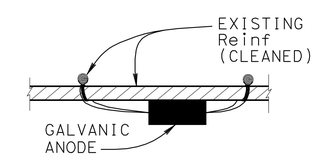

DETAIL "A"

NO SCALE

Detail A Notes:

1. Attach galvanic anodes to clean reinforcing steel per Detail "A" or as approved by Engineer.
2. Anode spacing not to exceed 24".
3. Ensure electrical continuity of all exposed reinf by securely fastening with tie wire.

	BY	CHECKED
DESIGN	Ramon Reyes	Rod Simmons
DETAILS	Craig Schellenger	Ramon Reyes
QUANTITIES	Ramon Reyes	Craig Schellenger

STATE OF CALIFORNIA
DEPARTMENT OF TRANSPORTATION

DIVISION OF ENGINEERING SERVICES
STRUCTURE DESIGN
DESIGN BRANCH 17

BRIDGE NO. 47-0049RL
POST MILE R24.9

MAMMOTH CREEK BRIDGE
BRIDGE DETAILS

STRUCTURES DESIGN DETAIL SHEET (ENGLISH) (REV. 10/25/05)

ORIGINAL SCALE IN INCHES FOR REDUCED PLANS 0 1 2 3

CU 09
EA 337701

DISREGARD PRINTS BEARING EARLIER REVISION DATES

REVISION DATES: 8-16-09 9-11-09 10-16-09 10-28-09 11-18-09 11-30-09 12-06-09 12-31-09 02-17-10

SHEET 2 OF 6

FILE => 47-0049rl-k-ts.dgn

USERNAME => trcarrol DATE PLOTTED => 25-MAY-2010 TIME PLOTTED => 13:53

DIST.	COUNTY	ROUTE	POST MILES TOTAL PROJECT	SHEET NO.	TOTAL SHEETS
09	Mno	395	R24.5/R26.3	49	52

REGISTERED ENGINEER - CIVIL 03-09-10

5-24-10
PLANS APPROVAL DATE

REGISTERED PROFESSIONAL ENGINEER Ramon Reyes No. C63767 Exp. 09-30-2010 CIVIL STATE OF CALIFORNIA

The State of California or its officers or agents shall not be responsible for the accuracy or completeness of electronic copies of this plan sheet.

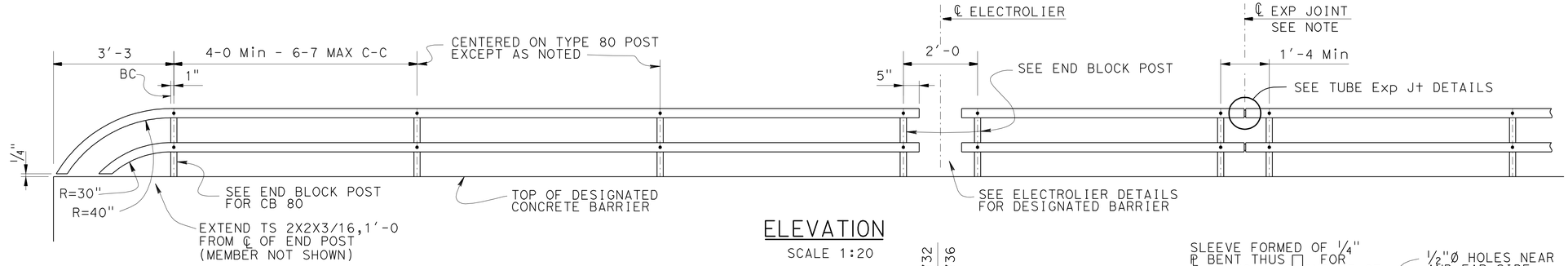

ELEVATION
SCALE 1:20

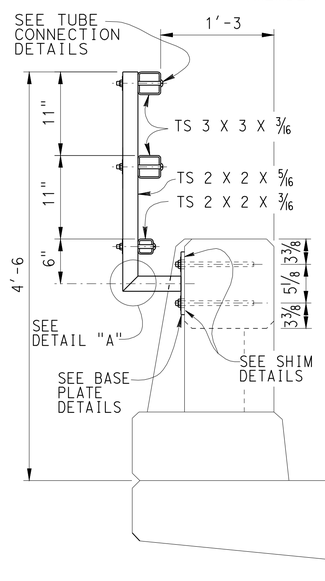

TYPE 80
END BLOCK POST
SCALE 1:10

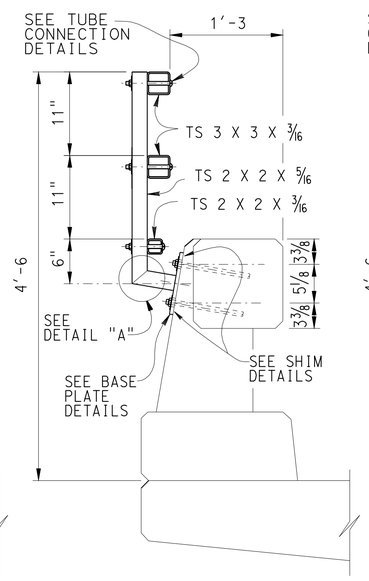

TYPE 80
SCALE 1:10

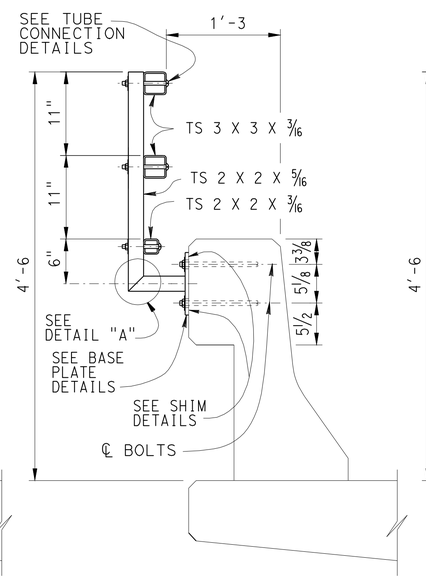

TYPE 25
SCALE 1:10

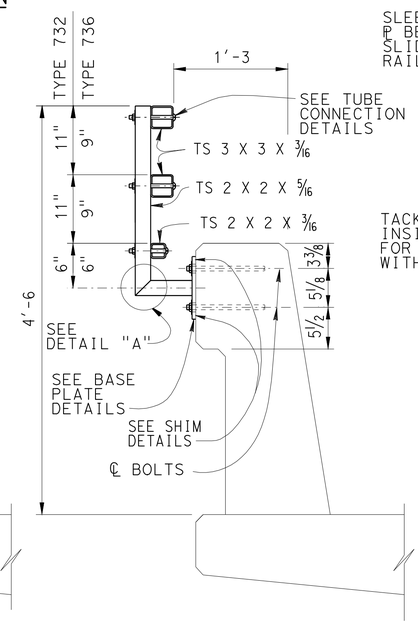

TYPE 732 OR 736
NO SCALE

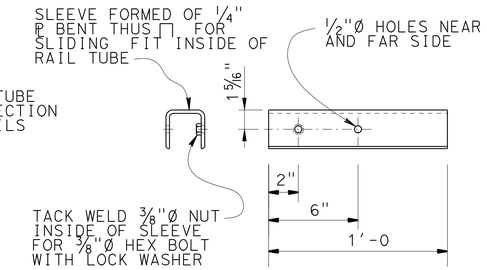

SLEEVE DETAIL
SCALE 1:5

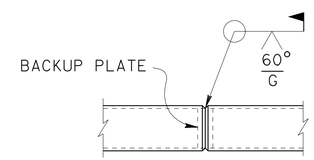

WELDED SPLICE DETAIL
SCALE 1:5

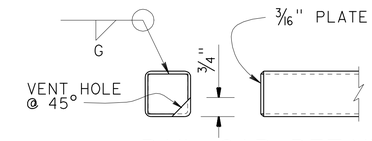

RAIL CAP DETAIL
SCALE 1:5

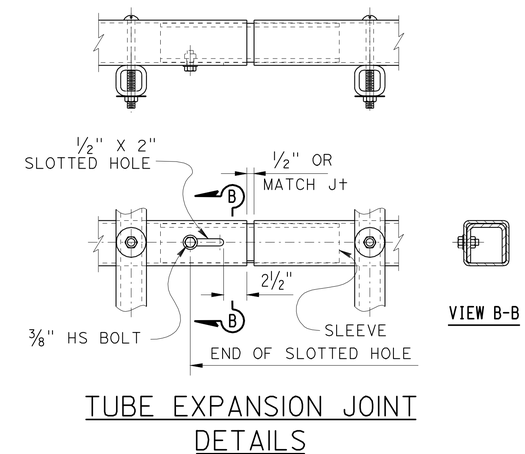

TUBE EXPANSION JOINT DETAILS
SCALE 1:5

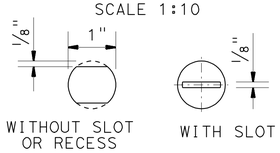

VIEW C-C
SCALE 1:1

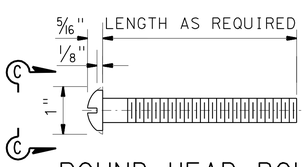

ROUND HEAD BOLT DETAIL
SCALE 1:1

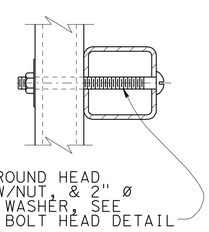

TUBE CONNECTION DETAIL
SCALE 1:2.5

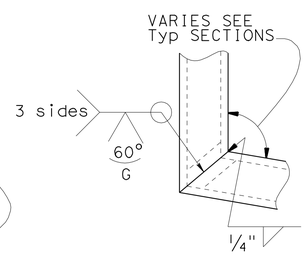

DETAIL "A"
SCALE 1:2.5

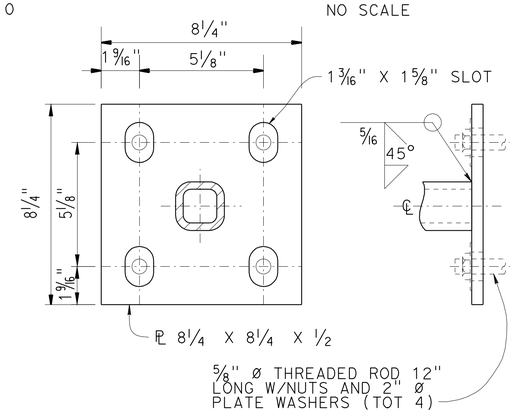

BASE PLATE DETAIL
SCALE 1:2.5

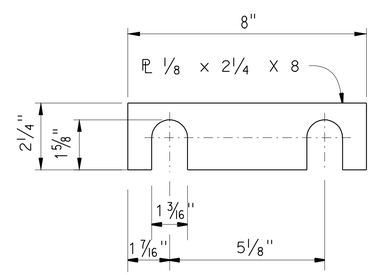

SHIM DETAILS
NO SCALE

NOTES:

1. Galvanize rail assembly after fabrication.
2. Post shall be normal to railing.
3. Rail tubes shall be shop bent or fabricated to fit horizontal curve when radius is less than 12 inches.
4. Tube splices shall be located in the tubes spanning deck or wall joints. Increase joint width in tubes to match expansion joint width and increase sleeve length correspondingly.
5. Top rail tube shall be continuous over not less than two posts except a short post spacing is permitted near deck or wall joints, electroliers, or other rail discontinuities as noted.
6. For details and reinforcement not shown see Standard Plan.
7. See project plans for limits of tubular hand railing.

STANDARD DRAWING

FILE NO. xs16-500e

APPROVED BY T SATTER — RESPONSIBLE TECHNICAL SPECIALIST
APPROVAL DATE 4-15-08

RELEASED BY ROBERTO LACALLE — RESPONSIBLE OFFICE CHIEF
RELEASE DATE 4-15-08

STATE OF CALIFORNIA
DEPARTMENT OF TRANSPORTATION

DIVISION OF ENGINEERING SERVICES

BRIDGE NO. 47-0049RL
POST MILE R24.9

MAMMOTH CREEK BRIDGE
TUBULAR BICYCLE RAILING

DS OSD 2147A (ENGLISH STANDARD DRAWING "XS" BORDER REV. 01/11/08)

ORIGINAL SCALE IN INCHES FOR REDUCED PLANS 0 1 2 3

CU 09
EA 337701

DISREGARD PRINTS BEARING EARLIER REVISION DATES
REVISION DATES (PRELIMINARY STAGE ONLY) 12-11-09 02-18-10

SHEET 3 OF 6

USERNAME => trcarol

DATE PLOTTED => 25-MAY-2010 TIME PLOTTED => 13:54

47-0049rl-t-brdt.dgn

DIST	COUNTY	ROUTE	POST MILES TOTAL PROJECT	SHEET No	TOTAL SHEETS
09	Mno	395	R24.5/R26.3	50	52

REGISTERED CIVIL ENGINEER 03-09-10 DATE

5-24-10
PLANS APPROVAL DATE

REGISTERED PROFESSIONAL ENGINEER Ramon Reyes No. C63767 Exp. 09-30-2010 CIVIL STATE OF CALIFORNIA

The State of California or its officers or agents shall not be responsible for the accuracy or completeness of electronic copies of this plan sheet.

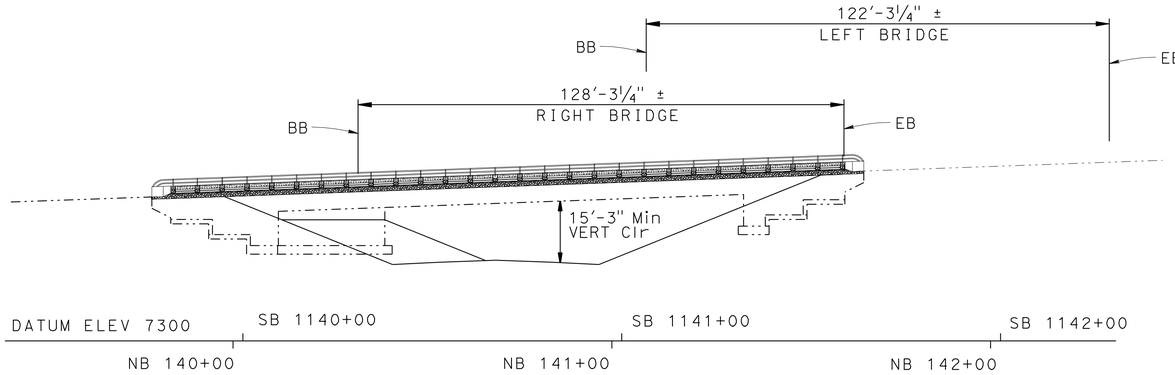

ELEVATION

1" = 20'-0"

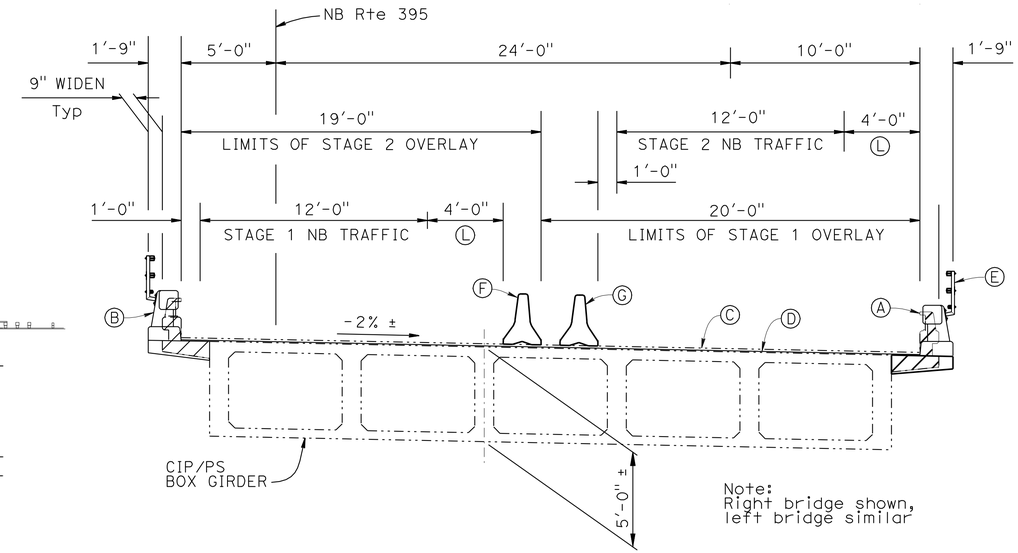

Note:
Right bridge shown,
left bridge similar

TYPICAL SECTION

¼" = 1'-0"

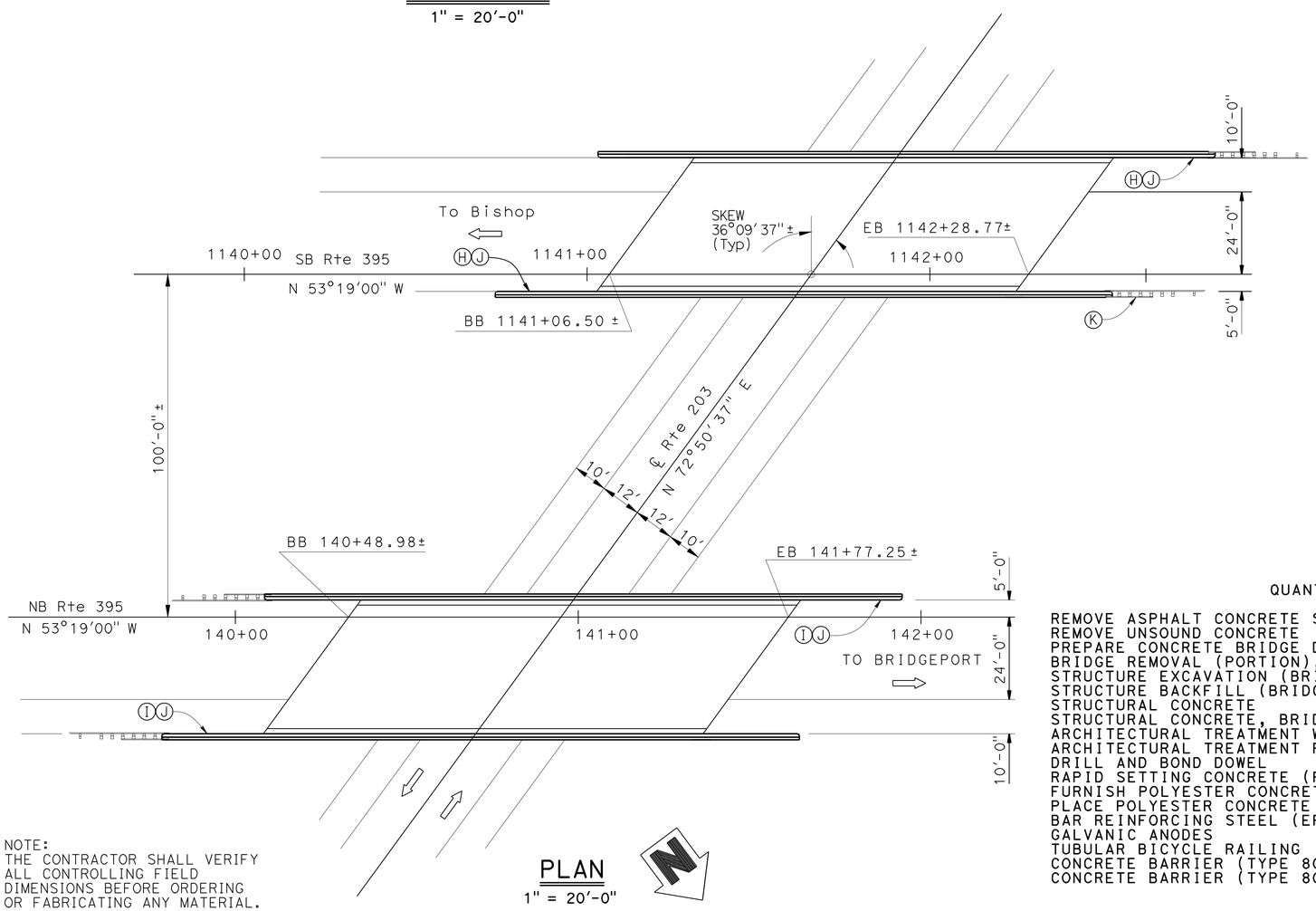

NOTE:
THE CONTRACTOR SHALL VERIFY
ALL CONTROLLING FIELD
DIMENSIONS BEFORE ORDERING
OR FABRICATING ANY MATERIAL.

PLAN

1" = 20'-0"

QUANTITIES

REMOVE ASPHALT CONCRETE SURFACING	10,005	SQFT
REMOVE UNSOUND CONCRETE	500	CF
PREPARE CONCRETE BRIDGE DECK SURFACE	10,005	SQFT
BRIDGE REMOVAL (PORTION), LOCATION B	LUMP	SUM
STRUCTURE EXCAVATION (BRIDGE)	49	CY
STRUCTURE BACKFILL (BRIDGE)	42	CY
STRUCTURAL CONCRETE	76	CY
STRUCTURAL CONCRETE, BRIDGE FOOTING	37	CY
ARCHITECTURAL TREATMENT WOODGRAIN	2,865	SQFT
ARCHITECTURAL TREATMENT RIVERROCK	1,108	SQFT
DRILL AND BOND DOWEL	120	LF
RAPID SETTING CONCRETE (PATCH)	500	CF
FURNISH POLYESTER CONCRETE OVERLAY	750	CF
PLACE POLYESTER CONCRETE OVERLAY	10,005	SQFT
BAR REINFORCING STEEL (EPOXY COATED) (BRIDGE)	21,086	LB
GALVANIC ANODES	580	EA
TUBULAR BICYCLE RAILING	753	LF
CONCRETE BARRIER (TYPE 80 MODIFIED)	513	LF
CONCRETE BARRIER (TYPE 80A MODIFIED)	240	LF

Notes:

- (A) Remove existing Type 9 barrier, typ
- (B) Concrete Barrier Type 80 (MOD), typ
- (C) Remove existing AC overlay and membrane
- (D) Place ¾" polyester concrete overlay
- (E) Painted Tubular Bicycle Railing, typ
- (F) Stage 1 Temporary Railing, Type K (District)
- (G) Stage 2 Temporary Railing, Type K (District)
- (H) Paint "Br No. 47-0050L"
- (I) Paint "Br No. 47-0050R"
- (J) Paint "395/203 Sep"
- (K) Metal Beam Guard Rail, typ (See Road Plans)
- (L) Temporary Shoulder
- —··—· Denotes existing structure
- ▨ Denotes structure removal

X
DESIGN ENGINEER

DESIGN	BY Ramon Reyes	CHECKED Rod Simmons	LOAD & RESISTANCE FACTOR DESIGN	LIVE LOADING: HL93 W/"LOW-BOY"; PERMIT DESIGN VEHICLE
DETAILS	BY Craig Schellenger	CHECKED Ramon Reyes	LAYOUT BY Ramon Reyes	CHECKED Craig Schellenger
QUANTITIES	BY Ramon Reyes	CHECKED Craig Schellenger	SPECIFICATIONS BY Rebecca Franti	PLANS AND SPECS COMPARED X

STATE OF CALIFORNIA
DEPARTMENT OF TRANSPORTATION

DIVISION OF ENGINEERING SERVICES
STRUCTURE DESIGN
DESIGN BRANCH 17

BRIDGE NO. 47-0050RL
POST MILE R25.7

ROUTE 395/203 SEPARATION (WIDEN)
GENERAL PLAN

ORIGINAL SCALE IN INCHES FOR REDUCED PLANS 0 1 2 3

CU 09
EA 337701

DISREGARD PRINTS BEARING EARLIER REVISION DATES

REVISION DATES: 7-31-09 8-18-09 10-16-09 10-28-09 11-04-09 11-06-09 11-30-09 12-31-09 02-17-10

SHEET 4 OF 6

STRUCTURES DESIGN GENERAL PLAN SHEET (ENGLISH) (REV.07-24-06)

FILE => 47-0050rl-a-gp.dgn

USERNAME => rrcarol DATE PLOTTED => 25-MAY-2010 TIME PLOTTED => 13:54

DIST	COUNTY	ROUTE	POST MILES TOTAL PROJECT	SHEET No	TOTAL SHEETS
09	Mno	395	R24.5/R26.3	51	52

REGISTERED CIVIL ENGINEER 03-09-10 DATE

5-24-10
PLANS APPROVAL DATE

REGISTERED PROFESSIONAL ENGINEER Ramon Reyes No. C63767 Exp. 09-30-2010 CIVIL STATE OF CALIFORNIA

The State of California or its officers or agents shall not be responsible for the accuracy or completeness of electronic copies of this plan sheet.

LEGEND

ECR denotes Epoxy Coated Reinforcement

-·-·- Denotes existing structure

Denotes structure removal

Denotes architectural treatment

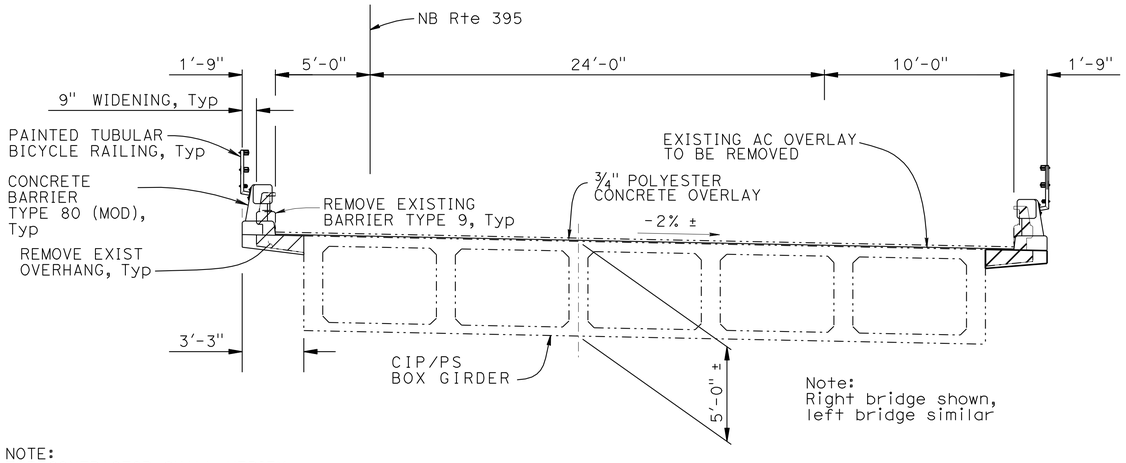

NOTE:
THE CONTRACTOR SHALL VERIFY ALL CONTROLLING FIELD DIMENSIONS BEFORE ORDERING OR FABRICATING ANY MATERIAL.

TYPICAL SECTION

1/4" = 1'-0"

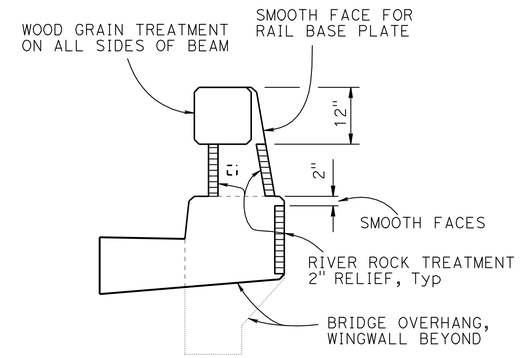

SECTION

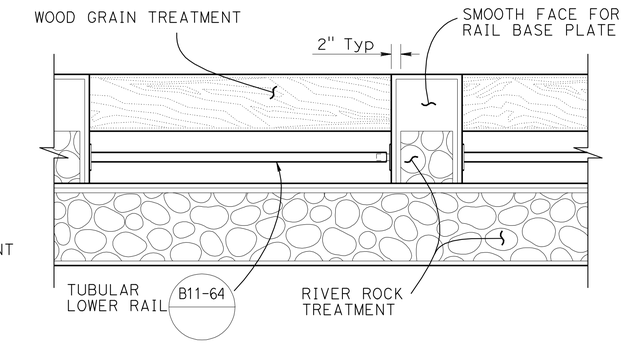

ELEVATION

ARCHITECTURAL TREATMENT

3/4" = 1'-0"

Painted Tubular Bicycle Railing omitted for clarity

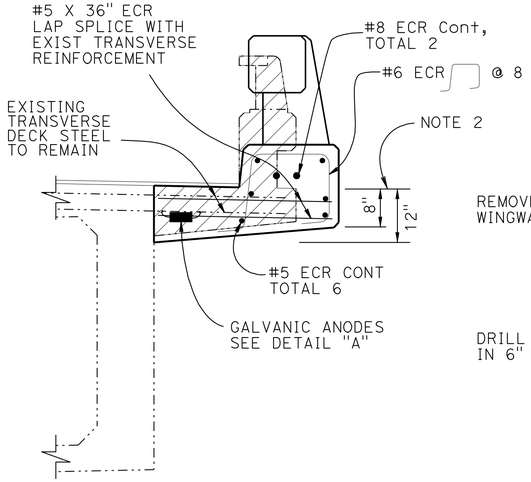

PART TYPICAL SECTION

B11-60

3/4" = 1'-0"

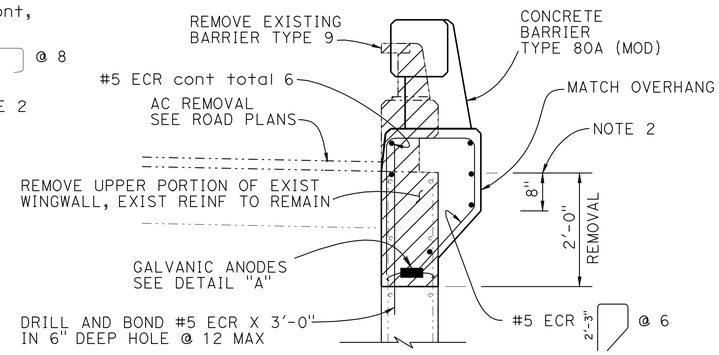

WINGWALL SECTION

B11-60

3/4" = 1'-0"

NOTES:
1. Architectural details and metal railing omitted for clarity, typ
2. No construction joint between barrier curb and overhang/wingwall
3. Barrier reinforcement to be in place prior to overhang/wingwall concrete placement

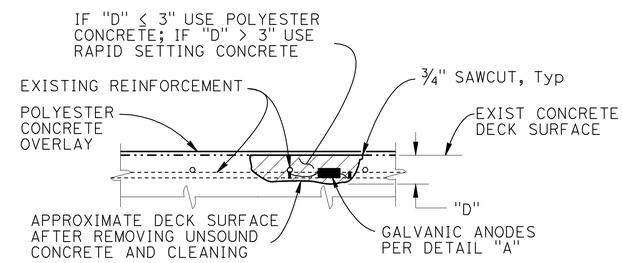

DECK REPAIR DETAIL

NO SCALE

Deck Repair Notes:

1. Approximately 20 percent of existing deck area will require repair
2. Repairs are approximately 3" deep
3. Repair locations determined by the Engineer
4. Install galvanic anodes when existing reinf is encountered. Quantity and locations shall be determined by the Engineer
5. Existing overlay omitted for clarity

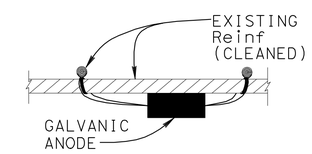

DETAIL "A"

NO SCALE

Detail A Notes:

1. Attach galvanic anodes to clean reinforcing steel per Detail "A" or as approved by Engineer.
2. Anode spacing not to exceed 24".
3. Ensure electrical continuity of all exposed reinf by securely fastening with tie wire.

	BY	CHECKED
DESIGN	Ramon Reyes	Rod Simmons
DETAILS	Craig Schellenger	Ramon Reyes
QUANTITIES	Ramon Reyes	Craig Schellenger

STATE OF CALIFORNIA
DEPARTMENT OF TRANSPORTATION

DIVISION OF ENGINEERING SERVICES
STRUCTURE DESIGN
DESIGN BRANCH 17

BRIDGE NO. 47-0050RL
POST MILE R25.7

ROUTE 395/203 SEPARATION (WIDEN)

BRIDGE DETAILS

STRUCTURES DESIGN DETAIL SHEET (ENGLISH) (REV. 10/25/05)

ORIGINAL SCALE IN INCHES FOR REDUCED PLANS 0 1 2 3

CU 09
EA 337701

DISREGARD PRINTS BEARING EARLIER REVISION DATES

REVISION DATES: 8-05-09, 8-18-09, 10-15-09, 11-30-09, 12-03-09, 12-15-09, 12-31-09, 02-17-10

SHEET 5 OF 6

FILE => 47-0050rl-k-ts.dgn

USERNAME => ttcarol DATE PLOTTED => 25-MAY-2010 TIME PLOTTED => 13:54

DIST.	COUNTY	ROUTE	POST MILES TOTAL PROJECT	SHEET NO.	TOTAL SHEETS
09	Mno	395	R24.5/R26.3	52	52

REGISTERED ENGINEER - CIVIL 03-09-10

5-24-10
PLANS APPROVAL DATE

REGISTERED PROFESSIONAL ENGINEER Ramon Reyes No. C63767 Exp. 09-30-2010 CIVIL STATE OF CALIFORNIA

The State of California or its officers or agents shall not be responsible for the accuracy or completeness of electronic copies of this plan sheet.

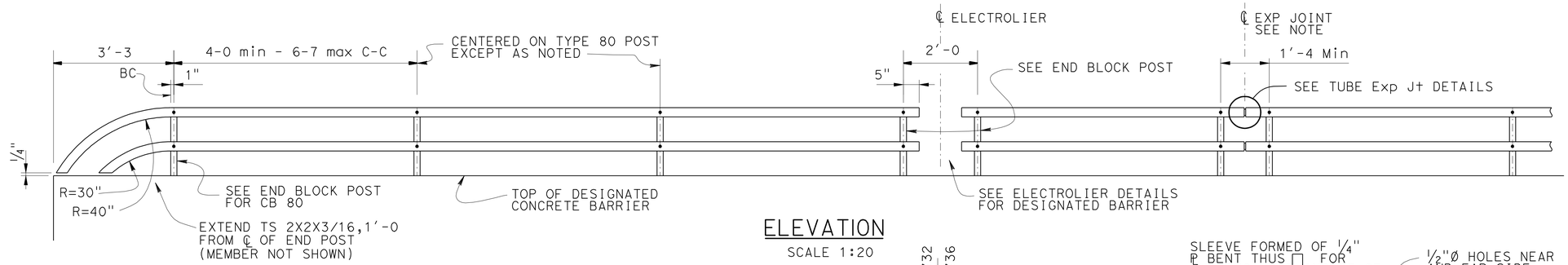

ELEVATION
SCALE 1:20

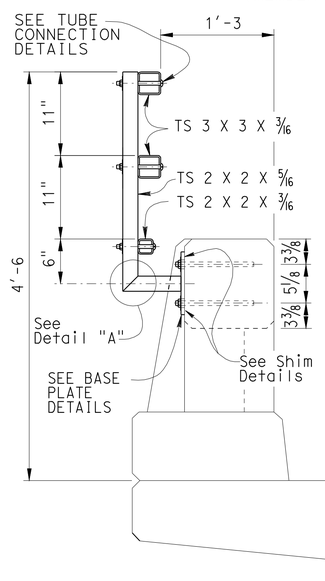

TYPE 80
END BLOCK POST
SCALE 1:10

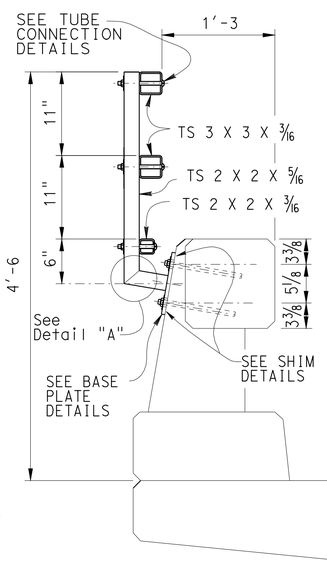

TYPE 80
SCALE 1:10

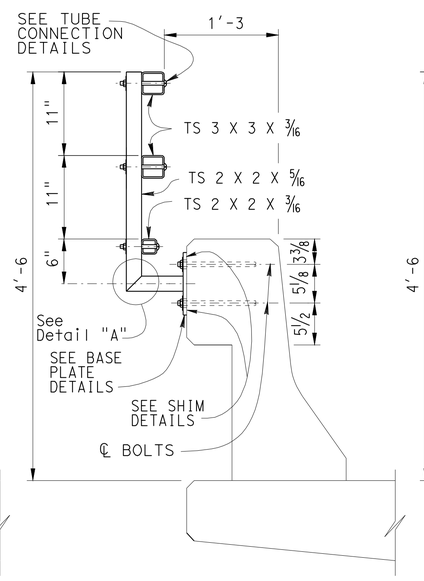

TYPE 25
SCALE 1:10

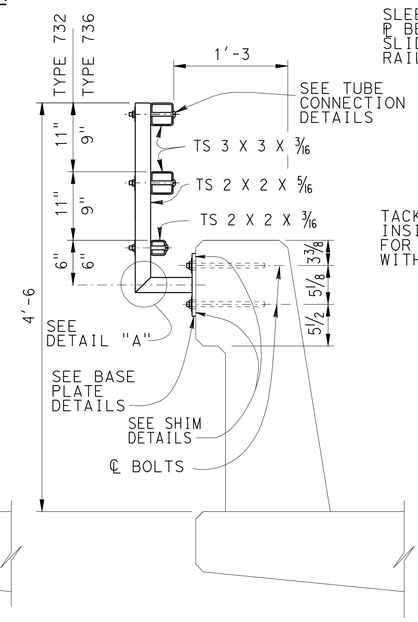

TYPE 732 OR 736
NO SCALE

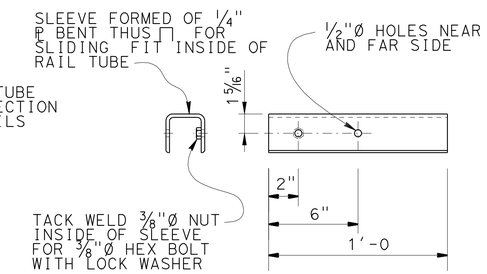

SLEEVE DETAIL
SCALE 1:5

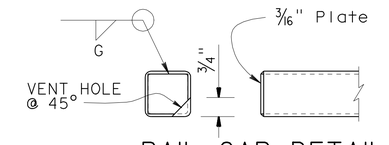

RAIL CAP DETAIL
SCALE 1:5

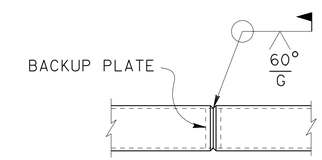

WELDED SPLICE DETAIL
SCALE 1:5

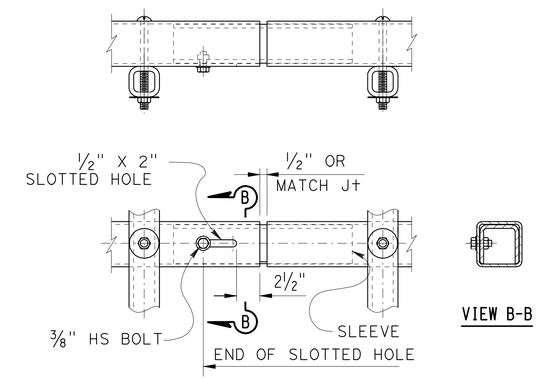

TUBE EXPANSION JOINT DETAILS
SCALE 1:5

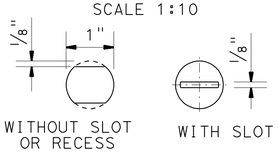

VIEW C-C
SCALE 1:1

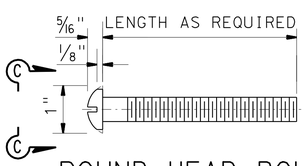

ROUND HEAD BOLT DETAIL
SCALE 1:1

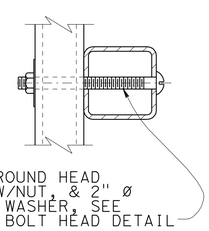

TUBE CONNECTION DETAIL
SCALE 1:2.5

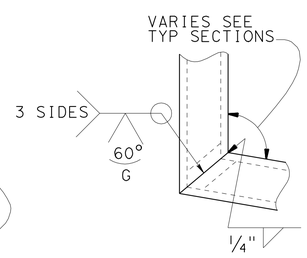

DETAIL A
SCALE 1:2.5

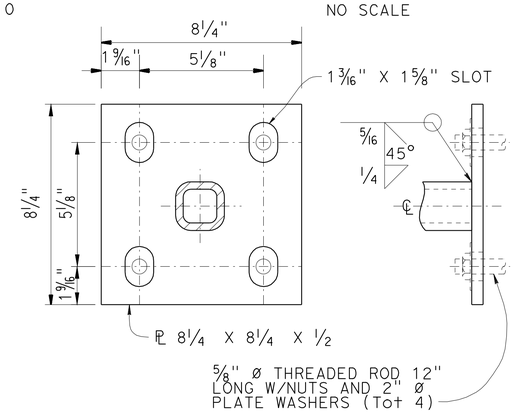

BASE PLATE DETAIL
SCALE 1:2.5

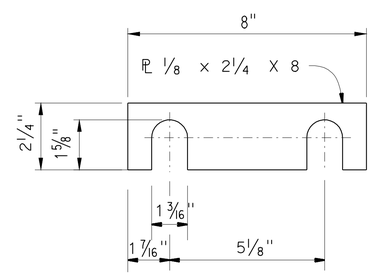

SHIM DETAILS
NO SCALE

NOTES:

1. Galvanize rail assembly after fabrication.
2. Post shall be normal to railing.
3. Rail tubes shall be shop bent or fabricated to fit horizontal curve when radius is less than 12 inches.
4. Tube splices shall be located in the tubes spanning deck or wall joints. Increase joint width in tubes to match expansion joint width and increase sleeve length correspondingly.
5. Top rail tube shall be continuous over not less than two posts except a short post spacing is permitted near deck or wall joints, electroliers, or other rail discontinuities as noted.
6. For details and reinforcement not shown see Standard Plan.
7. See project plans for limits of tubular hand railing.

STANDARD DRAWING

FILE NO. xs16-500e

APPROVED BY T SATTER — RESPONSIBLE TECHNICAL SPECIALIST
APPROVAL DATE 4-15-08

RELEASED BY ROBERTO LACALLE — RESPONSIBLE OFFICE CHIEF
RELEASE DATE 4-15-08

STATE OF CALIFORNIA
DEPARTMENT OF TRANSPORTATION

DIVISION OF ENGINEERING SERVICES

BRIDGE NO. 47-0050RL
POST MILE R25.7

ROUTE 395/203 SEPARATION (WIDEN)
TUBULAR BICYCLE RAILING

DS OSD 2147A (ENGLISH STANDARD DRAWING "XS" BORDER REV. 01/11/08)

ORIGINAL SCALE IN INCHES FOR REDUCED PLANS 0 1 2 3

CU 09
EA 337701

DISREGARD PRINTS BEARING EARLIER REVISION DATES 12-31-09 02-18-10

REVISION DATES (PRELIMINARY STAGE ONLY)

SHEET 6 OF 6

USERNAME => trcarol

DATE PLOTTED => 25-MAY-2010 TIME PLOTTED => 13:54

47-0050rl-t-brdt.dgn