DIST	COUNTY	ROUTE	POST MILES TOTAL PROJECT	SHEET NO.	TOTAL SHEETS
09	Mno	395	118.7/119.6	101	139

LICENSED LANDSCAPE ARCHITECT

April 3, 2009
PLANS APPROVAL DATE

The State of California or its officers or agents shall not be responsible for the accuracy or completeness of electronic copies of this plan sheet.

LICENSED LANDSCAPE ARCHITECT — Robert B. Schott — Signature — 11-30-10 Renewal Date — 2-25-09 Date — STATE OF CALIFORNIA

To accompany plans dated 8-8-11

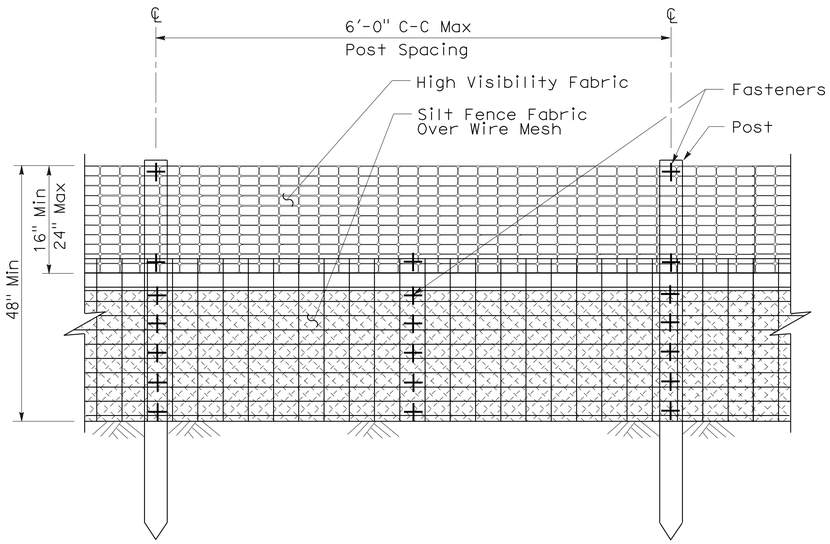

ELEVATION

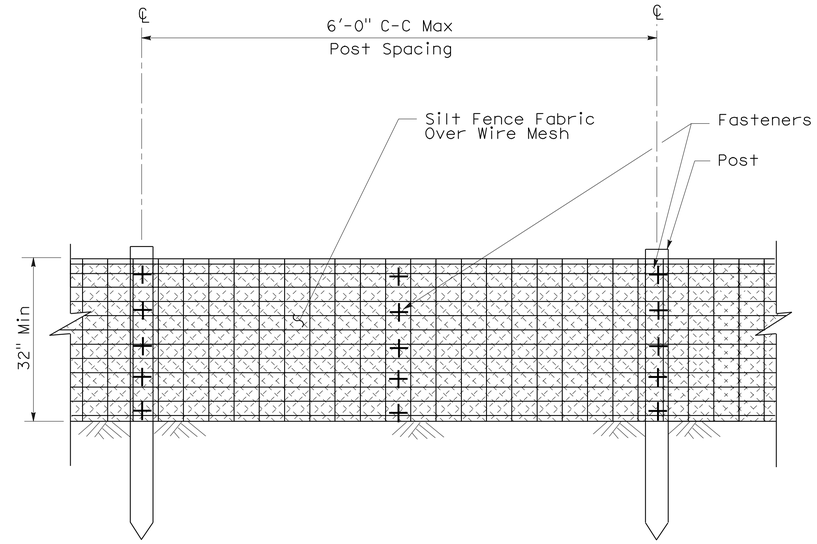

ELEVATION

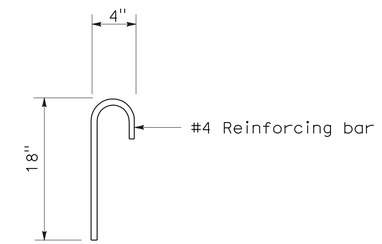

ANCHOR

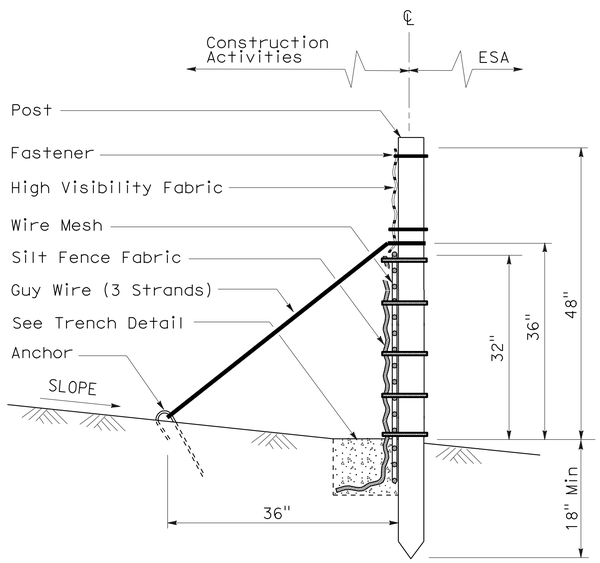

SECTION

TEMPORARY REINFORCED SILT FENCE (TYPE 1)

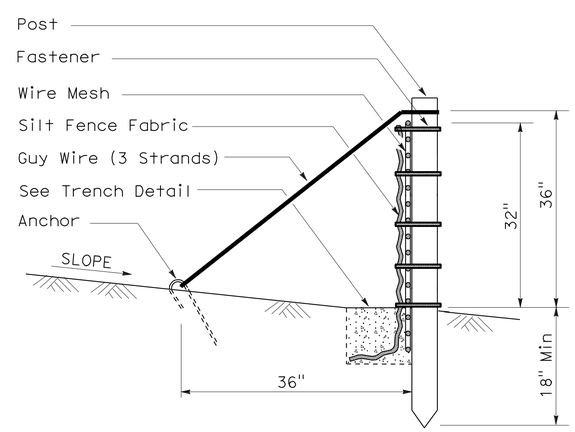

SECTION

TEMPORARY REINFORCED SILT FENCE (TYPE 2)

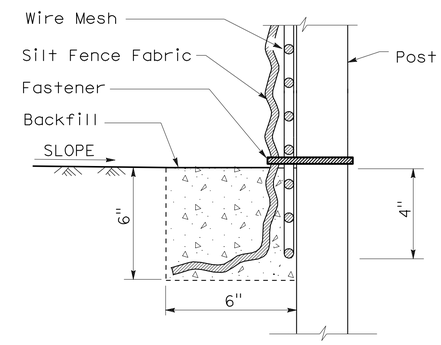

SECTION

TRENCH DETAIL

STATE OF CALIFORNIA
DEPARTMENT OF TRANSPORTATION

TEMPORARY WATER POLLUTION CONTROL DETAILS (TEMPORARY REINFORCED SILT FENCE)

NO SCALE

NSP T60 DATED APRIL 3, 2009 SUPPLEMENTS
THE STANDARD PLANS BOOK DATED MAY 2006.

NEW STANDARD PLAN NSP T60

2006 NEW STANDARD PLAN NSP T60

1-7-09

DIST	COUNTY	ROUTE	POST MILES TOTAL PROJECT	SHEET NO.	TOTAL SHEETS
09	Mno	395	118.7/119.6	102	139

Robert B Schott
LICENSED LANDSCAPE ARCHITECT

August 15, 2008
PLANS APPROVAL DATE

LICENSED LANDSCAPE ARCHITECT
Robert B. Schott 3695
Signature
11-04-08
Renewal Date
08-11-08
Date
STATE OF CALIFORNIA

The State of California or its officers or agents shall not be responsible for the accuracy or completeness of electronic copies of this plan sheet.

To accompany plans dated 8-8-11

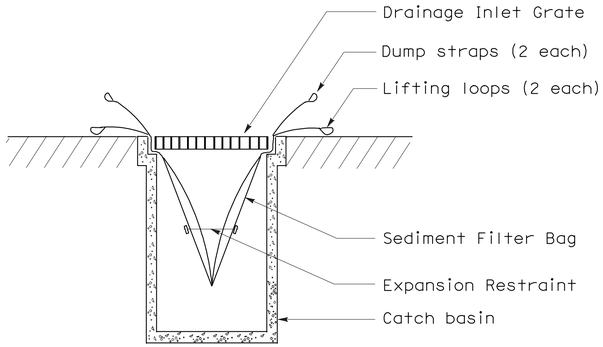

SECTION B-B

SEDIMENT FILTER BAG DETAIL

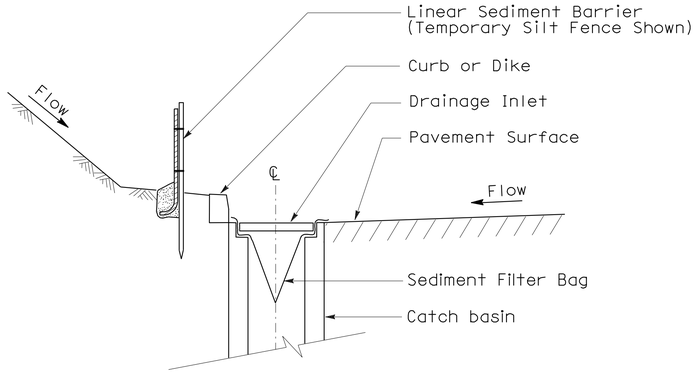

SECTION A-A

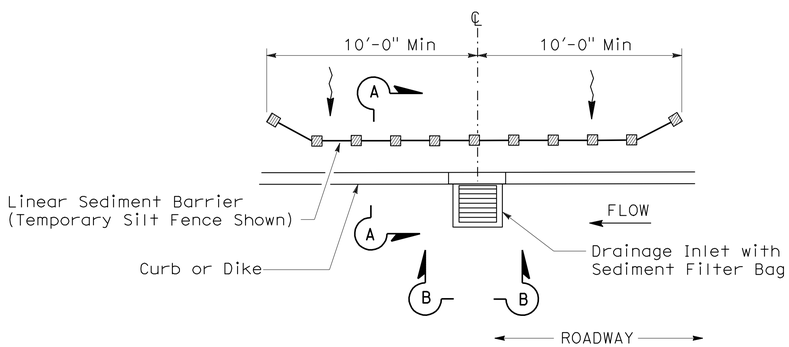

PLAN

TEMPORARY DRAINAGE INLET PROTECTION (TYPE 5) (SEDIMENT FILTER BAG)

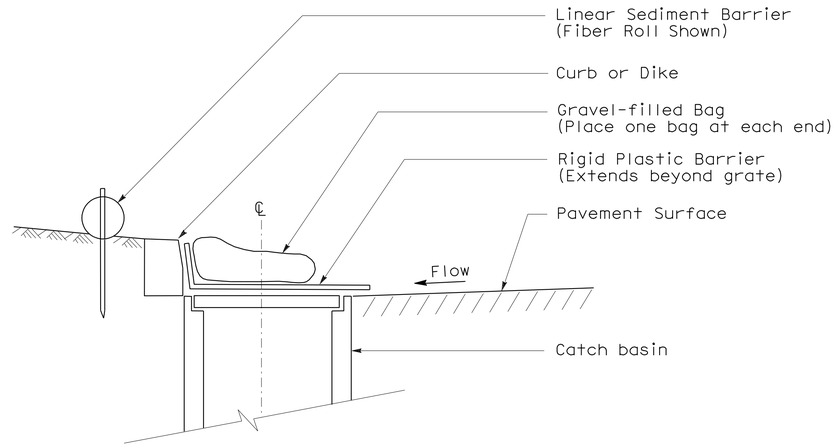

SECTION

TEMPORARY DRAINAGE INLET PROTECTION (TYPE 6A) (CATCH BASIN WITH GRATE)

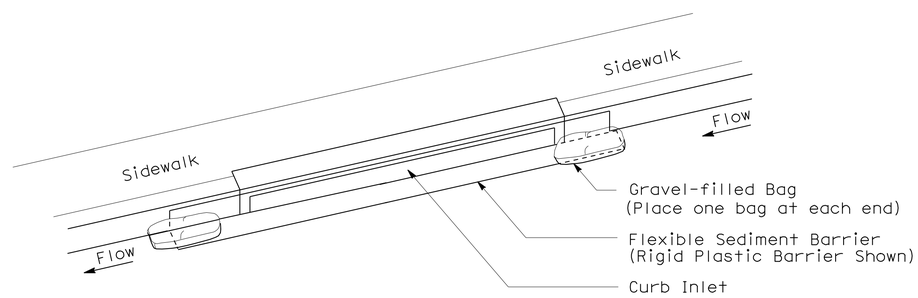

PERSPECTIVE

TEMPORARY DRAINAGE INLET PROTECTION (TYPE 6B) (CURB INLET WITHOUT GRATE)

NOTES:

1. See Standard Plan T51 for Temporary Silt Fence.
2. Dimensions may vary to fit field conditions.

STATE OF CALIFORNIA
DEPARTMENT OF TRANSPORTATION

TEMPORARY WATER POLLUTION CONTROL DETAILS (TEMPORARY DRAINAGE INLET PROTECTION)

NO SCALE

NSP T64 DATED AUGUST 15, 2008 SUPPLEMENTS
THE STANDARD PLANS BOOK DATED MAY 2006.

NEW STANDARD PLAN NSP T64

2006 NEW STANDARD PLAN NSP T64

7-11-08

DIST	COUNTY	ROUTE	POST MILES TOTAL PROJECT	SHEET No.	TOTAL SHEETS
09	Mno	395	118.7/119.6	103	139

Pete W. Norboe 6-23-11
REGISTERED CIVIL ENGINEER DATE

8-8-11
PLANS APPROVAL DATE

REGISTERED PROFESSIONAL ENGINEER
Pete Norboe
No. C57519
Exp. 12-31-2011
CIVIL
STATE OF CALIFORNIA

The State of California or its officers or agents shall not be responsible for the accuracy or completeness of electronic copies of this plan sheet.

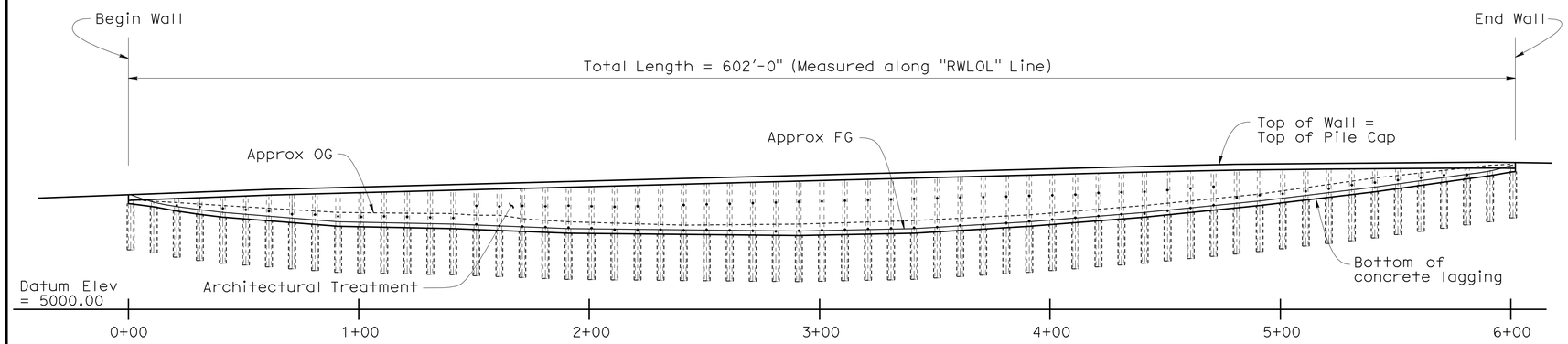

DEVELOPED ELEVATION

1" = 30'

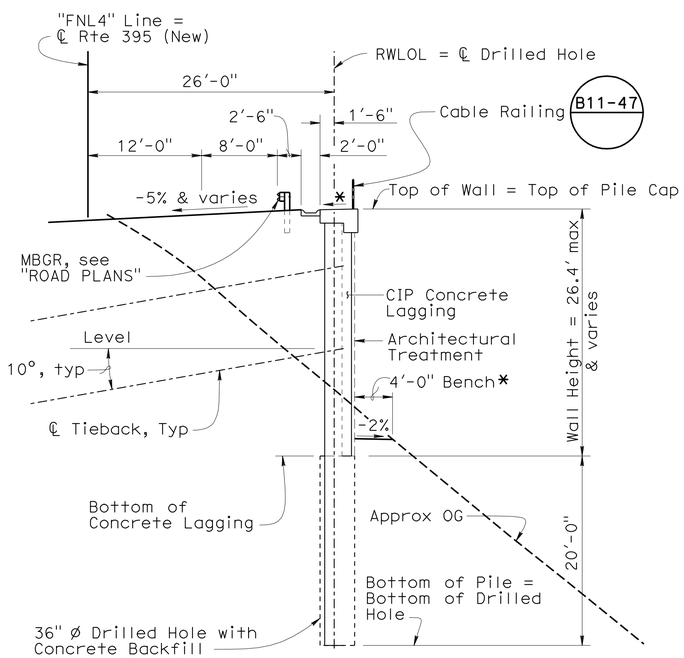

Note:

* Slope to drain

TYPICAL SECTION

1/8" = 1'-0"

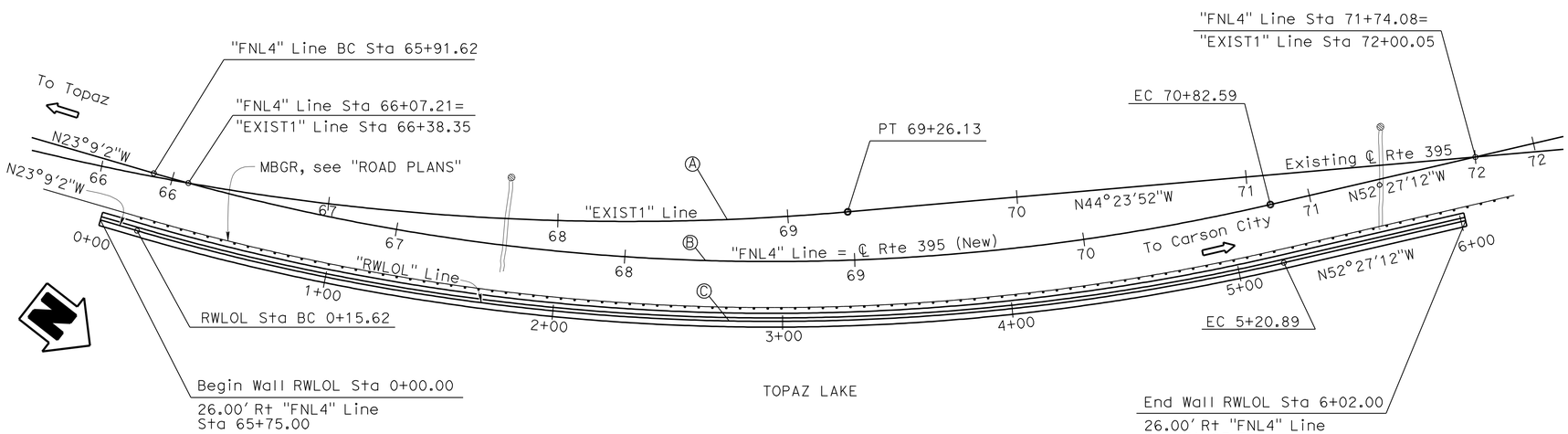

PLAN

1" = 30'

CURVE DATA

No.	R	Δ	T	L
Ⓐ	1100.00	21°58'57"	213.64	422.03
Ⓑ	960.00	29°18'09"	250.98	490.97
Ⓒ	986.00	29°18'10"	257.78	504.27

QUANTITIES

STRUCTURE EXCAVATION (SOLDIER PILE WALL)	339	CY
STRUCTURE BACKFILL (SOLDIER PILE WALL)	434	CY
CONCRETE BACKFILL (SOLDIER PILE WALL)	139	CY
36" DRILLED HOLE	1,529	LF
PRECAST CONCRETE SOLDIER PILE (24" X 24")	2,290	LF
TIEBACK ANCHOR	90	EA
CONCRETE LAGGING	10,600	SQFT
STRUCTURAL CONCRETE, BARRIER SLAB	134	CY
ARCHITECTURAL TEXTURE (RETANGULAR CUT STONE)	10,600	SQFT
PREPARE AND STAIN CONCRETE	10,600	SQFT
MINOR CONCRETE (GUTTER)	20	CY
CABLE RAILING	602	LF

G. Danke
DESIGN ENGINEER

	BY	CHECKED
DESIGN	Pete Norboe	Glenn Matthews
DETAILS	David Elliott	Glenn Matthews
QUANTITIES	Pete Norboe	Glenn Matthews

LOAD & RESISTANCE FACTOR DESIGN — LIVE LOADING: HL93 W/"LOW-BOY"; PERMIT DESIGN VEHICLE

	BY	CHECKED
LAYOUT	P. Norboe	G. Matthews
SPECIFICATIONS	T. Geerts	PLANS AND SPECS COMPARED P. Norboe

ORIGINAL SCALE IN INCHES FOR REDUCED PLANS 0 1 2 3

STATE OF CALIFORNIA
DEPARTMENT OF TRANSPORTATION

DIVISION OF ENGINEERING SERVICES
STRUCTURE DESIGN
DESIGN BRANCH 9

BRIDGE NO. 47E0002
POST MILE 118.7/119.0

RETAINING WALL A
GENERAL PLAN

UNIT: 3594
PROJECT NUMBER & PHASE: 09000000381
CONTRACT NO.: 09-237701

DISREGARD PRINTS BEARING EARLIER REVISION DATES

REVISION DATES: 6-23-11 | 5-18-11 | 6-3-11

SHEET 1 OF 19

FILE => 47e0002-a-gp.dgn

USERNAME => trmartok DATE PLOTTED => 15-AUG-2011 TIME PLOTTED => 09:01

STRUCTURES DESIGN GENERAL PLAN SHEET (ENGLISH) (REV.09-01-10)

DIST	COUNTY	ROUTE	POST MILES TOTAL PROJECT	SHEET No.	TOTAL SHEETS
09	Mno	395	118.7/119.6	104	139

Pete W. Norboe 6-23-11
REGISTERED CIVIL ENGINEER DATE

8-8-11
PLANS APPROVAL DATE

REGISTERED PROFESSIONAL ENGINEER
Pete Norboe
No. C57519
Exp. 12-31-11
CIVIL
STATE OF CALIFORNIA

The State of California or its officers or agents shall not be responsible for the accuracy or completeness of electronic copies of this plan sheet.

GENERAL NOTES
LOAD AND RESISTANCE FACTOR DESIGN

DESIGN:
AASHTO LRFD Bridge Design Specifications, 4th edition with Interims and California Amendments.

SEISMIC DESIGN:
Caltrans Seismic Design Criteria (SDC), Version 1.4 dated June 2006

LIVE LOADING:
HL93 and permit design load.

CONCRETE:
fy = 60 ksi
f'c = 3.6 ksi (CIP Concrete Lagging & Pile Cap)
f'c = 5.0 ksi (Precast pile)
n = 8

STRUCTURAL STEEL:
fy = ASTM A709 Grade 50

SOIL PARAMETERS:
(For determination of design lateral earth pressures)
$\phi = 32°$ γ=130 pcf

TIMBER: (If used as a temporary lagging)
Treated Douglas Fir, Grade No. 1 or better
Lagging shall be full sawn

TIEBACKS:
Strand tendon - ASTM Designation: A416
T = Design force per tieback, see "WALL DETAILS NO. 5" and "WALL DETAILS NO. 6" sheets, kips.

fpu = Minimum tensile strength of prestressing steel, ksi.

As(min) = Minimum cross sectional area of prestressing steel in tieback tendon, $inch^2$

$$As(min) = \frac{1.5\ T}{0.75\ fpu}$$

STANDARD PLANS DATED MAY 2006

A10A ACRONYMS AND ABBREVIATIONS (A-L) (SHEET 1 OF 2)
A10B ACRONYMS AND ABBREVIATIONS (M-Z) (SHEET 2 OF 2)
A10C SYMBOLS (SHEET 1 OF 2)
A10D SYMBOLS (SHEET 2 OF 2)
A62C LIMITS OF PAYMENT FOR EXCAVATION AND BACKFILL BRIDGE
B0-3 BRIDGE DETAILS
B3-9 RETAINING WALL DETAILS NO. 2
B11-47 CABLE RAILING

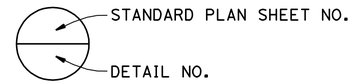

INDEX TO PLANS

1. General Plan
2. Index To Plans
3. Structure Plans No. 1
4. Structure Plans No. 2
5. Foundation Plan No. 1
6. Foundation Plan No. 2
7. Typical Section
8. Wall Details No. 1
9. Wall Details No. 2
10. Wall Details No. 3
11. Wall Details No. 4
12. Wall Details No. 5
13. Wall Details No. 6
14. Architectural Treatment
15. Log of Test Borings 1 of 5
16. Log of Test Borings 2 of 5
17. Log of Test Borings 3 of 5
18. Log of Test Borings 4 of 5
19. Log of Test Borings 5 of 5

	BY	CHECKED
DESIGN	P. Norboe	G. Matthews
DETAILS	D. Elliott	G. Matthews
QUANTITIES	P. Norboe	G. Matthews

STATE OF CALIFORNIA
DEPARTMENT OF TRANSPORTATION

DIVISION OF ENGINEERING SERVICES
STRUCTURE DESIGN
DESIGN BRANCH 9

BRIDGE NO. 47E0002
POST MILE 118.7/119.0

RETAINING WALL A
INDEX TO PLANS

STRUCTURES DESIGN DETAIL SHEET (ENGLISH) (REV. 09-01-10)

ORIGINAL SCALE IN INCHES FOR REDUCED PLANS 0 1 2 3

UNIT: 3594
PROJECT NUMBER & PHASE: 09000000381
CONTRACT NO.: 09-237701

DISREGARD PRINTS BEARING EARLIER REVISION DATES

REVISION DATES: 6-14-11 | 3-23-11 | 4-25-11

SHEET 2 OF 19

FILE => 47e0002-a-itp.dgn

USERNAME => trmorTOK DATE PLOTTED => 15-AUG-2011 TIME PLOTTED => 09:02

DIST	COUNTY	ROUTE	POST MILES TOTAL PROJECT	SHEET No.	TOTAL SHEETS
09	Mno	395	118.7/119.6	105	139

Pete W. Norboe 6-23-11
REGISTERED CIVIL ENGINEER DATE

8-8-11
PLANS APPROVAL DATE

REGISTERED PROFESSIONAL ENGINEER
Pete Norboe
No. C57519
Exp. 12-31-11
CIVIL
STATE OF CALIFORNIA

The State of California or its officers or agents shall not be responsible for the accuracy or completeness of electronic copies of this plan sheet.

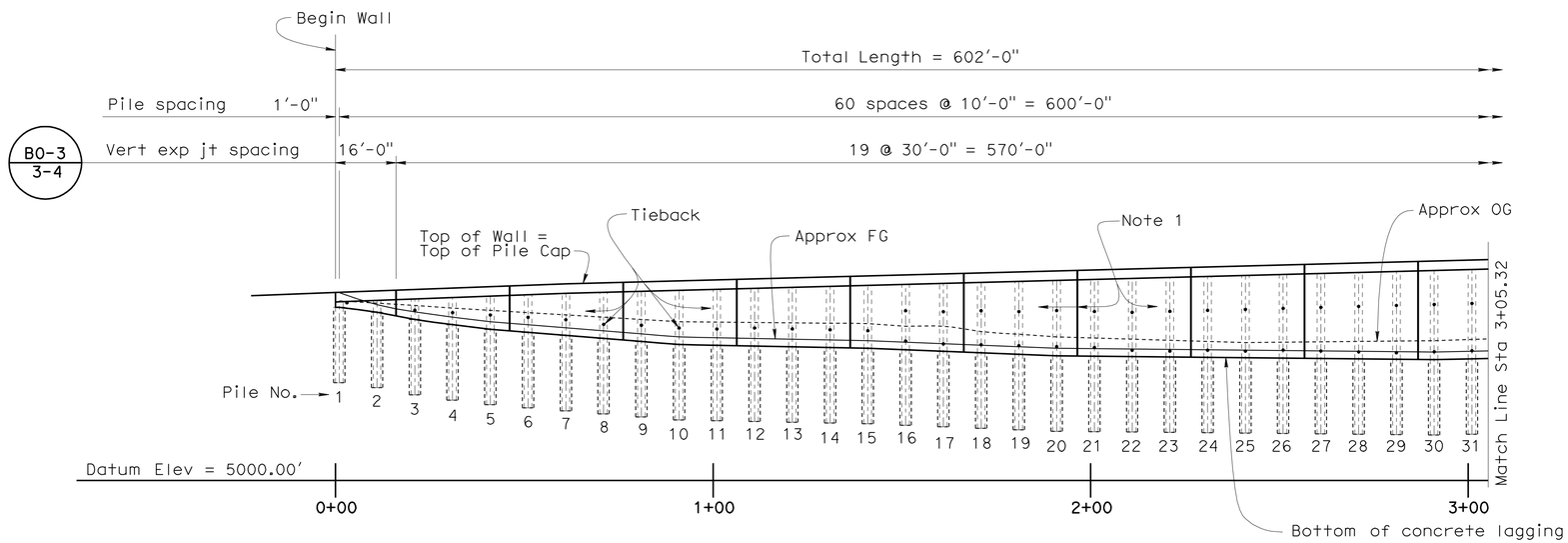

DEVELOPED ELEVATION

1" = 20'

NOTE: Cable Railing not shown

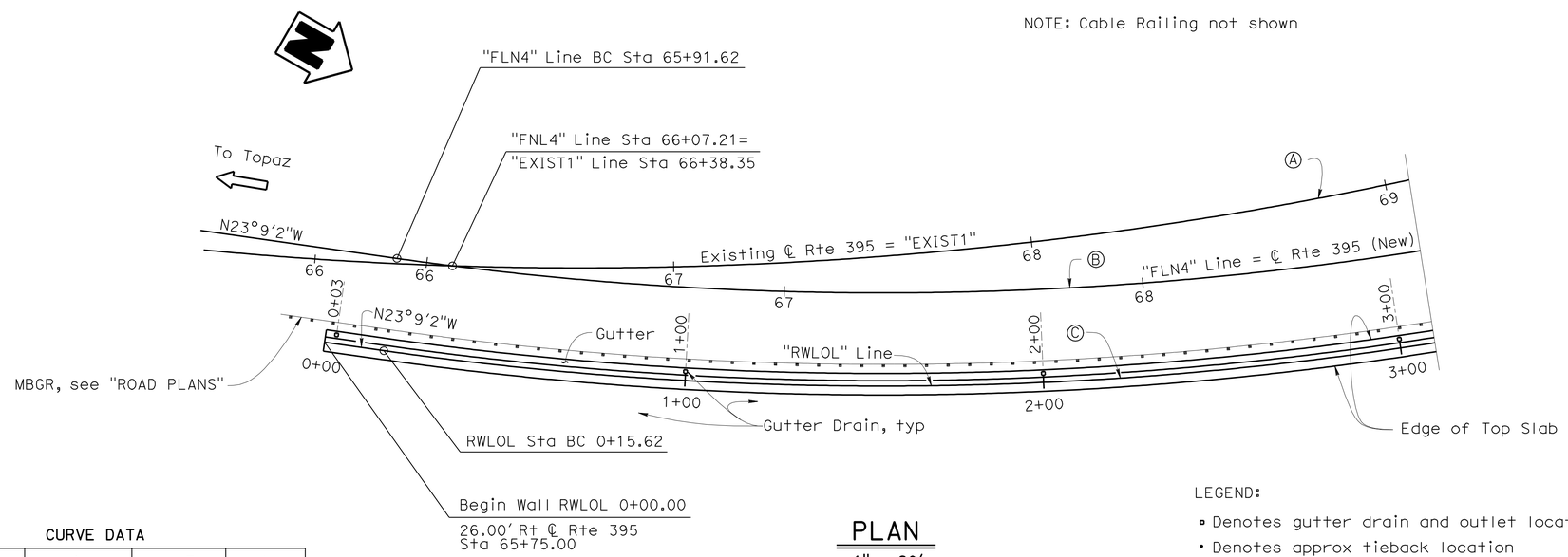

PLAN

1" = 20'

CURVE DATA

No.	R	Δ	T	L
Ⓐ	1100.00	21°58'57"	213.64	422.03
Ⓑ	960.00	29°18'09"	250.98	490.97
Ⓒ	986.00	29°18'10"	257.78	504.27

LEGEND:

- ▫ Denotes gutter drain and outlet location
- • Denotes approx tieback location

NOTE:

1. Vertical Expansion Joints continue from Top of Pile Cap to Bottom of Concrete Lagging.
2. For Vertical Expansion Joint Detail, see B0-3 / 3-4

	BY	CHECKED
DESIGN	P. Norboe	G. Matthews
DETAILS	D. Elliott	G. Matthews
QUANTITIES	P. Norboe	G. Matthews

STATE OF CALIFORNIA
DEPARTMENT OF TRANSPORTATION

DIVISION OF ENGINEERING SERVICES
STRUCTURE DESIGN
DESIGN BRANCH 9

BRIDGE NO. 47E0002
POST MILE 118.7/119.0

RETAINING WALL A
STRUCTURE PLAN NO. 1

STRUCTURES DESIGN DETAIL SHEET (ENGLISH) (REV. 09-01-10)

ORIGINAL SCALE IN INCHES FOR REDUCED PLANS 0 1 2 3

UNIT: 3594
PROJECT NUMBER & PHASE: 09000000381
CONTRACT NO.: 09-237701

DISREGARD PRINTS BEARING EARLIER REVISION DATES

REVISION DATES: 5-12-11 6-14-11 6-28-11

SHEET 3 OF 19

FILE => 47e0002-c-sp01.dgn

USERNAME => trmartok DATE PLOTTED => 15-AUG-2011 TIME PLOTTED => 09:02

DIST	COUNTY	ROUTE	POST MILES TOTAL PROJECT	SHEET No.	TOTAL SHEETS
09	Mno	395	118.7/119.6	106	139

Pete W. Norboe 6-23-11
REGISTERED CIVIL ENGINEER DATE

8-8-11
PLANS APPROVAL DATE

REGISTERED PROFESSIONAL ENGINEER
Pete Norboe
No. C57519
Exp. 12-31-11
CIVIL
STATE OF CALIFORNIA

The State of California or its officers or agents shall not be responsible for the accuracy or completeness of electronic copies of this plan sheet.

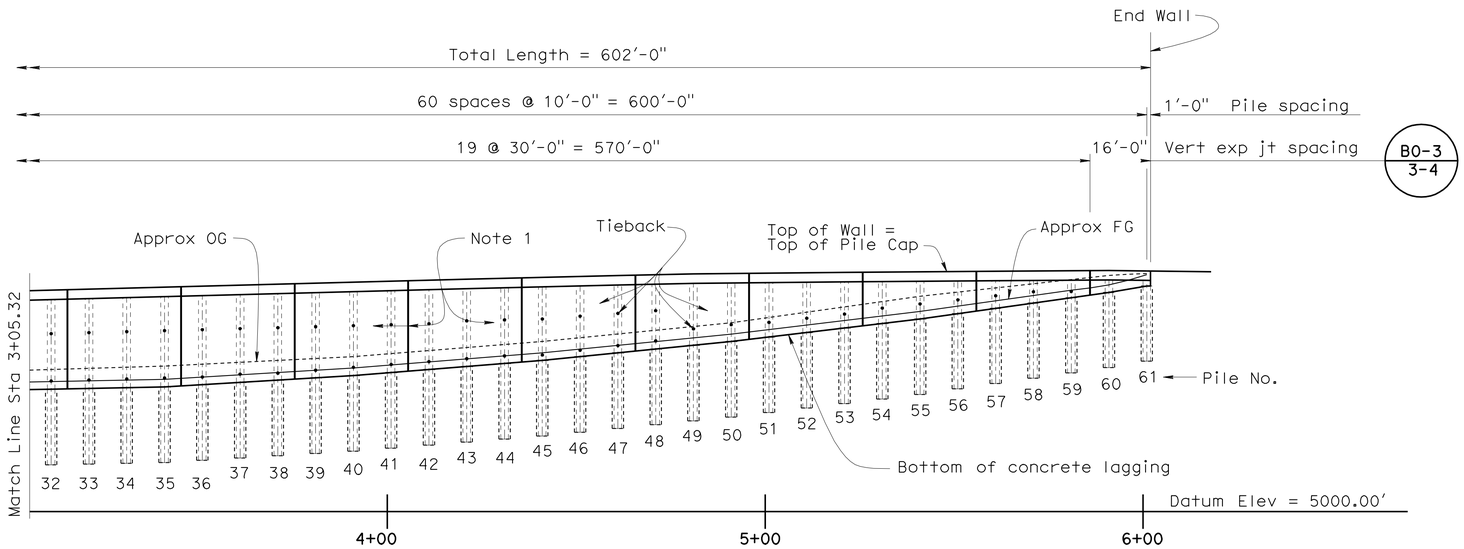

DEVELOPED ELEVATION

1" = 20'

NOTE: Cable Railing not shown

LEGEND:

- ▫ Denotes gutter drain and outlet location
- • Denotes approx tieback location

NOTE:

1. Vertical Expansion Joints continue from Top of Pile Cap to Bottom of Concrete Lagging.
2. For Vertical Expanision Joint Detail, see B0-3 / 3-4

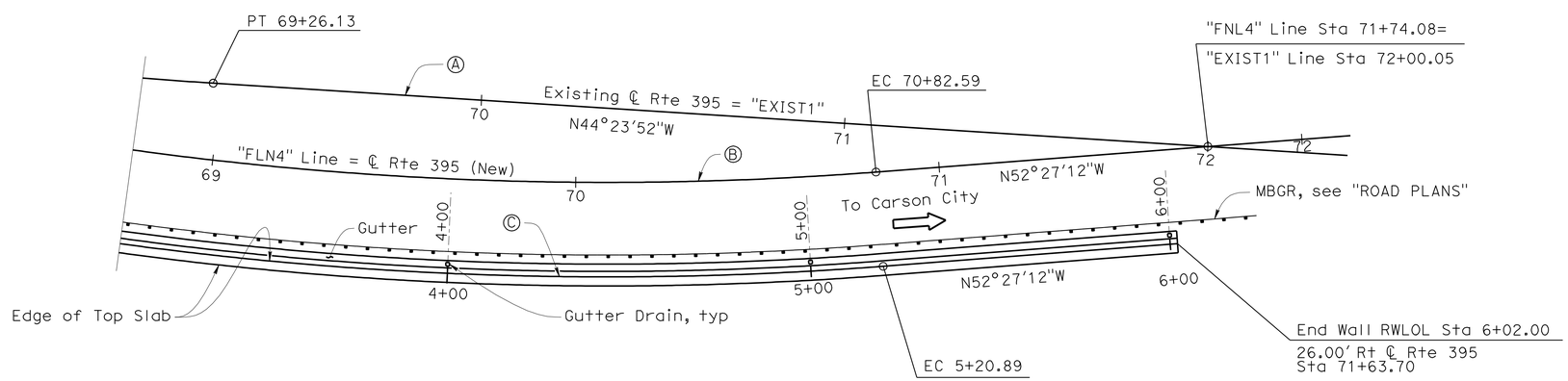

PLAN

1" = 20'

CURVE DATA

No.	R	Δ	T	L
Ⓐ	1100.00	21°58'57"	213.64	422.03
Ⓑ	960.00	29°18'09"	250.98	490.97
Ⓒ	986.00	29°18'10"	257.78	504.27

	BY	CHECKED
DESIGN	P. Norboe	G. Matthews
DETAILS	D. Elliott	G. Matthews
QUANTITIES	P. Norboe	G. Matthews

STATE OF CALIFORNIA
DEPARTMENT OF TRANSPORTATION

DIVISION OF ENGINEERING SERVICES
STRUCTURE DESIGN
DESIGN BRANCH 9

BRIDGE NO. 47E0002
POST MILE 118.7/119.0

RETAINING WALL A
STRUCTURE PLAN NO. 2

STRUCTURES DESIGN DETAIL SHEET (ENGLISH) (REV. 09-01-10)

ORIGINAL SCALE IN INCHES FOR REDUCED PLANS 0 1 2 3

UNIT: 3594
PROJECT NUMBER & PHASE: 09000000381
CONTRACT NO.: 09-237701

DISREGARD PRINTS BEARING EARLIER REVISION DATES

REVISION DATES: 5-11-11 6-14-11 6-23-11

SHEET 4 OF 19

FILE => 47e0002-c-sp02.dgn

USERNAME => trmartok DATE PLOTTED => 15-AUG-2011 TIME PLOTTED => 09:02

DIST	COUNTY	ROUTE	POST MILES TOTAL PROJECT	SHEET No.	TOTAL SHEETS
09	Mno	395	118.7/119.6	107	139

Peter W. Norboe 6-23-11
REGISTERED CIVIL ENGINEER DATE

8-8-11
PLANS APPROVAL DATE

REGISTERED PROFESSIONAL ENGINEER
Peter Norboe
No. C57519
Exp. 12-31-2011
CIVIL
STATE OF CALIFORNIA

The State of California or its officers or agents shall not be responsible for the accuracy or completeness of electronic copies of this plan sheet.

CURVE DATA

No.	R	Δ	T	L
Ⓐ	1100.00	21°58′57"	213.64	422.03
Ⓑ	960.00	29°18′09"	250.98	490.97
Ⓒ	986.00	29°18′10"	257.78	504.27

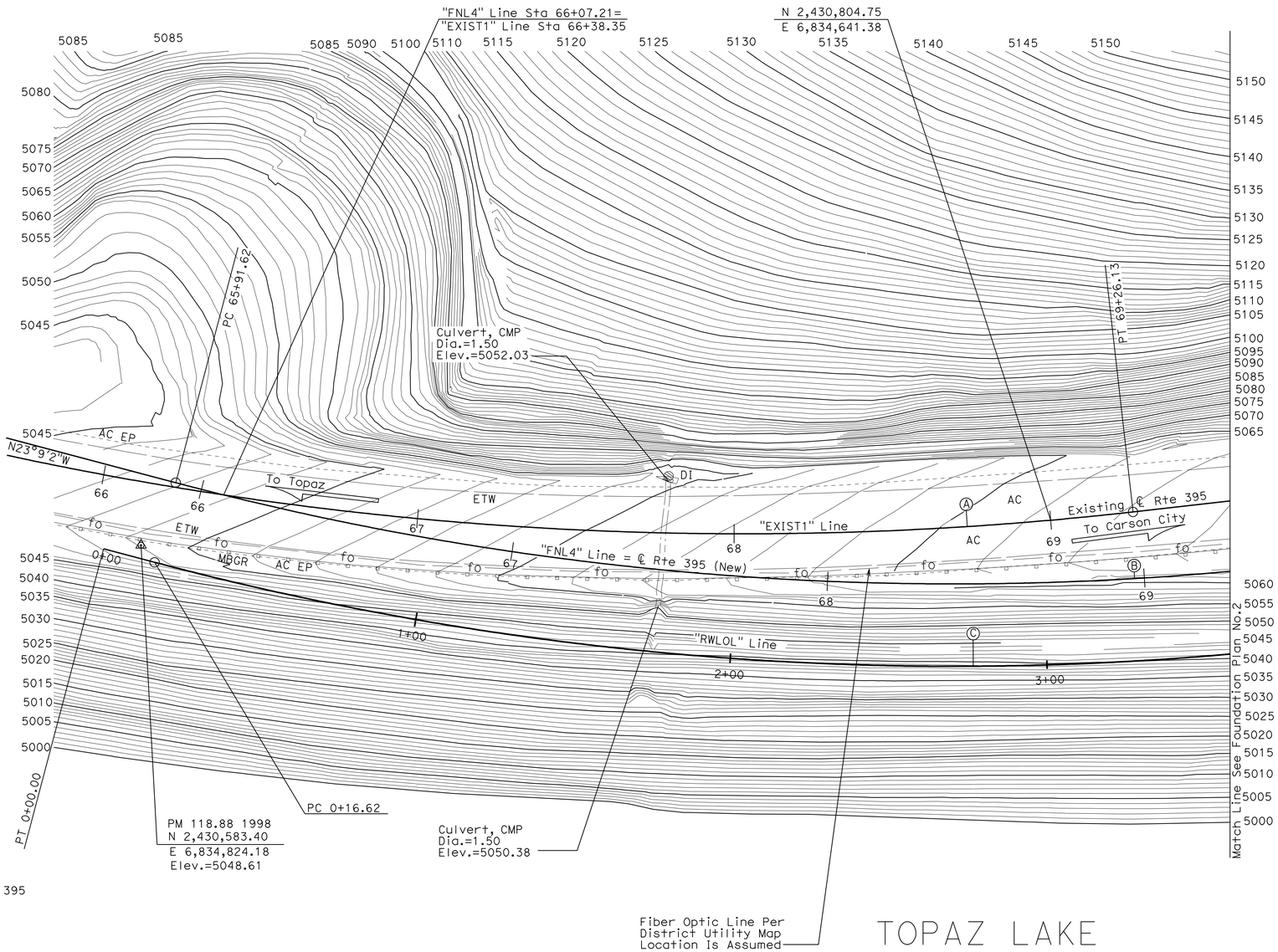

SURVEY CONTROL

PM 118.88 1998
Fnd CT Alum Cap ¾" Rebar
21.89FT Rt. "FNL4" Line ℄ Proposed Rte 395
Sta. 65+86.09
N 2,430,583.40
E 6,834,824.18
Elev. = 5048.61

BDRY MON 25 AZ (Not Shown On Plan)
Fnd CADT Brass Cap
76.63FT Rt. "FNL4" Line ℄ Proposed Rte 395
Sta. 74+37.55
N 2,431,240.67
E 6,834,269.48
Elev. = 5070.56

PRELIMINARY INVESTIGATION SECTION

SCALE	VERT.DATUM NGVD29	PHOTOGRAMMETRY AS OF: X			
1"=20′	HORZ.DATUM NAD83 (1991.35)	SURVEYED	BY District/Gillett	CHECKED	BY T.Gillett 09/2009
ALIGNMENT TIES Dist. Traverse Sheet		DRAFTED	BY T.Zolnikov 09/2009	CHECKED	BY T.Schmalz 09/2009

DESIGN	BY P. Norboe	CHECKED G. Matthews
DETAILS	BY D. Elliott	CHECKED G. Matthews
QUANTITIES	BY P. Norboe	CHECKED G. Matthews

STATE OF CALIFORNIA
DEPARTMENT OF TRANSPORTATION

DIVISION OF ENGINEERING SERVICES
STRUCTURE DESIGN
DESIGN BRANCH 9

BRIDGE NO. 47E0002
POST MILE 118.7/119.0

RETAINING WALL A
FOUNDATION PLAN NO. 1

STRUCTURES FOUNDATION PLAN SHEET (ENGLISH) (REV. 09-01-10)

ORIGINAL SCALE IN INCHES FOR REDUCED PLANS 0 1 2 3

UNIT: 3646
PROJECT NUMBER & PHASE: 0900000038 1 CONTRACT NO.: X

DISREGARD PRINTS BEARING EARLIER REVISION DATES

REVISION DATES 10-26-09 12-27-10 1-18-11 1-28-11

SHEET 5 OF 19

FILE => 47e0002-e-fpl01.dgn

DIST	COUNTY	ROUTE	POST MILES TOTAL PROJECT	SHEET No.	TOTAL SHEETS
09	Mno	395	118.7/119.6	108	139

Peter W. Norboe 6-23-11
REGISTERED CIVIL ENGINEER DATE

8-8-11
PLANS APPROVAL DATE

REGISTERED PROFESSIONAL ENGINEER
Peter Norboe
No. C57519
Exp. 12-31-2011
CIVIL
STATE OF CALIFORNIA

The State of California or its officers or agents shall not be responsible for the accuracy or completeness of electronic copies of this plan sheet.

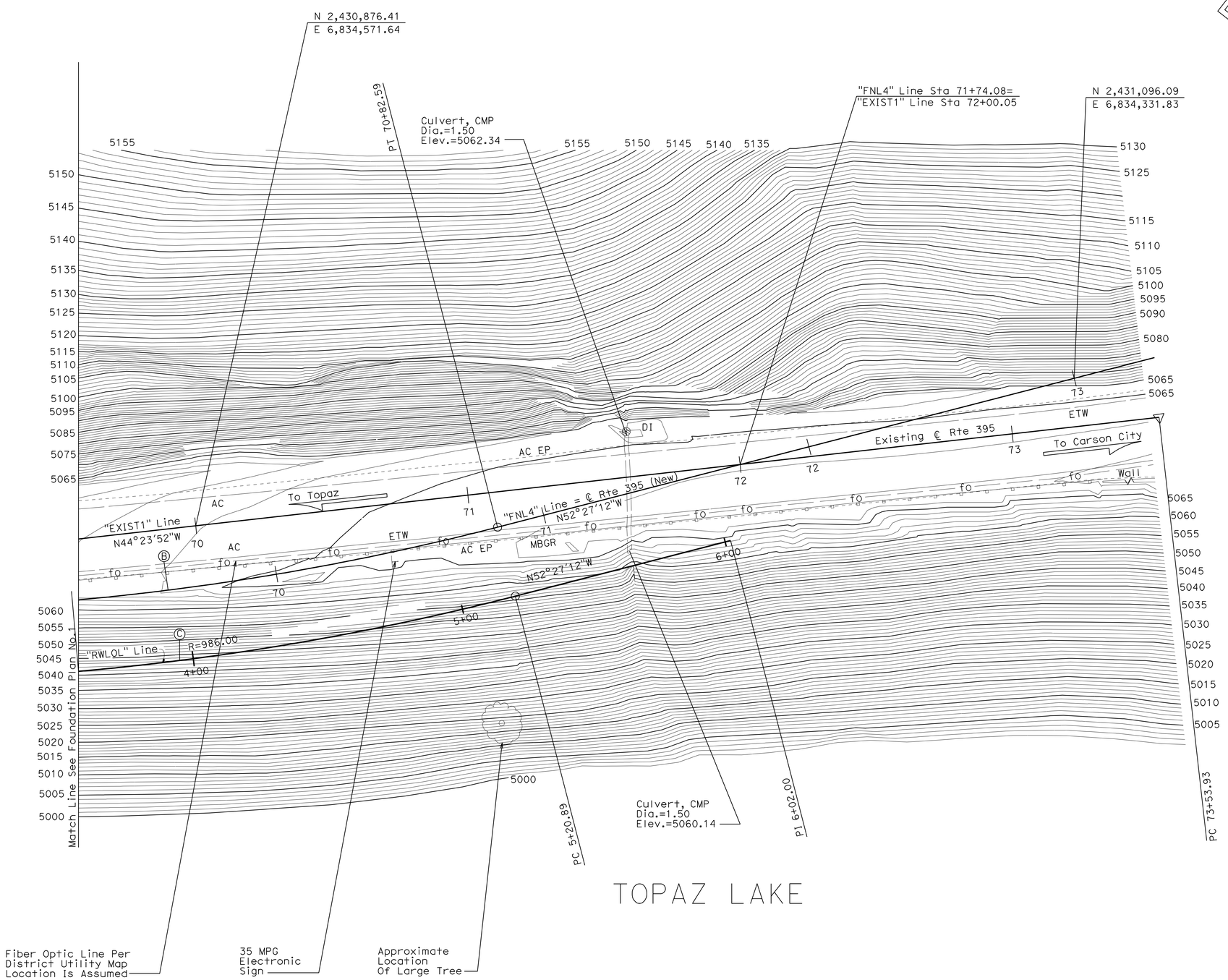

PRELIMINARY INVESTIGATION SECTION							
SCALE 1"=20'	VERT.DATUM NGVD29	PHOTOGRAMMETRY AS OF: X					
	HORZ.DATUM NAD83 (1991.35)	SURVEYED	BY District/Gillett	CHECKED	BY T.Gillett 09/2009		
ALIGNMENT TIES Dist. Traverse Sheet		DRAFTED	BY T.Zolnikov 09/2009	CHECKED	BY T.Schmalz 09/2009		

DESIGN	BY P. Norboe	CHECKED G. Matthews
DETAILS	BY D. Elliott	CHECKED G. Matthews
QUANTITIES	BY P. Norboe	CHECKED G. Matthews

STATE OF CALIFORNIA
DEPARTMENT OF TRANSPORTATION

DIVISION OF ENGINEERING SERVICES
STRUCTURE DESIGN
DESIGN BRANCH 9

BRIDGE NO. 47E0002
POST MILE 118.7/119.0

RETAINING WALL A
FOUNDATION PLAN NO. 2

STRUCTURES FOUNDATION PLAN SHEET (ENGLISH) (REV. 09-01-10)

ORIGINAL SCALE IN INCHES FOR REDUCED PLANS 0 1 2 3

UNIT: 3646
PROJECT NUMBER & PHASE: 0900000038 1 CONTRACT NO.: X

DISREGARD PRINTS BEARING EARLIER REVISION DATES

REVISION DATES 10-26-09 12-21-10 1-18-11 1-28-11

SHEET 6 OF 19

FILE => 47e0002-e-fp102.dgn

DIST	COUNTY	ROUTE	POST MILES TOTAL PROJECT	SHEET No.	TOTAL SHEETS
09	Mno	395	118.7/119.6	109	139

Pete W. Norboe 6-23-11
REGISTERED CIVIL ENGINEER DATE

8-8-11
PLANS APPROVAL DATE

REGISTERED PROFESSIONAL ENGINEER
Pete Norboe
No. C57519
Exp. 12-31-11
CIVIL
STATE OF CALIFORNIA

The State of California or its officers or agents shall not be responsible for the accuracy or completeness of electronic copies of this plan sheet.

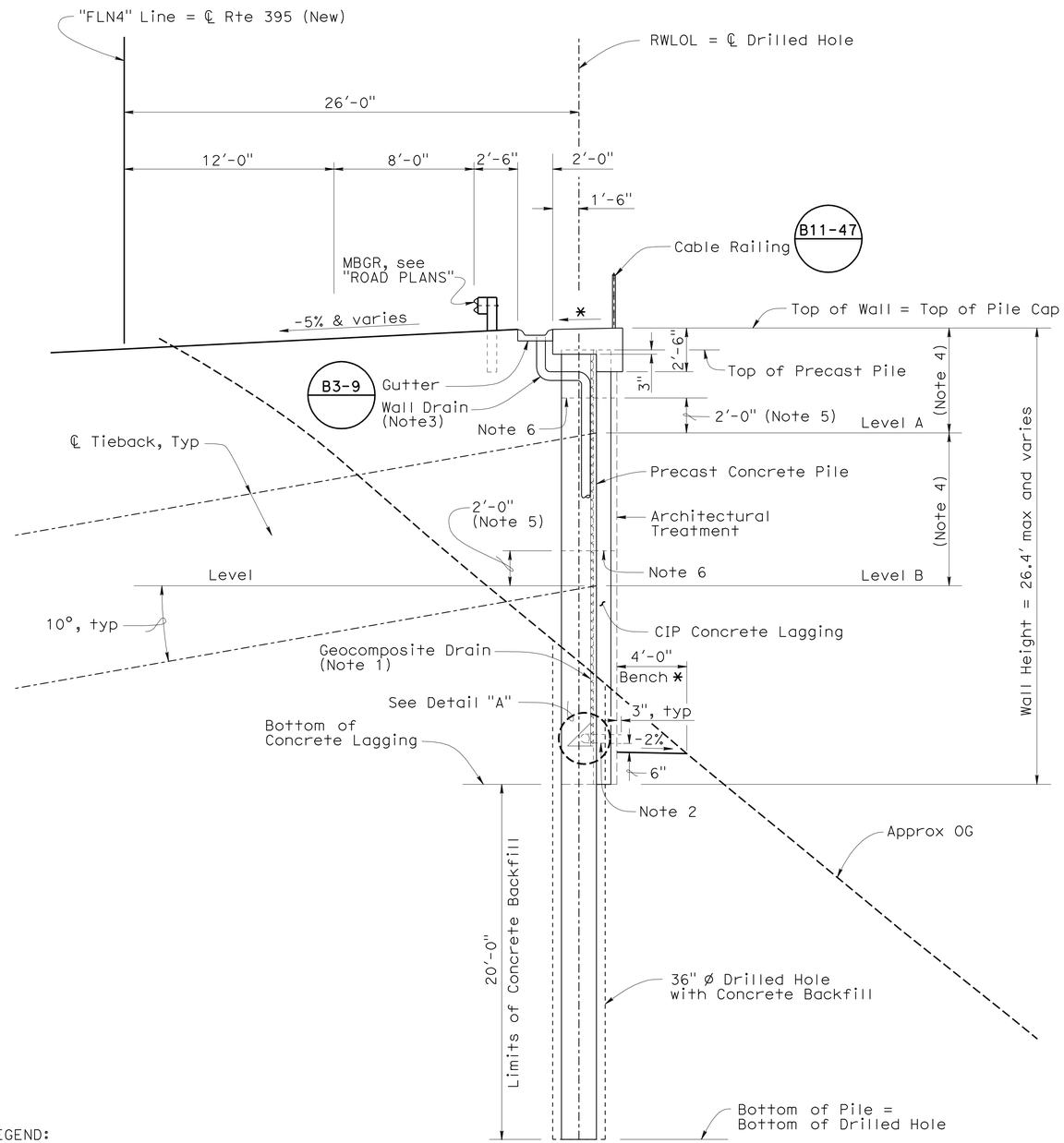

LEGEND:

Indicates Geocomposite Drain

NOTE:

* Slope to drain

TYPICAL SECTION

1/4" = 1'-0"

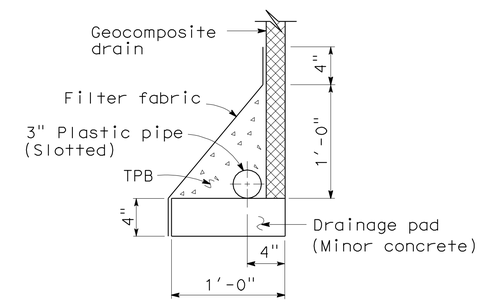

DETAIL "A"

NO SCALE

NOTES:

1. If temporary lagging becomes part of the final structure, the geocomposite draining fabric shall be placed between soil and the temporary lagging material to allow drainage of the soil mass. The geocomposite material shall be full width and height of wall.
2. A 6" ø PVC Outlet shall be provided every 20' O.C. Provide concrete splash pad at every outlet D99B
3. For locations of wall drains without scuppers, see "STRUCTURE PLANS NO. 1 and "STRUCTURE PLANS NO. 2" sheets.
4. For Tieback offsets and loads, see "WALL DETAILS NO. 5" and "WALL DETAILS NO. 6" sheets.
5. Tiebacks shall be full stressed when backfilling operation has reach a point of 2' above that tieback.
6. An optional construction joint is allowed in the CIP concrete lagging in the locations shown.
7. Pile with tiebacks is shown, piles with no tiebacks similiar.

	BY	CHECKED
DESIGN	P. Norboe	G. Matthews
DETAILS	D. Elliott	G. Matthews
QUANTITIES	P. Norboe	G. Matthews

STATE OF CALIFORNIA
DEPARTMENT OF TRANSPORTATION

DIVISION OF ENGINEERING SERVICES
STRUCTURE DESIGN
DESIGN BRANCH 9

BRIDGE NO. 47E0002
POST MILE 118.7/119.0

RETAINING WALL A
TYPICAL SECTION

STRUCTURES DESIGN DETAIL SHEET (ENGLISH) (REV. 09-01-10)

ORIGINAL SCALE IN INCHES FOR REDUCED PLANS 0 1 2 3

UNIT: 3594
PROJECT NUMBER & PHASE: 09000000381
CONTRACT NO.: 09-237701

DISREGARD PRINTS BEARING EARLIER REVISION DATES

REVISION DATES: 6-14-11 6-23-11 9-13-11

SHEET 7 OF 19

FILE => 47e0002-k-ts.dgn

USERNAME => trmarlok DATE PLOTTED => 15-AUG-2011 TIME PLOTTED => 09:02

DIST	COUNTY	ROUTE	POST MILES TOTAL PROJECT	SHEET No.	TOTAL SHEETS
09	Mno	395	118.7/119.6	110	139

REGISTERED CIVIL ENGINEER 6-23-11 DATE

8-8-11
PLANS APPROVAL DATE

REGISTERED PROFESSIONAL ENGINEER Pete Norboe No. C57519 Exp. 12-31-11 CIVIL STATE OF CALIFORNIA

The State of California or its officers or agents shall not be responsible for the accuracy or completeness of electronic copies of this plan sheet.

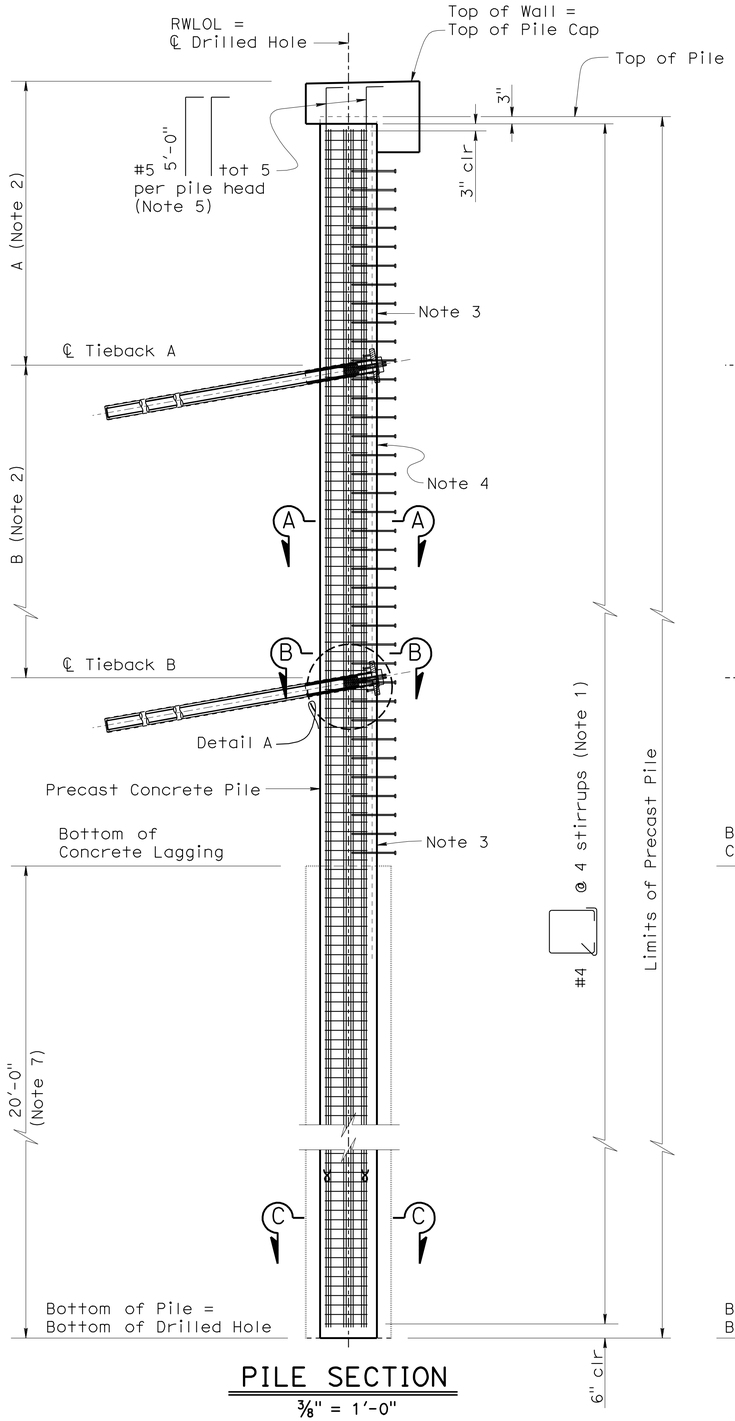

PILE SECTION

3/8" = 1'-0"

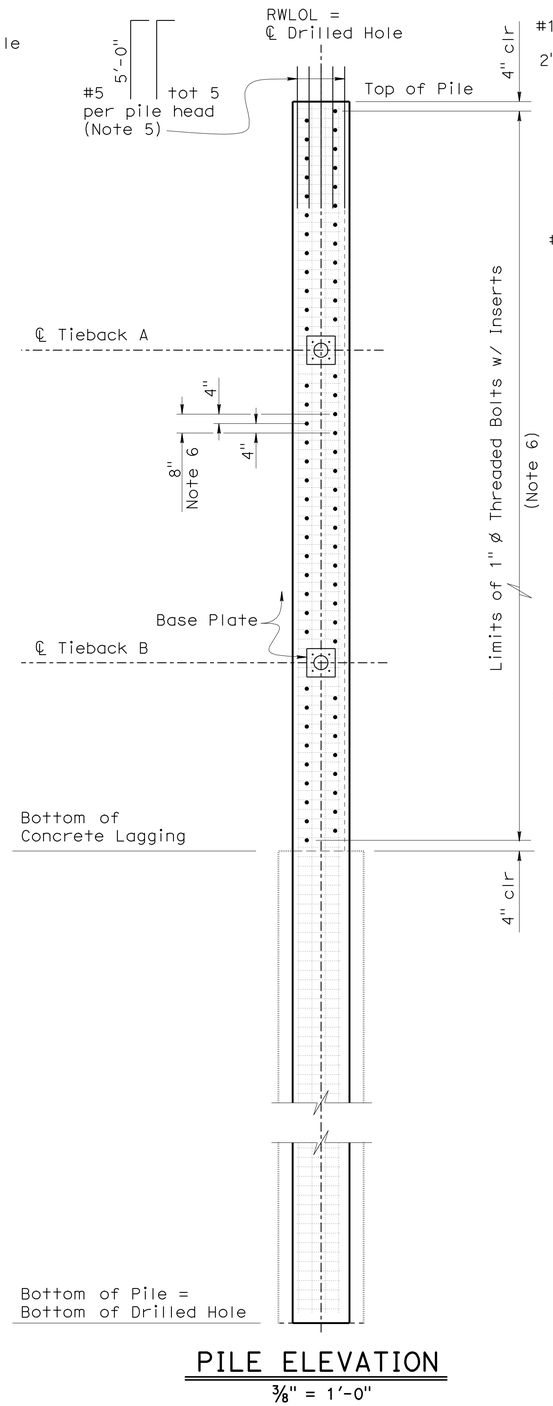

PILE ELEVATION

3/8" = 1'-0"

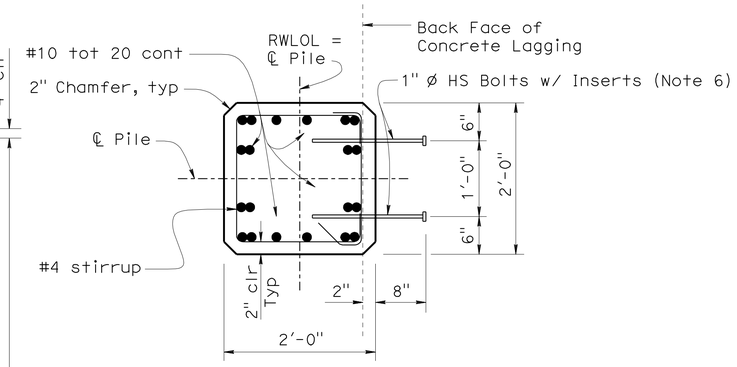

SECTION A-A

1" = 1'-0"

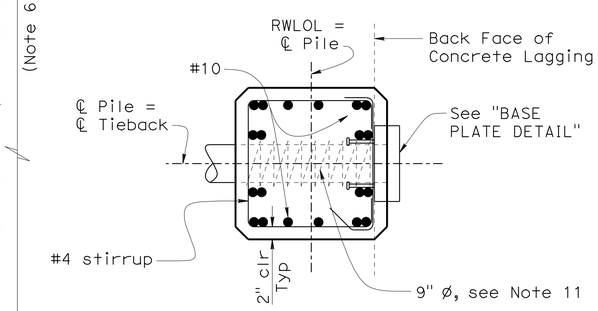

SECTION B-B

1" = 1'-0"

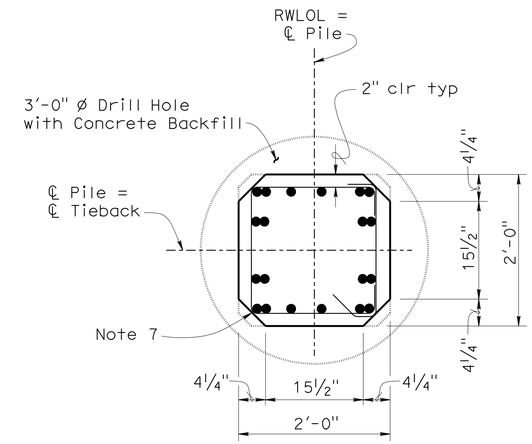

SECTION C-C

1" = 1'-0"

LEGEND:

ɣ Denotes bundled reinforcement

NOTES

1. Bundle stirrups on both sides near tieback anchorages.
2. For vertical placement of tiebacks, see "WALL DETAILS NO. 5" and "WALL DETAILS NO. 6" sheet.
3. Stamp "RETAINING WALL A" and "PILE NO.( )" at the top of the wall and 6'-0" above the bottom of concrete lagging on face noted.
4. Finish with rough texture of 1/4" amplitude on face with concrete lagging.
5. Hooks may be bent in the field after pile installation.
6. Bolts with Inserts are shown since it may be necessary to place the pile with temporary casings. #8 2'-5" hooked reinforcement may be used instead at the same spacing.
7. After casting, sand blast all sides to a rough surface below bottom of lagging to improve bonding to concrete backfill. A metal lath may be substituded for sand blasting on all surfaces.
8. Concrete strength of precast pile: f'c = 5000 psi.
9. Pile w/ tiebacks shown, piles without tiebacks similar except for base plates and tieback hardware.
10. For "BASE PLATE DETAILS" and "DETAIL A", see "WALL DETAILS NO. 2" sheet.
11. #3 spiral @ 2 1/2" pitch between #4 stirrups, for every tieback anchor tube.

	BY	CHECKED
DESIGN	P. Norboe	G. Matthews
DETAILS	D. Elliott	G. Matthews
QUANTITIES	P. Norboe	G. Matthews

STATE OF CALIFORNIA
DEPARTMENT OF TRANSPORTATION

DIVISION OF ENGINEERING SERVICES
STRUCTURE DESIGN
DESIGN BRANCH 9

BRIDGE NO. 47E0002
POST MILE 118.7/119.0

RETAINING WALL A
WALL DETAILS NO. 1

STRUCTURES DESIGN DETAIL SHEET (ENGLISH) (REV. 09-01-10)

ORIGINAL SCALE IN INCHES FOR REDUCED PLANS 0 1 2 3

UNIT: 3594
PROJECT NUMBER & PHASE: 09000000381
CONTRACT NO.: 09-237701

DISREGARD PRINTS BEARING EARLIER REVISION DATES

REVISION DATES 4-15-11 5-13-11 6-14-11 6-23-11

SHEET 8 OF 19

FILE => 47e0002-k-wall_det_01.dgn

USERNAME => tmorton DATE PLOTTED => 15-AUG-2011 TIME PLOTTED => 09:03

DIST	COUNTY	ROUTE	POST MILES TOTAL PROJECT	SHEET No.	TOTAL SHEETS
09	Mno	395	118.7/119.6	111	139

Pete W. Norboe 6-23-11
REGISTERED CIVIL ENGINEER DATE

8-8-11
PLANS APPROVAL DATE

REGISTERED PROFESSIONAL ENGINEER Pete Norboe No. C57519 Exp. 12-31-11 CIVIL STATE OF CALIFORNIA

The State of California or its officers or agents shall not be responsible for the accuracy or completeness of electronic copies of this plan sheet.

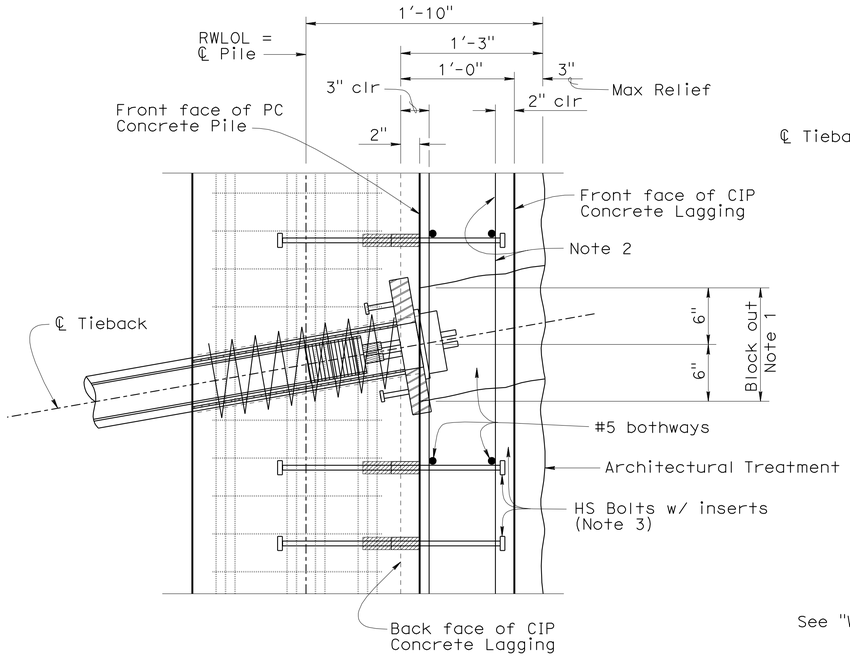

PART SECTION WALL (AT TIEBACK)

1½" = 1'-0"

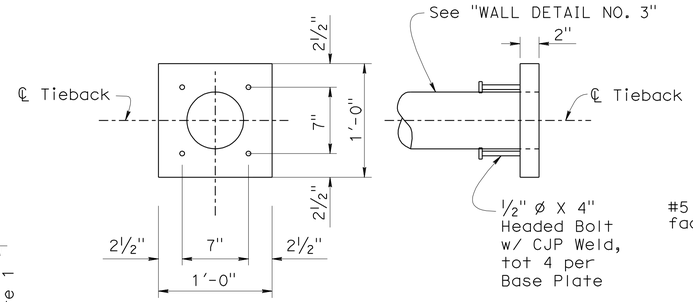

PLAN SECTION

BASE PLATE DETAIL

1 ½" = 1'-0"

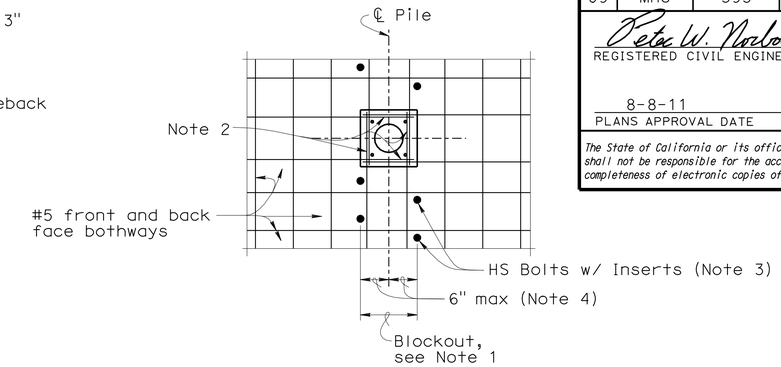

PART WALL ELEVATION

¾" = 1'-0"

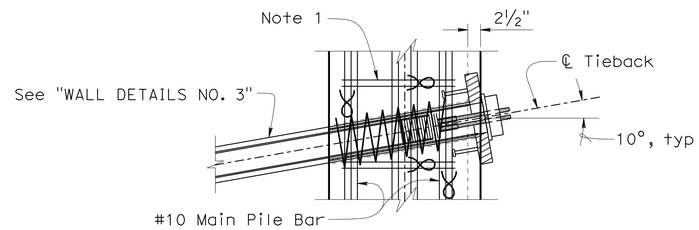

DETAIL A

1" = 1'-0"

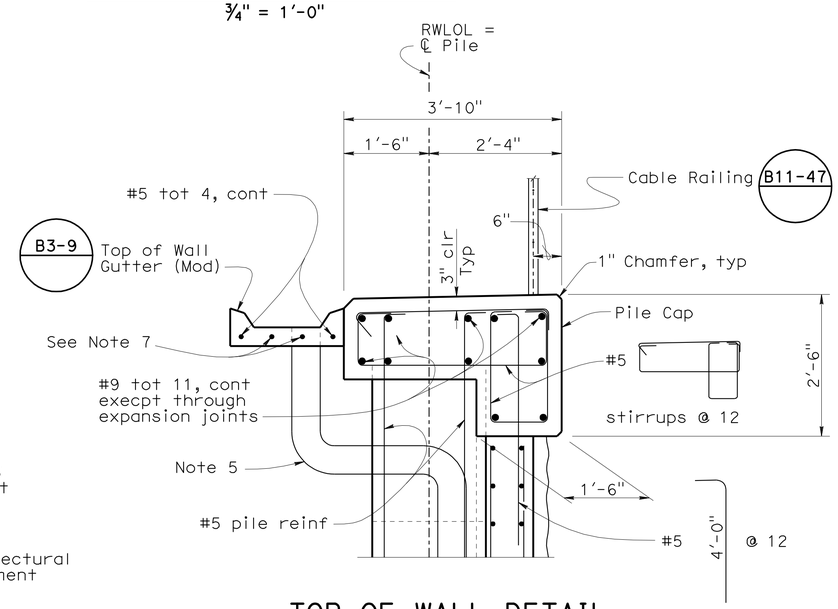

TOP OF WALL DETAIL

¾" = 1'-0"

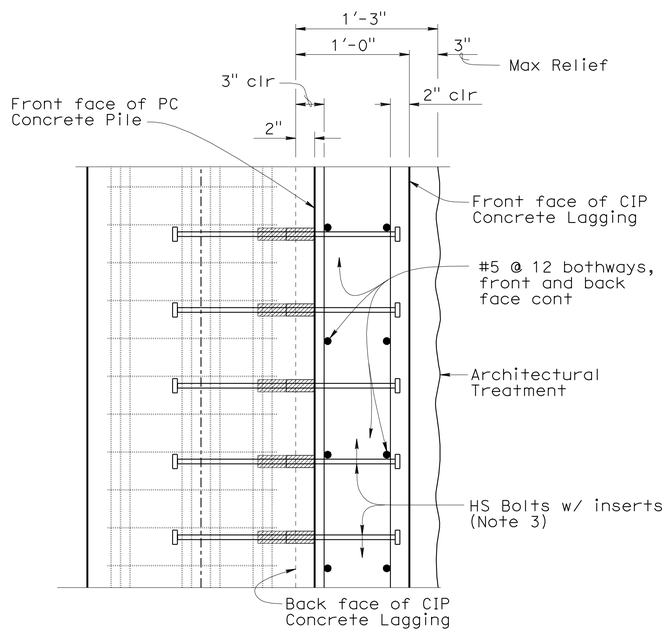

PART SECTION WALL (BETWEEN TIEBACKS)

1½" = 1'-0"

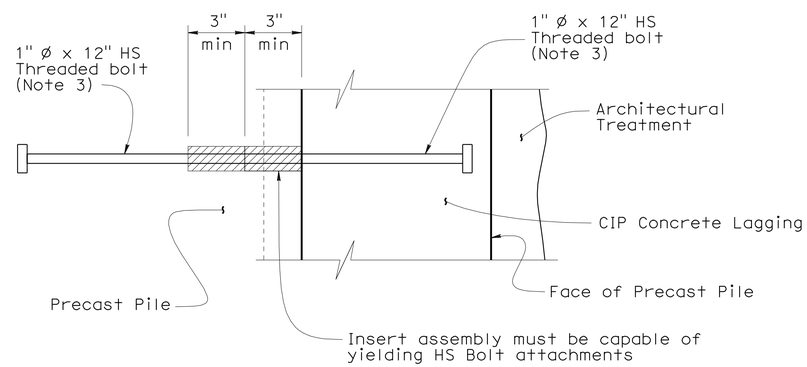

INSERT ASSEMBLY

3" = 1'-0"

LEGEND:

Denotes bundled bar

NOTES:

1. Blockout concrete shall match formliner appearance and shall be placed before staining of concrete.
2. #5 wall reinforcement may be cut as necessary to allow stressing operation.
3. Insert assembly option shown. If reinforcement option is used, hooks shall be horizontal.
4. Minimize blockout dimensions to maintain uniform architectural appearance.
5. For wall drain locations, see "GENERAL PLAN" sheet.
6. Base Plate shall be cast w/ precast pile.
7. Adjust to accomodate drains.

DESIGN	BY P. Norboe	CHECKED G. Matthews	
DETAILS	BY D. Elliott	CHECKED G. Matthews	
QUANTITIES	BY P. Norboe	CHECKED G. Matthews	

STATE OF CALIFORNIA
DEPARTMENT OF TRANSPORTATION

DIVISION OF ENGINEERING SERVICES
STRUCTURE DESIGN
DESIGN BRANCH 9

BRIDGE NO. 47E0002
POST MILE 118.7/119.0

RETAINING WALL A
WALL DETAILS NO. 2

STRUCTURES DESIGN DETAIL SHEET (ENGLISH) (REV. 09-01-10)

ORIGINAL SCALE IN INCHES FOR REDUCED PLANS 0 1 2 3

UNIT: 3594
PROJECT NUMBER & PHASE: 09000000381
CONTRACT NO.: 09-237701

DISREGARD PRINTS BEARING EARLIER REVISION DATES

REVISION DATES 4-19-11 5-13-11 6-10-11 6-23-11

SHEET 9 OF 19

FILE => 47e0002-k-wall_det_02.dgn

USERNAME => trmartok DATE PLOTTED => 15-AUG-2011 TIME PLOTTED => 09:03

DIST	COUNTY	ROUTE	POST MILES TOTAL PROJECT	SHEET No.	TOTAL SHEETS
09	Mno	395	118.7/119.6	112	139

Peter W. Norboe 6-23-11
REGISTERED CIVIL ENGINEER DATE

8-8-11
PLANS APPROVAL DATE

REGISTERED PROFESSIONAL ENGINEER
Pete Norboe
No. C57519
Exp. 12-31-11
CIVIL
STATE OF CALIFORNIA

The State of California or its officers or agents shall not be responsible for the accuracy or completeness of electronic copies of this plan sheet.

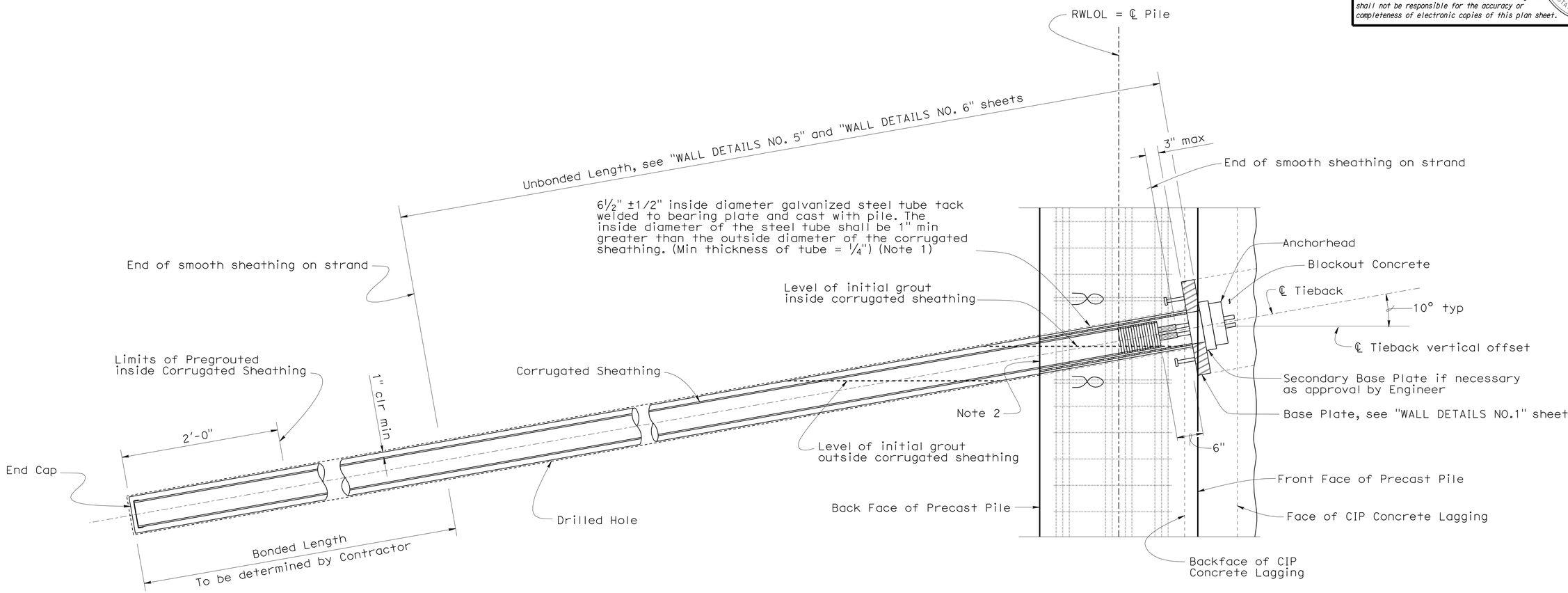

TIEBACK TENDON DETAIL

1½" = 1'-0"

LEGEND:

Denotes bundled bar

NOTES:

1. Diameter of steel tube may be modified upon approval of the Engineer to accomodate various drill auger sizes. In no case shall the inside diameter be greater than 7". Care shall be taken to prevent damage to the concrete piling during tieback installation.
2. Galvanized steel tube may be used as final trumpet, or a secondary trumpet may be used upon approval of Engineer.

	BY	CHECKED
DESIGN	P. Norboe	G. Matthews
DETAILS	D. Elliott	G. Matthews
QUANTITIES	P. Norboe	G. Matthews

STATE OF CALIFORNIA
DEPARTMENT OF TRANSPORTATION

DIVISION OF ENGINEERING SERVICES
STRUCTURE DESIGN
DESIGN BRANCH 9

BRIDGE NO. 47E0002
POST MILE 118.7/119.0

RETAINING WALL A
WALL DETAILS NO. 3

STRUCTURES DESIGN DETAIL SHEET (ENGLISH) (REV. 09-01-10)

ORIGINAL SCALE IN INCHES FOR REDUCED PLANS 0 1 2 3

UNIT: 3594
PROJECT NUMBER & PHASE: 09000000381
CONTRACT NO.: 09-237701

DISREGARD PRINTS BEARING EARLIER REVISION DATES

REVISION DATES 5-17-11 6-11-11 6-23-11

SHEET 10 OF 19

FILE => 47e0002-k-wall_det_03.dgn

USERNAME => trmariak DATE PLOTTED => 15-AUG-2011 TIME PLOTTED => 09:03

DIST	COUNTY	ROUTE	POST MILES TOTAL PROJECT	SHEET No.	TOTAL SHEETS
09	Mno	395	118.7/119.6	113	139

Pete W. Norboe 6-23-11
REGISTERED CIVIL ENGINEER DATE

8-8-11
PLANS APPROVAL DATE

REGISTERED PROFESSIONAL ENGINEER
Pete Norboe
No. C57519
Exp. 12-31-11
CIVIL
STATE OF CALIFORNIA

The State of California or its officers or agents shall not be responsible for the accuracy or completeness of electronic copies of this plan sheet.

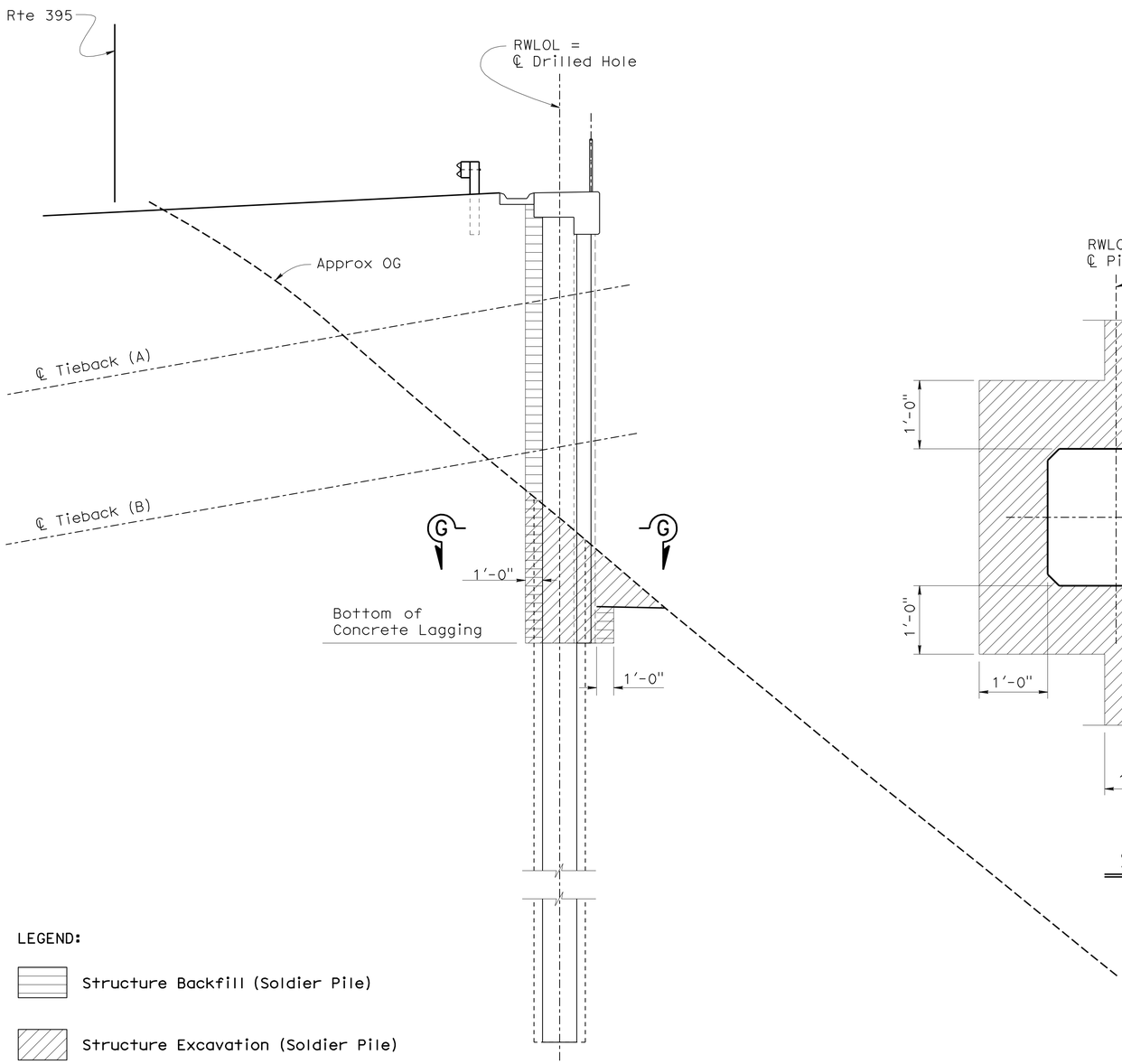

LIMITS OF PAYMENT FOR EXCAVATION AND BACKFILL

1/4" = 1'-0"

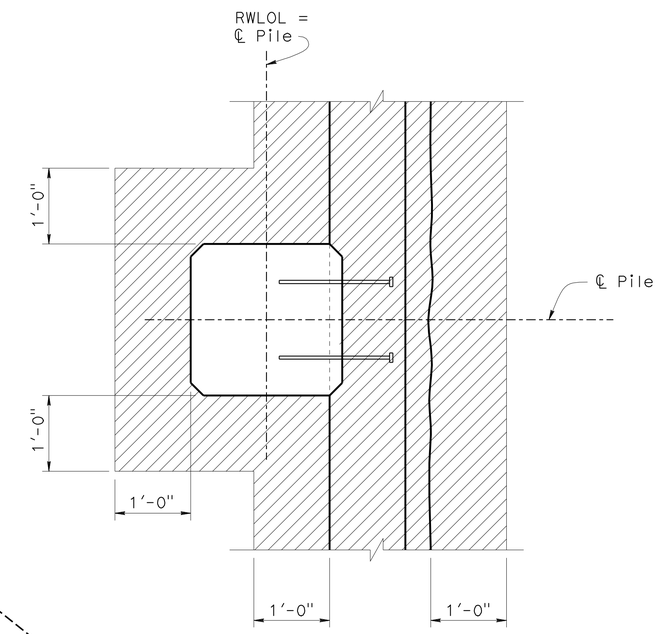

EXCAVATION

SECTION G-G

No Scale

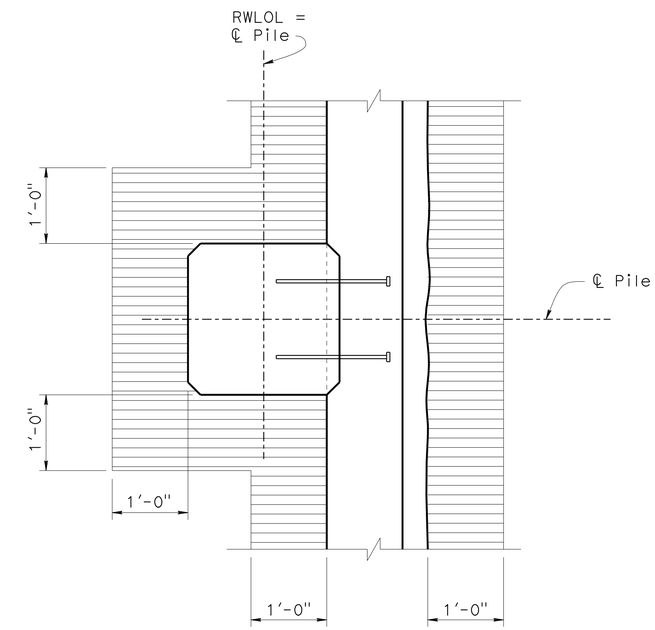

BACKFILL

SECTION G-G

No Scale

LEGEND:

Structure Backfill (Soldier Pile)

Structure Excavation (Soldier Pile)

DESIGN	BY P. Norboe	CHECKED G. Matthews	
DETAILS	BY D. Elliott	CHECKED G. Matthews	
QUANTITIES	BY P. Norboe	CHECKED G. Matthews	

STATE OF CALIFORNIA
DEPARTMENT OF TRANSPORTATION

DIVISION OF ENGINEERING SERVICES
STRUCTURE DESIGN
DESIGN BRANCH 9

BRIDGE NO. 47E0002
POST MILE 118.7/119.0

RETAINING WALL A
WALL DETAILS NO. 4

STRUCTURES DESIGN DETAIL SHEET (ENGLISH) (REV. 09-01-10)

ORIGINAL SCALE IN INCHES FOR REDUCED PLANS 0 1 2 3

UNIT: 3594
PROJECT NUMBER & PHASE: 09000000381
CONTRACT NO.: 09-237701

DISREGARD PRINTS BEARING EARLIER REVISION DATES

REVISION DATES 1-4-11 1-21-11 4-19-11

SHEET 11 OF 19

FILE => 47e0002-k-wall_det_04.dgn

USERNAME => trmartok DATE PLOTTED => 15-AUG-2011 TIME PLOTTED => 09:03

DIST	COUNTY	ROUTE	POST MILES TOTAL PROJECT	SHEET No.	TOTAL SHEETS
09	Mno	395	118.7/119.6	114	139

Pete W. Norboe 6-23-11
REGISTERED CIVIL ENGINEER DATE

8-8-11
PLANS APPROVAL DATE

REGISTERED PROFESSIONAL ENGINEER
Pete Norboe
No. C57519
Exp. 12-31-11
CIVIL
STATE OF CALIFORNIA

The State of California or its officers or agents shall not be responsible for the accuracy or completeness of electronic copies of this plan sheet.

PILE & TIEBACK DATA TABLE

Pile No.	Station (RWLOL)	Top of wall Elevation (ft)	Approx OG Elev (ft)	FG Elev (ft)	Bottom of Lagging Elev (ft)	Bottom Pile Elev (ft)	Wall Height (ft)	Pile Type	Hole Diameter (ft)	Tiebacks Level A			Tiebacks Level B		
										Force T (kips)	Vertical * Offset (ft)	Unbonded Length (ft)	Force T (kips)	Vertical * Offset (ft)	Unbonded Length (ft)
1	00+01.00	5049.78	5047.5	5049.7	5045.8	5025.8	4.0	24"x24" PCC	3.00	-	-	-	-	-	-
2	00+11.00	5050.16	5046.9	5046.5	5044.5	5024.5	5.7	24"x24" PCC	3.00	-	-	-	-	-	-
3	00+21.00	5050.55	5046.3	5044.6	5042.6	5022.6	7.9	24"x24" PCC	3.00	50	4.00	30.0	-	-	-
4	00+31.00	5050.92	5045.6	5043.2	5041.2	5021.2	9.7	24"x24" PCC	3.00	75	5.00	30.0	-	-	-
5	00+41.00	5051.30	5045.0	5042.0	5040.0	5020.0	11.3	24"x24" PCC	3.00	75	6.00	30.0	-	-	-
6	00+51.00	5051.68	5044.4	5041.2	5039.2	5019.2	12.5	24"x24" PCC	3.00	100	7.00	30.0	-	-	-
7	00+61.00	5052.05	5043.8	5040.4	5038.4	5018.4	13.6	24"x24" PCC	3.00	100	8.00	30.0	-	-	-
8	00+71.00	5052.31	5043.2	5039.6	5037.6	5017.6	14.7	24"x24" PCC	3.00	125	9.50	30.0	-	-	-
9	00+81.00	5052.58	5042.6	5038.8	5036.8	5016.8	15.8	24"x24" PCC	3.00	125	10.00	30.0	-	-	-
10	00+91.00	5052.84	5042.0	5038.0	5036.0	5016.0	16.8	24"x24" PCC	3.00	150	11.00	30.0	-	-	-
11	01+01.00	5053.10	5041.9	5037.8	5035.8	5015.8	17.3	24"x24" PCC	3.00	150	11.50	35.0	-	-	-
12	01+11.00	5053.36	5041.8	5037.6	5035.6	5015.6	17.8	24"x24" PCC	3.00	150	11.50	35.0	-	-	-
13	01+21.00	5053.63	5041.7	5037.4	5035.4	5015.4	18.2	24"x24" PCC	3.00	150	12.00	35.0	-	-	-
14	01+31.00	5053.89	5041.6	5037.2	5035.2	5015.2	18.7	24"x24" PCC	3.00	175	12.50	35.0	-	-	-
15	01+41.00	5054.15	5041.5	5037.0	5035.0	5015.0	19.2	24"x24" PCC	3.00	175	13.00	35.0	-	-	-
16	01+51.00	5054.42	5040.8	5036.6	5034.6	5014.6	19.8	24"x24" PCC	3.00	150	8.00	40.0	125	8.00	28.0
17	01+61.00	5054.68	5040.1	5036.2	5034.2	5014.2	20.5	24"x24" PCC	3.00	150	8.50	40.0	125	8.50	28.0
18	01+71.00	5054.94	5039.4	5035.8	5033.8	5013.8	21.1	24"x24" PCC	3.00	150	8.50	40.0	125	9.00	28.0
19	01+81.00	5055.20	5038.7	5035.4	5033.4	5013.4	21.8	24"x24" PCC	3.00	150	9.00	40.0	125	9.00	28.0
20	01+91.00	5055.47	5038.0	5035.0	5033.0	5013.0	22.5	24"x24" PCC	3.00	150	9.00	40.6	125	9.50	28.0
21	02+01.00	5055.73	5037.7	5034.9	5032.9	5012.9	22.8	24"x24" PCC	3.00	150	9.50	40.0	125	9.50	28.0
22	02+11.00	5055.99	5037.4	5034.8	5032.8	5012.8	23.2	24"x24" PCC	3.00	150	10.00	40.0	125	10.00	28.0
23	02+21.00	5056.26	5037.1	5034.7	5032.7	5012.7	23.6	24"x24" PCC	3.00	150	10.00	40.0	125	10.50	28.0
24	02+31.00	5056.52	5036.8	5034.6	5032.6	5012.6	23.9	24"x24" PCC	3.00	150	10.00	40.0	125	10.50	28.0
25	02+41.00	5056.78	5036.5	5034.5	5032.5	5012.5	24.3	24"x24" PCC	3.00	150	10.00	40.0	125	11.00	28.0
26	02+51.00	5057.05	5036.6	5034.4	5032.4	5012.4	24.6	24"x24" PCC	3.00	150	10.00	40.0	125	11.00	28.0
27	02+61.00	5057.31	5036.7	5034.3	5032.3	5012.3	25.0	24"x24" PCC	3.00	150	10.00	40.0	125	11.50	28.0
28	02+71.00	5057.57	5036.8	5034.2	5032.2	5012.2	25.4	24"x24" PCC	3.00	150	10.00	40.0	125	12.00	28.0
29	02+81.00	5057.83	5036.9	5034.1	5032.1	5012.1	25.7	24"x24" PCC	3.00	150	10.00	40.0	125	12.50	28.0
30	02+91.00	5058.10	5037.0	5034.0	5032.0	5012.0	26.1	24"x24" PCC	3.00	150	10.00	40.0	125	12.50	28.0

* NOTE: Tieback vertical offsets are measured from the top of the wall to the CG of the stressing base plate; or base plate to base plate.

	BY	CHECKED
DESIGN	P. Norboe	G. Matthews
DETAILS	D. Elliott	G. Matthews
QUANTITIES	P. Norboe	G. Matthews

STATE OF CALIFORNIA
DEPARTMENT OF TRANSPORTATION

DIVISION OF ENGINEERING SERVICES
STRUCTURE DESIGN
DESIGN BRANCH 9

BRIDGE NO. 47E0002
POST MILE 118.7/119.0

RETAINING WALL A
WALL DETAILS NO. 5

STRUCTURES DESIGN DETAIL SHEET (ENGLISH) (REV. 09-01-10)

ORIGINAL SCALE IN INCHES FOR REDUCED PLANS 0 1 2 3

UNIT: 3594
PROJECT NUMBER & PHASE: 09000000381
CONTRACT NO.: 09-237701

DISREGARD PRINTS BEARING EARLIER REVISION DATES

REVISION DATES: 12-24-10 1-24-11 1-28-11 3-23-11

SHEET 12 OF 19

FILE => 47e0002-k-wall_det_05.dgn

USERNAME => TTmorTOK DATE PLOTTED => 15-AUG-2011 TIME PLOTTED => 09:03

DIST	COUNTY	ROUTE	POST MILES TOTAL PROJECT	SHEET No.	TOTAL SHEETS
09	Mno	395	118.7/119.6	115	139

Pete W. Norboe 6-23-11
REGISTERED CIVIL ENGINEER DATE

8-8-11
PLANS APPROVAL DATE

REGISTERED PROFESSIONAL ENGINEER
Pete Norboe
No. C57519
Exp. 12-31-11
CIVIL
STATE OF CALIFORNIA

The State of California or its officers or agents shall not be responsible for the accuracy or completeness of electronic copies of this plan sheet.

PILE & TIEBACK DATA TABLE

Pile No.	Station (RWLOL)	Top of wall Elevation (ft)	Approx OG Elev (ft)	FG Elev (ft)	Bottom of Lagging Elev (ft)	Bottom Pile Elev (ft)	Wall Height (ft)	Pile Type	Hole Diameter (ft)	Tiebacks Level A			Tiebacks Level B		
										Force T (kips)	Vertical * Offset (ft)	Unbonded Length (ft)	Force T (kips)	Vertical * Offset (ft)	Unbonded Length (ft)
31	03+01.00	5058.36	5037.3	5034.2	5032.2	5012.2	26.2	24"x24" PCC	3.00	150	10.00	40.0	125	12.50	28.0
32	03+11.00	5058.62	5037.6	5034.4	5032.4	5012.4	26.2	24"x24" PCC	3.00	150	10.00	40.0	125	12.50	28.0
33	03+21.00	5058.89	5037.9	5034.6	5032.6	5012.6	26.3	24"x24" PCC	3.00	150	10.00	40.0	125	12.50	28.0
34	03+31.00	5059.15	5038.2	5034.8	5032.8	5012.8	26.3	24"x24" PCC	3.00	150	10.00	40.0	125	12.50	28.0
35	03+41.00	5059.41	5038.5	5035.0	5033.0	5013.0	26.4	24"x24" PCC	3.00	150	10.00	40.0	125	12.50	28.0
36	03+51.00	5059.67	5039.0	5035.6	5033.6	5013.6	26.1	24"x24" PCC	3.00	150	10.00	40.0	125	12.50	28.0
37	03+61.00	5059.94	5039.5	5036.2	5034.2	5014.2	25.7	24"x24" PCC	3.00	150	10.00	40.0	125	12.00	28.0
38	03+71.00	5060.20	5040.0	5036.8	5034.8	5014.8	25.4	24"x24" PCC	3.00	150	10.00	40.0	125	12.00	28.0
39	03+81.00	5060.46	5040.5	5037.4	5035.4	5015.4	25.1	24"x24" PCC	3.00	150	10.00	40.0	125	11.50	28.0
40	03+91.00	5060.73	5041.0	5038.0	5036.0	5016.0	24.7	24"x24" PCC	3.00	150	10.00	40.0	125	11.00	32.0
41	04+01.00	5060.99	5041.8	5038.8	5036.8	5016.8	24.2	24"x24" PCC	3.00	150	10.00	40.0	125	10.50	32.0
42	04+11.00	5061.25	5042.6	5039.6	5037.6	5017.6	23.6	24"x24" PCC	3.00	150	10.00	40.0	125	10.00	32.0
43	04+21.00	5061.51	5043.4	5040.4	5038.4	5018.4	23.1	24"x24" PCC	3.00	150	9.50	40.0	125	10.00	32.0
44	04+31.00	5061.76	5044.2	5041.2	5039.2	5019.2	22.6	24"x24" PCC	3.00	150	9.50	40.0	125	9.50	32.0
45	04+41.00	5062.00	5045.0	5042.0	5040.0	5020.0	22.0	24"x24" PCC	3.00	150	9.50	40.0	125	9.50	32.0
46	04+51.00	5062.25	5046.0	5043.0	5041.0	5021.0	21.3	24"x24" PCC	3.00	150	9.00	40.0	125	9.00	32.0
47	04+61.00	5062.48	5047.0	5044.0	5042.0	5022.0	20.5	24"x24" PCC	3.00	150	8.50	40.0	125	8.50	32.0
48	04+71.00	5062.71	5048.0	5045.0	5043.0	5023.0	19.7	24"x24" PCC	3.00	150	8.00	40.0	125	8.00	32.0
49	04+81.00	5062.90	5049.0	5046.0	5044.0	5024.0	18.9	24"x24" PCC	3.00	175	13.00	40.0	-	-	-
50	04+91.00	5063.01	5050.0	5047.0	5045.0	5025.0	18.0	24"x24" PCC	3.00	175	12.00	40.0	-	-	-
51	05+01.00	5063.12	5051.4	5048.2	5046.2	5026.2	16.9	24"x24" PCC	3.00	150	11.50	40.0	-	-	-
52	05+11.00	5063.21	5052.8	5049.4	5047.4	5027.4	15.8	24"x24" PCC	3.00	150	10.50	40.0	-	-	-
53	05+21.00	5063.30	5054.2	5050.6	5048.6	5028.6	14.7	24"x24" PCC	3.00	125	9.50	40.0	-	-	-
54	05+31.00	5063.39	5055.6	5051.8	5049.8	5029.8	13.6	24"x24" PCC	3.00	100	8.00	40.0	-	-	-
55	05+41.00	5063.48	5057.0	5053.0	5051.0	5031.0	12.5	24"x24" PCC	3.00	100	7.00	40.0	-	-	-
56	05+51.00	5063.56	5058.1	5054.4	5052.4	5032.4	11.2	24"x24" PCC	3.00	75	6.00	40.0	-	-	-
57	05+61.00	5063.63	5059.2	5055.8	5053.8	5033.8	9.8	24"x24" PCC	3.00	75	5.00	40.0	-	-	-
58	05+71.00	5063.70	5060.3	5057.2	5055.2	5035.2	8.5	24"x24" PCC	3.00	50	4.00	40.0	-	-	-
59	05+81.00	5063.76	5061.4	5058.6	5056.6	5036.6	7.2	24"x24" PCC	3.00	50	4.00	40.0	-	-	-
60	05+91.00	5063.81	5062.5	5060.0	5058.0	5038.0	5.8	24"x24" PCC	3.00	-	-	-	-	-	-
61	06+01.00	5063.70	5063.0	5062.7	5059.7	5039.7	4.0	24"x24" PCC	3.00	-	-	-	-	-	-

* NOTE: Tieback vertical offsets are measured from the top of the wall to the CG of the stressing base plate; or base plate to base plate.

	BY	CHECKED
DESIGN	P. Norboe	G. Matthews
DETAILS	D. Elliott	G. Matthews
QUANTITIES	P. Norboe	G. Matthews

STATE OF CALIFORNIA
DEPARTMENT OF TRANSPORTATION

DIVISION OF ENGINEERING SERVICES
STRUCTURE DESIGN
DESIGN BRANCH 9

BRIDGE NO. 47E0002
POST MILE 118.7/119.0

RETAINING WALL A
WALL DETAILS NO. 6

STRUCTURES DESIGN DETAIL SHEET (ENGLISH) (REV. 09-01-10)

ORIGINAL SCALE IN INCHES FOR REDUCED PLANS 0 1 2 3

UNIT: 3594
PROJECT NUMBER & PHASE: 09000000381
CONTRACT NO.: 09-237701

DISREGARD PRINTS BEARING EARLIER REVISION DATES

REVISION DATES: 12-24-10 1-24-11 1-28-11 3-23-11

SHEET 13 OF 19

FILE => 47e0002-k-wall_det_06.dgn

USERNAME => frmorlok DATE PLOTTED => 15-AUG-2011 TIME PLOTTED => 09:03

DIST	COUNTY	ROUTE	POST MILES TOTAL PROJECT	SHEET No.	TOTAL SHEETS
09	Mno	395	118.7/119.6	116	139

Pete W. Norboe 6-23-11
REGISTERED CIVIL ENGINEER DATE

8-8-11
PLANS APPROVAL DATE

REGISTERED PROFESSIONAL ENGINEER
Pete Norboe
No. C57519
Exp. 12-31-11
CIVIL
STATE OF CALIFORNIA

The State of California or its officers or agents shall not be responsible for the accuracy or completeness of electronic copies of this plan sheet.

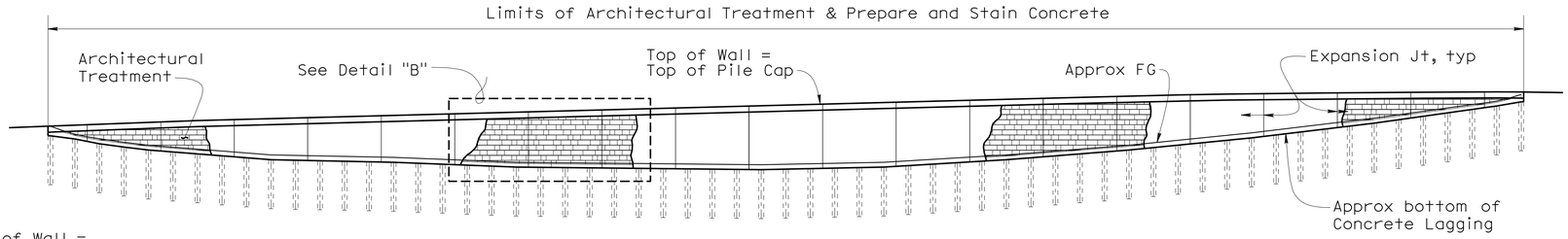

WALL ELEVATION
1" = 30'

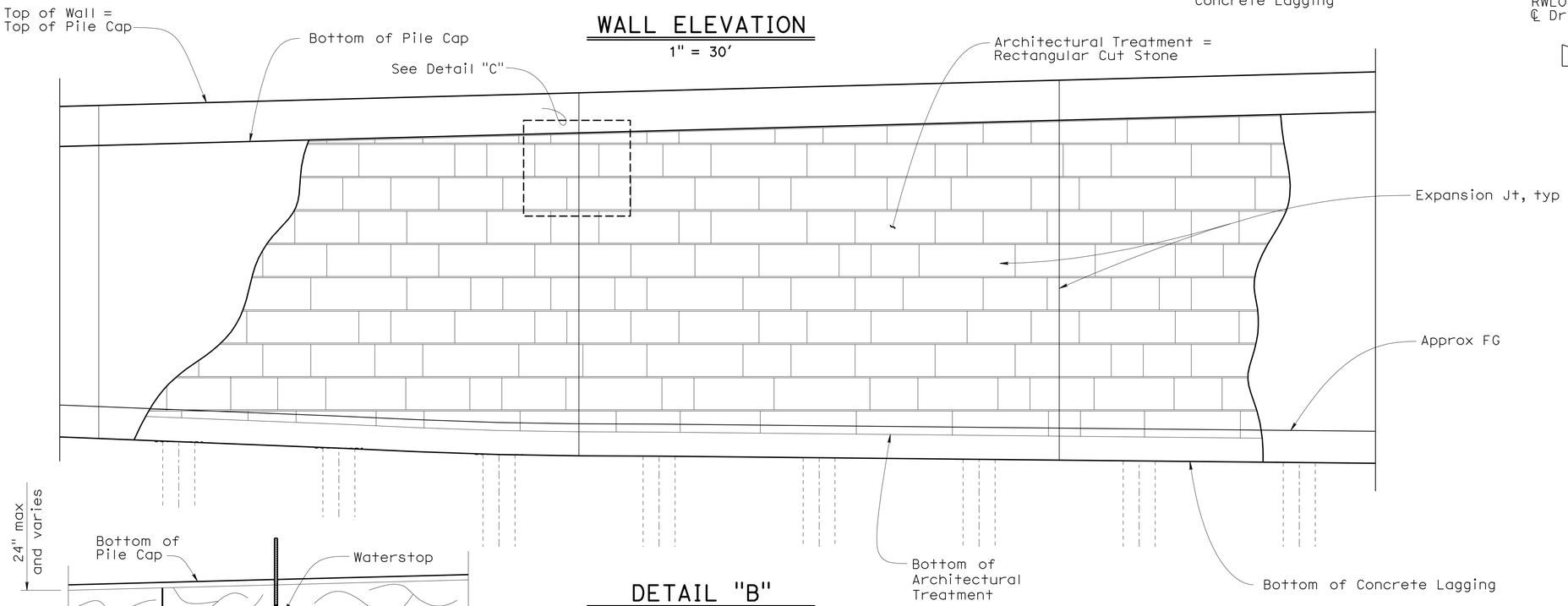

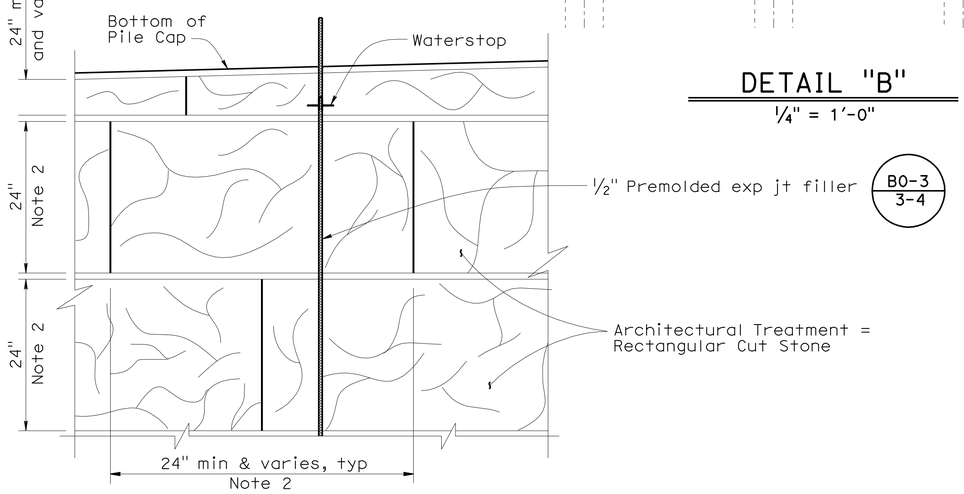

DETAIL "C"
NO SCALE

DETAIL "B"
¼" = 1'-0"

RECTANGULAR CUT STONE PANEL SPECIFICATIONS

Maximum Relief	3"
Average Relief	2"
Stone Size (Note 2)	24" - 72"
Color - See Special Provisions	

NOTES:

1. Grout lines to be arranged horizontal (level) and vertical.
2. Vertical stone dimension is 24"; horizontal stone dimension shall vary.
3. Architectutral pattern shall be non-repeatable in appearance.

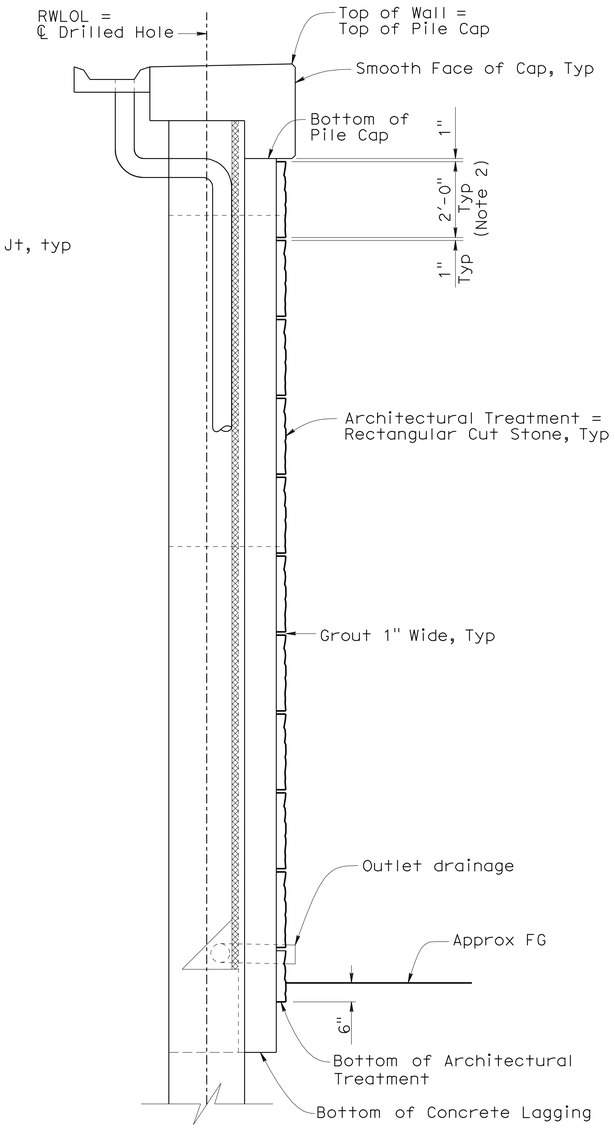

WALL SECTION
½" = 1'-0"

	BY	CHECKED
DESIGN	P. Norboe	G. Matthews
DETAILS	D. Elliott	G. Matthews
QUANTITIES	P. Norboe	G. Matthews

STATE OF CALIFORNIA
DEPARTMENT OF TRANSPORTATION

DIVISION OF ENGINEERING SERVICES
STRUCTURE DESIGN
DESIGN BRANCH 9

BRIDGE NO. 47E0002
POST MILE 118.7/119.0

RETAINING WALL A
ARCHITECTURAL TREATMENT

STRUCTURES DESIGN DETAIL SHEET (ENGLISH) (REV. 09-01-10)

ORIGINAL SCALE IN INCHES FOR REDUCED PLANS 0 1 2 3

UNIT: 3594
PROJECT NUMBER & PHASE: 09000000381
CONTRACT NO.: 09-237701

DISREGARD PRINTS BEARING EARLIER REVISION DATES

REVISION DATES: 6-23-11 | 7-18-11 | 8-11-11

SHEET 14 OF 19

FILE => 47e0002-u-at.dgn

USERNAME => trmartok DATE PLOTTED => 15-AUG-2011 TIME PLOTTED => 09:03

DIST	COUNTY	ROUTE	POST MILES TOTAL PROJECT	SHEET No	TOTAL SHEETS
09	Mno	395	118.7/119.6	117	139

CERTIFIED ENGINEERING GEOLOGIST 6-14-11

8-8-11
PLANS APPROVAL DATE

PROFESSIONAL GEOLOGIST Brandon Badeker No. 2480 Exp. 1-31-2013 CERTIFIED ENGINEERING GEOLOGIST STATE OF CALIFORNIA

The State of California or its officers or agents shall not be responsible for the accuracy or completeness of electronic copies of this plan sheet.

This LOTB sheet was prepared in accordance with the Caltrans Soil & Rock Logging, Classification, & Presentation Manual (2010 Edition).

BENCH MARK

PM 118.88 1998 (Not Shown On Plan)
Fnd CT Alum Cap ¾" Rebar
21.89′ Rt "FNL4" Line Proposed Rte 395
Sta 65+86.09
N 2,430,583.40
E 6,834,824.18
Elev = 5048.61

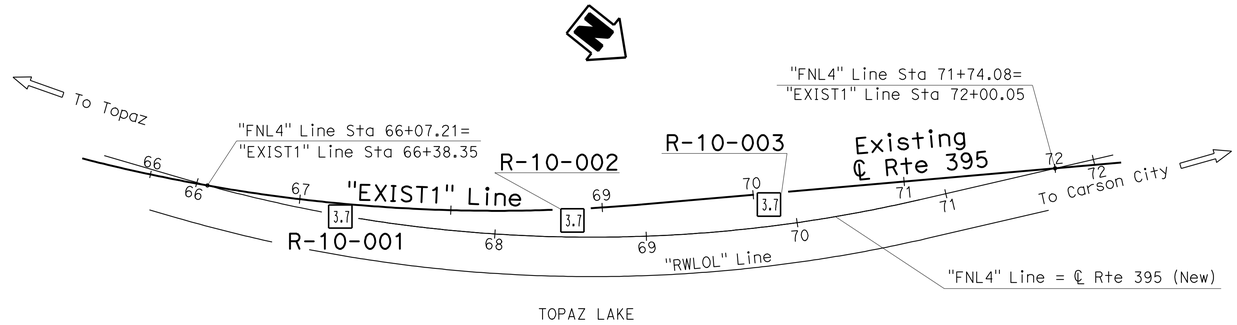

PLAN
1" = 50′

Note: No ground water encountered during field investigation.

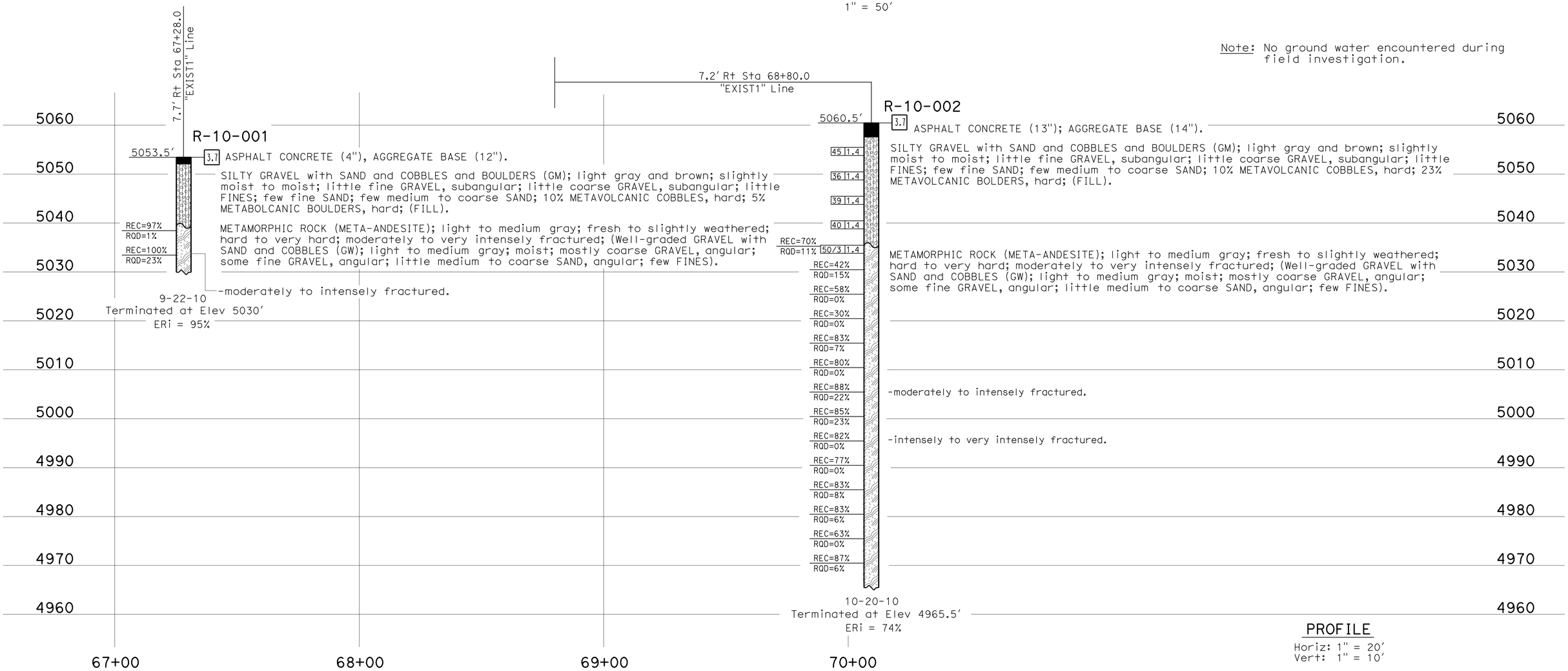

PROFILE
Horiz: 1" = 20′
Vert: 1" = 10′

ENGINEERING SERVICES	MATERIALS AND GEOTECHNICAL SERVICES	STATE OF CALIFORNIA DEPARTMENT OF TRANSPORTATION	DIVISION OF ENGINEERING SERVICES STRUCTURE DESIGN DESIGN BRANCH 9	BRIDGE NO. 47-E0002 POST MILE 118.7/119	RETAINING WALL A
FUNCTIONAL SUPERVISOR NAME: Q. Huang	DRAWN BY: W. Tang/C. Christian 06/11 CHECKED BY: B. Barnes	FIELD INVESTIGATION BY: B. Badeker/B. Bertucci			LOG OF TEST BORINGS 1 OF 5

OGS CIVIL LOG OF TEST BORINGS SHEET

ORIGINAL SCALE IN INCHES FOR REDUCED PLANS 0 1 2 3

UNIT: 3643
PROJECT NUMBER & PHASE: 0900000038 CONTRACT NO.: 09-237701

DISREGARD PRINTS BEARING EARLIER REVISION DATES

REVISION DATES 06-13-11 06-14-11

SHEET 15 OF 19

FILE => 47e0002-z-ltb_01.dgn

USERNAME => s124196 DATE PLOTTED => 15-AUG-2011 TIME PLOTTED => 09:02

DIST	COUNTY	ROUTE	POST MILES TOTAL PROJECT	SHEET No	TOTAL SHEETS
09	Mno	395	118.7/119.6	118	139

CERTIFIED ENGINEERING GEOLOGIST 6-14-11

8-8-11
PLANS APPROVAL DATE

PROFESSIONAL GEOLOGIST
Brandon Badeker
No. 2480
Exp. 1-31-2013
CERTIFIED ENGINEERING GEOLOGIST
STATE OF CALIFORNIA

The State of California or its officers or agents shall not be responsible for the accuracy or completeness of electronic copies of this plan sheet.

This LOTB sheet was prepared in accordance with the Caltrans Soil & Rock Logging, Classification, & Presentation Manual (2010 Edition).

FOR PLAN VIEW, SEE
"LOG OF TEST BORINGS 1 OF 5"

Note: No ground water encountered during field investigation.

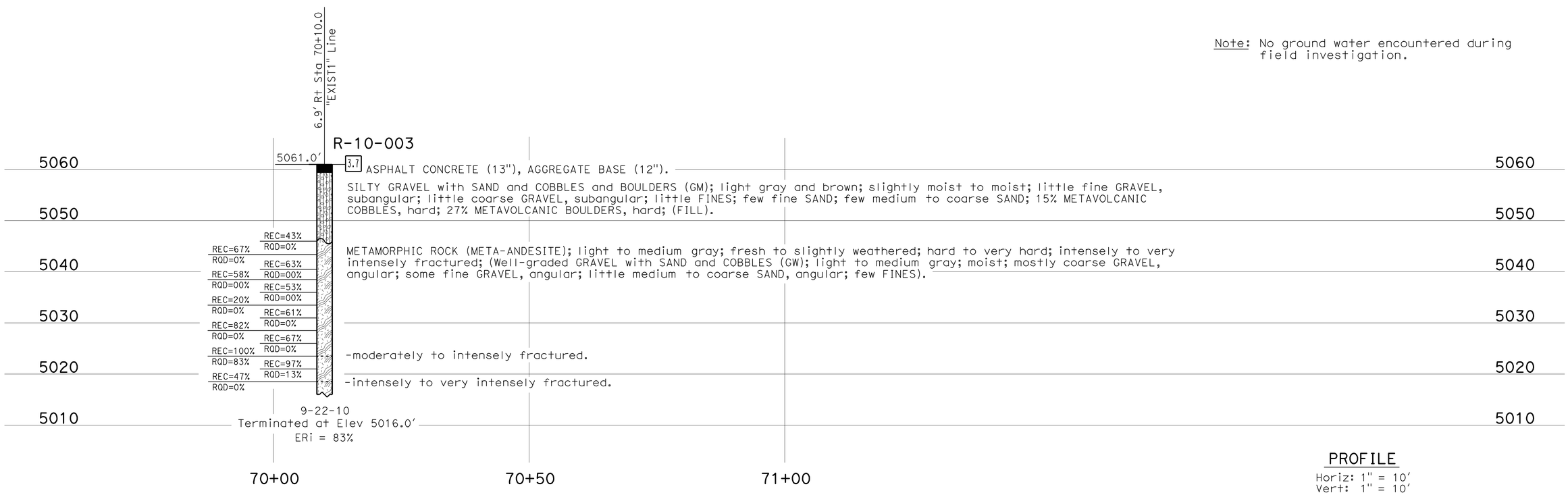

PROFILE
Horiz: 1" = 10'
Vert: 1" = 10'

ENGINEERING SERVICES	MATERIALS AND GEOTECHNICAL SERVICES	STATE OF CALIFORNIA DEPARTMENT OF TRANSPORTATION	DIVISION OF ENGINEERING SERVICES STRUCTURE DESIGN DESIGN BRANCH 9	BRIDGE NO. 47-E0002 POST MILE 118.7/119	RETAINING WALL A
FUNCTIONAL SUPERVISOR NAME: Q. Huang	DRAWN BY: W. Tang/C. Christian 06/11 CHECKED BY: B. Barnes	FIELD INVESTIGATION BY: B. Badeker/B. Bertucci			LOG OF TEST BORINGS 2 OF 5

OGS CIVIL LOG OF TEST BORINGS SHEET

ORIGINAL SCALE IN INCHES FOR REDUCED PLANS 0 1 2 3

UNIT: 3643
PROJECT NUMBER & PHASE: 0900000038 CONTRACT NO.: 09-237701

DISREGARD PRINTS BEARING EARLIER REVISION DATES → REVISION DATES 06-14-11 SHEET 16 OF 19

FILE => 47e0002-z-ltb_02.dgn

USERNAME => s124496 DATE PLOTTED => 15-AUG-2011 TIME PLOTTED => 09:02

DIST	COUNTY	ROUTE	POST MILES TOTAL PROJECT	SHEET No	TOTAL SHEETS
09	Mno	395	118.7/119.6	119	139

CERTIFIED ENGINEERING GEOLOGIST 6-14-11

8-8-11
PLANS APPROVAL DATE

PROFESSIONAL GEOLOGIST Brandon Badeker No. 2480 Exp. 1-31-2013 CERTIFIED ENGINEERING GEOLOGIST STATE OF CALIFORNIA

The State of California or its officers or agents shall not be responsible for the accuracy or completeness of electronic copies of this plan sheet.

REFERENCE: CALTRANS SOIL & ROCK LOGGING, CLASSIFICATION, AND PRESENTATION MANUAL (2010)

CEMENTATION

Description	Criteria
Weak	Crumbles or breaks with handling or little finger pressure.
Moderate	Crumbles or breaks with considerable finger pressure.
Strong	Will not crumble or break with finger pressure.

BOREHOLE IDENTIFICATION

Symbol	Hole Type	Description
Size	A	Auger Boring (hollow or solid stem bucket)
Size	R RW RC P	Rotary drilled boring (conventional) Rotary drilled with self-casing wire-line Rotary core with continuously-sampled, self-casing wire-line Rotary percussion boring (air)
Size	R	Rotary drilled diamond core
Size	HD HA	Hand driven (1-inch soil tube) Hand Auger
●	D	Dynamic Cone Penetration Boring
▲	CPT	Cone Penetration Test (ASTM D 5778)
⬚	O	Other (note on LOTB)

Note: Size in inches.

CONSISTENCY OF COHESIVE SOILS

Description	Shear Strength (tsf)	Pocket Penetrometer Measurement, PP, (tsf)	Torvane Measurement, TV, (tsf)	Vane Shear Measurement, VS, (tsf)
Very Soft	Less than 0.12	Less than 0.25	Less than 0.12	Less than 0.12
Soft	0.12 - 0.25	0.25 - 0.5	0.12 - 0.25	0.12 - 0.25
Medium Stiff	0.25 - 0.5	0.5 - 1	0.25 - 0.5	0.25 - 0.5
Stiff	0.5 - 1	1 - 2	0.5 - 1	0.5 - 1
Very Stiff	1 - 2	2 - 4	1 - 2	1 - 2
Hard	Greater than 2	Greater than 4	Greater than 2	Greater than 2

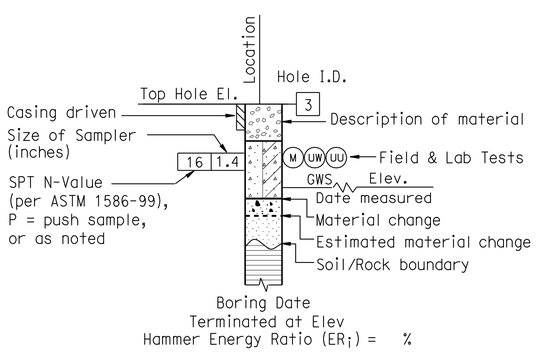

ROTARY BORING

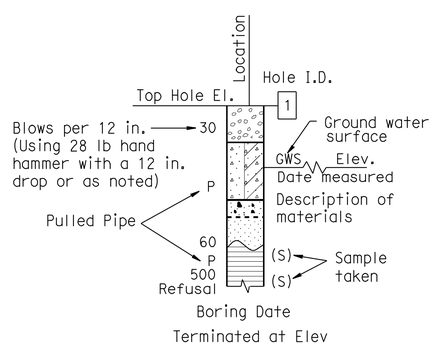

HAND BORING

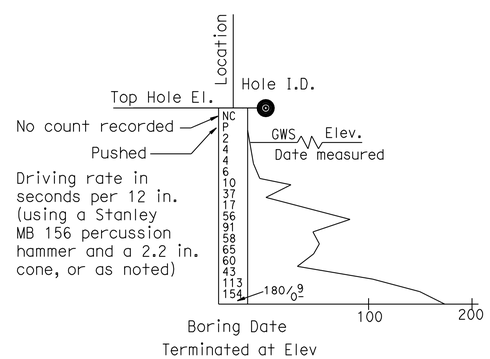

DYNAMIC CONE PENETRATION BORING

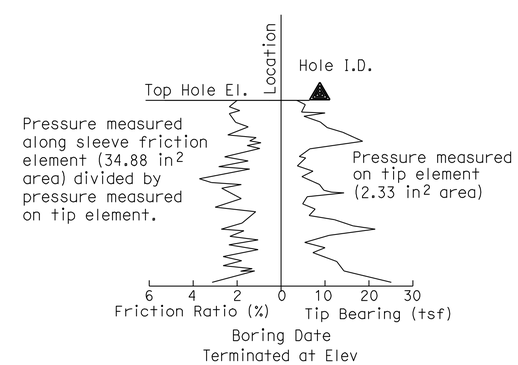

CONE PENETRATION TEST (CPT) BORING

ENGINEERING SERVICES	MATERIALS AND GEOTECHNICAL SERVICES	STATE OF CALIFORNIA DEPARTMENT OF TRANSPORTATION	DIVISION OF ENGINEERING SERVICES STRUCTURE DESIGN DESIGN BRANCH 9	BRIDGE NO. 47-E0002 POST MILE 118.7/119	RETAINING WALL A LOG OF TEST BORINGS 3 OF 5
	PREPARED BY: W. Tang 06/11				

GS LOTB SOIL LEGEND

ORIGINAL SCALE IN INCHES FOR REDUCED PLANS 0 1 2 3

UNIT: 3643
PROJECT NUMBER & PHASE: 0900000038
CONTRACT NO.: 09-237701

DISREGARD PRINTS BEARING EARLIER REVISION DATES

REVISION DATES

SHEET 17 OF 19

FILE => 47e0002-z-ltb_03.dgn

USERNAME => s124496 DATE PLOTTED => 15-AUG-2011 TIME PLOTTED => 09:02

REFERENCE: CALTRANS SOIL & ROCK LOGGING, CLASSIFICATION, AND PRESENTATION MANUAL (2010)

DIST	COUNTY	ROUTE	POST MILES TOTAL PROJECT	SHEET No	TOTAL SHEETS
09	Mno	395	118.7/119.6	120	139

CERTIFIED ENGINEERING GEOLOGIST 6-14-11

8-8-11
PLANS APPROVAL DATE

PROFESSIONAL GEOLOGIST Brandon Badeker No. 2480 Exp. 1-31-2013 CERTIFIED ENGINEERING GEOLOGIST STATE OF CALIFORNIA

The State of California or its officers or agents shall not be responsible for the accuracy or completeness of electronic copies of this plan sheet.

GROUP SYMBOLS AND NAMES

Graphic/Symbol	Group Names	Graphic/Symbol	Group Names
GW	Well-graded GRAVEL Well-graded GRAVEL with SAND	CL	Lean CLAY Lean CLAY with SAND Lean CLAY with GRAVEL SANDY lean CLAY SANDY lean CLAY with GRAVEL GRAVELLY lean CLAY GRAVELLY lean CLAY with SAND
GP	Poorly-graded GRAVEL Poorly-graded GRAVEL with SAND		
GW-GM	Well-graded GRAVEL with SILT Well-graded GRAVEL with SILT and SAND	CL-ML	SILTY CLAY SILTY CLAY with SAND SILTY CLAY with GRAVEL SANDY SILTY CLAY SANDY SILTY CLAY with GRAVEL GRAVELLY SILTY CLAY GRAVELLY SILTY CLAY with SAND
GW-GC	Well-graded GRAVEL with CLAY (or SILTY CLAY) Well-graded GRAVEL with CLAY and SAND (or SILTY CLAY and SAND)		
GP-GM	Poorly-graded GRAVEL with SILT Poorly-graded GRAVEL with SILT and SAND	ML	SILT SILT with SAND SILT with GRAVEL SANDY SILT SANDY SILT with GRAVEL GRAVELLY SILT GRAVELLY SILT with SAND
GP-GC	Poorly-graded GRAVEL with CLAY (or SILTY CLAY) Poorly-graded GRAVEL with CLAY and SAND (or SILTY CLAY and SAND)		
GM	SILTY GRAVEL SILTY GRAVEL with SAND	OL	ORGANIC lean CLAY ORGANIC lean CLAY with SAND ORGANIC lean CLAY with GRAVEL SANDY ORGANIC lean CLAY SANDY ORGANIC lean CLAY with GRAVEL GRAVELLY ORGANIC lean CLAY GRAVELLY ORGANIC lean CLAY with SAND
GC	CLAYEY GRAVEL CLAYEY GRAVEL with SAND		
GC-GM	SILTY, CLAYEY GRAVEL SILTY, CLAYEY GRAVEL with SAND	OL	ORGANIC SILT ORGANIC SILT with SAND ORGANIC SILT with GRAVEL SANDY ORGANIC SILT SANDY ORGANIC SILT with GRAVEL GRAVELLY ORGANIC SILT GRAVELLY ORGANIC SILT with SAND
SW	Well-graded SAND Well-graded SAND with GRAVEL		
SP	Poorly-graded SAND Poorly-graded SAND with GRAVEL	CH	Fat CLAY Fat CLAY with SAND Fat CLAY with GRAVEL SANDY fat CLAY SANDY fat CLAY with GRAVEL GRAVELLY fat CLAY GRAVELLY fat CLAY with SAND
SW-SM	Well-graded SAND with SILT Well-graded SAND with SILT and GRAVEL		
SW-SC	Well-graded SAND with CLAY (or SILTY CLAY) Well-graded SAND with CLAY and GRAVEL (or SILTY CLAY and GRAVEL)	MH	Elastic SILT Elastic SILT with SAND Elastic SILT with GRAVEL SANDY elastic SILT SANDY elastic SILT with GRAVEL GRAVELLY elastic SILT GRAVELLY elastic SILT with SAND
SP-SM	Poorly-graded SAND with SILT Poorly-graded SAND with SILT and GRAVEL		
SP-SC	Poorly-graded SAND with CLAY (or SILTY CLAY) Poorly-graded SAND with CLAY and GRAVEL (or SILTY CLAY and GRAVEL)	OH	ORGANIC fat CLAY ORGANIC fat CLAY with SAND ORGANIC fat CLAY with GRAVEL SANDY ORGANIC fat CLAY SANDY ORGANIC fat CLAY with GRAVEL GRAVELLY ORGANIC fat CLAY GRAVELLY ORGANIC fat CLAY with SAND
SM	SILTY SAND SILTY SAND with GRAVEL		
SC	CLAYEY SAND CLAYEY SAND with GRAVEL	OH	ORGANIC elastic SILT ORGANIC elastic SILT with SAND ORGANIC elastic SILT with GRAVEL SANDY ORGANIC elastic SILT SANDY ORGANIC elastic SILT with GRAVEL GRAVELLY ORGANIC elastic SILT GRAVELLY ORGANIC elastic SILT with SAND
SC-SM	SILTY, CLAYEY SAND SILTY, CLAYEY SAND with GRAVEL		
PT	PEAT	OL/OH	ORGANIC SOIL ORGANIC SOIL with SAND ORGANIC SOIL with GRAVEL SANDY ORGANIC SOIL SANDY ORGANIC SOIL with GRAVEL GRAVELLY ORGANIC SOIL GRAVELLY ORGANIC SOIL with SAND
	COBBLES COBBLES and BOULDERS BOULDERS		

FIELD AND LABORATORY TESTING

- (C) Consolidation (ASTM D 2435)
- (CL) Collapse Potential (ASTM D 5333)
- (CP) Compaction Curve (CTM 216)
- (CR) Corrosivity Testing (CTM 643, CTM 422, CTM 417)
- (CU) Consolidated Undrained Triaxial (ASTM D 4767)
- (DS) Direct Shear (ASTM D 3080)
- (EI) Expansion Index (ASTM D 4829)
- (M) Moisture Content (ASTM D 2216)
- (OC) Organic Content-% (ASTM D 2974)
- (P) Permeability (CTM 220)
- (PA) Particle Size Analysis (ASTM D 422)
- (PI) Plasticity Index (AASHTO T 90) Liquid Limit (AASHTO T 89)
- (PL) Point Load Index (ASTM D 5731)
- (PM) Pressure Meter
- (R) R-Value (CTM 301)
- (SE) Sand Equivalent (CTM 217)
- (SG) Specific Gravity (AASHTO T 100)
- (SL) Shrinkage Limit (ASTM D 427)
- (SW) Swell Potential (ASTM D 4546)
- (UC) Unconfined Compression-Soil (ASTM D 2166) Unconfined Compression-Rock (ASTM D 2938)
- (UU) Unconsolidated Undrained Triaxial (ASTM D 2850)
- (UW) Unit Weight (ASTM D 4767)

APPARENT DENSITY OF COHESIONLESS SOILS

Description	SPT N_{60} (Blows / 12 in.)
Very Loose	0 - 5
Loose	5 - 10
Medium Dense	10 - 30
Dense	30 - 50
Very Dense	Greater than 50

MOISTURE

Description	Criteria
Dry	No discernable moisture
Moist	Moisture present, but no free water
Wet	Visible free water

PERCENT OR PROPORTION OF SOILS

Description	Criteria
Trace	Particles are present but estimated to be less than 5%
Few	5% - 10%
Little	15% - 25%
Some	30% - 45%
Mostly	50% - 100%

PARTICLE SIZE

Description		Size (in.)
Boulder		Greater than 12
Cobble		3 - 12
Gravel	Coarse	3/4 - 3
	Fine	1/5 - 3/4
Sand	Coarse	1/16 - 1/5
	Medium	1/64 - 1/16
	Fine	1/300 - 1/64
Silt and Clay		Less than 1/300

ENGINEERING SERVICES

MATERIALS AND GEOTECHNICAL SERVICES

PREPARED BY: W. Tang 06/11

STATE OF CALIFORNIA DEPARTMENT OF TRANSPORTATION

DIVISION OF ENGINEERING SERVICES STRUCTURE DESIGN DESIGN BRANCH 9

BRIDGE NO. 47-E0002

POST MILE 118.7/119

RETAINING WALL A

LOG OF TEST BORINGS 4 OF 5

GS LOTB SOIL LEGEND

ORIGINAL SCALE IN INCHES FOR REDUCED PLANS 0 1 2 3

UNIT: 3643
PROJECT NUMBER & PHASE: 0900000038

CONTRACT NO.: 09-237701

DISREGARD PRINTS BEARING EARLIER REVISION DATES

REVISION DATES

SHEET 18 OF 19

FILE => 47e0002-z-ltb_04.dgn

USERNAME => s124496 DATE PLOTTED => 15-AUG-2011 TIME PLOTTED => 09:02

REFERENCE: CALTRANS SOIL & ROCK LOGGING, CLASSIFICATION, AND PRESENTATION MANUAL (2010)

DIST	COUNTY	ROUTE	POST MILES TOTAL PROJECT	SHEET No	TOTAL SHEETS
09	Mno	395	118.7/119.6	121	139

CERTIFIED ENGINEERING GEOLOGIST 6-14-11

8-8-11
PLANS APPROVAL DATE

PROFESSIONAL GEOLOGIST Brandon Badeker No. 2480 Exp. 1-31-2013 CERTIFIED ENGINEERING GEOLOGIST STATE OF CALIFORNIA

The State of California or its officers or agents shall not be responsible for the accuracy or completeness of electronic copies of this plan sheet.

PERCENT CORE RECOVERY (REC) & ROCK QUALITY DESIGNATION (RQD)

$$REC = \frac{\sum \text{Length of the recovered core pieces (in.)}}{\text{Total length of core run (in.)}} \times 100\%$$

$$RQD = \frac{\sum \text{Length of intact core pieces} \geq 4 \text{ in.}}{\text{Total length of core run (in.)}} \times 100\%$$

RQD* Indicates soundness criteria not met.

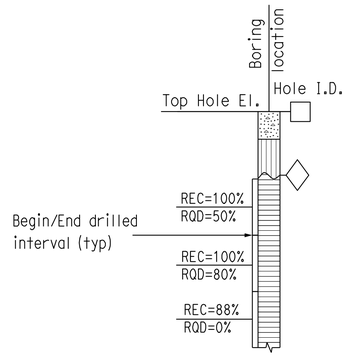

BEDDING SPACING

Description	Thickness / Spacing
Massive	Greater than 10 ft
Very Thickly Bedded	3 ft - 10 ft
Thickly Bedded	1 ft - 3 ft
Moderately Bedded	4 in. - 1 ft
Thinly Bedded	1 in. - 4 in.
Very Thinly Bedded	1/4 in. - 1 in.
Laminated	Less than 1/4 in.

LEGEND OF ROCK MATERIALS

- IGNEOUS ROCK
- SEDIMENTARY ROCK
- METAMORPHIC ROCK

ROCK HARDNESS

Description	Criteria
Extremely Hard	Cannot be scratched with a pocketknife or sharp pick. Can only be chipped with repeated heavy hammer blows.
Very Hard	Cannot be scratched with a pocketknife or sharp pick. Breaks with repeated heavy hammer blows.
Hard	Can be scratched with a pocketknife or sharp pick with difficulty (heavy pressure). Breaks with heavy hammer blows.
Moderately Hard	Can be scratched with pocketknife or sharp pick with light or moderate pressure. Breaks with moderate hammer blows.
Moderately Soft	Can be grooved 1/16 in. deep with a pocketknife or sharp pick with moderate or heavy pressure. Breaks with light hammer blow or heavy manual pressure.
Soft	Can be grooved or gouged easily by a pocketknife or sharp pick with light pressure, can be scratched with fingernail. Breaks with light to moderate manual pressure.
Very Soft	Can be readily indented, grooved or gouged with fingernail, or carved with a pocketknife. Breaks with light manual pressure.

FRACTURE DENSITY

Description	Observed Fracture Density
Unfractured	No fractures.
Very Slightly Fractured	Core lengths greater than 3 ft.
Slightly Fractured	Core lengths mostly from 1 to 3 ft.
Moderately Fractured	Core lengths mostly from 4 in. to 1 ft.
Intensely Fractured	Core lengths mostly from 1 to 4 in.
Very Intensely Fractured	Mostly chips and fragments.

WEATHERING DESCRIPTORS FOR INTACT ROCK

Description	Diagnostic Features					General Characteristics
	Chemical Weathering-Discoloration and/or Oxidation		Mechanical Weathering-Grain Boundary Conditions (Disaggregation) Primarily for Granitics and Some Coarse-Grained Sediments	Texture and Leaching		
	Body of Rock	Fracture Surfaces		Texture	Leaching	
Fresh	No discoloration, not oxidized.	No discoloration or oxidation.	No separation, intact (tight).	No change	No leaching	Hammer rings when crystalline rocks are struck.
Slightly Weathered	Discoloration or oxidation is limited to surface of, or short distance from, fractures; some feldspar crystals are dull.	Minor to complete discoloration or oxidation of most surfaces.	No visible separation, intact (tight).	Preserved	Minor leaching of some soluble minerals.	Hammer rings when crystalline rocks are struck. Body of rock not weakened.
Moderately Weathered	Discoloration or oxidation extends from fractures usually throughout; Fe-Mg minerals are "rusty," feldspar crystals are "cloudy."	All fracture surfaces are discolored or oxidized.	Partial separation of boundaries visible.	Generally preserved	Soluble minerals may be mostly leached.	Hammer does not ring when rock is struck. Body of rock is slightly weakened.
Intensely Weathered	Discoloration or oxidation throughout; all feldspars and Fe-Mg minerals are altered to clay to some extent; or chemical alteration produces in-situ disaggregation, see grain boundary conditions.	All fracture surfaces are discolored or oxidized, surfaces friable.	Partial separation, rock is friable; in semiarid conditions granitics are disaggregated.	Texture altered by chemical disintegration (hydration, argillation).	Leaching of soluble minerals may be complete.	Dull sound when struck with hammer, usually can be broken with moderate to heavy manual pressure or by light hammer blow without reference to planes of weakness such as incipient or hairline fractures, or veinlets. Rock is significantly weakened.
Decomposed	Discolored or oxidized throughout, but resistant minerals such as quartz may be unaltered; all feldspars and Fe-Mg minerals are completely altered to clay.		Complete separation of grain boundaries (disaggregated).	Resembles a soil, partial or complete remnant rock structure may be preserved; leaching of soluble minerals usually complete.		Can be granulated by hand. Resistant minerals such as quartz may be present as "stringers" or "dikes."

ENGINEERING SERVICES

MATERIALS AND GEOTECHNICAL SERVICES

PREPARED BY: W. Tang 06/11

STATE OF CALIFORNIA DEPARTMENT OF TRANSPORTATION

DIVISION OF ENGINEERING SERVICES STRUCTURE DESIGN DESIGN BRANCH 9

BRIDGE NO. 47-E0002

POST MILE 118.7/119

RETAINING WALL A

LOG OF TEST BORINGS 5 OF 5

GS LOTB SOIL LEGEND

ORIGINAL SCALE IN INCHES FOR REDUCED PLANS 0 1 2 3

UNIT: 3643
PROJECT NUMBER & PHASE: 0900000038

CONTRACT NO.: 09-237701

DISREGARD PRINTS BEARING EARLIER REVISION DATES

REVISION DATES

SHEET 19 OF 19

FILE => 47e0002-z-ltb_05.dgn

USERNAME => s124496 DATE PLOTTED => 15-AUG-2011 TIME PLOTTED => 09:02

DIST	COUNTY	ROUTE	POST MILES TOTAL PROJECT	SHEET No.	TOTAL SHEETS
09	Mno	395	118.7/119.6	122	139

Pete W. Norboe 6-23-11
REGISTERED CIVIL ENGINEER DATE

8-8-11
PLANS APPROVAL DATE

REGISTERED PROFESSIONAL ENGINEER
Pete Norboe
No. C57519
Exp. 12-31-11
CIVIL
STATE OF CALIFORNIA

The State of California or its officers or agents shall not be responsible for the accuracy or completeness of electronic copies of this plan sheet.

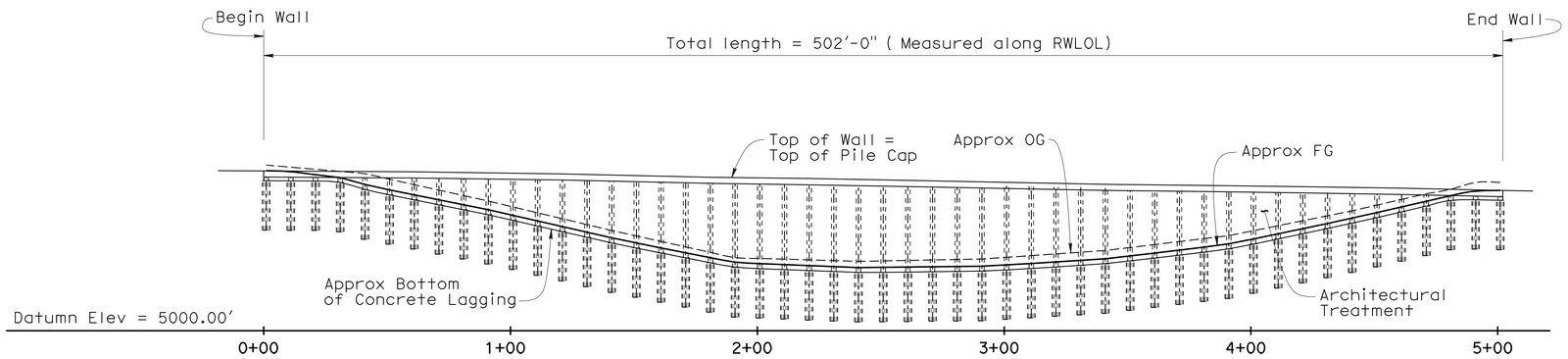

NOTE: Cable railing not shown

DEVELOPED ELEVATION

1" = 30'

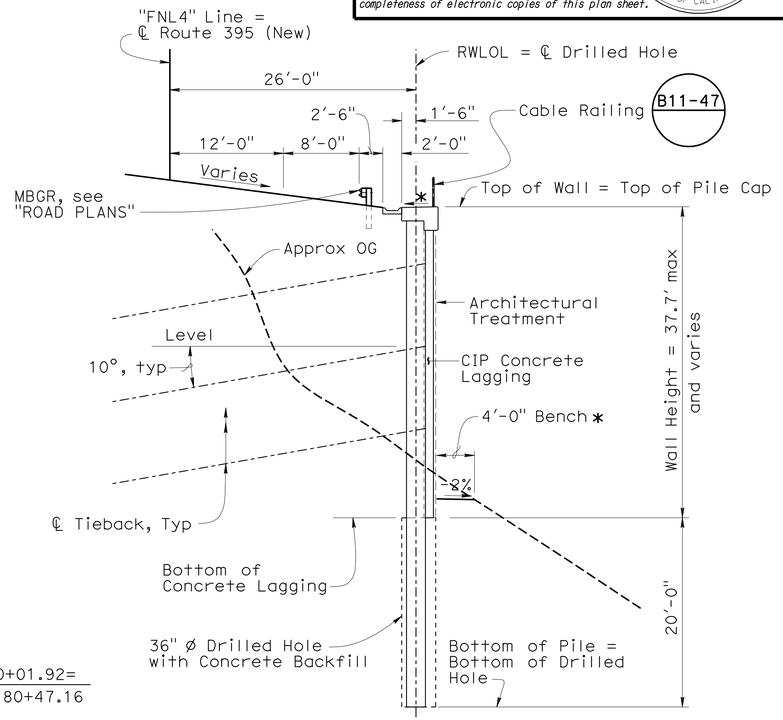

TYPICAL SECTION

1/8" = 1'-0"

NOTE:
* Slope to drain

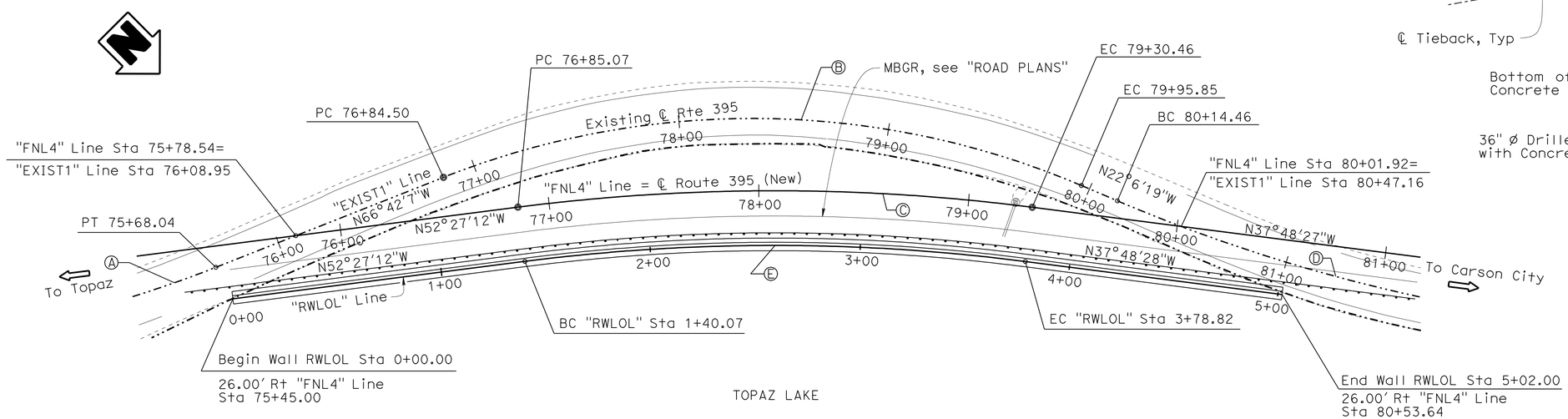

PLAN

1" = 30'

CURVE DATA

No.	R	Δ	T	L
Ⓐ	550.00	22°18'15"	108.43	214.10
Ⓑ	400.00	44°35'48"	164.04	311.34
Ⓒ	960.00	14°38'45"	123.37	245.39
Ⓓ	800.00	19°20'36"	136.34	270.08
Ⓔ	934.00	14°38'44"	120.03	238.75

QUANTITIES

STRUCTURE EXCAVATION (SOLDIER PILE WALL)	295	CY
STRUCTURE BACKFILL (SOLDIER PILE WALL)	450	CY
CONCRETE BACKFILL (SOLDIER PILE WALL)	116	CY
36" DRILLED HOLE	1,320	LF
PRECAST CONCRETE SOLDIER PILE (24" X 24")	2,144	LF
TIEBACK ANCHOR	97	EA
CONCRETE LAGGING	11,200	SQFT
STRUCTURAL CONCRETE, BARRIER SLAB	112	CY
ARCHITECTURAL TEXTURE (RETANGULAR CUT STONE)	11,200	SQFT
PREPARE AND STAIN CONCRETE	11,200	SQFT
MINOR CONCRETE (GUTTER)	17	CY
CABLE RAILING	502	LF

Gordon Danke
DESIGN ENGINEER

	BY	CHECKED
DESIGN	Pete Norboe	Glenn Matthews
DETAILS	David Elliott	Glenn Matthews
QUANTITIES	Pete Norboe	Glenn Matthews

LOAD & RESISTANCE FACTOR DESIGN — LIVE LOADING: HL93 W/"LOW-BOY"; PERMIT DESIGN VEHICLE
LAYOUT — BY P. Norboe — CHECKED G. Matthews
SPECIFICATIONS — BY T. Geerts — PLANS AND SPECS COMPARED P. Norboe

ORIGINAL SCALE IN INCHES FOR REDUCED PLANS 0 1 2 3

STATE OF CALIFORNIA
DEPARTMENT OF TRANSPORTATION

DIVISION OF ENGINEERING SERVICES
STRUCTURE DESIGN
DESIGN BRANCH 9

BRIDGE NO. 47E0003
POST MILE 118.7/119.0

RETAINING WALL B
GENERAL PLAN

UNIT: 3594
PROJECT NUMBER & PHASE: 09000000381
CONTRACT NO.: 09-237701

DISREGARD PRINTS BEARING EARLIER REVISION DATES
REVISION DATES: 6-14-11 6-23-11 4-19-11
SHEET 1 OF 18

USERNAME => s124196 DATE PLOTTED => 15-AUG-2011 TIME PLOTTED => 09:02

DIST	COUNTY	ROUTE	POST MILES TOTAL PROJECT	SHEET No.	TOTAL SHEETS
09	Mno	395	118.7/119.6	123	139

Peter W. Norboe 6-23-11
REGISTERED CIVIL ENGINEER DATE

8-8-11
PLANS APPROVAL DATE

REGISTERED PROFESSIONAL ENGINEER
Pete Norboe
No. C57519
Exp. 12-31-11
CIVIL
STATE OF CALIFORNIA

The State of California or its officers or agents shall not be responsible for the accuracy or completeness of electronic copies of this plan sheet.

GENERAL NOTES
LOAD AND RESISTANCE FACTOR DESIGN

DESIGN:
AASHTO LRFD Bridge Design Specifications, 4th edition with Interims and California Amendments

SEISMIC DESIGN:
Caltrans Seismic Design Criteria (SDC), Version 1.4 dated June 2006

LIVE LOADING:
HL93 and permit design load.

CONCRETE:
fy = 60 ksi
f'c = 3.6 ksi (CIP Concrete Lagging & Pile Cap)
f'c = 5.0 ksi (Precast pile)
n = 8

STRUCTURAL STEEL:
fy = ASTM A709 Grade 50

SOIL PARAMETERS:
(For determination of design lateral earth pressures)
$\phi = 32°$ $\gamma_m = 130$ pcf

TIMBER: (If used as a temporary lagging)
Treated Douglas Fir, Grade No. 1 or better
Lagging shall be full sawn

TIEBACKS:
Strand tendon - ASTM Designation: A416
T = Design force per tieback, see "WALL DETAILS NO. 5" and "WALL DETAILS NO. 6" sheets.

fpu = Minimum tensile strength of prestressing steel, ksi

As(min) = Minimum cross sectional area of prestressing steel in tieback tendon, $inch^2$

$$As(min) = \frac{1.5\ T}{0.75\ fpu}$$

STANDARD PLANS DATED MAY 2006

A10A ACRONYMS AND ABBREVIATIONS (A-L) (SHEET 1 OF 2)
A10B ACRONYMS AND ABBREVIATIONS (M-Z) (SHEET 2 OF 2)
A10C SYMBOLS (SHEET 1 OF 2)
A10D SYMBOLS (SHEET 2 OF 2)
A62C LIMITS OF PAYMENT FOR EXCAVATION AND BACKFILL BRIDGE
B0-3 BRIDGE DETAILS
B3-9 RETAINING WALL DETAILS NO. 2
B11-47 CABLE RAILING

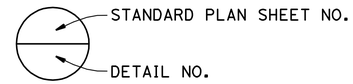

INDEX TO PLANS

1. General Plan
2. Index To Plans
3. Structure Plans No. 1
4. Structure Plans No. 2
5. Foundation Plan
6. Typical Section
7. Wall Details No. 1
8. Wall Details No. 2
9. Wall Details No. 3
10. Wall Details No. 4
11. Wall Details No. 5
12. Wall Details No. 6
13. Architectural Treatment
14. Log of Test Borings 1 of 5
15. Log of Test Borings 2 of 5
16. Log of Test Borings 3 of 5
17. Log of Test Borings 4 of 5
18. Log of Test Borings 5 of 5

	BY	CHECKED
DESIGN	P. Norboe	G. Matthews
DETAILS	D. Elliott	G. Matthews
QUANTITIES	P. Norboe	G. Matthews

STATE OF CALIFORNIA
DEPARTMENT OF TRANSPORTATION

DIVISION OF ENGINEERING SERVICES
STRUCTURE DESIGN
DESIGN BRANCH 9

BRIDGE NO. 47E0003
POST MILE 118.7/119.0

RETAINING WALL B
INDEX TO PLANS

STRUCTURES DESIGN DETAIL SHEET (ENGLISH) (REV. 09-01-10)

ORIGINAL SCALE IN INCHES FOR REDUCED PLANS 0 1 2 3

UNIT: 3594
PROJECT NUMBER & PHASE: 09000000381 CONTRACT NO.: 09-237701

DISREGARD PRINTS BEARING EARLIER REVISION DATES

REVISION DATES 6-14-11 1-28-11 3-23-11

SHEET 2 OF 18

FILE => 47e0003-a-itp.dgn

USERNAME => s124496 DATE PLOTTED => 15-AUG-2011 TIME PLOTTED => 09:02

DIST	COUNTY	ROUTE	POST MILES TOTAL PROJECT	SHEET No.	TOTAL SHEETS
09	Mno	395	118.7/119.6	124	139

Pete W. Norboe 6-23-11
REGISTERED CIVIL ENGINEER DATE

8-8-11
PLANS APPROVAL DATE

REGISTERED PROFESSIONAL ENGINEER
Pete Norboe
No. C57519
Exp. 12-31-11
CIVIL
STATE OF CALIFORNIA

The State of California or its officers or agents shall not be responsible for the accuracy or completeness of electronic copies of this plan sheet.

NOTES:

1. Vertical Expansion Joints continue from Top of Pile Cap to Bottom of Concrete Lagging.
2. For Vertical Expansion Joints details, see B0-3 / 3-4

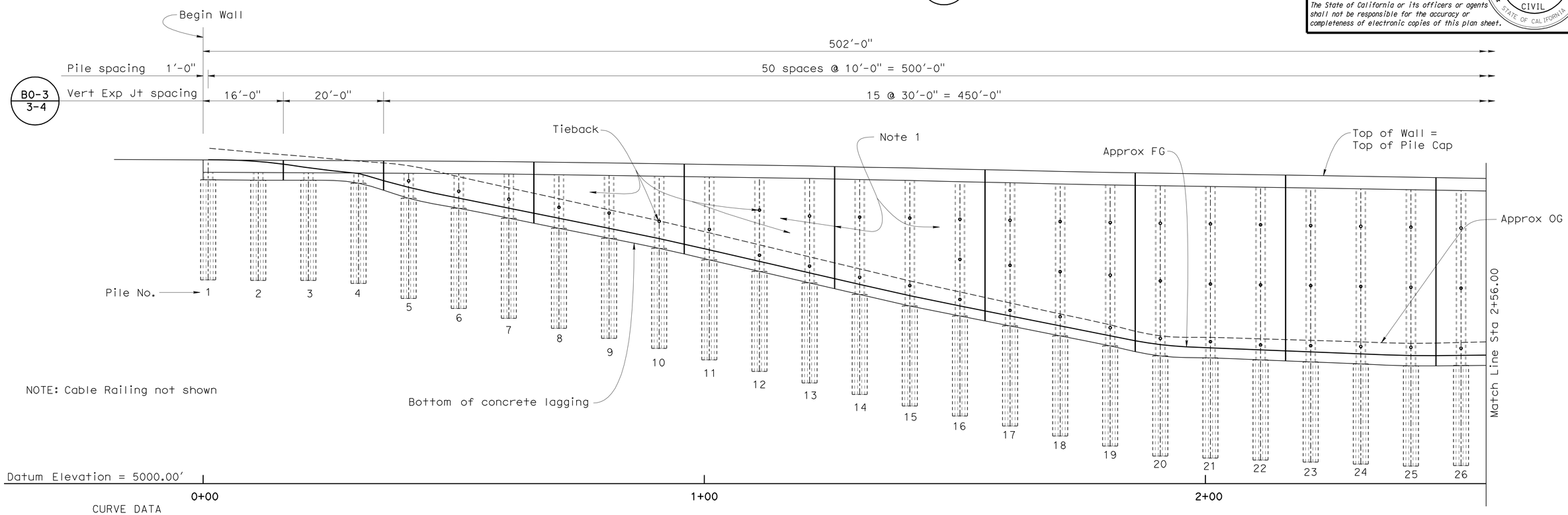

NOTE: Cable Railing not shown

CURVE DATA

No.	R	Δ	T	L
Ⓐ	500.00	22°18'15"	108.43	214.10
Ⓑ	400.00	44°35'48"	164.04	311.34
Ⓒ	960.00	14°38'45"	123.37	245.39
Ⓓ	800.00	19°20'36"	136.34	270.08
Ⓔ	934.00	14°38'44"	120.03	238.75

DEVELOPED ELEVATION

1" = 10'

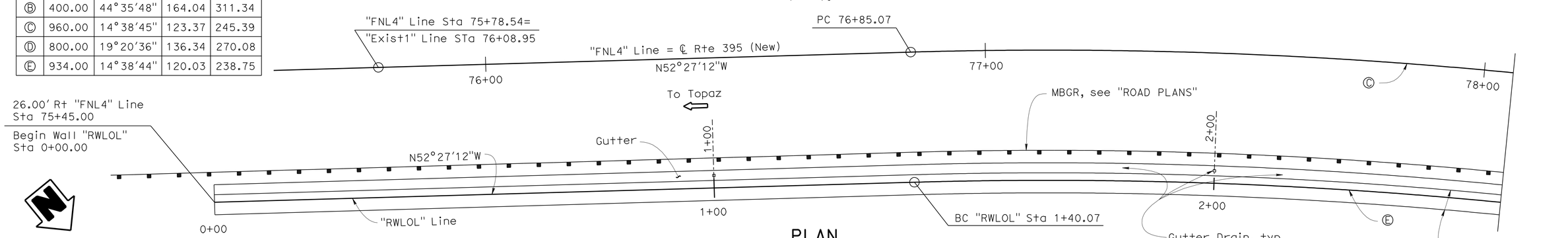

PLAN

1" = 10'

LEGEND:

- ▫ Denotes gutter drain and outlet location
- ∘ Denotes approx tieback location

	BY	CHECKED
DESIGN	P. Norboe	G. Matthews
DETAILS	D. Elliott	G. Matthews
QUANTITIES	P. Norboe	G. Matthews

STATE OF CALIFORNIA
DEPARTMENT OF TRANSPORTATION

DIVISION OF ENGINEERING SERVICES
STRUCTURE DESIGN
DESIGN BRANCH 9

BRIDGE NO. 47E0003
POST MILE 118.7/119.0

RETAINING WALL B
STRUCTURE PLAN NO. 1

STRUCTURES DESIGN DETAIL SHEET (ENGLISH) (REV. 09-01-10)

ORIGINAL SCALE IN INCHES FOR REDUCED PLANS 0 1 2 3

UNIT: 3594
PROJECT NUMBER & PHASE: 09000000381
CONTRACT NO.: 09-237701

DISREGARD PRINTS BEARING EARLIER REVISION DATES

REVISION DATES: 5-13-11 6-14-11 4-19-11

SHEET 3 OF 18

FILE => 47e0003-c-sp01.dgn

USERNAME => s124496 DATE PLOTTED => 15-AUG-2011 TIME PLOTTED => 09:03

DIST	COUNTY	ROUTE	POST MILES TOTAL PROJECT	SHEET No.	TOTAL SHEETS
09	Mno	395	118.7/119.6	125	139

Pete W. Norboe 6-23-11
REGISTERED CIVIL ENGINEER DATE

8-8-11
PLANS APPROVAL DATE

REGISTERED PROFESSIONAL ENGINEER
Pete Norboe
No. C57519
Exp. 12-31-11
CIVIL
STATE OF CALIFORNIA

The State of California or its officers or agents shall not be responsible for the accuracy or completeness of electronic copies of this plan sheet.

NOTES:

1. Vertical Expansion Joints continue from Top of Pile Cap to Bottom of Concrete Lagging.
2. For Vertical Expansion Joints details, see B0-3 / 3-4

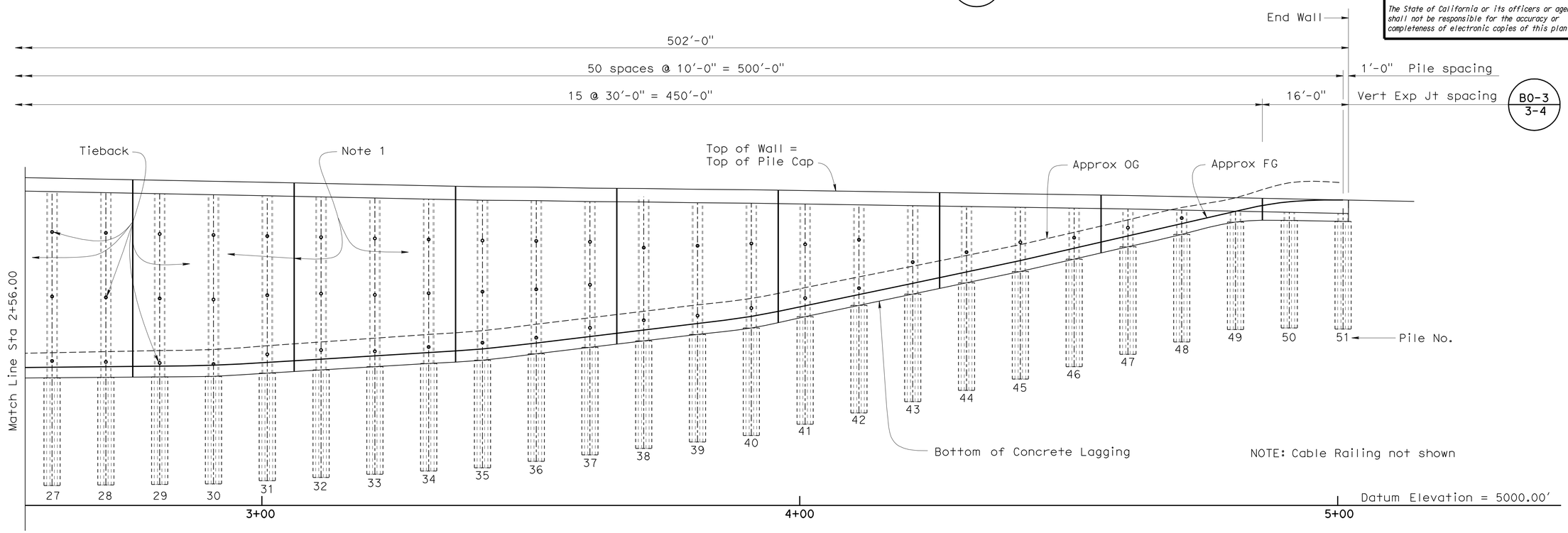

DEVELOPED ELEVATION

1" = 10'

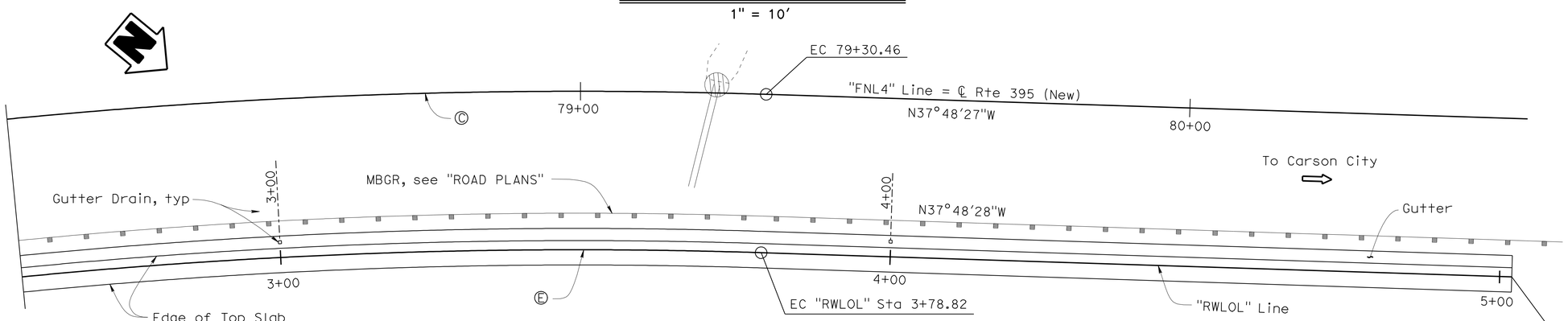

PLAN

1" = 10'

CURVE DATA

No.	R	Δ	T	L
Ⓐ	500.00	22°18'15"	108.43	214.10
Ⓑ	400.00	44°35'48"	164.04	311.34
Ⓒ	960.00	14°38'45"	123.37	245.39
Ⓓ	800.00	19°20'36"	136.34	270.08
Ⓔ	934.00	14°38'44"	120.03	238.75

LEGEND:

- ▫ Denotes gutter drain and outlet location
- ∘ Denotes approx tieback location

	BY	CHECKED
DESIGN	P. Norboe	G. Matthews
DETAILS	D. Elliott	G. Matthews
QUANTITIES	P. Norboe	G. Matthews

STATE OF CALIFORNIA
DEPARTMENT OF TRANSPORTATION

DIVISION OF ENGINEERING SERVICES
STRUCTURE DESIGN
DESIGN BRANCH 9

BRIDGE NO. 47E0003
POST MILE 118.7/119.0

RETAINING WALL B
STRUCTURE PLAN NO. 2

STRUCTURES DESIGN DETAIL SHEET (ENGLISH) (REV. 09-01-10)

ORIGINAL SCALE IN INCHES FOR REDUCED PLANS 0 1 2 3

UNIT: 3594
PROJECT NUMBER & PHASE: 09000000381
CONTRACT NO.: 09-237701

DISREGARD PRINTS BEARING EARLIER REVISION DATES

REVISION DATES: 6-14-11 | 5-26-11 | 5-27-11

SHEET 4 OF 18

FILE => 47e0003-c-sp02.dgn

USERNAME => s124496 DATE PLOTTED => 15-AUG-2011 TIME PLOTTED => 09:03

DIST	COUNTY	ROUTE	POST MILES TOTAL PROJECT	SHEET No.	TOTAL SHEETS
09	Mno	395	118.7/119.6	126	139

Peter W. Norboe 6-23-11
REGISTERED CIVIL ENGINEER DATE

8-8-11
PLANS APPROVAL DATE

REGISTERED PROFESSIONAL ENGINEER
Peter Norboe
No. C57519
Exp. 12-31-2011
CIVIL
STATE OF CALIFORNIA

The State of California or its officers or agents shall not be responsible for the accuracy or completeness of electronic copies of this plan sheet.

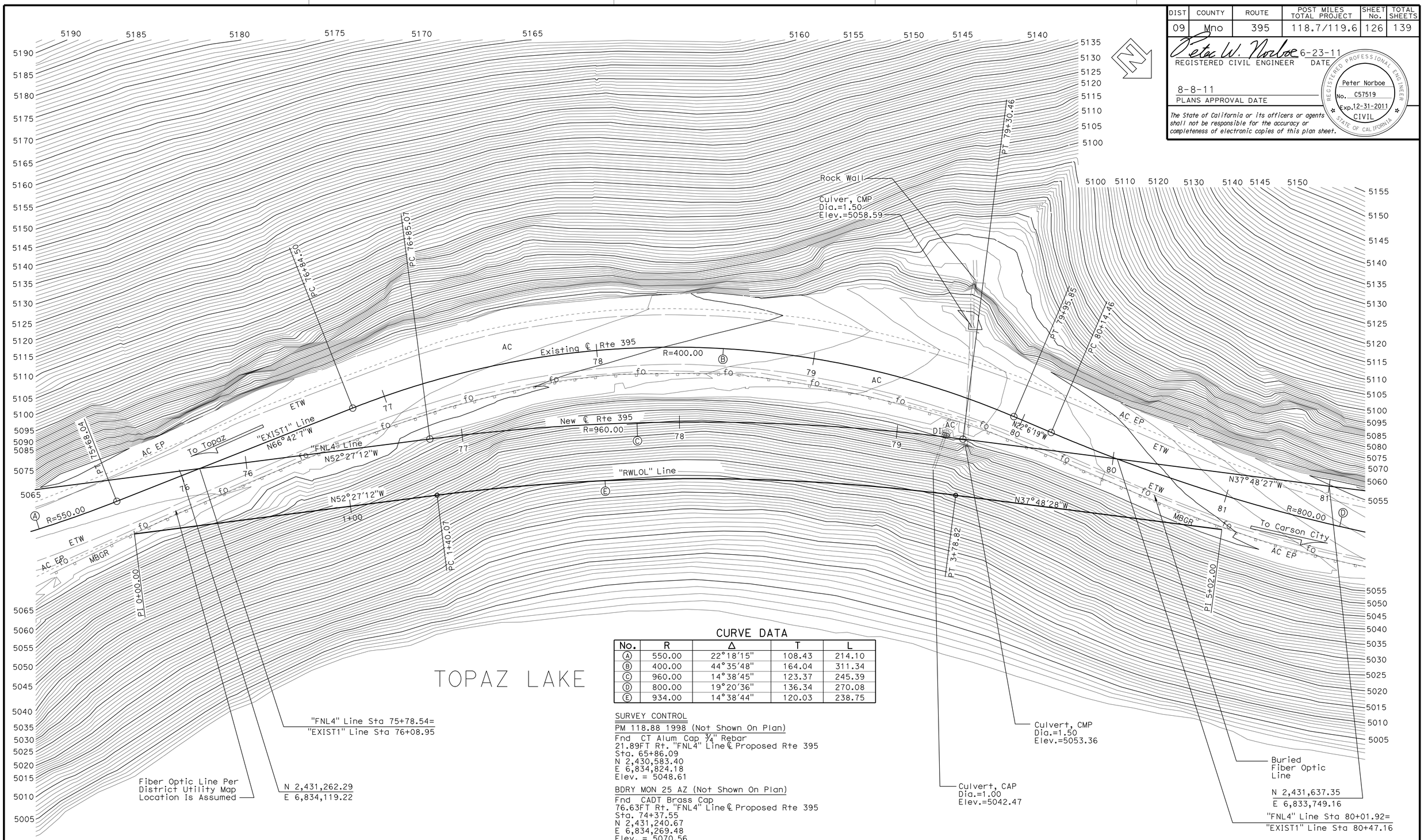

CURVE DATA

No.	R	Δ	T	L
A	550.00	22°18'15"	108.43	214.10
B	400.00	44°35'48"	164.04	311.34
C	960.00	14°38'45"	123.37	245.39
D	800.00	19°20'36"	136.34	270.08
E	934.00	14°38'44"	120.03	238.75

SURVEY CONTROL

PM 118.88 1998 (Not Shown On Plan)
Fnd CT Alum Cap ¾" Rebar
21.89FT Rt. "FNL4" Line ℄ Proposed Rte 395
Sta. 65+86.09
N 2,430,583.40
E 6,834,824.18
Elev. = 5048.61

BDRY MON 25 AZ (Not Shown On Plan)
Fnd CADT Brass Cap
76.63FT Rt. "FNL4" Line ℄ Proposed Rte 395
Sta. 74+37.55
N 2,431,240.67
E 6,834,269.48
Elev. = 5070.56

PRELIMINARY INVESTIGATION SECTION

SCALE 1"=20'	VERT.DATUM NGVD29	PHOTOGRAMMETRY AS OF: X		
	HORZ.DATUM NAD83 (1991.35)	SURVEYED	BY District/Gillett	CHECKED BY T.Gillett 09/2009
	ALIGNMENT TIES Dist. Traverse Sheet	DRAFTED	BY T.Zolnikov 09/2009	CHECKED BY T.Schmalz 09/2009

DESIGN	BY P. Norboe	CHECKED G. Matthews
DETAILS	BY D. Elliott	CHECKED G. Matthews
QUANTITIES	BY P. Norboe	CHECKED G. Matthews

STATE OF CALIFORNIA
DEPARTMENT OF TRANSPORTATION

DIVISION OF ENGINEERING SERVICES
STRUCTURE DESIGN
DESIGN BRANCH 9

BRIDGE NO. 47E0003
POST MILE 118.7/119.0

RETAINING WALL B
FOUNDATION PLAN

STRUCTURES FOUNDATION PLAN SHEET (ENGLISH) (REV. 09-01-10)

ORIGINAL SCALE IN INCHES FOR REDUCED PLANS 0 1 2 3

UNIT: 3646
PROJECT NUMBER & PHASE: 0900000038 1
CONTRACT NO.: 09-237701

DISREGARD PRINTS BEARING EARLIER REVISION DATES

REVISION DATES: 10-26-09 12-27-10 1-18-11 1-31-11

SHEET 5 OF 18

FILE => 47e0003-e-fp.dgn

DIST	COUNTY	ROUTE	POST MILES TOTAL PROJECT	SHEET No.	TOTAL SHEETS
09	Mno	395	118.7/119.6	127	139

Pete W. Norboe 6-23-11
REGISTERED CIVIL ENGINEER DATE

8-8-11
PLANS APPROVAL DATE

REGISTERED PROFESSIONAL ENGINEER
Pete Norboe
No. C57519
Exp. 12-31-11
CIVIL
STATE OF CALIFORNIA

The State of California or its officers or agents shall not be responsible for the accuracy or completeness of electronic copies of this plan sheet.

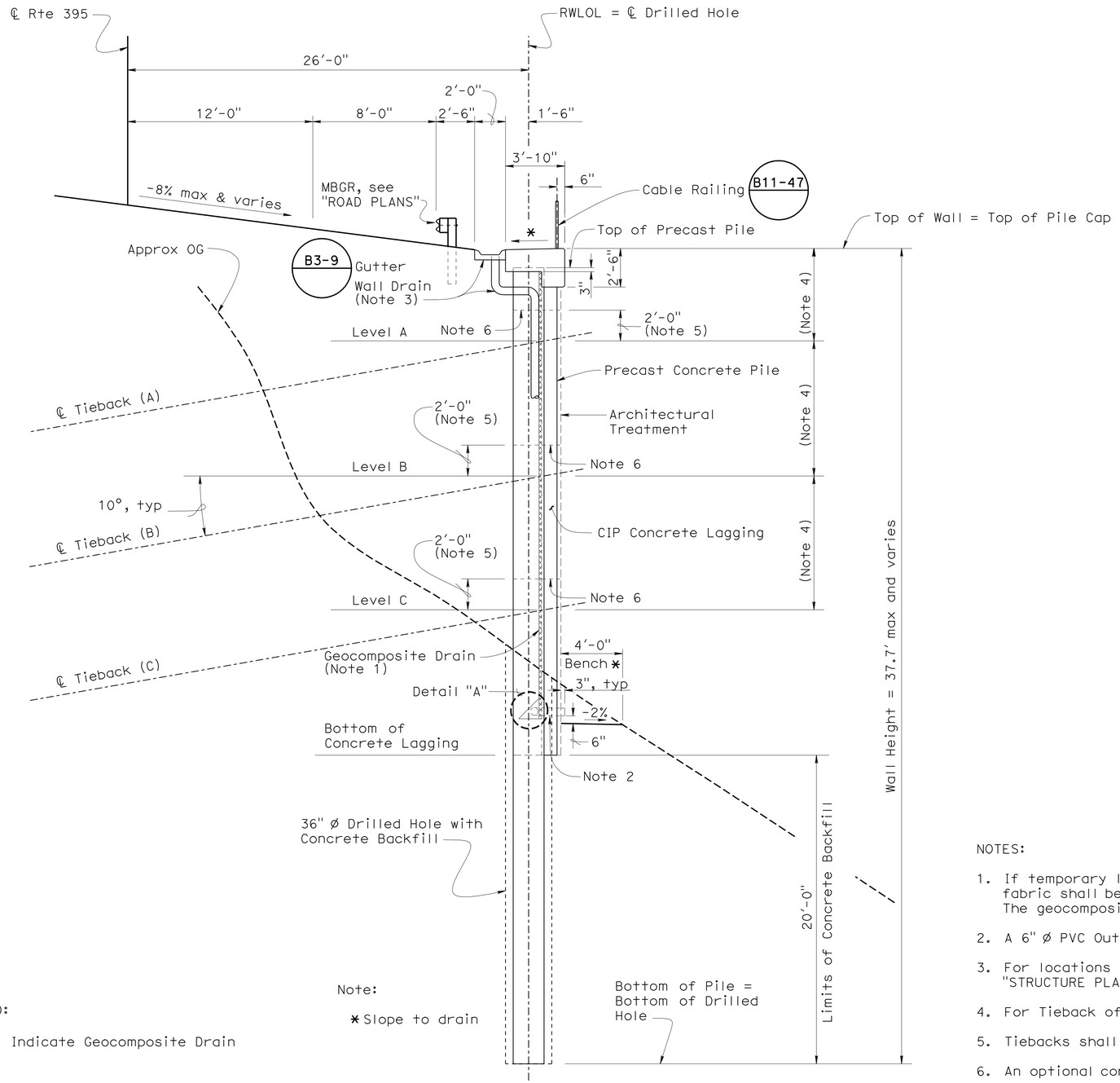

Note:

* Slope to drain

LEGEND:

Indicate Geocomposite Drain

TYPICAL SECTION

1/4" = 1'-0"

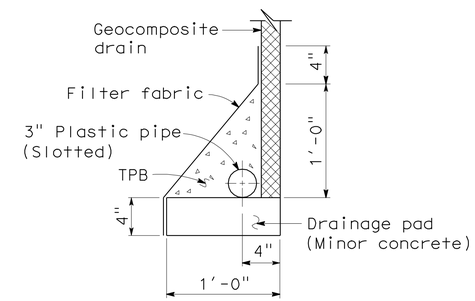

DETAIL "A"

NO SCALE

NOTES:

1. If temporary lagging becomes part of the final structure, the geocomposite draining fabric shall be placed between soil and the temporary lagging material to allow drainage of the soil mass. The geocomposite material shall be full width and height of wall.
2. A 6" ø PVC Outlet shall be provided every 20' O.C. Provide concrete spash pad at every outlet D99B
3. For locations of wall drains without scuppers, see "STRUCTURE PLANS NO. 1" and "STRUCTURE PLANS NO. 2" sheet.
4. For Tieback offsets and loads, see "WALL DETAILS NO. 5" and "WALL DETAILS NO. 6" sheets.
5. Tiebacks shall be full stressed when backfilling operation has reach a point of 2' above that tieback.
6. An optional construction joint is allowed in the CIP concrete lagging in the locations shown.
7. Pile with tiebacks is shown, piles with no tiebacks similiar.

	BY	CHECKED
DESIGN	P. Norboe	G. Matthews
DETAILS	D. Elliott	G. Matthews
QUANTITIES	P. Norboe	G. Matthews

STATE OF CALIFORNIA
DEPARTMENT OF TRANSPORTATION

DIVISION OF ENGINEERING SERVICES
STRUCTURE DESIGN
DESIGN BRANCH 9

BRIDGE NO. 47E0003
POST MILE 118.7/119.0

RETAINING WALL B
TYPICAL SECTION

STRUCTURES DESIGN DETAIL SHEET (ENGLISH) (REV. 09-01-10)

ORIGINAL SCALE IN INCHES FOR REDUCED PLANS 0 1 2 3

UNIT: 3594
PROJECT NUMBER & PHASE: 09000000381
CONTRACT NO.: 09-237701

DISREGARD PRINTS BEARING EARLIER REVISION DATES

REVISION DATES 4-19-11 5-11-11 6-14-11

SHEET 6 OF 18

FILE => 47e0003-k-ts.dgn

USERNAME => s124496 DATE PLOTTED => 15-AUG-2011 TIME PLOTTED => 09:09

DIST	COUNTY	ROUTE	POST MILES TOTAL PROJECT	SHEET No.	TOTAL SHEETS
09	Mno	395	118.7/119.6	128	139

Pete W. Norboe 6-23-11
REGISTERED CIVIL ENGINEER DATE

8-8-11
PLANS APPROVAL DATE

REGISTERED PROFESSIONAL ENGINEER
Pete Norboe
No. C57519
Exp. 12-31-11
CIVIL
STATE OF CALIFORNIA

The State of California or its officers or agents shall not be responsible for the accuracy or completeness of electronic copies of this plan sheet.

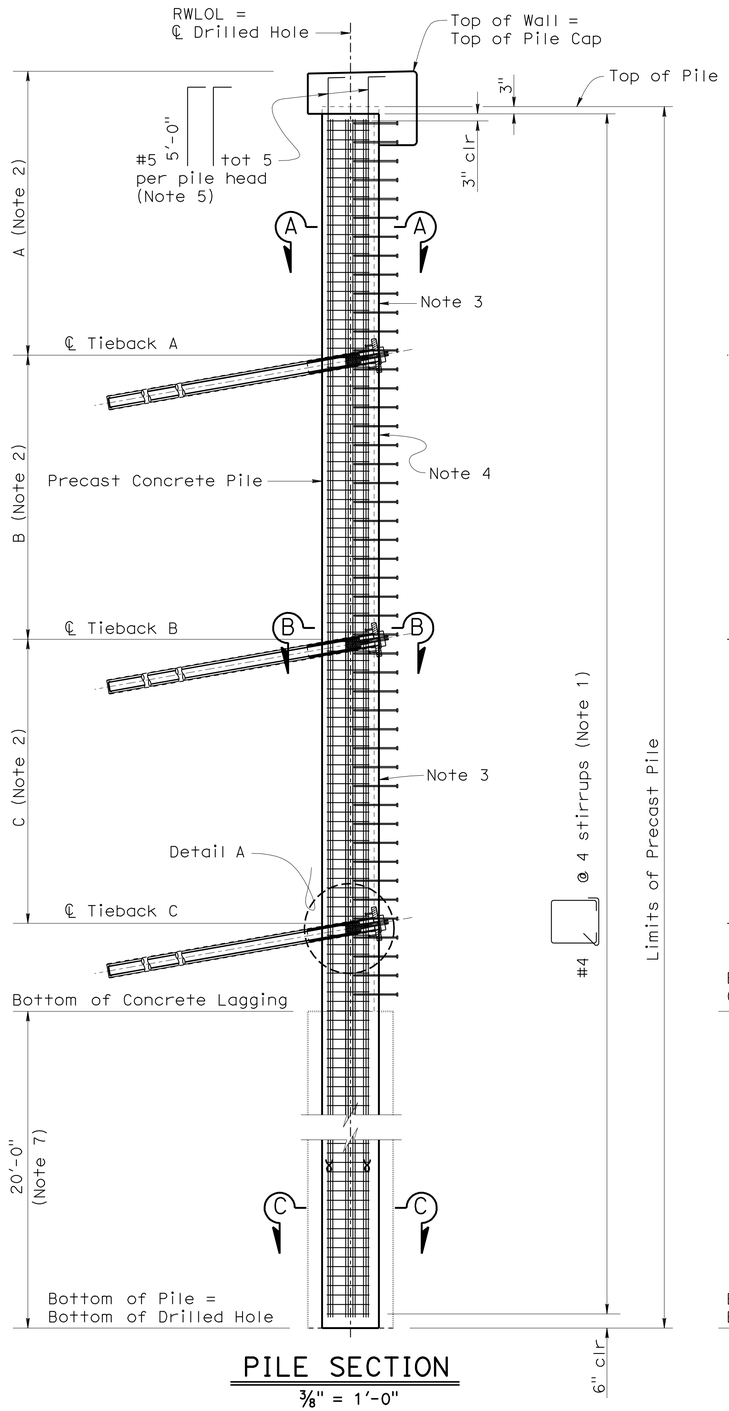

PILE SECTION
3/8" = 1'-0"

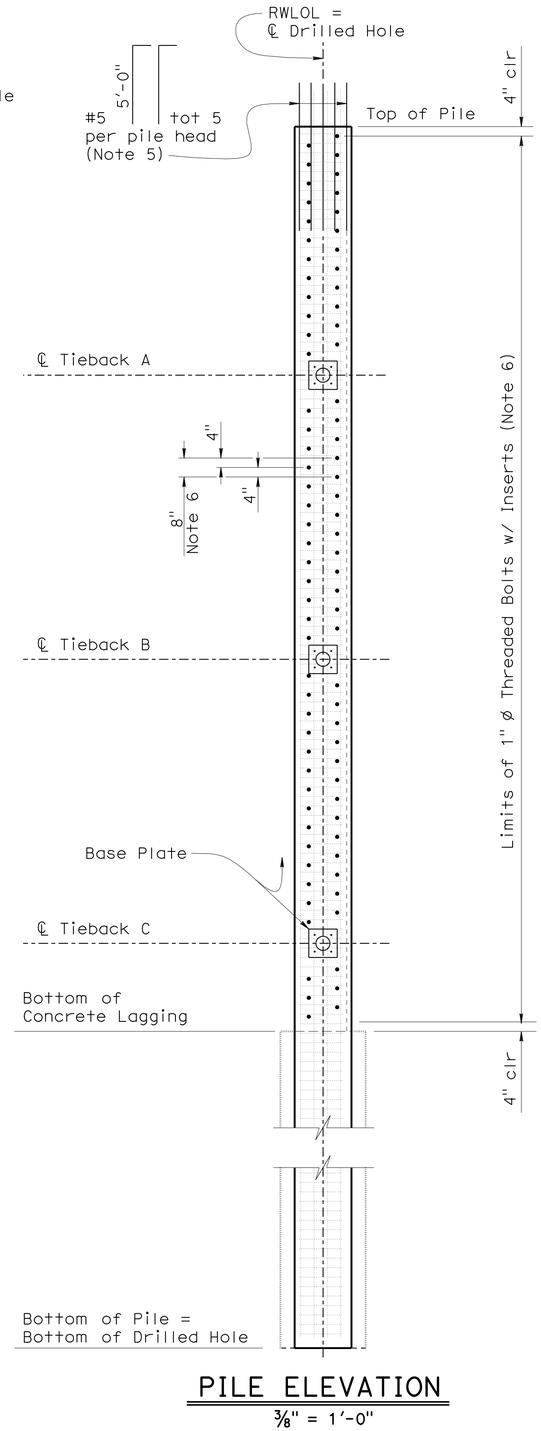

PILE ELEVATION
3/8" = 1'-0"

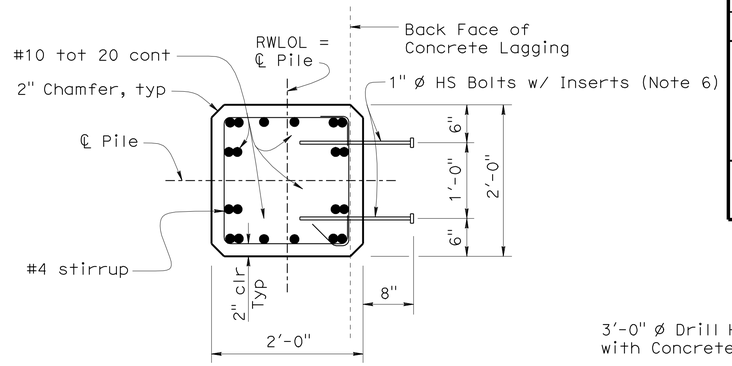

SECTION A-A
1" = 1'-0"

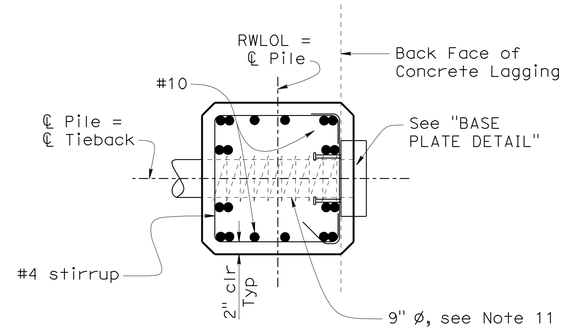

SECTION B-B
1" = 1'-0"

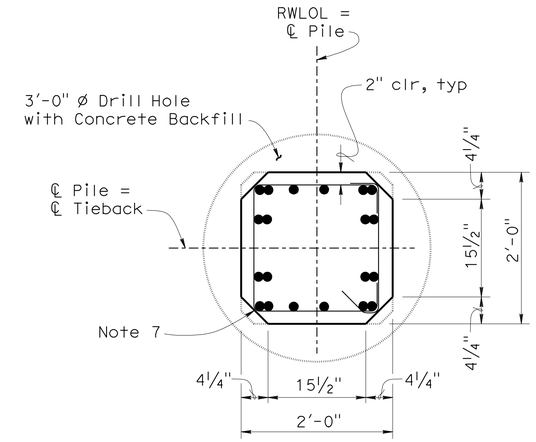

SECTION C-C
1" = 1'-0"

LEGEND:

ɣ Denotes bundled reinforcement

NOTES

1. Bundle stirrups on both sides near tieback anchorages.
2. For vertical placement of tiebacks, see "WALL DETAILS NO. 5" and "WALL DETAILS NO. 6" sheet.
3. Stamp "RETAINING WALL B" and "PILE NO.( )" at the top of the wall and 6'-0" above the bottom of concrete lagging on face noted.
4. Finish with rough texture of ¼" amplitude on face with concrete lagging.
5. Hooks may be bent in the field after pile installation.
6. Bolts with inserts are shown since it may be necessary to place the pile with temporary casings. #8 2'-5" hooked reinforcement may be used instead at the same spacing.
7. After casting, sand blast all sides to a rough surface below bottom of lagging to improve bonding to concrete backfill. A metal lath may be substituded for sand blasting on all surfaces.
8. Concrete strength of precast pile: f'c = 5000 psi.
9. Pile w/ tiebacks shown, piles without tiebacks similar except for base plates and tieback hardware.
10. For "BASE PLATE DETAILS" and "DETAIL A", see "WALL DETAILS NO. 2" sheet.
11. #3 spiral @ 2½" pitch between #4 stirrups, for every tieback anchor tube.

	BY	CHECKED
DESIGN	P. Norboe	G. Matthews
DETAILS	D. Elliott	G. Matthews
QUANTITIES	P. Norboe	G. Matthews

STATE OF CALIFORNIA
DEPARTMENT OF TRANSPORTATION

DIVISION OF ENGINEERING SERVICES
STRUCTURE DESIGN
DESIGN BRANCH 9

BRIDGE NO. 47E0003
POST MILE 118.7/119.0

RETAINING WALL B
WALL DETAILS NO. 1

STRUCTURES DESIGN DETAIL SHEET (ENGLISH) (REV. 09-01-10)

ORIGINAL SCALE IN INCHES FOR REDUCED PLANS 0 1 2 3

UNIT: 3594
PROJECT NUMBER & PHASE: 09000000381
CONTRACT NO.: 09-237701

DISREGARD PRINTS BEARING EARLIER REVISION DATES

REVISION DATES: 5-18-11 6-15-11 6-23-11

SHEET 7 OF 18

FILE => 47e0003-k-wall_det_01.dgn

USERNAME => s124496 DATE PLOTTED => 15-AUG-2011 TIME PLOTTED => 09:10

DIST	COUNTY	ROUTE	POST MILES TOTAL PROJECT	SHEET No.	TOTAL SHEETS
09	Mno	395	118.7/119.6	129	139

Pete W. Norboe 6-23-11
REGISTERED CIVIL ENGINEER DATE

8-8-11
PLANS APPROVAL DATE

REGISTERED PROFESSIONAL ENGINEER Pete Norboe No. C57519 Exp. 12-31-11 CIVIL STATE OF CALIFORNIA

The State of California or its officers or agents shall not be responsible for the accuracy or completeness of electronic copies of this plan sheet.

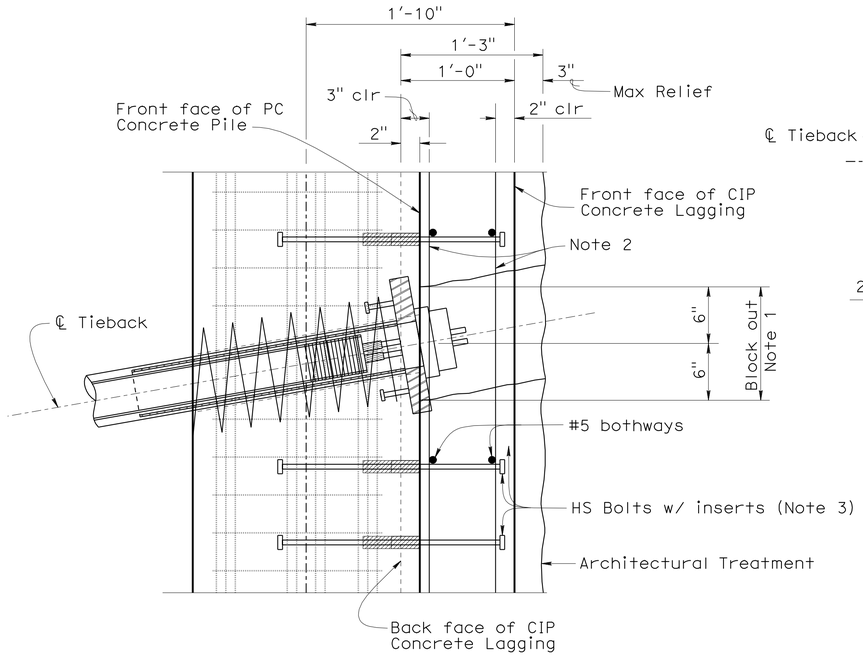

PART SECTION WALL (AT TIEBACK)

1½" = 1'-0"

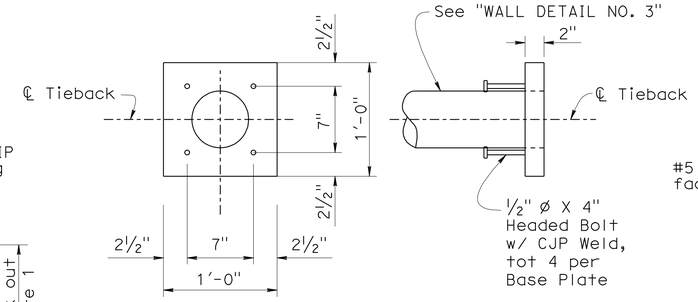

PLAN SECTION

BASE PLATE DETAIL

1" = 1'-0"

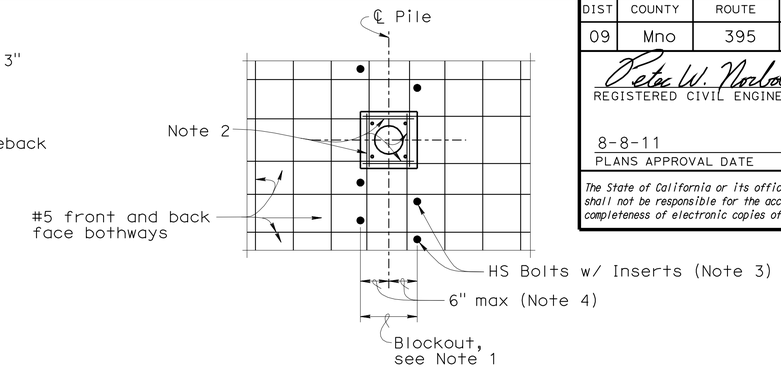

PART WALL ELEVATION

¾" = 1'-0"

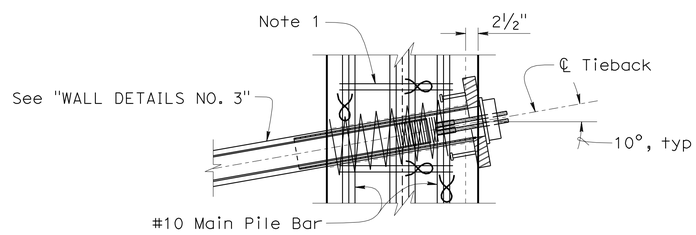

DETAIL A

1" = 1'-0"

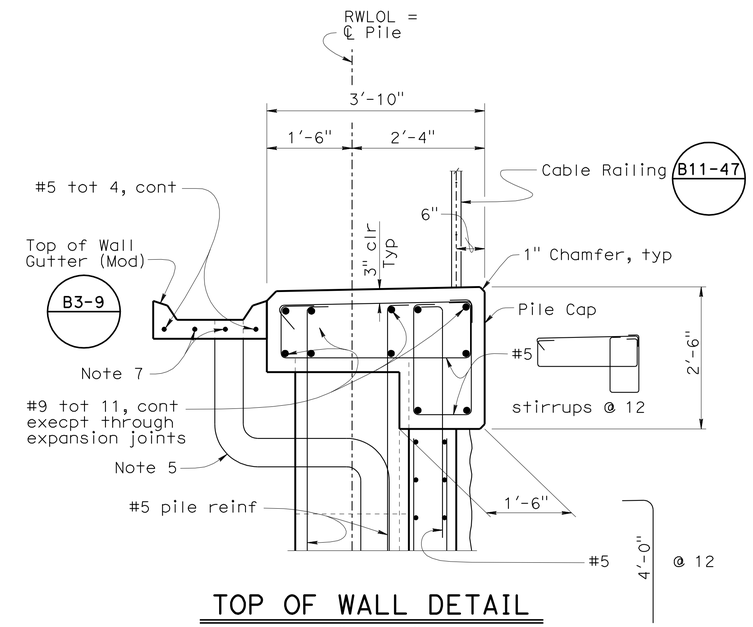

TOP OF WALL DETAIL

¾" = 1'-0"

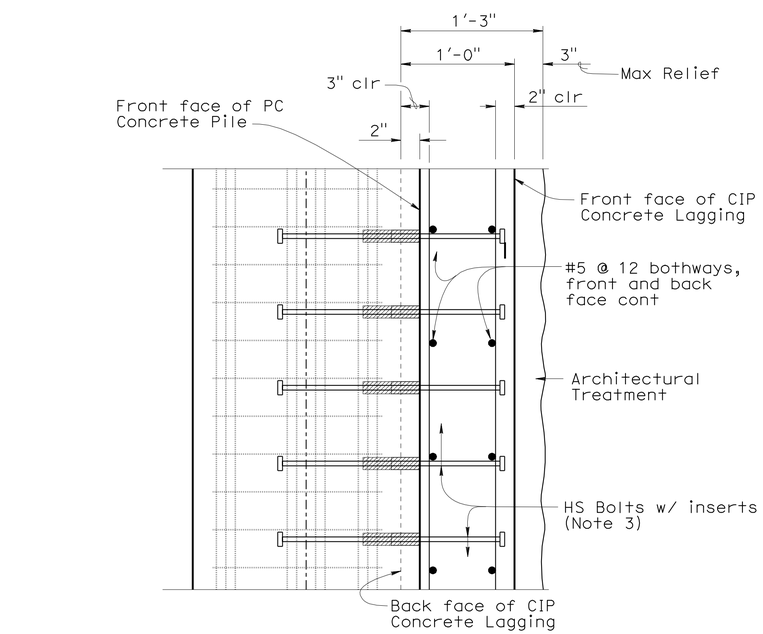

PART SECTION WALL (BETWEEN TIEBACKS)

1½" = 1'-0"

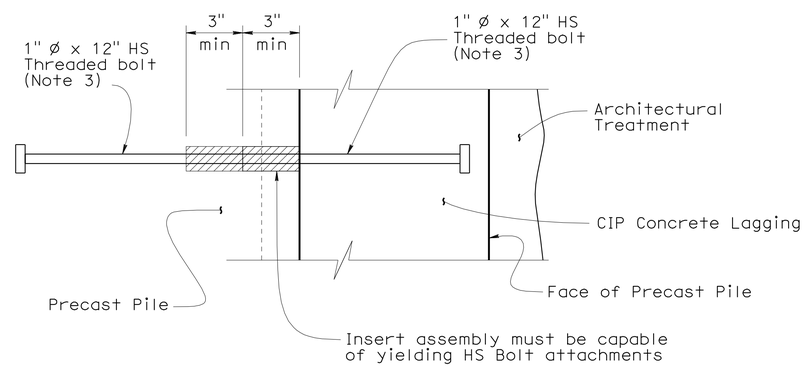

INSERT ASSEMBLY

3" = 1'-0"

LEGEND:

⋈ Denotes bundled bar

NOTES:

1. Blockout concrete shall match formliner appearance and shall be placed before staining of concrete.
2. #5 wall reinforcement may be cut as necessary to allow stressing operation.
3. Insert assembly option shown. If reinforcement option is used, hooks shall be horizontal.
4. Minimize blockout dimensions to maintain uniform architectural appearance.
5. For wall drain locations, see "STRUCTURE PLANS" sheets.
6. Base Plate shall be cast w/ precast pile.
7. Adjust to accomodate drains.

	BY	CHECKED
DESIGN	P. Norboe	G. Matthews
DETAILS	D. Elliott	G. Matthews
QUANTITIES	P. Norboe	G. Matthews

STATE OF CALIFORNIA
DEPARTMENT OF TRANSPORTATION

DIVISION OF ENGINEERING SERVICES
STRUCTURE DESIGN
DESIGN BRANCH 9

BRIDGE NO. 47E0003
POST MILE 118.7/119.0

RETAINING WALL B
WALL DETAILS NO. 2

STRUCTURES DESIGN DETAIL SHEET (ENGLISH) (REV. 09-01-10)

ORIGINAL SCALE IN INCHES FOR REDUCED PLANS 0 1 2 3

UNIT: 3594
PROJECT NUMBER & PHASE: 09000000381
CONTRACT NO.: 09-237701

DISREGARD PRINTS BEARING EARLIER REVISION DATES

REVISION DATES: 4-19-11 5-11-11 6-15-11

SHEET 8 OF 18

FILE => 47e0003-k-wall_det_02.dgn

USERNAME => s124496 DATE PLOTTED => 15-AUG-2011 TIME PLOTTED => 09:10

DIST	COUNTY	ROUTE	POST MILES TOTAL PROJECT	SHEET No.	TOTAL SHEETS
09	Mno	395	118.7/119.6	130	139

Pete W. Norboe 6-23-11
REGISTERED CIVIL ENGINEER DATE

8-8-11
PLANS APPROVAL DATE

REGISTERED PROFESSIONAL ENGINEER
Pete Norboe
No. C57519
Exp. 12-31-11
CIVIL
STATE OF CALIFORNIA

The State of California or its officers or agents shall not be responsible for the accuracy or completeness of electronic copies of this plan sheet.

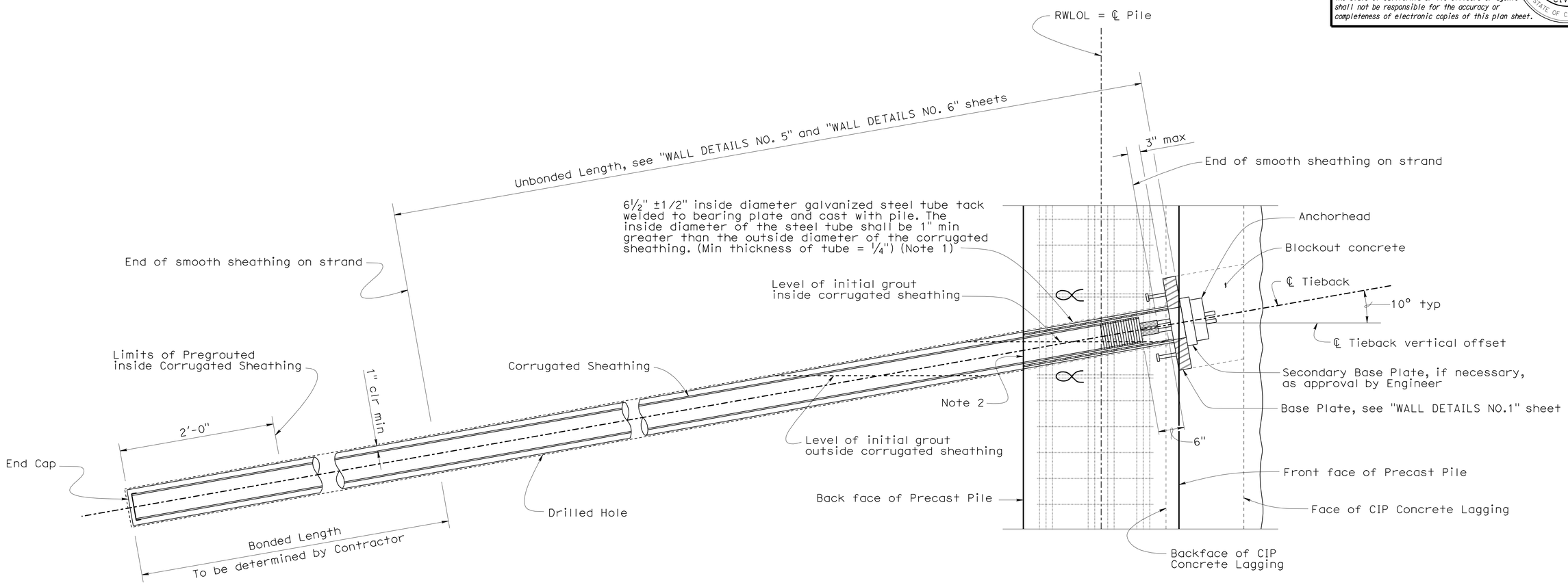

TIEBACK TENDON DETAIL

1½" = 1'-0"

LEGEND:

∝ Denotes bundled bar

NOTE:

1. Diameter of steel tube may be modified upon approval of the Engineer; to accomodate various drill auger sizes. In no case shall the inside diameter be greater than 7". Care shall be taken to prevent damage to the concrete piling during tieback installation.
2. Galvanized steel tube may be used as final trumpet, or a secondary trumpet may be used upon approval of Engineer.

	BY	CHECKED
DESIGN	P. Norboe	G. Matthews
DETAILS	D. Elliott	G. Matthews
QUANTITIES	P. Norboe	G. Matthews

STATE OF CALIFORNIA
DEPARTMENT OF TRANSPORTATION

DIVISION OF ENGINEERING SERVICES
STRUCTURE DESIGN
DESIGN BRANCH 9

BRIDGE NO. 47E0003
POST MILE 118.7/119.0

RETAINING WALL B
WALL DETAILS NO. 3

STRUCTURES DESIGN DETAIL SHEET (ENGLISH) (REV. 09-01-10)

ORIGINAL SCALE IN INCHES FOR REDUCED PLANS 0 1 2 3

UNIT: 3594
PROJECT NUMBER & PHASE: 09000000381
CONTRACT NO.: 09-237701

DISREGARD PRINTS BEARING EARLIER REVISION DATES

REVISION DATES 5-11-11 6-14-11 6-23-11

SHEET 9 OF 18

FILE => 47e0003-k-wall_det_03.dgn

USERNAME => s124496 DATE PLOTTED => 15-AUG-2011 TIME PLOTTED => 09:10

DIST	COUNTY	ROUTE	POST MILES TOTAL PROJECT	SHEET No.	TOTAL SHEETS
09	Mno	395	118.7/119.6	131	139

Peter W. Norboe 6-23-11
REGISTERED CIVIL ENGINEER DATE

8-8-11
PLANS APPROVAL DATE

REGISTERED PROFESSIONAL ENGINEER
Pete Norboe
No. C57519
Exp. 12-31-11
CIVIL
STATE OF CALIFORNIA

The State of California or its officers or agents shall not be responsible for the accuracy or completeness of electronic copies of this plan sheet.

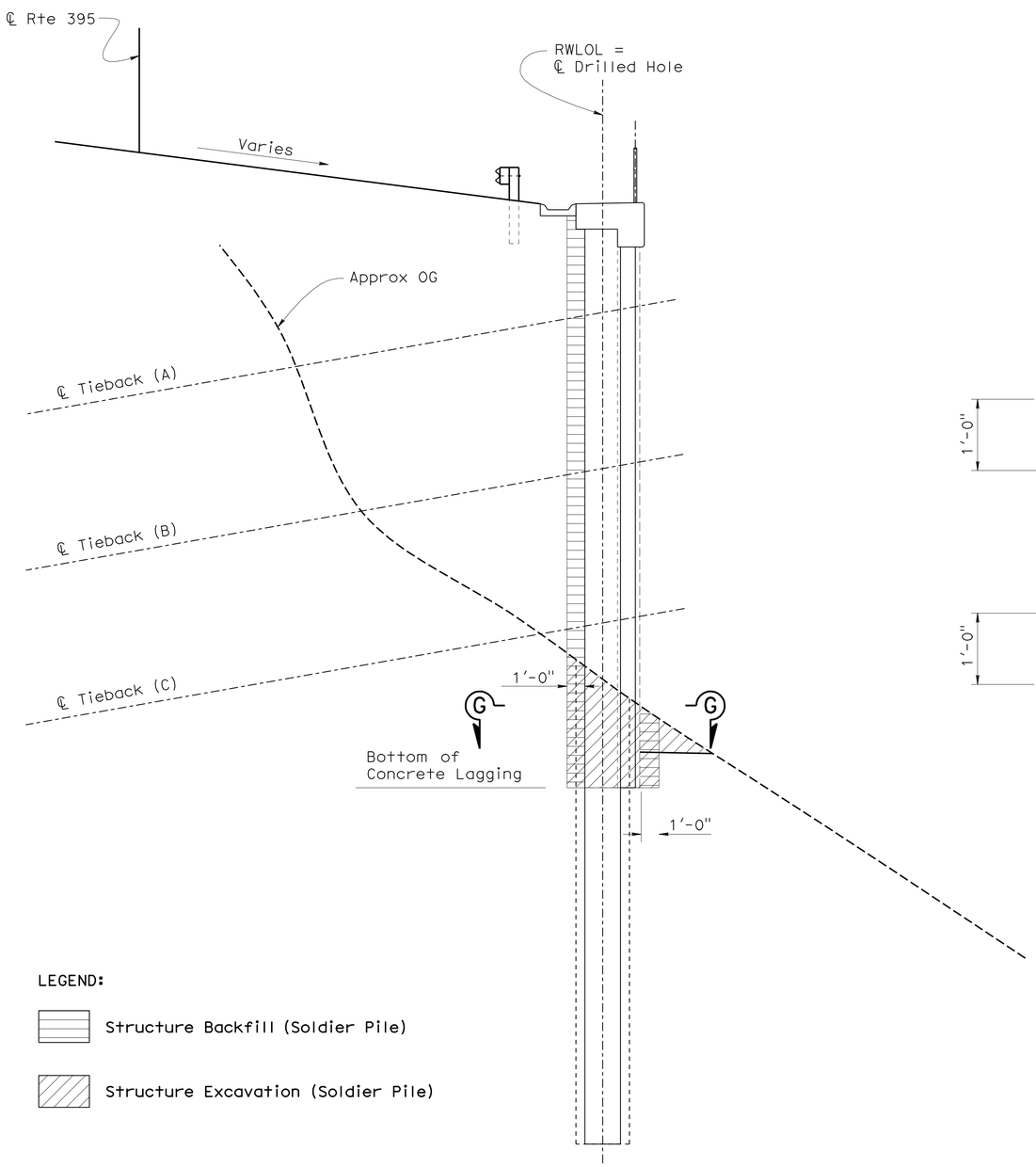

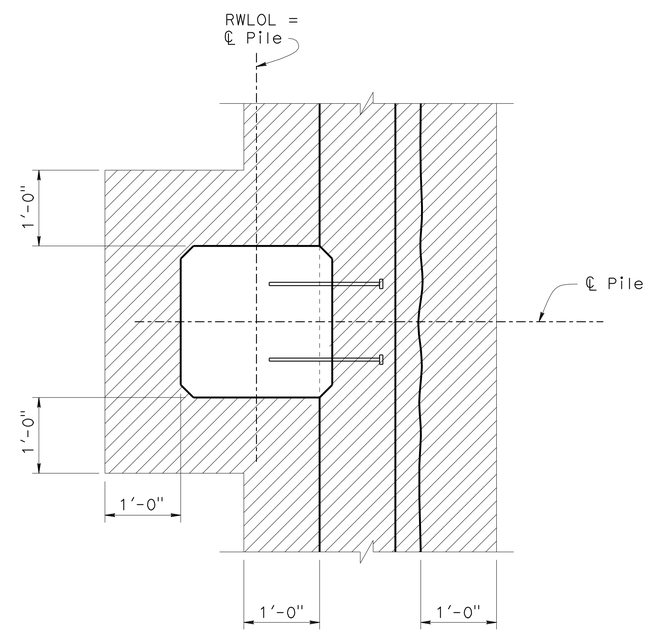

EXCAVATION

SECTION G-G

No Scale

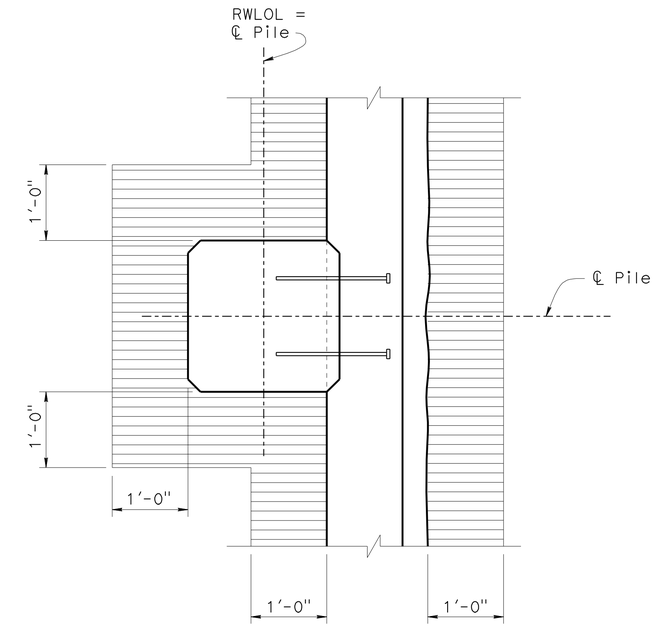

BACKFILL

SECTION G-G

No Scale

LEGEND:

Structure Backfill (Soldier Pile)

Structure Excavation (Soldier Pile)

LIMITS OF PAYMENT FOR EXCAVATION AND BACKFILL

1/4" = 1'-0"

DESIGN	BY P. Norboe	CHECKED G. Matthews	
DETAILS	BY D. Elliott	CHECKED G. Matthews	
QUANTITIES	BY P. Norboe	CHECKED G. Matthews	

STATE OF CALIFORNIA
DEPARTMENT OF TRANSPORTATION

DIVISION OF ENGINEERING SERVICES
STRUCTURE DESIGN
DESIGN BRANCH 9

BRIDGE NO. 47E0003
POST MILE 118.7/119.0

RETAINING WALL B
WALL DETAILS NO. 4

STRUCTURES DESIGN DETAIL SHEET (ENGLISH) (REV. 09-01-10)

ORIGINAL SCALE IN INCHES FOR REDUCED PLANS 0 1 2 3

UNIT: 3594
PROJECT NUMBER & PHASE: 09000000381
CONTRACT NO.: 09-237701

DISREGARD PRINTS BEARING EARLIER REVISION DATES

REVISION DATES 1-4-11 1-31-11 3-24-11 4-20-11

SHEET 10 OF 18

FILE => 47e0003-k-wall_det_04.dgn

USERNAME => trmarlak DATE PLOTTED => 15-AUG-2011 TIME PLOTTED => 09:17

DIST	COUNTY	ROUTE	POST MILES TOTAL PROJECT	SHEET No.	TOTAL SHEETS
09	Mno	395	118.7/119.6	132	139

Pete W. Norboe 6-23-11
REGISTERED CIVIL ENGINEER DATE

8-8-11
PLANS APPROVAL DATE

REGISTERED PROFESSIONAL ENGINEER
Pete Norboe
No. C57519
Exp. 12-31-11
CIVIL
STATE OF CALIFORNIA

The State of California or its officers or agents shall not be responsible for the accuracy or completeness of electronic copies of this plan sheet.

PILE & TIEBACK DATA TABLE

Pile No.	Station (RWLOL)	Top of wall Elevation (ft)	Approx OG Elev (ft)	FG Elev (ft)	Bottom of Lagging Elev (ft)	Bottom Pile Elev (ft)	Wall Height (ft)	Pile Type	Hole Diameter (ft)	Tiebacks Level A			Tiebacks Level B			Tiebacks Level C		
										Force T (kips)	Vertical * Offset (ft)	Unbonded Length (ft)	Force T (kips)	Vertical * Offset (ft)	Unbonded Length (ft)	Force T (kips)	Vertical * Offset (ft)	Unbonded Length (ft)
1	00+01.00	5064.66	5067.00	5064.70	5060.70	5040.70	4.00	24"x24" PCC	3.00	-	-	-	-	-	-	-	-	-
2	00+11.00	5064.62	5066.10	5063.80	5060.60	5040.60	4.00	24"x24" PCC	3.00	-	-	-	-	-	-	-	-	-
3	00+21.00	5064.57	5065.30	5062.90	5060.60	5040.60	4.00	24"x24" PCC	3.00	-	-	-	-	-	-	-	-	-
4	00+31.00	5064.52	5064.40	5062.00	5060.00	5040.00	4.50	24"x24" PCC	3.00	-	-	-	-	-	-	-	-	-
5	00+41.00	5064.46	5063.50	5059.00	5057.00	5037.00	7.50	24"x24" PCC	3.00	50	4.00	45.0	-	-	-	-	-	-
6	00+51.00	5064.40	5061.30	5057.00	5055.00	5035.00	9.40	24"x24" PCC	3.00	75	6.00	45.0	-	-	-	-	-	-
7	00+61.00	5064.31	5059.10	5055.00	5053.00	5033.00	11.30	24"x24" PCC	3.00	100	7.50	45.0	-	-	-	-	-	-
8	00+71.00	5064.18	5056.90	5053.00	5051.00	5031.00	13.20	24"x24" PCC	3.00	125	9.00	45.0	-	-	-	-	-	-
9	00+81.00	5064.04	5054.70	5051.00	5049.00	5029.00	15.00	24"x24" PCC	3.00	125	10.00	45.0	-	-	-	-	-	-
10	00+91.00	5063.90	5025.50	5049.00	5047.00	5027.00	16.90	24"x24" PCC	3.00	150	11.50	45.0	-	-	-	-	-	-
11	01+01.00	5063.76	5050.10	5046.70	5044.70	5024.70	19.10	24"x24" PCC	3.00	175	13.00	45.0	-	-	-	-	-	-
12	01+11.00	5063.61	5047.70	5044.4	5042.40	5022.40	21.20	24"x24" PCC	3.00	150	9.00	55.0	150	9.00	45.0	-	-	-
13	01+21.00	5063.45	5045.30	5042.10	5040.10	5020.10	23.40	24"x24" PCC	3.00	150	10.00	55.0	150	10.00	45.0	-	-	-
14	01+31.00	5063.21	5042.90	5039.80	5037.80	5017.80	25.40	24"x24" PCC	3.00	150	10.00	55.0	150	12.00	45.0	-	-	-
15	01+41.00	5063.04	5040.50	5037.50	5035.50	5015.50	27.50	24"x24" PCC	3.00	175	11.00	55.0	150	13.50	45.0	-	-	-
16	01+51.00	5062.79	5038.30	5035.50	5033.50	5013.50	29.30	24"x24" PCC	3.00	175	10.00	55.0	125	8.00	45.0	200	8.00	50.0
17	01+61.00	5062.60	5036.10	5033.50	5031.50	5011.50	31.10	24"x24" PCC	3.00	175	10.00	55.0	125	9.00	45.0	200	9.00	50.0
18	01+71.00	5062.34	5033.90	5031.50	5029.50	5009.50	32.80	24"x24" PCC	3.00	175	10.00	60.0	125	10.00	55.0	200	9.00	50.0
19	01+81.00	5062.14	5031.70	5029.50	5027.50	5007.50	34.60	24"x24" PCC	3.00	175	10.00	60.0	125	10.50	55.0	200	10.50	50.0
20	01+91.00	5062.00	5029.50	5027.50	5025.50	5005.50	36.50	24"x24" PCC	3.00	175	10.00	60.0	125	11.50	55.0	200	11.50	50.0
21	02+01.00	5061.86	5029.20	5027.10	5025.10	5005.10	36.80	24"x24" PCC	3.00	175	10.00	65.0	125	12.00	55.0	200	11.50	50.0
22	02+11.00	5061.70	5028.90	5026.70	5024.70	5004.70	37.00	24"x24" PCC	3.00	175	10.00	65.0	125	12.00	55.0	200	12.00	50.0
23	02+21.00	5061.55	5028.60	5026.30	5024.30	5004.30	37.20	24"x24" PCC	3.00	175	10.00	65.0	125	12.00	55.0	200	12.00	50.0
24	02+31.00	5061.38	5028.30	5025.90	5023.90	5003.90	37.50	24"x24" PCC	3.00	175	10.00	65.0	125	12.00	55.0	200	12.00	50.0
25	02+41.00	5061.22	5028.00	5025.50	5023.50	5003.50	37.70	24"x24" PCC	3.00	175	10.00	65.0	125	12.00	55.0	200	12.00	50.0
26	02+51.00	5061.04	5028.20	5025.60	5023.60	5003.60	37.40	24"x24" PCC	3.00	175	10.00	65.0	125	12.00	55.0	200	12.00	50.0
27	02+61.00	5060.86	5028.40	5025.70	5023.70	5003.70	37.20	24"x24" PCC	3.00	175	10.00	65.0	125	12.00	55.0	200	12.00	50.0
28	02+71.00	5060.68	5028.60	5025.80	5023.80	5003.80	36.90	24"x24" PCC	3.00	175	10.00	65.0	125	12.00	55.0	200	12.00	50.0
29	02+81.00	5060.48	5028.80	5025.90	5023.90	5003.90	36.60	24"x24" PCC	3.00	175	10.00	65.0	125	12.00	55.0	200	12.00	50.0
30	02+91.00	5060.29	5029.00	5026.00	5024.00	5004.00	36.30	24"x24" PCC	3.00	175	10.00	65.0	125	12.00	55.0	200	12.00	50.0

* NOTE: Tieback vertical offsets are measured from the top of the wall to the CG of the stressing base plate; or base plate to base plate.

	BY	CHECKED
DESIGN	P. Norboe	G. Matthews
DETAILS	D. Elliott	G. Matthews
QUANTITIES	P. Norboe	G. Matthews

STATE OF CALIFORNIA
DEPARTMENT OF TRANSPORTATION

DIVISION OF ENGINEERING SERVICES
STRUCTURE DESIGN
DESIGN BRANCH 9

BRIDGE NO. 47E0003
POST MILE 118.7/119.0

RETAINING WALL B
WALL DETAILS NO. 5

STRUCTURES DESIGN DETAIL SHEET (ENGLISH) (REV. 09-01-10)

ORIGINAL SCALE IN INCHES FOR REDUCED PLANS 0 1 2 3

UNIT: 3594
PROJECT NUMBER & PHASE: 09000000381
CONTRACT NO.: 09-237701

DISREGARD PRINTS BEARING EARLIER REVISION DATES

REVISION DATES: 4-20-11 1-30-11 3-28-11

SHEET 11 OF 18

FILE => 47e0003-k-wall_det_05.dgn

USERNAME => TTmorTOK DATE PLOTTED => 15-AUG-2011 TIME PLOTTED => 09:17

DIST	COUNTY	ROUTE	POST MILES TOTAL PROJECT	SHEET No.	TOTAL SHEETS
09	Mno	395	118.7/119.6	133	139

Pete W. Norboe 6-23-11
REGISTERED CIVIL ENGINEER DATE

8-8-11
PLANS APPROVAL DATE

REGISTERED PROFESSIONAL ENGINEER
Pete Norboe
No. C57519
Exp. 12-31-11
CIVIL
STATE OF CALIFORNIA

The State of California or its officers or agents shall not be responsible for the accuracy or completeness of electronic copies of this plan sheet.

PILE & TIEBACK DATA TABLE

Pile No.	Station (RWLOL)	Top of wall Elevation (ft)	Approx OG Elev (ft)	FG Elev (ft)	Bottom of Lagging Elev (ft)	Bottom Pile Elev (ft)	Wall Height (ft)	Pile Type	Hole Diameter (ft)	Tiebacks Level A			Tiebacks Level B			Tiebacks Level C		
										Force T (kips)	Vertical * Offset (ft)	Unbonded Length (ft)	Force T (kips)	Vertical * Offset (ft)	Unbonded Length (ft)	Force T (kips)	Vertical * Offset (ft)	Unbonded Length (ft)
31	03+01.00	5060.09	5029.70	5026.60	5024.60	5004.60	35.50	24"x24" PCC	3.00	175	10.00	65.0	125	11.00	55.0	200	11.00	50.0
32	03+11.00	5059.88	5030.40	5027.20	5025.20	5005.20	34.70	24"x24" PCC	3.00	175	10.00	65.0	125	10.50	55.0	200	10.50	50.0
33	03+21.00	5059.66	5031.10	5027.80	5025.80	5005.80	33.90	24"x24" PCC	3.00	175	10.00	65.0	125	10.50	55.0	200	10.50	50.0
34	03+31.00	5059.46	5031.80	5028.40	5026.40	5006.40	33.10	24"x24" PCC	3.00	175	10.00	65.0	125	10.00	55.0	200	10.00	50.0
35	03+41.00	5059.26	5032.50	5029.00	5027.00	5007.00	32.30	24"x24" PCC	3.00	175	10.00	65.0	125	9.50	55.0	200	9.50	50.0
36	03+51.00	5059.18	5033.70	5030.20	5028.20	5008.20	31.00	24"x24" PCC	3.00	175	10.00	65.0	125	9.00	55.0	200	9.00	50.0
37	03+61.00	5059.02	5034.90	5031.40	5029.40	5009.40	29.60	24"x24" PCC	3.00	175	10.00	65.0	125	8.00	55.0	200	8.00	50.0
38	03+71.00	5058.94	5036.10	5032.60	5030.60	5010.60	28.30	24"x24" PCC	3.00	175	11.00	60.0	150	13.50	50.0	-	-	-
39	03+81.00	5058.79	5037.30	5033.80	5031.80	5011.80	27.00	24"x24" PCC	3.00	175	10.50	60.0	150	13.00	50.0	-	-	-
40	03+91.00	5058.71	5038.50	5035.00	5033.00	5013.00	25.70	24"x24" PCC	3.00	175	10.00	60.0	150	12.00	50.0	-	-	-
41	04+01.00	5058.56	5040.50	5037.10	5035.10	5015.10	23.50	24"x24" PCC	3.00	150	10.00	60.0	150	10.00	50.0	-	-	-
42	04+11.00	5058.40	5042.50	5039.20	5037.20	5017.20	21.20	24"x24" PCC	3.00	125	9.00	60.0	150	9.00	50.0	-	-	-
43	04+21.00	5058.25	5044.50	5041.30	5039.30	5019.30	19.00	24"x24" PCC	3.00	175	13.00	45.0	-	-	-	-	-	-
44	04+31.00	5058.10	5046.50	5043.40	5041.40	5021.40	16.70	24"x24" PCC	3.00	150	11.00	45.0	-	-	-	-	-	-
45	04+41.00	5057.94	5048.50	5045.50	5043.50	5023.50	14.40	24"x24" PCC	3.00	125	9.00	45.0	-	-	-	-	-	-
46	04+51.00	5057.79	5050.80	5047.80	5045.80	5025.80	12.00	24"x24" PCC	3.00	100	8.00	45.0	-	-	-	-	-	-
47	04+61.00	5057.64	5053.10	5050.10	5048.10	5028.10	9.50	24"x24" PCC	3.00	75	6.00	45.0	-	-	-	-	-	-
48	04+71.00	5057.44	5055.40	5052.40	5050.40	5030.40	7.00	24"x24" PCC	3.00	50	4.00	45.0	-	-	-	-	-	-
49	04+81.00	5057.22	5057.70	5054.70	5052.70	5032.70	4.50	24"x24" PCC	3.00	-	-	-	-	-	-	-	-	-
50	04+91.00	5057.01	5060.00	5057.00	5053.00	5033.00	4.00	24"x24" PCC	3.00	-	-	-	-	-	-	-	-	-
51	05+01.00	5056.80	5060.00	5056.80	5052.80	5032.80	4.00	24"x24" PCC	3.00	-	-	-	-	-	-	-	-	-

* NOTE: Tieback vertical offsets are measured from the top of the wall to the CG of the stressing base plate; or base plate to base plate.

	BY	CHECKED
DESIGN	P. Norboe	G. Matthews
DETAILS	D. Elliott	G. Matthews
QUANTITIES	P. Norboe	G. Matthews

STATE OF CALIFORNIA
DEPARTMENT OF TRANSPORTATION

DIVISION OF ENGINEERING SERVICES
STRUCTURE DESIGN
DESIGN BRANCH 9

BRIDGE NO. 47E0003
POST MILE 118.7/119.0

RETAINING WALL B
WALL DETAILS NO. 6

STRUCTURES DESIGN DETAIL SHEET (ENGLISH) (REV. 09-01-10)

ORIGINAL SCALE IN INCHES FOR REDUCED PLANS 0 1 2 3

UNIT: 3594
PROJECT NUMBER & PHASE: 09000000381
CONTRACT NO.: 09-237701

DISREGARD PRINTS BEARING EARLIER REVISION DATES

REVISION DATES 12-24-10 1-21-11 1-31-11 3-25-11

SHEET 12 OF 18

FILE => 47e0003-k-wall_det_06.dgn

USERNAME => tfmorTOK DATE PLOTTED => 15-AUG-2011 TIME PLOTTED => 09:17

DIST	COUNTY	ROUTE	POST MILES TOTAL PROJECT	SHEET No.	TOTAL SHEETS
09	Mno	395	118.7/119.6	134	139

Pete W. Norboe 6-23-11
REGISTERED CIVIL ENGINEER DATE

8-8-11
PLANS APPROVAL DATE

REGISTERED PROFESSIONAL ENGINEER
Pete Norboe
No. C57519
Exp. 12-31-11
CIVIL
STATE OF CALIFORNIA

The State of California or its officers or agents shall not be responsible for the accuracy or completeness of electronic copies of this plan sheet.

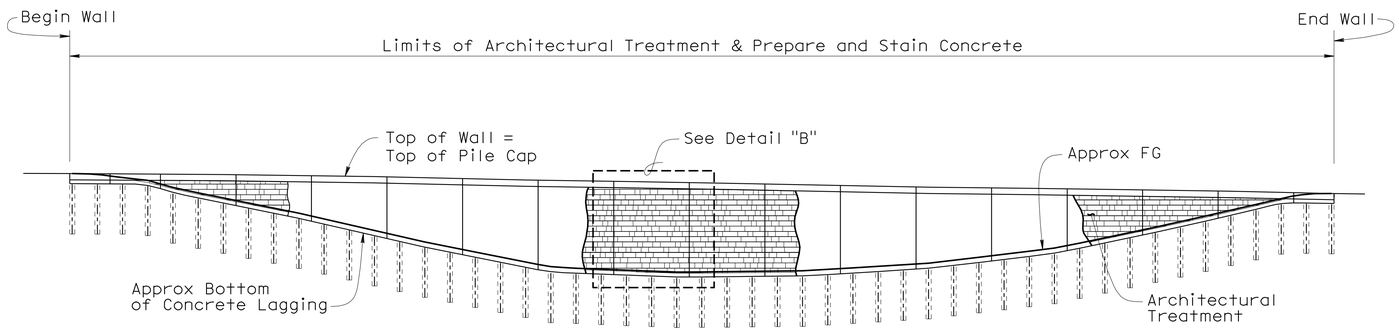

WALL ELEVATION

1" = 30'

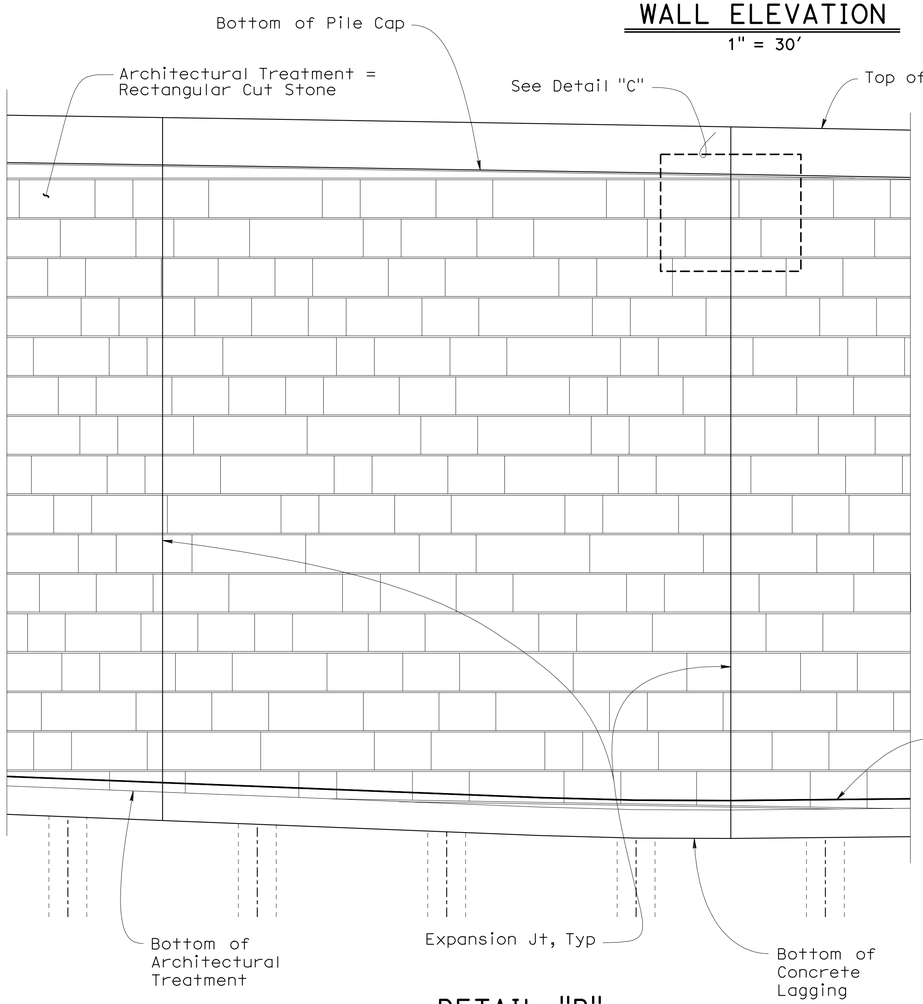

DETAIL "B"

1/4" = 1'-0"

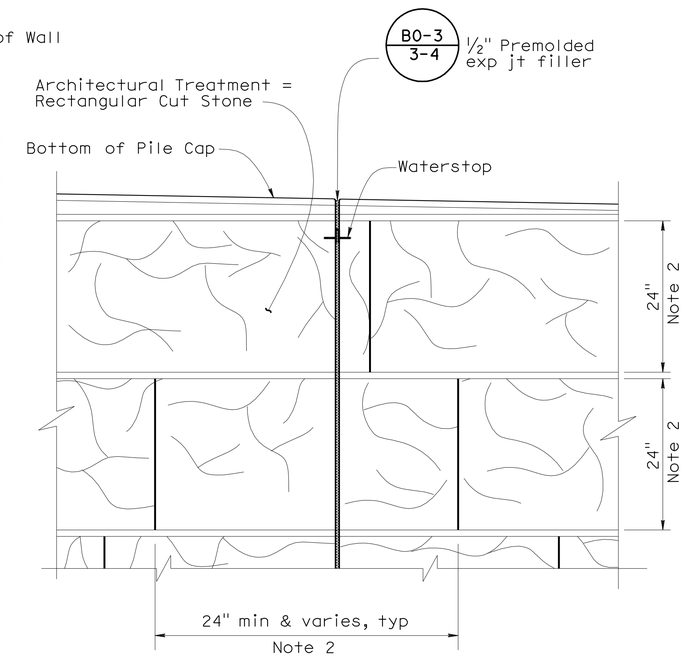

DETAIL "C"

NO SCALE

NOTES:

1. Grout lines to be arranged horizontal (level) and vertical.
2. Vertical stone dimension is 24"; horizontal stone dimension shall vary.
3. Architectural pattern shall be non-repeatable in appearance.

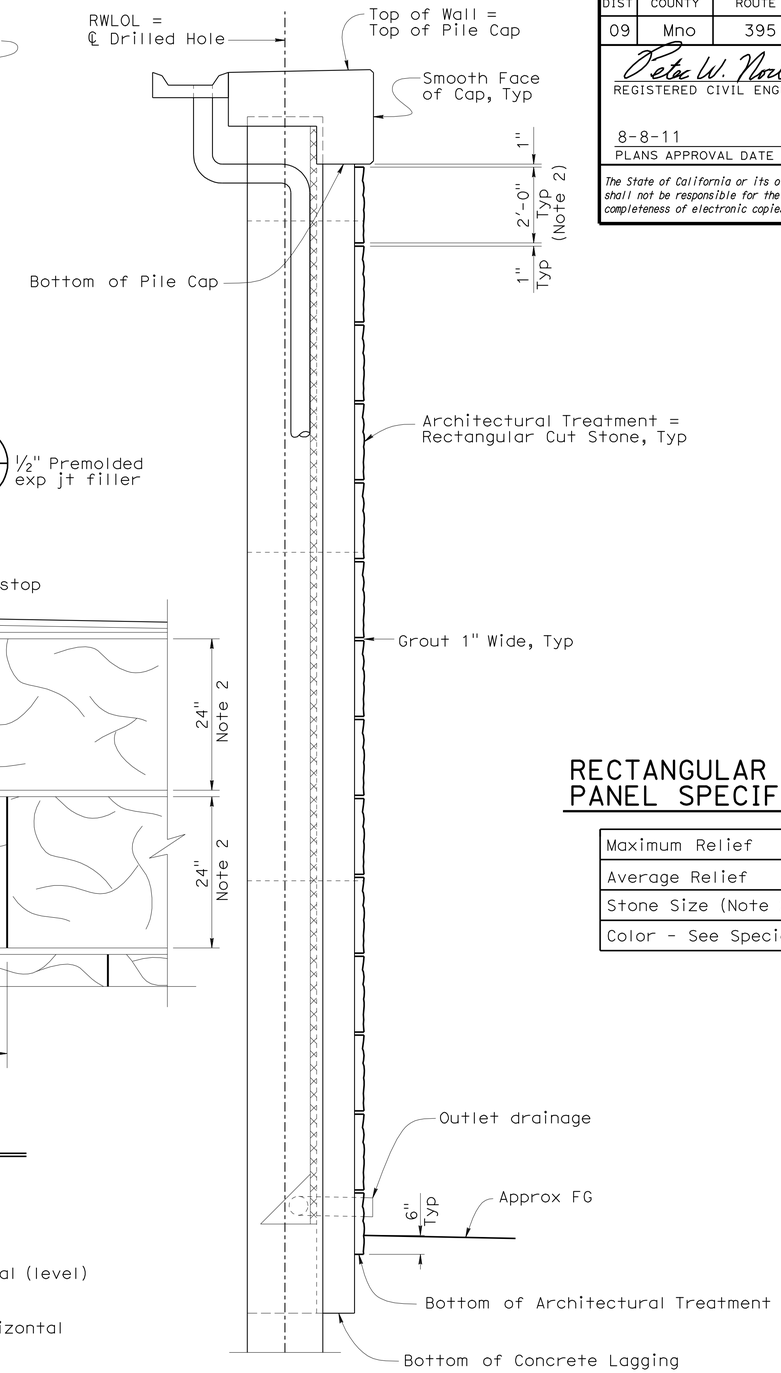

WALL SECTION

1/2" = 1'-0"

RECTANGULAR CUT STONE PANEL SPECIFICATIONS

Maximum Relief	3"
Average Relief	2"
Stone Size (Note 2)	24" - 72"
Color - See Special Provisions	

DESIGN	BY P. Norboe	CHECKED G. Matthews	
DETAILS	BY D. Elliott	CHECKED G. Matthews	
QUANTITIES	BY P. Norboe	CHECKED G. Matthews	

STATE OF CALIFORNIA
DEPARTMENT OF TRANSPORTATION

DIVISION OF ENGINEERING SERVICES
STRUCTURE DESIGN
DESIGN BRANCH 9

BRIDGE NO. 47E0003
POST MILE 118.7/119.0

RETAINING WALL B
ARCHITECTURAL TREATMENT

STRUCTURES DESIGN DETAIL SHEET (ENGLISH) (REV. 09-01-10)

ORIGINAL SCALE IN INCHES FOR REDUCED PLANS 0 1 2 3

UNIT: 3594
PROJECT NUMBER & PHASE: 09000000381
CONTRACT NO.: 09-237701

DISREGARD PRINTS BEARING EARLIER REVISION DATES

REVISION DATES: 4-22-11 5-11-11 5-18-11 6-15-11

SHEET 13 OF 18

FILE => 47e0003-u-at.dgn

USERNAME => s124496 DATE PLOTTED => 15-AUG-2011 TIME PLOTTED => 09:21

DIST	COUNTY	ROUTE	POST MILES TOTAL PROJECT	SHEET No	TOTAL SHEETS
09	Mno	395	118.7/119.6	135	139

CERTIFIED ENGINEERING GEOLOGIST 6-14-11

8-8-11
PLANS APPROVAL DATE

PROFESSIONAL GEOLOGIST Brandon Badeker No. 2480 Exp. 1-31-2013 CERTIFIED ENGINEERING GEOLOGIST STATE OF CALIFORNIA

The State of California or its officers or agents shall not be responsible for the accuracy or completeness of electronic copies of this plan sheet.

This LOTB sheet was prepared in accordance with the Caltrans Soil & Rock Logging, Classification, & Presentation Manual (2010 Edition).

BENCH MARK

PM 118.88 1998 (Not Shown On Plan)
Fnd CT Alum Cap 3/4" Rebar
21.89' Rt "FNL4" Line Proposed Rte 395
Sta 65+86.09
N 2,430,583.40
E 6,834,824.18
Elev = 5048.61

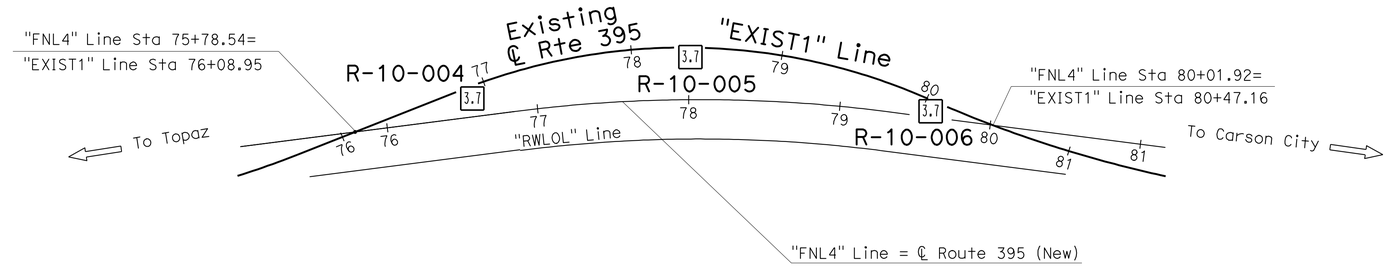

PLAN

1" = 50'

Note: No ground water encountered during field investigation.

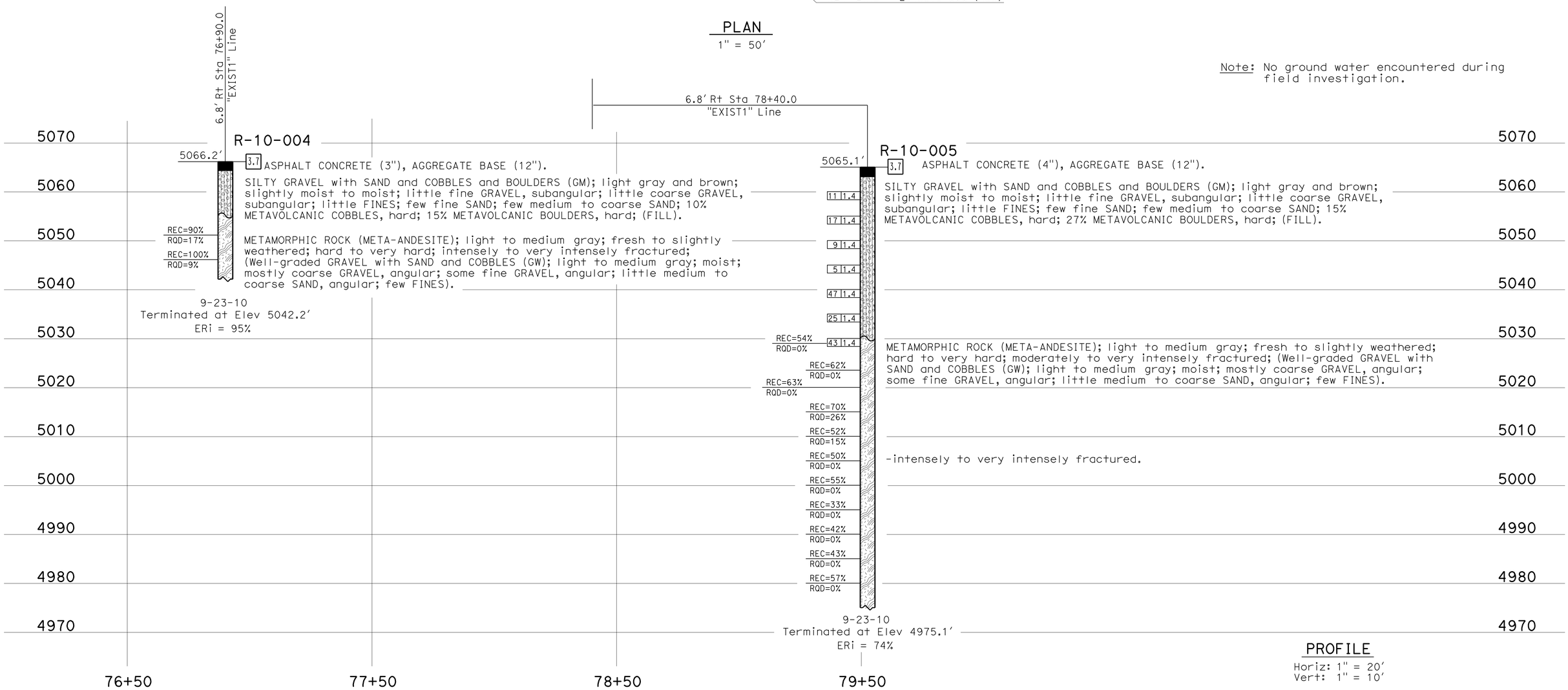

PROFILE

Horiz: 1" = 20'
Vert: 1" = 10'

ENGINEERING SERVICES	MATERIALS AND GEOTECHNICAL SERVICES	STATE OF CALIFORNIA DEPARTMENT OF TRANSPORTATION	DIVISION OF ENGINEERING SERVICES STRUCTURE DESIGN DESIGN BRANCH 9	BRIDGE NO. 47-E0003 POST MILE 118.7/119	RETAINING WALL B LOG OF TEST BORINGS 1 OF 5
FUNCTIONAL SUPERVISOR NAME: Q. Huang	DRAWN BY: W. Tang/C. Christian 06/11 CHECKED BY: B. Barnes	FIELD INVESTIGATION BY: B. Badeker/B. Bertucci			

OGS CIVIL LOG OF TEST BORINGS SHEET

ORIGINAL SCALE IN INCHES FOR REDUCED PLANS 0 1 2 3

UNIT: 3643
PROJECT NUMBER & PHASE: 0900000038 CONTRACT NO.: 09-237701

DISREGARD PRINTS BEARING EARLIER REVISION DATES 06-14-11

REVISION DATES | SHEET 14 | OF 18

FILE => 47e0003-z-ltb_01.dgn

USERNAME => s124496 DATE PLOTTED => 15-AUG-2011 TIME PLOTTED => 09:21

DIST	COUNTY	ROUTE	POST MILES TOTAL PROJECT	SHEET No	TOTAL SHEETS
09	Mno	395	118.7/119.6	136	139

CERTIFIED ENGINEERING GEOLOGIST 6-14-11

8-8-11
PLANS APPROVAL DATE

PROFESSIONAL GEOLOGIST
Brandon Badeker
No. 2480
Exp. 1-31-2013
CERTIFIED ENGINEERING GEOLOGIST
STATE OF CALIFORNIA

The State of California or its officers or agents shall not be responsible for the accuracy or completeness of electronic copies of this plan sheet.

This LOTB sheet was prepared in accordance with the Caltrans Soil & Rock Logging, Classification, & Presentation Manual (2010 Edition).

FOR PLAN VIEW, SEE
"LOG OF TEST BORINGS 1 OF 5"

Note: No ground water encountered during field investigation.

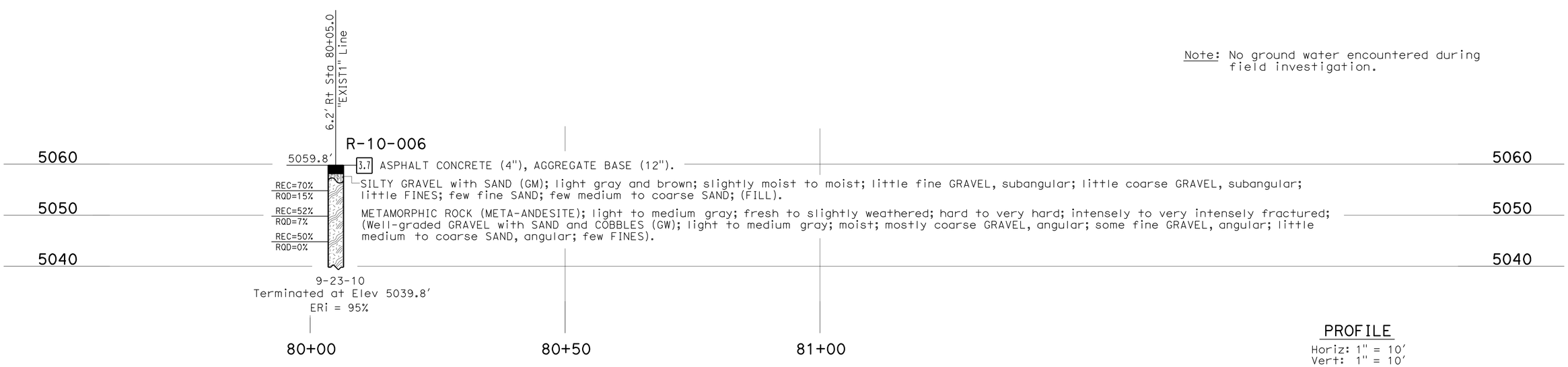

PROFILE
Horiz: 1" = 10'
Vert: 1" = 10'

ENGINEERING SERVICES	MATERIALS AND GEOTECHNICAL SERVICES	STATE OF CALIFORNIA DEPARTMENT OF TRANSPORTATION	DIVISION OF ENGINEERING SERVICES STRUCTURE DESIGN DESIGN BRANCH 9	BRIDGE NO. 47-E0003 POST MILE 118.7/119	RETAINING WALL B
FUNCTIONAL SUPERVISOR NAME: Q. Huang	DRAWN BY: W. Tang/C. Christian 06/11 CHECKED BY: B. Barnes	FIELD INVESTIGATION BY: B. Badeker/B. Bertucci			LOG OF TEST BORINGS 2 OF 5

OGS CIVIL LOG OF TEST BORINGS SHEET

ORIGINAL SCALE IN INCHES FOR REDUCED PLANS 0 1 2 3

UNIT: 3643
PROJECT NUMBER & PHASE: 0900000038 CONTRACT NO.: 09-237701

DISREGARD PRINTS BEARING EARLIER REVISION DATES

REVISION DATES 06-14-11 SHEET 15 OF 18

FILE => 47e0003-z-ltb_02.dgn

USERNAME => s124496 DATE PLOTTED => 15-AUG-2011 TIME PLOTTED => 09:21

REFERENCE: CALTRANS SOIL & ROCK LOGGING, CLASSIFICATION, AND PRESENTATION MANUAL (2010)

DIST	COUNTY	ROUTE	POST MILES TOTAL PROJECT	SHEET No	TOTAL SHEETS
09	Mno	395	118.7/119.6	137	139

CERTIFIED ENGINEERING GEOLOGIST 6-14-11

8-8-11
PLANS APPROVAL DATE

PROFESSIONAL GEOLOGIST Brandon Badeker No. 2480 Exp. 1-31-2013 CERTIFIED ENGINEERING GEOLOGIST STATE OF CALIFORNIA

The State of California or its officers or agents shall not be responsible for the accuracy or completeness of electronic copies of this plan sheet.

CEMENTATION

Description	Criteria
Weak	Crumbles or breaks with handling or little finger pressure.
Moderate	Crumbles or breaks with considerable finger pressure.
Strong	Will not crumble or break with finger pressure.

BOREHOLE IDENTIFICATION

Symbol	Hole Type	Description
Size	A	Auger Boring (hollow or solid stem bucket)
Size	R RW RC P	Rotary drilled boring (conventional) Rotary drilled with self-casing wire-line Rotary core with continuously-sampled, self-casing wire-line Rotary percussion boring (air)
Size	R	Rotary drilled diamond core
Size	HD HA	Hand driven (1-inch soil tube) Hand Auger
●	D	Dynamic Cone Penetration Boring
▲	CPT	Cone Penetration Test (ASTM D 5778)
⬚	O	Other (note on LOTB)

Note: Size in inches.

CONSISTENCY OF COHESIVE SOILS

Description	Shear Strength (tsf)	Pocket Penetrometer Measurement, PP, (tsf)	Torvane Measurement, TV, (tsf)	Vane Shear Measurement, VS, (tsf)
Very Soft	Less than 0.12	Less than 0.25	Less than 0.12	Less than 0.12
Soft	0.12 - 0.25	0.25 - 0.5	0.12 - 0.25	0.12 - 0.25
Medium Stiff	0.25 - 0.5	0.5 - 1	0.25 - 0.5	0.25 - 0.5
Stiff	0.5 - 1	1 - 2	0.5 - 1	0.5 - 1
Very Stiff	1 - 2	2 - 4	1 - 2	1 - 2
Hard	Greater than 2	Greater than 4	Greater than 2	Greater than 2

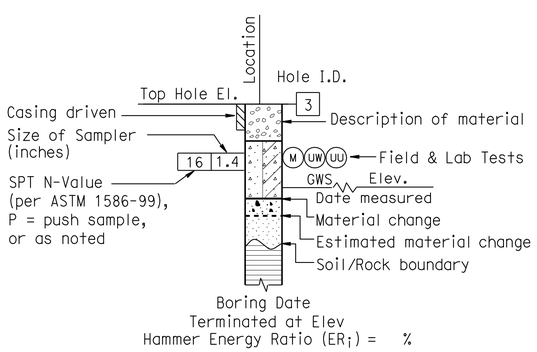

ROTARY BORING

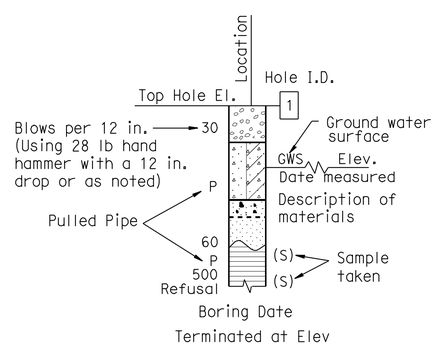

HAND BORING

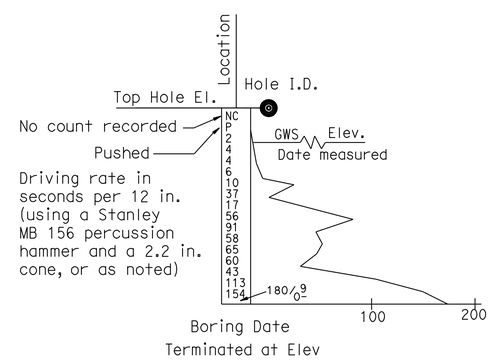

DYNAMIC CONE PENETRATION BORING

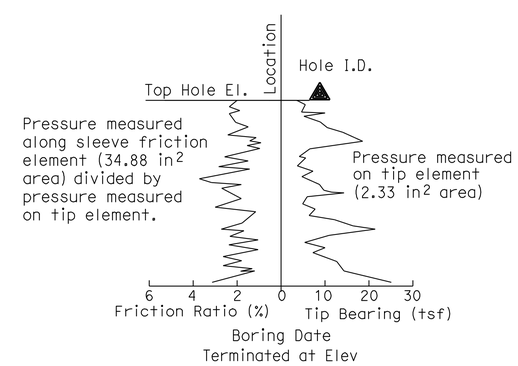

CONE PENETRATION TEST (CPT) BORING

ENGINEERING SERVICES	MATERIALS AND GEOTECHNICAL SERVICES	STATE OF CALIFORNIA DEPARTMENT OF TRANSPORTATION	DIVISION OF ENGINEERING SERVICES STRUCTURE DESIGN DESIGN BRANCH 9	BRIDGE NO. 47-E0003 POST MILE 118.7/119	RETAINING WALL B LOG OF TEST BORINGS 3 OF 5
	PREPARED BY: W. Tang 06/11				

GS LOTB SOIL LEGEND

ORIGINAL SCALE IN INCHES FOR REDUCED PLANS 0 1 2 3

UNIT: 3643
PROJECT NUMBER & PHASE: 0900000038
CONTRACT NO.: 09-237701

DISREGARD PRINTS BEARING EARLIER REVISION DATES

REVISION DATES | SHEET 16 OF 18

FILE => 47e0003-z-ltb_03.dgn

USERNAME => s124496 DATE PLOTTED => 15-AUG-2011 TIME PLOTTED => 09:21

REFERENCE: CALTRANS SOIL & ROCK LOGGING, CLASSIFICATION, AND PRESENTATION MANUAL (2010)

DIST	COUNTY	ROUTE	POST MILES TOTAL PROJECT	SHEET No	TOTAL SHEETS
09	Mno	395	118.7/119.6	138	139

CERTIFIED ENGINEERING GEOLOGIST 6-14-11

8-8-11
PLANS APPROVAL DATE

PROFESSIONAL GEOLOGIST Brandon Badeker No. 2480 Exp. 1-31-2013 CERTIFIED ENGINEERING GEOLOGIST STATE OF CALIFORNIA

The State of California or its officers or agents shall not be responsible for the accuracy or completeness of electronic copies of this plan sheet.

GROUP SYMBOLS AND NAMES

Graphic/Symbol	Group Names	Graphic/Symbol	Group Names
GW	Well-graded GRAVEL Well-graded GRAVEL with SAND	CL	Lean CLAY Lean CLAY with SAND Lean CLAY with GRAVEL SANDY lean CLAY SANDY lean CLAY with GRAVEL GRAVELLY lean CLAY GRAVELLY lean CLAY with SAND
GP	Poorly-graded GRAVEL Poorly-graded GRAVEL with SAND		
GW-GM	Well-graded GRAVEL with SILT Well-graded GRAVEL with SILT and SAND	CL-ML	SILTY CLAY SILTY CLAY with SAND SILTY CLAY with GRAVEL SANDY SILTY CLAY SANDY SILTY CLAY with GRAVEL GRAVELLY SILTY CLAY GRAVELLY SILTY CLAY with SAND
GW-GC	Well-graded GRAVEL with CLAY (or SILTY CLAY) Well-graded GRAVEL with CLAY and SAND (or SILTY CLAY and SAND)		
GP-GM	Poorly-graded GRAVEL with SILT Poorly-graded GRAVEL with SILT and SAND	ML	SILT SILT with SAND SILT with GRAVEL SANDY SILT SANDY SILT with GRAVEL GRAVELLY SILT GRAVELLY SILT with SAND
GP-GC	Poorly-graded GRAVEL with CLAY (or SILTY CLAY) Poorly-graded GRAVEL with CLAY and SAND (or SILTY CLAY and SAND)		
GM	SILTY GRAVEL SILTY GRAVEL with SAND	OL	ORGANIC lean CLAY ORGANIC lean CLAY with SAND ORGANIC lean CLAY with GRAVEL SANDY ORGANIC lean CLAY SANDY ORGANIC lean CLAY with GRAVEL GRAVELLY ORGANIC lean CLAY GRAVELLY ORGANIC lean CLAY with SAND
GC	CLAYEY GRAVEL CLAYEY GRAVEL with SAND		
GC-GM	SILTY, CLAYEY GRAVEL SILTY, CLAYEY GRAVEL with SAND	OL	ORGANIC SILT ORGANIC SILT with SAND ORGANIC SILT with GRAVEL SANDY ORGANIC SILT SANDY ORGANIC SILT with GRAVEL GRAVELLY ORGANIC SILT GRAVELLY ORGANIC SILT with SAND
SW	Well-graded SAND Well-graded SAND with GRAVEL		
SP	Poorly-graded SAND Poorly-graded SAND with GRAVEL	CH	Fat CLAY Fat CLAY with SAND Fat CLAY with GRAVEL SANDY fat CLAY SANDY fat CLAY with GRAVEL GRAVELLY fat CLAY GRAVELLY fat CLAY with SAND
SW-SM	Well-graded SAND with SILT Well-graded SAND with SILT and GRAVEL		
SW-SC	Well-graded SAND with CLAY (or SILTY CLAY) Well-graded SAND with CLAY and GRAVEL (or SILTY CLAY and GRAVEL)	MH	Elastic SILT Elastic SILT with SAND Elastic SILT with GRAVEL SANDY elastic SILT SANDY elastic SILT with GRAVEL GRAVELLY elastic SILT GRAVELLY elastic SILT with SAND
SP-SM	Poorly-graded SAND with SILT Poorly-graded SAND with SILT and GRAVEL		
SP-SC	Poorly-graded SAND with CLAY (or SILTY CLAY) Poorly-graded SAND with CLAY and GRAVEL (or SILTY CLAY and GRAVEL)	OH	ORGANIC fat CLAY ORGANIC fat CLAY with SAND ORGANIC fat CLAY with GRAVEL SANDY ORGANIC fat CLAY SANDY ORGANIC fat CLAY with GRAVEL GRAVELLY ORGANIC fat CLAY GRAVELLY ORGANIC fat CLAY with SAND
SM	SILTY SAND SILTY SAND with GRAVEL		
SC	CLAYEY SAND CLAYEY SAND with GRAVEL	OH	ORGANIC elastic SILT ORGANIC elastic SILT with SAND ORGANIC elastic SILT with GRAVEL SANDY ORGANIC elastic SILT SANDY ORGANIC elastic SILT with GRAVEL GRAVELLY ORGANIC elastic SILT GRAVELLY ORGANIC elastic SILT with SAND
SC-SM	SILTY, CLAYEY SAND SILTY, CLAYEY SAND with GRAVEL		
PT	PEAT	OL/OH	ORGANIC SOIL ORGANIC SOIL with SAND ORGANIC SOIL with GRAVEL SANDY ORGANIC SOIL SANDY ORGANIC SOIL with GRAVEL GRAVELLY ORGANIC SOIL GRAVELLY ORGANIC SOIL with SAND
	COBBLES COBBLES and BOULDERS BOULDERS		

FIELD AND LABORATORY TESTING

- (C) Consolidation (ASTM D 2435)
- (CL) Collapse Potential (ASTM D 5333)
- (CP) Compaction Curve (CTM 216)
- (CR) Corrosivity Testing (CTM 643, CTM 422, CTM 417)
- (CU) Consolidated Undrained Triaxial (ASTM D 4767)
- (DS) Direct Shear (ASTM D 3080)
- (EI) Expansion Index (ASTM D 4829)
- (M) Moisture Content (ASTM D 2216)
- (OC) Organic Content-% (ASTM D 2974)
- (P) Permeability (CTM 220)
- (PA) Particle Size Analysis (ASTM D 422)
- (PI) Plasticity Index (AASHTO T 90) Liquid Limit (AASHTO T 89)
- (PL) Point Load Index (ASTM D 5731)
- (PM) Pressure Meter
- (R) R-Value (CTM 301)
- (SE) Sand Equivalent (CTM 217)
- (SG) Specific Gravity (AASHTO T 100)
- (SL) Shrinkage Limit (ASTM D 427)
- (SW) Swell Potential (ASTM D 4546)
- (UC) Unconfined Compression-Soil (ASTM D 2166) Unconfined Compression-Rock (ASTM D 2938)
- (UU) Unconsolidated Undrained Triaxial (ASTM D 2850)
- (UW) Unit Weight (ASTM D 4767)

APPARENT DENSITY OF COHESIONLESS SOILS

Description	SPT N_{60} (Blows / 12 in.)
Very Loose	0 - 5
Loose	5 - 10
Medium Dense	10 - 30
Dense	30 - 50
Very Dense	Greater than 50

MOISTURE

Description	Criteria
Dry	No discernable moisture
Moist	Moisture present, but no free water
Wet	Visible free water

PERCENT OR PROPORTION OF SOILS

Description	Criteria
Trace	Particles are present but estimated to be less than 5%
Few	5% - 10%
Little	15% - 25%
Some	30% - 45%
Mostly	50% - 100%

PARTICLE SIZE

Description		Size (in.)
Boulder		Greater than 12
Cobble		3 - 12
Gravel	Coarse	3/4 - 3
	Fine	1/5 - 3/4
Sand	Coarse	1/16 - 1/5
	Medium	1/64 - 1/16
	Fine	1/300 - 1/64
Silt and Clay		Less than 1/300

ENGINEERING SERVICES

MATERIALS AND GEOTECHNICAL SERVICES

PREPARED BY: W. Tang 06/11

STATE OF CALIFORNIA DEPARTMENT OF TRANSPORTATION

DIVISION OF ENGINEERING SERVICES STRUCTURE DESIGN DESIGN BRANCH 9

BRIDGE NO. 47-E0003

POST MILE 118.7/119

RETAINING WALL B

LOG OF TEST BORINGS 4 OF 5

GS LOTB SOIL LEGEND

ORIGINAL SCALE IN INCHES FOR REDUCED PLANS 0 1 2 3

UNIT: 3643
PROJECT NUMBER & PHASE: 0900000038

CONTRACT NO.: 09-237701

DISREGARD PRINTS BEARING EARLIER REVISION DATES

REVISION DATES

SHEET 17 OF 18

FILE => 47e0003-z-ltb_04.dgn

USERNAME => s124096 DATE PLOTTED => 15-AUG-2011 TIME PLOTTED => 09:22

REFERENCE: CALTRANS SOIL & ROCK LOGGING, CLASSIFICATION, AND PRESENTATION MANUAL (2010)

DIST	COUNTY	ROUTE	POST MILES TOTAL PROJECT	SHEET No	TOTAL SHEETS
09	Mno	395	118.7/119.6	139	139

CERTIFIED ENGINEERING GEOLOGIST 6-14-11

8-8-11
PLANS APPROVAL DATE

PROFESSIONAL GEOLOGIST Brandon Badeker No. 2480 Exp. 1-31-2013 CERTIFIED ENGINEERING GEOLOGIST STATE OF CALIFORNIA

The State of California or its officers or agents shall not be responsible for the accuracy or completeness of electronic copies of this plan sheet.

PERCENT CORE RECOVERY (REC) & ROCK QUALITY DESIGNATION (RQD)

$$REC = \frac{\sum \text{Length of the recovered core pieces (in.)}}{\text{Total length of core run (in.)}} \times 100\%$$

$$RQD = \frac{\sum \text{Length of intact core pieces} \geq 4 \text{ in.}}{\text{Total length of core run (in.)}} \times 100\%$$

RQD* Indicates soundness criteria not met.

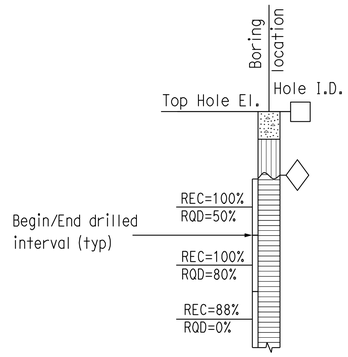

BEDDING SPACING

Description	Thickness / Spacing
Massive	Greater than 10 ft
Very Thickly Bedded	3 ft - 10 ft
Thickly Bedded	1 ft - 3 ft
Moderately Bedded	4 in. - 1 ft
Thinly Bedded	1 in. - 4 in.
Very Thinly Bedded	1/4 in. - 1 in.
Laminated	Less than 1/4 in.

LEGEND OF ROCK MATERIALS

- IGNEOUS ROCK
- SEDIMENTARY ROCK
- METAMORPHIC ROCK

ROCK HARDNESS

Description	Criteria
Extremely Hard	Cannot be scratched with a pocketknife or sharp pick. Can only be chipped with repeated heavy hammer blows.
Very Hard	Cannot be scratched with a pocketknife or sharp pick. Breaks with repeated heavy hammer blows.
Hard	Can be scratched with a pocketknife or sharp pick with difficulty (heavy pressure). Breaks with heavy hammer blows.
Moderately Hard	Can be scratched with pocketknife or sharp pick with light or moderate pressure. Breaks with moderate hammer blows.
Moderately Soft	Can be grooved 1/16 in. deep with a pocketknife or sharp pick with moderate or heavy pressure. Breaks with light hammer blow or heavy manual pressure.
Soft	Can be grooved or gouged easily by a pocketknife or sharp pick with light pressure, can be scratched with fingernail. Breaks with light to moderate manual pressure.
Very Soft	Can be readily indented, grooved or gouged with fingernail, or carved with a pocketknife. Breaks with light manual pressure.

FRACTURE DENSITY

Description	Observed Fracture Density
Unfractured	No fractures.
Very Slightly Fractured	Core lengths greater than 3 ft.
Slightly Fractured	Core lengths mostly from 1 to 3 ft.
Moderately Fractured	Core lengths mostly from 4 in. to 1 ft.
Intensely Fractured	Core lengths mostly from 1 to 4 in.
Very Intensely Fractured	Mostly chips and fragments.

WEATHERING DESCRIPTORS FOR INTACT ROCK

Description	Diagnostic Features					General Characteristics
	Chemical Weathering-Discoloration and/or Oxidation		Mechanical Weathering-Grain Boundary Conditions (Disaggregation) Primarily for Granitics and Some Coarse-Grained Sediments	Texture and Leaching		
	Body of Rock	Fracture Surfaces		Texture	Leaching	
Fresh	No discoloration, not oxidized.	No discoloration or oxidation.	No separation, intact (tight).	No change	No leaching	Hammer rings when crystalline rocks are struck.
Slightly Weathered	Discoloration or oxidation is limited to surface of, or short distance from, fractures; some feldspar crystals are dull.	Minor to complete discoloration or oxidation of most surfaces.	No visible separation, intact (tight).	Preserved	Minor leaching of some soluble minerals.	Hammer rings when crystalline rocks are struck. Body of rock not weakened.
Moderately Weathered	Discoloration or oxidation extends from fractures usually throughout; Fe-Mg minerals are "rusty," feldspar crystals are "cloudy."	All fracture surfaces are discolored or oxidized.	Partial separation of boundaries visible.	Generally preserved	Soluble minerals may be mostly leached.	Hammer does not ring when rock is struck. Body of rock is slightly weakened.
Intensely Weathered	Discoloration or oxidation throughout; all feldspars and Fe-Mg minerals are altered to clay to some extent; or chemical alteration produces in-situ disaggregation, see grain boundary conditions.	All fracture surfaces are discolored or oxidized, surfaces friable.	Partial separation, rock is friable; in semiarid conditions granitics are disaggregated.	Texture altered by chemical disintegration (hydration, argillation).	Leaching of soluble minerals may be complete.	Dull sound when struck with hammer, usually can be broken with moderate to heavy manual pressure or by light hammer blow without reference to planes of weakness such as incipient or hairline fractures, or veinlets. Rock is significantly weakened.
Decomposed	Discolored or oxidized throughout, but resistant minerals such as quartz may be unaltered; all feldspars and Fe-Mg minerals are completely altered to clay.		Complete separation of grain boundaries (disaggregated).	Resembles a soil, partial or complete remnant rock structure may be preserved; leaching of soluble minerals usually complete.		Can be granulated by hand. Resistant minerals such as quartz may be present as "stringers" or "dikes."

ENGINEERING SERVICES

MATERIALS AND GEOTECHNICAL SERVICES

PREPARED BY: W. Tang 06/11

STATE OF CALIFORNIA DEPARTMENT OF TRANSPORTATION

DIVISION OF ENGINEERING SERVICES STRUCTURE DESIGN DESIGN BRANCH 9

BRIDGE NO. 47-E0003

POST MILE 118.7/119

RETAINING WALL B

LOG OF TEST BORINGS 5 OF 5

GS LOTB SOIL LEGEND

ORIGINAL SCALE IN INCHES FOR REDUCED PLANS 0 1 2 3

UNIT: 3643
PROJECT NUMBER & PHASE: 0900000038

CONTRACT NO.: 09-237701

DISREGARD PRINTS BEARING EARLIER REVISION DATES

REVISION DATES

SHEET 18 OF 18

FILE => 47e0003-z-ltb_05.dgn

USERNAME => s124496 DATE PLOTTED => 15-AUG-2011 TIME PLOTTED => 09:22