Dist	COUNTY	ROUTE	POST MILES TOTAL PROJECT	SHEET No.	TOTAL SHEETS
08	SBd	10	12.0/19.8	2	319

REGISTERED CIVIL ENGINEER 5-4-09 DATE

8-3-09
PLANS APPROVAL DATE

REGISTERED PROFESSIONAL ENGINEER DAI HOANG No. C64203 Exp. 6-30-11 CIVIL STATE OF CALIFORNIA

THE STATE OF CALIFORNIA OR ITS OFFICERS OR AGENTS SHALL NOT BE RESPONSIBLE FOR THE ACCURACY OR COMPLETENESS OF SCANNED COPIES OF THIS PLAN SHEET.

NOTES:

1. DIMENSIONS OF THE PAVEMENT STRUCTURES (STRUCTURAL SECTIONS) ARE SUBJECT TO TOLERANCES SPECIFIED IN THE STANDARD SPECIFICATIONS.
2. SUPERELEVATION AS SHOWN OR AS DIRECTED BY THE ENGINEER.
3. CONCRETE BARRIER TYPE ~~60~~ 60C SEE STANDARD PLAN A76A. 1
4. CRASH CUSHION (TYPE ADIEM) SEE STANDARD PLAN A82B1.
5. EXACT LOCATION SAWCUT LINES ARE SHOWN ON THE LAYOUTS SHEETS.
6. EXACT LOCATIONS AND TYPES OF MBGR, TYPES OF PCC DIKE, CONCRETE BARRIER ARE SHOWN ON THE LAYOUTS AND IN THE SUMMARY OF QUANTITIES SHEETS.
7. VEGETATION CONTROL AND MINOR CONCRETE PAVEMENT UNDER MBGR (SEE NEW STANDARD PLAN NSP A77C5, A77C6 & A77C8).
8. EXISTING ROW OF TREES TO BE PROTECTED IN PLACE DURING CLEARING AND GRUBBING. SIDE SLOPES MAY VARY AT THE LOCATION OF EXISTING TREES TO PROTECT THE TREES.
9. PCC DIKE TYPE C & E. SEE CONSTRUCTION DETAILS C-1
10. PCC DIKE TRANSITION BETWEEN PCC DIKE TYPE E AND CRASH CUSHION. SEE CONSTRUCTION DETAILS C-9
11. FOR STEEL AND JOINTS WITHIN PCCP, PLACE DOWEL BARS IN SQUARE TRANSVERSE JOINTS OF THE NEW PCCP, AND USE TIE BARS IN THE LONGITUDINAL JOINTS WITHIN THE NEW PCCP, AS PER THE STD PLANS. INCLUDE A PAVEMENT END ANCHOR WHERE NEW PCCP WILL ADJOIN EXIST. AC PAVEMENT, PER STD PLAN P30. HOWEVER, USE LONGITUDINAL ISOLATION JOINTS BETWEEN THE EXIST. PCCP AND THE NEW PCCP, AS PER CURRENT PRACTICE. REFER TO STD PLANS ~~P1~~ P2 THRU P46 FOR DETAILS ON RIGID PAVEMENT CONSTRUCTION, INCLUDING FOR DOWELS, TIE BARS, AND JOINTS. 2
12. LOCATIONS OF UTILITY (FIBER OPTICS) SHOWN ON THESE PLANS ARE APPROXIMATE AND SHALL BE VERIFIED BY THE CONTRACTOR PRIOR TO CONSTRUCTION.
13. FOR RAPID STRENGTH COCRETE DETAILS, SEE X-2 "SPECIAL DETAIL".

ABBREVIATIONS:

ADT AVERAGE DAILY TRAFFIC
DHV DESIGN HOUR VOLUME
DS DIRECTIONAL SPLIT
T TRUCK % IN DHV
HMABB HOT MIX ASPHALT BOND BREAKER
PMCTB PLANT MIXED CEMENT TREATED BASE
LL LANE LINE
LOL RW LAYOUT LINE RETAINING WALL
V DESIGN SPEED
RSC RAPID STRENGTH CONCRETE
POLY FILM POLYETHYLENE FILM

DESIGN DESIGNATION (ROUTE 10)

2007 ADT = 227,600, DHV = 14,930, DS = 53%, T = 6%
2030 ADT = 268,500, DHV = 21,480, DS = 55%, T = 6%
2050 ADT = 309,900, DHV = 30,990, DS = 57%, T = 6%
V = 65 MPH

TRAFFIC INDEX	INSIDE LANES	OUTSIDE LANES	OUTSIDE SHOULDER
10 YEAR	12.0	14.5	9.0
20 YEAR	13.5	15.5	10.0
40 YEAR	15.0	17.5	11.0

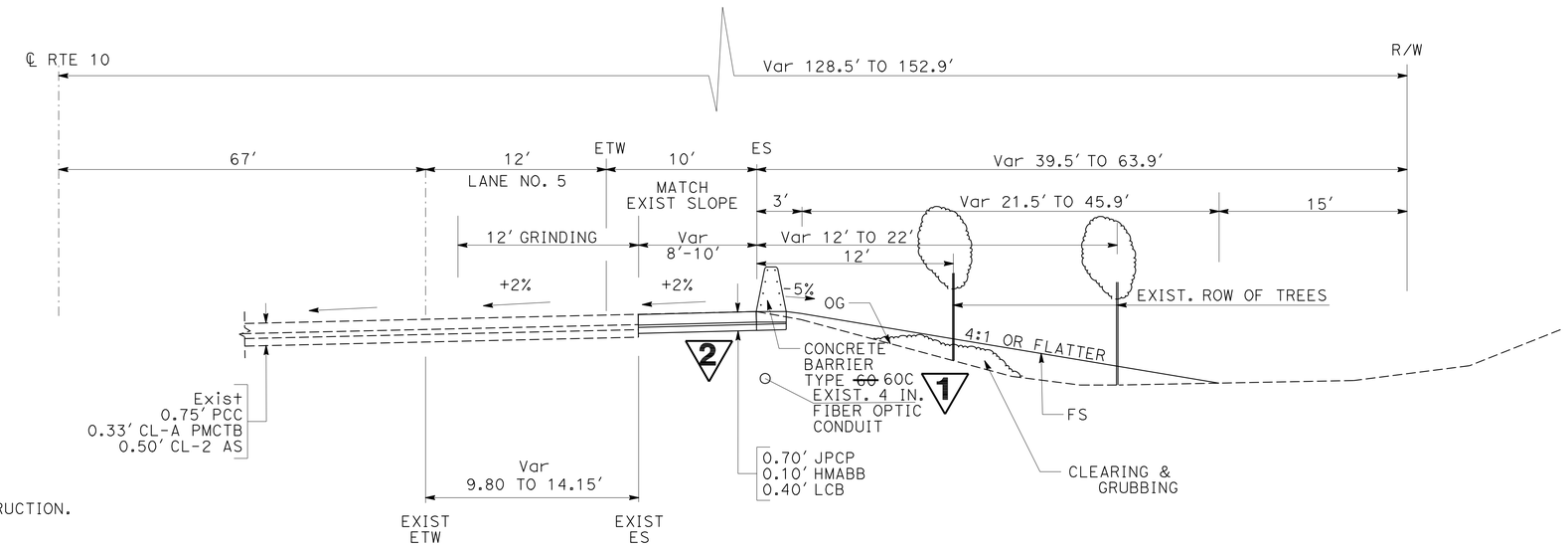

EASTBOUND LANE
FROM ETIWANDA AVE. TO CHERRY AVE. OFF-RAMP
STA 386+22.28 TO STA 392+91.00 ℄ RTE 10
(LOCATION 1)

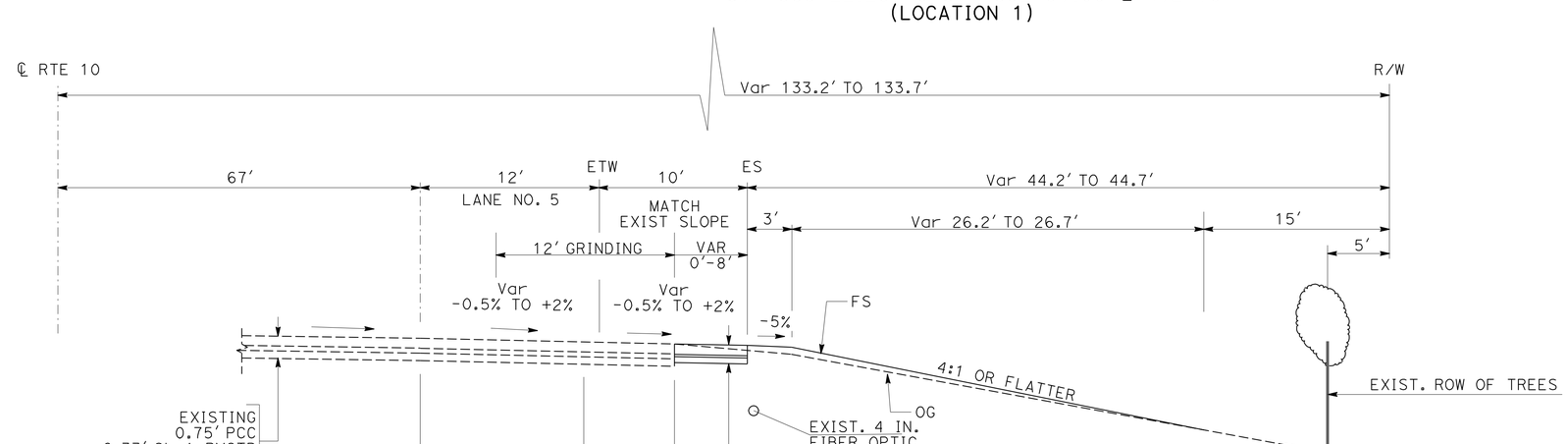

EASTBOUND LANE
FROM ETIWANDA AVE. TO CHERRY AVE. OFF-RAMP
STA 381+92.21 TO STA 386+22.28 ℄ RTE 10
(LOCATION 1)

2 **REVISED PER ADDENDUM No. 2 DATED JUNE 15, 2010**

1 **REVISED PER ADDENDUM No. 1 DATED JUNE 7, 2010**

TYPICAL CROSS SECTIONS

NO SCALE

X-1

STATE OF CALIFORNIA - DEPARTMENT OF TRANSPORTATION
Caltrans® DESIGN
FUNCTIONAL SUPERVISOR: SERGIO E. AVILA
CALCULATED-DESIGNED BY: TSUNG WANG
CHECKED BY: DAI HOANG
REVISED BY / DATE REVISED

LAST REVISION 05-04-09
DATE PLOTTED => 14-JUN-2010
TIME PLOTTED => 14:48

Dist	COUNTY	ROUTE	POST MILES TOTAL PROJECT	SHEET No.	TOTAL SHEETS
08	SBd	10	12.0/19.8	3	319

REGISTERED CIVIL ENGINEER 5-4-09 DATE

8-3-09
PLANS APPROVAL DATE

REGISTERED PROFESSIONAL ENGINEER DAI HOANG No. C64203 Exp. 6-30-11 CIVIL STATE OF CALIFORNIA

THE STATE OF CALIFORNIA OR ITS OFFICERS OR AGENTS SHALL NOT BE RESPONSIBLE FOR THE ACCURACY OR COMPLETENESS OF SCANNED COPIES OF THIS PLAN SHEET.

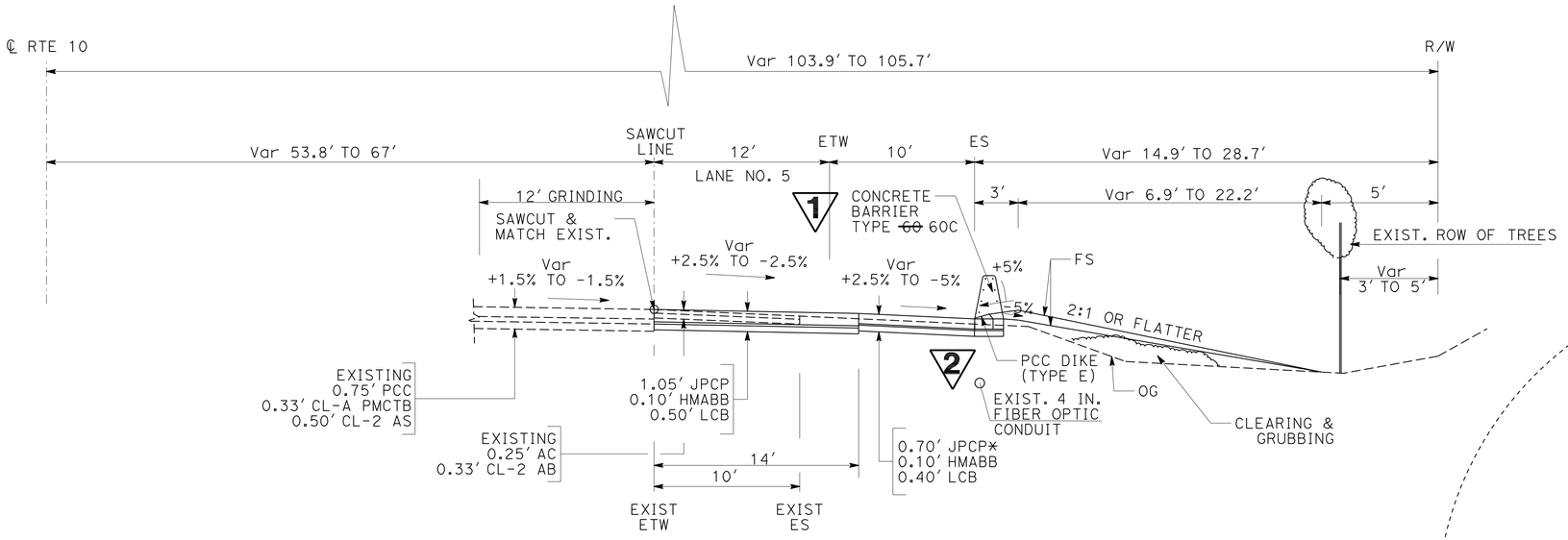

EASTBOUND AUXILIARY LANE
FROM ETIWANDA AVE. TO CHERRY AVE. OFF-RAMP
STA 399+93.36 TO STA 431+85.72 ℄ RTE 10 (LOCATION 1)
FROM SIERRA AVE. TO CEDAR AVE. OFF-RAMP
STA 660+00 TO STA 700+81.30 ℄ RTE 10 (LOCATION 4)

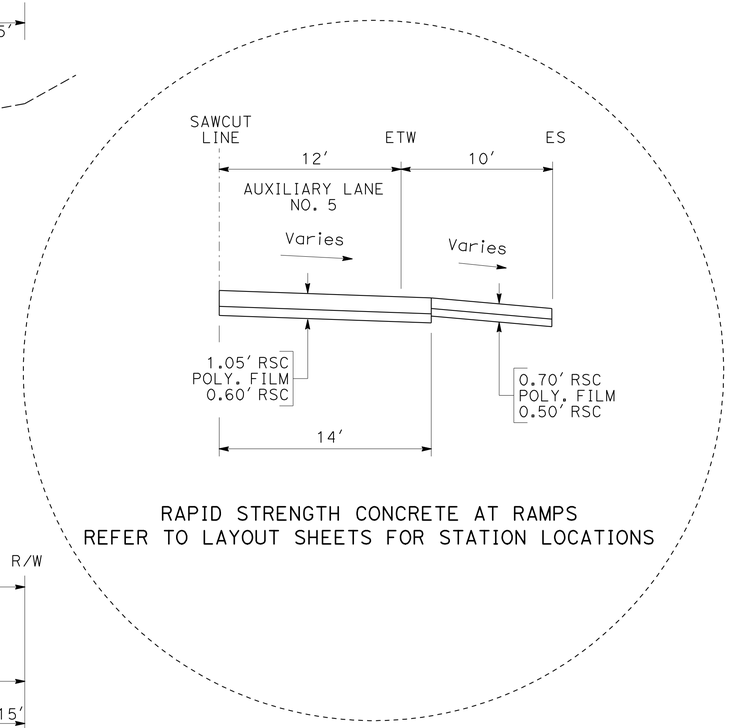

RAPID STRENGTH CONCRETE AT RAMPS
REFER TO LAYOUT SHEETS FOR STATION LOCATIONS

SPECIAL DETAIL

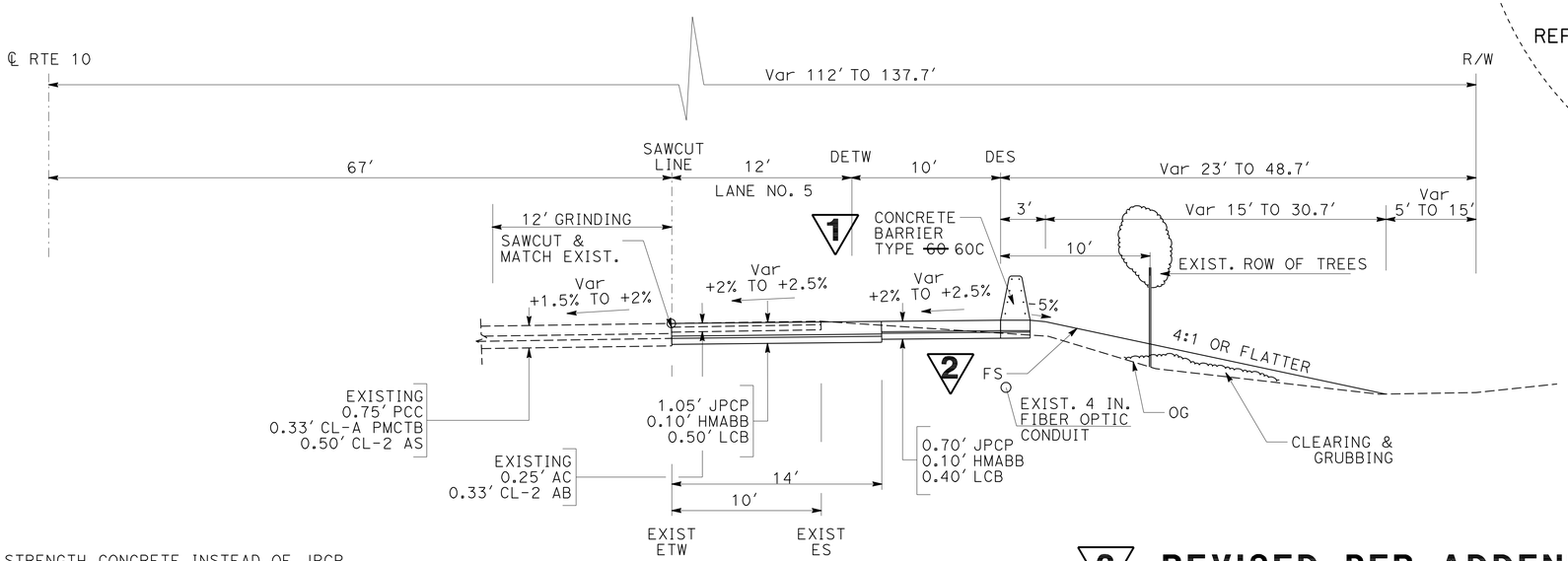

NOTE :

* USE RAPID STRENGTH CONCRETE INSTEAD OF JPCP
(FOR LIMIT OF RAPID STRENGTH CONCRETE, SEE SHEET L-4)

EASTBOUND LANE
FROM ETIWANDA AVE. TO CHERRY AVE. OFF-RAMP
STA 392+91.00 TO STA 399+93.36 ℄ RTE 10 (LOCATION 1)

2 REVISED PER ADDENDUM No. 2 DATED JUNE 15, 2010

1 REVISED PER ADDENDUM No. 1 DATED JUNE 7, 2010

TYPICAL CROSS SECTIONS

NO SCALE

X-2

STATE OF CALIFORNIA - DEPARTMENT OF TRANSPORTATION
Caltrans® **DESIGN**

FUNCTIONAL SUPERVISOR: SERGIO E. AVILA
CALCULATED-DESIGNED BY: TSUNG WANG
CHECKED BY: DAI HOANG
REVISED BY / DATE REVISED

LAST REVISION DATE PLOTTED => 14-JUN-2010
07-27-09 TIME PLOTTED => 14:48

Dist	COUNTY	ROUTE	POST MILES TOTAL PROJECT	SHEET No.	TOTAL SHEETS
08	SBd	10	12.0/19.8	4	319

REGISTERED CIVIL ENGINEER 5-4-09 DATE

8-3-09
PLANS APPROVAL DATE

REGISTERED PROFESSIONAL ENGINEER DAI HOANG No. C64203 Exp. 6-30-11 CIVIL STATE OF CALIFORNIA

THE STATE OF CALIFORNIA OR ITS OFFICERS OR AGENTS SHALL NOT BE RESPONSIBLE FOR THE ACCURACY OR COMPLETENESS OF SCANNED COPIES OF THIS PLAN SHEET.

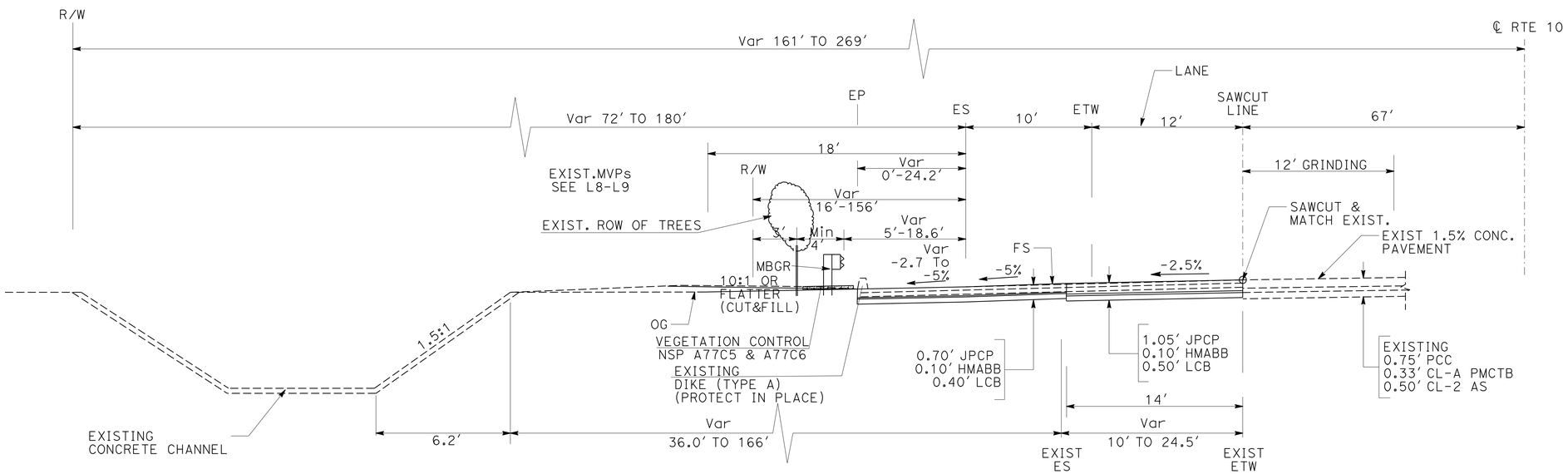

WESTBOUND LANE
FROM CHERRY AVE OFF-RAMP TO CITRUS AVE.
STA 497+50 TO STA 501+00 ℄ RTE 10
(LOCATION 2)

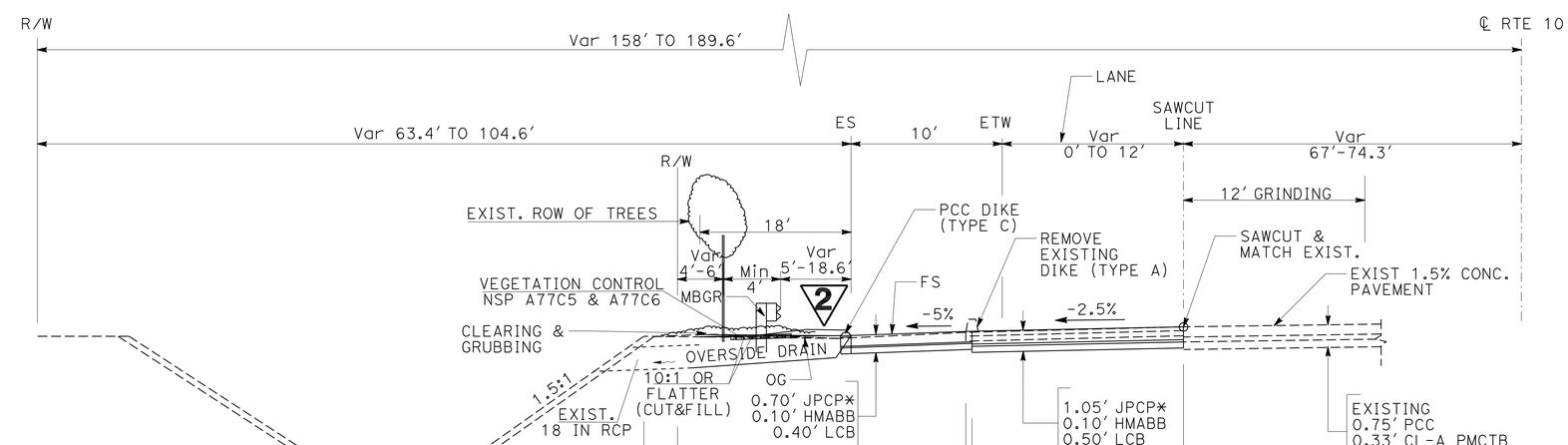

WESTBOUND LANE
FROM CHERRY AVE OFF-RAMP TO CITRUS AVE.
STA 455+21.4 TO STA 497+50 ℄ RTE 10
(LOCATION 2)

NOTE :

* USE RAPID STRENGTH CONCRETE INSTEAD OF JPCP
(FOR LIMIT OF RAPID STRENGTH CONCRETE, SEE SHEET L-5)

2 **REVISED PER ADDENDUM No. 2 DATED JUNE 15, 2010**

TYPICAL CROSS SECTIONS

NO SCALE

X-3

STATE OF CALIFORNIA - DEPARTMENT OF TRANSPORTATION
Caltrans® **DESIGN**

FUNCTIONAL SUPERVISOR: SERGIO E. AVILA
CALCULATED-DESIGNED BY: TSUNG WANG
CHECKED BY: DAI HOANG
REVISED BY
DATE REVISED

LAST REVISION 05-04-09
DATE PLOTTED => 14-JUN-2010
TIME PLOTTED => 14:49

Dist	COUNTY	ROUTE	POST MILES TOTAL PROJECT	SHEET No.	TOTAL SHEETS
08	SBd	10	12.0/19.8	5	319

REGISTERED CIVIL ENGINEER 5-4-09 DATE

8-3-09
PLANS APPROVAL DATE

REGISTERED PROFESSIONAL ENGINEER DAI HOANG No. C64203 Exp. 6-30-11 CIVIL STATE OF CALIFORNIA

THE STATE OF CALIFORNIA OR ITS OFFICERS OR AGENTS SHALL NOT BE RESPONSIBLE FOR THE ACCURACY OR COMPLETENESS OF SCANNED COPIES OF THIS PLAN SHEET.

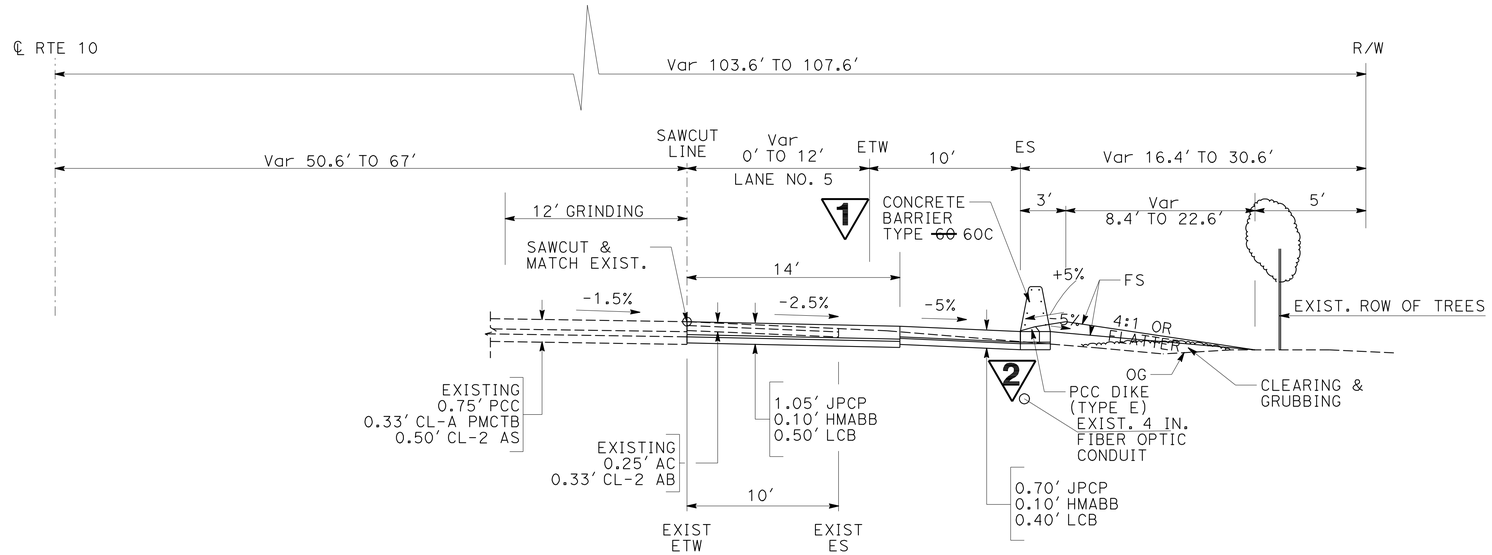

EASTBOUND LANE
FROM CHERRY AVE. TO CITRUS AVE. OFF-RAMP
STA 488+00 TO STA 494+00 ℄ RTE 10
STA 497+50 TO STA 507+50 ℄ RTE 10
STA 510+50 TO STA 511+50 ℄ RTE 10
STA 523+50 TO STA 527+50 ℄ RTE 10
STA 532+00 TO STA 534+50 ℄ RTE 10
STA 536+00 TO STA 539+27 ℄ RTE 10
(LOCATION 3)
STA 657+50 TO STA 660+00 ℄ RTE 10
(LOCATION 4)

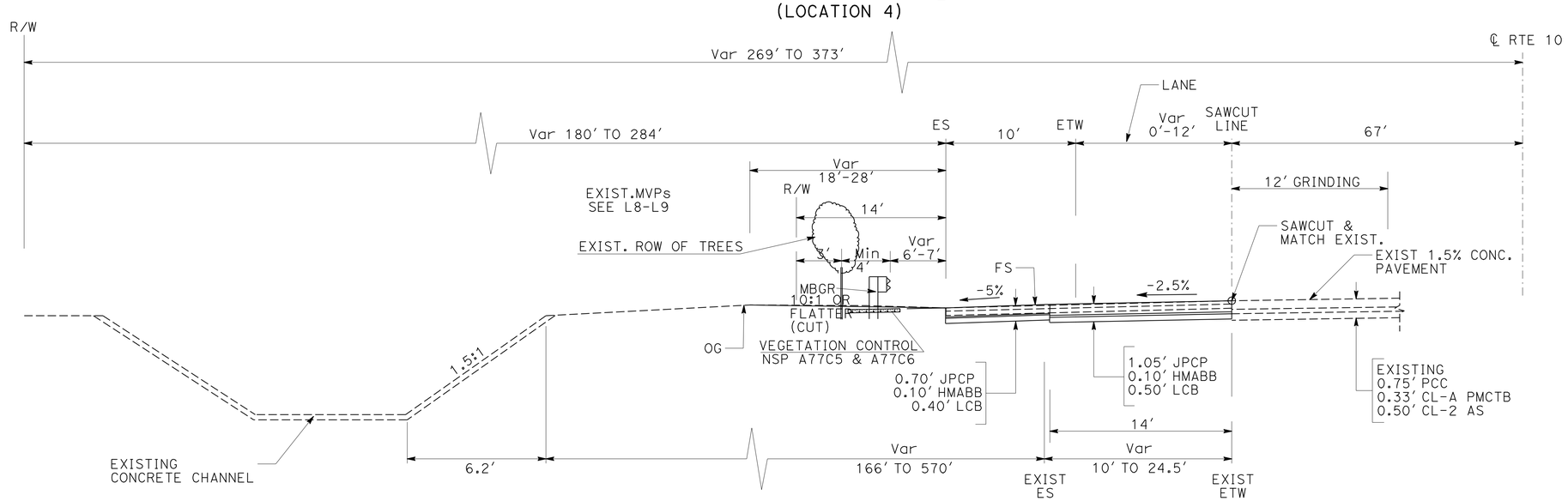

WESTBOUND LANE
FROM CHERRY AVE OFF-RAMP TO CITRUS AVE.
STA 501+00 TO STA 509+50 ℄ RTE 10
(LOCATION 2)

2 REVISED PER ADDENDUM No. 2 DATED JUNE 15, 2010

1 REVISED PER ADDENDUM No. 1 DATED JUNE 7, 2010

NOTE :

* USE RAPID STRENGTH CONCRETE INSTEAD OF JPCP (FOR LIMIT OF RAPID STRENGTH CONCRETE, SEE SHEET L-11)

TYPICAL CROSS SECTIONS

NO SCALE

X-4

STATE OF CALIFORNIA - DEPARTMENT OF TRANSPORTATION
Caltrans DESIGN

FUNCTIONAL SUPERVISOR: SERGIO E. AVILA
CALCULATED-DESIGNED BY: TSUNG WANG
CHECKED BY: DAI HOANG
REVISED BY / DATE REVISED

LAST REVISION 05-04-09
DATE PLOTTED => 14-JUN-2010
TIME PLOTTED => 14:49

Dist	COUNTY	ROUTE	POST MILES TOTAL PROJECT	SHEET No.	TOTAL SHEETS
08	SBd	10	12.0/19.8	6	319

REGISTERED CIVIL ENGINEER 5-4-09 DATE

8-3-09
PLANS APPROVAL DATE

REGISTERED PROFESSIONAL ENGINEER DAI HOANG No. C64203 Exp. 6-30-11 CIVIL STATE OF CALIFORNIA

THE STATE OF CALIFORNIA OR ITS OFFICERS OR AGENTS SHALL NOT BE RESPONSIBLE FOR THE ACCURACY OR COMPLETENESS OF SCANNED COPIES OF THIS PLAN SHEET.

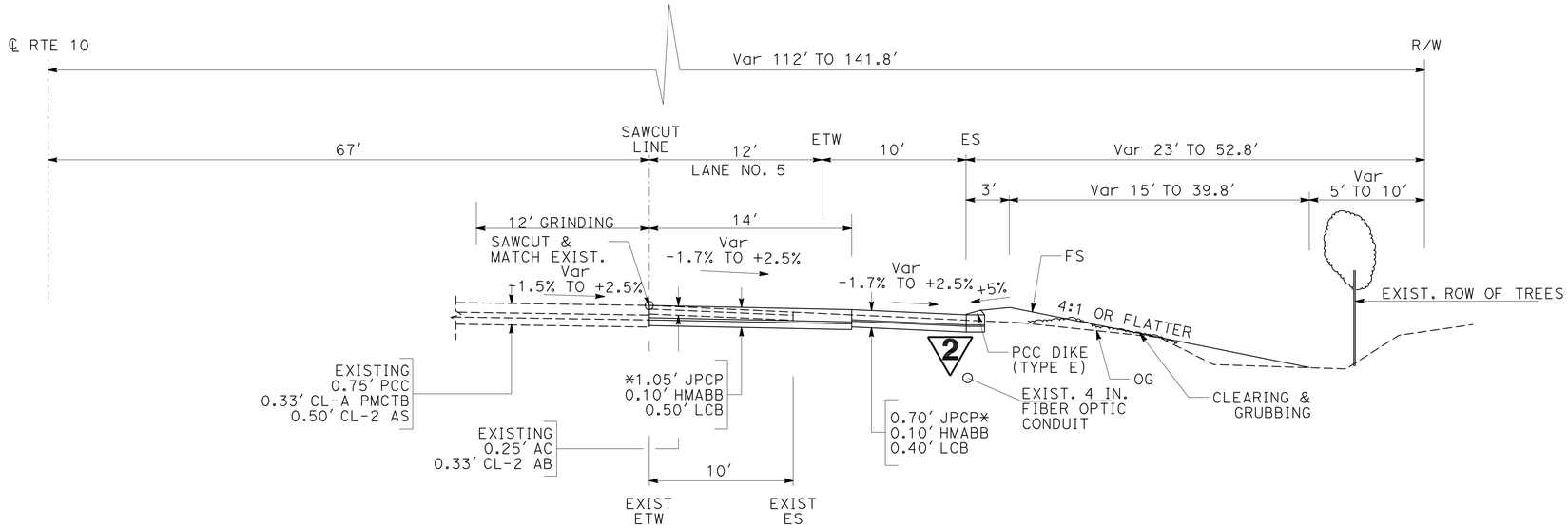

EASTBOUND LANE
FROM SIERRA AVE. TO CEDAR AVE. OFF-RAMP
STA 700+81.30 TO STA 705+55.4 ℄ RTE 10 (LOCATION 4)

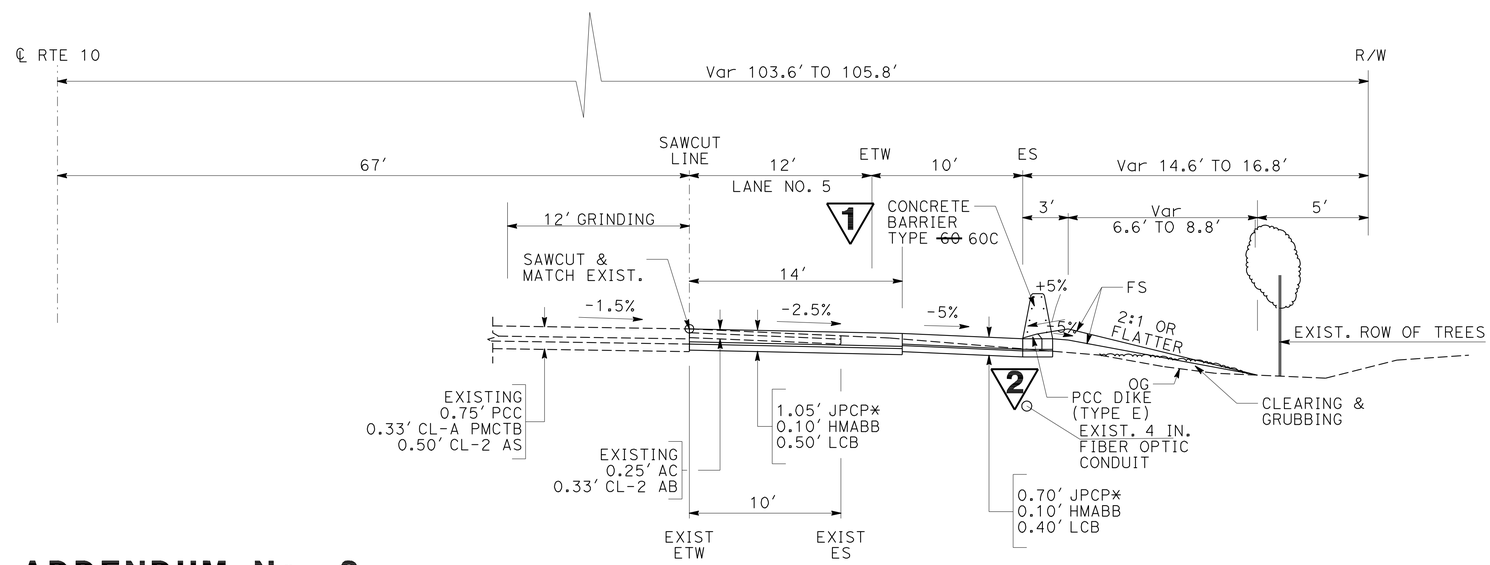

EASTBOUND LANE
FROM CHERRY AVE. TO CITRUS AVE. OFF-RAMP
STA 494+00 TO STA 497+50 ℄ RTE 10
STA 507+50 TO STA 510+50 ℄ RTE 10
STA 511+50 TO STA 523+50 ℄ RTE 10
STA 527+50 TO STA 532+00 ℄ RTE 10
STA 534+50 TO STA 536+00 ℄ RTE 10
(LOCATION 3)

2 REVISED PER ADDENDUM No. 2 DATED JUNE 15, 2010

NOTE :

* USE RAPID STRENGTH CONCRETE INSTEAD OF JPCP
(FOR LIMIT OF RAPID STRENGTH CONCRETE, SEE SHEETS L-10 AND L15)

1 REVISED PER ADDENDUM No. 1 DATED JUNE 7, 2010

TYPICAL CROSS SECTIONS

NO SCALE

X-5

STATE OF CALIFORNIA - DEPARTMENT OF TRANSPORTATION
Caltrans
DESIGN
FUNCTIONAL SUPERVISOR: SERGIO E. AVILA
CALCULATED-DESIGNED BY: TSUNG WANG
CHECKED BY: DAI HOANG
REVISED BY
DATE REVISED

LAST REVISION 05-04-09
DATE PLOTTED => 14-JUN-2010
TIME PLOTTED => 14:50

Dist	COUNTY	ROUTE	POST MILES TOTAL PROJECT	SHEET No.	TOTAL SHEETS
08	SBd	10	12.0/19.8	9	319

REGISTERED CIVIL ENGINEER 5-4-09 DATE

8-3-09
PLANS APPROVAL DATE

REGISTERED PROFESSIONAL ENGINEER DAI HOANG No. C64203 Exp. 6-30-11 CIVIL STATE OF CALIFORNIA

THE STATE OF CALIFORNIA OR ITS OFFICERS OR AGENTS SHALL NOT BE RESPONSIBLE FOR THE ACCURACY OR COMPLETENESS OF SCANNED COPIES OF THIS PLAN SHEET.

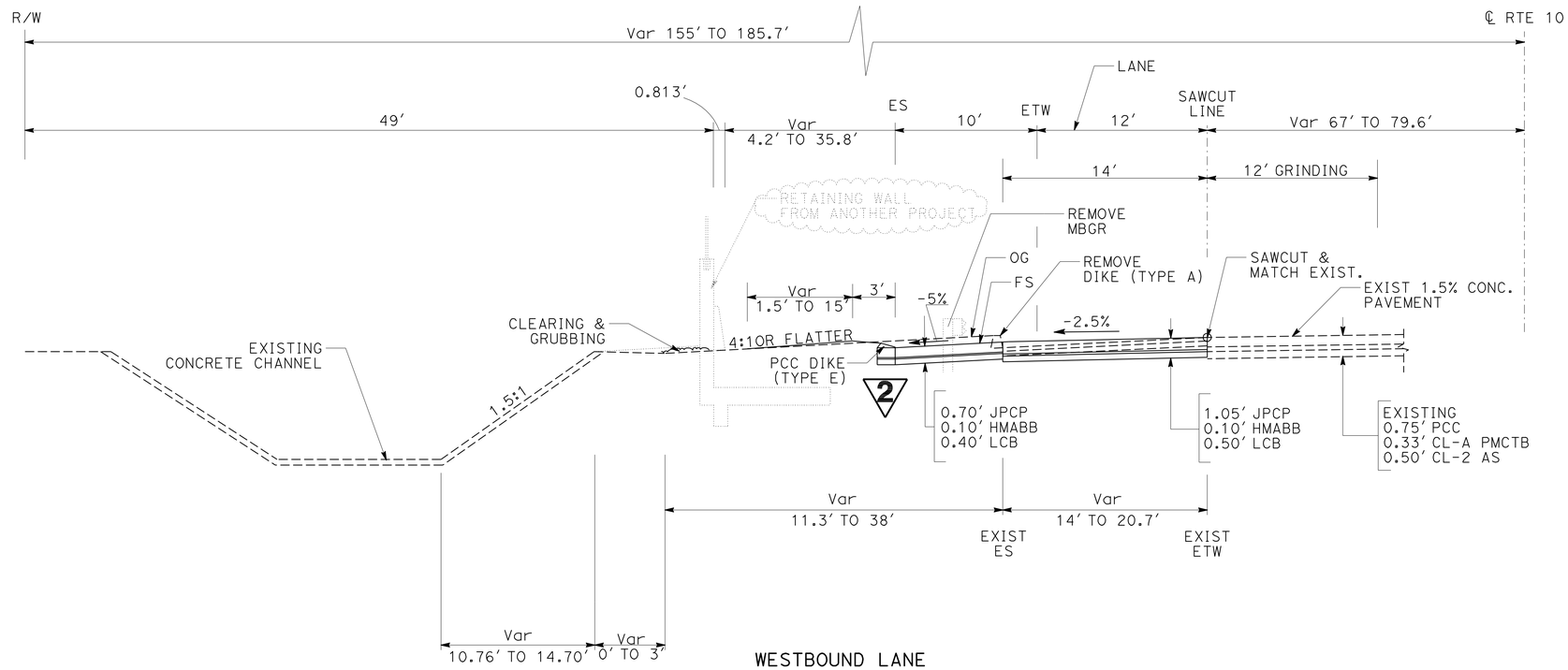

WESTBOUND LANE
FROM CEDAR AVE OFF-RAMP TO RIVERSIDE AVE. ON-RAMP
STA 788+65 TO STA 794+06.25 ℄ RTE 10
(LOCATION 5)

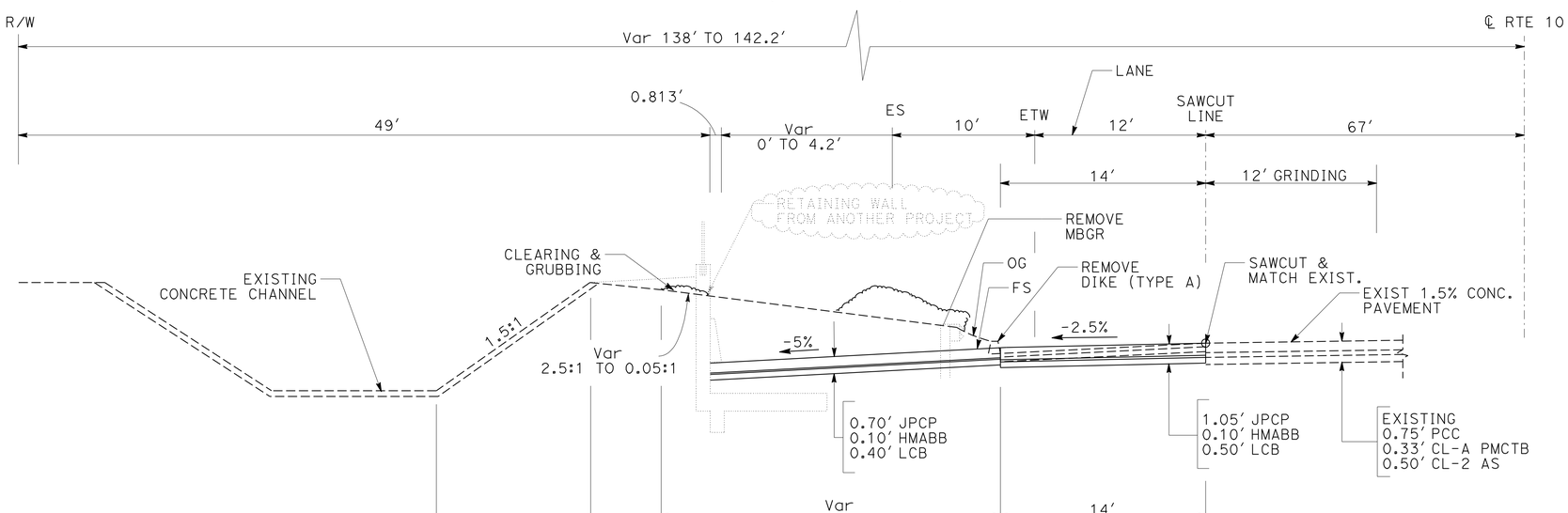

WESTBOUND LANE
FROM CEDAR AVE OFF-RAMP TO RIVERSIDE AVE. ON-RAMP
STA 780+18.5 TO STA 788+65 ℄ RTE 10
(LOCATION 5)

2 **REVISED PER ADDENDUM No. 2**
DATED JUNE 15, 2010

TYPICAL CROSS SECTIONS

NO SCALE

X-8

STATE OF CALIFORNIA - DEPARTMENT OF TRANSPORTATION
Caltrans
DESIGN
FUNCTIONAL SUPERVISOR: SERGIO E. AVILA
CALCULATED-DESIGNED BY: TSUNG WANG
CHECKED BY: DAI HOANG
REVISED BY
DATE REVISED

LAST REVISION DATE PLOTTED => 14-JUN-2010
05-04-09 TIME PLOTTED => 14:50

BORDER LAST REVISED 4/11/2008
RELATIVE BORDER SCALE IS IN INCHES 0 1 2 3
USERNAME => trstrk
DGN FILE => 849750ca008.add
CU 08230
EA 497501

Dist	COUNTY	ROUTE	POST MILES TOTAL PROJECT	SHEET No.	TOTAL SHEETS
08	SBd	10	12.0/19.8	183	319

REGISTERED CIVIL ENGINEER 5-4-09 DATE

8-3-09
PLANS APPROVAL DATE

REGISTERED PROFESSIONAL ENGINEER DAI HOANG No. C64203 Exp. 6-30-11 CIVIL STATE OF CALIFORNIA

THE STATE OF CALIFORNIA OR ITS OFFICERS OR AGENTS SHALL NOT BE RESPONSIBLE FOR THE ACCURACY OR COMPLETENESS OF SCANNED COPIES OF THIS PLAN SHEET.

ROADWAY QUANTITY SUMMARY 2

SHEET No.	DIRECTION	LOCATION	STATION	JOINTED PLAIN CONCRETE PAVEMENT	HOT MIX ASPHALT (TYPE A BOND BREAKER)	TACK COAT	LEAN CONCRETE BASE	SEAL PAVEMENT JOINT	SEAL ISOLATION JOINT	CONCRETE PAVEMENT (RAPID STRENGTH CONC.)	GRIND EXISTING CONCRETE PAVEMENT	ROADWAY EXCAVATION	ROADWAY EXCAVATION FROM RETAINING WALL PLANS	(N) EMBANKMENT
				CY	TON	TON	CY	LF	LF	CY	SQYD	CY	CY	CY
L-1 TO 4	EASTBOUND	1	381+92.21 TO 431+85.72	3218	679	10	1713	~~6918~~ 12118	4994	551	6659	4534		3508
L-5 TO 8	WESTBOUND	2	455+21.40 TO 509+50.00	4098	801	11	2066	~~8847~~ 14047	5429	383	7239	6861		441
L-7 TO 11	EASTBOUND	3	488+00.00 TO 539+27.00	3839	792	11	2030	~~8355~~ 13555	5127	553	6836	5171		2122
L-12 TO 15	EASTBOUND	4	657+50.00 TO 705+55.40	3569	753	11	1925	~~7830~~ 13030	4805	431	6407	4659		3397
L-16 TO 20	WESTBOUND	5	738+00.00 TO 794+06.25	4381	856	14	2491	~~6645~~ 11845	5606	879	7475	11910	1700	754
TOTAL				17371	3541	52	9354	~~38595~~ 64595	25961	2797	34616	34835		10222

CONCRETE BARRIER

LOCATION	DIRECTION	STATION	TYPE 60C	CRASH CUSHION (ADIEM)
			LF	EA
1	EASTBOUND	388+16.00 TO 392+02.00	386.0	1
1	EASTBOUND	397+17.00 TO 402+54.20	537.2	1
1	EASTBOUND	406+17.54 TO 408+60.53	243.0	1
1	EASTBOUND	412+62.12 TO 414+19.25	157.1	1
1	EASTBOUND	417+59.79 TO 428+08.00	1048.2	1
3	EASTBOUND	487+81.96 TO 491+00.00	318.5	1
3	EASTBOUND	498+57.18 TO 509+49.97	1092.8	1
3	EASTBOUND	521+67.79 TO 538+05.80	1638.2	1
4	EASTBOUND	657+25.03 TO 701+00.00	4375.9	1
TOTAL			9796.9	9

PORTLAND CEMENT CONCRETE DIKE

SHEET No.	DIRECTION	LOCATION	BEGIN STATION	END STATION	(N) REMOVE AC DIKE	PCC DIKE (TYPE C)	PCC DIKE (TYPE E)
					LF	LF	LF
L-2	EASTBOUND	1	404+81.18	405+87.54			106
L-2	EASTBOUND	1	408+60.53	412+32.12			372
L-3	EASTBOUND	1	414+19.25	417+29.79			311
L-4	EASTBOUND	1	428+08.00	431+85.72			378
L-5	WESTBOUND	2	455+21.40	498+17.50		4296	
L-8	WESTBOUND	2	495+07.00	498+17.50	311		
L-7	EASTBOUND	3	491+00.00	498+27.18			727
L-9	EASTBOUND	3	509+49.97	521+37.79			1188
L-11	EASTBOUND	3	538+05.80	539+27.00			121
L-15	EASTBOUND	4	701+00.00	705+55.40			455
L-16	WESTBOUND	5	738+00.00	793+45.60	5546		
TOTAL					5857	4296	3658

METAL BEAM GUARD RAIL

SHEET No.	DIRECTION	LOCATION	BEGIN STATION	END STATION	REMOVE MBGR	MBGR	ALTERNATIVE FLARED TERMINLAL SYSTEM	END ANCHOR ASSEMBLY (TYPE SFT)	VEGETATION CONTROL (MINOR CONCRETE)
					LF	LF	EA	EA	SQYD
L-5	WESTBOUND	2	456+90.00	498+17.50		4134	1	1	1551
L-8	WESTBOUND	2	502+85.40	509+72.90		688	1	1	
L-20	WESTBOUND	5	788+46.62	793+93.32	555				
TOTAL					555	4822	2	2	1551

CHAIN LINK FENCE

DESCRIPTION	UNIT	QUANTITY
CHAIN LINK FENCE (TYPE CL-6)	LF	200
6' CHAIN LINK GATE (TYPE CL-6)	EA	21
MINOR CONCRETE (MISCELLANEOUS CONSTRUCTION)	CY	14

NOTE: FOR LOCATION OF SERVICE EQUIPMENT REFER TO ELECTRICAL PLANS

2 REVISED PER ADDENDUM No. 2 DATED JUNE 15, 2010

(N) : NOT A SEPARATE PAY ITEM, FOR INFORMANTION ONLY

SUMMARY OF QUANTITIES
Q-1

REVISED BY | DATE REVISED
TSUNG WANG | DAI HOANG
CALCULATED-DESIGNED BY | CHECKED BY
FUNCTIONAL SUPERVISOR: SERGIO E. AVILA

STATE OF CALIFORNIA - DEPARTMENT OF TRANSPORTATION
Caltrans
DESIGN

LAST REVISION 07-29-09
DATE PLOTTED => 14-JUN-2010
TIME PLOTTED => 14:50