Dist	COUNTY	ROUTE	POST MILES TOTAL PROJECT	SHEET No.	TOTAL SHEETS
08	Riv	62	0.0/R6.7	5	104

REGISTERED CIVIL ENGINEER 01-08-13 DATE

1-28-13
PLANS APPROVAL DATE

REGISTERED PROFESSIONAL ENGINEER JAMES A. LAI No. C29368 Exp. 3-31-14 CIVIL STATE OF CALIFORNIA

THE STATE OF CALIFORNIA OR ITS OFFICERS OR AGENTS SHALL NOT BE RESPONSIBLE FOR THE ACCURACY OR COMPLETENESS OF SCANNED COPIES OF THIS PLAN SHEET.

NOTES:

1. FOR ACCURATE RIGHT OF WAY ACCESS DATA, CONTACT RIGHT OF WAY ENGINEERING AT THE DISTRICT OFFICE.
2. LOCATIONS OF UTILITIY FACILITIES SHOWN ON THESE PLANS ARE APPROXIMATE AND SHALL BE VERIFIED BY CONTRACTOR PRIOR TO CONSTRUCTION.
3. EXISTING UTILITY FACILITIES SHALL BE PROTECTED IN PLACE UNLESS OTHERWISE NOTED.

ABBREVIATION:

AFTS ALTERNATIVE FLARED TERMINAL SYSTEM (Type SRT)
AT&T AMERICAN TELEPHONE & TELEGRAPH

LEGEND:

- [X] STRUCTURAL SECTION TYPES (SEE TYPICAL CROSS SECTIONS SHEETS)
- RUMBLE STRIP (Type GROUND-IN) (SEE Std PLAN A40B)
- HINGE
- TOE OF FILL
- (X) DRAINAGE SYSTEM No.
- (X) DRAINAGE UNIT
- BRIDGE STRUCTURE
- Det X CONSTRUCTION DETAIL (SEE SHEET C-1)

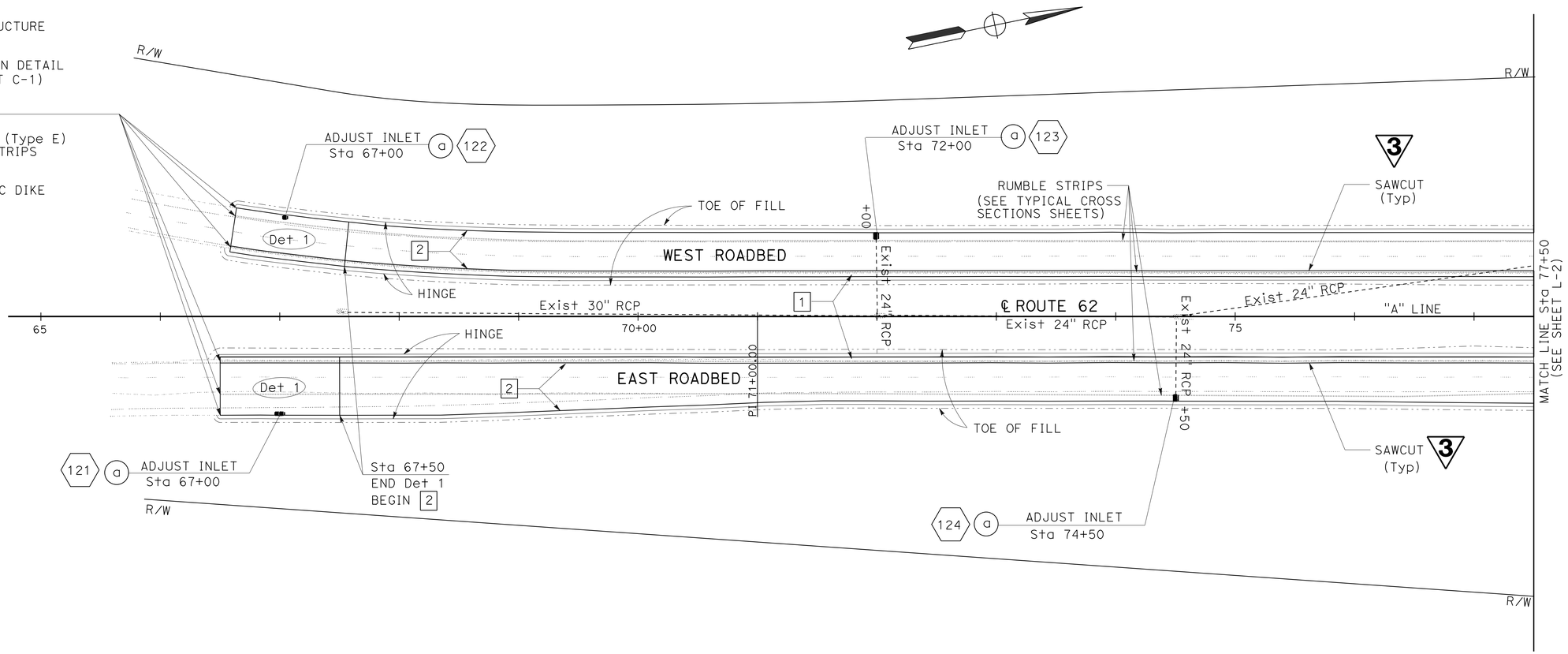

3 **REPLACED PER ADDENDUM No. 3 DATED JULY 26, 2013**

LAYOUT

SCALE: 1" = 50'

L-1

STATE OF CALIFORNIA - DEPARTMENT OF TRANSPORTATION
Caltrans®
DESIGN

FUNCTIONAL SUPERVISOR: SON NGUYEN
CALCULATED-DESIGNED BY: JAMES A. LAI
CHECKED BY: KHAI HUYNH
REVISED BY
DATE REVISED

LAST REVISION 01-08-13
DATE PLOTTED => 25-JUL-2013
TIME PLOTTED => 13:59

Dist	COUNTY	ROUTE	POST MILES TOTAL PROJECT	SHEET No.	TOTAL SHEETS
08	Riv	62	0.0/R6.7	6	104

REGISTERED CIVIL ENGINEER 09-28-12 DATE

1-28-13
PLANS APPROVAL DATE

REGISTERED PROFESSIONAL ENGINEER JAMES A. LAI No. C29368 Exp. 3-31-14 CIVIL STATE OF CALIFORNIA

THE STATE OF CALIFORNIA OR ITS OFFICERS OR AGENTS SHALL NOT BE RESPONSIBLE FOR THE ACCURACY OR COMPLETENESS OF SCANNED COPIES OF THIS PLAN SHEET.

NOTE:

FOR ACCURATE RIGHT OF WAY ACCESS DATA, CONTACT RIGHT OF WAY ENGINEERING AT THE DISTRICT OFFICE.

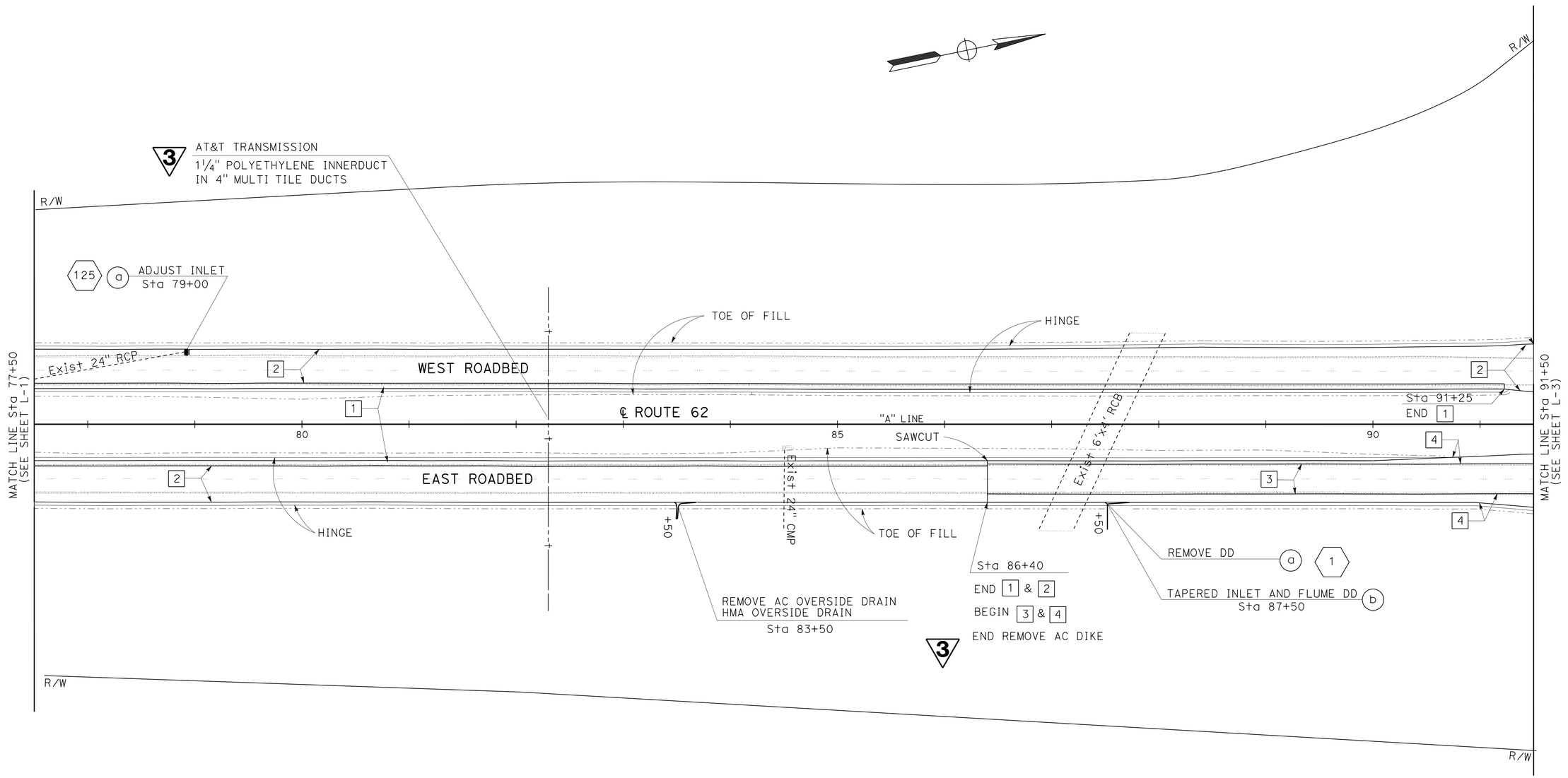

3 REPLACED PER ADDENDUM No. 3 DATED JULY 26, 2013

LAYOUT
SCALE: 1" = 50'

L-2

STATE OF CALIFORNIA - DEPARTMENT OF TRANSPORTATION
Caltrans® DESIGN

FUNCTIONAL SUPERVISOR: SON NGUYEN
CALCULATED-DESIGNED BY: JAMES A. LAI
CHECKED BY: KHAI HUYNH
REVISED BY
DATE REVISED

LAST REVISION 00-00-00
DATE PLOTTED => 26-JUL-2013
TIME PLOTTED => 11:09

Dist	COUNTY	ROUTE	POST MILES TOTAL PROJECT	SHEET No.	TOTAL SHEETS
08	Riv	62	0.0/R6.7	7	104

REGISTERED CIVIL ENGINEER 01-08-13 DATE

1-28-13
PLANS APPROVAL DATE

REGISTERED PROFESSIONAL ENGINEER JAMES A. LAI No. C29368 Exp. 3-31-13 CIVIL STATE OF CALIFORNIA

THE STATE OF CALIFORNIA OR ITS OFFICERS OR AGENTS SHALL NOT BE RESPONSIBLE FOR THE ACCURACY OR COMPLETENESS OF SCANNED COPIES OF THIS PLAN SHEET.

NOTE:

FOR ACCURATE RIGHT OF WAY ACCESS DATA, CONTACT RIGHT OF WAY ENGINEERING AT THE DISTRICT OFFICE.

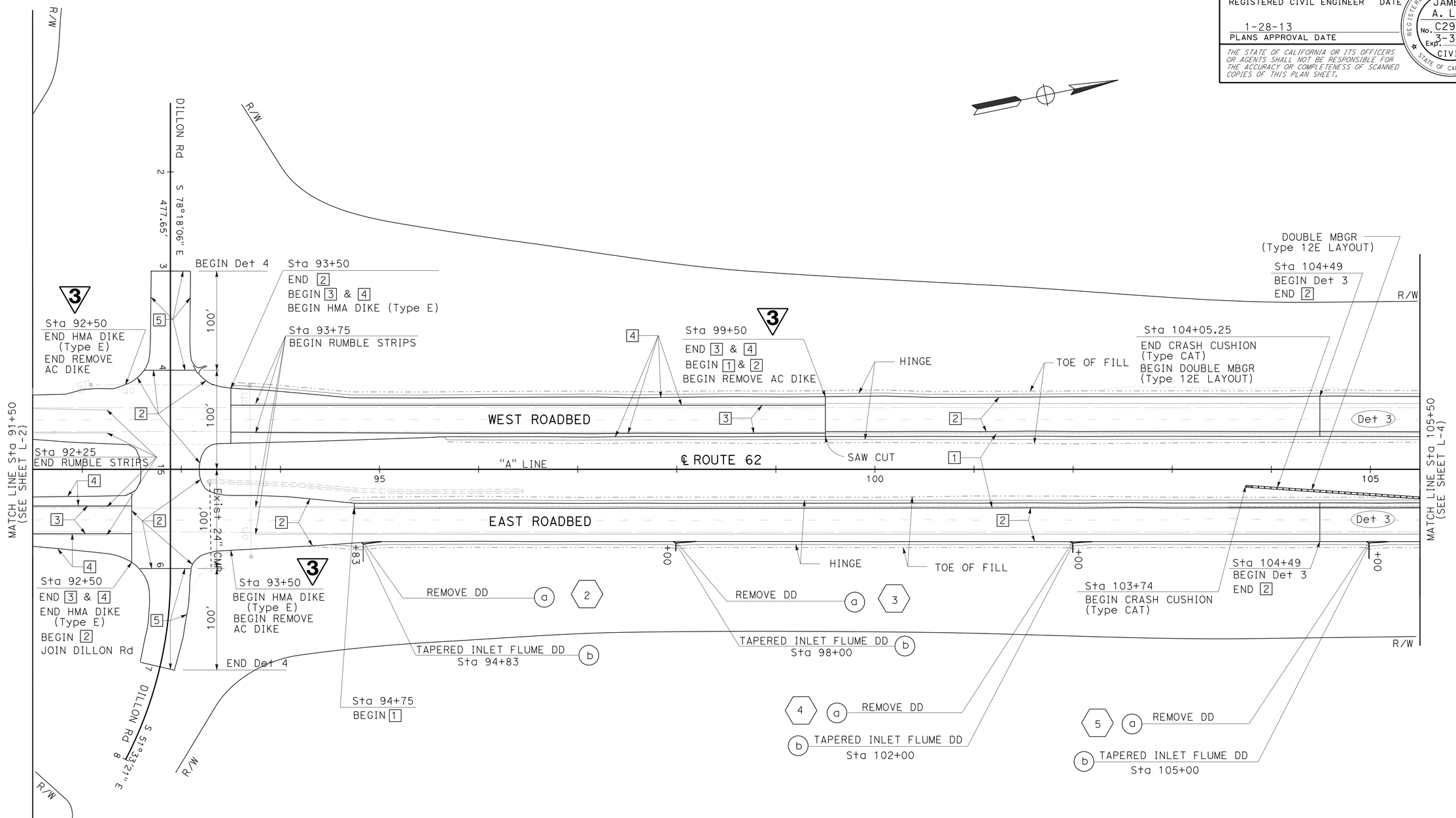

LAYOUT

3 **REPLACED PER ADDENDUM No. 3 DATED JULY 26, 2013**

SCALE: 1" = 50'

L-3

STATE OF CALIFORNIA - DEPARTMENT OF TRANSPORTATION

Caltrans® **DESIGN**

FUNCTIONAL SUPERVISOR: SON NGUYEN

CALCULATED-DESIGNED BY: JAMES A. LAI

CHECKED BY: KHAI HUYNH

REVISED BY

DATE REVISED

LAST REVISION 01-08-13

DATE PLOTTED => 25-JUL-2013
TIME PLOTTED => 14:26

Dist	COUNTY	ROUTE	POST MILES TOTAL PROJECT	SHEET No.	TOTAL SHEETS
08	Riv	62	0.0/R6.7	8	104

REGISTERED CIVIL ENGINEER 01-08-13 DATE

1-28-13
PLANS APPROVAL DATE

REGISTERED PROFESSIONAL ENGINEER JAMES A. LAI No. C29368 Exp. 3-31-14 CIVIL STATE OF CALIFORNIA

THE STATE OF CALIFORNIA OR ITS OFFICERS OR AGENTS SHALL NOT BE RESPONSIBLE FOR THE ACCURACY OR COMPLETENESS OF SCANNED COPIES OF THIS PLAN SHEET.

3

NOTE:

FOR ACCURATE RIGHT OF WAY ACCESS DATA, CONTACT RIGHT OF WAY ENGINEERING AT THE DISTRICT OFFICE.

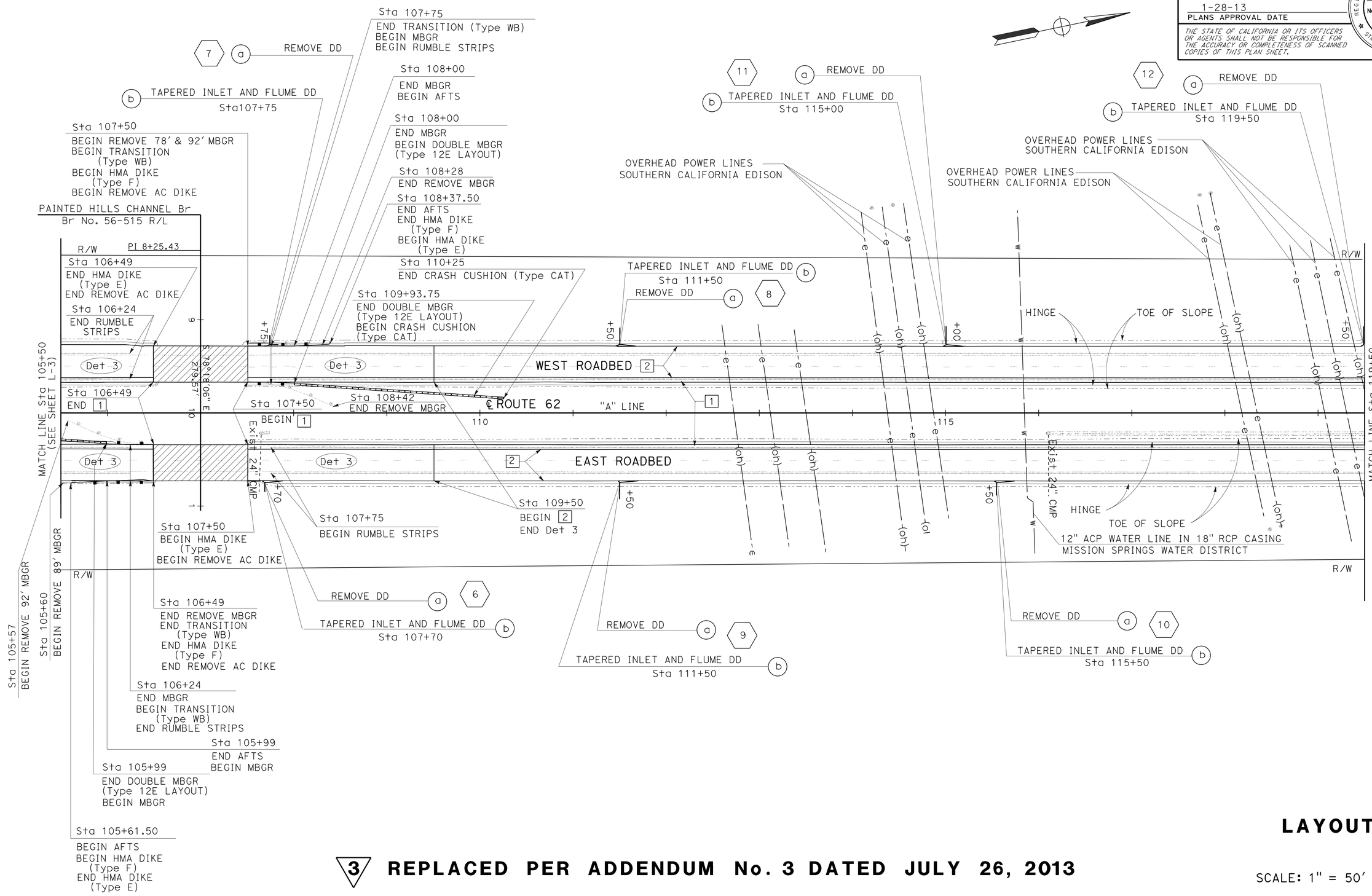

LAYOUT

3 **REPLACED PER ADDENDUM No. 3 DATED JULY 26, 2013**

SCALE: 1" = 50'

L-4

REVISED BY	DATE REVISED
JAMES A. LAI	KHAI HUYNH
CALCULATED-DESIGNED BY	CHECKED BY
FUNCTIONAL SUPERVISOR	SON NGUYEN

STATE OF CALIFORNIA - DEPARTMENT OF TRANSPORTATION

Caltrans

DESIGN

LAST REVISION 01-08-13 | DATE PLOTTED => 26-JUL-2013 | TIME PLOTTED => 11:46

Dist	COUNTY	ROUTE	POST MILES TOTAL PROJECT	SHEET No.	TOTAL SHEETS
08	Riv	62	0.0/R6.7	11	104

REGISTERED CIVIL ENGINEER 09-28-12 DATE

1-28-13
PLANS APPROVAL DATE

REGISTERED PROFESSIONAL ENGINEER JAMES A. LAI No. C29368 Exp. 3-31-14 CIVIL STATE OF CALIFORNIA

THE STATE OF CALIFORNIA OR ITS OFFICERS OR AGENTS SHALL NOT BE RESPONSIBLE FOR THE ACCURACY OR COMPLETENESS OF SCANNED COPIES OF THIS PLAN SHEET.

NOTE:

FOR ACCURATE RIGHT OF WAY ACCESS DATA, CONTACT RIGHT OF WAY ENGINEERING AT THE DISTRICT OFFICE.

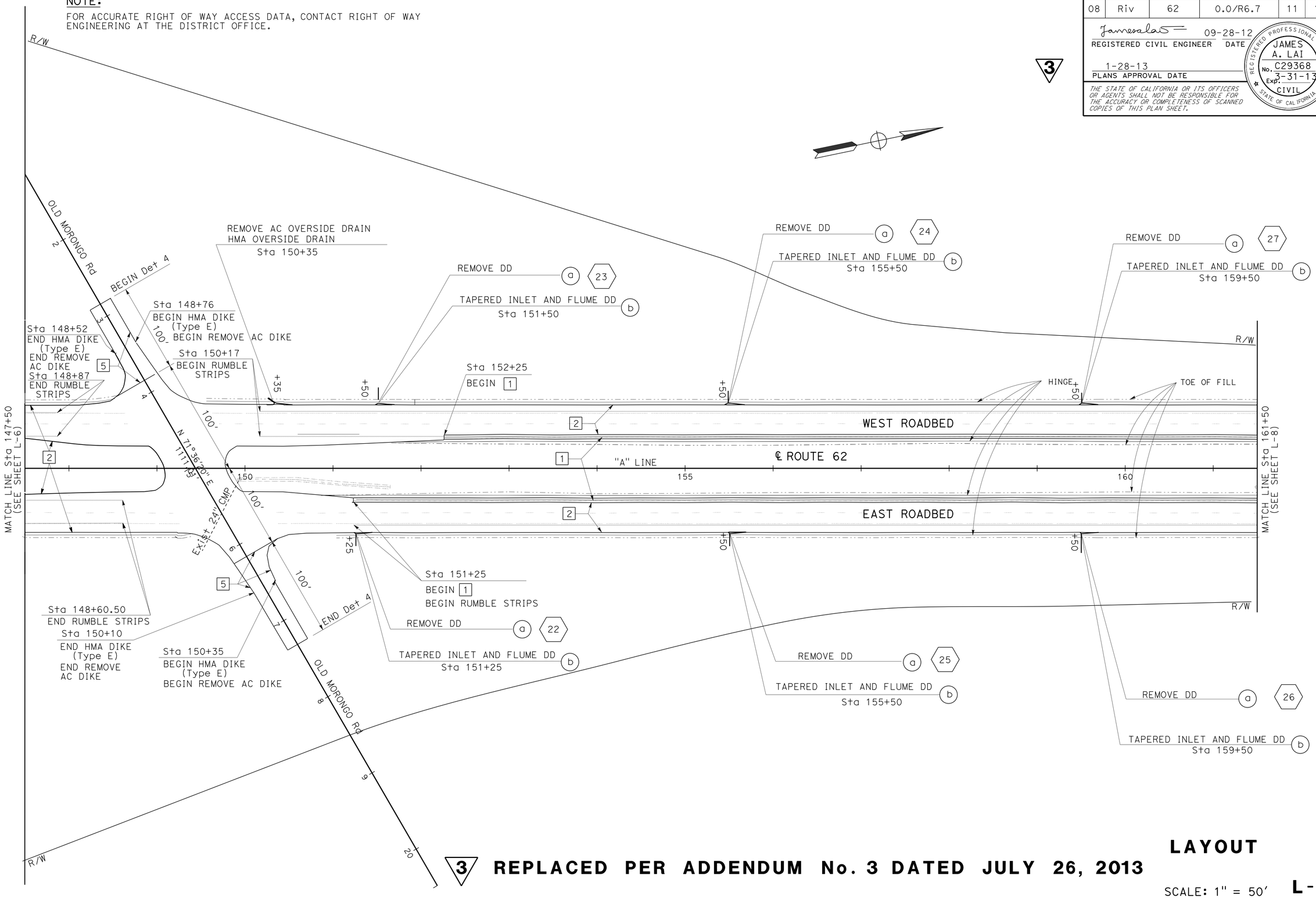

3 **REPLACED PER ADDENDUM No. 3 DATED JULY 26, 2013**

LAYOUT

SCALE: 1" = 50'

L-7

STATE OF CALIFORNIA - DEPARTMENT OF TRANSPORTATION

DESIGN

FUNCTIONAL SUPERVISOR: SON NGUYEN

CALCULATED-DESIGNED BY: JAMES A. LAI

CHECKED BY: KHAI HUYNH

REVISED BY

DATE REVISED

LAST REVISION 00-00-00

DATE PLOTTED => 25-JUL-2013

TIME PLOTTED => 13:59

Dist	COUNTY	ROUTE	POST MILES TOTAL PROJECT	SHEET No.	TOTAL SHEETS
08	Riv	62	0.0/R6.7	15	104

REGISTERED CIVIL ENGINEER 01-08-13 DATE

1-28-13
PLANS APPROVAL DATE

REGISTERED PROFESSIONAL ENGINEER JAMES A. LAI No. C29368 Exp. 3-31-14 CIVIL STATE OF CALIFORNIA

THE STATE OF CALIFORNIA OR ITS OFFICERS OR AGENTS SHALL NOT BE RESPONSIBLE FOR THE ACCURACY OR COMPLETENESS OF SCANNED COPIES OF THIS PLAN SHEET.

NOTE:

FOR ACCURATE RIGHT OF WAY ACCESS DATA, CONTACT RIGHT OF WAY ENGINEERING AT THE DISTRICT OFFICE.

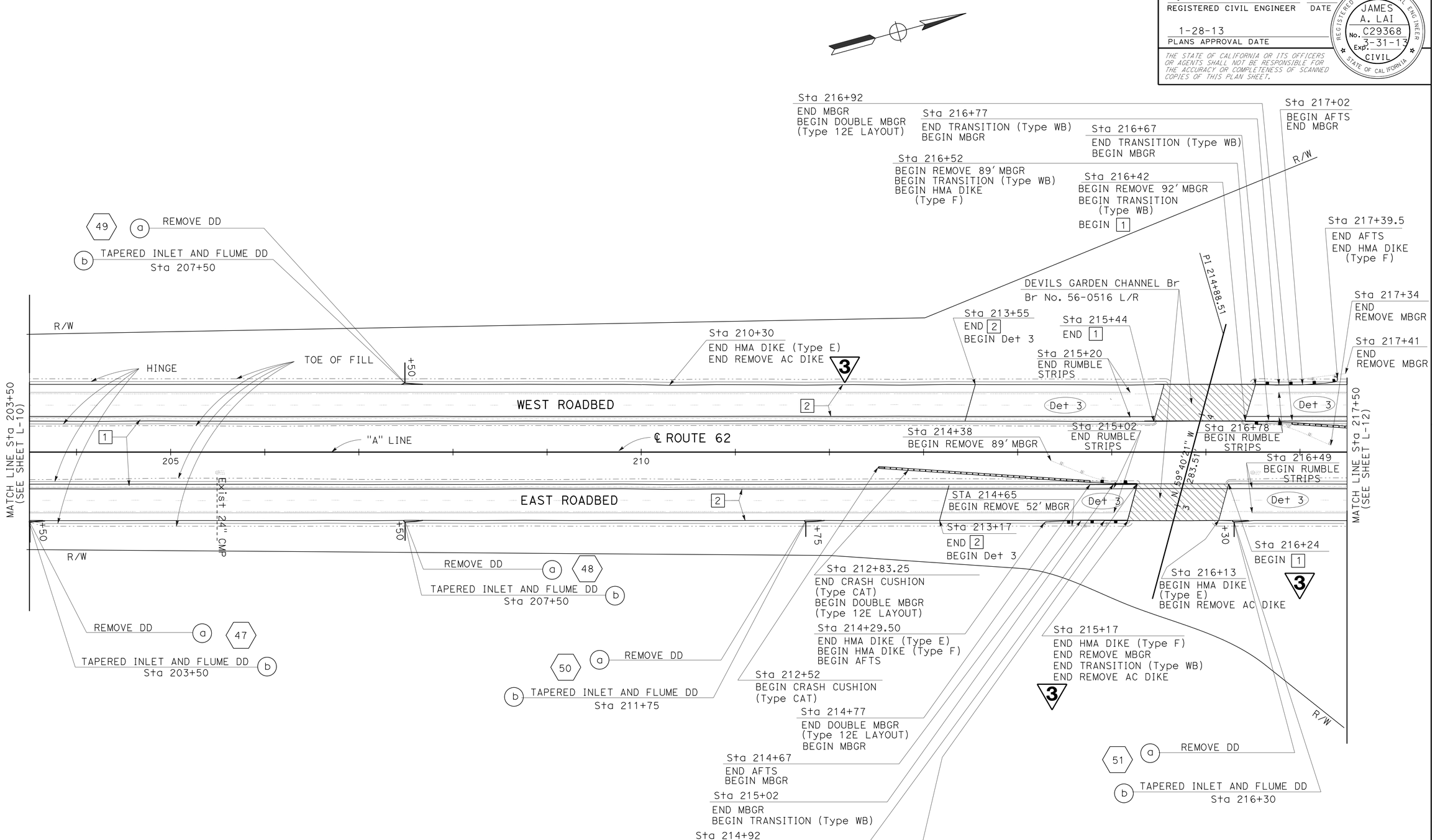

LAYOUT
SCALE: 1" = 50'

3 **REPLACED PER ADDENDUM No. 3 DATED JULY 26, 2013**

L-11

REVISED BY	DATE REVISED
JAMES A. LAI	KHAI HUYNH
CALCULATED-DESIGNED BY	CHECKED BY
FUNCTIONAL SUPERVISOR	SON NGUYEN

STATE OF CALIFORNIA - DEPARTMENT OF TRANSPORTATION
Caltrans
DESIGN

LAST REVISION 01-08-13 | DATE PLOTTED => 26-JUL-2013 | TIME PLOTTED => 11:46

Dist	COUNTY	ROUTE	POST MILES TOTAL PROJECT	SHEET No.	TOTAL SHEETS
08	Riv	62	0.0/R6.7	16	104

REGISTERED CIVIL ENGINEER 01-08-13 DATE

1-28-13
PLANS APPROVAL DATE

REGISTERED PROFESSIONAL ENGINEER JAMES A. LAI No. C29368 Exp. 3-31-14 CIVIL STATE OF CALIFORNIA

THE STATE OF CALIFORNIA OR ITS OFFICERS OR AGENTS SHALL NOT BE RESPONSIBLE FOR THE ACCURACY OR COMPLETENESS OF SCANNED COPIES OF THIS PLAN SHEET.

NOTE:

FOR ACCURATE RIGHT OF WAY ACCESS DATA, CONTACT RIGHT OF WAY ENGINEERING AT THE DISTRICT OFFICE.

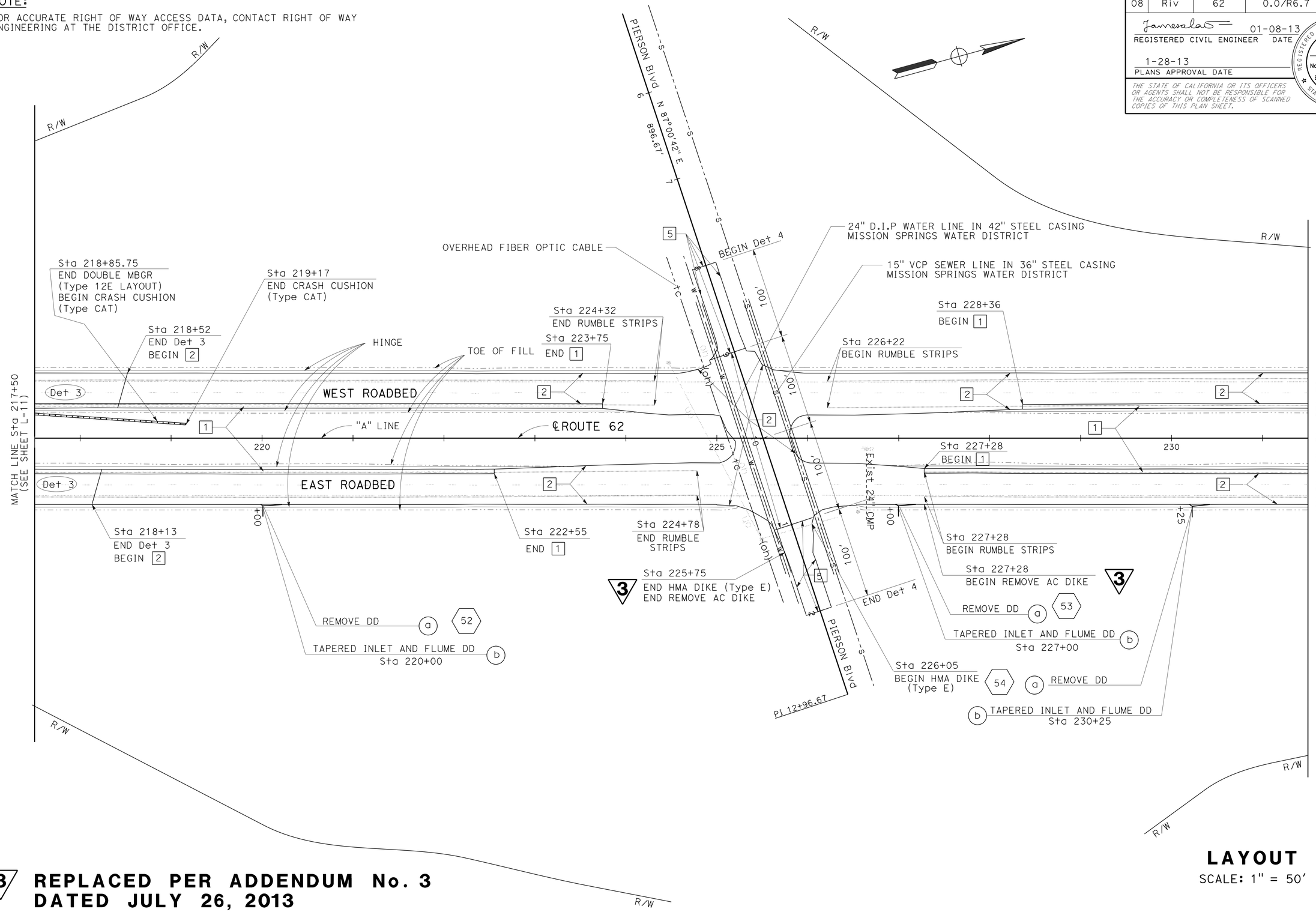

3 **REPLACED PER ADDENDUM No. 3 DATED JULY 26, 2013**

LAYOUT

SCALE: 1" = 50'

L-12

REVISED BY	DATE REVISED

CALCULATED-DESIGNED BY	CHECKED BY
JAMES A. LAI	KHAI HUYNH

FUNCTIONAL SUPERVISOR: SON NGUYEN

STATE OF CALIFORNIA - DEPARTMENT OF TRANSPORTATION

Caltrans DESIGN

LAST REVISION 01-08-13 | DATE PLOTTED => 26-JUL-2013 | TIME PLOTTED => 11:46

Dist	COUNTY	ROUTE	POST MILES TOTAL PROJECT	SHEET No.	TOTAL SHEETS
08	Riv	62	0.0/R6.7	17	104

REGISTERED CIVIL ENGINEER 01-08-13 DATE

1-28-13
PLANS APPROVAL DATE

REGISTERED PROFESSIONAL ENGINEER JAMES A. LAI No. C29368 Exp. 3-31-14 CIVIL STATE OF CALIFORNIA

THE STATE OF CALIFORNIA OR ITS OFFICERS OR AGENTS SHALL NOT BE RESPONSIBLE FOR THE ACCURACY OR COMPLETENESS OF SCANNED COPIES OF THIS PLAN SHEET.

NOTE:

FOR ACCURATE RIGHT OF WAY ACCESS DATA, CONTACT RIGHT OF WAY ENGINEERING AT THE DISTRICT OFFICE.

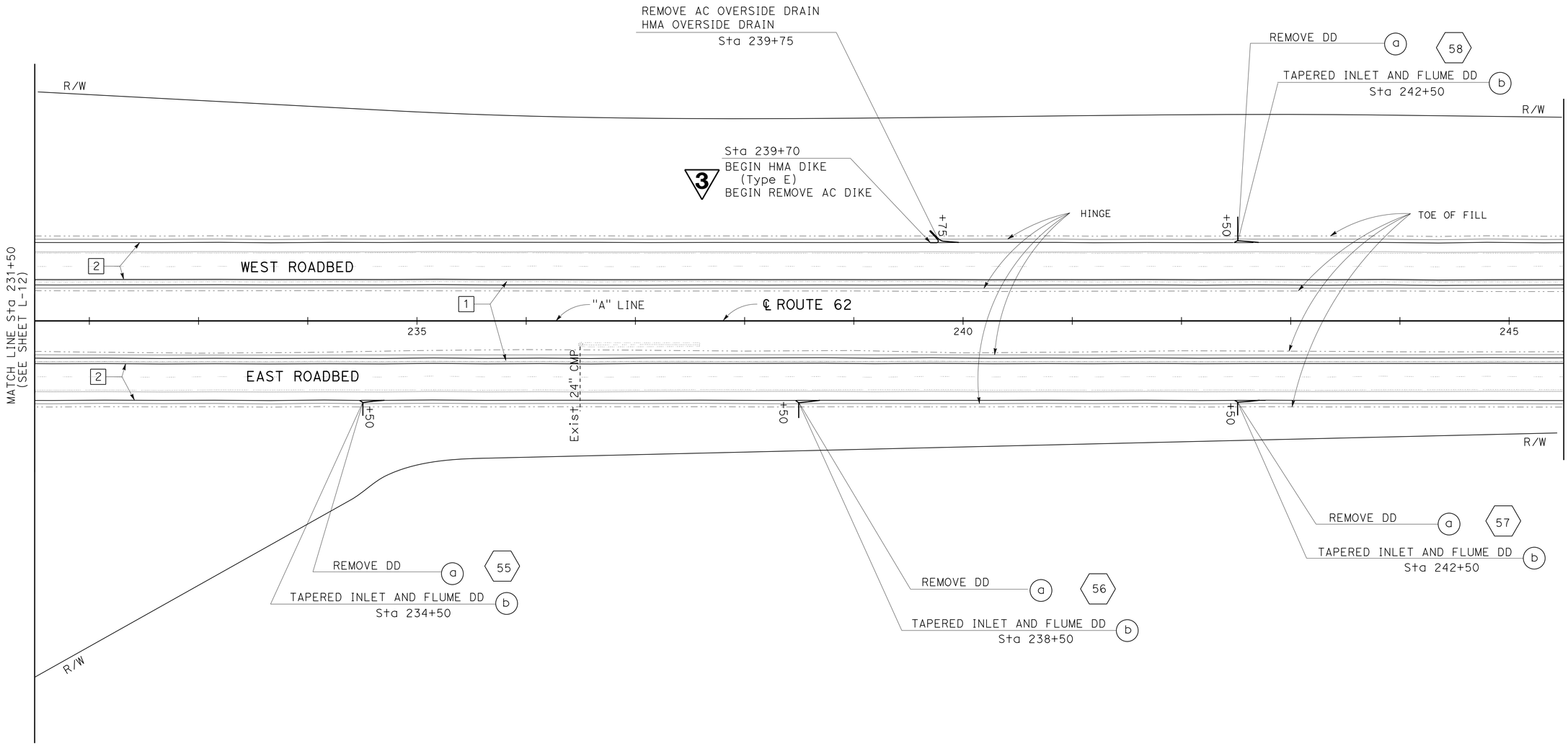

3 REPLACED PER ADDENDUM No. 3 DATED JULY 26, 2013

LAYOUT

SCALE: 1" = 50'

L-13

STATE OF CALIFORNIA - DEPARTMENT OF TRANSPORTATION
Caltrans
DESIGN

FUNCTIONAL SUPERVISOR: SON NGUYEN
CALCULATED-DESIGNED BY: JAMES A. LAI
CHECKED BY: KHAI HUYNH
REVISED BY
DATE REVISED

LAST REVISION 01-08-13
DATE PLOTTED => 25-JUL-2013
TIME PLOTTED => 14:17

Dist	COUNTY	ROUTE	POST MILES TOTAL PROJECT	SHEET No.	TOTAL SHEETS
08	Riv	62	0.0/R6.7	21	104

REGISTERED CIVIL ENGINEER 09-28-12 DATE

1-28-13
PLANS APPROVAL DATE

REGISTERED PROFESSIONAL ENGINEER JAMES A. LAI No. C29368 Exp. 3-31-14 CIVIL STATE OF CALIFORNIA

THE STATE OF CALIFORNIA OR ITS OFFICERS OR AGENTS SHALL NOT BE RESPONSIBLE FOR THE ACCURACY OR COMPLETENESS OF SCANNED COPIES OF THIS PLAN SHEET.

3

NOTES:

1. DO NOT USE VIBRATORY COMPACTION EQUIPMENT IN VIBRATORY MODE WITHIN 40 FEET OF THE CENTER OF THE AQUADUCT.
2. FOR ACCURATE RIGHT OF WAY ACCESS DATA, CONTACT RIGHT OF WAY ENGINEERING AT THE DISTRICT OFFICE.

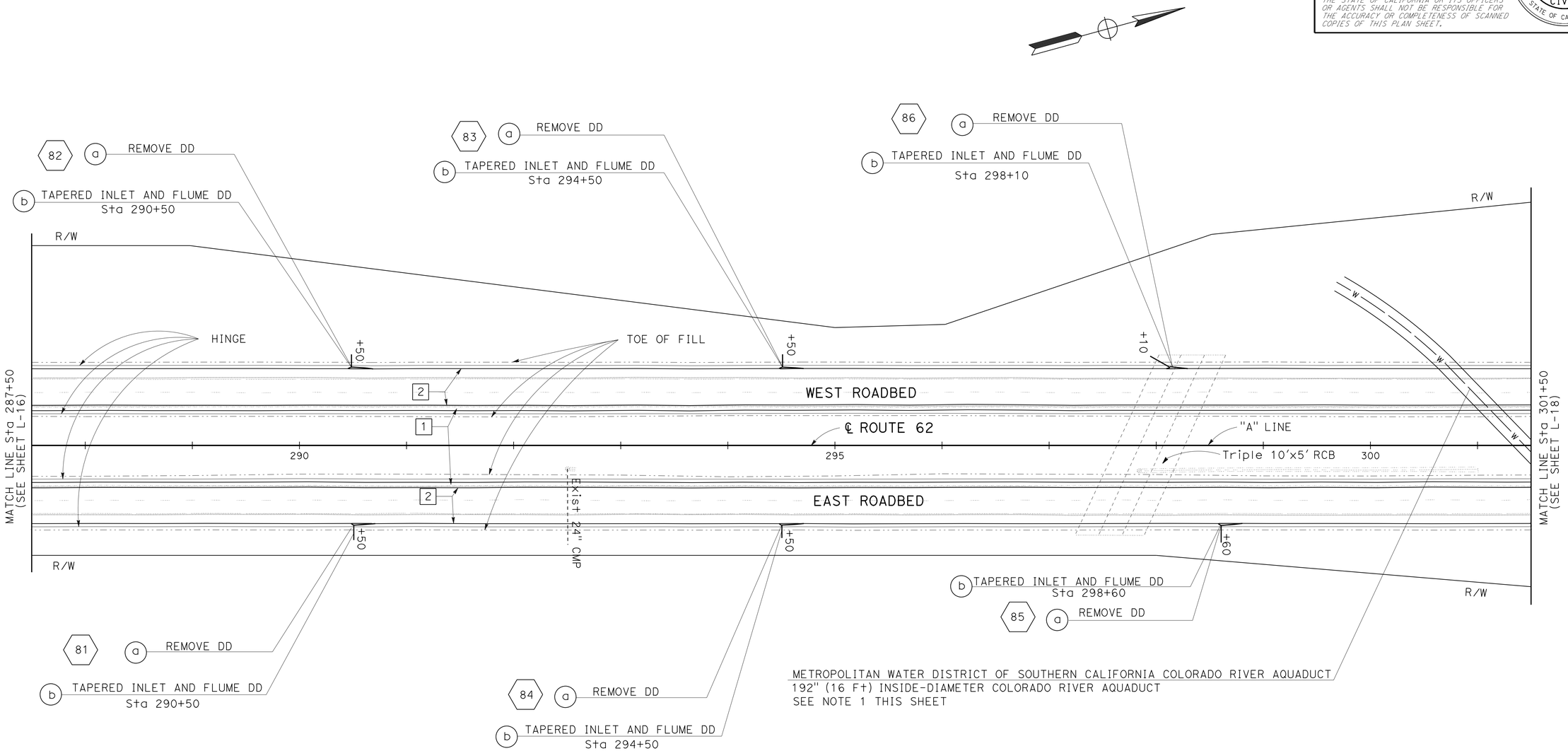

3 **REPLACED PER ADDENDUM No. 3 DATED JULY 26, 2013**

LAYOUT

SCALE: 1" = 50'

L-17

STATE OF CALIFORNIA - DEPARTMENT OF TRANSPORTATION
Caltrans
DESIGN
FUNCTIONAL SUPERVISOR: SON NGUYEN
CALCULATED-DESIGNED BY: JAMES A. LAI
CHECKED BY: KHAI HUYNH
REVISED BY
DATE REVISED

LAST REVISION 00-00-00
DATE PLOTTED => 26-JUL-2013
TIME PLOTTED => 12:30

Dist	COUNTY	ROUTE	POST MILES TOTAL PROJECT	SHEET No.	TOTAL SHEETS
08	Riv	62	0.0/R6.7	22	104

REGISTERED CIVIL ENGINEER 09-28-12 DATE

1-28-13
PLANS APPROVAL DATE

REGISTERED PROFESSIONAL ENGINEER JAMES A. LAI No. C29368 Exp. 3-31-14 CIVIL STATE OF CALIFORNIA

THE STATE OF CALIFORNIA OR ITS OFFICERS OR AGENTS SHALL NOT BE RESPONSIBLE FOR THE ACCURACY OR COMPLETENESS OF SCANNED COPIES OF THIS PLAN SHEET.

3

NOTES:

1. DO NOT USE VIBRATORY COMPACTION EQUIPMENT IN VIBRATORY MODE WITHIN 40 FEET OF THE CENTER OF THE AQUADUCT.
2. FOR ACCURATE RIGHT OF WAY ACCESS DATA, CONTACT RIGHT OF WAY ENGINEERING AT THE DISTRICT OFFICE.

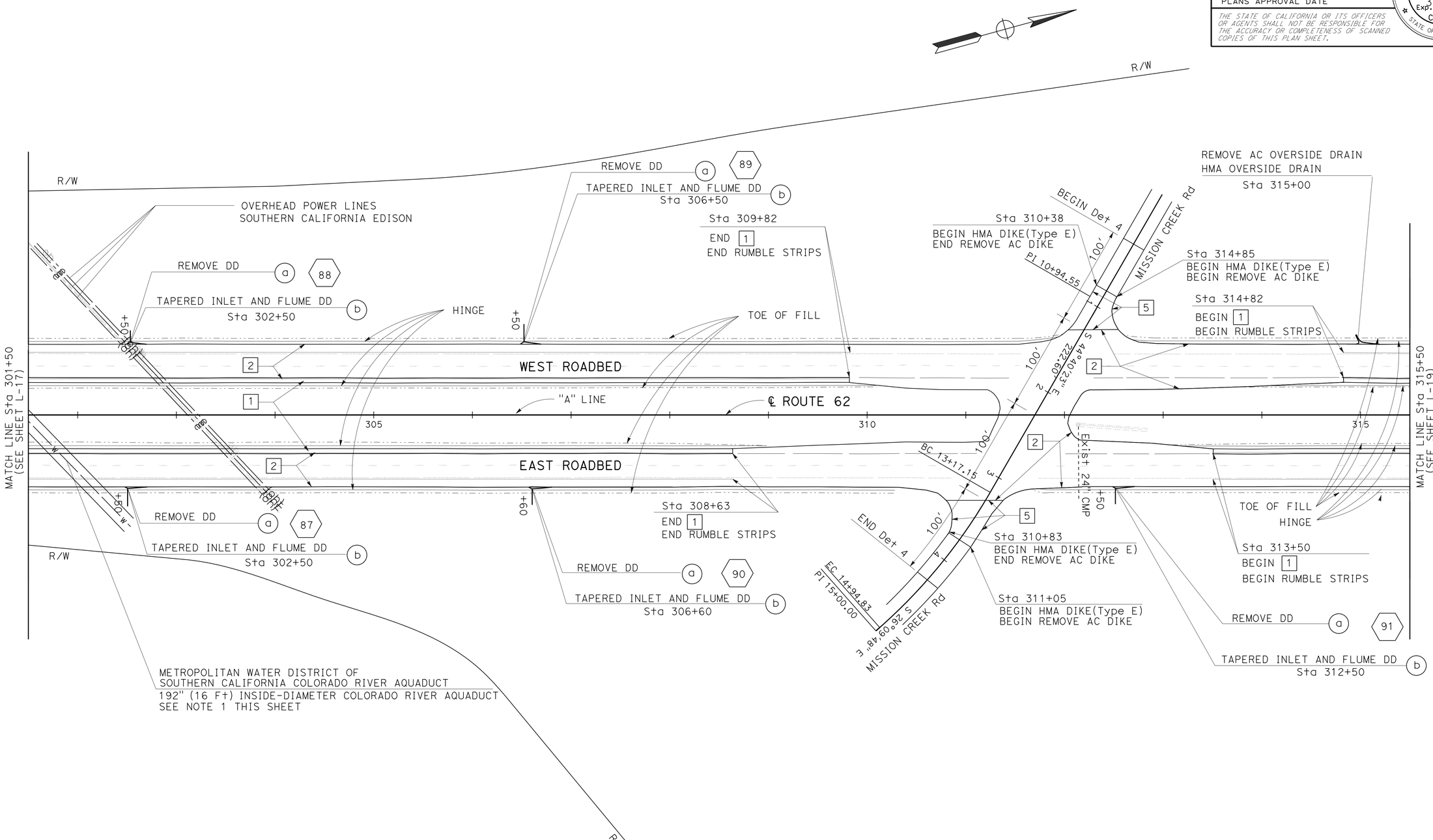

LAYOUT

SCALE: 1" = 50'

3 **REPLACED PER ADDENDUM No. 3 DATED JULY 26, 2013**

L-18

STATE OF CALIFORNIA - DEPARTMENT OF TRANSPORTATION
Caltrans
DESIGN

FUNCTIONAL SUPERVISOR: SON NGUYEN
CALCULATED-DESIGNED BY: JAMES A. LAI
CHECKED BY: KHAI HUYNH
REVISED BY
DATE REVISED

LAST REVISION 00-00-00
DATE PLOTTED => 26-JUL-2013
TIME PLOTTED => 12:30

Dist	COUNTY	ROUTE	POST MILES TOTAL PROJECT	SHEET No.	TOTAL SHEETS
08	Riv	62	0.0/R6.7	25	104

3

REGISTERED CIVIL ENGINEER 01-08-13 DATE

1-28-13
PLANS APPROVAL DATE

REGISTERED PROFESSIONAL ENGINEER JAMES A. LAI No. C29368 Exp. 3-31-14 CIVIL STATE OF CALIFORNIA

THE STATE OF CALIFORNIA OR ITS OFFICERS OR AGENTS SHALL NOT BE RESPONSIBLE FOR THE ACCURACY OR COMPLETENESS OF SCANNED COPIES OF THIS PLAN SHEET.

NOTE:

FOR ACCURATE RIGHT OF WAY ACCESS DATA, CONTACT RIGHT OF WAY ENGINEERING AT THE DISTRICT OFFICE.
CONNECT MBGR TO BRIDGE RAILING.

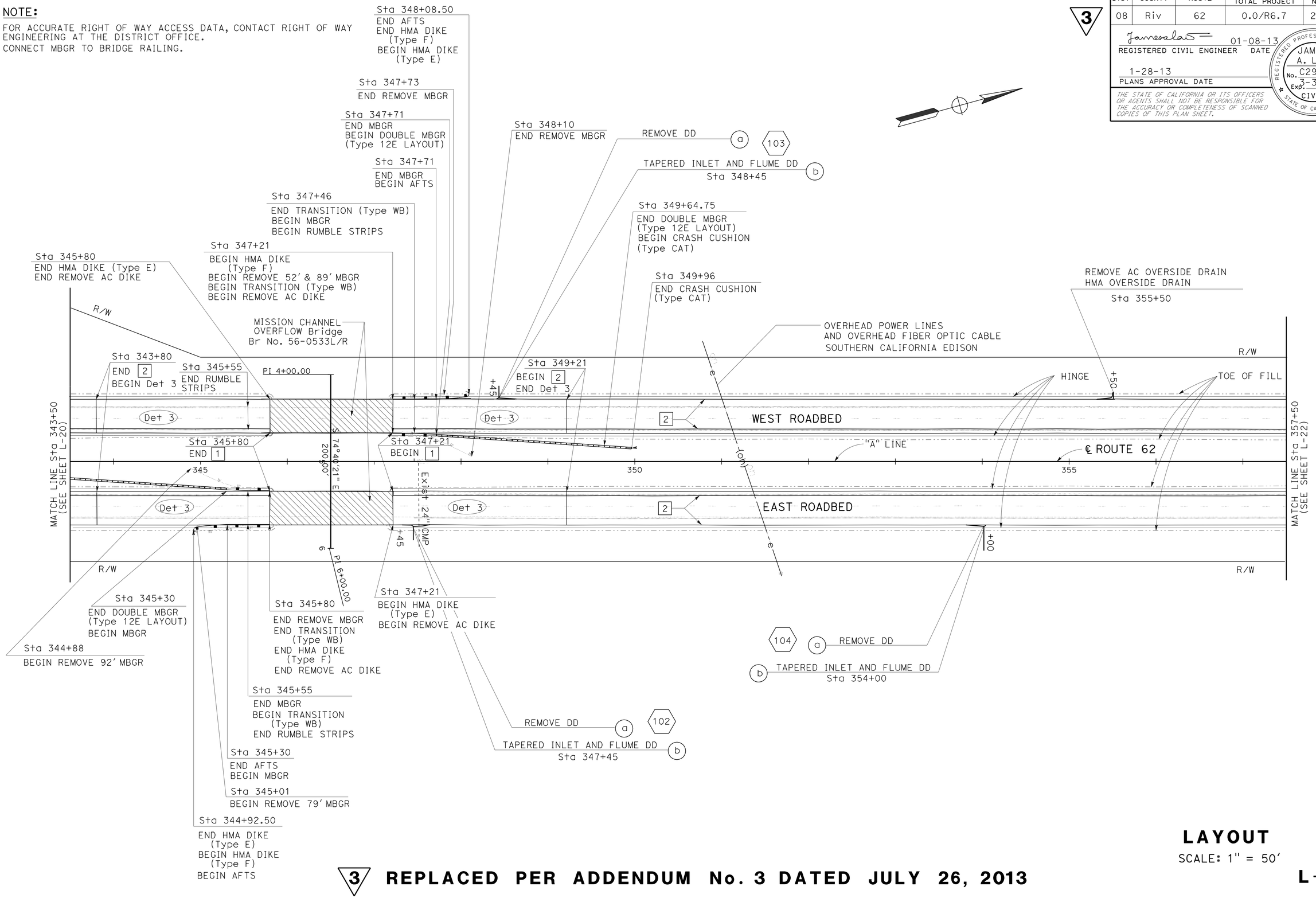

3 **REPLACED PER ADDENDUM No. 3 DATED JULY 26, 2013**

LAYOUT
SCALE: 1" = 50'

L-21

STATE OF CALIFORNIA - DEPARTMENT OF TRANSPORTATION
Caltrans
DESIGN

FUNCTIONAL SUPERVISOR: SON NGUYEN
CALCULATED-DESIGNED BY: JAMES A. LAI
CHECKED BY: KHAI HUYNH
REVISED BY
DATE REVISED

LAST REVISION 01-08-13
DATE PLOTTED => 25-JUL-2013
TIME PLOTTED => 13:56

Dist	COUNTY	ROUTE	POST MILES TOTAL PROJECT	SHEET No.	TOTAL SHEETS
08	Riv	62	0.0/R6.7	26	104

REGISTERED CIVIL ENGINEER 09-28-12 DATE

1-28-13
PLANS APPROVAL DATE

REGISTERED PROFESSIONAL ENGINEER JAMES A. LAI No. C29368 Exp. 3-31-14 CIVIL STATE OF CALIFORNIA

THE STATE OF CALIFORNIA OR ITS OFFICERS OR AGENTS SHALL NOT BE RESPONSIBLE FOR THE ACCURACY OR COMPLETENESS OF SCANNED COPIES OF THIS PLAN SHEET.

3

NOTE:

FOR ACCURATE RIGHT OF WAY ACCESS DATA, CONTACT RIGHT OF WAY ENGINEERING AT THE DISTRICT OFFICE.
CONNECT MBGR TO BRIDGE RAILING.

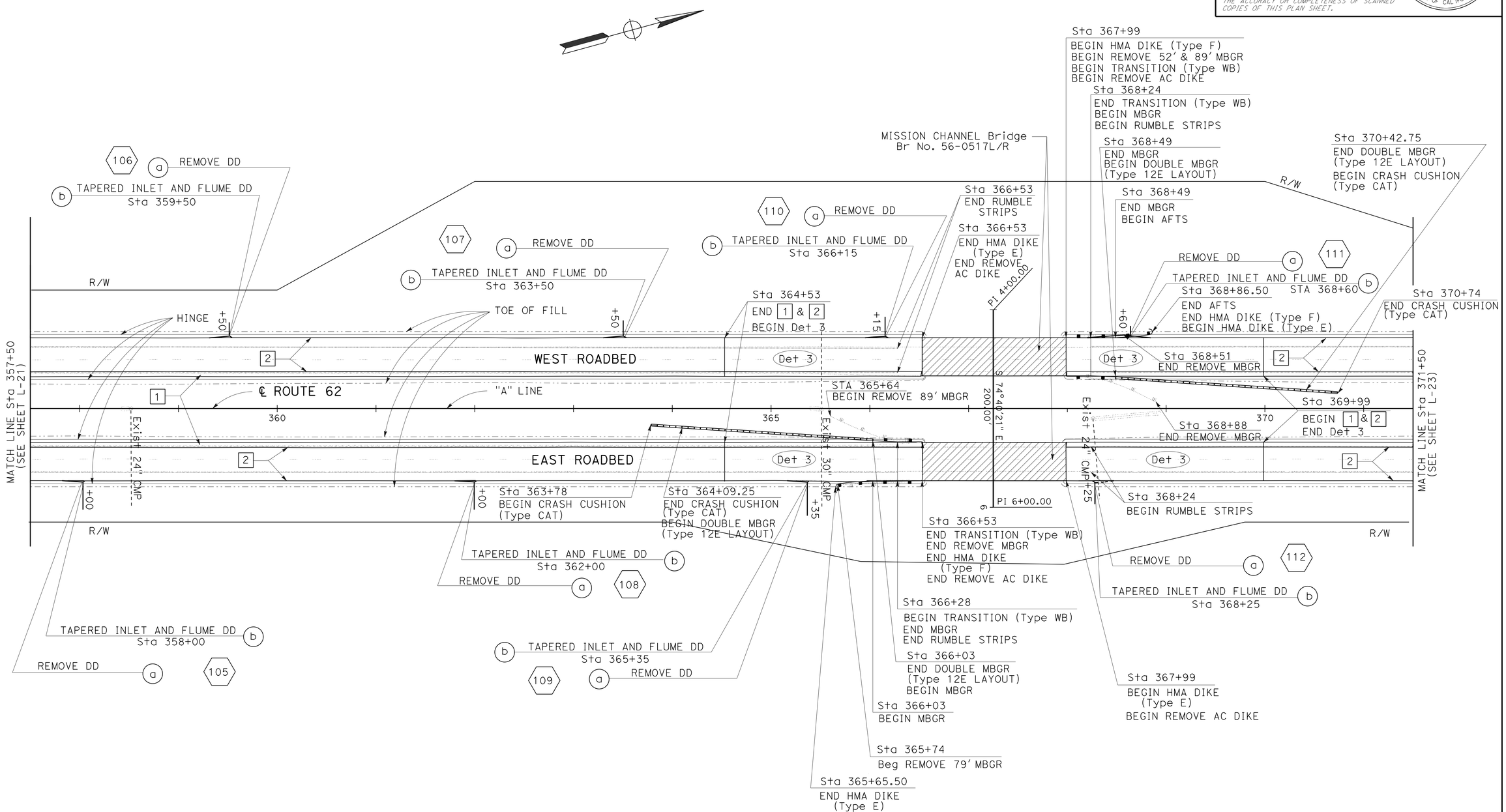

LAYOUT
SCALE: 1" = 50'

3 **REPLACED PER ADDENDUM No. 3 DATED JULY 26, 2013**

L-22

REVISED BY | DATE REVISED
JAMES A. LAI | KHAI HUYNH
CALCULATED-DESIGNED BY | CHECKED BY
FUNCTIONAL SUPERVISOR: SON NGUYEN

STATE OF CALIFORNIA - DEPARTMENT OF TRANSPORTATION
Caltrans
DESIGN

LAST REVISION 00-00-00 | DATE PLOTTED => 25-JUL-2013 | TIME PLOTTED => 13:56

Dist	COUNTY	ROUTE	POST MILES TOTAL PROJECT	SHEET No.	TOTAL SHEETS
08	Riv	62	0.0/R6.7	28	104

REGISTERED CIVIL ENGINEER 01-08-13 DATE

1-28-13
PLANS APPROVAL DATE

REGISTERED PROFESSIONAL ENGINEER JAMES A. LAI No. C29368 Exp. 3-31-14 CIVIL STATE OF CALIFORNIA

THE STATE OF CALIFORNIA OR ITS OFFICERS OR AGENTS SHALL NOT BE RESPONSIBLE FOR THE ACCURACY OR COMPLETENESS OF SCANNED COPIES OF THIS PLAN SHEET.

NOTE:

FOR ACCURATE RIGHT OF WAY ACCESS DATA, CONTACT RIGHT OF WAY ENGINEERING AT THE DISTRICT OFFICE.

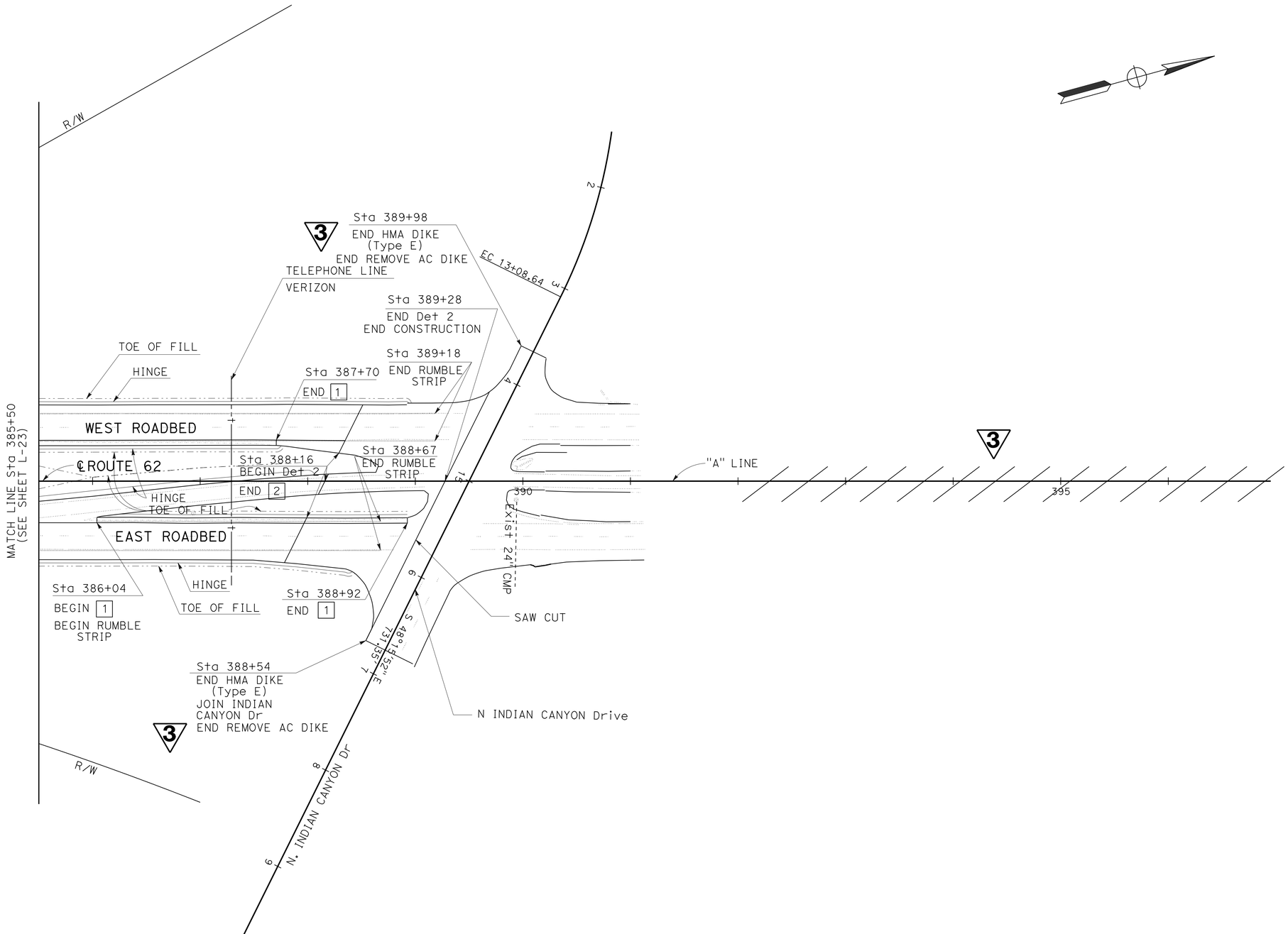

LAYOUT

SCALE: 1" = 50'

3 **REPLACED PER ADDENDUM No. 3 DATED JULY 26, 2013**

L-24

STATE OF CALIFORNIA - DEPARTMENT OF TRANSPORTATION

Caltrans

DESIGN

FUNCTIONAL SUPERVISOR: SON NGUYEN

CALCULATED-DESIGNED BY: JAMES A. LAI

CHECKED BY: KHAI HUYNH

REVISED BY

DATE REVISED

LAST REVISION 01-08-13 | DATE PLOTTED => 25-JUL-2013 | TIME PLOTTED => 13:56

Dist	COUNTY	ROUTE	POST MILES TOTAL PROJECT	SHEET No.	TOTAL SHEETS
08	Riv	62	0.0/R6.7	31A	104

REGISTERED CIVIL ENGINEER DATE 07-25-13

1-28-13
PLANS APPROVAL DATE

REGISTERED PROFESSIONAL ENGINEER JAMES A. LAI No. C29368 Exp. 3-31-15 CIVIL STATE OF CALIFORNIA

THE STATE OF CALIFORNIA OR ITS OFFICERS OR AGENTS SHALL NOT BE RESPONSIBLE FOR THE ACCURACY OR COMPLETENESS OF SCANNED COPIES OF THIS PLAN SHEET.

3

NOTES:

1. For additional details of Crash Cushion (Type CAT), refer to the manufacturer's installation instructions.
2. Crash Cushion (Type CAT) may be used at sites where the sides of the crash cushion would be exposed to opposing directions of travel (bidirectional traffic) or the same direction of travel (unidirectional traffic). For locations where traffic would only be on one side of the CAT system, see Standard Plan A77L4.
3. The Crash Cushion Backup is required for all Crash Cushion (Type CAT) installations. This allows the slotted rail elements to slide over the face of the unslotted rail elements.
4. For length and type of railing or barrier the crash cushion is attached to, see Project Plans.
5. Both of the 0.135" thick slotted rail elements have an attachment plate welded to the back side of one end of each rail element. Attach the welded plate end of the rail elements to Post No.4 prior to splicing the 0.105" thick slotted rail element over the 0.135" thick slotted rail element.
6. The 0.105" thick slotted rail elements have four ¾" diameter holes near one end of the rail elements for the attachment of the spacer channel. Attach this end of the rail elements to Post No.2.
7. Attach steel soil plate to steel foundation tube with ⅝" ø x 7½" hex head bolts with hex nuts (3/16" holes in plate and in two sides of tube to accommodate hex bolts).
8. The 6" x 8" knockout tube is to be located 4" down from top of wood post. Attach the knockout tube to the post with two ⅜" ø lag screws and flat washers.
9. Attach strut to Post Nos.1 and 2 foundation tubes with ⅝" ø hex head bolts, washers, and hex nuts. Bolts extend through the strut, steel foundation tube, and wood posts.
10. Do not attach the rail elements to Post Nos.3, 5 and 6.
11. Yellow retroreflective sheeting, as provided by the Crash Cushion (Type CAT) manufacturer, shall be adhered to the rounded end of nose plate. The sheeting shall be consistent with the design pattern and colors of a Type P object marker panel for unidirectional traffic and that of a TYPE R object marker panel for bidirectional traffic. The sheeting shall be positioned on the end of the nose plate so that it is visible to approaching traffic.
12. A 6'-0" length steel foundation tube, TS 8" x 6" x 3/16" , without a soil plate, may be furnished and installed in place of the 4'-6" length steel foundation tube and soil plate shown. Minimum embedment of the 6'-0" length tube shall be 5'-9". A ⅝" ø hex head bolt and nut shall be installed in the hole in 6'-0" length tube to keep the wood post from dropping into the tube.

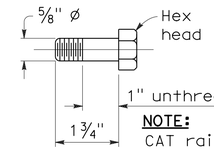

NOTE:
CAT rail splice bolts allow telescoping action of rail sliding on rail.

CAT RAIL SPLICE BOLT

Use at Post Nos. 4 and 6

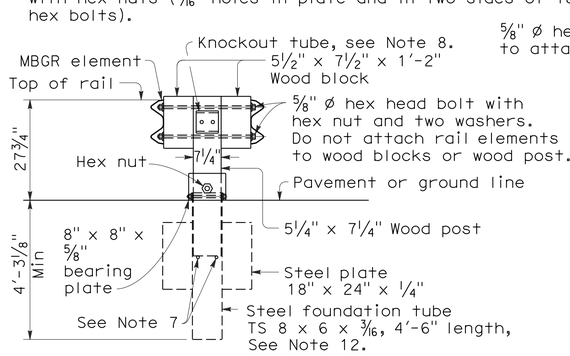

SECTION A-A

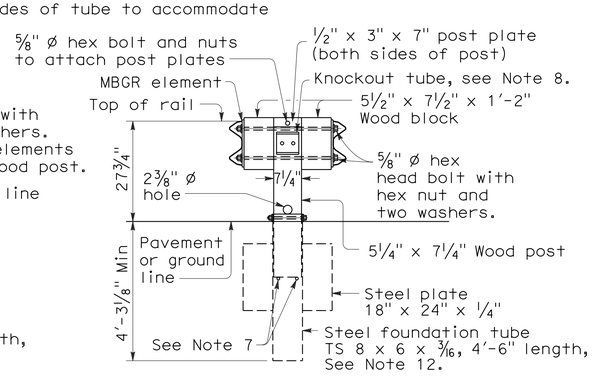

SECTION B-B

See Note 5

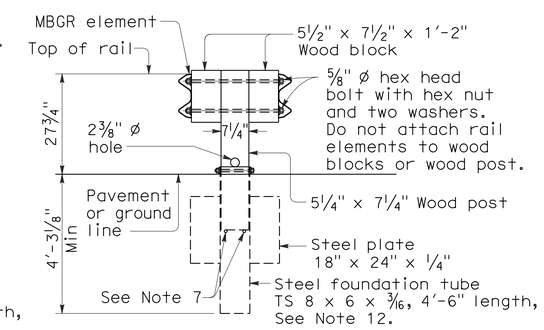

SECTION C-C

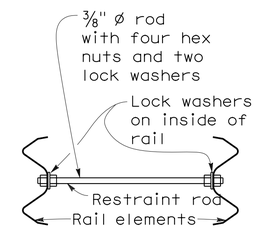

SECTION D-D

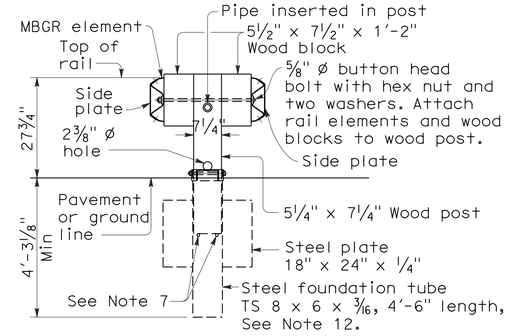

SECTION E-E

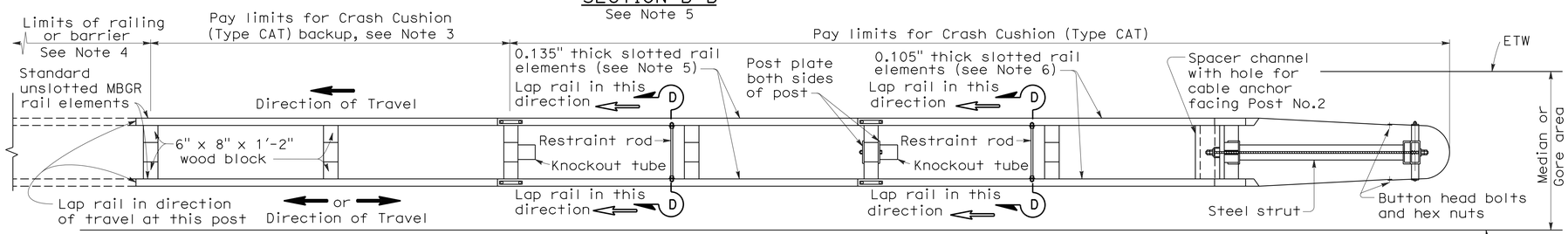

PLAN

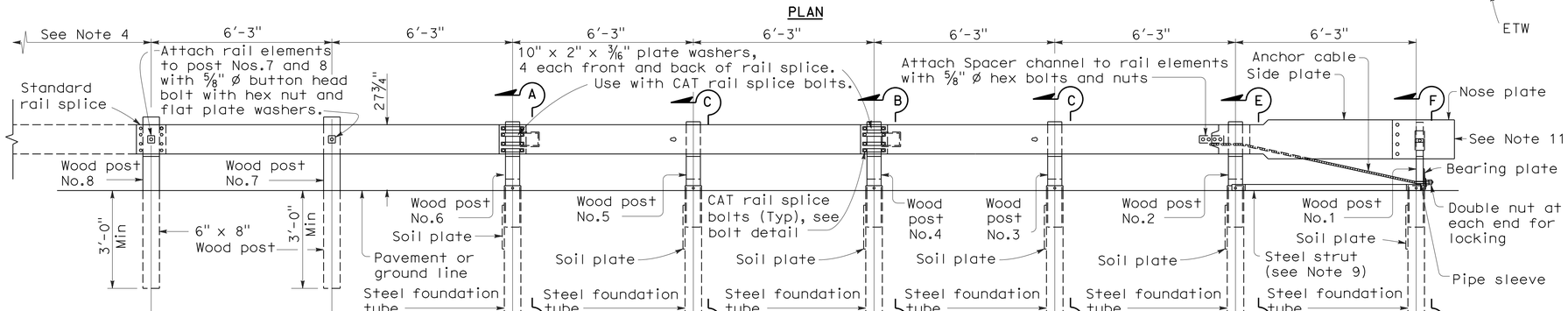

ELEVATION

CRASH CUSHION (TYPE CAT)

See Note 2

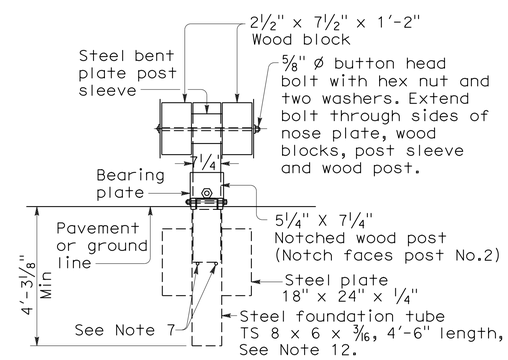

SECTION F-F

CONSTRUCTION DETAILS CRASH CUSHION (TYPE CAT)

NO SCALE

3 **ADDED PER ADDENDUM No. 3 DATED JULY 26, 2013**

C-4

REVISED BY | DATE REVISED
JAMES A. LAI | KHAI HUYNH
CALCULATED-DESIGNED BY | CHECKED BY
FUNCTIONAL SUPERVISOR: SON NGUYEN
STATE OF CALIFORNIA - DEPARTMENT OF TRANSPORTATION
Caltrans® DESIGN

LAST REVISION 00-00-00 | DATE PLOTTED => 25-JUL-2013 | TIME PLOTTED => 13:56

Dist	COUNTY	ROUTE	POST MILES TOTAL PROJECT	SHEET No.	TOTAL SHEETS
08	Riv	62	0.0/R6.7	85	104

REGISTERED CIVIL ENGINEER 01-08-13 DATE

1-28-13
PLANS APPROVAL DATE

REGISTERED PROFESSIONAL ENGINEER JAMES A. LAI No. C29368 Exp. 3-31-14 CIVIL STATE OF CALIFORNIA

THE STATE OF CALIFORNIA OR ITS OFFICERS OR AGENTS SHALL NOT BE RESPONSIBLE FOR THE ACCURACY OR COMPLETENESS OF SCANNED COPIES OF THIS PLAN SHEET.

3

ROADWAY QUANTITIES

SHEET No.	STATION LIMITS "A" LINE FROM	TO	DIRECTION	Pvmt Str Sec Type	COLD PLANE AC SQYD	RHMA-G TON	HOT MIX ASPHALT (TYPE C) TON	CLASS 2 AGGREGATE BASE CY	JPCP CY	HOT MIX ASPHALT (*) TON	LCB CY	TACK COAT TON
L-1	66+50	77+50	BOTH	1		82.50	288.75	468.52				4.20
			EB	2 & 5	4,364	294.57	736.43					
			WB		3,870	261.26	653.14					
L-2	77+50	86+40	EB	1		33.38	116.81	189.54				4.31
	77+50	91+25	WB			51.56	180.47	292.82				
	77+50	86+40	EB	2	3,335	225.10	562.74					
	77+50	91+50	WB		5,095	343.94	859.86					
	86+40	91+50	EB	3					567.21	99.88	246.61	
				4					195.19	52.70	91.09	
L-3	94+75	105+50	EB	1		40.31	141.09	228.94				5.33
	99+50	105+50	WB			22.50	78.75	127.78				
	92+50	105+50	EB	2 & 5	6,730	454.29	1,135.73					
	91+50	93+50	WB		1,990	134.35	335.87					
	99+50	105+50			2,336	157.68	394.20					
	91+50	92+50	EB	3					119.30	21.01	51.87	
	93+50	99+50	WB						662.78	116.71	288.17	
	91+50	92+50	EB	4					77.44	20.91	36.14	
	93+50	99+50	WB						230.83	62.33	107.72	
L-4	105+50	106+49	BOTH	1		7.43	25.99	42.17				5.00
			EB	5	372.22	25.13	62.81					
			WB		388.44	26.22	65.55					
	106+49	107+50	BOTH	(1)	875.33							
	107+50	119+50	BOTH	1		90.00	315.00	511.11				
			EB	2 & 5	4,516	304.82	762.04					
			WB		4,523	305.33	763.31					
L-5	119+50	133+50	BOTH	1		105.00	367.50	596.30				5.53
			EB	2	5,268	355.60	888.98					
			WB		5,620	379.32	948.30					
L-6	133+50	146+35	EB	1		48.19	168.66	273.66				5.40
	133+50	147+25	WB			51.56	180.47	292.82				
	133+50	147+50	EB	2	5,391	363.92	909.79					
			WB		5,266	355.44	886.61					
L-7	151+25	161+50	EB	1		38.44	134.53	218.29				6.15
	152+25	161+50	WB			34.69	121.41	196.99				
	147+50	161+50	EB	2 & 5	6,336	427.70	1,069.26					
			WB		6,424	433.62	1,084.05					
L-8	161+50	175+50	BOTH	1		105.00	367.50	596.30				5.37
			EB	2	5,277	356.23	890.57					
			WB		5,247	354.17	885.41					
L-9	175+50	189+50	BOTH	1		105.00	367.50	596.30				5.38
			BOTH	2	10,539	711.41	1,778.53					
SUBTOTAL					93,762.99	7,085.66	18,527.61	4,631.54	1,852.75	373.54	821.6	46.67

* (Type A Bond Breaker)
(1) COLD PLANE ON STRUCTURE

ROADWAY QUANTITIES (CONTINUED)

SHEET No.	STATION LIMITS "A" LINE FROM	TO	DIRECTION	Pvmt Str Sec Type	COLD PLANE AC SQYD	RHMA-G TON	HOT MIX ASPHALT (TYPE C) TON	CLASS 2 AGGREGATE BASE CY	JPCP CY	HOT MIX ASPHALT (*) TON	LCB CY	TACK COAT TON
L-10	189+50	203+50	BOTH	1		105.00	367.50	596.30				5.37
			EB	2	5,239	353.65	884.12					
			WB		5,292	357.18	892.95					
L-11	203+50	215+27	EB	1		44.14	154.48	250.66				4.98
	216+24	217+50				4.73	16.54	26.83				
	203+50	215+44	WB			44.78	156.71	254.28				
	216+42	217+50				4.05	14.18	23.00				
	203+50	215+27	EB	2 & 5	4,363	294.47	736.18					
	215+27	216+24		(1)	420.33							
	216+24	217+50		2 & 5	497	33.56	83.89					
	203+50	215+44	WB		4,517	304.90	762.24					
	216+42	217+50			382	25.76	64.41					
L-12	217+50	222+55	EB	1		18.94	66.28	107.55				6.04
	227+28	231+50				15.83	55.39	89.87				
	217+50	223+75	WB			23.44	82.03	133.10				
	228+36	231+50				11.78	41.21	66.87				
	217+50	231+50	EB	2 & 5	6,342	428.11	1,070.27					
			WB		6,210	419.21	1,048.01					
L-13	231+50	245+50	BOTH	1		105.00	367.50	596.30				5.36
			EB	2	5,233	353.23	883.07					
			WB		5,272	355.88	889.69					
L-14	245+50	259+50	BOTH	1		105.00	367.50	596.30				5.38
			EB	2	5,254	354.65	886.63					
			WB		5,293	357.30	893.25					
L-15	259+50	273+50	BOTH	1		105.00	367.50	596.30				5.40
			EB	2	5,259	354.96	887.40					
			WB		5,323	359.33	898.33					
L-16	273+50	287+50	BOTH	1		105.00	367.50	596.30				5.37
			EB	2	5,212	351.84	879.60					
			WB		5,312	358.54	896.34					
L-17	287+50	301+50	BOTH	1		105.00	367.50	596.30				5.37
			EB	2	5,230	353.04	882.60					
			WB		5,291	357.16	892.89					
L-18	301+50	308+63	EB	1		26.74	93.58	151.84				6.11
	313+50	315+50				7.50	26.25	42.59				
	301+50	309+82	WB			31.20	109.20	177.19				
	314+82	315+50				2.55	8.93	14.48				
	301+50	315+50	EB	2 & 5	6,343	428.15	1,070.36					
			WB		6,386	431.06	1,077.64					
SUBTOTAL					99,090.66	7,497.66	19,609.65	4,916.06				49.38

* (Type A Bond Breaker)
(1) COLD PLANE ON STRUCTURE

3 **REPLACED PER ADDENDUM No. 3 DATED JULY 26, 2013**

SUMMARY OF QUANTITIES

Q-1

JAMES A. LAI 7/17/13
REVISED BY DATE REVISED
ALBERT ATMADJA JAMES A. LAI
CALCULATED-DESIGNED BY CHECKED BY
FUNCTIONAL SUPERVISOR SON NGUYEN
STATE OF CALIFORNIA - DEPARTMENT OF TRANSPORTATION
Caltrans DESIGN

LAST REVISION 01-08-13 | DATE PLOTTED => 25-JUL-2013 TIME PLOTTED => 15:23

Dist	COUNTY	ROUTE	POST MILES TOTAL PROJECT	SHEET No.	TOTAL SHEETS
08	Riv	62	0.0/R6.7	86	104

REGISTERED CIVIL ENGINEER 01-08-13 DATE

1-28-13
PLANS APPROVAL DATE

REGISTERED PROFESSIONAL ENGINEER JAMES A. LAI No. C29368 Exp. 3-31-14 CIVIL STATE OF CALIFORNIA

THE STATE OF CALIFORNIA OR ITS OFFICERS OR AGENTS SHALL NOT BE RESPONSIBLE FOR THE ACCURACY OR COMPLETENESS OF SCANNED COPIES OF THIS PLAN SHEET.

3

ROADWAY QUANTITIES (CONTINUED)

SHEET No.	STATION LIMITS "A" LINE FROM	STATION LIMITS "A" LINE TO	DIRECTION	Pvmt Str Sec Type	COLD PLANE AC SQYD	RHMA-G TON	HOT MIX ASPHALT (TYPE C) TON	CLASS 2 AGGREGATE BASE CY	JPCP CY	HOT MIX ASPHALT (*) TON	LCB CY	TACK COAT TON
L-19	315+50	329+50	BOTH	1		105.00	367.50	596.30				5.37
			EB	2	5,215	351.99	879.98					
			WB		5,315	358.79	896.96					
L-20	329+50	343+50	BOTH	1		105.00	367.50	596.30				5.38
			EB	2	5,266	355.45	888.62					
			WB		5,288	356.96	892.39					
L-21	343+50	345+80	BOTH	1		17.25	60.38	97.96				4.85
	347+21	357+50				77.18	270.11	438.28				
	343+50	345+80	EB	2 & 5	858.78	57.97	144.92					
			WB		869.67	58.70	146.76					
	345+80	347+21	BOTH	(1)	1,222							
	347+21	357+50	EB	2 & 5	3,858	260.42	651.04					
			WB		3,917	264.38	660.96					
L-22	357+50	366+53	BOTH	1		67.73	237.04	384.61				4.84
	367+99	371+50				26.33	92.14	149.50				
	357+50	366+53	EB	2 & 5	3,412	230.33	575.83					
			WB		3,422	230.96	577.39					
	366+53	367+99	BOTH	(1)	1,265.33							
	367+99	371+50	EB	2 & 5	1,330	89.76	224.40					
			WB		1,327	89.60	224.01					
L-23	371+50	383+97	EB	1		46.76	163.67	265.56				5.44
	371+50	385+50	WB			52.50	183.75	298.15				
	371+50	385+50	EB	2	5,466	368.98	922.44					
			WB		5,305	358.10	895.26					
L-24	386+04	388+92	EB	1		10.80	37.80	61.33				2.01
	385+50	387+70	WB			8.25	28.88	46.85				
	385+50	389+28	EB	2 & 5	2,231	150.61	376.52					
	385+50	389+28	WB		1,998	134.84	337.09					
SUBTOTAL					57,566.08	4,234.64	11,103.34	2,934.84				27.89
TOTAL FROM Q-1					93,762.99	7,085.66	18,527.61	4,631.54	1,852.75	373.54	821.60	46.67
					99,090.66	7,497.66	19,609.65	4,916.06				49.38
GRAND TOTAL					250,419.73	18,817.96	49,240.60	12,482.44	1,852.75	373.54	821.60	23.94

(*) (Type A Bond Breaker)
(1) COLD PLANE ON STRUCTURE

EARTHWORK

SHEET No.	STATION LIMITS "A" LINE FROM	STATION LIMITS "A" LINE TO	DIRECTION	ROADWAY Exc (CY)	IMPORTED BORROW (CY)
L-1 Thru L-24	66+50	391+00	BOTH	15,200	8,145

RUMBLE STRIPS

SHEET No.	STATION LIMITS "A" LINE FROM	STATION LIMITS "A" LINE TO	DIRECTION	RUMBLE STRIPS Sta
L-1 Thru L-24	66+50	389+28	BOTH	1,296

REMOVE ASPHALT CONCRETE OVERSIDE DRAIN

SHEET No.	LOCATION	STATION LIMITS	SIDE	REMOVE AC OVERSIDE DRAIN EA
L-2	EB	"A" 83+50.00	R+	1
L-6		"A" 135+00.00		
L-7	WB	"A" 150+35.00		
L-13		"A" 239+75.00		
L-18		"A" 315+00.00		
L-19		"A" 319+00.00		
	EB	"A" 325+50.00		
L-21	WB	"A" 355+50.00		
TOTAL				8

REMOVE METAL BEAM GUARD RAILING

SHEET No.	LOCATION	STATION LIMITS	SIDE	REMOVE MBGR LF	TREATED WOOD WASTE LB
L-4	EB	"A" 105+60.00 To "A" 106+49.00	R+	89	1485
		"A" 105+57.00 To "A" 106+49.00	L+	92	1584
	WB	"A" 107+50.00 To "A" 108+28.00	R+	78	1287
			L+	92	1584
L-11	EB	"A" 214+64.00 To "A" 215+17.00	R+	52	891
		"A" 214+38.00 To "A" 215+27.00	L+	89	1485
	WB	"A" 216+52.00 To "A" 217+41.00	R+	89	1485
		"A" 216+42.00 To "A" 217+34.00	L+	92	1584
L-21	EB	"A" 345+01.00 To "A" 345+80.00	R+	79	1386
		"A" 344+88.00 To "A" 345+80.00	L+	92	1584
	WB	"A" 347+21.00 To "A" 347+73.00	R+	52	891
		"A" 347+21.00 To "A" 348+10.00	L+	89	1485
L-22	EB	"A" 365+74.00 To "A" 366+53.00	R+	79	1386
		"A" 365+64.00 To "A" 366+53.00	L+	89	1485
	WB	"A" 367+99.00 To "A" 368+51.00	R+	52	891
		"A" 367+99.00 To "A" 368+88.00	L+	89	1485
	TOTAL TREATED WOOD WASTE FROM SHEET SQ-2				2175.16
			TOTAL	1294	24153.16

3 **REPLACED PER ADDENDUM No. 3 DATED JULY 26, 2013**

SUMMARY OF QUANTITIES

Q-2

STATE OF CALIFORNIA - DEPARTMENT OF TRANSPORTATION
Caltrans DESIGN
FUNCTIONAL SUPERVISOR: SON NGUYEN
CALCULATED-DESIGNED BY: JAMES A. LAI 7/17/13
CHECKED BY: ALBERT ATMADJA JAMES A. LAI
REVISED BY / DATE REVISED

LAST REVISION 01-08-13 | DATE PLOTTED => 25-JUL-2013 | TIME PLOTTED => 13:56

Dist	COUNTY	ROUTE	POST MILES TOTAL PROJECT	SHEET No.	TOTAL SHEETS
08	Riv	62	0.0/R6.7	88	104

REGISTERED CIVIL ENGINEER 01-08-13 DATE

1-28-13
PLANS APPROVAL DATE

REGISTERED PROFESSIONAL ENGINEER JAMES A. LAI No. C29368 Exp. 3-31-14 CIVIL STATE OF CALIFORNIA

THE STATE OF CALIFORNIA OR ITS OFFICERS OR AGENTS SHALL NOT BE RESPONSIBLE FOR THE ACCURACY OR COMPLETENESS OF SCANNED COPIES OF THIS PLAN SHEET.

HMA DIKE (CONTINUED)

SHEET No.	LOCATION	STATION LIMITS	SIDE	PLACE HMA DIKE (TYPE E) LF	PLACE HMA DIKE (TYPE F) LF	HMA (TYPE A) TON
L-22	EB	"A" 357+50.00 TO "A" 365+65.50	R†	815.5		21.4
		"A" 365+65.50 TO "A" 366+53.00			87.5	1.2
		"A" 367+99.00 TO "A" 371+50.00		351		9.2
	WB	"A" 357+50.00 TO "A" 366+53.00	L†	903		23.7
		"A" 367+99.00 TO "A" 368+86.50			87.5	1.2
		"A" 368+86.50 TO "A" 371+50.00		263.5		6.9
L-23	EB	"A" 371+50.00 TO "A" 385+50.00	R†	1,400		36.8
	WB		L†			
L-24	EB	"A" 385+50.00 TO "A" 388+54.00	R†	304		8.0
	WB	"A" 385+50.00 TO "A" 389+98.00	L†	448		11.8
SUBTOTAL				4,485	175	120.2
TOTAL FROM Q-3				19,170.5	350	508.8
				16,424	175	434.3
GRAND TOTAL				40,079.5	700	1,063.3

SEAL PAVEMENT JOINT BAR REINFORCING STEEL (EPOXY COATED)

(JPCP PAVEMENT)

3

SHEET No.	STATION LIMITS	SEAL PAVEMENT JOINT LF	BAR Reinf STEEL (EPOXY COATED) (N) LB
L-2	EB "A" 86+40 TO "A" 91+50	3,776	13,774
L-3	EB "A" 91+50 TO "A" 92+50		
L-3	WB"A" 93+50 TO "A" 99+50	3,776	13,774
TOTAL		7,552	27,548

3 (N) - NOT A SEPARATE PAY ITEM, FOR INFORMATION ONLY.

VEGETATION CONTROL (MINOR CONCRETE)

(VEGETATION CONTROL UNDER MBGR)

SHEET No.	STRUCTURE NAME	LOCATION	CY
L-4	PAINTED HILLS CHANNEL	EB	1.60
		WB	1.60
L-11	DEVILS GARDEN CHANNEL	EB	1.60
		WB	1.60
L-21	MISSION CHANNEL OVERFLOW	EB	1.60
		WB	1.60
L-22	MISSION CREEK ROAD	EB	1.60
		WB	1.60
TOTAL			12.80

METAL BEAM GUARD RAILING (WOOD POST)

SHEET No.	LOCATION	STATION LIMITS	SIDE	MBGR (WOOD POST) LF	Trans RAILING (TYPE WB) EA	ALTERNATIVE FLARED TERMINAL SYSTEM EA	CRASH CUSHION (TYPE CAT) EA	DOUBLE MBGR (WOOD POST) LF
L-3 L-4	EB	"A" 103+74.00 TO "A" 104+05.25	L†				1	
		"A" 104+05.25 TO "A" 105+99.00						194.0
L-4	EB	"A" 105+99.00 TO "A" 106+24.00	R†	25.0	1	1		
			L†		1			
	WB	"A" 107+75.00 TO "A" 108+00.00	R†		1	1		
					1			
		"A" 108+00.00 TO "A" 109+93.75	L†					194.0
		"A" 109+93.75 TO "A" 110+25.00					1	
L-11	EB	"A" 214+67.00 TO "A" 214+92.00	R†	25.0	1	1		
		"A" 214+77.00 TO "A" 215+02.00	L†		1			
		"A" 212+52.00 TO "A" 212+83.25					1	
		"A" 212+83.25 TO "A" 214+77.00						194.0
	WB	"A" 216+77.00 TO "A" 217+02.00	R†	25.0	1	1		
		"A" 216+67.00 TO "A" 216+92.00	L†		1			
L-11 L-12	WB	"A" 216+92.00 TO "A" 218+85.75	L†					194.0
		"A" 218+85.75 TO "A" 219+17.00					1	
L-20 L-21	EB	"A" 343+05.00 TO "A" 343+36.25	L†				1	
		"A" 343+36.25 TO "A" 345+30.00						194.0
L-21	EB	"A" 345+30.00 TO "A" 345+55.00	R†	25.0	1	1		
			L†		1			
	WB	"A" 347+46.00 TO "A" 347+71.00	R†		1	1		
					1			
		"A" 347+71.00 TO "A" 349+64.75	L†					194.0
		"A" 349+64.75 TO "A" 349+96.00					1	
L-22	EB	"A" 366+03.00 TO "A" 366+28.00	R†	25.0	1	1		
			L†		1			
		"A" 363+78.00 TO "A" 364+09.25					1	
		"A" 364+09.25 TO "A" 366+03.00						194.0
	WB	"A" 368+24.00 TO "A" 368+49.00	R†	25.0	1	1		
			L†		1			
		"A" 368+49.00 TO "A" 370+42.75						194.0
		"A" 370+42.75 TO "A" 370+74.00					1	
TOTAL				150.0	16	8	8	1552.0

3 REPLACED PER ADDENDUM No. 3 DATED JULY 26, 2013

SUMMARY OF QUANTITIES

Q-4

STATE OF CALIFORNIA - DEPARTMENT OF TRANSPORTATION
Caltrans DESIGN
FUNCTIONAL SUPERVISOR SON NGUYEN
CALCULATED-DESIGNED BY ALBERT ATMADJA CHECKED BY JAMES A. LAI
REVISED BY DATE REVISED

LAST REVISION 01-08-13 DATE PLOTTED => 25-JUL-2013 TIME PLOTTED => 15:23

Dist	COUNTY	ROUTE	POST MILES TOTAL PROJECT	SHEET No.	TOTAL SHEETS
08	Riv	62	0.0/R6.7	88A	104

3

REGISTERED CIVIL ENGINEER DATE 07-25-13

1-28-13
PLANS APPROVAL DATE

REGISTERED PROFESSIONAL ENGINEER JAMES A. LAI No. C29368 Exp. 3-31-15 CIVIL STATE OF CALIFORNIA

THE STATE OF CALIFORNIA OR ITS OFFICERS OR AGENTS SHALL NOT BE RESPONSIBLE FOR THE ACCURACY OR COMPLETENESS OF SCANNED COPIES OF THIS PLAN SHEET.

REMOVE AC DIKE

(TABLE 1)

SHEET No.	LOCATION	STATION LIMITS "A" LINE	LF
L-1	EB	66+50 TO 77+50	1,100
	WB	66+50 TO 77+50	1,100
L-2	EB	77+50 TO 86+40	890
	WB	77+50 TO 91+50	1,400
L-3	EB	93+50 TO 105+50	1,200
	WB	91+50 TO 92+50	100
	WB	99+50 TO 105+50	600
L-4	EB	105+50 TO 106+49	99
	EB	107+50 TO 119+50	1,200
	WB	105+50 TO 106+49	99
	WB	107+50 TO 119+50	1,200
L-5	EB	119+50 TO 133+50	1,400
	WB	119+50 TO 133+50	1,400
L-6	EB	133+50 TO 147+50	1,400
	WB	133+50 TO 147+50	1,400
L-7	EB	147+50 TO 148+60.50	110.50
	EB	150+35 TO 161+50	1,115
	WB	147+50 TO 148+52	102
	WB	148+76 TO 161+50	1,274
L-8	EB	161+50 TO 175+50	1,400
	WB	161+50 TO 175+50	1,400
L-9	EB	175+50 TO 189+50	1,400
	WB	175+50 TO 189+50	1,400
L-10	EB	189+50 TO 203+50	1,400
	WB	189+50 TO 203+50	1,400
L-11	EB	203+50 TO 215+17	1,167
	EB	216+13 TO 217+50	137
	WB	203+50 TO 210+30	680
L-12	EB	217+50 TO 225+75	825
	EB	227+28 TO 231+50	422
		SUBTOTAL TABLE 1	28,820.50

REMOVE AC DIKE (CONTINUED)

(TABLE 2)

SHEET No.	LOCATION	STATION LIMITS "A" LINE	LF
L-13	EB	231+50 TO 245+50	1,400
	WB	239+70 TO 245+50	580
L-14	EB	245+50 TO 259+50	1,400
	WB	245+50 TO 259+50	1,400
L-15	EB	259+50 TO 273+50	1,400
	WB	259+50 TO 273+50	1,400
L-16	EB	273+50 TO 287+50	1,400
	WB	273+50 TO 287+50	1,400
L-17	EB	287+50 TO 301+50	1,400
	WB	287+50 TO 301+50	1,400
L-18	EB	301+50 TO 310+83	933
	EB	311+05 TO 315+50	445
	WB	301+50 TO 310+38	888
	WB	314+85 TO 315+50	65
L-19	EB	315+50 TO 329+50	1,400
	WB	315+50 TO 329+50	1,400
L-20	EB	329+50 TO 343+50	1,400
	WB	329+50 TO 343+50	1,400
L-21	EB	343+50 TO 345+80	230
	EB	347+21 TO 357+50	1,029
	WB	343+50 TO 345+80	230
	WB	347+21 TO 357+50	1,029
L-22	EB	357+50 TO 366+53	903
	EB	367+99 TO 371+50	351
	WB	357+50 TO 366+53	903
	WB	367+99 TO 371+50	351
L-23	EB	371+50 TO 385+50	1,400
	WB	371+50 TO 385+50	1,400
L-24	EB	385+50 TO 388+54	304
	WB	385+50 TO 389+98	448
		SUBTOTAL TABLE 2	27,030
		SUBTOTAL TABLE 1	28,820.50
		TOTAL	55,850.50

CRASH CUSHION (Type CAT)

SHEET No.	STATION LIMITS	DIRECTION	QUANTITY
L-3	103+74 TO 104+05.25	EB	1
L-4	109+93.75 TO 110+25	WB	1
L-11	212+52 TO 212+83.25	EB	1
L-12	218+85.75 TO 219+17	WB	1
L-20	343+05 TO 343+36.25	EB	1
L-21	349+64.75 TO 349+96	WB	1
L-22	363+78 TO 364+09.25	EB	1
	370+42.75 TO 370+74	WB	1
		TOTAL	8

3 ADDED PER ADDENDUM No. 3 DATED JULY 26, 2013

SUMMARY OF QUANTITIES

Q-5

STATE OF CALIFORNIA - DEPARTMENT OF TRANSPORTATION
Caltrans DESIGN
FUNCTIONAL SUPERVISOR SON NGUYEN
CALCULATED-DESIGNED BY ALBERT ATMADJA
CHECKED BY JAMES A. LAI
REVISED BY
DATE REVISED

LAST REVISION 00-00-00
DATE PLOTTED => 25-JUL-2013
TIME PLOTTED => 13:56