Dist	COUNTY	ROUTE	POST MILES TOTAL PROJECT	SHEET No.	TOTAL SHEETS
08	SBd	15	3.8/12.8	101	680

REGISTERED CIVIL ENGINEER 4-14-11 DATE

6-13-11
PLANS APPROVAL DATE

REGISTERED PROFESSIONAL ENGINEER
AHMAD SHAH
No. C55259
Exp. 9-30-12
CIVIL
STATE OF CALIFORNIA

THE STATE OF CALIFORNIA OR ITS OFFICERS OR AGENTS SHALL NOT BE RESPONSIBLE FOR THE ACCURACY OR COMPLETENESS OF SCANNED COPIES OF THIS PLAN SHEET.

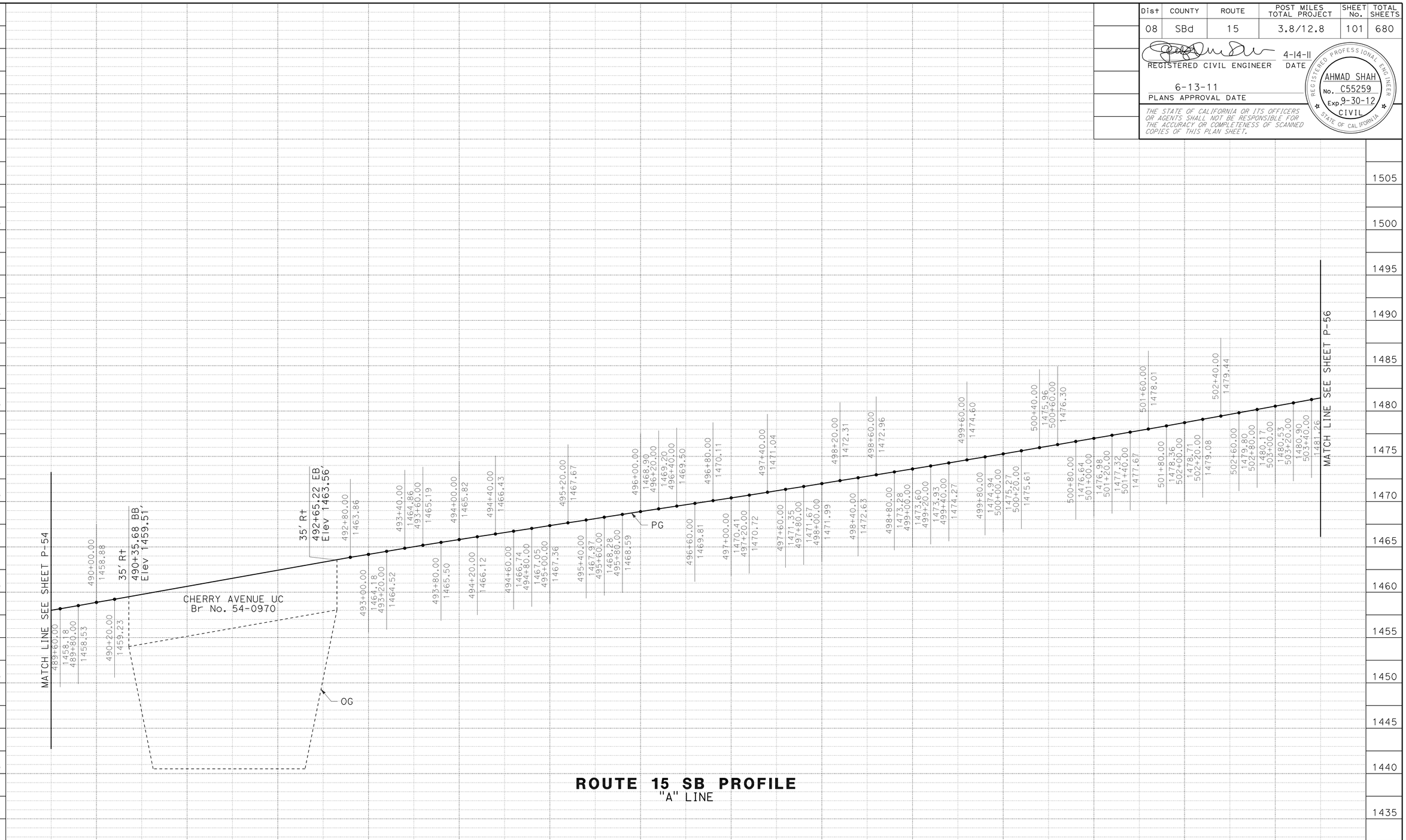

ROUTE 15 SB PROFILE
"A" LINE

PROFILE
SCALE: Horiz 1" = 50'
Vert 1" = 5'

P-55

STATE OF CALIFORNIA - DEPARTMENT OF TRANSPORTATION
Caltrans
DESIGN

FUNCTIONAL SUPERVISOR: GEORGE MORHIG
CALCULATED-DESIGNED BY: RYAN MITRY
CHECKED BY: AHMAD SHAH
REVISED BY
DATE REVISED

LAST REVISION 04-14-11
DATE PLOTTED => 17-JUN-2011
TIME PLOTTED => 05:24

Dist	COUNTY	ROUTE	POST MILES TOTAL PROJECT	SHEET No.	TOTAL SHEETS
08	SBd	15	3.8/12.8	102	680

REGISTERED CIVIL ENGINEER 4-14-11 DATE

6-13-11
PLANS APPROVAL DATE

REGISTERED PROFESSIONAL ENGINEER
AHMAD SHAH
No. C55259
Exp. 9-30-12
CIVIL
STATE OF CALIFORNIA

THE STATE OF CALIFORNIA OR ITS OFFICERS OR AGENTS SHALL NOT BE RESPONSIBLE FOR THE ACCURACY OR COMPLETENESS OF SCANNED COPIES OF THIS PLAN SHEET.

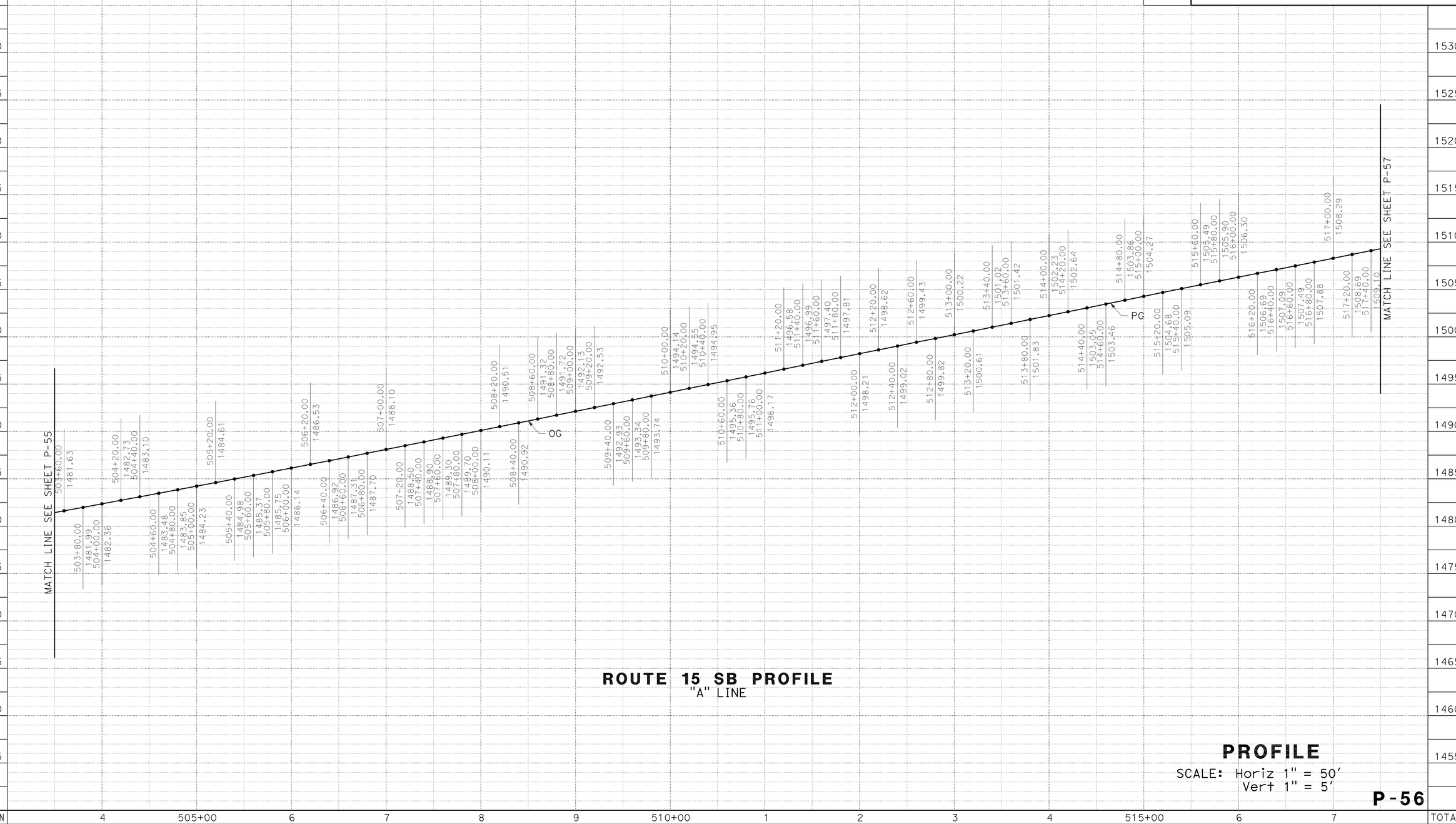

ROUTE 15 SB PROFILE
"A" LINE

PROFILE
SCALE: Horiz 1" = 50'
Vert 1" = 5'

P-56

STATION	4	505+00	6	7	8	9	510+00	1	2	3	4	515+00	6	7	TOTAL
CY Exc															
CY Emb															

STATE OF CALIFORNIA - DEPARTMENT OF TRANSPORTATION
Caltrans® DESIGN

FUNCTIONAL SUPERVISOR: GEORGE MORHIG
CALCULATED-DESIGNED BY: RYAN MITRY
CHECKED BY: AHMAD SHAH
REVISED BY
DATE REVISED

LAST REVISION 04-14-11
DATE PLOTTED => 17-JUN-2011
TIME PLOTTED => 05:24

Dist	COUNTY	ROUTE	POST MILES TOTAL PROJECT	SHEET No.	TOTAL SHEETS
08	SBd	15	3.8/12.8	103	680

REGISTERED CIVIL ENGINEER 4-14-11 DATE

6-13-11
PLANS APPROVAL DATE

REGISTERED PROFESSIONAL ENGINEER
AHMAD SHAH
No. C55259
Exp. 9-30-12
CIVIL
STATE OF CALIFORNIA

THE STATE OF CALIFORNIA OR ITS OFFICERS OR AGENTS SHALL NOT BE RESPONSIBLE FOR THE ACCURACY OR COMPLETENESS OF SCANNED COPIES OF THIS PLAN SHEET.

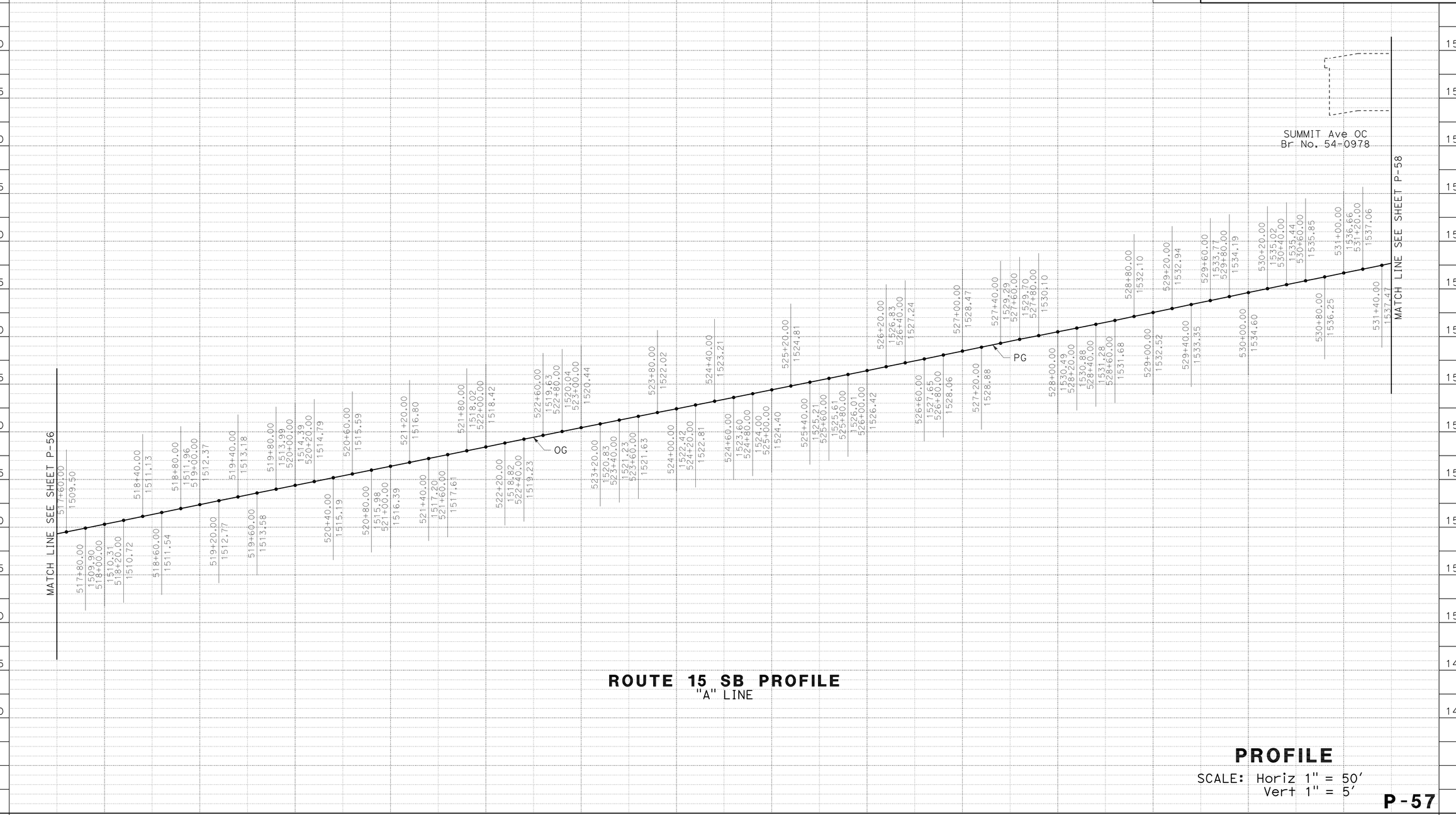

ROUTE 15 SB PROFILE
"A" LINE

PROFILE
SCALE: Horiz 1" = 50'
Vert 1" = 5'

P-57

STATE OF CALIFORNIA - DEPARTMENT OF TRANSPORTATION
Caltrans® DESIGN

FUNCTIONAL SUPERVISOR: GEORGE MORHIG
CALCULATED-DESIGNED BY: AHMAD SHAH
CHECKED BY: RYAN MITRY
REVISED BY
DATE REVISED

LAST REVISION 04-14-11
DATE PLOTTED => 17-JUN-2011
TIME PLOTTED => 05:24

Dist	COUNTY	ROUTE	POST MILES TOTAL PROJECT	SHEET No.	TOTAL SHEETS
08	SBd	15	3.8/12.8	104	680

REGISTERED CIVIL ENGINEER 4-14-11 DATE

6-13-11
PLANS APPROVAL DATE

REGISTERED PROFESSIONAL ENGINEER
AHMAD SHAH
No. C55259
Exp. 9-30-12
CIVIL
STATE OF CALIFORNIA

THE STATE OF CALIFORNIA OR ITS OFFICERS OR AGENTS SHALL NOT BE RESPONSIBLE FOR THE ACCURACY OR COMPLETENESS OF SCANNED COPIES OF THIS PLAN SHEET.

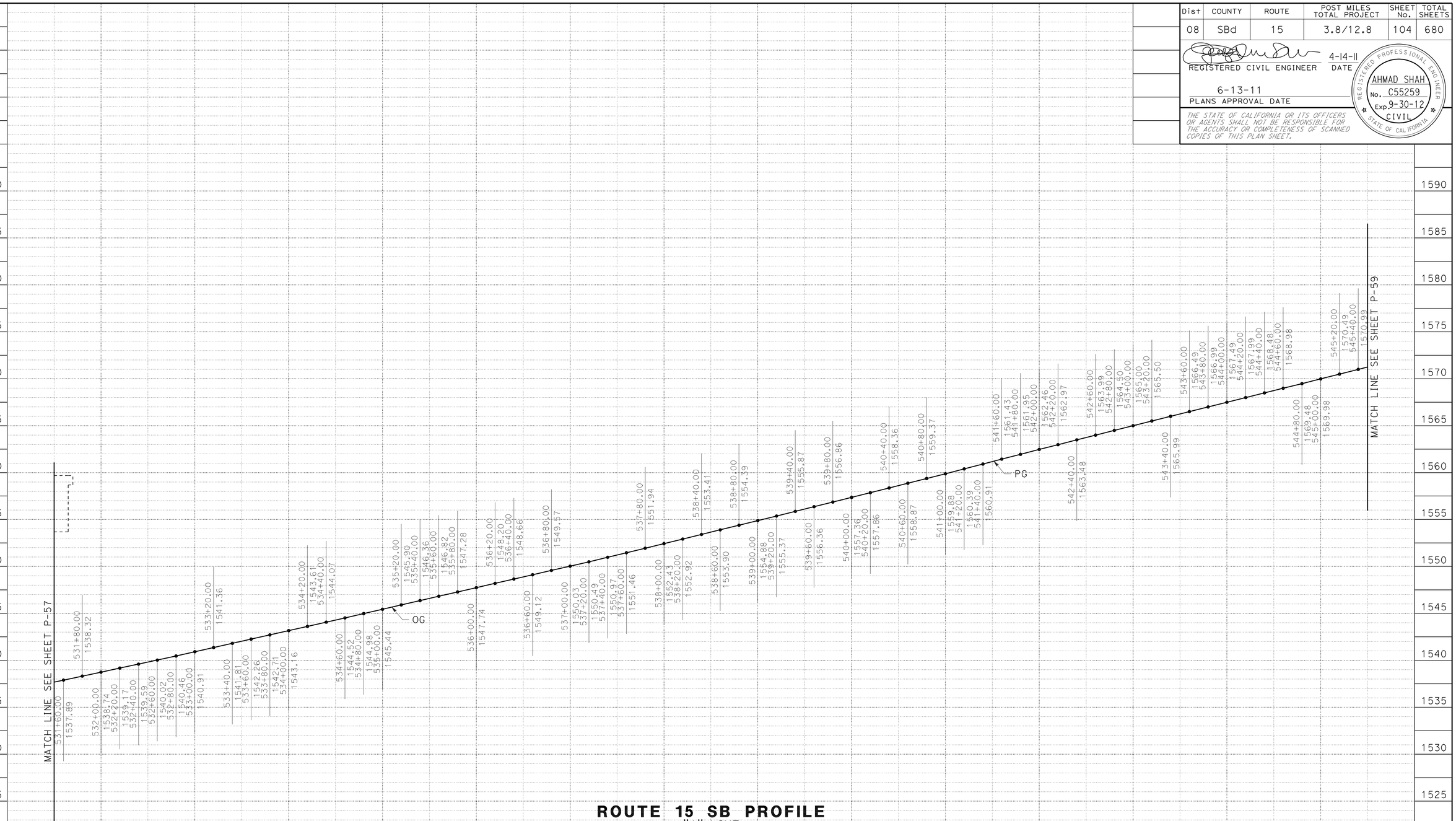

ROUTE 15 SB PROFILE
"A" LINE

PROFILE
SCALE: Horiz 1" = 50'
Vert 1" = 5'

P-58

STATION	2	3	4	535+00	6	7	8	9	540+00	1	2	3	4	545+00	TOTAL
CY Exc															
CY Emb															

STATE OF CALIFORNIA - DEPARTMENT OF TRANSPORTATION
Caltrans® DESIGN

FUNCTIONAL SUPERVISOR: GEORGE MORHIG
CALCULATED-DESIGNED BY: AHMAD SHAH
CHECKED BY:
REVISED BY: RYAN MITRY
DATE REVISED:

LAST REVISION 04-14-11
DATE PLOTTED => 17-JUN-2011
TIME PLOTTED => 05:24

Dist	COUNTY	ROUTE	POST MILES TOTAL PROJECT	SHEET No.	TOTAL SHEETS
08	SBd	15	3.8/12.8	105	680

REGISTERED CIVIL ENGINEER 4-14-11 DATE

6-13-11
PLANS APPROVAL DATE

REGISTERED PROFESSIONAL ENGINEER
AHMAD SHAH
No. C55259
Exp. 9-30-12
CIVIL
STATE OF CALIFORNIA

THE STATE OF CALIFORNIA OR ITS OFFICERS OR AGENTS SHALL NOT BE RESPONSIBLE FOR THE ACCURACY OR COMPLETENESS OF SCANNED COPIES OF THIS PLAN SHEET.

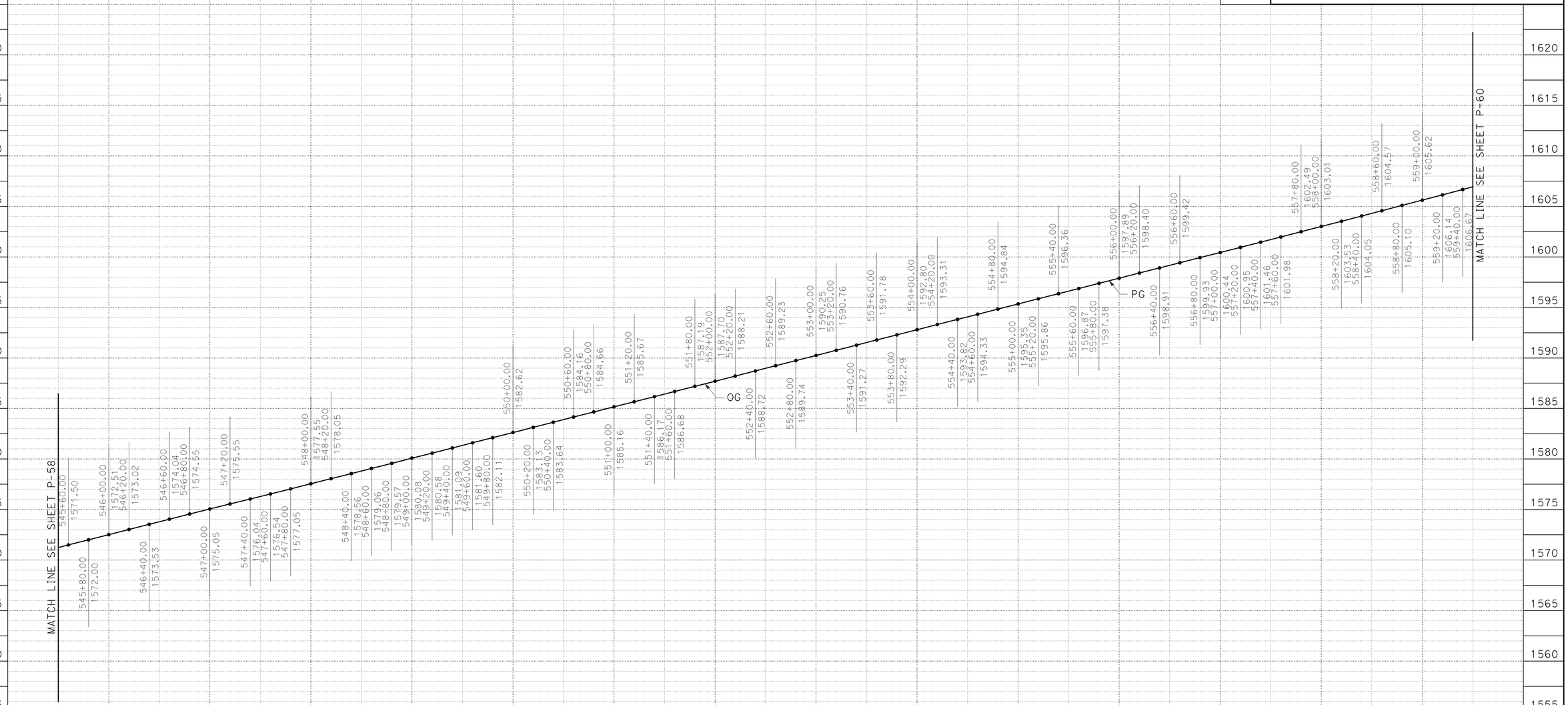

ROUTE 15 SB PROFILE
"A" LINE

PROFILE
SCALE: Horiz 1" = 50'
Vert 1" = 5'

P-59

STATION	6	7	8	9	550+00	1	2	3	4	555+00	6	7	8	9	TOTAL
CY Exc															
CY Emb															

STATE OF CALIFORNIA - DEPARTMENT OF TRANSPORTATION
Caltrans DESIGN

FUNCTIONAL SUPERVISOR: GEORGE MORHIG
CALCULATED-DESIGNED BY: RYAN MITRY
CHECKED BY: AHMAD SHAH
REVISED BY
DATE REVISED

LAST REVISION 04-14-11
DATE PLOTTED => 17-JUN-2011
TIME PLOTTED => 05:24

Dist	COUNTY	ROUTE	POST MILES TOTAL PROJECT	SHEET No.	TOTAL SHEETS
08	SBd	15	3.8/12.8	106	680

REGISTERED CIVIL ENGINEER 4-14-11 DATE

6-13-11
PLANS APPROVAL DATE

REGISTERED PROFESSIONAL ENGINEER
AHMAD SHAH
No. C55259
Exp. 9-30-12
CIVIL
STATE OF CALIFORNIA

THE STATE OF CALIFORNIA OR ITS OFFICERS OR AGENTS SHALL NOT BE RESPONSIBLE FOR THE ACCURACY OR COMPLETENESS OF SCANNED COPIES OF THIS PLAN SHEET.

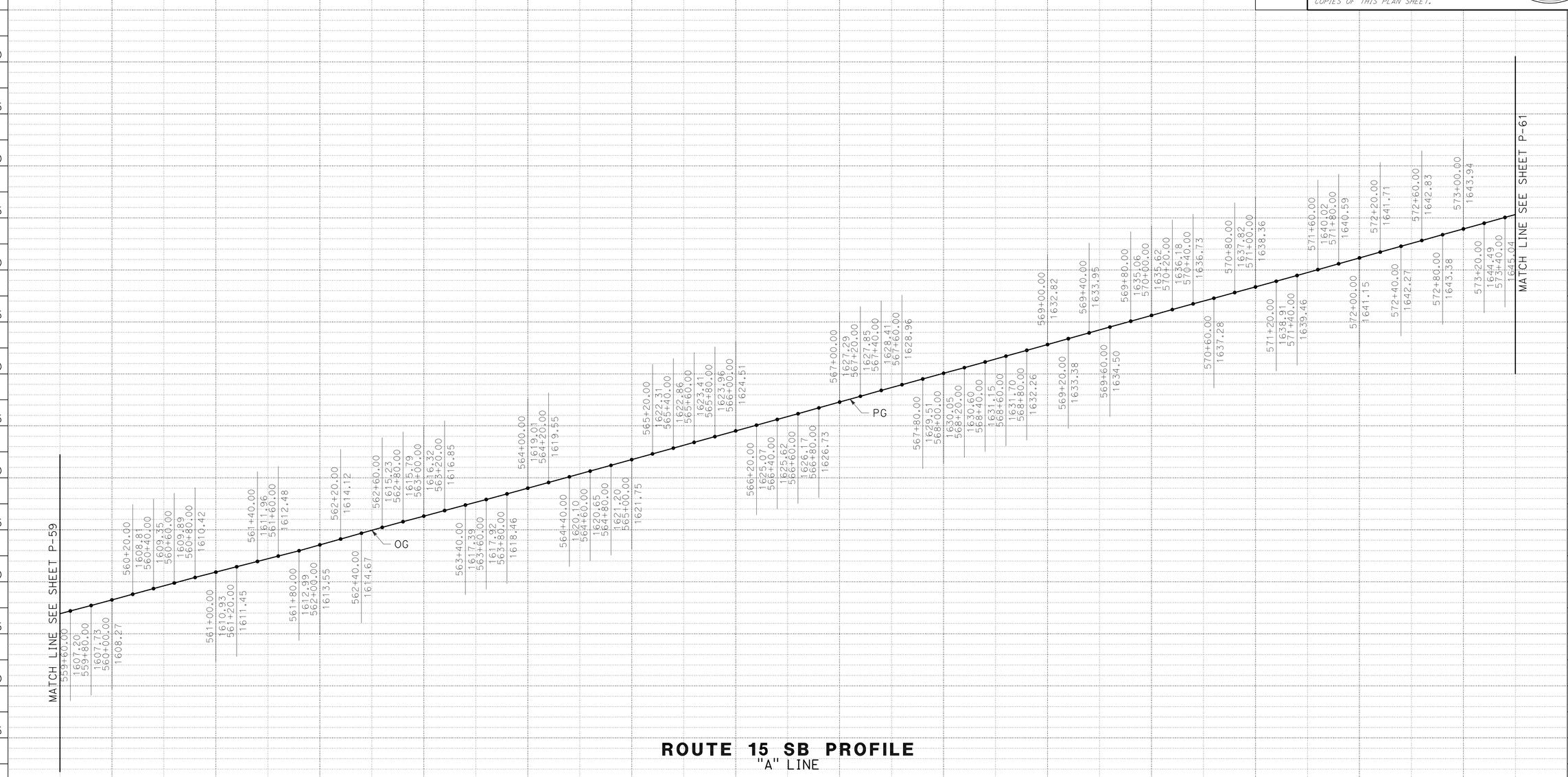

ROUTE 15 SB PROFILE
"A" LINE

PROFILE
SCALE: Horiz 1" = 50'
Vert 1" = 5'

P-60

STATION		560+00	1	2	3	4	565+00	6	7	8	9	570+00	1	2	3	TOTAL
CY	Exc															
	Emb															

STATE OF CALIFORNIA - DEPARTMENT OF TRANSPORTATION
Caltrans
DESIGN

FUNCTIONAL SUPERVISOR: GEORGE MORHIG
CALCULATED-DESIGNED BY: RYAN MITRY
CHECKED BY: AHMAD SHAH
REVISED BY
DATE REVISED

LAST REVISION 04-14-11
DATE PLOTTED => 17-JUN-2011
TIME PLOTTED => 05:24

Dist	COUNTY	ROUTE	POST MILES TOTAL PROJECT	SHEET No.	TOTAL SHEETS
08	SBd	15	3.8/12.8	107	680

REGISTERED CIVIL ENGINEER 4-14-11 DATE

6-13-11
PLANS APPROVAL DATE

REGISTERED PROFESSIONAL ENGINEER
AHMAD SHAH
No. C55259
Exp. 9-30-12
CIVIL
STATE OF CALIFORNIA

THE STATE OF CALIFORNIA OR ITS OFFICERS OR AGENTS SHALL NOT BE RESPONSIBLE FOR THE ACCURACY OR COMPLETENESS OF SCANNED COPIES OF THIS PLAN SHEET.

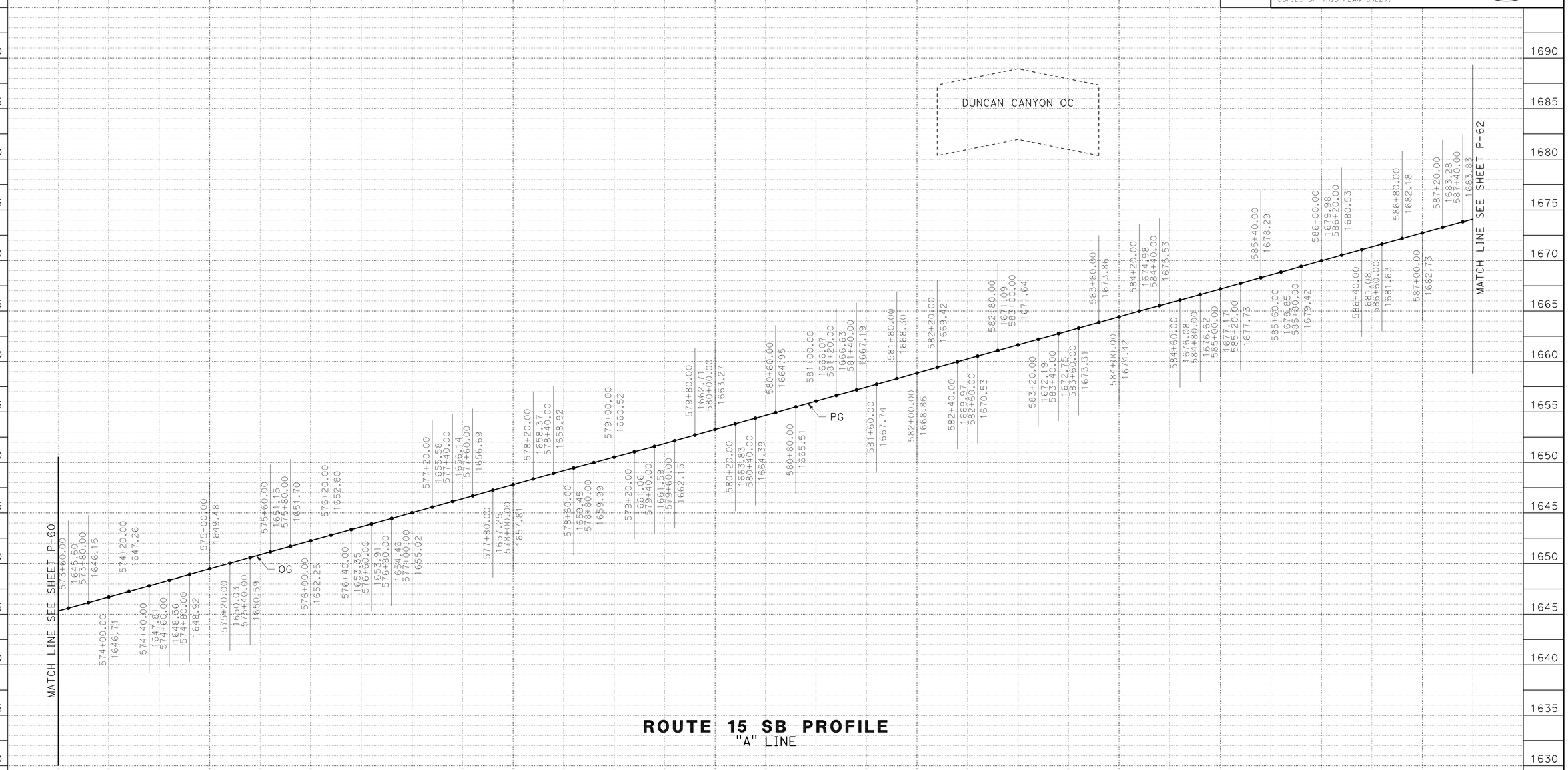

ROUTE 15 SB PROFILE
"A" LINE

PROFILE
SCALE: Horiz 1" = 50'
Vert 1" = 5'

P-61

STATE OF CALIFORNIA - DEPARTMENT OF TRANSPORTATION
Caltrans® DESIGN

FUNCTIONAL SUPERVISOR: GEORGE MORHIG
CALCULATED-DESIGNED BY: RYAN MITRY
CHECKED BY: AHMAD SHAH
REVISED BY
DATE REVISED

LAST REVISION 04-14-11
DATE PLOTTED => 17-JUN-2011
TIME PLOTTED => 05:24

Dist	COUNTY	ROUTE	POST MILES TOTAL PROJECT	SHEET No.	TOTAL SHEETS
08	SBd	15	3.8/12.8	108	680

REGISTERED CIVIL ENGINEER 4-14-11 DATE

6-13-11
PLANS APPROVAL DATE

REGISTERED PROFESSIONAL ENGINEER
AHMAD SHAH
No. C55259
Exp. 9-30-12
CIVIL
STATE OF CALIFORNIA

THE STATE OF CALIFORNIA OR ITS OFFICERS OR AGENTS SHALL NOT BE RESPONSIBLE FOR THE ACCURACY OR COMPLETENESS OF SCANNED COPIES OF THIS PLAN SHEET.

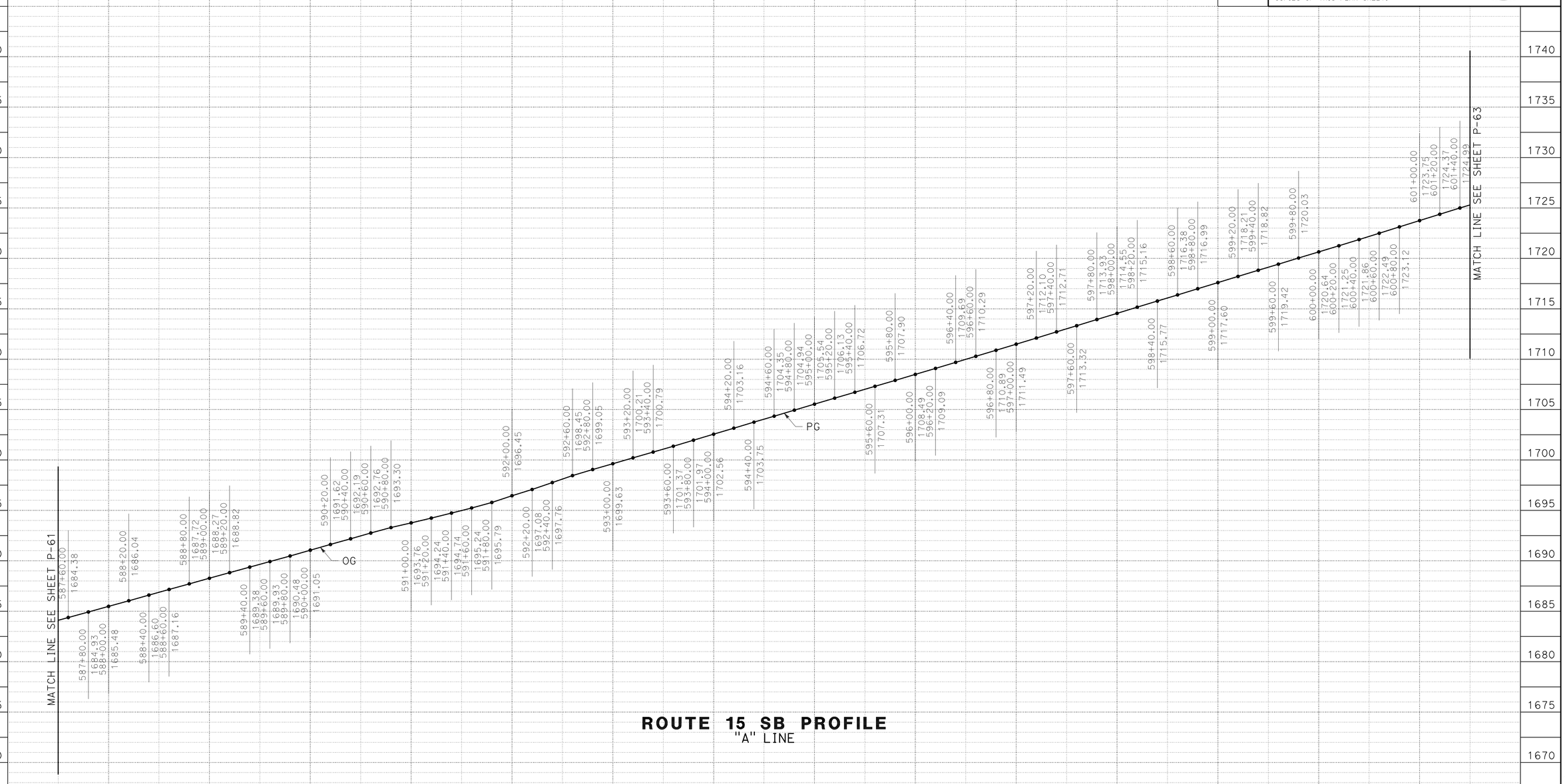

ROUTE 15 SB PROFILE
"A" LINE

PROFILE
SCALE: Horiz 1" = 50'
Vert 1" = 5'

P-62

STATE OF CALIFORNIA - DEPARTMENT OF TRANSPORTATION
Caltrans® DESIGN

FUNCTIONAL SUPERVISOR: GEORGE MORHIG
CALCULATED-DESIGNED BY: RYAN MITRY
CHECKED BY: AHMAD SHAH
REVISED BY
DATE REVISED

LAST REVISION 04-14-11
DATE PLOTTED => 17-JUN-2011
TIME PLOTTED => 05:24

Dist	COUNTY	ROUTE	POST MILES TOTAL PROJECT	SHEET No.	TOTAL SHEETS
08	SBd	15	3.8/12.8	109	680

REGISTERED CIVIL ENGINEER 4-14-11 DATE

6-13-11
PLANS APPROVAL DATE

REGISTERED PROFESSIONAL ENGINEER
AHMAD SHAH
No. C55259
Exp. 9-30-12
CIVIL
STATE OF CALIFORNIA

THE STATE OF CALIFORNIA OR ITS OFFICERS OR AGENTS SHALL NOT BE RESPONSIBLE FOR THE ACCURACY OR COMPLETENESS OF SCANNED COPIES OF THIS PLAN SHEET.

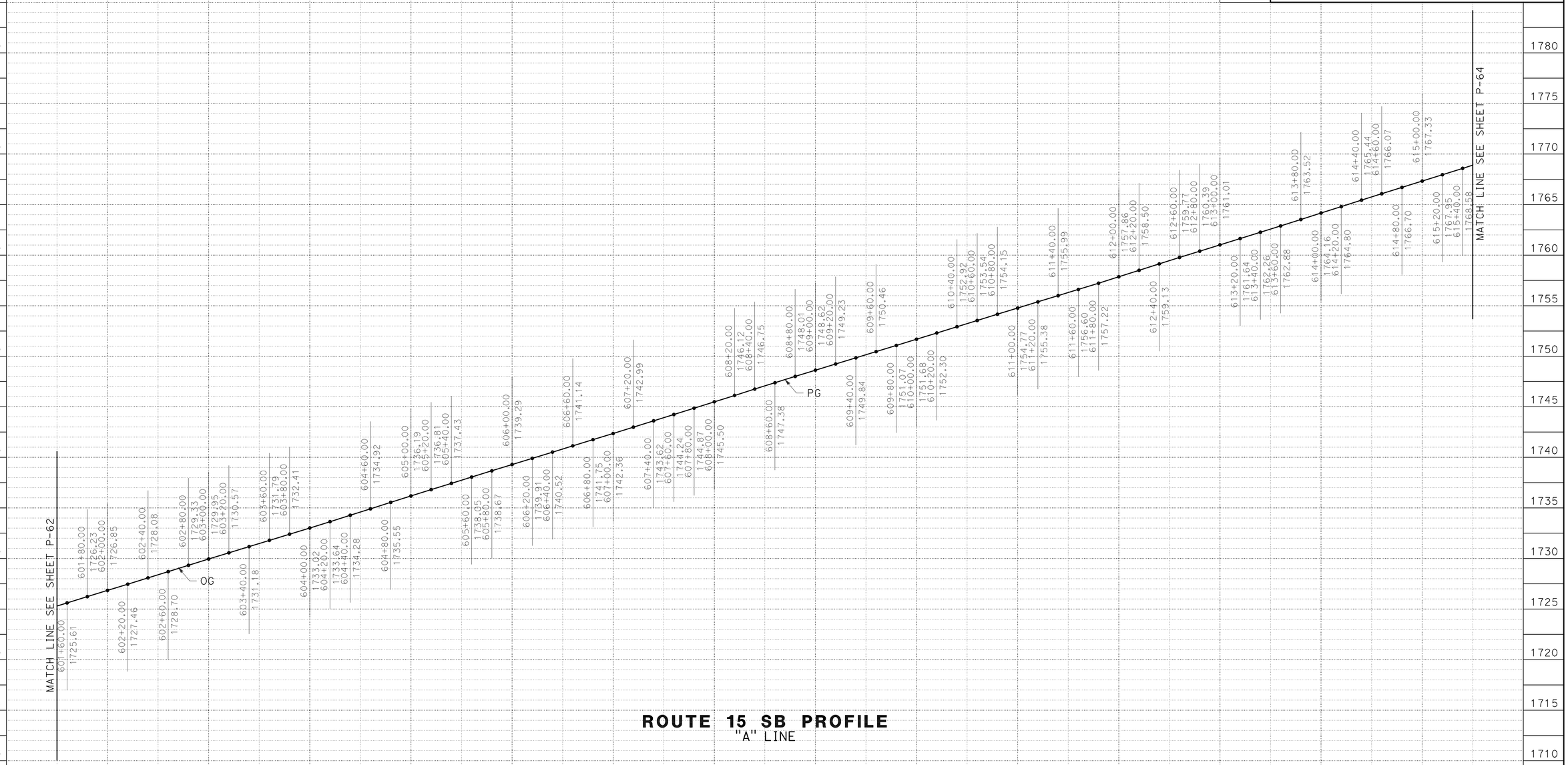

ROUTE 15 SB PROFILE
"A" LINE

PROFILE

SCALE: Horiz 1" = 50'
Vert 1" = 5'

P-63

STATION	2	3	4	605+00	6	7	8	9	610+00	1	2	3	4	615+00	TOTAL
CY Exc															
CY Emb															

STATE OF CALIFORNIA - DEPARTMENT OF TRANSPORTATION
Caltrans®
DESIGN

FUNCTIONAL SUPERVISOR: GEORGE MORHIG
CALCULATED-DESIGNED BY: RYAN MITRY
CHECKED BY: AHMAD SHAH
REVISED BY
DATE REVISED

LAST REVISION 04-14-11
DATE PLOTTED => 17-JUN-2011
TIME PLOTTED => 09:25

Dist	COUNTY	ROUTE	POST MILES TOTAL PROJECT	SHEET No.	TOTAL SHEETS
08	SBd	15	3.8/12.8	110	680

REGISTERED CIVIL ENGINEER 4-14-11 DATE

6-13-11
PLANS APPROVAL DATE

REGISTERED PROFESSIONAL ENGINEER
AHMAD SHAH
No. C55259
Exp. 9-30-12
CIVIL
STATE OF CALIFORNIA

THE STATE OF CALIFORNIA OR ITS OFFICERS OR AGENTS SHALL NOT BE RESPONSIBLE FOR THE ACCURACY OR COMPLETENESS OF SCANNED COPIES OF THIS PLAN SHEET.

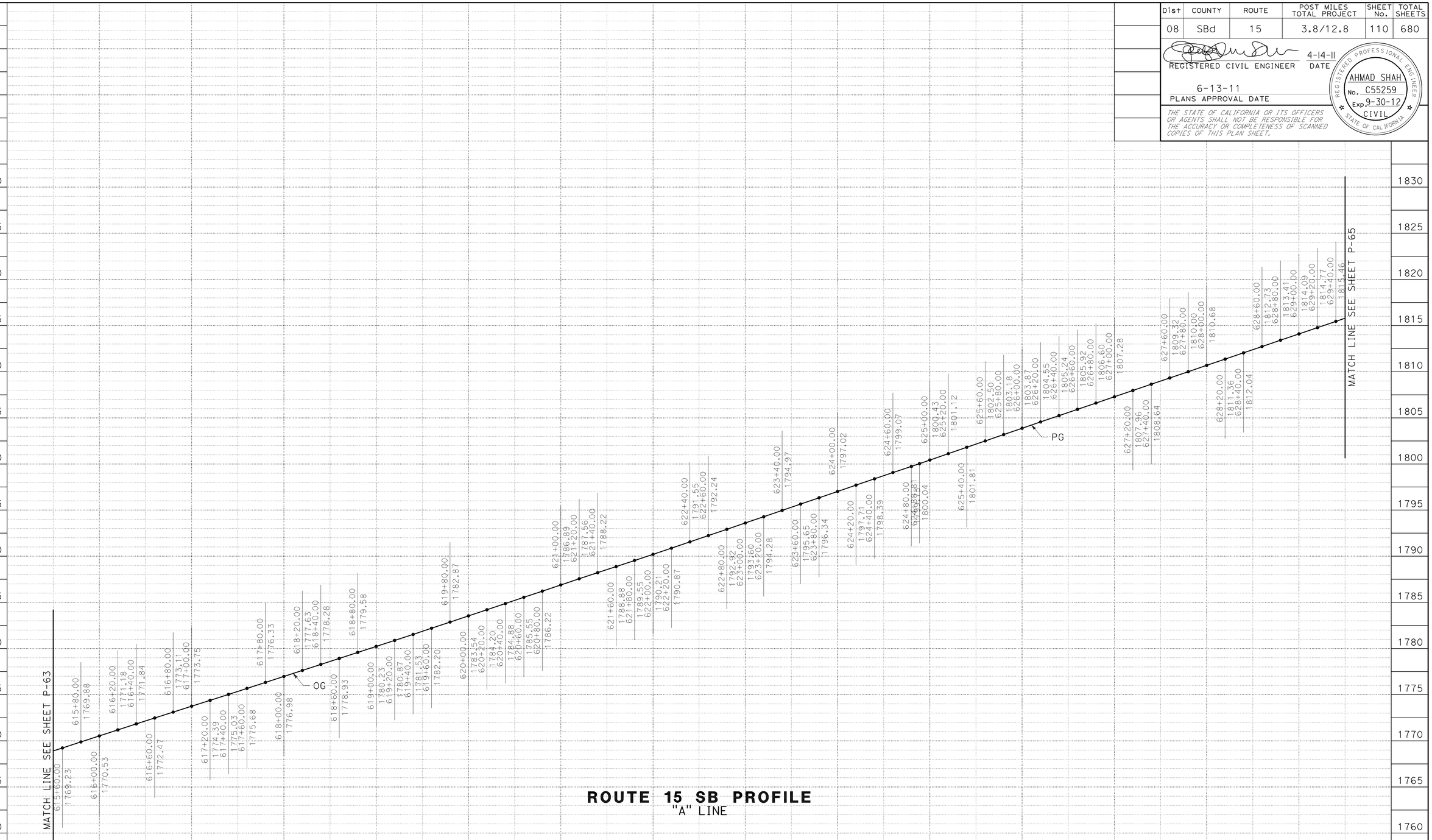

ROUTE 15 SB PROFILE
"A" LINE

PROFILE
SCALE: Horiz 1" = 50'
Vert 1" = 5'

P-64

STATE OF CALIFORNIA - DEPARTMENT OF TRANSPORTATION
Caltrans® **DESIGN**

FUNCTIONAL SUPERVISOR: GEORGE MORHIG
CALCULATED-DESIGNED BY: RYAN MITRY
CHECKED BY: AHMAD SHAH
REVISED BY
DATE REVISED

LAST REVISION 04-14-11
DATE PLOTTED => 17-JUN-2011
TIME PLOTTED => 05:25

Dist	COUNTY	ROUTE	POST MILES TOTAL PROJECT	SHEET No.	TOTAL SHEETS
08	SBd	15	3.8/12.8	111	680

REGISTERED CIVIL ENGINEER 4-14-11 DATE

6-13-11
PLANS APPROVAL DATE

REGISTERED PROFESSIONAL ENGINEER AHMAD SHAH No. C55259 Exp. 9-30-12 CIVIL STATE OF CALIFORNIA

THE STATE OF CALIFORNIA OR ITS OFFICERS OR AGENTS SHALL NOT BE RESPONSIBLE FOR THE ACCURACY OR COMPLETENESS OF SCANNED COPIES OF THIS PLAN SHEET.

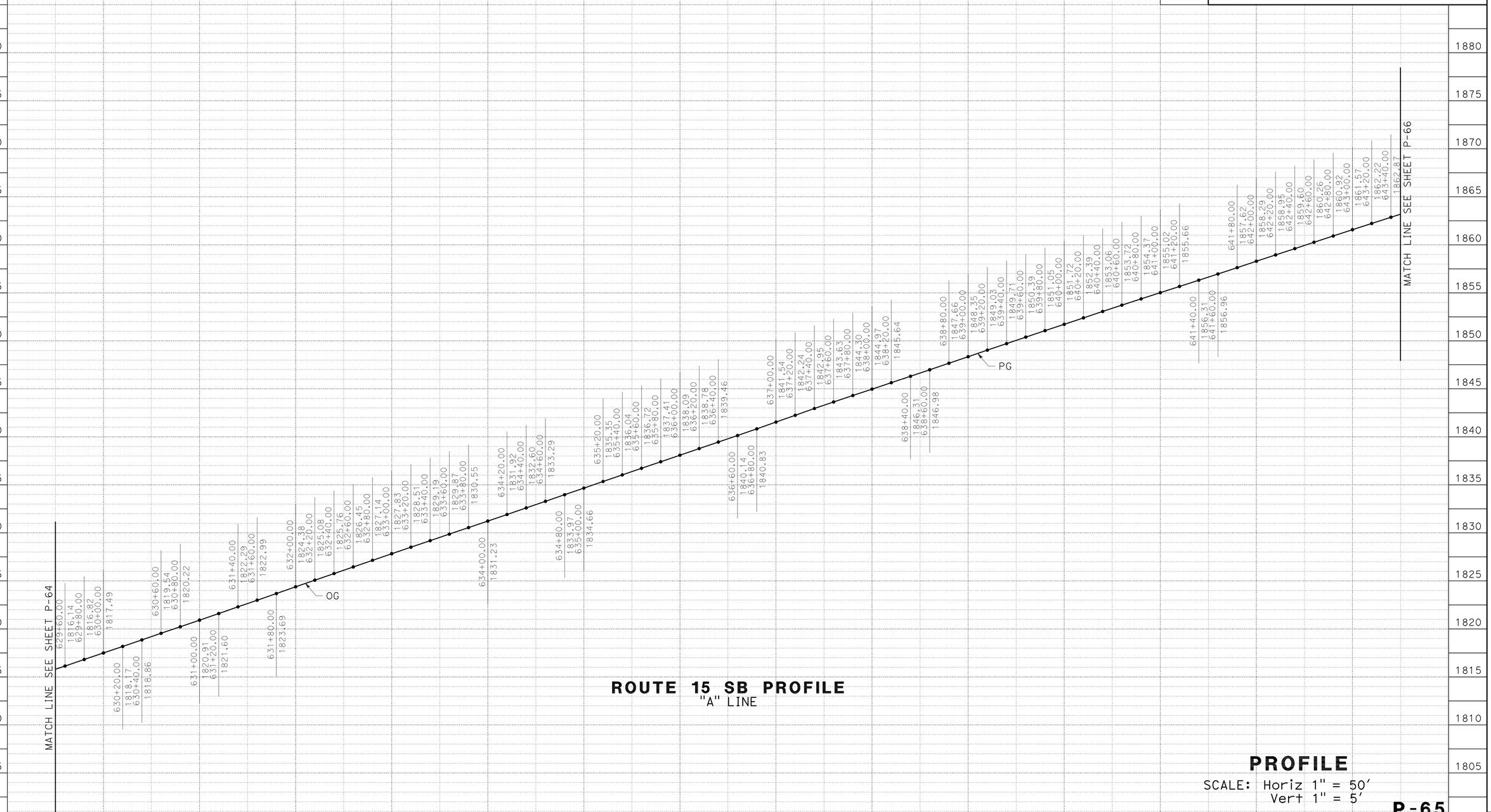

ROUTE 15 SB PROFILE
"A" LINE

PROFILE
SCALE: Horiz 1" = 50'
Vert 1" = 5'

P-65

STATION	630+00	1	2	3	4	635+00	6	7	8	9	640+00	1	2	3	TOTAL
CY Exc															
CY Emb															

STATE OF CALIFORNIA - DEPARTMENT OF TRANSPORTATION
Caltrans®
DESIGN

FUNCTIONAL SUPERVISOR: GEORGE MORHIG
CALCULATED-DESIGNED BY: RYAN MITRY
CHECKED BY: AHMAD SHAH
REVISED BY
DATE REVISED

DATE PLOTTED => 17-JUN-2011
TIME PLOTTED => 05:25
LAST REVISION 04-14-11

Dist	COUNTY	ROUTE	POST MILES TOTAL PROJECT	SHEET No.	TOTAL SHEETS
08	SBd	15	3.8/12.8	112	680

REGISTERED CIVIL ENGINEER 4-14-11 DATE

6-13-11
PLANS APPROVAL DATE

REGISTERED PROFESSIONAL ENGINEER
AHMAD SHAH
No. C55259
Exp. 9-30-12
CIVIL
STATE OF CALIFORNIA

THE STATE OF CALIFORNIA OR ITS OFFICERS OR AGENTS SHALL NOT BE RESPONSIBLE FOR THE ACCURACY OR COMPLETENESS OF SCANNED COPIES OF THIS PLAN SHEET.

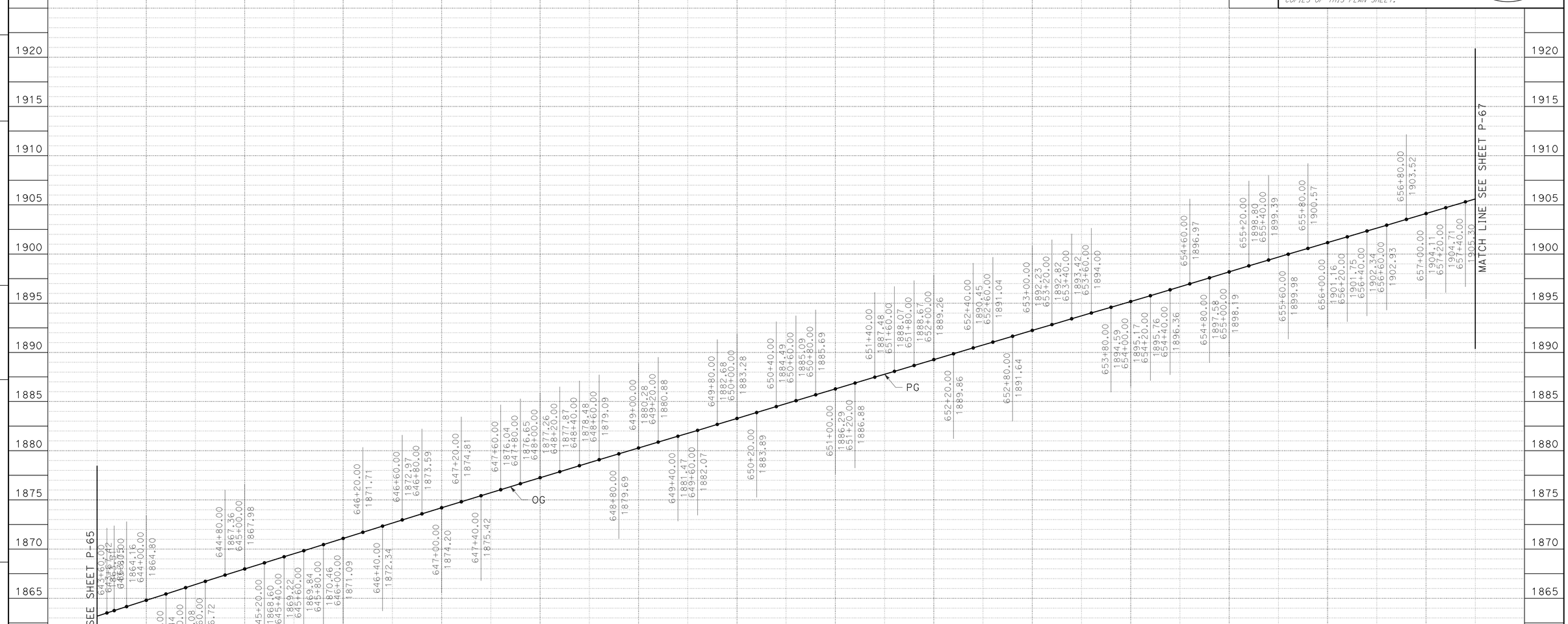

ROUTE 15 SB PROFILE
"A" LINE

PROFILE
SCALE: Horiz 1" = 50'
Vert 1" = 5'

P-66

STATION	4	645+00	6	7	8	9	650+00	1	2	3	4	655+00	6	7	TOTAL
CY Exc															
CY Emb															

STATE OF CALIFORNIA - DEPARTMENT OF TRANSPORTATION
Caltrans® DESIGN

FUNCTIONAL SUPERVISOR: GEORGE MORHIG
CALCULATED-DESIGNED BY: RYAN MITRY
CHECKED BY: AHMAD SHAH
REVISED BY
DATE REVISED

LAST REVISION 04-14-11
DATE PLOTTED => 17-JUN-2011
TIME PLOTTED => 05:25

Dist	COUNTY	ROUTE	POST MILES TOTAL PROJECT	SHEET No.	TOTAL SHEETS
08	SBd	15	3.8/12.8	113	680

REGISTERED CIVIL ENGINEER 4-14-11 DATE

6-13-11
PLANS APPROVAL DATE

REGISTERED PROFESSIONAL ENGINEER
AHMAD SHAH
No. C55259
Exp. 9-30-12
CIVIL
STATE OF CALIFORNIA

THE STATE OF CALIFORNIA OR ITS OFFICERS OR AGENTS SHALL NOT BE RESPONSIBLE FOR THE ACCURACY OR COMPLETENESS OF SCANNED COPIES OF THIS PLAN SHEET.

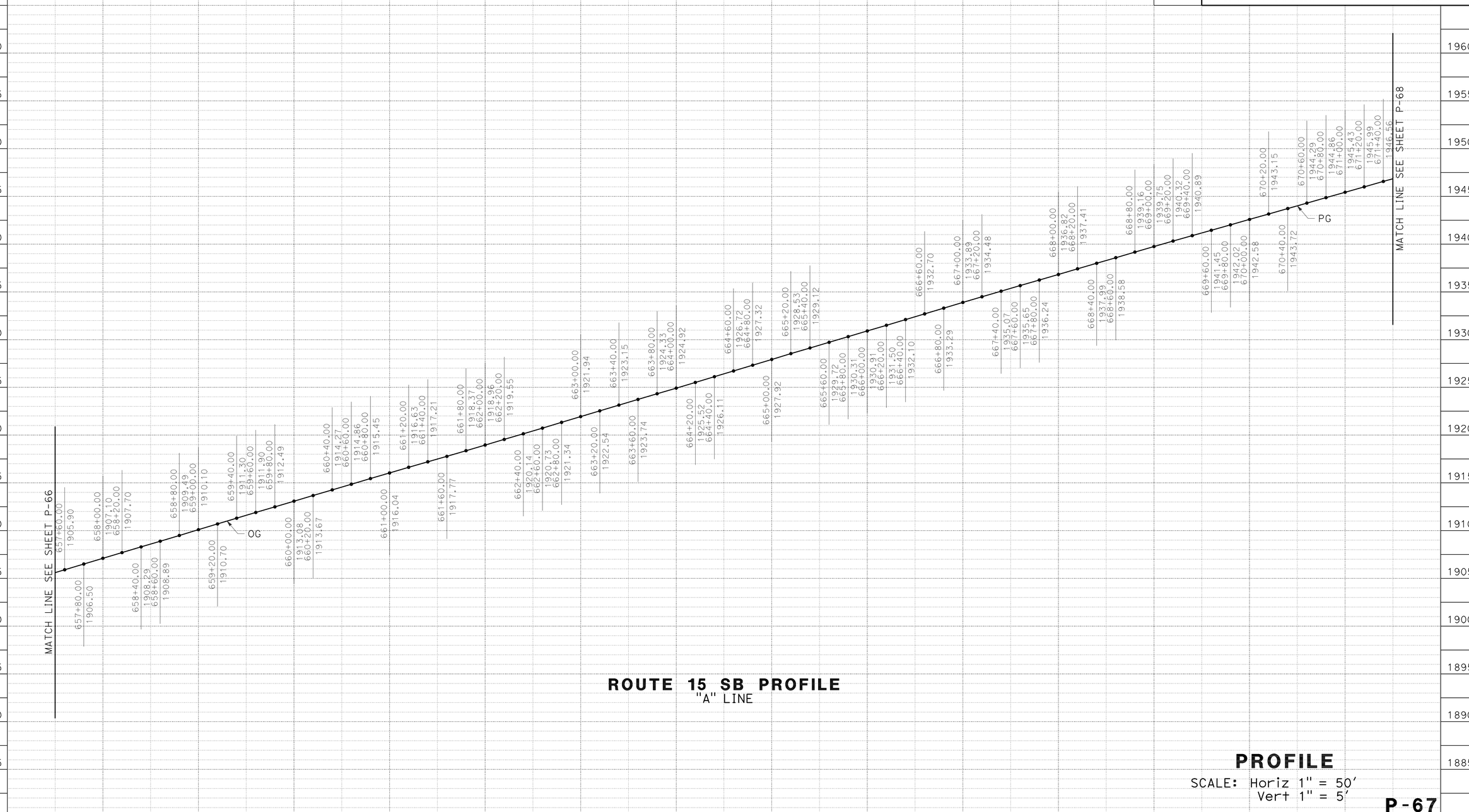

ROUTE 15 SB PROFILE
"A" LINE

PROFILE
SCALE: Horiz 1" = 50'
Vert 1" = 5'

P-67

STATION	8	9	660+00	1	2	3	4	665+00	6	7	8	9	670+00	1	TOTAL
CY Exc															
CY Emb															

STATE OF CALIFORNIA - DEPARTMENT OF TRANSPORTATION
Caltrans®
DESIGN

FUNCTIONAL SUPERVISOR: GEORGE MORHIG
CALCULATED-DESIGNED BY: RYAN MITRY
CHECKED BY: AHMAD SHAH
REVISED BY
DATE REVISED

LAST REVISION 04-14-11
DATE PLOTTED => 17-JUN-2011
TIME PLOTTED => 09:25

Dist	COUNTY	ROUTE	POST MILES TOTAL PROJECT	SHEET No.	TOTAL SHEETS
08	SBd	15	3.8/12.8	114	680

REGISTERED CIVIL ENGINEER 4-14-11 DATE

6-13-11
PLANS APPROVAL DATE

REGISTERED PROFESSIONAL ENGINEER
AHMAD SHAH
No. C55259
Exp. 9-30-12
CIVIL
STATE OF CALIFORNIA

THE STATE OF CALIFORNIA OR ITS OFFICERS OR AGENTS SHALL NOT BE RESPONSIBLE FOR THE ACCURACY OR COMPLETENESS OF SCANNED COPIES OF THIS PLAN SHEET.

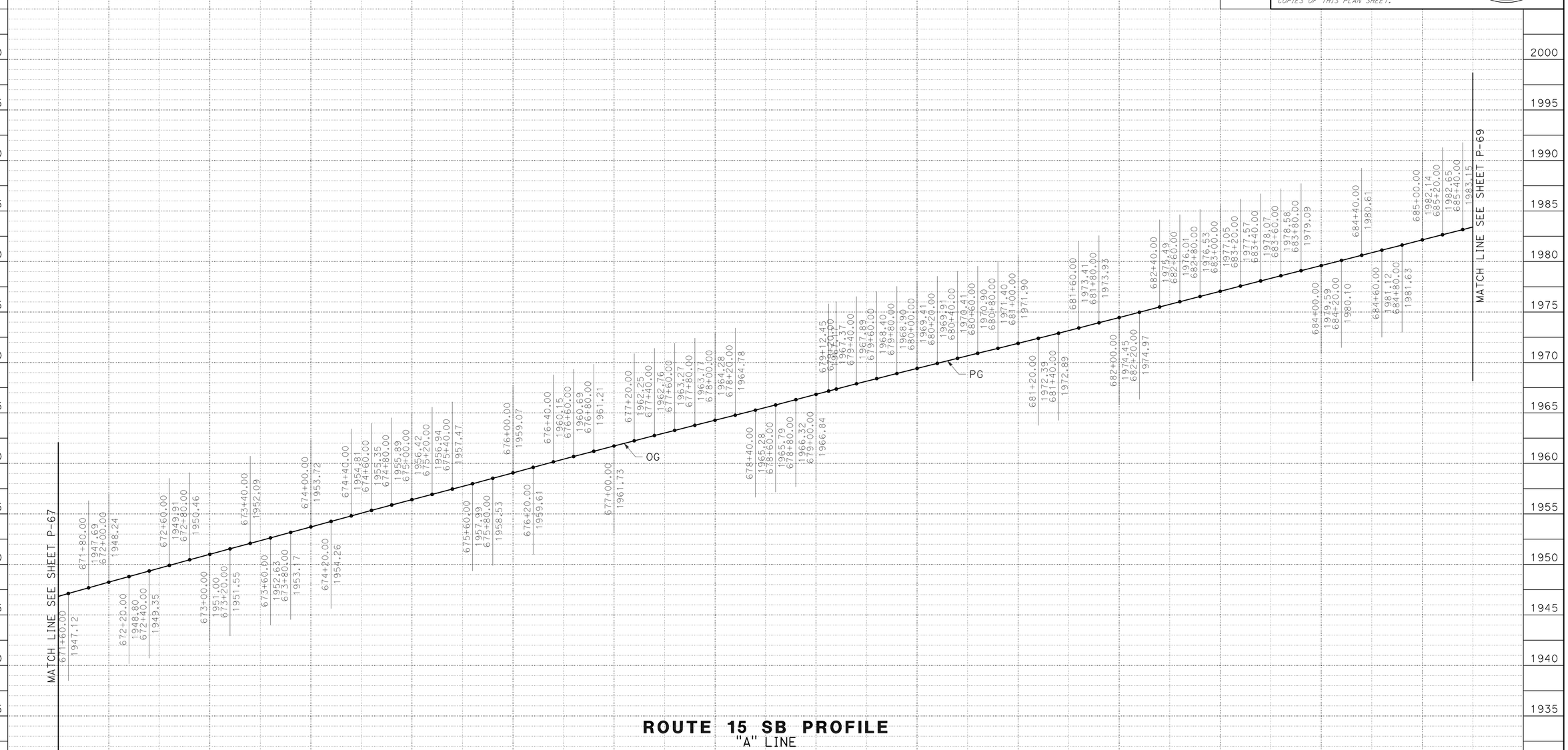

ROUTE 15 SB PROFILE
"A" LINE

PROFILE
SCALE: Horiz 1" = 50'
Vert 1" = 5'

P-68

STATION	2	3	4	675+00	6	7	8	9	680+00	1	2	3	4	685+00	TOTAL
CY Exc															
CY Emb															

STATE OF CALIFORNIA - DEPARTMENT OF TRANSPORTATION
Caltrans®
DESIGN

FUNCTIONAL SUPERVISOR: GEORGE MORHIG
CALCULATED-DESIGNED BY: RYAN MITRY
CHECKED BY: AHMAD SHAH
REVISED BY
DATE REVISED

LAST REVISION 04-14-11
DATE PLOTTED => 17-JUN-2011
TIME PLOTTED => 05:25

Dist	COUNTY	ROUTE	POST MILES TOTAL PROJECT	SHEET No.	TOTAL SHEETS
08	SBd	15	3.8/12.8	115	680

REGISTERED CIVIL ENGINEER 4-14-11 DATE

6-13-11
PLANS APPROVAL DATE

REGISTERED PROFESSIONAL ENGINEER
AHMAD SHAH
No. C55259
Exp. 9-30-12
CIVIL
STATE OF CALIFORNIA

THE STATE OF CALIFORNIA OR ITS OFFICERS OR AGENTS SHALL NOT BE RESPONSIBLE FOR THE ACCURACY OR COMPLETENESS OF SCANNED COPIES OF THIS PLAN SHEET.

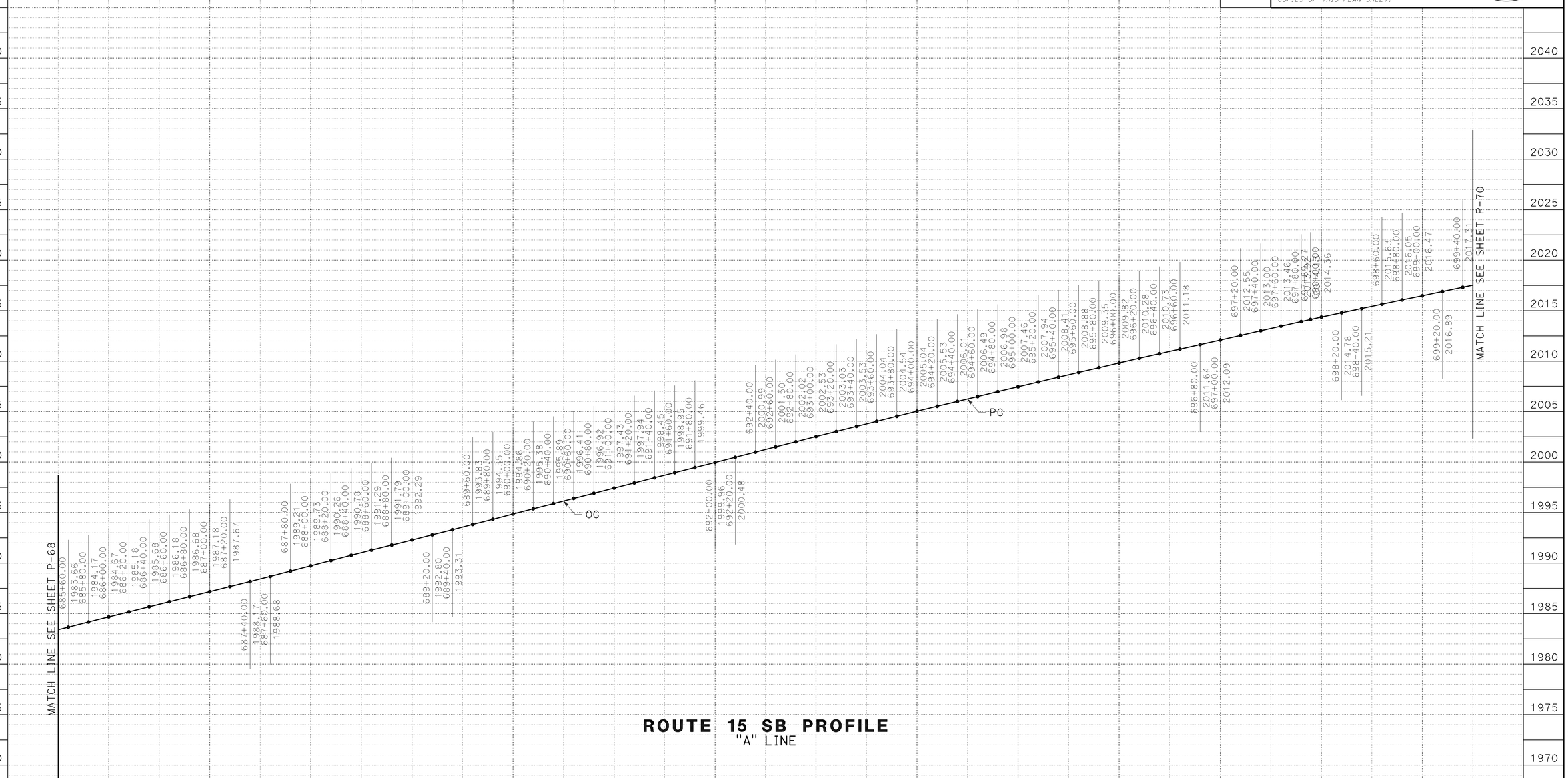

ROUTE 15 SB PROFILE
"A" LINE

PROFILE
SCALE: Horiz 1" = 50'
Vert 1" = 5'

P-69

REVISED BY | DATE REVISED
RYAN MITRY | AHMAD SHAH
CALCULATED-DESIGNED BY | CHECKED BY
FUNCTIONAL SUPERVISOR
GEORGE MORHIG

STATE OF CALIFORNIA - DEPARTMENT OF TRANSPORTATION
Caltrans®
DESIGN

LAST REVISION 04-14-11
DATE PLOTTED => 17-JUN-2011
TIME PLOTTED => 05:25

Dist	COUNTY	ROUTE	POST MILES TOTAL PROJECT	SHEET No.	TOTAL SHEETS
08	SBd	15	3.8/12.8	116	680

REGISTERED CIVIL ENGINEER 4-14-11 DATE

6-13-11
PLANS APPROVAL DATE

REGISTERED PROFESSIONAL ENGINEER
AHMAD SHAH
No. C55259
Exp. 9-30-12
CIVIL
STATE OF CALIFORNIA

THE STATE OF CALIFORNIA OR ITS OFFICERS OR AGENTS SHALL NOT BE RESPONSIBLE FOR THE ACCURACY OR COMPLETENESS OF SCANNED COPIES OF THIS PLAN SHEET.

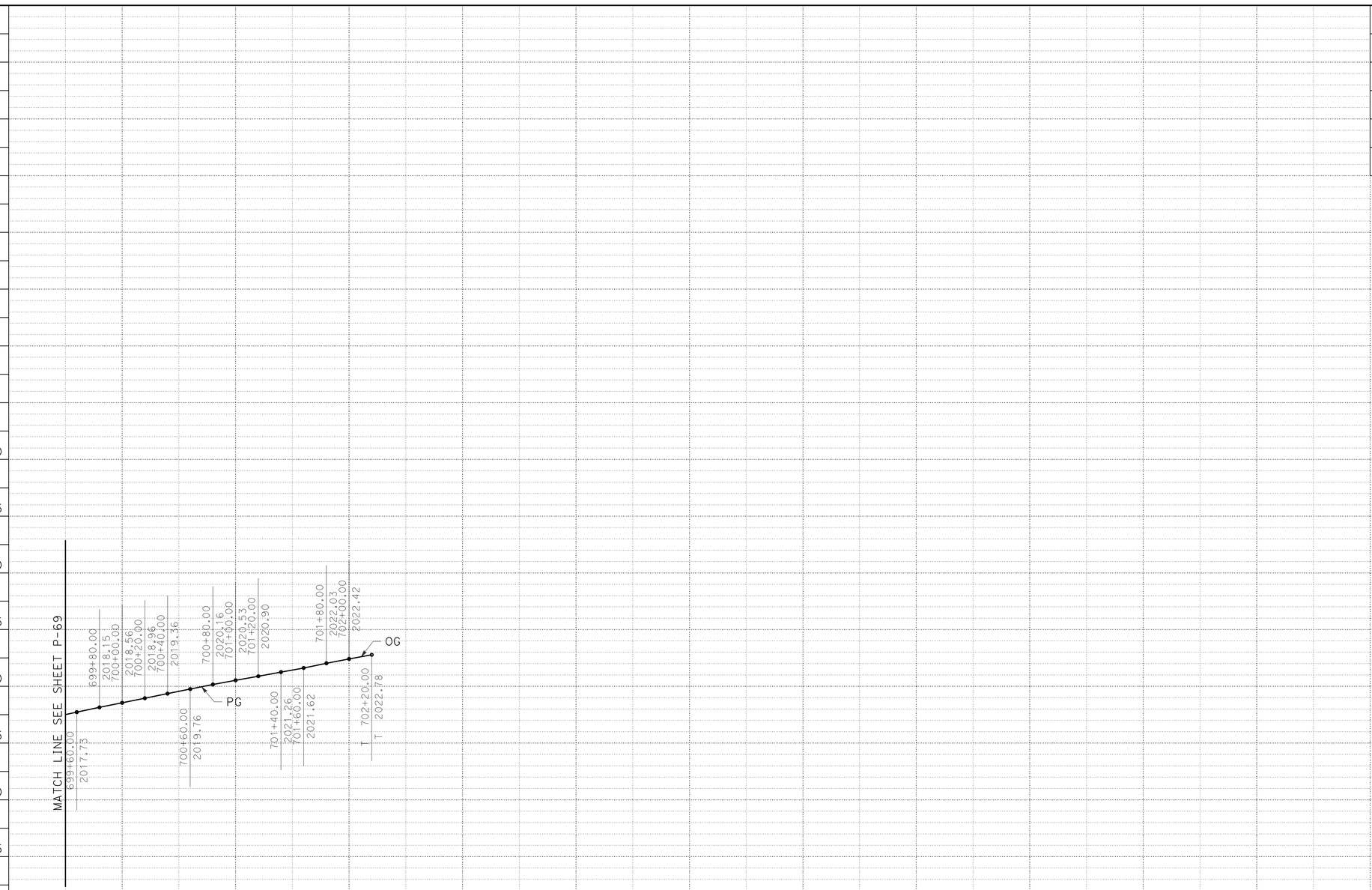

ROUTE 15 SB PROFILE
"A" LINE

PROFILE
SCALE: Horiz 1" = 50'
Vert 1" = 5'

P-70

STATION		700+00	1	2	3	4	705+00	6	7	8	9	TOTAL
CY	Exc											
	Emb											

STATE OF CALIFORNIA - DEPARTMENT OF TRANSPORTATION
Caltrans® DESIGN

FUNCTIONAL SUPERVISOR: GEORGE MORHIG
CALCULATED-DESIGNED BY: RYAN MITRY
CHECKED BY: AHMAD SHAH
REVISED BY
DATE REVISED

LAST REVISION 04-14-11
DATE PLOTTED => 17-JUN-2011
TIME PLOTTED => 09:25

Dist	COUNTY	ROUTE	POST MILES TOTAL PROJECT	SHEET No.	TOTAL SHEETS
08	SBd	15	3.8/12.8	117	680

REGISTERED CIVIL ENGINEER 4-14-11 DATE

6-13-11
PLANS APPROVAL DATE

REGISTERED PROFESSIONAL ENGINEER AHMAD SHAH No. C55259 Exp. 9-30-12 CIVIL STATE OF CALIFORNIA

THE STATE OF CALIFORNIA OR ITS OFFICERS OR AGENTS SHALL NOT BE RESPONSIBLE FOR THE ACCURACY OR COMPLETENESS OF SCANNED COPIES OF THIS PLAN SHEET.

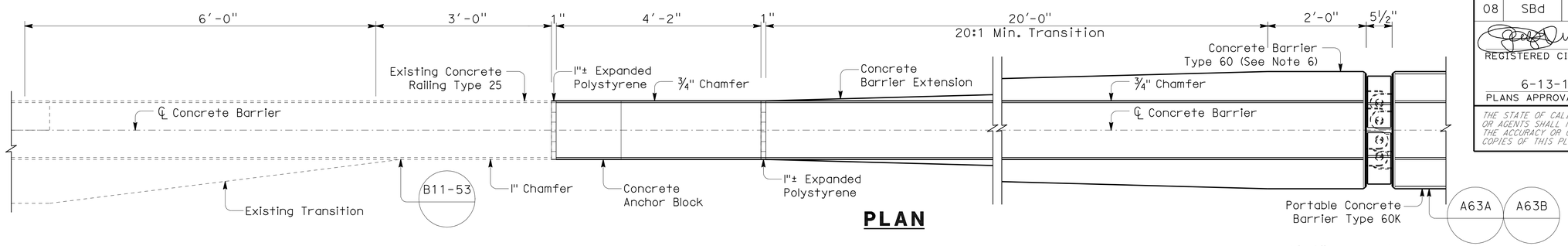

PLAN

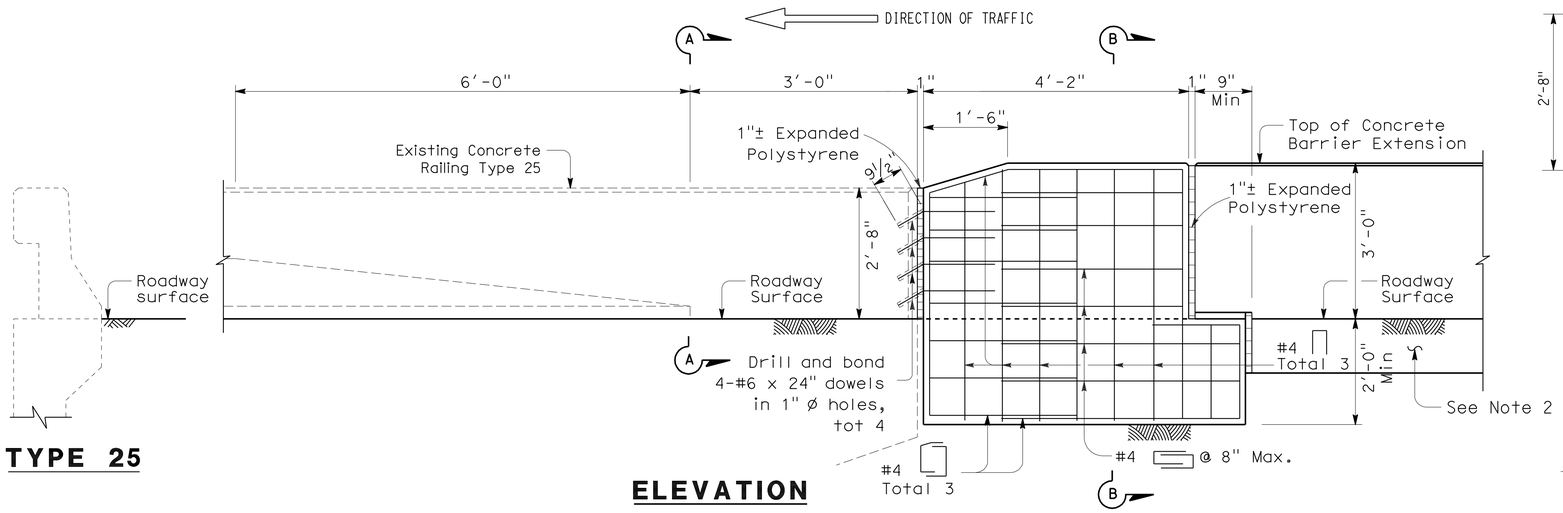

TYPE 25

ELEVATION

BRIDGE CONCRETE BARRIER EXTENSION
CONNECTION TO EXISTING TYPR 25 RAILING

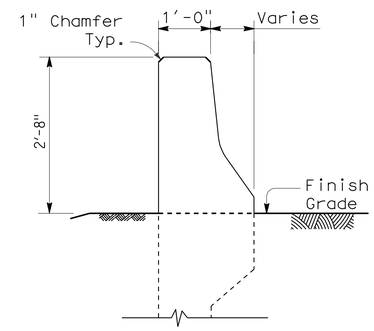

SECTION A-A

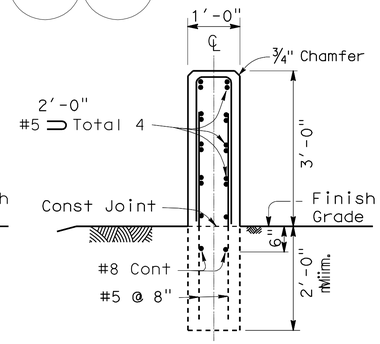

SECTION B-B

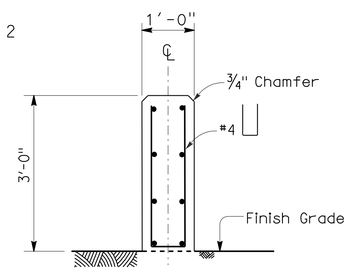

SECTION C-C

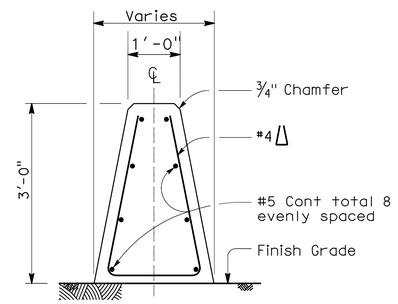

SECTION D-D

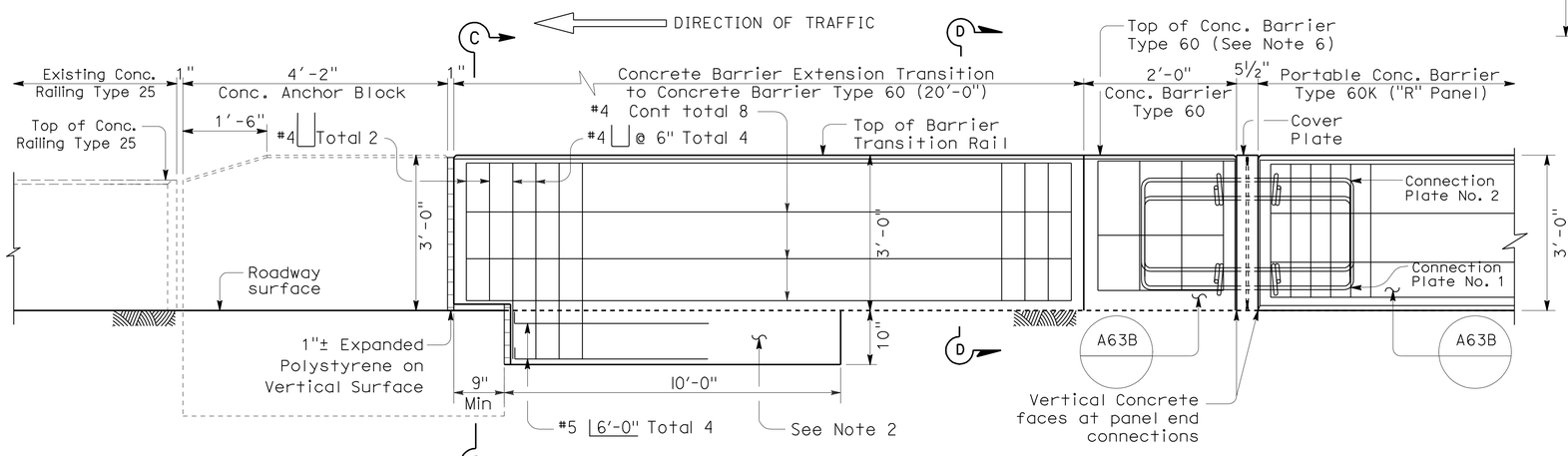

ELEVATION

CONCRETE BARRIER TRANSITION
TO CONCRETE BARRIER TYPE 60 RAILING

NOTES:

1. For details not shown, see Standard Plans.
2. Footing monolithic or doweled with 2-#8 x 8" @ 2'-0". The footing is required at concrete barrier ends and at interruptions in concrete barrier.
3. See Standard Plan RSP A76A for Concrete Barrier Type 60C.
4. Clearance to reinforcing steel in barrier to be 1", except as noted. Longititudinal reinforcement to stop at all expansion joints.
5. Taper the top of the end of the Concrete Anchor Block at 4:1 to match the top elevation of the Concrete Barrier Extension.
6. Modify end of permanent concrete barrier with the installation of connection plates for connection pins and cover paltes.

CONSTRUCTION DETAILS

NO SCALE

C-1

STATE OF CALIFORNIA - DEPARTMENT OF TRANSPORTATION
DESIGN
FUNCTIONAL SUPERVISOR: GEORGE MORHIG
CALCULATED-DESIGNED BY: WILLIAM ONKUMPOL
CHECKED BY: AHMAD SHAH
REVISED BY
DATE REVISED

LAST REVISION 04-14-11
DATE PLOTTED => 17-JUN-2011
TIME PLOTTED => 09:25

Dist	COUNTY	ROUTE	POST MILES TOTAL PROJECT	SHEET No.	TOTAL SHEETS
08	SBd	15	3.8/12.8	118	680

REGISTERED CIVIL ENGINEER 4-14-11 DATE

6-13-11
PLANS APPROVAL DATE

REGISTERED PROFESSIONAL ENGINEER AHMAD SHAH No. C55259 Exp. 9-30-12 CIVIL STATE OF CALIFORNIA

THE STATE OF CALIFORNIA OR ITS OFFICERS OR AGENTS SHALL NOT BE RESPONSIBLE FOR THE ACCURACY OR COMPLETENESS OF SCANNED COPIES OF THIS PLAN SHEET.

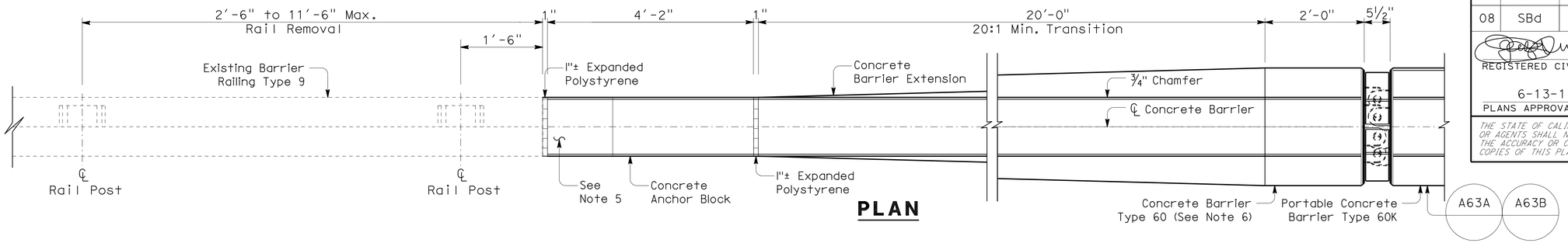

PLAN

DIRECTION OF TRAFFIC

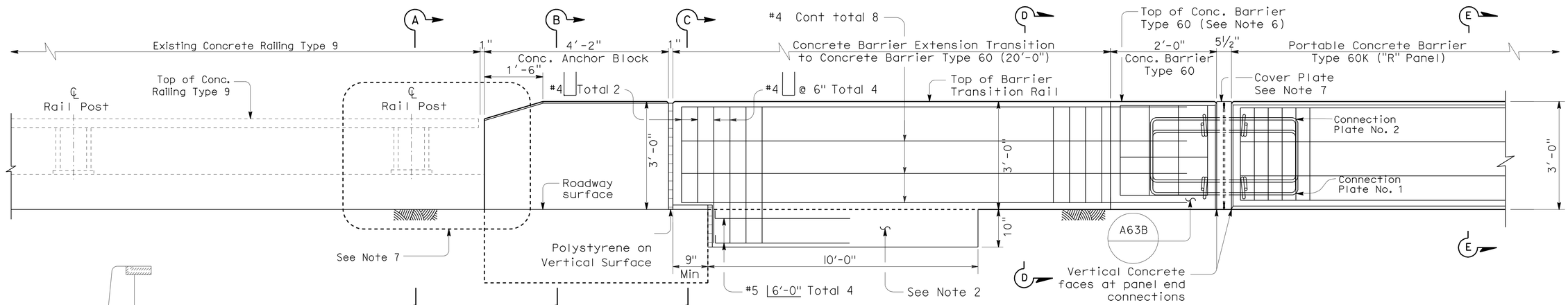

ELEVATION

TRANSITION CONCRETE BARRIER
TO CONCRETE BARRIER TYPE 60 RAILING

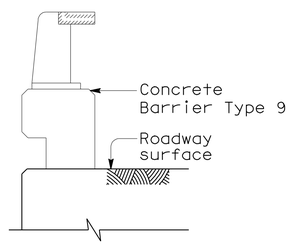

SECTION A-A

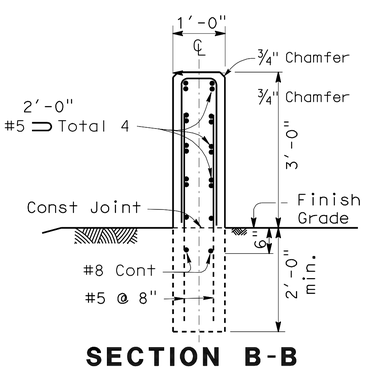

SECTION B-B

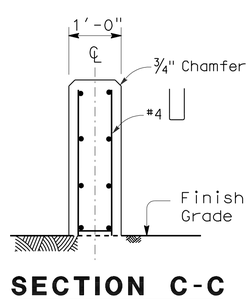

SECTION C-C

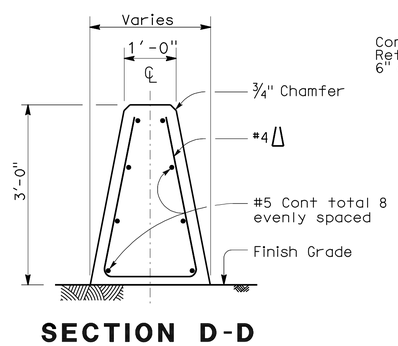

SECTION D-D

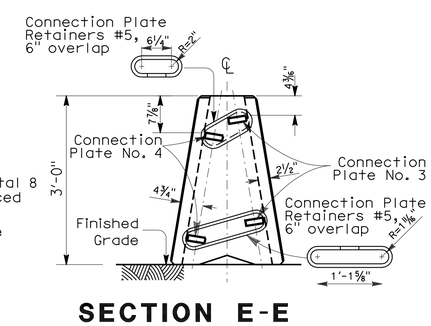

SECTION E-E

NOTES:

1. For details not shown, see Standard Plans.
2. Footing monolithic or doweled with 2-#8 x 8" @ 2'-0". The footing is required at concrete barrier ends and at interruptions in concrete barrier.
3. See Standard Plan RSP A76A for Concrete Barrier Type 60C.
4. Clearance to reinforcing steel in barrier to be 1", except as noted. Longititudinal reinforcement to stop at all expansion joints.
5. Taper the top of the end of the Concrete Anchor Block at 4:1 to match the top elevation of the Concrete Barrier Extension.
6. Modify end of permanent concrete barrier with the installation of connection plates for connection pins and cover paltes.
7. All metal plates to be galvanized after fabrication.
8. For additional details of concrete anchor block connection configurations, see Construction plan sheet C-03.

CONSTRUCTION DETAILS

NO SCALE

C-2

REVISED BY | DATE REVISED
WILLIAM ONKUMPOL | AHMAD SHAH
CALCULATED-DESIGNED BY | CHECKED BY
FUNCTIONAL SUPERVISOR
GEORGE MORHIG

STATE OF CALIFORNIA - DEPARTMENT OF TRANSPORTATION
Caltrans DESIGN

LAST REVISION 04-14-11 | DATE PLOTTED => 17-JUN-2011 | TIME PLOTTED => 05:26

Dist	COUNTY	ROUTE	POST MILES TOTAL PROJECT	SHEET No.	TOTAL SHEETS
08	SBd	15	3.8/12.8	119	680

REGISTERED CIVIL ENGINEER 4-14-11 DATE

6-13-11
PLANS APPROVAL DATE

REGISTERED PROFESSIONAL ENGINEER AHMAD SHAH No. C55259 Exp. 9-30-12 CIVIL STATE OF CALIFORNIA

THE STATE OF CALIFORNIA OR ITS OFFICERS OR AGENTS SHALL NOT BE RESPONSIBLE FOR THE ACCURACY OR COMPLETENESS OF SCANNED COPIES OF THIS PLAN SHEET.

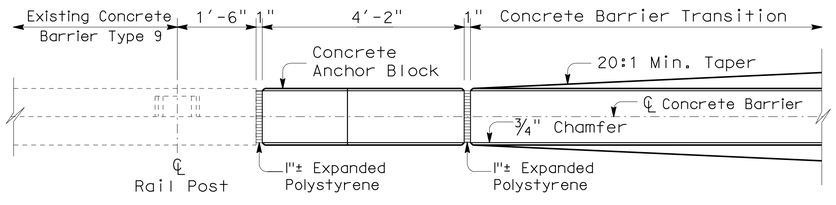

PLAN

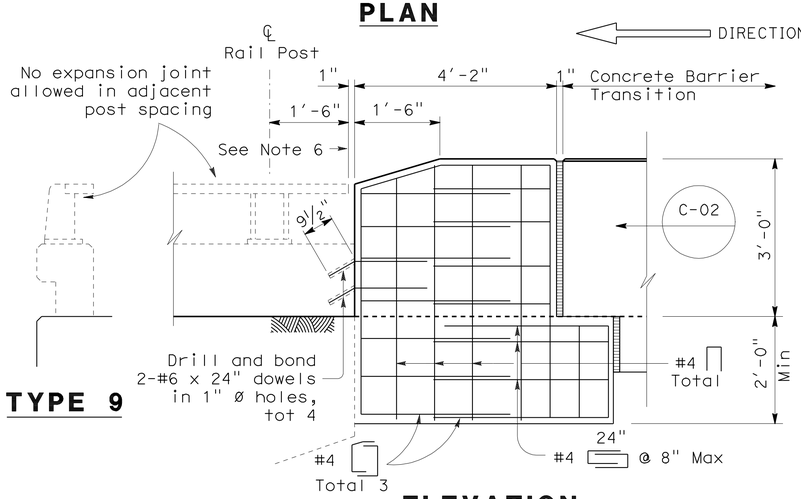

TYPE 9

ELEVATION

EXISTING BARRIER RAILING TYPE 9
ALTERNATIVE 1

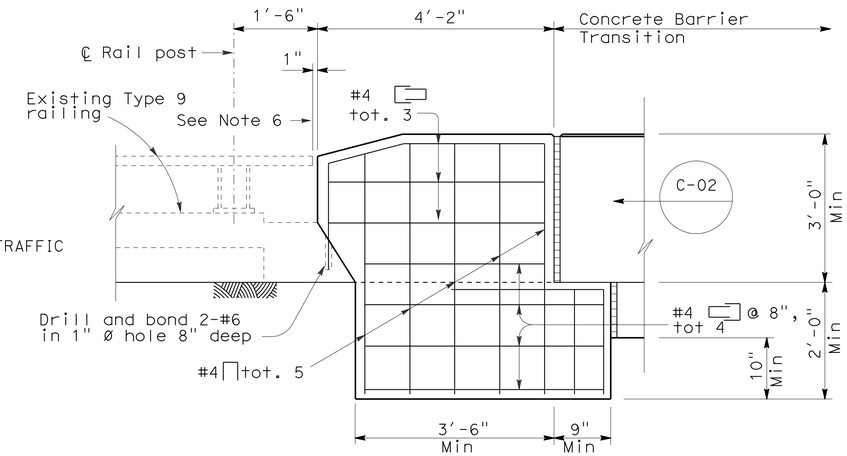

ELEVATION

EXISTING BARRIER RAILING TYPE 9
ALTERNATIVE 3

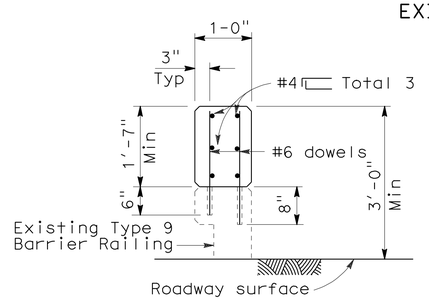

SECTION A-A

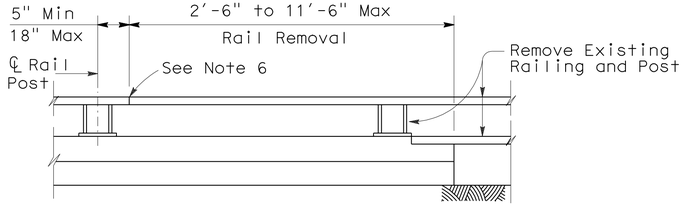

ELEVATION

RAIL REMOVAL

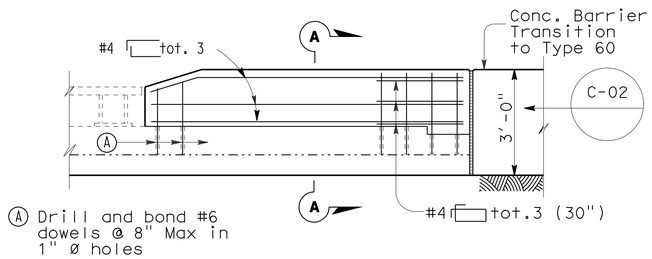

ELEVATION

EXISTING BARRIER RAILING TYPE 9
ALTERNATIVE 2

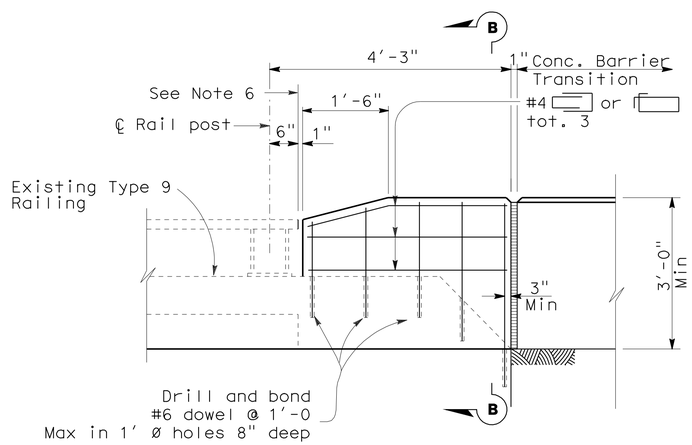

ELEVATION

EXISTING BARRIER RAILING TYPE 9
ALTERNATIVE 4

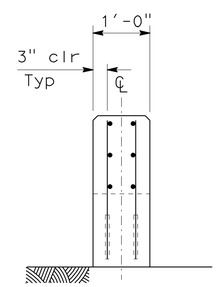

SECTION B-B

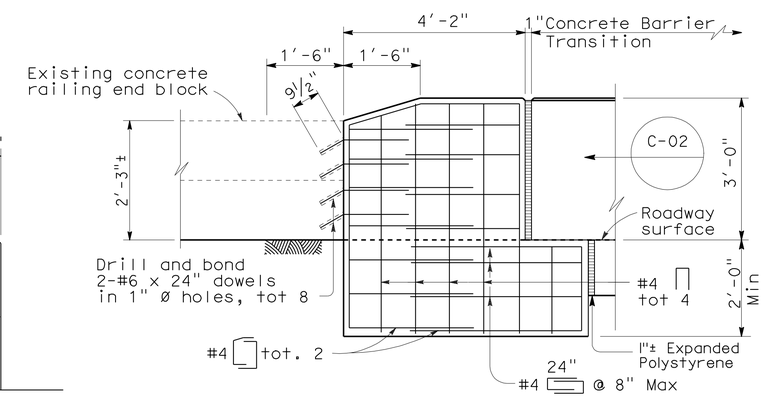

ELEVATION

EXISTING BARRIER RAILING TYPE 9
ALTERNATIVE 5

NOTES:

1. For details not shown, see Standard Plans.
2. Dependent dimensions will be verified in the field before fabricating any end connection to conform with existing paved conditions.
3. See Construction Plan C-02 for Concrete Barrier Transition details.
4. For Thrie Beam connection, see Standard Plans "Thrie beam barrier connections to Bridge Railing".
5. All plates and bolts are galvanized.
6. Cut and remove that portion of Type 9, 9-11 and BAGR as required.
7. If rail is not continuous over 2 posts, use splice at expansion joint.
8. Exterior splice bolt holes shall be the standard ⅞" x 1⅛" slot size for rail splices at Post # T4 and the connection to the concrete barrier or railing. Interior splice bolt holes may be increased up to 1⅛" dia. Washers shall be used with splice bolts on back side of rail element at Post # T4 and connection to the concrete barrier or railing.
9. Taper the top of the end of the bridge railing at 4:1 to match the top elevation of the thrie beam rail element.

CONSTRUCTION DETAILS

NO SCALE

C-3

STATE OF CALIFORNIA - DEPARTMENT OF TRANSPORTATION
Caltrans® DESIGN

FUNCTIONAL SUPERVISOR: GEORGE MORHIG
CALCULATED-DESIGNED BY: WILLIAM ONKUMPOL
CHECKED BY: AHMAD SHAH
REVISED BY / DATE REVISED

LAST REVISION 04-14-11
DATE PLOTTED => 17-JUN-2011
TIME PLOTTED => 05:26

Dist	COUNTY	ROUTE	POST MILES TOTAL PROJECT	SHEET No.	TOTAL SHEETS
08	SBd	15	3.8/12.8	120	680

REGISTERED CIVIL ENGINEER 4-14-11 DATE

6-13-11
PLANS APPROVAL DATE

REGISTERED PROFESSIONAL ENGINEER AHMAD SHAH No. C55259 Exp. 9-30-12 CIVIL STATE OF CALIFORNIA

THE STATE OF CALIFORNIA OR ITS OFFICERS OR AGENTS SHALL NOT BE RESPONSIBLE FOR THE ACCURACY OR COMPLETENESS OF SCANNED COPIES OF THIS PLAN SHEET.

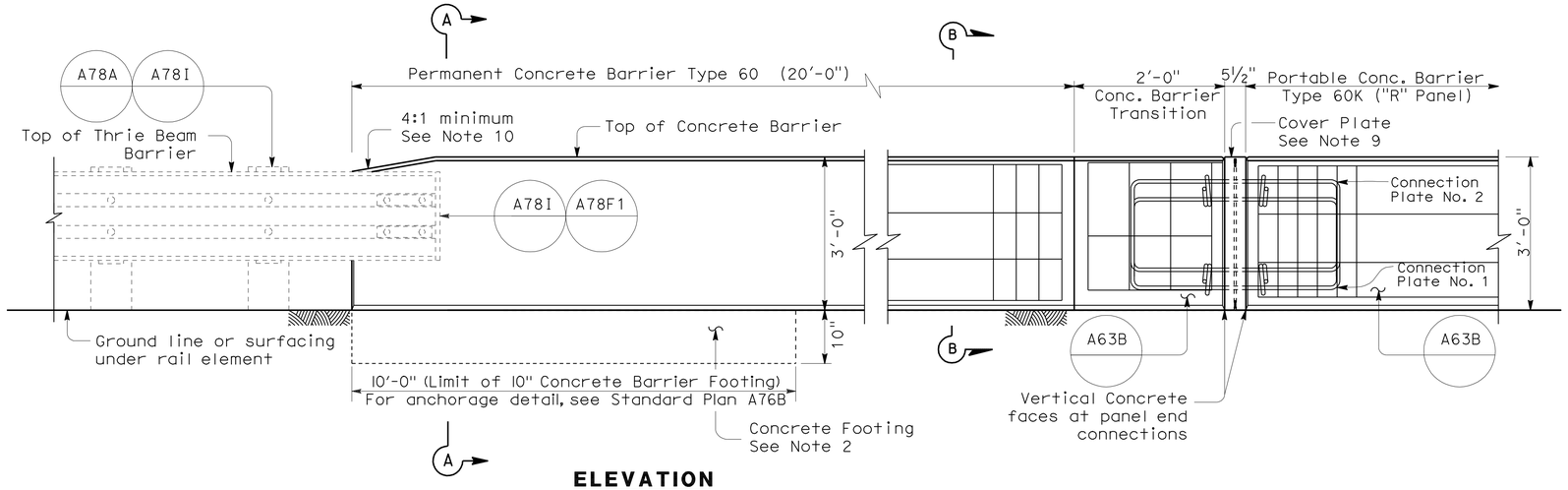

ELEVATION

DOUBLE THRIE BEAM BARRIER
CONNECTION TO CONCRETE BARRIER TYPE 60

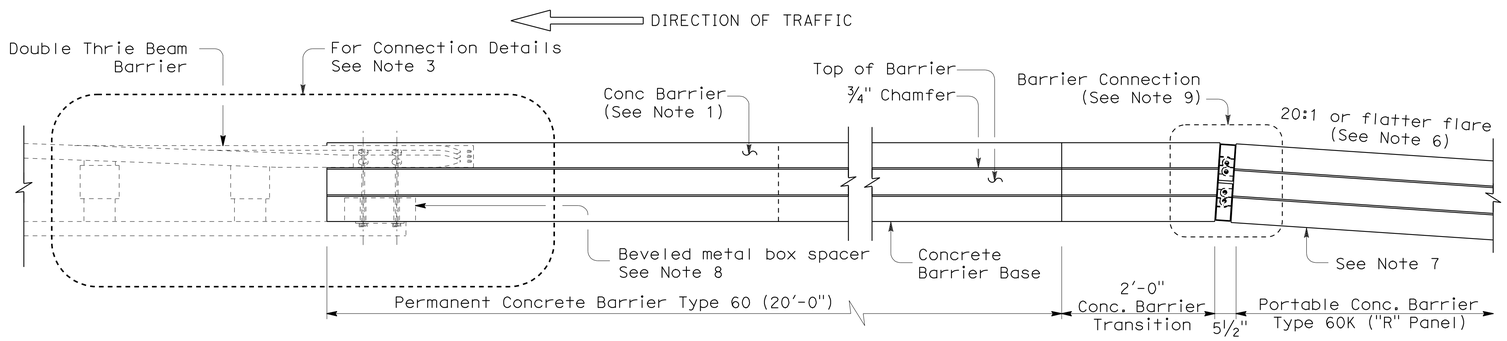

PLAN

DOUBLE THRIE BEAM BARRIER
CONNECTION TO CONCRETE BARRIER TYPE 60

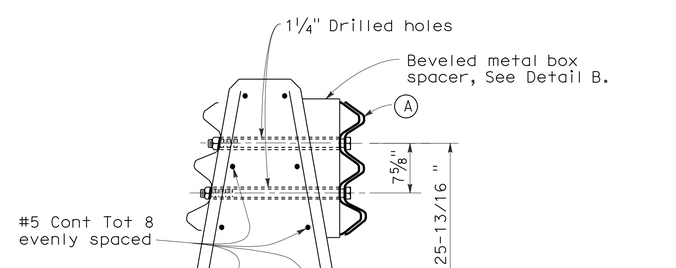

SECTION A-A

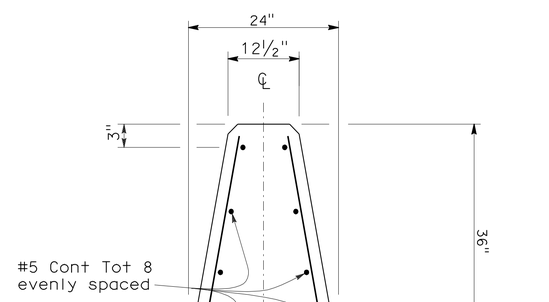

SECTION B-B

NOTES:

1. For details not shown, see Standard Plans.
2. Dependent dimensions will be verified in the field before fabricating any end connection to conform with existing paved conditions.
3. For details of Double Thrie beam Barrier Connection to Concrete Barrier Type 60, see Revised Standard Plan A78I.
4. For Thrie Beam connection, see Standard Plans "Thrie beam barrier connections to Bridge Railing".
5. All plates and bolts are galvanized.
6. The 20:1 or flatter flare is measured off the edge of traveled way.
7. For Portable Concrete Barrier "R" Panel details and layouts, see Standard Plan A63B.
8. Where beveled metal box spacer is installed, place 1¼" ø x 3¼" and 1¼" ø x 2" pipe spacers on 1" HS bolts passing through interior of box.
9. For Connection Plate Configuration details and concrete face joints details, see Revised Standard Plan A63A and A63B.
10. Taper the top of the end of the concrete railing at 4:1 to match the top elevation of the thrie beam rail element.
11. For additional thrie beam barrier details, see Standard Plan A78A, Revised Standard Plans RSPs A78B and A78C1, and Standard Plan A78C2.

CONSTRUCTION DETAILS

NO SCALE

C-4

STATE OF CALIFORNIA - DEPARTMENT OF TRANSPORTATION
Caltrans DESIGN

FUNCTIONAL SUPERVISOR: GEORGE MORHIG
CALCULATED-DESIGNED BY: WILLIAM ONKUMPOL
CHECKED BY: AHMAD SHAH
REVISED BY
DATE REVISED

LAST REVISION 04-14-11
DATE PLOTTED => 17-JUN-2011
TIME PLOTTED => 05:26

Dist	COUNTY	ROUTE	POST MILES TOTAL PROJECT	SHEET No.	TOTAL SHEETS
08	SBd	15	3.8/12.8	121	680

REGISTERED CIVIL ENGINEER 4-14-11 DATE

6-13-11
PLANS APPROVAL DATE

REGISTERED PROFESSIONAL ENGINEER AHMAD SHAH No. C55259 Exp. 9-30-12 CIVIL STATE OF CALIFORNIA

THE STATE OF CALIFORNIA OR ITS OFFICERS OR AGENTS SHALL NOT BE RESPONSIBLE FOR THE ACCURACY OR COMPLETENESS OF SCANNED COPIES OF THIS PLAN SHEET.

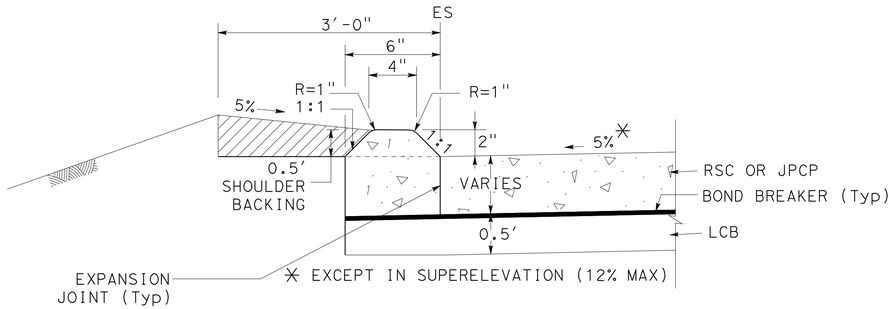

PCC DIKE
(MODIFIED TYPE C)
IN FILL

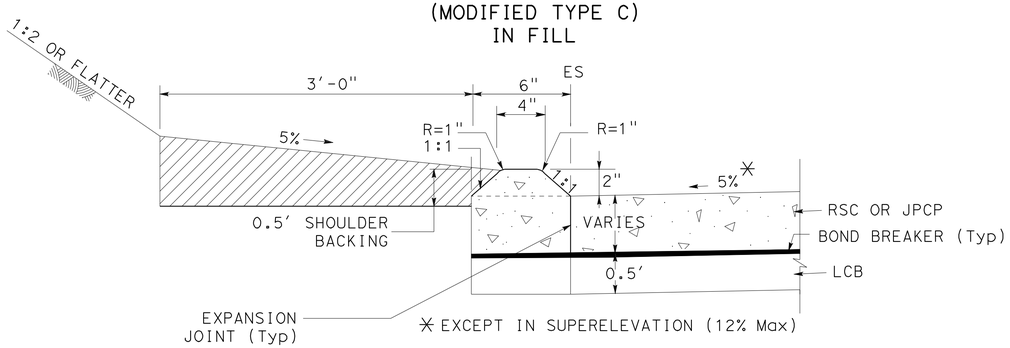

PCC DIKE
(MODIFIED TYPE C)
IN CUT

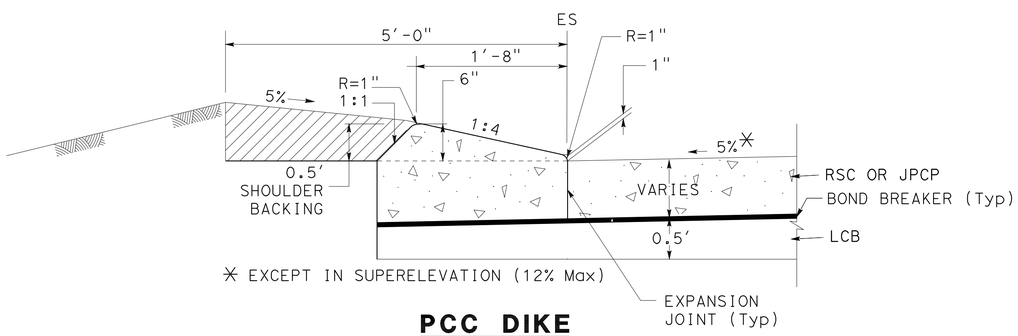

PCC DIKE
(MODIFIED TYPE D)
IN FILL

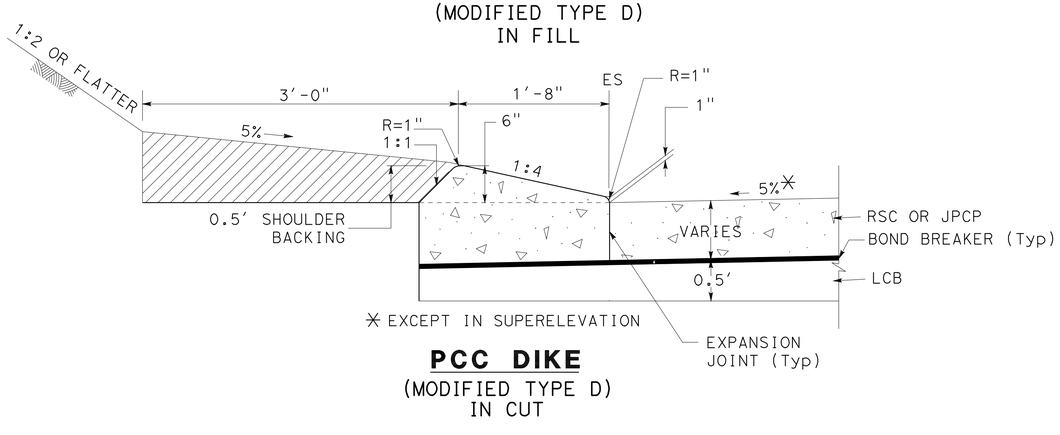

PCC DIKE
(MODIFIED TYPE D)
IN CUT

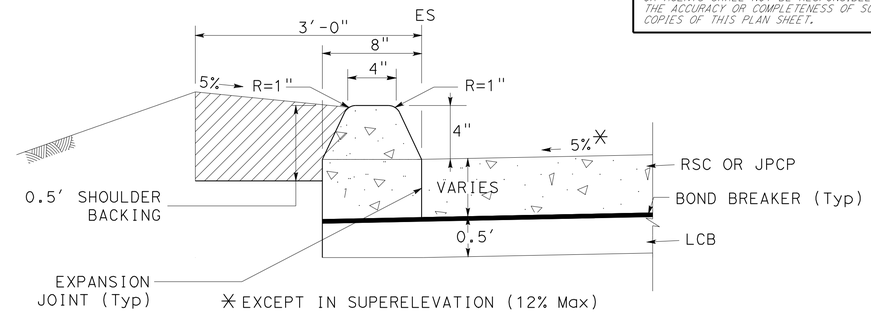

PCC DIKE
(MODIFIED TYPE F)
IN FILL

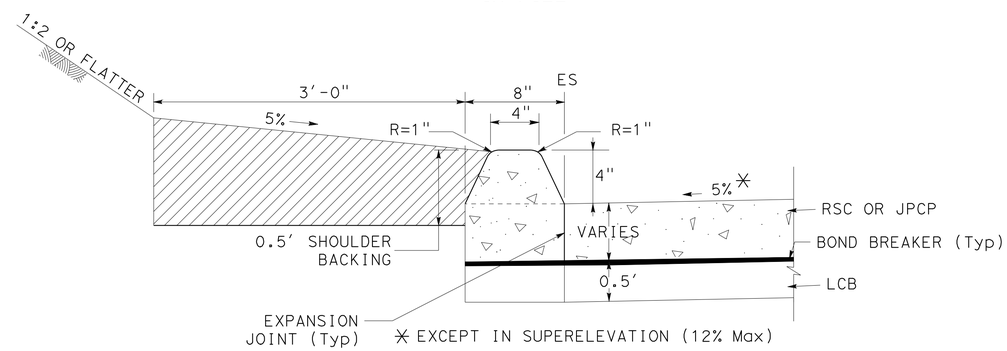

PCC DIKE
(MODIFIED TYPE F)
IN CUT

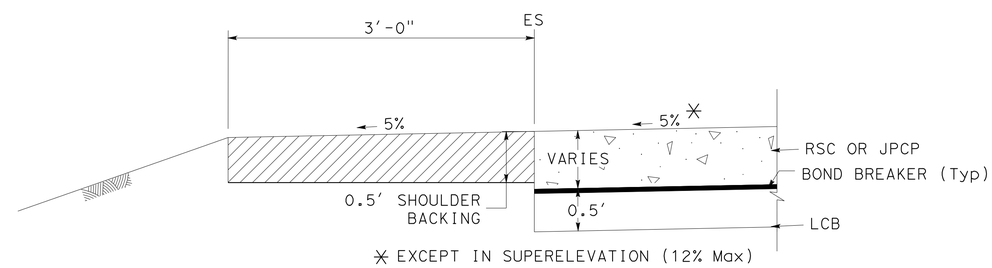

NO PCC DIKE

CONSTRUCTION DETAILS
NO SCALE

C-5

STATE OF CALIFORNIA - DEPARTMENT OF TRANSPORTATION
Caltrans DESIGN

FUNCTIONAL SUPERVISOR: GEORGE MORHIG
CALCULATED-DESIGNED BY: WILLIAM ONKUMPOL
CHECKED BY: AHMAD SHAH
REVISED BY
DATE REVISED

LAST REVISION 04-14-11 | DATE PLOTTED => 17-JUN-2011 | TIME PLOTTED => 05:26

Dist	COUNTY	ROUTE	POST MILES TOTAL PROJECT	SHEET No.	TOTAL SHEETS
08	SBd	15	3.8/12.8	122	680

REGISTERED CIVIL ENGINEER 4-14-11 DATE

6-13-11
PLANS APPROVAL DATE

REGISTERED PROFESSIONAL ENGINEER AHMAD SHAH No. C55259 Exp. 9-30-12 CIVIL STATE OF CALIFORNIA

THE STATE OF CALIFORNIA OR ITS OFFICERS OR AGENTS SHALL NOT BE RESPONSIBLE FOR THE ACCURACY OR COMPLETENESS OF SCANNED COPIES OF THIS PLAN SHEET.

NOTES:

1. FOR DETAILS NOT SHOWN, SEE STANDARD PLANS A87B.
2. SEE TYPICAL CROSS SECTION PLANS FOR STRUCTURAL SECTION DETAILS.

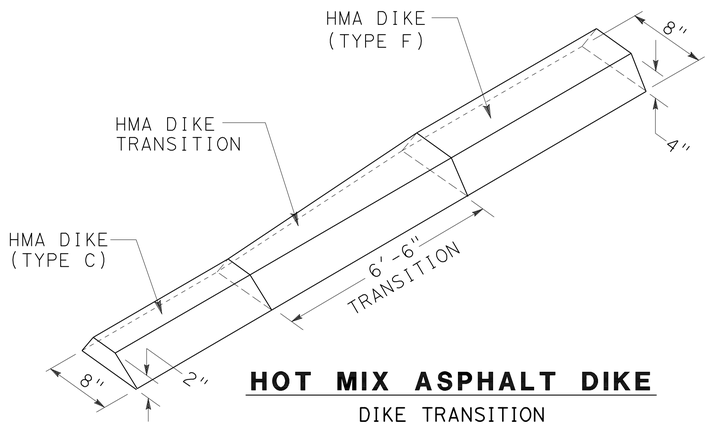

HOT MIX ASPHALT DIKE

DIKE TRANSITION
FOR DIKE (TYPE C AND F)

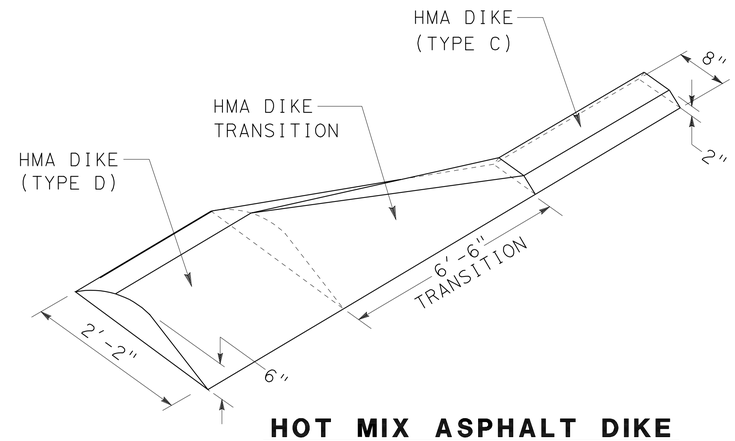

HOT MIX ASPHALT DIKE

DIKE TRANSITION

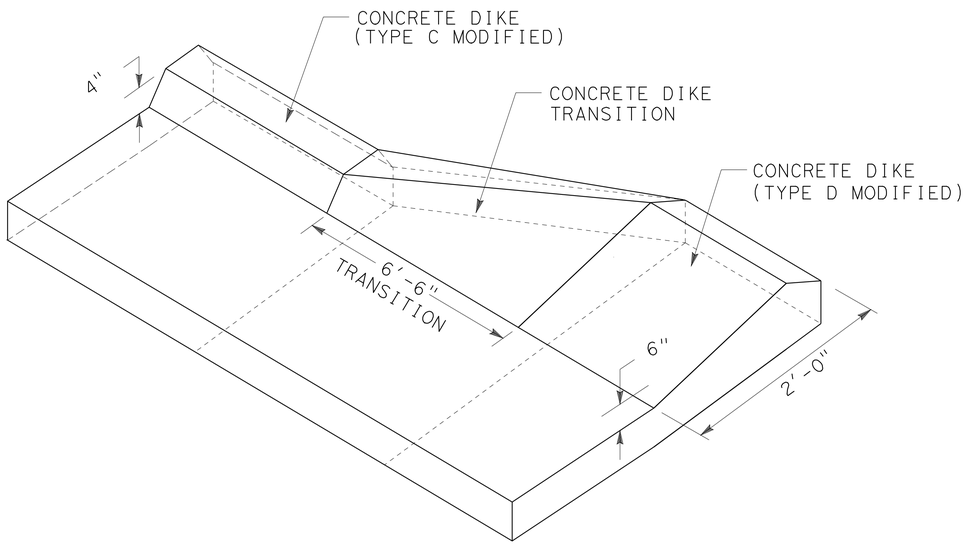

CONCRETE DIKE

DIKE TRANSITION

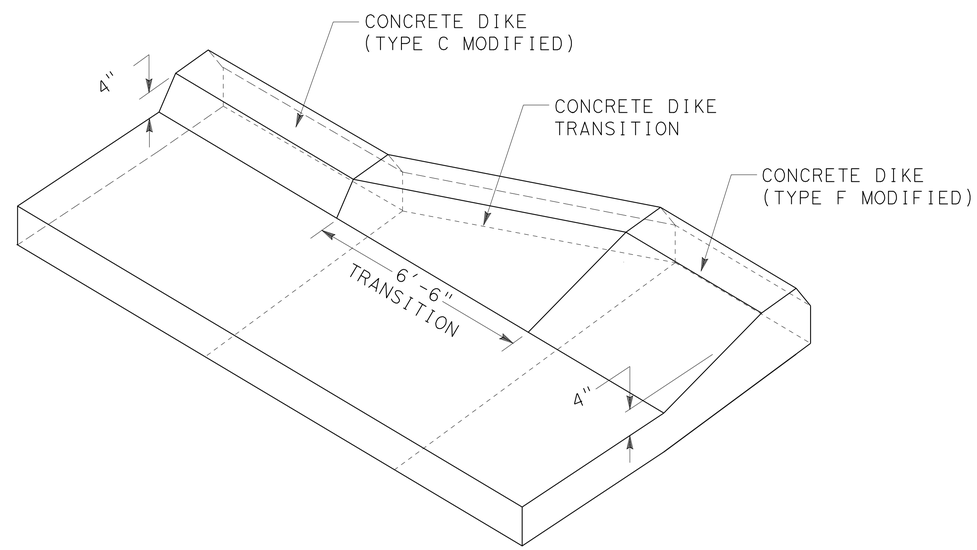

CONCRETE DIKE

DIKE TRANSITION

CONSTRUCTION DETAILS

NO SCALE

C-6

STATE OF CALIFORNIA - DEPARTMENT OF TRANSPORTATION
Caltrans® DESIGN

FUNCTIONAL SUPERVISOR: GEORGE MORHIG
CALCULATED-DESIGNED BY: WILLIAM ONKUMPOL
CHECKED BY: AHMAD SHAH
REVISED BY / DATE REVISED

LAST REVISION 04-14-11 | DATE PLOTTED => 17-JUN-2011 | TIME PLOTTED => 05:26

Dist	COUNTY	ROUTE	POST MILES TOTAL PROJECT	SHEET No.	TOTAL SHEETS
08	SBd	15	3.8/12.8	123	680

REGISTERED CIVIL ENGINEER 4-14-11 DATE

6-13-11
PLANS APPROVAL DATE

REGISTERED PROFESSIONAL ENGINEER HA VU No. C61359 Exp. 6-30-11 CIVIL STATE OF CALIFORNIA

THE STATE OF CALIFORNIA OR ITS OFFICERS OR AGENTS SHALL NOT BE RESPONSIBLE FOR THE ACCURACY OR COMPLETENESS OF SCANNED COPIES OF THIS PLAN SHEET.

NOTE:

1. THE QUANTITIES OF CONSTRUCTION SITE BMPs SHOWN ON THIS QUANTITIY SHEET (WPCQ-1) ARE INTENDED TO BE USED AS GUIDELINES ONLY. FIELD CONDITION MAY NECESSITATE MODIFICATION OR RELOCATION OF BMPs AND ITS QUANTITIES AS PER INSTRUCTION OF ENGINEER.

TEMPORARY CONSTRUCTION SITE BMPs

TEMPORARY CONSTRUCTION SITE BMPs	UNITS	QUANTITIES
TEMPORARY CONSTRUCTION ENTRANCE	EA	8
TEMPORARY DRAINAGE INLET PROTECTION	EA	100
TEMPORARY CONCRETE WASHOUT BIN	EA	75
TEMPORARY SOIL BINDER	SQYD	20000
RAIN EVENT ACTION PLAN	EA	84
STORM WATER ANNUAL REPORT	EA	3
STORM WATER SAMPLING AND ANALYSIS DAY	EA	33

TEMPORARY WATER POLLUTION CONTROL QUANTITIES

WPCQ-1

THIS PLAN ACCURATE FOR WATER POLLUTION CONTROL WORK ONLY

STATE OF CALIFORNIA - DEPARTMENT OF TRANSPORTATION
Caltrans® DESIGN

FUNCTIONAL SUPERVISOR: GEORGE MORHIG
CALCULATED-DESIGNED BY: TOUHIDA HAIDER
CHECKED BY: PAUL LAMBERT
REVISED BY
DATE REVISED

LAST REVISION 04-14-11
DATE PLOTTED => 17-JUN-2011
TIME PLOTTED => 05:26

NOTE:

FOR ACCURATE RIGHT OF WAY AND ACCESS DATA,
CONTACT RIGHT OF WAY ENGINEERING AT THE DISTRICT OFFICE.

Dist	COUNTY	ROUTE	POST MILES TOTAL PROJECT	SHEET No.	TOTAL SHEETS
08	SBd	15	3.8/12.8	124	680

REGISTERED CIVIL ENGINEER 5-24-11 DATE

6-13-11
PLANS APPROVAL DATE

REGISTERED PROFESSIONAL ENGINEER
AHMAD SHAH
No. C55259
Exp. 9-30-12
CIVIL
STATE OF CALIFORNIA

THE STATE OF CALIFORNIA OR ITS OFFICERS OR AGENTS SHALL NOT BE RESPONSIBLE FOR THE ACCURACY OR COMPLETENESS OF SCANNED COPIES OF THIS PLAN SHEET.

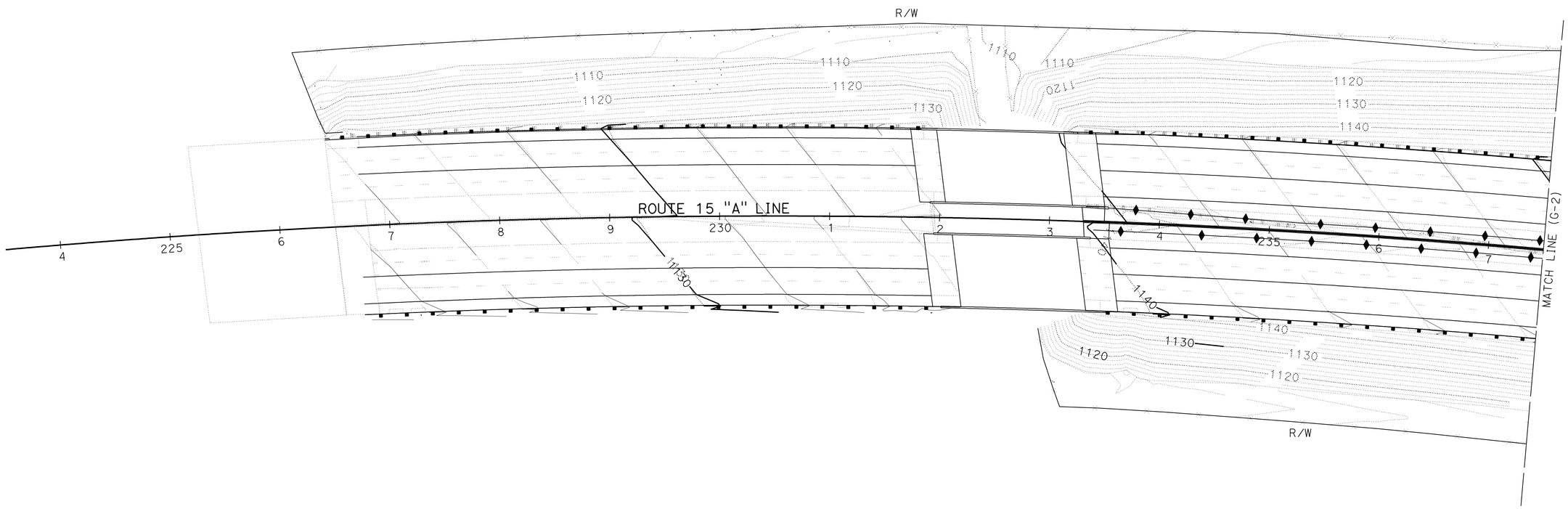

CONTOUR GRADING

SCALE: 1" = 50'

G-1

THIS PLAN ACCURATE FOR CONTOUR GRADING WORK ONLY

REVISED BY | DATE REVISED

RYAN MITRY | AHMAD SHAH

CALCULATED-DESIGNED BY | CHECKED BY

FUNCTIONAL SUPERVISOR: GEORGE MORHIG

STATE OF CALIFORNIA - DEPARTMENT OF TRANSPORTATION

Caltrans DESIGN

LAST REVISION 05-24-11 | DATE PLOTTED => 17-JUN-2011 | TIME PLOTTED => 05:26

Dist	COUNTY	ROUTE	POST MILES TOTAL PROJECT	SHEET No.	TOTAL SHEETS
08	SBd	15	3.8/12.8	125	680

REGISTERED CIVIL ENGINEER 5-24-11 DATE

6-13-11
PLANS APPROVAL DATE

REGISTERED PROFESSIONAL ENGINEER
AHMAD SHAH
No. C55259
Exp. 9-30-12
CIVIL
STATE OF CALIFORNIA

THE STATE OF CALIFORNIA OR ITS OFFICERS OR AGENTS SHALL NOT BE RESPONSIBLE FOR THE ACCURACY OR COMPLETENESS OF SCANNED COPIES OF THIS PLAN SHEET.

NOTE:

FOR ACCURATE RIGHT OF WAY AND ACCESS DATA,
CONTACT RIGHT OF WAY ENGINEERING AT THE DISTRICT OFFICE.

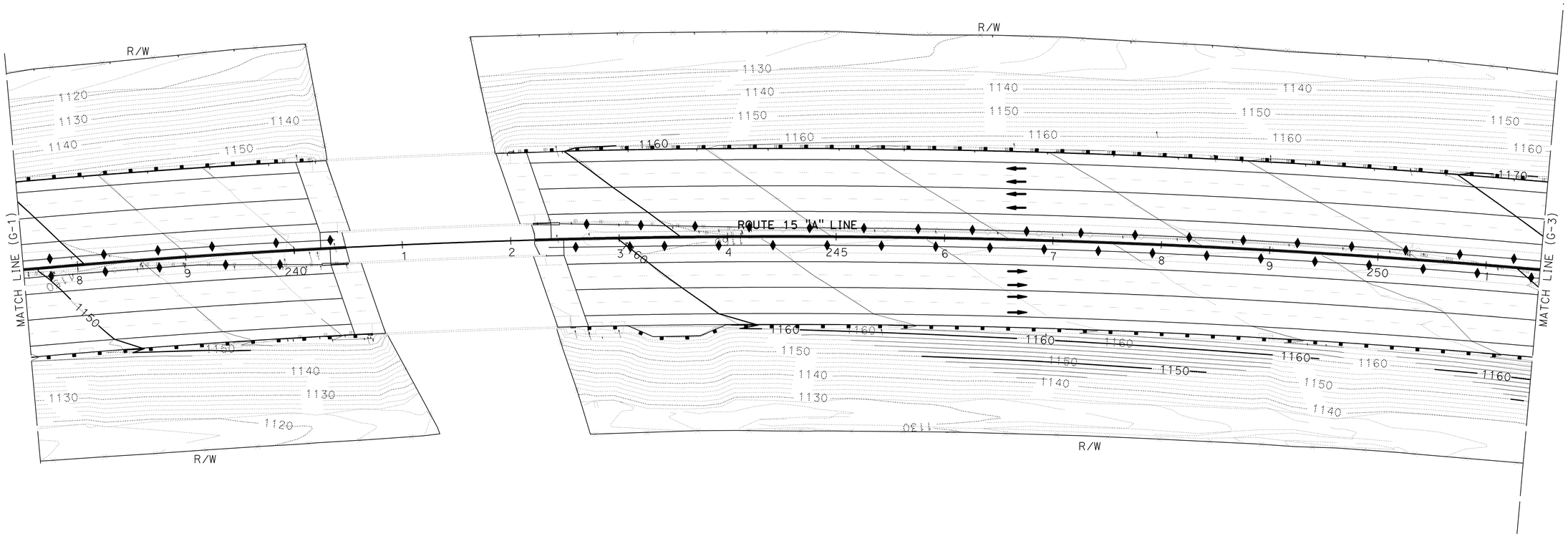

CONTOUR GRADING

SCALE: 1" = 50'

G-2

THIS PLAN ACCURATE FOR CONTOUR GRADING WORK ONLY

STATE OF CALIFORNIA - DEPARTMENT OF TRANSPORTATION
Caltrans DESIGN

FUNCTIONAL SUPERVISOR: GEORGE MORHIG
CALCULATED-DESIGNED BY: RYAN MITRY
CHECKED BY: AHMAD SHAH
REVISED BY
DATE REVISED

LAST REVISION 05-24-11
DATE PLOTTED => 17-JUN-2011
TIME PLOTTED => 05:27

NOTE:

FOR ACCURATE RIGHT OF WAY AND ACCESS DATA,
CONTACT RIGHT OF WAY ENGINEERING AT THE DISTRICT OFFICE.

Dist	COUNTY	ROUTE	POST MILES TOTAL PROJECT	SHEET No.	TOTAL SHEETS
08	SBd	15	3.8/12.8	126	680

REGISTERED CIVIL ENGINEER 5-24-11 DATE

6-13-11
PLANS APPROVAL DATE

REGISTERED PROFESSIONAL ENGINEER
AHMAD SHAH
No. C55259
Exp. 9-30-12
CIVIL
STATE OF CALIFORNIA

THE STATE OF CALIFORNIA OR ITS OFFICERS OR AGENTS SHALL NOT BE RESPONSIBLE FOR THE ACCURACY OR COMPLETENESS OF SCANNED COPIES OF THIS PLAN SHEET.

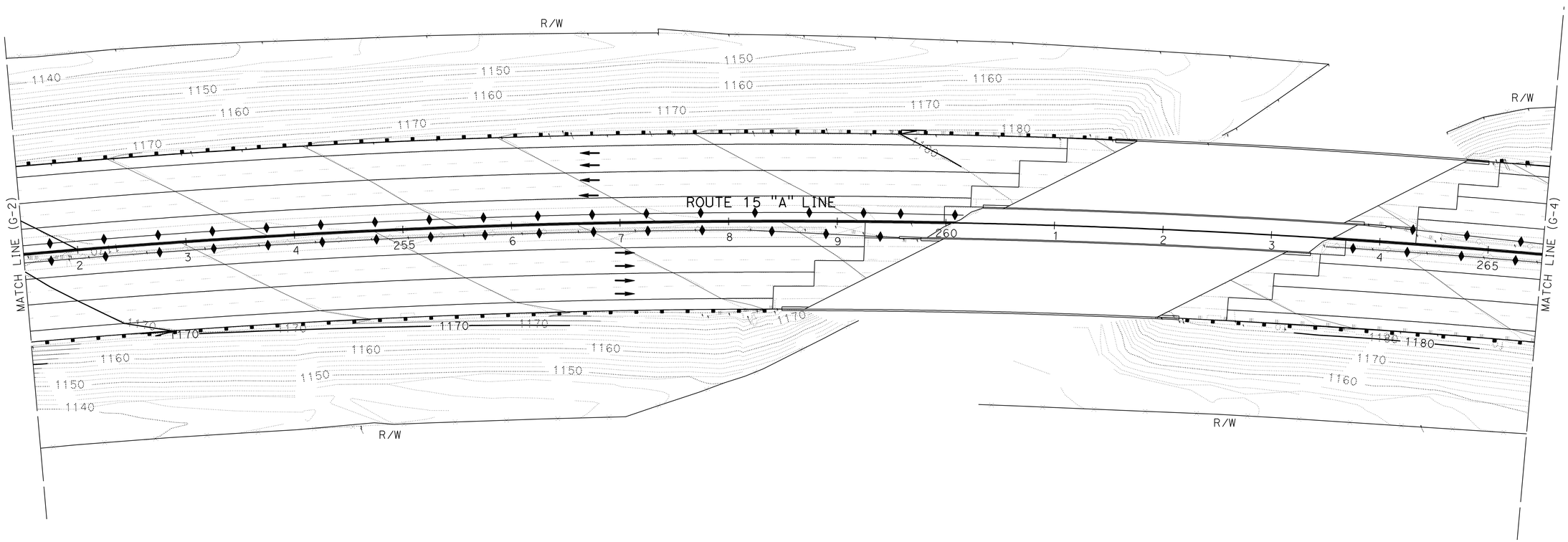

CONTOUR GRADING

SCALE: 1" = 50'

G-3

THIS PLAN ACCURATE FOR CONTOUR GRADING WORK ONLY

REVISED BY | DATE REVISED

RYAN MITRY | AHMAD SHAH

CALCULATED-DESIGNED BY | CHECKED BY

FUNCTIONAL SUPERVISOR: GEORGE MORHIG

STATE OF CALIFORNIA - DEPARTMENT OF TRANSPORTATION

Caltrans DESIGN

LAST REVISION 05-24-11 | DATE PLOTTED => 17-JUN-2011 | TIME PLOTTED => 05:27

Dist	COUNTY	ROUTE	POST MILES TOTAL PROJECT	SHEET No.	TOTAL SHEETS
08	SBd	15	3.8/12.8	127	680

REGISTERED CIVIL ENGINEER 5-24-11 DATE

6-13-11
PLANS APPROVAL DATE

REGISTERED PROFESSIONAL ENGINEER
AHMAD SHAH
No. C55259
Exp. 9-30-12
CIVIL
STATE OF CALIFORNIA

THE STATE OF CALIFORNIA OR ITS OFFICERS OR AGENTS SHALL NOT BE RESPONSIBLE FOR THE ACCURACY OR COMPLETENESS OF SCANNED COPIES OF THIS PLAN SHEET.

NOTE:

FOR ACCURATE RIGHT OF WAY AND ACCESS DATA,
CONTACT RIGHT OF WAY ENGINEERING AT THE DISTRICT OFFICE.

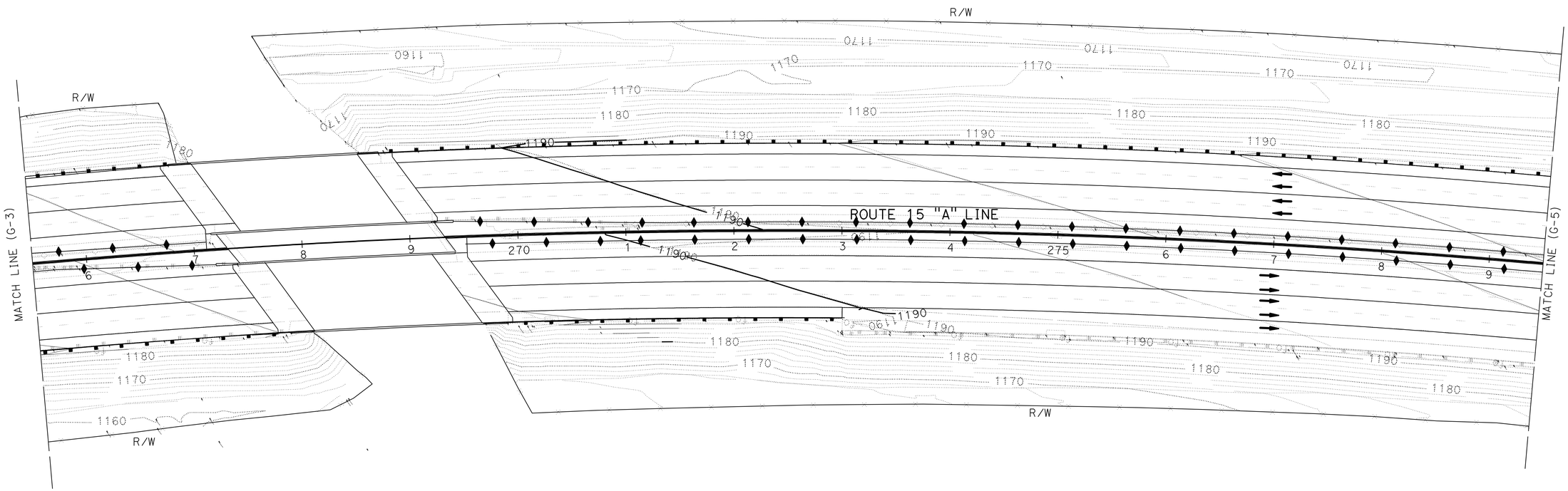

CONTOUR GRADING

SCALE: 1" = 50'

G-4

THIS PLAN ACCURATE FOR CONTOUR GRADING WORK ONLY

REVISED BY	DATE REVISED

CALCULATED-DESIGNED BY	RYAN MITRY
CHECKED BY	AHMAD SHAH
FUNCTIONAL SUPERVISOR	GEORGE MORHIG

STATE OF CALIFORNIA - DEPARTMENT OF TRANSPORTATION
Caltrans
DESIGN

LAST REVISION 05-24-11
DATE PLOTTED => 17-JUN-2011
TIME PLOTTED => 09:27

Dist	COUNTY	ROUTE	POST MILES TOTAL PROJECT	SHEET No.	TOTAL SHEETS
08	SBd	15	3.8/12.8	128	680

REGISTERED CIVIL ENGINEER 5-24-11 DATE

6-13-11
PLANS APPROVAL DATE

REGISTERED PROFESSIONAL ENGINEER
AHMAD SHAH
No. C55259
Exp. 9-30-12
CIVIL
STATE OF CALIFORNIA

THE STATE OF CALIFORNIA OR ITS OFFICERS OR AGENTS SHALL NOT BE RESPONSIBLE FOR THE ACCURACY OR COMPLETENESS OF SCANNED COPIES OF THIS PLAN SHEET.

NOTE:

FOR ACCURATE RIGHT OF WAY AND ACCESS DATA,
CONTACT RIGHT OF WAY ENGINEERING AT THE DISTRICT OFFICE.

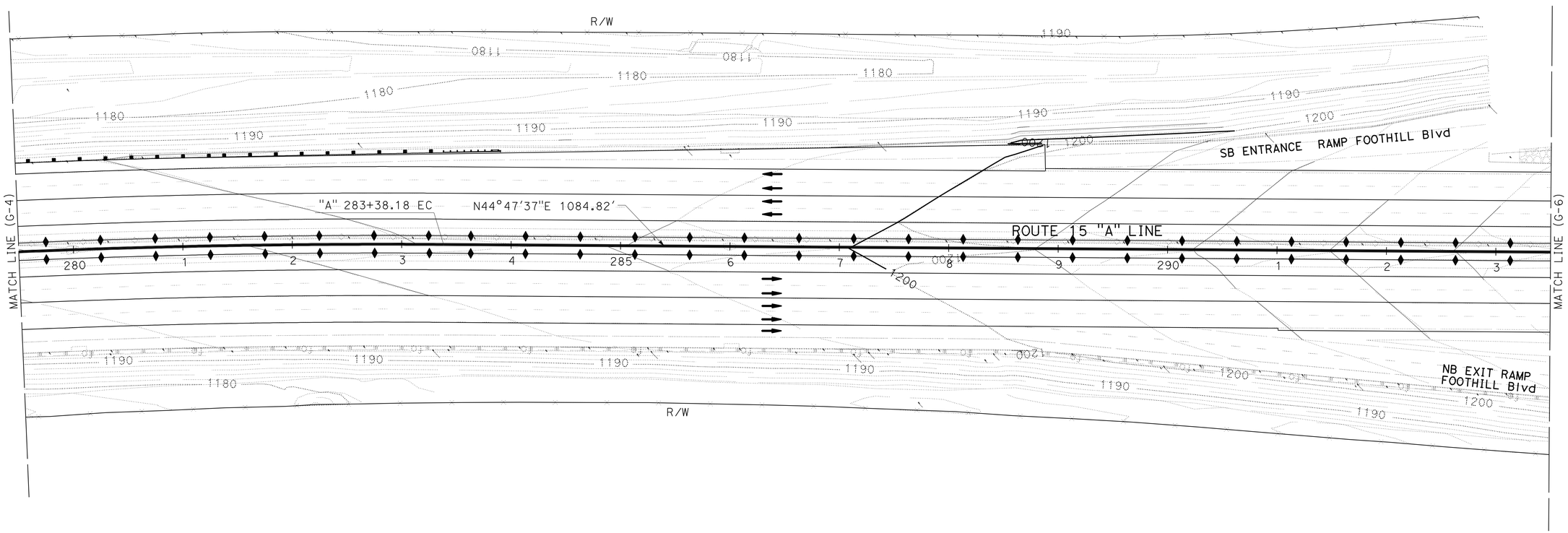

CONTOUR GRADING

SCALE: 1" = 50'

G-5

THIS PLAN ACCURATE FOR CONTOUR GRADING WORK ONLY

STATE OF CALIFORNIA - DEPARTMENT OF TRANSPORTATION
Caltrans
DESIGN

FUNCTIONAL SUPERVISOR: GEORGE MORHIG

CALCULATED-DESIGNED BY: RYAN MITRY
CHECKED BY: AHMAD SHAH

REVISED BY
DATE REVISED

LAST REVISION 05-24-11
DATE PLOTTED => 17-JUN-2011
TIME PLOTTED => 05:27

Dist	COUNTY	ROUTE	POST MILES TOTAL PROJECT	SHEET No.	TOTAL SHEETS
08	SBd	15	3.8/12.8	129	680

REGISTERED CIVIL ENGINEER 5-24-11 DATE

6-13-11
PLANS APPROVAL DATE

REGISTERED PROFESSIONAL ENGINEER
AHMAD SHAH
No. C55259
Exp. 9-30-12
CIVIL
STATE OF CALIFORNIA

THE STATE OF CALIFORNIA OR ITS OFFICERS OR AGENTS SHALL NOT BE RESPONSIBLE FOR THE ACCURACY OR COMPLETENESS OF SCANNED COPIES OF THIS PLAN SHEET.

NOTE:

FOR ACCURATE RIGHT OF WAY AND ACCESS DATA,
CONTACT RIGHT OF WAY ENGINEERING AT THE DISTRICT OFFICE.

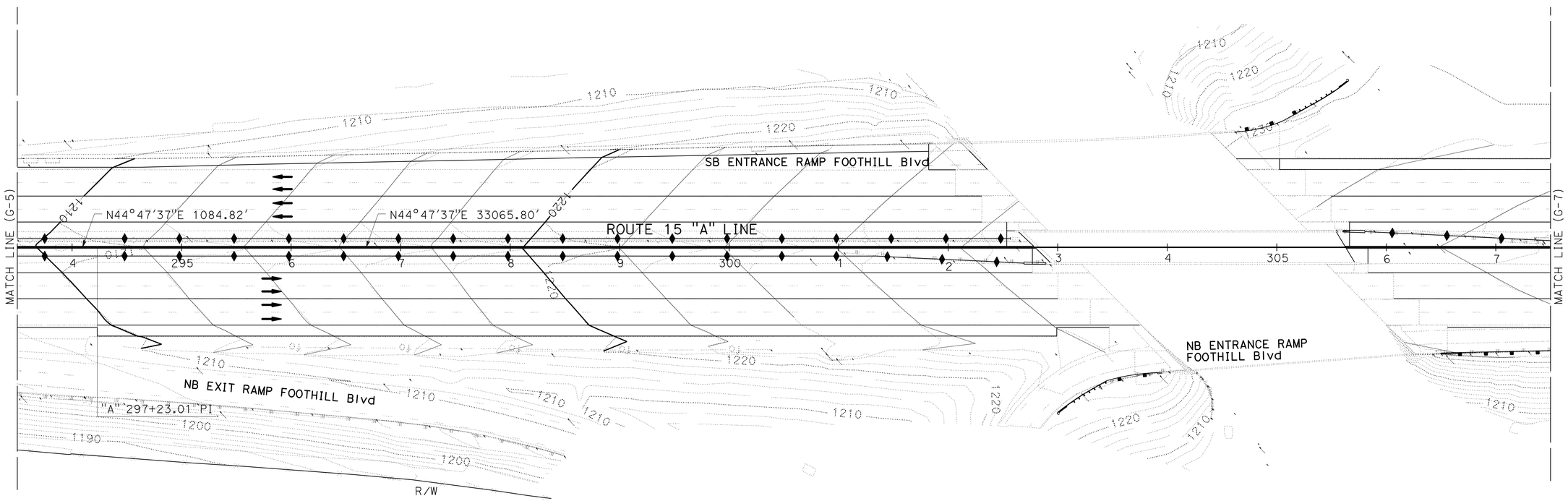

CONTOUR GRADING

SCALE: 1" = 50'

G-6

THIS PLAN ACCURATE FOR CONTOUR GRADING WORK ONLY

STATE OF CALIFORNIA - DEPARTMENT OF TRANSPORTATION
Caltrans
DESIGN

FUNCTIONAL SUPERVISOR: GEORGE MORHIG

CALCULATED-DESIGNED BY: RYAN MITRY
CHECKED BY: AHMAD SHAH

REVISED BY
DATE REVISED

LAST REVISION 05-24-11
DATE PLOTTED => 17-JUN-2011
TIME PLOTTED => 05:27

Dist	COUNTY	ROUTE	POST MILES TOTAL PROJECT	SHEET No.	TOTAL SHEETS
08	SBd	15	3.8/12.8	130	680

REGISTERED CIVIL ENGINEER 5-24-11 DATE

6-13-11
PLANS APPROVAL DATE

REGISTERED PROFESSIONAL ENGINEER
AHMAD SHAH
No. C55259
Exp. 9-30-12
CIVIL
STATE OF CALIFORNIA

THE STATE OF CALIFORNIA OR ITS OFFICERS OR AGENTS SHALL NOT BE RESPONSIBLE FOR THE ACCURACY OR COMPLETENESS OF SCANNED COPIES OF THIS PLAN SHEET.

NOTE:

FOR ACCURATE RIGHT OF WAY AND ACCESS DATA,
CONTACT RIGHT OF WAY ENGINEERING AT THE DISTRICT OFFICE.

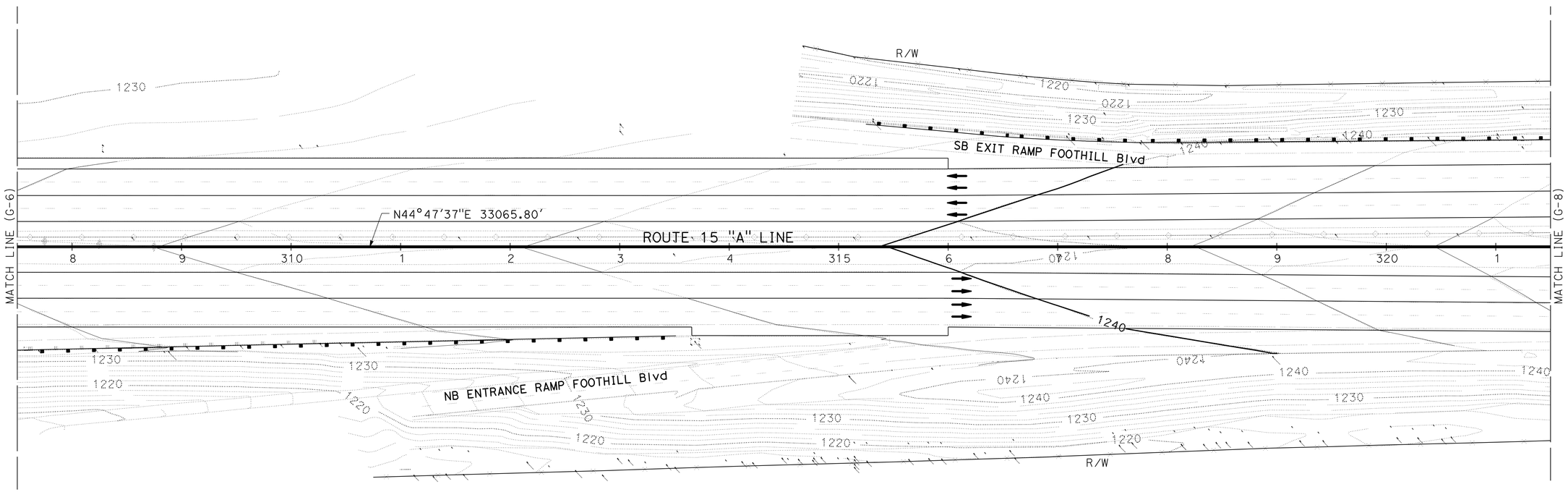

CONTOUR GRADING

SCALE: 1" = 50'

G-7

THIS PLAN ACCURATE FOR CONTOUR GRADING WORK ONLY

STATE OF CALIFORNIA - DEPARTMENT OF TRANSPORTATION
Caltrans
DESIGN

FUNCTIONAL SUPERVISOR: GEORGE MORHIG
CALCULATED-DESIGNED BY: RYAN MITRY
CHECKED BY: AHMAD SHAH
REVISED BY
DATE REVISED

LAST REVISION 05-24-11
DATE PLOTTED => 17-JUN-2011
TIME PLOTTED => 05:27

Dist	COUNTY	ROUTE	POST MILES TOTAL PROJECT	SHEET No.	TOTAL SHEETS
08	SBd	15	3.8/12.8	131	680

REGISTERED CIVIL ENGINEER 5-24-11 DATE

6-13-11
PLANS APPROVAL DATE

REGISTERED PROFESSIONAL ENGINEER
AHMAD SHAH
No. C55259
Exp. 9-30-12
CIVIL
STATE OF CALIFORNIA

THE STATE OF CALIFORNIA OR ITS OFFICERS OR AGENTS SHALL NOT BE RESPONSIBLE FOR THE ACCURACY OR COMPLETENESS OF SCANNED COPIES OF THIS PLAN SHEET.

NOTE:

FOR ACCURATE RIGHT OF WAY AND ACCESS DATA,
CONTACT RIGHT OF WAY ENGINEERING AT THE DISTRICT OFFICE.

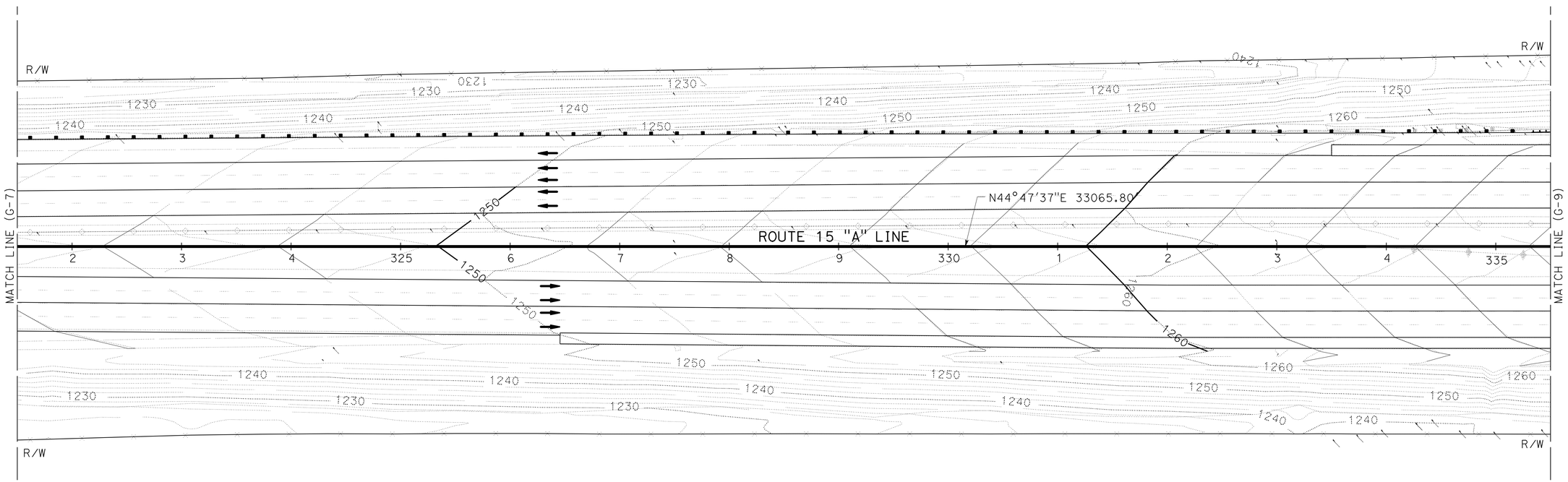

CONTOUR GRADING

SCALE: 1" = 50'

G-8

THIS PLAN ACCURATE FOR CONTOUR GRADING WORK ONLY

REVISED BY | DATE REVISED

RYAN MITRY | AHMAD SHAH

CALCULATED-DESIGNED BY | CHECKED BY

FUNCTIONAL SUPERVISOR: GEORGE MORHIG

STATE OF CALIFORNIA - DEPARTMENT OF TRANSPORTATION

Caltrans

DESIGN

LAST REVISION 05-24-11 | DATE PLOTTED => 17-JUN-2011 | TIME PLOTTED => 05:27

Dist	COUNTY	ROUTE	POST MILES TOTAL PROJECT	SHEET No.	TOTAL SHEETS
08	SBd	15	3.8/12.8	132	680

REGISTERED CIVIL ENGINEER 5-24-11 DATE

6-13-11
PLANS APPROVAL DATE

REGISTERED PROFESSIONAL ENGINEER
AHMAD SHAH
No. C55259
Exp. 9-30-12
CIVIL
STATE OF CALIFORNIA

THE STATE OF CALIFORNIA OR ITS OFFICERS OR AGENTS SHALL NOT BE RESPONSIBLE FOR THE ACCURACY OR COMPLETENESS OF SCANNED COPIES OF THIS PLAN SHEET.

NOTE:

FOR ACCURATE RIGHT OF WAY AND ACCESS DATA,
CONTACT RIGHT OF WAY ENGINEERING AT THE DISTRICT OFFICE.

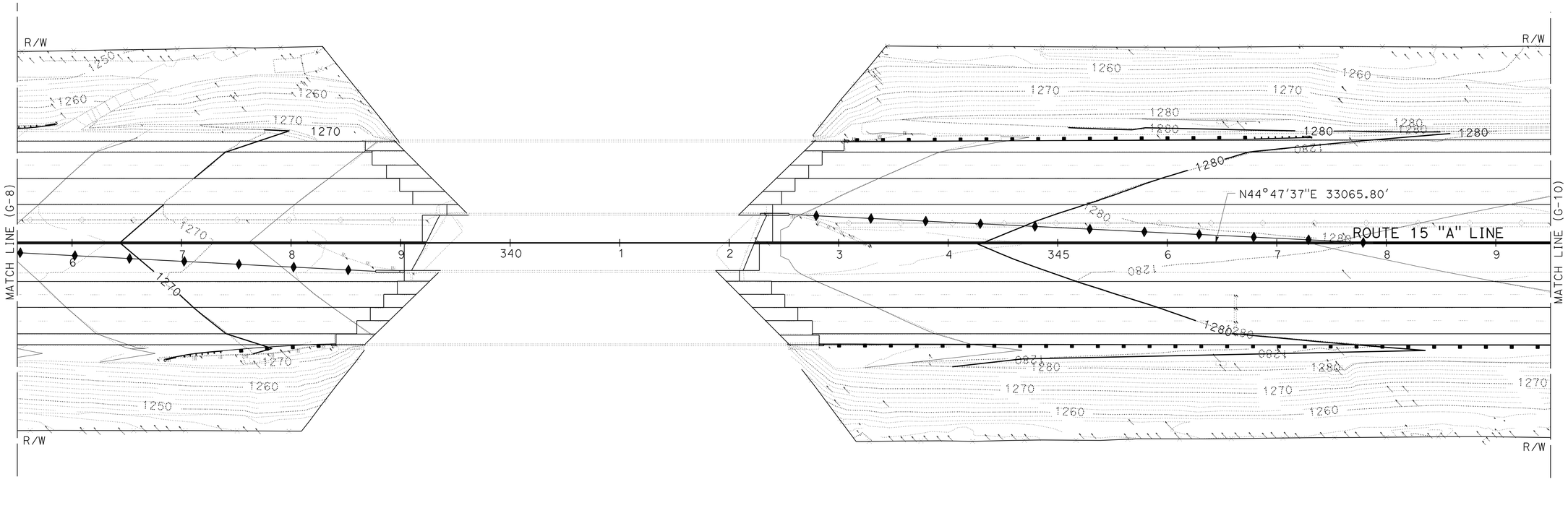

CONTOUR GRADING

SCALE: 1" = 50'

G-9

THIS PLAN ACCURATE FOR CONTOUR GRADING WORK ONLY

REVISED BY | DATE REVISED

RYAN MITRY | AHMAD SHAH

CALCULATED-DESIGNED BY | CHECKED BY

FUNCTIONAL SUPERVISOR

GEORGE MORHIG

STATE OF CALIFORNIA - DEPARTMENT OF TRANSPORTATION

Caltrans

DESIGN

LAST REVISION 05-24-11 | DATE PLOTTED => 17-JUN-2011 TIME PLOTTED => 05:27

Dist	COUNTY	ROUTE	POST MILES TOTAL PROJECT	SHEET No.	TOTAL SHEETS
08	SBd	15	3.8/12.8	133	680

REGISTERED CIVIL ENGINEER 5-24-11 DATE

6-13-11
PLANS APPROVAL DATE

REGISTERED PROFESSIONAL ENGINEER
AHMAD SHAH
No. C55259
Exp. 9-30-12
CIVIL
STATE OF CALIFORNIA

THE STATE OF CALIFORNIA OR ITS OFFICERS OR AGENTS SHALL NOT BE RESPONSIBLE FOR THE ACCURACY OR COMPLETENESS OF SCANNED COPIES OF THIS PLAN SHEET.

NOTE:

FOR ACCURATE RIGHT OF WAY AND ACCESS DATA,
CONTACT RIGHT OF WAY ENGINEERING AT THE DISTRICT OFFICE.

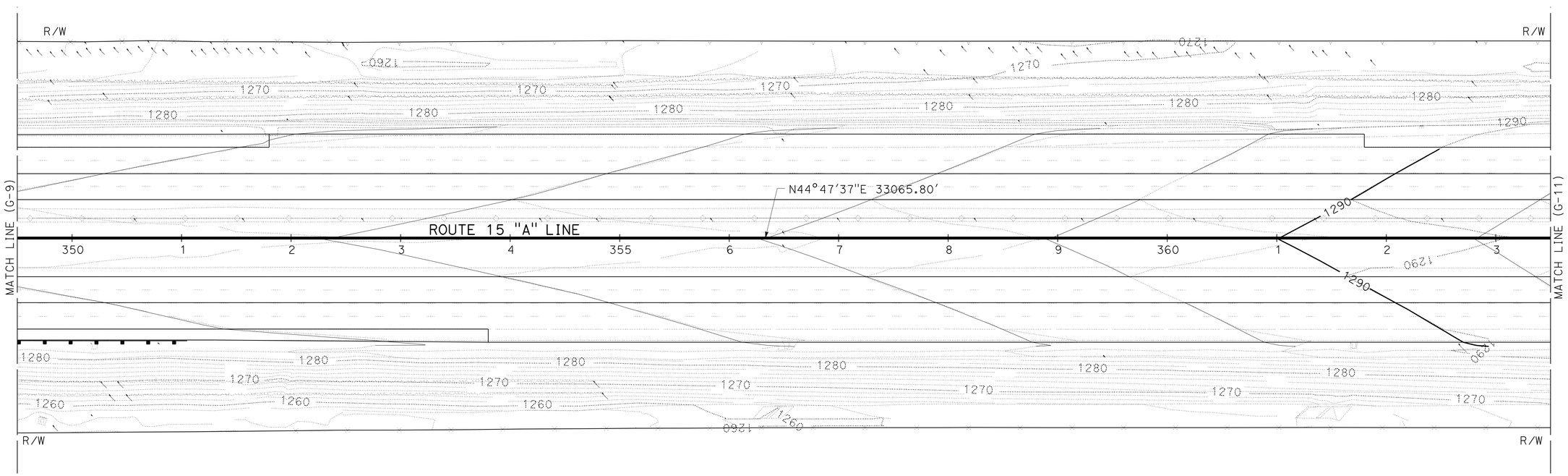

CONTOUR GRADING

SCALE: 1" = 50'

G-10

THIS PLAN ACCURATE FOR CONTOUR GRADING WORK ONLY

STATE OF CALIFORNIA - DEPARTMENT OF TRANSPORTATION
Caltrans
DESIGN

FUNCTIONAL SUPERVISOR: GEORGE MORHIG
CALCULATED-DESIGNED BY: RYAN MITRY
CHECKED BY: AHMAD SHAH
REVISED BY
DATE REVISED

LAST REVISION 05-24-11
DATE PLOTTED => 17-JUN-2011
TIME PLOTTED => 05:27

Dist	COUNTY	ROUTE	POST MILES TOTAL PROJECT	SHEET No.	TOTAL SHEETS
08	SBd	15	3.8/12.8	134	680

REGISTERED CIVIL ENGINEER 5-24-11 DATE

6-13-11
PLANS APPROVAL DATE

REGISTERED PROFESSIONAL ENGINEER
AHMAD SHAH
No. C55259
Exp. 9-30-12
CIVIL
STATE OF CALIFORNIA

THE STATE OF CALIFORNIA OR ITS OFFICERS OR AGENTS SHALL NOT BE RESPONSIBLE FOR THE ACCURACY OR COMPLETENESS OF SCANNED COPIES OF THIS PLAN SHEET.

NOTE:

FOR ACCURATE RIGHT OF WAY AND ACCESS DATA,
CONTACT RIGHT OF WAY ENGINEERING AT THE DISTRICT OFFICE.

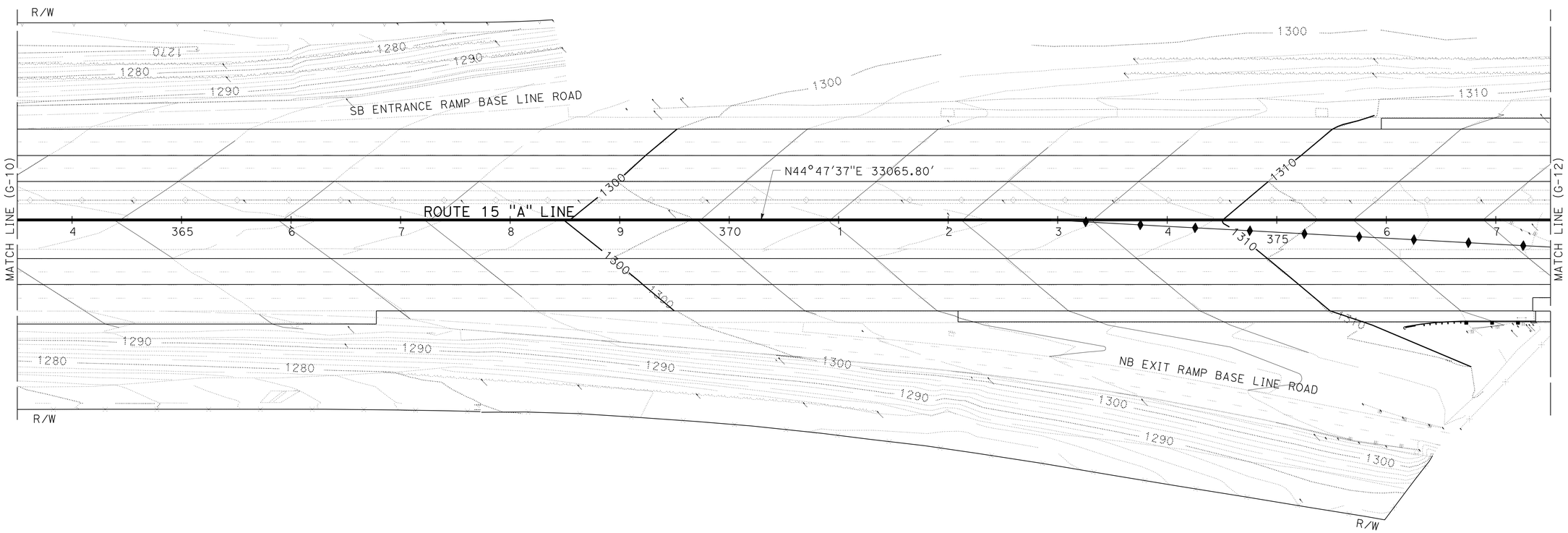

CONTOUR GRADING

SCALE: 1" = 50'

G-11

THIS PLAN ACCURATE FOR CONTOUR GRADING WORK ONLY

STATE OF CALIFORNIA - DEPARTMENT OF TRANSPORTATION
Caltrans
DESIGN

FUNCTIONAL SUPERVISOR: GEORGE MORHIG
CALCULATED-DESIGNED BY: RYAN MITRY
CHECKED BY: AHMAD SHAH
REVISED BY
DATE REVISED

LAST REVISION 05-24-11
DATE PLOTTED => 17-JUN-2011
TIME PLOTTED => 09:28

NOTE:

FOR ACCURATE RIGHT OF WAY AND ACCESS DATA,
CONTACT RIGHT OF WAY ENGINEERING AT THE DISTRICT OFFICE.

Dist	COUNTY	ROUTE	POST MILES TOTAL PROJECT	SHEET No.	TOTAL SHEETS
08	SBd	15	3.8/12.8	135	680

REGISTERED CIVIL ENGINEER 5-24-11 DATE

6-13-11
PLANS APPROVAL DATE

REGISTERED PROFESSIONAL ENGINEER
AHMAD SHAH
No. C55259
Exp. 9-30-12
CIVIL
STATE OF CALIFORNIA

THE STATE OF CALIFORNIA OR ITS OFFICERS OR AGENTS SHALL NOT BE RESPONSIBLE FOR THE ACCURACY OR COMPLETENESS OF SCANNED COPIES OF THIS PLAN SHEET.

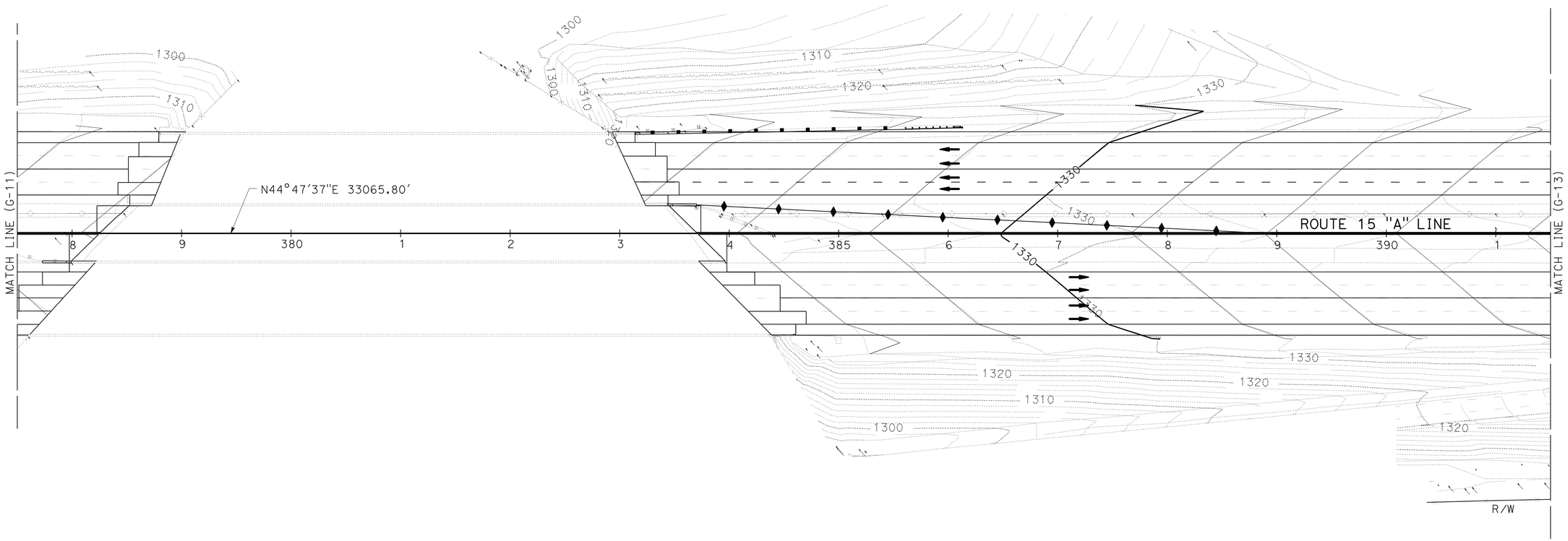

CONTOUR GRADING

SCALE: 1" = 50'

G-12

THIS PLAN ACCURATE FOR CONTOUR GRADING WORK ONLY

REVISED BY | DATE REVISED

RYAN MITRY | AHMAD SHAH

CALCULATED-DESIGNED BY | CHECKED BY

FUNCTIONAL SUPERVISOR: GEORGE MORHIG

STATE OF CALIFORNIA - DEPARTMENT OF TRANSPORTATION

Caltrans

DESIGN

LAST REVISION 05-24-11 | DATE PLOTTED => 17-JUN-2011 | TIME PLOTTED => 05:28

Dist	COUNTY	ROUTE	POST MILES TOTAL PROJECT	SHEET No.	TOTAL SHEETS
08	SBd	15	3.8/12.8	136	680

REGISTERED CIVIL ENGINEER 5-24-11 DATE

6-13-11
PLANS APPROVAL DATE

REGISTERED PROFESSIONAL ENGINEER
AHMAD SHAH
No. C55259
Exp. 9-30-12
CIVIL
STATE OF CALIFORNIA

THE STATE OF CALIFORNIA OR ITS OFFICERS OR AGENTS SHALL NOT BE RESPONSIBLE FOR THE ACCURACY OR COMPLETENESS OF SCANNED COPIES OF THIS PLAN SHEET.

NOTE:

FOR ACCURATE RIGHT OF WAY AND ACCESS DATA,
CONTACT RIGHT OF WAY ENGINEERING AT THE DISTRICT OFFICE.

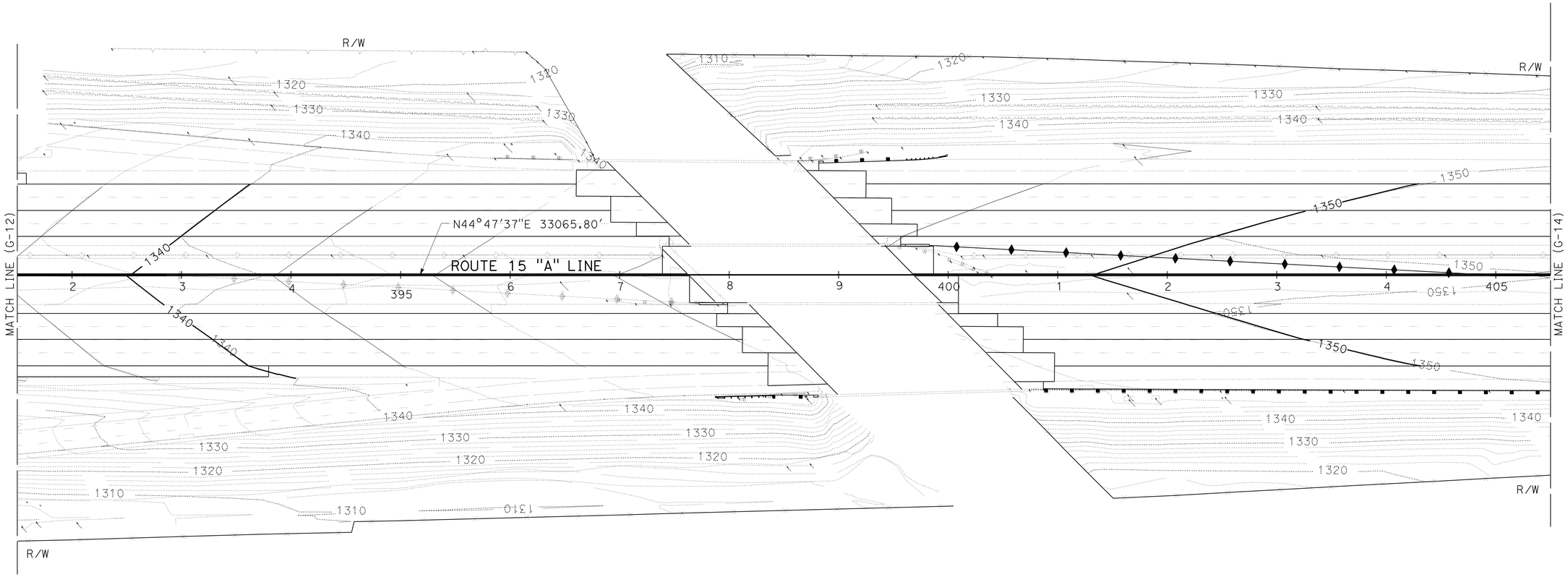

CONTOUR GRADING

SCALE: 1" = 50'

G-13

THIS PLAN ACCURATE FOR CONTOUR GRADING WORK ONLY

STATE OF CALIFORNIA - DEPARTMENT OF TRANSPORTATION
Caltrans
DESIGN

FUNCTIONAL SUPERVISOR: GEORGE MORHIG
CALCULATED-DESIGNED BY: RYAN MITRY
CHECKED BY: AHMAD SHAH
REVISED BY
DATE REVISED

LAST REVISION 05-24-11
DATE PLOTTED => 17-JUN-2011
TIME PLOTTED => 05:28

Dist	COUNTY	ROUTE	POST MILES TOTAL PROJECT	SHEET No.	TOTAL SHEETS
08	SBd	15	3.8/12.8	137	680

REGISTERED CIVIL ENGINEER 5-24-11 DATE

6-13-11
PLANS APPROVAL DATE

REGISTERED PROFESSIONAL ENGINEER
AHMAD SHAH
No. C55259
Exp. 9-30-12
CIVIL
STATE OF CALIFORNIA

THE STATE OF CALIFORNIA OR ITS OFFICERS OR AGENTS SHALL NOT BE RESPONSIBLE FOR THE ACCURACY OR COMPLETENESS OF SCANNED COPIES OF THIS PLAN SHEET.

NOTE:

FOR ACCURATE RIGHT OF WAY AND ACCESS DATA,
CONTACT RIGHT OF WAY ENGINEERING AT THE DISTRICT OFFICE.

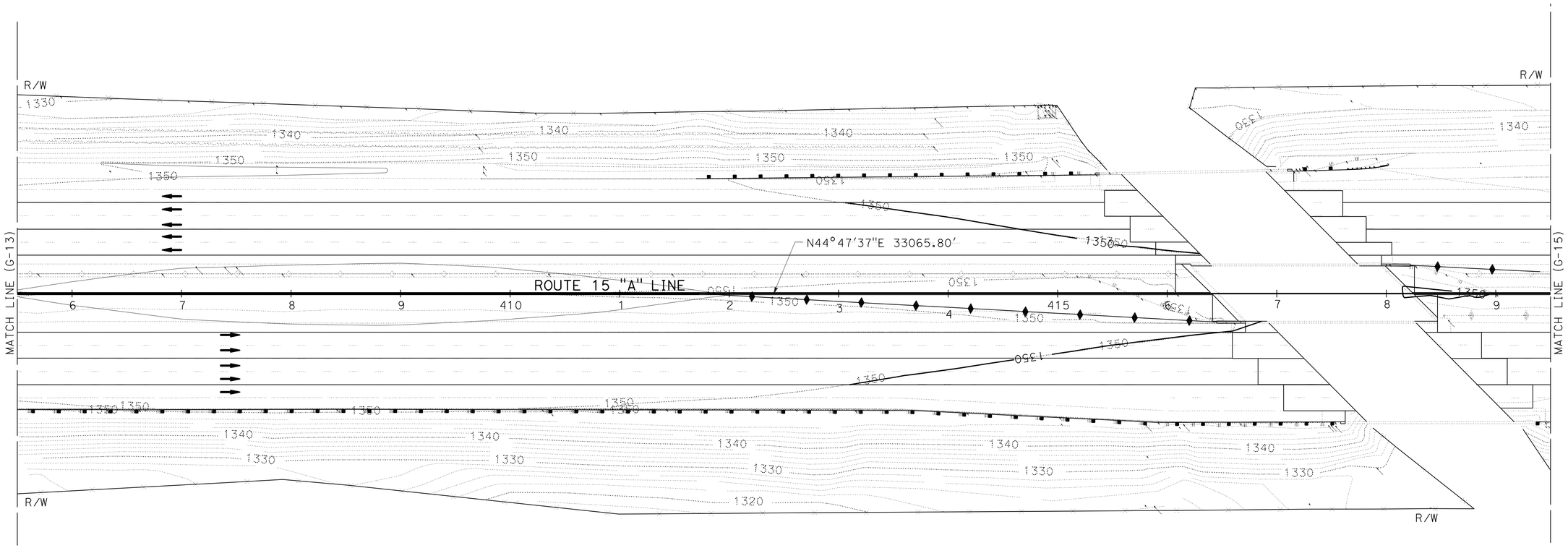

CONTOUR GRADING

SCALE: 1" = 50'

G-14

THIS PLAN ACCURATE FOR CONTOUR GRADING WORK ONLY

REVISED BY | DATE REVISED

RYAN MITRY | AHMAD SHAH

CALCULATED-DESIGNED BY | CHECKED BY

FUNCTIONAL SUPERVISOR: GEORGE MORHIG

STATE OF CALIFORNIA - DEPARTMENT OF TRANSPORTATION

Caltrans

DESIGN

LAST REVISION 05-24-11 | DATE PLOTTED => 17-JUN-2011 | TIME PLOTTED => 05:28

Dist	COUNTY	ROUTE	POST MILES TOTAL PROJECT	SHEET No.	TOTAL SHEETS
08	SBd	15	3.8/12.8	138	680

REGISTERED CIVIL ENGINEER 5-24-11 DATE

6-13-11
PLANS APPROVAL DATE

REGISTERED PROFESSIONAL ENGINEER
AHMAD SHAH
No. C55259
Exp. 9-30-12
CIVIL
STATE OF CALIFORNIA

THE STATE OF CALIFORNIA OR ITS OFFICERS OR AGENTS SHALL NOT BE RESPONSIBLE FOR THE ACCURACY OR COMPLETENESS OF SCANNED COPIES OF THIS PLAN SHEET.

NOTE:

FOR ACCURATE RIGHT OF WAY AND ACCESS DATA,
CONTACT RIGHT OF WAY ENGINEERING AT THE DISTRICT OFFICE.

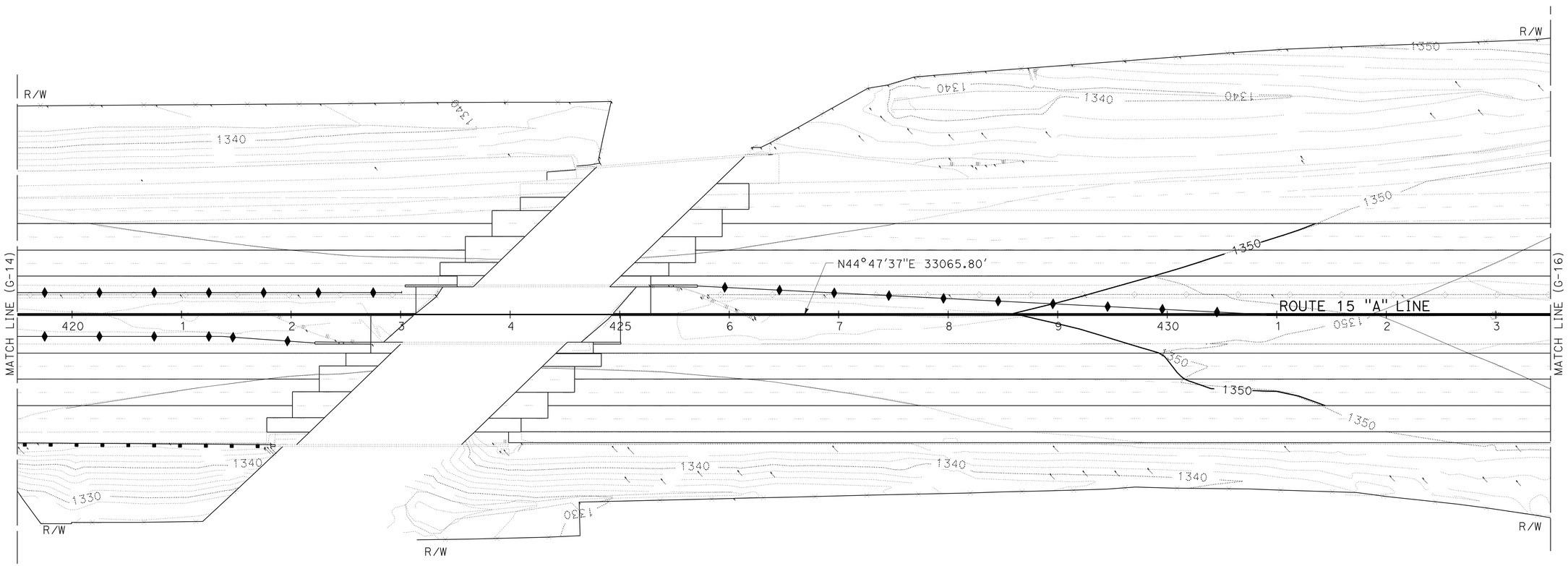

CONTOUR GRADING

SCALE: 1" = 50'

G-15

THIS PLAN ACCURATE FOR CONTOUR GRADING WORK ONLY

STATE OF CALIFORNIA - DEPARTMENT OF TRANSPORTATION
Caltrans
DESIGN

FUNCTIONAL SUPERVISOR: GEORGE MORHIG
CALCULATED-DESIGNED BY: RYAN MITRY
CHECKED BY: AHMAD SHAH
REVISED BY
DATE REVISED

LAST REVISION 05-24-11
DATE PLOTTED => 17-JUN-2011
TIME PLOTTED => 09:28

Dist	COUNTY	ROUTE	POST MILES TOTAL PROJECT	SHEET No.	TOTAL SHEETS
08	SBd	15	3.8/12.8	139	680

REGISTERED CIVIL ENGINEER 5-24-11 DATE

6-13-11
PLANS APPROVAL DATE

REGISTERED PROFESSIONAL ENGINEER
AHMAD SHAH
No. C55259
Exp. 9-30-12
CIVIL
STATE OF CALIFORNIA

THE STATE OF CALIFORNIA OR ITS OFFICERS OR AGENTS SHALL NOT BE RESPONSIBLE FOR THE ACCURACY OR COMPLETENESS OF SCANNED COPIES OF THIS PLAN SHEET.

NOTE:

FOR ACCURATE RIGHT OF WAY AND ACCESS DATA,
CONTACT RIGHT OF WAY ENGINEERING AT THE DISTRICT OFFICE.

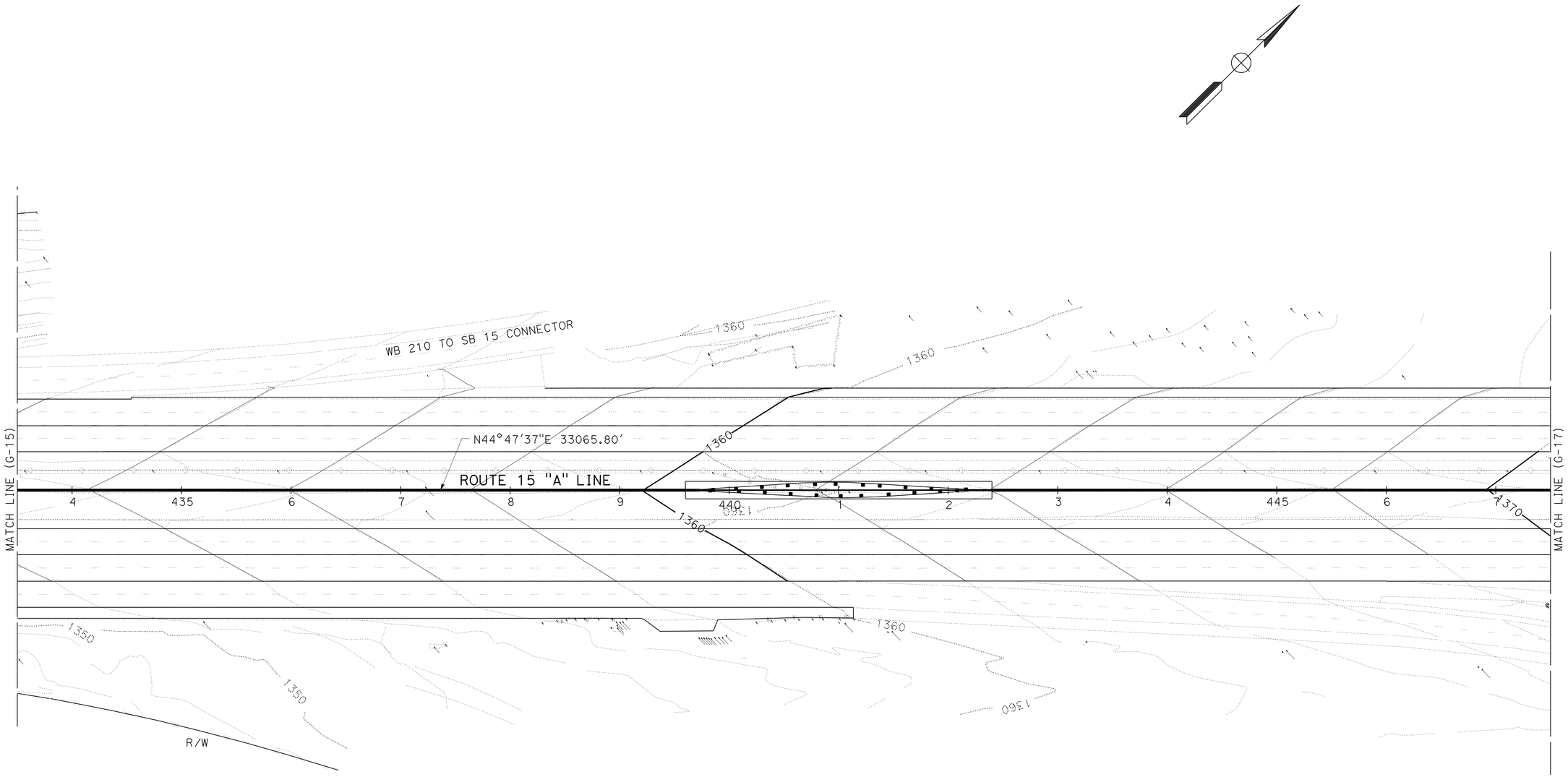

CONTOUR GRADING

SCALE: 1" = 50'

G-16

THIS PLAN ACCURATE FOR CONTOUR GRADING WORK ONLY

STATE OF CALIFORNIA - DEPARTMENT OF TRANSPORTATION
Caltrans
DESIGN

FUNCTIONAL SUPERVISOR: GEORGE MORHIG
CALCULATED-DESIGNED BY: RYAN MITRY
CHECKED BY: AHMAD SHAH
REVISED BY
DATE REVISED

LAST REVISION 05-24-11
DATE PLOTTED => 17-JUN-2011
TIME PLOTTED => 05:28

Dist	COUNTY	ROUTE	POST MILES TOTAL PROJECT	SHEET No.	TOTAL SHEETS
08	SBd	15	3.8/12.8	140	680

REGISTERED CIVIL ENGINEER 5-24-11 DATE

6-13-11
PLANS APPROVAL DATE

REGISTERED PROFESSIONAL ENGINEER
AHMAD SHAH
No. C55259
Exp. 9-30-12
CIVIL
STATE OF CALIFORNIA

THE STATE OF CALIFORNIA OR ITS OFFICERS OR AGENTS SHALL NOT BE RESPONSIBLE FOR THE ACCURACY OR COMPLETENESS OF SCANNED COPIES OF THIS PLAN SHEET.

NOTE:

FOR ACCURATE RIGHT OF WAY AND ACCESS DATA,
CONTACT RIGHT OF WAY ENGINEERING AT THE DISTRICT OFFICE.

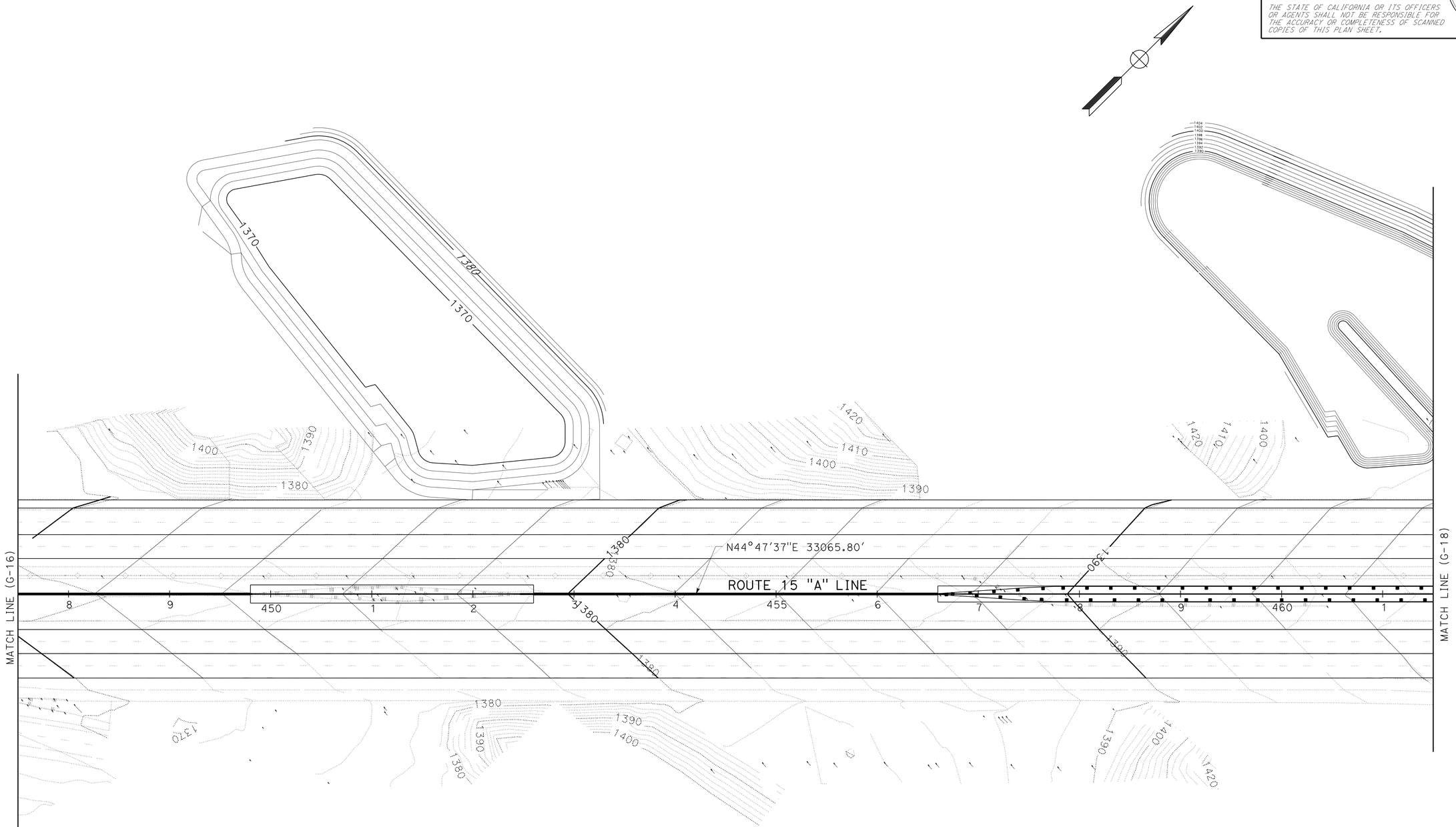

CONTOUR GRADING

SCALE: 1" = 50'

G-17

THIS PLAN ACCURATE FOR CONTOUR GRADING WORK ONLY

STATE OF CALIFORNIA - DEPARTMENT OF TRANSPORTATION
Caltrans
DESIGN

FUNCTIONAL SUPERVISOR: GEORGE MORHIG

CALCULATED-DESIGNED BY: RYAN MITRY
CHECKED BY: AHMAD SHAH

REVISED BY
DATE REVISED

LAST REVISION 05-24-11
DATE PLOTTED => 17-JUN-2011
TIME PLOTTED => 05:28

Dist	COUNTY	ROUTE	POST MILES TOTAL PROJECT	SHEET No.	TOTAL SHEETS
08	SBd	15	3.8/12.8	141	680

REGISTERED CIVIL ENGINEER 5-24-11 DATE

6-13-11
PLANS APPROVAL DATE

REGISTERED PROFESSIONAL ENGINEER
AHMAD SHAH
No. C55259
Exp. 9-30-12
CIVIL
STATE OF CALIFORNIA

THE STATE OF CALIFORNIA OR ITS OFFICERS OR AGENTS SHALL NOT BE RESPONSIBLE FOR THE ACCURACY OR COMPLETENESS OF SCANNED COPIES OF THIS PLAN SHEET.

NOTE:

FOR ACCURATE RIGHT OF WAY AND ACCESS DATA,
CONTACT RIGHT OF WAY ENGINEERING AT THE DISTRICT OFFICE.

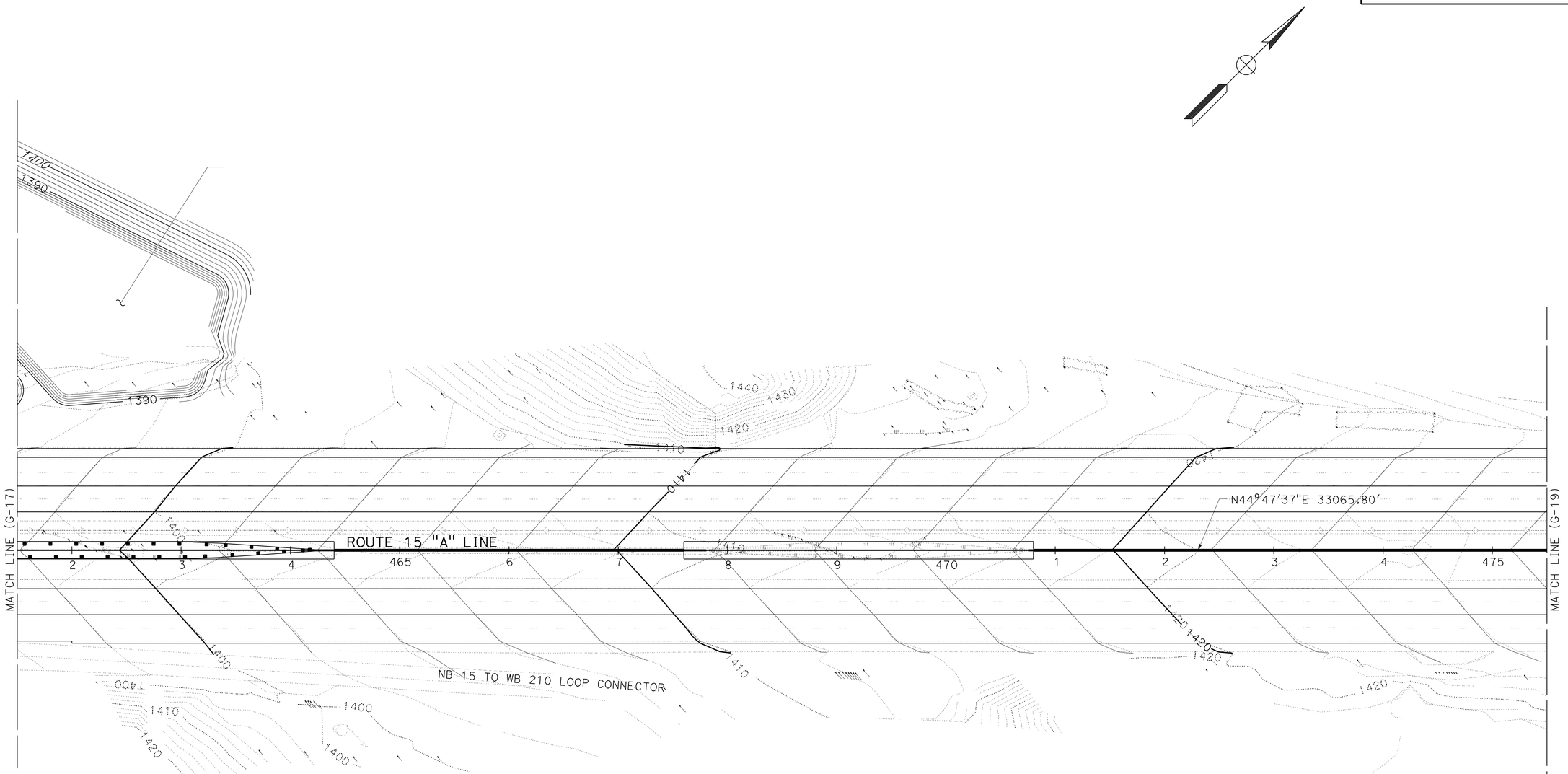

CONTOUR GRADING

SCALE: 1" = 50'

G-18

THIS PLAN ACCURATE FOR CONTOUR GRADING WORK ONLY

STATE OF CALIFORNIA - DEPARTMENT OF TRANSPORTATION
Caltrans
DESIGN

FUNCTIONAL SUPERVISOR: GEORGE MORHIG
CALCULATED-DESIGNED BY: RYAN MITRY
CHECKED BY: AHMAD SHAH
REVISED BY
DATE REVISED

LAST REVISION 05-24-11
DATE PLOTTED => 17-JUN-2011
TIME PLOTTED => 05:28

Dist	COUNTY	ROUTE	POST MILES TOTAL PROJECT	SHEET No.	TOTAL SHEETS
08	SBd	15	3.8/12.8	142	680

REGISTERED CIVIL ENGINEER 5-24-11 DATE

6-13-11
PLANS APPROVAL DATE

REGISTERED PROFESSIONAL ENGINEER
AHMAD SHAH
No. C55259
Exp. 9-30-12
CIVIL
STATE OF CALIFORNIA

THE STATE OF CALIFORNIA OR ITS OFFICERS OR AGENTS SHALL NOT BE RESPONSIBLE FOR THE ACCURACY OR COMPLETENESS OF SCANNED COPIES OF THIS PLAN SHEET.

NOTE:

FOR ACCURATE RIGHT OF WAY AND ACCESS DATA,
CONTACT RIGHT OF WAY ENGINEERING AT THE DISTRICT OFFICE.

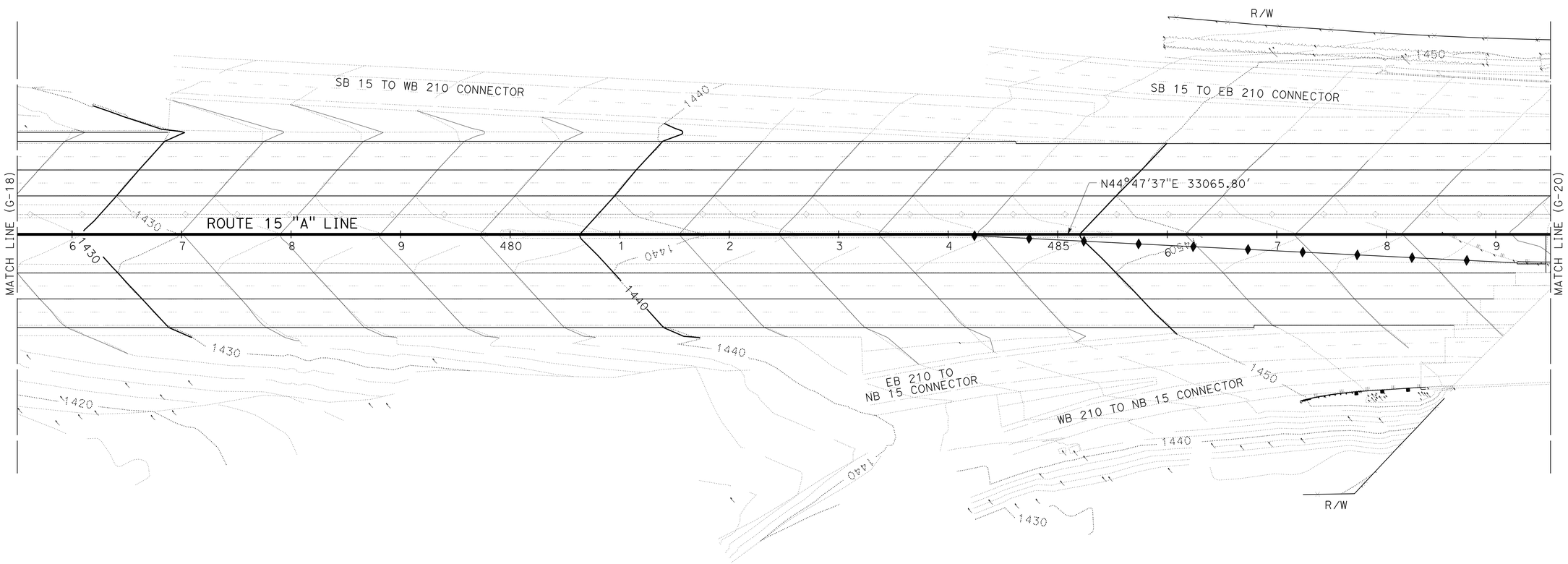

CONTOUR GRADING

SCALE: 1" = 50'

G-19

THIS PLAN ACCURATE FOR CONTOUR GRADING WORK ONLY

STATE OF CALIFORNIA - DEPARTMENT OF TRANSPORTATION
Caltrans® DESIGN

FUNCTIONAL SUPERVISOR: GEORGE MORHIG
CALCULATED-DESIGNED BY: RYAN MITRY
CHECKED BY: AHMAD SHAH
REVISED BY
DATE REVISED

LAST REVISION 05-24-11
DATE PLOTTED => 17-JUN-2011
TIME PLOTTED => 05:28

Dist	COUNTY	ROUTE	POST MILES TOTAL PROJECT	SHEET No.	TOTAL SHEETS
08	SBd	15	3.8/12.8	143	680

REGISTERED CIVIL ENGINEER 5-24-11 DATE

6-13-11
PLANS APPROVAL DATE

REGISTERED PROFESSIONAL ENGINEER
AHMAD SHAH
No. C55259
Exp. 9-30-12
CIVIL
STATE OF CALIFORNIA

THE STATE OF CALIFORNIA OR ITS OFFICERS OR AGENTS SHALL NOT BE RESPONSIBLE FOR THE ACCURACY OR COMPLETENESS OF SCANNED COPIES OF THIS PLAN SHEET.

NOTE:

FOR ACCURATE RIGHT OF WAY AND ACCESS DATA,
CONTACT RIGHT OF WAY ENGINEERING AT THE DISTRICT OFFICE.

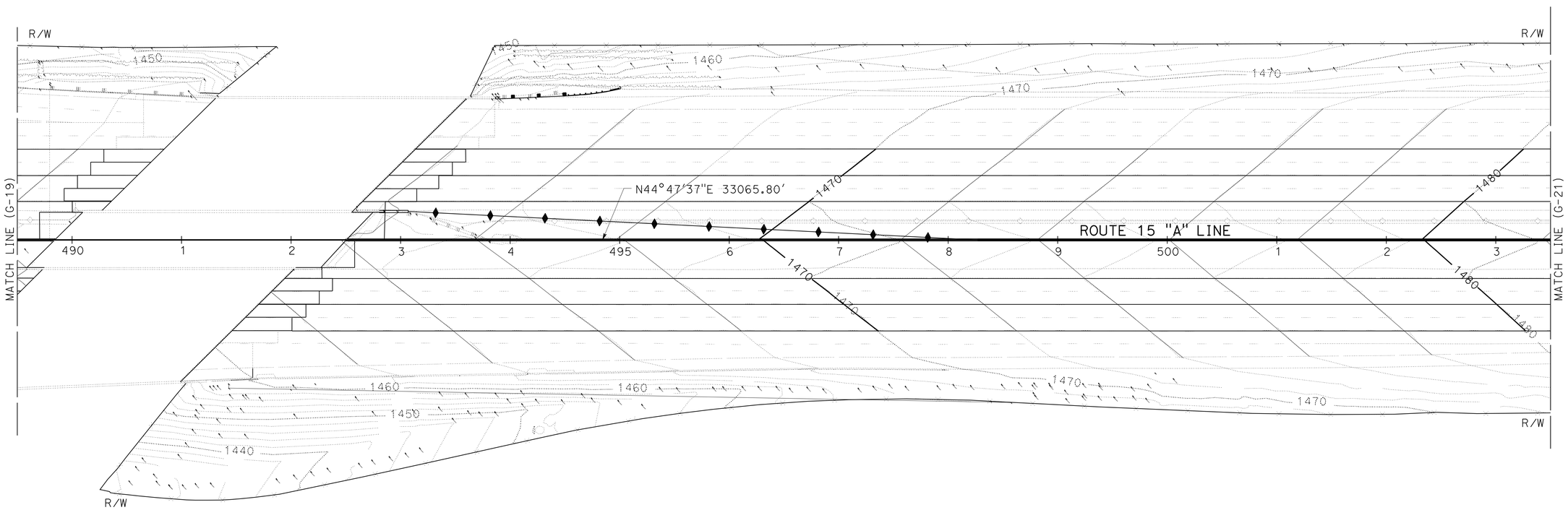

CONTOUR GRADING

SCALE: 1" = 50'

G-20

THIS PLAN ACCURATE FOR CONTOUR GRADING WORK ONLY

STATE OF CALIFORNIA - DEPARTMENT OF TRANSPORTATION
Caltrans
DESIGN

FUNCTIONAL SUPERVISOR: GEORGE MORHIG
CALCULATED-DESIGNED BY: RYAN MITRY
CHECKED BY: AHMAD SHAH
REVISED BY
DATE REVISED

LAST REVISION 05-24-11
DATE PLOTTED => 17-JUN-2011
TIME PLOTTED => 05:28

Dist	COUNTY	ROUTE	POST MILES TOTAL PROJECT	SHEET No.	TOTAL SHEETS
08	SBd	15	3.8/12.8	144	680

REGISTERED CIVIL ENGINEER 5-24-11 DATE

6-13-11
PLANS APPROVAL DATE

REGISTERED PROFESSIONAL ENGINEER
AHMAD SHAH
No. C55259
Exp. 9-30-12
CIVIL
STATE OF CALIFORNIA

THE STATE OF CALIFORNIA OR ITS OFFICERS OR AGENTS SHALL NOT BE RESPONSIBLE FOR THE ACCURACY OR COMPLETENESS OF SCANNED COPIES OF THIS PLAN SHEET.

NOTE:

FOR ACCURATE RIGHT OF WAY AND ACCESS DATA,
CONTACT RIGHT OF WAY ENGINEERING AT THE DISTRICT OFFICE.

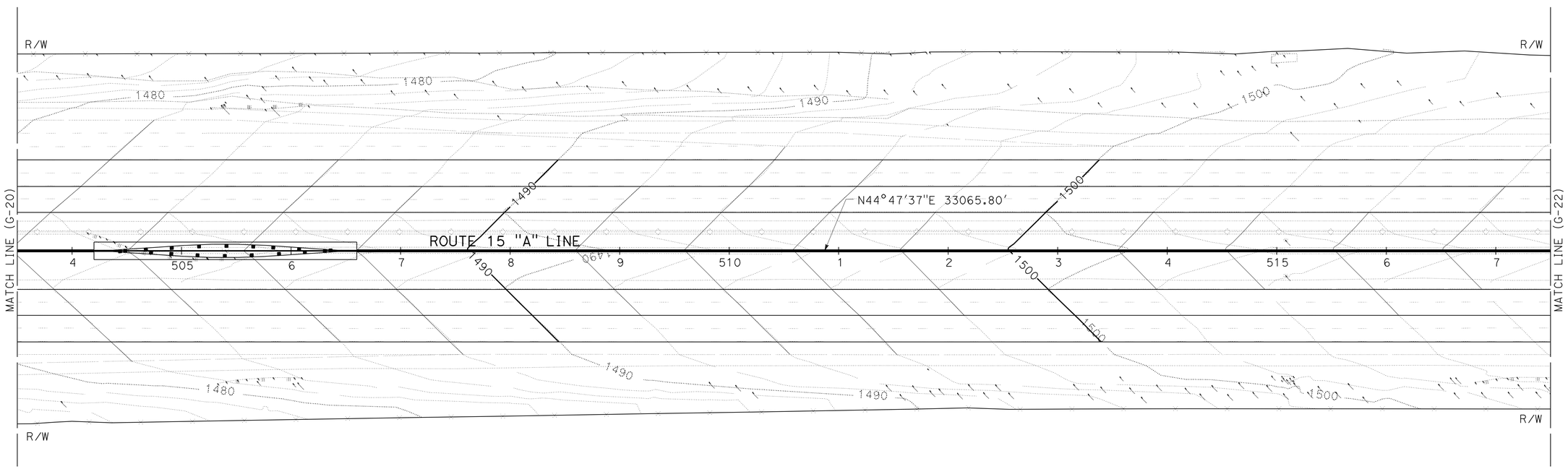

CONTOUR GRADING

SCALE: 1" = 50'

G-21

THIS PLAN ACCURATE FOR CONTOUR GRADING WORK ONLY

STATE OF CALIFORNIA - DEPARTMENT OF TRANSPORTATION
Caltrans
DESIGN

FUNCTIONAL SUPERVISOR: GEORGE MORHIG
CALCULATED-DESIGNED BY: RYAN MITRY
CHECKED BY: AHMAD SHAH
REVISED BY
DATE REVISED

LAST REVISION 05-24-11
DATE PLOTTED => 17-JUN-2011
TIME PLOTTED => 09:29

Dist	COUNTY	ROUTE	POST MILES TOTAL PROJECT	SHEET No.	TOTAL SHEETS
08	SBd	15	3.8/12.8	145	680

REGISTERED CIVIL ENGINEER 5-24-11 DATE

6-13-11
PLANS APPROVAL DATE

REGISTERED PROFESSIONAL ENGINEER
AHMAD SHAH
No. C55259
Exp. 9-30-12
CIVIL
STATE OF CALIFORNIA

THE STATE OF CALIFORNIA OR ITS OFFICERS OR AGENTS SHALL NOT BE RESPONSIBLE FOR THE ACCURACY OR COMPLETENESS OF SCANNED COPIES OF THIS PLAN SHEET.

NOTE:

FOR ACCURATE RIGHT OF WAY AND ACCESS DATA,
CONTACT RIGHT OF WAY ENGINEERING AT THE DISTRICT OFFICE.

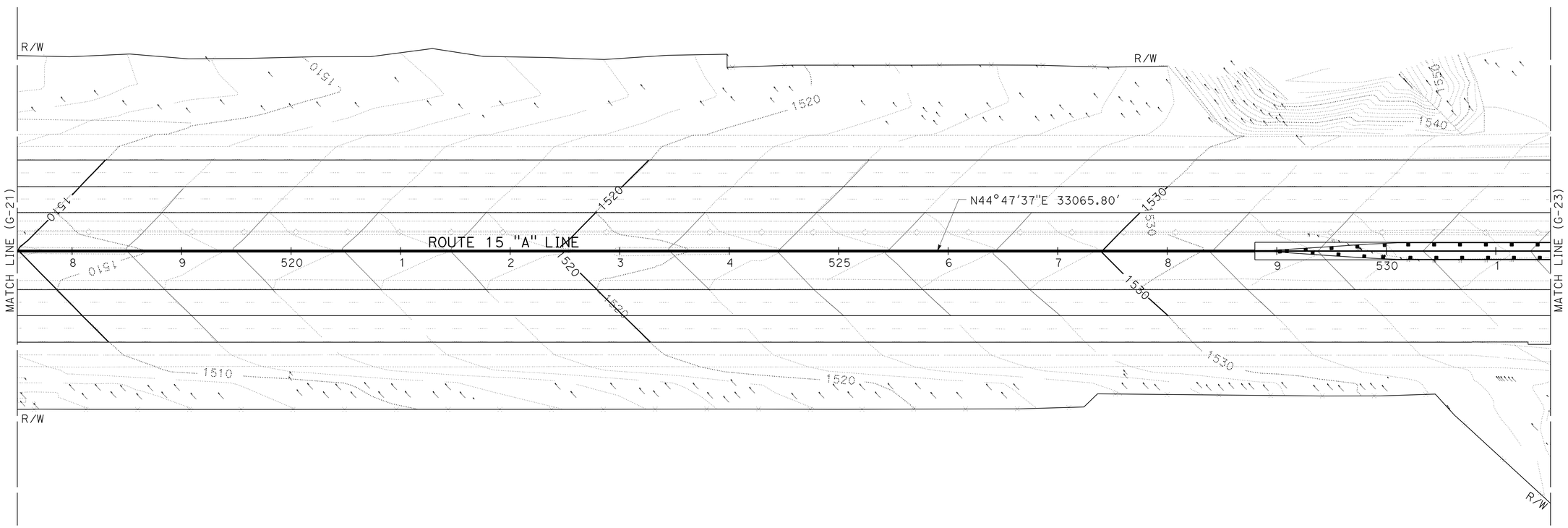

CONTOUR GRADING

SCALE: 1" = 50'

G-22

THIS PLAN ACCURATE FOR CONTOUR GRADING WORK ONLY

STATE OF CALIFORNIA - DEPARTMENT OF TRANSPORTATION
Caltrans
DESIGN

FUNCTIONAL SUPERVISOR: GEORGE MORHIG
CALCULATED-DESIGNED BY: RYAN MITRY
CHECKED BY: AHMAD SHAH
REVISED BY
DATE REVISED

LAST REVISION 05-24-11
DATE PLOTTED => 17-JUN-2011
TIME PLOTTED => 05:29

Dist	COUNTY	ROUTE	POST MILES TOTAL PROJECT	SHEET No.	TOTAL SHEETS
08	SBd	15	3.8/12.8	146	680

REGISTERED CIVIL ENGINEER 5-24-11 DATE

6-13-11
PLANS APPROVAL DATE

REGISTERED PROFESSIONAL ENGINEER
AHMAD SHAH
No. C55259
Exp. 9-30-12
CIVIL
STATE OF CALIFORNIA

THE STATE OF CALIFORNIA OR ITS OFFICERS OR AGENTS SHALL NOT BE RESPONSIBLE FOR THE ACCURACY OR COMPLETENESS OF SCANNED COPIES OF THIS PLAN SHEET.

NOTE:

FOR ACCURATE RIGHT OF WAY AND ACCESS DATA,
CONTACT RIGHT OF WAY ENGINEERING AT THE DISTRICT OFFICE.

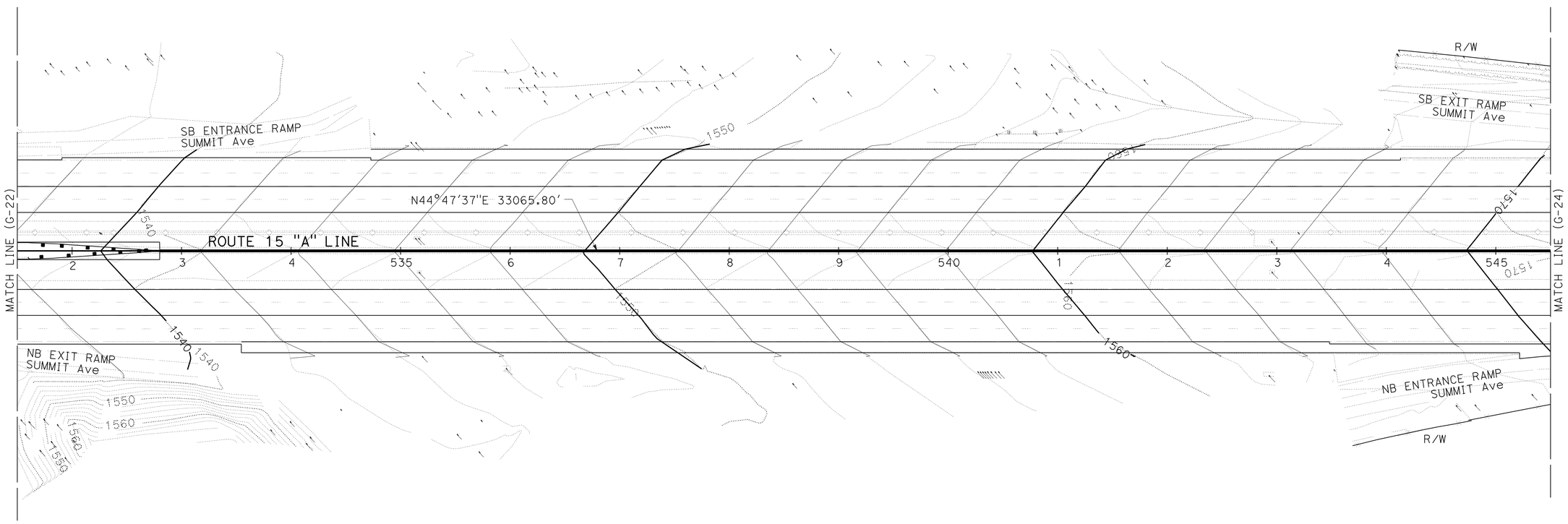

CONTOUR GRADING

SCALE: 1" = 50'

G-23

THIS PLAN ACCURATE FOR CONTOUR GRADING WORK ONLY

STATE OF CALIFORNIA - DEPARTMENT OF TRANSPORTATION
Caltrans
DESIGN

FUNCTIONAL SUPERVISOR: GEORGE MORHIG
CALCULATED-DESIGNED BY: RYAN MITRY
CHECKED BY: AHMAD SHAH
REVISED BY
DATE REVISED

LAST REVISION 05-24-11
DATE PLOTTED => 17-JUN-2011
TIME PLOTTED => 05:29

Dist	COUNTY	ROUTE	POST MILES TOTAL PROJECT	SHEET No.	TOTAL SHEETS
08	SBd	15	3.8/12.8	147	680

REGISTERED CIVIL ENGINEER 5-24-11 DATE

6-13-11
PLANS APPROVAL DATE

REGISTERED PROFESSIONAL ENGINEER
AHMAD SHAH
No. C55259
Exp. 9-30-12
CIVIL
STATE OF CALIFORNIA

THE STATE OF CALIFORNIA OR ITS OFFICERS OR AGENTS SHALL NOT BE RESPONSIBLE FOR THE ACCURACY OR COMPLETENESS OF SCANNED COPIES OF THIS PLAN SHEET.

NOTE:

FOR ACCURATE RIGHT OF WAY AND ACCESS DATA,
CONTACT RIGHT OF WAY ENGINEERING AT THE DISTRICT OFFICE.

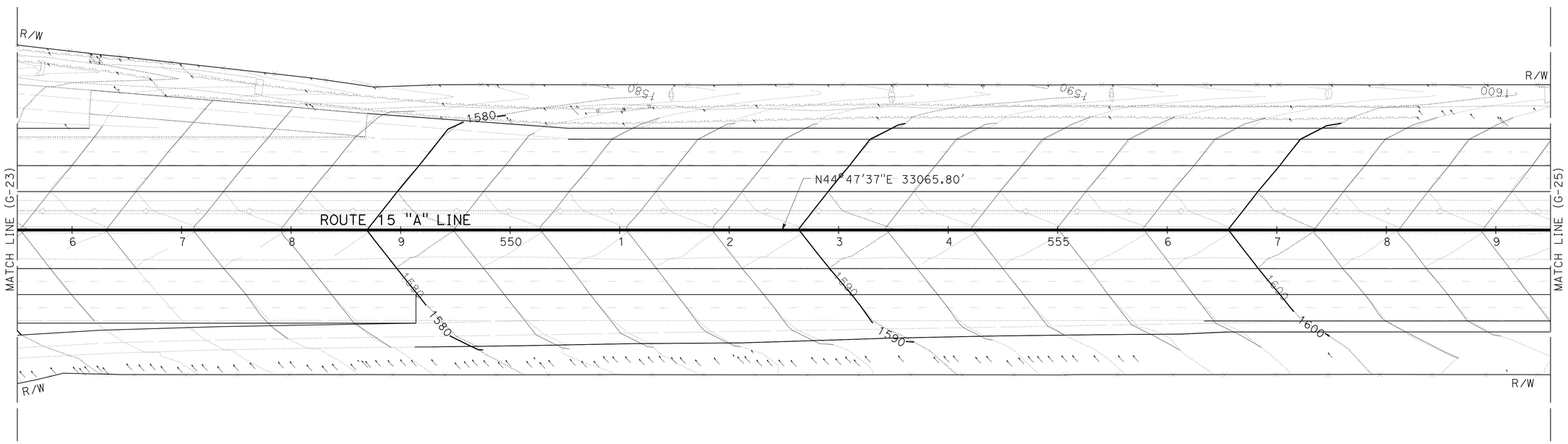

CONTOUR GRADING

SCALE: 1" = 50'

G-24

THIS PLAN ACCURATE FOR CONTOUR GRADING WORK ONLY

REVISED BY | DATE REVISED
RYAN MITRY | AHMAD SHAH
CALCULATED-DESIGNED BY | CHECKED BY
FUNCTIONAL SUPERVISOR
GEORGE MORHIG

STATE OF CALIFORNIA - DEPARTMENT OF TRANSPORTATION
Caltrans
DESIGN

LAST REVISION 05-24-11
DATE PLOTTED => 17-JUN-2011
TIME PLOTTED => 09:29

Dist	COUNTY	ROUTE	POST MILES TOTAL PROJECT	SHEET No.	TOTAL SHEETS
08	SBd	15	3.8/12.8	148	680

REGISTERED CIVIL ENGINEER 5-24-11 DATE

6-13-11
PLANS APPROVAL DATE

REGISTERED PROFESSIONAL ENGINEER
AHMAD SHAH
No. C55259
Exp. 9-30-12
CIVIL
STATE OF CALIFORNIA

THE STATE OF CALIFORNIA OR ITS OFFICERS OR AGENTS SHALL NOT BE RESPONSIBLE FOR THE ACCURACY OR COMPLETENESS OF SCANNED COPIES OF THIS PLAN SHEET.

NOTE:

FOR ACCURATE RIGHT OF WAY AND ACCESS DATA,
CONTACT RIGHT OF WAY ENGINEERING AT THE DISTRICT OFFICE.

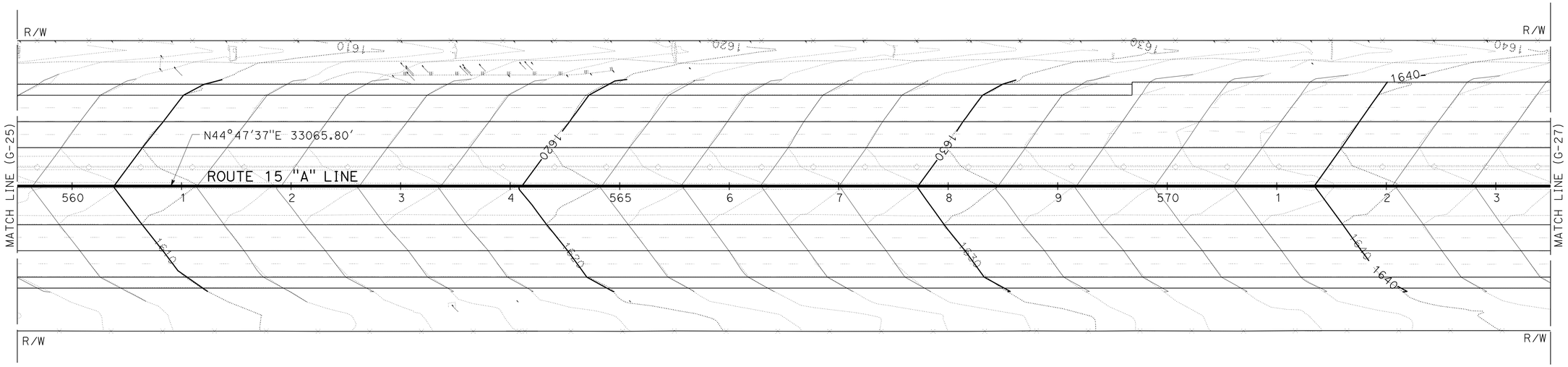

CONTOUR GRADING

SCALE: 1" = 50'

G-25

THIS PLAN ACCURATE FOR CONTOUR GRADING WORK ONLY

STATE OF CALIFORNIA - DEPARTMENT OF TRANSPORTATION
Caltrans
DESIGN

FUNCTIONAL SUPERVISOR: GEORGE MORHIG
CALCULATED-DESIGNED BY: RYAN MITRY
CHECKED BY: AHMAD SHAH
REVISED BY
DATE REVISED

LAST REVISION 05-24-11
DATE PLOTTED => 17-JUN-2011
TIME PLOTTED => 09:29

Dist	COUNTY	ROUTE	POST MILES TOTAL PROJECT	SHEET No.	TOTAL SHEETS
08	SBd	15	3.8/12.8	149	680

REGISTERED CIVIL ENGINEER 5-24-11 DATE

6-13-11
PLANS APPROVAL DATE

REGISTERED PROFESSIONAL ENGINEER
AHMAD SHAH
No. C55259
Exp. 9-30-12
CIVIL
STATE OF CALIFORNIA

THE STATE OF CALIFORNIA OR ITS OFFICERS OR AGENTS SHALL NOT BE RESPONSIBLE FOR THE ACCURACY OR COMPLETENESS OF SCANNED COPIES OF THIS PLAN SHEET.

NOTE:

FOR ACCURATE RIGHT OF WAY AND ACCESS DATA,
CONTACT RIGHT OF WAY ENGINEERING AT THE DISTRICT OFFICE.

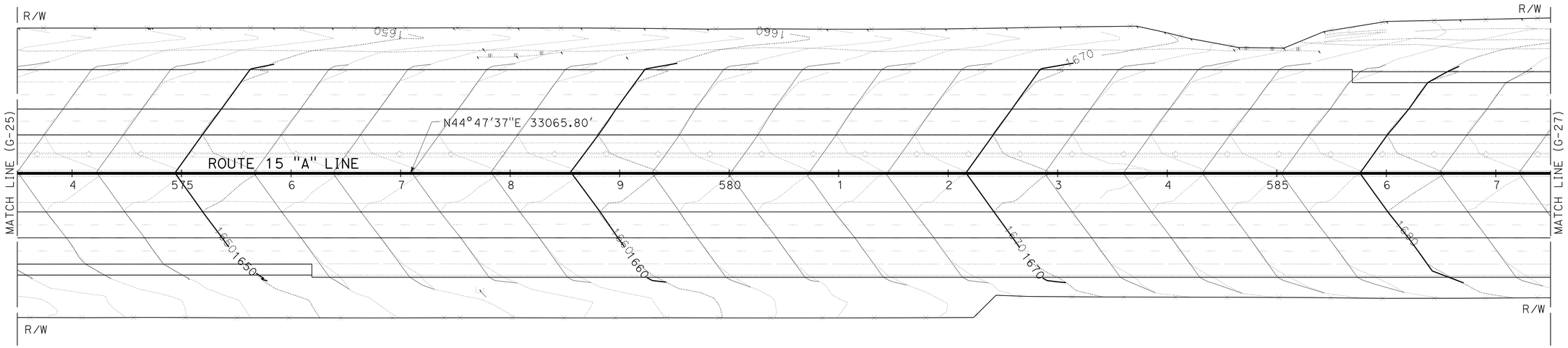

CONTOUR GRADING

SCALE: 1" = 50'

G-26

THIS PLAN ACCURATE FOR CONTOUR GRADING WORK ONLY

STATE OF CALIFORNIA - DEPARTMENT OF TRANSPORTATION
Caltrans
DESIGN

FUNCTIONAL SUPERVISOR: GEORGE MORHIG
CALCULATED-DESIGNED BY: RYAN MITRY
CHECKED BY: AHMAD SHAH
REVISED BY
DATE REVISED

LAST REVISION 05-24-11
DATE PLOTTED => 17-JUN-2011
TIME PLOTTED => 05:29

Dist	COUNTY	ROUTE	POST MILES TOTAL PROJECT	SHEET No.	TOTAL SHEETS
08	SBd	15	3.8/12.8	150	680

REGISTERED CIVIL ENGINEER 5-24-11 DATE

6-13-11
PLANS APPROVAL DATE

REGISTERED PROFESSIONAL ENGINEER
AHMAD SHAH
No. C55259
Exp. 9-30-12
CIVIL
STATE OF CALIFORNIA

THE STATE OF CALIFORNIA OR ITS OFFICERS OR AGENTS SHALL NOT BE RESPONSIBLE FOR THE ACCURACY OR COMPLETENESS OF SCANNED COPIES OF THIS PLAN SHEET.

NOTE:

FOR ACCURATE RIGHT OF WAY AND ACCESS DATA,
CONTACT RIGHT OF WAY ENGINEERING AT THE DISTRICT OFFICE.

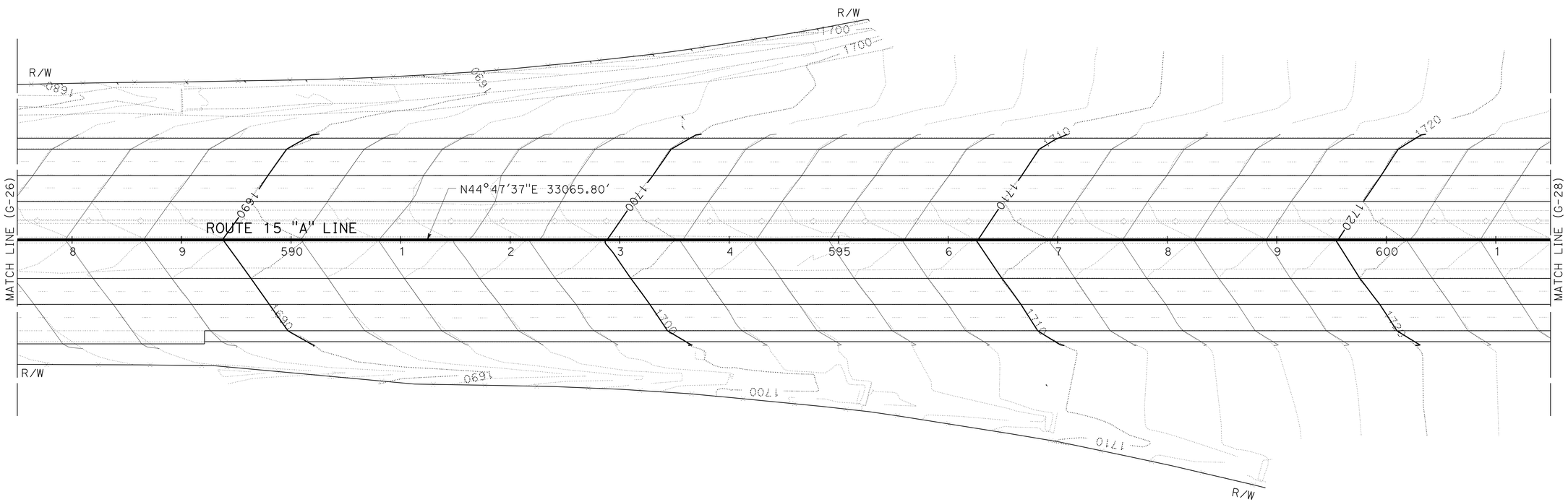

CONTOUR GRADING

SCALE: 1" = 50'

G-27

THIS PLAN ACCURATE FOR CONTOUR GRADING WORK ONLY

STATE OF CALIFORNIA - DEPARTMENT OF TRANSPORTATION
Caltrans
DESIGN

FUNCTIONAL SUPERVISOR: GEORGE MORHIG
CALCULATED-DESIGNED BY: RYAN MITRY
CHECKED BY: AHMAD SHAH
REVISED BY
DATE REVISED

LAST REVISION 05-24-11
DATE PLOTTED => 17-JUN-2011
TIME PLOTTED => 09:29

Dist	COUNTY	ROUTE	POST MILES TOTAL PROJECT	SHEET No.	TOTAL SHEETS
08	SBd	15	3.8/12.8	151	680

REGISTERED CIVIL ENGINEER 5-24-11 DATE

6-13-11
PLANS APPROVAL DATE

REGISTERED PROFESSIONAL ENGINEER
AHMAD SHAH
No. C55259
Exp. 9-30-12
CIVIL
STATE OF CALIFORNIA

THE STATE OF CALIFORNIA OR ITS OFFICERS OR AGENTS SHALL NOT BE RESPONSIBLE FOR THE ACCURACY OR COMPLETENESS OF SCANNED COPIES OF THIS PLAN SHEET.

NOTE:

FOR ACCURATE RIGHT OF WAY AND ACCESS DATA,
CONTACT RIGHT OF WAY ENGINEERING AT THE DISTRICT OFFICE.

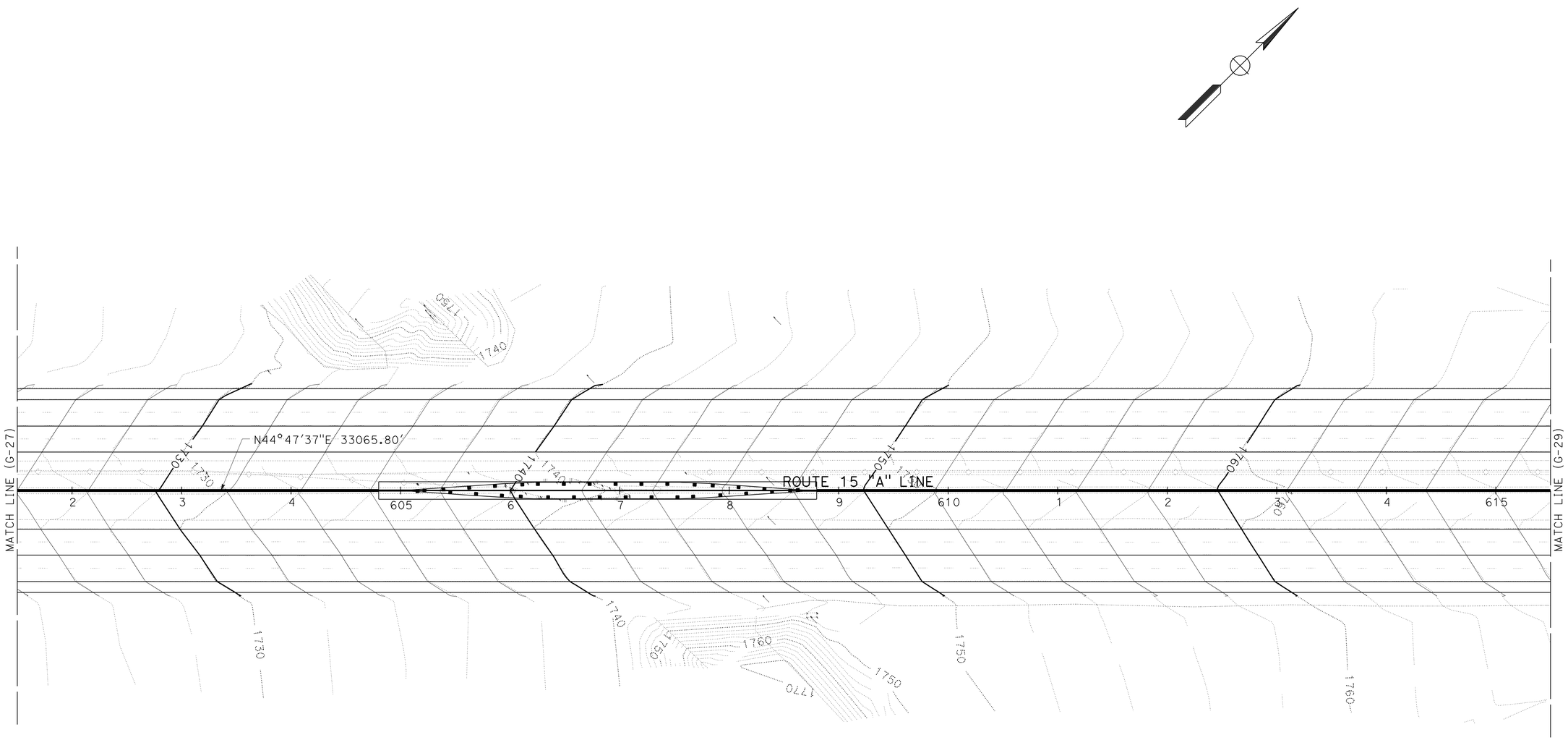

CONTOUR GRADING

SCALE: 1" = 50'

G-28

THIS PLAN ACCURATE FOR CONTOUR GRADING WORK ONLY

STATE OF CALIFORNIA - DEPARTMENT OF TRANSPORTATION
Caltrans
DESIGN

FUNCTIONAL SUPERVISOR: GEORGE MORHIG
CALCULATED-DESIGNED BY: RYAN MITRY
CHECKED BY: AHMAD SHAH
REVISED BY
DATE REVISED

LAST REVISION 05-24-11
DATE PLOTTED => 17-JUN-2011
TIME PLOTTED => 05:29

Dist	COUNTY	ROUTE	POST MILES TOTAL PROJECT	SHEET No.	TOTAL SHEETS
08	SBd	15	3.8/12.8	152	680

REGISTERED CIVIL ENGINEER 5-24-11 DATE

6-13-11
PLANS APPROVAL DATE

REGISTERED PROFESSIONAL ENGINEER
AHMAD SHAH
No. C55259
Exp. 9-30-12
CIVIL
STATE OF CALIFORNIA

THE STATE OF CALIFORNIA OR ITS OFFICERS OR AGENTS SHALL NOT BE RESPONSIBLE FOR THE ACCURACY OR COMPLETENESS OF SCANNED COPIES OF THIS PLAN SHEET.

NOTE:

FOR ACCURATE RIGHT OF WAY AND ACCESS DATA,
CONTACT RIGHT OF WAY ENGINEERING AT THE DISTRICT OFFICE.

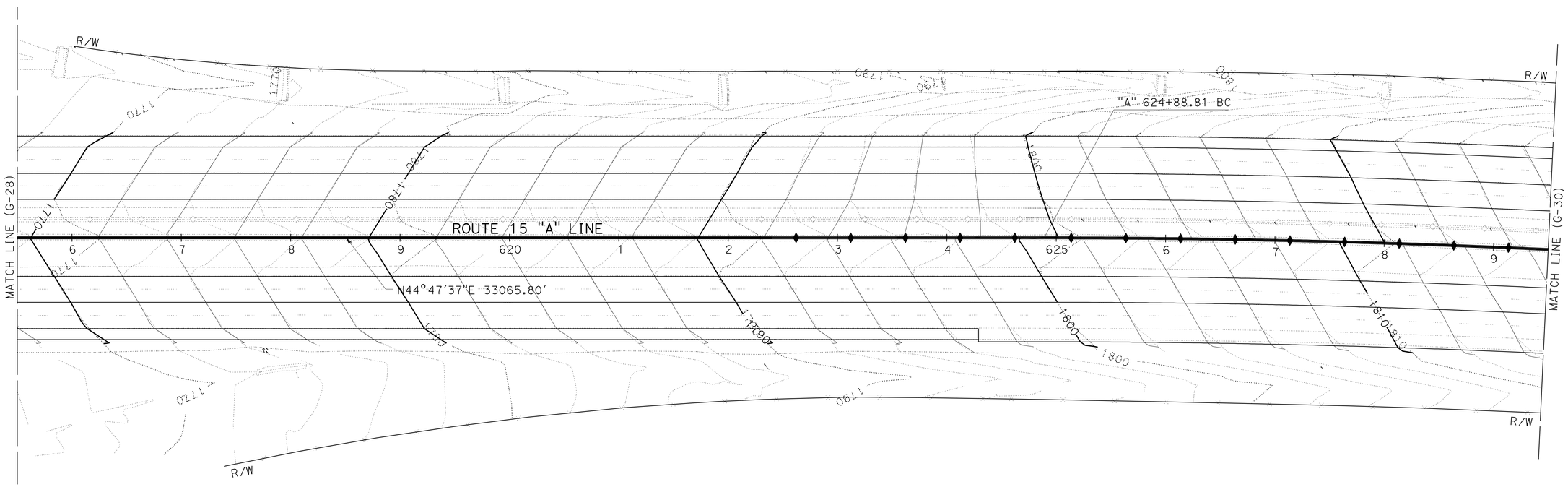

CONTOUR GRADING

SCALE: 1" = 50'

G-29

THIS PLAN ACCURATE FOR CONTOUR GRADING WORK ONLY

STATE OF CALIFORNIA - DEPARTMENT OF TRANSPORTATION
Caltrans
DESIGN

FUNCTIONAL SUPERVISOR: GEORGE MORHIG
CALCULATED-DESIGNED BY: RYAN MITRY
CHECKED BY: AHMAD SHAH
REVISED BY
DATE REVISED

LAST REVISION 05-24-11
DATE PLOTTED => 17-JUN-2011
TIME PLOTTED => 05:29

Dist	COUNTY	ROUTE	POST MILES TOTAL PROJECT	SHEET No.	TOTAL SHEETS
08	SBd	15	3.8/12.8	153	680

REGISTERED CIVIL ENGINEER 5-24-11 DATE

6-13-11
PLANS APPROVAL DATE

REGISTERED PROFESSIONAL ENGINEER
AHMAD SHAH
No. C55259
Exp. 9-30-12
CIVIL
STATE OF CALIFORNIA

THE STATE OF CALIFORNIA OR ITS OFFICERS OR AGENTS SHALL NOT BE RESPONSIBLE FOR THE ACCURACY OR COMPLETENESS OF SCANNED COPIES OF THIS PLAN SHEET.

NOTE:

FOR ACCURATE RIGHT OF WAY AND ACCESS DATA,
CONTACT RIGHT OF WAY ENGINEERING AT THE DISTRICT OFFICE.

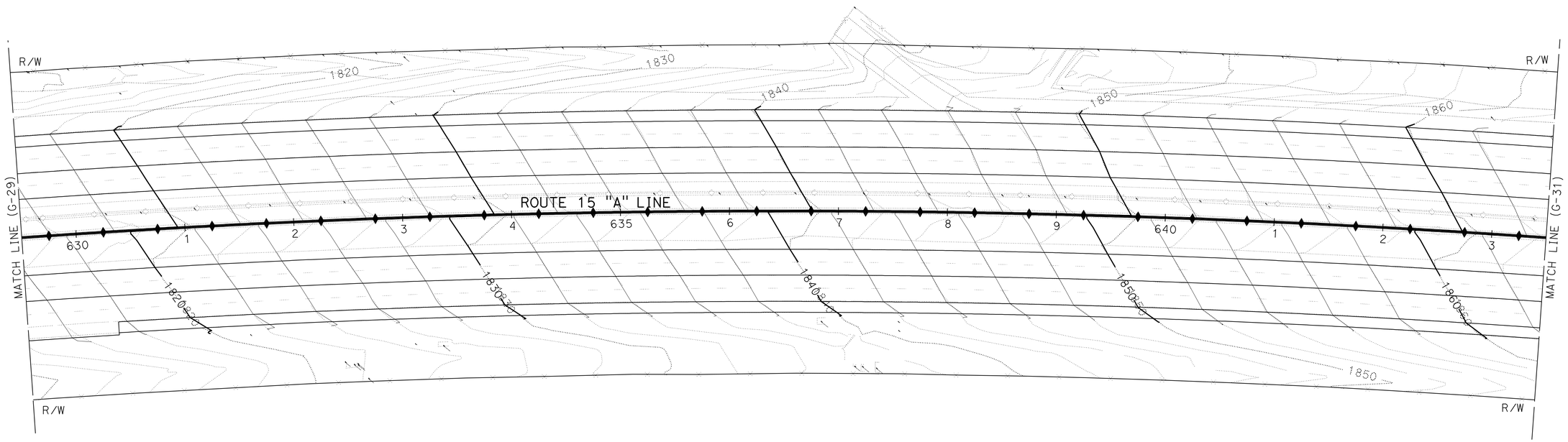

CONTOUR GRADING

SCALE: 1" = 50'

G-30

THIS PLAN ACCURATE FOR CONTOUR GRADING WORK ONLY

STATE OF CALIFORNIA - DEPARTMENT OF TRANSPORTATION
Caltrans
DESIGN

FUNCTIONAL SUPERVISOR: GEORGE MORHIG
CALCULATED-DESIGNED BY: RYAN MITRY
CHECKED BY: AHMAD SHAH
REVISED BY
DATE REVISED

LAST REVISION 05-24-11
DATE PLOTTED => 17-JUN-2011
TIME PLOTTED => 05:29

Dist	COUNTY	ROUTE	POST MILES TOTAL PROJECT	SHEET No.	TOTAL SHEETS
08	SBd	15	3.8/12.8	154	680

REGISTERED CIVIL ENGINEER 5-24-11 DATE

6-13-11
PLANS APPROVAL DATE

REGISTERED PROFESSIONAL ENGINEER
AHMAD SHAH
No. C55259
Exp. 9-30-12
CIVIL
STATE OF CALIFORNIA

THE STATE OF CALIFORNIA OR ITS OFFICERS OR AGENTS SHALL NOT BE RESPONSIBLE FOR THE ACCURACY OR COMPLETENESS OF SCANNED COPIES OF THIS PLAN SHEET.

NOTE:

FOR ACCURATE RIGHT OF WAY AND ACCESS DATA,
CONTACT RIGHT OF WAY ENGINEERING AT THE DISTRICT OFFICE.

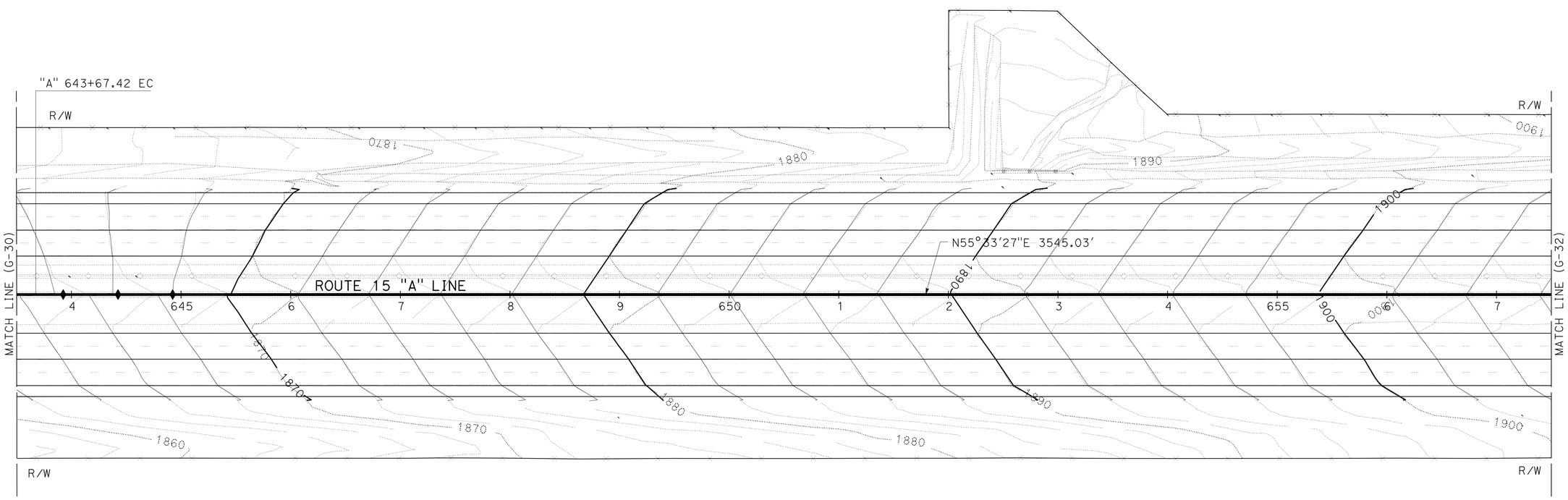

CONTOUR GRADING

SCALE: 1" = 50'

G-31

THIS PLAN ACCURATE FOR CONTOUR GRADING WORK ONLY

STATE OF CALIFORNIA - DEPARTMENT OF TRANSPORTATION
Caltrans
DESIGN

FUNCTIONAL SUPERVISOR: GEORGE MORHIG

CALCULATED-DESIGNED BY: RYAN MITRY
CHECKED BY: AHMAD SHAH

REVISED BY
DATE REVISED

LAST REVISION DATE PLOTTED => 17-JUN-2011
05-24-11 TIME PLOTTED => 05:29

Dist	COUNTY	ROUTE	POST MILES TOTAL PROJECT	SHEET No.	TOTAL SHEETS
08	SBd	15	3.8/12.8	155	680

REGISTERED CIVIL ENGINEER 5-24-11 DATE

6-13-11
PLANS APPROVAL DATE

REGISTERED PROFESSIONAL ENGINEER
AHMAD SHAH
No. C55259
Exp. 9-30-12
CIVIL
STATE OF CALIFORNIA

THE STATE OF CALIFORNIA OR ITS OFFICERS OR AGENTS SHALL NOT BE RESPONSIBLE FOR THE ACCURACY OR COMPLETENESS OF SCANNED COPIES OF THIS PLAN SHEET.

NOTE:

FOR ACCURATE RIGHT OF WAY AND ACCESS DATA,
CONTACT RIGHT OF WAY ENGINEERING AT THE DISTRICT OFFICE.

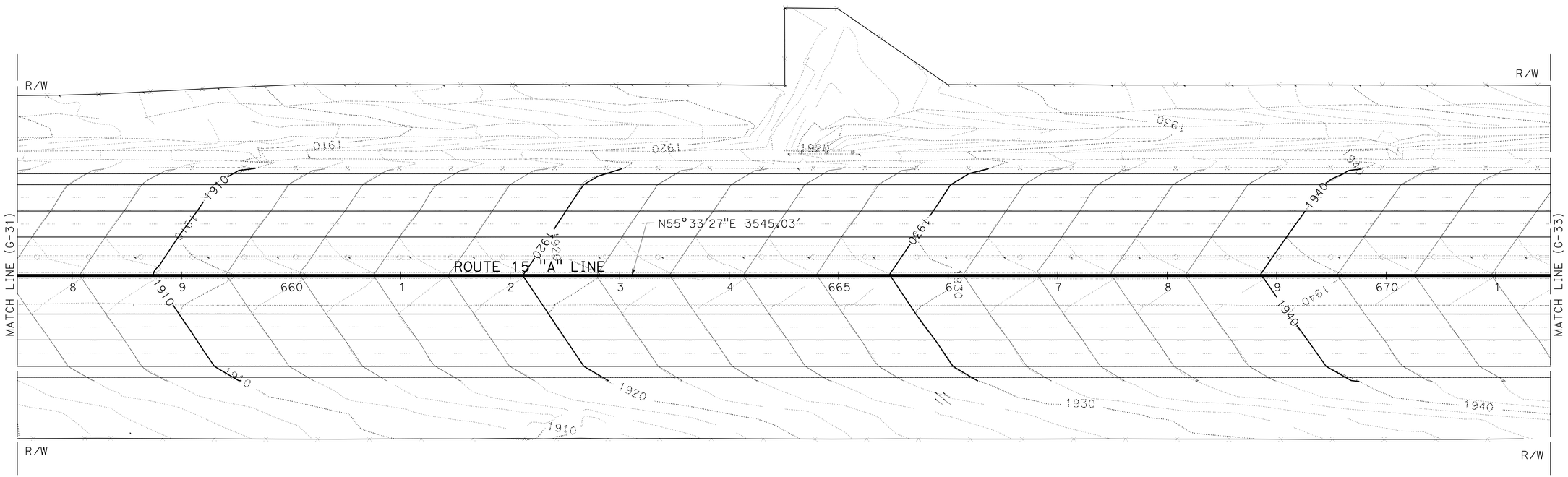

CONTOUR GRADING

SCALE: 1" = 50'

G-32

THIS PLAN ACCURATE FOR CONTOUR GRADING WORK ONLY

STATE OF CALIFORNIA - DEPARTMENT OF TRANSPORTATION
Caltrans
DESIGN

FUNCTIONAL SUPERVISOR: GEORGE MORHIG
CALCULATED-DESIGNED BY: RYAN MITRY
CHECKED BY: AHMAD SHAH
REVISED BY
DATE REVISED

LAST REVISION 05-24-11
DATE PLOTTED => 17-JUN-2011
TIME PLOTTED => 05:30

Dist	COUNTY	ROUTE	POST MILES TOTAL PROJECT	SHEET No.	TOTAL SHEETS
08	SBd	15	3.8/12.8	156	680

REGISTERED CIVIL ENGINEER 5-24-11 DATE

6-13-11
PLANS APPROVAL DATE

REGISTERED PROFESSIONAL ENGINEER
AHMAD SHAH
No. C55259
Exp. 9-30-12
CIVIL
STATE OF CALIFORNIA

THE STATE OF CALIFORNIA OR ITS OFFICERS OR AGENTS SHALL NOT BE RESPONSIBLE FOR THE ACCURACY OR COMPLETENESS OF SCANNED COPIES OF THIS PLAN SHEET.

NOTE:

FOR ACCURATE RIGHT OF WAY AND ACCESS DATA,
CONTACT RIGHT OF WAY ENGINEERING AT THE DISTRICT OFFICE.

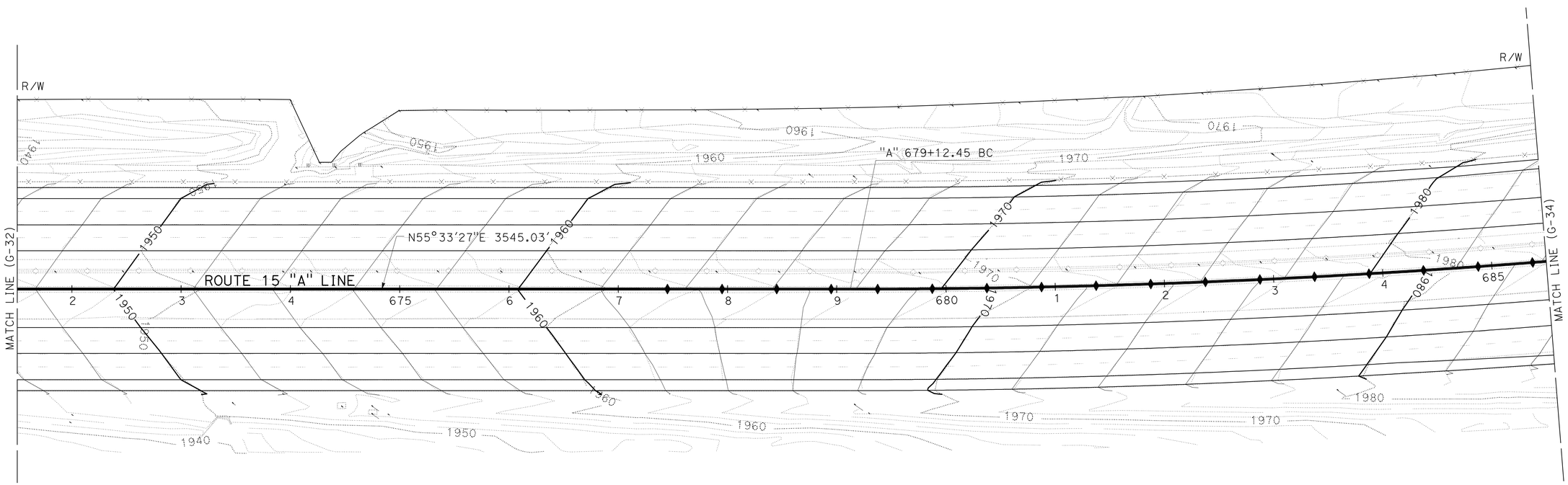

CONTOUR GRADING

SCALE: 1" = 50'

G-33

THIS PLAN ACCURATE FOR CONTOUR GRADING WORK ONLY

STATE OF CALIFORNIA - DEPARTMENT OF TRANSPORTATION
Caltrans
DESIGN

FUNCTIONAL SUPERVISOR: GEORGE MORHIG
CALCULATED-DESIGNED BY: RYAN MITRY
CHECKED BY: AHMAD SHAH
REVISED BY
DATE REVISED

LAST REVISION 05-24-11
DATE PLOTTED => 17-JUN-2011
TIME PLOTTED => 05:30

Dist	COUNTY	ROUTE	POST MILES TOTAL PROJECT	SHEET No.	TOTAL SHEETS
08	SBd	15	3.8/12.8	157	680

REGISTERED CIVIL ENGINEER 5-24-11 DATE

6-13-11
PLANS APPROVAL DATE

REGISTERED PROFESSIONAL ENGINEER
AHMAD SHAH
No. C55259
Exp. 9-30-12
CIVIL
STATE OF CALIFORNIA

THE STATE OF CALIFORNIA OR ITS OFFICERS OR AGENTS SHALL NOT BE RESPONSIBLE FOR THE ACCURACY OR COMPLETENESS OF SCANNED COPIES OF THIS PLAN SHEET.

NOTE:

FOR ACCURATE RIGHT OF WAY AND ACCESS DATA,
CONTACT RIGHT OF WAY ENGINEERING AT THE DISTRICT OFFICE.

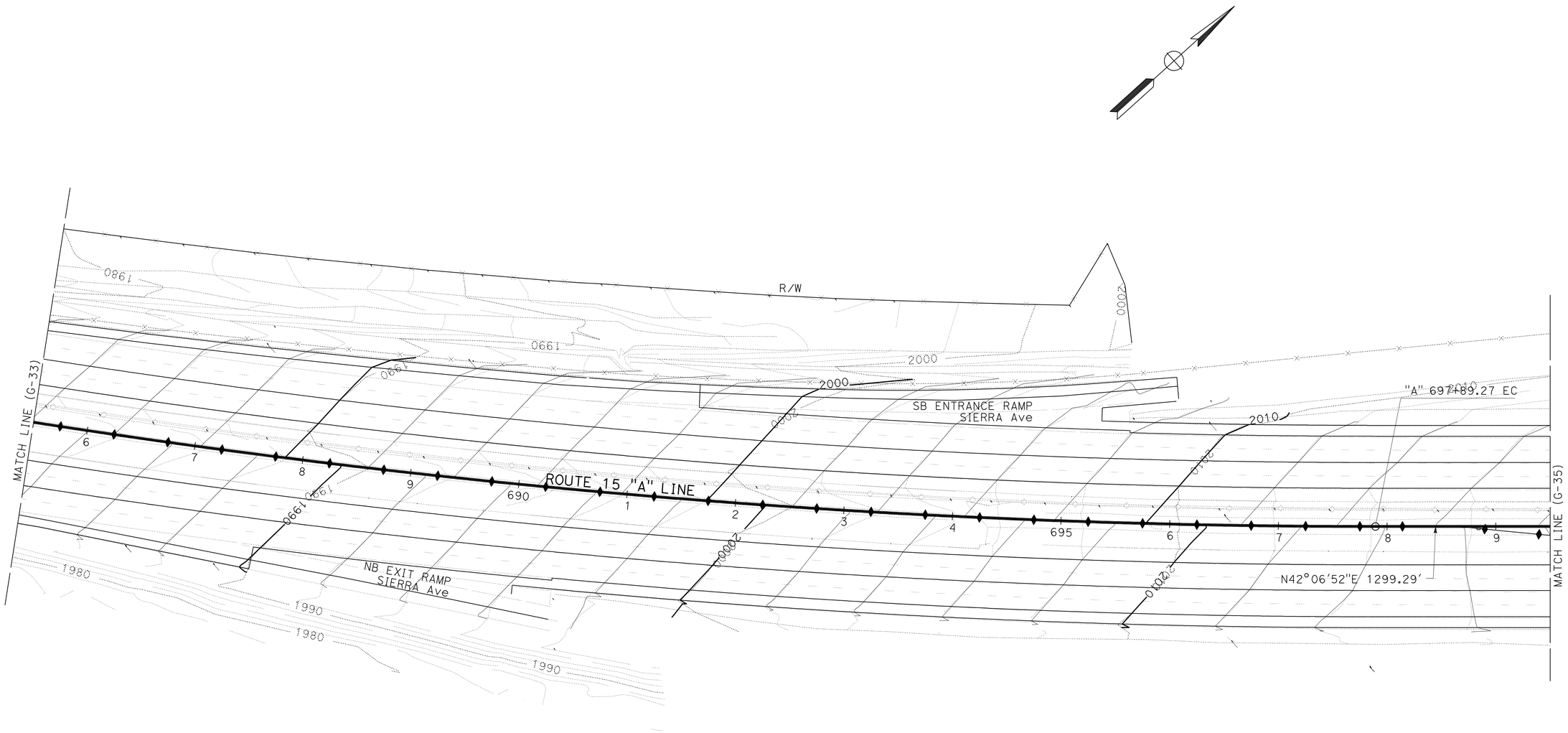

CONTOUR GRADING

SCALE: 1" = 50'

G-34

THIS PLAN ACCURATE FOR CONTOUR GRADING WORK ONLY

STATE OF CALIFORNIA - DEPARTMENT OF TRANSPORTATION
Caltrans
DESIGN

FUNCTIONAL SUPERVISOR: GEORGE MORHIG
CALCULATED-DESIGNED BY: RYAN MITRY
CHECKED BY: AHMAD SHAH
REVISED BY
DATE REVISED

LAST REVISION 05-24-11
DATE PLOTTED => 17-JUN-2011
TIME PLOTTED => 05:30

Dist	COUNTY	ROUTE	POST MILES TOTAL PROJECT	SHEET No.	TOTAL SHEETS
08	SBd	15	3.8/12.8	158	680

REGISTERED CIVIL ENGINEER 5-24-11 DATE

6-13-11
PLANS APPROVAL DATE

REGISTERED PROFESSIONAL ENGINEER
AHMAD SHAH
No. C55259
Exp. 9-30-12
CIVIL
STATE OF CALIFORNIA

THE STATE OF CALIFORNIA OR ITS OFFICERS OR AGENTS SHALL NOT BE RESPONSIBLE FOR THE ACCURACY OR COMPLETENESS OF SCANNED COPIES OF THIS PLAN SHEET.

NOTE:

FOR ACCURATE RIGHT OF WAY AND ACCESS DATA,
CONTACT RIGHT OF WAY ENGINEERING AT THE DISTRICT OFFICE.

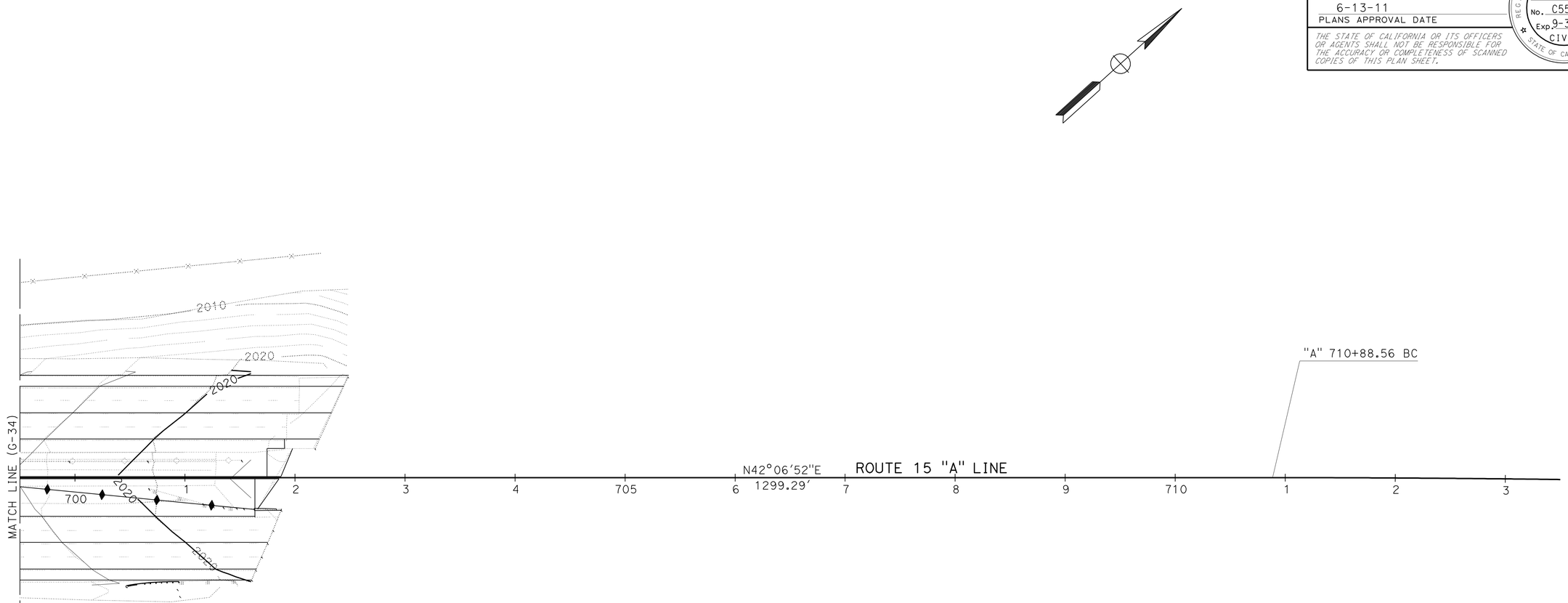

THIS PLAN ACCURATE FOR CONTOUR GRADING WORK ONLY

CONTOUR GRADING

SCALE: 1" = 50'

G-35

REVISED BY	DATE REVISED

CALCULATED-DESIGNED BY	CHECKED BY
RYAN MITRY	AHMAD SHAH

FUNCTIONAL SUPERVISOR: GEORGE MORHIG

STATE OF CALIFORNIA - DEPARTMENT OF TRANSPORTATION
Caltrans
DESIGN

LAST REVISION 05-24-11
DATE PLOTTED => 17-JUN-2011
TIME PLOTTED => 05:30

Dist	COUNTY	ROUTE	POST MILES TOTAL PROJECT	SHEET No.	TOTAL SHEETS
08	SBd	15	3.8/12.8	159	680

REGISTERED CIVIL ENGINEER 5-24-11 DATE

6-13-11
PLANS APPROVAL DATE

REGISTERED PROFESSIONAL ENGINEER HA VU No. C61359 Exp. 6-30-11 CIVIL STATE OF CALIFORNIA

THE STATE OF CALIFORNIA OR ITS OFFICERS OR AGENTS SHALL NOT BE RESPONSIBLE FOR THE ACCURACY OR COMPLETENESS OF SCANNED COPIES OF THIS PLAN SHEET.

NOTES:

1. FOR ACCURATE RIGHT OF WAY AND ACCESS DATA, CONTACT RIGHT OF WAY ENGINEERING AT THE DISTRICT OFFICE.
2. *- SEE DRAINAGE DETAIL SHEETS

ABBREVIATIONS:

GLD GRATED LINE DRAIN
RSP ROCK SLOPE PROTECTION

LEGEND:

- DRAINAGE SYSTEM No.
- DRAINAGE UNIT/DRAINAGE CURVE No.
- ROCK SLOPE PROTECTION
- DOWNDRAIN
- INLET
- FLARED END SECTION

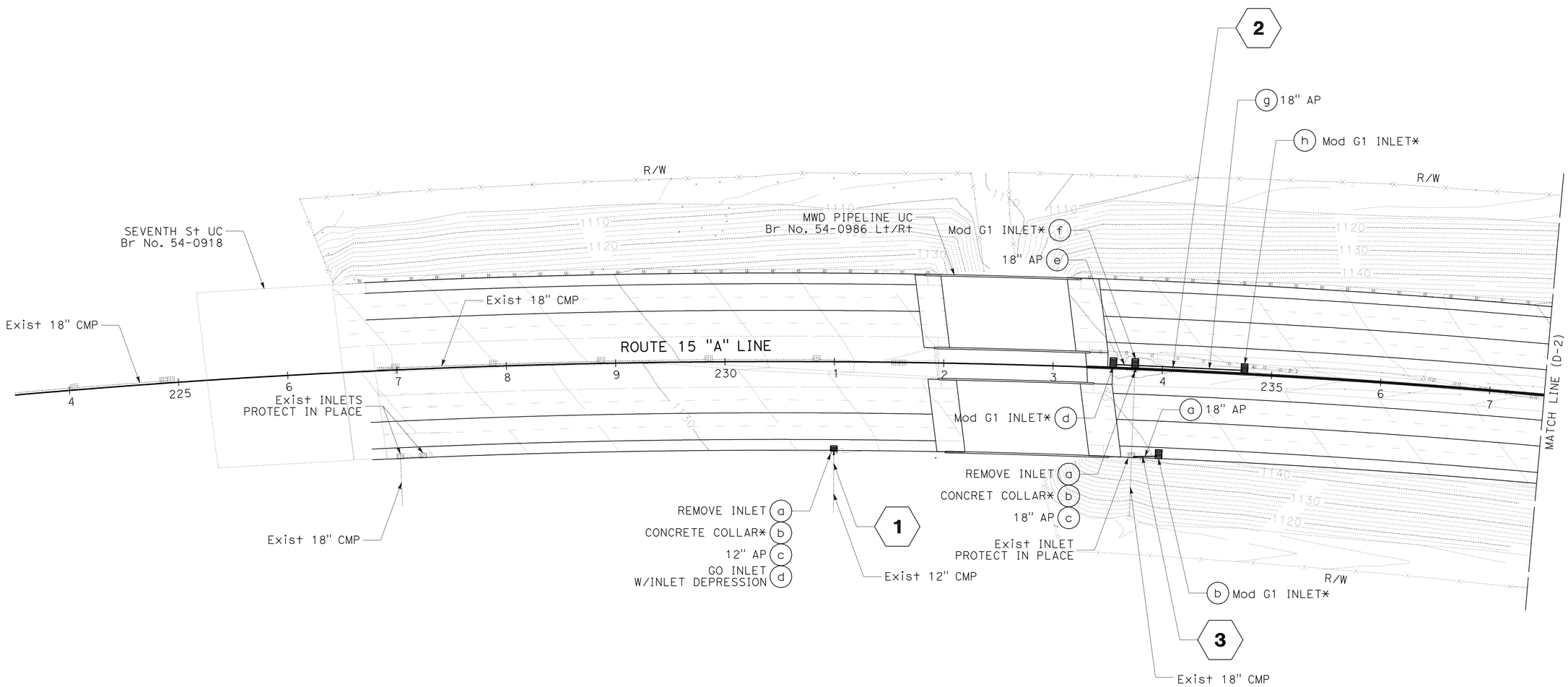

DRAINAGE PLAN

SCALE: 1" = 50'

D-1

THIS PLAN ACCURATE FOR DRAINAGE WORK ONLY

STATE OF CALIFORNIA - DEPARTMENT OF TRANSPORTATION
Caltrans DESIGN

FUNCTIONAL SUPERVISOR: GEORGE MORHIG
CALCULATED-DESIGNED BY: HA VU
CHECKED BY: AHMAD SHAH
REVISED BY
DATE REVISED

LAST REVISION 05-24-11
DATE PLOTTED => 17-JUN-2011
TIME PLOTTED => 05:30

Dist	COUNTY	ROUTE	POST MILES TOTAL PROJECT	SHEET No.	TOTAL SHEETS
08	SBd	15	3.8/12.8	160	680

REGISTERED CIVIL ENGINEER 5-24-11 DATE

6-13-11
PLANS APPROVAL DATE

REGISTERED PROFESSIONAL ENGINEER HA VU No. C61359 Exp. 6-30-11 CIVIL STATE OF CALIFORNIA

THE STATE OF CALIFORNIA OR ITS OFFICERS OR AGENTS SHALL NOT BE RESPONSIBLE FOR THE ACCURACY OR COMPLETENESS OF SCANNED COPIES OF THIS PLAN SHEET.

NOTE:

FOR ACCURATE RIGHT OF WAY AND ACCESS DATA,
CONTACT RIGHT OF WAY ENGINEERING AT THE DISTRICT OFFICE.

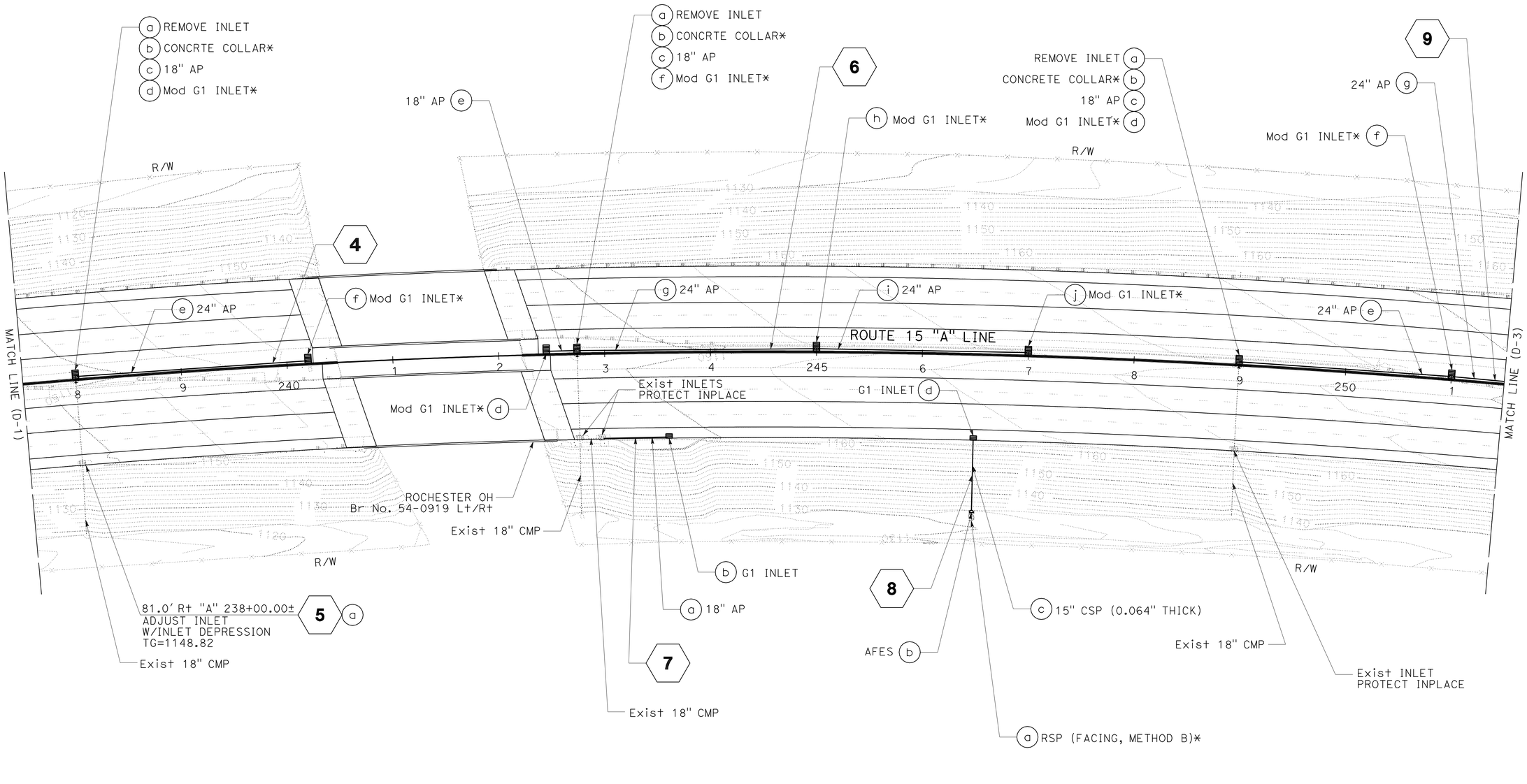

DRAINAGE PLAN

SCALE: 1" = 50'

D-2

THIS PLAN ACCURATE FOR DRAINAGE WORK ONLY

STATE OF CALIFORNIA - DEPARTMENT OF TRANSPORTATION
Caltrans
DESIGN

FUNCTIONAL SUPERVISOR: GEORGE MORHIG

CALCULATED-DESIGNED BY: HA VU
CHECKED BY: AHMAD SHAH

REVISED BY | DATE REVISED

LAST REVISION 05-24-11 | DATE PLOTTED => 17-JUN-2011 | TIME PLOTTED => 05:30

Dist	COUNTY	ROUTE	POST MILES TOTAL PROJECT	SHEET No.	TOTAL SHEETS
08	SBd	15	3.8/12.8	161	680

REGISTERED CIVIL ENGINEER 5-24-11 DATE

6-13-11
PLANS APPROVAL DATE

REGISTERED PROFESSIONAL ENGINEER HA VU No. C61359 Exp. 6-30-11 CIVIL STATE OF CALIFORNIA

THE STATE OF CALIFORNIA OR ITS OFFICERS OR AGENTS SHALL NOT BE RESPONSIBLE FOR THE ACCURACY OR COMPLETENESS OF SCANNED COPIES OF THIS PLAN SHEET.

NOTE:

FOR ACCURATE RIGHT OF WAY AND ACCESS DATA,
CONTACT RIGHT OF WAY ENGINEERING AT THE DISTRICT OFFICE.

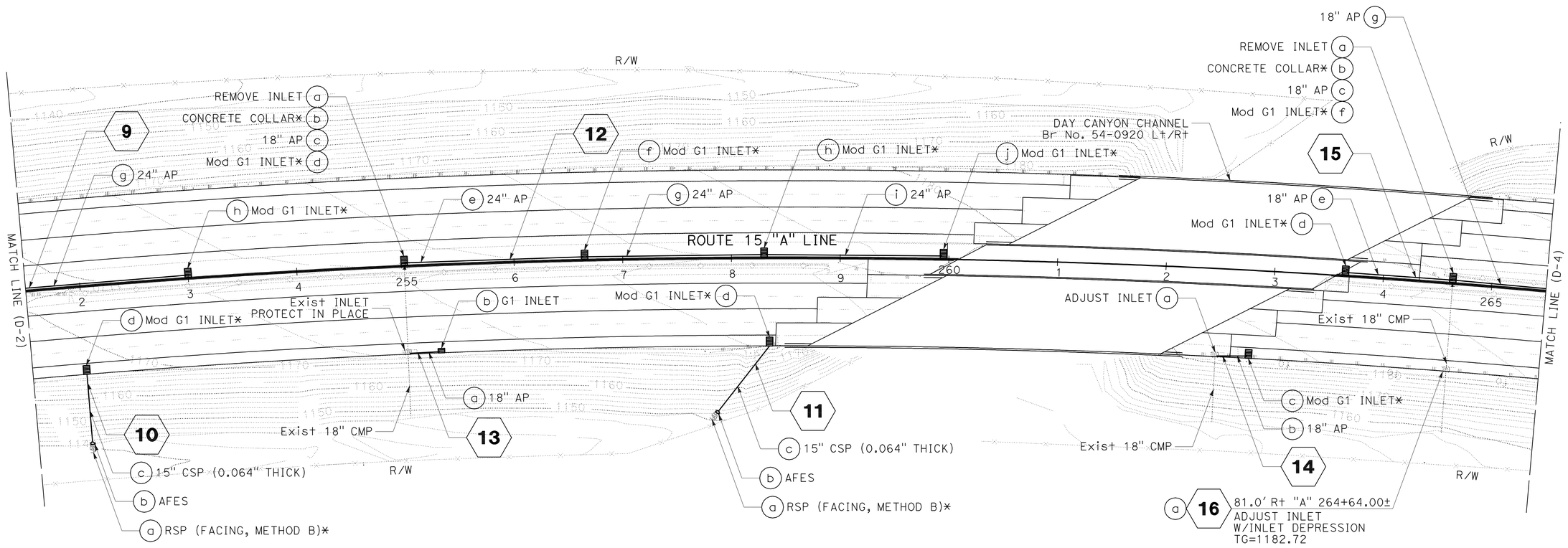

DRAINAGE PLAN

SCALE 1" = 50'

D-3

THIS PLAN ACCURATE FOR DRAINAGE WORK ONLY

REVISED BY	DATE REVISED

CALCULATED-DESIGNED BY: HA VU
CHECKED BY: AHMAD SHAH
FUNCTIONAL SUPERVISOR: GEORGE MORHIG

STATE OF CALIFORNIA - DEPARTMENT OF TRANSPORTATION
Caltrans
DESIGN

LAST REVISION 05-24-11
DATE PLOTTED => 17-JUN-2011
TIME PLOTTED => 05:30

Dist	COUNTY	ROUTE	POST MILES TOTAL PROJECT	SHEET No.	TOTAL SHEETS
08	SBd	15	3.8/12.8	162	680

REGISTERED CIVIL ENGINEER 5-24-11 DATE

6-13-11
PLANS APPROVAL DATE

REGISTERED PROFESSIONAL ENGINEER HA VU No. C61359 Exp. 6-30-11 CIVIL STATE OF CALIFORNIA

THE STATE OF CALIFORNIA OR ITS OFFICERS OR AGENTS SHALL NOT BE RESPONSIBLE FOR THE ACCURACY OR COMPLETENESS OF SCANNED COPIES OF THIS PLAN SHEET.

NOTE:

FOR ACCURATE RIGHT OF WAY AND ACCESS DATA,
CONTACT RIGHT OF WAY ENGINEERING AT THE DISTRICT OFFICE.

DRAINAGE CURVE DATA

No.	R	Δ	T	L
1	8000.00′	0°50′17″	58.52′	117.03′
2	8000.00′	0°41′42″	48.51′	97.03′
3	8000.00′	0°41′42″	48.51′	97.03′

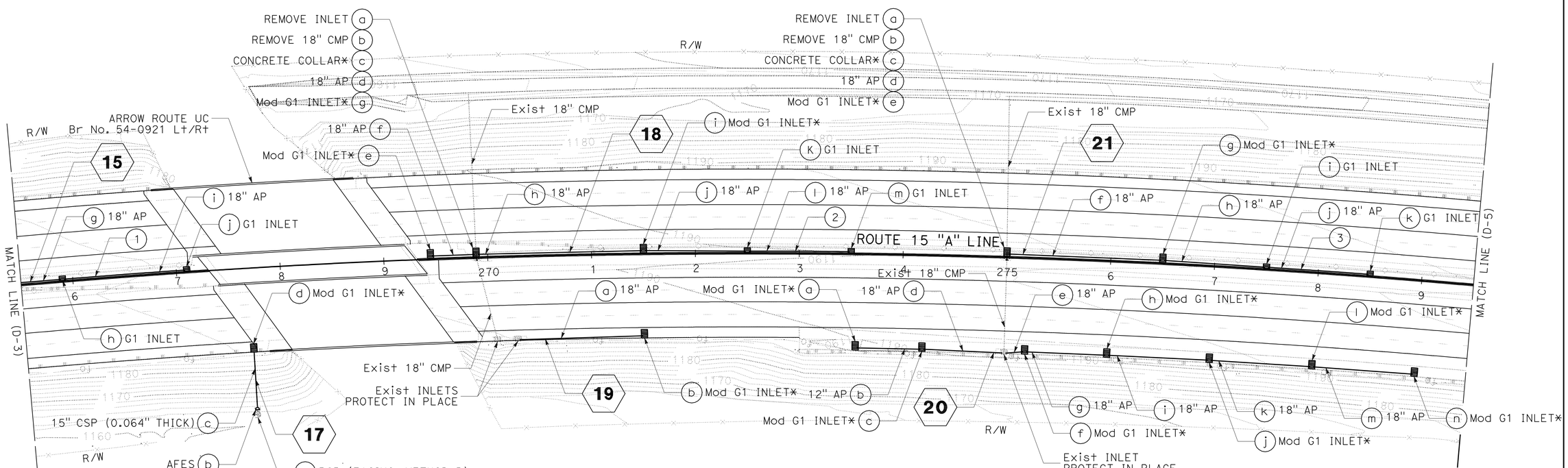

DRAINAGE PLAN

SCALE 1" = 50′

D-4

THIS PLAN ACCURATE FOR DRAINAGE WORK ONLY

REVISED BY	DATE REVISED
HA VU	AHMAD SHAH

CALCULATED-DESIGNED BY | CHECKED BY

FUNCTIONAL SUPERVISOR: GEORGE MORHIG

STATE OF CALIFORNIA - DEPARTMENT OF TRANSPORTATION

Caltrans® DESIGN

LAST REVISION 05-24-11 | DATE PLOTTED => 17-JUN-2011 | TIME PLOTTED => 95:30

Dist	COUNTY	ROUTE	POST MILES TOTAL PROJECT	SHEET No.	TOTAL SHEETS
08	SBd	15	3.8/12.8	163	680

REGISTERED CIVIL ENGINEER 5-24-11 DATE

6-13-11
PLANS APPROVAL DATE

REGISTERED PROFESSIONAL ENGINEER HA VU No. C61359 Exp. 6-30-11 CIVIL STATE OF CALIFORNIA

THE STATE OF CALIFORNIA OR ITS OFFICERS OR AGENTS SHALL NOT BE RESPONSIBLE FOR THE ACCURACY OR COMPLETENESS OF SCANNED COPIES OF THIS PLAN SHEET.

NOTE:

FOR ACCURATE RIGHT OF WAY AND ACCESS DATA,
CONTACT RIGHT OF WAY ENGINEERING AT THE DISTRICT OFFICE.

DRAINAGE CURVE DATA

No.	R	Δ	T	L
4	8000.00′	0°46′00"	53.51′	107.03′
5	8000.00′	0°54′24"	63.30′	126.60′

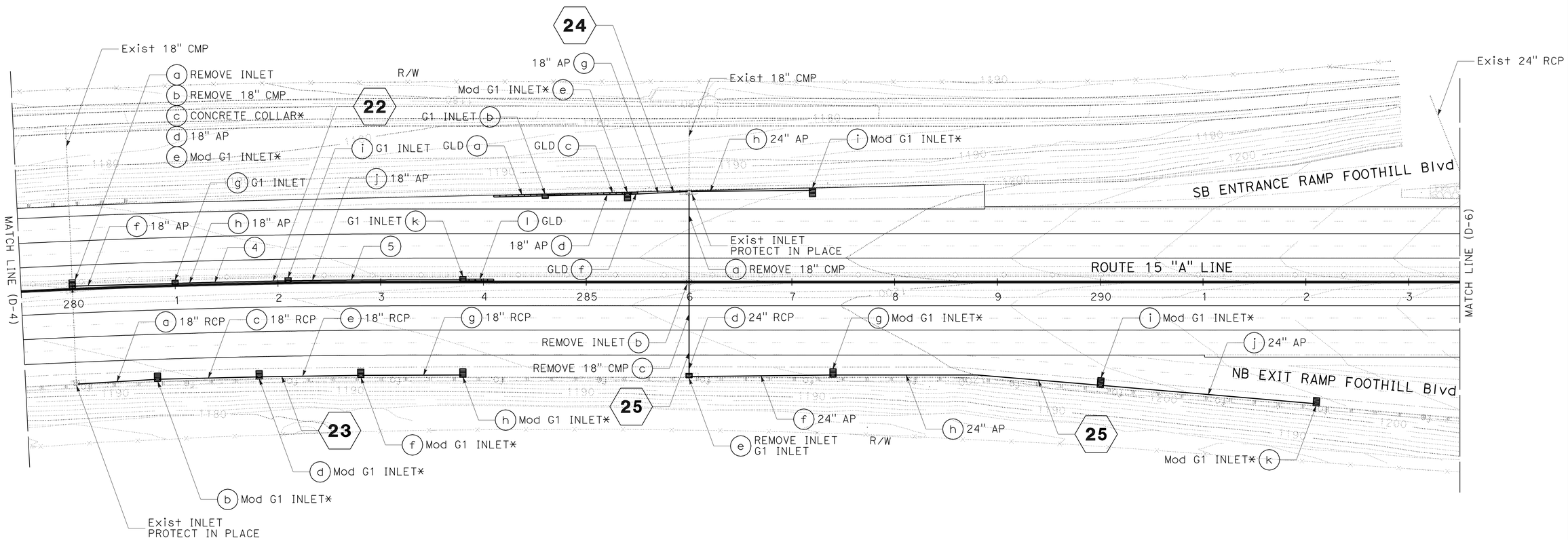

DRAINAGE PLAN

SCALE 1" = 50′

D-5

THIS PLAN ACCURATE FOR DRAINAGE WORK ONLY

STATE OF CALIFORNIA - DEPARTMENT OF TRANSPORTATION
Caltrans® DESIGN

FUNCTIONAL SUPERVISOR: GEORGE MORHIG

CALCULATED-DESIGNED BY: HA VU
CHECKED BY: AHMAD SHAH

REVISED BY
DATE REVISED

LAST REVISION 05-24-11
DATE PLOTTED => 17-JUN-2011
TIME PLOTTED => 05:30

Dist	COUNTY	ROUTE	POST MILES TOTAL PROJECT	SHEET No.	TOTAL SHEETS
08	SBd	15	3.8/12.8	164	680

REGISTERED CIVIL ENGINEER 5-24-11 DATE

6-13-11
PLANS APPROVAL DATE

REGISTERED PROFESSIONAL ENGINEER HA VU No. C61359 Exp. 6-30-11 CIVIL STATE OF CALIFORNIA

THE STATE OF CALIFORNIA OR ITS OFFICERS OR AGENTS SHALL NOT BE RESPONSIBLE FOR THE ACCURACY OR COMPLETENESS OF SCANNED COPIES OF THIS PLAN SHEET.

NOTE:

FOR ACCURATE RIGHT OF WAY AND ACCESS DATA,
CONTACT RIGHT OF WAY ENGINEERING AT THE DISTRICT OFFICE.

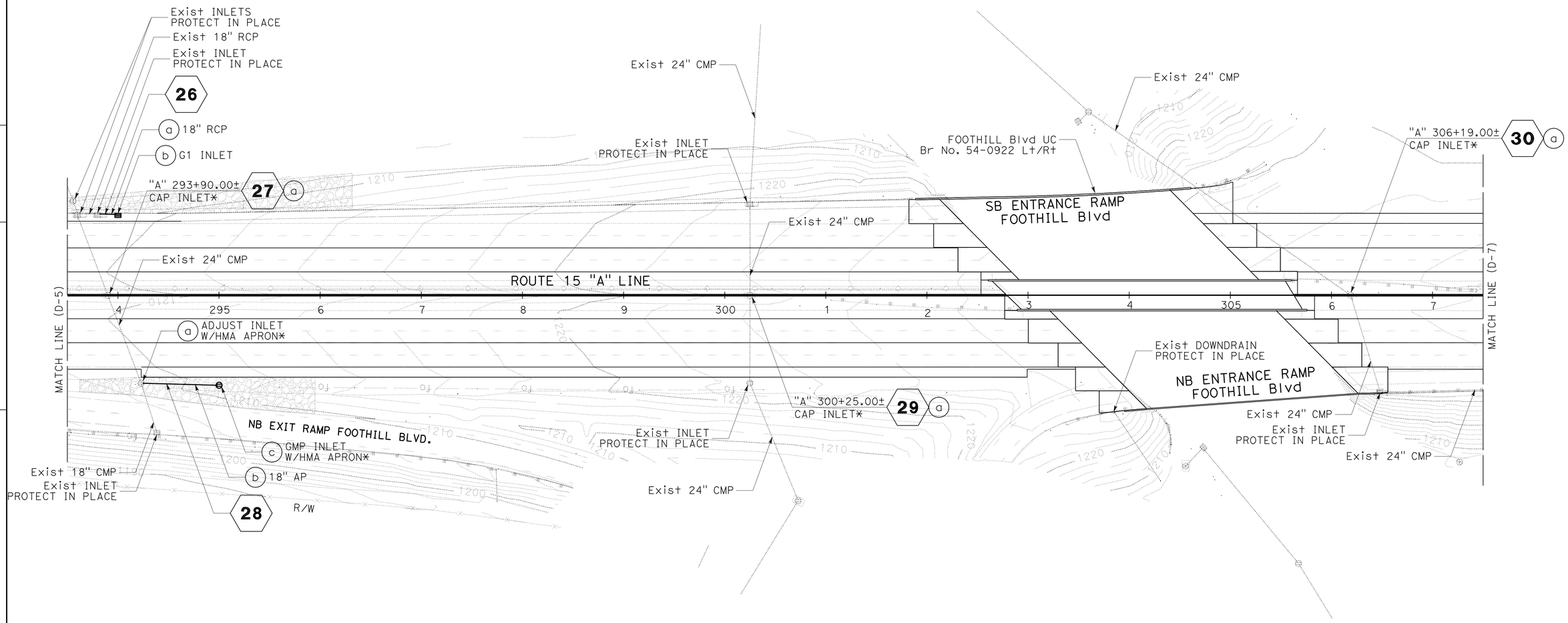

DRAINAGE PLAN

SCALE 1" = 50'

D-6

THIS PLAN ACCURATE FOR DRAINAGE WORK ONLY

STATE OF CALIFORNIA - DEPARTMENT OF TRANSPORTATION
DESIGN
FUNCTIONAL SUPERVISOR GEORGE MORHIG
CALCULATED-DESIGNED BY HA VU AHMAD SHAH
CHECKED BY
REVISED BY
DATE REVISED

LAST REVISION 05-24-11
DATE PLOTTED => 17-JUN-2011
TIME PLOTTED => 09:30

Dist	COUNTY	ROUTE	POST MILES TOTAL PROJECT	SHEET No.	TOTAL SHEETS
08	SBd	15	3.8/12.8	165	680

REGISTERED CIVIL ENGINEER 5-24-11 DATE

6-13-11
PLANS APPROVAL DATE

REGISTERED PROFESSIONAL ENGINEER HA VU No. C61359 Exp. 6-30-11 CIVIL STATE OF CALIFORNIA

THE STATE OF CALIFORNIA OR ITS OFFICERS OR AGENTS SHALL NOT BE RESPONSIBLE FOR THE ACCURACY OR COMPLETENESS OF SCANNED COPIES OF THIS PLAN SHEET.

NOTE:

FOR ACCURATE RIGHT OF WAY AND ACCESS DATA,
CONTACT RIGHT OF WAY ENGINEERING AT THE DISTRICT OFFICE.

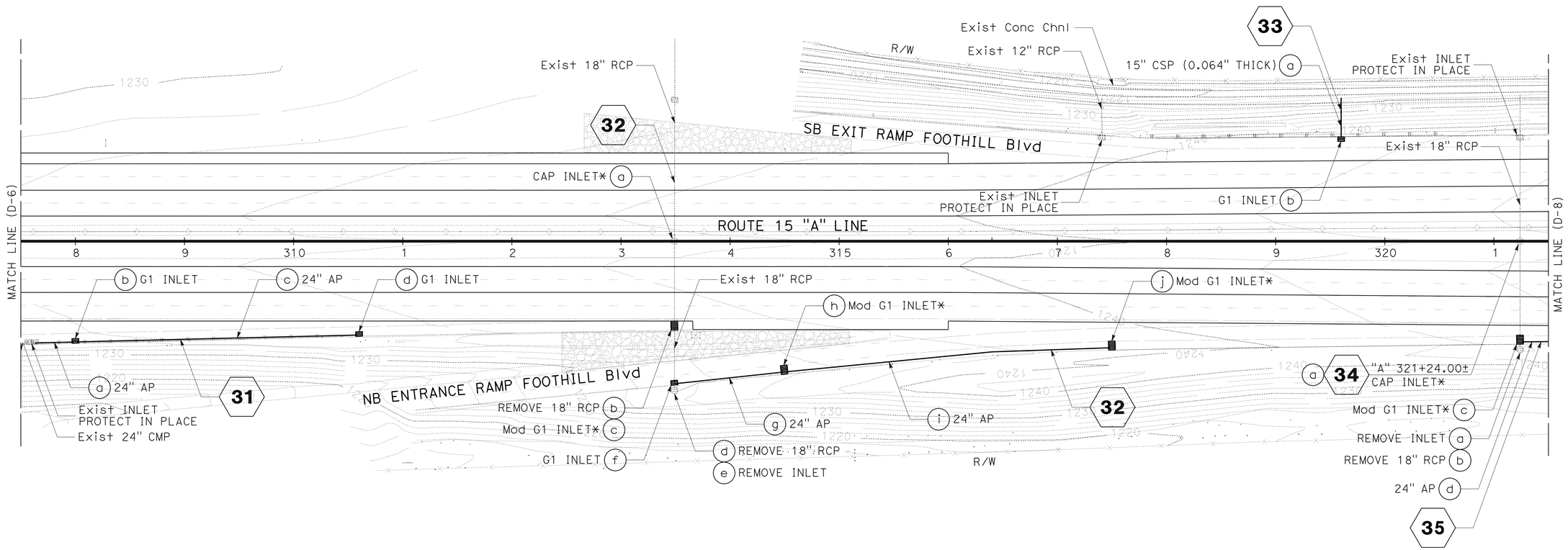

* SEE DRAINAGE DETAIL SHEETS

THIS PLAN ACCURATE FOR DRAINAGE WORK ONLY

DRAINAGE PLAN

SCALE 1" = 50'

D-7

STATE OF CALIFORNIA - DEPARTMENT OF TRANSPORTATION
Caltrans® DESIGN

FUNCTIONAL SUPERVISOR: GEORGE MORHIG
CALCULATED-DESIGNED BY: HA VU
CHECKED BY: AHMAD SHAH
REVISED BY
DATE REVISED

LAST REVISION 05-24-11
DATE PLOTTED => 17-JUN-2011
TIME PLOTTED => 05:30

Dist	COUNTY	ROUTE	POST MILES TOTAL PROJECT	SHEET No.	TOTAL SHEETS
08	SBd	15	3.8/12.8	166	680

REGISTERED CIVIL ENGINEER 5-24-11 DATE

6-13-11
PLANS APPROVAL DATE

REGISTERED PROFESSIONAL ENGINEER
HA VU
No. C61359
Exp. 6-30-11
CIVIL
STATE OF CALIFORNIA

THE STATE OF CALIFORNIA OR ITS OFFICERS OR AGENTS SHALL NOT BE RESPONSIBLE FOR THE ACCURACY OR COMPLETENESS OF SCANNED COPIES OF THIS PLAN SHEET.

NOTE:

FOR ACCURATE RIGHT OF WAY AND ACCESS DATA,
CONTACT RIGHT OF WAY ENGINEERING AT THE DISTRICT OFFICE.

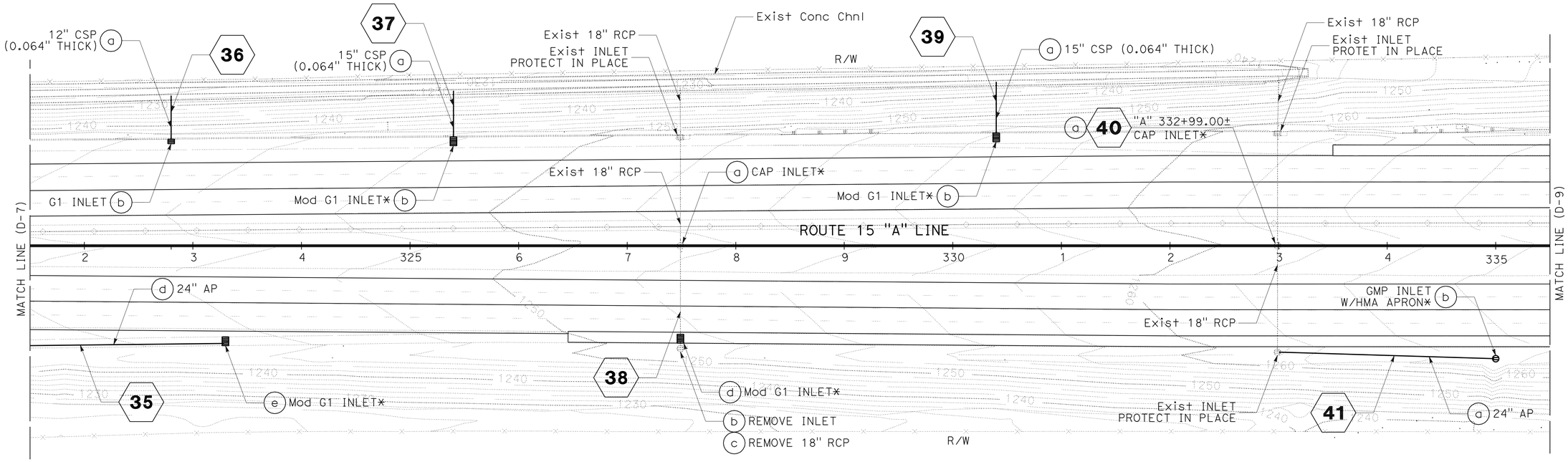

DRAINAGE PLAN

SCALE 1" = 50'

D-8

THIS PLAN ACCURATE FOR DRAINAGE WORK ONLY

STATE OF CALIFORNIA - DEPARTMENT OF TRANSPORTATION
Caltrans
DESIGN

FUNCTIONAL SUPERVISOR: GEORGE MORHIG
CALCULATED-DESIGNED BY: HA VU
CHECKED BY: AHMAD SHAH
REVISED BY
DATE REVISED

LAST REVISION 05-24-11
DATE PLOTTED => 17-JUN-2011
TIME PLOTTED => 09:31

Dist	COUNTY	ROUTE	POST MILES TOTAL PROJECT	SHEET No.	TOTAL SHEETS
08	SBd	15	3.8/12.8	167	680

REGISTERED CIVIL ENGINEER 5-24-11 DATE

6-13-11
PLANS APPROVAL DATE

REGISTERED PROFESSIONAL ENGINEER HA VU No. C61359 Exp. 6-30-11 CIVIL STATE OF CALIFORNIA

THE STATE OF CALIFORNIA OR ITS OFFICERS OR AGENTS SHALL NOT BE RESPONSIBLE FOR THE ACCURACY OR COMPLETENESS OF SCANNED COPIES OF THIS PLAN SHEET.

NOTE:

FOR ACCURATE RIGHT OF WAY AND ACCESS DATA,
CONTACT RIGHT OF WAY ENGINEERING AT THE DISTRICT OFFICE.

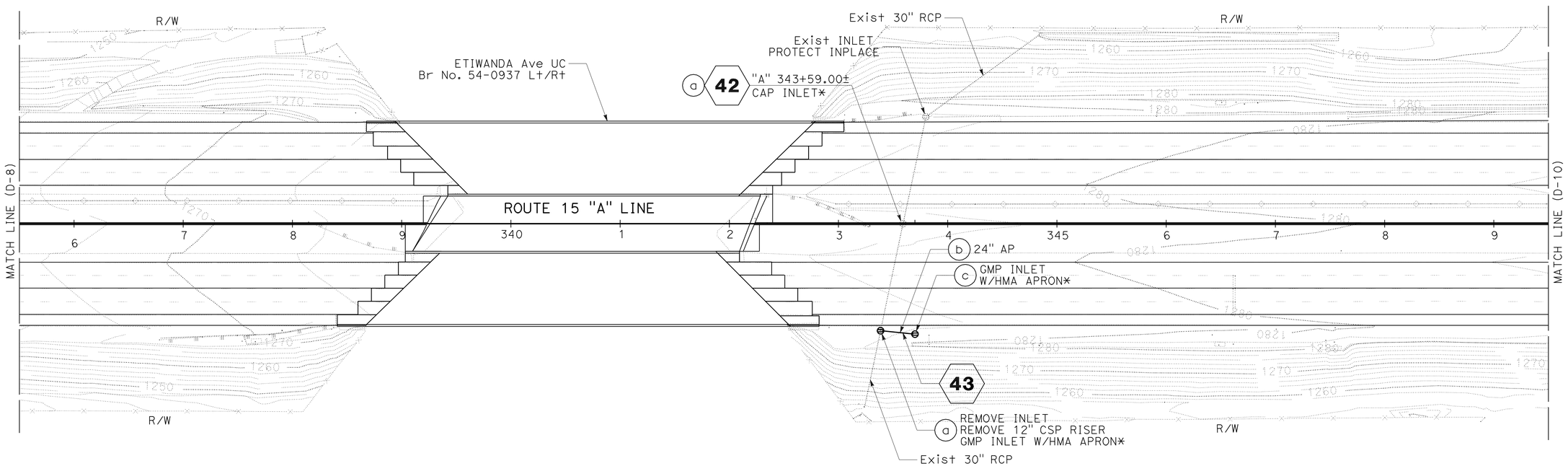

DRAINAGE PLAN

SCALE 1" = 50'

D-9

THIS PLAN ACCURATE FOR DRAINAGE WORK ONLY

REVISED BY	DATE REVISED

CALCULATED-DESIGNED BY	CHECKED BY
HA VU	AHMAD SHAH

FUNCTIONAL SUPERVISOR: GEORGE MORHIG

STATE OF CALIFORNIA - DEPARTMENT OF TRANSPORTATION

Caltrans DESIGN

LAST REVISION 05-24-11 | DATE PLOTTED => 17-JUN-2011 | TIME PLOTTED => 05:31

Dist	COUNTY	ROUTE	POST MILES TOTAL PROJECT	SHEET No.	TOTAL SHEETS
08	SBd	15	3.8/12.8	168	680

REGISTERED CIVIL ENGINEER 5-24-11 DATE

6-13-11
PLANS APPROVAL DATE

REGISTERED PROFESSIONAL ENGINEER HA VU No. C61359 Exp. 6-30-11 CIVIL STATE OF CALIFORNIA

THE STATE OF CALIFORNIA OR ITS OFFICERS OR AGENTS SHALL NOT BE RESPONSIBLE FOR THE ACCURACY OR COMPLETENESS OF SCANNED COPIES OF THIS PLAN SHEET.

NOTE:

FOR ACCURATE RIGHT OF WAY AND ACCESS DATA,
CONTACT RIGHT OF WAY ENGINEERING AT THE DISTRICT OFFICE.

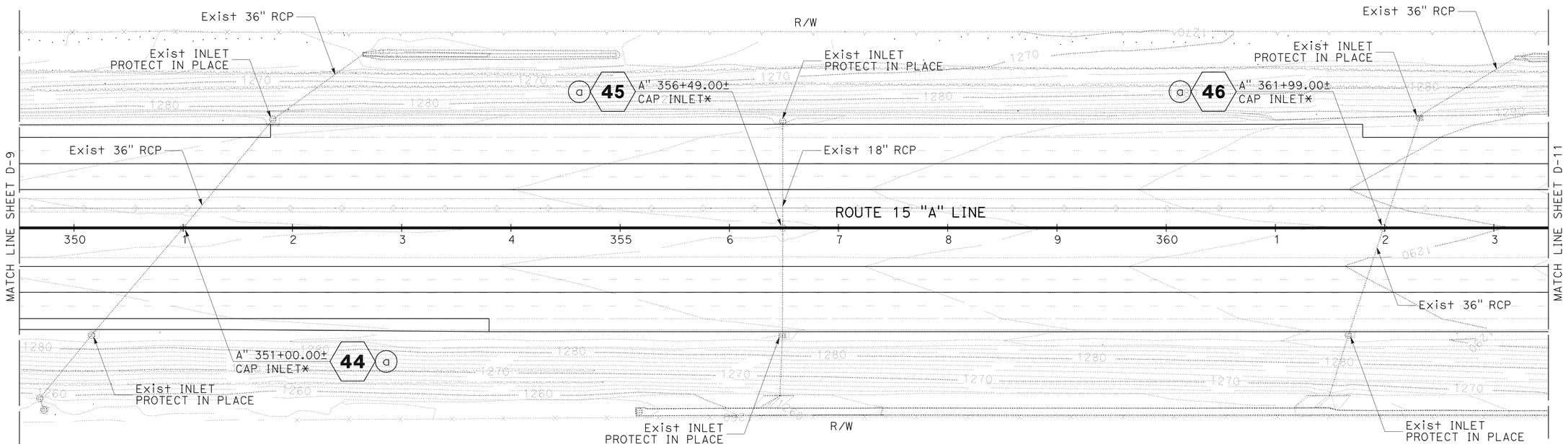

DRAINAGE PLAN

SCALE 1" = 50'

D-10

THIS PLAN ACCURATE FOR DRAINAGE WORK ONLY

STATE OF CALIFORNIA - DEPARTMENT OF TRANSPORTATION
Caltrans® DESIGN

FUNCTIONAL SUPERVISOR: GEORGE MORHIG
CALCULATED-DESIGNED BY: HA VU
CHECKED BY: AHMAD SHAH
REVISED BY
DATE REVISED

LAST REVISION 05-24-11
DATE PLOTTED => 17-JUN-2011
TIME PLOTTED => 05:31

Dist	COUNTY	ROUTE	POST MILES TOTAL PROJECT	SHEET No.	TOTAL SHEETS
08	SBd	15	3.8/12.8	169	680

REGISTERED CIVIL ENGINEER 5-24-11 DATE

6-13-11
PLANS APPROVAL DATE

REGISTERED PROFESSIONAL ENGINEER HA VU No. C61359 Exp. 6-30-11 CIVIL STATE OF CALIFORNIA

THE STATE OF CALIFORNIA OR ITS OFFICERS OR AGENTS SHALL NOT BE RESPONSIBLE FOR THE ACCURACY OR COMPLETENESS OF SCANNED COPIES OF THIS PLAN SHEET.

NOTE:

FOR ACCURATE RIGHT OF WAY AND ACCESS DATA,
CONTACT RIGHT OF WAY ENGINEERING AT THE DISTRICT OFFICE.

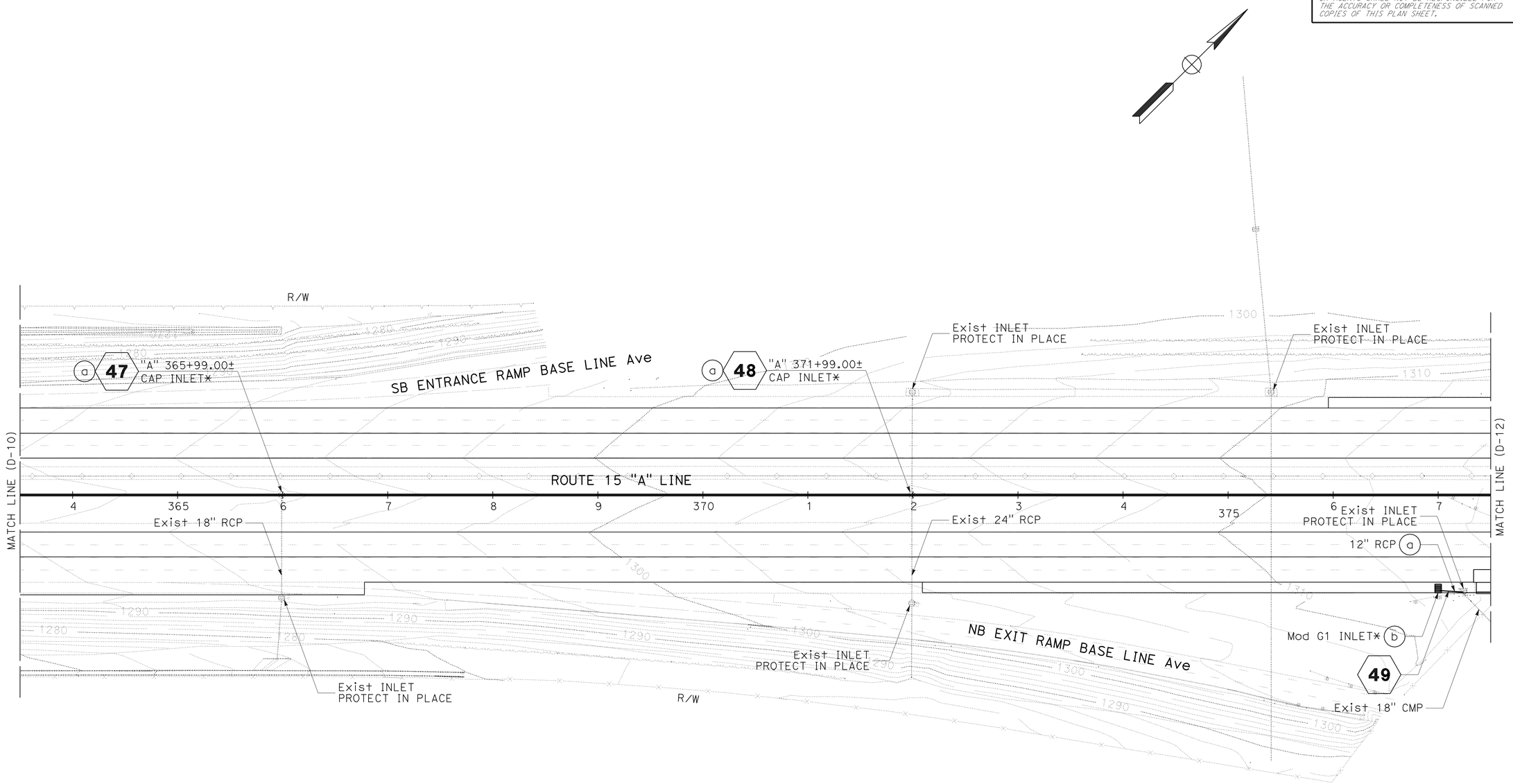

DRAINAGE PLAN

SCALE 1" = 50'

D-11

THIS PLAN ACCURATE FOR DRAINAGE WORK ONLY

STATE OF CALIFORNIA - DEPARTMENT OF TRANSPORTATION
Caltrans DESIGN

FUNCTIONAL SUPERVISOR: GEORGE MORHIG

CALCULATED-DESIGNED BY: HA VU
CHECKED BY: AHMAD SHAH

REVISED BY | DATE REVISED

LAST REVISION 05-24-11 | DATE PLOTTED => 17-JUN-2011 | TIME PLOTTED => 09:31

Dist	COUNTY	ROUTE	POST MILES TOTAL PROJECT	SHEET No.	TOTAL SHEETS
08	SBd	15	3.8/12.8	170	680

REGISTERED CIVIL ENGINEER 5-24-11 DATE

6-13-11
PLANS APPROVAL DATE

REGISTERED PROFESSIONAL ENGINEER HA VU No. C61359 Exp. 6-30-11 CIVIL STATE OF CALIFORNIA

THE STATE OF CALIFORNIA OR ITS OFFICERS OR AGENTS SHALL NOT BE RESPONSIBLE FOR THE ACCURACY OR COMPLETENESS OF SCANNED COPIES OF THIS PLAN SHEET.

NOTE:

FOR ACCURATE RIGHT OF WAY AND ACCESS DATA,
CONTACT RIGHT OF WAY ENGINEERING AT THE DISTRICT OFFICE.

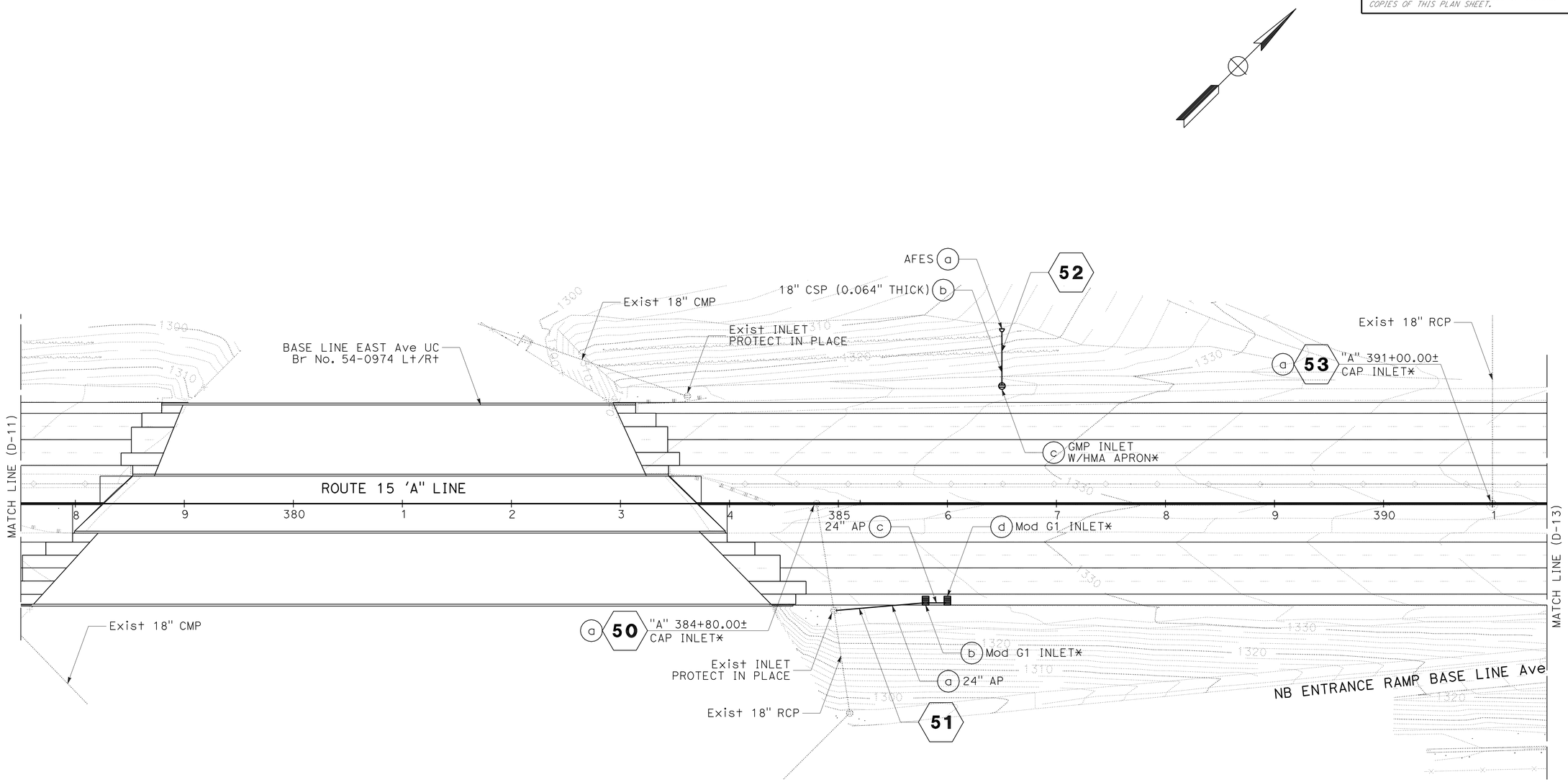

DRAINAGE PLAN

SCALE 1" = 50'

D-12

THIS PLAN ACCURATE FOR DRAINAGE WORK ONLY

STATE OF CALIFORNIA - DEPARTMENT OF TRANSPORTATION
Caltrans® DESIGN

FUNCTIONAL SUPERVISOR: GEORGE MORHIG
CALCULATED-DESIGNED BY: HA VU AHMAD SHAH
CHECKED BY
REVISED BY
DATE REVISED

LAST REVISION 05-24-11
DATE PLOTTED => 17-JUN-2011
TIME PLOTTED => 09:31

Dist	COUNTY	ROUTE	POST MILES TOTAL PROJECT	SHEET No.	TOTAL SHEETS
08	SBd	15	3.8/12.8	171	680

REGISTERED CIVIL ENGINEER 5-24-11 DATE

6-13-11
PLANS APPROVAL DATE

REGISTERED PROFESSIONAL ENGINEER HA VU No. C61359 Exp. 6-30-11 CIVIL STATE OF CALIFORNIA

THE STATE OF CALIFORNIA OR ITS OFFICERS OR AGENTS SHALL NOT BE RESPONSIBLE FOR THE ACCURACY OR COMPLETENESS OF SCANNED COPIES OF THIS PLAN SHEET.

NOTE:

FOR ACCURATE RIGHT OF WAY AND ACCESS DATA,
CONTACT RIGHT OF WAY ENGINEERING AT THE DISTRICT OFFICE.

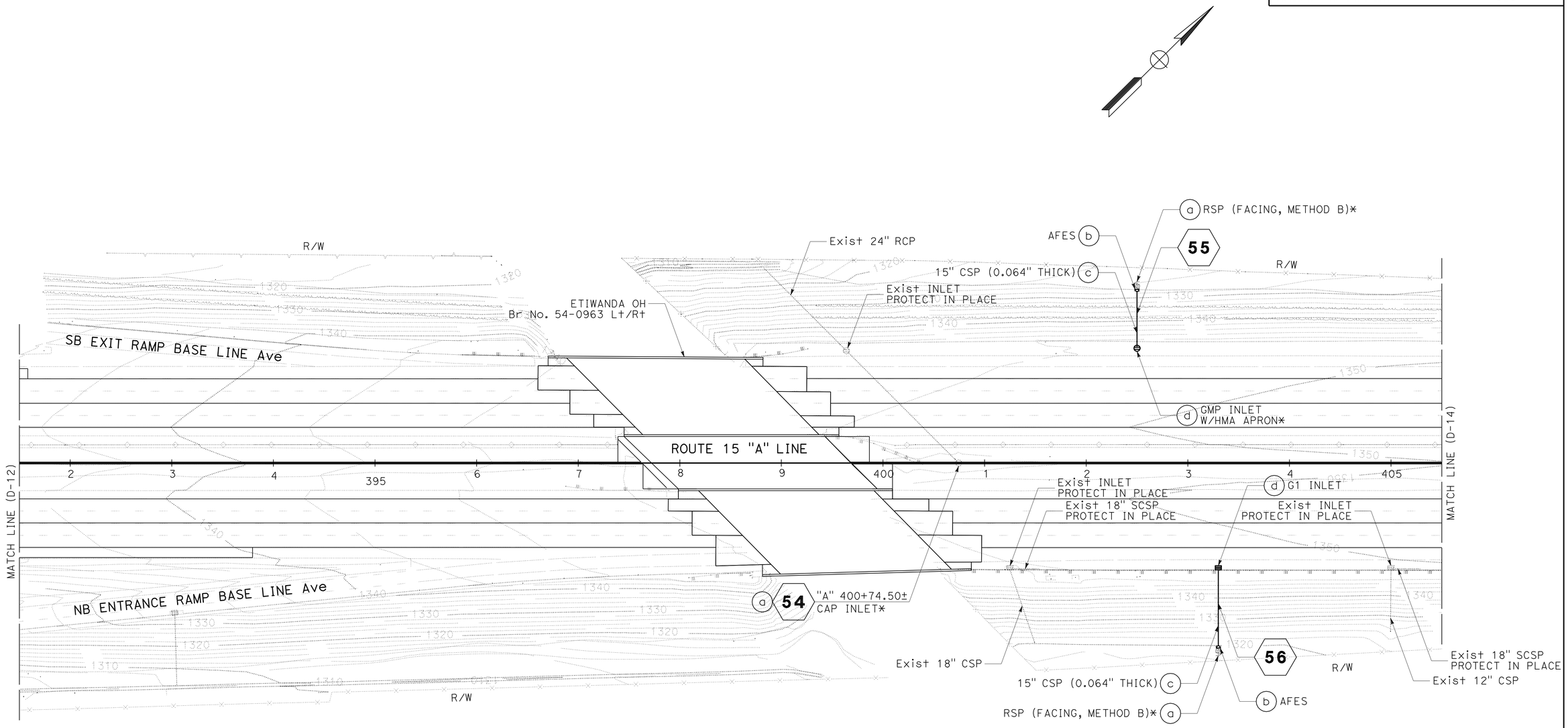

DRAINAGE PLAN

SCALE: 1" = 50'

D-13

THIS PLAN ACCURATE FOR DRAINAGE WORK ONLY

REVISED BY	DATE REVISED
HA VU	AHMAD SHAH

CALCULATED-DESIGNED BY | CHECKED BY

FUNCTIONAL SUPERVISOR: GEORGE MORHIG

STATE OF CALIFORNIA - DEPARTMENT OF TRANSPORTATION

Caltrans DESIGN

LAST REVISION 05-24-11 | DATE PLOTTED => 17-JUN-2011 | TIME PLOTTED => 05:31

Dist	COUNTY	ROUTE	POST MILES TOTAL PROJECT	SHEET No.	TOTAL SHEETS
08	SBd	15	3.8/12.8	172	680

REGISTERED CIVIL ENGINEER 5-24-11 DATE

6-13-11
PLANS APPROVAL DATE

REGISTERED PROFESSIONAL ENGINEER HA VU No. C61359 Exp. 6-30-11 CIVIL STATE OF CALIFORNIA

THE STATE OF CALIFORNIA OR ITS OFFICERS OR AGENTS SHALL NOT BE RESPONSIBLE FOR THE ACCURACY OR COMPLETENESS OF SCANNED COPIES OF THIS PLAN SHEET.

NOTE:

FOR ACCURATE RIGHT OF WAY AND ACCESS DATA,
CONTACT RIGHT OF WAY ENGINEERING AT THE DISTRICT OFFICE.

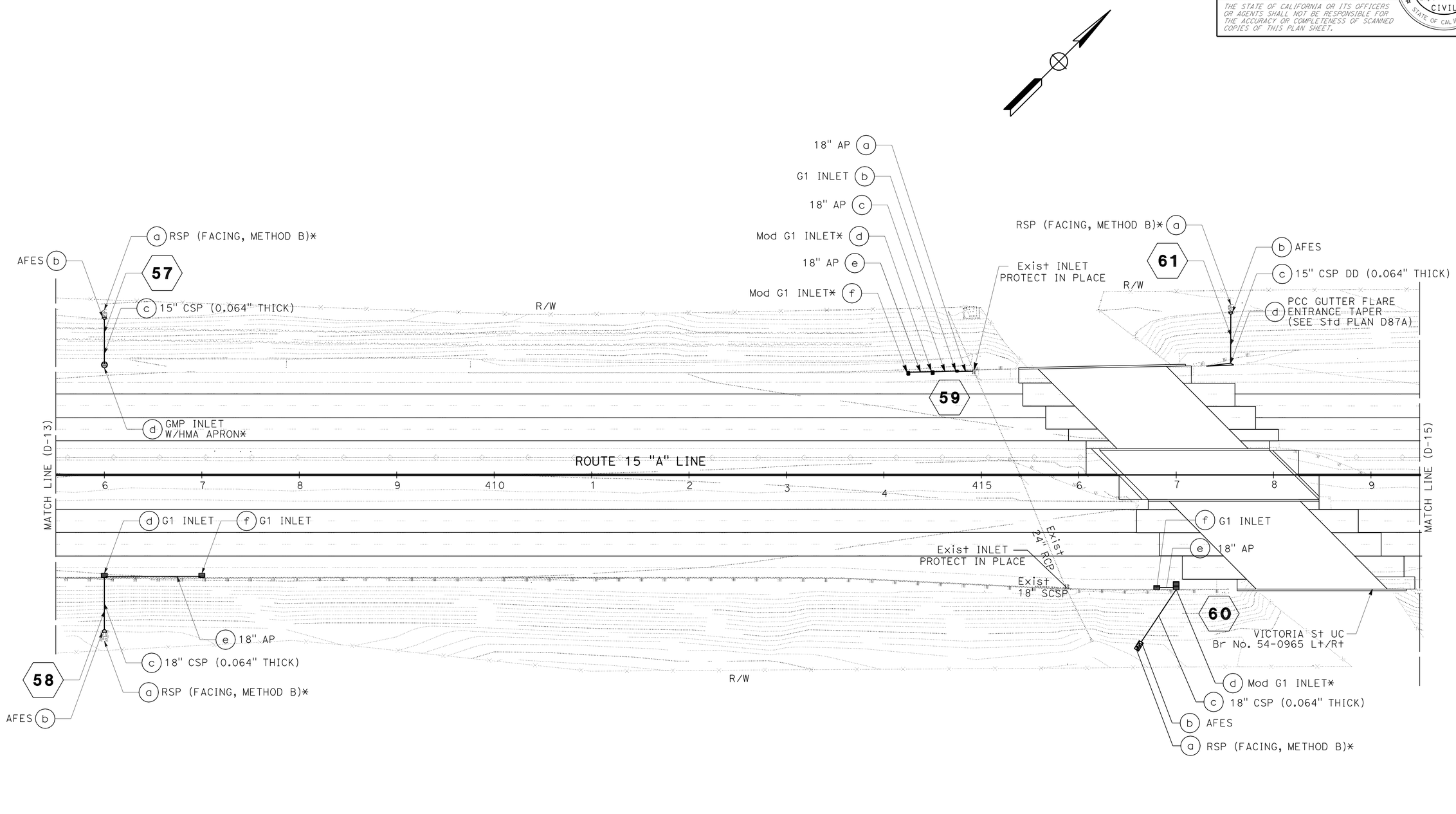

DRAINAGE PLAN

SCALE: 1" = 50'

D-14

THIS PLAN ACCURATE FOR DRAINAGE ONLY

STATE OF CALIFORNIA - DEPARTMENT OF TRANSPORTATION
Caltrans
DESIGN

FUNCTIONAL SUPERVISOR: GEORGE MORHIG
CALCULATED-DESIGNED BY: MICHAEL HUYNH
CHECKED BY: ALAN BISI
REVISED BY
DATE REVISED

LAST REVISION 05-24-11
DATE PLOTTED => 17-JUN-2011
TIME PLOTTED => 05:31

Dist	COUNTY	ROUTE	POST MILES TOTAL PROJECT	SHEET No.	TOTAL SHEETS
08	SBd	15	3.8/12.8	173	680

REGISTERED CIVIL ENGINEER 5-24-11 DATE

6-13-11
PLANS APPROVAL DATE

REGISTERED PROFESSIONAL ENGINEER HA VU No. C61359 Exp. 6-30-11 CIVIL STATE OF CALIFORNIA

THE STATE OF CALIFORNIA OR ITS OFFICERS OR AGENTS SHALL NOT BE RESPONSIBLE FOR THE ACCURACY OR COMPLETENESS OF SCANNED COPIES OF THIS PLAN SHEET.

NOTE:

FOR ACCURATE RIGHT OF WAY AND ACCESS DATA,
CONTACT RIGHT OF WAY ENGINEERING AT THE DISTRICT OFFICE.

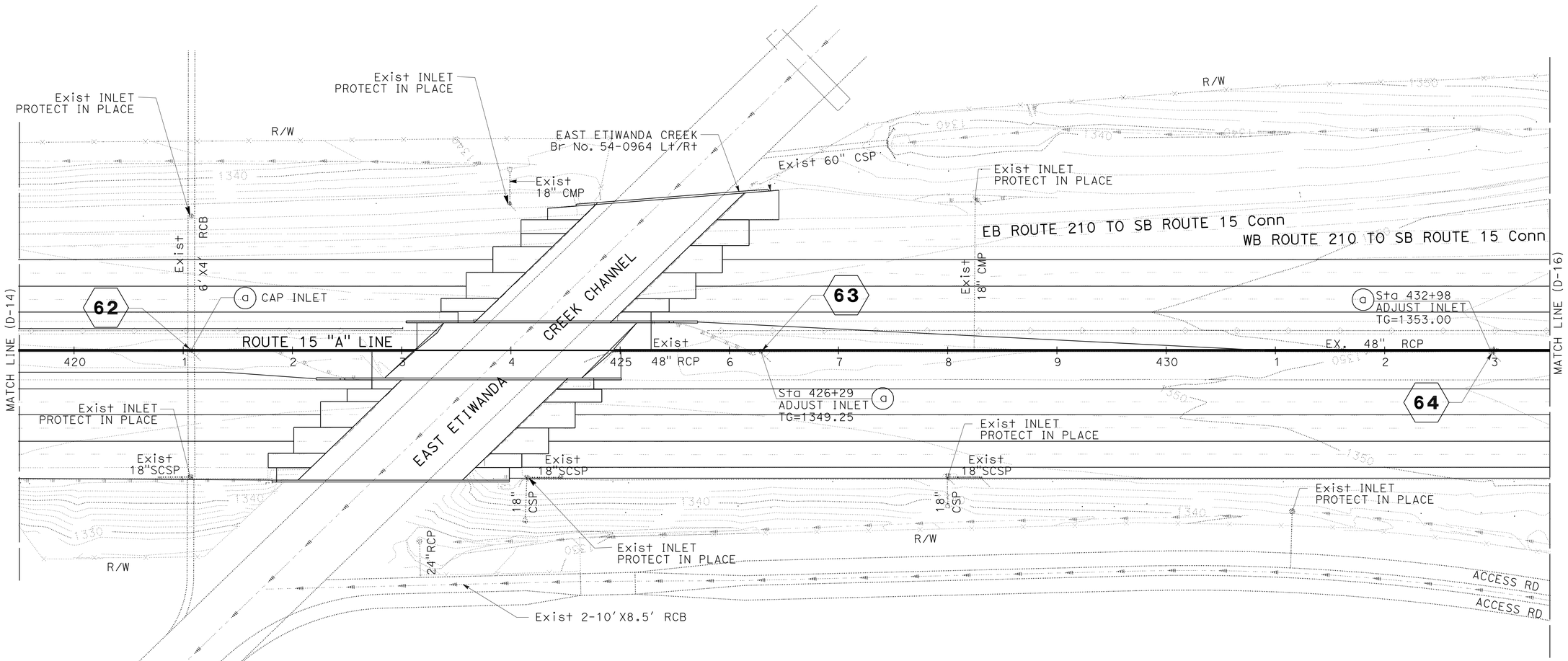

DRAINAGE PLAN

SCALE: 1" = 50'

D-15

THIS PLAN ACCURATE FOR DRAINAGE ONLY

STATE OF CALIFORNIA - DEPARTMENT OF TRANSPORTATION
Caltrans DESIGN

FUNCTIONAL SUPERVISOR: GEORGE MORHIG
CALCULATED-DESIGNED BY: MICHAEL HUYNH
CHECKED BY: ALAN BISI
REVISED BY
DATE REVISED

LAST REVISION: DATE PLOTTED => 17-JUN-2011 TIME PLOTTED => 05:31
05-24-11

Dist	COUNTY	ROUTE	POST MILES TOTAL PROJECT	SHEET No.	TOTAL SHEETS
08	SBd	15	3.8/12.8	174	680

REGISTERED CIVIL ENGINEER 5-24-11 DATE

6-13-11
PLANS APPROVAL DATE

REGISTERED PROFESSIONAL ENGINEER HA VU No. C61359 Exp. 6-30-11 CIVIL STATE OF CALIFORNIA

THE STATE OF CALIFORNIA OR ITS OFFICERS OR AGENTS SHALL NOT BE RESPONSIBLE FOR THE ACCURACY OR COMPLETENESS OF SCANNED COPIES OF THIS PLAN SHEET.

NOTE:

FOR ACCURATE RIGHT OF WAY AND ACCESS DATA,
CONTACT RIGHT OF WAY ENGINEERING AT THE DISTRICT OFFICE.

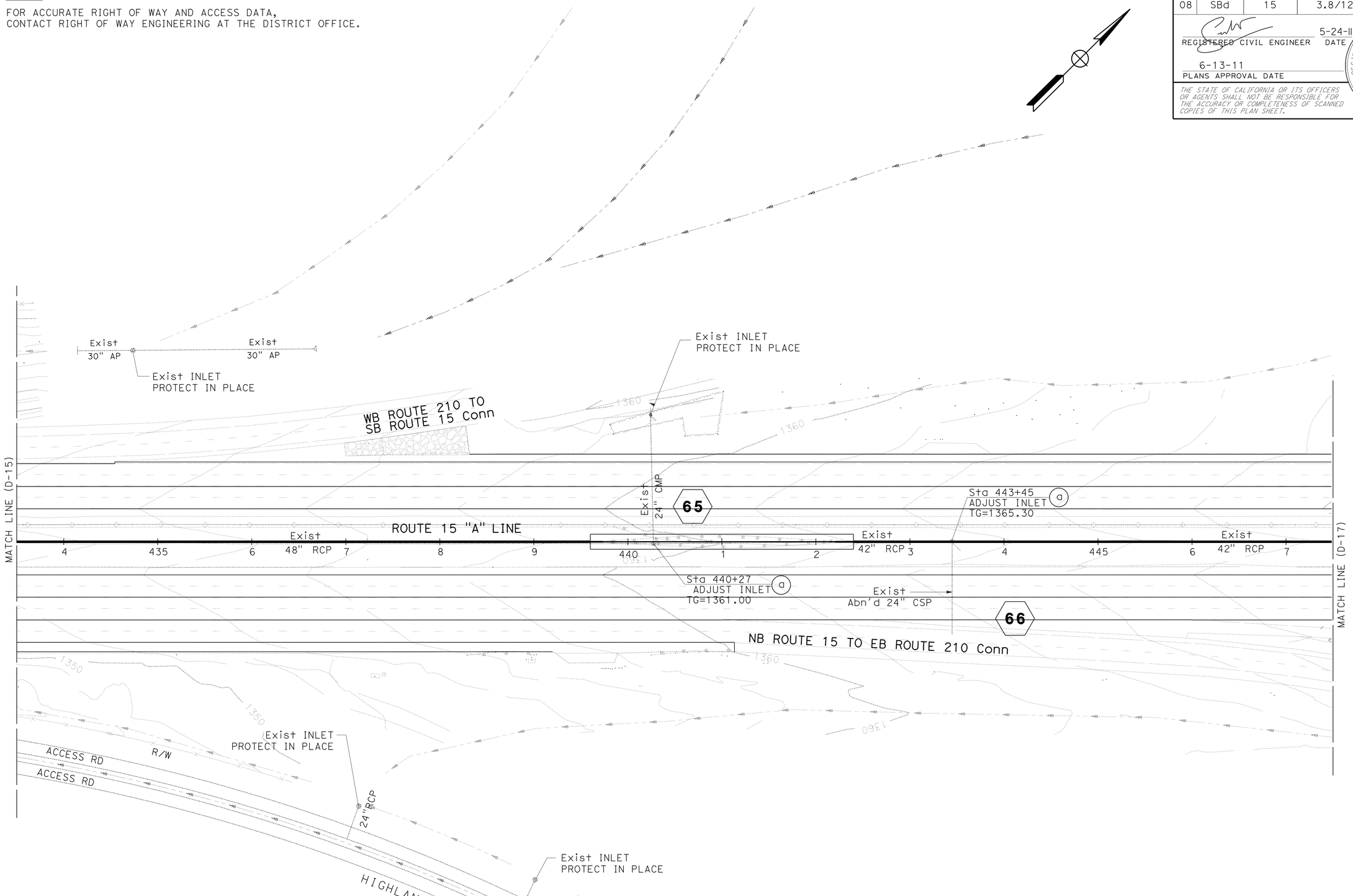

THIS PLAN ACCURATE FOR DRAINAGE ONLY

DRAINAGE PLAN

SCALE: 1" = 50'

D-16

REVISED BY	DATE REVISED

CALCULATED-DESIGNED BY	CHECKED BY
MICHAEL HUYNH	ALAN BISI

FUNCTIONAL SUPERVISOR: GEORGE MORHIG

STATE OF CALIFORNIA - DEPARTMENT OF TRANSPORTATION

Caltrans

DESIGN

LAST REVISION 05-24-11 | DATE PLOTTED => 17-JUN-2011 | TIME PLOTTED => 05:31

Dist	COUNTY	ROUTE	POST MILES TOTAL PROJECT	SHEET No.	TOTAL SHEETS
08	SBd	15	3.8/12.8	175	680

REGISTERED CIVIL ENGINEER 5-24-11 DATE

6-13-11
PLANS APPROVAL DATE

REGISTERED PROFESSIONAL ENGINEER HA VU No. C61359 Exp. 6-30-11 CIVIL STATE OF CALIFORNIA

THE STATE OF CALIFORNIA OR ITS OFFICERS OR AGENTS SHALL NOT BE RESPONSIBLE FOR THE ACCURACY OR COMPLETENESS OF SCANNED COPIES OF THIS PLAN SHEET.

NOTE:

FOR ACCURATE RIGHT OF WAY AND ACCESS DATA,
CONTACT RIGHT OF WAY ENGINEERING AT THE DISTRICT OFFICE.

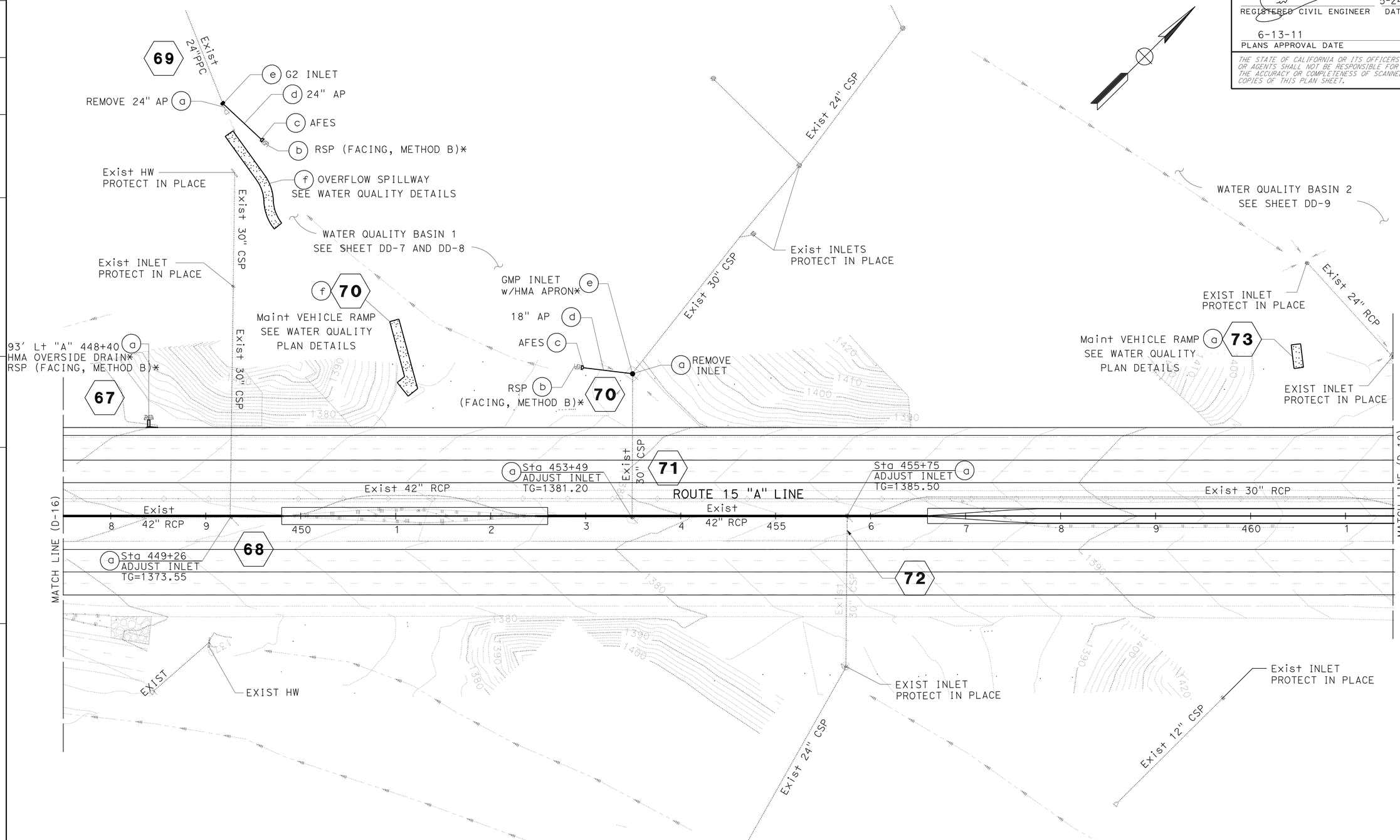

DRAINAGE PLAN

SCALE: 1" = 50'

D-17

THIS PLAN ACCURATE FOR DRAINAGE ONLY

STATE OF CALIFORNIA - DEPARTMENT OF TRANSPORTATION
Caltrans
DESIGN

FUNCTIONAL SUPERVISOR: GEORGE MORHIG
CALCULATED-DESIGNED BY: ALAN BISI
CHECKED BY: MICHAEL HUYNH
REVISED BY
DATE REVISED

LAST REVISION 05-24-11
DATE PLOTTED => 17-JUN-2011
TIME PLOTTED => 05:31

Dist	COUNTY	ROUTE	POST MILES TOTAL PROJECT	SHEET No.	TOTAL SHEETS
08	SBd	15	3.8/12.8	176	680

REGISTERED CIVIL ENGINEER 5-24-11 DATE

6-13-11
PLANS APPROVAL DATE

REGISTERED PROFESSIONAL ENGINEER HA VU No. C61359 Exp. 6-30-11 CIVIL STATE OF CALIFORNIA

THE STATE OF CALIFORNIA OR ITS OFFICERS OR AGENTS SHALL NOT BE RESPONSIBLE FOR THE ACCURACY OR COMPLETENESS OF SCANNED COPIES OF THIS PLAN SHEET.

NOTE:

FOR ACCURATE RIGHT OF WAY AND ACCESS DATA,
CONTACT RIGHT OF WAY ENGINEERING AT THE DISTRICT OFFICE.

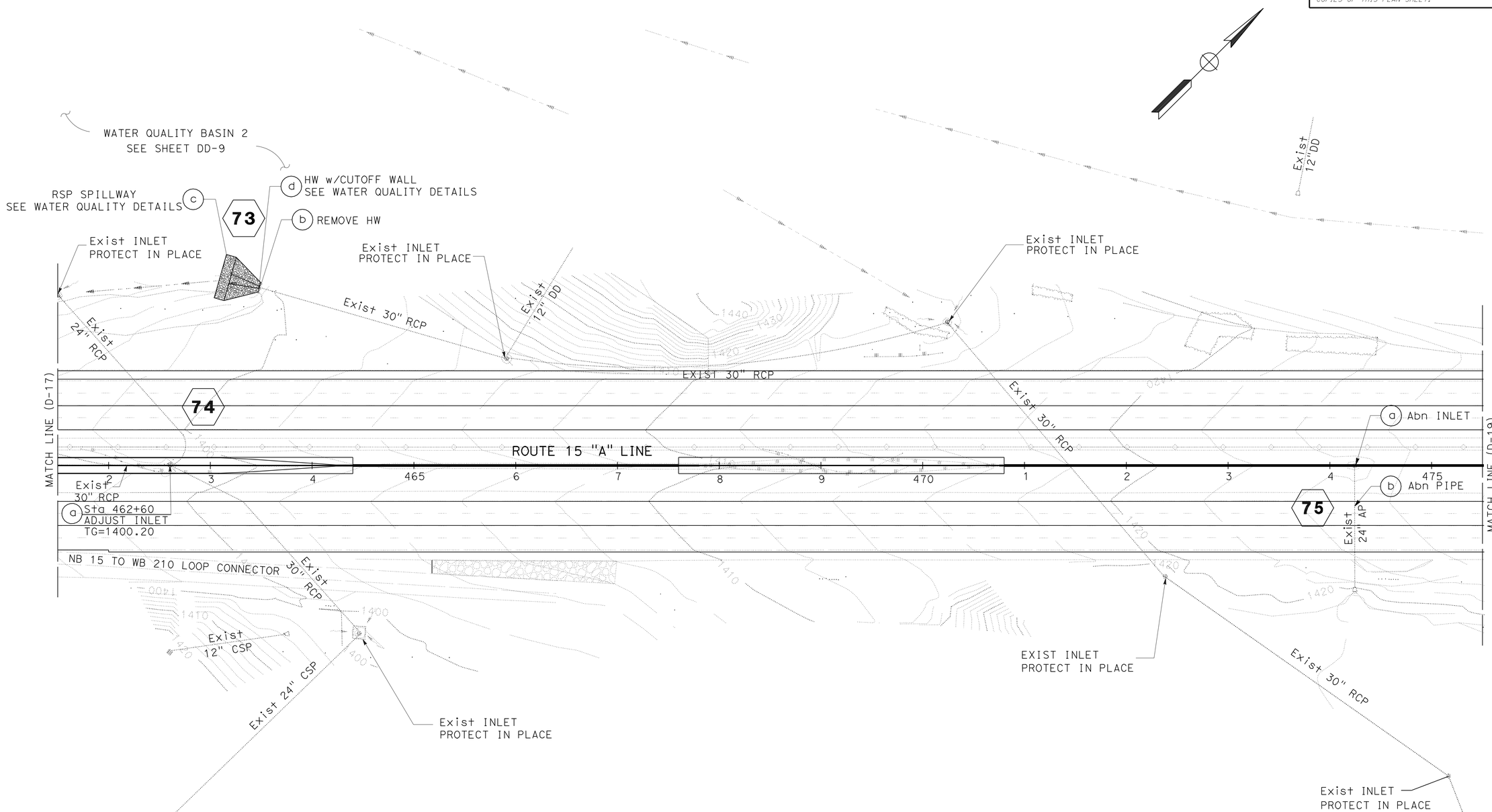

DRAINAGE PLAN

SCALE: 1" = 50'

D-18

THIS PLAN ACCURATE FOR DRAINAGE ONLY

STATE OF CALIFORNIA - DEPARTMENT OF TRANSPORTATION
Caltrans
DESIGN

FUNCTIONAL SUPERVISOR: GEORGE MORHIG
CALCULATED-DESIGNED BY: MICHAEL HUYNH
CHECKED BY: ALAN BISI
REVISED BY
DATE REVISED

LAST REVISION 05-24-11
DATE PLOTTED => 17-JUN-2011
TIME PLOTTED => 05:31

Dist	COUNTY	ROUTE	POST MILES TOTAL PROJECT	SHEET No.	TOTAL SHEETS
08	SBd	15	3.8/12.8	177	680

REGISTERED CIVIL ENGINEER 5-24-11 DATE

6-13-11
PLANS APPROVAL DATE

REGISTERED PROFESSIONAL ENGINEER HA VU No. C61359 Exp. 6-30-11 CIVIL STATE OF CALIFORNIA

THE STATE OF CALIFORNIA OR ITS OFFICERS OR AGENTS SHALL NOT BE RESPONSIBLE FOR THE ACCURACY OR COMPLETENESS OF SCANNED COPIES OF THIS PLAN SHEET.

NOTE:

FOR ACCURATE RIGHT OF WAY AND ACCESS DATA,
CONTACT RIGHT OF WAY ENGINEERING AT THE DISTRICT OFFICE.

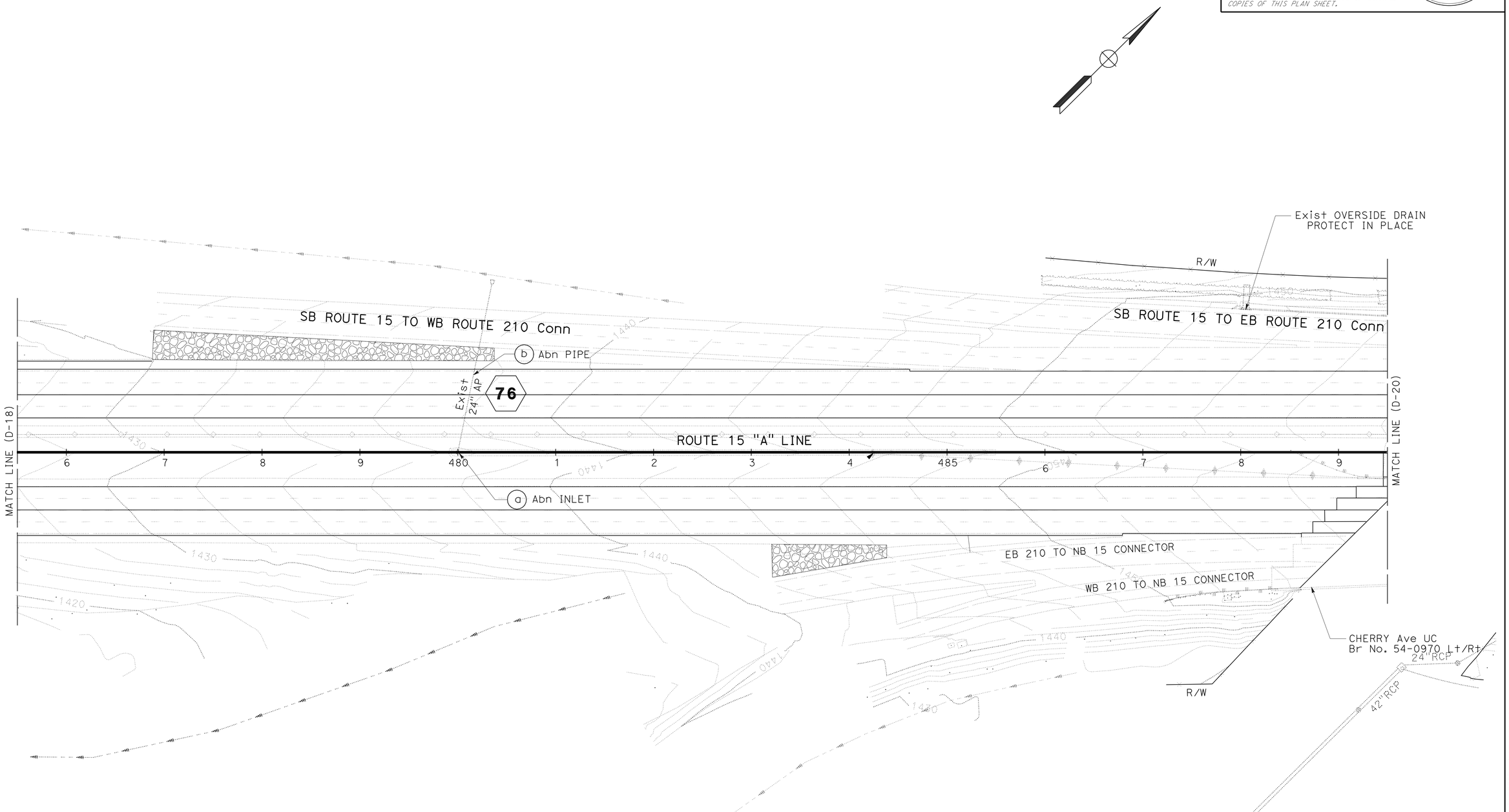

DRAINAGE PLAN

SCALE: 1" = 50'

D-19

THIS PLAN ACCURATE FOR DRAINAGE ONLY

STATE OF CALIFORNIA - DEPARTMENT OF TRANSPORTATION
Caltrans
DESIGN

FUNCTIONAL SUPERVISOR: GEORGE MORHIG
CALCULATED-DESIGNED BY: MICHAEL HUYNH
CHECKED BY: ALAN BISI
REVISED BY
DATE REVISED

LAST REVISION 05-24-11
DATE PLOTTED => 17-JUN-2011
TIME PLOTTED => 05:32

Dist	COUNTY	ROUTE	POST MILES TOTAL PROJECT	SHEET No.	TOTAL SHEETS
08	SBd	15	3.8/12.8	178	680

REGISTERED CIVIL ENGINEER 5-24-11 DATE

6-13-11
PLANS APPROVAL DATE

REGISTERED PROFESSIONAL ENGINEER
HA VU
No. C61359
Exp. 6-30-11
CIVIL
STATE OF CALIFORNIA

THE STATE OF CALIFORNIA OR ITS OFFICERS OR AGENTS SHALL NOT BE RESPONSIBLE FOR THE ACCURACY OR COMPLETENESS OF SCANNED COPIES OF THIS PLAN SHEET.

NOTE:

FOR ACCURATE RIGHT OF WAY AND ACCESS DATA,
CONTACT RIGHT OF WAY ENGINEERING AT THE DISTRICT OFFICE.

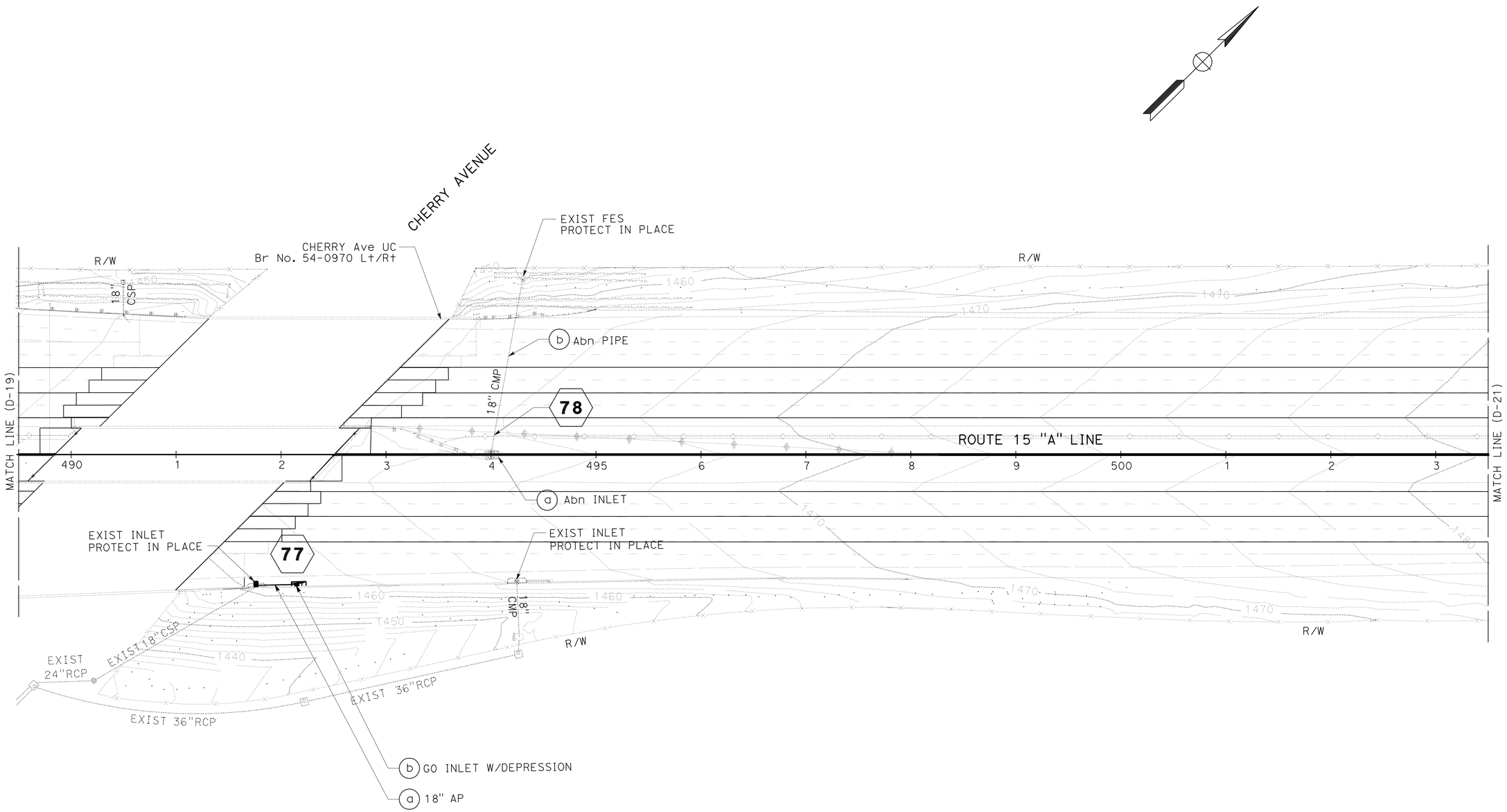

THIS PLAN ACCURATE FOR DRAINAGE ONLY

DRAINAGE PLAN

SCALE: 1" = 50'

D-20

STATE OF CALIFORNIA - DEPARTMENT OF TRANSPORTATION
Caltrans
DESIGN

FUNCTIONAL SUPERVISOR: GEORGE MORHIG
CALCULATED-DESIGNED BY: MICHAEL HUYNH
CHECKED BY: ALAN BISI
REVISED BY
DATE REVISED

LAST REVISION 05-24-11
DATE PLOTTED => 17-JUN-2011
TIME PLOTTED => 05:32

Dist	COUNTY	ROUTE	POST MILES TOTAL PROJECT	SHEET No.	TOTAL SHEETS
08	SBd	15	3.8/12.8	179	680

REGISTERED CIVIL ENGINEER 5-24-11 DATE

6-13-11
PLANS APPROVAL DATE

REGISTERED PROFESSIONAL ENGINEER HA VU No. C61359 Exp. 6-30-11 CIVIL STATE OF CALIFORNIA

THE STATE OF CALIFORNIA OR ITS OFFICERS OR AGENTS SHALL NOT BE RESPONSIBLE FOR THE ACCURACY OR COMPLETENESS OF SCANNED COPIES OF THIS PLAN SHEET.

NOTE:

FOR ACCURATE RIGHT OF WAY AND ACCESS DATA,
CONTACT RIGHT OF WAY ENGINEERING AT THE DISTRICT OFFICE.

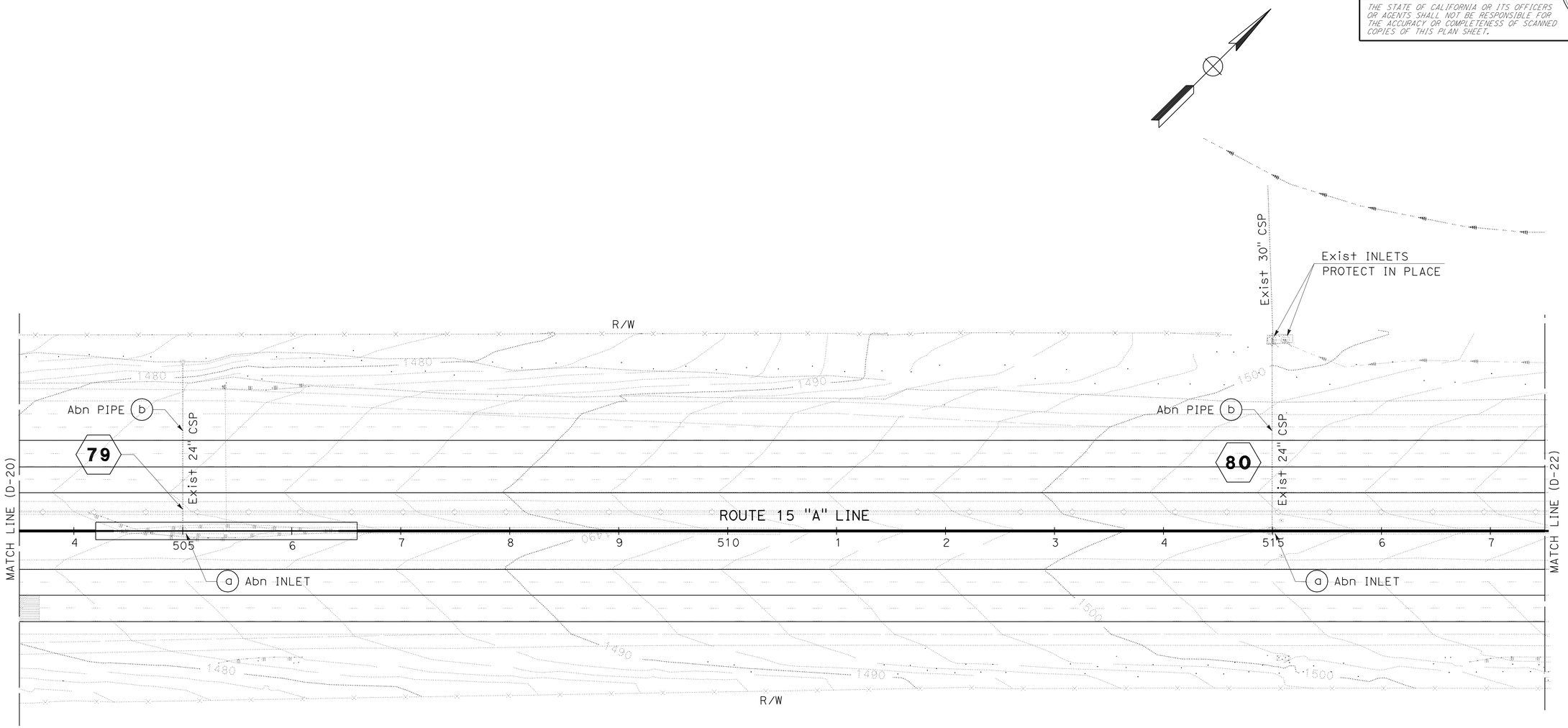

DRAINAGE PLAN

SCALE: 1" = 50'

D-21

THIS PLAN ACCURATE FOR DRAINAGE ONLY

STATE OF CALIFORNIA - DEPARTMENT OF TRANSPORTATION
Caltrans
DESIGN

FUNCTIONAL SUPERVISOR: GEORGE MORHIG
CALCULATED-DESIGNED BY: MICHAEL HUYNH
CHECKED BY: ALAN BISI
REVISED BY
DATE REVISED

LAST REVISION 05-24-11
DATE PLOTTED => 17-JUN-2011
TIME PLOTTED => 05:32

Dist	COUNTY	ROUTE	POST MILES TOTAL PROJECT	SHEET No.	TOTAL SHEETS
08	SBd	15	3.8/12.8	180	680

REGISTERED CIVIL ENGINEER 5-24-11 DATE

6-13-11
PLANS APPROVAL DATE

REGISTERED PROFESSIONAL ENGINEER HA VU No. C61359 Exp. 6-30-11 CIVIL STATE OF CALIFORNIA

THE STATE OF CALIFORNIA OR ITS OFFICERS OR AGENTS SHALL NOT BE RESPONSIBLE FOR THE ACCURACY OR COMPLETENESS OF SCANNED COPIES OF THIS PLAN SHEET.

NOTE:

FOR ACCURATE RIGHT OF WAY AND ACCESS DATA,
CONTACT RIGHT OF WAY ENGINEERING AT THE DISTRICT OFFICE.

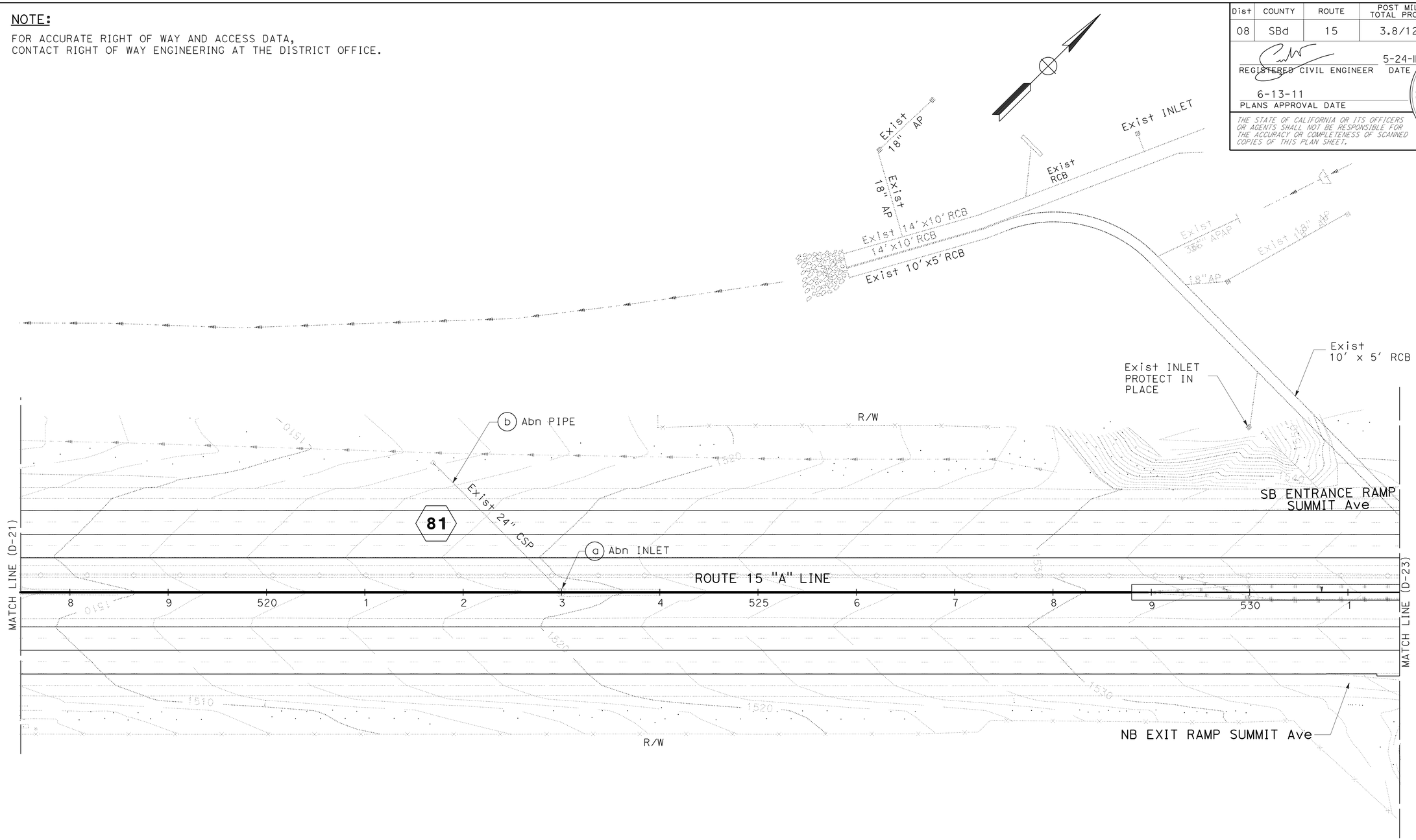

DRAINAGE PLAN

SCALE: 1" = 50'

D-22

THIS PLAN ACCURATE FOR DRAINAGE ONLY

STATE OF CALIFORNIA - DEPARTMENT OF TRANSPORTATION
Caltrans® DESIGN

FUNCTIONAL SUPERVISOR: GEORGE MORHIG
CALCULATED-DESIGNED BY: MICHAEL HUYNH
CHECKED BY: ALAN BISI
REVISED BY
DATE REVISED

LAST REVISION 05-24-11
DATE PLOTTED => 17-JUN-2011
TIME PLOTTED => 09:32

Dist	COUNTY	ROUTE	POST MILES TOTAL PROJECT	SHEET No.	TOTAL SHEETS
08	SBd	15	3.8/12.8	181	680

REGISTERED CIVIL ENGINEER 5-24-11 DATE

6-13-11
PLANS APPROVAL DATE

REGISTERED PROFESSIONAL ENGINEER HA VU No. C61359 Exp. 6-30-11 CIVIL STATE OF CALIFORNIA

THE STATE OF CALIFORNIA OR ITS OFFICERS OR AGENTS SHALL NOT BE RESPONSIBLE FOR THE ACCURACY OR COMPLETENESS OF SCANNED COPIES OF THIS PLAN SHEET.

NOTE:

FOR ACCURATE RIGHT OF WAY AND ACCESS DATA, CONTACT RIGHT OF WAY ENGINEERING AT THE DISTRICT OFFICE.

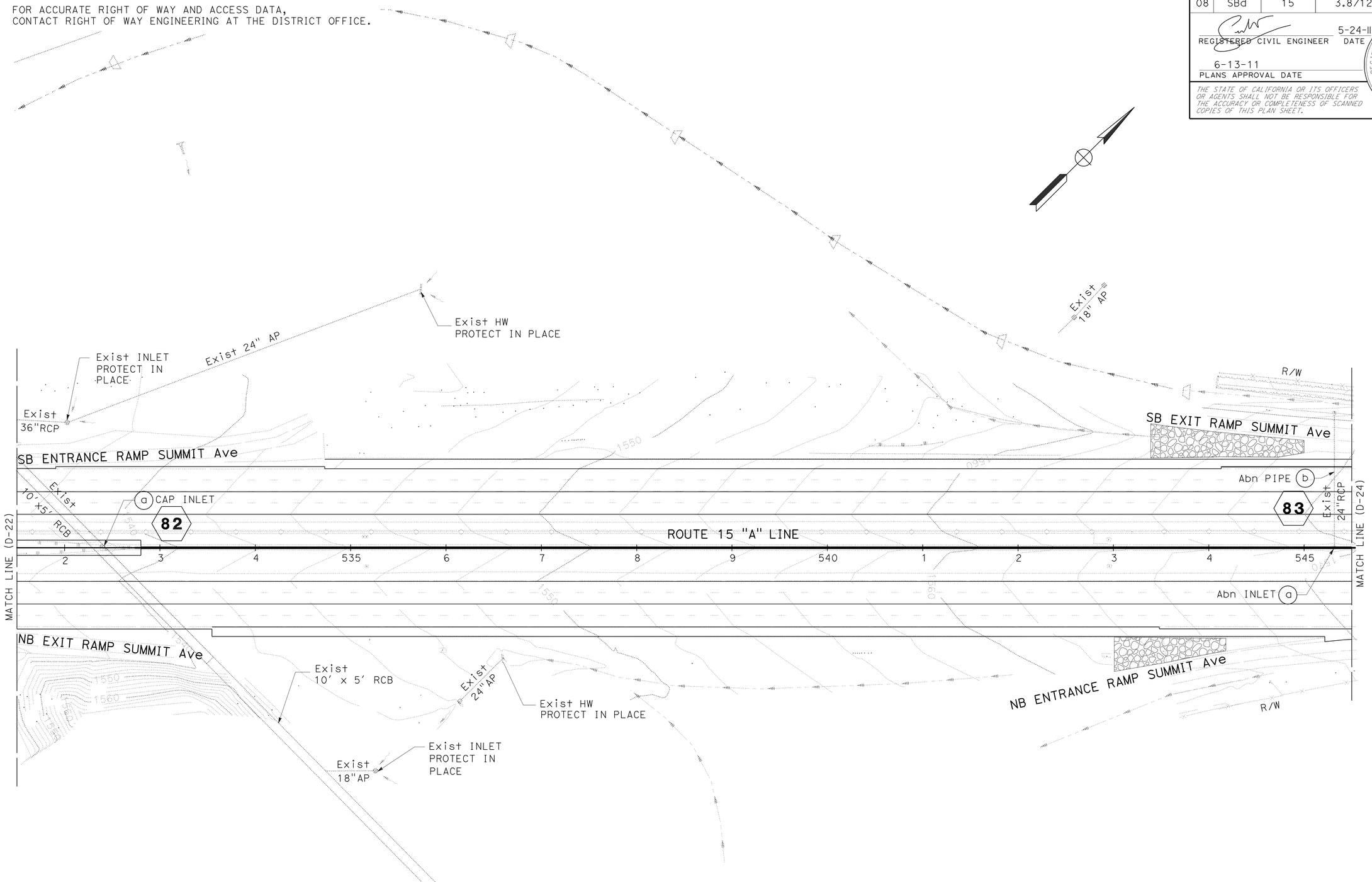

THIS PLAN ACCURATE FOR DRAINAGE ONLY

DRAINAGE PLAN

SCALE 1" = 50'

D-23

REVISED BY	DATE REVISED

CALCULATED-DESIGNED BY	CHECKED BY
MICHAEL HUYNH	ALAN BISI

FUNCTIONAL SUPERVISOR: GEORGE MORHIG

STATE OF CALIFORNIA - DEPARTMENT OF TRANSPORTATION

Caltrans® **DESIGN**

LAST REVISION 05-24-11 | DATE PLOTTED => 17-JUN-2011 | TIME PLOTTED => 05:32

Dist	COUNTY	ROUTE	POST MILES TOTAL PROJECT	SHEET No.	TOTAL SHEETS
08	SBd	15	3.8/12.8	182	680

REGISTERED CIVIL ENGINEER 5-24-11 DATE

6-13-11
PLANS APPROVAL DATE

REGISTERED PROFESSIONAL ENGINEER
HA VU
No. C61359
Exp. 6-30-11
CIVIL
STATE OF CALIFORNIA

THE STATE OF CALIFORNIA OR ITS OFFICERS OR AGENTS SHALL NOT BE RESPONSIBLE FOR THE ACCURACY OR COMPLETENESS OF SCANNED COPIES OF THIS PLAN SHEET.

NOTE:

FOR ACCURATE RIGHT OF WAY AND ACCESS DATA,
CONTACT RIGHT OF WAY ENGINEERING AT THE DISTRICT OFFICE.

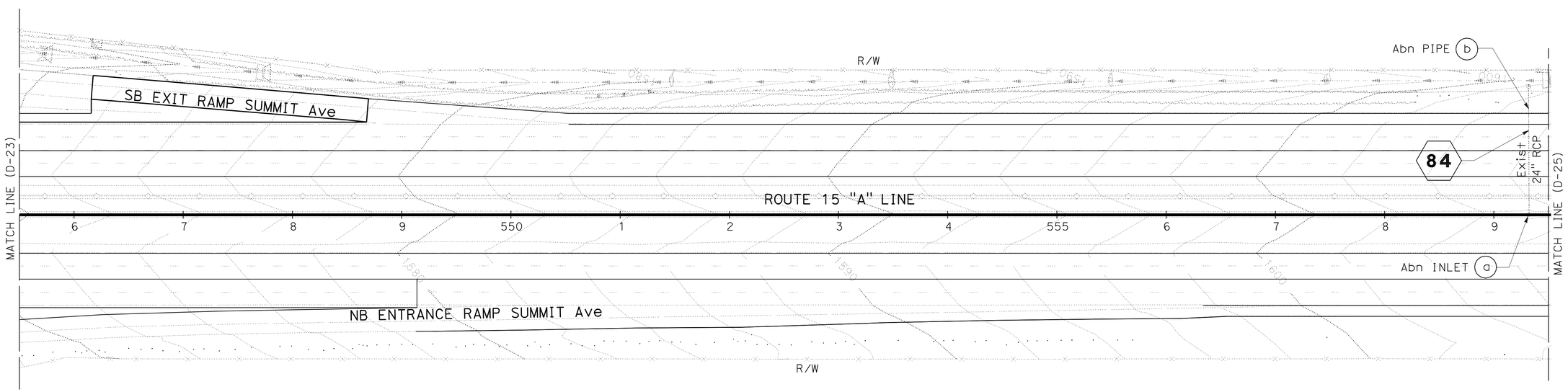

DRAINAGE PLAN

SCALE 1" = 50'

D-24

THIS PLAN ACCURATE FOR DRAINAGE ONLY

STATE OF CALIFORNIA - DEPARTMENT OF TRANSPORTATION
Caltrans
DESIGN

FUNCTIONAL SUPERVISOR: GEORGE MORHIG
CALCULATED-DESIGNED BY: MICHAEL HUYNH
CHECKED BY: ALAN BISI
REVISED BY
DATE REVISED

LAST REVISION 05-24-11
DATE PLOTTED => 17-JUN-2011
TIME PLOTTED => 05:32

Dist	COUNTY	ROUTE	POST MILES TOTAL PROJECT	SHEET No.	TOTAL SHEETS
08	SBd	15	3.8/12.8	183	680

REGISTERED CIVIL ENGINEER 5-24-11 DATE

6-13-11
PLANS APPROVAL DATE

REGISTERED PROFESSIONAL ENGINEER
HA VU
No. C61359
Exp. 6-30-11
CIVIL
STATE OF CALIFORNIA

THE STATE OF CALIFORNIA OR ITS OFFICERS OR AGENTS SHALL NOT BE RESPONSIBLE FOR THE ACCURACY OR COMPLETENESS OF SCANNED COPIES OF THIS PLAN SHEET.

NOTE:

FOR ACCURATE RIGHT OF WAY AND ACCESS DATA,
CONTACT RIGHT OF WAY ENGINEERING AT THE DISTRICT OFFICE.

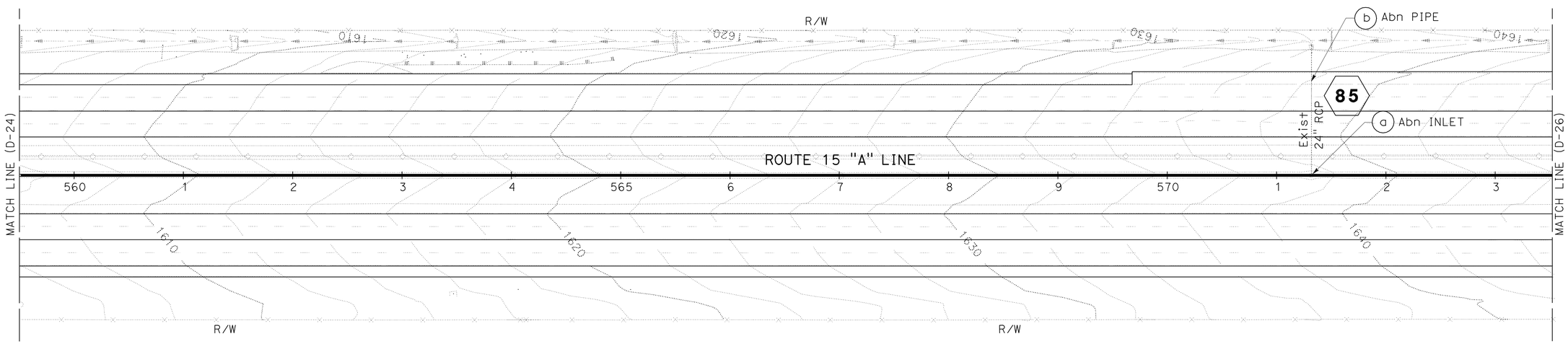

THIS PLAN ACCURATE FOR DRAINAGE ONLY

DRAINAGE PLAN

SCALE 1" = 50'

D-25

REVISED BY	DATE REVISED

CALCULATED-DESIGNED BY: MICHAEL HUYNH
CHECKED BY: ALAN BISI
FUNCTIONAL SUPERVISOR: GEORGE MORHIG

STATE OF CALIFORNIA - DEPARTMENT OF TRANSPORTATION
Caltrans
DESIGN

LAST REVISION 05-24-11
DATE PLOTTED => 17-JUN-2011
TIME PLOTTED => 09:32

Dist	COUNTY	ROUTE	POST MILES TOTAL PROJECT	SHEET No.	TOTAL SHEETS
08	SBd	15	3.8/12.8	184	680

REGISTERED CIVIL ENGINEER 5-24-11 DATE

6-13-11
PLANS APPROVAL DATE

REGISTERED PROFESSIONAL ENGINEER
HA VU
No. C61359
Exp. 6-30-11
CIVIL
STATE OF CALIFORNIA

THE STATE OF CALIFORNIA OR ITS OFFICERS OR AGENTS SHALL NOT BE RESPONSIBLE FOR THE ACCURACY OR COMPLETENESS OF SCANNED COPIES OF THIS PLAN SHEET.

NOTE:

FOR ACCURATE RIGHT OF WAY AND ACCESS DATA,
CONTACT RIGHT OF WAY ENGINEERING AT THE DISTRICT OFFICE.

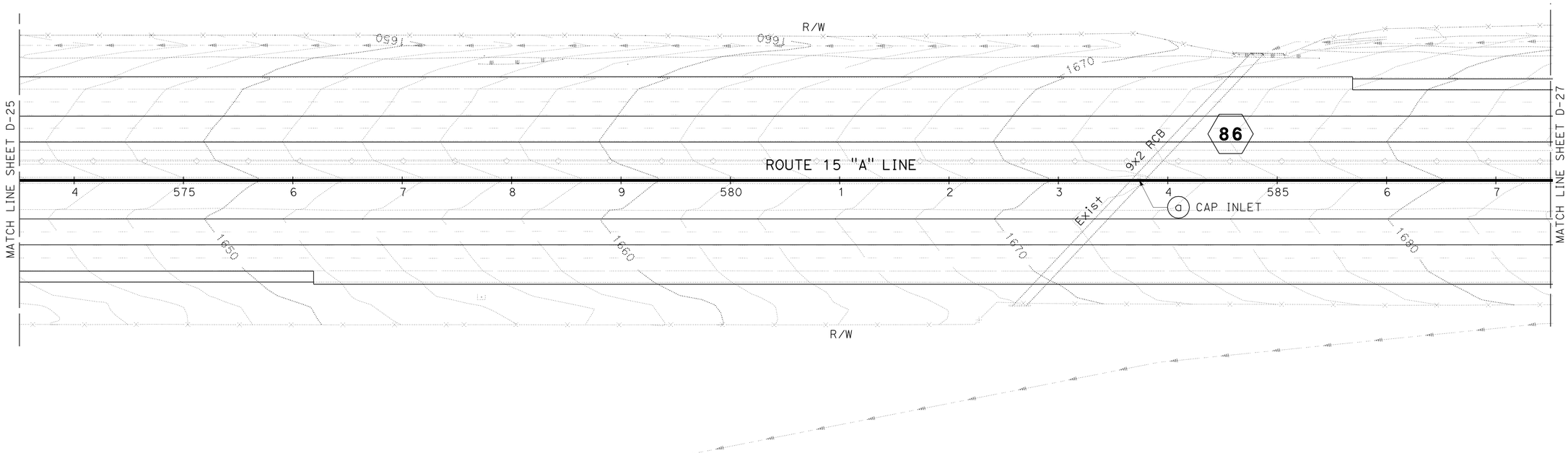

DRAINAGE PLAN

SCALE 1" = 50'

D-26

THIS PLAN ACCURATE FOR DRAINAGE ONLY

STATE OF CALIFORNIA - DEPARTMENT OF TRANSPORTATION
Caltrans® **DESIGN**

FUNCTIONAL SUPERVISOR: GEORGE MORHIG

CALCULATED-DESIGNED BY: MICHAEL HUYNH
CHECKED BY: ALAN BISI

REVISED BY
DATE REVISED

LAST REVISION 05-24-11
DATE PLOTTED => 17-JUN-2011
TIME PLOTTED => 05:32

Dist	COUNTY	ROUTE	POST MILES TOTAL PROJECT	SHEET No.	TOTAL SHEETS
08	SBd	15	3.8/12.8	185	680

REGISTERED CIVIL ENGINEER 5-24-11 DATE

6-13-11
PLANS APPROVAL DATE

REGISTERED PROFESSIONAL ENGINEER
HA VU
No. C61359
Exp. 6-30-11
CIVIL
STATE OF CALIFORNIA

THE STATE OF CALIFORNIA OR ITS OFFICERS OR AGENTS SHALL NOT BE RESPONSIBLE FOR THE ACCURACY OR COMPLETENESS OF SCANNED COPIES OF THIS PLAN SHEET.

NOTE:

FOR ACCURATE RIGHT OF WAY AND ACCESS DATA,
CONTACT RIGHT OF WAY ENGINEERING AT THE DISTRICT OFFICE.

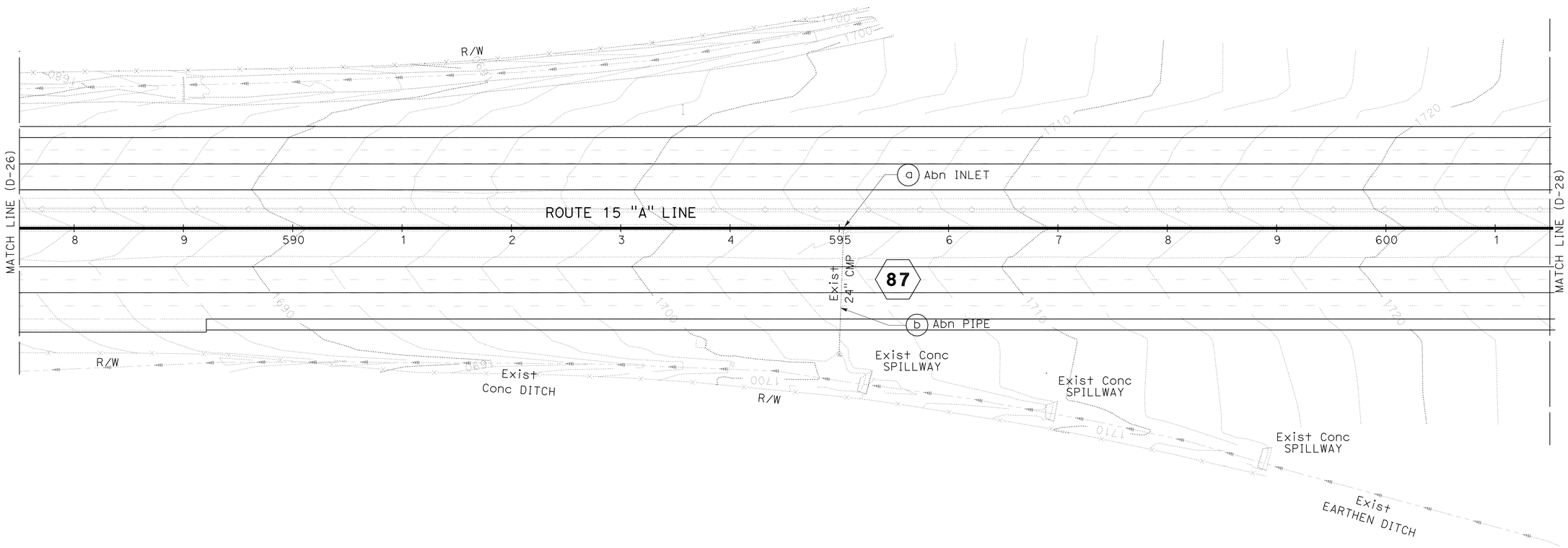

DRAINAGE PLAN

SCALE 1" = 50'

D-27

THIS PLAN ACCURATE FOR DRAINAGE ONLY

STATE OF CALIFORNIA - DEPARTMENT OF TRANSPORTATION
Caltrans
DESIGN

FUNCTIONAL SUPERVISOR: GEORGE MORHIG
CALCULATED-DESIGNED BY: MICHAEL HUYNH
CHECKED BY: ALAN BISI
REVISED BY
DATE REVISED

LAST REVISION 05-24-11
DATE PLOTTED => 17-JUN-2011
TIME PLOTTED => 05:32

Dist	COUNTY	ROUTE	POST MILES TOTAL PROJECT	SHEET No.	TOTAL SHEETS
08	SBd	15	3.8/12.8	186	680

REGISTERED CIVIL ENGINEER 5-24-11 DATE

6-13-11
PLANS APPROVAL DATE

REGISTERED PROFESSIONAL ENGINEER
HA VU
No. C61359
Exp. 6-30-11
CIVIL
STATE OF CALIFORNIA

THE STATE OF CALIFORNIA OR ITS OFFICERS OR AGENTS SHALL NOT BE RESPONSIBLE FOR THE ACCURACY OR COMPLETENESS OF SCANNED COPIES OF THIS PLAN SHEET.

NOTE:

FOR ACCURATE RIGHT OF WAY AND ACCESS DATA,
CONTACT RIGHT OF WAY ENGINEERING AT THE DISTRICT OFFICE.

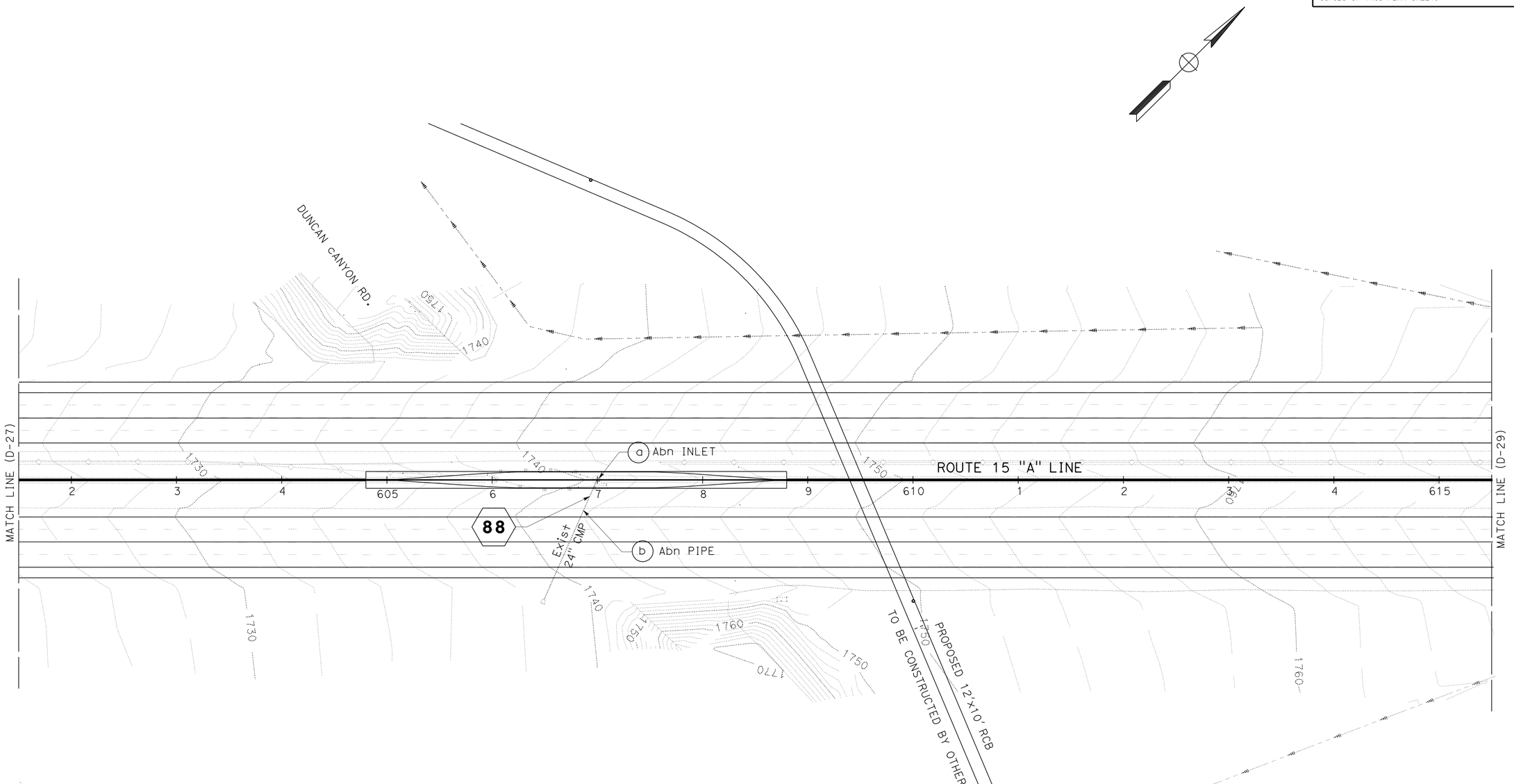

DRAINAGE PLAN

SCALE 1" = 50'

D-28

THIS PLAN ACCURATE FOR DRAINAGE ONLY

STATE OF CALIFORNIA - DEPARTMENT OF TRANSPORTATION
Caltrans
DESIGN

FUNCTIONAL SUPERVISOR: GEORGE MORHIG

CALCULATED-DESIGNED BY: MICHAEL HUYNH
CHECKED BY: ALAN BISI

REVISED BY
DATE REVISED

LAST REVISION 05-24-11
DATE PLOTTED => 17-JUN-2011
TIME PLOTTED => 95:32

Dist	COUNTY	ROUTE	POST MILES TOTAL PROJECT	SHEET No.	TOTAL SHEETS
08	SBd	15	3.8/12.8	187	680

REGISTERED CIVIL ENGINEER 5-24-11 DATE

6-13-11
PLANS APPROVAL DATE

REGISTERED PROFESSIONAL ENGINEER
HA VU
No. C61359
Exp. 6-30-11
CIVIL
STATE OF CALIFORNIA

THE STATE OF CALIFORNIA OR ITS OFFICERS OR AGENTS SHALL NOT BE RESPONSIBLE FOR THE ACCURACY OR COMPLETENESS OF SCANNED COPIES OF THIS PLAN SHEET.

NOTE:

FOR ACCURATE RIGHT OF WAY AND ACCESS DATA,
CONTACT RIGHT OF WAY ENGINEERING AT THE DISTRICT OFFICE.

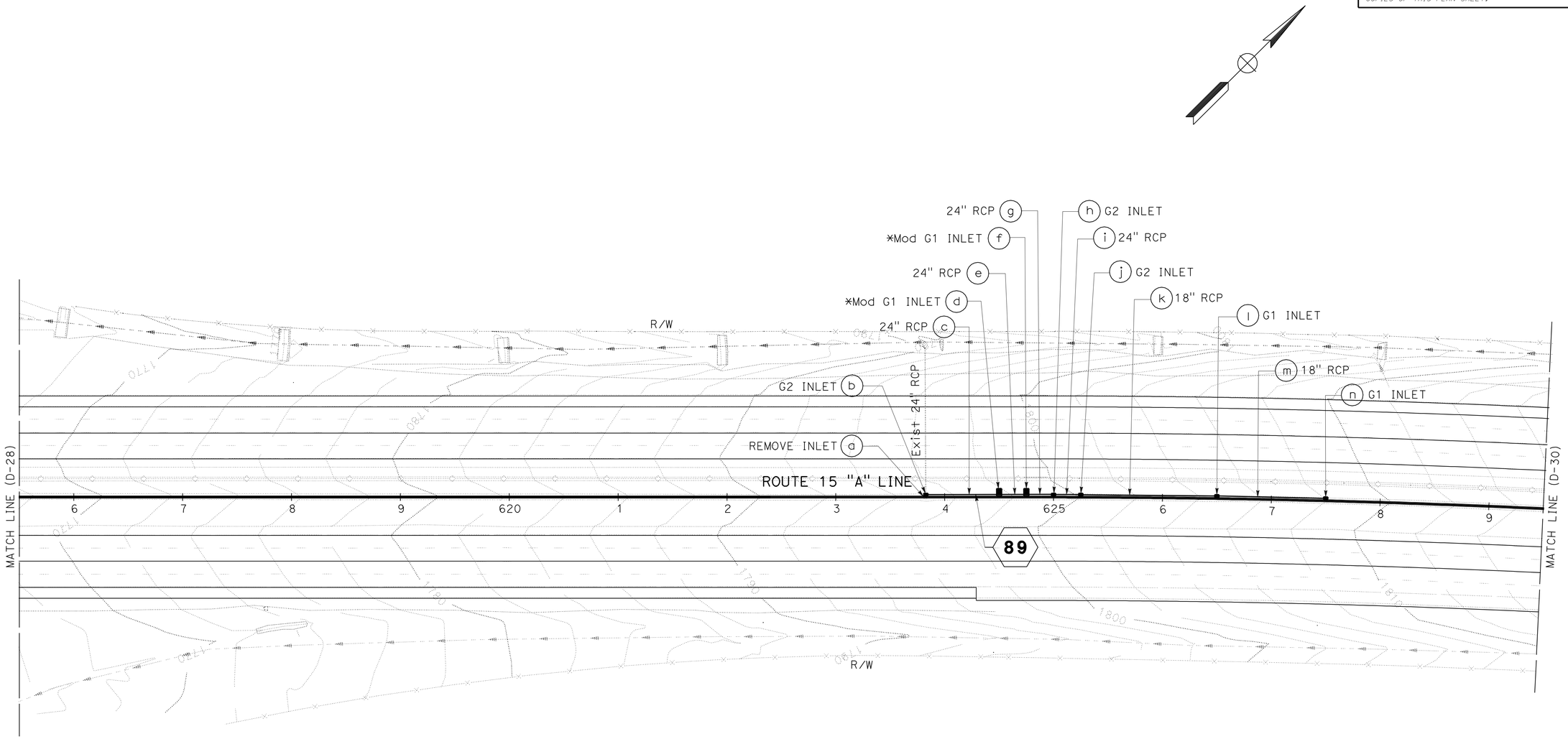

DRAINAGE PLAN

SCALE 1" = 50'

D-29

THIS PLAN ACCURATE FOR DRAINAGE ONLY

STATE OF CALIFORNIA - DEPARTMENT OF TRANSPORTATION
Caltrans
DESIGN

FUNCTIONAL SUPERVISOR: GEORGE MORHIG

CALCULATED-DESIGNED BY: MICHAEL HUYNH
CHECKED BY: ALAN BISI

REVISED BY
DATE REVISED

LAST REVISION 05-24-11
DATE PLOTTED => 17-JUN-2011
TIME PLOTTED => 05:32

Dist	COUNTY	ROUTE	POST MILES TOTAL PROJECT	SHEET No.	TOTAL SHEETS
08	SBd	15	3.8/12.8	188	680

REGISTERED CIVIL ENGINEER 5-24-11 DATE

6-13-11
PLANS APPROVAL DATE

REGISTERED PROFESSIONAL ENGINEER HA VU No. C61359 Exp. 6-30-11 CIVIL STATE OF CALIFORNIA

THE STATE OF CALIFORNIA OR ITS OFFICERS OR AGENTS SHALL NOT BE RESPONSIBLE FOR THE ACCURACY OR COMPLETENESS OF SCANNED COPIES OF THIS PLAN SHEET.

NOTE:

FOR ACCURATE RIGHT OF WAY AND ACCESS DATA,
CONTACT RIGHT OF WAY ENGINEERING AT THE DISTRICT OFFICE.

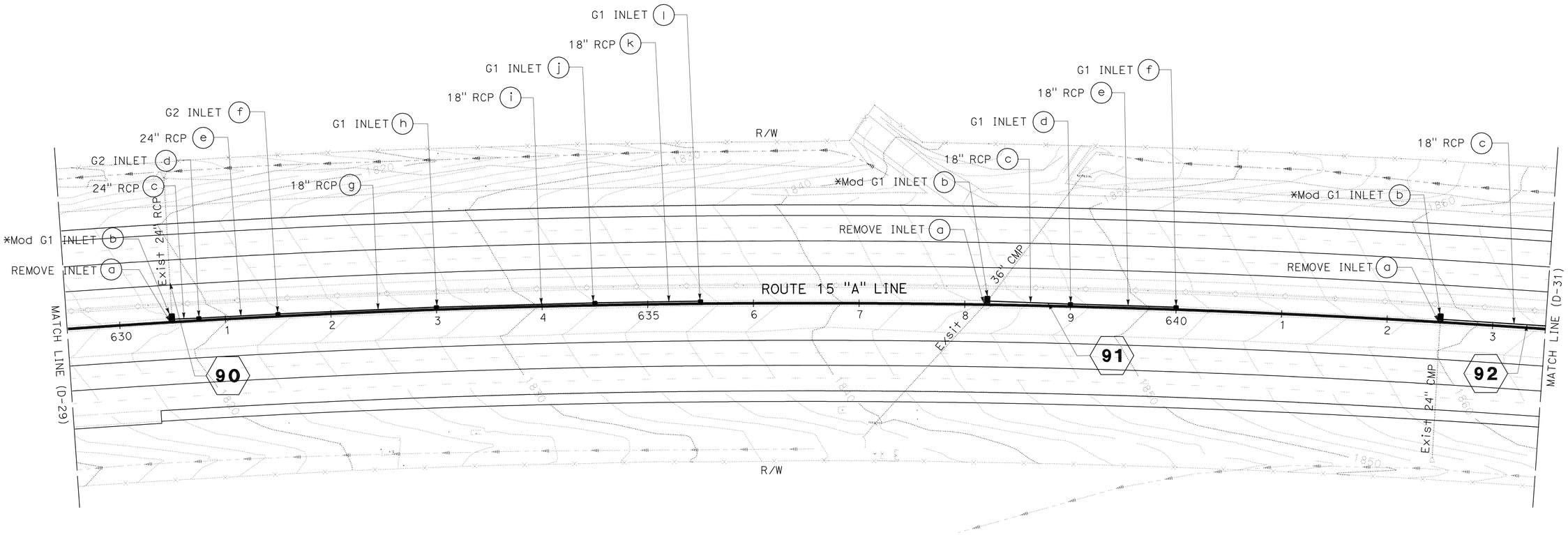

DRAINAGE PLAN

SCALE 1" = 50'

D-30

THIS PLAN ACCURATE FOR DRAINAGE ONLY

STATE OF CALIFORNIA - DEPARTMENT OF TRANSPORTATION
Caltrans® DESIGN

FUNCTIONAL SUPERVISOR: GEORGE MORHIG
CALCULATED-DESIGNED BY: MICHAEL HUYNH
CHECKED BY: ALAN BISI
REVISED BY
DATE REVISED

LAST REVISION 05-24-11
DATE PLOTTED => 17-JUN-2011
TIME PLOTTED => 05:32

Dist	COUNTY	ROUTE	POST MILES TOTAL PROJECT	SHEET No.	TOTAL SHEETS
08	SBd	15	3.8/12.8	189	680

REGISTERED CIVIL ENGINEER 5-24-11 DATE

6-13-11
PLANS APPROVAL DATE

REGISTERED PROFESSIONAL ENGINEER
HA VU
No. C61359
Exp. 6-30-11
CIVIL
STATE OF CALIFORNIA

THE STATE OF CALIFORNIA OR ITS OFFICERS OR AGENTS SHALL NOT BE RESPONSIBLE FOR THE ACCURACY OR COMPLETENESS OF SCANNED COPIES OF THIS PLAN SHEET.

NOTE:

FOR ACCURATE RIGHT OF WAY AND ACCESS DATA,
CONTACT RIGHT OF WAY ENGINEERING AT THE DISTRICT OFFICE.

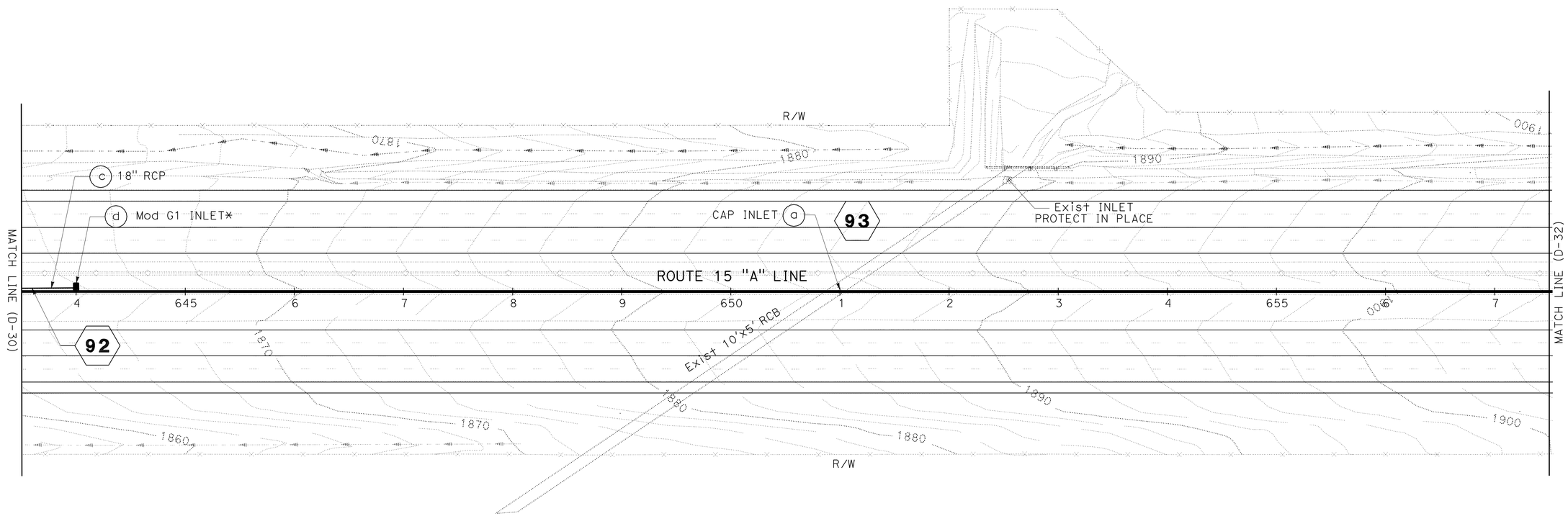

DRAINAGE PLAN

SCALE 1" = 50'

D-31

THIS PLAN ACCURATE FOR DRAINAGE ONLY

STATE OF CALIFORNIA - DEPARTMENT OF TRANSPORTATION
Caltrans
DESIGN

FUNCTIONAL SUPERVISOR: GEORGE MORHIG
CALCULATED-DESIGNED BY: MICHAEL HUYNH
CHECKED BY: ALAN BISI
REVISED BY
DATE REVISED

LAST REVISION 05-24-11
DATE PLOTTED => 17-JUN-2011
TIME PLOTTED => 05:33

Dist	COUNTY	ROUTE	POST MILES TOTAL PROJECT	SHEET No.	TOTAL SHEETS
08	SBd	15	3.8/12.8	190	680

REGISTERED CIVIL ENGINEER 5-24-11 DATE

6-13-11
PLANS APPROVAL DATE

REGISTERED PROFESSIONAL ENGINEER
HA VU
No. C61359
Exp. 6-30-11
CIVIL
STATE OF CALIFORNIA

THE STATE OF CALIFORNIA OR ITS OFFICERS OR AGENTS SHALL NOT BE RESPONSIBLE FOR THE ACCURACY OR COMPLETENESS OF SCANNED COPIES OF THIS PLAN SHEET.

NOTE:

FOR ACCURATE RIGHT OF WAY AND ACCESS DATA,
CONTACT RIGHT OF WAY ENGINEERING AT THE DISTRICT OFFICE.

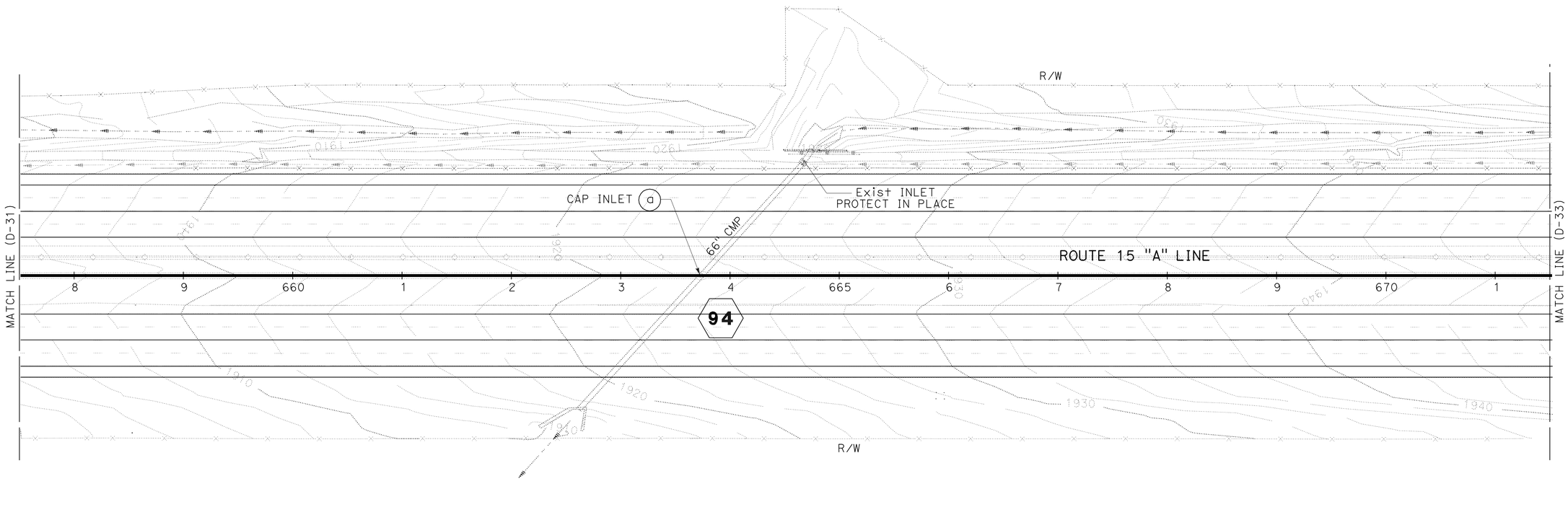

DRAINAGE PLAN

SCALE 1" = 50'

D-32

THIS PLAN ACCURATE FOR DRAINAGE ONLY

STATE OF CALIFORNIA - DEPARTMENT OF TRANSPORTATION
Caltrans
DESIGN

FUNCTIONAL SUPERVISOR: GEORGE MORHIG
CALCULATED-DESIGNED BY: MICHAEL HUYNH
CHECKED BY: ALAN BISI
REVISED BY
DATE REVISED

LAST REVISION 05-24-11
DATE PLOTTED => 17-JUN-2011
TIME PLOTTED => 05:33

Dist	COUNTY	ROUTE	POST MILES TOTAL PROJECT	SHEET No.	TOTAL SHEETS
08	SBd	15	3.8/12.8	191	680

REGISTERED CIVIL ENGINEER 5-24-11 DATE

6-13-11
PLANS APPROVAL DATE

REGISTERED PROFESSIONAL ENGINEER HA VU No. C61359 Exp. 6-30-11 CIVIL STATE OF CALIFORNIA

THE STATE OF CALIFORNIA OR ITS OFFICERS OR AGENTS SHALL NOT BE RESPONSIBLE FOR THE ACCURACY OR COMPLETENESS OF SCANNED COPIES OF THIS PLAN SHEET.

NOTE:

FOR ACCURATE RIGHT OF WAY AND ACCESS DATA,
CONTACT RIGHT OF WAY ENGINEERING AT THE DISTRICT OFFICE.

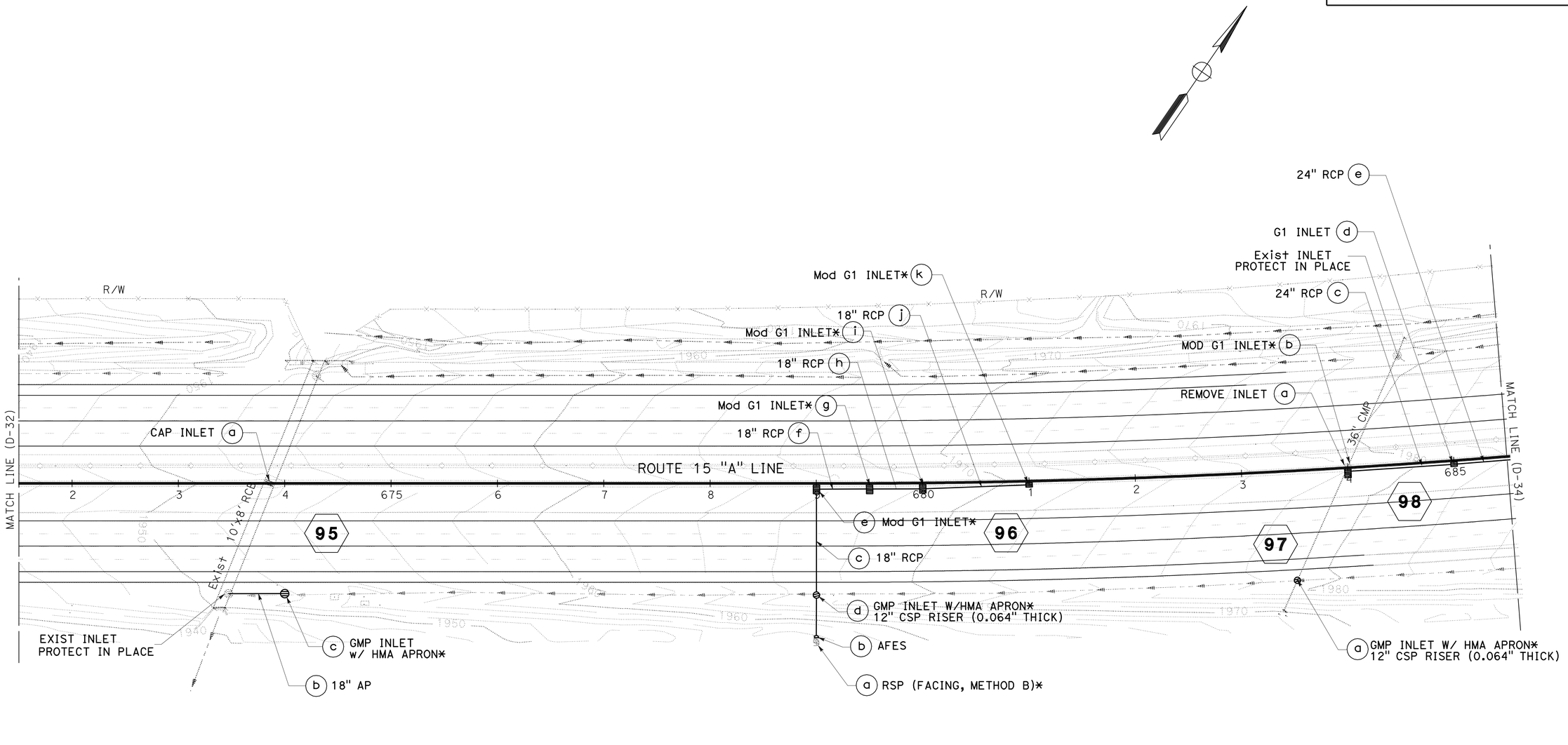

DRAINAGE PLAN

SCALE: 1" = 50'

D-33

THIS PLAN ACCURATE FOR DRAINAGE ONLY

REVISED BY	DATE REVISED

CALCULATED-DESIGNED BY	CHECKED BY
MICHAEL HUYNH	ALAN BISI

FUNCTIONAL SUPERVISOR: GEORGE MORHIG

STATE OF CALIFORNIA - DEPARTMENT OF TRANSPORTATION

Caltrans® **DESIGN**

LAST REVISION 05-24-11 | DATE PLOTTED => 17-JUN-2011 TIME PLOTTED => 05:33

Dist	COUNTY	ROUTE	POST MILES TOTAL PROJECT	SHEET No.	TOTAL SHEETS
08	SBd	15	3.8/12.8	192	680

REGISTERED CIVIL ENGINEER 5-24-11 DATE

6-13-11
PLANS APPROVAL DATE

REGISTERED PROFESSIONAL ENGINEER
HA VU
No. C61359
Exp. 6-30-11
CIVIL
STATE OF CALIFORNIA

THE STATE OF CALIFORNIA OR ITS OFFICERS OR AGENTS SHALL NOT BE RESPONSIBLE FOR THE ACCURACY OR COMPLETENESS OF SCANNED COPIES OF THIS PLAN SHEET.

NOTE:

FOR ACCURATE RIGHT OF WAY AND ACCESS DATA,
CONTACT RIGHT OF WAY ENGINEERING AT THE DISTRICT OFFICE.

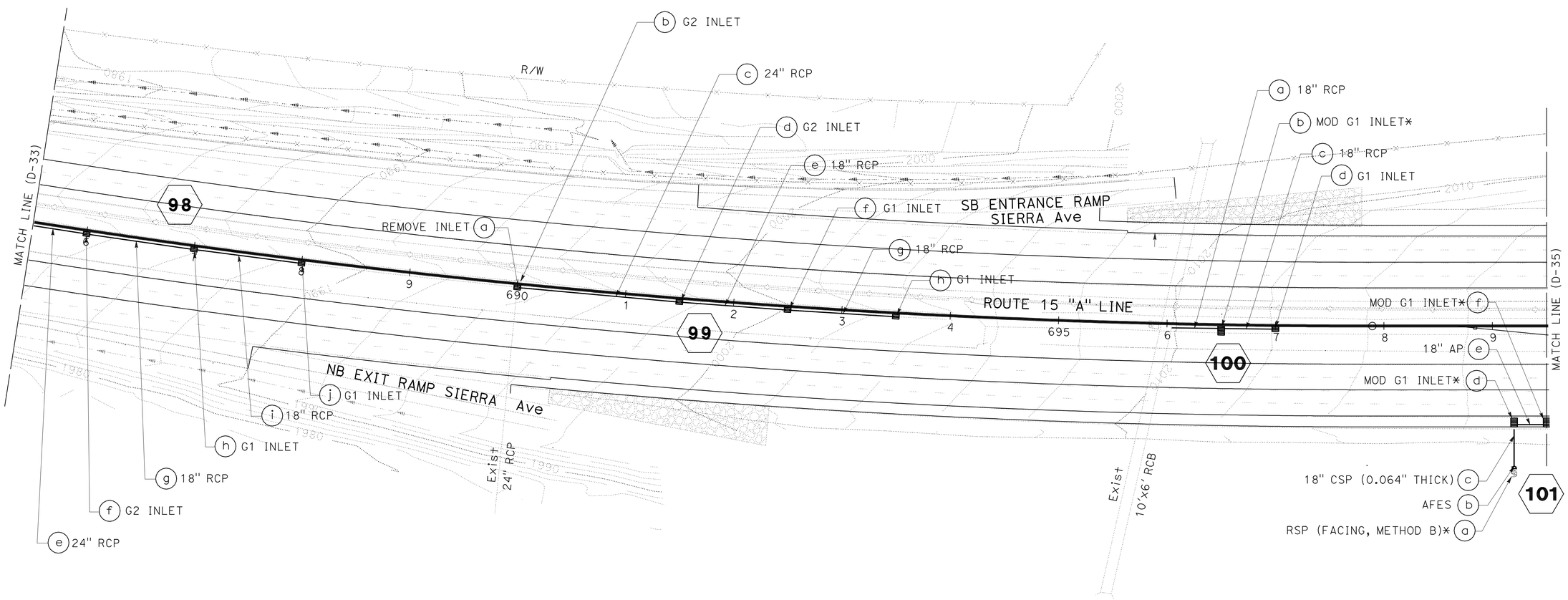

DRAINAGE PLAN

SCALE 1" = 50'

D-34

THIS PLAN ACCURATE FOR DRAINAGE ONLY

STATE OF CALIFORNIA - DEPARTMENT OF TRANSPORTATION
Caltrans
DESIGN

FUNCTIONAL SUPERVISOR: GEORGE MORHIG
CALCULATED-DESIGNED BY: MICHAEL HUYNH
CHECKED BY: ALAN BISI
REVISED BY
DATE REVISED

LAST REVISION 05-24-11
DATE PLOTTED => 17-JUN-2011
TIME PLOTTED => 05:33

Dist	COUNTY	ROUTE	POST MILES TOTAL PROJECT	SHEET No.	TOTAL SHEETS
08	SBd	15	3.8/12.8	193	680

REGISTERED CIVIL ENGINEER 5-24-11 DATE

6-13-11
PLANS APPROVAL DATE

REGISTERED PROFESSIONAL ENGINEER
HA VU
No. C61359
Exp. 6-30-11
CIVIL
STATE OF CALIFORNIA

THE STATE OF CALIFORNIA OR ITS OFFICERS OR AGENTS SHALL NOT BE RESPONSIBLE FOR THE ACCURACY OR COMPLETENESS OF SCANNED COPIES OF THIS PLAN SHEET.

NOTE:

FOR ACCURATE RIGHT OF WAY AND ACCESS DATA,
CONTACT RIGHT OF WAY ENGINEERING AT THE DISTRICT OFFICE.

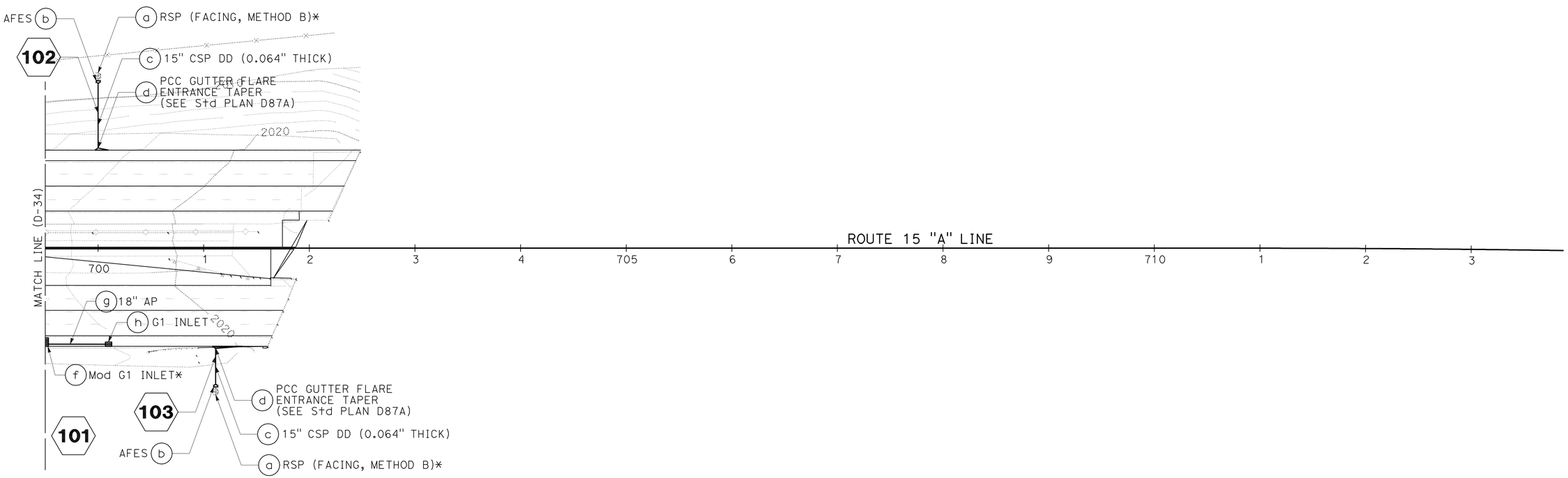

DRAINAGE PLAN

SCALE: 1" = 50'

D-35

THIS PLAN ACCURATE FOR DRAINAGE ONLY

STATE OF CALIFORNIA - DEPARTMENT OF TRANSPORTATION
Caltrans
DESIGN

FUNCTIONAL SUPERVISOR: GEORGE MORHIG
CALCULATED-DESIGNED BY: MICHAEL HUYNH
CHECKED BY: ALAN BISI
REVISED BY
DATE REVISED

LAST REVISION 05-24-11
DATE PLOTTED => 17-JUN-2011
TIME PLOTTED => 05:33

Dist	COUNTY	ROUTE	POST MILES TOTAL PROJECT	SHEET No.	TOTAL SHEETS
08	SBd	15	3.8/12.8	194	680

REGISTERED CIVIL ENGINEER 4-14-11 DATE

6-13-11
PLANS APPROVAL DATE

REGISTERED PROFESSIONAL ENGINEER HA VU No. C61359 Exp. 6-30-11 CIVIL STATE OF CALIFORNIA

THE STATE OF CALIFORNIA OR ITS OFFICERS OR AGENTS SHALL NOT BE RESPONSIBLE FOR THE ACCURACY OR COMPLETENESS OF SCANNED COPIES OF THIS PLAN SHEET.

NOTES

1. OFFSETS FOR INLETS IN PAVED SHOULDER AREAS ARE TAKEN TO EDGE OF SHOULDER.
2. OFFSETS FOR GLD IN PAVED SHOULDER AND OFFSETS FOR INLETS IN UNPAVED AREAS ARE TAKEN TO CENTER OF GRATE.
3. TOP OF GRATE ELEVATIONS INCLUDE INLET DEPRESSION.
4. FOR LEGEND AND ABBREVIATION, SEE SHEET D-1.

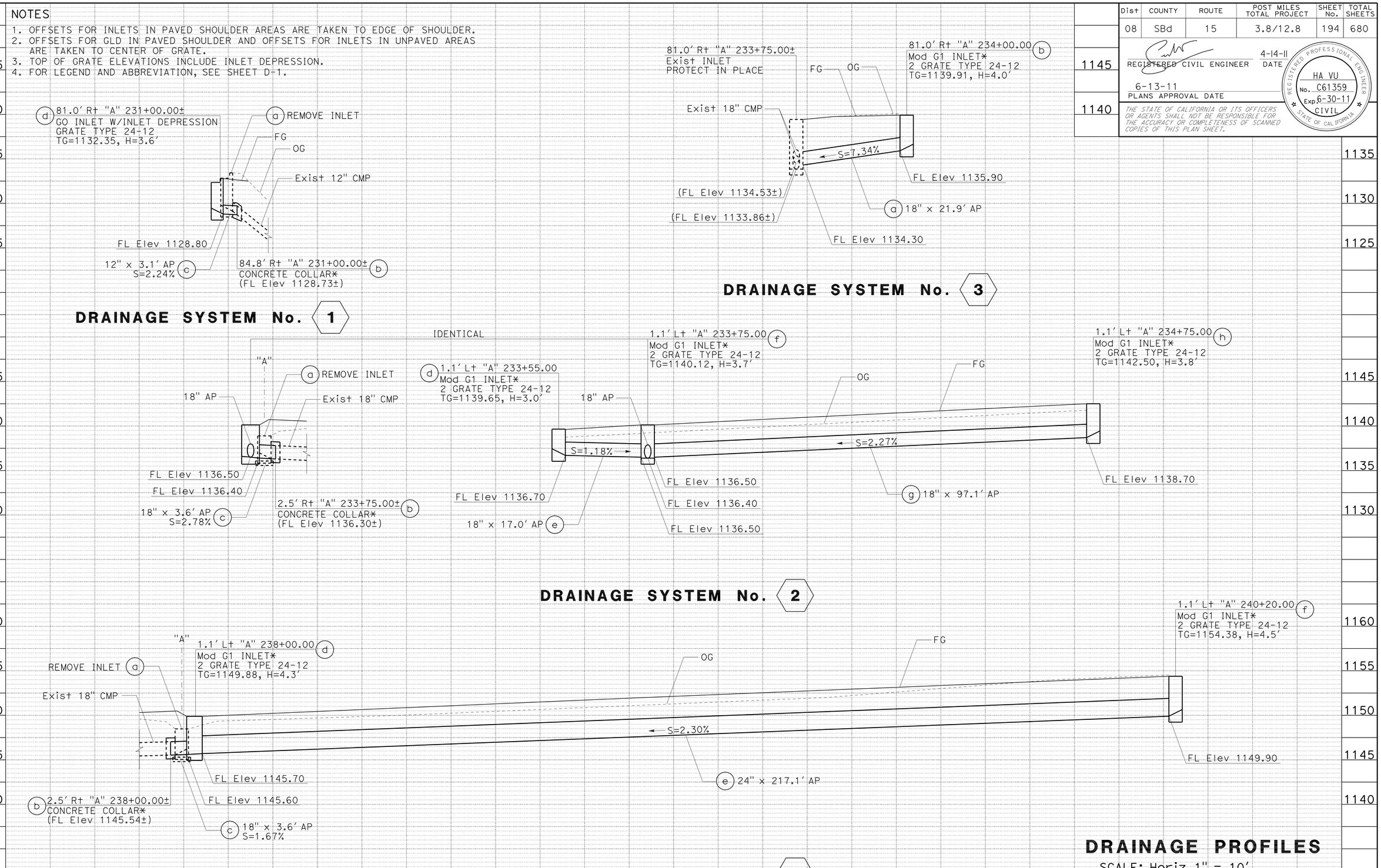

* SEE DRAINAGE DETAIL SHEETS

DRAINAGE PROFILES

SCALE: Horiz 1" = 10'
Vert 1" = 5'

DP-1

STATION		TOTAL
CY	Exc	
	Emb	

STATE OF CALIFORNIA - DEPARTMENT OF TRANSPORTATION
Caltrans® DESIGN

FUNCTIONAL SUPERVISOR: GEORGE MORHIG
CALCULATED-DESIGNED BY: HA VU
CHECKED BY: AHMAD SHAH
REVISED BY / DATE REVISED

LAST REVISION 04-14-11 | DATE PLOTTED => 17-JUN-2011 | TIME PLOTTED => 05:33

Dist	COUNTY	ROUTE	POST MILES TOTAL PROJECT	SHEET No.	TOTAL SHEETS
08	SBd	15	3.8/12.8	195	680

REGISTERED CIVIL ENGINEER 4-14-11 DATE

6-13-11
PLANS APPROVAL DATE

REGISTERED PROFESSIONAL ENGINEER HA VU No. C61359 Exp. 6-30-11 CIVIL STATE OF CALIFORNIA

THE STATE OF CALIFORNIA OR ITS OFFICERS OR AGENTS SHALL NOT BE RESPONSIBLE FOR THE ACCURACY OR COMPLETENESS OF SCANNED COPIES OF THIS PLAN SHEET.

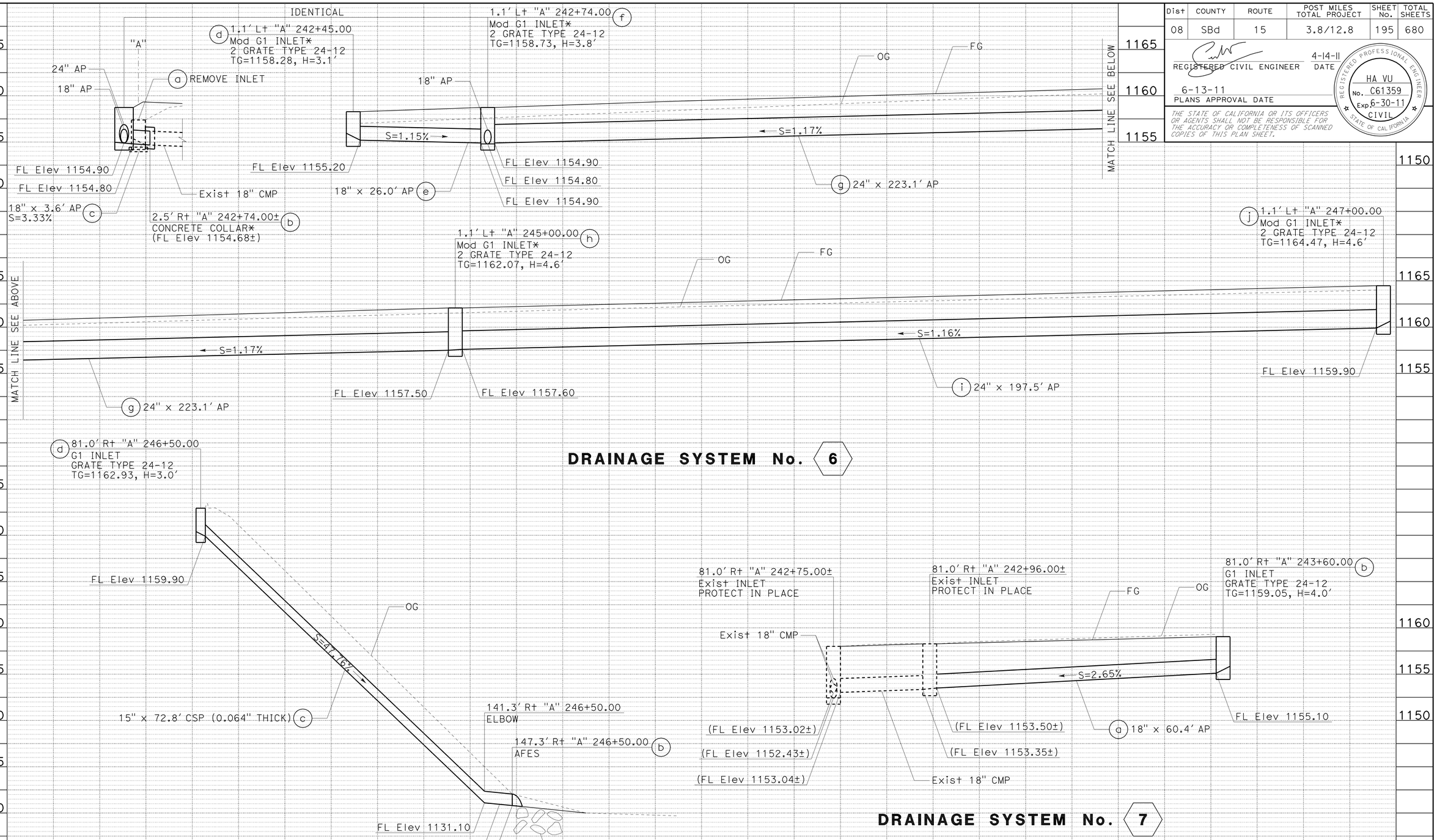

* SEE DRAINAGE DETAIL SHEETS

DRAINAGE PROFILES

SCALE: Horiz 1" = 10'
Vert 1" = 5'

DP-2

STATION		TOTAL
CY	Exc	
	Emb	

STATE OF CALIFORNIA - DEPARTMENT OF TRANSPORTATION
Caltrans
DESIGN

FUNCTIONAL SUPERVISOR: GEORGE MORHIG
CALCULATED-DESIGNED BY: HA VU
CHECKED BY: AHMAD SHAH
REVISED BY
DATE REVISED

LAST REVISION DATE PLOTTED => 17-JUN-2011
TIME PLOTTED => 05:33
04-14-11

Dist	COUNTY	ROUTE	POST MILES TOTAL PROJECT	SHEET No.	TOTAL SHEETS
08	SBd	15	3.8/12.8	196	680

REGISTERED CIVIL ENGINEER 4-14-11 DATE

6-13-11
PLANS APPROVAL DATE

REGISTERED PROFESSIONAL ENGINEER HA VU No. C61359 Exp. 6-30-11 CIVIL STATE OF CALIFORNIA

THE STATE OF CALIFORNIA OR ITS OFFICERS OR AGENTS SHALL NOT BE RESPONSIBLE FOR THE ACCURACY OR COMPLETENESS OF SCANNED COPIES OF THIS PLAN SHEET.

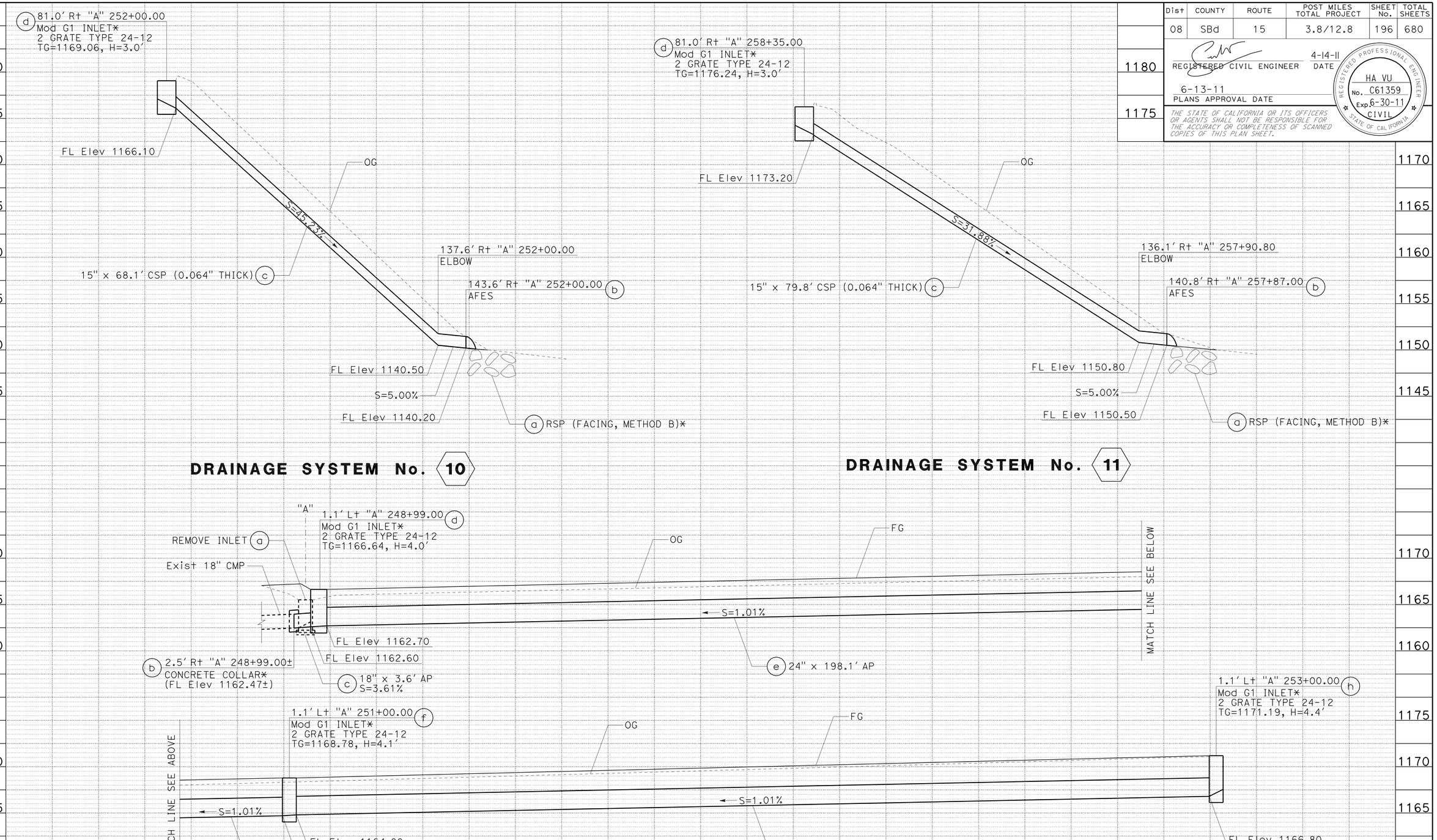

* SEE DRAINAGE DETAIL SHEETS

DRAINAGE PROFILES

SCALE: Horiz 1" = 10'
Vert 1" = 5'

DP-3

STATION		TOTAL
CY	Exc	
	Emb	

REVISED BY / DATE REVISED

HA VU / AHMAD SHAH

CALCULATED-DESIGNED BY / CHECKED BY

FUNCTIONAL SUPERVISOR: GEORGE MORHIG

STATE OF CALIFORNIA - DEPARTMENT OF TRANSPORTATION

Caltrans DESIGN

LAST REVISION 04-14-11 DATE PLOTTED => 17-JUN-2011 TIME PLOTTED => 05:33

Dist	COUNTY	ROUTE	POST MILES TOTAL PROJECT	SHEET No.	TOTAL SHEETS
08	SBd	15	3.8/12.8	197	680

REGISTERED CIVIL ENGINEER 4-14-11 DATE

6-13-11
PLANS APPROVAL DATE

REGISTERED PROFESSIONAL ENGINEER HA VU No. C61359 Exp. 6-30-11 CIVIL STATE OF CALIFORNIA

THE STATE OF CALIFORNIA OR ITS OFFICERS OR AGENTS SHALL NOT BE RESPONSIBLE FOR THE ACCURACY OR COMPLETENESS OF SCANNED COPIES OF THIS PLAN SHEET.

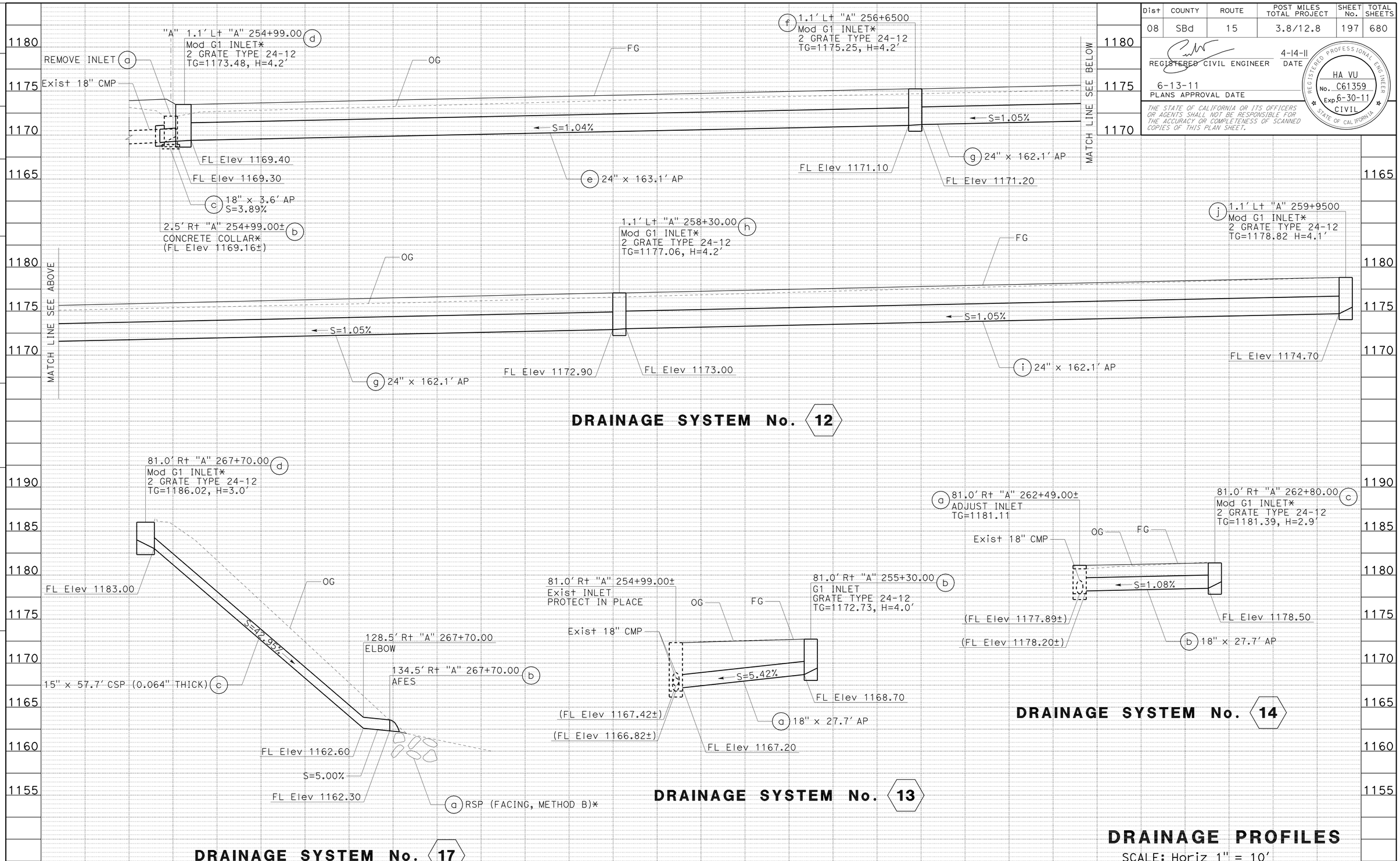

* SEE DRAINAGE DETAIL SHEETS

DRAINAGE PROFILES

SCALE: Horiz 1" = 10'
Vert 1" = 5'

DP-4

STATION		TOTAL
CY	Exc	
	Emb	

STATE OF CALIFORNIA - DEPARTMENT OF TRANSPORTATION
Caltrans DESIGN

FUNCTIONAL SUPERVISOR: GEORGE MORHIG
CALCULATED-DESIGNED BY: HA VU
CHECKED BY: AHMAD SHAH
REVISED BY / DATE REVISED

LAST REVISION 04-14-11
DATE PLOTTED => 17-JUN-2011
TIME PLOTTED => 05:33

Dist	COUNTY	ROUTE	POST MILES TOTAL PROJECT	SHEET No.	TOTAL SHEETS
08	SBd	15	3.8/12.8	198	680

REGISTERED CIVIL ENGINEER 4-14-11 DATE

6-13-11
PLANS APPROVAL DATE

REGISTERED PROFESSIONAL ENGINEER HA VU No. C61359 Exp. 6-30-11 CIVIL STATE OF CALIFORNIA

THE STATE OF CALIFORNIA OR ITS OFFICERS OR AGENTS SHALL NOT BE RESPONSIBLE FOR THE ACCURACY OR COMPLETENESS OF SCANNED COPIES OF THIS PLAN SHEET.

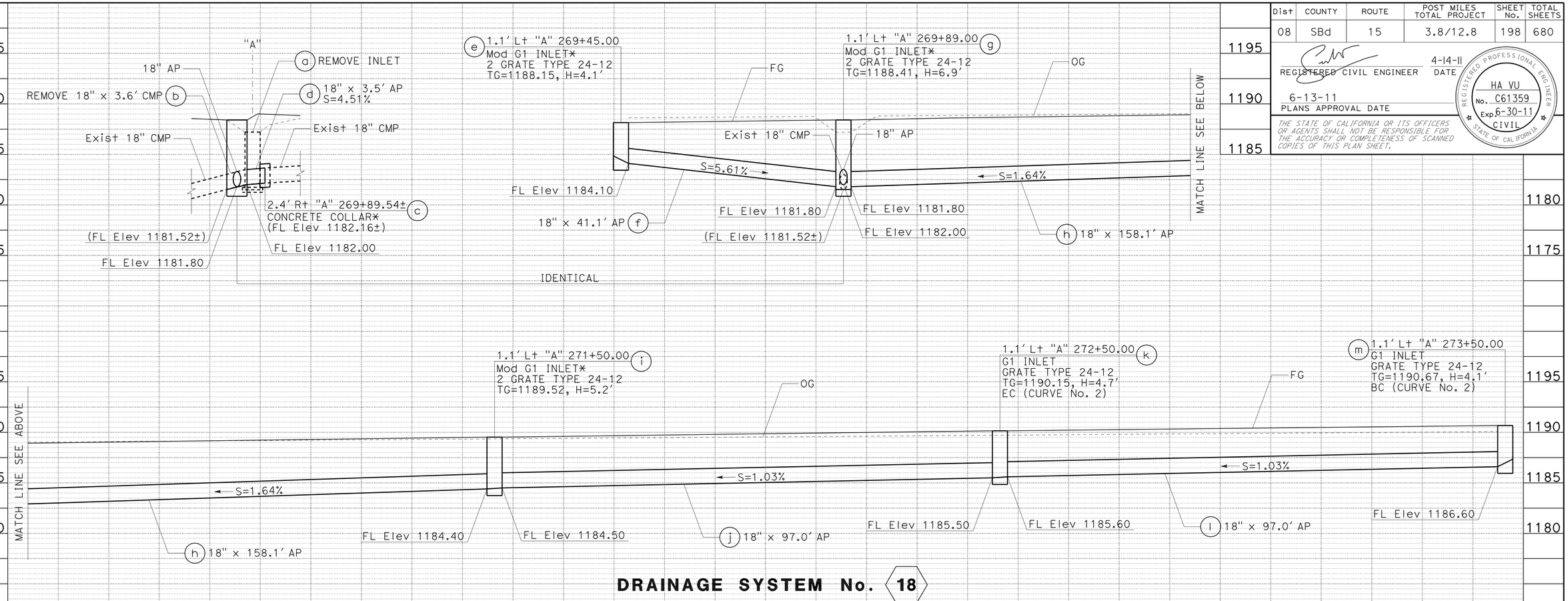

DRAINAGE SYSTEM No. 18

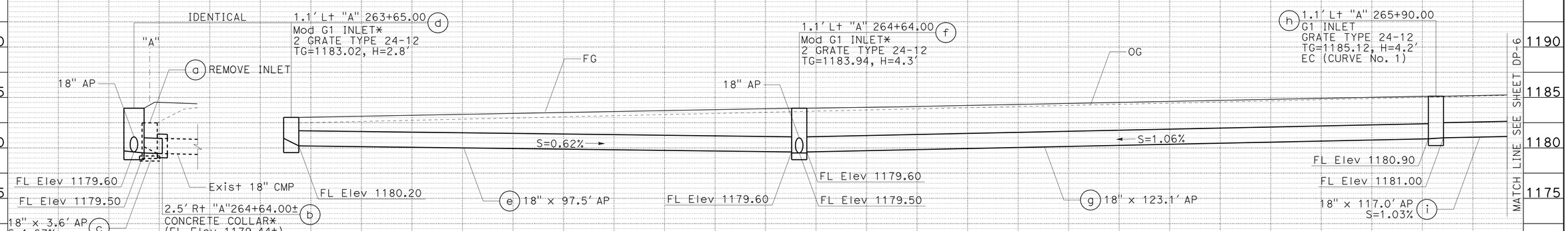

DRAINAGE SYSTEM No. 15

DRAINAGE PROFILES

SCALE: Horiz 1" = 10'
Vert 1" = 5'

DP-5

* SEE DRAINAGE DETAIL SHEETS

STATION		TOTAL
CY	Exc	
	Emb	

STATE OF CALIFORNIA - DEPARTMENT OF TRANSPORTATION
Caltrans
DESIGN
FUNCTIONAL SUPERVISOR: GEORGE MORHIG
CALCULATED-DESIGNED BY: HA VU
CHECKED BY: AHMAD SHAH
REVISED BY
DATE REVISED

LAST REVISION 04-14-11
DATE PLOTTED => 17-JUN-2011
TIME PLOTTED => 09:33

Dist	COUNTY	ROUTE	POST MILES TOTAL PROJECT	SHEET No.	TOTAL SHEETS
08	SBd	15	3.8/12.8	199	680

REGISTERED CIVIL ENGINEER 4-14-11 DATE

6-13-11
PLANS APPROVAL DATE

REGISTERED PROFESSIONAL ENGINEER HA VU No. C61359 Exp. 6-30-11 CIVIL STATE OF CALIFORNIA

THE STATE OF CALIFORNIA OR ITS OFFICERS OR AGENTS SHALL NOT BE RESPONSIBLE FOR THE ACCURACY OR COMPLETENESS OF SCANNED COPIES OF THIS PLAN SHEET.

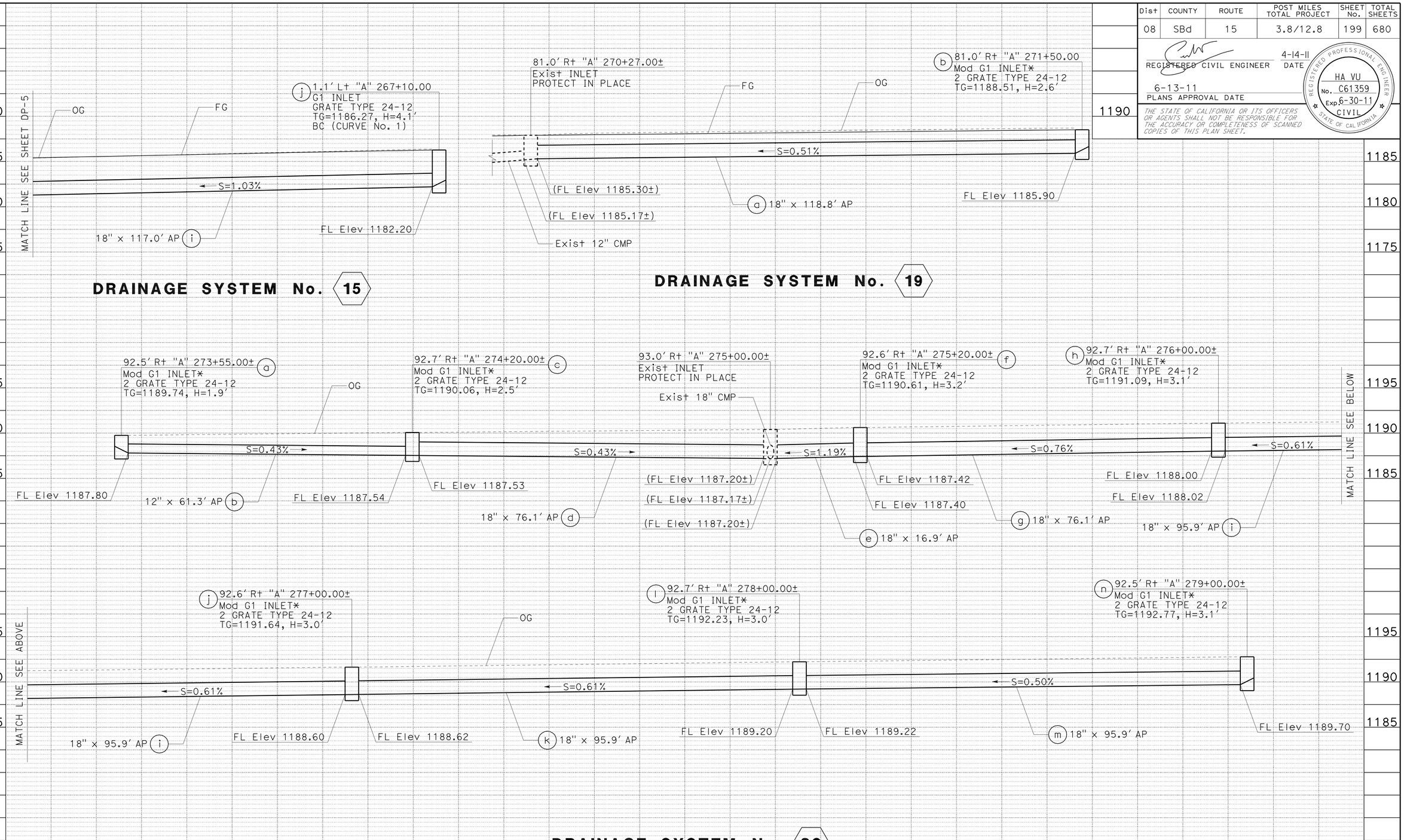

* SEE DRAINAGE DETAIL SHEETS

DRAINAGE PROFILES

SCALE: Horiz 1" = 10'
Vert 1" = 5'

DP-6

STATION		TOTAL
CY	Exc	
	Emb	

REVISED BY | DATE REVISED
HA VU | AHMAD SHAH
CALCULATED-DESIGNED BY | CHECKED BY
FUNCTIONAL SUPERVISOR | GEORGE MORHIG

STATE OF CALIFORNIA - DEPARTMENT OF TRANSPORTATION
Caltrans
DESIGN

LAST REVISION 04-14-11 | DATE PLOTTED => 17-JUN-2011 | TIME PLOTTED => 09:33

Dist	COUNTY	ROUTE	POST MILES TOTAL PROJECT	SHEET No.	TOTAL SHEETS
08	SBd	15	3.8/12.8	200	680

REGISTERED CIVIL ENGINEER 4-14-11 DATE

6-13-11
PLANS APPROVAL DATE

REGISTERED PROFESSIONAL ENGINEER HA VU No. C61359 Exp. 6-30-11 CIVIL STATE OF CALIFORNIA

THE STATE OF CALIFORNIA OR ITS OFFICERS OR AGENTS SHALL NOT BE RESPONSIBLE FOR THE ACCURACY OR COMPLETENESS OF SCANNED COPIES OF THIS PLAN SHEET.

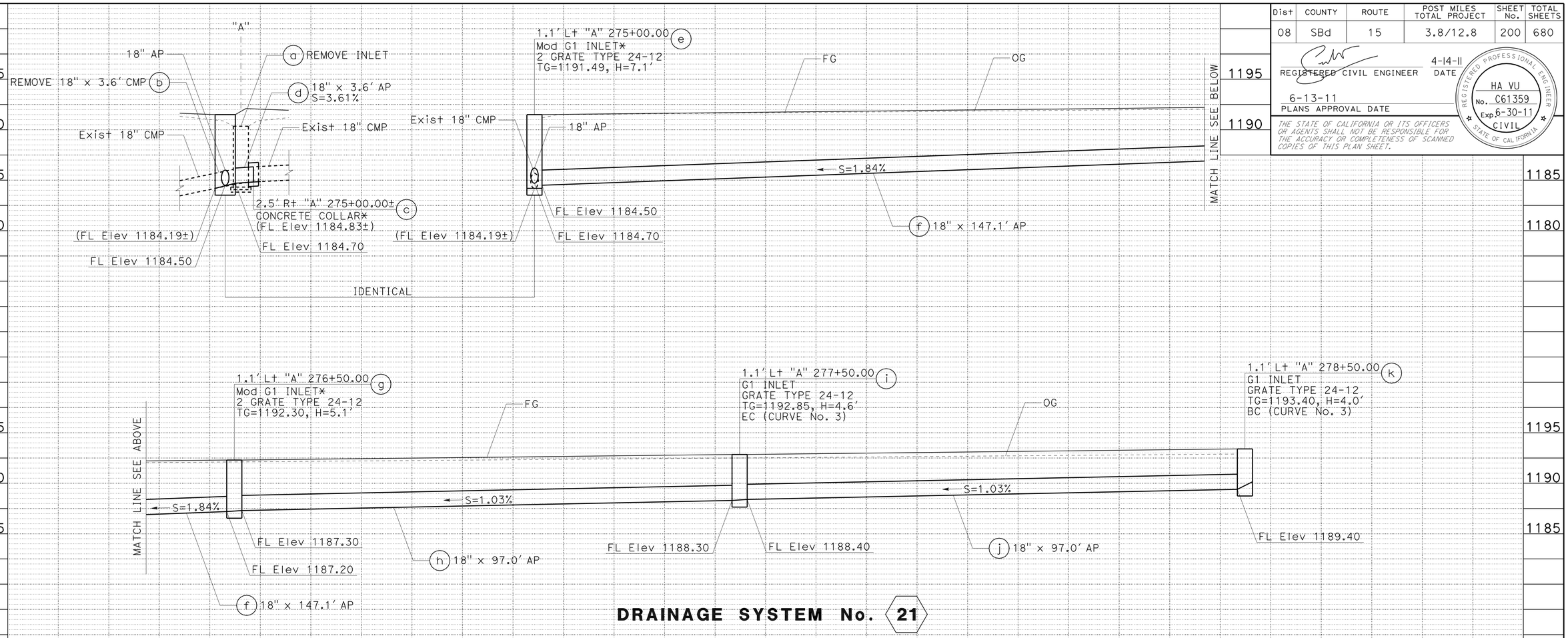

DRAINAGE SYSTEM No. 21

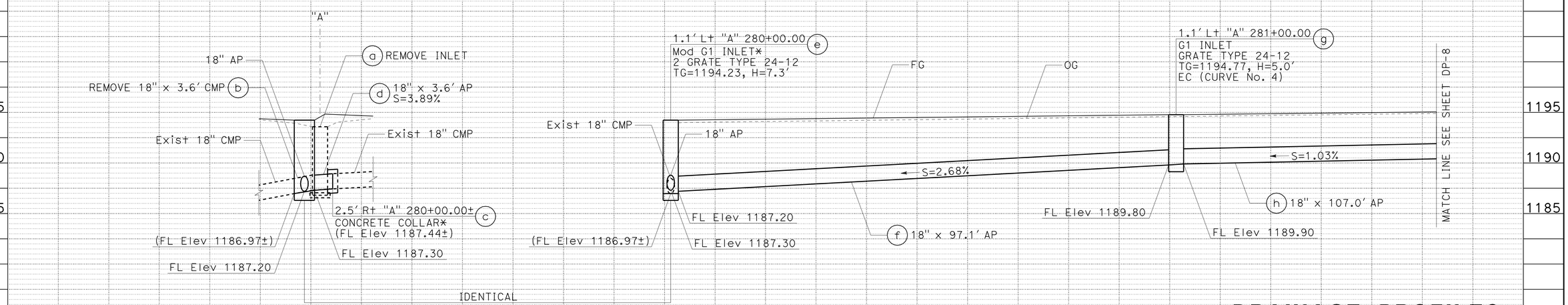

DRAINAGE SYSTEM No. 22

* SEE DRAINAGE DETAIL SHEETS

DRAINAGE PROFILES

SCALE: Horiz 1" = 10'
Vert 1" = 5'

DP-7

STATION		TOTAL
CY	Exc	
	Emb	

STATE OF CALIFORNIA - DEPARTMENT OF TRANSPORTATION
Caltrans DESIGN

FUNCTIONAL SUPERVISOR: GEORGE MORHIG
CALCULATED-DESIGNED BY: HA VU
CHECKED BY: AHMAD SHAH
REVISED BY / DATE REVISED

LAST REVISION 04-14-11
DATE PLOTTED => 17-JUN-2011
TIME PLOTTED => 05:34