Dist	COUNTY	ROUTE	KILOMETER POST TOTAL PROJECT	SHEET No.	TOTAL SHEETS
08	Riv	10	66.5/71.7	2	410

REGISTERED CIVIL ENGINEER 1-15-09 DATE

5-18-09
PLANS APPROVAL DATE

REGISTERED PROFESSIONAL ENGINEER JUSTINE NIU No. 62897 Exp. 6-30-10 CIVIL STATE OF CALIFORNIA

THE STATE OF CALIFORNIA OR ITS OFFICERS OR AGENTS SHALL NOT BE RESPONSIBLE FOR THE ACCURACY OR COMPLETENESS OF ELECTRONIC COPIES OF THIS PLAN SHEET.

Caltrans Metric

NOTES:

1. DIMENSIONS OF THE STRUCTURAL SECTIONS ARE SUBJECT TO TOLERANCE SPECIFIED IN THE STANDARD SPECIFICATIONS.
2. SUPERELEVATION AS SHOWN OR SPECIFIED BY THE ENGINEER.
3. SEE LAYOUT PLANS AND QUANTITY SHEETS FOR LOCATIONS, TYPE AND LENGTH OF CURB, AC DIKE AND MBGR.

DESIGN DESIGNATION (Rte 10)

2000	ADT=46,100	DHV=4400	T=10%	D=53/47
2030	ADT=90,000	DHV=8870	T=6%	D=52/48

V=120 KPH

DESIGN DESIGNATION (BOB HOPE DR)

V=69 KPH

LEGEND:

REPLACE BASE & SURFACING

STRUCTURAL SECTION

A: 180 mm HMA (TYPE A), 240 mm CLASS 2 AB

B: 240 mm PCC, 30 mm AC (BOND BREAKER), 120 mm LCB

C: 150 mm HMA (TYPE A), 195 mm CLASS 2 AB

D: 20 mm OGHMA, 150 mm HMA (TYPE A), 195 mm CLASS 2 AB

E: 260 mm PCC, 30 mm AC (BOND BREAKER), 150 mm LCB, 120 mm CLASS 2 AB

F: 20 mm OGHMA, 75 mm HMA (TYPE A), 75 mm CLASS 2 AB

STRUCTURAL SECTION - Exist

1: 20 mm OGAC, 150 mm AC, 210 mm CTB

2: 20 mm OGAC, 150 mm AC, 260 mm CTB

3: 20 mm OGAC, 150 mm AC, 210 mm CLASS 2 AB

4: 20 mm OGAC, 150 mm AC, 260 mm CLASS 2 AB

5: 20 mm OGAC, 150 mm AC, 150 mm CL2 AB, 225 mm CL2 AS

6: 110 mm AC, 152 mm CLASS 2 AB

7: 260 mm PCC, 150 mm LCB, 120 mm CL2 AB

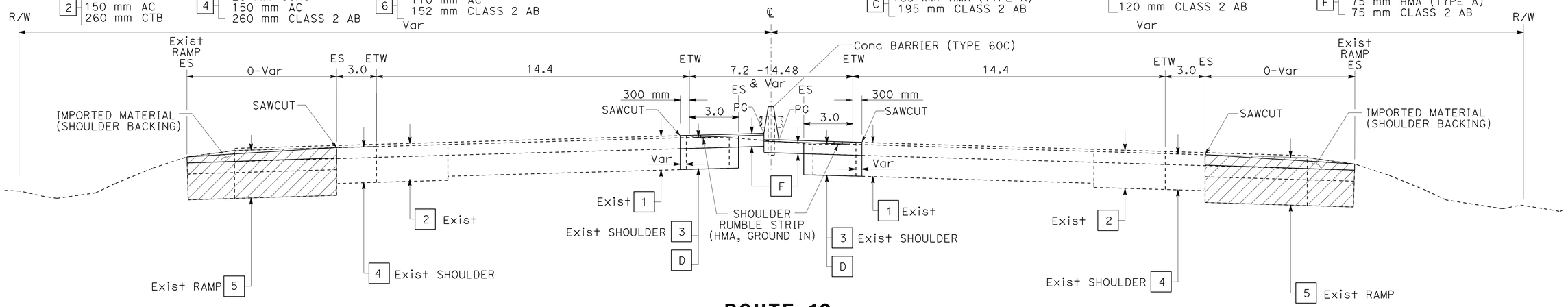

ROUTE 10

WESTBOUND

STA 693+00.00 TO 694+64.49
STA 697+66.12 TO 699+93.21
STA 701+39.08 TO 703+65.00

EASTBOUND

STA 693+97.36 TO 703+65 (MEDIAN PAVING ONLY)
STA 693+00.00 TO 693+97.36
STA 690+91.29 TO 693+00 (MEDIAN PAVING ONLY)

1

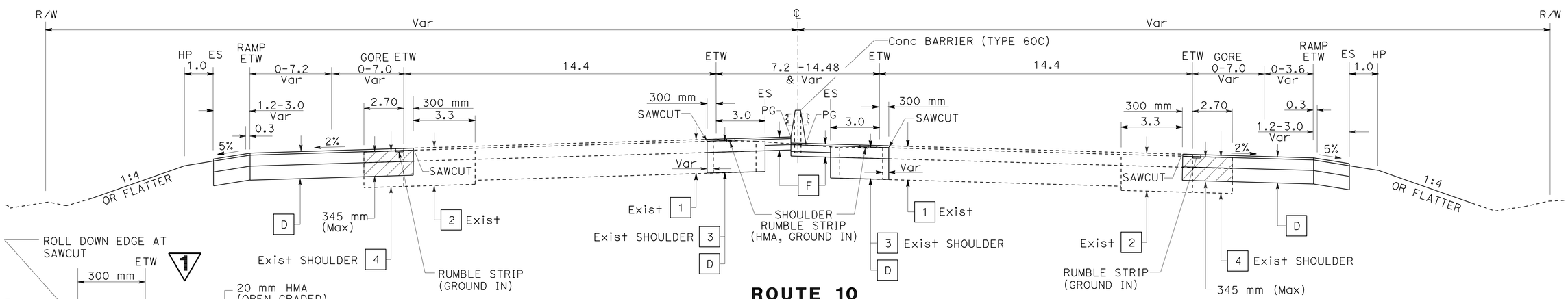

ROUTE 10

WESTBOUND

STA 694+64.49 TO 697+66.12
STA 683+15.29 TO 686+80.31

EASTBOUND

STA 694+24.16 TO 697+98.27
STA 685+81.42 TO 687+08.26

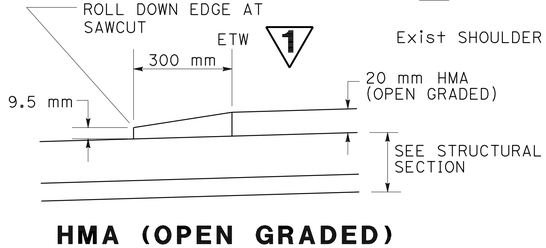

HMA (OPEN GRADED) TAPER DETAIL

1 **REVISED PER ADDENDUM No. 1 DATED SEPTEMBER 25, 2009**

ALL DIMENSIONS ARE IN METERS UNLESS OTHERWISE SHOWN

TYPICAL CROSS SECTION

NO SCALE

X-1

STATE OF CALIFORNIA - DEPARTMENT OF TRANSPORTATION
Caltrans **DESIGN**

FUNCTIONAL SUPERVISOR: BEN AMIRI
CALCULATED-DESIGNED BY: JUSTINE NIU
CHECKED BY: JUAN CARLOS ALVAREZ
REVISED BY / DATE REVISED

LAST REVISION 01-15-09 | DATE PLOTTED => 23-SEP-2009 | TIME PLOTTED => 07:07

BORDER LAST REVISED 3/1/2007 | RELATIVE BORDER SCALE IS IN MILLIMETERS 0 20 40 60 80 | USERNAME => trmikesl | DGN FILE => 845600ca001.dgn | CU 08236 | EA 456001

Dist	COUNTY	ROUTE	KILOMETER POST TOTAL PROJECT	SHEET No.	TOTAL SHEETS
08	Riv	10	66.5/71.7	3	410

REGISTERED CIVIL ENGINEER 1-15-09 DATE

5-18-09
PLANS APPROVAL DATE

REGISTERED PROFESSIONAL ENGINEER JUSTINE NIU No. 62897 Exp. 6-30-10 CIVIL STATE OF CALIFORNIA

THE STATE OF CALIFORNIA OR ITS OFFICERS OR AGENTS SHALL NOT BE RESPONSIBLE FOR THE ACCURACY OR COMPLETENESS OF ELECTRONIC COPIES OF THIS PLAN SHEET.

Caltrans Metric

NOTES:

1. 100 mm OF CLASS 2 AB IS TO BE PLACED UNDER CURB AND GUTTER.
2. PLACE INTERLOCKING PAVERS, SEE C-7 FOR DETAILS.

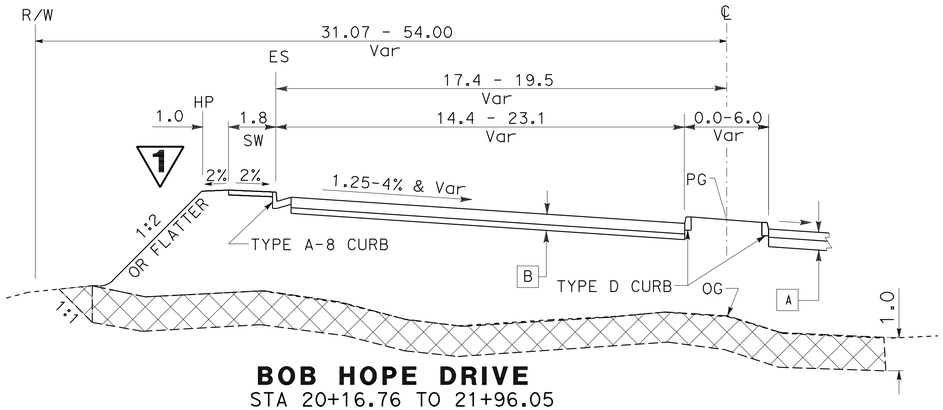

BOB HOPE DRIVE
STA 20+16.76 TO 21+96.05

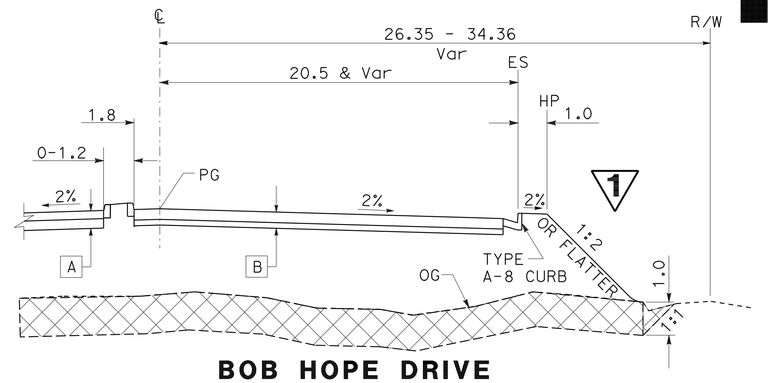

BOB HOPE DRIVE
STA 27+59.04 TO 28+28.12

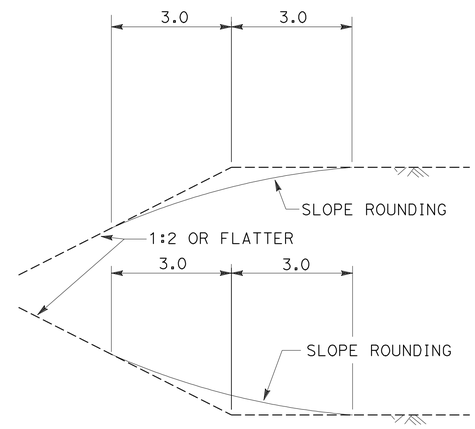

SLOPE ROUNDING DETAIL (TYPICAL)

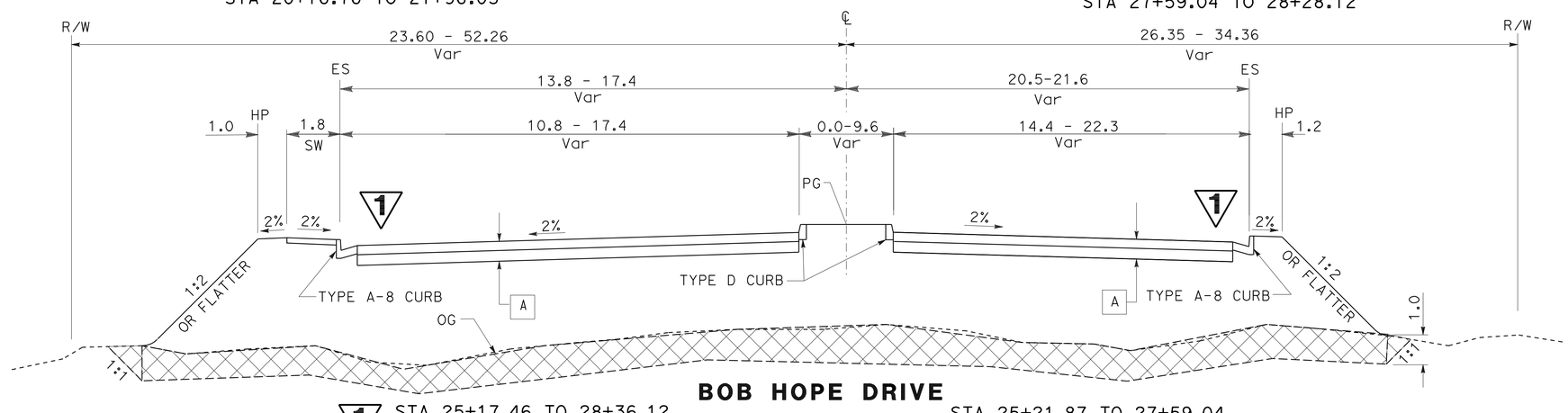

BOB HOPE DRIVE

1 STA 25+17.46 TO 28+36.12
STA 23+70.06 TO 24+09.96

STA 25+21.87 TO 27+59.04
STA 23+70.06 TO 24+08.52

LEGEND:

LIMITS OF OVEREXCAVATION AND RECOMPACTING EXISTING MATERIAL AT 95% RELATIVE COMPACTION.

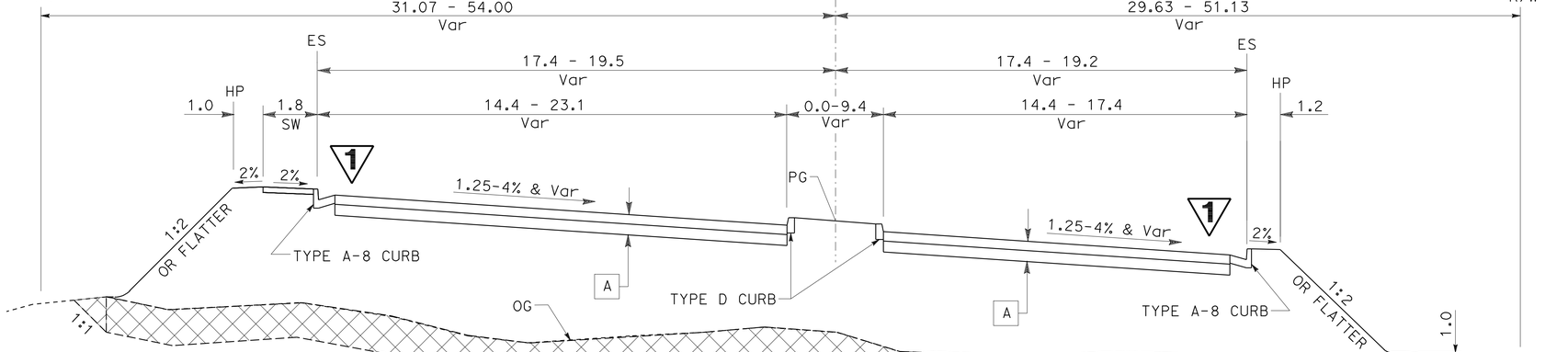

BOB HOPE DRIVE
STA 22+71.125 TO 23+70.06
STA 22+71.125 TO 23+70.06
STA 20+16.76 TO 21+96.05

ALL DIMENSIONS ARE IN METERS UNLESS OTHERWISE SHOWN

TYPICAL CROSS SECTION

NO SCALE

X-2

1 **REVISED PER ADDENDUM No. 1 DATED SEPTEMBER 25, 2009**

REVISED BY	DATE REVISED

CALCULATED-DESIGNED BY	CHECKED BY
JUSTINE NIU	JUAN CARLOS ALVAREZ

FUNCTIONAL SUPERVISOR: BEN AMIRI

STATE OF CALIFORNIA - DEPARTMENT OF TRANSPORTATION
Caltrans **DESIGN**

LAST REVISION 01-15-09 | DATE PLOTTED => 23-SEP-2009 | TIME PLOTTED => 07:07

Dist	COUNTY	ROUTE	KILOMETER POST TOTAL PROJECT	SHEET No.	TOTAL SHEETS
08	Riv	10	66.5/71.7	9	410

REGISTERED CIVIL ENGINEER 1-15-09 DATE

5-18-09
PLANS APPROVAL DATE

REGISTERED PROFESSIONAL ENGINEER JUSTINE NIU No. 62897 Exp. 6-30-10 CIVIL STATE OF CALIFORNIA

THE STATE OF CALIFORNIA OR ITS OFFICERS OR AGENTS SHALL NOT BE RESPONSIBLE FOR THE ACCURACY OR COMPLETENESS OF ELECTRONIC COPIES OF THIS PLAN SHEET.

Caltrans Metric

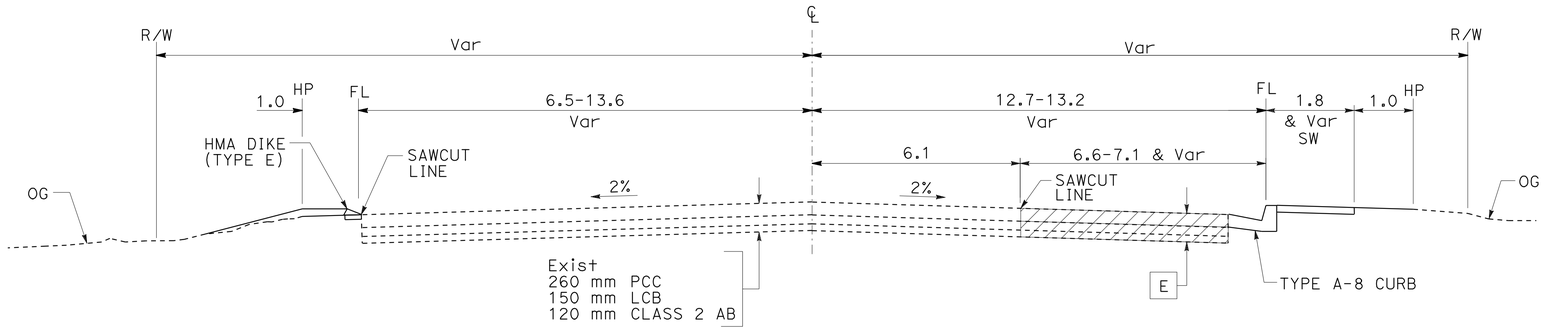

RAMON ROAD
STA 27+10.42 TO 28+00.58

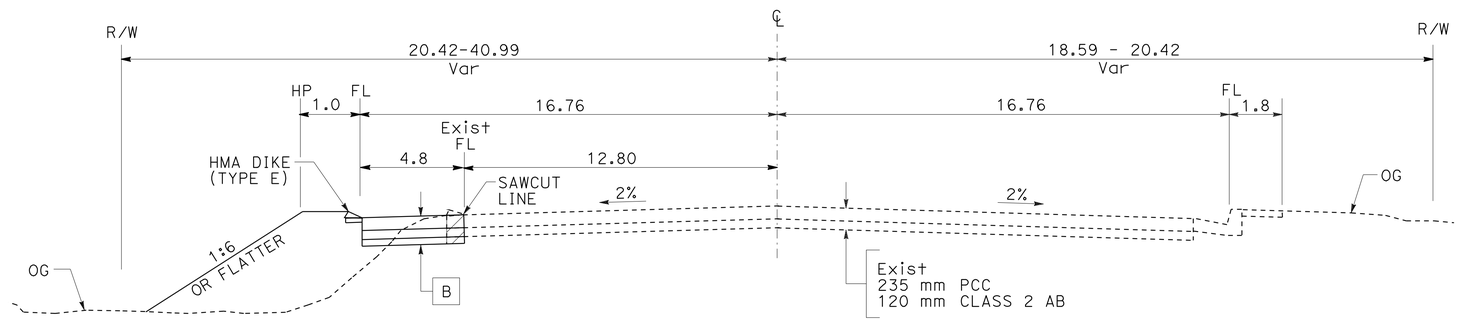

RAMON ROAD
STA 19+69.35 TO 20+89.35

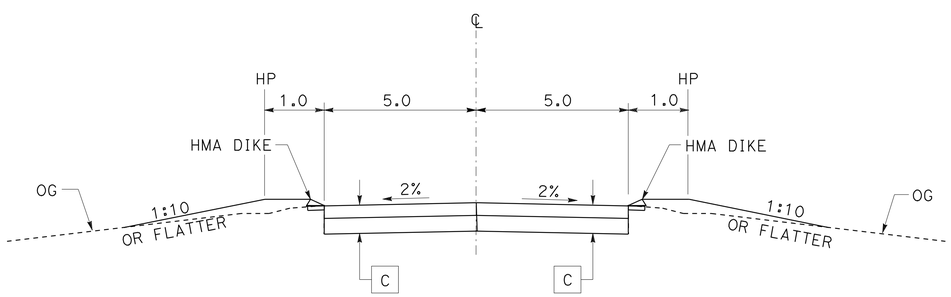

DRIVEWAY
STA 10+00 TO 10+30.00

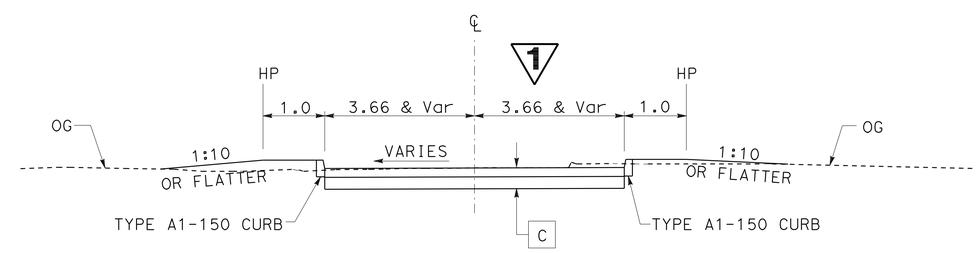

ACCESS RD
STA 10+06.277 TO 10+21.910

ALL DIMENSIONS ARE IN METERS UNLESS OTHERWISE SHOWN

1 **REVISED PER ADDENDUM No. 1 DATED SEPTEMBER 25, 2009**

TYPICAL CROSS SECTION

NO SCALE

X-8

STATE OF CALIFORNIA - DEPARTMENT OF TRANSPORTATION
Caltrans **DESIGN**

FUNCTIONAL SUPERVISOR: BEN AMIRI
CALCULATED-DESIGNED BY: JUSTINE NIU
CHECKED BY: JUAN CARLOS ALVAREZ
REVISED BY / DATE REVISED

LAST REVISION 01-15-09
DATE PLOTTED => 23-SEP-2009
TIME PLOTTED => 07:07

Dist	COUNTY	ROUTE	KILOMETER POST TOTAL PROJECT	SHEET No.	TOTAL SHEETS
08	Riv	10	66.5/71.7	11	410

REGISTERED CIVIL ENGINEER 1-15-09 DATE

5-18-09
PLANS APPROVAL DATE

REGISTERED PROFESSIONAL ENGINEER JUSTINE NIU No. 62897 Exp. 6-30-10 CIVIL STATE OF CALIFORNIA

THE STATE OF CALIFORNIA OR ITS OFFICERS OR AGENTS SHALL NOT BE RESPONSIBLE FOR THE ACCURACY OR COMPLETENESS OF ELECTRONIC COPIES OF THIS PLAN SHEET.

Caltrans Metric

NOTES:

1. FOR COMPLETE RIGHT OF WAY AND ACCURATE ACCESS DATA, SEE RIGHT OF WAY RECORD MAPS AT DISTRICT OFFICE.
2. SEE CONSTRUCTION DETAILS FOR DETAILS NOT SHOWN.
3. ENVIRONMENTALLY SENSITIVE AREAS (ESA) AND EXISTING TREE REMOVAL ARE RESTRICTED TO R/W AND TEMPORARY CONSTRUCTION EASTMENT LINE, UNLESS OTHERWISE SHOWN.
4. SEE SUMMARY OF QUANTITIES FOR EXACT LIMITS OF WORK.
5. FOR RW AND SW DETAILS, SEE RW AND SW PLANS.

LEGEND:

- INTERLOCKING CONCRETE PAVERS SEE C-7 FOR DETAILS
- CONCRETE PAVEMENT
- 45 mm COLD PLANE HMA (TYPE A)
- REMOVE BASE AND SURFACING
- ESA - PNP — LIMITS OF ENVIRONMENTAL SENSITIVE AREA/ PRESERVATION OF NATIVE PLANTS
- TEMPORARY FENCE (TYPE WILDLIFE)

ABBREVIATIONS

BHD - BOB HOPE DRIVE
RR - RAMON ROAD
VR - VARNER ROAD
RDSR - RIO DEL SOL Rd
(R) - REALIGNMENT
HMA - HOT MIX ASPHALT
ESA - ENVIRONMENTALLY SENSITIVE AREAS
PNP - PRESERVATION OF NATIVE PLANTS
TCE - TEMPORARY CONSTRUCTION EASEMENT
WL - TYPE WILDLIFE
CHDPE - CORRUGATED HIGH DENSITY POLYETHYLENE PIPE (IRRIGATION CROSSOVER)
AITS - ALTERNATIVE IN-LINE TERMINAL SYSTEM
AFTS - ALTERNATIVE FLARED TERMINAL SYSTEM
TR(WB) - TRANSITIONAL RAILING (TYPE WB)
VC(MC) - VEGETATION CONTROL (MINOR CONCRETE)

CURVE DATA

No.	R	Δ	T	L
1	300.600	39°13'01"	107.089	205.75

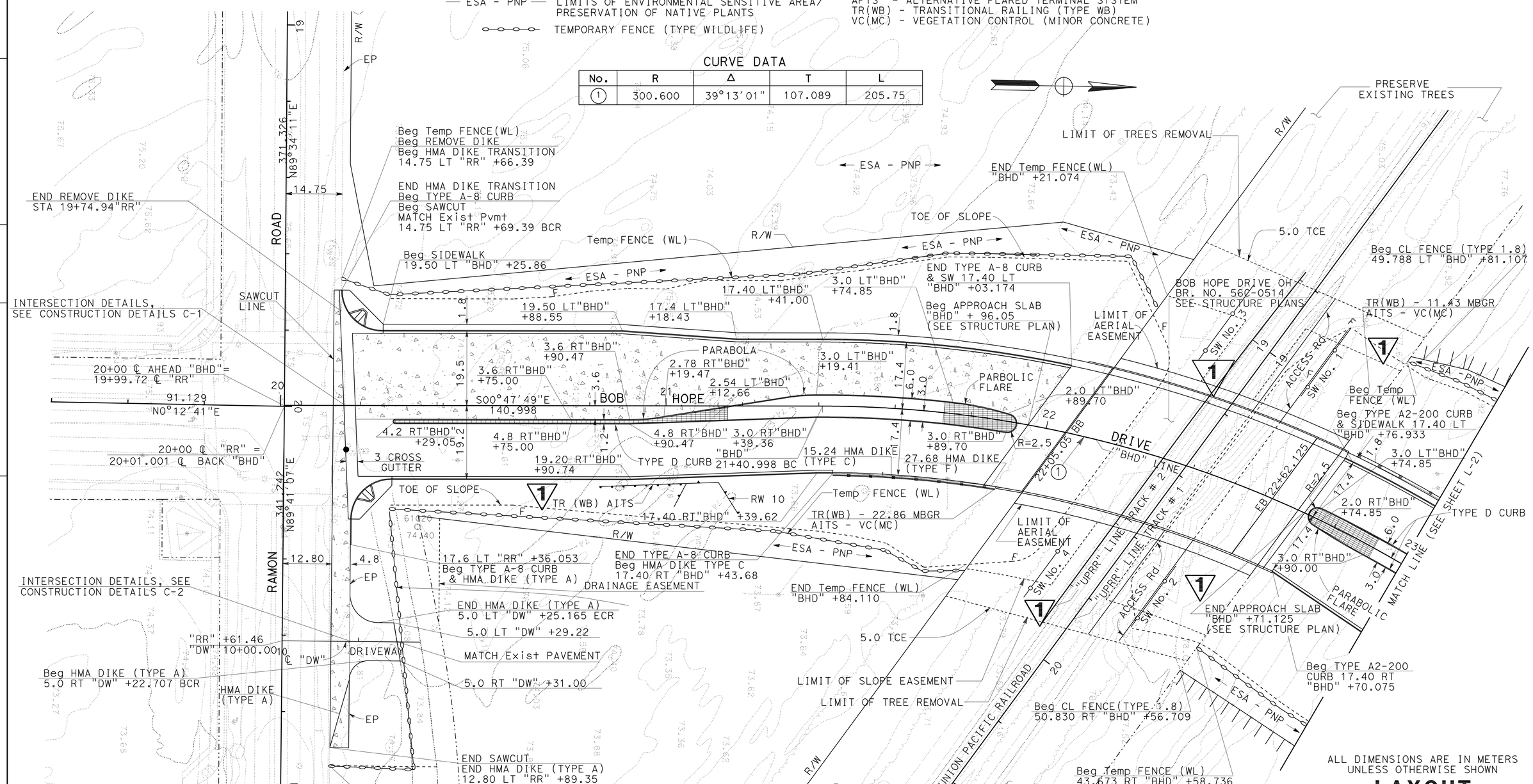

ALL DIMENSIONS ARE IN METERS UNLESS OTHERWISE SHOWN

LAYOUT

SCALE: 1: 500

REVISED PER ADDENDUM No. 1 DATED SEPTEMBER 25, 2009

L-1

STATE OF CALIFORNIA - DEPARTMENT OF TRANSPORTATION
Caltrans **DESIGN**

FUNCTIONAL SUPERVISOR: BEN AMIRI
CALCULATED-DESIGNED BY: JUSTINE NIU
CHECKED BY: MARK DE LA VEGA
REVISED BY / DATE REVISED

LAST REVISION 01-15-09 | DATE PLOTTED => 23-SEP-2009 | TIME PLOTTED => 07:08

Dist	COUNTY	ROUTE	KILOMETER POST TOTAL PROJECT	SHEET No.	TOTAL SHEETS
08	Riv	10	66.5/71.7	19	410

REGISTERED CIVIL ENGINEER 1-15-09 DATE

5-18-09
PLANS APPROVAL DATE

REGISTERED PROFESSIONAL ENGINEER JUSTINE NIU No. 62897 Exp. 6-30-10 CIVIL STATE OF CALIFORNIA

THE STATE OF CALIFORNIA OR ITS OFFICERS OR AGENTS SHALL NOT BE RESPONSIBLE FOR THE ACCURACY OR COMPLETENESS OF ELECTRONIC COPIES OF THIS PLAN SHEET.

Caltrans Metric

NOTES:

1. FOR COMPLETE RIGHT OF WAY AND ACCURATE ACCESS DATA, SEE RIGHT OF WAY RECORD MAPS AT DISTRICT OFFICE.
2. ENVIRONMENTALLY SENSITIVE AREAS (ESA) AND TREES REMOVAL ARE RESTRICTED TO R/W AND TEMPORARY CONSTRUCTION EASTMENT LINE, UNLESS OTHERWISE SHOWN.

CURVE DATA

No.	R	Δ	T	L
13	1000.000	12°19'7"	107.916	215.000
14	200.000	29°49'20"	53.258	104.099

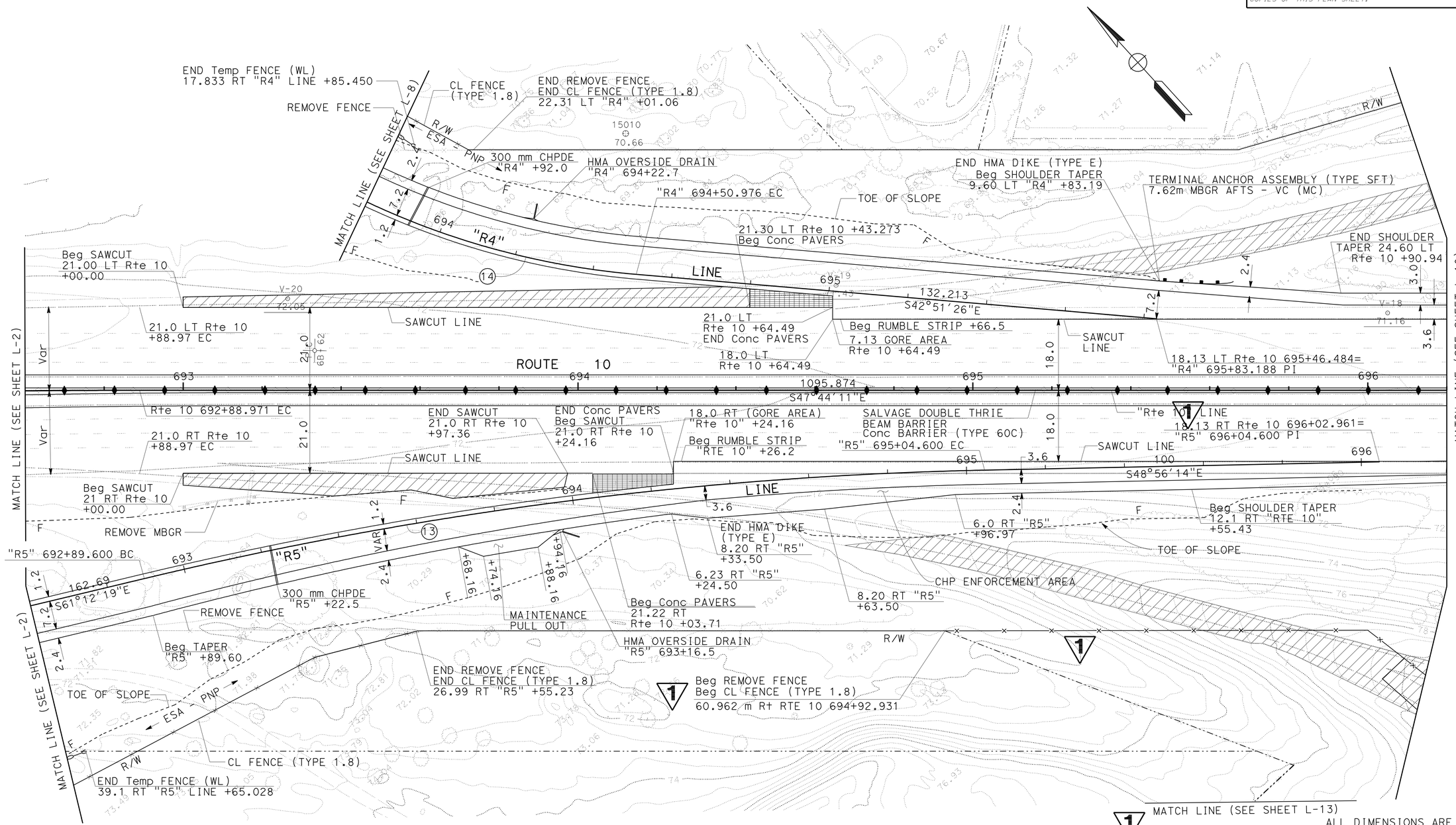

ALL DIMENSIONS ARE IN METERS UNLESS OTHERWISE SHOWN

LAYOUT

SCALE: 1: 500

L-9

1 **REVISED PER ADDENDUM No. 1 DATED SEPTEMBER 25, 2009**

REVISED BY	DATE REVISED

CALCULATED-DESIGNED BY: JUSTINE NIU
CHECKED BY: MARK DE LA VEGA
FUNCTIONAL SUPERVISOR: BEN AMIRI

STATE OF CALIFORNIA - DEPARTMENT OF TRANSPORTATION
Caltrans **DESIGN**

LAST REVISION 01-15-09 | DATE PLOTTED => 23-SEP-2009 | TIME PLOTTED => 07:08

Dist	COUNTY	ROUTE	KILOMETER POST TOTAL PROJECT	SHEET No.	TOTAL SHEETS
08	Riv	10	66.5/71.7	20	410

REGISTERED CIVIL ENGINEER 1-15-09 DATE

5-18-09
PLANS APPROVAL DATE

REGISTERED PROFESSIONAL ENGINEER JUSTINE NIU No. 62897 Exp. 6-30-10 CIVIL STATE OF CALIFORNIA

THE STATE OF CALIFORNIA OR ITS OFFICERS OR AGENTS SHALL NOT BE RESPONSIBLE FOR THE ACCURACY OR COMPLETENESS OF ELECTRONIC COPIES OF THIS PLAN SHEET.

Caltrans Metric

NOTES:

1. FOR COMPLETE RIGHT OF WAY AND ACCURATE ACCESS DATA, SEE RIGHT OF WAY RECORD MAPS AT DISTRICT OFFICE.
2. FOR THRIE BEAM CONNECTION DETAIL, SEE CONSTRUCTION DETAILS

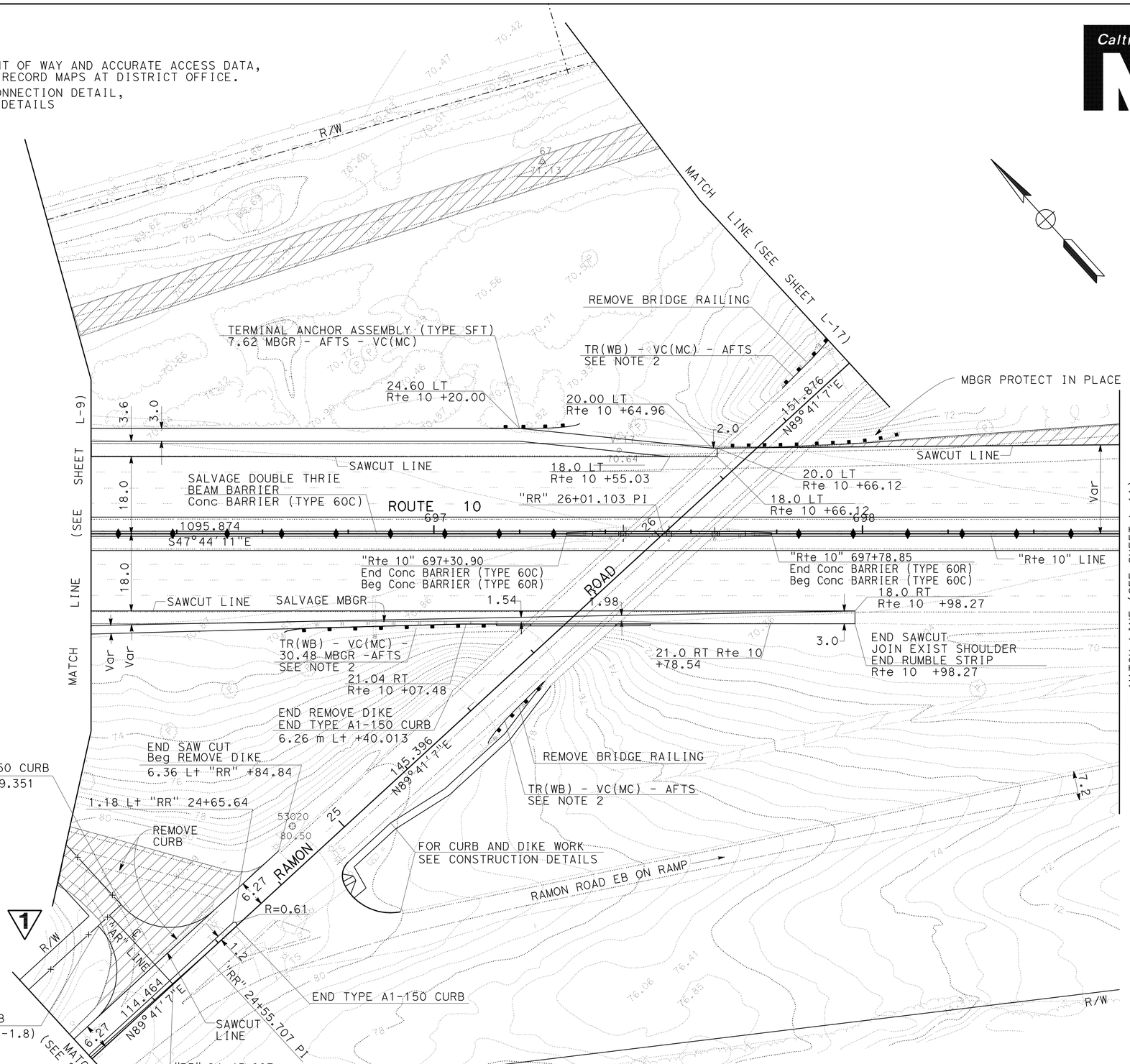

1 REVISED PER ADDENDUM No. 1 DATED SEPTEMBER 25, 2009

ALL DIMENSIONS ARE IN METERS UNLESS OTHERWISE SHOWN

LAYOUT

SCALE: 1: 500

L-10

STATE OF CALIFORNIA - DEPARTMENT OF TRANSPORTATION

Caltrans **DESIGN**

FUNCTIONAL SUPERVISOR: BEN AMIRI

CALCULATED-DESIGNED BY: JUSTINE NIU

CHECKED BY: JUAN CARLOS ALVAREZ

REVISED BY: MARK DE LA VEGA

DATE REVISED

LAST REVISION 01-15-09 DATE PLOTTED => 23-SEP-2009 TIME PLOTTED => 07:08

Dist	COUNTY	ROUTE	KILOMETER POST TOTAL PROJECT	SHEET No.	TOTAL SHEETS
08	Riv	10	66.5/71.7	23	410

REGISTERED CIVIL ENGINEER 1-15-09 DATE

5-18-09
PLANS APPROVAL DATE

REGISTERED PROFESSIONAL ENGINEER JUSTINE NIU No. 62897 Exp. 6-30-10 CIVIL STATE OF CALIFORNIA

THE STATE OF CALIFORNIA OR ITS OFFICERS OR AGENTS SHALL NOT BE RESPONSIBLE FOR THE ACCURACY OR COMPLETENESS OF ELECTRONIC COPIES OF THIS PLAN SHEET.

Caltrans Metric

NOTE:
FOR COMPLETE RIGHT OF WAY AND ACCURATE ACCESS DATA, SEE RIGHT OF WAY RECORD MAPS AT DISTRICT OFFICE.

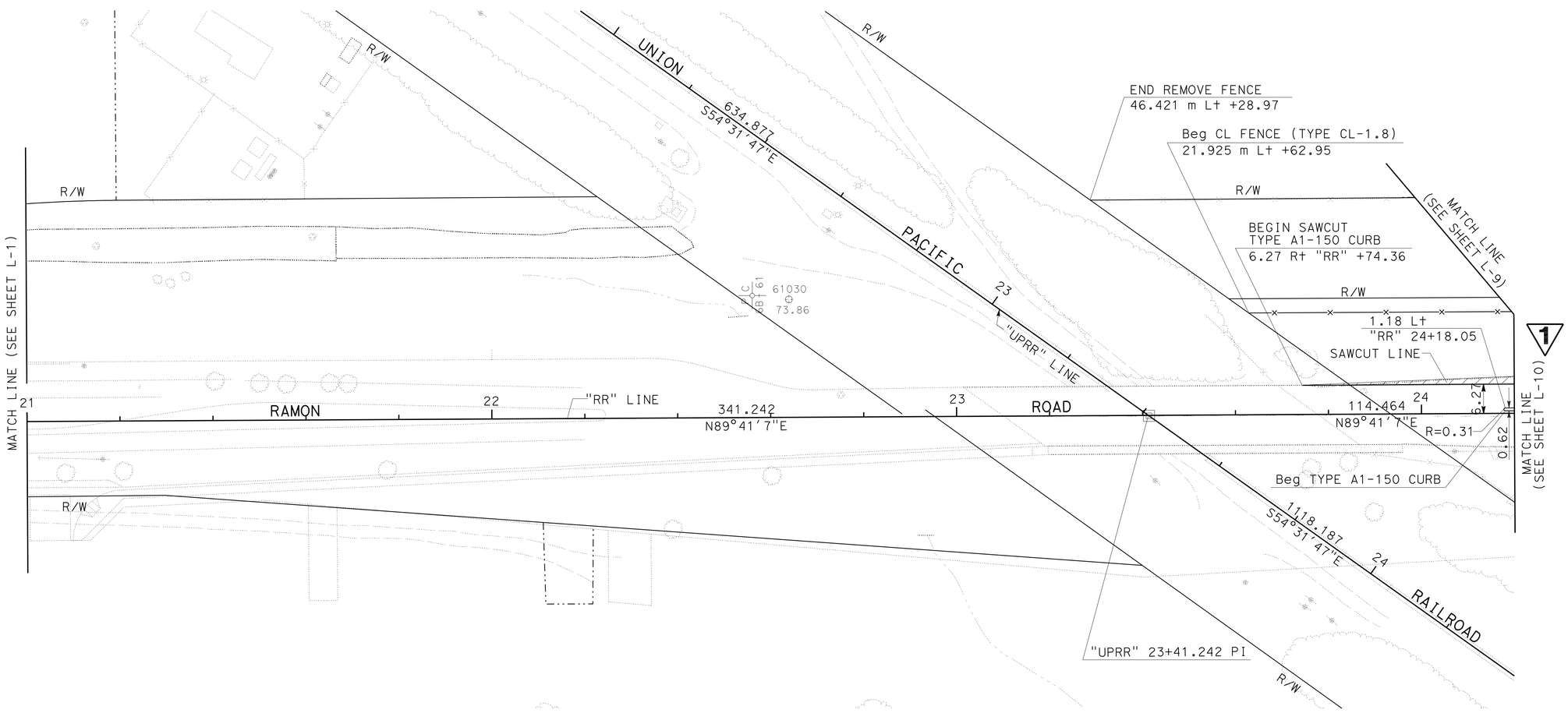

ALL DIMENSIONS ARE IN METERS UNLESS OTHERWISE SHOWN

LAYOUT

SCALE: 1: 500

L-13

1 **REVISED PER ADDENDUM No. 1 DATED SEPTEMBER 25, 2009**

STATE OF CALIFORNIA - DEPARTMENT OF TRANSPORTATION
Caltrans **DESIGN**

FUNCTIONAL SUPERVISOR: BEN AMIRI

CALCULATED-DESIGNED BY: JUSTINE NIU
CHECKED BY: MARK DE LA VEGA

REVISED BY / DATE REVISED

LAST REVISION 01-15-09 | DATE PLOTTED => 23-SEP-2009 | TIME PLOTTED => 07:08

Dist	COUNTY	ROUTE	KILOMETER POST TOTAL PROJECT	SHEET No.	TOTAL SHEETS
08	Riv	10	66.5/71.7	39	410

REGISTERED CIVIL ENGINEER 1-15-09 DATE

5-18-09
PLANS APPROVAL DATE

REGISTERED PROFESSIONAL ENGINEER JUSTINE NIU No. 62897 Exp. 6-30-10 CIVIL STATE OF CALIFORNIA

THE STATE OF CALIFORNIA OR ITS OFFICERS OR AGENTS SHALL NOT BE RESPONSIBLE FOR THE ACCURACY OR COMPLETENESS OF ELECTRONIC COPIES OF THIS PLAN SHEET.

Caltrans Metric

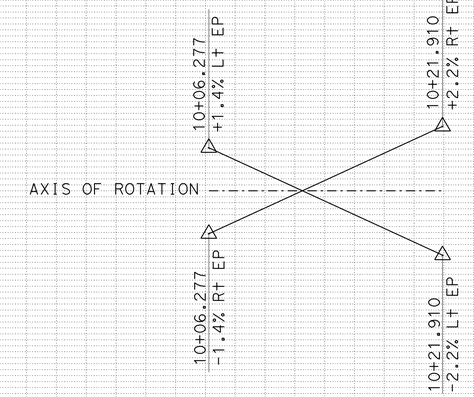

SUPERELEVATION DIAGRAM

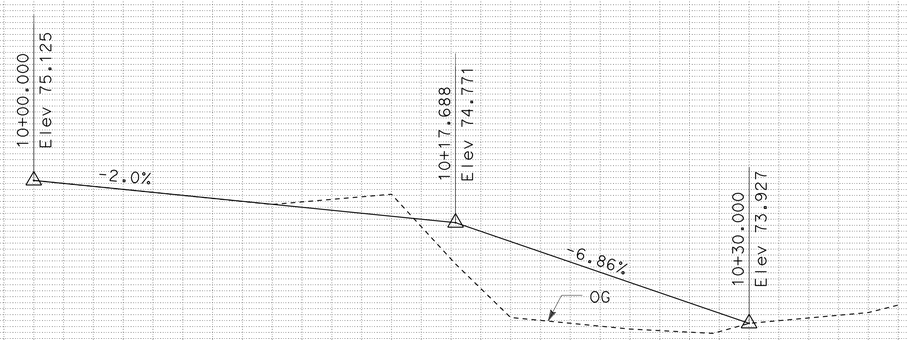

PROFILE
"DW" LINE
DRIVEWAY

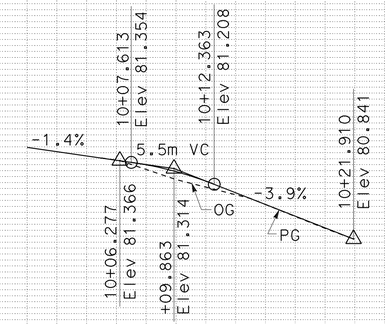

PROFILE
ACCESS Rd
"AR" LINE

SCALE: Horiz 1:200
Vert 1:20

1 REVISED PER ADDENDUM No. 1 DATED SEPTEMBER 25, 2009

ALL DIMENSIONS ARE IN METERS UNLESS OTHERWISE SHOWN

PROFILE AND SUPERELEVATION DIAGRAM

SCALE: Horiz 1:125
Vert 1:25

PS-10

Station	10+00	+05	+10	+15	+20	+25	+30	+35	10+00	+10	+20	TOTAL
m^3 Exc	0								79			79
m^3 Emb	3751								14			3765

SHEET TOTAL

LAST REVISION 01-15-09 DATE PLOTTED => 23-SEP-2009 TIME PLOTTED => 07:09

REVISED BY | DATE REVISED

JUSTINE NIU | JUAN CARLOS ALVAREZ

CALCULATED-DESIGNED BY | CHECKED BY

FUNCTIONAL SUPERVISOR: BEN AMIRI

STATE OF CALIFORNIA - DEPARTMENT OF TRANSPORTATION
Caltrans DESIGN

Dist	COUNTY	ROUTE	KILOMETER POST TOTAL PROJECT	SHEET No.	TOTAL SHEETS
08	Riv	10	66.5/71.7	47	410

REGISTERED CIVIL ENGINEER 1-15-09 DATE

5-18-09
PLANS APPROVAL DATE

REGISTERED PROFESSIONAL ENGINEER JUSTINE NIU No. 62897 Exp. 6-30-10 CIVIL STATE OF CALIFORNIA

THE STATE OF CALIFORNIA OR ITS OFFICERS OR AGENTS SHALL NOT BE RESPONSIBLE FOR THE ACCURACY OR COMPLETENESS OF ELECTRONIC COPIES OF THIS PLAN SHEET.

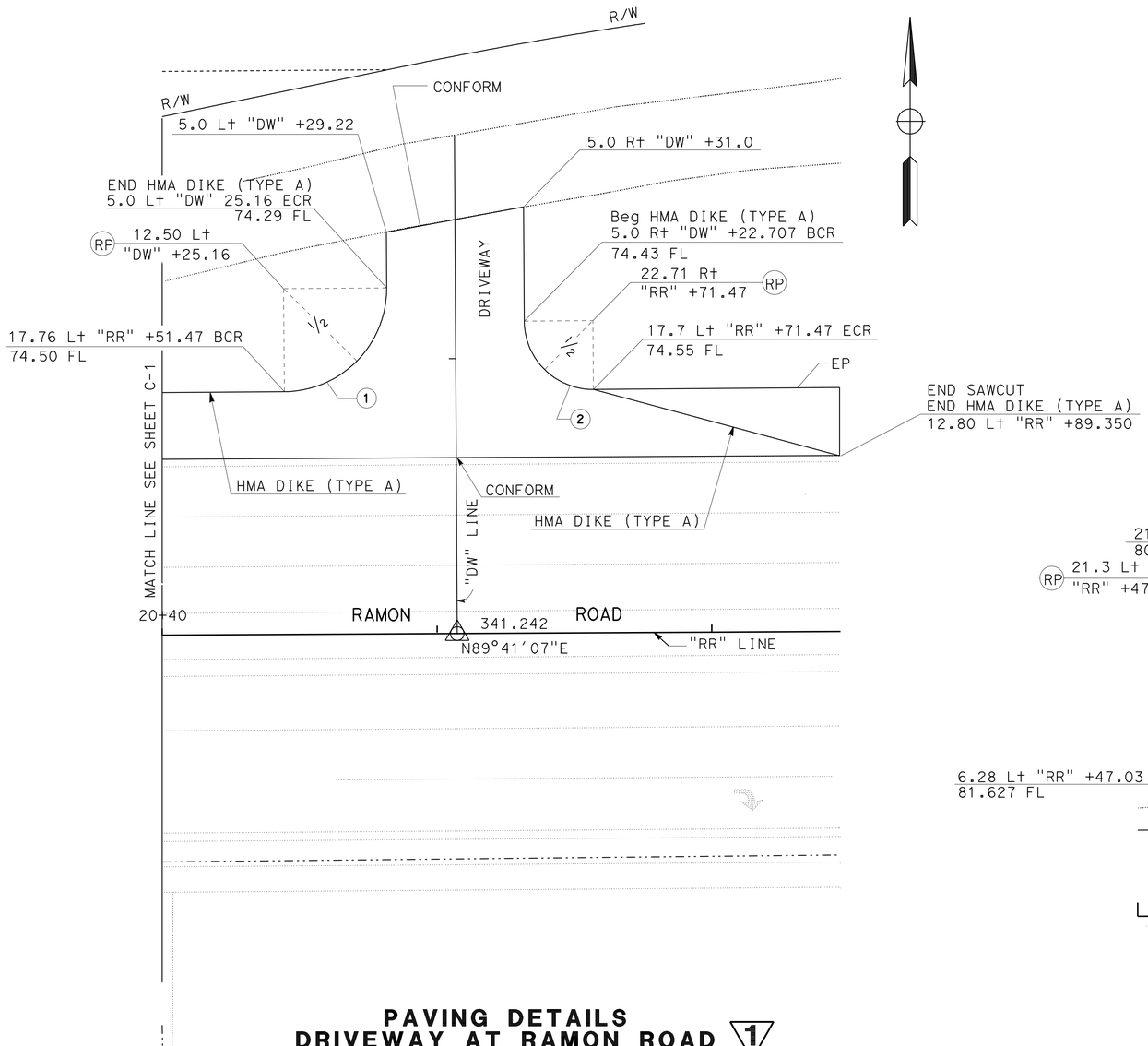

PAVING DETAILS
DRIVEWAY AT RAMON ROAD 1

CURVE DATA

No.	R	Δ	T	L
1	7.50	89°53'30"	7.49	11.77
2	5.00	90°06'32"	5.01	7.86

CURVE DATA

No.	R	Δ	T	L
3	15.00	90°0'00"	15.00	23.56
4	15.00	90°0'00"	15.00	23.56

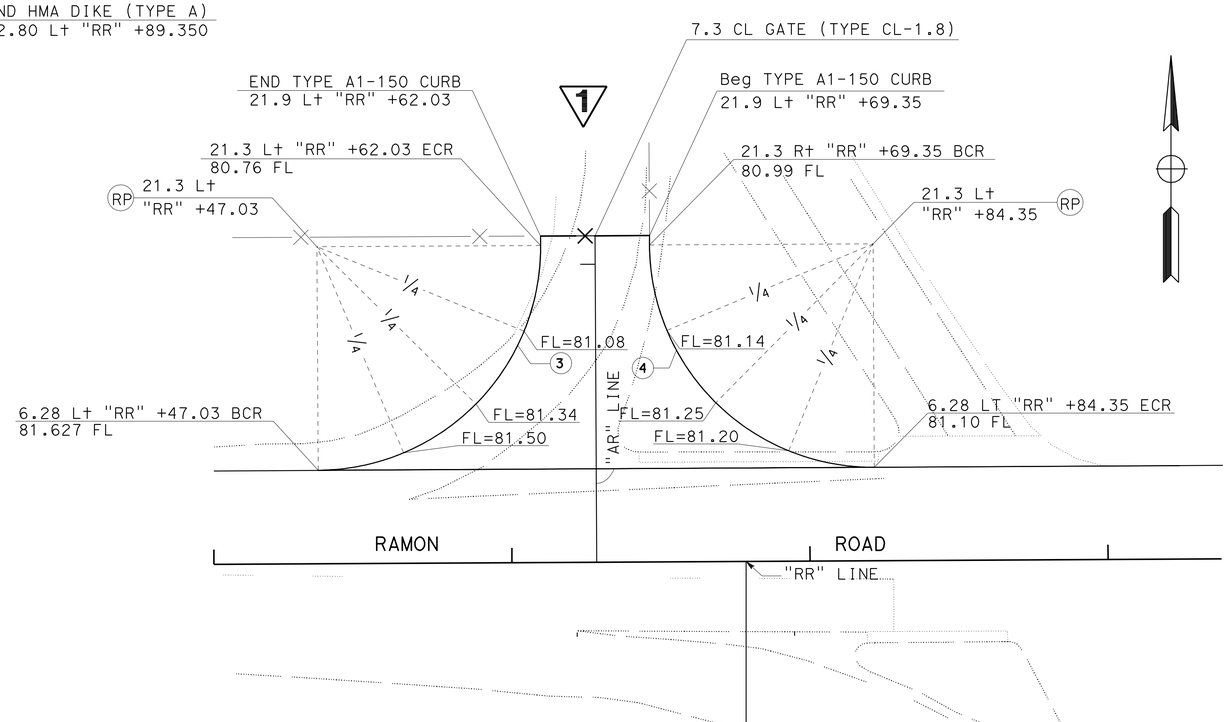

PAVING DETAILS
ACCESS ROAD AT RAMON ROAD

ALL DIMENSIONS ARE IN METERS UNLESS OTHERWISE SHOWN

CONSTRUCTION DETAILS
(PAVING DETAILS DRIVEWAY AT RAMON ROAD)

SCALE 1:200

C-2

1 **REVISED PER ADDENDUM No. 1 DATED SEPTEMBER 25, 2009**

STATE OF CALIFORNIA - DEPARTMENT OF TRANSPORTATION
Caltrans DESIGN

FUNCTIONAL SUPERVISOR: BEN AMIRI
CALCULATED-DESIGNED BY: JUSTINE NIU
CHECKED BY: TRUC BUI
REVISED BY / DATE REVISED

LAST REVISION 01-15-09
DATE PLOTTED => 23-SEP-2009
TIME PLOTTED => 07:09

Dist	COUNTY	ROUTE	KILOMETER POST TOTAL PROJECT	SHEET No.	TOTAL SHEETS
08	Riv	10	66.5/71.7	64	410

REGISTERED CIVIL ENGINEER 1-15-09 DATE

5-18-09
PLANS APPROVAL DATE

REGISTERED PROFESSIONAL ENGINEER
JUSTINE NIU
No. 62897
Exp. 6-30-10
CIVIL
STATE OF CALIFORNIA

THE STATE OF CALIFORNIA OR ITS OFFICERS OR AGENTS SHALL NOT BE RESPONSIBLE FOR THE ACCURACY OR COMPLETENESS OF ELECTRONIC COPIES OF THIS PLAN SHEET.

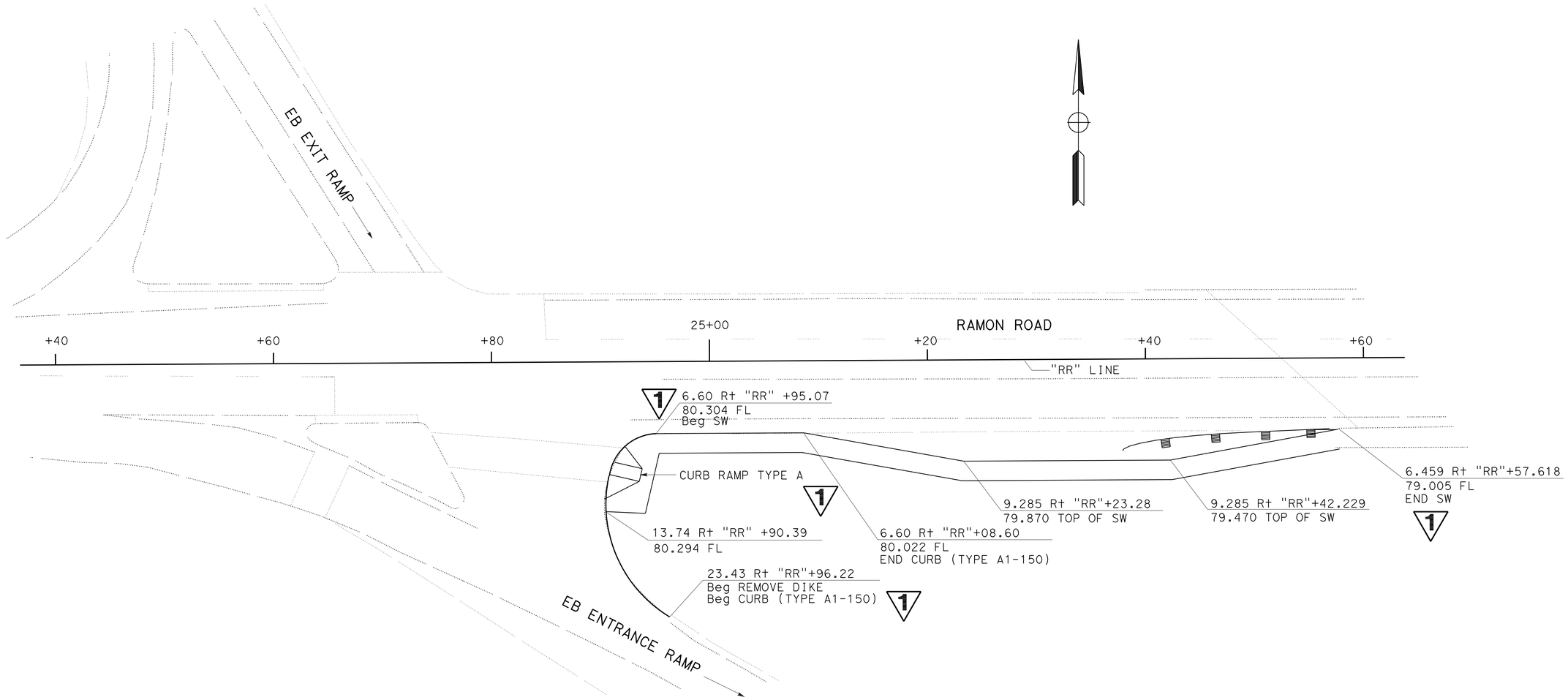

ALL DIMENSIONS ARE IN METERS UNLESS OTHERWISE SHOWN

CONSTRUCTION DETAILS
SIDEWALK ELEVATIONS

SCALE 1:200

C-19

1 **REVISED PER ADDENDUM No. 1 DATED SEPTEMBER 25, 2009**

STATE OF CALIFORNIA - DEPARTMENT OF TRANSPORTATION
Caltrans DESIGN

FUNCTIONAL SUPERVISOR: BEN AMIRI

CALCULATED-DESIGNED BY: TRUC BUI
CHECKED BY: JUSTINE NIU

REVISED BY / DATE REVISED

LAST REVISION 01-15-09
DATE PLOTTED => 23-SEP-2009
TIME PLOTTED => 07:09

Dist	COUNTY	ROUTE	KILOMETER POST TOTAL PROJECT	SHEET No.	TOTAL SHEETS
08	Riv	10	66.5/71.7	72	410

REGISTERED CIVIL ENGINEER 1-15-09 DATE

5-18-09
PLANS APPROVAL DATE

REGISTERED PROFESSIONAL ENGINEER REFAAT ELSHERIF No. 67382 Exp. 9-30-10 CIVIL STATE OF CALIFORNIA

THE STATE OF CALIFORNIA OR ITS OFFICERS OR AGENTS SHALL NOT BE RESPONSIBLE FOR THE ACCURACY OR COMPLETENESS OF ELECTRONIC COPIES OF THIS PLAN SHEET.

Caltrans Metric

NOTE: FOR COMPLETE RIGHT OF WAY AND ACCURATE ACCESS DATA, SEE RIGHT OF WAY RECORD MAPS AT DISTRICT OFFICE.

LEGEND:

- DRAINAGE SYSTEM No.
- DRAINAGE UNIT No.
- ROCK SLOPE PROTECTION (RSP)

ABBREVIATIONS:

GLD - GRATED LINE DRAIN
DD - DOWNDRAIN
USWD - UNDER SIDEWALK DRAIN
SGD - STANDARD GUTTER DEPRESSION
TCE - TEMPORARY CONSTRUCTION EASEMENT
APC - ALTERNATIVE PIPE CULVERT

NOTE:

1. FOR DECK CONTOURS, SEE STRUCTURE PLANS
2. SEE DRAINAGE DETAILS FOR SECTION Y-Y.

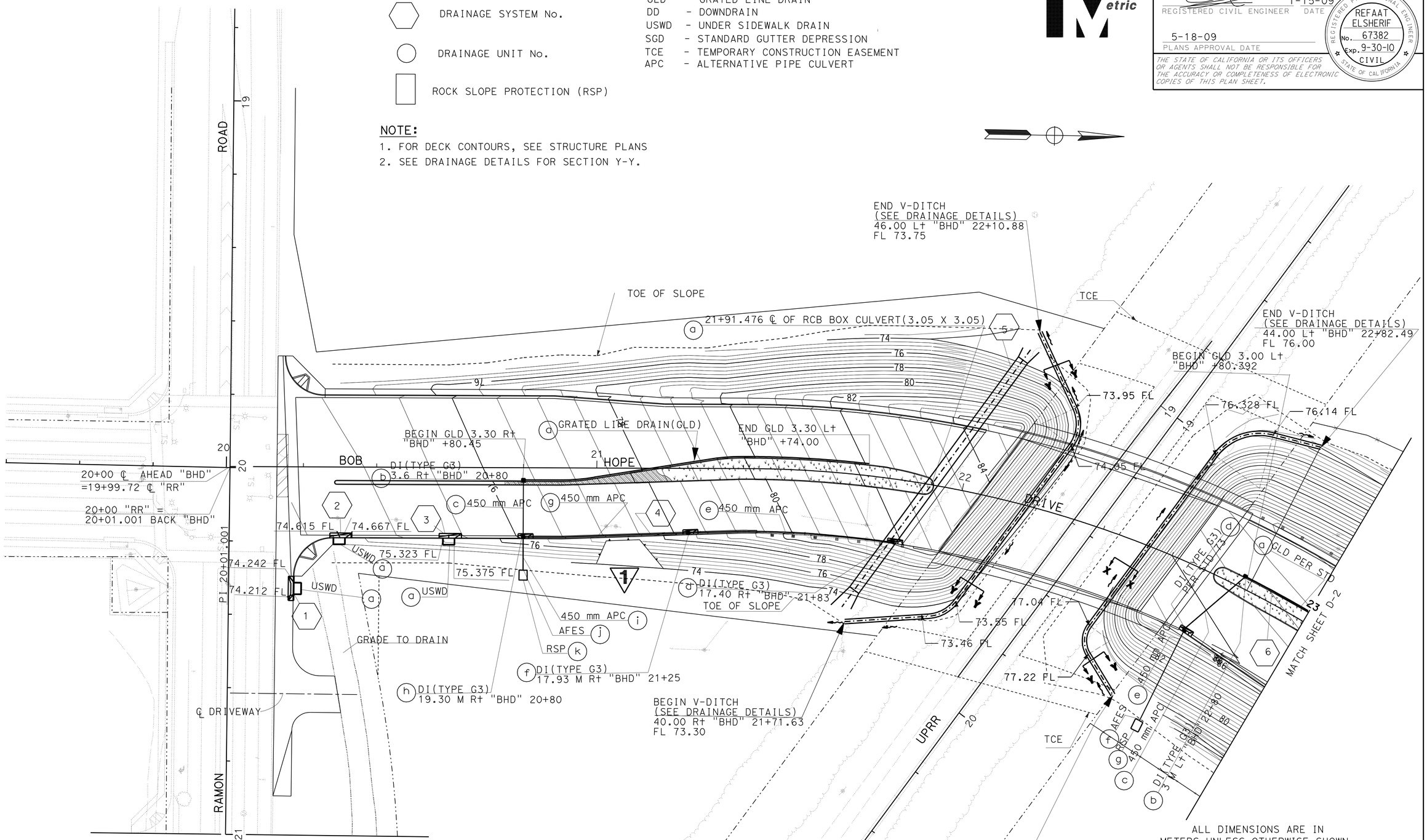

ALL DIMENSIONS ARE IN METERS UNLESS OTHERWISE SHOWN

DRAINAGE AND CONTOUR GRADING PLAN

SCALE 1:500

D-1

1 REVISED PER ADDENDUM No. 1 DATED SEPTEMBER 25, 2009

THIS PLAN ACCURATE FOR DRAINAGE WORK ONLY

STATE OF CALIFORNIA - DEPARTMENT OF TRANSPORTATION
Caltrans DESIGN

FUNCTIONAL SUPERVISOR: BEN AMIRI
CALCULATED-DESIGNED BY: R. ELSHERIF
CHECKED BY: JUSTINE NIU
REVISED BY / DATE REVISED

LAST REVISION 01-15-09
DATE PLOTTED => 23-SEP-2009
TIME PLOTTED => 07:09

Dist	COUNTY	ROUTE	KILOMETER POST TOTAL PROJECT	SHEET No.	TOTAL SHEETS
08	Riv	10	66.5/71.7	176	410

W E Wasser 1-15-09
REGISTERED CIVIL ENGINEER DATE

5-18-09
PLANS APPROVAL DATE

REGISTERED PROFESSIONAL ENGINEER W. E. WASSER No. 37378 Exp. 6-30-10 CIVIL STATE OF CALIFORNIA

THE STATE OF CALIFORNIA OR ITS OFFICERS OR AGENTS SHALL NOT BE RESPONSIBLE FOR THE ACCURACY OR COMPLETENESS OF ELECTRONIC COPIES OF THIS PLAN SHEET.

Caltrans Metric

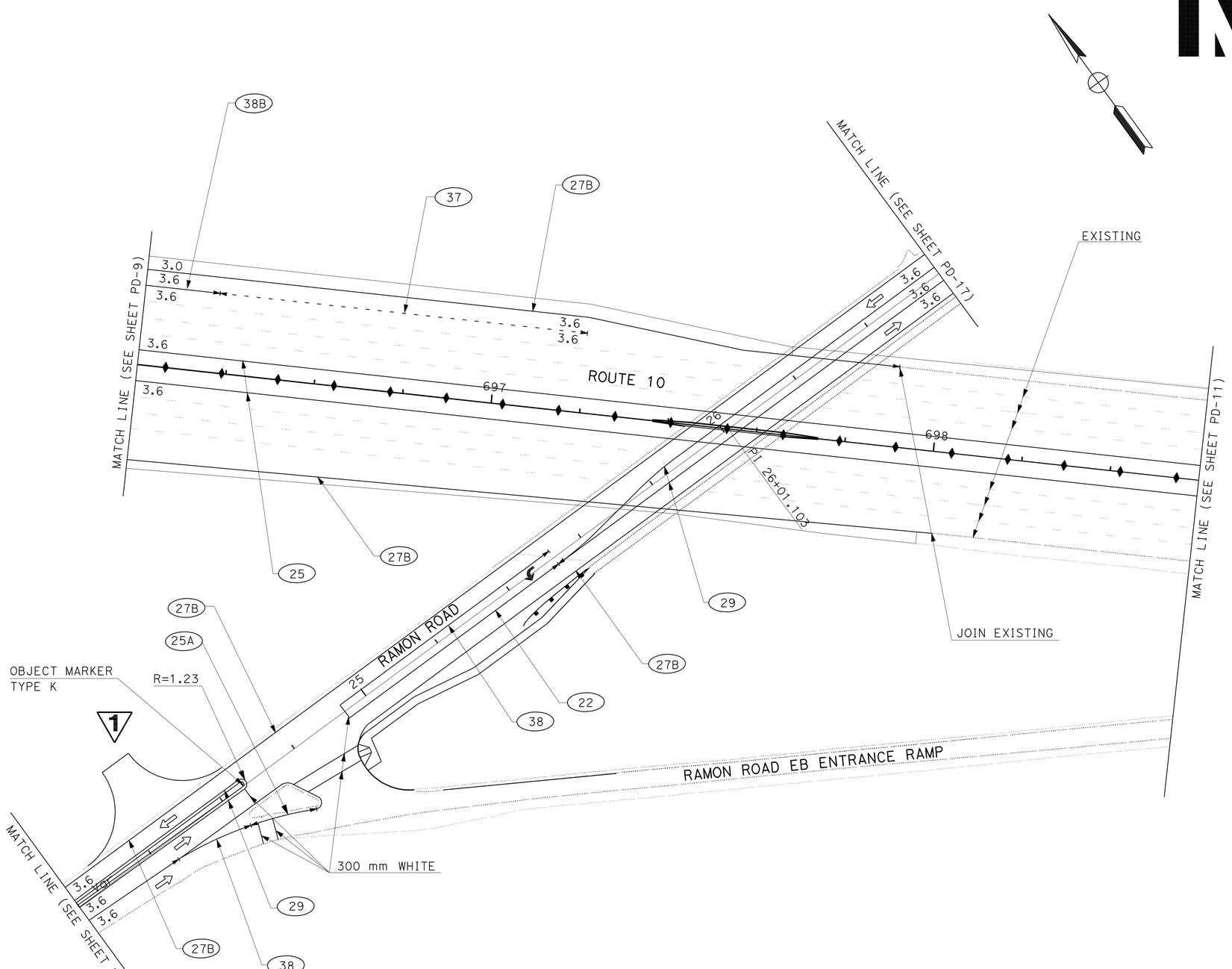

ALL DIMENSIONS ARE IN METERS UNLESS OTHERWISE SHOWN

PAVEMENT DELINEATION PLAN

SCALE: 1:500

PD-10

1 **REVISED PER ADDENDUM No. 1 DATED SEPTEMBER 25, 2009**

THIS PLAN ACCURATE FOR PAVEMENT DELINEATION WORK ONLY

STATE OF CALIFORNIA - DEPARTMENT OF TRANSPORTATION
Caltrans **TRAFFIC DESIGN A**

FUNCTIONAL SUPERVISOR: W. E. WASSER
CALCULATED-DESIGNED BY: DEAN TO
CHECKED BY: W. E. WASSER
REVISED BY / DATE REVISED

LAST REVISION 01-15-09 | DATE PLOTTED => 23-SEP-2009 | TIME PLOTTED => 07:09

Dist	COUNTY	ROUTE	KILOMETER POST TOTAL PROJECT	SHEET No.	TOTAL SHEETS
08	Riv	10	66.5/71.7	179	410

W E Wasser 1-15-09
REGISTERED CIVIL ENGINEER DATE

5-18-09
PLANS APPROVAL DATE

REGISTERED PROFESSIONAL ENGINEER W. E. WASSER No. 37378 Exp. 6-30-10 CIVIL STATE OF CALIFORNIA

THE STATE OF CALIFORNIA OR ITS OFFICERS OR AGENTS SHALL NOT BE RESPONSIBLE FOR THE ACCURACY OR COMPLETENESS OF ELECTRONIC COPIES OF THIS PLAN SHEET.

Caltrans Metric

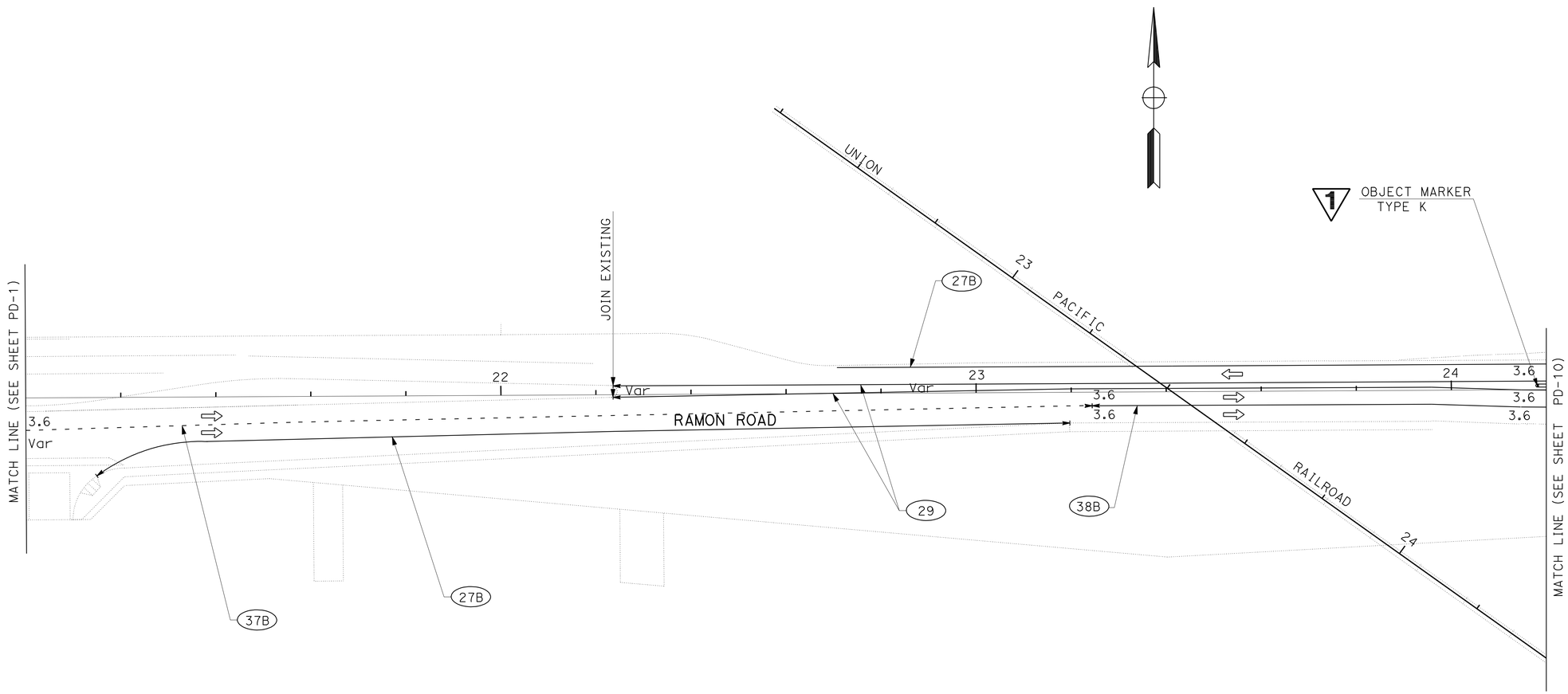

ALL DIMENSIONS ARE IN METERS UNLESS OTHERWISE SHOWN

PAVEMENT DELINEATION PLAN

SCALE: 1:500

PD-13

1 **REVISED PER ADDENDUM No. 1 DATED SEPTEMBER 25, 2009**

THIS PLAN ACCURATE FOR PAVEMENT DELINEATION WORK ONLY

STATE OF CALIFORNIA - DEPARTMENT OF TRANSPORTATION
Caltrans **TRAFFIC DESIGN A**

FUNCTIONAL SUPERVISOR: W. E. WASSER

CALCULATED-DESIGNED BY: DEAN TO
CHECKED BY: W. E. WASSER

REVISED BY
DATE REVISED

LAST REVISION 01-15-09
DATE PLOTTED => 23-SEP-2009
TIME PLOTTED => 07:09

Dist	COUNTY	ROUTE	KILOMETER POST TOTAL PROJECT	SHEET No.	TOTAL SHEETS
08	Riv	10	66.5/71.7	186	410

W E Wasser 1-15-09
REGISTERED CIVIL ENGINEER DATE

5-18-09
PLANS APPROVAL DATE

REGISTERED PROFESSIONAL ENGINEER W. E. WASSER No. 37378 Exp. 6-30-10 CIVIL STATE OF CALIFORNIA

THE STATE OF CALIFORNIA OR ITS OFFICERS OR AGENTS SHALL NOT BE RESPONSIBLE FOR THE ACCURACY OR COMPLETENESS OF ELECTRONIC COPIES OF THIS PLAN SHEET.

Caltrans Metric

PAVEMENT DELINEATION QUANTITIES

SHEET No.	STATION LIMITS	LOCATION	DETAIL No. OR PAVEMENT MARKING	THERMOPLASTIC TRAFFIC STRIPE (SPRAYABLE)			PAVEMENT MARKER RETRO-REFLECTIVE			THERMOPLASTIC PAVEMENT MARKING	DELINEATOR (CLASS 1)		OBJECT MARKER
				100 mm YELLOW	100 mm WHITE	200 mm WHITE	TYPE D	TYPE G	TYPE H		TYPE F	TYPE G	TYPE K
				m	m	m	EA	EA	EA	m^2	EA	EA	EA
PD-7	685+60 TO 689+20	ROUTE 10	DETAIL 38			252		35			16	11	
			DETAIL 27B		703								
			DETAIL 25	720					50				
			DETAIL 25A	372					51				
			DETAIL 9		160			11					
			DETAIL 8		29								
			'SIGNAL' MARKING							2.97			
			'AHEAD' MARKING							2.88			
			TYPE V ARROW							6.12			
PD-8	691+80 TO 693+80	WB EXIT RAMP	DETAIL 38			212		29			12	11	
			DETAIL 27B		208								
			DETAIL 25A	201					28				
			TYPE III ARROW							6.78			
			TYPE IIB ARROW							5.48			
PD-9	692+60 TO 696+20	ROUTE 10	DETAIL 38			262		36			16	8	
			DETAIL 38B			75		22					
			DETAIL 27B		1061								
			DETAIL 25A	291					40				
			DETAIL 25	720					50				
			DETAIL 9		232			16					
			DETAIL 8		81								
			'SIGNAL' MARKING							2.97			
			'AHEAD' MARKING							2.88			
PD-10	696+20 TO 698+60	ROUTE 10	DETAIL 38			150		22					1
			DETAIL 37			83		24					
			DETAIL 29	482			132						
			DETAIL 27B		800								
			DETAIL 25	482					33				
			DETAIL 25A	20					4				
			DETAIL 22	60			18						
			300 mm WHITE							15			
PD-11	698+60 TO 701+20	ROUTE 10	DETAIL 25	521					36				
PD-12	701+20 TO 704+20	ROUTE 10	DETAIL 27B		300				41				
			DETAIL 25	600									
SHEET TOTAL				4409	3574	974	150	195	333	45.08	44	30	1
SUB TOTAL				8957			678			45.08	74		1

1 REVISED PER ADDENDUM No. 1 DATED SEPTEMBER 25, 2009

PAVEMENT DELINEATION QUANTITIES

PDQ-3

STATE OF CALIFORNIA - DEPARTMENT OF TRANSPORTATION
Caltrans TRAFFIC DESIGN A

FUNCTIONAL SUPERVISOR: W. E. WASSER
CALCULATED-DESIGNED BY: DEAN TO
CHECKED BY: W. E. WASSER
REVISED BY
DATE REVISED

LAST REVISION 01-15-09 | DATE PLOTTED => 23-SEP-2009 | TIME PLOTTED => 07:10

Dist	COUNTY	ROUTE	KILOMETER POST TOTAL PROJECT	SHEET No.	TOTAL SHEETS
08	Riv	10	66.5/71.7	187	410

W E Wasser 1-15-09
REGISTERED CIVIL ENGINEER DATE

5-18-09
PLANS APPROVAL DATE

REGISTERED PROFESSIONAL ENGINEER W. E. WASSER No. 37378 Exp. 6-30-10 CIVIL STATE OF CALIFORNIA

THE STATE OF CALIFORNIA OR ITS OFFICERS OR AGENTS SHALL NOT BE RESPONSIBLE FOR THE ACCURACY OR COMPLETENESS OF ELECTRONIC COPIES OF THIS PLAN SHEET.

Caltrans Metric

PAVEMENT DELINEATION QUANTITIES

SHEET No.	STATION LIMITS	LOCATION	DETAIL No. OR PAVEMENT MARKING	THERMOPLASTIC TRAFFIC STRIPE (SPRAYABLE)			PAVEMENT MARKER RETRO-REFLECTIVE			THERMOPLASTIC PAVEMENT MARKING	DELINEATOR (CLASS 1)		OBJECT MARKER
				100 mm YELLOW	100 mm WHITE	200 mm WHITE	TYPE D	TYPE G	TYPE H		TYPE F	TYPE G	TYPE K
				m	m	m	EA	EA	EA	m^2	EA	EA	EA
PD-13	21+00 TO 24+00	RAMON Rd	DETAIL 29	400			110						
			DETAIL 27B		149								
			DETAIL 9		156			12					
			TYPE VI ARROW							11.70			1
			DETAIL 37B			225		50					
			DETAIL 38			10		2					
			DETAIL 38B			90		26					
PD-14	687+60 TO 689+60	VARNER Rd	DETAIL 29	329			92						
			DETAIL 27B		409								
			DETAIL 22	41			14						
			DETAIL 9	3				1					
			TYPE VI ARROW							3.90			
PD-15	691+80 TO 695+00	VARNER Rd	100mm WHITE		57								
			DETAIL 38			66		10					
			DETAIL 32	96			20						
			DETAIL 29	510			142						
			DETAIL 9		577			40		2.78			
			TYPE IV ARROW							11.70			
			TYPE VI ARROW										
PD-16	695+00 TO 697+40	VARNER Rd	DETAIL 32	480			165						
			DETAIL 9		480			33					
PD-17	697+40 TO 699+20 26+60 TO 29+60	VARNER Rd RAMON Rd	100 mm WHITE		74								
			DETAIL 38			348		48					
			DETAIL 32	65				25					
			DETAIL 29	580				160					
			DETAIL 27B		344								
			DETAIL 9		399			28					
			TYPE I ARROW							2.88			
			TYPE II ARROW							4.18			
			TYPE IV ARROW							6.95			
SHEET TOTAL				2504	2345	739	543	435		44.09			1
SUB TOTAL				5933			978			44.09	74	47	1
TOTAL				28381			2913			399.71	121		9

1

1

1 REVISED PER ADDENDUM No. 1 DATED SEPTEMBER 25, 2009

PAVEMENT DELINEATION QUANTITIES

PDQ-4

STATE OF CALIFORNIA - DEPARTMENT OF TRANSPORTATION
Caltrans TRAFFIC DESIGN A

FUNCTIONAL SUPERVISOR: W. E. WASSER
CALCULATED-DESIGNED BY: DEAN TO
CHECKED BY: W. E. WASSER
REVISED BY
DATE REVISED

LAST REVISION 01-15-09 | DATE PLOTTED => 23-SEP-2009 | TIME PLOTTED => 07:10

Dist	COUNTY	ROUTE	KILOMETER POST TOTAL PROJECT	SHEET No.	TOTAL SHEETS
08	Riv	10	66.5/71.7	198	410

W E Wasser 1-15-09
REGISTERED CIVIL ENGINEER DATE

5-18-09
PLANS APPROVAL DATE

REGISTERED PROFESSIONAL ENGINEER W. E. WASSER No. 37378 Exp. 6-30-10 CIVIL STATE OF CALIFORNIA

THE STATE OF CALIFORNIA OR ITS OFFICERS OR AGENTS SHALL NOT BE RESPONSIBLE FOR THE ACCURACY OR COMPLETENESS OF ELECTRONIC COPIES OF THIS PLAN SHEET.

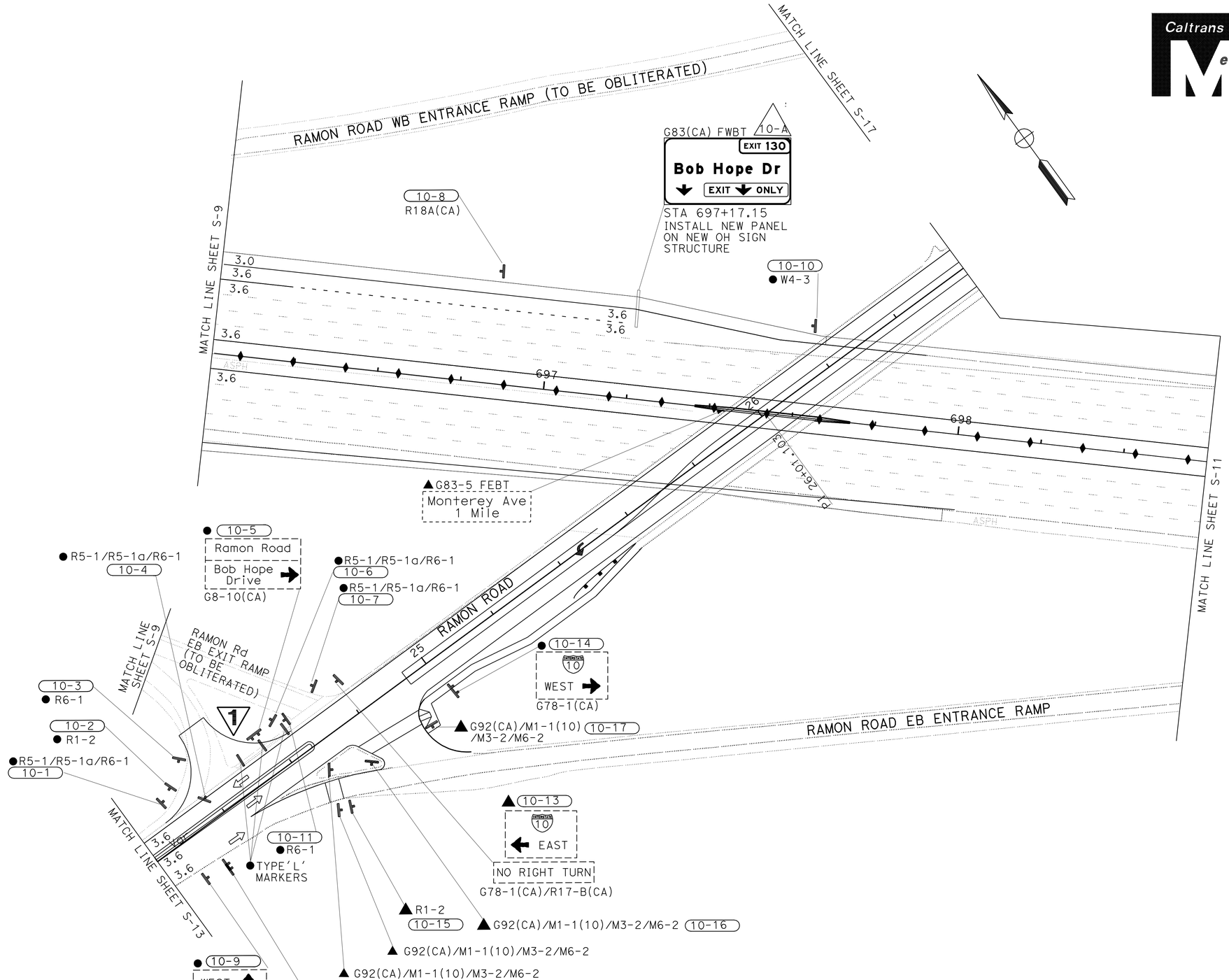

1 **REVISED PER ADDENDUM No. 1 DATED SEPTEMBER 25, 2009**
THIS PLAN ACCURATE FOR SIGN WORK ONLY

ALL DIMENSIONS ARE IN METERS UNLESS OTHERWISE SHOWN

SIGN PLAN
SCALE: 1:500

S-10

STATE OF CALIFORNIA - DEPARTMENT OF TRANSPORTATION
Caltrans **TRAFFIC DESIGN A**

FUNCTIONAL SUPERVISOR: W. E. WASSER
CALCULATED-DESIGNED BY: DEAN TO
CHECKED BY: W. E. WASSER
REVISED BY / DATE REVISED

LAST REVISION 01-15-09 DATE PLOTTED => 23-SEP-2009 TIME PLOTTED => 07:10

Dist	COUNTY	ROUTE	KILOMETER POST TOTAL PROJECT	SHEET No.	TOTAL SHEETS
08	Riv	10	66.5/71.7	201	410

W E Wasser 1-15-09
REGISTERED CIVIL ENGINEER DATE

5-18-09
PLANS APPROVAL DATE

REGISTERED PROFESSIONAL ENGINEER W. E. WASSER No. 37378 Exp. 6-30-10 CIVIL STATE OF CALIFORNIA

THE STATE OF CALIFORNIA OR ITS OFFICERS OR AGENTS SHALL NOT BE RESPONSIBLE FOR THE ACCURACY OR COMPLETENESS OF ELECTRONIC COPIES OF THIS PLAN SHEET.

Caltrans Metric

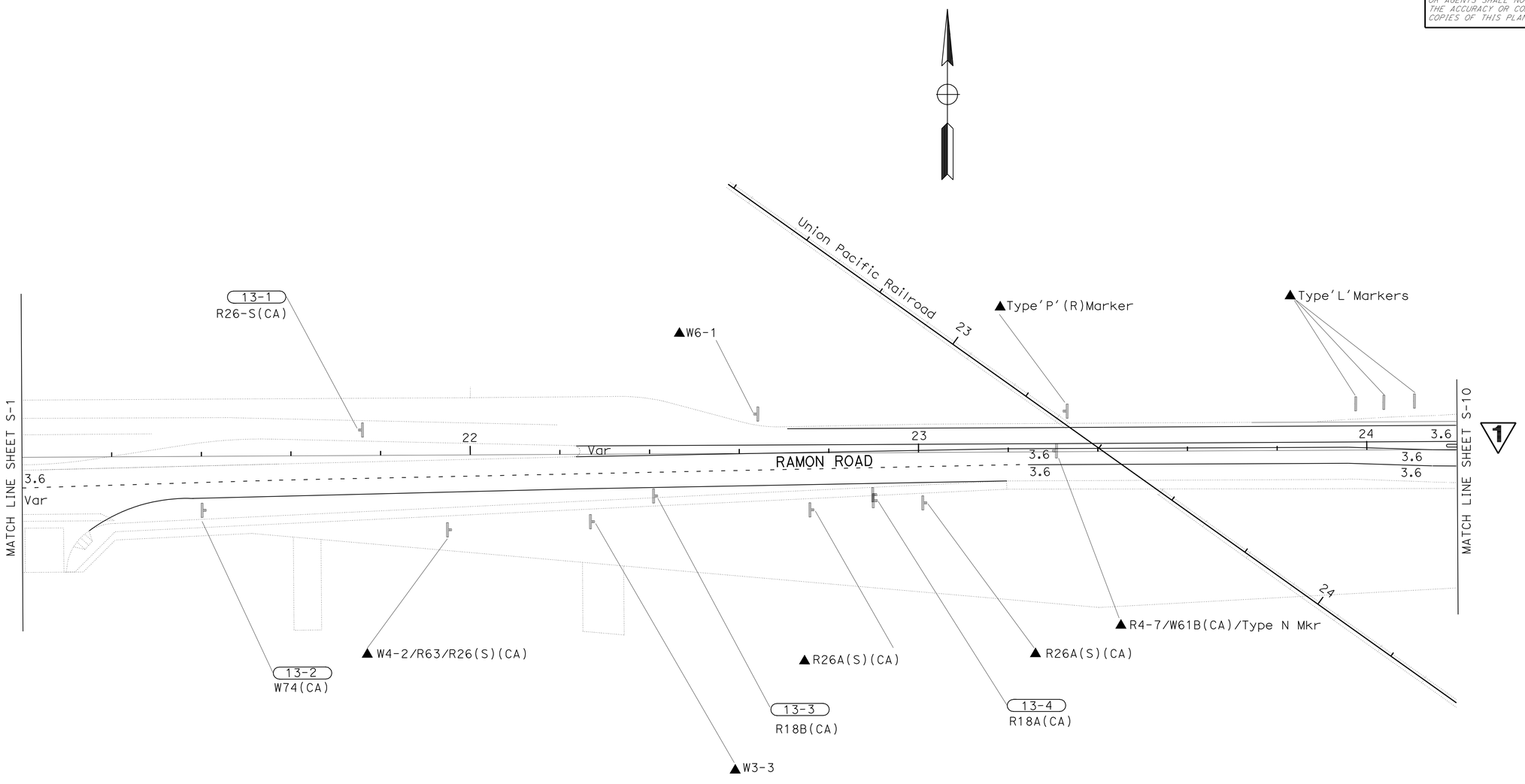

1 **REVISED PER ADDENDUM No. 1 DATED SEPTEMBER 25, 2009**

THIS PLAN ACCURATE FOR SIGN WORK ONLY

ALL DIMENSIONS ARE IN METERS UNLESS OTHERWISE SHOWN

SIGN PLAN

SCALE 1:500

S-13

STATE OF CALIFORNIA - DEPARTMENT OF TRANSPORTATION
Caltrans **TRAFFIC DESIGN A**

FUNCTIONAL SUPERVISOR: W. E. WASSER

CALCULATED-DESIGNED BY: DEAN TO
CHECKED BY: W. E. WASSER

REVISED BY
DATE REVISED

LAST REVISION 01-15-09 | DATE PLOTTED => 23-SEP-2009 | TIME PLOTTED => 07:10

Dist	COUNTY	ROUTE	KILOMETER POST TOTAL PROJECT	SHEET No.	TOTAL SHEETS
08	Riv	10	66.5/71.7	223	410

REGISTERED CIVIL ENGINEER 1-15-09 DATE

5-18-09
PLANS APPROVAL DATE

REGISTERED PROFESSIONAL ENGINEER JUSTINE NIU No. 62897 Exp. 6-30-10 CIVIL STATE OF CALIFORNIA

THE STATE OF CALIFORNIA OR ITS OFFICERS OR AGENTS SHALL NOT BE RESPONSIBLE FOR THE ACCURACY OR COMPLETENESS OF ELECTRONIC COPIES OF THIS PLAN SHEET.

Caltrans Metric

ABBREVEATIONS

DW - DRIVEWAY
RR - RAMON ROAD
BHD - BOB HOPE DRIVE
VR - VARNER ROAD
RDSR(R) - RIO DEL SOL ROAD REALIGNMENT

ROADWAY QUANTITIES

LOCATION AND DESCRIPTION	HOT MIX ASPHALT	HOT MIX ASPHALT (OPEN GRADED)	ASPHALT CONCRETE (BOND BREAKER)	CLASS 2 AGGREGATE BASE	CONCRETE PAVEMENT	CONCRETE PAVEMENT (RAMP TERMINI)	LEAN CONCRETE BASE	LIQUID ASPHALT MC-70 (PRIME COAT)
	Tonne	Tonne	Tonne	m^3	m^3	m^3	m^3	Tonne
"DW" 10+07.69 TO 10+30.11 CL	51.9	-	-	30.4	-	-	-	0.15
"RR" 19+66.39 TO 20+89.35 L†	-	-	33.3	62.9	124.0	-	75.1	-
1 "RR" 24+27.028 TO 24+64.348 L†	73.5	-	-	41.1	-	-	-	0.23
"RR" 27+10.71 TO 28+00.58 R†	-	-	40.6	11.5	151.6	-	91.8	-
"BHD" 20+20.00 TO 21+96.05 L†	-	-	234.8	-	808.4	-	424.4	-
"BHD" 20+20.00 TO 21+96.05 R†	1034.2	-	-	621.6	-	-	-	2.56
"BHD" 22+71.12 TO 24+09.96 CL	1916.6	-	-	1151.9	-	-	-	4.75
"BHD" 25+17.46 TO 28+34.65 CL	4532.0	-	-	2723.9	-	-	-	11.24
"BHD" 27+59.04 RT TO "BHD" 28+22.84 R†	-	-	103.5	-	356.4	-	187.1	-
"R3" 690+41.03 TO 691+11.07 CL	-	-	70.5	-	-	242.8	127.4	-
"R4" 691+48.18 TO 692+09.97 CL	-	-	63.0	-	-	216.8	113.8	-
"VR" 687+36.895 TO 694+20.055 R†	1257.0	-	-	736.7	-	-	-	3.74
"VR" 687+36.895 TO 691+15.923 L†	848.5	-	-	497.2	-	-	-	2.52
"VR" 687+70.00 TO 687+80.00 CL	35.2	-	-	20.7	-	-	-	0.10
"VR" 688+55.00 TO 689+30.00 CL	249.8	-	-	146.4	-	-	-	0.74
"VR" 690+35.00 TO 691+60.95 CL	586.1	-	-	343.5	-	-	-	1.74
"RDSR(R)" 10+73.88 TO 14+80.00 CL	1760.9	-	-	1031.9	-	-	-	5.24
"RDSR(R)" 10+81.93 TO 11+72.55 L†	-	-	115.8	-	398.5	-	209.2	-
"RTE 10" 683+15.30 LT TO "R1" 691+31.76 CL	2976.0	138.5	-	1744.0	-	-	-	8.85
"RTE 10" 685+81.42 RT TO "R3" 690+88.65 CL	1451.1	43.6	-	850.4	-	-	-	4.32
"R4" 691+70.97 TO "RTE 10" 698+93.22 L†	2314.8	123.1	-	1356.5	-	-	-	6.89
"R5" 691+45.10 CL TO "RTE 10" 697+98.27 R†	1913.9	101.9	-	1121.6	-	-	-	5.69
"RTE 10" 691+91.29 TO 703+65.00 (MEDIAN)	4476.3	433.3	-	1473.1	-	-	-	11.23
SUBTOTAL	25 477.8	840.4	661.5	13 965.3	1838.9	459.6	1228.8	69.99
FROM COLD PLANING	3137.4	-	-	-	-	-	-	-
FROM AC DIKES	120.3	-	-	-	-	-	-	-
FROM MISC AC	18.8	-	-	-	-	-	-	-
TOTAL	28 754.3	840.4	661.5	13 965.3	1838.9	459.6	1228.8	69.99
	1			1				1

PAVEMENT JOINTS

LOCATION	SEAL PAVEMENT JOINT	SEAL LONGITUDINAL ISOLATION JOINT
	m	m
"BHD" 20+18.57 LT TO "BHD" 21+96.05 L†	1500.5	-
"BHD" 27+59.04 RT TO "VR" 691+14.70 R†	689.4	-
"RR" 19+69.39 LT TO "RR" 20+89.35 L†	105.9	-
"RR" 27+10.42 RT TO "RR" 28+00.58 R†	333.5	-
"R3" 690+46.07 TO 691+11.07 CL	418.8	13.5
"R4" 691+48.18 TO 692+12.64 CL	374.8	15.8
"RDSR(R)" 10+81.93 TO 11+72.55 L†	964.2	-
TOTAL	4387.1	29.3

PLACE HMA (MISCELLANEOUS AREA)

LOCATION AND DESCRIPTION	m^2	TONNE
"RR" 24+68.57 TO 25+36.10 R†	10.5	12.8
"R1" 687+60.0 R† (AC OVERSIDE DRAIN)	11.5	1.9
"R4" 694+22.7 R† (AC OVERSIDE DRAIN)	11.2	1.8
"R5" 693+96.1 R† (AC OVERSIDE DRAIN)	14.1	2.3
TOTAL	47.3	18.8

1 REVISED PER ADDENDUM No. 1 DATED SEPTEMBER 25, 2009

SUMMARY OF QUANTITIES
Q-1

STATE OF CALIFORNIA - DEPARTMENT OF TRANSPORTATION
Caltrans DESIGN

FUNCTIONAL SUPERVISOR: BEN AMIRI
CALCULATED-DESIGNED BY: JUSTINE NIU
CHECKED BY: MARK DE LA VEGA
REVISED BY / DATE REVISED

LAST REVISION 01-15-09
DATE PLOTTED => 23-SEP-2009
TIME PLOTTED => 07:10

Dist	COUNTY	ROUTE	KILOMETER POST TOTAL PROJECT	SHEET No.	TOTAL SHEETS
08	Riv	10	66.5/71.7	224	410

REGISTERED CIVIL ENGINEER 1-15-09 DATE

5-18-09
PLANS APPROVAL DATE

REGISTERED PROFESSIONAL ENGINEER JUSTINE NIU No. 62897 Exp. 6-30-10 CIVIL STATE OF CALIFORNIA

THE STATE OF CALIFORNIA OR ITS OFFICERS OR AGENTS SHALL NOT BE RESPONSIBLE FOR THE ACCURACY OR COMPLETENESS OF ELECTRONIC COPIES OF THIS PLAN SHEET.

Caltrans Metric

REMOVE BASE & SURFACING

LOCATION AND DESCRIPTION	m^3
"RDSR" 10+22.85 TO 11+14.39 R+	292.2
"RTE 10" 693+00 TO 694+43.27 L+	313.0
"RTE 10" 693+00 TO 693+97.36 R+	252.6
"RTE 10" 694+67.50 R+ TO "RR" 23+74.36 L+	987.7
"RTE 10" 695+16.24 L+ TO "RR" 27+65.94 R+	1390.1
"RTE 10" 697+66.12 L+ TO "RR" 27+10.42 R+	452.6
"RR" 28+00.58 R+ TO "RTE 10" 703+65.00 L+	1714.7
TOTAL	5402.9

1

COLD PLANE AC PAVEMENT

LOCATION AND DESCRIPTION	45 mm Max	HOT MIX ASPHALT
	m^2	TONNE
"RDSR" 11+82.91 TO 14+80.00 R+	2636.7	965.1
"VR" 687+36.89 TO 687+70.00 CL	326.2	119.4
"VR" 687+80.00 TO 688+55.00 CL	704.4	343.8
"VR" 689+30.00 TO 690+35.00 CL	987.4	361.4
"VR" 691+60.95 TO 694+55.00 L+	3682.0	1347.7
TOTAL	8336.7	3137.4

HMA DIKE QUANTITIES

LOCATION AND DESCRIPTION	REMOVE AC DIKE	PLACE HMA DIKE				HMA (TYPE A)
		TYPE A	TYPE C	TYPE E	TYPE F	
	m	m	m	m	m	Tonne
"RR" 24+68.57 TO 25+36.10 R+	34.9	-	-	-	-	-
"RR" 19+39.46 TO 19+69.45 L+	-	3.0	-	-	-	0.2
"RR" 20+36.05 L+ TO "DW" 10+25.16 L+	-	31.4	-	-	-	2.4
"DW" 10+22.71 R+ TO "RR" 20+89.35 L+	-	26.4	-	-	-	2.0
"BHD" OH BR. 56C-0514 RT (APPROACH)	-	-	15.2	-	27.7	1.3
"R1" 686+29.23 TO 688+80.00 L+	-	-	-	250.8	-	15.7
"R1" 690+32.71 TO 691+16.18 L+	-	-	-	83.5	-	5.2
"R3" 685+81.42 TO 689+00.00 R+	-	-	-	318.6	-	20.0
"R3" 689+00.00 TO 691+00.11 L+	-	-	-	200.1	-	12.6
"R3" 690+88.65 TO 690+98.45 R+	-	-	-	9.8	-	0.6
"R5" 692+00.00 TO 694+33.50 R+	-	-	-	233.5	-	14.7
"R5" 691+59.286 TO OC BR 56-0811 (APPROACH)	-	-	-	-	80.1	3.0
"BHD" 25+17.46 TO 25+30.02 R+	-	-	-	12.6	-	0.8
"R1" 688+90.00 TO 691+23.25 R+	-	-	-	235.3	-	14.7
"R4" 691+70.97 TO 691+78.77 L+	-	-	-	7.8	-	0.5
"R4" 691+60.77 TO 692+94.00 R+	-	-	-	133.2	-	8.4
"R4" 692+93.87 TO 695+85.19 L+	-	-	-	289.3	-	18.2
"RR" 24+84.84 L+ TO 25+20.013	20.5	-	-	-	-	-
TOTAL	55.4	60.8	15.2	1774.5	107.8	120.3

1 1 1 1

EARTHWORK QUANTITIES

LOCATION/DESCRIPTION	ROADWAY EXCAVATION	EMBANKMENT (N)	IMPORTED BORROW	IMPORTED MATERIAL (SHOULDER BACKING)
	m^3	m^3	m^3	TONNE
"DW" 10+00.00 TO 10+30.00	3751	-	-	-
"AR" 10+00.00 TO 10+21.91	79	14	-	-
"RR" 25+37.81 TO 25+72.80 R+	24	76	52	-
"R1" 685+00.00 TO 691+10.00	17 856	52 336	34 480	-
"R3" 686+26.26 TO 691+00.00	23 760	150 671	126 911	-
"R4" 691+60.00 TO 695+83.19	15 732	45 914	30 182	-
"R5" 691+60.00 TO 696+04.60	14 509	84 133	69 624	-
"BHD" 20+12.80 TO 23+50.00	22 660	150 900	128 240	-
"BHD" 23+50.00 TO 27+10.00	28 043	188 194	160 151	-
"BHD" 27+10.00 TO 28+49.53	6048	6896	848	-
"RDSR" 10+22.85 TO 11+14.39	-	292	292	-
"RDSR"(R)10+58.69 TO 14+80.00	2103	1335	-	-
"VR" 687+36.89 TO 691+00.00	1474	494	-	-
"VR" 691+00.00 TO 691+77.70	187	290	103	-
"RTE 10" 690+91.30 TO 703+65.02 ℄	3532	-	-	-
"RR" 28+00.58 R+ TO "RTE 10" 703+65.00 L+	-	1085	1085	-
"RTE 10" 694+67.50 R+ TO "RR" 23+74.36 L+	-	698	698	-
"RTE 10" 695+16.24 L+ TO "RR" 27+65.94 R+	-	880	880	-
"RTE 10" 697+66.12 L+ TO "RR" 27+10.42 R+	-	453	453	-
"RTE 10" 685+81.42 TO 686+26.26 R+	19	16	-	-
"RTE 10" 696+02.96 TO 697+98.27 R+	149	34	-	-
"RTE 10" 695+46.48 TO 697+66.11 L+	238	7	-	-
"RTE 10" 683+15.30 TO 685+00.00 L+	266	110	-	-
"RTE 10" 693+00.00 TO 693+97.36 R+	-	463	463	33.9
"RTE 10" 693+00.00 TO 694+43.27 L+	-	574	574	49.9
"RTE 10" 697+64.96 TO 698+93.21 L+	-	-	-	44.7
"RTE 10" 701+39.08 TO 703+65.00 L+	-	-	-	78.8
TOTAL	140 430	685 865	555 036	207.3

(N) - NOT A SEPARATE PAY ITEM, FOR INFORMATION ONLY 1 1

1 **REVISED PER ADDENDUM No. 1 DATED SEPTEMBER 25, 2009**

SUMMARY OF QUANTITIES
Q-2

STATE OF CALIFORNIA - DEPARTMENT OF TRANSPORTATION
Caltrans DESIGN

FUNCTIONAL SUPERVISOR: BEN AMIRI
CALCULATED-DESIGNED BY: JUSTINE NIU
CHECKED BY: MARK DE LA VEGA
REVISED BY / DATE REVISED

LAST REVISION 01-15-09 DATE PLOTTED => 23-SEP-2009 TIME PLOTTED => 07:11

Dist	COUNTY	ROUTE	KILOMETER POST TOTAL PROJECT	SHEET No.	TOTAL SHEETS
08	Riv	10	66.5/71.7	225	410

REGISTERED CIVIL ENGINEER 1-15-09 DATE

5-18-09
PLANS APPROVAL DATE

REGISTERED PROFESSIONAL ENGINEER JUSTINE NIU No. 62897 Exp. 6-30-10 CIVIL STATE OF CALIFORNIA

THE STATE OF CALIFORNIA OR ITS OFFICERS OR AGENTS SHALL NOT BE RESPONSIBLE FOR THE ACCURACY OR COMPLETENESS OF ELECTRONIC COPIES OF THIS PLAN SHEET.

Caltrans Metric

SHOULDER RUMBLE STRIP (HMA, GROUND-IN INDENTATIONS)

STATION TO STATION ℄ RTE 10 (UNLESS OTHERWISE NOTED)	DIRECTION	LENGTH
		m
690+91.3 TO 703+65.0	EB	1273.7
690+91.3 TO 703+65.0	WB	1273.7
694+66.50 TO 698+93.21	WB	426.7
694+26.16 TO 697+98.27	EB	372.1
TOTAL		3346.2

CONCRETE BARRIER

STATION TO STATION ℄ RTE 10 (UNLESS OTHERWISE NOTED)	TYPE 60	TYPE 60C	TYPE 60R (mod)
	m	m	m
690+91.3 TO 690+94.3	-	3.0	-
690+94.3 TO 691+60.9	-	-	66.6
691+60.9 TO 695+40.0	-	379.1	-
695+40.0 TO 696+20.0	80.0	-	-
696+20.0 TO 697+30.9	-	110.9	-
697+30.9 TO 697+78.8	-	-	47.9
697+78.8 TO 699+00.0	121.1	-	-
699+00.0 TO 701+20.0	-	220.0	-
701+20.0 TO 702+80.0	160.0	-	-
702+80.0 TO 703+65.0	-	85.0	-
TOTAL	361.1	798.0	114.5

FENCE QUANTITIES

LOCATION AND DESCRIPTION	CHAIN LINK FENCE (TYPE CL-1.8)	TEMPORARY FENCE (TYPE WILDLIFE)	REMOVE FENCE
	m	m	m
"BHD" 22+63.311 R+ TO "R5" 693+55.23 R+	235.8	-	-
"R1" 687+37.00 L+ TO "BHD" 27+13.27 L+	473.6	-	-
"BHD" 27+14.02 R+ TO "R4" 694+01.06 L+	344.0	-	-
"BHD" 22+81.107 L+ TO "R3" 688+04.42 R+	334.0	-	-
"R3" 688+04.42 R+ TO "R5" 693+55.23 R+	-	-	551.5
"R1" 687+37.00 L+ TO "R4" 694+01.06 R+	-	-	613.0
"RR" 19+66.4 L+ TO "BHD" 22+21.1 L+	-	218.9	-
"RR" 20+94.1 L+ TO "BHD" 21+84.1 R+	-	243.2	-
"BHD" 22+89.9 L+ TO "R3" LINE 689+10.0 R+	-	220.8	-
"BHD" 22+58.7 R+ TO "R5" LINE 692+65.0 R+	-	148.2	-
"BHD" 26+26.7 L+ TO "VR" LINE 690+38.6 R+	-	230.4	-
"R1" 687+49.8 L+ TO "BHD" 26+26.7 L+	-	381.0	-
"BHD" 26+26.7 R+ TO "VR" 691+22.6 R+	-	202.0	-
"BHD" 26+26.7 R+ TO "R4" 693+85.4 L+	-	241.2	-
"I10" 694+92.931 TO "RR" 23+28.967	-	-	175.7
"I10" 694+92.931 TO "RR" 24+49.351	145.3	-	-
"RR" 23+62.950 TO "RR" 24+42.031	79.1	-	-
TOTAL	1611.8	1885.7	1340.2

1 1

REMOVE BRIDGE RAILING

LOCATION AND DESCRIPTION	APPROACH RAILING
	m
"RR" OC 25+45.82 TO 25+56.09 R+	11.6
"RR" OC 26+43.67 TO 26+55.33 L+	11.6
TOTAL	23.2

SALVAGE DOUBLE THRIE BEAM BARRIER

LOCATION AND DESCRIPTION	m
"RTE 10" 690+91.3 TO 703+65.0 (MEDIAN)	1273.7
TOTAL	1273.7

DOUBLE THRIE BEAM BARRIER (WOOD POST)

LOCATION AND DESCRIPTION	m
"RTE 10" 690+86.3 TO 690+91.3 (MEDIAN)	5.7
"RTE 10" 703+65.0 TO 703+70.7 (MEDIAN)	5.7
TOTAL	11.4

7.3 CHAIN LINK GATE (TYPE CL-1.8)

LOCATION	EA
"RR" 21.9 m L+ STA 24+42.031	1

1

METAL BEAM GUARD RAILING

LOCATION AND DESCRIPTION	SALVAGE METAL BEAM GUARD RAILING	METAL BEAM GUARD RAILING (WOOD POST)	ALTERNATIVE IN-LINE TERMINAL SYSTEM	ALTERNATIVE FLARED TERMINAL SYSTEM	TERMINAL ANCHOR ASSEMBLY (TYPE SFT)	TRANSITION RAILING (TYPE WB)	(N) GUARD RAILING LAYOUT
	m	m	ea	ea	ea	ea	TYPE
"RR" OC 25+26.38 TO 25+56.86 R+	-	11.43	-	1	-	1	12A
"RR" OC 26+44.43 TO 26+63.48 L+	-	-	-	1	-	1	12A
"BHD"	-	-	1	-	-	1	12A
"BHD" OH 22+76.91 TO 23+09.25 L+	-	11.43	1	-	-	1	12A
"BHD" OH 21+43.68 TO 21+89.40 R+	-	22.86	1	-	-	1	12A
"BHD" OC 25+14.01 TO 25+36.87 L+	-	-	1	-	-	1	12A
"BHD" OC 24+17.05 R+ TO "R5" 691+99.49 L+	-	70.48	-	-	1	1	12A,11D
"RTE 10" 685+63.35 TO 685+84.30 R+	-	7.62	-	1	1	-	16B
"RTE 10" 692+98.78 TO 693+19.40 R+	23.0	-	-	-	-	-	-
"RTE 10" 696+65.12 TO 697+14.63 R+	-	30.48	-	1	-	1	12A
"RTE 10" 696+68.34 TO 697+21.68 R+	53.3	-	-	-	-	-	-
"RTE 10" 699+11.97 L+ TO "RR" 27+58.00 R+	72.4	-	-	-	-	-	-
"RTE 10" 695+44.97 TO 695+65.93 L+	-	7.62	-	1	1	-	16B
"RTE 10" 697+13.10 TO 697+34.10 L+	-	7.62	-	1	1	-	16B
"RTE 10" 702+15.78 TO 702+36.54 L+	21.0	-	-	-	-	-	-
TOTAL	169.7	169.54	4	6	4	8	-

(N) - NOT A SEPARATE PAY ITEM, FOR INFORMATION ONLY.

1 1 1 1 1

1 **REVISED PER ADDENDUM No. 1 DATED SEPTEMBER 25, 2009**

SUMMARY OF QUANTITIES

Q-3

STATE OF CALIFORNIA - DEPARTMENT OF TRANSPORTATION
Caltrans DESIGN

FUNCTIONAL SUPERVISOR: BEN AMIRI
CALCULATED-DESIGNED BY: MARK DE LA VEGA
CHECKED BY: JUSTINE NIU
REVISED BY / DATE REVISED

LAST REVISION 01-15-09 DATE PLOTTED => 23-SEP-2009 TIME PLOTTED => 07:11

Dist	COUNTY	ROUTE	KILOMETER POST TOTAL PROJECT	SHEET No.	TOTAL SHEETS
08	Riv	10	66.5/71.7	226	410

REGISTERED CIVIL ENGINEER 1-15-09 DATE

5-18-09
PLANS APPROVAL DATE

REGISTERED PROFESSIONAL ENGINEER JUSTINE NIU No. 62897 Exp. 6-30-10 CIVIL STATE OF CALIFORNIA

THE STATE OF CALIFORNIA OR ITS OFFICERS OR AGENTS SHALL NOT BE RESPONSIBLE FOR THE ACCURACY OR COMPLETENESS OF ELECTRONIC COPIES OF THIS PLAN SHEET.

Caltrans Metric

MINOR CONCRETE (Misc CONSTRUCTION)

LOCATION AND DESCRIPTION	CURB TYPE A-8	CURB TYPE D	CURB TYPE A1-150	SIDEWALK	CURB RAMP	CROSS GUTTER
	m^3	m^3	m^3	m3	m^3	m^3
"RR" 19+69.45 TO 20+29.45 L+	-	-	-	-	-	37.7
"RR" 20+36.053 L+ TO "BHD" 20+28.20 R+	3.6	-	-	-	5.3	-
"RR" 19+69.37 L+ TO "BHD" 20+25.86 L+	2.6	-	-	-	5.3	-
"RR" 24+17.736 TO 24+66.255 (MEDIAN)	-	-	6.3	-	-	-
"RR" 23+74.36 TO 24+42.031 L+	-	-	4.9	-	-	-
"RR" 24+49.351 TO 25+40.013 L+	-	-	6.3	-	-	-
"RR" 27+30.79 TO 27+69.45 L+	6.1	-	-	-	-	-
"RR" 24+68.57 TO 25+36.10 R+	-	-	2.6	-	2.6	-
"RR" 24+95.07 TO 25+57.45 R+	-	-	-	11.3	-	-
"BHD" 20+29.05 TO 21+92.21 (MEDIAN)	-	24.9	-	-	-	-
"BHD" 22+74.85 TO 23+60.17 (MEDIAN)	-	14.3	-	-	-	-
"BHD" 26+06.94 TO 27+72.83 (MEDIAN)	-	32.6	-	-	-	-
"BHD" 20+28.45 TO 22+03.17 L+	28.2	-	-	32.2	-	-
"BHD" 22+76.93 TO 23+54.81 L+	12.7	-	-	14.8	-	-
"BHD" 23+54.81 L+ TO "R3" 690+98.45 R+	2.9	-	-	-	6.0	-
"R3" 691+02.74 L+ TO "BHD" 23+85.62 L+	1.8	-	-	-	3.4	-
"BHD" 23+91.64 TO 24+09.96 L+	3.8	-	-	4.4	-	-
"BHD" 25+17.46 TO 25+76.64 L+	9.2	-	-	10.7	-	-
"BHD" 26+07.608 L+ TO "VR" 28+22.34 R+	34.5	-	-	40.1	-	-
"BHD" 20+28.20 TO 21+39.62 R+	17.9	-	-	-	-	-
"BHD" 22+70.07 R+ TO "R5" 691+58.98 R+	16.6	-	-	-	-	-
"BHD" 25+31.52 R+ TO "R4" 691+60.77 R+	10.0	-	-	-	-	-
"R4" 691+70.97 L+ TO "VR" 694+20.05 R+	85.2	-	-	-	-	-
"VR" 690+17.351 TO 691+02.582 L+	-	-	-	-	-	40.2
"VR" 691+05.66 TO 691+60.95 L+	8.5	-	-	9.9	-	-
"RDSR" 10+86.19 TO 11+66.60 R+	13.7	-	-	16.0	-	-
"RR" 27+10.42 TO 28+00.58 R+	14.0	-	-	16.1	-	-
"R1" 691+16.17 L+ TO "BHD" 26+07.608 L+	3.5	-	-	-	5.5	-
"BHD" 28+28.66 L+ TO "VR" 690+57.73 R+	3.7	-	-	-	6.1	-
"VR" 690+34.55 L+ TO "RDSR" 10+98.33 L+	4.0	-	-	-	5.5	-
"VR" 691+05.70 L+ TO "RDSR" 10+86.84 R+	5.4	-	-	-	17.7	-
"BHD" 25+76.40 L+ TO "R1" 691+23.25 R+	1.8	-	-	-	3.6	-
"BHD" 25+90.80 R+ (ISLAND)	-	-	1.2	-	-	-
"BHD" 28+21.01 R+ (ISLAND)	-	-	2.8	-	-	-
SUBTOTAL	289.7	71.8	1 24.1	155.5	61.0	77.9
TOTAL	680.0					

1

INTERLOCKING CONCRETE PAVERS

LOCATION AND DESCRIPTION	m^2
RTE 10 L+ 686+80.31 TO 686+97.99 (GORE)	69.1
RTE 10 R+ 687+08.26 TO 687+34.50 (GORE)	105.6
RTE 10 R+ 694+03.71 TO 694+24.16 (GORE)	75.5
RTE 10 L+ 694+43.27 TO 694+64.49 (GORE)	80.1
"BHD" 20+28.45 TO 21+16.08 MEDIAN	96.0
"BHD" 21+72.84 TO 21+92.18 MEDIAN	97.7
"BHD" 22+72.18 TO 22+91.70 MEDIAN	96.6
"BHD" 23+44.24 TO 23+63.40 MEDIAN	157.1
"BHD" 25+90.80 TO 25+95.55 ISLAND	15.7
"BHD" 26+02.64 TO 26+21.94 MEDIAN	159.4
"BHD" 27+22.29 TO 28+16.59 MEDIAN	95.0
"BHD" 28+21.01 TO 28+30.59 ISLAND	75.2
TOTAL	1123.0

VEGETATION CONTROL (MINOR CONCRETE)

LOCATION AND DESCRIPTION	UNDER GUARDRAIL
	m^2
"BHD" OH 22+76.91 TO 23+09.25 L+	29.0
"BHD" OH 21+43.68 TO 21+89.40 R+	40.0
"BHD" OC 25+14.01 TO 25+36.87 L+	21.3
"BHD" OC 24+17.05 R+ TO "R5"691+99.49 L+	69.8
"RTE 10" 685+63.35 TO 685+84.30 R+	35.3
"RTE 10" 696+65.12 TO 697+14.63 R+	56.5
"RTE 10" 695+44.97 TO 695+65.93 L+	35.3
"RTE 10" 697+13.10 TO 697+34.10 L+	35.3
"RR" OC 25+37.81 TO 25+56.86 R+	15.1
"RR" OC 26+44.43 TO 26+63.48 L+	15.1
TOTAL	352.7

1 REVISED PER ADDENDUM No. 1 DATED SEPTEMBER 25, 2009

SUMMARY OF QUANTITIES
Q-4

STATE OF CALIFORNIA - DEPARTMENT OF TRANSPORTATION
Caltrans DESIGN

FUNCTIONAL SUPERVISOR: BEN AMIRI
CALCULATED-DESIGNED BY: MARK DE LA VEGA
CHECKED BY: JUSTINE NIU
REVISED BY / DATE REVISED

LAST REVISION 01-15-09 DATE PLOTTED => 23-SEP-2009 TIME PLOTTED => 07:11

Dist	COUNTY	ROUTE	KILOMETER POST TOTAL PROJECT	SHEET No.	TOTAL SHEETS
08	Riv	10	66.5/71.7	227A	410

REGISTERED CIVIL ENGINEER 9-17-09 DATE

5-18-09
PLANS APPROVAL DATE

REGISTERED PROFESSIONAL ENGINEER JUSTINE NIU No. C-62897 Exp. 6-30-10 CIVIL STATE OF CALIFORNIA

THE STATE OF CALIFORNIA OR ITS OFFICERS OR AGENTS SHALL NOT BE RESPONSIBLE FOR THE ACCURACY OR COMPLETENESS OF ELECTRONIC COPIES OF THIS PLAN SHEET.

Caltrans Metric

1

NOTES:

1. LIMITS OF OVEREXCAVATION AND RECOMPACTING EXISTING MATERIAL AT 95% RELATIVE COMPACTION.
2. WATERSTOP IN EXPANSION JOINT SHALL BE EXTENDED 150 mm INTO THE BARRIER.
3. FOR POST ANCHOR DETAILS, SEE STANDARD PLAN B11-52

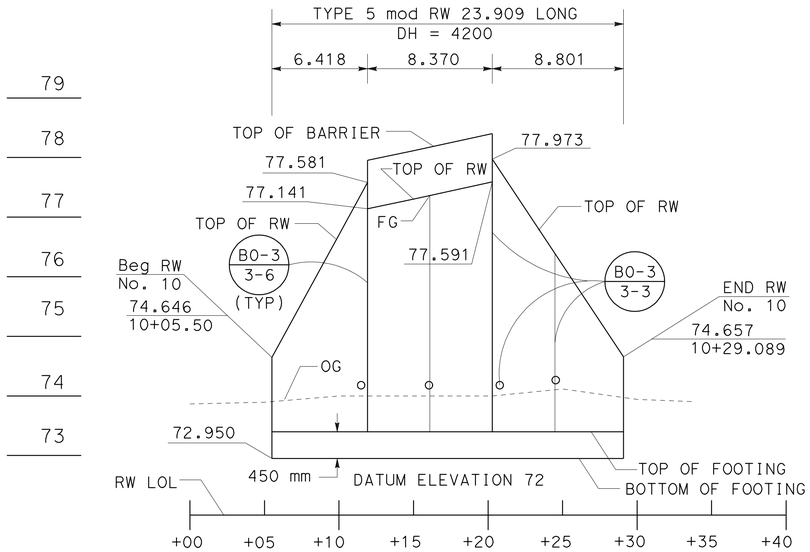

ELEVATION

SCALE: Horiz 1:200
Vert 1:50

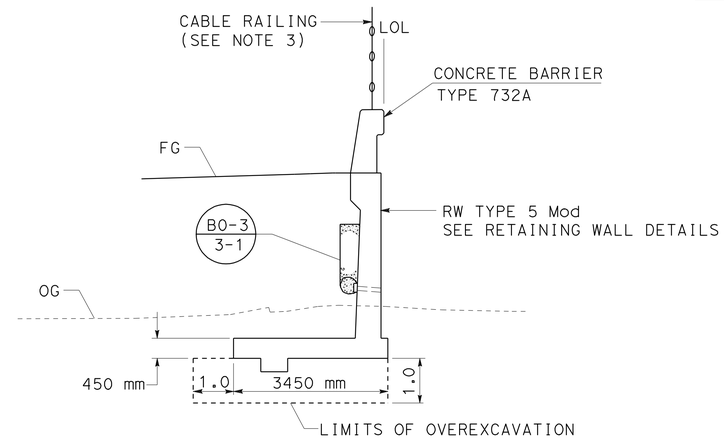

TYPICAL CROSS SECTION

NO SCALE

STATION 10+11.918 TO 10+20.288

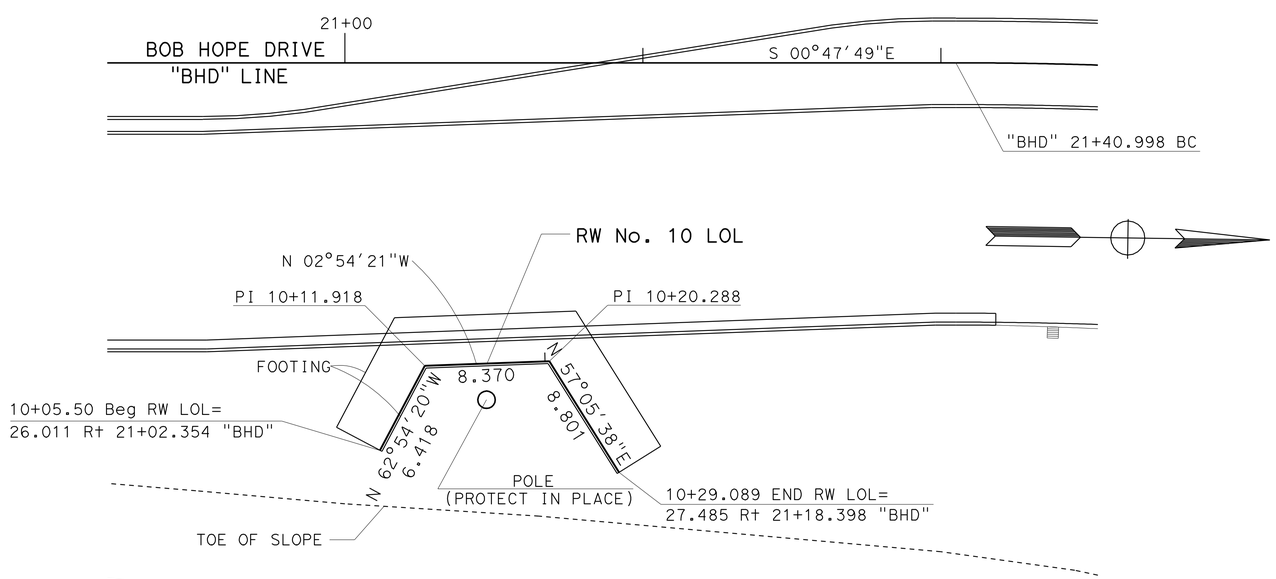

PLAN

SCALE 1:200

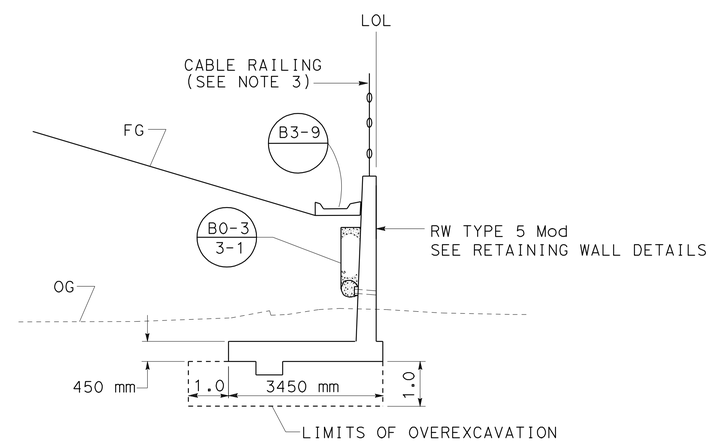

TYPICAL CROSS SECTION

NO SCALE

STATION 10+05.500 TO 10+11.918
STATION 10+20.288 TO 10+29.089

1 ADDED PER ADDENDUM No. 1 DATED SEPTEMBER 25, 2009

ALL DIMENSIONS ARE IN METERS
UNLESS OTHERWISE SHOWN

RETAINING WALL PLAN

SCALE AS SHOWN

R-1

REVISED BY | DATE REVISED
JUSTINE NIU | MARK DE LA VEGA
CALCULATED-DESIGNED BY | CHECKED BY
FUNCTIONAL SUPERVISOR
BEN AMIRI

STATE OF CALIFORNIA - DEPARTMENT OF TRANSPORTATION
Caltrans DESIGN

LAST REVISION 09-17-09 | DATE PLOTTED => 23-SEP-2009 | TIME PLOTTED => 07:11

Dist	COUNTY	ROUTE	KILOMETER POST TOTAL PROJECT	SHEET No.	TOTAL SHEETS
08	Riv	10	66.5/71.7	227B	410

REGISTERED CIVIL ENGINEER 9-17-09 DATE

5-18-09
PLANS APPROVAL DATE

REGISTERED PROFESSIONAL ENGINEER JUSTINE NIU No. C-62897 Exp. 6-30-10 CIVIL STATE OF CALIFORNIA

THE STATE OF CALIFORNIA OR ITS OFFICERS OR AGENTS SHALL NOT BE RESPONSIBLE FOR THE ACCURACY OR COMPLETENESS OF ELECTRONIC COPIES OF THIS PLAN SHEET.

Caltrans Metric

1

RETAINING WALL QUANTITIES

RW No.	STATION TO STATION LOL RETAINING WALL (UNLESS OTHERWISE NOTED)	STRUCTURAL CONCRETE, RETAINING WALL	BAR REINFORCING STEEL (RETAINING WALL)	STRUCTURE EXCAVATION (RETAINING WALL)	STRUCTURE BACKFILL (RETAINING WALL)	PERVIOUS BACKFILL MATERIAL (RETAINING WALL)	CABLE RAILING	MINOR CONCRETE (GUTTER)	(N) PLASTIC PIPE	(N) WATERSTOP	CONCRETE BARRIER (TYPE 732A)
		(m^3)	(Kg)	(m^3)	(m^3)	(m^3)	(m)	(m)	(m)	(m)	(m)
10	10+05.500 TO 10+29.089	61.9	4748	217.0	261.8	14.7	23.5	15.2	1.9	7.1	8.37

(N) - NOT A SEPARATE PAY ITEM. FOR INFORMATION ONLY.

1 ADDED PER ADDENDUM No. 1 DATED SEPTEMBER 25, 2009

RETAINING WALL QUANTITIES

R-2

STATE OF CALIFORNIA - DEPARTMENT OF TRANSPORTATION
Caltrans DESIGN

FUNCTIONAL SUPERVISOR BEN AMIRI

CALCULATED-DESIGNED BY TRUC BUI
CHECKED BY JUSTINE NIU

REVISED BY
DATE REVISED

LAST REVISION 09-17-09 DATE PLOTTED => 23-SEP-2009 TIME PLOTTED => 07:11

DIST	COUNTY	ROUTE	KILOMETER POST TOTAL PROJECT	SHEET No	TOTAL SHEETS
08	Riv	10	66.5/71.7	227C	410

REGISTERED CIVIL ENGINEER DATE

5-18-09
PLANS APPROVAL DATE

REGISTERED PROFESSIONAL ENGINEER Isaias D. Yalan No. 68269 Exp. 9-30-11 CIVIL STATE OF CALIFORNIA

The State of California or its officers or agents shall not be responsible for the accuracy or completeness of electronic copies of this plan sheet.

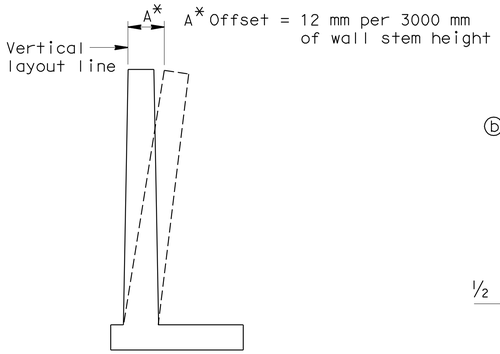

WALL OFFSET

NO SCALE
Values for offsetting forms to be determined by the engineer

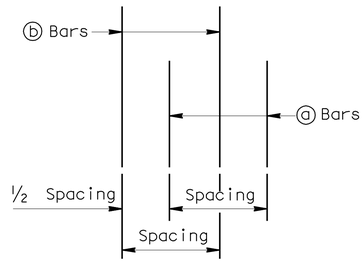

DETAIL B

NO SCALE

TABLE OF REINFORCING STEEL	
DIMENSIONS AND DATA	
Design H	4200
W	3450
F Spread Ftg.	450
Batter	100:4
Stem Thickness @ Haunch	305
ⓐ Bars	#22 @ 450 *
Y	2000
ⓑ Bars	#22 @ 450 *
Y	3200
ⓒ Bars	#19 @ 450
SHORT ⓓ BARS	#25 @ 450 *
X	2000
ⓓ Bars	#25 @ 450 *
X	Cont
Ultimate Bearing Capacity req'd Kpa	545

Cont = Continuous

* = Alternate ⓐ & ⓑ bars as shown in "Detail B". Alternate Short ⓓ & ⓓ bars

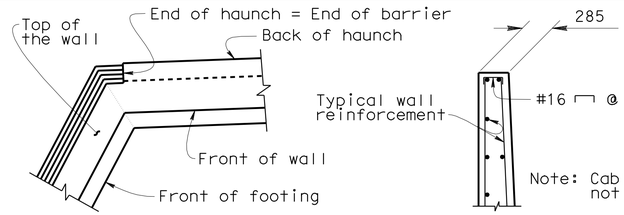

TYPICAL PLAN AT CORNERS

No Scale

TOP OF WALL WITHOUT CONCRETE BARRIER

No Scale

1

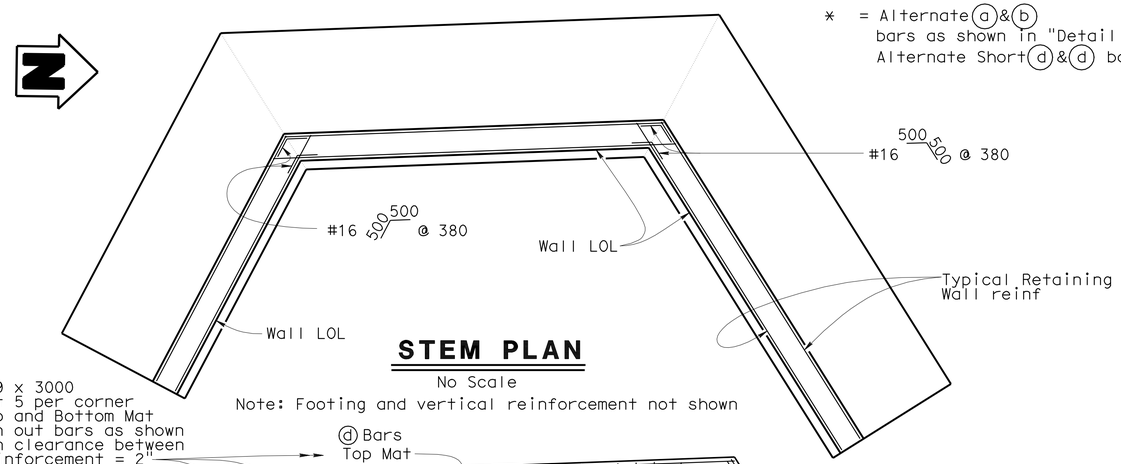

STEM PLAN

No Scale
Note: Footing and vertical reinforcement not shown

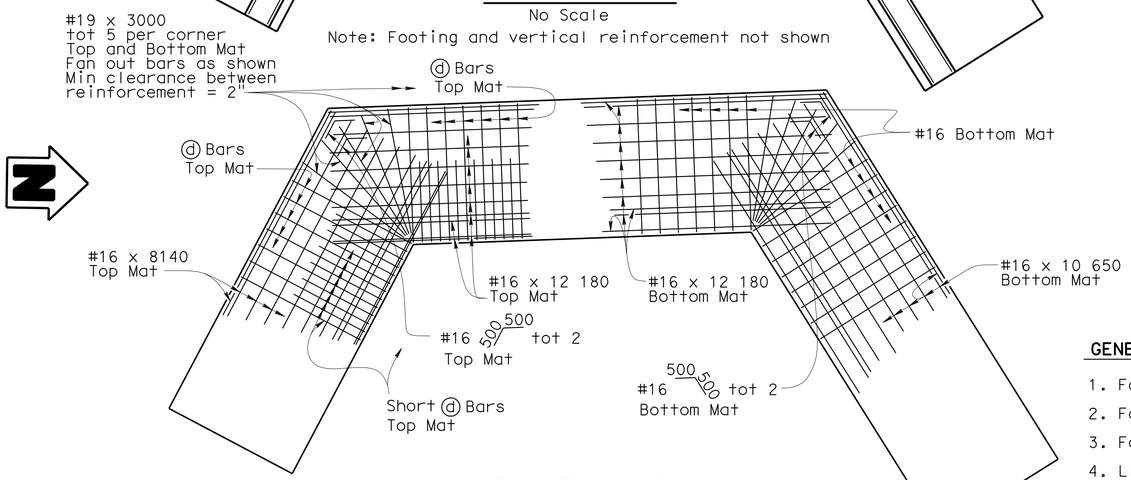

FOOTING PLAN

No Scale
Note: Stem reinforcement not shown

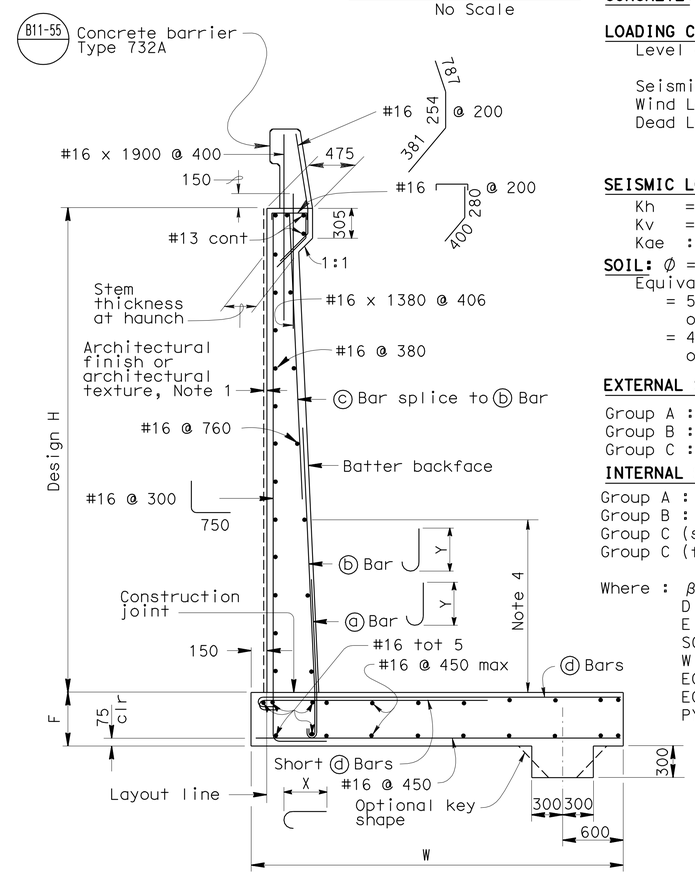

SPREAD FOOTING SECTION

NO SCALE

DESIGN DATA

DESIGN: Load Factor Design (LFD)

CONCRETE: Reinforced Concrete, f'c = 25 MPa
fy = 420 MPa

LOADING CASE:
Level ground with 11.5 KPa Live Load Surcharge

Seismic Load = 0.3 Dead Load
Wind Load = 1435 Pa
Dead Load of Barrier = 5.4 kN/m

SEISMIC LOAD: SOIL
Kh = 0.3g
Kv = 0.0
Kae : Mononobe-Okabe Method

SOIL: $\phi = 34°$ $\gamma = 19$ kN/m³
Equivalent fluid pressure:
= 5.6 KPa/m for determination of toe pressure
= 4.2 KPa/m for determination of heel pressure

EXTERNAL STABILITY:

Group A : D + E + SC
Group B : D + E + SC + W
Group C : D + PYM

INTERNAL STABILITY (LFD):

Group A : βD + 1.7 E + 1.7 SC
Group B : βD + 1.7 E + 1.3 W
Group C (stem) : 1.0 D + 1.0 E + 1.0 EQD + 1.0 EQE
Group C (footing) : D + PYM

Where : β = 1.0 or 1.3 whichever controls design
D = Dead Load
E = Lateral Earth Pressure
SC = Live Load Surcharge
W = Wind Load
EQD = Seismic Dead Load
EQE = Seismic Lateral Earth Pressure
PYM = Probable Yield Moment (1.3 x Nominal Yield Moment of Stem)

GENERAL NOTES

1. For retaining wall architectural finish or texture, see details elsewhere in project plans.
2. For details not shown and drainage notes, see B3-8 and B0-3 / 3-1
3. Footing cover, 450 mm minimum.
4. Limit of no splicing rebars = H/3
5. Increasing stem thickness not permitted.
6. Portion of wall will not utilize "c" bars due to wall height and height variability. At the option of the Contractor, the "a" bars and "b" bars may be extended full wall height, in lieu of placing "c" bars, as approved by the Engineer.

1 **ADDED PER ADDENDUM No. 1 DATED SEPTEMBER 25, 2009**

R - 3

Caltrans Metric

	BY	CHECKED
DESIGN	I. Yalan	M. Van De Pol
DETAILS	I. Yalan	M. Van De Pol
QUANTITIES		

STATE OF CALIFORNIA
DEPARTMENT OF TRANSPORTATION

DIVISION OF ENGINEERING SERVICES
STRUCTURE DESIGN
DESIGN BRANCH 9

BRIDGE NO.
KILOMETER POST 66.5/71.7

RETAINING WALL
SPECIAL DETAILS

ALL DIMENSIONS ARE IN MILLIMETERS UNLESS OTHERWISE SHOWN

ORIGINAL SCALE IN MILLIMETERS FOR REDUCED PLANS 0 10 20 30 40 50 60 70 80 90 100

CU 08
EA 456001

DISREGARD PRINTS BEARING EARLIER REVISION DATES 9-16-09

REVISION DATES | SHEET | OF

FILE => rw_5swb.add

STRUCTURES DESIGN DETAIL SHEET (METRIC) (REV.03-17-04)

USERNAME => trmikest DATE PLOTTED => 23-SEP-2009 TIME PLOTTED => 07:12

Dist	COUNTY	ROUTE	KILOMETER POST TOTAL PROJECT	SHEET No.	TOTAL SHEETS
08	Riv	10	66.5/71.7	262	410

Dilara Zaman 1-15-09
REGISTERED ELECTRICAL ENGINEER DATE

5-18-09
PLANS APPROVAL DATE

REGISTERED PROFESSIONAL ENGINEER DILARA H. ZAMAN No. E 18356 Exp. 6-30-10 ELECTRICAL STATE OF CALIFORNIA

THE STATE OF CALIFORNIA OR ITS OFFICERS OR AGENTS SHALL NOT BE RESPONSIBLE FOR THE ACCURACY OR COMPLETENESS OF ELECTRONIC COPIES OF THIS PLAN SHEET.

Caltrans Metric

NOTE: FOR COMPLETE RIGHT OF WAY AND ACCURATE ACCESS DATA, SEE RIGHT OF WAY RECORD MAPS AT DISTRICT OFFICE.

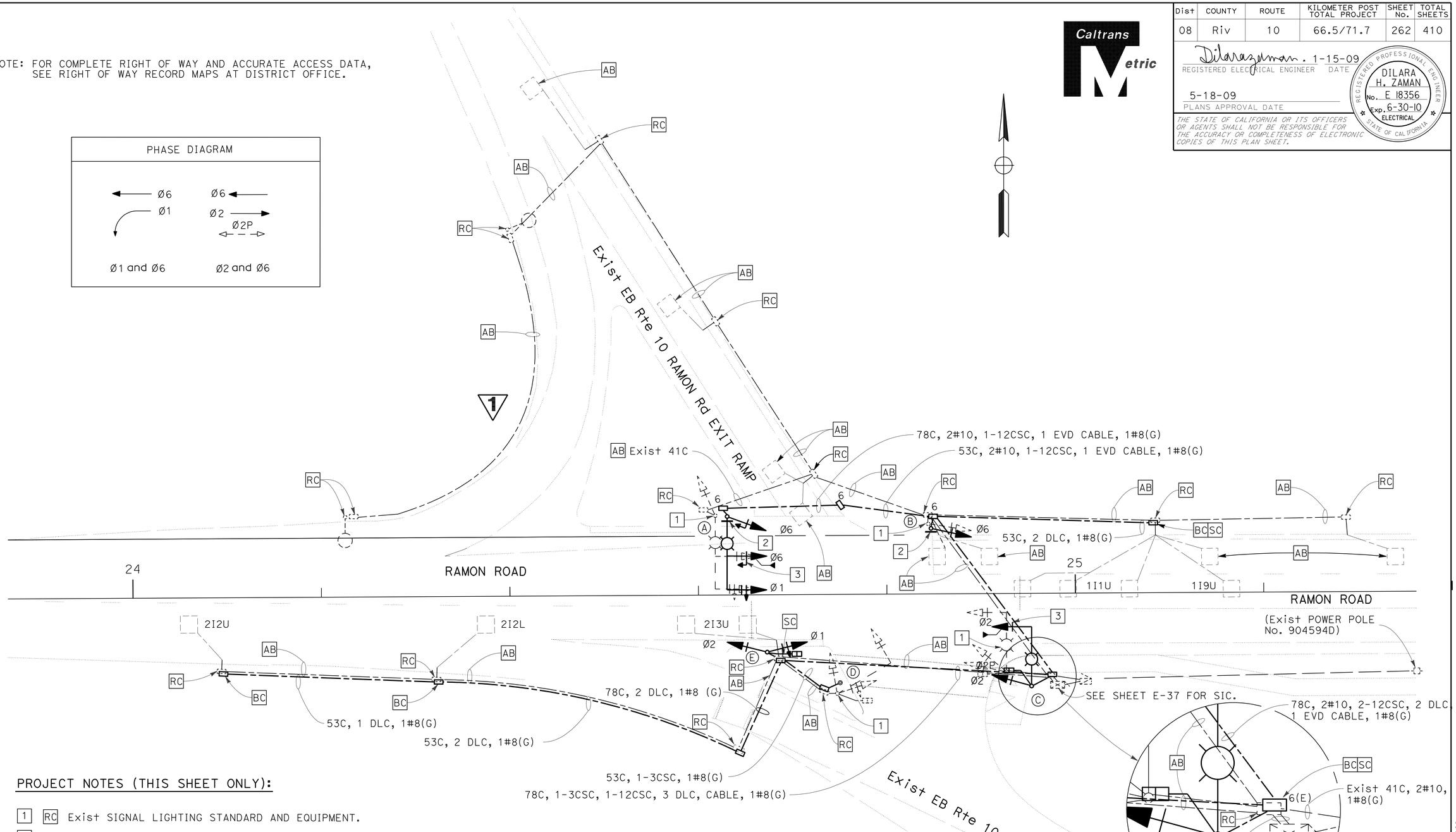

PROJECT NOTES (THIS SHEET ONLY):

1. RC Exist SIGNAL LIGHTING STANDARD AND EQUIPMENT.
2. INSTALL R9-3 AND R9-3a.
3. EMERGENCY VEHICLE DETECTOR (EVD) PER ES-4E AND INSTALL EVD CABLE.

CONDUIT RUN:

1 Exist 2-78C, RC ALL Exist CONDUCTORS, INSTALL 2-3CSC, 4-12CSC, 5 DLC, 2 EVD CABLE, 2 SIC, 1#8(G).

1 REVISED PER ADDENDUM No. 1 DATED SEPTEMBER 25, 2009

THIS PLAN IS ACCURATE FOR ELECTRICAL WORK ONLY.

ALL DIMENSIONS ARE IN METERS UNLESS OTHERWISE SHOWN

EMERGENCY VEHICLE DETECTOR MODIFY SIGNAL AND LIGHTING

SCALE 1:200

E-30

STATE OF CALIFORNIA - DEPARTMENT OF TRANSPORTATION
Caltrans ELECTRICAL DESIGN A

FUNCTIONAL SUPERVISOR: DAVID A. GONZALEZ
CALCULATED-DESIGNED BY: HARRY UMEMOTO
CHECKED BY: DILARA ZAMAN
REVISED BY / DATE REVISED

LAST REVISION 01-15-09
DATE PLOTTED => 23-SEP-2009
TIME PLOTTED => 07:12