Dist	COUNTY	ROUTE	KILOMETER POST TOTAL PROJECT	SHEET No.	TOTAL SHEETS
08	Riv	60,215	R19.7/21.9, R61.3/62.7	101	594

Robert Wong 1-14-10
REGISTERED CIVIL ENGINEER DATE

6-28-10
PLANS APPROVAL DATE

REGISTERED PROFESSIONAL ENGINEER ROBERT WONG No. C64734 Exp.06/30/11 CIVIL STATE OF CALIFORNIA

THE STATE OF CALIFORNIA OR ITS OFFICERS OR AGENTS SHALL NOT BE RESPONSIBLE FOR THE ACCURACY OR COMPLETENESS OF ELECTRONIC COPIES OF THIS PLAN SHEET.

LAN ENGINEERING CORP
1887 BUSINESS CENTER DR
SUITE 6
SAN BERNARDINO, CA 92408

RIVERSIDE COUNTY
TRANSPORTATION COMMISSION
4080 LEMON STREET
RIVERSIDE, CA 92502

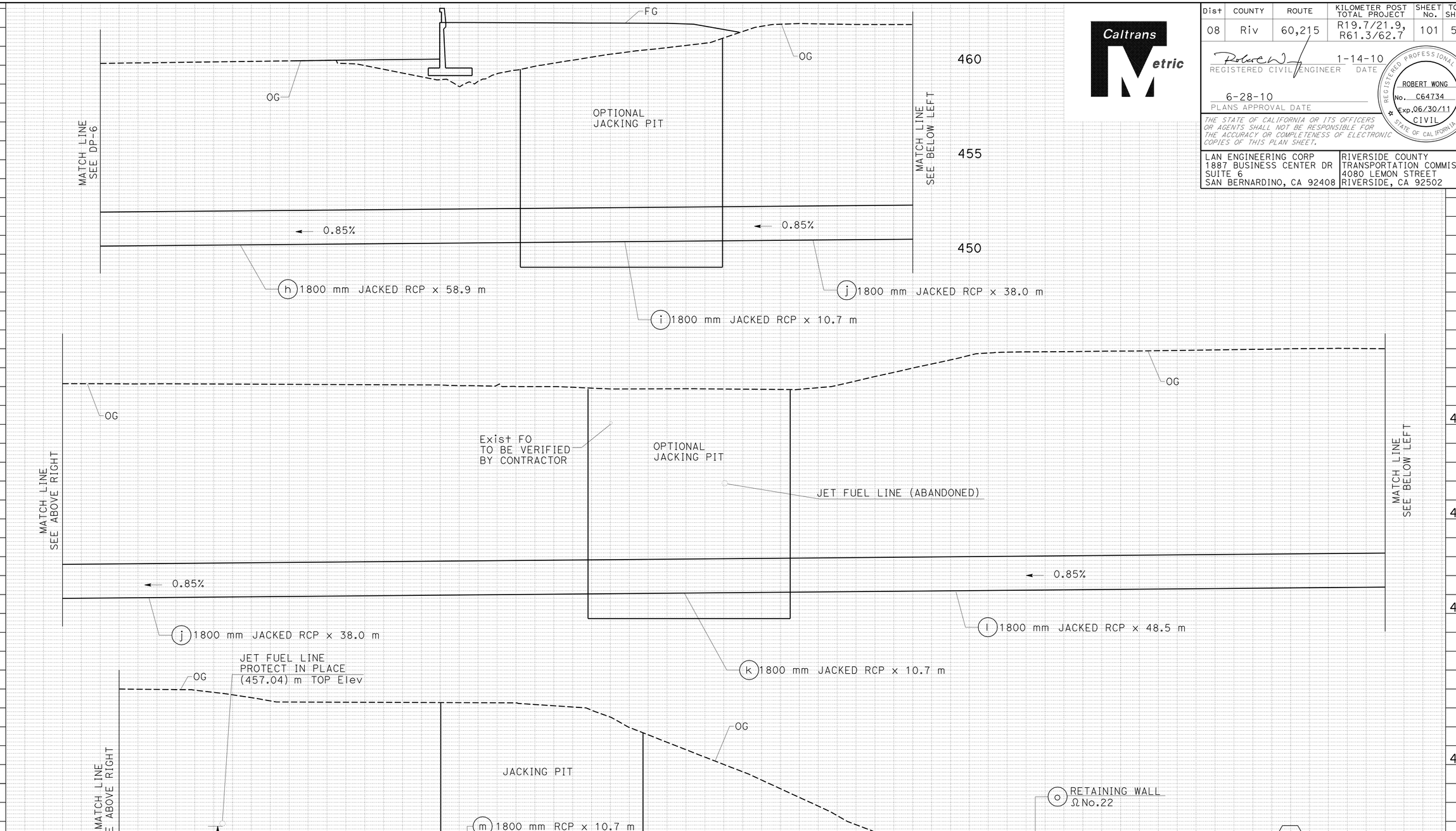

ALL DIMENSIONS ARE IN METERS UNLESS OTHERWISE SHOWN

DRAINAGE PROFILE

SCALE: HORIZ 1:100
VERT 1:100

DP-7

DRAINAGE SYSTEM NO. 6

Station	
m^3	Exc
	Emb

REVISED BY | DATE REVISED

ROBERT WONG | NORMAN SUYDAM

CALCULATED-DESIGNED BY | CHECKED BY

CONSULTANT FUNCTIONAL SUPERVISOR | NORMAN SUYDAM

STATE OF CALIFORNIA - DEPARTMENT OF TRANSPORTATION

Caltrans

LAST REVISION 11-09-09 | DATE PLOTTED => 19-OCT-2010 | TIME PLOTTED => 15:53

Dist	COUNTY	ROUTE	KILOMETER POST TOTAL PROJECT	SHEET No.	TOTAL SHEETS
08	Riv	60,215	R19.7/21.9, R61.3/62.7	102	594

REGISTERED CIVIL ENGINEER 1-14-10 DATE

6-28-10
PLANS APPROVAL DATE

REGISTERED PROFESSIONAL ENGINEER ROBERT WONG No. C64734 Exp.06/30/11 CIVIL STATE OF CALIFORNIA

THE STATE OF CALIFORNIA OR ITS OFFICERS OR AGENTS SHALL NOT BE RESPONSIBLE FOR THE ACCURACY OR COMPLETENESS OF ELECTRONIC COPIES OF THIS PLAN SHEET.

LAN ENGINEERING CORP
1887 BUSINESS CENTER DR
SUITE 6
SAN BERNARDINO, CA 92408

RIVERSIDE COUNTY
TRANSPORTATION COMMISSION
4080 LEMON STREET
RIVERSIDE, CA 92502

Caltrans Metric

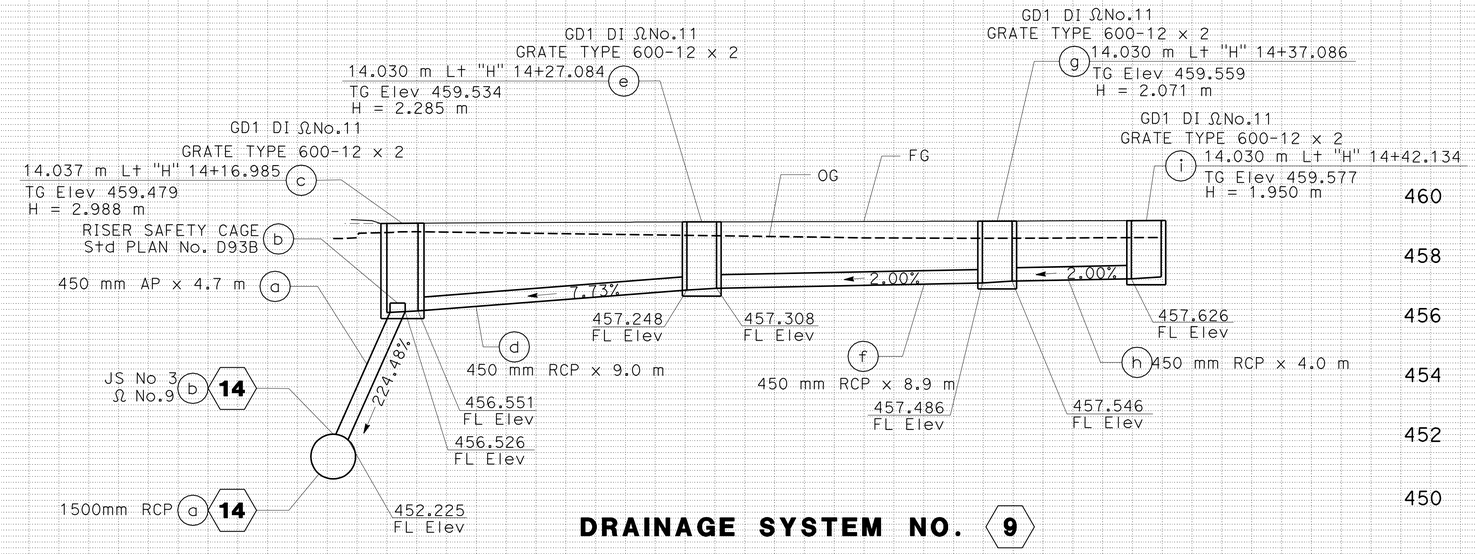

DRAINAGE SYSTEM NO. 9

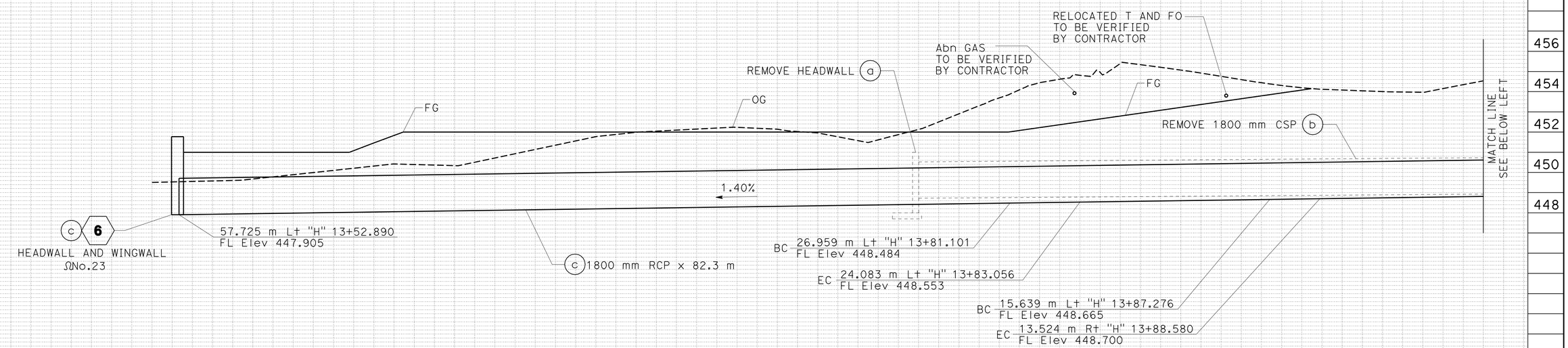

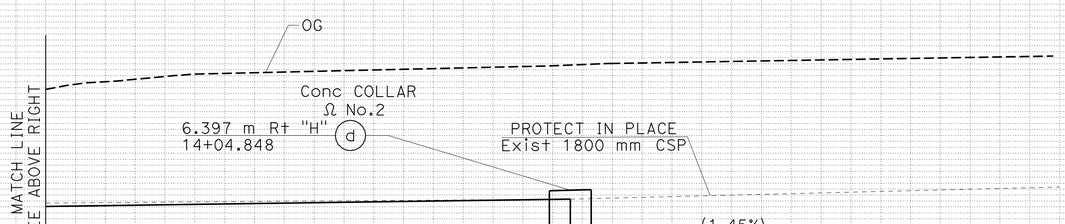

DRAINAGE SYSTEM NO. 8

8 9

ALL DIMENSIONS ARE IN
METERS UNLESS OTHERWISE SHOWN

DRAINAGE PROFILE

SCALE: HORIZ 1:100
VERT 1:100

DP-8

Station	
m^3	Exc
	Emb

STATE OF CALIFORNIA - DEPARTMENT OF TRANSPORTATION
Caltrans

CONSULTANT FUNCTIONAL SUPERVISOR: NORMAN SUYDAM
CALCULATED-DESIGNED BY: ROBERT WONG
CHECKED BY: NORMAN SUYDAM
REVISED BY / DATE REVISED

LAST REVISION 11-09-09 DATE PLOTTED => 19-OCT-2010 TIME PLOTTED => 15:53

Dist	COUNTY	ROUTE	KILOMETER POST TOTAL PROJECT	SHEET No.	TOTAL SHEETS
08	Riv	60,215	R19.7/21.9, R61.3/62.7	103	594

Robert Wong 1-14-10
REGISTERED CIVIL ENGINEER DATE

6-28-10
PLANS APPROVAL DATE

REGISTERED PROFESSIONAL ENGINEER ROBERT WONG No. C64734 Exp.06/30/11 CIVIL STATE OF CALIFORNIA

THE STATE OF CALIFORNIA OR ITS OFFICERS OR AGENTS SHALL NOT BE RESPONSIBLE FOR THE ACCURACY OR COMPLETENESS OF ELECTRONIC COPIES OF THIS PLAN SHEET.

LAN ENGINEERING CORP
1887 BUSINESS CENTER DR
SUITE 6
SAN BERNARDINO, CA 92408

RIVERSIDE COUNTY
TRANSPORTATION COMMISSION
4080 LEMON STREET
RIVERSIDE, CA 92502

Caltrans Metric

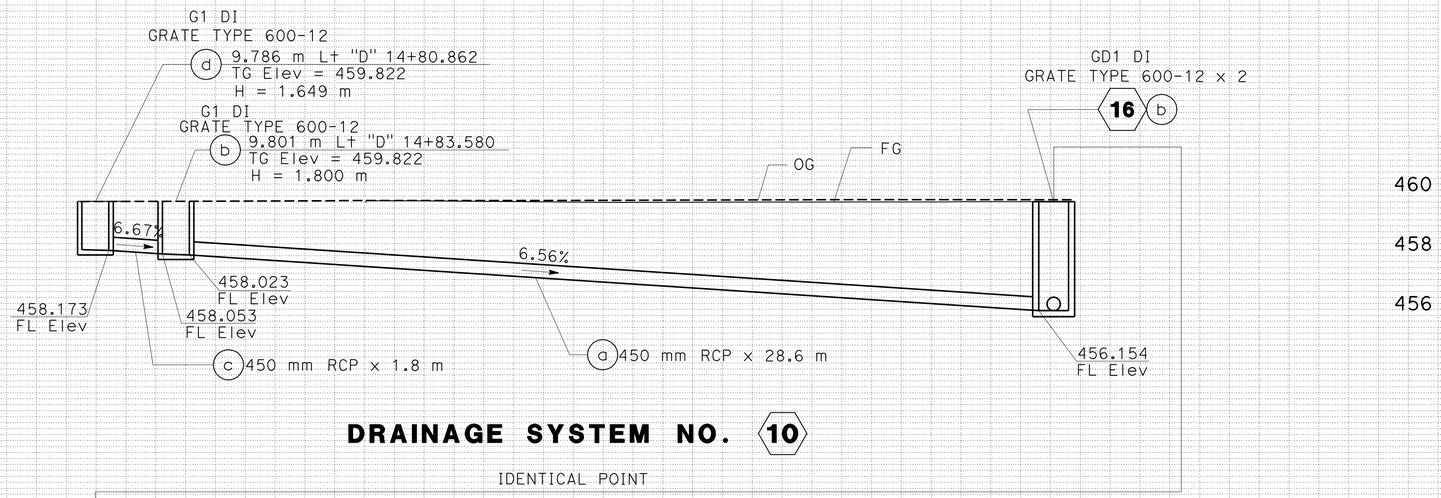

DRAINAGE SYSTEM NO. 10

IDENTICAL POINT

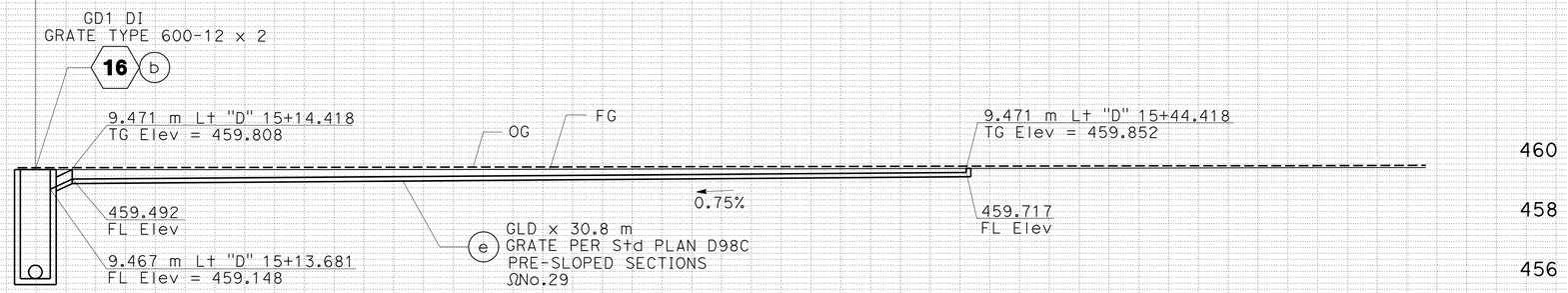

DRAINAGE SYSTEM NO. 10

A = 45.590°
B = 0.450 m
C = 1.200 m
D1= 0.600 m
D2= 0.600 m
E = 1.785 m

L = 2.130 m
M = 3.253 m
Elev R = 455.122
Elev S = 455.063
Elev A = 454.650
Elev B = 454.600

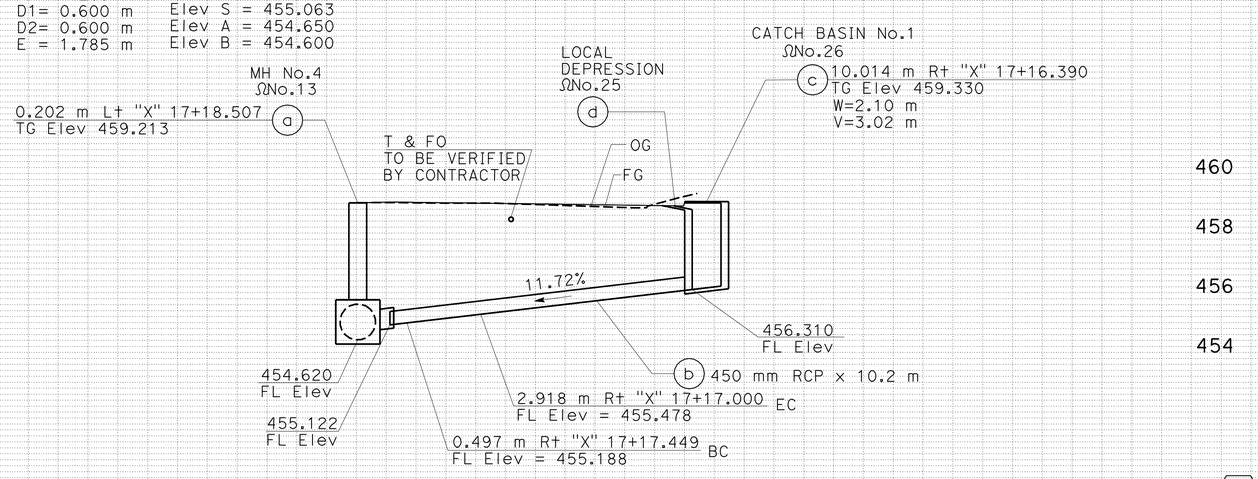

DRAINAGE SYSTEM NO. 11

10 11

ALL DIMENSIONS ARE IN
METERS UNLESS OTHERWISE SHOWN

DRAINAGE PROFILE

SCALE: HORIZ 1:100
VERT 1:100

DP-9

REVISED BY | DATE REVISED
ROBERT WONG | NORMAN SUYDAM
CALCULATED-DESIGNED BY | CHECKED BY
CONSULTANT FUNCTIONAL SUPERVISOR
NORMAN SUYDAM
STATE OF CALIFORNIA - DEPARTMENT OF TRANSPORTATION
Caltrans

Station
m^3 Exc
Emb

LAST REVISION 11-09-09
DATE PLOTTED => 19-OCT-2010
TIME PLOTTED => 15:53

Dist	COUNTY	ROUTE	KILOMETER POST TOTAL PROJECT	SHEET No.	TOTAL SHEETS
08	Riv	60,215	R19.7/21.9, R61.3/62.7	104	594

Caltrans Metric

REGISTERED CIVIL ENGINEER 1-14-10 DATE

6-28-10
PLANS APPROVAL DATE

REGISTERED PROFESSIONAL ENGINEER ROBERT WONG No. C64734 Exp.06/30/11 CIVIL STATE OF CALIFORNIA

THE STATE OF CALIFORNIA OR ITS OFFICERS OR AGENTS SHALL NOT BE RESPONSIBLE FOR THE ACCURACY OR COMPLETENESS OF ELECTRONIC COPIES OF THIS PLAN SHEET.

LAN ENGINEERING CORP
1887 BUSINESS CENTER DR
SUITE 6
SAN BERNARDINO, CA 92408

RIVERSIDE COUNTY
TRANSPORTATION COMMISSION
4080 LEMON STREET
RIVERSIDE, CA 92502

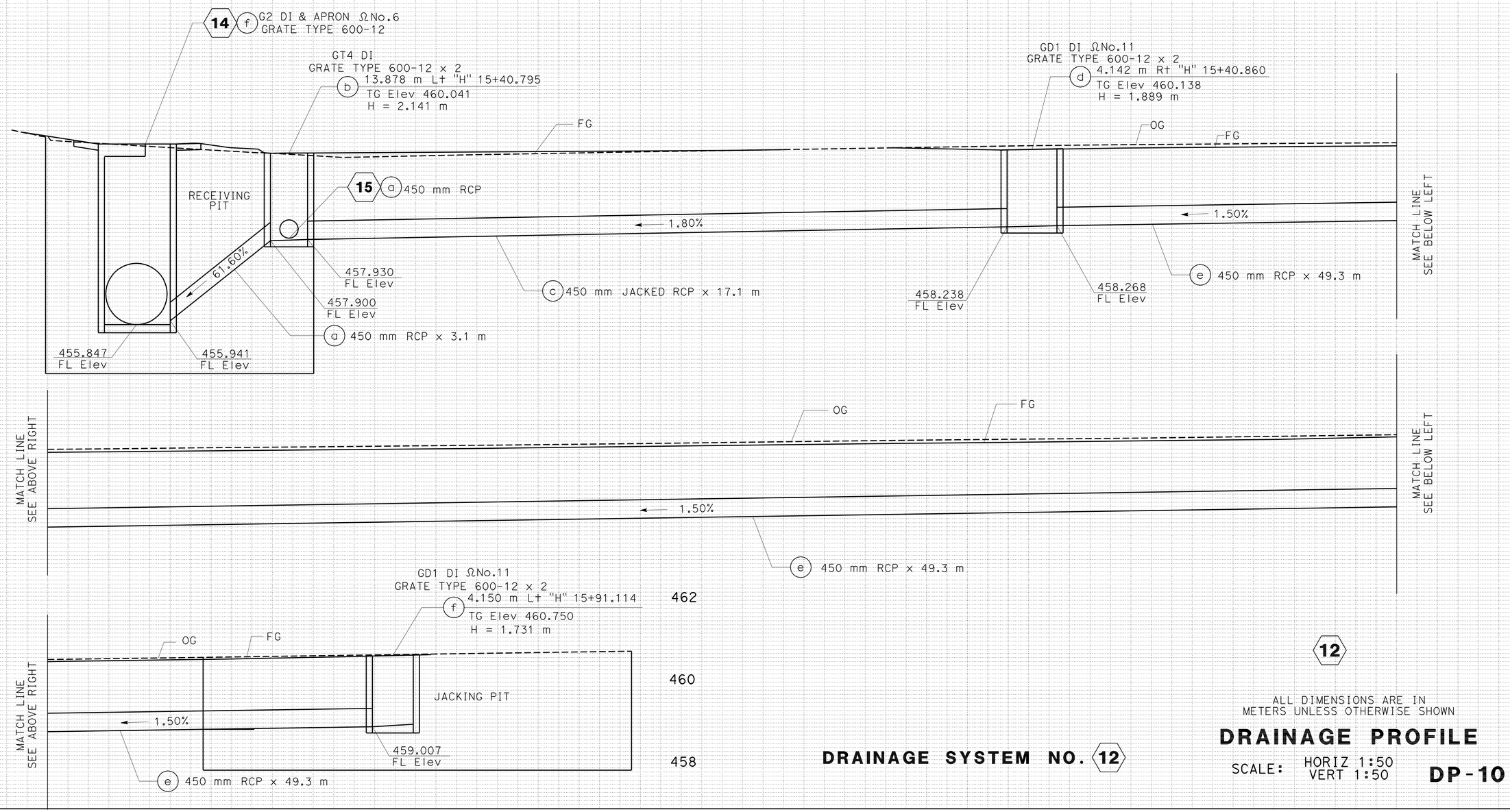

ALL DIMENSIONS ARE IN METERS UNLESS OTHERWISE SHOWN

DRAINAGE SYSTEM NO. 12

DRAINAGE PROFILE

SCALE: HORIZ 1:50
VERT 1:50

DP-10

Station	
m^3	Exc
	Emb

ROBERT WONG — REVISED BY — DATE REVISED
NORMAN SUYDAM — CALCULATED-DESIGNED BY — CHECKED BY
NORMAN SUYDAM — CONSULTANT FUNCTIONAL SUPERVISOR
STATE OF CALIFORNIA - DEPARTMENT OF TRANSPORTATION — Caltrans

LAST REVISION 11-09-09 DATE PLOTTED => 19-OCT-2010 TIME PLOTTED => 15:53

Dist	COUNTY	ROUTE	KILOMETER POST TOTAL PROJECT	SHEET No.	TOTAL SHEETS
08	Riv	60,215	R19.7/21.9, R61.3/62.7	105	594

Robert W 1-14-10
REGISTERED CIVIL ENGINEER DATE

6-28-10
PLANS APPROVAL DATE

REGISTERED PROFESSIONAL ENGINEER ROBERT WONG No. C64734 Exp.06/30/11 CIVIL STATE OF CALIFORNIA

THE STATE OF CALIFORNIA OR ITS OFFICERS OR AGENTS SHALL NOT BE RESPONSIBLE FOR THE ACCURACY OR COMPLETENESS OF ELECTRONIC COPIES OF THIS PLAN SHEET.

LAN ENGINEERING CORP
1887 BUSINESS CENTER DR
SUITE 6
SAN BERNARDINO, CA 92408

RIVERSIDE COUNTY
TRANSPORTATION COMMISSION
4080 LEMON STREET
RIVERSIDE, CA 92502

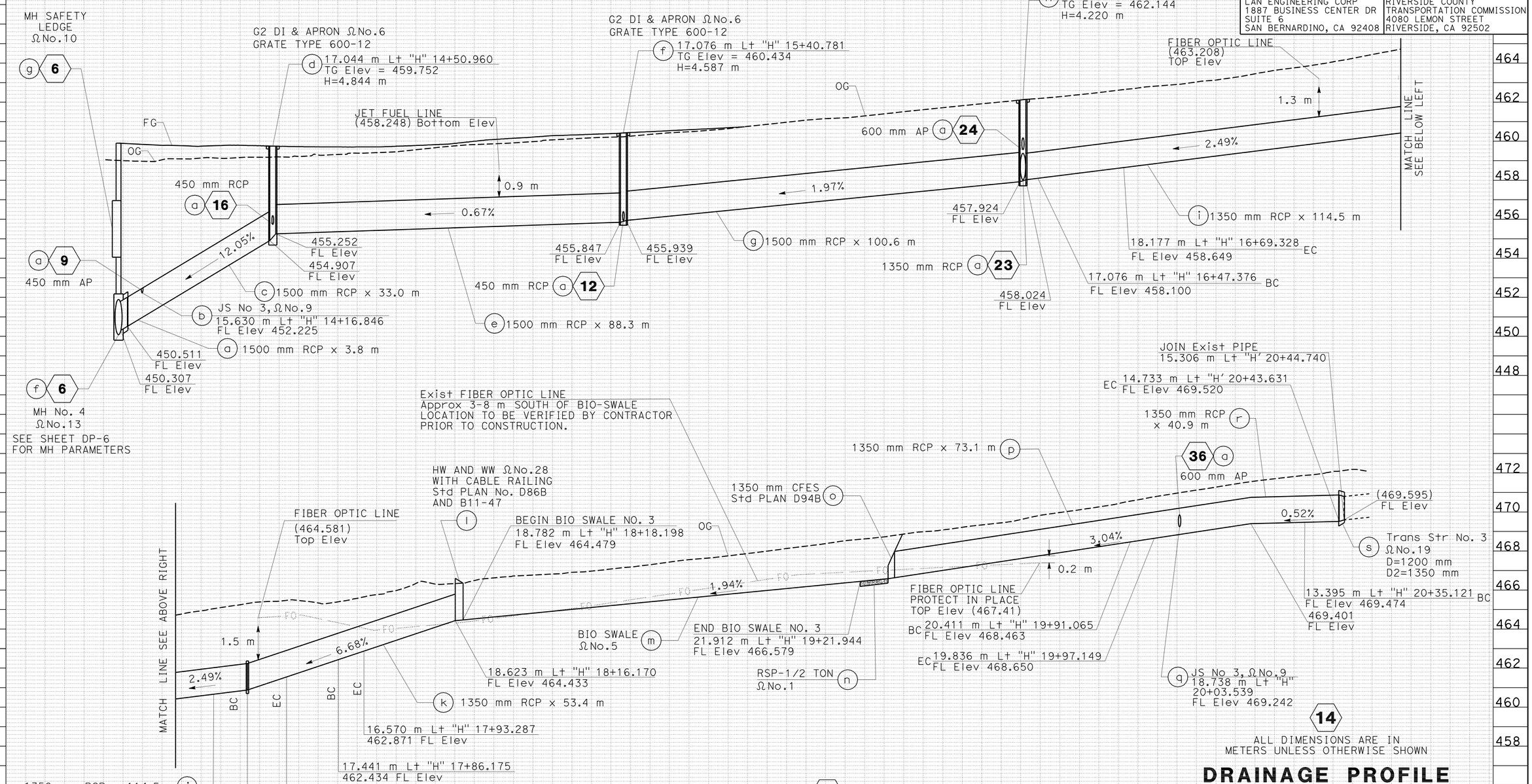

Station
m³ Exc Emb

STATE OF CALIFORNIA - DEPARTMENT OF TRANSPORTATION
Caltrans

CONSULTANT FUNCTIONAL SUPERVISOR: NORMAN SUYDAM
CALCULATED-DESIGNED BY: ROBERT WONG
CHECKED BY: NORMAN SUYDAM
REVISED BY / DATE REVISED

LAST REVISION 11-09-09 DATE PLOTTED => 19-OCT-2010 TIME PLOTTED => 15:53

Dist	COUNTY	ROUTE	KILOMETER POST TOTAL PROJECT	SHEET No.	TOTAL SHEETS
08	Riv	60,215	R19.7/21.9, R61.3/62.7	106	594

Robert Wong 1-14-10
REGISTERED CIVIL ENGINEER DATE

6-28-10
PLANS APPROVAL DATE

REGISTERED PROFESSIONAL ENGINEER ROBERT WONG No. C64734 Exp.06/30/11 CIVIL STATE OF CALIFORNIA

THE STATE OF CALIFORNIA OR ITS OFFICERS OR AGENTS SHALL NOT BE RESPONSIBLE FOR THE ACCURACY OR COMPLETENESS OF ELECTRONIC COPIES OF THIS PLAN SHEET.

LAN ENGINEERING CORP
1887 BUSINESS CENTER DR
SUITE 6
SAN BERNARDINO, CA 92408

RIVERSIDE COUNTY
TRANSPORTATION COMMISSION
4080 LEMON STREET
RIVERSIDE, CA 92502

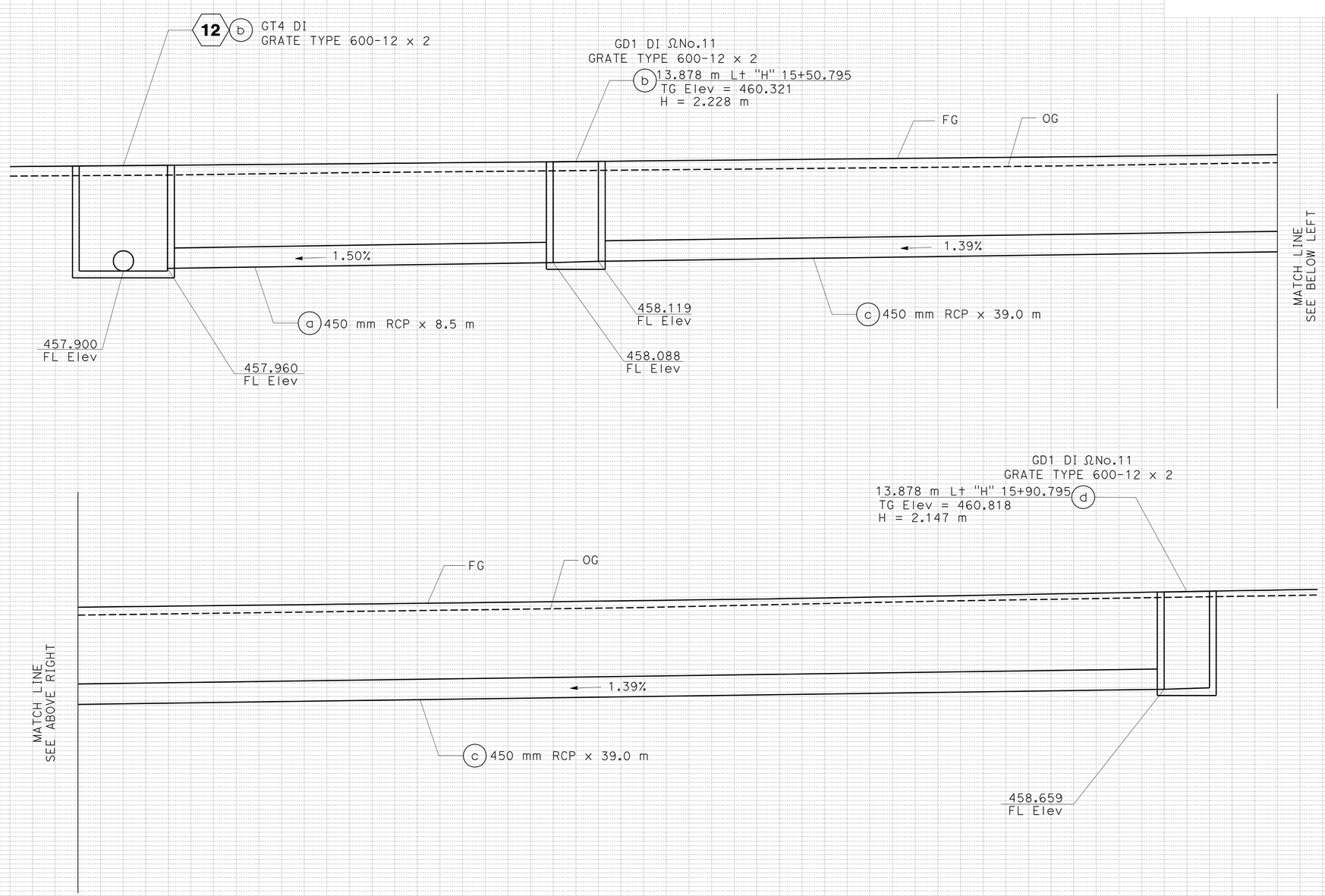

15

ALL DIMENSIONS ARE IN METERS UNLESS OTHERWISE SHOWN

DRAINAGE PROFILE

SCALE: HORIZ 1:50
VERT 1:50

DP-12

DRAINAGE SYSTEM NO. 15

Station	
m^3	Exc
	Emb

STATE OF CALIFORNIA - DEPARTMENT OF TRANSPORTATION
Caltrans

CONSULTANT FUNCTIONAL SUPERVISOR: NORMAN SUYDAM
CALCULATED-DESIGNED BY: ROBERT WONG
CHECKED BY: NORMAN SUYDAM
REVISED BY / DATE REVISED

LAST REVISION DATE PLOTTED => 19-OCT-2010
TIME PLOTTED => 15:53
11-09-09

Dist	COUNTY	ROUTE	KILOMETER POST TOTAL PROJECT	SHEET No.	TOTAL SHEETS
08	Riv	60,215	R19.7/21.9, R61.3/62.7	107	594

Robert Wong 1-14-10
REGISTERED CIVIL ENGINEER DATE

6-28-10
PLANS APPROVAL DATE

REGISTERED PROFESSIONAL ENGINEER ROBERT WONG No. C64734 Exp.06/30/11 CIVIL STATE OF CALIFORNIA

THE STATE OF CALIFORNIA OR ITS OFFICERS OR AGENTS SHALL NOT BE RESPONSIBLE FOR THE ACCURACY OR COMPLETENESS OF ELECTRONIC COPIES OF THIS PLAN SHEET.

LAN ENGINEERING CORP
1887 BUSINESS CENTER DR
SUITE 6
SAN BERNARDINO, CA 92408

RIVERSIDE COUNTY
TRANSPORTATION COMMISSION
4080 LEMON STREET
RIVERSIDE, CA 92502

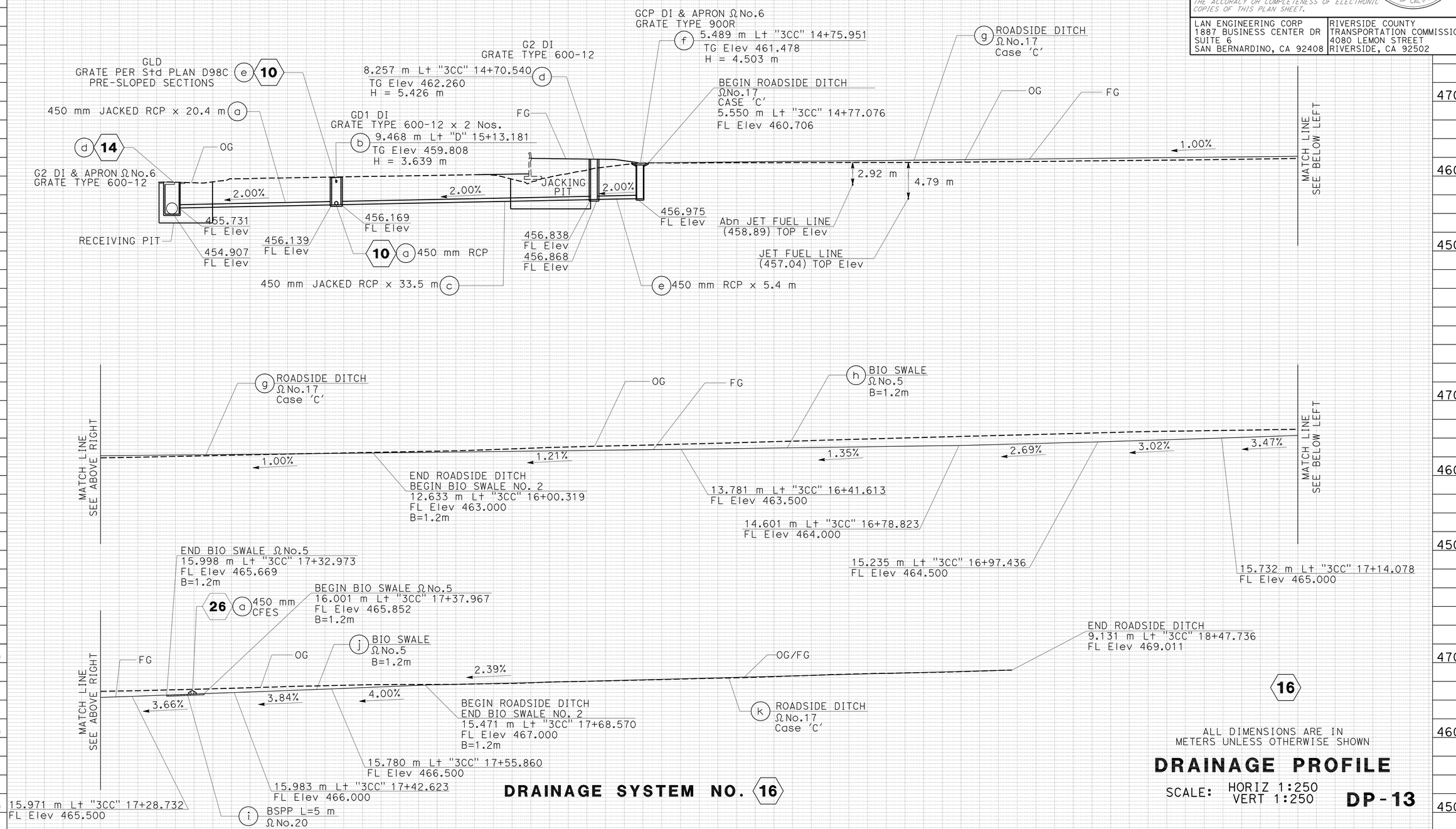

ALL DIMENSIONS ARE IN METERS UNLESS OTHERWISE SHOWN

DRAINAGE SYSTEM NO. 16

DRAINAGE PROFILE

SCALE: HORIZ 1:250
VERT 1:250

DP-13

Station	
m^3	Exc
	Emb

STATE OF CALIFORNIA - DEPARTMENT OF TRANSPORTATION
Caltrans

CONSULTANT FUNCTIONAL SUPERVISOR: NORMAN SUYDAM
CALCULATED-DESIGNED BY: ROBERT WONG
CHECKED BY: NORMAN SUYDAM
REVISED BY / DATE REVISED

LAST REVISION 11-09-09
DATE PLOTTED => 19-OCT-2010
TIME PLOTTED => 15:53

Dist	COUNTY	ROUTE	KILOMETER POST TOTAL PROJECT	SHEET No.	TOTAL SHEETS
08	Riv	60,215	R19.7/21.9, R61.3/62.7	108	594

REGISTERED CIVIL ENGINEER 1-14-10 DATE

6-28-10
PLANS APPROVAL DATE

REGISTERED PROFESSIONAL ENGINEER ROBERT WONG No. C64734 Exp.06/30/11 CIVIL STATE OF CALIFORNIA

THE STATE OF CALIFORNIA OR ITS OFFICERS OR AGENTS SHALL NOT BE RESPONSIBLE FOR THE ACCURACY OR COMPLETENESS OF ELECTRONIC COPIES OF THIS PLAN SHEET.

LAN ENGINEERING CORP
1887 BUSINESS CENTER DR
SUITE 6
SAN BERNARDINO, CA 92408

RIVERSIDE COUNTY
TRANSPORTATION COMMISSION
4080 LEMON STREET
RIVERSIDE, CA 92502

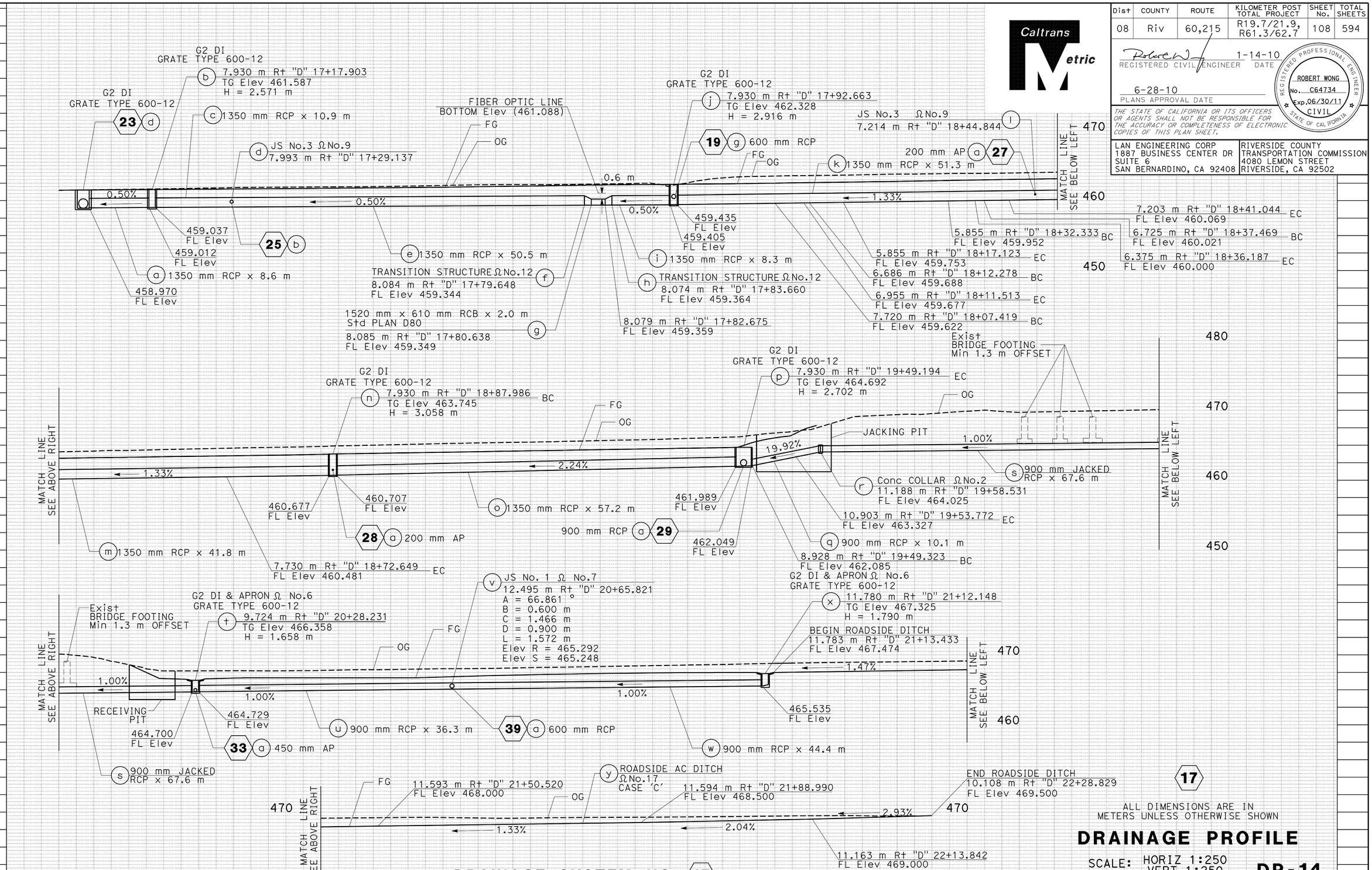

DRAINAGE SYSTEM NO. 17

17

ALL DIMENSIONS ARE IN METERS UNLESS OTHERWISE SHOWN

DRAINAGE PROFILE

SCALE: HORIZ 1:250
VERT 1:250

DP-14

Caltrans Metric

REVISED BY	DATE REVISED
ROBERT WONG	NORMAN SUYDAM

CALCULATED-DESIGNED BY	CHECKED BY
NORMAN SUYDAM	

CONSULTANT FUNCTIONAL SUPERVISOR

STATE OF CALIFORNIA - DEPARTMENT OF TRANSPORTATION

Caltrans

Station	
m³	Exc
	Emb

LAST REVISION 11-09-09 DATE PLOTTED => 19-OCT-2010 TIME PLOTTED => 15:53

Dist	COUNTY	ROUTE	KILOMETER POST TOTAL PROJECT	SHEET No.	TOTAL SHEETS
08	Riv	60,215	R19.7/21.9, R61.3/62.7	109	594

Robert Wong 1-14-10
REGISTERED CIVIL ENGINEER DATE

6-28-10
PLANS APPROVAL DATE

REGISTERED PROFESSIONAL ENGINEER ROBERT WONG No. C64734 Exp.06/30/11 CIVIL STATE OF CALIFORNIA

THE STATE OF CALIFORNIA OR ITS OFFICERS OR AGENTS SHALL NOT BE RESPONSIBLE FOR THE ACCURACY OR COMPLETENESS OF ELECTRONIC COPIES OF THIS PLAN SHEET.

LAN ENGINEERING CORP
1887 BUSINESS CENTER DR
SUITE 6
SAN BERNARDINO, CA 92408

RIVERSIDE COUNTY
TRANSPORTATION COMMISSION
4080 LEMON STREET
RIVERSIDE, CA 92502

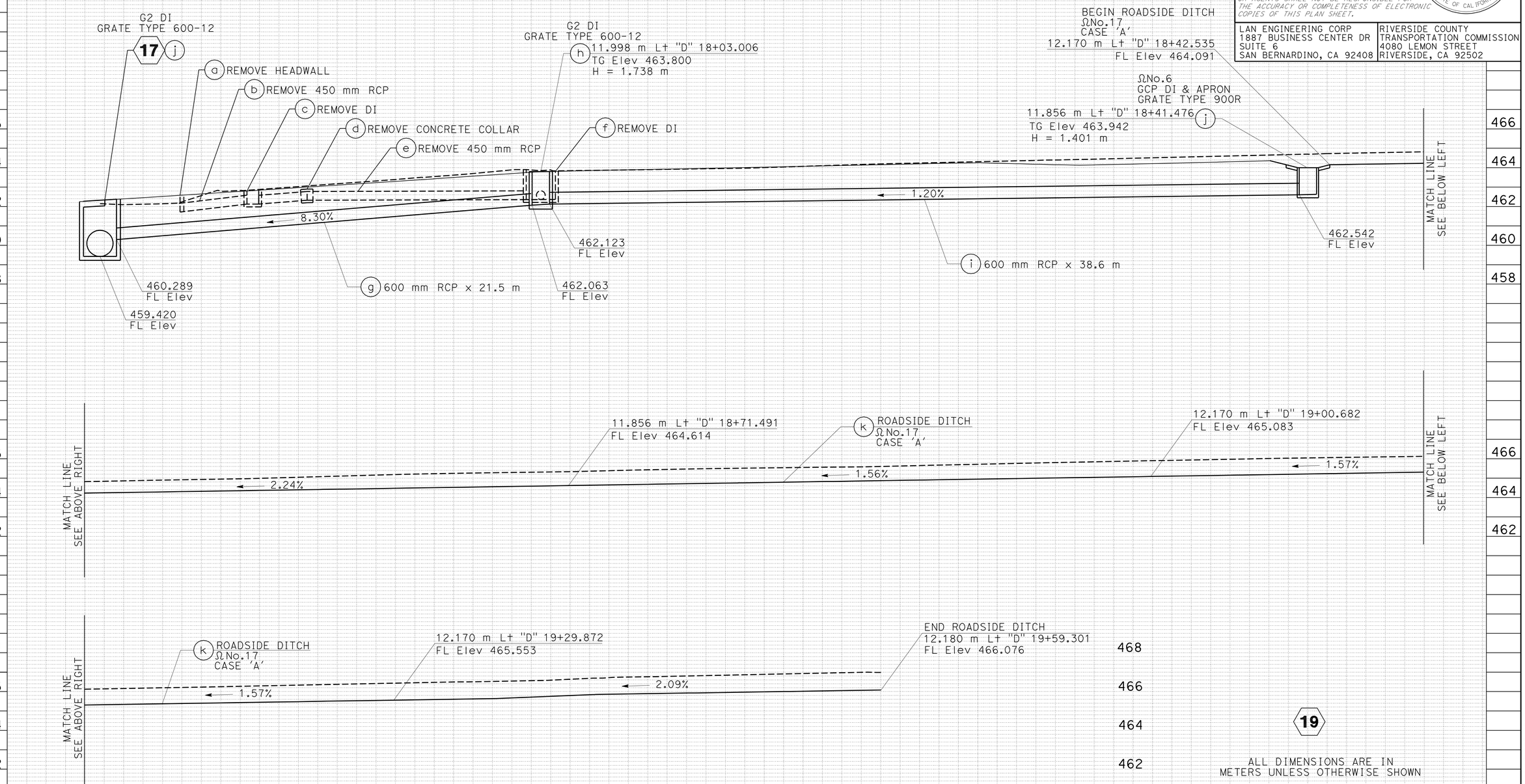

ALL DIMENSIONS ARE IN METERS UNLESS OTHERWISE SHOWN

DRAINAGE PROFILE

SCALE: HORIZ 1:100
VERT 1:100

DP-15

DRAINAGE SYSTEM NO. 19

Caltrans Metric

REVISED BY	DATE REVISED
ROBERT WONG	NORMAN SUYDAM

CALCULATED-DESIGNED BY: NORMAN SUYDAM
CHECKED BY:
CONSULTANT FUNCTIONAL SUPERVISOR

STATE OF CALIFORNIA - DEPARTMENT OF TRANSPORTATION
Caltrans

Station
m³ Exc
Emb

LAST REVISION 11-09-09
DATE PLOTTED => 19-OCT-2010
TIME PLOTTED => 15:54

Dist	COUNTY	ROUTE	KILOMETER POST TOTAL PROJECT	SHEET No.	TOTAL SHEETS
08	Riv	60,215	R19.7/21.9, R61.3/62.7	110	594

Caltrans Metric

REGISTERED CIVIL ENGINEER 1-14-10 DATE

6-28-10
PLANS APPROVAL DATE

REGISTERED PROFESSIONAL ENGINEER ROBERT WONG No. C64734 Exp.06/30/11 CIVIL STATE OF CALIFORNIA

THE STATE OF CALIFORNIA OR ITS OFFICERS OR AGENTS SHALL NOT BE RESPONSIBLE FOR THE ACCURACY OR COMPLETENESS OF ELECTRONIC COPIES OF THIS PLAN SHEET.

LAN ENGINEERING CORP
1887 BUSINESS CENTER DR
SUITE 6
SAN BERNARDINO, CA 92408

RIVERSIDE COUNTY
TRANSPORTATION COMMISSION
4080 LEMON STREET
RIVERSIDE, CA 92502

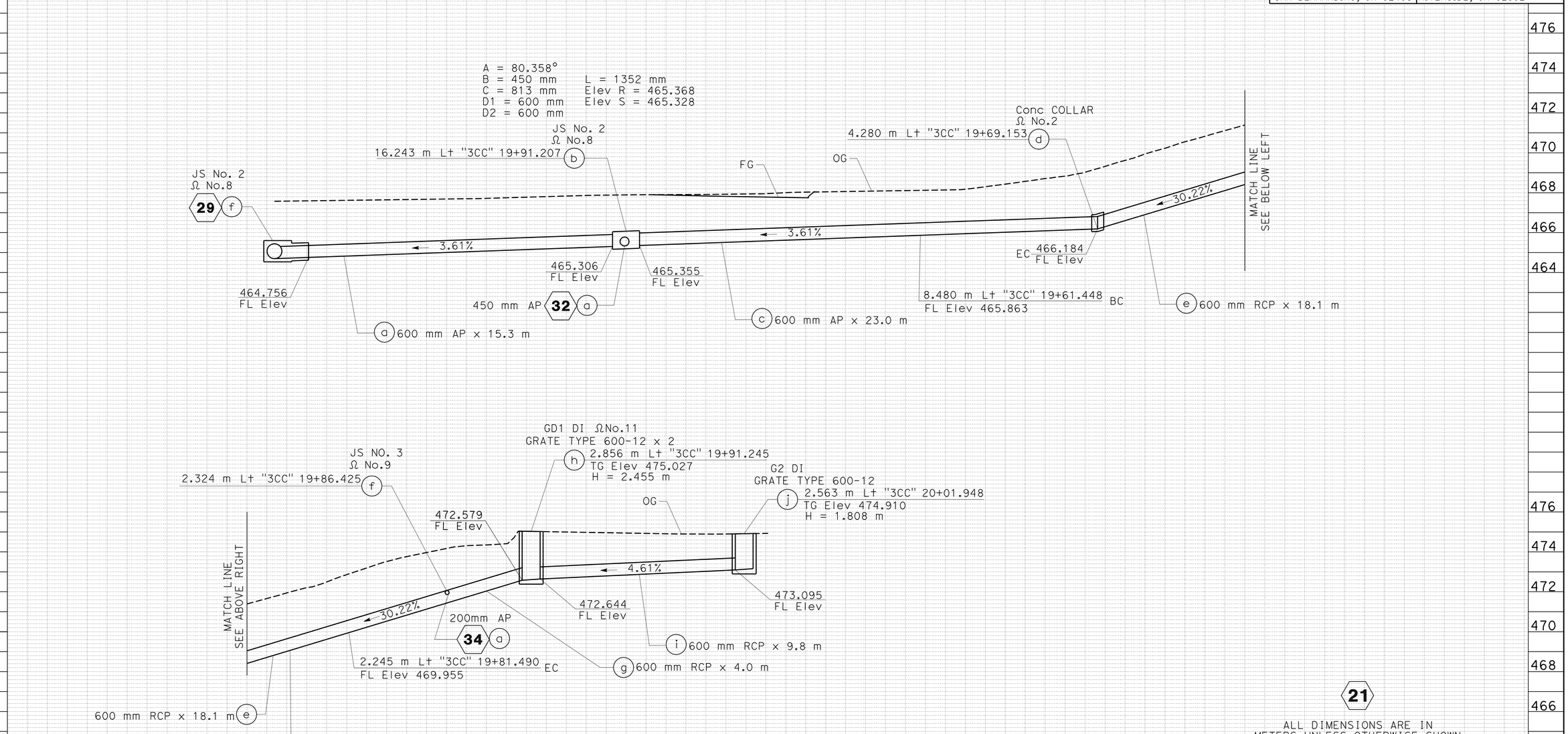

DRAINAGE SYSTEM NO. 21

21

ALL DIMENSIONS ARE IN METERS UNLESS OTHERWISE SHOWN

DRAINAGE PROFILE

SCALE: HORIZ 1:100
VERT 1:100

DP-16

REVISED BY	DATE REVISED
ROBERT WONG	NORMAN SUYDAM

CALCULATED-DESIGNED BY: NORMAN SUYDAM
CHECKED BY:
CONSULTANT FUNCTIONAL SUPERVISOR

STATE OF CALIFORNIA - DEPARTMENT OF TRANSPORTATION
Caltrans

Station	
m^3	Exc
	Emb

LAST REVISION 11-09-09
DATE PLOTTED => 19-OCT-2010
TIME PLOTTED => 15:54

Dist	COUNTY	ROUTE	KILOMETER POST TOTAL PROJECT	SHEET No.	TOTAL SHEETS
08	Riv	60,215	R19.7/21.9, R61.3/62.7	111	594

Robert Wong 1-14-10
REGISTERED CIVIL ENGINEER DATE

6-28-10
PLANS APPROVAL DATE

REGISTERED PROFESSIONAL ENGINEER
ROBERT WONG
No. C64734
Exp.06/30/11
CIVIL
STATE OF CALIFORNIA

THE STATE OF CALIFORNIA OR ITS OFFICERS OR AGENTS SHALL NOT BE RESPONSIBLE FOR THE ACCURACY OR COMPLETENESS OF ELECTRONIC COPIES OF THIS PLAN SHEET.

LAN ENGINEERING CORP
1887 BUSINESS CENTER DR
SUITE 6
SAN BERNARDINO, CA 92408

RIVERSIDE COUNTY
TRANSPORTATION COMMISSION
4080 LEMON STREET
RIVERSIDE, CA 92502

22

ALL DIMENSIONS ARE IN METERS UNLESS OTHERWISE SHOWN

DRAINAGE SYSTEM NO. 22

DRAINAGE PROFILE

SCALE: HORIZ 1:100
VERT 1:100

DP-17

REVISED BY | DATE REVISED
ROBERT WONG | NORMAN SUYDAM
CALCULATED-DESIGNED BY | CHECKED BY
CONSULTANT FUNCTIONAL SUPERVISOR | NORMAN SUYDAM

STATE OF CALIFORNIA - DEPARTMENT OF TRANSPORTATION
Caltrans

Station	
m^3 Exc	
m^3 Emb	

LAST REVISION 11-09-09 | DATE PLOTTED => 19-OCT-2010 | TIME PLOTTED => 15:54

Dist	COUNTY	ROUTE	KILOMETER POST TOTAL PROJECT	SHEET No.	TOTAL SHEETS
08	Riv	60,215	R19.7/21.9, R61.3/62.7	112	594

Robert Wong 1-14-10
REGISTERED CIVIL ENGINEER DATE

6-28-10
PLANS APPROVAL DATE

REGISTERED PROFESSIONAL ENGINEER
ROBERT WONG
No. C64734
Exp.06/30/11
CIVIL
STATE OF CALIFORNIA

THE STATE OF CALIFORNIA OR ITS OFFICERS OR AGENTS SHALL NOT BE RESPONSIBLE FOR THE ACCURACY OR COMPLETENESS OF ELECTRONIC COPIES OF THIS PLAN SHEET.

LAN ENGINEERING CORP
1887 BUSINESS CENTER DR
SUITE 6
SAN BERNARDINO, CA 92408

RIVERSIDE COUNTY
TRANSPORTATION COMMISSION
4080 LEMON STREET
RIVERSIDE, CA 92502

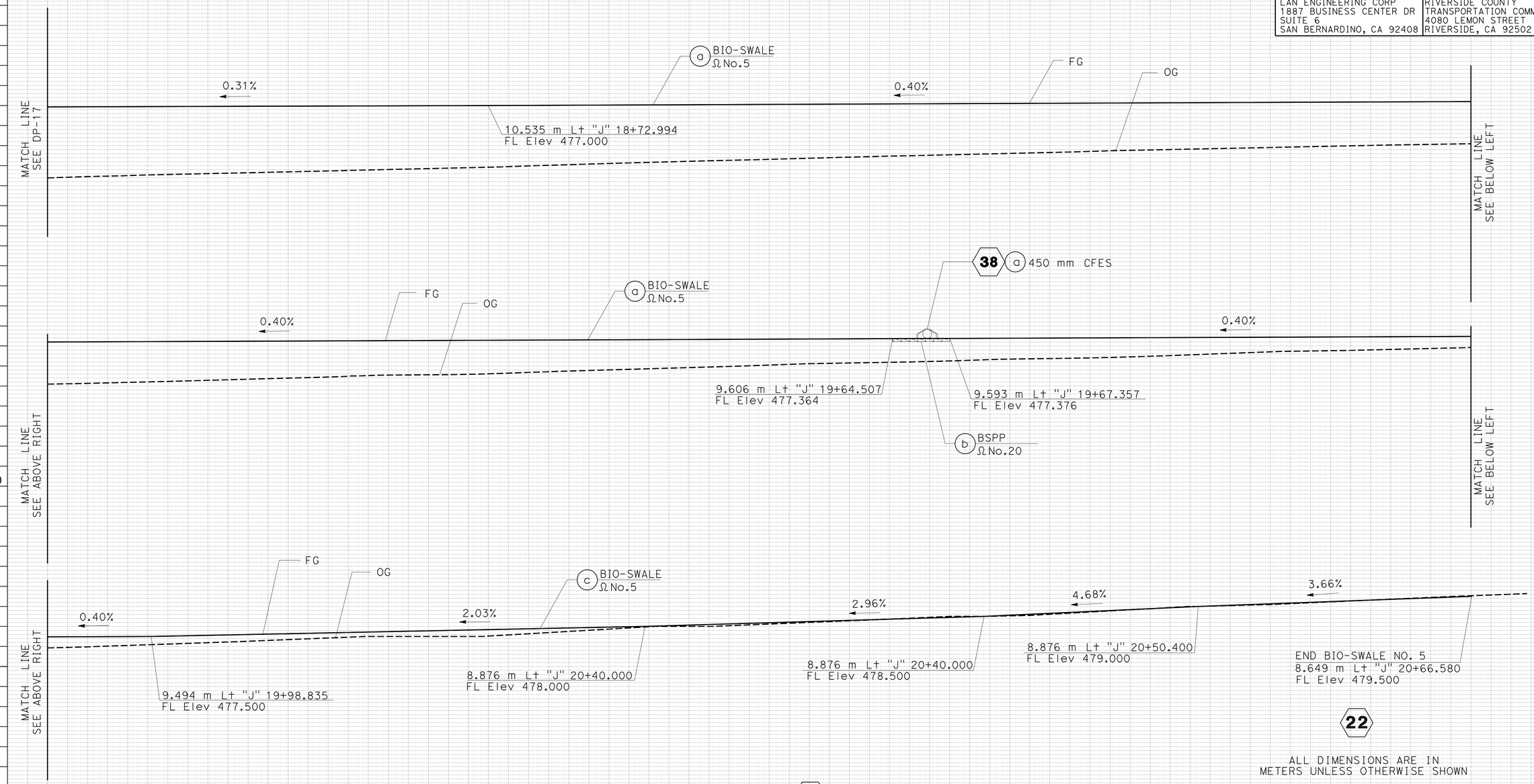

ALL DIMENSIONS ARE IN METERS UNLESS OTHERWISE SHOWN

DRAINAGE SYSTEM NO. 22

DRAINAGE PROFILE

SCALE: HORIZ 1:100
VERT 1:100

DP-18

Station	
m^3	Exc
	Emb

REVISED BY | DATE REVISED
ROBERT WONG | NORMAN SUYDAM
CALCULATED-DESIGNED BY | CHECKED BY
CONSULTANT FUNCTIONAL SUPERVISOR | NORMAN SUYDAM

STATE OF CALIFORNIA - DEPARTMENT OF TRANSPORTATION
Caltrans

LAST REVISION 11-09-09 | DATE PLOTTED => 19-OCT-2010 | TIME PLOTTED => 15:54

Dist	COUNTY	ROUTE	KILOMETER POST TOTAL PROJECT	SHEET No.	TOTAL SHEETS
08	Riv	60,215	R19.7/21.9, R61.3/62.7	113	594

REGISTERED CIVIL ENGINEER 1-14-10 DATE

6-28-10
PLANS APPROVAL DATE

REGISTERED PROFESSIONAL ENGINEER ROBERT WONG No. C64734 Exp.06/30/11 CIVIL STATE OF CALIFORNIA

THE STATE OF CALIFORNIA OR ITS OFFICERS OR AGENTS SHALL NOT BE RESPONSIBLE FOR THE ACCURACY OR COMPLETENESS OF ELECTRONIC COPIES OF THIS PLAN SHEET.

LAN ENGINEERING CORP
1887 BUSINESS CENTER DR
SUITE 6
SAN BERNARDINO, CA 92408

RIVERSIDE COUNTY
TRANSPORTATION COMMISSION
4080 LEMON STREET
RIVERSIDE, CA 92502

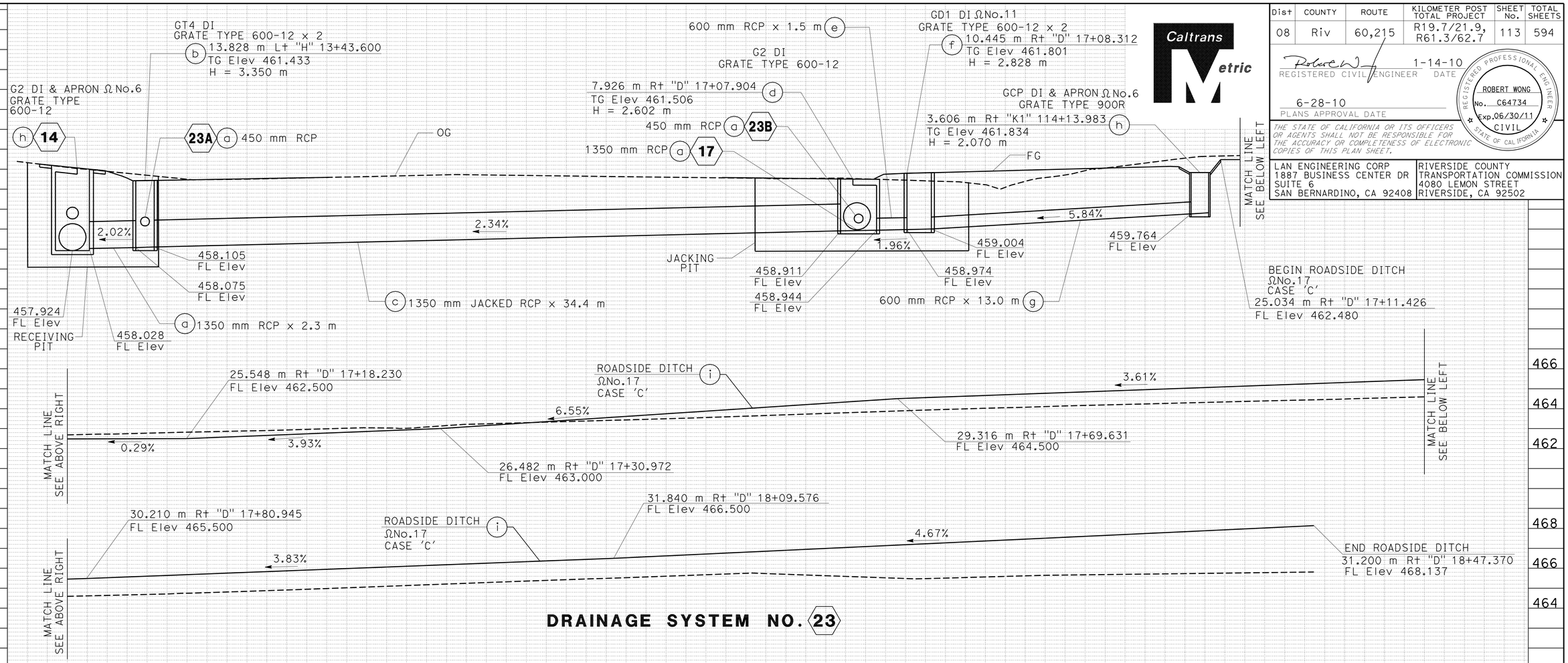

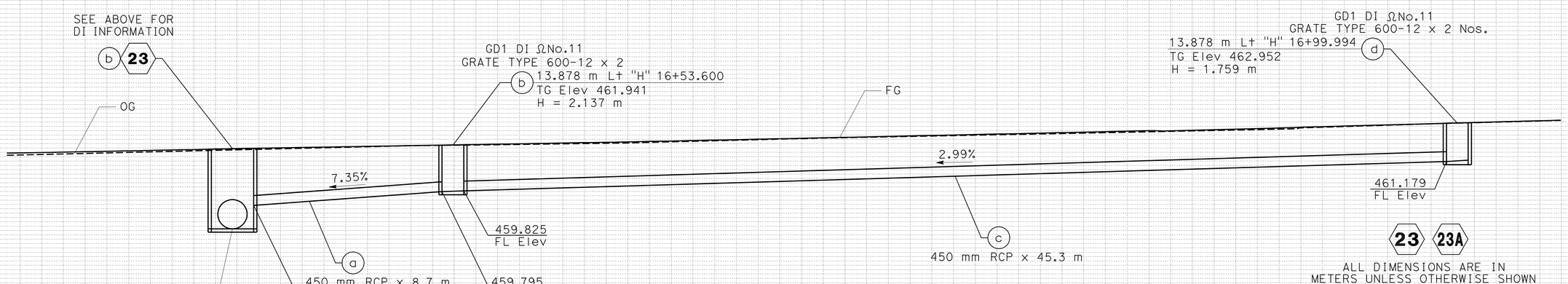

ALL DIMENSIONS ARE IN METERS UNLESS OTHERWISE SHOWN

DRAINAGE PROFILE

SCALE: HORIZ 1:100
VERT 1:100

DP-19

REVISED BY	DATE REVISED
ROBERT WONG	NORMAN SUYDAM

CALCULATED-DESIGNED BY: NORMAN SUYDAM
CHECKED BY:
CONSULTANT FUNCTIONAL SUPERVISOR

STATE OF CALIFORNIA - DEPARTMENT OF TRANSPORTATION
Caltrans

Station	
m^3	Exc
	Emb

LAST REVISION 11-09-09
DATE PLOTTED => 19-OCT-2010
TIME PLOTTED => 15:54

Dist	COUNTY	ROUTE	KILOMETER POST TOTAL PROJECT	SHEET No.	TOTAL SHEETS
08	Riv	60,215	R19.7/21.9, R61.3/62.7	114	594

Robert W 1-14-10
REGISTERED CIVIL ENGINEER DATE

6-28-10
PLANS APPROVAL DATE

REGISTERED PROFESSIONAL ENGINEER ROBERT WONG No. C64734 Exp.06/30/11 CIVIL STATE OF CALIFORNIA

THE STATE OF CALIFORNIA OR ITS OFFICERS OR AGENTS SHALL NOT BE RESPONSIBLE FOR THE ACCURACY OR COMPLETENESS OF ELECTRONIC COPIES OF THIS PLAN SHEET.

LAN ENGINEERING CORP
1887 BUSINESS CENTER DR
SUITE 6
SAN BERNARDINO, CA 92408

RIVERSIDE COUNTY
TRANSPORTATION COMMISSION
4080 LEMON STREET
RIVERSIDE, CA 92502

Caltrans Metric

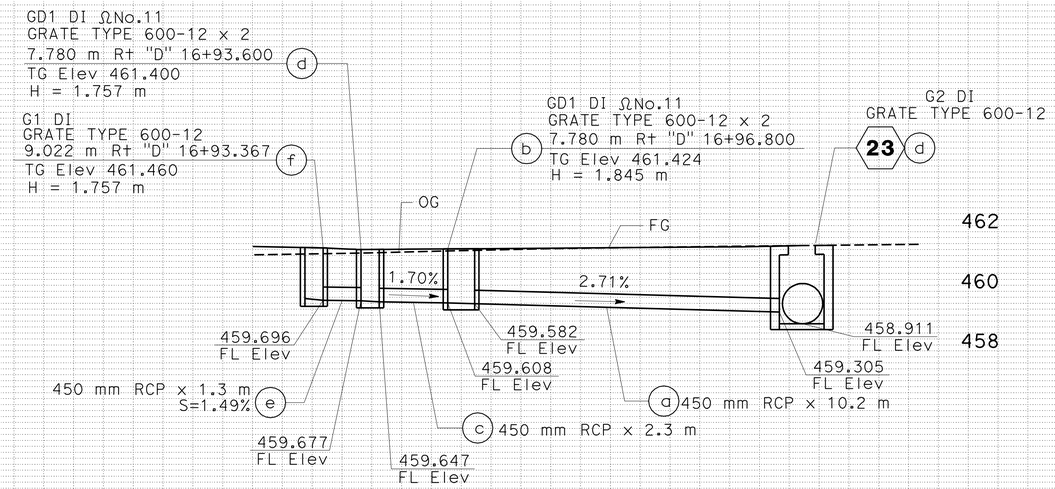

DRAINAGE SYSTEM NO. 23B

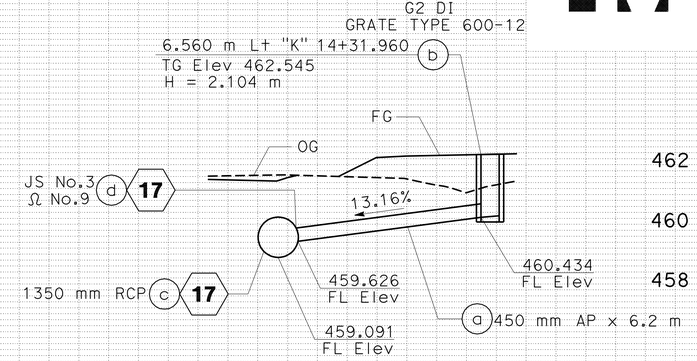

DRAINAGE SYSTEM NO. 25

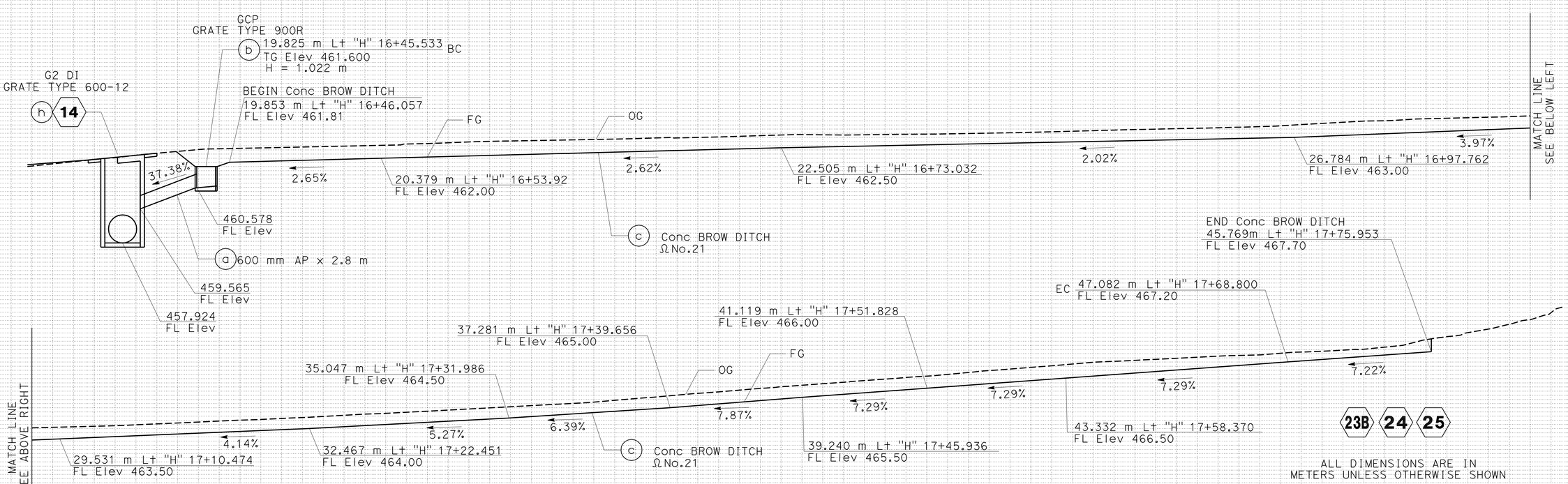

DRAINAGE SYSTEM NO. 24

ALL DIMENSIONS ARE IN METERS UNLESS OTHERWISE SHOWN

DRAINAGE PROFILE

SCALE: HORIZ 1:100
VERT 1:100

DP-20

REVISED BY	DATE REVISED

ROBERT WONG — NORMAN SUYDAM

CALCULATED-DESIGNED BY — CHECKED BY

CONSULTANT FUNCTIONAL SUPERVISOR — NORMAN SUYDAM

STATE OF CALIFORNIA - DEPARTMENT OF TRANSPORTATION

Caltrans

Station	
m^3	Exc
	Emb

LAST REVISION 11-09-09 DATE PLOTTED => 19-OCT-2010 TIME PLOTTED => 15:54

Dist	COUNTY	ROUTE	KILOMETER POST TOTAL PROJECT	SHEET No.	TOTAL SHEETS
08	Riv	60,215	R19.7/21.9, R61.3/62.7	115	594

Caltrans Metric

REGISTERED CIVIL ENGINEER 1-14-10 DATE

6-28-10
PLANS APPROVAL DATE

REGISTERED PROFESSIONAL ENGINEER ROBERT WONG No. C64734 Exp.06/30/11 CIVIL STATE OF CALIFORNIA

THE STATE OF CALIFORNIA OR ITS OFFICERS OR AGENTS SHALL NOT BE RESPONSIBLE FOR THE ACCURACY OR COMPLETENESS OF ELECTRONIC COPIES OF THIS PLAN SHEET.

LAN ENGINEERING CORP
1887 BUSINESS CENTER DR
SUITE 6
SAN BERNARDINO, CA 92408

RIVERSIDE COUNTY
TRANSPORTATION COMMISSION
4080 LEMON STREET
RIVERSIDE, CA 92502

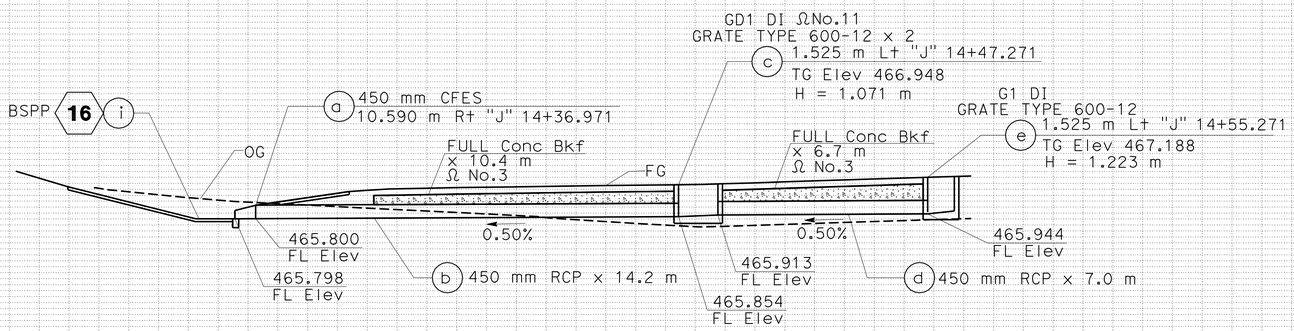

DRAINAGE SYSTEM NO. 26

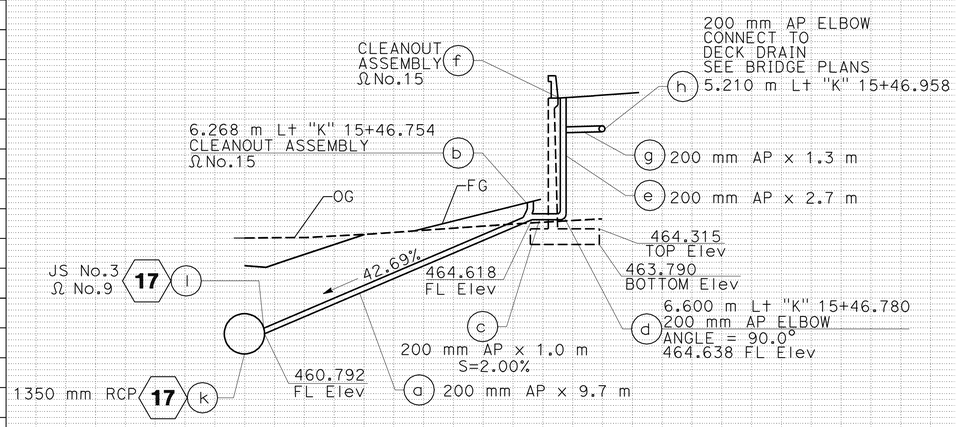

DRAINAGE SYSTEM NO. 27

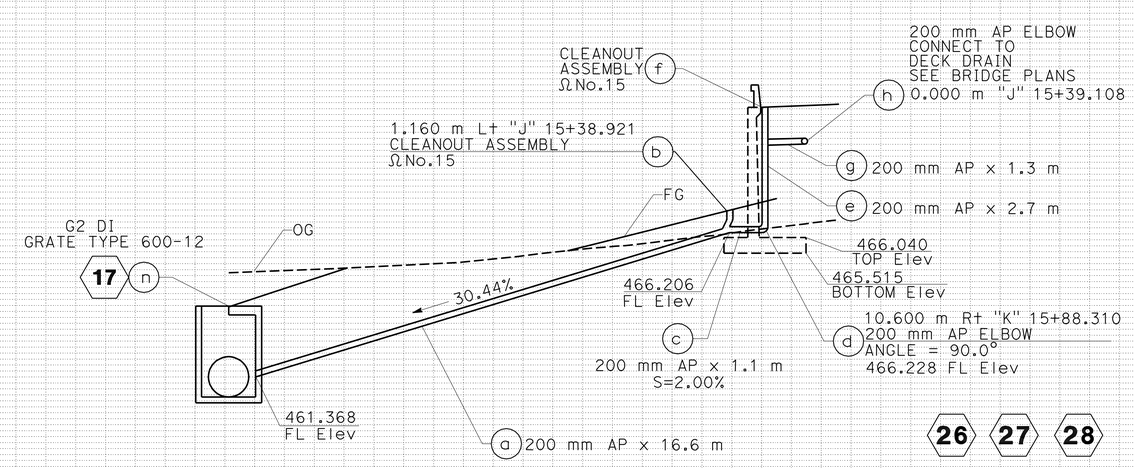

DRAINAGE SYSTEM NO. 28

26 27 28

ALL DIMENSIONS ARE IN METERS UNLESS OTHERWISE SHOWN

DRAINAGE PROFILE

SCALE: HORIZ 1:100
VERT 1:100

DP-21

Station	
m^3 Exc	
m^3 Emb	

REVISED BY | DATE REVISED
ROBERT WONG | NORMAN SUYDAM
CALCULATED-DESIGNED BY | CHECKED BY
CONSULTANT FUNCTIONAL SUPERVISOR: NORMAN SUYDAM
STATE OF CALIFORNIA - DEPARTMENT OF TRANSPORTATION
Caltrans

LAST REVISION 11-09-09 | DATE PLOTTED => 19-OCT-2010 | TIME PLOTTED => 15:54

Dist	COUNTY	ROUTE	KILOMETER POST TOTAL PROJECT	SHEET No.	TOTAL SHEETS
08	Riv	60,215	R19.7/21.9, R61.3/62.7	116	594

Robert Wong 1-14-10
REGISTERED CIVIL ENGINEER DATE

6-28-10
PLANS APPROVAL DATE

REGISTERED PROFESSIONAL ENGINEER ROBERT WONG No. C64734 Exp.06/30/11 CIVIL STATE OF CALIFORNIA

THE STATE OF CALIFORNIA OR ITS OFFICERS OR AGENTS SHALL NOT BE RESPONSIBLE FOR THE ACCURACY OR COMPLETENESS OF ELECTRONIC COPIES OF THIS PLAN SHEET.

LAN ENGINEERING CORP
1887 BUSINESS CENTER DR
SUITE 6
SAN BERNARDINO, CA 92408

RIVERSIDE COUNTY
TRANSPORTATION COMMISSION
4080 LEMON STREET
RIVERSIDE, CA 92502

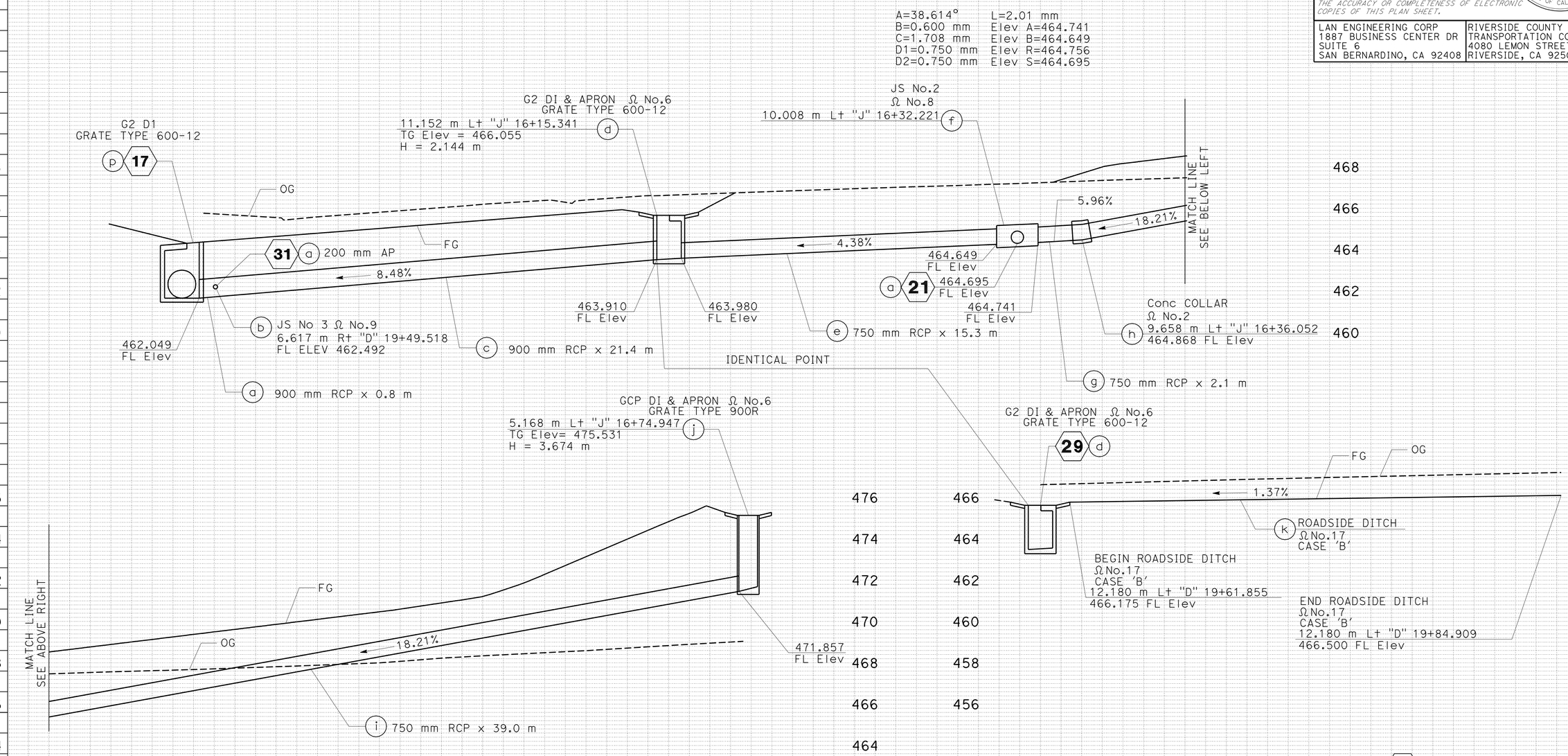

ALL DIMENSIONS ARE IN METERS UNLESS OTHERWISE SHOWN

DRAINAGE SYSTEM NO. 29

DRAINAGE PROFILE

SCALE: HORIZ 1:100
VERT 1:100

DP-22

REVISED BY	DATE REVISED
ROBERT WONG	NORMAN SUYDAM

CALCULATED-DESIGNED BY: NORMAN SUYDAM
CHECKED BY:
CONSULTANT FUNCTIONAL SUPERVISOR: NORMAN SUYDAM

STATE OF CALIFORNIA - DEPARTMENT OF TRANSPORTATION
Caltrans

Station	
m^3	Exc
	Emb

LAST REVISION 11-09-09
DATE PLOTTED => 19-OCT-2010
TIME PLOTTED => 15:54

Dist	COUNTY	ROUTE	KILOMETER POST TOTAL PROJECT	SHEET No.	TOTAL SHEETS
08	Riv	60,215	R19.7/21.9, R61.3/62.7	117	594

Robert Wong 1-14-10
REGISTERED CIVIL ENGINEER DATE

6-28-10
PLANS APPROVAL DATE

REGISTERED PROFESSIONAL ENGINEER ROBERT WONG No. C64734 Exp.06/30/11 CIVIL STATE OF CALIFORNIA

THE STATE OF CALIFORNIA OR ITS OFFICERS OR AGENTS SHALL NOT BE RESPONSIBLE FOR THE ACCURACY OR COMPLETENESS OF ELECTRONIC COPIES OF THIS PLAN SHEET.

LAN ENGINEERING CORP
1887 BUSINESS CENTER DR
SUITE 6
SAN BERNARDINO, CA 92408

RIVERSIDE COUNTY
TRANSPORTATION COMMISSION
4080 LEMON STREET
RIVERSIDE, CA 92502

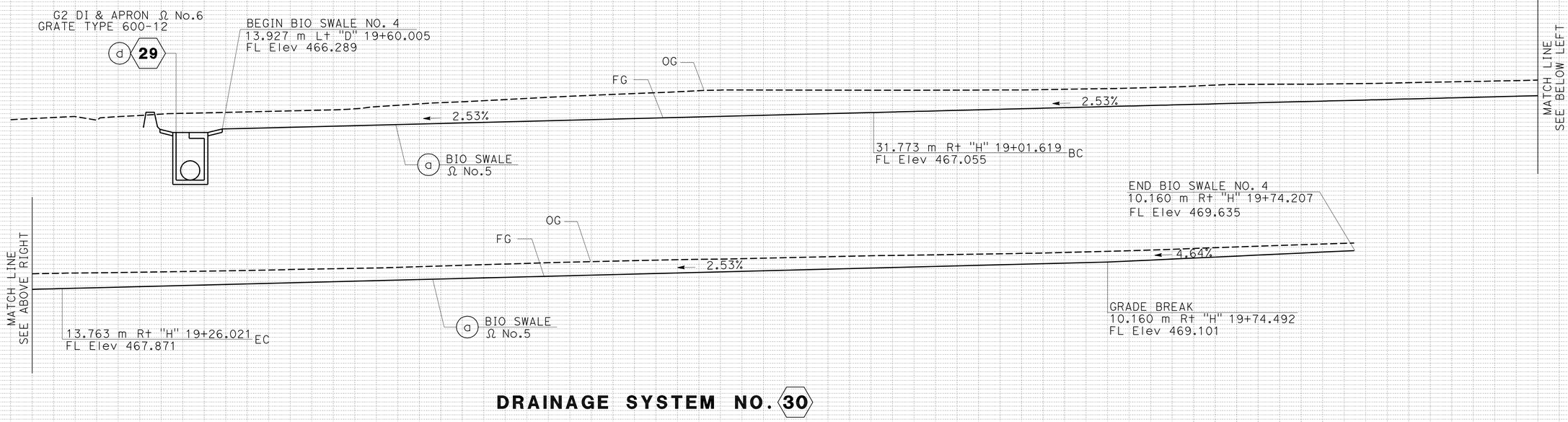

DRAINAGE SYSTEM NO. 30

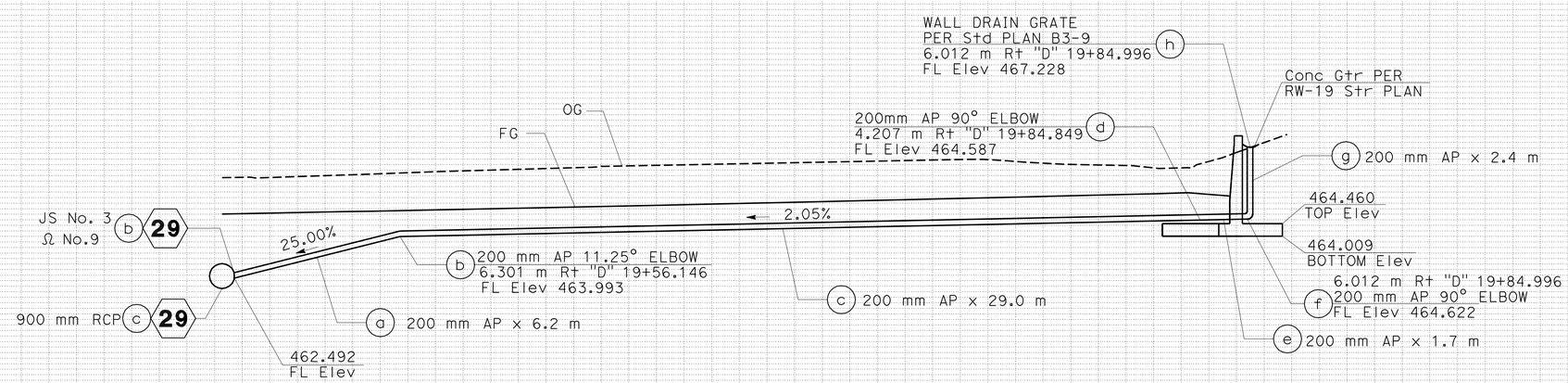

DRAINAGE SYSTEM NO. 31

30 31

ALL DIMENSIONS ARE IN METERS UNLESS OTHERWISE SHOWN

DRAINAGE PROFILE

SCALE: HORIZ 1:100
VERT 1:100

DP-23

Station	
m^3	Exc
	Emb

STATE OF CALIFORNIA - DEPARTMENT OF TRANSPORTATION
Caltrans

CONSULTANT FUNCTIONAL SUPERVISOR: NORMAN SUYDAM
CALCULATED-DESIGNED BY: ROBERT WONG
CHECKED BY: NORMAN SUYDAM
REVISED BY / DATE REVISED

LAST REVISION 11-09-09
DATE PLOTTED => 19-OCT-2010
TIME PLOTTED => 15:54

Dist	COUNTY	ROUTE	KILOMETER POST TOTAL PROJECT	SHEET No.	TOTAL SHEETS
08	Riv	60,215	R19.7/21.9, R61.3/62.7	118	594

REGISTERED CIVIL ENGINEER 1-14-10 DATE

6-28-10
PLANS APPROVAL DATE

REGISTERED PROFESSIONAL ENGINEER ROBERT WONG No. C64734 Exp.06/30/11 CIVIL STATE OF CALIFORNIA

THE STATE OF CALIFORNIA OR ITS OFFICERS OR AGENTS SHALL NOT BE RESPONSIBLE FOR THE ACCURACY OR COMPLETENESS OF ELECTRONIC COPIES OF THIS PLAN SHEET.

LAN ENGINEERING CORP
1887 BUSINESS CENTER DR
SUITE 6
SAN BERNARDINO, CA 92408

RIVERSIDE COUNTY
TRANSPORTATION COMMISSION
4080 LEMON STREET
RIVERSIDE, CA 92502

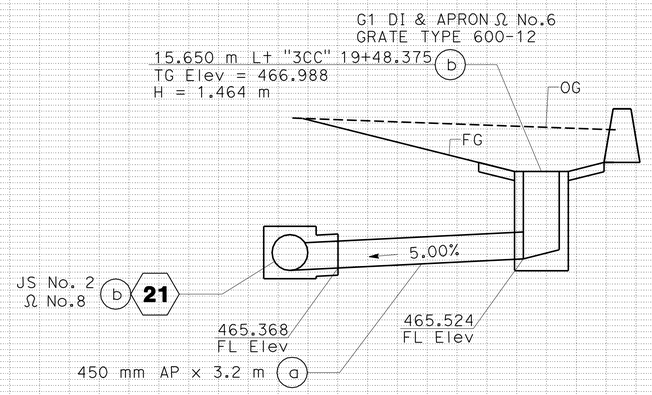

DRAINAGE SYSTEM NO. 32

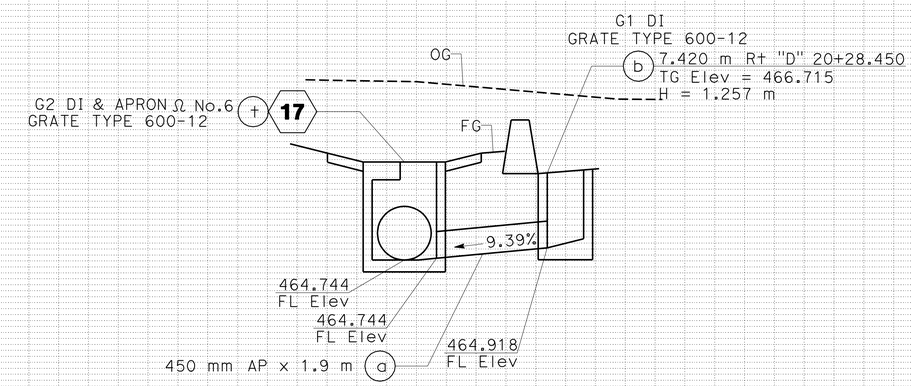

DRAINAGE SYSTEM NO. 33

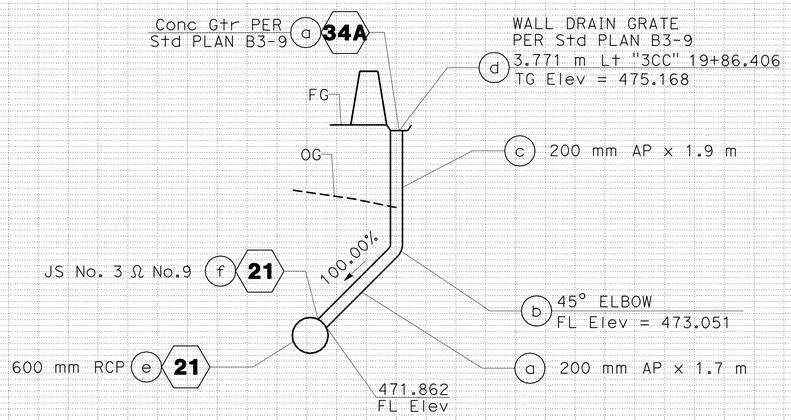

DRAINAGE SYSTEM NO. 34

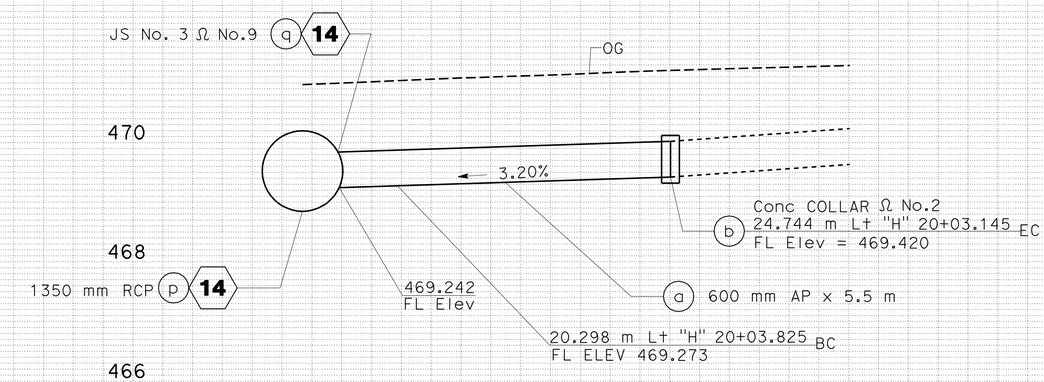

DRAINAGE SYSTEM NO. 36

32 33 34 36

ALL DIMENSIONS ARE IN METERS UNLESS OTHERWISE SHOWN

DRAINAGE PROFILE

SCALE: HORIZ 1:50
VERT 1:50

DP-24

REVISED BY | DATE REVISED
ROBERT WONG | NORMAN SUYDAM
CALCULATED-DESIGNED BY | CHECKED BY
CONSULTANT FUNCTIONAL SUPERVISOR: NORMAN SUYDAM
STATE OF CALIFORNIA - DEPARTMENT OF TRANSPORTATION
Caltrans

Station
m³ Exc
Emb

LAST REVISION 11-09-09
DATE PLOTTED => 19-OCT-2010
TIME PLOTTED => 15:54

Dist	COUNTY	ROUTE	KILOMETER POST TOTAL PROJECT	SHEET No.	TOTAL SHEETS
08	Riv	60,215	R19.7/21.9, R61.3/62.7	119	594

Robert Wong 1-14-10
REGISTERED CIVIL ENGINEER DATE

6-28-10
PLANS APPROVAL DATE

REGISTERED PROFESSIONAL ENGINEER
ROBERT WONG
No. C64734
Exp.06/30/11
CIVIL
STATE OF CALIFORNIA

THE STATE OF CALIFORNIA OR ITS OFFICERS OR AGENTS SHALL NOT BE RESPONSIBLE FOR THE ACCURACY OR COMPLETENESS OF ELECTRONIC COPIES OF THIS PLAN SHEET.

LAN ENGINEERING CORP
1887 BUSINESS CENTER DR
SUITE 6
SAN BERNARDINO, CA 92408

RIVERSIDE COUNTY
TRANSPORTATION COMMISSION
4080 LEMON STREET
RIVERSIDE, CA 92502

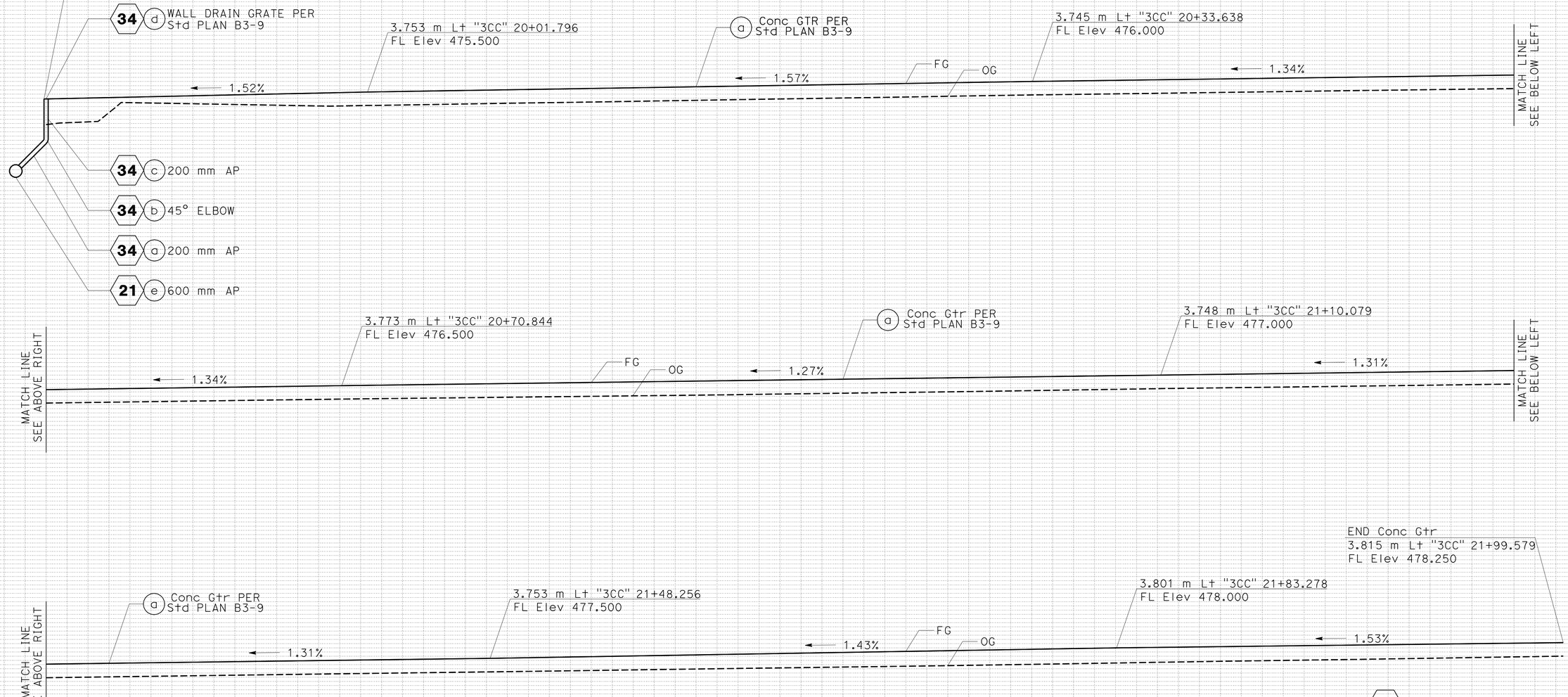

34A

DRAINAGE SYSTEM NO. 34A

ALL DIMENSIONS ARE IN METERS UNLESS OTHERWISE SHOWN

DRAINAGE PROFILE

SCALE: HORIZ 1:100
VERT 1:100

DP-25

REVISED BY	DATE REVISED
ROBERT WONG	NORMAN SUYDAM

CALCULATED-DESIGNED BY
CHECKED BY

CONSULTANT FUNCTIONAL SUPERVISOR: NORMAN SUYDAM

STATE OF CALIFORNIA - DEPARTMENT OF TRANSPORTATION
Caltrans

Station	
m^3	Exc
	Emb

LAST REVISION 11-09-09
DATE PLOTTED => 19-OCT-2010
TIME PLOTTED => 15:55

Dist	COUNTY	ROUTE	KILOMETER POST TOTAL PROJECT	SHEET No.	TOTAL SHEETS
08	Riv	60,215	R19.7/21.9, R61.3/62.7	120	594

Robert Wong 1-14-10
REGISTERED CIVIL ENGINEER DATE

6-28-10
PLANS APPROVAL DATE

REGISTERED PROFESSIONAL ENGINEER ROBERT WONG No. C64734 Exp.06/30/11 CIVIL STATE OF CALIFORNIA

THE STATE OF CALIFORNIA OR ITS OFFICERS OR AGENTS SHALL NOT BE RESPONSIBLE FOR THE ACCURACY OR COMPLETENESS OF ELECTRONIC COPIES OF THIS PLAN SHEET.

LAN ENGINEERING CORP
1887 BUSINESS CENTER DR
SUITE 6
SAN BERNARDINO, CA 92408

RIVERSIDE COUNTY
TRANSPORTATION COMMISSION
4080 LEMON STREET
RIVERSIDE, CA 92502

Caltrans Metric

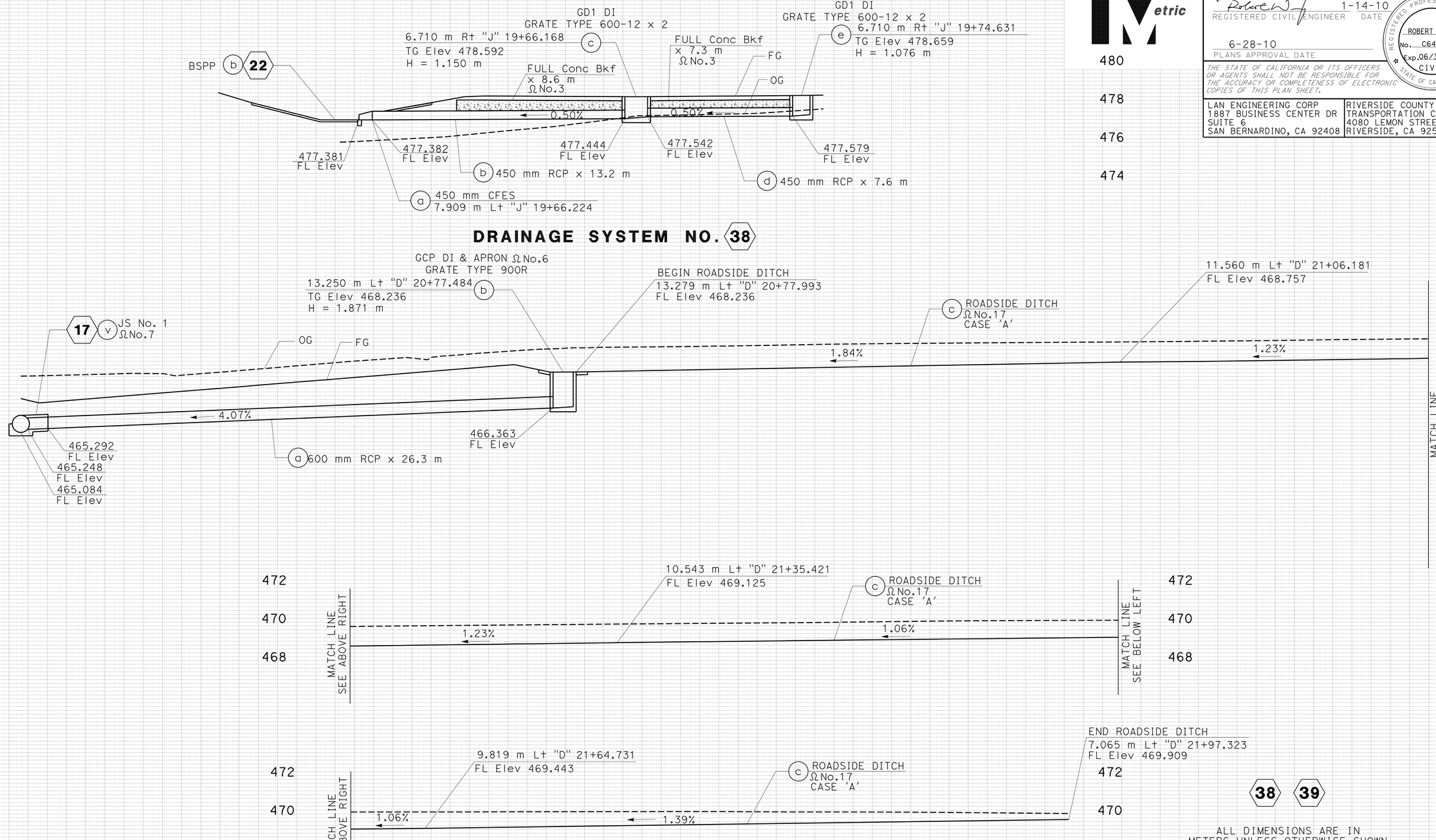

38 39

ALL DIMENSIONS ARE IN METERS UNLESS OTHERWISE SHOWN

DRAINAGE PROFILE

SCALE: HORIZ 1:100
VERT 1:100

DP-26

REVISED BY	DATE REVISED
ROBERT WONG	NORMAN SUYDAM

CALCULATED-DESIGNED BY: NORMAN SUYDAM
CHECKED BY:
CONSULTANT FUNCTIONAL SUPERVISOR:

STATE OF CALIFORNIA - DEPARTMENT OF TRANSPORTATION
Caltrans

Station	
m^3	Exc
	Emb

LAST REVISION 11-09-09
DATE PLOTTED => 19-OCT-2010
TIME PLOTTED => 15:55

Dist	COUNTY	ROUTE	KILOMETER POST TOTAL PROJECT	SHEET No.	TOTAL SHEETS
08	Riv	60,215	R19.7/21.9, R61.3/62.7	121	594

REGISTERED CIVIL ENGINEER 1-14-10 DATE

6-28-10
PLANS APPROVAL DATE

REGISTERED PROFESSIONAL ENGINEER ROBERT WONG No. C64734 Exp.06/30/11 CIVIL STATE OF CALIFORNIA

THE STATE OF CALIFORNIA OR ITS OFFICERS OR AGENTS SHALL NOT BE RESPONSIBLE FOR THE ACCURACY OR COMPLETENESS OF ELECTRONIC COPIES OF THIS PLAN SHEET.

LAN ENGINEERING CORP
1887 BUSINESS CENTER DR
SUITE 6
SAN BERNARDINO, CA 92408

RIVERSIDE COUNTY
TRANSPORTATION COMMISSION
4080 LEMON STREET
RIVERSIDE, CA 92502

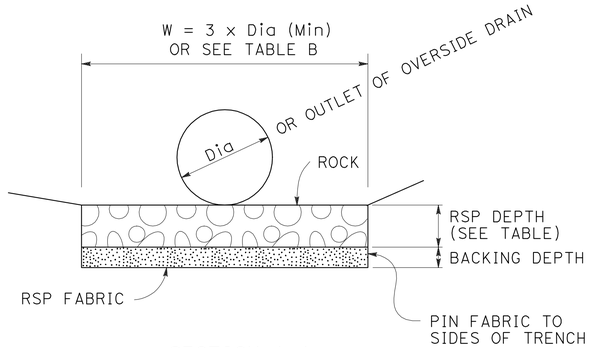

SECTION A-A

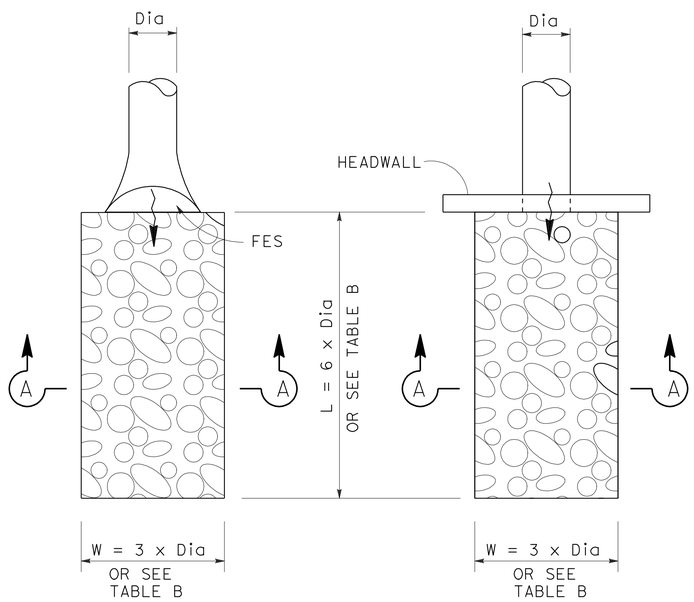

PLAN

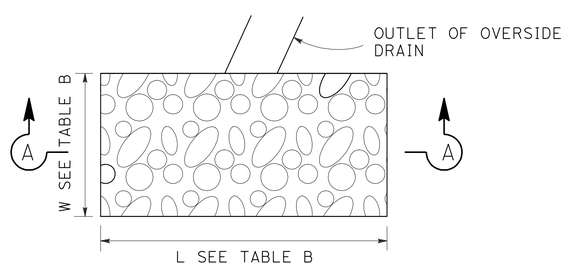

AT OVERSIDE DRAIN OUTLET

NOTES:

1. RSP FABRIC SHALL NOT PROTRUDE ABOVE GROUND. TRIM FABRIC BELOW GROUND TO NO MORE THAN 50 mm BELOW GROUND SURFACE.
2. RSP WIDTH AND LENGTH SHALL BE AS SHOWN ON THESE DETAILS UNLESS SHOWN OTHERWISE ON TABLE B OR AS SHOWN OTHERWISE ON THE PLANS.

TABLE A

ROCK	RSP MINIMUM DEPTH (mm)	BACKING DEPTH (mm)	NONWOVEN OR WOVEN RSP-FABRIC
FACING	460	150	TYPE A OR B
LIGHT	460	230	TYPE A OR B
1/4 T	900	230	TYPE A OR B
1/2 T	1200	300	TYPE B
1 T	1500	300	TYPE B

TABLE B

RSP SUMMARY					
STATION	RT/LT	W (m)	L (m)	RSP SIZE	DRAINAGE SYSTEM No.
11+24	Lt "S"	3.0	4.0	FACING	2
19+85	Lt "H"	4.0	7.0	1/2 T	14

ROCK SLOPE PROTECTION DETAILS
DRAINAGE DETAIL No.1

ALL DIMENSIONS ARE IN METERS UNLESS OTHERWISE SHOWN

DRAINAGE DETAILS

NO SCALE **DD-1**

STATE OF CALIFORNIA - DEPARTMENT OF TRANSPORTATION
Caltrans

CONSULTANT FUNCTIONAL SUPERVISOR: NORMAN SUYDAM
CALCULATED-DESIGNED BY: ROBERT WONG
CHECKED BY: NORMAN SUYDAM
REVISED BY
DATE REVISED

LAST REVISION 11-09-09
DATE PLOTTED => 19-OCT-2010
TIME PLOTTED => 15:55

Dist	COUNTY	ROUTE	KILOMETER POST TOTAL PROJECT	SHEET No.	TOTAL SHEETS
08	Riv	60,215	R19.7/21.9, R61.3/62.7	122	594

Robert Wong 1-14-10
REGISTERED CIVIL ENGINEER DATE

6-28-10
PLANS APPROVAL DATE

REGISTERED PROFESSIONAL ENGINEER ROBERT WONG No. C64734 Exp.06/30/11 CIVIL STATE OF CALIFORNIA

THE STATE OF CALIFORNIA OR ITS OFFICERS OR AGENTS SHALL NOT BE RESPONSIBLE FOR THE ACCURACY OR COMPLETENESS OF ELECTRONIC COPIES OF THIS PLAN SHEET.

LAN ENGINEERING CORP
1887 BUSINESS CENTER DR
SUITE 6
SAN BERNARDINO, CA 92408

RIVERSIDE COUNTY
TRANSPORTATION COMMISSION
4080 LEMON STREET
RIVERSIDE, CA 92502

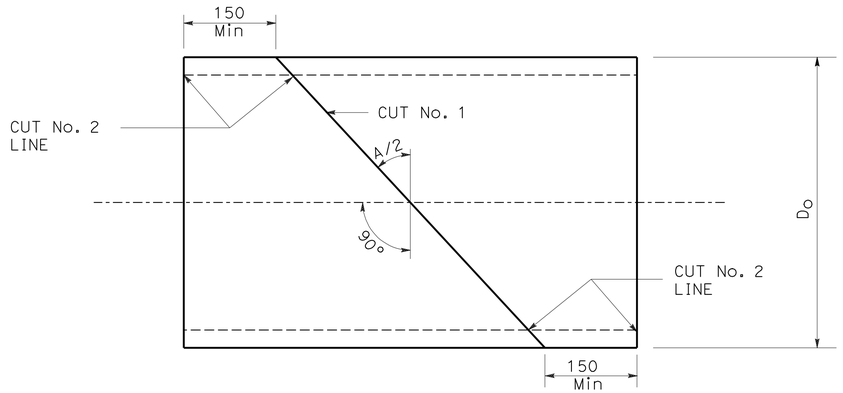

DETAIL A (SEE NOTE 10)

SONO-TUBE, OR EQUAL, INTERIOR FORM

CUT No. 1: SAW THE TUBE AT AN ANGLE OF A/2 WITH THE TRANSVERSE PLANE. REVERSE ONE SECTION AND TAPE BOTH SECTONS TOGETHER FORMING THE DEFLECTION ANGLE A.

CUT No. 2: SAW THE TUBE LONGITUDINALLY REMOVING A STRIP 3.14 (Do-D) WIDE ON THE SIDE OPPOSITE THE OPEN JOINT. BEND THE ENDS OF THE CUT TOGETHER AND INSERT THE TUBE IN THE PIPE.

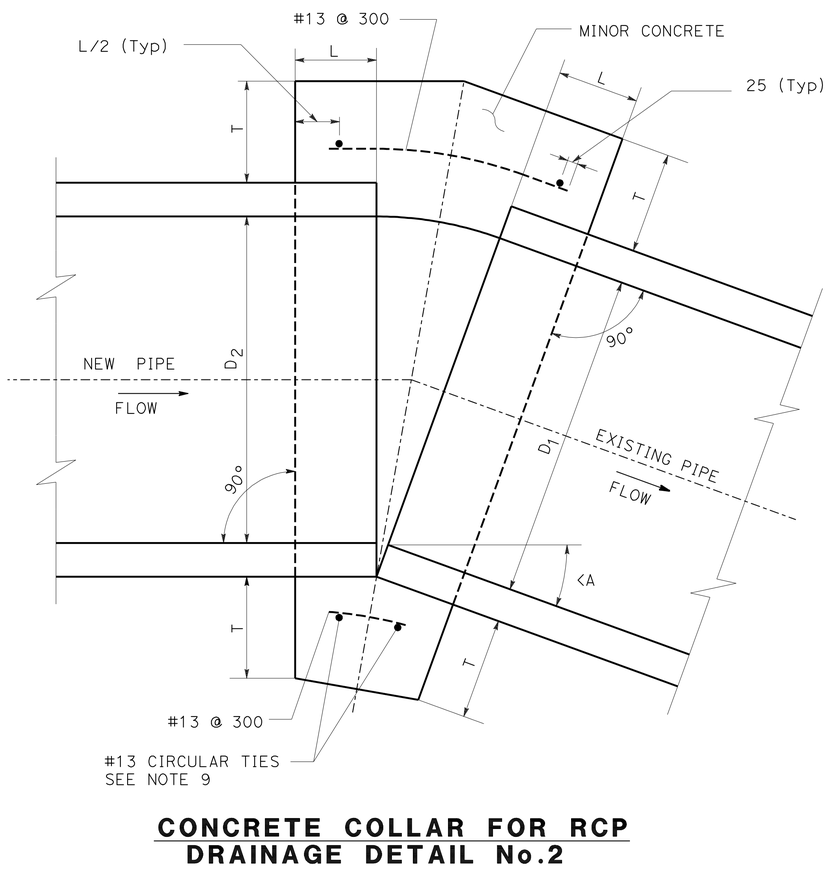

CONCRETE COLLAR FOR RCP
DRAINAGE DETAIL No.2

NOTES:

1. A CONCRETE COLLAR IS REQUIRED WHERE THE CHANGE IN GRADE EXCEEDS 10 PERCENT.

2. FOR CURVE JOINTS (SEE DETAIL B)
   IF THE EXTREME ENDS OF THE PIPE LEAVE A CLEAR SPACE THAT IS GREATER THAN 25 mm, BUT IS LESS THAN 75 mm, A CONCRETE COVER IS REQUIRED.
   IF THE EXTREME ENDS OF THE PIPE LEAVE A CLEAR SPACE THAT IS EQUAL TO OR GREATER THAN 75 mm, BUT LESS THAN 150 mm, A CONCRETE COLLAR IS REQUIRED. IF THE CLEAR SPACE IS 150 mm OR GREATER, A TRANSITION STRUCTURE IS REQUIRED.

3. CONCRETE COLLAR SHALL NOT BE USED FOR A SIZE CHANGE ON THE MAIN LINE.

4. CONNECTOR PIPES
   A. WHERE PIPES OF DIFFERENT DIAMETERS ARE JOINED WITH A CONCRETE COLLAR, L AND T SHALL BE THOSE OF THE LARGER PIPE . $D=D_1$ OR D_2, WHICHEVER IS GREATER.
   B. WHEN D_1 IS EQUAL TO OR LESS THAN D_2, JOIN INVERTS AND WHEN D_1 IS GREATER THAN D_2, JOIN SOFFITS.

5. FOR PIPE LARGER THAN 1800 mm SPECIAL COLLAR DETAILS ARE REQUIRED.

6. FOR PIPE SIZE NOT LISTED USE NEXT SIZE LARGER.

7. REINFORCEMENT SHALL CONFORM TO ASTM A 615 M GRADE 300.

8. WHERE REINFORCING IS REQUIRED THE DIAMETER OF THE CIRCULAR TIES SHALL BE D+(2X WALL THICKNESS) + T.

9. REINFORCING SHALL BE USED WHERE THE PIPE DIAMETER IS GREATER THAN 525 mm AND ON ALL PIPES WHERE THE SPACES BETWEEN THE EXTREME OUTER ENDS IS 75 mm OR LARGER.

CIRCULAR TIES:

PIPE DIAMETER	No. OF CIRCULAR TIES
525 mm OR LESS	3
600 mm TO 750 mm	3
825 mm TO 1425 mm	4

WHERE THE SPACE BETWEEN PIPE ENDS EXCEEDS 75 mm THE NUMBER OF CIRCULAR TIES SHALL BE INCREASED TO MAINTAIN AN APPROXIMATE SPACING OF 150 mm C-C

10. AN INTERIOR FORM OF UNSEALED SONO-TUBE OR EQUAL SHALL BE USED TO PROVIDE A SMOOTH INTERIOR JOINT.THE PAPER FORM MAY BE LEFT IN PLACE (SEE DETAIL A).

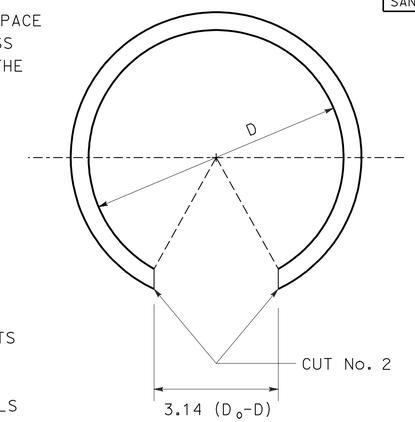

D	L	T
300 mm	300 mm	100 mm
450 mm	300 mm	125 mm
600 mm	300 mm	150 mm
750 mm	450 mm	175 mm
900 mm	450 mm	225 mm
1050 mm	450 mm	225 mm
1200 mm	450 mm	250 mm
1350 mm	450 mm	250 mm

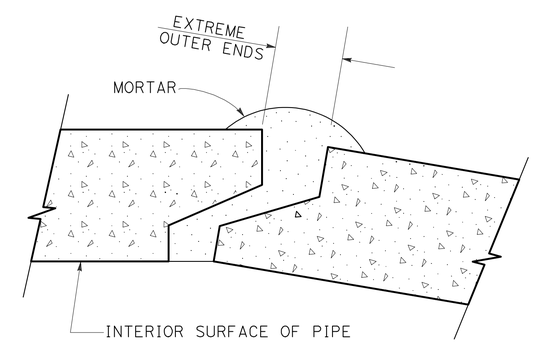

DETAIL B

TYPICAL JOINT FOR REINFORCED CONCRETE PIPE

ALL DIMENSIONS ARE IN MILLIMETERS UNLESS OTHERWISE SHOWN

DRAINAGE DETAILS

NO SCALE **DD-2**

STATE OF CALIFORNIA - DEPARTMENT OF TRANSPORTATION
Caltrans

CONSULTANT FUNCTIONAL SUPERVISOR: NORMAN SUYDAM
CALCULATED-DESIGNED BY: ROBERT WONG
CHECKED BY: NORMAN SUYDAM
REVISED BY
DATE REVISED

LAST REVISION 11-09-09
DATE PLOTTED => 19-OCT-2010
TIME PLOTTED => 15:55

Dist	COUNTY	ROUTE	KILOMETER POST TOTAL PROJECT	SHEET No.	TOTAL SHEETS
08	Riv	60,215	R19.7/21.9, R61.3/62.7	123	594

Robert Wong 1-14-10
REGISTERED CIVIL ENGINEER DATE

6-28-10
PLANS APPROVAL DATE

REGISTERED PROFESSIONAL ENGINEER ROBERT WONG No. C64734 Exp.06/30/11 CIVIL STATE OF CALIFORNIA

THE STATE OF CALIFORNIA OR ITS OFFICERS OR AGENTS SHALL NOT BE RESPONSIBLE FOR THE ACCURACY OR COMPLETENESS OF ELECTRONIC COPIES OF THIS PLAN SHEET.

LAN ENGINEERING CORP
1887 BUSINESS CENTER DR
SUITE 6
SAN BERNARDINO, CA 92408

RIVERSIDE COUNTY
TRANSPORTATION COMMISSION
4080 LEMON STREET
RIVERSIDE, CA 92502

Caltrans Metric

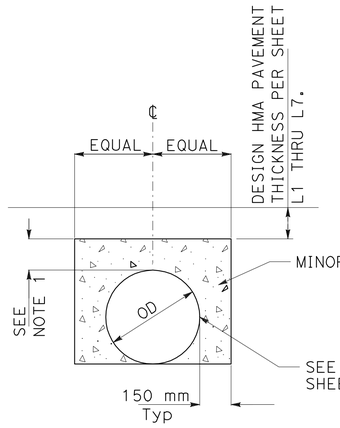

NOTE:

1. Typ 150 mm OR FULL DEPTH TO THE BOTTOM OF CORRESPONDING HMA LAYER IF THE PIPE RUNS INTO DESIGN PAVEMENT THICKNESS. PAVEMENT CONFIGURATION PER SHEET X-1.

CONCRETE BACKFILL FOR AT GRADE PIPE
DRAINAGE DETAIL No.3

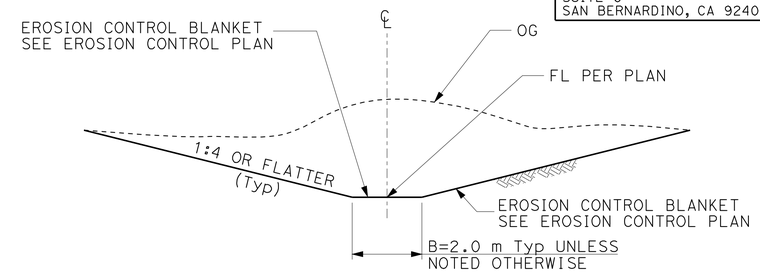

TYPICAL BIO SWALE SECTION
DRAINAGE DETAIL No.5

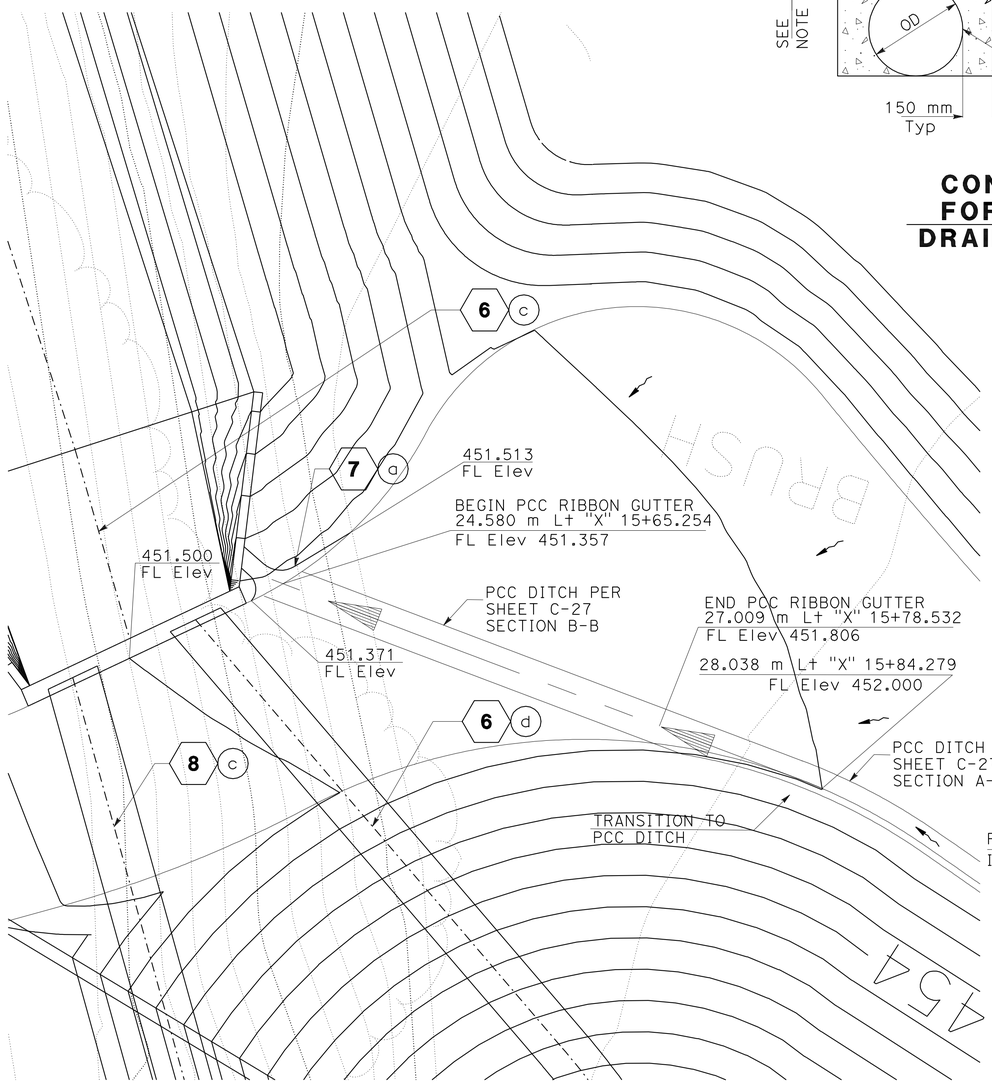

OVERSIDE DRAIN FLOWLINE ELEVATIONS
DRAINAGE DETAIL No.4

7 a

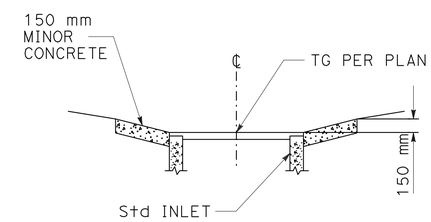

SECTION A-A

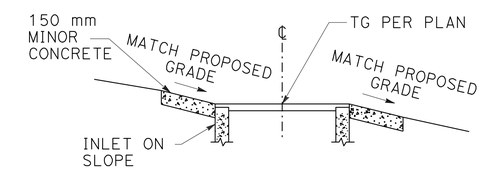

SECTION B-B

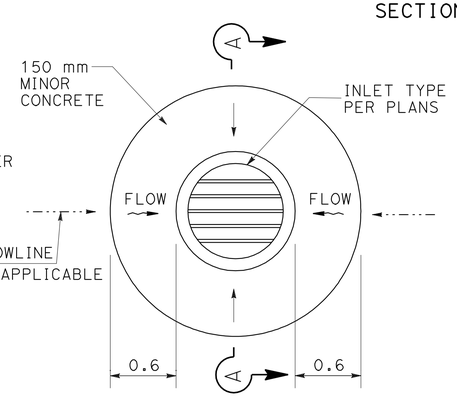

PLAN
CIRCULAR

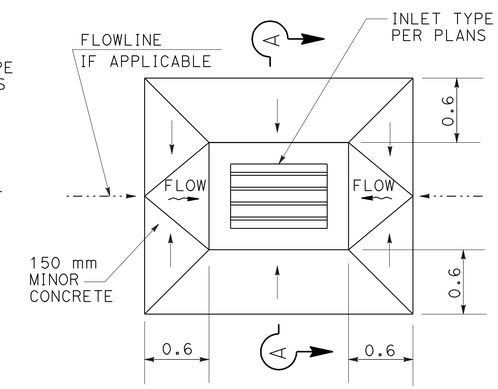

PLAN
RECTANGULAR

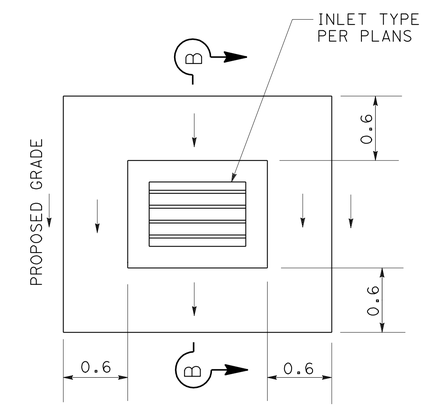

PLAN
INLET ON SLOPE
(FOR ACCESS USE)

CONCRETE APRON
DRAINAGE DETAIL No.6

ALL DIMENSIONS ARE IN METERS UNLESS OTHERWISE SHOWN

DRAINAGE DETAILS

NO SCALE **DD-3**

REVISED BY	DATE REVISED
ROBERT WONG	NORMAN SUYDAM

CALCULATED-DESIGNED BY / CHECKED BY

CONSULTANT FUNCTIONAL SUPERVISOR: DIBORO KANABOLO

STATE OF CALIFORNIA - DEPARTMENT OF TRANSPORTATION

Caltrans

LAST REVISION 11-09-09 DATE PLOTTED => 19-OCT-2010 TIME PLOTTED => 15:55

Dist	COUNTY	ROUTE	KILOMETER POST TOTAL PROJECT	SHEET No.	TOTAL SHEETS
08	Riv	60,215	R19.7/21.9, R61.3/62.7	124	594

Caltrans Metric

REGISTERED CIVIL ENGINEER 1-14-10 DATE

6-28-10
PLANS APPROVAL DATE

REGISTERED PROFESSIONAL ENGINEER ROBERT WONG No. C64734 Exp.06/30/11 CIVIL STATE OF CALIFORNIA

THE STATE OF CALIFORNIA OR ITS OFFICERS OR AGENTS SHALL NOT BE RESPONSIBLE FOR THE ACCURACY OR COMPLETENESS OF ELECTRONIC COPIES OF THIS PLAN SHEET.

LAN ENGINEERING CORP
1887 BUSINESS CENTER DR
SUITE 6
SAN BERNARDINO, CA 92408

RIVERSIDE COUNTY
TRANSPORTATION COMMISSION
4080 LEMON STREET
RIVERSIDE, CA 92502

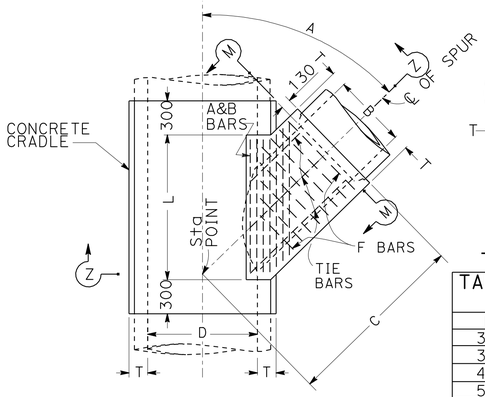

PLAN

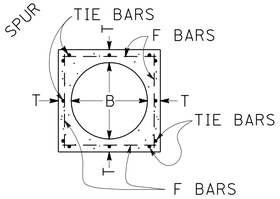

SECTION M-M

TABLE OF VALUES FOR T	
B	T
300	130
375	130
450	130
525	130
600	140
675	140
750	150
825	170
900	170
975	180

MINIMUM DEPTH OF TOP AND BOTTOM SLABS SHALL BE $\frac{D}{12} + 50$

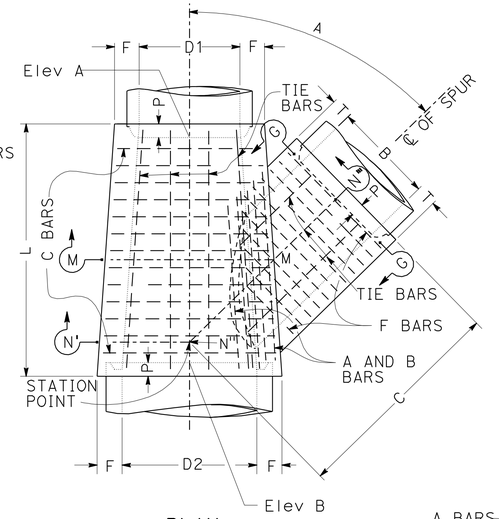

PLAN

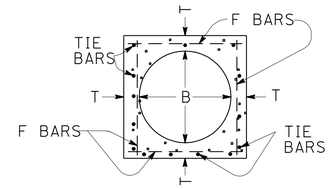

SECTION G-G

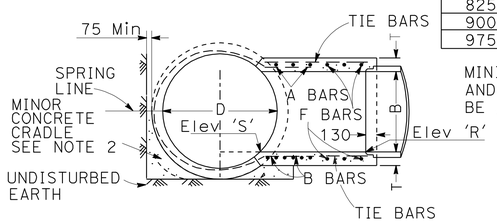

SECTION Z-Z

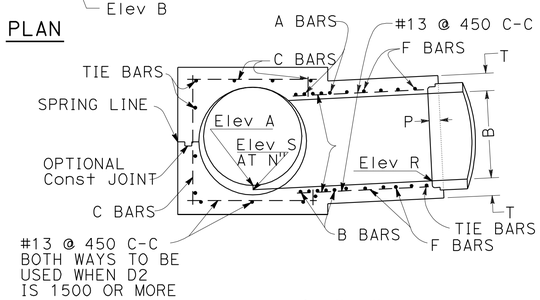

SECTION N'-N"-N"
PROJECTED ON M-M-N"

NOTES:

1. VALUES FOR A, B, C, D, L, Elev R AND Elev S SHOWN ON DRAINAGE PLANS OR PROFILES. IF B EXCEEDS 3/4D, DO NOT USE THIS DETAIL.
2. PIPE SHALL BE CRADLED IN CONCRETE EXTENDING LONGITUDINALLY TO 300 BEYOND LIMITS OF 'L'. H=1/2 OUTSIDE DIAMETER OF PIPE PLUS 80 AS A MINIMUM. CRADLE MAY BE OMITTED ON SIDE OPPOSITE LATERAL INLET WHEN CONSTRUCTED IN CONNECTION WITH EXISTING PIPE STORM DRAIN.
3. A AND B BARS SHALL BE CARRIED TO A POINT NOT LESS THAN J DISTANCE FROM CENTER LINE. J= (7D/12)+150.
4. TRANSVERSE REINFORCEMENT IN PIPE SHALL BE CUT IN CENTER OF OPENING AND BENT TO UNIFORM DISTANCE FROM TOP AND BOTTOM OF JUNCTION STRUCTURE.
5. OPTIONAL CONSTRUCTION: WHEN JUNCTION STRUCTURE #1 IS SPECIFIED ON DRAINAGE PLAN, THE CONTRACTOR SHALL HAVE THE OPTION OF CONSTRUCTING JUNCTION STRUCTURE #2, IN WHICH CASE CONSTRUCTION DATA WILL BE FURNISHED BY THE ENGINEER.
6. REINFORCING STEEL SHALL BE 40 CLEAR FROM FACE OF CONCRETE UNLESS OTHERWISE SHOWN.
7. STEEL SCHEDULE: A AND B BARS - #16 @ 75 C-C
   F BARS - #13 @ 150 C-C
   TIE BARS - #13 @ 450 C-C
   F BARS AND TIE BARS SHALL BE PLACED IN ALL FOUR FACES
8. MONOLITHIC ARCH: WHEN JUNCTION STRUCTURE #1 IS SPECIFIED WITH REINFORCED MONOLITHIC ARCH STORM DRAIN, VALUE 'D' SHALL REFER TO THE CLEAR SPAN OF ARCH. REINFORCING STEEL SHALL BE CUT AND BENT INTO JUNCTION STRUCTURE THE SAME AS FOR PIPE. CONCRETE CRADLE UNDER REINFORCED MONOLITHIC ARCH IS NOT REQUIRED.
9. FLOOR OF STRUCTURE SHALL BE STEEL-TROWELED TO SPRING LINE.
10. ELEVATION 'S' APPLIES AT CENTER OF MAIN LINE ON PROLONGATION OF INVERT SPUR.

JUNCTION STRUCTURE No.1 (JS NO 1)
DRAINAGE DETAIL No.7

NOTES:

1. VALUES FOR A, B, C, D1, D2, L, Elev A, Elev B, Elev R AND Elev S ARE SHOWN ON DRAINAGE PLANS OR PROFILES.
2. EMBEDMENT 'P' SHALL BE 130 FOR PIPE DIAMETERS 300 TO 2400 AND 200 FOR PIPE DIAMETERS 2550 TO 3600.
3. FLOOR OF STRUCTURE SHALL BE STEEL TROWELED TO SPRING LINE.
4. REINFORCEMENT STEEL SHALL BE 40 CLEAR FROM FACE OF CONCRETE UNLESS OTHERWISE SHOWN. A AND B BARS NEED NOT BE LONGER THAN THE OUTSIDE DIAGONAL WIDTH OF THE LATERAL SPUR.
5. STEEL SCHEDULE:

Dia B OR D2	A OR B BARS	C OR F BARS
300 TO 975	#16 @ 75	#13 @ 150
1050 TO 2100	#19 @ 75	#16 @ 150
2250 TO 3600	#22 @ 75	#19 @ 150
TIE BARS - #13 @ 450 C-C		

   F BARS, C BARS AND TIE BARS SHALL BE PLACED IN ALL FOUR FACES
6. ELEVATION S APPLIES AT CENTER OF MAIN LINE ON PROLONGATION OF INVERT OF SPUR.
7. JUNCTION STRUCTURE SHALL BE POURED IN ONE CONTINUOUS OPERATION, EXCEPT THAT THE CONTRACTOR SHALL HAVE THE OPTION OF PLACING AT THE SPRING LINE A CONSTRUCTION JOINT WITH A LONGITUDINAL KEYWAY.
8. LATERALS - WHERE LATERALS ENTER BOTH SIDES OF STRUCTURE, THEY SHALL BE DESIGNATED ON THE DRAINAGE PLAN AS A RIGHT OR LEFT, FACING IN THE DIRECTION OF STATIONING.
9. CONTRACTOR SHALL ASSURE THAT WHERE METAL PIPE WITH PAVED INVERT JOINS THE JUNCTION STRUCTURE, THE JUNCTION STRUCTURE IS POURED MONOLITHICALLY TO MATCH THE FINISHED INVERT SURFACE OF THE JOINING PIPE.

JUNCTION STRUCTURE No.2 (JS NO 2)
DRAINAGE DETAIL No.8

TABLE FOR DIMENSIONS	
D2 OR B	F OR T
300	110
375	110
450	120
525	130
600	140
675	140
750	160
825	160
900	170
975	180
1050	190
1125	200
1200	210
1275	220
1350	230
1425	240
1500	250
1575	260
1650	260
1725	280
1800	280
1950	300
2100	320
2250	340
2400	360
2550	400
2700	410
2850	420
3000	440
3150	440
3300	450
3450	450
3600	460

ALL DIMENSIONS ARE IN MILLIMETERS UNLESS OTHERWISE SHOWN

DRAINAGE DETAILS
NO SCALE **DD-4**

REVISED BY	DATE REVISED
ROBERT WONG	NORMAN SUYDAM
CALCULATED-DESIGNED BY	CHECKED BY
NORMAN SUYDAM	

CONSULTANT FUNCTIONAL SUPERVISOR

STATE OF CALIFORNIA - DEPARTMENT OF TRANSPORTATION
Caltrans

LAST REVISION 11-09-09 | DATE PLOTTED => 19-OCT-2010 | TIME PLOTTED => 15:55

Dist	COUNTY	ROUTE	KILOMETER POST TOTAL PROJECT	SHEET No.	TOTAL SHEETS
08	Riv	60,215	R19.7/21.9, R61.3/62.7	125	594

REGISTERED CIVIL ENGINEER 1-14-10 DATE

6-28-10
PLANS APPROVAL DATE

REGISTERED PROFESSIONAL ENGINEER ROBERT WONG No. C64734 Exp.06/30/11 CIVIL STATE OF CALIFORNIA

THE STATE OF CALIFORNIA OR ITS OFFICERS OR AGENTS SHALL NOT BE RESPONSIBLE FOR THE ACCURACY OR COMPLETENESS OF ELECTRONIC COPIES OF THIS PLAN SHEET.

LAN ENGINEERING CORP
1887 BUSINESS CENTER DR
SUITE 6
SAN BERNARDINO, CA 92408

RIVERSIDE COUNTY
TRANSPORTATION COMMISSION
4080 LEMON STREET
RIVERSIDE, CA 92502

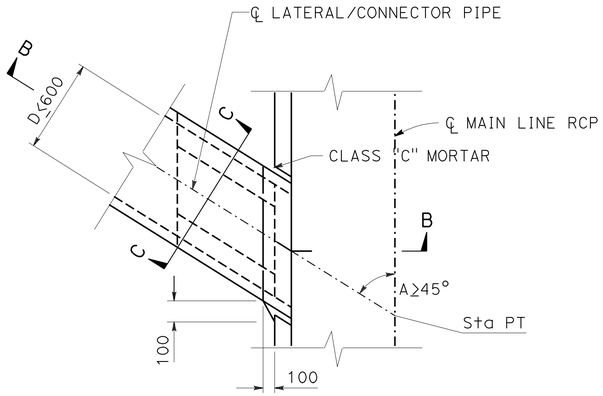

CASE 1
PLAN

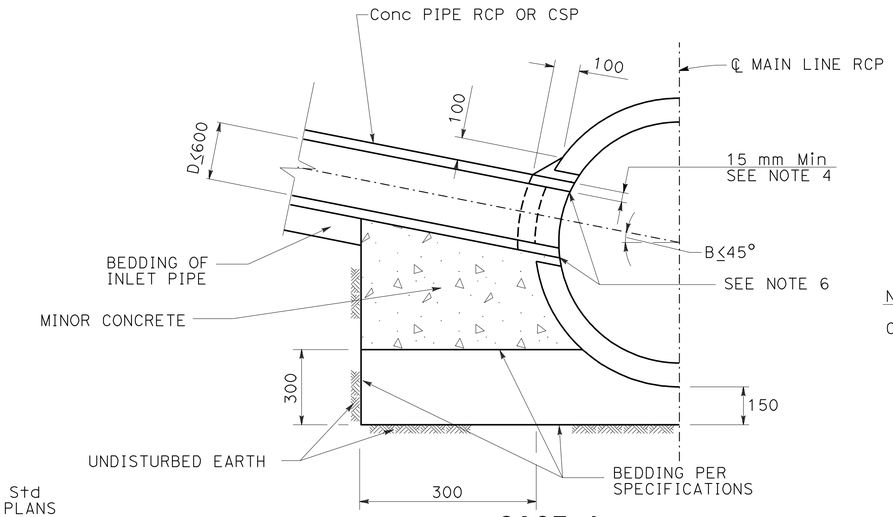

CASE 1
SECTION B-B

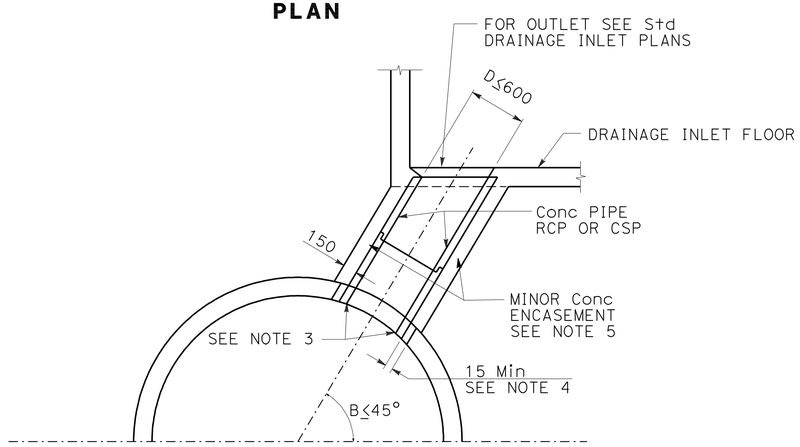

CASE 2
(SEE NOTES 9 & 10)

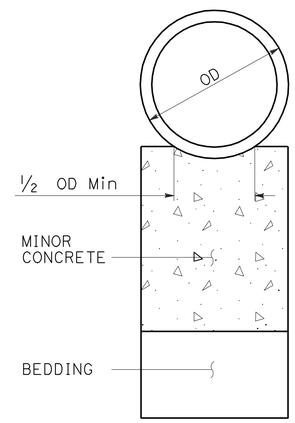

CASE 1
SECTION C-C

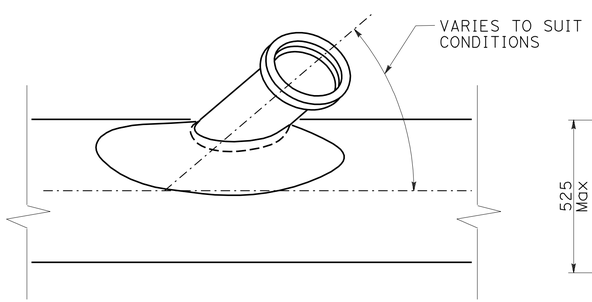

PLAN

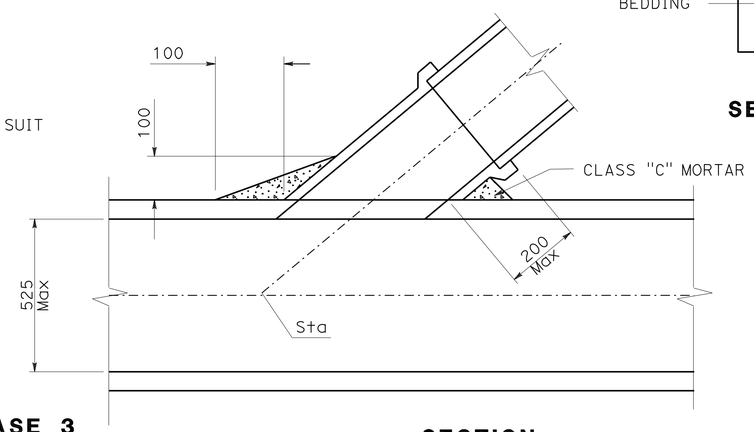

CASE 3
SADDLE CONNECTION

SECTION

JUNCTION STRUCTURE No. 3 (JS No.3)
DRAINAGE DETAIL No.9

NOTES:

CASE 1 AND CASE 2

1. IF ANGLE A IS LESS THAN 45° OR IF D IS LARGER THAN 600 mm, THEN ANOTHER STANDARD STRUCTURE SHALL BE SPECIFIED.
2. THE OUTSIDE DIAMETER OF THE INLET PIPE SHALL NOT EXCEED ONE-HALF THE INSIDE DIAMETER OF THE MAIN LINE.
3. THE INLET PIPE SHALL ENTER THE MAIN LINE RADIALLY. IF THE INLET PIPE CANNOT ENTER RADIALLY, THEN ANOTHER STANDARD STRUCTURE SHALL BE SPECIFIED.
4. THE SIZE OF THE OPENING INTO THE MAIN LINE SHALL BE THE OUTSIDE DIAMETER OF THE INLET PIPE PLUS 30 mm MINIMUM TO 75 mm MAXIMUM.
5. ALL CONNECTOR PIPES FOR CASE 2 SHALL BE ENCASED IN CONCRETE IF LAID WITHIN THE MAIN LINE EXCAVATED TRENCH OR IF LAID ON FILL WHICH HAS NOT BEEN DENSIFIED.
6. BURN OR CHIP END OF CONNECTOR PIPE FLUSH WITH INNER SURFACE OF MAIN LINE. ROUND EDGE OF CONCRETE PIPE OR RCP.
7. ALL CSP AND FITTINGS SHALL BE GALVANIZED.
8. STATION SPECIFIED ON THE PROJECT DRAWINGS APPLIES AT THE INTERSECTION OF THE INSIDE WALL OF MAIN LINE AND THE CENTER LINE OF INLET PIPE.
9. CASE 2 SHALL NOT BE USED TO CONNECT TO THE FLOOR OF A GRATING CATCH BASIN WHERE THE GRATE WILL BE SUBJECT TO VEHICLE TRAFFIC.
10. FOR CASE 2, NOT MORE THAN 3.5 m OF INLET PIPE SHALL BE LOCATED WITHIN THE MAIN LINE EXCAVATED TRENCH.

CASE 3

11. CONNECTIONS TO PIPES 525 mm OR LESS IN DIAMETER WITHOUT JUNCTION STRUCTURES OR PRECAST Y BRANCHES SHALL BE MADE WITH SADDLES.
12. THE OUSIDE DIAMETER OF THE INLET PIPE SHALL NOT EXCEED ONE-HALF THE INSIDE DIAMETER OF THE MAIN LINE.
13. TRIM OR CUT SADDLE TO FIT SNUGLY OVER THE OUTSIDE OF THE MAIN LINE SO ITS AXIS WILL BE ON THE LINE AND GRADE OF THE CONNECTOR PIPE.
14. THE OPENING INTO THE PIPE SHALL BE CUT AND TRIMMED TO FIT THE SADDLE SO THAT NO PART WILL PROJECT WITHIN THE BORE OF THE SADDLE PIPE.
15. THE CONNECTOR PIPE SHALL BE SUPPORTED AS SHOWN IN CASES 1 AND 2.

ALL DIMENSIONS ARE IN MILLIMETERS UNLESS OTHERWISE SHOWN

DRAINAGE DETAILS

NO SCALE **DD-5**

STATE OF CALIFORNIA - DEPARTMENT OF TRANSPORTATION
Caltrans

CONSULTANT FUNCTIONAL SUPERVISOR: NORMAN SUYDAM
CALCULATED-DESIGNED BY: ROBERT WONG
CHECKED BY: NORMAN SUYDAM
REVISED BY / DATE REVISED

LAST REVISION 11-09-09
DATE PLOTTED => 19-OCT-2010
TIME PLOTTED => 15:55

Dist	COUNTY	ROUTE	KILOMETER POST TOTAL PROJECT	SHEET No.	TOTAL SHEETS
08	Riv	60,215	R19.7/21.9, R61.3/62.7	126	594

Caltrans Metric

REGISTERED CIVIL ENGINEER 1-14-10 DATE

6-28-10
PLANS APPROVAL DATE

REGISTERED PROFESSIONAL ENGINEER ROBERT WONG No. C64734 Exp.06/30/11 CIVIL STATE OF CALIFORNIA

THE STATE OF CALIFORNIA OR ITS OFFICERS OR AGENTS SHALL NOT BE RESPONSIBLE FOR THE ACCURACY OR COMPLETENESS OF ELECTRONIC COPIES OF THIS PLAN SHEET.

LAN ENGINEERING CORP
1887 BUSINESS CENTER DR
SUITE 6
SAN BERNARDINO, CA 92408

RIVERSIDE COUNTY
TRANSPORTATION COMMISSION
4080 LEMON STREET
RIVERSIDE, CA 92502

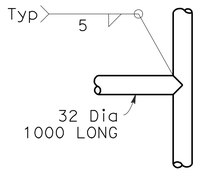

DETAIL "A"
ROTATE 90°

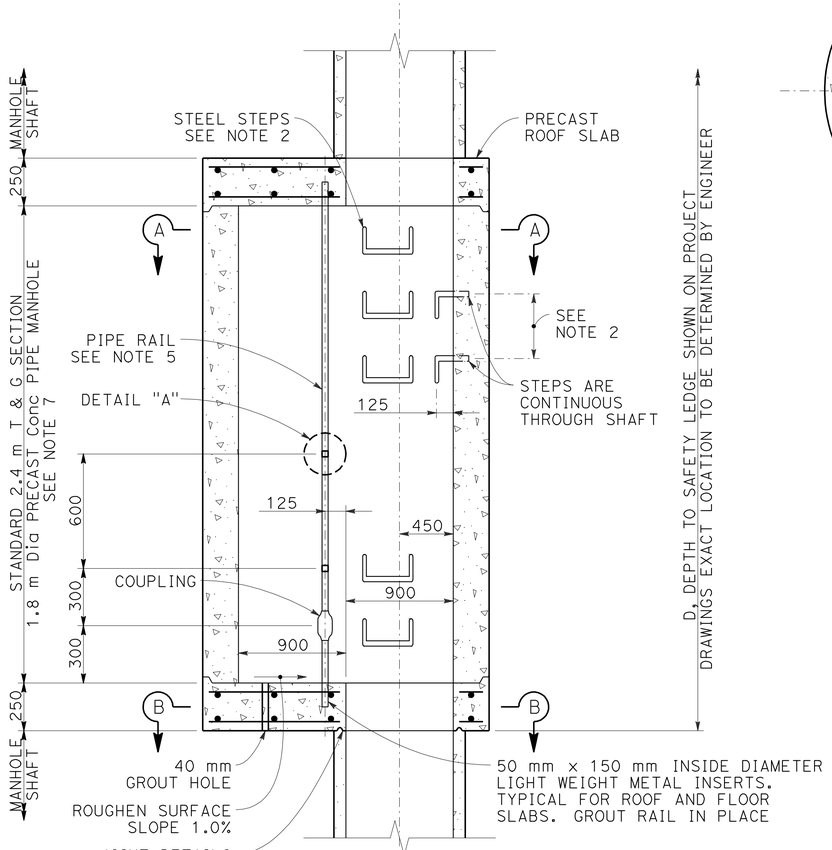

VERTICAL SECTION

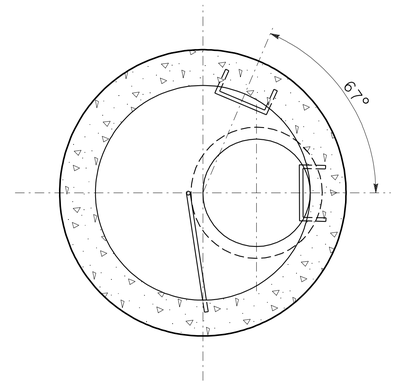

SECTION A-A

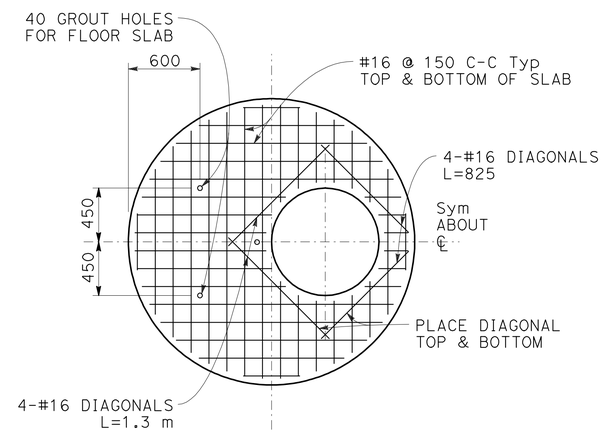

SECTION B-B
REINFORCEMENT DETAILS
FOR FLOOR AND ROOF SLABS

NOTES:

1. MANHOLE SHAFT SAFETY LEDGE WILL BE NOTED ON THE PROJECT DRAWINGS WHEN REQUIRED. IT IS TO BE CONSTRUCTED IN DEEP MANHOLE SHAFT 6 m OR GREATER IN DEPTH.
2. STEPS SHALL CONFORM TO CALTRANS Std PLAN D74C AND SHALL BE ANCHORED 100 mm IN THE WALL OF THE STRUCTURE. STEPS SHALL BE PLACED TO MATCH SPACING ON THE MANHOLE SHAFT.
3. REINFORCEMENT SHALL BE PER ASTM A 615M, GRADE 300 AND SHALL TERMINATE 50 mm CLEAR OF CONCRETE SURFACES UNLESS OTHERWISE SHOWN.
4. GROUT HOLES, PIPE AND FITTINGS SHALL BE PROVIDED IN THE FLOOR SLAB. PRESSURE GROUTING SHALL BE USED TO FILL VOIDS AND TO SECURE UNIFORM BEARING. THE GROUT SHALL BE NEAT CEMENT GROUT AND GROUTING PRESSURES SHALL BE AS DETERMINED IN THE FIELD BY THE ENGINEER.
5. PIPE RAIL SHALL BE FABRICATED OF 32 mm STANDARD GALVINIZED PIPE COMPOSED OF TWO SECTION 2.25 m AND 450 mm IN LENGTH JOINED BY A GALVINIZED COUPLING. THE COUPLING SHALL BE THREADED A MINIMUM OF 50 mm ON EACH SIDE OF PIPE LENGTH.
6. ROOF AND FLOOR SLABS SHALL BE PRECAST AND KEYED FOR REINFORCED CONCRETE PIPE SECTIONS AS SHOWN. ALL JOINTS SHALL BE FILLED WITH CLASS C MORTAR AND NEATLY POINTED OR WIPED ON THE INSIDE.
7. 1.8 m Dia PRECAST Conc PIPE MANHOLE SHALL BE PROVIDED WITH TWO CIRCULAR CAGES OF REINFORCEMENT.
8. THE FOLLOWING DRAINAGE DETAILS ARE INCORPORATED HEREIN:
   STANDARD MANHOLE SHAFT
   STEEL STEP (SEE CALTRANS Std PLAN D74C).

MANHOLE SHAFT SAFETY LEDGE
DRAINAGE DETAIL No.10

ALL DIMENSIONS ARE IN
MILLIMETERS UNLESS OTHERWISE SHOWN

DRAINAGE DETAILS
NO SCALE **DD-6**

REVISED BY	DATE REVISED

ROBERT WONG — CALCULATED-DESIGNED BY
NORMAN SUYDAM — CHECKED BY
NORMAN SUYDAM — CONSULTANT FUNCTIONAL SUPERVISOR

STATE OF CALIFORNIA - DEPARTMENT OF TRANSPORTATION
Caltrans

LAST REVISION 11-09-09 | DATE PLOTTED => 19-OCT-2010 | TIME PLOTTED => 15:55

Dist	COUNTY	ROUTE	KILOMETER POST TOTAL PROJECT	SHEET No.	TOTAL SHEETS
08	Riv	60,215	R19.7/21.9, R61.3/62.7	127	594

Caltrans Metric

REGISTERED CIVIL ENGINEER 1-14-10 DATE

6-28-10
PLANS APPROVAL DATE

REGISTERED PROFESSIONAL ENGINEER ROBERT WONG No. C64734 Exp.06/30/11 CIVIL STATE OF CALIFORNIA

THE STATE OF CALIFORNIA OR ITS OFFICERS OR AGENTS SHALL NOT BE RESPONSIBLE FOR THE ACCURACY OR COMPLETENESS OF ELECTRONIC COPIES OF THIS PLAN SHEET.

LAN ENGINEERING CORP
1887 BUSINESS CENTER DR
SUITE 6
SAN BERNARDINO, CA 92408

RIVERSIDE COUNTY
TRANSPORTATION COMMISSION
4080 LEMON STREET
RIVERSIDE, CA 92502

NOTES: FOR GD-1

1. "H" IS THE DIFFERENCE IN ELEVATION BETWEEN THE OUTLET PIPE FLOW LINE AND THE FLOW LINE OF THE GRATES.
2. STEPS - NONE REQUIRED WHEN "H" IS 1.1 m OR LESS. INSTALL ONE STEP 0.4 m ± ABOVE FLOOR WHEN 'H' IS MORE THAN 1.1 m AND LESS THAN 1.5 m. WHERE 'H' IS MORE THAN 1.5 m STEPS SHALL BE EVENLY SPACED @ 0.3 m ± INTERVALS FROM 0.4 m ± ABOVE FLOOR TO WITHIN 0.3 m ± OF THE TOP OF THE BOX. PLACE STEPS IN WALL WITHOUT PIPE OPENINGS. SEE Std PLAN D74C FOR STEP DETAIL.
3. PIPE(S) CAN BE PLACED IN ANY WALL.
4. REINFORCING STEEL IN WALLS SHALL BE #16 @ 300 C-C EACH WAY AND PLACED 38 mm CLEAR TO INSIDE OF BOX.
5. BAR MAY BE ROTATED AS NECESSARY TO CLEAR OPENING. WHERE "L" IS 150 mm OR LESS, BAR MAY BE OMITTED.

TABLE A
MISCELLANEOUS IRON & STEEL

INLET TYPE	GRATE TYPE	WEIGHT
GD-1	600 - 12	263
	600 - 10C	172
	600 - 10S	196
	600 - 12X	206
	600 - 13	159

TABLE B

H	T
2.5 m OR LESS	150
2.51 m TO 6.0 m	200

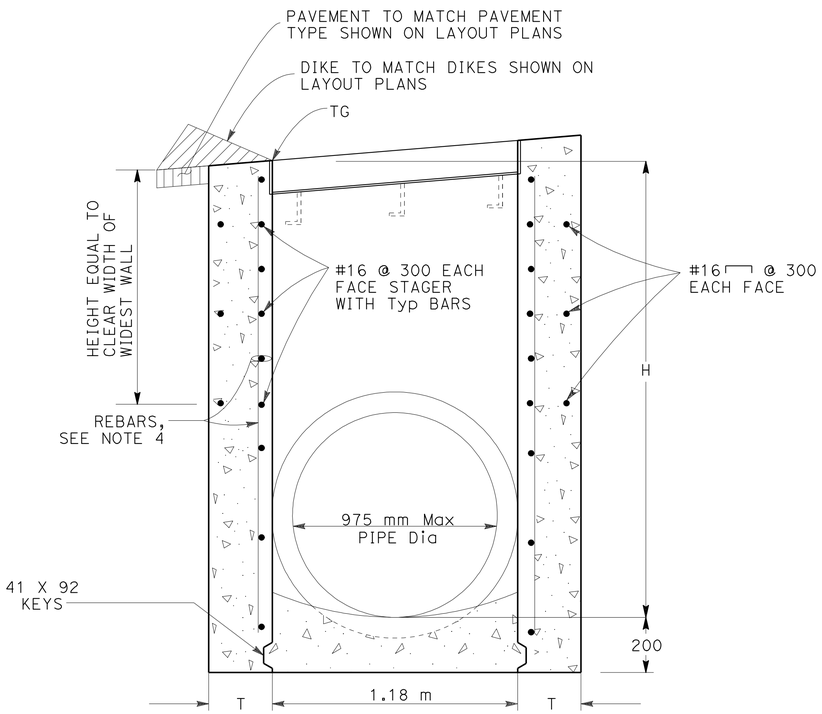

SECTION A-A
(FOR PIPE DIAMETERS 975 mm OR LESS)

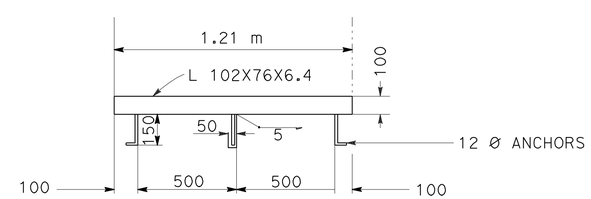

ANCHOR PLACEMENT

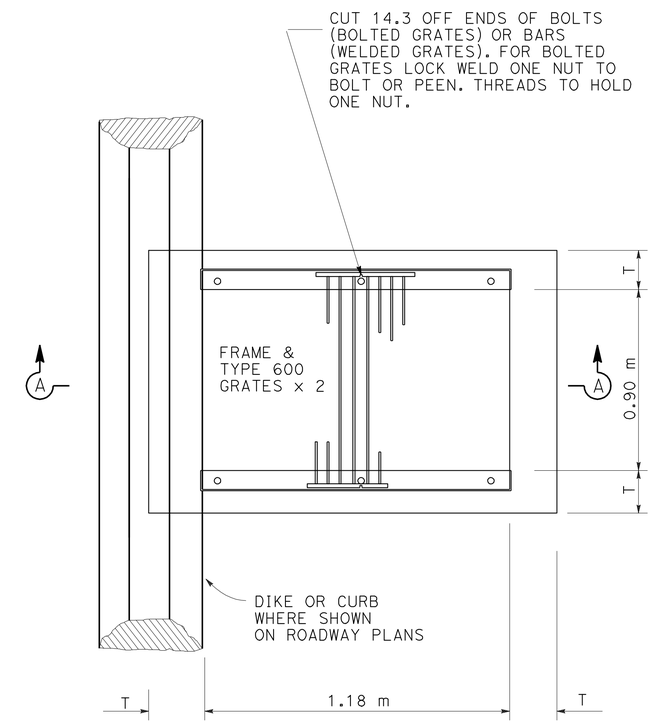

PLAN
GD-1 INLET

ALL DIMENSIONS ARE IN MILLIMETERS UNLESS OTHERWISE SHOWN

GD1-INLET DETAILS
DRAINAGE DETAIL No.11

DRAINAGE DETAILS

NO SCALE **DD-7**

STATE OF CALIFORNIA - DEPARTMENT OF TRANSPORTATION
Caltrans

CONSULTANT FUNCTIONAL SUPERVISOR: NORMAN SUYDAM
CALCULATED-DESIGNED BY: ROBERT WONG
CHECKED BY: NORMAN SUYDAM
REVISED BY / DATE REVISED

LAST REVISION 11-09-09 | DATE PLOTTED => 19-OCT-2010 | TIME PLOTTED => 15:56

Dist	COUNTY	ROUTE	KILOMETER POST TOTAL PROJECT	SHEET No.	TOTAL SHEETS
08	Riv	60,215	R19.7/21.9, R61.3/62.7	128	594

Robert Wong 1-14-10
REGISTERED CIVIL ENGINEER DATE

6-28-10
PLANS APPROVAL DATE

REGISTERED PROFESSIONAL ENGINEER ROBERT WONG No. C64734 Exp.06/30/11 CIVIL STATE OF CALIFORNIA

THE STATE OF CALIFORNIA OR ITS OFFICERS OR AGENTS SHALL NOT BE RESPONSIBLE FOR THE ACCURACY OR COMPLETENESS OF ELECTRONIC COPIES OF THIS PLAN SHEET.

LAN ENGINEERING CORP
1887 BUSINESS CENTER DR
SUITE 6
SAN BERNARDINO, CA 92408

RIVERSIDE COUNTY
TRANSPORTATION COMMISSION
4080 LEMON STREET
RIVERSIDE, CA 92502

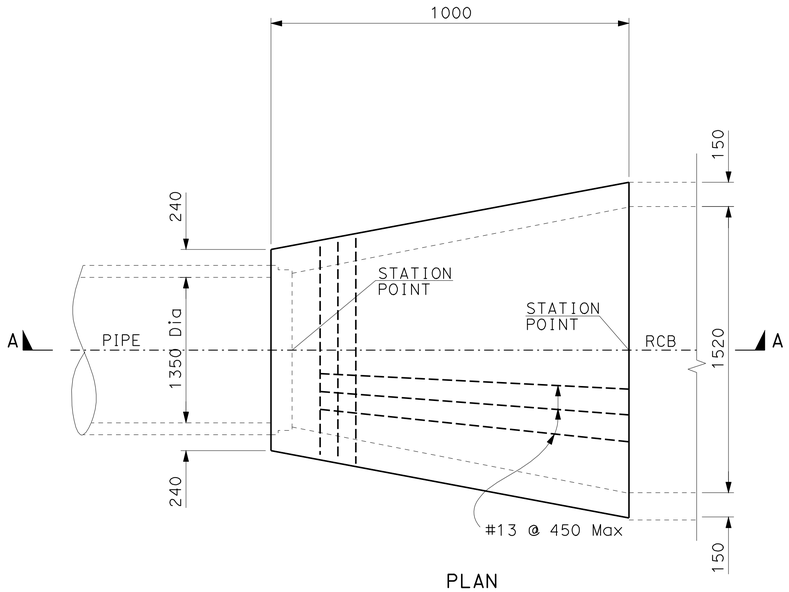

PLAN

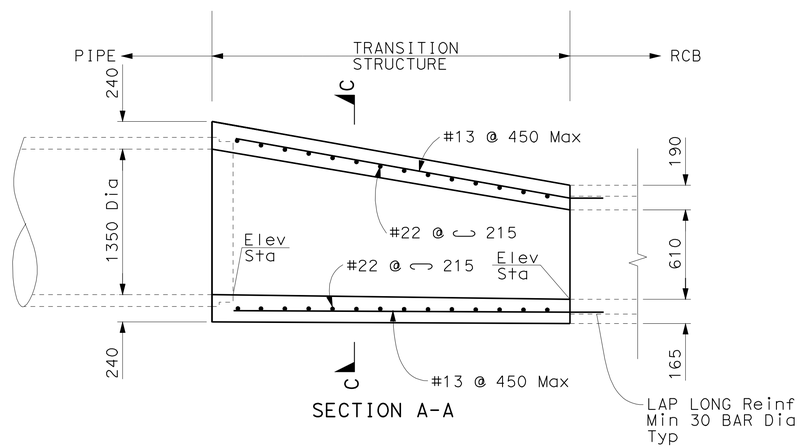

SECTION A-A

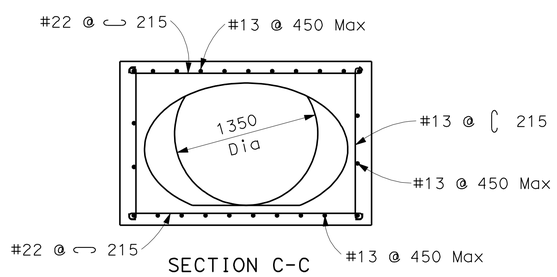

SECTION C-C

NOTES:

1. FLOOR OF TRANSITION STRUCTURE SHALL BE STEEL TROWELED TO SPRING LINE.
2. BODY OF TRANSITION STRUCTURE SHALL BE POURED IN ONE CONTINUOUS OPERATION EXCEPT THAT A CONSTRUCTION JOINT WITH A LONGITUDINAL KEY WAY MAY BE PLACED AT SPRING LINE.
3. REINFORCEMENT SHALL CONFORM TO ASTM A 615M, GRADE 300 AND SHALL TERMINATE 50 mm CLEAR OF CONCRETE SURFACES UNLESS OTHERWISE SHOWN.
4. fc′ = 28 MPa AT 28 DAYS.
5. MAIN TRANSVERSE REINFORCING SHALL BE PLACED PERPENDICULAR TO THE CENTERLINE OR, FOR CULVERTS, RADIAL. AT CURVED CULVERTS SPACING OF TRANSVERSE Reinf IS MEASURED ALONG CENTERLINE, SPACING OF VERTICAL WALL Reinf IS MEASURED ALONG EACH WALL. HOOKS MAY BE ROTATED AS NEEDED FOR CLEARANCE.
6. AT TRANSITION SECTIONS NUMBER OF LONGITUDINAL BARS ARE CONSTANT AND GOVERNED BY SPACING AT END WITH LARGER DIMENSION.

PIPE TO RCB
TRANSITION STRUCTURE
DRAINAGE DETAIL No.12

17 f & 17 h

ALL DIMENSIONS ARE IN MILLIMETERS UNLESS OTHERWISE SHOWN

DRAINAGE DETAILS

NO SCALE **DD-8**

STATE OF CALIFORNIA - DEPARTMENT OF TRANSPORTATION
Caltrans

CONSULTANT FUNCTIONAL SUPERVISOR: NORMAN SUYDAM
CALCULATED-DESIGNED BY: ROBERT WONG
CHECKED BY: NORMAN SUYDAM
REVISED BY
DATE REVISED

LAST REVISION 11-09-09
DATE PLOTTED => 19-OCT-2010
TIME PLOTTED => 15:56

Dist	COUNTY	ROUTE	KILOMETER POST TOTAL PROJECT	SHEET No.	TOTAL SHEETS
08	Riv	60,215	R19.7/21.9, R61.3/62.7	129	594

Caltrans Metric

REGISTERED CIVIL ENGINEER — DATE 1-14-10

PLANS APPROVAL DATE 6-28-10

REGISTERED PROFESSIONAL ENGINEER — ROBERT WONG No. C64734 Exp.06/30/11 CIVIL — STATE OF CALIFORNIA

THE STATE OF CALIFORNIA OR ITS OFFICERS OR AGENTS SHALL NOT BE RESPONSIBLE FOR THE ACCURACY OR COMPLETENESS OF ELECTRONIC COPIES OF THIS PLAN SHEET.

LAN ENGINEERING CORP
1887 BUSINESS CENTER DR
SUITE 6
SAN BERNARDINO, CA 92408

RIVERSIDE COUNTY
TRANSPORTATION COMMISSION
4080 LEMON STREET
RIVERSIDE, CA 92502

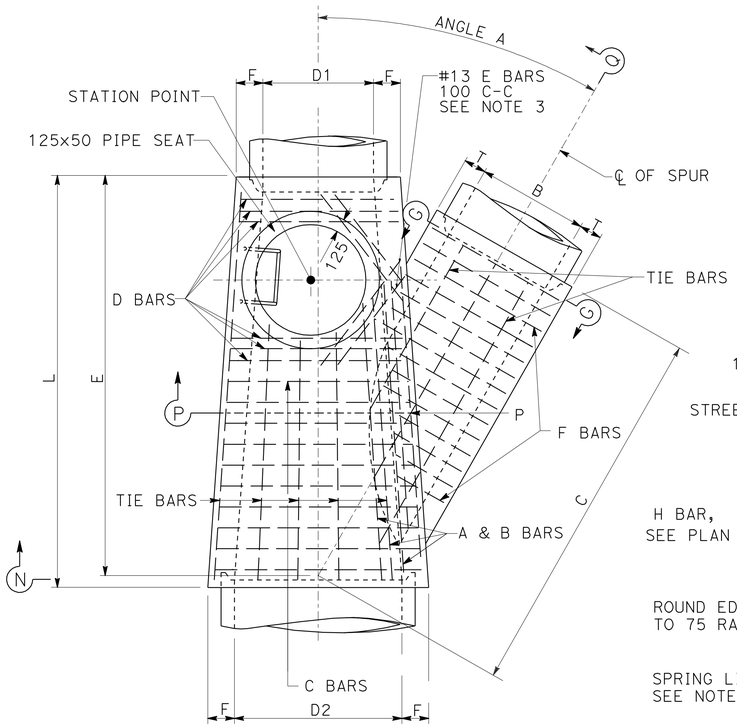

PLAN
(SHAFT NOT SHOWN)

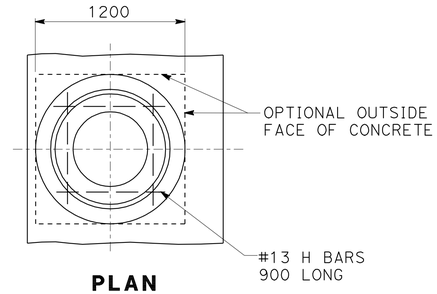

PLAN
(RING AND COVER NOT SHOWN)

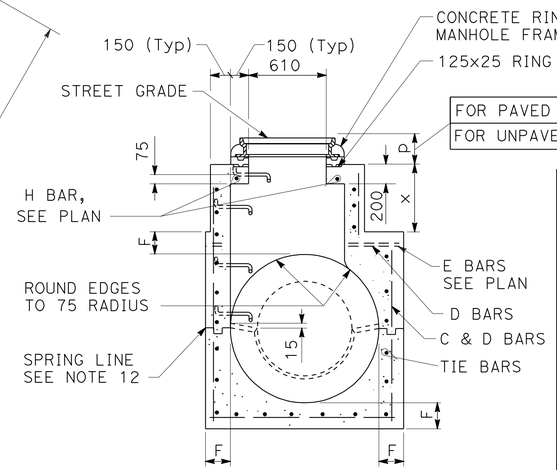

DETAIL 'M'
(SEE NOTE 5)

	Max	Min
FOR PAVED STREETS	282	217
FOR UNPAVED STREETS	410	380

TABLE OF VALUES FOR F AND T				
D2	F		B	T
300	100		300	100
375	110		375	110
450	115		450	115
525	125		525	125
600	135		600	135
675	140		675	140
750	150		750	150
825	160		825	160
900	165		900	165
975	180		975	180
1050	190		1050	190
1125	195		1125	195
1200	205		1200	205
1275	215		1275	215
1350	230		1350	230
1425	235		1425	235
1500	240		1500	240
1575	255		1575	255
1650	260		1650	260
1725	275		1725	275
1800	280		1800	280
1950	300		1950	300
2100	320		2100	320
2250	335		2250	335
2400	355		2400	355
2550	395		2550	395
2700	405		2700	405
2850	420		2850	420
3000	430		3000	430
3150	430		3150	430
3300	445		3300	445
3450	445		3450	445
3600	455		3600	455

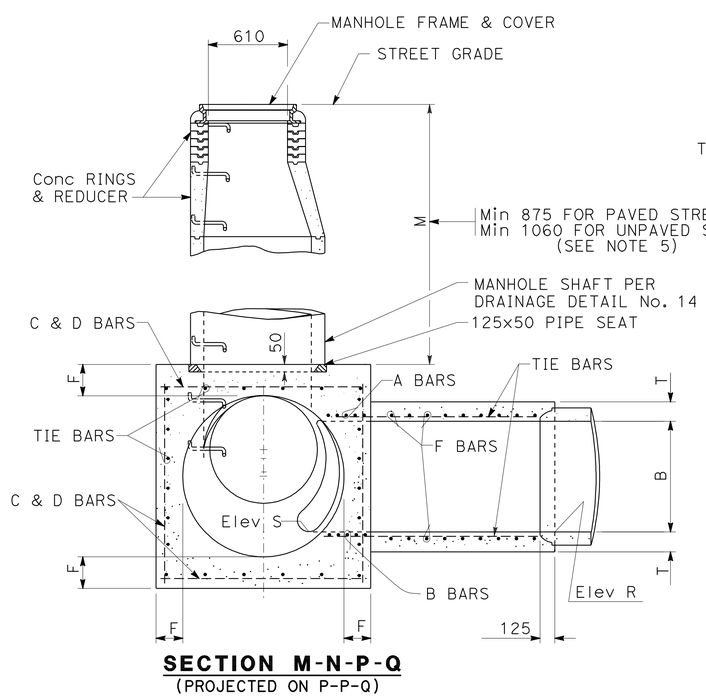

SECTION M-N-P-Q
(PROJECTED ON P-P-Q)

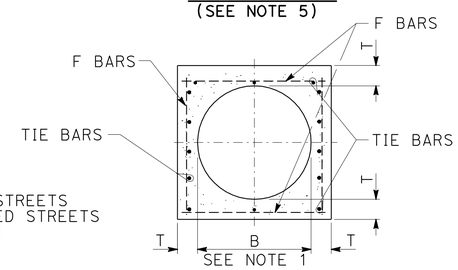

SECTION G-G

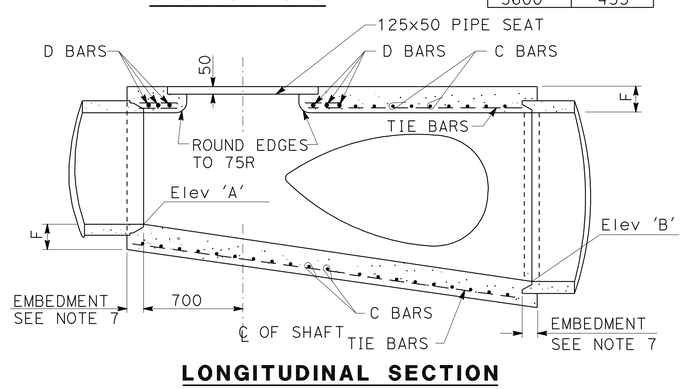

LONGITUDINAL SECTION

NOTES:

1. VALUES for 'A', 'B', 'C', 'D1', 'D2', 'E', 'L', 'M', OR 'P' AND 'X', Elev 'R', Elev 'S', Elev 'A', AND Elev 'B' ARE SHOWN ON DRAINAGE PROFILE.
2. LATERALS: IF LATERALS ENTER ON BOTH SIDES OF MANHOLE,ACCESS SHAFT SHALL BE LOCATED ON SIDE RECEIVING THE SMALLER LATERAL. LATERALS SHALL BE DESIGNATED ON DRAINAGE PLAN AS RIGHT OR LEFT, FACING IN THE DIRECTION OF STATIONING.
3. CENTER OF MANHOLE SHAFT SHALL BE LOCATED OVER CENTERLINE OF MAIN STORM DRAIN WHEN D1 IS 1200 OR LESS, IN WHICH CASE PLACE 4E BARS SYMMETRICALLY AROUND SHAFT AT 45° WITH CENTER LINE.
4. LENGTH L SHOWN ON DRAINAGE PLAN.
5. DETAIL 'M': WHEN DEPTH OF MANHOLE FROM STREET GRADE TO TOP OF BOX IS LESS THAN 875 FOR PAVED STREETS OR 1050 FOR UNPAVED STREETS, CONSTRUCT MONOLITHIC SHAFT AS PER DETAIL 'M'. WHEN DIAMETER 'D1'IS 1200 OR LESS, CENTER OF SHAFT SHALL BE LOCATED AS PER NOTE 3.
6. REINFORCING STEEL SHALL BE ROUND, DEFORMED, STRAIGHT BARS 40 CLEAR FROM FACE OF CONCRETE UNLESS SHOWN OTHERWISE. TIE BARS SHALL BE #13 & SPACED 450 ON CENTERS OR CLOSER IN ALL FOUR FACES. F BARS AND C BARS SHALL BE PLACED IN ALL FOUR FACES. STEEL SCHEDULE DETAILED BELOW.
7. EMBEDMENT SHALL BE 125 FOR D2 = 2400 OR LESS & 200 FOR D2 OVER 2400.
8. UNLESS OTHERWISE SHOWN, STEPS SHALL BE PLACED 300 ON CENTERS. THE LOWEST STEP SHALL NOT BE MORE THAN 400 ABOVE THE LEDGE AT THE SIDE OF THE MANHOLE FLOOR.
9. RINGS, REDUCER, AND PIPE FOR ACCESS SHAFT SHALL BE SEATED IN CLASS C CEMENT MORTAR AND NEATLY PAINTED OR WIPED INSIDE SHAFT.
10. STATIONS OF MANHOLES SHOWN ON DRAINAGE PLAN APPLY AT CENTER OF MANHOLE SHAFT.
11. FLOOR OF MANHOLE SHALL BE STEEL TROWELED TO SPRING LINE.
12. BODY OF MANHOLE, INCLUDING SPUR, SHALL BE POURED IN ONE CONTINUOUS OPERATION. EXCEPT THAT THE CONTRACTOR SHALL HAVE THE OPTION OF PLACING AT SPRING LINE A CONSTRUCTION JOINT WITH LONGITUDINAL KEYWAY.
13. ELEVATION 'S' APPLIES AT CENTER OF MAIN LINE ON PROLONGATION INVERT OF SPUR.
14. MANHOLE FRAME AND COVER PER STANDARD PLAN B7-11 DETAIL 'U45'.
15. STEP DETAIL PER STANDARD PLAN D74C.

STEEL SCHEDULE			
DIA B OR D2	A & B BARS	C & F BARS	D BARS
300 TO 975	#16 @ 75	#13 @ 150	#13 @ 75
1050 TO 2100	#19 @ 75	#16 @ 150	#16 @ 75
2250 TO 3600	#22 @ 75	#19 @ 150	#19 @ 75

MANHOLE NO 4
DRAINAGE DETAIL No.13

ALL DIMENSIONS ARE IN MILLIMETERS UNLESS OTHERWISE SHOWN

DRAINAGE DETAILS

NO SCALE **DD-9**

REVISED BY	DATE REVISED
ROBERT WONG	NORMAN SUYDAM

CALCULATED-DESIGNED BY: NORMAN SUYDAM
CHECKED BY:
CONSULTANT FUNCTIONAL SUPERVISOR: NORMAN SUYDAM

STATE OF CALIFORNIA - DEPARTMENT OF TRANSPORTATION
Caltrans

LAST REVISION 11-09-09
DATE PLOTTED => 19-OCT-2010
TIME PLOTTED => 15:56

Dist	COUNTY	ROUTE	KILOMETER POST TOTAL PROJECT	SHEET No.	TOTAL SHEETS
08	Riv	60,215	R19.7/21.9, R61.3/62.7	130	594

Robert Wong 1-14-10
REGISTERED CIVIL ENGINEER DATE

6-28-10
PLANS APPROVAL DATE

REGISTERED PROFESSIONAL ENGINEER ROBERT WONG No. C64734 Exp.06/30/11 CIVIL STATE OF CALIFORNIA

THE STATE OF CALIFORNIA OR ITS OFFICERS OR AGENTS SHALL NOT BE RESPONSIBLE FOR THE ACCURACY OR COMPLETENESS OF ELECTRONIC COPIES OF THIS PLAN SHEET.

LAN ENGINEERING CORP
1887 BUSINESS CENTER DR
SUITE 6
SAN BERNARDINO, CA 92408

RIVERSIDE COUNTY
TRANSPORTATION COMMISSION
4080 LEMON STREET
RIVERSIDE, CA 92502

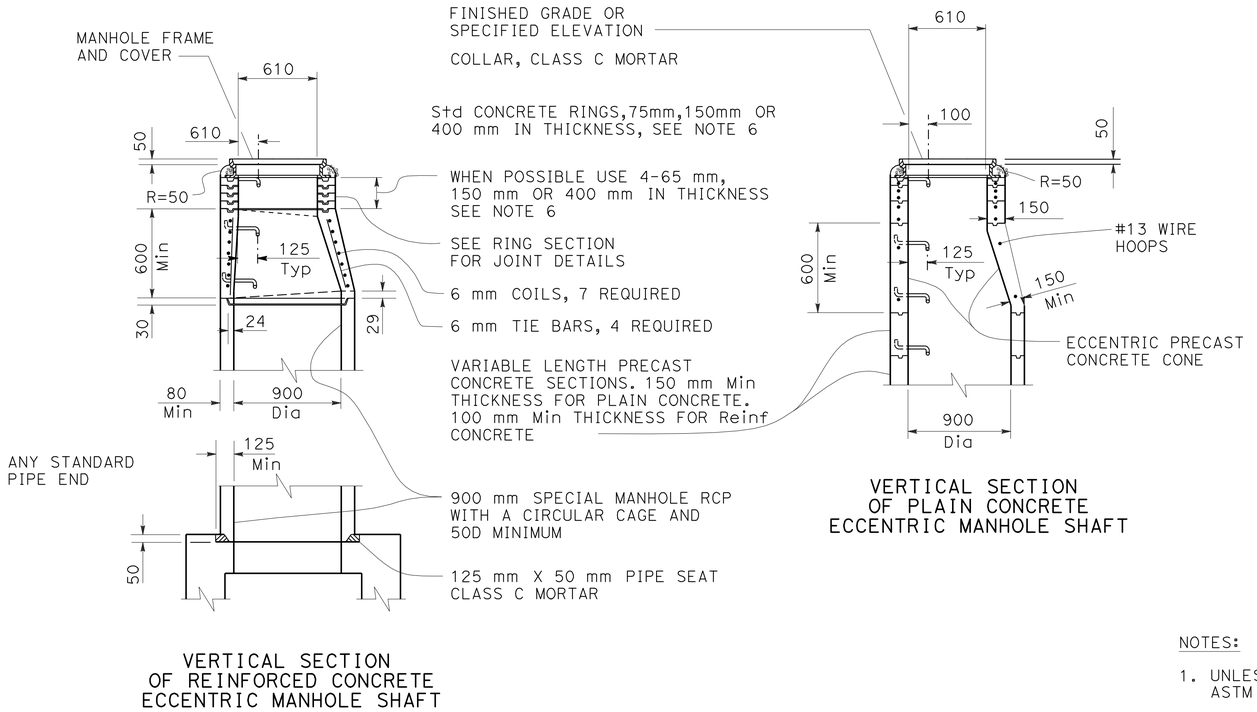

VERTICAL SECTION OF REINFORCED CONCRETE ECCENTRIC MANHOLE SHAFT

VERTICAL SECTION OF PLAIN CONCRETE ECCENTRIC MANHOLE SHAFT

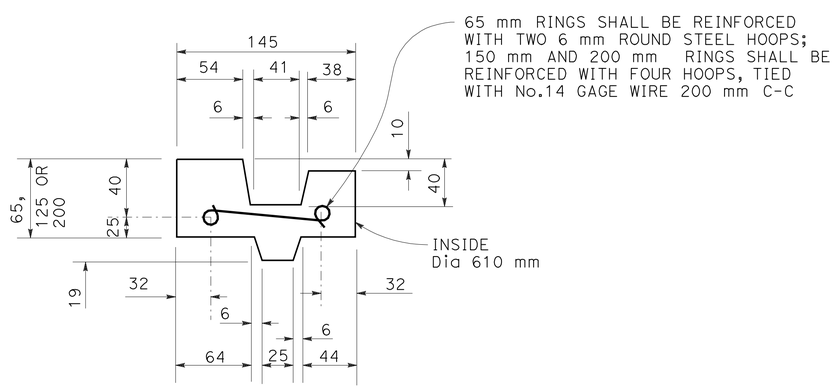

CROSS SECTION OF REINFORCED CONCRETE RING

NOTES:

1. UNLESS OTHERWISE INDICATED THIS STRUCTURE SHALL CONFORM TO ASTM C 478M AND ALL CONCRETE SHALL BE PER THE SPECIFICATIONS.
2. MANHOLE FRAME AND COVER SHALL CONFORM TO STANDARD PLAN B7-11 DETAIL "U45".
3. ALL JOINTS SHALL BE SEALED BY FILLING THE ANNULAR SPACES WITH CLASS C MORTAR. THE INSIDE OF THE SHAFT AT EACH JOINT SHALL BE WIPED CLEAN OF EXCESS MORTAR.
4. PROTECTIVE PLASTIC LINER (T LOCK) OR ENGINEER-APPROVED COATINGS WHERE REQUIRED BY THE PROJECT DRAWINGS SHALL BE IN ACCORDANCE WITH THE SPECIFICATIONS AND THE MANUFACTURER'S DIRECTIONS.
5. STEPS SHALL CONFORM TO STANDARD PLAN D74C. THE TOP STEP SHALL BE PLACED DIRECTLY BENEATH THE MANHOLE FRAME. UNLESS OTHERWISE SHOWN, STEPS SHALL BE UNIFORMLY SPACED 350 mm TO 375 mm C-C.
6. THE ECCENTRIC MANHOLE SHAFT REDUCER AND RINGS MAY BE PLAIN CONCRETE. FOR PLAIN CONCRETE SECTIONS THE MINIMUM THICKNESS SHALL BE 150 mm.
7. THE PRECAST CONCRETE MANHOLE STRUCTURES WILL BE INSPECTED BY THE ENGINEER WHO WILL INDICATE ACCEPTANCE FOR SHIPMENT TO THE JOB BY MARKING THE STRUCTURES WITH THE AGENCY'S STAMP.
8. THE VERTICAL SIDES OF THE MANHOLE SHAFT AND THE ECCENTRIC REDUCER SHALL BE LOCATED ABOVE AND IN LINE WITH THE SIDE OF THE STORM DRAIN CONDUIT.
9. CONSTRUCT MANHOLE SAFETY LEDGE PER DETAIL No. 10 IF DEPTH OF MANHOLE TO INVERT IS GREATER THAN 6 m AND MANHOLE SHAFT IS GREATER THAN 3 m.

MANHOLE SHAFT WITH ECCENTRIC REDUCER
DRAINAGE DETAIL No.14

ALL DIMENSIONS ARE IN MILLIMETERS UNLESS OTHERWISE SHOWN

DRAINAGE DETAILS

NO SCALE **DD-10**

STATE OF CALIFORNIA - DEPARTMENT OF TRANSPORTATION
Caltrans

CONSULTANT FUNCTIONAL SUPERVISOR: NORMAN SUYDAM
CALCULATED-DESIGNED BY: ROBERT WONG
CHECKED BY: NORMAN SUYDAM
REVISED BY
DATE REVISED

LAST REVISION 11-09-09
DATE PLOTTED => 19-OCT-2010
TIME PLOTTED => 15:56

Dist	COUNTY	ROUTE	KILOMETER POST TOTAL PROJECT	SHEET No.	TOTAL SHEETS
08	Riv	60,215	R19.7/21.9, R61.3/62.7	131	594

Robert Wong 1-14-10
REGISTERED CIVIL ENGINEER DATE

6-28-10
PLANS APPROVAL DATE

REGISTERED PROFESSIONAL ENGINEER ROBERT WONG No. C64734 Exp.06/30/11 CIVIL STATE OF CALIFORNIA

THE STATE OF CALIFORNIA OR ITS OFFICERS OR AGENTS SHALL NOT BE RESPONSIBLE FOR THE ACCURACY OR COMPLETENESS OF ELECTRONIC COPIES OF THIS PLAN SHEET.

LAN ENGINEERING CORP
1887 BUSINESS CENTER DR
SUITE 6
SAN BERNARDINO, CA 92408

RIVERSIDE COUNTY
TRANSPORTATION COMMISSION
4080 LEMON STREET
RIVERSIDE, CA 92502

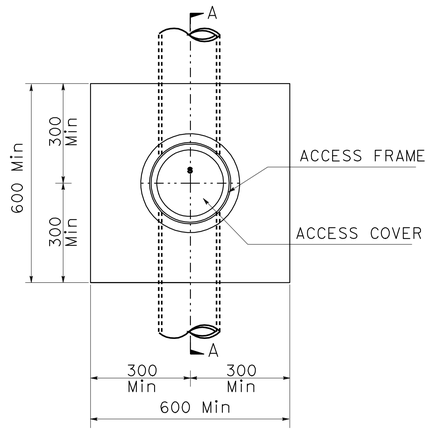

PLAN

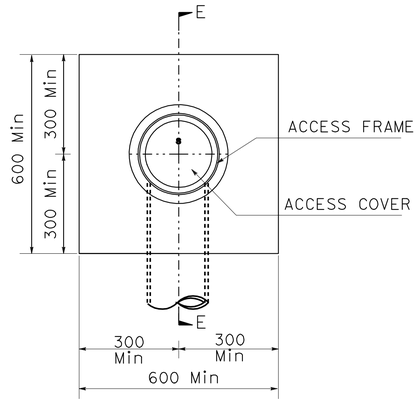

PLAN

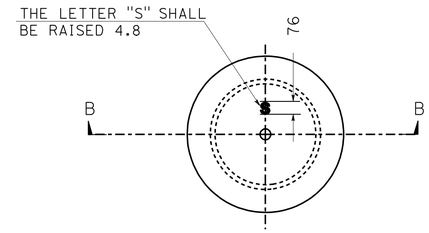

ACCESS COVER

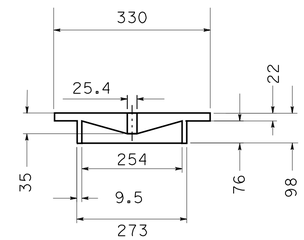

SECTION B-B

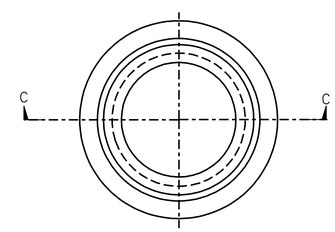

ACCESS FRAME

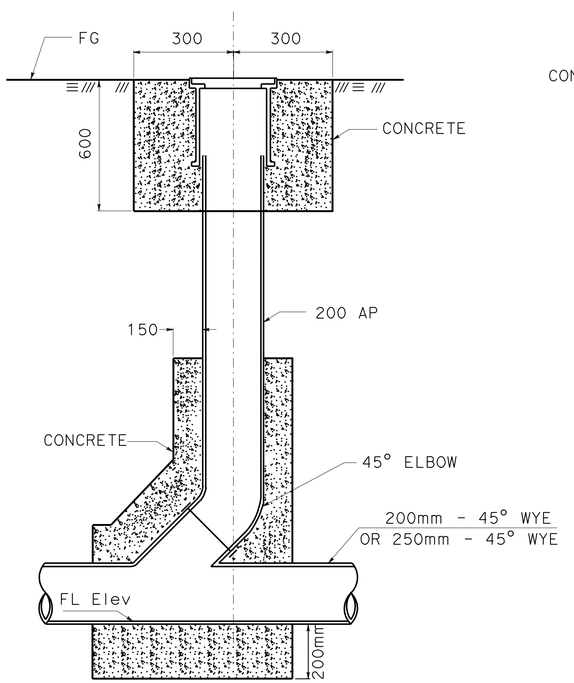

SECTION A-A
HORIZONTAL PIPE

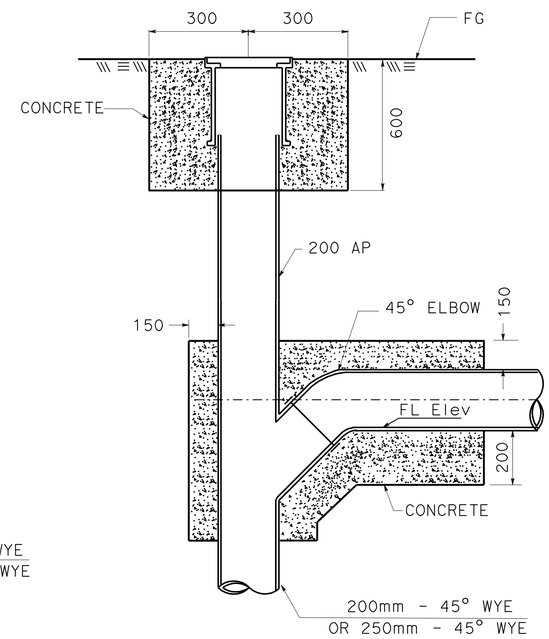

SECTION E-E
VERTICAL DOWN PIPE

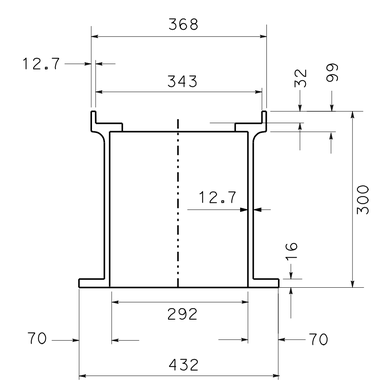

SECTION C-C

NOTES:

1. PIPE AND FITTINGS, EXCEPT AS OTHERWISE SHOWN HEREON, SHALL BE AP MATERIAL.
2. PIPES AND FITTINGS SHALL BE PROPERLY ALIGNED AND MAINTAINED WHILE CONCRETE IS BEING PLACED AND ALLOWED TO HARDEN. JOINTS FOR PIPES AND FITTINGS SHALL BE MADE PRIOR TO PLACING CONCRETE. CONCRETE FOR BEDDING, ENCASEMENT, AND WALL SUPPORT FOR PIPES AND FITTINGS SHALL BE PLACED UNIFORMLY AROUND THE PIPE AND FITTINGS AS SHOWN HEREON TO MAINTAIN PROPER ALIGNMENT, AND SHALL BE MINOR CONCRETE.
3. THE ACCESS FRAME, COVER AND CAP SHALL BE CAST IRON. THE FINGER HOLES MAY BE DRILLED OUT OR MAY BE BLOCKED OUT PRIOR TO CASTING; THEY SHALL NOT BE PUNCHED OUT.
4. THE CONTRACTOR, AT HIS OPTION, MAY PLACE EITHER CIRCULAR OR SQUARE CONCRETE PIPE WALL SUPPORTS AS SHOWN HEREON.

CLEANOUT ASSEMBLY DETAIL
DRAINAGE DETAIL No.15

ALL DIMENSIONS ARE IN MILLIMETERS UNLESS OTHERWISE SHOWN

DRAINAGE DETAILS

NO SCALE **DD-11**

STATE OF CALIFORNIA - DEPARTMENT OF TRANSPORTATION
Caltrans

CONSULTANT FUNCTIONAL SUPERVISOR: NORMAN SUYDAM
CALCULATED-DESIGNED BY: ROBERT WONG
CHECKED BY: NORMAN SUYDAM
REVISED BY / DATE REVISED

LAST REVISION 11-09-09 | DATE PLOTTED => 19-OCT-2010 | TIME PLOTTED => 15:56

Dist	COUNTY	ROUTE	KILOMETER POST TOTAL PROJECT	SHEET No.	TOTAL SHEETS
08	Riv	60,215	R19.7/21.9, R61.3/62.7	132	594

REGISTERED CIVIL ENGINEER 1-14-10 DATE

6-28-10
PLANS APPROVAL DATE

REGISTERED PROFESSIONAL ENGINEER ROBERT WONG No. C64734 Exp.06/30/11 CIVIL STATE OF CALIFORNIA

THE STATE OF CALIFORNIA OR ITS OFFICERS OR AGENTS SHALL NOT BE RESPONSIBLE FOR THE ACCURACY OR COMPLETENESS OF ELECTRONIC COPIES OF THIS PLAN SHEET.

LAN ENGINEERING CORP
1887 BUSINESS CENTER DR
SUITE 6
SAN BERNARDINO, CA 92408

RIVERSIDE COUNTY
TRANSPORTATION COMMISSION
4080 LEMON STREET
RIVERSIDE, CA 92502

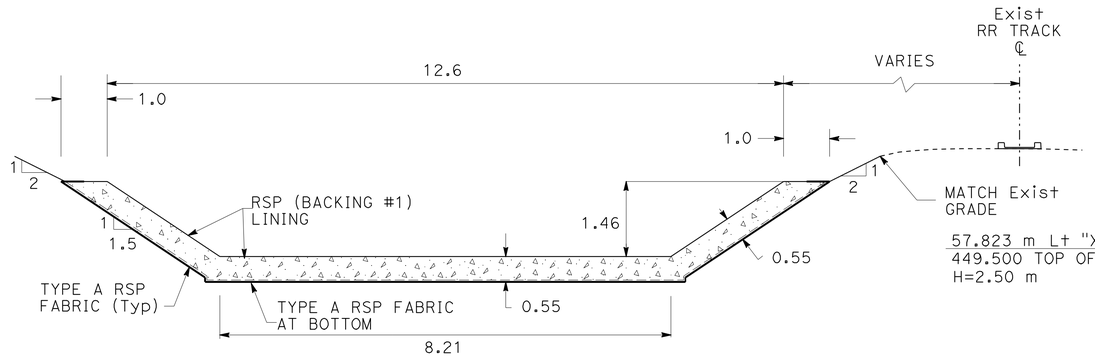

RSP LINING
TRAPEZOIDAL CHANNEL
(CROSS SECTION A-A)
DRAINAGE DETAIL No.16

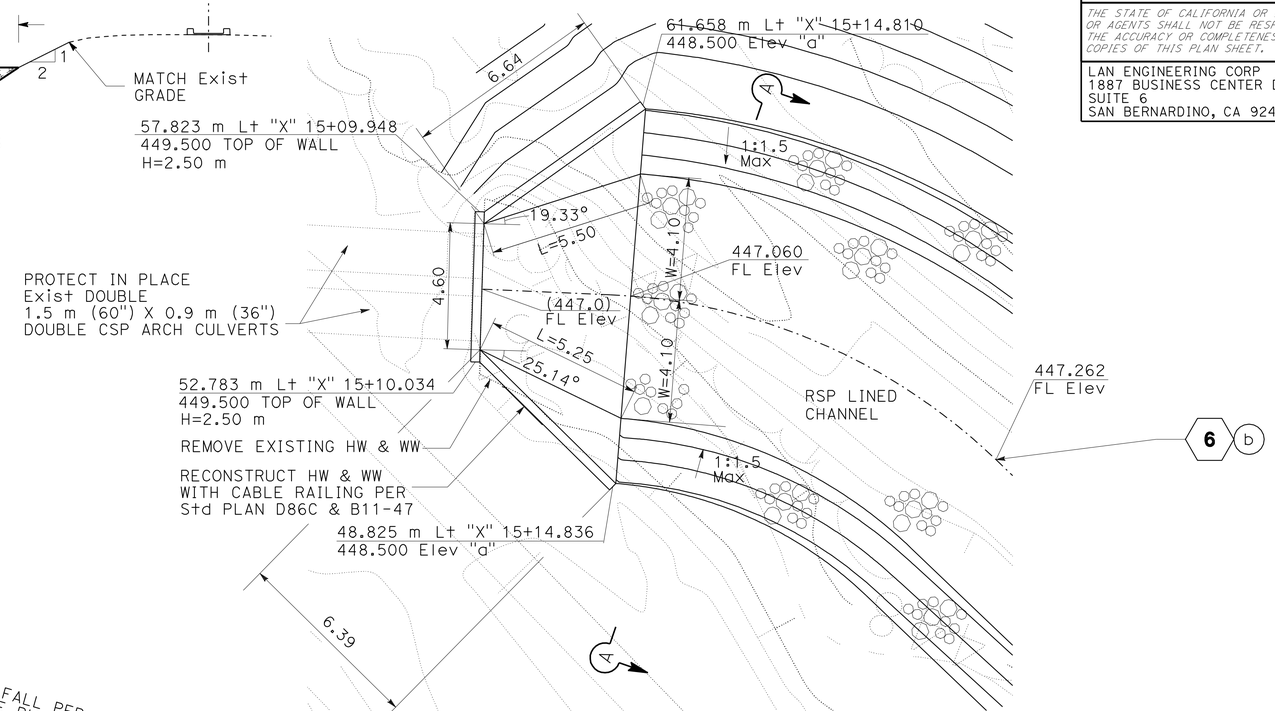

HEADWALL AND WINGWALL DETAIL
DRAINAGE DETAIL No.18

6 a

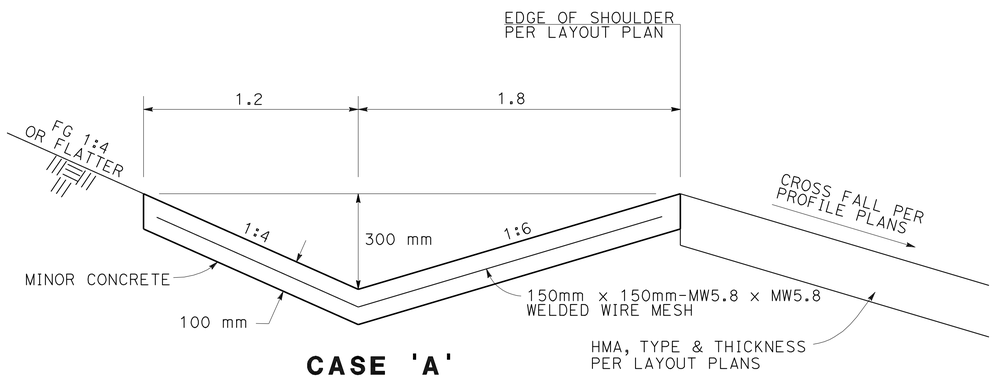

CASE 'A'

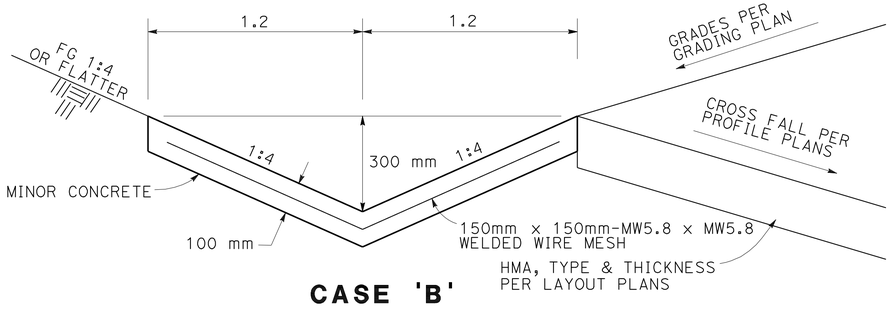

CASE 'B'

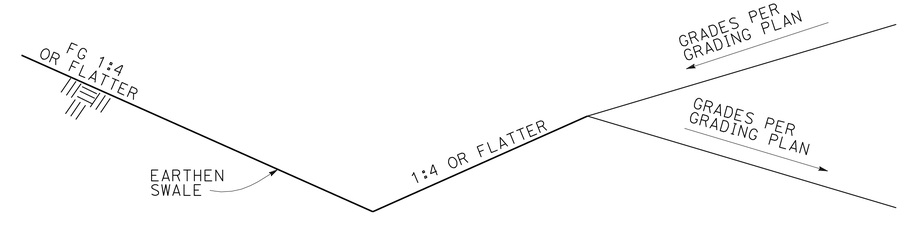

CASE 'C'

ROADSIDE DITCH DETAILS
DRAINAGE DETAIL No.17

ALL DIMENSIONS ARE IN
METERS UNLESS OTHERWISE SHOWN

DRAINAGE DETAILS
NO SCALE **DD-12**

STATE OF CALIFORNIA - DEPARTMENT OF TRANSPORTATION
Caltrans

CONSULTANT FUNCTIONAL SUPERVISOR: NORMAN SUYDAM
CALCULATED-DESIGNED BY: ROBERT WONG
CHECKED BY: NORMAN SUYDAM
REVISED BY
DATE REVISED

LAST REVISION 11-09-09
DATE PLOTTED => 19-OCT-2010
TIME PLOTTED => 15:57

Dist	COUNTY	ROUTE	KILOMETER POST TOTAL PROJECT	SHEET No.	TOTAL SHEETS
08	Riv	60,215	R19.7/21.9, R61.3/62.7	133	594

Robert Wong 1-14-10
REGISTERED CIVIL ENGINEER DATE

6-28-10
PLANS APPROVAL DATE

REGISTERED PROFESSIONAL ENGINEER ROBERT WONG No. C64734 Exp.06/30/11 CIVIL STATE OF CALIFORNIA

THE STATE OF CALIFORNIA OR ITS OFFICERS OR AGENTS SHALL NOT BE RESPONSIBLE FOR THE ACCURACY OR COMPLETENESS OF ELECTRONIC COPIES OF THIS PLAN SHEET.

LAN ENGINEERING CORP
1887 BUSINESS CENTER DR
SUITE 6
SAN BERNARDINO, CA 92408

RIVERSIDE COUNTY
TRANSPORTATION COMMISSION
4080 LEMON STREET
RIVERSIDE, CA 92502

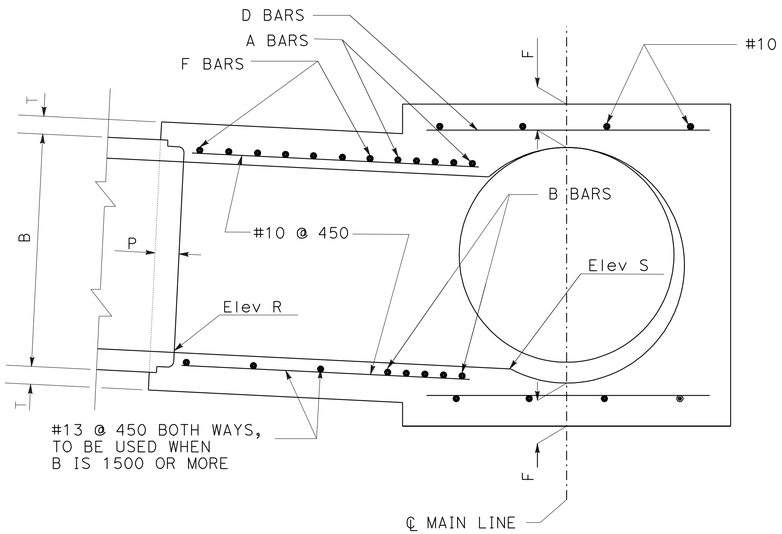

SECTION N′-N″-N‴
PROJECTED ON M-M-N‴

TABLE
FOR DIMENSIONS AND BAR SIZES

D_2 OR B (mm)	F OR T (mm)	A OR B BARS	D OR F BARS	P (RCP)
600	140	#16 @ 75 mm	#13 @ 150 mm	125 mm
750	160			
1050	190	#19 @ 75 mm	#16 @ 150 mm	
1350	230	#22 @ 75 mm	#19 @ 150 mm	

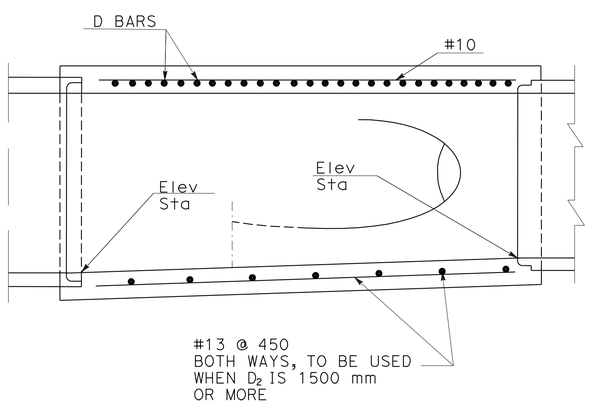

LONGITUDINAL SECTION

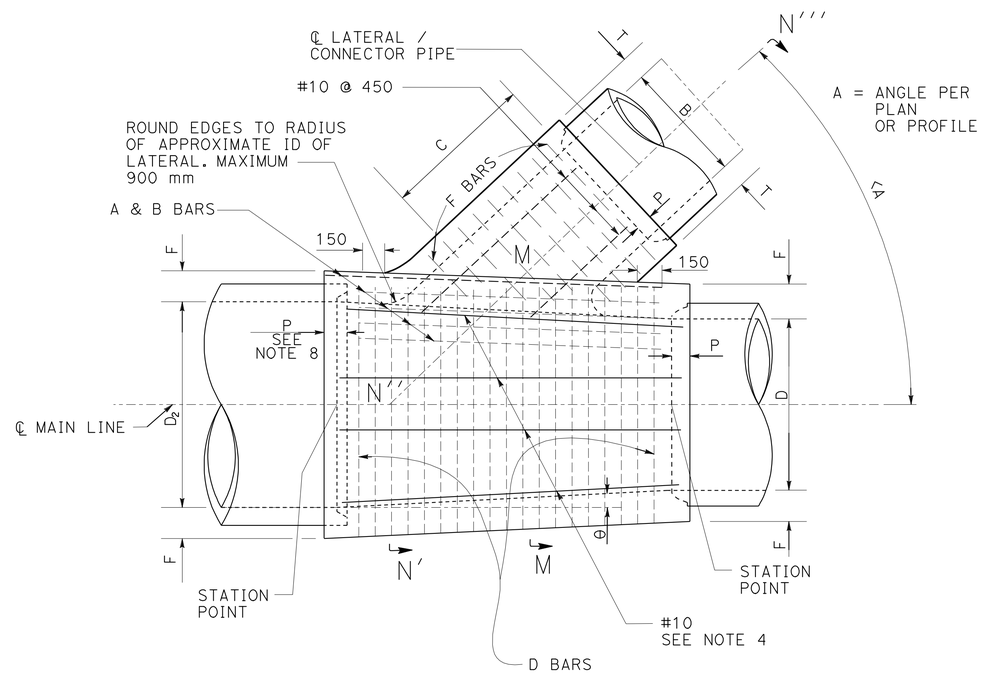

PLAN

NOTES:

1. THE HORIZONTAL ANGLE OF CONVERGENCE OR DIVERGENCE. O. SHALL NOT EXCEED 5°45′.
2. VALUES FOR A, B, D AND D2 ARE SHOWN ON THE PROJECT DRAWINGS. ELEVATION R AND ELEVATION S ARE SHOWN WHEN REQUIRED BY NOTE 10.
3. FLOOR OF STRUCTURE SHALL BE STEEL TROWELED TO SPRING LINE.
4. REINFORCEMENT STEEL SHALL CONFORM TO ASTM A 615 M GRADE 300, AND SHALL TERMINATE 40 mm CLEAR OF CONCRETE SURFACES UNLESS OTHERWISE SHOWN. LONGITUDINAL BARS SHALL BE #10 @ 450 mm C-C OR LESS.
5. ELEVATION S APPLIES AT INSIDE WALL OF STRUCTURE.
6. TRANSITION STRUCTURE SHALL BE POURED IN ONE CONTINUOUS OPERATION, EXCEPT THAT THE CONTRACTOR SHALL HAVE THE OPTION OF PLACING AT THE SPRING LINE A CONSTRUCTION JOINT LONGITUDINAL KEYWAY.
7. THE LENGTH OF THE STRUCTURE MAY BE INCREASED AT THE OPTION OF THE CONTRACTOR TO MEET RCP ENDS. USING D BARS. LONGITUDINAL AND BOTTOM REINFORCEMENT IN EXTENDED PORTION OF SAME DIAMETER AND SPACING AS SPECIFIED IN THE TABLE. BUT ANY CHANGE IN THE LOCATION OF SPUR MUST BE APPROVED BY THE ENGINEER.
8. EMBEDMENT P SHALL BE AS SPECIFIED IN THE TABLE, UNLESS OTHERWISE SHOWN ON THE PROJECT DRAWINGS.
9. WHEN THERE IS NO SPUR REQUIRED, A & B BARS SHALL BE OMITTED.
10. WHEN ELEVATION R AND ELEVATION S ARE NOT SHOWN ON PROJECT DRAWINGS. INLET PIPE SHALL ENTER MAIN LINE RADIALLY. WHEN INLET PIPE ENTERS MAIN LINE OTHER THAN RADIALLY, ELEVATION S SHALL BE SHOWN ON PROJECT DRAWINGS, AND INLET PIPE SHALL BE LAID ON A STRAIGHT GRADE FROM ELEVATION S TO CATCH BASIN OR GRADE BREAK IN INLET LINE. ELEVATION R SHALL BE SHOWN ON PROJECT DRAWINGS ONLY WHEN STUB IS TO BE PROVIDED IN MAIN LINE FOR FUTURE CONSTRUCTION OF INLET PIPE.
11. THE MAXIMUM COVER ABOVE THIS STRUCTURE SHALL BE 7.5 m. IF THE COVER EXCEEDS 7.5 m A SPECIAL STRUCTURE SHALL BE DESIGNED FOR THE COVER AND DETAILED ON THE PROJECT DRAWINGS.

TRANSITION STRUCTURE No.3
DRAINAGE DETAIL No.19

ALL DIMENSIONS ARE IN MILLIMETERS UNLESS OTHERWISE SHOWN

DRAINAGE DETAILS

NO SCALE **DD-13**

REVISED BY | DATE REVISED
ROBERT WONG | NORMAN SUYDAM
CALCULATED-DESIGNED BY | CHECKED BY
CONSULTANT FUNCTIONAL SUPERVISOR | NORMAN SUYDAM
STATE OF CALIFORNIA - DEPARTMENT OF TRANSPORTATION
Caltrans

LAST REVISION 11-09-09 | DATE PLOTTED => 19-OCT-2010 | TIME PLOTTED => 15:57

Dist	COUNTY	ROUTE	KILOMETER POST TOTAL PROJECT	SHEET No.	TOTAL SHEETS
08	Riv	60,215	R19.7/21.9, R61.3/62.7	134	594

REGISTERED CIVIL ENGINEER 1-14-10 DATE

6-28-10
PLANS APPROVAL DATE

REGISTERED PROFESSIONAL ENGINEER ROBERT WONG No. C64734 Exp.06/30/11 CIVIL STATE OF CALIFORNIA

THE STATE OF CALIFORNIA OR ITS OFFICERS OR AGENTS SHALL NOT BE RESPONSIBLE FOR THE ACCURACY OR COMPLETENESS OF ELECTRONIC COPIES OF THIS PLAN SHEET.

LAN ENGINEERING CORP
1887 BUSINESS CENTER DR
SUITE 6
SAN BERNARDINO, CA 92408

RIVERSIDE COUNTY
TRANSPORTATION COMMISSION
4080 LEMON STREET
RIVERSIDE, CA 92502

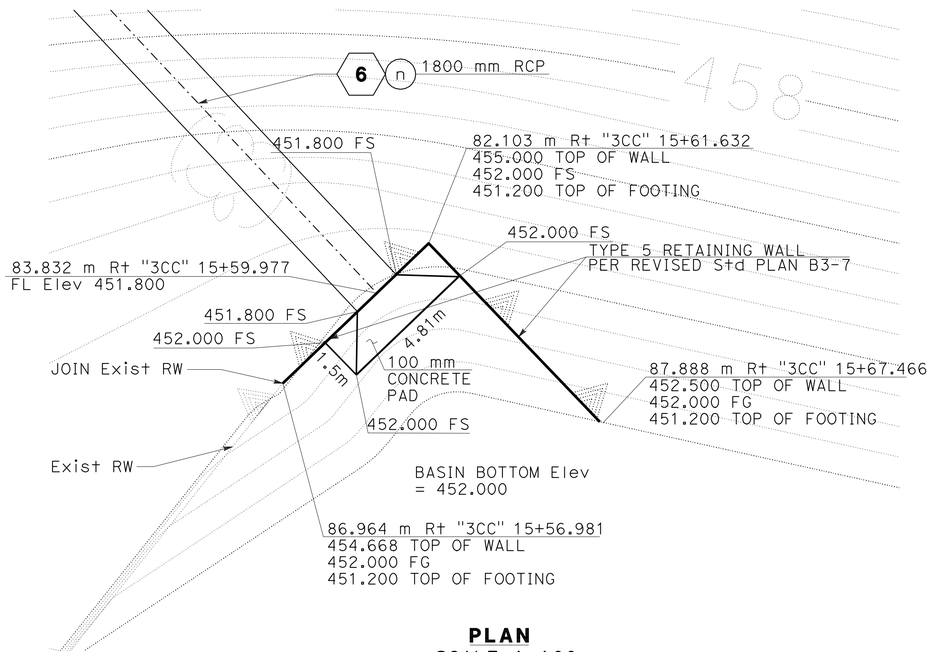

PLAN
SCALE 1:100

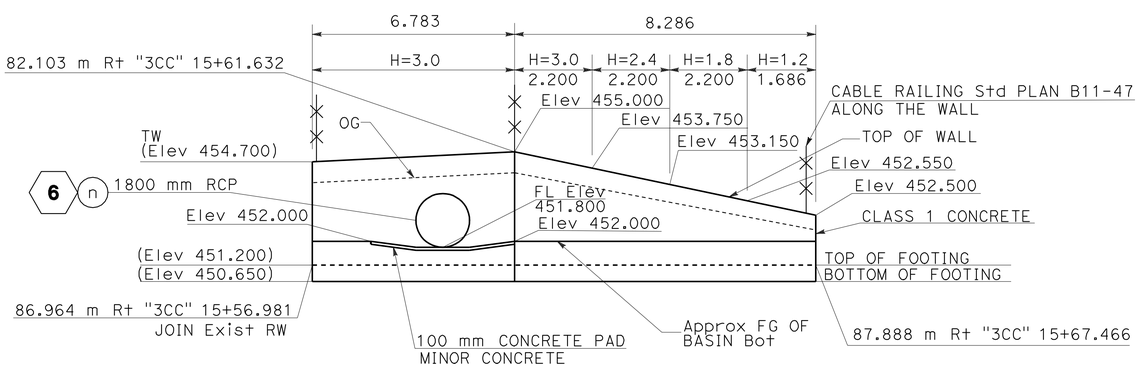

RETAINING WALL ELEVATION

DS-6 & DS-8 INLET TYPE 5 RETAINING WALL DETAIL

DRAINAGE DETAIL No.22

6 o

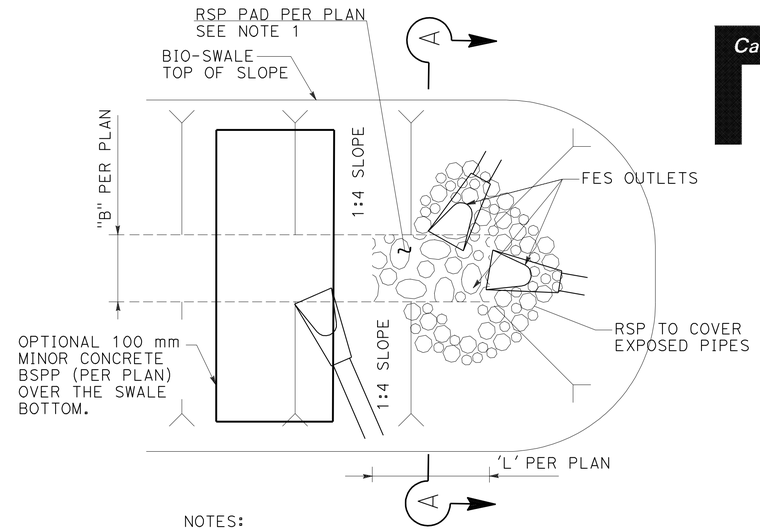

NOTES:

1. AT WHERE RSP BOTTOM CANNOT BE CONSTRUCTED, 100 mm CONCRETE PAD SHALL BE PLACED OVER THE SWALE BOTTOM.
2. RSP OVER FES OUTLETS TO MATCH RSP BOTTOM SPEC.

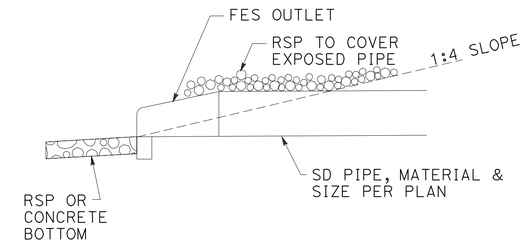

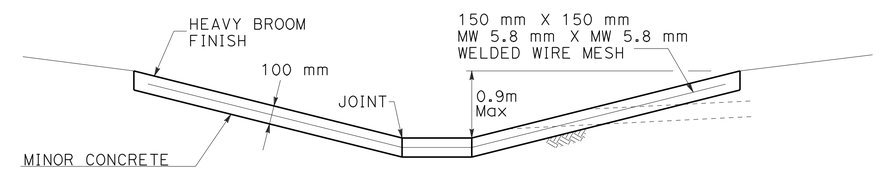

SECTION A-A

RSP OVER FES OUTLET AND BIO-SWALE PROTECTION PAD (BSPP) DETAILS

DRAINAGE DETAIL No.20

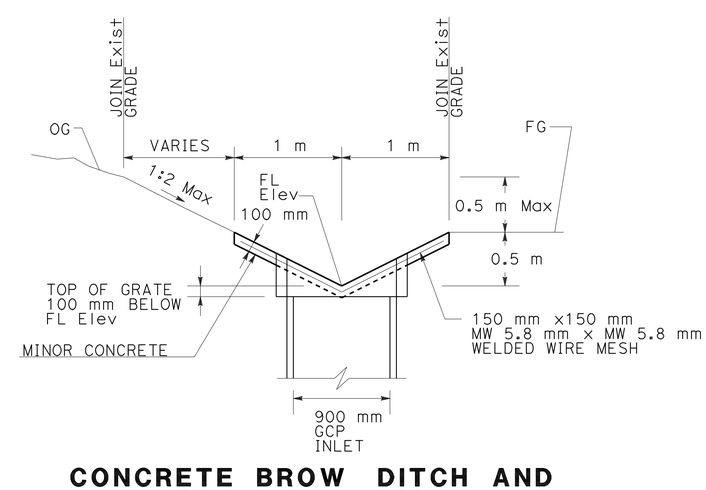

CONCRETE BROW DITCH AND GCP INLET DETAIL

DRAINAGE DETAIL No.21

ALL DIMENSIONS ARE IN METERS UNLESS OTHERWISE SHOWN

DRAINAGE DETAILS

NO SCALE **DD-14**

STATE OF CALIFORNIA - DEPARTMENT OF TRANSPORTATION
Caltrans

CONSULTANT FUNCTIONAL SUPERVISOR: NORMAN SUYDAM
CALCULATED-DESIGNED BY: ROBERT WONG
CHECKED BY: NORMAN SUYDAM
REVISED BY
DATE REVISED

LAST REVISION 11-09-09
DATE PLOTTED => 19-OCT-2010
TIME PLOTTED => 15:57

Dist	COUNTY	ROUTE	KILOMETER POST TOTAL PROJECT	SHEET No.	TOTAL SHEETS
08	Riv	60,215	R19.7/21.9, R61.3/62.7	135	594

Robert Wong 1-14-10
REGISTERED CIVIL ENGINEER DATE

6-28-10
PLANS APPROVAL DATE

REGISTERED PROFESSIONAL ENGINEER ROBERT WONG No. C64734 Exp.06/30/11 CIVIL STATE OF CALIFORNIA

THE STATE OF CALIFORNIA OR ITS OFFICERS OR AGENTS SHALL NOT BE RESPONSIBLE FOR THE ACCURACY OR COMPLETENESS OF ELECTRONIC COPIES OF THIS PLAN SHEET.

LAN ENGINEERING CORP
1887 BUSINESS CENTER DR
SUITE 6
SAN BERNARDINO, CA 92408

RIVERSIDE COUNTY
TRANSPORTATION COMMISSION
4080 LEMON STREET
RIVERSIDE, CA 92502

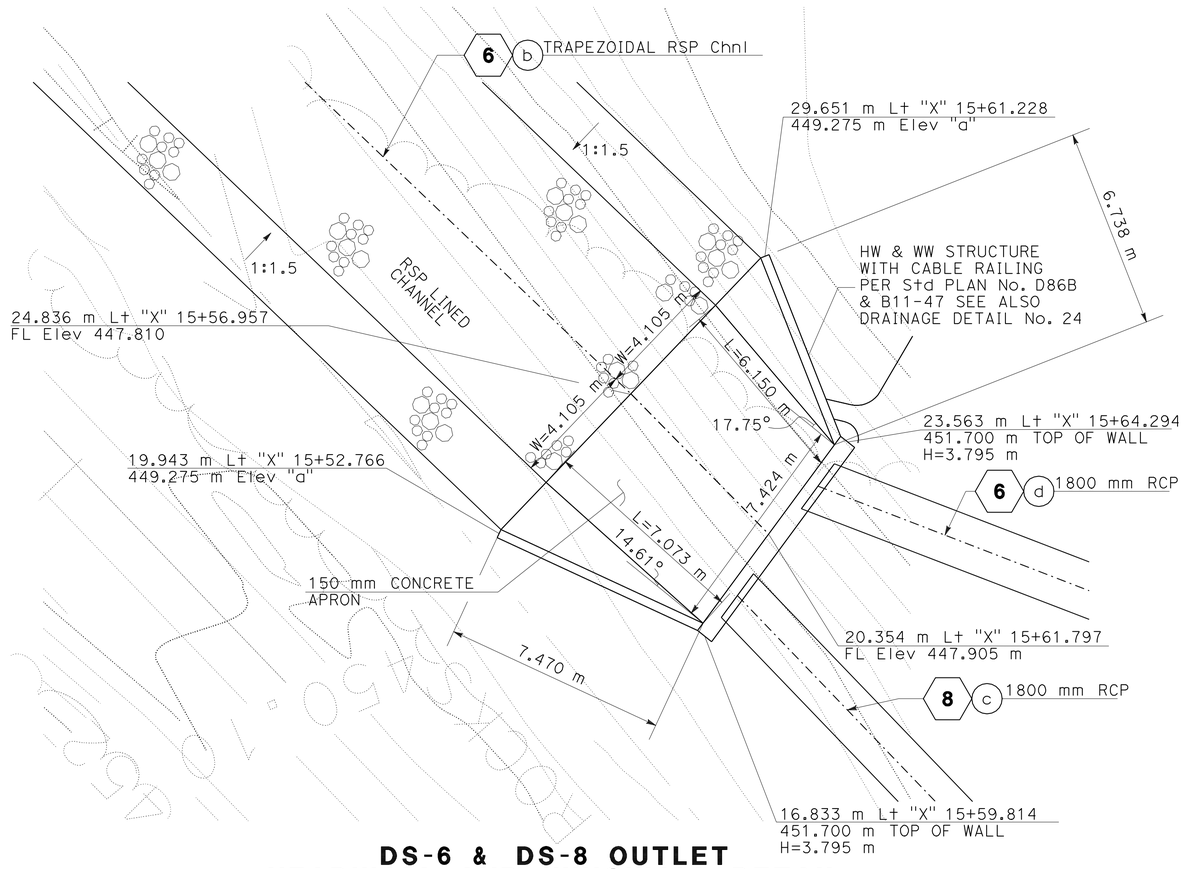

DS-6 & DS-8 OUTLET HEADWALL AND WINGWALL DETAIL

DRAINAGE DETAIL No.23

6 c

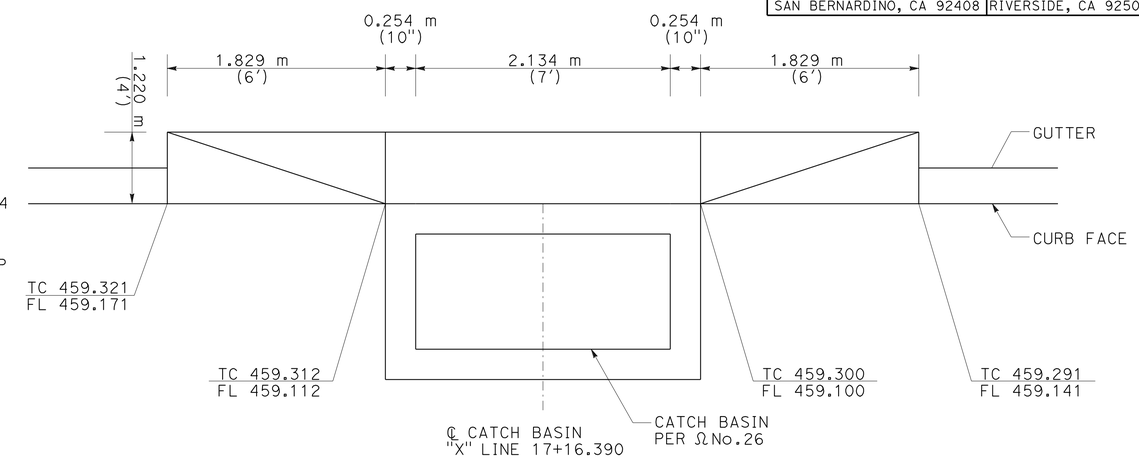

LOCAL DEPRESSION

DRAINAGE DETAIL No.25

11 d

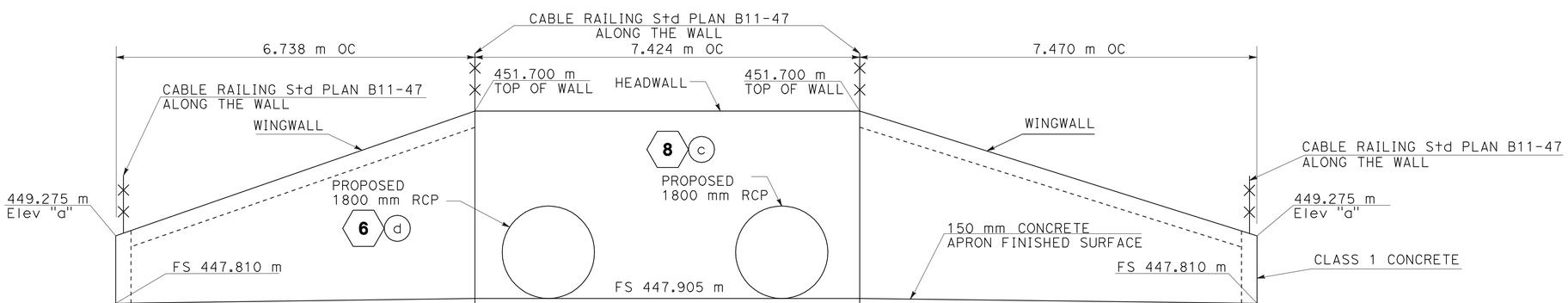

DS-6 & DS-8 OUTLET HEADWALL AND WINGWALL ELEVATION

DRAINAGE DETAIL No.24

ALL DIMENSIONS ARE IN METERS UNLESS OTHERWISE SHOWN

DRAINAGE DETAILS

NO SCALE **DD-15**

REVISED BY | DATE REVISED

ROBERT WONG | NORMAN SUYDAM

CALCULATED-DESIGNED BY | CHECKED BY

CONSULTANT FUNCTIONAL SUPERVISOR | NORMAN SUYDAM

STATE OF CALIFORNIA - DEPARTMENT OF TRANSPORTATION

Caltrans

LAST REVISION 11-09-09 | DATE PLOTTED => 19-OCT-2010 | TIME PLOTTED => 15:57

Dist	COUNTY	ROUTE	KILOMETER POST TOTAL PROJECT	SHEET No.	TOTAL SHEETS
08	Riv	60,215	R19.7/21.9, R61.3/62.7	136	594

Caltrans Metric

REGISTERED CIVIL ENGINEER — DATE 1-14-10

6-28-10
PLANS APPROVAL DATE

REGISTERED PROFESSIONAL ENGINEER ROBERT WONG No. C64734 Exp.06/30/11 CIVIL STATE OF CALIFORNIA

THE STATE OF CALIFORNIA OR ITS OFFICERS OR AGENTS SHALL NOT BE RESPONSIBLE FOR THE ACCURACY OR COMPLETENESS OF ELECTRONIC COPIES OF THIS PLAN SHEET.

LAN ENGINEERING CORP
1887 BUSINESS CENTER DR
SUITE 6
SAN BERNARDINO, CA 92408

RIVERSIDE COUNTY
TRANSPORTATION COMMISSION
4080 LEMON STREET
RIVERSIDE, CA 92502

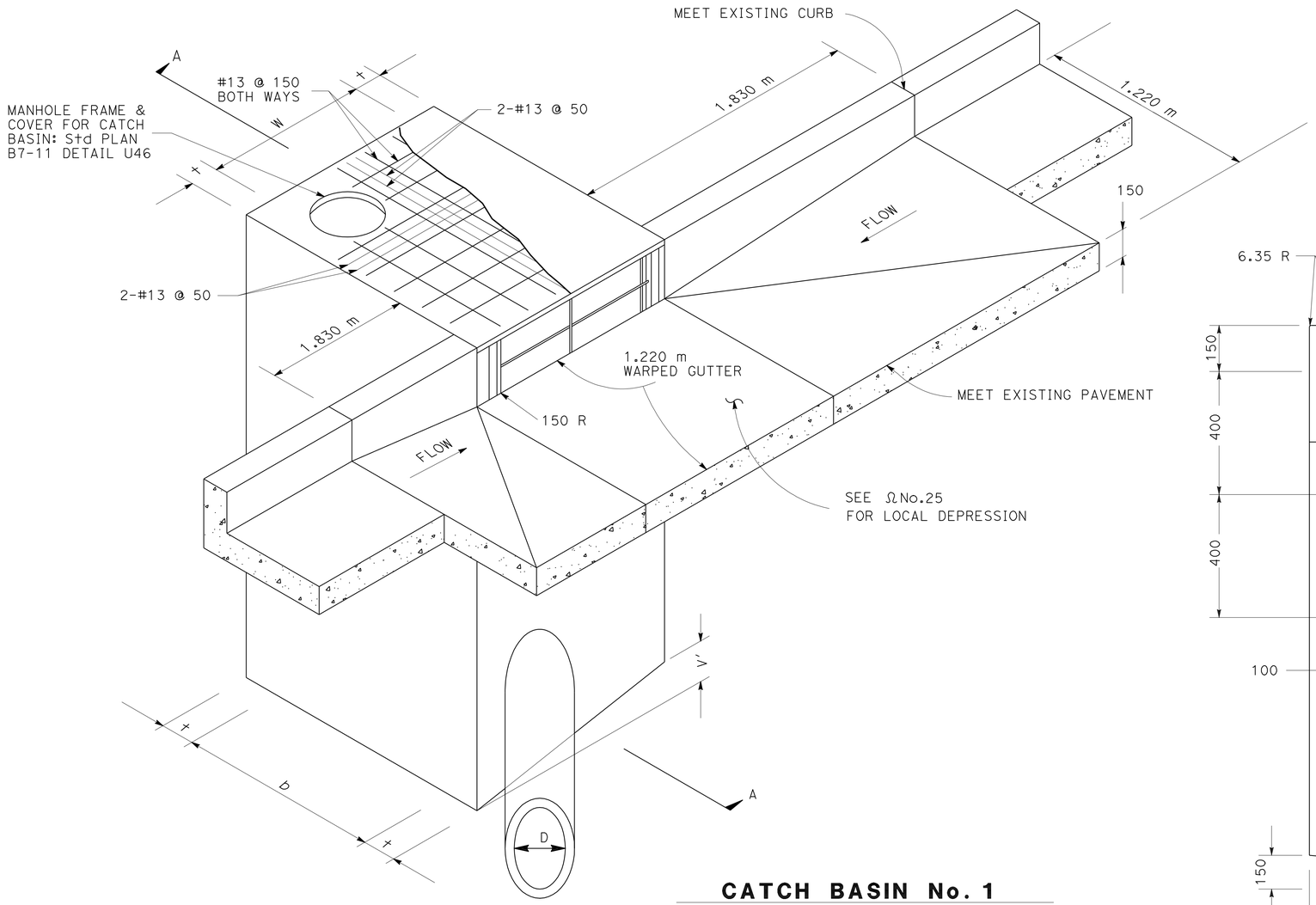

PERSPECTIVE OF
CATCH BASIN No.1

CATCH BASIN No. 1
DRAINAGE DETAIL No.26

11

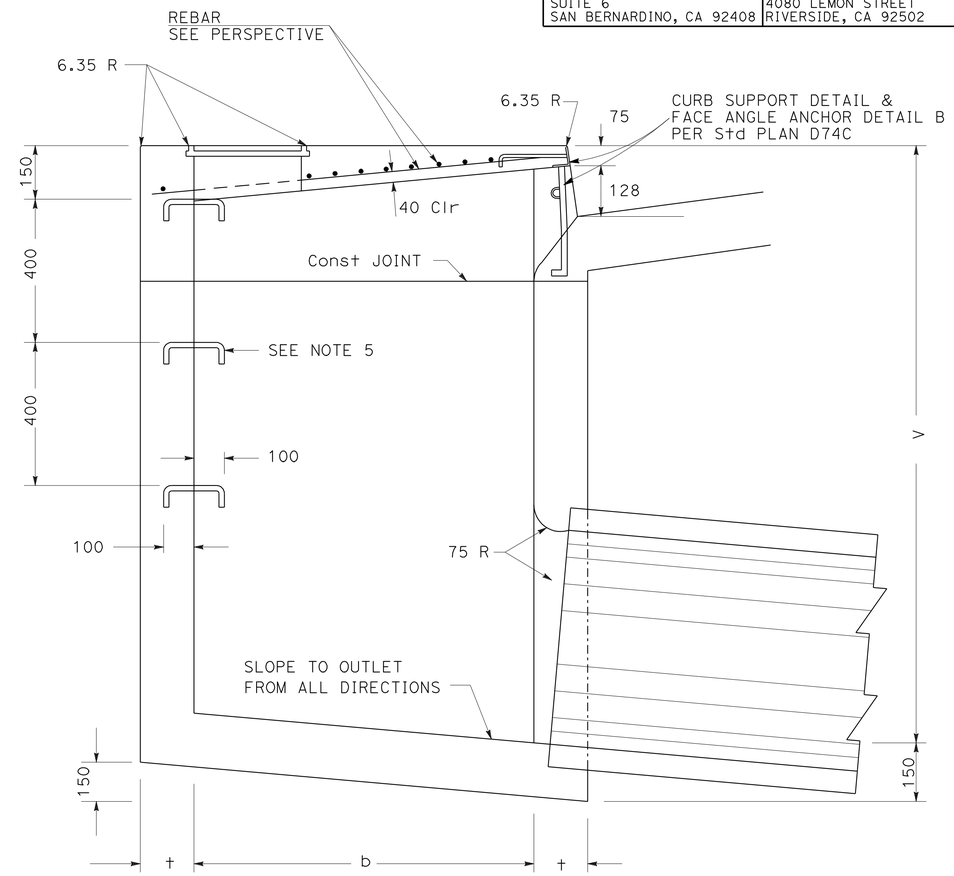

SECTION A-A

NOTES:

1. DIMENSIONS: UNLESS OTHERWISE SPECIFIED
   V' = 150 @ W = 2.1 m,
   230 @ W = 4.3 m,
   300 @ W = 6.4 m
   V = SHALL BE SHOWN ON THE PLANS
   W = SHALL BE SHOWN ON THE PLANS (2.1 m Min)
   t = 150 IF V IS 1.2 m OR LESS.
   t = 200 IF V IS 2.4 m OR LESS.
   t = 250 IF V IS MORE THAN 2.4 m.
   b = 965 UNLESS OTHERWISE SPECIFIED.

2. CATCH BASIN SHALL BE MINOR CONCRETE.

3. THE REINFORCING STEEL SHALL BE #13 DEFORMED BARS. CLEARANCE SHALL BE 40 mm FROM THE BOTTOM OF THE SLAB. SEE NOTE 7.

4. THE SURFACE OF ALL EXPOSED CONCRETE SHALL CONFORM TO SLOPE, GRADE, COLOR, FINISH AND SCORING IN THE EXISTING OR PROPOSED CURB & WALK ADJACENT TO THE BASIN. THE BASIN FLOOR SHALL BE GIVEN A TIGHT WOOD FLOAT FINISH. CURVATURE OF THE LIP AND SIDEWALLS AT THE GUTTER OPENING SHALL NOT BE MADE BY PLASTERING. THE OUTLET PIPE SHALL BE TRIMMED TO FINAL SHAPE AND LENGTH BEFORE THE CONCRETE IS POURED.

5. STEPS:
   20 mm PLAIN ROUND GALVANIZED STEEL STEPS SHALL BE INSTALLED 405 mm APART WHEN V EXCEEDS 1.372 m. THE TOP STEP SHALL BE 150 mm BELOW THE TOP SURFACE AND SHALL BE 64 mm CLEAR FROM THE WALL.

   ALL OTHER STEPS SHALL BE 100 mm CLEAR FROM THE WALL. ONLY ONE STEP 300 mm FROM THE BOTTOM SHALL BE INSTALLED IF V IS 1.372 m OR LESS. ALL STEPS SHALL BE ANCHORED NOT LESS THAN 100 mm INTO THE WALL OF THE BASIN.

6. CURB, GUTTER AND LOCAL DEPRESSIONS SHALL BE MINOR CONCRETE (Misc Const).

7. SEE DRAINAGE DETAIL No. 27 FOR WALL & FLOOR STEEL REINFORCING.

ALL DIMENSIONS ARE IN
MILLIMETERS UNLESS OTHERWISE SHOWN

DRAINAGE DETAILS

NO SCALE **DD-16**

STATE OF CALIFORNIA - DEPARTMENT OF TRANSPORTATION
Caltrans

CONSULTANT FUNCTIONAL SUPERVISOR: NORMAN SUYDAM
CALCULATED-DESIGNED BY: ROBERT WONG
CHECKED BY: NORMAN SUYDAM
REVISED BY
DATE REVISED

LAST REVISION 11-09-09
DATE PLOTTED => 19-OCT-2010
TIME PLOTTED => 15:57

Dist	COUNTY	ROUTE	KILOMETER POST TOTAL PROJECT	SHEET No.	TOTAL SHEETS
08	Riv	60,215	R19.7/21.9, R61.3/62.7	137	594

Caltrans Metric

REGISTERED CIVIL ENGINEER 1-14-10 DATE

6-28-10
PLANS APPROVAL DATE

REGISTERED PROFESSIONAL ENGINEER ROBERT WONG No. C64734 Exp.06/30/11 CIVIL STATE OF CALIFORNIA

THE STATE OF CALIFORNIA OR ITS OFFICERS OR AGENTS SHALL NOT BE RESPONSIBLE FOR THE ACCURACY OR COMPLETENESS OF ELECTRONIC COPIES OF THIS PLAN SHEET.

LAN ENGINEERING CORP
1887 BUSINESS CENTER DR
SUITE 6
SAN BERNARDINO, CA 92408

RIVERSIDE COUNTY
TRANSPORTATION COMMISSION
4080 LEMON STREET
RIVERSIDE, CA 92502

W	V(m) FROM	V(m) TO (inclusive)	t (mm)	FRONT WALL STEEL Horiz	FRONT WALL STEEL Vert	REAR & END WALLS & FLOOR STEEL BOTH WAYS
TO 2.1m		1.2	150	#10 @ 150mm	#10 @ 150mm	#10 @ 150mm
TO 2.1m	1.2	2.4	200	#13 @ 300mm	#13 @ 300mm	#13 @ 300mm
TO 2.1m	2.4	3.7	250	#13 @ 250mm	#13 @ 250mm	#13 @ 250mm
4.3m		1.2	150	#10 @ 150mm	#10 @ 150mm	#10 @ 150mm
4.3m	1.2	2.4	200	#13 @ 300mm	#13 @ 300mm	#13 @ 300mm
4.3m	2.4	3.0	250	#13 @ 200mm	#13 @ 300mm	#13 @ 250mm
4.3m	3.0	3.7	250	#13 @ 150mm	#13 @ 300mm	#13 @ 250mm

WALL AND FLOOR STEEL

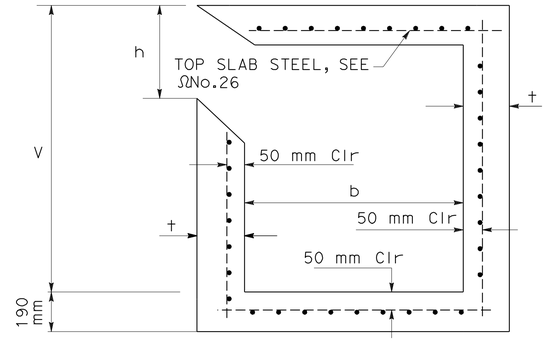

SECTION 1

CATCH BASIN REINFORCEMENT - "W" to 4.3 m

V(m) FROM	V(m) TO (inclusive)	t (mm)	FRONT WALL STEEL Bars A & B	REAR WALL STEEL Bars C	REAR WALL STEEL Bars D	REAR WALL STEEL Bars E	END WALL STEEL Horiz & Vert
	1.2	150	#10 @ 600mm	#10 @ 300mm	—	#13 @ 600mm	#10 @ 450mm
1.2	1.5	200	#10 @ 500mm	#10 @ 300mm	—	#13 @ 600mm	#10 @ 350mm
1.5	1.8	200	#10 @ 300mm	#10 @ 260mm	—	#13 @ 600mm	#10 @ 350mm
1.8	2.1	200	#13 @ 425mm	#10 @ 210mm	—	#13 @ 600mm	#10 @ 350mm
2.1	2.4	200	#13 @ 325mm	#10 @ 160mm	—	#13 @ 600mm	#10 @ 350mm
2.4	2.7	250	#13 @ 375mm	#10 @ 190mm	—	#13 @ 500mm	#10 @ 275mm
2.7	3.0	250	#13 @ 300mm	#13 @ 300mm	—	#13 @ 500mm	#10 @ 275mm
3.0	3.4	250	#16 @ 375mm	—	#13 @ 275mm	#13 @ 450mm	#10 @ 275mm
3.4	3.7	250	#19 @ 450mm	—	#13 @ 225mm	#13 @ 325mm	#10 @ 275mm
X=(V+t)-(h+112mm)				Y= $\frac{(b+2t)}{2}$+15xdia-50mm			

WALL AND FLOOR STEEL

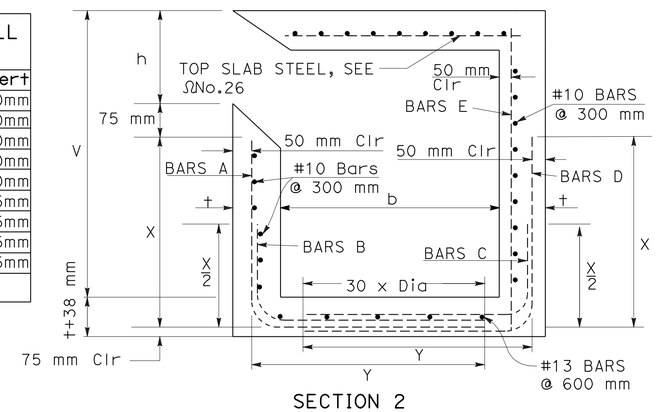

SECTION 2

CATCH BASIN REINFORCEMENT - "W" GREATER THAN 4.3 m

NOTES:

1. WALL AND FLOOR REINFORCING SHOWN SHALL BE USED WITH CATCH BASIN STANDARD DRAWINGS.
2. REINFORCING STEEL SHOWN HEREON SHALL BE USED IN ALL CATCH BASINS ON STATE HIGHWAYS AND WHEN EXCAVATION OR SOIL CONDITIONS REQUIRE BOTH SIDES OF THE WALLS TO BE FORMED REGARDLESS OF BASIN LENGTH OR DEPTH.

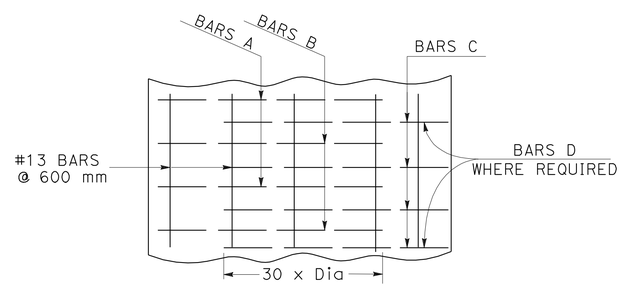

FLOOR REINFORCEMENT SECTION 2

REINFORCEMENT DETAILS FOR CATCH BASIN

DRAINAGE DETAIL No.27

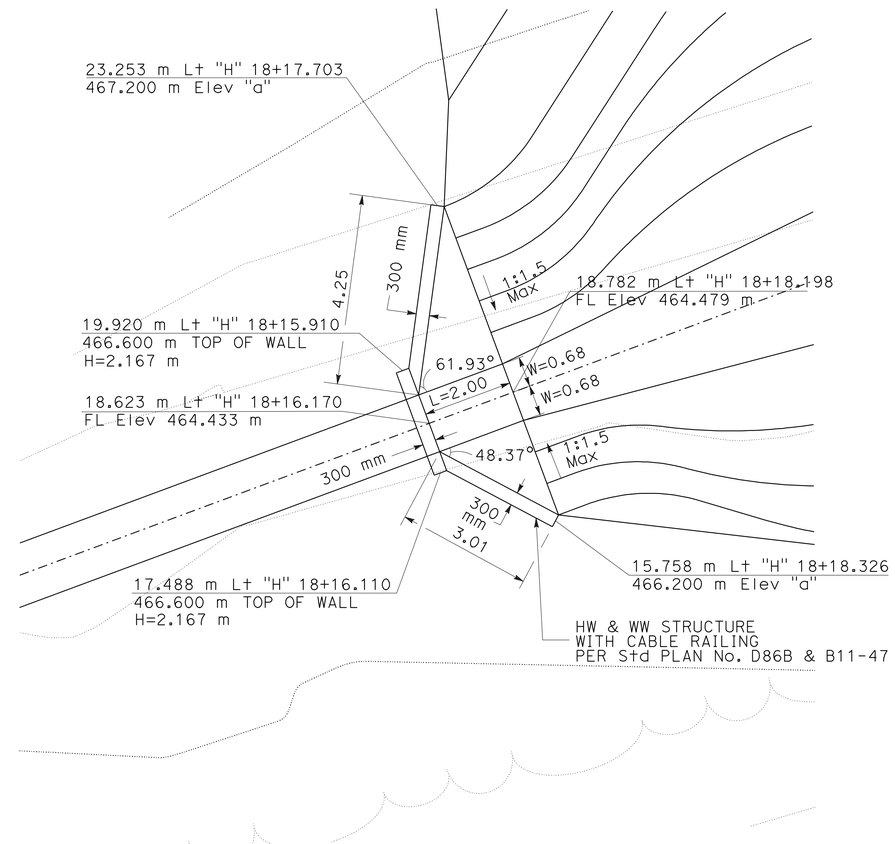

HEADWALL AND WINGWALL DETAIL

DRAINAGE DETAIL No.28

14 | 1

ALL DIMENSIONS ARE IN METERS UNLESS OTHERWISE SHOWN

DRAINAGE DETAILS

NO SCALE **DD-17**

REVISED BY | DATE REVISED
ROBERT WONG | NORMAN SUYDAM
CALCULATED-DESIGNED BY | CHECKED BY
CONSULTANT FUNCTIONAL SUPERVISOR | NORMAN SUYDAM
STATE OF CALIFORNIA - DEPARTMENT OF TRANSPORTATION
Caltrans

LAST REVISION 11-09-09 | DATE PLOTTED => 19-OCT-2010 | TIME PLOTTED => 15:57

Dist	COUNTY	ROUTE	KILOMETER POST TOTAL PROJECT	SHEET No.	TOTAL SHEETS
08	Riv	60,215	R19.7/21.9, R61.3/62.7	138	594

REGISTERED CIVIL ENGINEER 1-14-10 DATE

6-28-10
PLANS APPROVAL DATE

REGISTERED PROFESSIONAL ENGINEER ROBERT WONG No. C64734 Exp.06/30/11 CIVIL STATE OF CALIFORNIA

THE STATE OF CALIFORNIA OR ITS OFFICERS OR AGENTS SHALL NOT BE RESPONSIBLE FOR THE ACCURACY OR COMPLETENESS OF ELECTRONIC COPIES OF THIS PLAN SHEET.

LAN ENGINEERING CORP
1887 BUSINESS CENTER DR
SUITE 6
SAN BERNARDINO, CA 92408

RIVERSIDE COUNTY
TRANSPORTATION COMMISSION
4080 LEMON STREET
RIVERSIDE, CA 92502

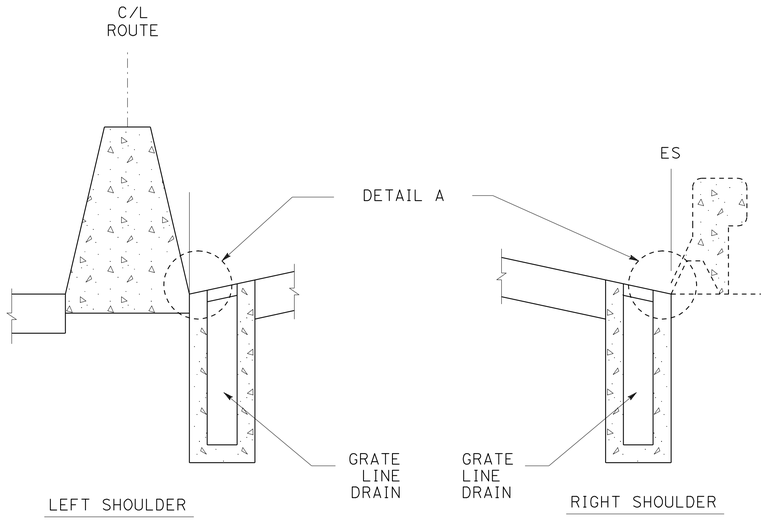

TYPICAL SECTION (OFFSET "X")

TABLE B

SYSTEM	UNIT	ROUTE/LOL	DIRECTION	SHOULDER	DESCRIPTION	STATION	DEPTH (mm)	LENGTH (m)
10	e	215	NB	R+	BEGINNING	9.471 m L+ "D" 15+44.418	135	-
				R+	END	9.471 m L+ "D" 15+14.418	316	30.000
				R+	TRANSITION	9.467 m L+ "D" 15+13.681	660	0.737

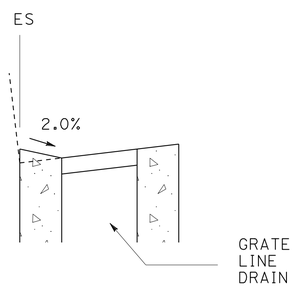

DETAIL A

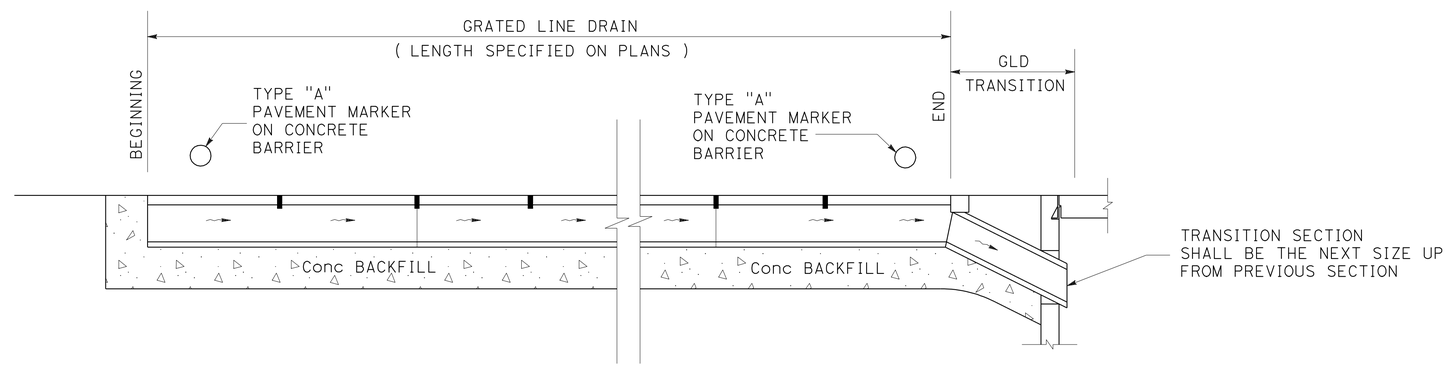

GRATED LINE DRAIN DETAILS
DRAINAGE DETAIL No.29

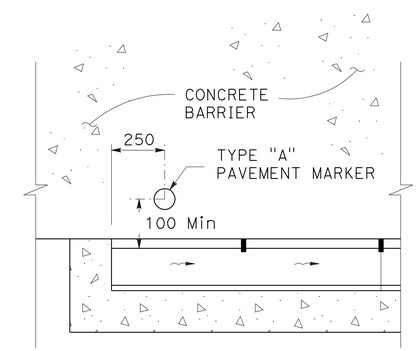

TYPE "A" MARKER LOCATION

ALL DIMENSIONS ARE IN
MILLIMETERS UNLESS OTHERWISE SHOWN

DRAINAGE DETAILS

NO SCALE **DD-18**

STATE OF CALIFORNIA - DEPARTMENT OF TRANSPORTATION
Caltrans

CONSULTANT FUNCTIONAL SUPERVISOR: NORMAN SUYDAM
CALCULATED-DESIGNED BY: ROBERT WONG
CHECKED BY: NORMAN SUYDAM
REVISED BY
DATE REVISED

LAST REVISION 11-09-09
DATE PLOTTED => 19-OCT-2010
TIME PLOTTED => 15:57

Dist	COUNTY	ROUTE	KILOMETER POST TOTAL PROJECT	SHEET No.	TOTAL SHEETS
08	Riv	60,215	R19.7/21.9, R61.3/62.7	139	594

REGISTERED CIVIL ENGINEER 1-14-10 DATE

6-28-10
PLANS APPROVAL DATE

REGISTERED PROFESSIONAL ENGINEER ROBERT WONG No. C64734 Exp.06/30/11 CIVIL STATE OF CALIFORNIA

THE STATE OF CALIFORNIA OR ITS OFFICERS OR AGENTS SHALL NOT BE RESPONSIBLE FOR THE ACCURACY OR COMPLETENESS OF ELECTRONIC COPIES OF THIS PLAN SHEET.

LAN ENGINEERING CORP
1887 BUSINESS CENTER DR
SUITE 6
SAN BERNARDINO, CA 92408

RIVERSIDE COUNTY
TRANSPORTATION COMMISSION
4080 LEMON STREET
RIVERSIDE, CA 92502

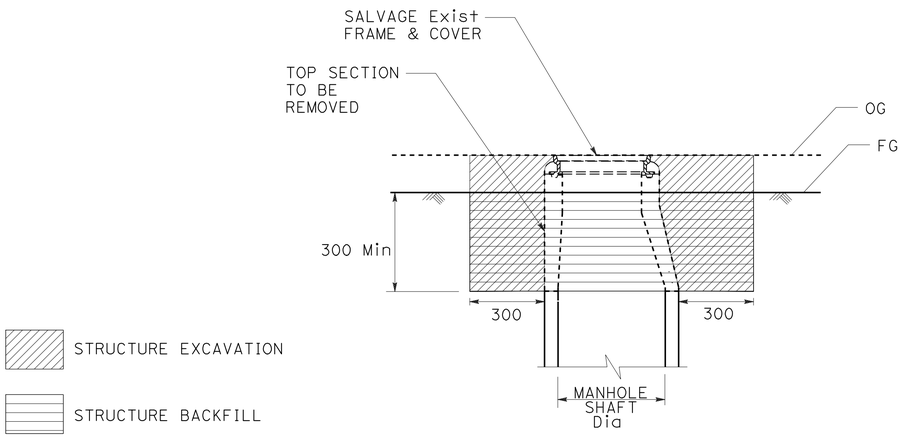

ABANDON MANHOLE
DRAINAGE DETAIL No.30

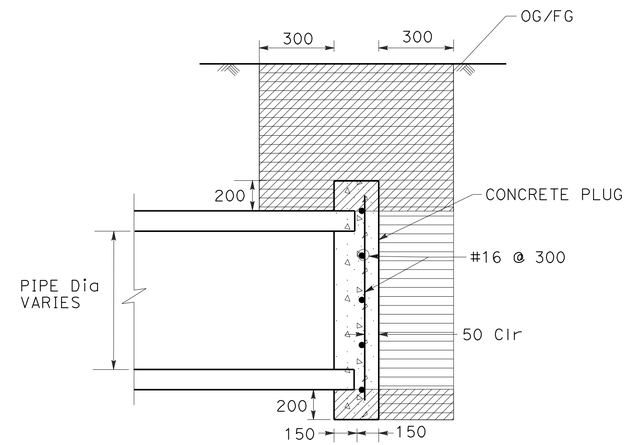

PLUG DRAINAGE PIPE
DRAINAGE DETAIL No.31

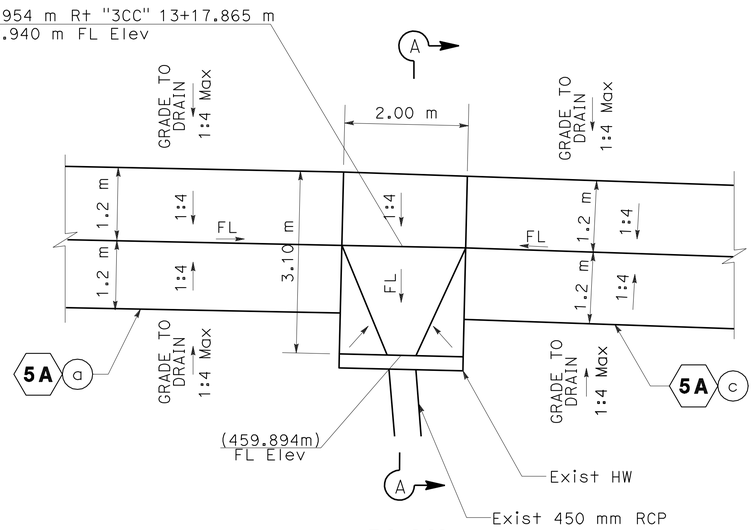

PLAN

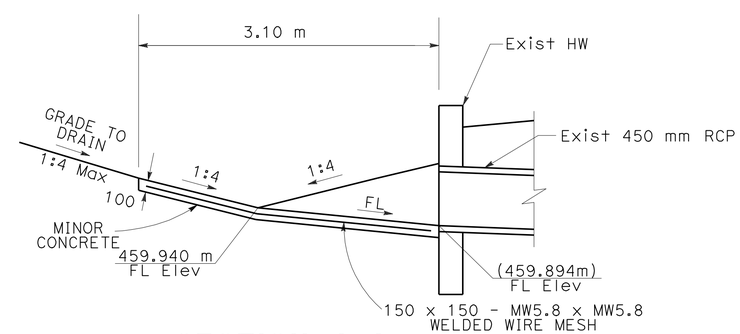

SECTION A-A

ROADSIDE DITCH
TRANSITION STRUCTURE
DRAINAGE DETAIL No.32

5A b

ALL DIMENSIONS ARE IN MILLIMETERS UNLESS OTHERWISE SHOWN

DRAINAGE DETAILS

NO SCALE **DD-19**

STATE OF CALIFORNIA - DEPARTMENT OF TRANSPORTATION
Caltrans

CONSULTANT FUNCTIONAL SUPERVISOR: NORMAN SUYDAM
CALCULATED-DESIGNED BY: ROBERT WONG
CHECKED BY: NORMAN SUYDAM
REVISED BY
DATE REVISED

LAST REVISION 11-09-09
DATE PLOTTED => 19-OCT-2010
TIME PLOTTED => 15:58

Dist	COUNTY	ROUTE	KILOMETER POST TOTAL PROJECT	SHEET No.	TOTAL SHEETS
08	Riv	60,215	R19.7/21.9, R61.3/62.7	140	594

REGISTERED CIVIL ENGINEER 1-14-10 DATE

6-28-10
PLANS APPROVAL DATE

REGISTERED PROFESSIONAL ENGINEER ROBERT WONG No. C64734 Exp.06/30/11 CIVIL STATE OF CALIFORNIA

THE STATE OF CALIFORNIA OR ITS OFFICERS OR AGENTS SHALL NOT BE RESPONSIBLE FOR THE ACCURACY OR COMPLETENESS OF ELECTRONIC COPIES OF THIS PLAN SHEET.

LAN ENGINEERING CORP
1887 BUSINESS CENTER DR
SUITE 6
SAN BERNARDINO, CA 92408

RIVERSIDE COUNTY
TRANSPORTATION COMMISSION
4080 LEMON STREET
RIVERSIDE, CA 92502

NOTES:

1. (N) NOT A SEPARATE PAY ITEM, FOR INFORMATION ONLY. FOR MINIMUM ALLOWABLE CLASS AND BACKFILL METHOD FOR RCP SEE STANDARD PLAN A62-D.
2. THE PRECISE DETERMINATION OF THE FOLLOWING ITEMS WILL BE MADE BY THE ENGINEER IN THE FIELD, STATION SKEW LENGTH FL ELEVATION AND HEIGHT OF INLET (H).
3. ALL CSP SHALL 2.8 mm THICK UNLESS OTHERWISE SPECIFIED AND SHALL BE Galv AND BIT COATED ON BOTH SIDES.
4. FOR CIP RCB, THE Min 28-DAY COMPRESSIVE STRENGTH OF Conc SHALL BE AS FOLLOWS:
   INVERT SLAB - 34MPa
   WALLS AND TOP SLAB - 28 MPa

ALTERNATE PIPE CULVERT

ALLOWABLE PIPE MATERIAL AND PROTECTION (DIMENSIONS IN mm)

DESIGNATION	RCP	SSRP			CSP			CAP			PP (TYPE S)					PP (TYPE C)		
												HDPE		PVC			HDPE	
	SIZE	SIZE	THICK	BIT CT	SIZE	THICK	BIT CT	SIZE	THICK	BIT CT	SIZE	THICK	STIFF	THICK	STIFF	SIZE	THICK	STIFF
200 AP	200	-	-	-	200	1.6	YES	200	1.5	NO	200	0.9	434	2.03	317	200	0.9	434
450 AP	450	450	2.8	YES	450	2.8	YES	450	1.5	NO	450	1.3	275	2.41	220	450	1.27	275
600 AP	600	600	2.8	YES	-	-	-	-	-	-	600	1.5	235	2.92	165	-	-	-
900 AP	900	900	2.8	YES	-	-	-	-	-	-	900	1.7	150	3.94	110	-	-	-
1050 AP	1050	1050	2.8	YES	-	-	-	-	-	-	1050	1.8	130	-	-	-	-	-
450 AP RISER	450	450	2.8	YES	450	2.8	YES	450	1.5	-	-	-	-	-	-	-	-	-
900 AP RISER	900	900	2.8	YES	900	2.8	YES	900	1.5	-	-	-	-	-	-	-	-	-
1200 AP RISER	1200	1200	2.8	YES	1200	2.8	YES	1200	1.5	-	-	-	-	-	-	-	-	-

LEGEND & ABBREVIATIONS:

GO, GI, G2, GDO, GCP, GD1 - DRAINAGE TYPE
PP - PLASTIC PIPE
TRAP - TRAPEZOIDAL
RECT - RECTANGULAR
SSRP - STEEL SPIRAL RIB PIPE
CSP - CORRUGATED STEEL PIPE
CAP - CORRUGATED ALUMINUM PIPE
CFES - CONCRETE FLARED END SECTION
AFES - ALTERNATIVE FLARED END SECTION
AP - ALTERNATIVE PIPE
GTR - GUTTER
DEP - DEPRESSION
RCP - REINFORCED CONCRETE PIPE
HDPE - HIGH DENSITY POLYETHELYNE
CL - CLASS
RSP - ROCK SLOPE PROTECTION
D - DOWNDRAIN JOINT TYPE
S - STANDARD JOINT TYPE
P - POSITIVE JOINT TYPE

DRAINAGE SYSTEM No. ⬡	DRAINAGE UNIT ○		MINOR CONCRETE (MINOR Str) (F)	CABLE RAILING	MINOR CONCRETE (Misc Const)	MINOR CONCRETE (BACKFILL)	CL 1 CONCRETE (STRUCTURE) (F)	MISCELLANEOUS IRON & STEEL (F)	BAR REINFORCING STEEL (F)	FRAMES, GRATES & COVERS: MH FRAME / COVER (N)	600-12 GRATE (N)	600-12X GRATE (N)	900 R GRATE (N)	900 mm PRECAST CONCRETE PIPE INLET	900 mm PRECAST CONCRETE PIPE MANHOLE	1800 mm PRECAST CONCRETE PIPE MANHOLE	RSP: RSP FABRIC	BACKING No. 1, METHOD B	FACING, METHOD B	1/2-TON, METHOD B	GRATED LINE DRAIN	RISER SAFETY CAGE (N)	AP: 200 mm	450 mm	600 mm	RCP: 450 mm	600 mm	750 mm	900 mm	1350 mm	1500 mm	1800 mm	JACKED 450 mm (CL V)	JACKED 900 mm (CL V)	JACKED 1350 mm (CL V)	JACKED 1800 mm (CL V)	PIPE JOINT CLASSIFICATION (N)	HEIGHT OF INLET "H" (N)	DESCRIPTION	STATION	DRAINAGE PLAN SHEET No.	DRAINAGE SYSTEM No. ⬡	DRAINAGE UNIT ○
			m3	m	m3	m3	m3	Kg	Kg	EA	EA	EA	EA	m	m	m	m2	m3	m3	m3	m	EA	m	m	m	m	m	m	m	m	m	m	m	m	m		m					
1	a																																					REMOVE 600 mm PP		D-1	1	a
	b																																					600 mm CFES ΩNo. 20	13.096 m Lt "S" 11+24.878			b
	c																									9.8										S		600 mm RCP				c
	d		0.3																																			Conc COLLAR ΩNo. 2	5.480 m Lt "S" 11+30.084			d
	e		0.3																																			Conc COLLAR ΩNo. 2	6.636 m Rt "S" 11+58.598			e
	f																																					REMOVE 600 mm PP				f
	g																																					REMOVE DRAINAGE INLET				g
	h																																					REMOVE 600 mm RCP				h
	i																									7.5										S		600 mm RCP				i
	j		1.2				263			2																											1.1	GD1 DI ΩNo. 11	13.029 m Lt "H" 11+84.781			j
	k		0.3																																			Conc COLLAR ΩNo. 2	1.933 m Lt "H" 11+82.723			k
	l																																					REMOVE DRAINAGE INLET				l
	m					0.5																				1.4										S		600 mm RCP & Conc Bkf ΩNo. 3				m
	n		0.3																																			Conc COLLAR ΩNo. 2	0.429 m Lt "H" 11+82.749			n
	o		0.9				148			1																											1.3	G1 DRAINAGE INLET	7.645 m Lt "3CC" 11+92.162			o
	p																																					REMOVE 600 mm RCP				p
	q																																					REMOVE DRAINAGE INLET				q
	r																																					PLUG 600 mm RCP ΩNo. 31	2.848 m Lt "3CC" 11+92.815			r
2	a																17	1.8	5.5																			RSP FACING ΩNo. 1		D-1	2	a
	b																																					600 mm CFES ΩNo. 20	11.495 m Lt "S" 11+24.984			b
	c					1.1																				35.4										S		600 mm RCP & Conc Bkf ΩNo. 3				c
	d		1.4				215				2																										1.1	GDO DRAINAGE INLET	11.635 m Lt "X" 13+81.196			d
	e					1.4																				3.9										S		600 mm RCP & Conc Bkf ΩNo. 3				e
	f		1.4				215				2																										1.1	GDO DRAINAGE INLET	11.430 m Lt "X" 13+86.430			f
SHEET TOTAL			6.1			3.0		841		3	4						17	1.8	5.5							58.0												SHEET TOTAL				

DRAINAGE QUANTITIES
DQ-1

STATE OF CALIFORNIA - DEPARTMENT OF TRANSPORTATION
Caltrans

CONSULTANT FUNCTIONAL SUPERVISOR: NORMAN SUYDAM
CALCULATED-DESIGNED BY: ROBERT WONG
CHECKED BY: NORMAN SUYDAM
REVISED BY / DATE REVISED

LAST REVISION 11-09-09
DATE PLOTTED => 19-OCT-2010
TIME PLOTTED => 15:58

NOTES:

1. (N) NOT A SEPARATE PAY ITEM, FOR INFORMATION ONLY. FOR MINIMUM ALLOWABLE CLASS AND BACKFILL METHOD FOR RCP SEE STANDARD PLAN A62-D.
2. THE PRECISE DETERMINATION OF THE FOLLOWING ITEMS WILL BE MADE BY THE ENGINEER IN THE FIELD, STATION SKEW LENGTH FL ELEVATION AND HEIGHT OF INLET (H).
3. ALL CSP SHALL 2.8 mm THICK UNLESS OTHERWISE SPECIFIED AND SHALL BE Galv AND BIT COATED ON BOTH SIDES.
4. FOR CIP RCB, THE Min 28-DAY COMPRESSIVE STRENGTH OF Conc SHALL BE AS FOLLOWS:
   INVERT SLAB - 34MPa
   WALLS AND TOP SLAB - 28 MPa

ALTERNATE PIPE CULVERT

ALLOWABLE PIPE MATERIAL AND PROTECTION (DIMENSIONS IN mm)

DESIGNATION	RCP	SSRP			CSP			CAP			PP (TYPE S)					PP (TYPE C)		
												HDPE		PVC			HDPE	
	SIZE	SIZE	THICK	BIT CT	SIZE	THICK	BIT CT	SIZE	THICK	BIT CT	SIZE	THICK	STIFF	THICK	STIFF	SIZE	THICK	STIFF
200 AP	200	-	-	-	200	1.6	YES	200	1.5	NO	200	0.9	434	2.03	317	200	0.9	434
450 AP	450	450	2.8	YES	450	2.8	YES	450	1.5	NO	450	1.3	275	2.41	220	450	1.27	275
600 AP	600	600	2.8	YES	-	-	-	-	-	-	600	1.5	235	2.92	165	-	-	-
900 AP	900	900	2.8	YES	-	-	-	-	-	-	900	1.7	150	3.94	110	-	-	-
1050 AP	1050	1050	2.8	YES	-	-	-	-	-	-	1050	1.8	130	-	-	-	-	-
450 AP RISER	450	450	2.8	YES	450	2.8	YES	450	1.5	-	-	-	-	-	-	-	-	-
900 AP RISER	900	900	2.8	YES	900	2.8	YES	900	1.5	-	-	-	-	-	-	-	-	-
1200 AP RISER	1200	1200	2.8	YES	1200	2.8	YES	1200	1.5	-	-	-	-	-	-	-	-	-

Caltrans Metric

Dist	COUNTY	ROUTE	KILOMETER POST TOTAL PROJECT	SHEET No.	TOTAL SHEETS
08	Riv	60,215	R19.7/21.9, R61.3/62.7	141	594

REGISTERED CIVIL ENGINEER 1-14-10 DATE

6-28-10
PLANS APPROVAL DATE

REGISTERED PROFESSIONAL ENGINEER ROBERT WONG No. C64734 Exp.06/30/11 CIVIL STATE OF CALIFORNIA

THE STATE OF CALIFORNIA OR ITS OFFICERS OR AGENTS SHALL NOT BE RESPONSIBLE FOR THE ACCURACY OR COMPLETENESS OF ELECTRONIC COPIES OF THIS PLAN SHEET.

LAN ENGINEERING CORP
1887 BUSINESS CENTER DR
SUITE 6
SAN BERNARDINO, CA 92408

RIVERSIDE COUNTY
TRANSPORTATION COMMISSION
4080 LEMON STREET
RIVERSIDE, CA 92502

LEGEND & ABBREVIATIONS:

GO, GI, G2, GD0, GCP, GD1 - DRAINAGE TYPE
PP - PLASTIC PIPE
TRAP - TRAPEZOIDAL
RECT - RECTANGULAR
SSRP - STEEL SPIRAL RIB PIPE
CSP - CORRUGATED STEEL PIPE
CAP - CORRUGATED ALUMINUM PIPE
CFES - CONCRETE FLARED END SECTION
AFES - ALTERNATIVE FLARED END SECTION
AP - ALTERNATIVE PIPE
GTR - GUTTER
DEP - DEPRESSION
RCP - REINFORCED CONCRETE PIPE
HDPE - HIGH DENSITY POLYETHELYNE
CL - CLASS
RSP - ROCK SLOPE PROTECTION
D - DOWNDRAIN JOINT TYPE
S - STANDARD JOINT TYPE
P - POSITIVE JOINT TYPE

DRAINAGE SYSTEM No. ⬡	DRAINAGE UNIT ○	REMOVE INLET	REMOVE MANHOLE	REMOVE CONCRETE	REMOVE OVERSIDE DRAIN	REMOVE HEADWALL	PLUG PIPE 300 mm	PLUG PIPE 450 mm	PLUG PIPE 600 mm	PLUG PIPE 1200 mm	ABANDON CULVERT	SAND BACKFILL	ABANDON MANHOLE	DITCH EXCAVATION	200 mm ELBOW (N)	450 mm CFES	600 mm CFES	1350 mm CFES	600 mm AFES	CLEANOUT ASSEMBLY	WALL DRAIN GRATE (N)	Str EXCAVATION (CULVERT)	Str BACKFILL (CULVERT)	REMOVE PIPE 300 mm RCP	REMOVE PIPE 450 mm RCP	REMOVE PIPE 600 mm PP	REMOVE PIPE 600 mm RCP	REMOVE PIPE 1200 mm RCP	REMOVE PIPE 1800 mm CSP	DESCRIPTION	STATION	DRAINAGE PLAN SHEET No.	DRAINAGE SYSTEM No. ⬡	DRAINAGE UNIT ○
		EA	EA	m3	EA	EA	EA	EA	EA	EA	EA	m3	EA	m3	EA	EA	EA	EA	EA	EA	EA	m3	m3	m	m	m	m	m	m					
1	a																									20.2				REMOVE 600 mm PP		D-1	1	a
	b																1													600 mm CFES ΩNo. 20	13.096 m Lt "S" 11+24.878			b
	c																													600 mm RCP				c
	d																													Conc COLLAR ΩNo. 2	5.480 m Lt "S" 11+30.084			d
	e																													Conc COLLAR ΩNo. 2	6.636 m Rt "S" 11+58.598			e
	f																									3.5				REMOVE 600 mm PP				f
	g	1																												REMOVE DRAINAGE INLET				g
	h																										4.0			REMOVE 600 mm RCP				h
	i																													600 mm RCP				i
	j																													GD1 DI ΩNo. 11	13.029 m Lt "H" 11+84.781			j
	k																													Conc COLLAR ΩNo. 2	1.933 m Lt "H" 11+82.723			k
	l	1																												REMOVE DRAINAGE INLET				l
	m																													600 mm RCP & Conc Bkf ΩNo. 3				m
	n																													Conc COLLAR ΩNo. 2	0.429 m Lt "H" 11+82.749			n
	o																													G1 DRAINAGE INLET	7.645 m Lt "3CC" 11+92.162			o
	p																										4.2			REMOVE 600 mm RCP				p
	q	1																												REMOVE DRAINAGE INLET				q
	r							1																						PLUG 600 mm RCP ΩNo. 31	2.848 m Lt "3CC" 11+92.815			r
2	a																													RSP FACING ΩNo. 1		D-1	2	a
	b																1													600 mm CFES ΩNo. 20	11.495 m Lt "S" 11+24.984			b
	c																													600 mm RCP & Conc Bkf ΩNo. 3				c
	d																													GDO DRAINAGE INLET	11.635 m Lt "X" 13+81.196			d
	e																													600 mm RCP & Conc Bkf ΩNo. 3				e
	f																													GDO DRAINAGE INLET	11.430 m Lt "X" 13+86.430			f
SHEET TOTAL		3						1									2									23.7	8.2			SHEET TOTAL				

DRAINAGE QUANTITIES
DQ-2

REVISED BY | DATE REVISED

ROBERT WONG | NORMAN SUYDAM
CALCULATED-DESIGNED BY | CHECKED BY

CONSULTANT FUNCTIONAL SUPERVISOR
NORMAN SUYDAM

STATE OF CALIFORNIA - DEPARTMENT OF TRANSPORTATION
Caltrans

LAST REVISION 11-09-09 | DATE PLOTTED => 19-OCT-2010 | TIME PLOTTED => 15:58

Dist	COUNTY	ROUTE	KILOMETER POST TOTAL PROJECT	SHEET No.	TOTAL SHEETS
08	Riv	60,215	R19.7/21.9, R61.3/62.7	142	594

Robert Wong 1-14-10
REGISTERED CIVIL ENGINEER DATE

6-28-10
PLANS APPROVAL DATE

REGISTERED PROFESSIONAL ENGINEER ROBERT WONG No. C64734 Exp.06/30/11 CIVIL STATE OF CALIFORNIA

THE STATE OF CALIFORNIA OR ITS OFFICERS OR AGENTS SHALL NOT BE RESPONSIBLE FOR THE ACCURACY OR COMPLETENESS OF ELECTRONIC COPIES OF THIS PLAN SHEET.

LAN ENGINEERING CORP
1887 BUSINESS CENTER DR
SUITE 6
SAN BERNARDINO, CA 92408

RIVERSIDE COUNTY
TRANSPORTATION COMMISSION
4080 LEMON STREET
RIVERSIDE, CA 92502

DRAINAGE QUANTITIES

DRAINAGE SYSTEM No. ⬡	DRAINAGE UNIT ◯		MINOR CONCRETE (MINOR Str) (F)	CABLE RAILING	MINOR CONCRETE (Misc Const)	MINOR CONCRETE (BACKFILL)	CL 1 CONCRETE (STRUCTURE) (F)	MISCELLANEOUS IRON & STEEL (F)	BAR REINFORCING STEEL (F)	FRAMES, GRATES & COVERS: MH FRAME / COVER (N)	FRAMES, GRATES & COVERS: 600-12 GRATE (N)	FRAMES, GRATES & COVERS: 600-12X GRATE (N)	FRAMES, GRATES & COVERS: 900 R GRATE (N)	900 mm PRECAST CONCRETE PIPE INLET	900 mm PRECAST CONCRETE PIPE MANHOLE	1800 mm PRECAST CONCRETE PIPE MANHOLE	RSP: RSP FABRIC	RSP: BACKING No. 1, METHOD B	RSP: FACING, METHOD B	RSP: 1/2-TON, METHOD B	GRATED LINE DRAIN	RISER SAFETY CAGE (N)	AP: 200 mm	AP: 450 mm	AP: 600 mm	RCP: 450 mm	RCP: 600 mm	RCP: 750 mm	RCP: 900 mm	RCP: 1350 mm	RCP: 1500 mm	RCP: 1800 mm	RCP: JACKED 450 mm (CL V)	RCP: JACKED 900 mm (CL V)	RCP: JACKED 1350 mm (CL V)	RCP: JACKED 1800 mm (CL V)	PIPE JOINT CLASSIFICATION (N)	HEIGHT OF INLET "H" (N)	DESCRIPTION	STATION	DRAINAGE PLAN SHEET No.	DRAINAGE SYSTEM No. ⬡	DRAINAGE UNIT ◯
			m3	m	m3	m3	m3	Kg	Kg	EA	EA	EA	EA	m	m	m	m2	m3	m3	m3	m	EA	m	m	m	m	m	m	m	m	m	m	m	m	m		m					
3	a																																					600 mm AFES Ω No. 20	14.907 m L+ "S" 11+27.026	D-1	3	a
	b					1.8																		24.2											S		600 mm AP & Conc Bkf Ω No. 3				b
	c		1.2					263			2																									1.1	GD1 DRAINAGE INLET Ω No. 11	9.760 m L+ "S" 11+51.010			c
	d					6.9																				102.3									S		600 mm RCP & Conc Bkf Ω No. 3		D-2		d
	e		1.8					263			2																									1.9	GD1 DRAINAGE INLET Ω No. 11	6.100 m L+ "S" 12+54.670	D-2		e
4	a																								37.3										S		450 mm RCP		D-1	4	a
	b		1.3					148			1																									1.4	G2 DRAINAGE INLET	13.706 m L+ "H" 12+23.885			b
	c																								24.1										S		450 mm RCP				c
	d		1.9					263			2																									2.1	GD1 DRAINAGE INLET Ω No. 11	3.805 m R+ "H" 12+42.035			d
	e																								4.2										S		450 mm RCP				e
	f		1.7					148			1																									2.1	G2 DRAINAGE INLET	3.855 m R+ "H" 12+47.099			f
5	a																																					REMOVE 600 mm RCP		D-1	5	a
	b																																					REMOVE DRAINAGE INLET				b
	c																								56.6										S		450 mm RCP				c
	d		1.7					148			1																									2.0	G2 DRAINAGE INLET	7.801 m L+ "3CC" 12+49.984			d
5A	a		13.9																																			ROADSIDE DITCH CASE B Ω No.17	20.658 m R+ "3CC" 12+62.178	D-1	5A	a
	b		0.8																																			DITCH Trans Str Ω No.32	21.954 m R+ "3CC" 13+17.865	D-2		b
	c		20.9																																			ROADSIDE DITCH CASE B Ω No.17	24.826 m R+ "3CC" 14+02.581			c
6	a			17.5			24.0		2528																													HEADWALL & WINGWALL Ω No.18	97.615 m L+ "H" 13+01.690	D-2	6	a
	b																786	432																				TRAPEZOIDAL RSP Chnl Ω No.16				b
	c			22.3			49.0		4542																													HEADWALL & WINGWALL Ω No.23	61.309 m L+ "H" 13+55.816			c
	d																													48.7					S		1800 mm RCP				d
SHEET TOTAL			45.2	39.8		8.7	73.0	1233	7070		9						786	432						24.2	122.2	102.3				48.7							SHEET TOTAL				

DRAINAGE QUANTITIES
DQ-3

STATE OF CALIFORNIA - DEPARTMENT OF TRANSPORTATION
Caltrans

CONSULTANT FUNCTIONAL SUPERVISOR: NORMAN SUYDAM
CALCULATED-DESIGNED BY: ROBERT WONG
CHECKED BY: NORMAN SUYDAM
REVISED BY
DATE REVISED

LAST REVISION 11-09-09
DATE PLOTTED => 19-OCT-2010
TIME PLOTTED => 15:58

Dist	COUNTY	ROUTE	KILOMETER POST TOTAL PROJECT	SHEET No.	TOTAL SHEETS
08	Riv	60,215	R19.7/21.9, R61.3/62.7	143	594

Robert W 1-14-10
REGISTERED CIVIL ENGINEER DATE

6-28-10
PLANS APPROVAL DATE

REGISTERED PROFESSIONAL ENGINEER ROBERT WONG No. C64734 Exp.06/30/11 CIVIL STATE OF CALIFORNIA

THE STATE OF CALIFORNIA OR ITS OFFICERS OR AGENTS SHALL NOT BE RESPONSIBLE FOR THE ACCURACY OR COMPLETENESS OF ELECTRONIC COPIES OF THIS PLAN SHEET.

LAN ENGINEERING CORP
1887 BUSINESS CENTER DR
SUITE 6
SAN BERNARDINO, CA 92408

RIVERSIDE COUNTY
TRANSPORTATION COMMISSION
4080 LEMON STREET
RIVERSIDE, CA 92502

DRAINAGE QUANTITIES

DRAINAGE SYSTEM No. ⬡	DRAINAGE UNIT ○	REMOVE INLET	REMOVE MANHOLE	REMOVE CONCRETE	REMOVE OVERSIDE DRAIN	REMOVE HEADWALL	PLUG PIPE 300 mm	PLUG PIPE 450 mm	PLUG PIPE 600 mm	PLUG PIPE 1200 mm	ABANDON CULVERT	SAND BACKFILL	ABANDON MANHOLE	DITCH EXCAVATION	200 mm ELBOW (N)	450 mm CFES	600 mm CFES	1350 mm CFES	600 mm AFES	CLEANOUT ASSEMBLY	WALL DRAIN GRATE (N)	Str EXCAVATION (CULVERT)	Str BACKFILL (CULVERT)	REMOVE PIPE 300 mm RCP	REMOVE PIPE 450 mm RCP	REMOVE PIPE 600 mm PP	REMOVE PIPE 600 mm RCP	REMOVE PIPE 1200 mm RCP	REMOVE PIPE 1800 mm CSP	DESCRIPTION	STATION	DRAINAGE PLAN SHEET No.	DRAINAGE SYSTEM No. ⬡	DRAINAGE UNIT ○
		EA	EA	m3	EA	EA	EA	EA	EA	EA	EA	m3	EA	m3	EA	EA	EA	EA	EA	EA	EA	m3	m3	m	m	m	m	m	m					
3	a																		1											600 mm AFES ΩNo. 20	14.907 m Lt "S" 11+27.026	D-1	3	a
	b																													600 mm AP & Conc BkfΩNo. 3				b
	c																													GD1 DRAINAGE INLET ΩNo. 11	9.760 m Lt "S" 11+51.010			c
	d																													600 mm RCP & Conc BkfΩNo. 3		D-2		d
	e																													GD1 DRAINAGE INLET ΩNo. 11	6.100 m Lt "S" 12+54.670	D-2		e
4	a																													450 mm RCP		D-1	4	a
	b																													G2 DRAINAGE INLET	13.706 m Lt "H" 12+23.885			b
	c																													450 mm RCP				c
	d																													GD1 DRAINAGE INLET ΩNo. 11	3.805 m Rt "H" 12+42.035			d
	e																													450 mm RCP				e
																														G2 DRAINAGE INLET	3.855 m Rt "H" 12+47.099			f
5	a																										66.0			REMOVE 600 mm RCP		D-1	5	a
	b	1																												REMOVE DRAINAGE INLET				b
	c																													450 mm RCP				c
	d																													G2 DRAINAGE INLET	7.801 m Lt "3CC" 12+49.984			d
5A	a													27.4																ROADSIDE DITCH CASE BΩNo.17	20.658 m Rt "3CC" 12+62.178	D-1	5A	a
	b													4.3																DITCH Trans StrΩNo.32	21.954 m Rt "3CC" 13+17.865	D-2		b
	c													40.8																ROADSIDE DITCH CASE BΩNo.17	24.826 m Rt "3CC" 14+02.581			c
6	a																					81.0	15.0							HEADWALL & WINGWALL ΩNo. 18	97.615 m Lt "H" 13+01.690	D-2	6	
	b	FOR EXCAVATION QUANTITIES, SEE SHEET Q-4.																												TRAPEZOIDAL RSP Chnl ΩNo. 16				a
	c																					253.0	29.0							HEADWALL & WINGWALL ΩNo. 23	61.309 m Lt "H" 13+55.816			b
	d																													1800 mm RCP				c
																																		d
SHEET TOTAL		1												72.5					1			334.0	44.0				66.0			SHEET TOTAL				

DRAINAGE QUANTITIES
DQ-4

STATE OF CALIFORNIA - DEPARTMENT OF TRANSPORTATION
Caltrans

CONSULTANT FUNCTIONAL SUPERVISOR: NORMAN SUYDAM
CALCULATED-DESIGNED BY: ROBERT WONG
CHECKED BY: NORMAN SUYDAM
REVISED BY
DATE REVISED

LAST REVISION 11-09-09
DATE PLOTTED => 19-OCT-2010
TIME PLOTTED => 15:58

Dist	COUNTY	ROUTE	KILOMETER POST TOTAL PROJECT	SHEET No.	TOTAL SHEETS
08	Riv	60,215	R19.7/21.9, R61.3/62.7	144	594

Robert Wong 1-14-10
REGISTERED CIVIL ENGINEER DATE

6-28-10
PLANS APPROVAL DATE

REGISTERED PROFESSIONAL ENGINEER ROBERT WONG No. C64734 Exp.06/30/11 CIVIL STATE OF CALIFORNIA

THE STATE OF CALIFORNIA OR ITS OFFICERS OR AGENTS SHALL NOT BE RESPONSIBLE FOR THE ACCURACY OR COMPLETENESS OF ELECTRONIC COPIES OF THIS PLAN SHEET.

LAN ENGINEERING CORP
1887 BUSINESS CENTER DR
SUITE 6
SAN BERNARDINO, CA 92408

RIVERSIDE COUNTY
TRANSPORTATION COMMISSION
4080 LEMON STREET
RIVERSIDE, CA 92502

DRAINAGE QUANTITIES

DRAINAGE SYSTEM No. ⬡	DRAINAGE UNIT ○		MINOR CONCRETE (MINOR Str) (F)	CABLE RAILING	MINOR CONCRETE (Misc Const)	MINOR CONCRETE (BACKFILL)	CL 1 CONCRETE (STRUCTURE) (F)	MISCELLANEOUS IRON & STEEL (F)	BAR REINFORCING STEEL (F)	FRAMES, GRATES & COVERS: MH FRAME / COVER (N)	600-12 GRATE (N)	600-12X GRATE (N)	900 R GRATE (N)	900 mm PRECAST CONCRETE PIPE INLET	900 mm PRECAST CONCRETE PIPE MANHOLE	1800 mm PRECAST CONCRETE PIPE MANHOLE	RSP: RSP FABRIC	BACKING No. 1, METHOD B	FACING, METHOD B	1/2-TON, METHOD B	GRATED LINE DRAIN	RISER SAFETY CAGE (N)	AP: 200 mm	450 mm	600 mm	RCP: 450 mm	600 mm	750 mm	900 mm	1350 mm	1500 mm	1800 mm	JACKED 450 mm (CL V)	JACKED 900 mm (CL V)	JACKED 1350 mm (CL V)	JACKED 1800 mm (CL V)	PIPE JOINT CLASSIFICATION (N)	HEIGHT OF INLET "H" (N)	DESCRIPTION	STATION	DRAINAGE PLAN SHEET No.	DRAINAGE SYSTEM No. ⬡	DRAINAGE UNIT ○
			m3	m	m3	m3	m3	Kg	Kg	EA	EA	EA	EA	m	m	m	m2	m3	m3	m3	m	EA	m	m	m	m	m	m	m	m	m	m	m	m	m		m					
6	e														5.3																				26.2	S		1800 mm JACKED RCP		D-2	6	e
	f						11.0	200	512	1						2.4																						MANHOLE No. 4 Ω No. 13	16.197 m L+ "H" 14+10.791			f
	g																																					SAFETY LEDGE Ω No. 10	16.197 m L+ "H" 14+10.791			g
	h																																		58.9	S		1800 mm JACKED RCP				h
	i																																		10.7	S		1800 mm JACKED RCP				i
	j																																		38.0	S		1800 mm JACKED RCP				j
	k																																		10.7	S		1800 mm JACKED RCP				k
	l																																		48.5	S		1800 mm JACKED RCP				l
	m																													10.7						S		1800 mm RCP				m
	n																													20.9						S		1800 mm RCP				n
	o			15.1	0.8		34.0		1562																													BASIN RETAINING WALL ΩNo.22	83.832 m R+ "3CC" 15+59.977			o
6A	a																																					REMOVE HEADWALL		D-2	6A	a
	b																																					REMOVE 300 mm RCP				b
	c																																					PLUG 300 mm RCP Ω No. 31	14.218 m L+ "S" 13+18.828			c
	d																																					Abn 300 mm RCP				d
7	a		FOR OVERSIDE DRAIN QUANTITIES, SEE SHEET Q-1.																																			HMA OVERSIDE DRAIN Ω No. 4	24.537 m L+ "X" 15+65.013	D-2	7	a
8	a																																					REMOVE HEADWALL		D-2	8	a
	b																																					REMOVE 1800 mm CSP				b
	c																													82.3						S		1800 mm RCP				c
	d		1.8																																			CONCRETE COLLAR Ω No. 2	6.397 m R+ "H" 14+04.848			d
8A	a																																					REMOVE 600 mm RCP		D-2	8A	a
	b																																					REMOVE DRAINAGE INLET				b
9	a																						4.7												S		450 mm AP		D-2	9	a
	b							5														1																RISER SAFETY CAGE				b
	c		3.5					263			2																										3.0	GD1 DRAINAGE INLET Ω No. 11	14.037 m L+ "H" 14+16.985			c
SHEET TOTAL			5.3	15.1	0.8		45.0	468	2074	1	2				5.3	2.4						1		4.7							113.9				193.0			SHEET TOTAL				

DRAINAGE QUANTITIES
DQ-5

STATE OF CALIFORNIA - DEPARTMENT OF TRANSPORTATION
Caltrans

CONSULTANT FUNCTIONAL SUPERVISOR: NORMAN SUYDAM
CALCULATED-DESIGNED BY: ROBERT WONG
CHECKED BY: NORMAN SUYDAM
REVISED BY
DATE REVISED

LAST REVISION 11-09-09
DATE PLOTTED => 19-OCT-2010
TIME PLOTTED => 15:58

Dist	COUNTY	ROUTE	KILOMETER POST TOTAL PROJECT	SHEET No.	TOTAL SHEETS
08	Riv	60,215	R19.7/21.9, R61.3/62.7	145	594

Robert Wong 1-14-10
REGISTERED CIVIL ENGINEER DATE

6-28-10
PLANS APPROVAL DATE

REGISTERED PROFESSIONAL ENGINEER ROBERT WONG No. C64734 Exp.06/30/11 CIVIL STATE OF CALIFORNIA

THE STATE OF CALIFORNIA OR ITS OFFICERS OR AGENTS SHALL NOT BE RESPONSIBLE FOR THE ACCURACY OR COMPLETENESS OF ELECTRONIC COPIES OF THIS PLAN SHEET.

LAN ENGINEERING CORP
1887 BUSINESS CENTER DR
SUITE 6
SAN BERNARDINO, CA 92408

RIVERSIDE COUNTY
TRANSPORTATION COMMISSION
4080 LEMON STREET
RIVERSIDE, CA 92502

DRAINAGE QUANTITIES

DRAINAGE SYSTEM No. ⬡	DRAINAGE UNIT ○	REMOVE INLET	REMOVE MANHOLE	REMOVE CONCRETE	REMOVE OVERSIDE DRAIN	REMOVE HEADWALL	PLUG PIPE 300 mm	PLUG PIPE 450 mm	PLUG PIPE 600 mm	PLUG PIPE 1200 mm	ABANDON CULVERT	SAND BACKFILL	ABANDON MANHOLE	DITCH EXCAVATION	200 mm ELBOW (N)	450 mm CFES	600 mm CFES	1350 mm CFES	600 mm AFES	CLEANOUT ASSEMBLY	WALL DRAIN GRATE (N)	Str EXCAVATION (CULVERT)	Str BACKFILL (CULVERT)	REMOVE PIPE 300 mm RCP	REMOVE PIPE 450 mm RCP	REMOVE PIPE 600 mm PP	REMOVE PIPE 600 mm RCP	REMOVE PIPE 1200 mm RCP	REMOVE PIPE 1800 mm CSP	DESCRIPTION	STATION	DRAINAGE PLAN SHEET No.	DRAINAGE SYSTEM No. ⬡	DRAINAGE UNIT ○
		EA	EA	m3	EA	EA	EA	EA	EA	EA	EA	m3	EA	m3	EA	EA	EA	EA	EA	EA	EA	m3	m3	m	m	m	m	m	m					
6	e																													1800 mm JACKED RCP		D-2	6	e
	f																					153.0	112.0							MANHOLE No. 4 Ω No. 13	16.197 m Lt "H" 14+10.791			f
	g																													SAFETY LEDGE Ω No. 10	16.197 m Lt "H" 14+10.791			g
	h																													1800 mm JACKED RCP				h
	i																													1800 mm JACKED RCP				i
	j																													1800 mm JACKED RCP				j
	k																													1800 mm JACKED RCP				k
	l																													1800 mm JACKED RCP				l
	m																													1800 mm RCP				m
	n																													1800 mm RCP				n
	o																					180.5	122.0							BASIN RETAINING WALL ΩNo.22	83.832 m Rt "3CC" 15+59.977			o
6A	a					1																								REMOVE HEADWALL		D-2	6A	a
	b																							8.0						REMOVE 300 mm RCP				b
	c						1																							PLUG 300 mm RCP Ω No. 31	14.218 m Lt "S" 13+18.828			c
	d										1	0.7																		Abn 300 mm RCP				d
7	a																													HMA OVERSIDE DRAIN Ω No. 4	24.537 m Lt "X" 15+65.013	D-2	7	a
8	a					1																								REMOVE HEADWALL		D-2	8	a
	b																												45.3	REMOVE 1800 mm CSP				b
	c																													1800 mm RCP				c
	d																													CONCRETE COLLAR Ω No. 2	6.397 m Rt "H" 14+04.848			d
8A	a																										12.0			REMOVE 600 mm RCP		D-2	8A	a
	b	1																												REMOVE DRAINAGE INLET				b
9	a																													450 mm AP		D-2	9	a
	b																													RISER SAFETY CAGE				b
	c																													GD1 DRAINAGE INLET Ω No. 11	14.037 m Lt "H" 14+16.985			c
SHEET TOTAL		1				2	1				1	0.7										333.5	234.0	8.0			12.0		45.3	SHEET TOTAL				

DRAINAGE QUANTITIES
DQ-6

STATE OF CALIFORNIA - DEPARTMENT OF TRANSPORTATION
Caltrans

CONSULTANT FUNCTIONAL SUPERVISOR: NORMAN SUYDAM
CALCULATED-DESIGNED BY: ROBERT WONG
CHECKED BY: NORMAN SUYDAM
REVISED BY
DATE REVISED

LAST REVISION 11-09-09
DATE PLOTTED => 19-OCT-2010
TIME PLOTTED => 15:58

Dist	COUNTY	ROUTE	KILOMETER POST TOTAL PROJECT	SHEET No.	TOTAL SHEETS
08	Riv	60,215	R19.7/21.9, R61.3/62.7	146	594

Robert Wong 1-14-10
REGISTERED CIVIL ENGINEER DATE

6-28-10
PLANS APPROVAL DATE

REGISTERED PROFESSIONAL ENGINEER ROBERT WONG No. C64734 Exp.06/30/11 CIVIL STATE OF CALIFORNIA

THE STATE OF CALIFORNIA OR ITS OFFICERS OR AGENTS SHALL NOT BE RESPONSIBLE FOR THE ACCURACY OR COMPLETENESS OF ELECTRONIC COPIES OF THIS PLAN SHEET.

LAN ENGINEERING CORP
1887 BUSINESS CENTER DR
SUITE 6
SAN BERNARDINO, CA 92408

RIVERSIDE COUNTY
TRANSPORTATION COMMISSION
4080 LEMON STREET
RIVERSIDE, CA 92502

DRAINAGE QUANTITIES

DRAINAGE SYSTEM No. ⬡	DRAINAGE UNIT ◯		MINOR CONCRETE (MINOR Str) (F)	CABLE RAILING	MINOR CONCRETE (Misc Const)	MINOR CONCRETE (BACKFILL)	CL 1 CONCRETE (STRUCTURE) (F)	MISCELLANEOUS IRON & STEEL (F)	BAR REINFORCING STEEL (F)	FRAMES, GRATES & COVERS: MH FRAME / COVER (N)	600-12 GRATE (N)	600-12X GRATE (N)	900 R GRATE (N)	900 mm PRECAST CONCRETE PIPE INLET	900 mm PRECAST CONCRETE PIPE MANHOLE	1800 mm PRECAST CONCRETE PIPE MANHOLE	RSP: RSP FABRIC	BACKING No. 1, METHOD B	FACING, METHOD B	1/2-TON, METHOD B	GRATED LINE DRAIN	RISER SAFETY CAGE (N)	AP: 200 mm	450 mm	600 mm	RCP: 450 mm	600 mm	750 mm	900 mm	1350 mm	1500 mm	1800 mm	JACKED 450 mm (CL V)	JACKED 900 mm (CL V)	JACKED 1350 mm (CL V)	JACKED 1800 mm (CL V)	PIPE JOINT CLASSIFICATION (N)	HEIGHT OF INLET "H" (N)	DESCRIPTION	STATION	DRAINAGE PLAN SHEET No.	DRAINAGE SYSTEM No. ⬡	DRAINAGE UNIT ◯
			m3	m	m3	m3	m3	Kg	Kg	EA	EA	EA	EA	m	m	m	m2	m3	m3	m3	m	EA	m	m	m	m	m	m	m	m	m	m	m	m	m		m					
9	d																									9.0										S		450 mm RCP		D-2	9	d
	e		2.1					263			2																										2.3	GD1 DRAINAGE INLET ΩNo. 11	14.030 m L+ "H" 14+27.084			e
	f																									8.9										S		450 mm RCP				f
	g		1.9					263			2																										2.1	GD1 DRAINAGE INLET ΩNo. 11	14.030 m L+ "H" 14+37.086			g
	h																									4.0										S		450 mm RCP				h
	i		1.9					263			2																										2.0	GD1 DRAINAGE INLET ΩNo. 11	14.030 m L+ "H" 14+42.134			i
10	a																									28.6										S		450 mm RCP		D-2	10	a
	b		1.2					148			1																										1.8	G1 DRAINAGE INLET	9.801 m L+ "D" 14+83.580			b
	c																									1.8										S		450 mm RCP				c
	d		1.1					148			1																										1.6	G1 DRAINAGE INLET	9.786 m L+ "D" 14+80.862			d
	e					4.4		422													30.8																	GRATED LINE DRAIN ΩNo. 29				e
11	a						1.1	200	97	1					3.5																							MANHOLE No. 4 ΩNo. 13	0.202 m L+ "X" 17+18.507	D-2	11	a
	b																									10.2										S		450 mm RCP				b
	c		5.0					110			1																											CB No.1, W=2.10 m ΩNo. 26	10.014 m R+ "X" 17+16.390			c
	d				0.9																																	LOCAL DEPRESSION ΩNo. 25	8.541 m R+ "X" 17+16.390			d
12	a																									3.1										S		450 mm RCP		D-2	12	a
	b		2.8					296			2																										2.1	GT4 DRAINAGE INLET	13.878 m L+ "H" 15+40.795			b
	c																															17.1				S		450 mm JACKED RCP				c
	d		1.8					263			2																										1.9	GD1 DRAINAGE INLET ΩNo. 11	4.142 m R+ "H" 15+40.860			d
	e																									49.3										S		450 mm RCP				e
	f		1.6					263			2																										1.7	GD1 DRAINAGE INLET ΩNo. 11	4.150 m L+ "H" 15+91.114			f
SHEET TOTAL			19.4		0.9	4.4	1.1	2639	97	2	14			3.5							30.8					114.9							17.1						SHEET TOTAL				

DRAINAGE QUANTITIES
DQ-7

STATE OF CALIFORNIA - DEPARTMENT OF TRANSPORTATION
Caltrans

CONSULTANT FUNCTIONAL SUPERVISOR: NORMAN SUYDAM
CALCULATED-DESIGNED BY: ROBERT WONG
CHECKED BY: NORMAN SUYDAM
REVISED BY
DATE REVISED

LAST REVISION 11-09-09
DATE PLOTTED => 19-OCT-2010
TIME PLOTTED => 15:58

Dist	COUNTY	ROUTE	KILOMETER POST TOTAL PROJECT	SHEET No.	TOTAL SHEETS
08	Riv	60,215	R19.7/21.9, R61.3/62.7	147	594

Robert Wong 1-14-10
REGISTERED CIVIL ENGINEER DATE

6-28-10
PLANS APPROVAL DATE

REGISTERED PROFESSIONAL ENGINEER ROBERT WONG No. C64734 Exp.06/30/11 CIVIL STATE OF CALIFORNIA

THE STATE OF CALIFORNIA OR ITS OFFICERS OR AGENTS SHALL NOT BE RESPONSIBLE FOR THE ACCURACY OR COMPLETENESS OF ELECTRONIC COPIES OF THIS PLAN SHEET.

LAN ENGINEERING CORP
1887 BUSINESS CENTER DR
SUITE 6
SAN BERNARDINO, CA 92408

RIVERSIDE COUNTY
TRANSPORTATION COMMISSION
4080 LEMON STREET
RIVERSIDE, CA 92502

DRAINAGE QUANTITIES

DRAINAGE SYSTEM No. ⬡	DRAINAGE UNIT ○	REMOVE INLET	REMOVE MANHOLE	REMOVE CONCRETE	REMOVE OVERSIDE DRAIN	REMOVE HEADWALL	PLUG PIPE 300 mm	PLUG PIPE 450 mm	PLUG PIPE 600 mm	PLUG PIPE 1200 mm	ABANDON CULVERT	SAND BACKFILL	ABANDON MANHOLE	DITCH EXCAVATION	200 mm ELBOW (N)	450 mm CFES	600 mm CFES	1350 mm CFES	600 mm AFES	CLEANOUT ASSEMBLY	WALL DRAIN GRATE (N)	Str EXCAVATION (CULVERT)	Str BACKFILL (CULVERT)	REMOVE PIPE 300 mm RCP	REMOVE PIPE 450 mm RCP	REMOVE PIPE 600 mm PP	REMOVE PIPE 600 mm RCP	REMOVE PIPE 1200 mm RCP	REMOVE PIPE 1800 mm CSP	DESCRIPTION	STATION	DRAINAGE PLAN SHEET No.	DRAINAGE SYSTEM No. ⬡	DRAINAGE UNIT ○
		EA	EA	m3	EA	EA	EA	EA	EA	EA	EA	m3	EA	m3	EA	EA	EA	EA	EA	EA	EA	m3	m3	m	m	m	m	m	m					
9	d																													450 mm RCP		D-2	9	d
	e																													GD1 DRAINAGE INLET Ω No. 11	14.030 m Lt "H" 14+27.084			e
	f																													450 mm RCP				f
	g																													GD1 DRAINAGE INLET Ω No. 11	14.030 m Lt "H" 14+37.086			g
	h																													450 mm RCP				h
	i																													GD1 DRAINAGE INLET Ω No. 11	14.030 m Lt "H" 14+42.134			i
10	a																													450 mm RCP		D-2	10	a
	b																													G1 DRAINAGE INLET	9.801 m Lt "D" 14+83.580			b
	c																													450 mm RCP				c
	d																													G1 DRAINAGE INLET	9.786 m Lt "D" 14+80.862			d
	e																													GRATED LINE DRAIN Ω No. 29				e
11	a																					18.0	11.4							MANHOLE No. 4 Ω No. 13	0.202 m Lt "X" 17+18.507	D-2	11	a
	b																													450 mm RCP				b
	c																													CB No.1, W=2.10 m Ω No. 26	10.014 m Rt "X" 17+16.390			c
	d																													LOCAL DEPRESSION Ω No. 25	8.541 m Rt "X" 17+16.390			d
12	a																													450 mm RCP		D-2	12	a
	b																													GT4 DRAINAGE INLET	13.878 m Lt "H" 15+40.795			b
	c																													450 mm JACKED RCP				c
	d																													GD1 DRAINAGE INLET Ω No. 11	4.142 m Rt "H" 15+40.860			d
	e																													450 mm RCP				e
	f																													GD1 DRAINAGE INLET Ω No. 11	4.150 m Lt "H" 15+91.114			f
SHEET TOTAL																						18.0	11.4							SHEET TOTAL				

DRAINAGE QUANTITIES
DQ-8

STATE OF CALIFORNIA - DEPARTMENT OF TRANSPORTATION
Caltrans

CONSULTANT FUNCTIONAL SUPERVISOR: NORMAN SUYDAM
CALCULATED-DESIGNED BY: ROBERT WONG
CHECKED BY: NORMAN SUYDAM
REVISED BY
DATE REVISED

LAST REVISION 11-09-09
DATE PLOTTED => 19-OCT-2010
TIME PLOTTED => 15:58

Dist	COUNTY	ROUTE	KILOMETER POST TOTAL PROJECT	SHEET No.	TOTAL SHEETS
08	Riv	60,215	R19.7/21.9, R61.3/62.7	148	594

Robert Wong 1-14-10
REGISTERED CIVIL ENGINEER DATE

6-28-10
PLANS APPROVAL DATE

REGISTERED PROFESSIONAL ENGINEER ROBERT WONG No. C64734 Exp.06/30/11 CIVIL STATE OF CALIFORNIA

THE STATE OF CALIFORNIA OR ITS OFFICERS OR AGENTS SHALL NOT BE RESPONSIBLE FOR THE ACCURACY OR COMPLETENESS OF ELECTRONIC COPIES OF THIS PLAN SHEET.

LAN ENGINEERING CORP
1887 BUSINESS CENTER DR
SUITE 6
SAN BERNARDINO, CA 92408

RIVERSIDE COUNTY
TRANSPORTATION COMMISSION
4080 LEMON STREET
RIVERSIDE, CA 92502

DRAINAGE QUANTITIES

DRAINAGE SYSTEM No. ⬡	DRAINAGE UNIT ◯		MINOR CONCRETE (MINOR Str) (F)	CABLE RAILING	MINOR CONCRETE (Misc Const)	MINOR CONCRETE (BACKFILL)	CL 1 CONCRETE (STRUCTURE) (F)	MISCELLANEOUS IRON & STEEL (F)	BAR REINFORCING STEEL (F)	FRAMES, GRATES & COVERS: MH FRAME / COVER (N)	600-12 GRATE (N)	600-12X GRATE (N)	900 R GRATE (N)	900 mm PRECAST CONCRETE PIPE INLET	900 mm PRECAST CONCRETE PIPE MANHOLE	1800 mm PRECAST CONCRETE PIPE MANHOLE	RSP: RSP FABRIC	BACKING No. 1, METHOD B	FACING, METHOD B	1/2-TON, METHOD B	GRATED LINE DRAIN	RISER SAFETY CAGE (N)	AP: 200 mm	450 mm	600 mm	RCP: 450 mm	600 mm	750 mm	900 mm	1350 mm	1500 mm	1800 mm	JACKED 450 mm (CL V)	JACKED 900 mm (CL V)	JACKED 1350 mm (CL V)	JACKED 1800 mm (CL V)	PIPE JOINT CLASSIFICATION (N)	HEIGHT OF INLET "H" (N)	DESCRIPTION	STATION	DRAINAGE PLAN SHEET No.	DRAINAGE SYSTEM No. ⬡	DRAINAGE UNIT ◯
			m3	m	m3	m3	m3	Kg	Kg	EA	EA	EA	EA	m	m	m	m2	m3	m3	m3	m	EA	m	m	m	m	m	m	m	m	m	m	m	m	m		m					
13	a																																					PLUG 450 mm RCP Ω No. 31	6.914 m Rt "J" 11+48.733	D-2A	13	a
	b																																					REMOVE 450 mm RCP				b
	c																																					REMOVE DRAINAGE INLET				c
	d																																					REMOVE 450 mm RCP				d
	e																																					PLUG 450 mm RCP Ω No. 31	2.855 m Rt "J" 11+63.088			e
	f																																					Abn 450 mm RCP				f
14	a																													3.8					S			1500 mm RCP		D-2A	14	a
	b		2.0																																			JS No. 3	15.630 m Lt "H" 14+16.846			b
	c																													33.0					S			1500 mm RCP				c
	d		7.2		0.9			148			1																										4.8	G2 DI & APRON Ω No. 6	17.044 m Lt "H" 14+50.960			d
	e																													88.3					S			1500 mm RCP				e
	f		7.0		0.9			148			1																										4.6	G2 DI & APRON Ω No. 6	17.076 m Lt "H" 15+40.781			f
	g																													100.6					S			1500 mm RCP				g
	h		10.8		1.0			148			1																										4.2	G2 DI & APRON Ω No. 6	17.076 m Lt "H" 15+43.167	D-3		h
	i																												114.5						S			1350 mm RCP				i
	j		1.1																																			Conc COLLAR Ω No. 2	24.104 m Lt "H" 17+63.308			j
	k																												53.4						S			1350 mm RCP				k
	l			7.9			10.0		1655																													HEADWALL & WINGWALL Ω No.28	18.623 m Lt "H" 18+16.170	D-4		l
	m																			FOR EXCAVATION QUANTITIES, SEE ROADWAY PLAN.																		BIO-SWALE Ω No. 5				m
	n																49	8.4		33.6																		RSP 1/2-TON Ω No. 1				n
	o																																					1350 mm CFES	13.240 m Lt "D" 19+60.150			o
	p																												9.1						S			1350 mm RCP				p
	q		0.2																																			JS No. 3 Ω No. 9	18.738 m Lt "H" 20+03.359			q
	r																												40.9						S			1350 mm RCP				r
	s						1.0		26																													Trans Str No. 3 Ω No. 19				s
15	a																								8.5										S			450 mm RCP		D-2A	15	a
	b		2.0					263			2																										2.2	GD1 DRAINAGE INLET Ω No. 11	13.878 m Lt "H" 15+50.795			b
	c																								39.0										S			450 mm RCP				c
	d		2.0					263			2																										2.2	GD1 DRAINAGE INLET Ω No. 11	13.878 m Lt "H" 15+90.795			d
SHEET TOTAL			32.3	7.9	2.8		11.0	970	1681		7						49	8.4		33.6					47.5				217.9	225.7								SHEET TOTAL				

DRAINAGE QUANTITIES
DQ-9

STATE OF CALIFORNIA - DEPARTMENT OF TRANSPORTATION
Caltrans

CONSULTANT FUNCTIONAL SUPERVISOR: NORMAN SUYDAM
CALCULATED-DESIGNED BY: ROBERT WONG
CHECKED BY: NORMAN SUYDAM
REVISED BY
DATE REVISED

LAST REVISION 11-09-09
DATE PLOTTED => 19-OCT-2010
TIME PLOTTED => 15:59

Dist	COUNTY	ROUTE	KILOMETER POST TOTAL PROJECT	SHEET No.	TOTAL SHEETS
08	Riv	60,215	R19.7/21.9, R61.3/62.7	149	594

Robert W 1-14-10
REGISTERED CIVIL ENGINEER DATE

6-28-10
PLANS APPROVAL DATE

REGISTERED PROFESSIONAL ENGINEER ROBERT WONG No. C64734 Exp.06/30/11 CIVIL STATE OF CALIFORNIA

THE STATE OF CALIFORNIA OR ITS OFFICERS OR AGENTS SHALL NOT BE RESPONSIBLE FOR THE ACCURACY OR COMPLETENESS OF ELECTRONIC COPIES OF THIS PLAN SHEET.

LAN ENGINEERING CORP
1887 BUSINESS CENTER DR
SUITE 6
SAN BERNARDINO, CA 92408

RIVERSIDE COUNTY
TRANSPORTATION COMMISSION
4080 LEMON STREET
RIVERSIDE, CA 92502

DRAINAGE QUANTITIES

DRAINAGE SYSTEM No. ⬡	DRAINAGE UNIT ○	REMOVE INLET	REMOVE MANHOLE	REMOVE CONCRETE	REMOVE OVERSIDE DRAIN	REMOVE HEADWALL	PLUG PIPE 300 mm	PLUG PIPE 450 mm	PLUG PIPE 600 mm	PLUG PIPE 1200 mm	ABANDON CULVERT	SAND BACKFILL	ABANDON MANHOLE	DITCH EXCAVATION	200 mm ELBOW (N)	450 mm CFES	600 mm CFES	1350 mm CFES	600 mm AFES	CLEANOUT ASSEMBLY	WALL DRAIN GRATE (N)	Str EXCAVATION (CULVERT)	Str BACKFILL (CULVERT)	REMOVE PIPE 300 mm RCP	REMOVE PIPE 450 mm RCP	REMOVE PIPE 600 mm PP	REMOVE PIPE 600 mm RCP	REMOVE PIPE 1200 mm RCP	REMOVE PIPE 1800 mm CSP	DESCRIPTION	STATION	DRAINAGE PLAN SHEET No.	DRAINAGE SYSTEM No. ⬡	DRAINAGE UNIT ○
		EA	EA	m3	EA	EA	EA	EA	EA	EA	EA	m3	EA	m3	EA	EA	EA	EA	EA	EA	EA	m3	m3	m	m	m	m	m	m					
13	a							1																					PLUG 450 mm RCP Ω No. 31	6.914 m Rt "J" 11+48.733	D-2A	13	a
	b																								15.2				REMOVE 450 mm RCP				b
	c	1																											REMOVE DRAINAGE INLET				c
	d																								5.5				REMOVE 450 mm RCP				d
	e							1																					PLUG 450 mm RCP Ω No. 31	2.855 m Rt "J" 11+63.088			e
	f										1	3.8																	Abn 450 mm RCP				f
14	a																												1500 mm RCP		D-2A	14	a
	b																												JS No. 3	15.630 m Lt "H" 14+16.846			b
	c																												1500 mm RCP				c
	d																												G2 DI & APRON Ω No. 6	17.044 m Lt "H" 14+50.960			d
	e																												1500 mm RCP				e
	f																												G2 DI & APRON Ω No. 6	17.076 m Lt "H" 15+40.781			f
	g																												1500 mm RCP				g
	h																												G2 DI & APRON Ω No. 6	17.076 m Lt "H" 15+43.167	D-3		h
	i																												1350 mm RCP				i
	j																												Conc COLLAR Ω No. 2	24.104 m Lt "H" 17+63.308			j
	k																												1350 mm RCP				k
	l																					27.0	5.0						HEADWALL & WINGWALL Ω No. 28	18.623 m Lt "H" 18+16.170	D-4		l
	m																												BIO-SWALE Ω No. 5				m
	n																												RSP 1/2-TON Ω No. 1				n
	o																	1											1350 mm CFES	13.240 m Lt "D" 19+60.150			o
	p																												1350 mm RCP				p
	q																												JS No. 3 Ω No. 9	18.738 m Lt "H" 20+03.359			q
	r																												1350 mm RCP				r
	s																					8.0	7.0						Trans Str No. 3 Ω No. 19				s
15	a																												450 mm RCP		D-2A	15	a
	b																												GD1 DRAINAGE INLET Ω No. 11	13.878 m Lt "H" 15+50.795			b
	c																												450 mm RCP				c
	d																												GD1 DRAINAGE INLET Ω No. 11	13.878 m Lt "H" 15+90.795			d
SHEET TOTAL		1						2			1	3.8						1				35.0	12.0		20.7					SHEET TOTAL				

DRAINAGE QUANTITIES
DQ-10

STATE OF CALIFORNIA - DEPARTMENT OF TRANSPORTATION
Caltrans

CONSULTANT FUNCTIONAL SUPERVISOR: NORMAN SUYDAM
CALCULATED-DESIGNED BY: ROBERT WONG
CHECKED BY: NORMAN SUYDAM
REVISED BY
DATE REVISED

LAST REVISION 11-09-09
DATE PLOTTED => 19-OCT-2010
TIME PLOTTED => 15:59

Dist	COUNTY	ROUTE	KILOMETER POST TOTAL PROJECT	SHEET No.	TOTAL SHEETS
08	Riv	60,215	R19.7/21.9, R61.3/62.7	150	594

REGISTERED CIVIL ENGINEER 1-14-10 DATE

6-28-10
PLANS APPROVAL DATE

REGISTERED PROFESSIONAL ENGINEER ROBERT WONG No. C64734 Exp.06/30/11 CIVIL STATE OF CALIFORNIA

THE STATE OF CALIFORNIA OR ITS OFFICERS OR AGENTS SHALL NOT BE RESPONSIBLE FOR THE ACCURACY OR COMPLETENESS OF ELECTRONIC COPIES OF THIS PLAN SHEET.

LAN ENGINEERING CORP
1887 BUSINESS CENTER DR
SUITE 6
SAN BERNARDINO, CA 92408

RIVERSIDE COUNTY
TRANSPORTATION COMMISSION
4080 LEMON STREET
RIVERSIDE, CA 92502

DRAINAGE QUANTITIES

DRAINAGE SYSTEM No. ⬡	DRAINAGE UNIT ○		MINOR CONCRETE (MINOR Str) (F)	CABLE RAILING	MINOR CONCRETE (Misc Const)	MINOR CONCRETE (BACKFILL)	CL 1 CONCRETE (STRUCTURE) (F)	MISCELLANEOUS IRON & STEEL (F)	BAR REINFORCING STEEL (F)	FRAMES, GRATES & COVERS: MH FRAME / COVER (N)	FRAMES, GRATES & COVERS: 600-12 GRATE (N)	FRAMES, GRATES & COVERS: 600-12X GRATE (N)	FRAMES, GRATES & COVERS: 900 R GRATE (N)	900 mm PRECAST CONCRETE PIPE INLET	900 mm PRECAST CONCRETE PIPE MANHOLE	1800 mm PRECAST CONCRETE PIPE MANHOLE	RSP: RSP FABRIC	RSP: BACKING No. 1, METHOD B	RSP: FACING, METHOD B	RSP: 1/2-TON, METHOD B	GRATED LINE DRAIN	RISER SAFETY CAGE (N)	AP: 200 mm	AP: 450 mm	AP: 600 mm	RCP: 450 mm	RCP: 600 mm	RCP: 750 mm	RCP: 900 mm	RCP: 1350 mm	RCP: 1500 mm	RCP: 1800 mm	RCP: JACKED 450 mm (CLV)	RCP: JACKED 900 mm (CLV)	RCP: JACKED 1350 mm (CLV)	RCP: JACKED 1800 mm (CLV)	PIPE JOINT CLASSIFICATION (N)	HEIGHT OF INLET "H" (N)	DESCRIPTION	STATION	DRAINAGE PLAN SHEET No.	DRAINAGE SYSTEM No. ⬡	DRAINAGE UNIT ○
			m3	m	m3	m3	m3	Kg	Kg	EA	EA	EA	EA	m	m	m	m2	m3	m3	m3	m	EA	m	m	m	m	m	m	m	m	m	m	m	m	m		m					
16	a																															20.4				S		450 mm JACKED RCP		D-2A	16	a
	b		4.2					263			2																										3.7	GD1 DRAINAGE INLET	3.953 m Rt "H" 14+53.495			b
	c																															33.5				S		450 mm JACKED RCP				c
	d		5.3					148			1																										5.5	G2 DRAINAGE INLET	8.257 m Rt "3CC" 14+70.540			d
	e																								5.4											S		450 mm RCP				e
	f		0.4		0.5			107				1	4.65																								4.5	GCP DI & APRON Ω No. 6	5.489 m Rt "3CC" 14+75.951			f
	g																																					ROADSIDE DITCH CASE 'C' Ω No. 17				g
	h																																					BIO-SWALE Ω No. 5				h
	i		5.1																																			BSPP Ω No. 20				i
	j																																					BIO-SWALE Ω No. 5				j
	k																																					ROADSIDE DITCH CASE 'C' Ω No. 17				k
17	a																												8.6							S		1350 mm RCP		D-3	17	a
	b		4.1					148			1																										2.6	G2 DRAINAGE INLET	7.930 m Rt "D" 17+17.903			b
	c																												10.9							S		1350 mm RCP				c
	d		0.1																																			JS No. 3 Ω No. 9	7.993 m Rt "D" 17+29.137			d
	e																												50.5							S		1350 mm RCP				e
	f					2.0			84.0																													TRANSITION STRUCTURE Ω No. 12				f
	g					1.8			173.0																													1520 mm x 610 mm RCB				g
	h					2.0			84.0																													TRANSITION STRUCTURE Ω No. 12				h
	i																												8.3									1350 mm RCP				i
	j		4.5					148			1																										2.9	G2 DRAINAGE INLET				j
	k																												50.9							S		1350 mm RCP				k
	l		0.1																																			JS No. 3 Ω No. 9	7.214 m Rt "D" 18+44.844			l
	m																												41.8							S		1350 mm RCP				m
	n		4.7					148			1																										3.1	G2 DRAINAGE INLET	7.930 m Rt "D" 18+87.986			n
	o																												57.2							S		1350 mm RCP				o
	p		4.8					148			1																										2.7	G2 DRAINAGE INLET	7.930 m Rt "D" 19+49.194			p
	q																											10.1								S		900 mm RCP				q
	r		0.3																																			CONCRETE COLLAR Ω No. 2	11.188 m Rt "D" 19+58.531			r
SHEET TOTAL			33.6		0.5		5.8	1110	341.0		7		1	4.65											5.4			10.1	228.2			53.9						SHEET TOTAL				

DRAINAGE QUANTITIES
DQ-11

STATE OF CALIFORNIA - DEPARTMENT OF TRANSPORTATION
Caltrans

CONSULTANT FUNCTIONAL SUPERVISOR: NORMAN SUYDAM
CALCULATED-DESIGNED BY: ROBERT WONG
CHECKED BY: NORMAN SUYDAM
REVISED BY
DATE REVISED

LAST REVISION 11-09-09
DATE PLOTTED => 19-OCT-2010
TIME PLOTTED => 15:59

Dist	COUNTY	ROUTE	KILOMETER POST TOTAL PROJECT	SHEET No.	TOTAL SHEETS
08	Riv	60,215	R19.7/21.9, R61.3/62.7	151	594

Robert Wong 1-14-10
REGISTERED CIVIL ENGINEER DATE

6-28-10
PLANS APPROVAL DATE

REGISTERED PROFESSIONAL ENGINEER ROBERT WONG No. C64734 Exp.06/30/11 CIVIL STATE OF CALIFORNIA

THE STATE OF CALIFORNIA OR ITS OFFICERS OR AGENTS SHALL NOT BE RESPONSIBLE FOR THE ACCURACY OR COMPLETENESS OF ELECTRONIC COPIES OF THIS PLAN SHEET.

LAN ENGINEERING CORP
1887 BUSINESS CENTER DR
SUITE 6
SAN BERNARDINO, CA 92408

RIVERSIDE COUNTY
TRANSPORTATION COMMISSION
4080 LEMON STREET
RIVERSIDE, CA 92502

DRAINAGE QUANTITIES

DRAINAGE SYSTEM No. ⬡	DRAINAGE UNIT ○	REMOVE INLET	REMOVE MANHOLE	REMOVE CONCRETE	REMOVE OVERSIDE DRAIN	REMOVE HEADWALL	PLUG PIPE 300 mm	PLUG PIPE 450 mm	PLUG PIPE 600 mm	PLUG PIPE 1200 mm	ABANDON CULVERT	SAND BACKFILL	ABANDON MANHOLE	DITCH EXCAVATION	200 mm ELBOW (N)	450 mm CFES	600 mm CFES	1350 mm CFES	600 mm AFES	CLEANOUT ASSEMBLY	WALL DRAIN GRATE (N)	Str EXCAVATION (CULVERT)	Str BACKFILL (CULVERT)	REMOVE PIPE 300 mm RCP	REMOVE PIPE 450 mm RCP	REMOVE PIPE 600 mm PP	REMOVE PIPE 600 mm RCP	REMOVE PIPE 1200 mm RCP	REMOVE PIPE 1800 mm CSP	DESCRIPTION	STATION	DRAINAGE PLAN SHEET No.	DRAINAGE SYSTEM No. ⬡	DRAINAGE UNIT ○
		EA	EA	m3	EA	EA	EA	EA	EA	EA	EA	m3	EA	m3	EA	EA	EA	EA	EA	EA	EA	m3	m3	m	m	m	m	m	m					
16	a																													450 mm JACKED RCP		D-2A	16	a
	b																													GD1 DRAINAGE INLET	3.953 m R+ "H" 14+53.495			b
	c																													450 mm JACKED RCP				c
	d																													G2 DRAINAGE INLET	8.257 m R+ "3CC" 14+70.540			d
	e																													450 mm RCP				e
	f																													GCP DI & APRON Ω No. 6	5.489 m R+ "3CC" 14+75.951			f
	g																													ROADSIDE DITCH CASE 'C' Ω No. 17				g
	h													807.8																BIO-SWALE Ω No. 5				h
	i																													BSPP Ω No. 20				i
	j													180.2																BIO-SWALE Ω No. 5				j
	k																													ROADSIDE DITCH CASE 'C' Ω No. 17				k
17	a																													1350 mm RCP		D-3	17	a
	b																													G2 DRAINAGE INLET	7.930 m R+ "D" 17+17.903			b
	c																													1350 mm RCP				c
	d																													JS No. 3 Ω No. 9	7.993 m R+ "D" 17+29.137			d
	e																													1350 mm RCP				e
	f																					16.0	11.0							TRANSITION STRUCTURE Ω No. 12				f
	g																					33.0	20.0							1520 mm x 610 mm RCB				g
	h																					16.0	11.0							TRANSITION STRUCTURE Ω No. 12				h
	i																													1350 mm RCP				i
	j																													G2 DRAINAGE INLET				j
	k																													1350 mm RCP				k
	l																													JS No. 3 Ω No. 9	7.214 m R+ "D" 18+44.844			l
	m																													1350 mm RCP				m
	n																													G2 DRAINAGE INLET	7.930 m R+ "D" 18+87.986			n
	o																													1350 mm RCP				o
	p																													G2 DRAINAGE INLET	7.930 m R+ "D" 19+49.194			p
	q																													900 mm RCP				q
	r																													CONCRETE COLLAR Ω No. 2	11.188 m R+ "D" 19+58.531			r
SHEET TOTAL														988.0								65.0	42.0							SHEET TOTAL				

DRAINAGE QUANTITIES
DQ-12

STATE OF CALIFORNIA - DEPARTMENT OF TRANSPORTATION
Caltrans

CONSULTANT FUNCTIONAL SUPERVISOR: NORMAN SUYDAM
CALCULATED-DESIGNED BY: ROBERT WONG
CHECKED BY: NORMAN SUYDAM
REVISED BY
DATE REVISED

LAST REVISION 11-09-09
DATE PLOTTED => 19-OCT-2010
TIME PLOTTED => 15:59

Dist	COUNTY	ROUTE	KILOMETER POST TOTAL PROJECT	SHEET No.	TOTAL SHEETS
08	Riv	60,215	R19.7/21.9, R61.3/62.7	152	594

Robert Wong 1-14-10
REGISTERED CIVIL ENGINEER DATE

6-28-10
PLANS APPROVAL DATE

REGISTERED PROFESSIONAL ENGINEER ROBERT WONG No. C64734 Exp.06/30/11 CIVIL STATE OF CALIFORNIA

THE STATE OF CALIFORNIA OR ITS OFFICERS OR AGENTS SHALL NOT BE RESPONSIBLE FOR THE ACCURACY OR COMPLETENESS OF ELECTRONIC COPIES OF THIS PLAN SHEET.

LAN ENGINEERING CORP
1887 BUSINESS CENTER DR
SUITE 6
SAN BERNARDINO, CA 92408

RIVERSIDE COUNTY
TRANSPORTATION COMMISSION
4080 LEMON STREET
RIVERSIDE, CA 92502

DRAINAGE QUANTITIES

DRAINAGE SYSTEM No. ⬡	DRAINAGE UNIT ○		MINOR CONCRETE (MINOR Str) (F)	CABLE RAILING	MINOR CONCRETE (Misc Const)	MINOR CONCRETE (BACKFILL)	CL 1 CONCRETE (STRUCTURE) (F)	MISCELLANEOUS IRON & STEEL (F)	BAR REINFORCING STEEL (F)	FRAMES, GRATES & COVERS: MH FRAME / COVER (N)	FRAMES, GRATES & COVERS: 600-12 GRATE (N)	FRAMES, GRATES & COVERS: 600-12X GRATE (N)	FRAMES, GRATES & COVERS: 900 R GRATE (N)	900 mm PRECAST CONCRETE PIPE INLET	900 mm PRECAST CONCRETE PIPE MANHOLE	1800 mm PRECAST CONCRETE PIPE MANHOLE	RSP: RSP FABRIC	RSP: BACKING No. 1, METHOD B	RSP: FACING, METHOD B	RSP: 1/2-TON, METHOD B	GRATED LINE DRAIN	RISER SAFETY CAGE (N)	AP: 200 mm	AP: 450 mm	AP: 600 mm	RCP: 450 mm	RCP: 600 mm	RCP: 750 mm	RCP: 900 mm	RCP: 1350 mm	RCP: 1500 mm	RCP: 1800 mm	RCP: JACKED 450 mm (CL V)	RCP: JACKED 900 mm (CL V)	RCP: JACKED 1350 mm (CL V)	RCP: JACKED 1800 mm (CL V)	PIPE JOINT CLASSIFICATION (N)	HEIGHT OF INLET "H" (N)	DESCRIPTION	STATION	DRAINAGE PLAN SHEET No.	DRAINAGE SYSTEM No. ⬡	DRAINAGE UNIT ○
			m3	m	m3	m3	m3	Kg	Kg	EA	EA	EA	EA	m	m	m	m2	m3	m3	m3	m	EA	m	m	m	m	m	m	m	m	m	m	m	m	m		m					
17	s																																67.6			S		900 mm JACKED RCP		D-3	17	s
	t		1.8		0.7			148			1																										1.7	G2 DI & APRON ΩNo. 6	9.724 m Rt "D" 20+28.231			t
	u																											36.3								S		900 mm RCP				u
	v		0.9																																			JS No. 1 ΩNo. 7	12.495 m Rt "D" 20+65.821	D-6		v
	w																											44.4								S		900 mm RCP				w
	x		1.8		0.7			148			1																										1.7	G2 DI & APRON ΩNo. 6	11.780 m Rt "D" 21+12.148			x
	y																																					ROADSIDE DITCH CASE 'C' ΩNo. 17				y
18	a																																					REMOVE 450 mm RCP		D-3	18	a
19	a																																					REMOVE HEADWALL		D-3	19	a
	b																																					REMOVE 450 mm RCP				b
	c																																					REMOVE DRAINAGE INLET				c
	d																																					REMOVE CONCRETE COLLAR				d
	e																																					REMOVE 450 mm RCP				e
	f																																					REMOVE DRAINAGE INLET				f
	g																									21.5										S		600 mm RCP				g
	h		1.5					148			1																										1.8	G2 DRAINAGE INLET	11.998 m Lt "D" 18+03.006			h
	i																									38.6										S		600 mm RCP				i
	j		0.4		0.5			107				1	1.55																								1.4	G2 DI & APRON ΩNo. 6	11.856 m Lt "D" 18+41.476			j
	k		35.5																																			ROADSIDE DITCH CASE 'A' ΩNo. 17				k
20	a																																					PLUG 1200 mm RCP ΩNo. 31	16.881 m Rt "D" 19+48.439	D-3	20	a
	b																																					REMOVE 450 mm RCP				b
	c																																					REMOVE DRAINAGE INLET				c
	d																																					REMOVE 1200 mm RCP				d
	e																																					REMOVE MANHOLE				e
SHEET TOTAL			41.9		1.9			551			3		1	1.55												60.1		80.7					67.6					SHEET TOTAL				

DRAINAGE QUANTITIES
DQ-13

STATE OF CALIFORNIA - DEPARTMENT OF TRANSPORTATION
Caltrans

CONSULTANT FUNCTIONAL SUPERVISOR: NORMAN SUYDAM
CALCULATED-DESIGNED BY: ROBERT WONG
CHECKED BY: NORMAN SUYDAM
REVISED BY
DATE REVISED

LAST REVISION 11-09-09
DATE PLOTTED => 19-OCT-2010
TIME PLOTTED => 15:59

Dist	COUNTY	ROUTE	KILOMETER POST TOTAL PROJECT	SHEET No.	TOTAL SHEETS
08	Riv	60,215	R19.7/21.9, R61.3/62.7	153	594

Robert Wong 1-14-10
REGISTERED CIVIL ENGINEER DATE

6-28-10
PLANS APPROVAL DATE

REGISTERED PROFESSIONAL ENGINEER ROBERT WONG No. C64734 Exp.06/30/11 CIVIL STATE OF CALIFORNIA

THE STATE OF CALIFORNIA OR ITS OFFICERS OR AGENTS SHALL NOT BE RESPONSIBLE FOR THE ACCURACY OR COMPLETENESS OF ELECTRONIC COPIES OF THIS PLAN SHEET.

LAN ENGINEERING CORP
1887 BUSINESS CENTER DR
SUITE 6
SAN BERNARDINO, CA 92408

RIVERSIDE COUNTY
TRANSPORTATION COMMISSION
4080 LEMON STREET
RIVERSIDE, CA 92502

DRAINAGE QUANTITIES

DRAINAGE SYSTEM No. ⬡	DRAINAGE UNIT ○	REMOVE INLET	REMOVE MANHOLE	REMOVE CONCRETE	REMOVE OVERSIDE DRAIN	REMOVE HEADWALL	PLUG PIPE 300 mm	PLUG PIPE 450 mm	PLUG PIPE 600 mm	PLUG PIPE 1200 mm	ABANDON CULVERT	SAND BACKFILL	ABANDON MANHOLE	DITCH EXCAVATION	200 mm ELBOW (N)	450 mm CFES	600 mm CFES	1350 mm CFES	600 mm AFES	CLEANOUT ASSEMBLY	WALL DRAIN GRATE (N)	Str EXCAVATION (CULVERT)	Str BACKFILL (CULVERT)	REMOVE PIPE 300 mm RCP	REMOVE PIPE 450 mm RCP	REMOVE PIPE 600 mm PP	REMOVE PIPE 600 mm RCP	REMOVE PIPE 1200 mm RCP	REMOVE PIPE 1800 mm CSP	DESCRIPTION	STATION	DRAINAGE PLAN SHEET No.	DRAINAGE SYSTEM No. ⬡	DRAINAGE UNIT ○
		EA	EA	m3	EA	EA	EA	EA	EA	EA	EA	m3	EA	m3	EA	EA	EA	EA	EA	EA	EA	m3	m3	m	m	m	m	m	m					
17	s																													900 mm JACKED RCP		D-3	17	s
	t																													G2 DI & APRON ΩNo. 6	9.724 m Rt "D" 20+28.231			t
	u																													900 mm RCP				u
	v																													JS No. 1 ΩNo. 7	12.495 m Rt "D" 20+65.821	D-6		v
	w																													900 mm RCP				w
	x																													G2 DI & APRON ΩNo. 6	11.780 m Rt "D" 21+12.148			x
	y													791																ROADSIDE DITCH CASE 'C' ΩNo. 17				y
18	a																								41.3					REMOVE 450 mm RCP		D-3	18	a
19	a					1																								REMOVE HEADWALL		D-3	19	a
	b																								3.3					REMOVE 450 mm RCP				b
	c	1																												REMOVE DRAINAGE INLET				c
	d			0.2																										REMOVE CONCRETE COLLAR				d
	e																								13.9					REMOVE 450 mm RCP				e
	f	1																												REMOVE DRAINAGE INLET				f
	g																													600 mm RCP				g
	h																													G2 DRAINAGE INLET	11.998 m Lt "D" 18+03.006			h
	i																													600 mm RCP				i
	j																													G2 DI & APRON ΩNo. 6	11.856 m Lt "D" 18+41.476			j
	k													332																ROADSIDE DITCH CASE 'A' ΩNo. 17				k
20	a									1																				PLUG 1200 mm RCP ΩNo. 31	16.881 m Rt "D" 19+48.439	D-3	20	a
	b																								2.0					REMOVE 450 mm RCP				b
	c	1																												REMOVE DRAINAGE INLET				c
	d																											57.0		REMOVE 1200 mm RCP				d
	e		1																											REMOVE MANHOLE				e
SHEET TOTAL		3	1	0.2		1				1				1123											60.5			57.0		SHEET TOTAL				

DRAINAGE QUANTITIES
DQ-14

STATE OF CALIFORNIA - DEPARTMENT OF TRANSPORTATION
Caltrans

CONSULTANT FUNCTIONAL SUPERVISOR: NORMAN SUYDAM
CALCULATED-DESIGNED BY: ROBERT WONG
CHECKED BY: NORMAN SUYDAM
REVISED BY
DATE REVISED

LAST REVISION 11-09-09
DATE PLOTTED => 19-OCT-2010
TIME PLOTTED => 15:59

Dist	COUNTY	ROUTE	KILOMETER POST TOTAL PROJECT	SHEET No.	TOTAL SHEETS
08	Riv	60,215	R19.7/21.9, R61.3/62.7	154	594

Robert Wong 1-14-10
REGISTERED CIVIL ENGINEER DATE

6-28-10
PLANS APPROVAL DATE

REGISTERED PROFESSIONAL ENGINEER
ROBERT WONG
No. C64734
Exp.06/30/11
CIVIL
STATE OF CALIFORNIA

THE STATE OF CALIFORNIA OR ITS OFFICERS OR AGENTS SHALL NOT BE RESPONSIBLE FOR THE ACCURACY OR COMPLETENESS OF ELECTRONIC COPIES OF THIS PLAN SHEET.

LAN ENGINEERING CORP
1887 BUSINESS CENTER DR
SUITE 6
SAN BERNARDINO, CA 92408

RIVERSIDE COUNTY
TRANSPORTATION COMMISSION
4080 LEMON STREET
RIVERSIDE, CA 92502

DRAINAGE QUANTITIES

DRAINAGE SYSTEM No. ⬡	DRAINAGE UNIT ○		MINOR CONCRETE (MINOR Str) (F)	CABLE RAILING	MINOR CONCRETE (Misc Const)	MINOR CONCRETE (BACKFILL)	CL 1 CONCRETE (STRUCTURE) (F)	MISCELLANEOUS IRON & STEEL (F)	BAR REINFORCING STEEL (F)	FRAMES, GRATES & COVERS: MH FRAME / COVER (N)	FRAMES, GRATES & COVERS: 600-12 GRATE (N)	FRAMES, GRATES & COVERS: 600-12X GRATE (N)	FRAMES, GRATES & COVERS: 900 R GRATE (N)	900 mm PRECAST CONCRETE PIPE INLET	900 mm PRECAST CONCRETE PIPE MANHOLE	1800 mm PRECAST CONCRETE PIPE MANHOLE	RSP: RSP FABRIC	RSP: BACKING No. 1, METHOD B	RSP: FACING, METHOD B	RSP: 1/2-TON, METHOD B	GRATED LINE DRAIN	RISER SAFETY CAGE (N)	AP: 200 mm	AP: 450 mm	AP: 600 mm	RCP: 450 mm	RCP: 600 mm	RCP: 750 mm	RCP: 900 mm	RCP: 1350 mm	RCP: 1500 mm	RCP: 1800 mm	RCP: JACKED 450 mm (CL V)	RCP: JACKED 900 mm (CL V)	RCP: JACKED 1350 mm (CL V)	RCP: JACKED 1800 mm (CL V)	PIPE JOINT CLASSIFICATION (N)	HEIGHT OF INLET "H" (N)	DESCRIPTION	STATION	DRAINAGE PLAN SHEET No.	DRAINAGE SYSTEM No. ⬡	DRAINAGE UNIT ○
			m3	m	m3	m3	m3	Kg	Kg	EA	EA	EA	EA	m	m	m	m2	m3	m3	m3	m	EA	m	m	m	m	m	m	m	m	m	m	m	m	m		m					
20	f																																					PLUG 1200 mm RCP Ω No. 31	10.812 m Lt "K" 16+93.753	D-3	20	f
	g																																					Abn AND PLUG MANHOLE Ω No. 30				g
	h																																					Abn 1200 mm RCP				h
	i																																					PLUG 1200 mm RCP Ω No. 31	11.082 m Lt "H" 20+36.573	D-4		i
	j																																					REMOVE 1200 mm RCP				j
21	a																						15.3												S		600 mm AP		D-3	21	a
	b		0.3																																			JS No. 2 Ω No. 8	16.243 m Lt "3CC" 19+91.207			b
	c																						23.0												S		600 mm AP				c
	d		0.3																																			CONCRETE COLLAR Ω No. 2	4.280 m Lt "3CC" 19+69.153			d
	e																								18.1										S		600 mm RCP				e
	f		0.1																																			JS No. 3 Ω No. 9	2.324 m Lt "3CC" 19+86.425			f
	g																								4.0										S		600 mm RCP				g
	h		2.2					263			2																									2.5	GD1 DRAINAGE INLET Ω No. 11	2.856 m Lt "3CC" 19+91.245			h
	i																								9.8										S		600 mm RCP				i
	j		1.5					148			1																									1.8	G2 DRAINAGE INLET	2.563 m Lt "3CC" 20+01.948			j
22	a		FOR EXCAVATION QUANTITIES, SEE ROADWAY PLAN.																																			BIO-SWALE Ω No. 5		D-3	22	a
	b		5.2																																			BSPP Ω No. 20				b
	c		FOR EXCAVATION QUANTITIES, SEE ROADWAY PLAN.																																			BIO-SWALE Ω No. 5				c
23	a																										2.3								S		1350 mm RCP		D-3A	23	a
	b		5.3					296			2																									3.4	GT4 DRAINAGE INLET	13.828 m Lt "H" 13+43.600			b
	c																															34.4			S		1350 mm JACKED RCP				c
	d		7.0					148			1																									2.6	G2 DRAINAGE INLET Ω No. 2	7.926 m Rt "D" 17+07.904			d
	e																								1.5										S		600 mm RCP				e
	f		3.3					263			2																									2.8	GD1 DRAINAGE INLET Ω No. 11	10.445 m Rt "D" 17+08.312			f
	g																								13.0										S		600 mm RCP				g
	h		0.4		0.5			107				1	2.25																							2.1	GCP DI & APRON Ω No. 6	3.606 m Rt "K1" 114+13.983			h
	i																																					ROADSIDE DITCH CASE C Ω No. 17				i
23A	a																							8.7											S		450 mm RCP		D-3A	23A	a
	b		1.9					263			2																									2.1	GD1 DRAINAGE INLET Ω No. 11	7.780 m Rt "D" 16+96.800			b
SHEET TOTAL			27.5		0.5			1488			10		1	2.25									38.3	8.7	46.4			2.3					34.4					SHEET TOTAL				

ROBERT WONG — CALCULATED-DESIGNED BY
NORMAN SUYDAM — CHECKED BY
REVISED BY — DATE REVISED
NORMAN SUYDAM — CONSULTANT FUNCTIONAL SUPERVISOR

STATE OF CALIFORNIA - DEPARTMENT OF TRANSPORTATION
Caltrans

DRAINAGE QUANTITIES
DQ-15

LAST REVISION 11-09-09
DATE PLOTTED => 19-OCT-2010
TIME PLOTTED => 15:59

Dist	COUNTY	ROUTE	KILOMETER POST TOTAL PROJECT	SHEET No.	TOTAL SHEETS
08	Riv	60,215	R19.7/21.9, R61.3/62.7	155	594

Robert W 1-14-10
REGISTERED CIVIL ENGINEER DATE

6-28-10
PLANS APPROVAL DATE

REGISTERED PROFESSIONAL ENGINEER ROBERT WONG No. C64734 Exp.06/30/11 CIVIL STATE OF CALIFORNIA

THE STATE OF CALIFORNIA OR ITS OFFICERS OR AGENTS SHALL NOT BE RESPONSIBLE FOR THE ACCURACY OR COMPLETENESS OF ELECTRONIC COPIES OF THIS PLAN SHEET.

LAN ENGINEERING CORP
1887 BUSINESS CENTER DR
SUITE 6
SAN BERNARDINO, CA 92408

RIVERSIDE COUNTY
TRANSPORTATION COMMISSION
4080 LEMON STREET
RIVERSIDE, CA 92502

DRAINAGE QUANTITIES

DRAINAGE SYSTEM No. ⬡	DRAINAGE UNIT ○	REMOVE INLET	REMOVE MANHOLE	REMOVE CONCRETE	REMOVE OVERSIDE DRAIN	REMOVE HEADWALL	PLUG PIPE 300 mm	PLUG PIPE 450 mm	PLUG PIPE 600 mm	PLUG PIPE 1200 mm	ABANDON CULVERT	SAND BACKFILL	ABANDON MANHOLE	DITCH EXCAVATION	200 mm ELBOW (N)	450 mm CFES	600 mm CFES	1350 mm CFES	600 mm AFES	CLEANOUT ASSEMBLY	WALL DRAIN GRATE (N)	Str EXCAVATION (CULVERT) (F)	Str BACKFILL (CULVERT) (F)	REMOVE PIPE 300 mm RCP	REMOVE PIPE 450 mm RCP	REMOVE PIPE 600 mm PP	REMOVE PIPE 600 mm RCP	REMOVE PIPE 1200 mm RCP	REMOVE PIPE 1800 mm CSP	DESCRIPTION	STATION	DRAINAGE PLAN SHEET No.	DRAINAGE SYSTEM No. ⬡	DRAINAGE UNIT ○
		EA	EA	m3	EA	EA	EA	EA	EA	EA	EA	m3	EA	m3	EA	EA	EA	EA	EA	EA	EA	m3	m3	m	m	m	m	m	m					
20	f									1																			PLUG 1200 mm RCP Ω No. 31	10.812 m Lt "K" 16+93.753	D-3	20	f
	g											3.4	1																Abn MANHOLE Ω No. 30				g
	h										1	150.4																	Abn 1200 mm RCP				h
	i									1																			PLUG 1200 mm RCP Ω No. 31	11.082 m Lt "H" 20+36.573	D-4		i
	j																										8.0		REMOVE 1200 mm RCP				j
21	a																												600 mm AP		D-3	21	a
	b																												JS No. 2 Ω No. 8	16.243 m Lt "3CC" 19+91.207			b
	c																												600 mm AP				c
	d																												CONCRETE COLLAR Ω No. 2	4.280 m Lt "3CC" 19+69.153			d
	e																												600 mm RCP				e
	f																												JS No. 3 Ω No. 9	2.324 m Lt "3CC" 19+86.425			f
	g																												600 mm RCP				g
	h																												GD1 DRAINAGE INLET Ω No. 11	2.856 m Lt "3CC" 19+91.245			h
	i																												600 mm RCP				i
	j																												G2 DRAINAGE INLET	2.563 m Lt "3CC" 20+01.948			j
22	a																												BIO-SWALE Ω No. 5		D-3	22	a
	b																												BSPP Ω No. 20				b
	c																												BIO-SWALE Ω No. 5				c
23	a																												1350 mm RCP		D-3A	23	a
	b																												GT4 DRAINAGE INLET	13.828 m Lt "H" 13+43.600			b
	c																												1350 mm JACKED RCP				c
	d																												G2 DRAINAGE INLET Ω No. 2	7.926 m Rt "D" 17+07.904			d
	e																												600 mm RCP				e
	f																												GD1 DRAINAGE INLET Ω No. 11	10.445 m Rt "D" 17+08.312			f
	g																												600 mm RCP				g
	h																												GCP DI & APRON Ω No. 6	3.606 m Rt "K1" 114+13.983			h
	i													132.3															ROADSIDE DITCH CASE C Ω No. 17				i
23A	a																												450 mm RCP		D-3A	23A	a
	b																												GD1 DRAINAGE INLET Ω No. 11	7.780 m Rt "D" 16+96.800			b
SHEET TOTAL										2	1	153.8	1	132.3													8.0		SHEET TOTAL				

DRAINAGE QUANTITIES
DQ-16

STATE OF CALIFORNIA - DEPARTMENT OF TRANSPORTATION
Caltrans

CONSULTANT FUNCTIONAL SUPERVISOR: NORMAN SUYDAM
CALCULATED-DESIGNED BY: ROBERT WONG
CHECKED BY: NORMAN SUYDAM
REVISED BY
DATE REVISED

LAST REVISION 11-09-09
DATE PLOTTED => 19-OCT-2010
TIME PLOTTED => 15:59

Dist	COUNTY	ROUTE	KILOMETER POST TOTAL PROJECT	SHEET No.	TOTAL SHEETS
08	Riv	60,215	R19.7/21.9, R61.3/62.7	156	594

Robert W 1-14-10
REGISTERED CIVIL ENGINEER DATE

6-28-10
PLANS APPROVAL DATE

REGISTERED PROFESSIONAL ENGINEER ROBERT WONG No. C64734 Exp.06/30/11 CIVIL STATE OF CALIFORNIA

THE STATE OF CALIFORNIA OR ITS OFFICERS OR AGENTS SHALL NOT BE RESPONSIBLE FOR THE ACCURACY OR COMPLETENESS OF ELECTRONIC COPIES OF THIS PLAN SHEET.

LAN ENGINEERING CORP
1887 BUSINESS CENTER DR
SUITE 6
SAN BERNARDINO, CA 92408

RIVERSIDE COUNTY
TRANSPORTATION COMMISSION
4080 LEMON STREET
RIVERSIDE, CA 92502

DRAINAGE QUANTITIES

DRAINAGE SYSTEM No. ⬡	DRAINAGE UNIT ◯		MINOR CONCRETE (MINOR Str) (F)	CABLE RAILING	MINOR CONCRETE (Misc Const)	MINOR CONCRETE (BACKFILL)	CL 1 CONCRETE (STRUCTURE) (F)	MISCELLANEOUS IRON & STEEL (F)	BAR REINFORCING STEEL (F)	FRAMES, GRATES & COVERS: MH FRAME / COVER (N)	FRAMES, GRATES & COVERS: 600-12 GRATE (N)	FRAMES, GRATES & COVERS: 600-12X GRATE (N)	FRAMES, GRATES & COVERS: 900 R GRATE (N)	900 mm PRECAST CONCRETE PIPE INLET	900 mm PRECAST CONCRETE PIPE MANHOLE	1800 mm PRECAST CONCRETE PIPE MANHOLE	RSP: RSP FABRIC	RSP: BACKING No. 1, METHOD B	RSP: FACING, METHOD B	RSP: 1/2-TON, METHOD B	GRATED LINE DRAIN	RISER SAFETY CAGE (N)	AP: 200 mm	AP: 450 mm	AP: 600 mm	RCP: 450 mm	RCP: 600 mm	RCP: 750 mm	RCP: 900 mm	RCP: 1350 mm	RCP: 1500 mm	RCP: 1800 mm	RCP: JACKED 450 mm (CL V)	RCP: JACKED 900 mm (CL V)	RCP: JACKED 1350 mm (CL V)	RCP: JACKED 1800 mm (CL 5)	PIPE JOINT CLASSIFICATION (N)	HEIGHT OF INLET "H" (N)	DESCRIPTION	STATION	DRAINAGE PLAN SHEET No.	DRAINAGE SYSTEM No. ⬡	DRAINAGE UNIT ◯
			m3	m	m3	m3	m3	Kg	Kg	EA	EA	EA	EA	m	m	m	m2	m3	m3	m3	m	EA	m	m	m	m	m	m	m	m	m	m	m	m	m		m					
23A	c																									45.3										S		450 mm RCP		D-3A	23A	c
	d		1.7					263			2																										1.8	GD1 DRAINAGE INLET Ω No. 11	13.878 m Lt "H" 16+99.994			d
23B	a																									10.2										S		450 mm RCP		D-3	23B	a
	b		1.7					263			2																										1.8	GD1 DRAINAGE INLET Ω No. 11	7.780 m Rt "D" 16+96.800			b
	c																									2.3										S		450 mm RCP				c
	d		1.7					263			2																										1.8	GD1 DRAINAGE INLET Ω No. 11	7.780 m Rt "D" 16+93.600			d
	e																									1.3										S		450 mm RCP				e
	f		1.2					148			1																										1.8	G1 DRAINAGE INLET	9.022 m Rt "D" 16+93.367			f
24	a																							2.8												S		600 mm AP		D-3A	24	a
	b		0.4					107				1	1.15																								1.0	GCP DRAINAGE INLET	19.825 m Lt "H" 16+45.533			b
	c		29.2																																			CONCRETE BROW DITCH Ω No. 21				c
25	a																						6.2													S		450 mm AP		D-3A	25	a
	b		1.7					148			1																										2.1	G2 DRAINAGE INLET	6.560 m Lt "K" 14+31.960			b
26	a																																					450 mm CFES	10.590 m Rt "J" 14+36.971	D-3A	26	a
	b					4.6																				14.2										S		450 mm RCP & Conc Bkf Ω No. 3				b
	c		1.2					263			2																										1.1	GD1 DRAINAGE INLET Ω No. 11	1.525 m Lt "J" 14+47.271			c
	d					3.5																				7.0										S		450 mm RCP & Conc Bkf Ω No. 3				d
	e		0.9					148			1																										1.2	G1 DRAINAGE INLET	1.525 m Lt "J" 14+55.271			e
SHEET TOTAL			39.7			8.1		1603			11		1	1.15									6.2	2.8		80.3													SHEET TOTAL				

DRAINAGE QUANTITIES
DQ-17

STATE OF CALIFORNIA - DEPARTMENT OF TRANSPORTATION
Caltrans

CONSULTANT FUNCTIONAL SUPERVISOR: NORMAN SUYDAM
CALCULATED-DESIGNED BY: ROBERT WONG
CHECKED BY: NORMAN SUYDAM
REVISED BY
DATE REVISED

LAST REVISION 11-09-09
DATE PLOTTED => 19-OCT-2010
TIME PLOTTED => 15:59

Dist	COUNTY	ROUTE	KILOMETER POST TOTAL PROJECT	SHEET No.	TOTAL SHEETS
08	Riv	60,215	R19.7/21.9, R61.3/62.7	157	594

Robert Wong 1-14-10
REGISTERED CIVIL ENGINEER DATE

6-28-10
PLANS APPROVAL DATE

REGISTERED PROFESSIONAL ENGINEER ROBERT WONG No. C64734 Exp.06/30/11 CIVIL STATE OF CALIFORNIA

THE STATE OF CALIFORNIA OR ITS OFFICERS OR AGENTS SHALL NOT BE RESPONSIBLE FOR THE ACCURACY OR COMPLETENESS OF ELECTRONIC COPIES OF THIS PLAN SHEET.

LAN ENGINEERING CORP
1887 BUSINESS CENTER DR
SUITE 6
SAN BERNARDINO, CA 92408

RIVERSIDE COUNTY
TRANSPORTATION COMMISSION
4080 LEMON STREET
RIVERSIDE, CA 92502

DRAINAGE QUANTITIES

DRAINAGE SYSTEM No. ⬡	DRAINAGE UNIT ○	REMOVE INLET	REMOVE MANHOLE	REMOVE CONCRETE	REMOVE OVERSIDE DRAIN	REMOVE HEADWALL	PLUG PIPE 300 mm	PLUG PIPE 450 mm	PLUG PIPE 600 mm	PLUG PIPE 1200 mm	ABANDON CULVERT	SAND BACKFILL	ABANDON MANHOLE	DITCH EXCAVATION	200 mm ELBOW (N)	450 mm CFES	600 mm CFES	1350 mm CFES	600 mm AFES	CLEANOUT ASSEMBLY	WALL DRAIN GRATE (N)	Str EXCAVATION (CULVERT)	Str BACKFILL (CULVERT)	REMOVE PIPE 300 mm RCP	REMOVE PIPE 450 mm RCP	REMOVE PIPE 600 mm PP	REMOVE PIPE 600 mm RCP	REMOVE PIPE 1200 mm RCP	REMOVE PIPE 1800 mm CSP	DESCRIPTION	STATION	DRAINAGE PLAN SHEET No.	DRAINAGE SYSTEM No. ⬡	DRAINAGE UNIT ○
		EA	EA	m3	EA	EA	EA	EA	EA	EA	EA	m3	EA	m3	EA	EA	EA	EA	EA	EA	EA	m3	m3	m	m	m	m	m	m					
23A	c																													450 mm RCP		D-3A	23A	c
	d																													GD1 DRAINAGE INLET Ω No. 11	13.878 m Lt "H" 16+99.994			d
23B	a																													450 mm RCP		D-3	23B	a
	b																													GD1 DRAINAGE INLET Ω No. 11	7.780 m Rt "D" 16+96.800			b
	c																													450 mm RCP				c
	d																													GD1 DRAINAGE INLET Ω No. 11	7.780 m Rt "D" 16+93.600			d
	e																													450 mm RCP				e
	f																													G1 DRAINAGE INLET	9.022 m Rt "D" 16+93.367			f
24	a																													600 mm AP		D-3A	24	a
	b																													GCP DRAINAGE INLET	19.825 m Lt "H" 16+45.533			b
	c													127.9																CONCRETE BROW DITCH Ω No. 21				c
25	a																													450 mm AP		D-3A	25	a
	b																													G2 DRAINAGE INLET	6.560 m Lt "K" 14+31.960			b
26	a															1														450 mm CFES	10.590 m Rt "J" 14+36.971	D-3A	26	a
	b																													450 mm RCP & Conc Bkf Ω No. 3				b
	c																													GD1 DRAINAGE INLET Ω No. 11	1.525 m Lt "J" 14+47.271			c
	d																													450 mm RCP & Conc Bkf Ω No. 3				d
	e																													G1 DRAINAGE INLET	1.525 m Lt "J" 14+55.271			e
SHEET TOTAL														127.9		1														SHEET TOTAL				

DRAINAGE QUANTITIES
DQ-18

STATE OF CALIFORNIA - DEPARTMENT OF TRANSPORTATION
Caltrans

CONSULTANT FUNCTIONAL SUPERVISOR: NORMAN SUYDAM
CALCULATED-DESIGNED BY: ROBERT WONG
CHECKED BY: NORMAN SUYDAM
REVISED BY
DATE REVISED

LAST REVISION 11-09-09
DATE PLOTTED => 19-OCT-2010
TIME PLOTTED => 16:00

Dist	COUNTY	ROUTE	KILOMETER POST TOTAL PROJECT	SHEET No.	TOTAL SHEETS
08	Riv	60,215	R19.7/21.9, R61.3/62.7	158	594

REGISTERED CIVIL ENGINEER 1-14-10 DATE

6-28-10
PLANS APPROVAL DATE

REGISTERED PROFESSIONAL ENGINEER ROBERT WONG No. C64734 Exp.06/30/11 CIVIL STATE OF CALIFORNIA

THE STATE OF CALIFORNIA OR ITS OFFICERS OR AGENTS SHALL NOT BE RESPONSIBLE FOR THE ACCURACY OR COMPLETENESS OF ELECTRONIC COPIES OF THIS PLAN SHEET.

LAN ENGINEERING CORP
1887 BUSINESS CENTER DR
SUITE 6
SAN BERNARDINO, CA 92408

RIVERSIDE COUNTY
TRANSPORTATION COMMISSION
4080 LEMON STREET
RIVERSIDE, CA 92502

DRAINAGE QUANTITIES

DRAINAGE SYSTEM No. ⬡	DRAINAGE UNIT ○		MINOR CONCRETE (MINOR Str) (F)	CABLE RAILING	MINOR CONCRETE (Misc Const)	MINOR CONCRETE (BACKFILL)	CL 1 CONCRETE (STRUCTURE) (F)	MISCELLANEOUS IRON & STEEL (F)	BAR REINFORCING STEEL (F)	FRAMES, GRATES & COVERS: MH FRAME / COVER (N)	FRAMES, GRATES & COVERS: 600-12 GRATE (N)	FRAMES, GRATES & COVERS: 600-12X GRATE (N)	FRAMES, GRATES & COVERS: 900 R GRATE (N)	900 mm PRECAST CONCRETE PIPE INLET	900 mm PRECAST CONCRETE PIPE MANHOLE	1800 mm PRECAST CONCRETE PIPE MANHOLE	RSP: RSP FABRIC	RSP: BACKING No. 1, METHOD B	RSP: FACING, METHOD B	RSP: 1/2-TON, METHOD B	GRATED LINE DRAIN	RISER SAFETY CAGE (N)	AP: 200 mm	AP: 450 mm	AP: 600 mm	RCP: 450 mm	RCP: 600 mm	RCP: 750 mm	RCP: 900 mm	RCP: 1350 mm	RCP: 1500 mm	RCP: 1800 mm	RCP: JACKED 450 mm (CL V)	RCP: JACKED 900 mm (CL V)	RCP: JACKED 1350 mm (CL V)	RCP: JACKED 1800 mm (CL V)	PIPE JOINT CLASSIFICATION (N)	HEIGHT OF INLET "H" (N)	DESCRIPTION	STATION	DRAINAGE PLAN SHEET No.	DRAINAGE SYSTEM No. ⬡	DRAINAGE UNIT ○
			m3	m	m3	m3	m3	Kg	Kg	EA	EA	EA	EA	m	m	m	m2	m3	m3	m3	m	EA	m	m	m	m	m	m	m	m	m	m	m	m	m		m					
27	a																						9.7													S		200 mm AP		D-3A	27	a
	b				0.4			62															0.5															CLEANOUT ASSEMBLY Ω No. 15	6.268 m Lt "K" 15+46.754			b
	c																						1.0													S		200 mm AP				c
	d																						0.3													S		200 mm AP ELBOW	6.600 m Lt "K" 15+46.780			d
	e																						2.7													S		200 mm AP				e
	f				0.4			62															1.2															CLEANOUT ASSEMBLY Ω No. 15	6.600 m Lt "K" 15+46.780			f
	g																						1.3													S		200 mm AP				g
	h																						0.3													S		200 mm AP ELBOW	5.210 m Lt "K" 15+46.958			h
28	a																						16.6													S		200 mm AP		D-3A	28	a
	b				0.4			62															0.7															CLEANOUT ASSEMBLY Ω No. 15	1.160 m Rt "J" 15+38.921			b
	c																						1.1													S		200 mm AP				c
	d																						0.3													S		200 mm AP ELBOW	10.600 m Rt "K" 15+88.310			d
	e																						2.7													S		200 mm AP				e
	f				0.4			62															1.3															CLEANOUT ASSEMBLY Ω No. 15	10.600 m Rt "K" 15+88.310			f
	g																						1.3													S		200 mm AP				g
	h																						0.3													S		200 mm AP ELBOW	0.000 m "J" 15+39.108			h
29	a																											0.8								S		900 mm RCP		D-3A	29	a
	b		0.1																																			JS No. 3 Ω No. 9	6.617 m Rt "D" 19+49.518			b
	c																											21.4								S		900 mm RCP				c
	d		1.8		0.6			148			1																										2.1	G2 DI & APRON Ω No. 6	11.152 m Lt "J" 16+15.341			d
	e																				15.3															S		750 mm RCP				e
	f		0.3																																			JS No. 2 Ω No. 8	10.008 m Lt "J" 16+32.221			f
	g																				2.1															S		750 mm RCP				g
	h		0.7																																			CONCRETE COLLAR Ω No. 2	9.658 m Lt "J" 16+36.052			h
	i																				39.0															S		750 mm RCP				i
	j		0.4		0.5			107				1	3.85																								3.7	GCP DI & APRON Ω No. 6	5.168 m Lt "J" 16+74.947			j
	k		6.0																																			ROADSIDE DITCH CASE 'B' Ω No. 17				k
SHEET TOTAL			9.3		2.7			503			1		1	3.85									41.3					56.4	22.2									SHEET TOTAL				

DRAINAGE QUANTITIES
DQ-19

STATE OF CALIFORNIA - DEPARTMENT OF TRANSPORTATION
Caltrans

CONSULTANT FUNCTIONAL SUPERVISOR: NORMAN SUYDAM
CALCULATED-DESIGNED BY: ROBERT WONG
CHECKED BY: NORMAN SUYDAM
REVISED BY
DATE REVISED

LAST REVISION 11-09-09
DATE PLOTTED => 19-OCT-2010
TIME PLOTTED => 16:00

Dist	COUNTY	ROUTE	KILOMETER POST TOTAL PROJECT	SHEET No.	TOTAL SHEETS
08	Riv	60,215	R19.7/21.9, R61.3/62.7	159	594

Robert Wong 1-14-10
REGISTERED CIVIL ENGINEER DATE

6-28-10
PLANS APPROVAL DATE

REGISTERED PROFESSIONAL ENGINEER ROBERT WONG No. C64734 Exp.06/30/11 CIVIL STATE OF CALIFORNIA

THE STATE OF CALIFORNIA OR ITS OFFICERS OR AGENTS SHALL NOT BE RESPONSIBLE FOR THE ACCURACY OR COMPLETENESS OF ELECTRONIC COPIES OF THIS PLAN SHEET.

LAN ENGINEERING CORP
1887 BUSINESS CENTER DR
SUITE 6
SAN BERNARDINO, CA 92408

RIVERSIDE COUNTY
TRANSPORTATION COMMISSION
4080 LEMON STREET
RIVERSIDE, CA 92502

DRAINAGE QUANTITIES

DRAINAGE SYSTEM No. ⬡	DRAINAGE UNIT ○	REMOVE INLET	REMOVE MANHOLE	REMOVE CONCRETE	REMOVE OVERSIDE DRAIN	REMOVE HEADWALL	PLUG PIPE 300 mm	PLUG PIPE 450 mm	PLUG PIPE 600 mm	PLUG PIPE 1200 mm	ABANDON CULVERT	SAND BACKFILL	ABANDON MANHOLE	DITCH EXCAVATION	200 mm ELBOW (N)	450 mm CFES	600 mm CFES	1350 mm CFES	600 mm AFES	CLEANOUT ASSEMBLY	WALL DRAIN GRATE (N)	Str EXCAVATION (CULVERT)	Str BACKFILL (CULVERT)	REMOVE PIPE 300 mm RCP	REMOVE PIPE 450 mm RCP	REMOVE PIPE 600 mm PP	REMOVE PIPE 600 mm RCP	REMOVE PIPE 1200 mm RCP	REMOVE PIPE 1800 mm CSP	DESCRIPTION	STATION	DRAINAGE PLAN SHEET No.	DRAINAGE SYSTEM No. ⬡	DRAINAGE UNIT ○
		EA	EA	m3	EA	EA	EA	EA	EA	EA	EA	m3	EA	m3	EA	EA	EA	EA	EA	EA	EA	m3	m3	m	m	m	m	m	m					
27	a																													200 mm AP		D-3A	27	a
	b																			1										CLEANOUT ASSEMBLY Ω No. 15	6.268 m Lt "K" 15+46.754			b
	c																													200 mm AP				c
	d														1															200 mm AP ELBOW	6.600 m Lt "K" 15+46.780			d
	e																													200 mm AP				e
	f																			1										CLEANOUT ASSEMBLY Ω No. 15	6.600 m Lt "K" 15+46.780			f
	g																													200 mm AP				g
	h														1															200 mm AP ELBOW	5.210 m Lt "K" 15+46.958			h
28	a																													200 mm AP		D-3A	28	a
	b																			1										CLEANOUT ASSEMBLY Ω No. 15	1.160 m Rt "J" 15+38.921			b
	c																													200 mm AP				c
	d														1															200 mm AP ELBOW	10.600 m Rt "K" 15+88.310			d
	e																													200 mm AP				e
	f																			1										CLEANOUT ASSEMBLY Ω No. 15	10.600 m Rt "K" 15+88.310			f
	g																													200 mm AP				g
	h														1															200 mm AP ELBOW	0.000 m "J" 15+39.108			h
29	a																													900 mm RCP		D-3A	29	a
	b																													JS No. 3 Ω No. 9	6.617 m Rt "D" 19+49.518			b
	c																													900 mm RCP				c
	d																													G2 DI & APRON Ω No. 6	11.152 m Lt "J" 16+15.341			d
	e																													750 mm RCP				e
	f																													JS No. 2 Ω No. 8	10.008 m Lt "J" 16+32.221			f
	g																													750 mm RCP				g
	h																													CONCRETE COLLAR Ω No. 2	9.658 m Lt "J" 16+36.052			h
	i																													750 mm RCP				i
	j																													GCP DI & APRON Ω No. 6	5.168 m Lt "J" 16+74.947			j
	k													60.5																ROADSIDE DITCH CASE 'B' Ω No. 17				k
SHEET TOTAL														60.5	4					4										SHEET TOTAL				

DRAINAGE QUANTITIES
DQ-20

STATE OF CALIFORNIA - DEPARTMENT OF TRANSPORTATION
Caltrans

CONSULTANT FUNCTIONAL SUPERVISOR: NORMAN SUYDAM
CALCULATED-DESIGNED BY: ROBERT WONG
CHECKED BY: NORMAN SUYDAM
REVISED BY
DATE REVISED

LAST REVISION 11-09-09
DATE PLOTTED => 19-OCT-2010
TIME PLOTTED => 16:00

Dist	COUNTY	ROUTE	KILOMETER POST TOTAL PROJECT	SHEET No.	TOTAL SHEETS
08	Riv	60,215	R19.7/21.9, R61.3/62.7	160	594

Robert Wong 1-14-10
REGISTERED CIVIL ENGINEER DATE

6-28-10
PLANS APPROVAL DATE

REGISTERED PROFESSIONAL ENGINEER ROBERT WONG No. C64734 Exp.06/30/11 CIVIL STATE OF CALIFORNIA

THE STATE OF CALIFORNIA OR ITS OFFICERS OR AGENTS SHALL NOT BE RESPONSIBLE FOR THE ACCURACY OR COMPLETENESS OF ELECTRONIC COPIES OF THIS PLAN SHEET.

LAN ENGINEERING CORP
1887 BUSINESS CENTER DR
SUITE 6
SAN BERNARDINO, CA 92408

RIVERSIDE COUNTY
TRANSPORTATION COMMISSION
4080 LEMON STREET
RIVERSIDE, CA 92502

DRAINAGE QUANTITIES

DRAINAGE SYSTEM No. ⬡	DRAINAGE UNIT ○		MINOR CONCRETE (MINOR Str) (F)	CABLE RAILING	MINOR CONCRETE (Misc Const)	MINOR CONCRETE (BACKFILL)	CL 1 CONCRETE (STRUCTURE) (F)	MISCELLANEOUS IRON & STEEL (F)	BAR REINFORCING STEEL (F)	FRAMES, GRATES & COVERS: MH FRAME / COVER (N)	FRAMES, GRATES & COVERS: 600-12 GRATE (N)	FRAMES, GRATES & COVERS: 600-12X GRATE (N)	FRAMES, GRATES & COVERS: 900 R GRATE (N)	900 mm PRECAST CONCRETE PIPE INLET	900 mm PRECAST CONCRETE PIPE MANHOLE	1800 mm PRE CONCRETE PIPE MANHOLE	RSP: RSP FABRIC	RSP: BACKING No. 1, METHOD B	RSP: FACING, METHOD B	RSP: 1/2-TON, METHOD B	GRATED LINE DRAIN	RISER SAFETY CAGE (N)	AP: 200 mm	AP: 450 mm	AP: 600 mm	RCP: 450 mm	RCP: 600 mm	RCP: 750 mm	RCP: 900 mm	RCP: 1350 mm	RCP: 1500 mm	RCP: 1800 mm	RCP: JACKED 450 mm (CL V)	RCP: JACKED 900 mm (CL V)	RCP: JACKED 1350 mm (CL V)	RCP: JACKED 1800 mm (CL V)	PIPE JOINT CLASSIFICATION (N)	HEIGHT OF INLET "H" (N)	DESCRIPTION	STATION	DRAINAGE PLAN SHEET No.	DRAINAGE SYSTEM No. ⬡	DRAINAGE UNIT ○
			m3	m	m3	m3	m3	Kg	Kg	EA	EA	EA	EA	m	m	m	m2	m3	m3	m3	m	EA	m	m	m	m	m	m	m	m	m	m	m	m	m		m					
30	a																																					BIO SWALE Ω No. 5		D-3A	30	a
31	a																						6.2													S		200 mm AP		D-3A	31	a
	b																						0.2													S		200 mm AP ELBOW	6.301 m R+ "D" 19+56.146			b
	c																						29.0													S		200 mm AP				c
	d																						0.3													S		200 mm AP ELBOW	4.207 m R+ "D" 19+84.849			d
	e																						1.7													S		200 mm AP				e
	f																						0.3													S		200 mm AP ELBOW	6.012 m L+ "D" 19+84.996			f
	g																						2.4													S		200 mm AP				g
	h							3																														WALL DRAIN GRATE	6.012 m L+ "D" 19+84.996			h
32	a																							3.2												S		450 mm AP		D-3A	32	a
	b		1.0		0.6			148			1																										1.5	G1 DI & APRON Ω No. 6	15.650 m L+ "3CC" 19+48.375			b
33	a																							1.9												S		450 mm AP		D-3A	33	a
	b		0.9					148			1																										1.3	G1 DRAINAGE INLET	7.420 m R+ "D" 20+28.450			b
34	a																						1.7													S		200 mm AP		D-3A	34	a
	b																						0.2													S		200 mm AP ELBOW	3.771 m L+ "3CC" 19+86.406			b
	c																						1.9													S		200 mm AP				c
	d							3																														WALL DRAIN GRATE	3.771 m L+ "3CC" 19+86.406			d
34A	a		17.9																																			CONCRETE GUTTER		D-3A	34A	a
35	a																																					REMOVE OVERSIDE DRAIN		D-3A	35	a
SHEET TOTAL			19.8		0.6			302			2												43.9	5.1															SHEET TOTAL				

DRAINAGE QUANTITIES
DQ-21

STATE OF CALIFORNIA - DEPARTMENT OF TRANSPORTATION
Caltrans

CONSULTANT FUNCTIONAL SUPERVISOR: NORMAN SUYDAM
CALCULATED-DESIGNED BY: ROBERT WONG
CHECKED BY: NORMAN SUYDAM
REVISED BY
DATE REVISED

LAST REVISION 11-09-09
DATE PLOTTED => 19-OCT-2010
TIME PLOTTED => 16:00

Dist	COUNTY	ROUTE	KILOMETER POST TOTAL PROJECT	SHEET No.	TOTAL SHEETS
08	Riv	60,215	R19.7/21.9, R61.3/62.7	161	594

Robert W 1-14-10
REGISTERED CIVIL ENGINEER DATE

6-28-10
PLANS APPROVAL DATE

REGISTERED PROFESSIONAL ENGINEER ROBERT WONG No. C64734 Exp.06/30/11 CIVIL STATE OF CALIFORNIA

THE STATE OF CALIFORNIA OR ITS OFFICERS OR AGENTS SHALL NOT BE RESPONSIBLE FOR THE ACCURACY OR COMPLETENESS OF ELECTRONIC COPIES OF THIS PLAN SHEET.

LAN ENGINEERING CORP
1887 BUSINESS CENTER DR
SUITE 6
SAN BERNARDINO, CA 92408

RIVERSIDE COUNTY
TRANSPORTATION COMMISSION
4080 LEMON STREET
RIVERSIDE, CA 92502

DRAINAGE QUANTITIES

DRAINAGE SYSTEM No. ⬡	DRAINAGE UNIT ○	REMOVE INLET	REMOVE MANHOLE	REMOVE CONCRETE	REMOVE OVERSIDE DRAIN	REMOVE HEADWALL	PLUG PIPE 300 mm	PLUG PIPE 450 mm	PLUG PIPE 600 mm	PLUG PIPE 1200 mm	ABANDON CULVERT	SAND BACKFILL	ABANDON MANHOLE	DITCH EXCAVATION	200 mm ELBOW (N)	450 mm CFES	600 mm CFES	1350 mm CFES	600 mm AFES	CLEANOUT ASSEMBLY	WALL DRAIN GRATE (N)	Str EXCAVATION (CULVERT)	Str BACKFILL (CULVERT)	REMOVE PIPE 300 mm RCP	REMOVE PIPE 450 mm RCP	REMOVE PIPE 600 mm PP	REMOVE PIPE 600 mm RCP	REMOVE PIPE 1200 mm RCP	REMOVE PIPE 1800 mm CSP	DESCRIPTION	STATION	DRAINAGE PLAN SHEET No.	DRAINAGE SYSTEM No. ⬡	DRAINAGE UNIT ○
		EA	EA	m3	EA	EA	EA	EA	EA	EA	EA	m3	EA	m3	EA	EA	EA	EA	EA	EA	EA	m3	m3	m	m	m	m	m	m					
30	a													337.2																BIO SWALE Ω No. 5		D-3A	30	a
31	a																													200 mm AP		D-3A	31	a
	b														1															200 mm AP ELBOW	6.301 m Rt "D" 19+56.146			b
	c																													200 mm AP				c
	d														1															200 mm AP ELBOW	4.207 m Rt "D" 19+84.849			d
	e																													200 mm AP				e
	f														1															200 mm AP ELBOW	6.012 m Lt "D" 19+84.996			f
	g																													200 mm AP				g
	h																				1									WALL DRAIN GRATE	6.012 m Lt "D" 19+84.996			h
32	a																													450 mm AP		D-3A	32	a
	b																													G1 DI & APRON Ω No. 6	15.650 m Lt "3CC" 19+48.375			b
33	a																													450 mm AP		D-3A	33	a
	b																													G1 DRAINAGE INLET	7.420 m Rt "D" 20+28.450			b
34	a																													200 mm AP		D-3A	34	a
	b														1															200 mm AP ELBOW	3.771 m Lt "3CC" 19+86.406			b
	c																													200 mm AP				c
	d																				1									WALL DRAIN GRATE	3.771 m Lt "3CC" 19+86.406			d
34A	a																													CONCRETE GUTTER		D-3A	34A	a
35	a				1																									REMOVE OVERSIDE DRAIN		D-3A	35	a
SHEET TOTAL					1									337.2	4						2									SHEET TOTAL				

DRAINAGE QUANTITIES
DQ-22

STATE OF CALIFORNIA - DEPARTMENT OF TRANSPORTATION
Caltrans

CONSULTANT FUNCTIONAL SUPERVISOR: NORMAN SUYDAM
CALCULATED-DESIGNED BY: ROBERT WONG
CHECKED BY: NORMAN SUYDAM
REVISED BY
DATE REVISED

LAST REVISION 11-09-09
DATE PLOTTED => 19-OCT-2010
TIME PLOTTED => 16:00

Dist	COUNTY	ROUTE	KILOMETER POST TOTAL PROJECT	SHEET No.	TOTAL SHEETS
08	Riv	60,215	R19.7/21.9, R61.3/62.7	162	594

Robert W 1-14-10
REGISTERED CIVIL ENGINEER DATE

6-28-10
PLANS APPROVAL DATE

REGISTERED PROFESSIONAL ENGINEER ROBERT WONG No. C64734 Exp.06/30/11 CIVIL STATE OF CALIFORNIA

THE STATE OF CALIFORNIA OR ITS OFFICERS OR AGENTS SHALL NOT BE RESPONSIBLE FOR THE ACCURACY OR COMPLETENESS OF ELECTRONIC COPIES OF THIS PLAN SHEET.

LAN ENGINEERING CORP
1887 BUSINESS CENTER DR
SUITE 6
SAN BERNARDINO, CA 92408

RIVERSIDE COUNTY
TRANSPORTATION COMMISSION
4080 LEMON STREET
RIVERSIDE, CA 92502

DRAINAGE QUANTITIES

DRAINAGE SYSTEM No. ⬡	DRAINAGE UNIT ○		MINOR CONCRETE (MINOR Str) (F)	CABLE RAILING	MINOR CONCRETE (Misc Const)	MINOR CONCRETE (BACKFILL)	CL 1 CONCRETE (STRUCTURE) (F)	MISCELLANEOUS IRON & STEEL (F)	BAR REINFORCING STEEL (F)	FRAMES, GRATES & COVERS: MH FRAME / COVER (N)	600-12 GRATE (N)	600-12X GRATE (N)	900 R GRATE (N)	900 mm PRECAST CONCRETE PIPE INLET	900 mm PRECAST CONCRETE PIPE MANHOLE	1800 mm PRECAST CONCRETE PIPE MANHOLE	RSP: RSP FABRIC	BACKING No. 1, METHOD B	FACING, METHOD B	1/2-TON, METHOD B	GRATED LINE DRAIN	RISER SAFETY CAGE (N)	APC: 200 mm	450 mm	600 mm	RCP: 450 mm	600 mm	750 mm	900 mm	1350 mm	1500 mm	1800 mm	JACKED 450 mm (CL V)	JACKED 900 mm (CL V)	JACKED 1350 mm (CL V)	JACKED 1800 mm (CL V)	PIPE JOINT CLASSIFICATION (N)	HEIGHT OF INLET "H" (N)	DESCRIPTION	STATION	DRAINAGE PLAN SHEET No.	DRAINAGE SYSTEM No. ⬡	DRAINAGE UNIT ○
			m3	m	m3	m3	m3	Kg	Kg	EA	EA	EA	EA	m	m	m	m2	m3	m3	m3	m	EA	m	m	m	m	m	m	m	m	m	m	m	m	m		m					
36	a																								5.5												S		600 mm AP		D-4	36	a
	b		0.3																																				CONCRETE COLLAR Ω No. 2	24.744 m Lt "H" 20+03.145			b
	c																																						REMOVE 600 mm RCP				c
	d																																						PLUG 600 mm RCP Ω No. 31	15.839 m Lt "H" 20+07.816			d
	e																																						Abn 600 mm RCP				e
37	a																																						REMOVE OVERSIDE DRAIN		D-4	37	a
38	a																																						450 mm CFES	7.909 m Lt "J" 19+66.224	D-4	38	a
	b					5.0																				13.2										S		450 mm RCP & Conc Bkf Ω No. 3				b
	c		1.3					263			2																										1.2	GD1 DRAINAGE INLET	6.710 m Rt "J" 19+66.168			c
	d					3.5																				7.6										S		450 mm RCP & Conc Bkf Ω No. 3				d
	e		1.2					263			2																										1.1	GD1 DRAINAGE INLET	6.710 m Rt "J" 19+74.631			e
39	a																										26.4									S		600 mm RCP		D-6	39	a
	b		0.4		0.5			107					1	2.05																							1.9	GCP DI & APRON Ω No. 6	13.250 m Lt "D" 20+77.484			b
	c		39.4																																				ROADSIDE DITCH CASE A Ω No. 17				c
SHEET TOTAL			42.6		0.5	8.5		633			4		1	2.05											5.5	20.8	26.4												SHEET TOTAL				
TOTAL			322.7	** 62.8	*11.2	32.7	135.9	12 341	11 263	3	73		6	15.5	8.8	2.4	852.0	442.2	5.5	33.6	30.8	1	85.2	16.0	70.8	399.8	293.2	56.4	113.0	448.4	225.7	162.6	71.0	67.6	34.4	193.0			TOTAL				

* MINOR CONCRETE (Misc Const) TOTAL IS INCLUDED IN MINOR CONCRETE (Misc Const) ROADWAY QUANTITIES ON SHEET Q-3.
** FOR ADDITIONAL QUANTITIES SEE STRUCTURES PLANS.

DRAINAGE QUANTITIES
DQ-23

STATE OF CALIFORNIA - DEPARTMENT OF TRANSPORTATION
Caltrans

CONSULTANT FUNCTIONAL SUPERVISOR: NORMAN SUYDAM
CALCULATED-DESIGNED BY: ROBERT WONG
CHECKED BY: NORMAN SUYDAM
REVISED BY
DATE REVISED

LAST REVISION 11-09-09
DATE PLOTTED => 19-OCT-2010
TIME PLOTTED => 16:00

Dist	COUNTY	ROUTE	KILOMETER POST TOTAL PROJECT	SHEET No.	TOTAL SHEETS
08	Riv	60,215	R19.7/21.9, R61.3/62.7	163	594

Robert Wong 1-14-10
REGISTERED CIVIL ENGINEER DATE

6-28-10
PLANS APPROVAL DATE

REGISTERED PROFESSIONAL ENGINEER ROBERT WONG No. C64734 Exp.06/30/11 CIVIL STATE OF CALIFORNIA

THE STATE OF CALIFORNIA OR ITS OFFICERS OR AGENTS SHALL NOT BE RESPONSIBLE FOR THE ACCURACY OR COMPLETENESS OF ELECTRONIC COPIES OF THIS PLAN SHEET.

LAN ENGINEERING CORP
1887 BUSINESS CENTER DR
SUITE 6
SAN BERNARDINO, CA 92408

RIVERSIDE COUNTY
TRANSPORTATION COMMISSION
4080 LEMON STREET
RIVERSIDE, CA 92502

DRAINAGE QUANTITIES

DRAINAGE SYSTEM No. ⬡	DRAINAGE UNIT ○	REMOVE INLET	REMOVE MANHOLE	REMOVE CONCRETE	REMOVE OVERSIDE DRAIN	REMOVE HEADWALL	PLUG PIPE 300 mm	PLUG PIPE 450 mm	PLUG PIPE 600 mm	PLUG PIPE 1200 mm	ABANDON CULVERT	SAND BACKFILL	ABANDON MANHOLE	DITCH EXCAVATION	200 mm ELBOW (N)	450 mm CFES	600 mm CFES	1350 mm CFES	600 mm AFES	CLEANOUT ASSEMBLY	WALL DRAIN GRATE (N)	Str EXCAVATION (CULVERT)	Str BACKFILL (CULVERT)	REMOVE PIPE 300 mm RCP	REMOVE PIPE 450 mm RCP	REMOVE PIPE 600 mm PP	REMOVE PIPE 600 mm RCP	REMOVE PIPE 1200 mm RCP	REMOVE PIPE 1800 mm CSP	DESCRIPTION	STATION	DRAINAGE PLAN SHEET No.	DRAINAGE SYSTEM No. ⬡	DRAINAGE UNIT ○
		EA	EA	m3	EA	EA	EA	EA	EA	EA	EA	m3	EA	m3	EA	EA	EA	EA	EA	EA	EA	m3	m3	m	m	m	m	m	m					
36	a																													600 mm AP		D-4	36	a
	b																													CONCRETE COLLAR Ω No. 2	24.744 m Lt "H" 20+03.145			b
	c																										15.0			REMOVE 600 mm RCP				c
	d								1																					PLUG 600 mm RCP Ω No. 31	15.839 m Lt "H" 20+07.816			d
	e										1	2.8																		Abn 600 mm RCP				e
37	a				1																									REMOVE OVERSIDE DRAIN		D-4	37	a
38	a															1														450 mm CFES	7.909 m Lt "J" 19+66.224	D-4	38	a
	b																													450 mm RCP & Conc Bkf Ω No. 3				b
	c																													GD1 DRAINAGE INLET	6.710 m Rt "J" 19+66.168			c
	d																													450 mm RCP & Conc Bkf Ω No. 3				d
	e																													GD1 DRAINAGE INLET	6.710 m Rt "J" 19+74.631			e
39	a																													600 mm RCP		D-6	39	a
	b																													GCP DI & APRON Ω No. 6	13.250 m Lt "D" 20+77.484			b
	c													611.3																ROADSIDE DITCH CASE A Ω No. 17				c
SHEET TOTAL					1				1		1	2.8		611.3		1											15.0			SHEET TOTAL				
SUBTOTAL		9	1	0.2	2	3	1	2	2	3	4	161.1	1	3452.7	8	2	2	1	1	4	2	785.5	343.4	8	81.2	23.7	101.2	65.0	45.3	SUBTOTAL				
TOTAL		9	1	* 0.2	2	3	8				4	161.1	1	3452.7	8	2	2	1	1	4	2	785.5	343.4	324.4						TOTAL				

* SEE ALSO Q-4.

DRAINAGE QUANTITIES
DQ-24

STATE OF CALIFORNIA - DEPARTMENT OF TRANSPORTATION
Caltrans

CONSULTANT FUNCTIONAL SUPERVISOR: NORMAN SUYDAM
CALCULATED-DESIGNED BY: ROBERT WONG
CHECKED BY: NORMAN SUYDAM
REVISED BY
DATE REVISED

LAST REVISION 11-09-09
DATE PLOTTED => 19-OCT-2010
TIME PLOTTED => 16:00

Dist	COUNTY	ROUTE	KILOMETER POST TOTAL PROJECT	SHEET No.	TOTAL SHEETS
08	Riv	60,215	R19.7/21.9, R61.3/62.7	164	594

REGISTERED CIVIL ENGINEER — DATE 1-14-10

PLANS APPROVAL DATE 6-28-10

REGISTERED PROFESSIONAL ENGINEER — ERIC S. GIROD No. C57288 Exp.12/31/09 CIVIL — STATE OF CALIFORNIA

THE STATE OF CALIFORNIA OR ITS OFFICERS OR AGENTS SHALL NOT BE RESPONSIBLE FOR THE ACCURACY OR COMPLETENESS OF ELECTRONIC COPIES OF THIS PLAN SHEET.

LAN ENGINEERING CORP
1887 BUSINESS CENTER DR
SUITE 6
SAN BERNARDINO, CA 92408

RIVERSIDE COUNTY
TRANSPORTATION COMMISSION
4080 LEMON STREET
RIVERSIDE, CA 92502

UTILITY OWNERSHIP ON THIS PROJECT:

CABLE TELEVISION - TIME WARNER CABLE (TWC)
ELECTRIC - CITY OF RIVERSIDE (COR)
ELECTRIC - SOUTHERN CALIFORNIA EDISON (SCE)
GAS - THE GAS COMPANY (TGC)
FIBER OPTIC - PACIFIC BELL (SBC)
PETROLEUM - KINDER MORGAN COMPANY (KM)
TELEPHONE - PACIFIC BELL (SBC)
TELEPHONE - AT&T (AT&T)
TELEPHONE - VERIZON (VZ)
SEWER - CITY OF RIVERSIDE (COR)
SEWER - EASTERN MUNICIPAL WATER DISTRICT (EMWD)
WATER - EASTERN MUNICIPAL WATER DISTRICT (EMWD)
WATER - WESTERN MUNICIPAL WATER DISTRICT (WMWD)
WATER - CITY OF RIVERSIDE (COR)
WATER - DEPARTMENT OF WATER RESOURCES (DWR)

LEGEND:

- INDICATES GUY ANCHOR FROM POLE
- INDICATES ELECTRIC PULL BOX
- INDICATES ELECTRIC VAULT
- XX-XXXXX-XX - INDICATES WOOD POWER POLE NUMBER
- INDICATES WOOD POWER POLE
- INDICATES STEEL POWER POLE
- INDICATES POWER POLE
- INDICATES TELEPHONE PEDESTAL
- INDICATES WATER VENT OR RISER
- INDICATES WATER VALVE
- INDICATES FIRE HYDRANT
- INDICATES WATER METER
- INDICATES GAS METER
- INDICATES GAS VALVE
- INDICATES GAS VENT PIPE OR ETS
- INDICATES SEWER MANHOLE

LEGEND UTILITY PATTERNING:

—OHE—OHT—OTV--	INDICATES OVERHEAD ELECTRIC & TELEPHONE & TELEVISION
—T—	INDICATES UNDERGROUND TELEPHONE LINES
—G—	INDICATES UNDERGROUND NATURAL GAS LINES
—S—	INDICATES UNDERGROUND SEWER LINES
—E—	INDICATES UNDERGROUND ELECTRICAL LINES
—TV—	INDICATES UNDERGROUND TELEVISION LINES
—OHE—	INDICATES OVERHEAD ELECTRICAL LINES
—GS—	INDICATES JET FUEL LINES
—T—FO—	INDICATES TELEVISION & FIBER OPTIC LINE
—W—	INDICATES WATER LINE
—FO—	INDICATES FIBER OPTIC COMMUNICATION LINE

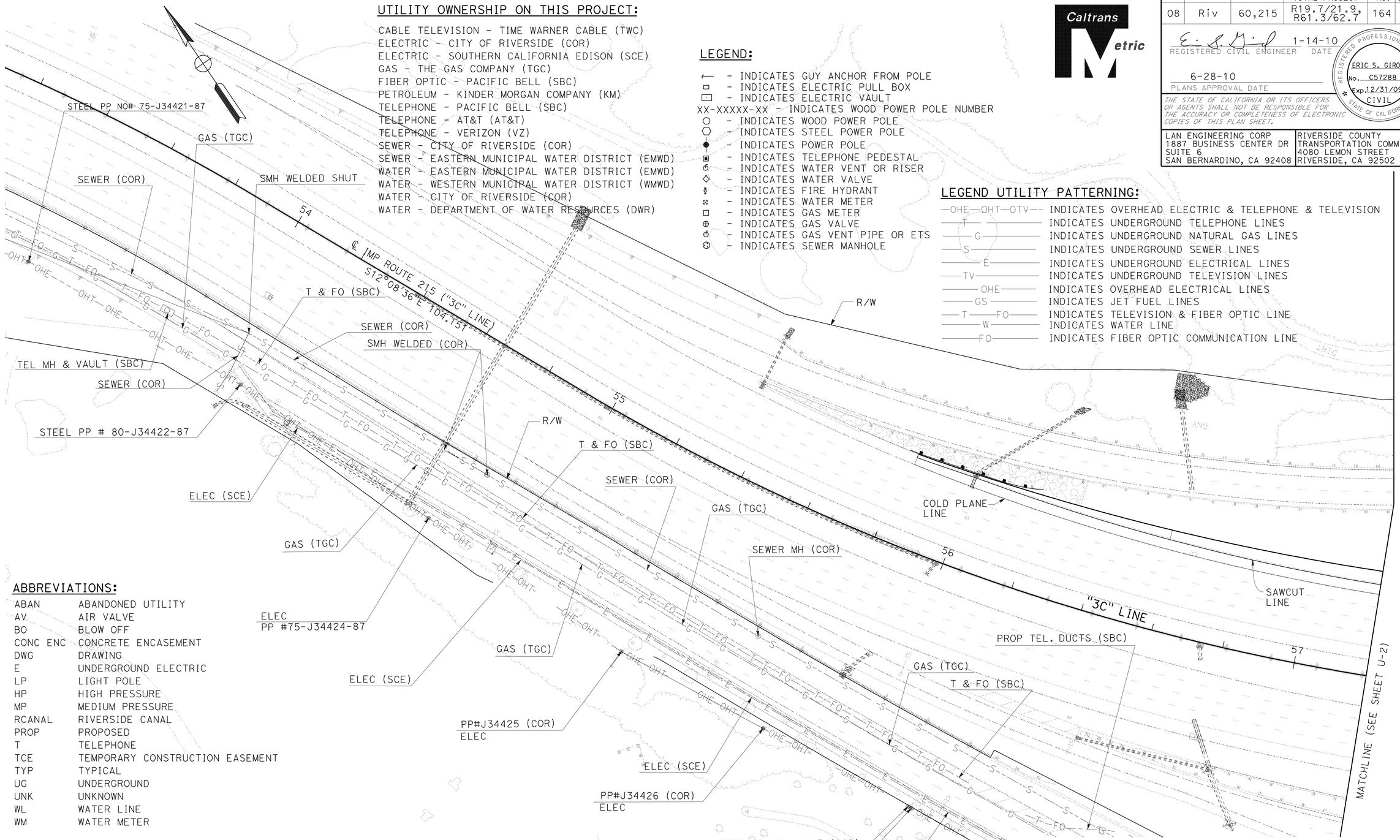

ABBREVIATIONS:

ABAN	ABANDONED UTILITY
AV	AIR VALVE
BO	BLOW OFF
CONC ENC	CONCRETE ENCASEMENT
DWG	DRAWING
E	UNDERGROUND ELECTRIC
LP	LIGHT POLE
HP	HIGH PRESSURE
MP	MEDIUM PRESSURE
RCANAL	RIVERSIDE CANAL
PROP	PROPOSED
T	TELEPHONE
TCE	TEMPORARY CONSTRUCTION EASEMENT
TYP	TYPICAL
UG	UNDERGROUND
UNK	UNKNOWN
WL	WATER LINE
WM	WATER METER

NOTES:

1. LOCATIONS OF UTILITY FACILITIES SHOWN ON THESE PLANS ARE APPROXIMATE AND SHALL BE VERIFIED BY THE CONTRACTOR PRIOR TO CONSTRUCTION.
2. ALL ELEVATIONS SHOWN REFER TO THE TOP OF PIPE ELEVATION UNLESS OTHERWISE INDICATED.
3. FOR COMPLETE RIGHT OF WAY AND ACCURATE ACCESS DATA, SEE RIGHT OF WAY RECORD MAPS AT DISTRICT OFFICE.

THIS PLAN ACCURATE FOR UTILITY WORK ONLY

NOTE: UTILITY RELOCATIONS TO BE VERIFIED

ALL DIMENSIONS ARE IN METERS UNLESS OTHERWISE SHOWN

UTILITY PLAN

SCALE 1:500 **U-1**

STATE OF CALIFORNIA - DEPARTMENT OF TRANSPORTATION
Caltrans

CONSULTANT FUNCTIONAL SUPERVISOR: NORMAN SUYDAM
CALCULATED-DESIGNED BY: ERIC GIROD
CHECKED BY: NORMAN SUYDAM
REVISED BY / DATE REVISED

LAST REVISION 11-09-09
DATE PLOTTED => 19-OCT-2010
TIME PLOTTED => 16:00

Dist	COUNTY	ROUTE	KILOMETER POST TOTAL PROJECT	SHEET No.	TOTAL SHEETS
08	Riv	60,215	R19.7/21.9, R61.3/62.7	165	594

REGISTERED CIVIL ENGINEER 1-14-10 DATE

6-28-10
PLANS APPROVAL DATE

REGISTERED PROFESSIONAL ENGINEER
ERIC S. GIROD
No. C57288
Exp.12/31/09
CIVIL
STATE OF CALIFORNIA

THE STATE OF CALIFORNIA OR ITS OFFICERS OR AGENTS SHALL NOT BE RESPONSIBLE FOR THE ACCURACY OR COMPLETENESS OF ELECTRONIC COPIES OF THIS PLAN SHEET.

LAN ENGINEERING CORP
1887 BUSINESS CENTER DR
SUITE 6
SAN BERNARDINO, CA 92408

RIVERSIDE COUNTY
TRANSPORTATION COMMISSION
4080 LEMON STREET
RIVERSIDE, CA 92502

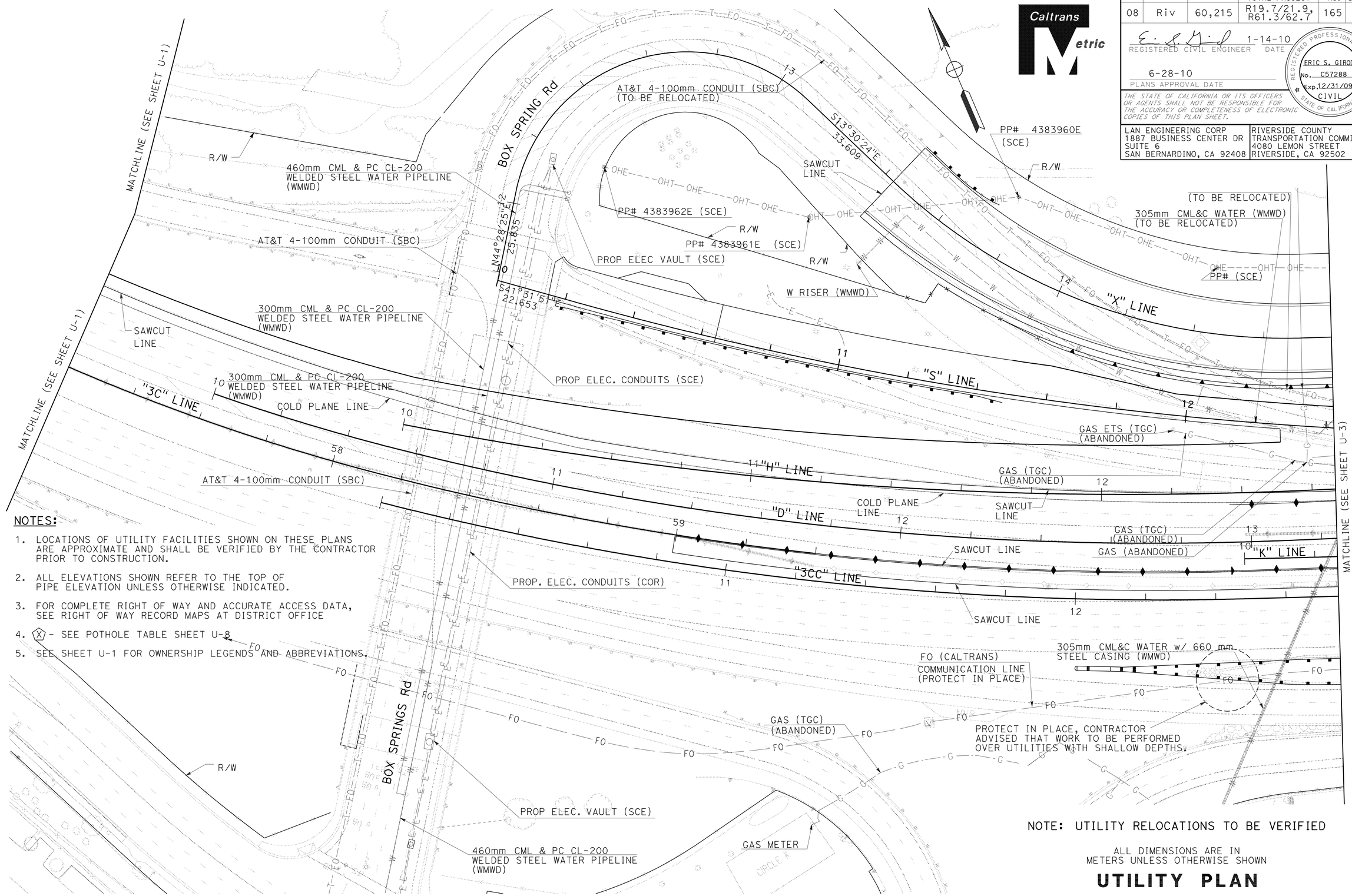

NOTES:

1. LOCATIONS OF UTILITY FACILITIES SHOWN ON THESE PLANS ARE APPROXIMATE AND SHALL BE VERIFIED BY THE CONTRACTOR PRIOR TO CONSTRUCTION.
2. ALL ELEVATIONS SHOWN REFER TO THE TOP OF PIPE ELEVATION UNLESS OTHERWISE INDICATED.
3. FOR COMPLETE RIGHT OF WAY AND ACCURATE ACCESS DATA, SEE RIGHT OF WAY RECORD MAPS AT DISTRICT OFFICE
4. (X) - SEE POTHOLE TABLE SHEET U-8
5. SEE SHEET U-1 FOR OWNERSHIP LEGENDS AND ABBREVIATIONS.

NOTE: UTILITY RELOCATIONS TO BE VERIFIED

ALL DIMENSIONS ARE IN METERS UNLESS OTHERWISE SHOWN

UTILITY PLAN

SCALE 1:500

U-2

THIS PLAN ACCURATE FOR UTILITY WORK ONLY

STATE OF CALIFORNIA - DEPARTMENT OF TRANSPORTATION
Caltrans

CONSULTANT FUNCTIONAL SUPERVISOR: NORMAN SUYDAM
CALCULATED-DESIGNED BY: ERIC GIROD
CHECKED BY: NORMAN SUYDAM
REVISED BY / DATE REVISED

LAST REVISION 11-09-09
DATE PLOTTED => 19-OCT-2010
TIME PLOTTED => 16:00

Dist	COUNTY	ROUTE	KILOMETER POST TOTAL PROJECT	SHEET No.	TOTAL SHEETS
08	Riv	60,215	R19.7/21.9, R61.3/62.7	166	594

REGISTERED CIVIL ENGINEER 1-14-10 DATE

6-28-10
PLANS APPROVAL DATE

REGISTERED PROFESSIONAL ENGINEER ERIC S. GIROD No. C57288 Exp.12/31/09 CIVIL STATE OF CALIFORNIA

THE STATE OF CALIFORNIA OR ITS OFFICERS OR AGENTS SHALL NOT BE RESPONSIBLE FOR THE ACCURACY OR COMPLETENESS OF ELECTRONIC COPIES OF THIS PLAN SHEET.

LAN ENGINEERING CORP
1887 BUSINESS CENTER DR
SUITE 6
SAN BERNARDINO, CA 92408

RIVERSIDE COUNTY
TRANSPORTATION COMMISSION
4080 LEMON STREET
RIVERSIDE, CA 92502

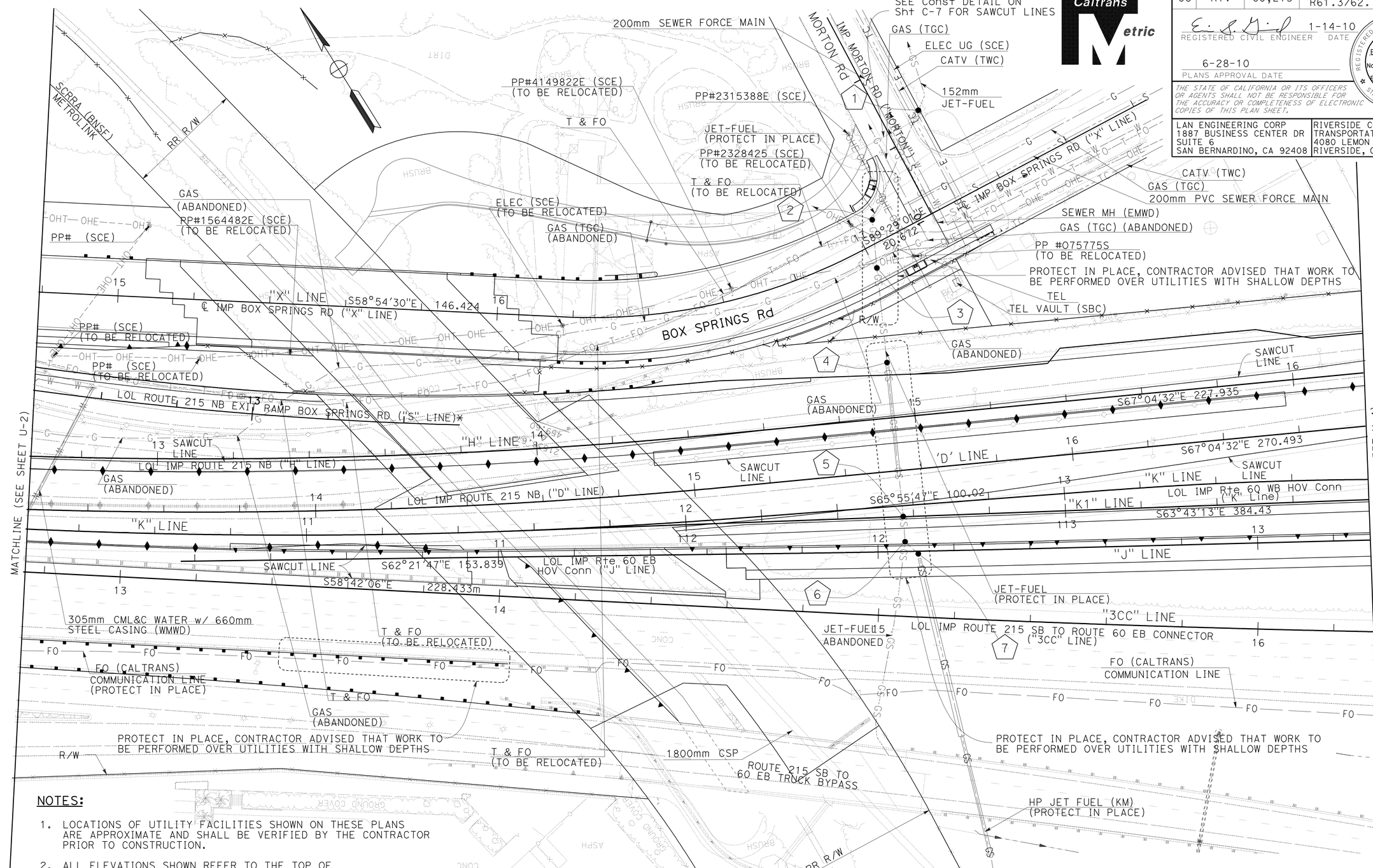

NOTES:

1. LOCATIONS OF UTILITY FACILITIES SHOWN ON THESE PLANS ARE APPROXIMATE AND SHALL BE VERIFIED BY THE CONTRACTOR PRIOR TO CONSTRUCTION.
2. ALL ELEVATIONS SHOWN REFER TO THE TOP OF PIPE ELEVATION UNLESS OTHERWISE INDICATED.
3. FOR COMPLETE RIGHT OF WAY AND ACCURATE ACCESS DATA, SEE RIGHT OF WAY RECORD MAPS AT DISTRICT OFFICE.
4. (X) - SEE POTHOLE TABLE SHEET U-8
5. SEE SHEET U-1 FOR OWNERSHIP LEGENDS AND ABBREVIATIONS.

NOTE: UTILITY RELOCATIONS TO BE VERIFIED

ALL DIMENSIONS ARE IN METERS UNLESS OTHERWISE SHOWN

UTILITY PLAN

SCALE 1:500

U-3

THIS PLAN ACCURATE FOR UTILITY WORK ONLY

STATE OF CALIFORNIA - DEPARTMENT OF TRANSPORTATION

Caltrans

CONSULTANT FUNCTIONAL SUPERVISOR: NORMAN SUYDAM

CALCULATED-DESIGNED BY: ERIC GIROD

CHECKED BY: NORMAN SUYDAM

REVISED BY | DATE REVISED

LAST REVISION 11-09-09

DATE PLOTTED => 19-OCT-2010
TIME PLOTTED => 16:01

BORDER LAST REVISED 3/1/2007

RELATIVE BORDER SCALE IS IN MILLIMETERS 0 20 40 60 80

USERNAME => trlim
DGN FILE => 844931ka003.dgn

CU 08232

EA 449311

Dist	COUNTY	ROUTE	KILOMETER POST TOTAL PROJECT	SHEET No.	TOTAL SHEETS
08	Riv	60,215	R19.7/21.9, R61.3/62.7	167	594

REGISTERED CIVIL ENGINEER 1-14-10 DATE

6-28-10
PLANS APPROVAL DATE

REGISTERED PROFESSIONAL ENGINEER ERIC S. GIROD No. C57288 Exp.12/31/09 CIVIL STATE OF CALIFORNIA

THE STATE OF CALIFORNIA OR ITS OFFICERS OR AGENTS SHALL NOT BE RESPONSIBLE FOR THE ACCURACY OR COMPLETENESS OF ELECTRONIC COPIES OF THIS PLAN SHEET.

LAN ENGINEERING CORP
1887 BUSINESS CENTER DR
SUITE 6
SAN BERNARDINO, CA 92408

RIVERSIDE COUNTY
TRANSPORTATION COMMISSION
4080 LEMON STREET
RIVERSIDE, CA 92502

Caltrans Metric

NOTES:

1. LOCATIONS OF UTILITY FACILITIES SHOWN ON THESE PLANS ARE APPROXIMATE AND SHALL BE VERIFIED BY THE CONTRACTOR PRIOR TO CONSTRUCTION.
2. ALL ELEVATIONS SHOWN REFER TO THE TOP OF PIPE ELEVATION UNLESS OTHERWISE INDICATED.
3. FOR COMPLETE RIGHT OF WAY AND ACCURATE ACCESS DATA, SEE RIGHT OF WAY RECORD MAPS AT DISTRICT OFFICE.
4. (X) - SEE POTHOLE TABLE SHEET U-8
5. SEE SHEET U-1 FOR OWNERSHIP LEGENDS AND ABBREVIATIONS.

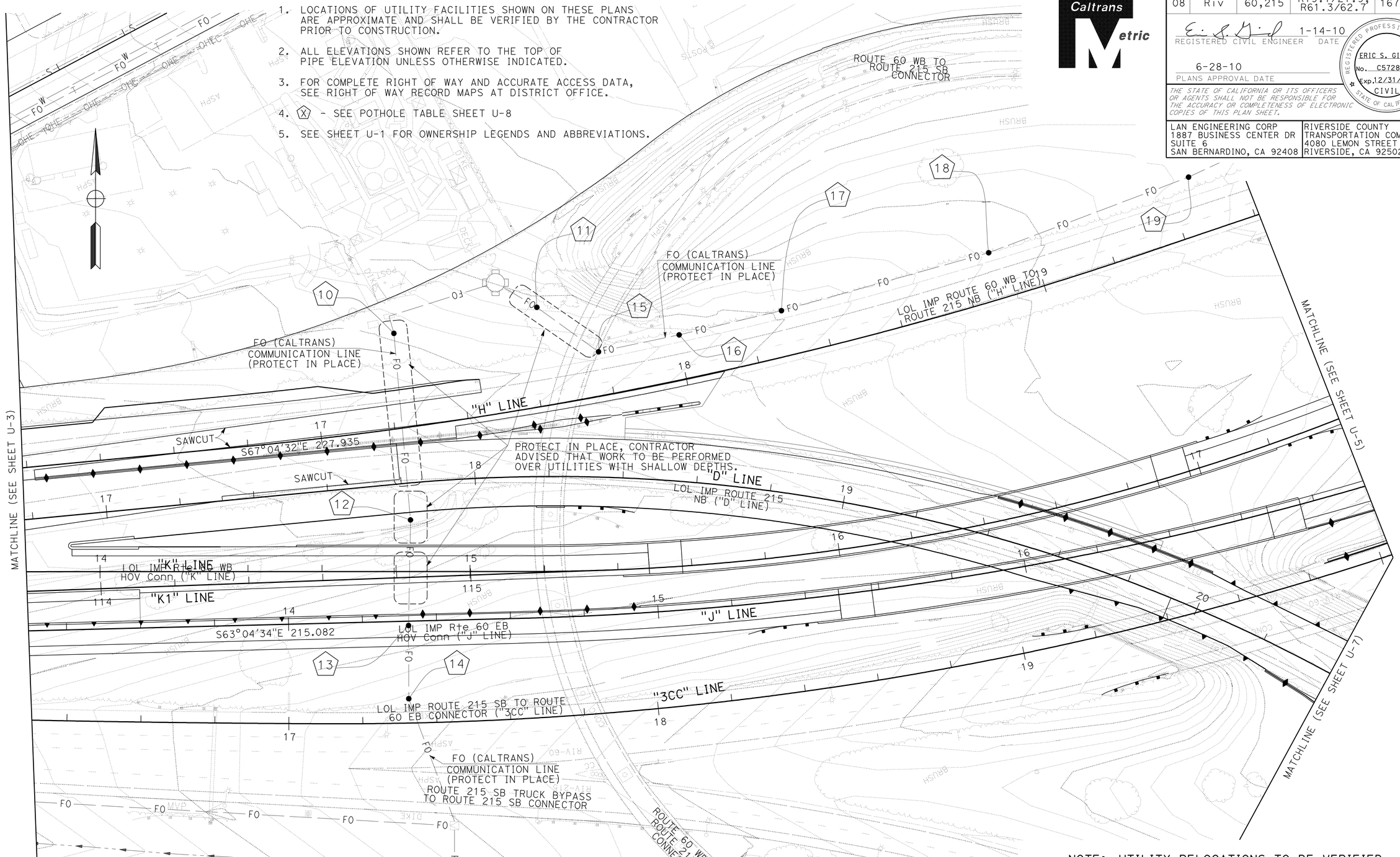

NOTE: UTILITY RELOCATIONS TO BE VERIFIED

ALL DIMENSIONS ARE IN METERS UNLESS OTHERWISE SHOWN

UTILITY PLAN

SCALE 1:500

U-4

THIS PLAN ACCURATE FOR UTILITY WORK ONLY

STATE OF CALIFORNIA - DEPARTMENT OF TRANSPORTATION

Caltrans

CONSULTANT FUNCTIONAL SUPERVISOR: NORMAN SUYDAM

CALCULATED-DESIGNED BY: ERIC GIROD

CHECKED BY: NORMAN SUYDAM

REVISED BY | DATE REVISED

LAST REVISION 11-09-09 DATE PLOTTED => 19-OCT-2010 TIME PLOTTED => 16:01

Dist	COUNTY	ROUTE	KILOMETER POST TOTAL PROJECT	SHEET No.	TOTAL SHEETS
08	Riv	60,215	R19.7/21.9, R61.3/62.7	168	594

REGISTERED CIVIL ENGINEER 1-14-10 DATE

6-28-10
PLANS APPROVAL DATE

REGISTERED PROFESSIONAL ENGINEER
ERIC S. GIROD
No. C57288
Exp.12/31/09
CIVIL
STATE OF CALIFORNIA

THE STATE OF CALIFORNIA OR ITS OFFICERS OR AGENTS SHALL NOT BE RESPONSIBLE FOR THE ACCURACY OR COMPLETENESS OF ELECTRONIC COPIES OF THIS PLAN SHEET.

LAN ENGINEERING CORP
1887 BUSINESS CENTER DR
SUITE 6
SAN BERNARDINO, CA 92408

RIVERSIDE COUNTY
TRANSPORTATION COMMISSION
4080 LEMON STREET
RIVERSIDE, CA 92502

Caltrans Metric

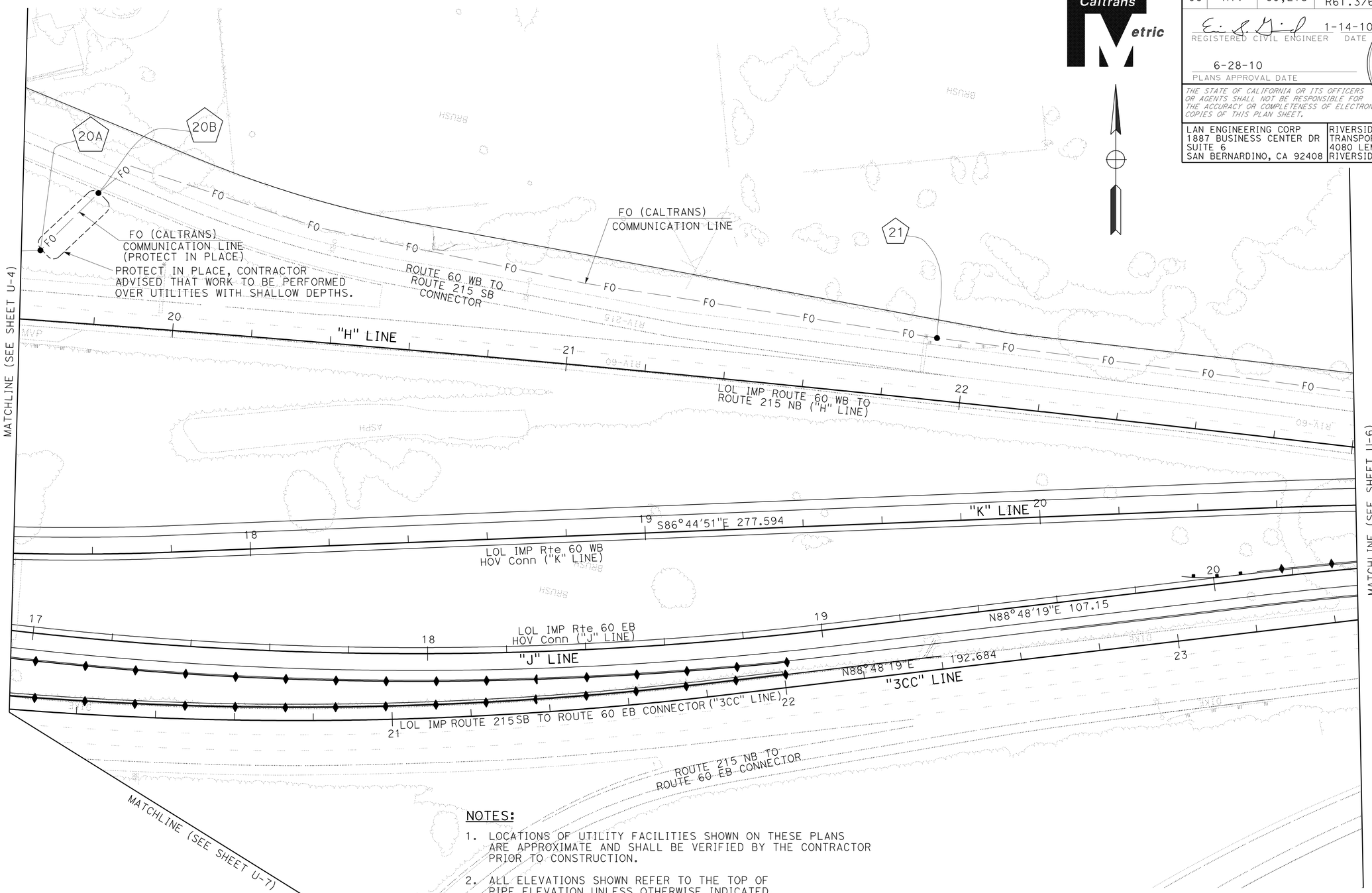

NOTES:

1. LOCATIONS OF UTILITY FACILITIES SHOWN ON THESE PLANS ARE APPROXIMATE AND SHALL BE VERIFIED BY THE CONTRACTOR PRIOR TO CONSTRUCTION.
2. ALL ELEVATIONS SHOWN REFER TO THE TOP OF PIPE ELEVATION UNLESS OTHERWISE INDICATED.
3. FOR COMPLETE RIGHT OF WAY AND ACCURATE ACCESS DATA, SEE RIGHT OF WAY RECORD MAPS AT DISTRICT OFFICE.
4. (X) - SEE POTHOLE TABLE SHEET U-8
5. SEE SHEET U-1 FOR OWNERSHIP LEGENDS AND ABBREVIATIONS.

THIS PLAN ACCURATE FOR UTILITY WORK ONLY

NOTE: UTILITY RELOCATIONS TO BE VERIFIED

ALL DIMENSIONS ARE IN METERS UNLESS OTHERWISE SHOWN

UTILITY PLAN

SCALE 1:500 **U-5**

STATE OF CALIFORNIA - DEPARTMENT OF TRANSPORTATION
Caltrans

CONSULTANT FUNCTIONAL SUPERVISOR: NORMAN SUYDAM
CALCULATED-DESIGNED BY: ERIC GIROD
CHECKED BY: NORMAN SUYDAM
REVISED BY
DATE REVISED

LAST REVISION 11-09-09 | DATE PLOTTED => 19-OCT-2010 | TIME PLOTTED => 16:01

Dist	COUNTY	ROUTE	KILOMETER POST TOTAL PROJECT	SHEET No.	TOTAL SHEETS
08	Riv	60,215	R19.7/21.9, R61.3/62.7	169	594

REGISTERED CIVIL ENGINEER 1-14-10 DATE

6-28-10
PLANS APPROVAL DATE

REGISTERED PROFESSIONAL ENGINEER
ERIC S. GIROD
No. C57288
Exp.12/31/09
CIVIL
STATE OF CALIFORNIA

THE STATE OF CALIFORNIA OR ITS OFFICERS OR AGENTS SHALL NOT BE RESPONSIBLE FOR THE ACCURACY OR COMPLETENESS OF ELECTRONIC COPIES OF THIS PLAN SHEET.

LAN ENGINEERING CORP
1887 BUSINESS CENTER DR
SUITE 6
SAN BERNARDINO, CA 92408

RIVERSIDE COUNTY
TRANSPORTATION COMMISSION
4080 LEMON STREET
RIVERSIDE, CA 92502

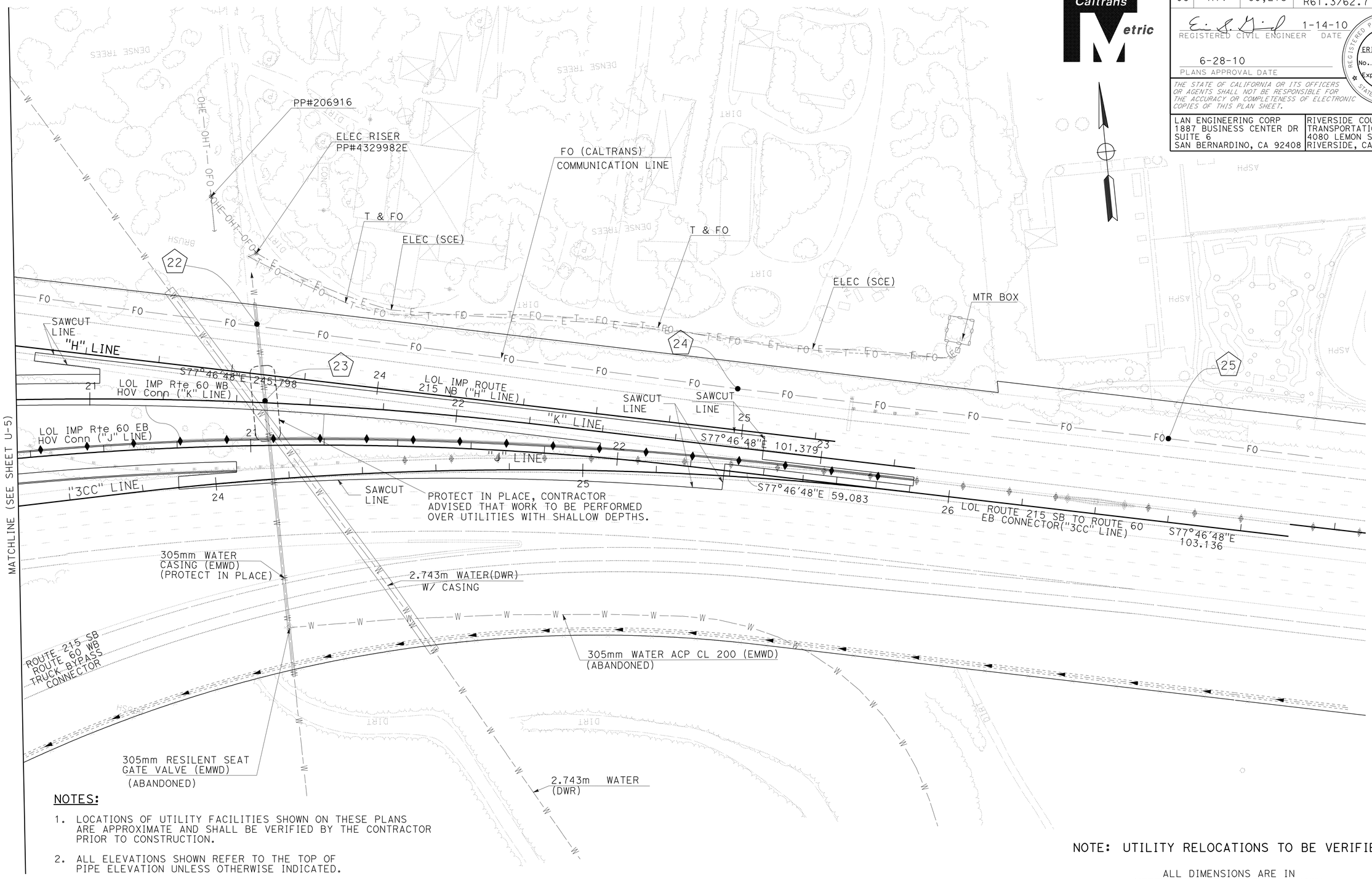

NOTES:

1. LOCATIONS OF UTILITY FACILITIES SHOWN ON THESE PLANS ARE APPROXIMATE AND SHALL BE VERIFIED BY THE CONTRACTOR PRIOR TO CONSTRUCTION.
2. ALL ELEVATIONS SHOWN REFER TO THE TOP OF PIPE ELEVATION UNLESS OTHERWISE INDICATED.
3. FOR COMPLETE RIGHT OF WAY AND ACCURATE ACCESS DATA, SEE RIGHT OF WAY RECORD MAPS AT DISTRICT OFFICE.
4. (X) - SEE POTHOLE TABLE SHEET U-8
5. SEE SHEET U-1 FOR OWNERSHIP LEGENDS AND ABBREVIATIONS.

THIS PLAN ACCURATE FOR UTILITY WORK ONLY

NOTE: UTILITY RELOCATIONS TO BE VERIFIED

ALL DIMENSIONS ARE IN METERS UNLESS OTHERWISE SHOWN

UTILITY PLAN

SCALE 1:500

U-6

STATE OF CALIFORNIA - DEPARTMENT OF TRANSPORTATION
Caltrans

CONSULTANT FUNCTIONAL SUPERVISOR: NORMAN SUYDAM
CALCULATED-DESIGNED BY: ERIC GIROD
CHECKED BY: NORMAN SUYDAM
REVISED BY
DATE REVISED

LAST REVISION 11-09-09
DATE PLOTTED => 19-OCT-2010
TIME PLOTTED => 16:01

Dist	COUNTY	ROUTE	KILOMETER POST TOTAL PROJECT	SHEET No.	TOTAL SHEETS
08	Riv	60,215	R19.7/21.9, R61.3/62.7	170	594

REGISTERED CIVIL ENGINEER 1-14-10 DATE

6-28-10
PLANS APPROVAL DATE

REGISTERED PROFESSIONAL ENGINEER
ERIC S. GIROD
No. C57288
Exp.12/31/09
CIVIL
STATE OF CALIFORNIA

THE STATE OF CALIFORNIA OR ITS OFFICERS OR AGENTS SHALL NOT BE RESPONSIBLE FOR THE ACCURACY OR COMPLETENESS OF ELECTRONIC COPIES OF THIS PLAN SHEET.

LAN ENGINEERING CORP
1887 BUSINESS CENTER DR
SUITE 6
SAN BERNARDINO, CA 92408

RIVERSIDE COUNTY
TRANSPORTATION COMMISSION
4080 LEMON STREET
RIVERSIDE, CA 92502

Caltrans Metric

NOTES:

1. LOCATIONS OF UTILITY FACILITIES SHOWN ON THESE PLANS ARE APPROXIMATE AND SHALL BE VERIFIED BY THE CONTRACTOR PRIOR TO CONSTRUCTION.
2. ALL ELEVATIONS SHOWN REFER TO THE TOP OF PIPE ELEVATION UNLESS OTHERWISE INDICATED.
3. FOR COMPLETE RIGHT OF WAY AND ACCURATE ACCESS DATA, SEE RIGHT OF WAY RECORD MAPS AT DISTRICT OFFICE.
4. (X) - SEE POTHOLE TABLE SHEET U-8
5. SEE SHEET U-1 FOR OWNERSHIP LEGENDS AND ABBREVIATIONS.

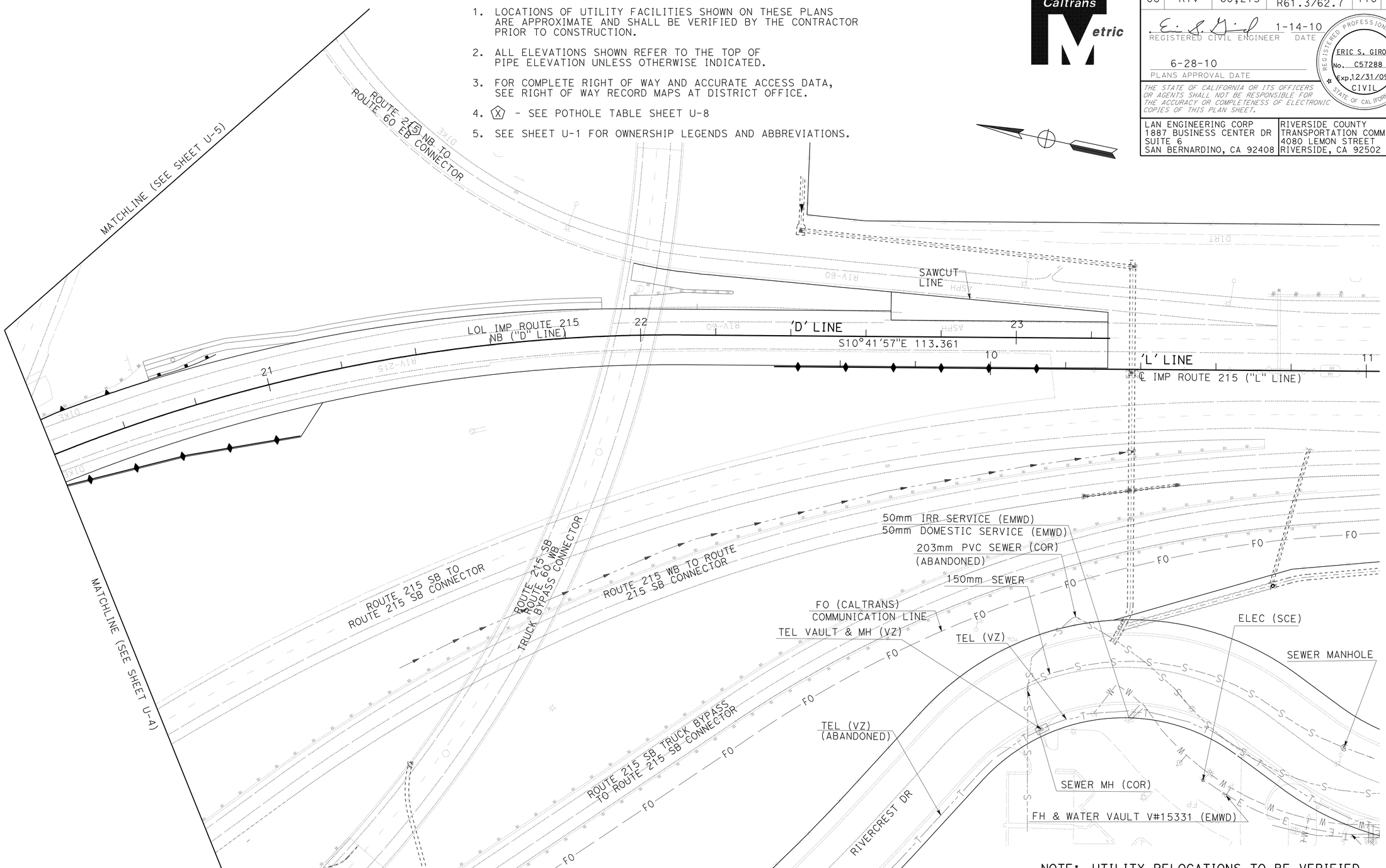

NOTE: UTILITY RELOCATIONS TO BE VERIFIED

ALL DIMENSIONS ARE IN METERS UNLESS OTHERWISE SHOWN

UTILITY PLAN

SCALE 1:500

U-7

THIS PLAN ACCURATE FOR UTILITY WORK ONLY

STATE OF CALIFORNIA - DEPARTMENT OF TRANSPORTATION
Caltrans

CONSULTANT FUNCTIONAL SUPERVISOR: NORMAN SUYDAM
CALCULATED-DESIGNED BY: ERIC GIROD
CHECKED BY: NORMAN SUYDAM
REVISED BY
DATE REVISED

LAST REVISION 11-09-09
DATE PLOTTED => 19-OCT-2010
TIME PLOTTED => 16:01

Dist	COUNTY	ROUTE	KILOMETER POST TOTAL PROJECT	SHEET No.	TOTAL SHEETS
08	Riv	60,215	R19.7/21.9, R61.3/62.7	171	594

Caltrans Metric

REGISTERED CIVIL ENGINEER 1-14-10 DATE

6-28-10
PLANS APPROVAL DATE

REGISTERED PROFESSIONAL ENGINEER ERIC S. GIROD No. C57288 Exp.12/31/09 CIVIL STATE OF CALIFORNIA

THE STATE OF CALIFORNIA OR ITS OFFICERS OR AGENTS SHALL NOT BE RESPONSIBLE FOR THE ACCURACY OR COMPLETENESS OF ELECTRONIC COPIES OF THIS PLAN SHEET.

LAN ENGINEERING CORP
1887 BUSINESS CENTER DR
SUITE 6
SAN BERNARDINO, CA 92408

RIVERSIDE COUNTY
TRANSPORTATION COMMISSION
4080 LEMON STREET
RIVERSIDE, CA 92502

U-3 POTHOLE LOCATION TABLE

X	UTILITY	NORTHING	EASTING	UTILITY ELEV.	DEPTH
1	HP JET FUEL (KM)	697909.70	1903271.98	456.400	-2.01
2	HP JET FUEL (KM)	697890.07	1903247.58	457.581	-1.22
3	HP JET FUEL (KM)	697878.34	1903242.62	457.783	-1.49
4	HP JET FUEL (KM)	697855.14	1903233.13	458.398	-1.25
5	HP JET FUEL (KM)	697817.44	1903217.60	458.697	-1.46
6	HP JET FUEL (KM)	697811.33	1903214.88	458.738	-1.40
7	HP JET FUEL (KM)	697806.90	1903216.42	457.036	-3.67

U-4 POTHOLE LOCATION TABLE

X	UTILITY	NORTHING	EASTING	UTILITY ELEV.	DEPTH
10	FO (CALTRANS)	697777.29	1903448.01	463.338	-0.98
11	FO (CALTRANS)	697765.12	1903485.34	464.720	-1.01
12	FO (CALTRANS)	697730.78	1903427.97	461.240	-1.08
13	FO (CALTRANS)	697705.91	1903413.95	464.793	-0.67
14	FO (CALTRANS)	697688.47	1903404.60	464.982	-2.16
15	FO (CALTRANS)	697746.62	1903494.31	463.936	-0.76
16	FO (CALTRANS)	697740.28	1903515.66	464.334	-1.07
17	FO (CALTRANS)	697732.90	1903543.08	465.051	-1.10
18	FO (CALTRANS)	697720.05	1903599.81	466.793	-0.82
19	FO (CALTRANS)	697712.35	1903657.07	468.460	-0.76

U-5 POTHOLE LOCATION TABLE

X	UTILITY	NORTHING	EASTING	UTILITY ELEV.	DEPTH
20A	FO (CALTRANS)	697711.21	1903675.97	467.394	-2.23
20B	FO (CALTRANS)	697724.21	1903692.00	467.407	-3.35
21	FO (CALTRANS)	697667.09	1903899.66	474.558	-1.01

U-6 POTHOLE LOCATION TABLE

X	UTILITY	NORTHING	EASTING	UTILITY ELEV.	DEPTH
22	WATER (EMWD)	697628.83	1904068.29	480.378	-0.59
23	WATER (EMWD)	697607.81	1904068.46	479.843	-1.42
24	FO (CALTRANS)	697598.60	1904196.93	484.960	-0.90
25	FO (CALTRANS)	697573.70	1904312.36	489.092	-0.95

NOTES:

1. LOCATIONS OF UTILITY FACILITIES SHOWN ON THESE PLANS ARE APPROXIMATE AND SHALL BE VERIFIED BY THE CONTRACTOR PRIOR TO CONSTRUCTION.
2. UTILITY ELEVATION AND DEPTH SHOWN REFER TO THE TOP OF PIPE ELEVATION UNLESS OTHERWISED NOTED.
3. FOR COMPLETE RIGHT OF WAY AND ACCURATE ACCESS DATA SEE RIGHT OF WAY RECORD MAPS AT DISTRICT OFFICE.
4. SEE U-1 SHEET FOR ABBREVIATIONS

POTHOLE LOCATION TABLES

NOTE: UTILITY RELOCATIONS TO BE VERIFIED

ALL DIMENSIONS ARE IN METERS UNLESS OTHERWISE SHOWN

UTILITY PLAN

U-8

REVISED BY | DATE REVISED
ERIC GIROD | NORMAN SUYDAM
CALCULATED-DESIGNED BY | CHECKED BY
CONSULTANT FUNCTIONAL SUPERVISOR | NORMAN SUYDAM
STATE OF CALIFORNIA - DEPARTMENT OF TRANSPORTATION
Caltrans

LAST REVISION 11-09-09 | DATE PLOTTED => 19-OCT-2010 | TIME PLOTTED => 16:01

Dist	COUNTY	ROUTE	KILOMETER POST TOTAL PROJECT	SHEET No.	TOTAL SHEETS
08	Riv	60,215	R19.7/21.9, R61.3/62.7	172	594

REGISTERED CIVIL ENGINEER 1-14-10 DATE

6-28-10
PLANS APPROVAL DATE

REGISTERED PROFESSIONAL ENGINEER
ERIC S. GIROD
No. C57288
Exp.12/31/11
CIVIL
STATE OF CALIFORNIA

THE STATE OF CALIFORNIA OR ITS OFFICERS OR AGENTS SHALL NOT BE RESPONSIBLE FOR THE ACCURACY OR COMPLETENESS OF ELECTRONIC COPIES OF THIS PLAN SHEET.

LAN ENGINEERING CORP
1887 BUSINESS CENTER DR
SUITE 6
SAN BERNARDINO, CA 92408

RIVERSIDE COUNTY
TRANSPORTATION COMMISSION
4080 LEMON STREET
RIVERSIDE, CA 92502

Caltrans Metric

LEGEND:

- CONSTRUCT ROADWAY THIS STAGE
- CONSTRUCT BRIDGE STRUCTURE THIS STAGE
- CONSTRUCT TEMPORARY PAVEMENT THIS STAGE
- CHANNELIZERS (SURFACE MOUNTED)
- TEMPORARY RAILING (TYPE K)
- Temp CRASH CUSHION MODULES (ARRAY AS NOTED)
- DIRECTION OF TRAFFIC, UNLESS OTHERWISE NOTED.
- CHANGE IN PAVEMENT DELINEATION DETAILS
- SIGN
- BARRICADE
- XXX TRAFFIC STRIPE DETAIL No.
- X CONSTRUCTION NOTES FOR EACH STAGE.
- CONSTRUCTION RETAINING WALL THIS STAGE

GENERAL NOTES (ALL STAGES):

1. ALL CONFLICTING SIGNING, STRIPING AND PAVEMENT MARKINGS SHALL BE REMOVED PRIOR TO STARTING WORK ON EACH STAGE.
2. ULTIMATE STRIPING IDENTIFIED ON STAGE CONSTRUCTION PLANS SHALL BE PERMANENT STRIPING AS SHOWN ON THE PAVEMENT DELINEATION (PD) PLANS.
3. ALL STAGE CONSTRUCTION STRIPING AND PAVEMENT MARKING SHALL BE PAINT (2 COATS), UNLESS OTHERWISE DESIGNED FOR FREEWAY MAINLINE OR NOTED IN PLAN.
4. ALL CHEVRON AND DIAGONAL MARKINGS SHALL BE PLACED AT A 45° ANGLE TO THE EDGE OF TRAVEL WAY.
5. ALL TEMPORARY CRASH CUSHION SHALL HAVE TEMPORARY "P" OR "R" MARKERS PLACED IN FRONT. ALL TEMPORARY RAILING (TYPE K) SHALL HAVE TEMPORARY "P" OR "R" MARKERS PLACED IN FRONT AND AT ANGLE POINT.
6. LOCAL STREET LANE WIDTHS SHALL BE 3.3 m MINIMUM UNLESS OTHERWISE NOTED. FREEWAY LANE WIDTHS SHALL BE 3.6 m MINIMUM UNLESS OTHERWISE NOTED.
7. A MINIMUM CLEARANCE OF 0.3 m FROM EXISTING OR TEMPORARY EDGE OF TRAVEL WAY TO BASE OF TEMPORARY RAILING (TYPE K) SHALL BE PROVIDED, UNLESS OTHERWISE NOTED.
8. CONTRACTOR SHALL REFER TO SPECIAL PROVISION REGARDING THE USE OF PORTABLE CHANGEABLE MESSAGE SIGNS.
9. THE DESCRIPTIVE TERM - 'JOIN' OR 'MATCH' WHEN USED ON THE PLANS REFERS TO THE JOINING OF STAGE CONSTRUCTION STRIPING WITH EXISTING, ULTIMATE OR PREVIOUS STAGE CONSTRUCTION DELINEATION UNLESS OTHERWISE NOTED.
10. ALL TEMPORARY RAILING (TYPE K) SHALL HAVE TRAFFIC SCREEN AND SCUPPERS, UNLESS OTHERWISE NOTED.

NOTE: FOR COMPLETE RIGHT OF WAY AND ACCURATE ACCESS DATA SEE RIGHT OF WAY RECORD MAPS AT DISTRICT OFFICE

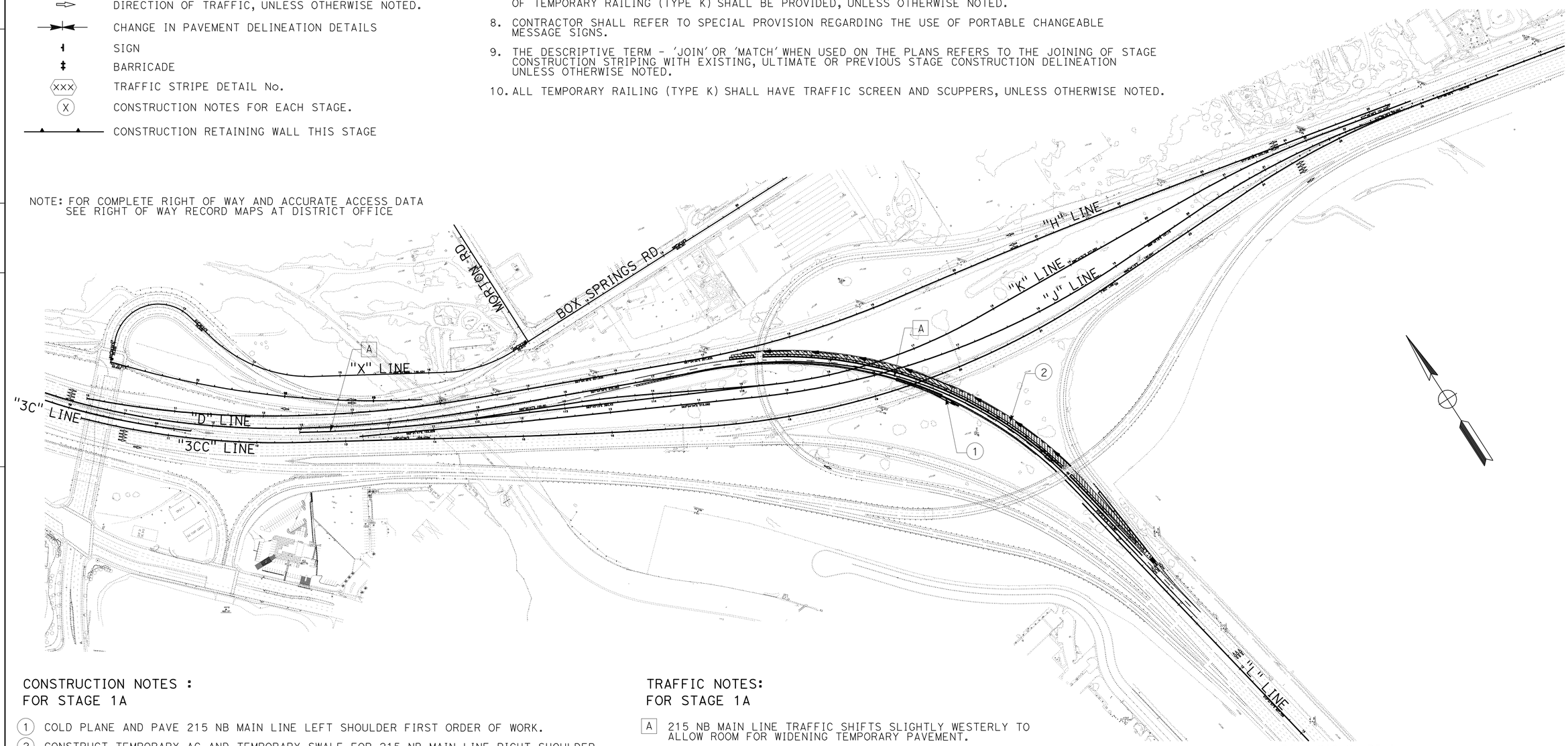

CONSTRUCTION NOTES : FOR STAGE 1A

1. COLD PLANE AND PAVE 215 NB MAIN LINE LEFT SHOULDER FIRST ORDER OF WORK.
2. CONSTRUCT TEMPORARY AC AND TEMPORARY SWALE FOR 215 NB MAIN LINE RIGHT SHOULDER.

TRAFFIC NOTES: FOR STAGE 1A

A 215 NB MAIN LINE TRAFFIC SHIFTS SLIGHTLY WESTERLY TO ALLOW ROOM FOR WIDENING TEMPORARY PAVEMENT.

ALL DIMENSIONS ARE IN METERS UNLESS OTHERWISE SHOWN

STAGE CONSTRUCTION
STAGE 1A

NO SCALE

THIS PLAN IS ACCURATE FOR STAGE CONSTRUCTION ONLY.

SC-1

REVISED BY | DATE REVISED
ERIC GIROD, NICOLAS BORRAYO | NORMAN SUYDAM
CALCULATED-DESIGNED BY | CHECKED BY
CONSULTANT FUNCTIONAL SUPERVISOR | NORMAN SUYDAM
STATE OF CALIFORNIA - DEPARTMENT OF TRANSPORTATION
Caltrans

LAST REVISION 11-09-09 | DATE PLOTTED => 19-OCT-2010 | TIME PLOTTED => 16:02

Dist	COUNTY	ROUTE	KILOMETER POST TOTAL PROJECT	SHEET No.	TOTAL SHEETS
08	Riv	60,215	R19.7/21.9, R61.3/62.7	173	594

Caltrans Metric

REGISTERED CIVIL ENGINEER 1-14-10 DATE

6-28-10
PLANS APPROVAL DATE

REGISTERED PROFESSIONAL ENGINEER
ERIC S. GIROD
No. C57288
Exp.12/31/11
CIVIL
STATE OF CALIFORNIA

THE STATE OF CALIFORNIA OR ITS OFFICERS OR AGENTS SHALL NOT BE RESPONSIBLE FOR THE ACCURACY OR COMPLETENESS OF ELECTRONIC COPIES OF THIS PLAN SHEET.

LAN ENGINEERING CORP
1887 BUSINESS CENTER DR
SUITE 6
SAN BERNARDINO, CA 92408

RIVERSIDE COUNTY
TRANSPORTATION COMMISSION
4080 LEMON STREET
RIVERSIDE, CA 92502

CONSTRUCTION NOTES :
FOR STAGE 1B

1. CONSTRUCT TEMPORARY AC ON THE SHOULDER. FIRST ORDER OF WORK ON THIS STAGE. THIS WORK TO BE COMPLETED DURING NIGHT LANE CLOSURES.
2. CONSTRUCT LOWERED PAVEMENT OF 215 NB MAIN LINE. CONSTRUCT SHORING ADJACENT TO TEMPORARY RAILING. THIS WORK TO BE COMPLETED DURING THIS STAGE 1B AND PRIOR TO THE FOLLOWING STAGE 1C.
3. CONSTRUCT BRIDGE WIDENING OVER RAILROAD. COMPLETE BRIDGE CONSTRUCTION PRIOR TO PAVING OF ROAD LEADING UP TO AND AWAY FROM BRIDGE.
4. GRADE EB AND WB HOV CONNECTOR, ALONG "J" LINE AND "K" LINE.
5. CONSTRUCT BOX SPRINGS RD BRIDGE STRUCTURE; INCLUDING SUBSTRUCTURES. COMPLETE BRIDGE CONSTRUCTION PRIOR TO PAVING OF ROAD LEADING UP TO AND AWAY FROM BRIDGE.
6. GRADE AND PAVE NEW BOX SPRINGS RD.
7. CONSTRUCT TEMPORARY PAVEMENT FOR DETOUR B.
8. CONSTRUCT PORTIONS OF DRAINAGE SYSTEM 6 AND 8.

TRAFFIC NOTES:
FOR STAGE 1B

- A 215 NB MAIN LINE TRAFFIC SHIFTS TO EASTERLY WIDENED TEMPORARY PAVEMENT AFTER NO. 1 ON THE CONSTRUCTION NOTES FOR THIS STAGE IS FINISHED.
- B ROUTE 60 EB TRAFFIC SHIFTS SLIGHTLY OUTWARDLY TO ALLOW CONSTRUCTION AT THE MEDIAN AND BRIDGE WIDENING OVER THE RAILROAD.
- C ROUTE 215 NB TRAFFIC SHIFTS SLIGHTLY OUTWARDLY TO ALLOW CONSTRUCTION AT THE MEDIAN AND BRIDGE WIDENING OVER THE RAILROAD AND RETAINING WALLS.
- D ROUTE 60 WB AND EB TRAFFIC SHIFTS OUTWARDLY TO ALLOW CONSTRUCTION AT THE MEDIAN AREA WHERE THE HOV LANES TIE-IN.
- E BOX SPRINGS RD TRAFFIC SHIFTS SOUTHERLY TO ALLOW CONSTRUCTION AT THE NEW BOX SPRINGS RD BRIDGE.

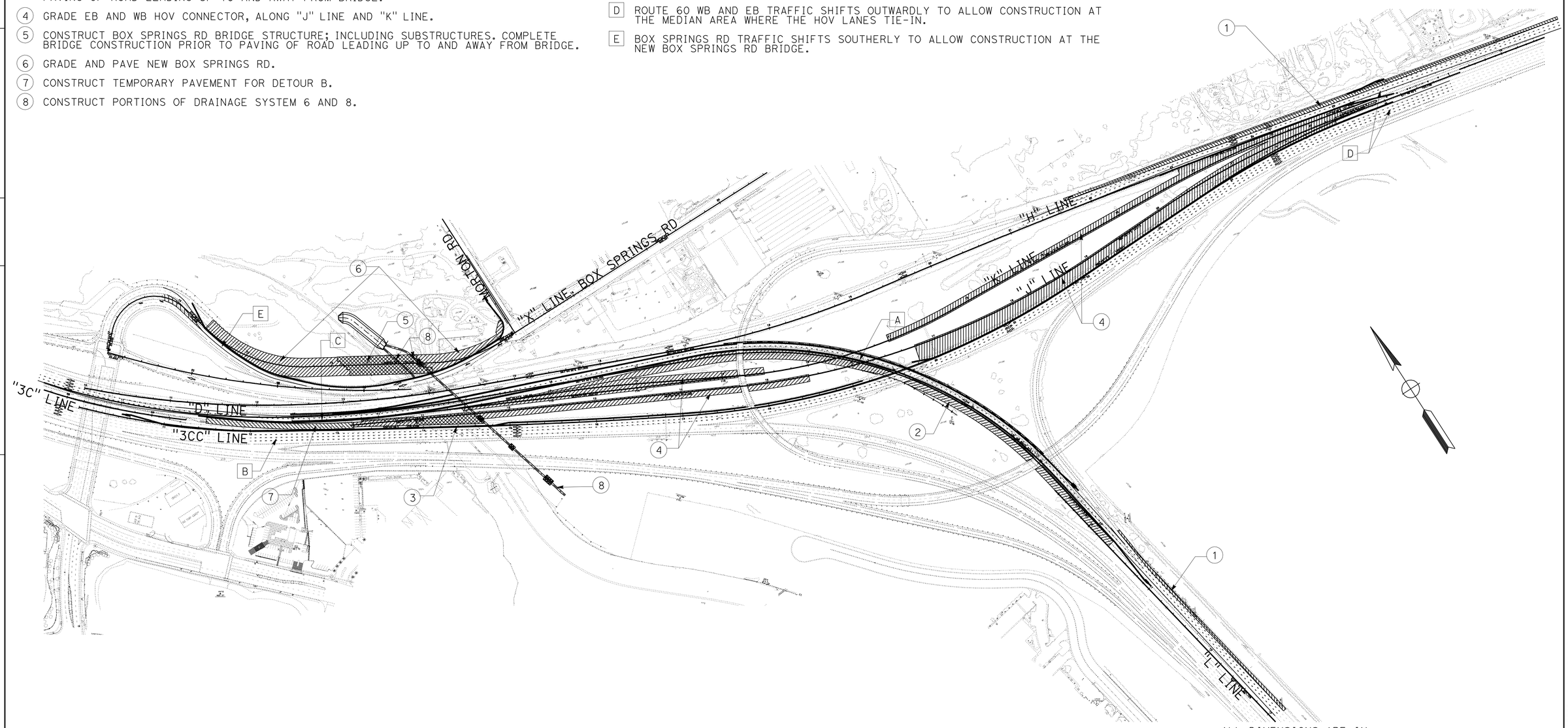

ALL DIMENSIONS ARE IN METERS UNLESS OTHERWISE SHOWN

STAGE CONSTRUCTION
STAGE 1B
NO SCALE

THIS PLAN IS ACCURATE FOR STAGE CONSTRUCTION ONLY.

SC-2

STATE OF CALIFORNIA - DEPARTMENT OF TRANSPORTATION
Caltrans

CONSULTANT FUNCTIONAL SUPERVISOR: NORMAN SUYDAM
CALCULATED-DESIGNED BY: ERIC GIROD, NICOLAS BORRAYO
CHECKED BY: NORMAN SUYDAM
REVISED BY / DATE REVISED

LAST REVISION 11-09-09
DATE PLOTTED => 19-OCT-2010
TIME PLOTTED => 16:02

Dist	COUNTY	ROUTE	KILOMETER POST TOTAL PROJECT	SHEET No.	TOTAL SHEETS
08	Riv	60,215	R19.7/21.9, R61.3/62.7	174	594

REGISTERED CIVIL ENGINEER 1-14-10 DATE

6-28-10
PLANS APPROVAL DATE

REGISTERED PROFESSIONAL ENGINEER
ERIC S. GIROD
No. C57288
Exp.12/31/11
CIVIL
STATE OF CALIFORNIA

THE STATE OF CALIFORNIA OR ITS OFFICERS OR AGENTS SHALL NOT BE RESPONSIBLE FOR THE ACCURACY OR COMPLETENESS OF ELECTRONIC COPIES OF THIS PLAN SHEET.

LAN ENGINEERING CORP
1887 BUSINESS CENTER DR
SUITE 6
SAN BERNARDINO, CA 92408

RIVERSIDE COUNTY
TRANSPORTATION COMMISSION
4080 LEMON STREET
RIVERSIDE, CA 92502

Caltrans Metric

CONSTRUCTION NOTES :
FOR STAGE 1C

1. CONSTRUCT REMAINING PAVEMENT OF 215 NB MAIN LINE.
2. CONSTRUCT BRIDGE WIDENING OVER RAILROAD (CONTINUE). COMPLETE BRIDGE CONSTRUCTION PRIOR TO PAVING OF ROAD LEADING UP TO AND AWAY FROM BRIDGE.
3. GRADE EB AND WB HOV CONNECTOR, ALONG "J" LINE AND "K" LINE (CONTINUE).
4. CONSTRUCT BOX SPRINGS RD BRIDGE STRUCTURE; INCLUDING SUBSTRUCTURES (CONTINUE). COMPLETE BRIDGE CONSTRUCTION PRIOR TO PAVING OF ROAD LEADING UP TO AND AWAY FROM BRIDGE.
5. GRADE AND PAVE BOX SPRINGS RD (CONTINUE).

TRAFFIC NOTES:
FOR STAGE 1C

A 215 NB MAIN LINE TRAFFIC SHIFTS TO WESTERLY CONSTRUCTED PAVEMENT.

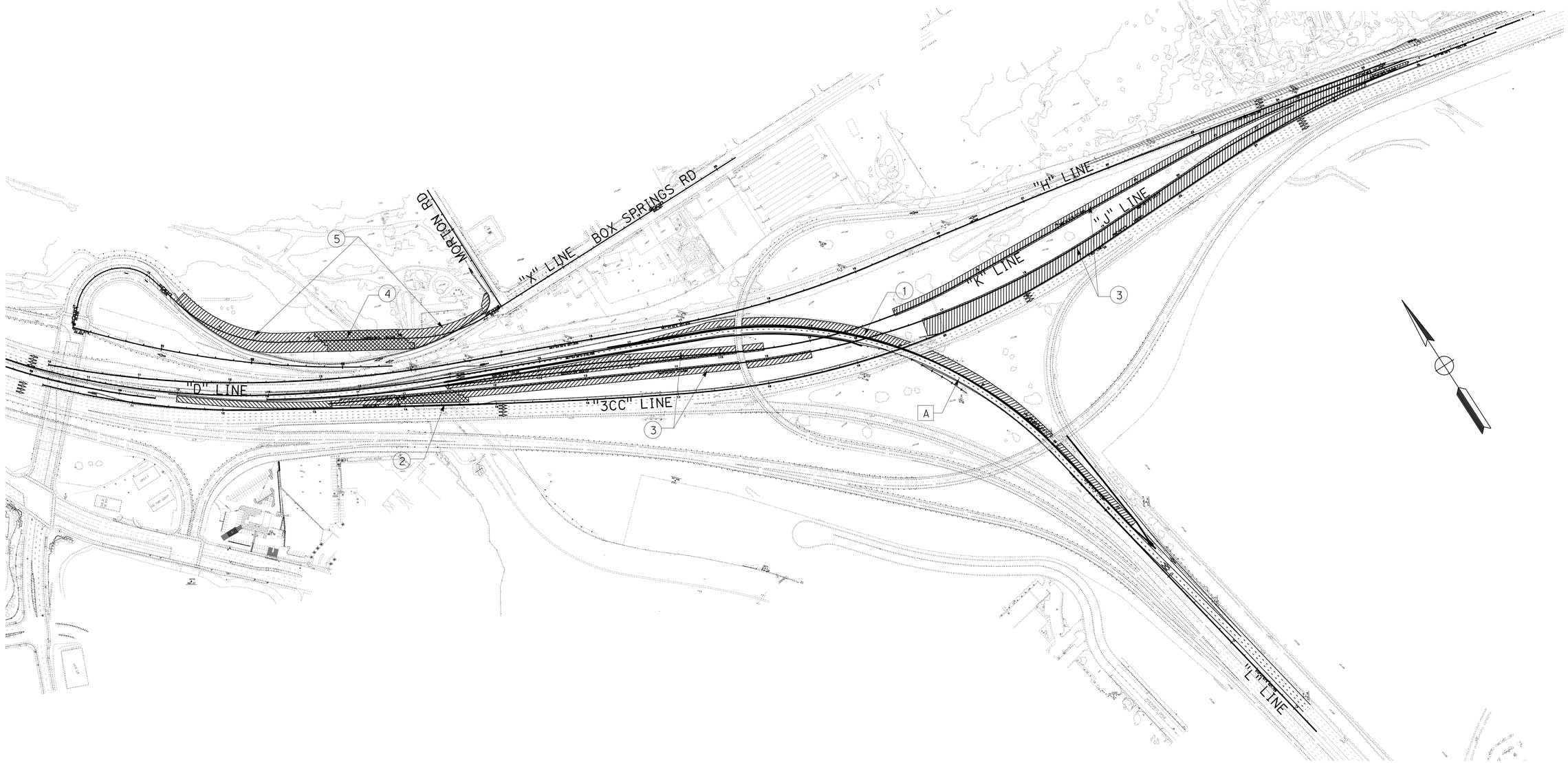

ALL DIMENSIONS ARE IN METERS UNLESS OTHERWISE SHOWN

THIS PLAN IS ACCURATE FOR STAGE CONSTRUCTION ONLY.

STAGE CONSTRUCTION
STAGE 1C
NO SCALE

SC-3

STATE OF CALIFORNIA - DEPARTMENT OF TRANSPORTATION
Caltrans

CONSULTANT FUNCTIONAL SUPERVISOR: NORMAN SUYDAM
CALCULATED-DESIGNED BY: ERIC GIROD, NICOLAS BORRAYO
CHECKED BY: NORMAN SUYDAM
REVISED BY
DATE REVISED

LAST REVISION 11-09-09
DATE PLOTTED => 19-OCT-2010
TIME PLOTTED => 16:03

Dist	COUNTY	ROUTE	KILOMETER POST TOTAL PROJECT	SHEET No.	TOTAL SHEETS
08	Riv	60,215	R19.7/21.9, R61.3/62.7	175	594

Caltrans Metric

REGISTERED CIVIL ENGINEER 1-14-10 DATE

6-28-10
PLANS APPROVAL DATE

REGISTERED PROFESSIONAL ENGINEER
ERIC S. GIROD
No. C57288
Exp. 12/31/11
CIVIL
STATE OF CALIFORNIA

THE STATE OF CALIFORNIA OR ITS OFFICERS OR AGENTS SHALL NOT BE RESPONSIBLE FOR THE ACCURACY OR COMPLETENESS OF ELECTRONIC COPIES OF THIS PLAN SHEET.

LAN ENGINEERING CORP
1887 BUSINESS CENTER DR
SUITE 6
SAN BERNARDINO, CA 92408

RIVERSIDE COUNTY
TRANSPORTATION COMMISSION
4080 LEMON STREET
RIVERSIDE, CA 92502

CONSTRUCTION NOTES : FOR STAGE 2

1. RECONSTRUCT ROUTE 60 WB No. 1 LANE (HOV LANE) AND SHOULDER.
2. CONSTRUCT HOV OVERCROSSING STRUCTURES, BOTH WESTBOUND AND EASTBOUND; INCLUDING SUBSTRUCTURES. COMPLETE BRIDGE CONSTRUCTION PRIOR TO PAVING OF ROAD LEADING UP TO AND AWAY FROM BRIDGES.
3. CONSTRUCT TEMPORARY PAVEMENT FOR DETOUR A.
4. CONSTRUCT REMAINDER OF BOX SPRINGS RD.
5. REMOVE EXISTING BOX SPRINGS RD OH BRIDGE, THEN CONSTRUCT NORTH PORTION OF OVERHEAD (RIGHT) REPLACEMENT OVER RAILROAD. COMPLETE BRIDGE CONSTRUCTION PRIOR TO PAVING OF ROAD LEADING UP TO AND AWAY FROM BRIDGE.
6. RECONSTRUCT NORTH PORTION OF BOX SPRINGS RD OFF RAMP.
7. CONSTRUCT PORTION OF DRAINAGE SYSTEM 8 AND MANHOLE FOR DRAINAGE SYSTEM 6.
8. PAVE EB AND WB HOV CONNECTOR, ALONG "J" LINE AND "K" LINE.

TRAFFIC NOTES: FOR STAGE 2

A. ROUTE 60 WB SHIFT LANES TO ALLOW CONSTRUCTION AND IMMEDIATELY PRECEDE STAGE 3A.

B. BOX SPRINGS RD TRAFFIC SHIFTS NORTHERLY TO CONSTRUCTED BRIDGE AND ROADWAY TIE-IN.

C. BOX SPRINGS RD OFF RAMP STAYS ONE LANE TO ALLOW WIDENING TO THE NORTH.

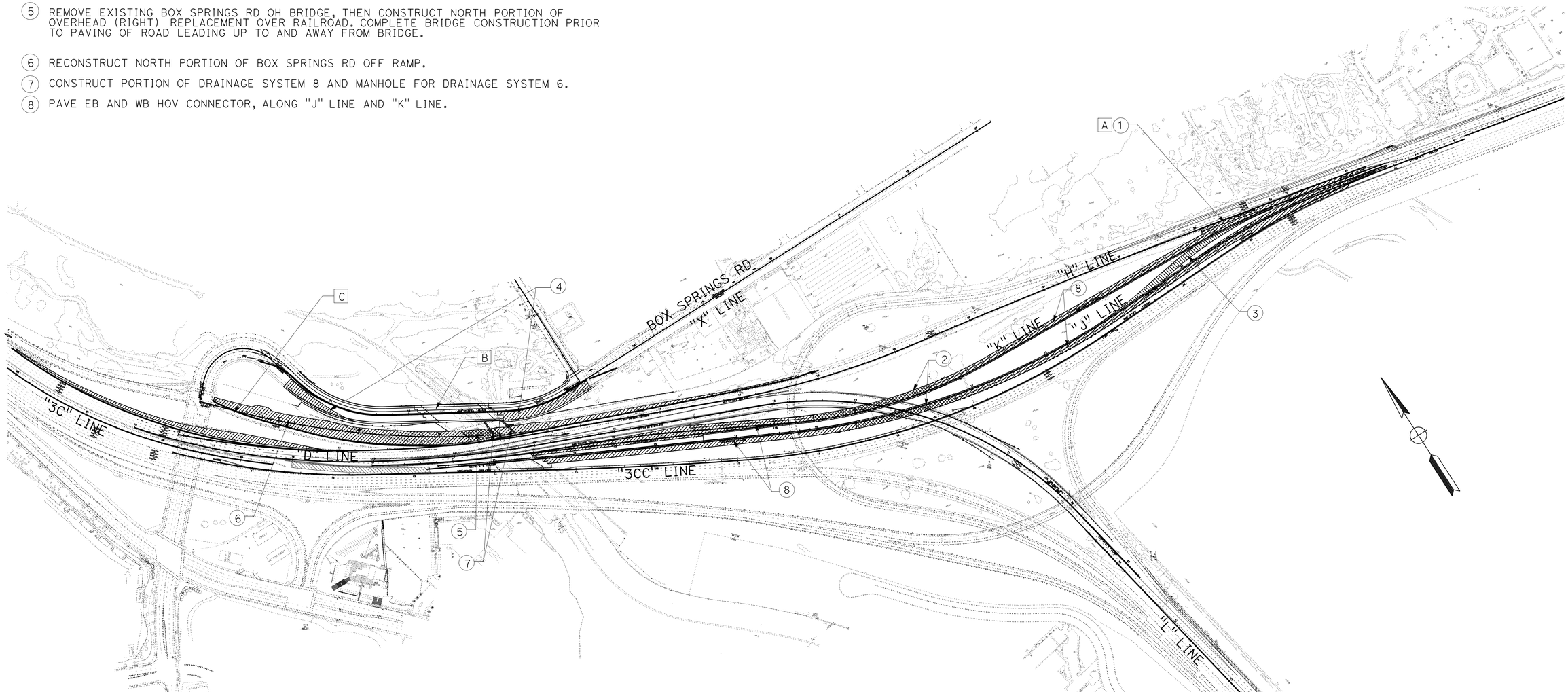

ALL DIMENSIONS ARE IN METERS UNLESS OTHERWISE SHOWN

STAGE CONSTRUCTION
STAGE 2
NO SCALE

THIS PLAN IS ACCURATE FOR STAGE CONSTRUCTION ONLY.

SC-4

REVISED BY	DATE REVISED

CALCULATED-DESIGNED BY: ERIC GIROD, NICOLAS BORRAYO
CHECKED BY: NORMAN SUYDAM
CONSULTANT FUNCTIONAL SUPERVISOR: NORMAN SUYDAM
STATE OF CALIFORNIA - DEPARTMENT OF TRANSPORTATION
Caltrans

LAST REVISION 11-09-09
DATE PLOTTED => 19-OCT-2010
TIME PLOTTED => 16:03

Dist	COUNTY	ROUTE	KILOMETER POST TOTAL PROJECT	SHEET No.	TOTAL SHEETS
08	Riv	60,215	R19.7/21.9, R61.3/62.7	176	594

REGISTERED CIVIL ENGINEER 1-14-10 DATE

6-28-10
PLANS APPROVAL DATE

REGISTERED PROFESSIONAL ENGINEER
ERIC S. GIROD
No. C57288
Exp.12/31/11
CIVIL
STATE OF CALIFORNIA

THE STATE OF CALIFORNIA OR ITS OFFICERS OR AGENTS SHALL NOT BE RESPONSIBLE FOR THE ACCURACY OR COMPLETENESS OF ELECTRONIC COPIES OF THIS PLAN SHEET.

LAN ENGINEERING CORP
1887 BUSINESS CENTER DR
SUITE 6
SAN BERNARDINO, CA 92408

RIVERSIDE COUNTY
TRANSPORTATION COMMISSION
4080 LEMON STREET
RIVERSIDE, CA 92502

CONSTRUCTION NOTES :
FOR STAGE 3A

1. CONSTRUCT ROADWAY ITEMS OF ROUTE 60 WB.
2. CONSTRUCT REMAINING BOX SPRINGS RD OFF RAMP.

TRAFFIC NOTES:
FOR STAGE 3A

A. ROUTE 60 WB No.1 LANE TRAFFIC DETOURED TO NEWLY CONSTRUCTED HOV CONNECTORS ("J" LINE & "K" LINE), THEN BACK TO NB 215.

B. THE No.1 LANE OF WB 60 ALIGNS WITH THE HOV CONNECTOR DETOUR, No.2 LANE CONTINUES WEST TO JOIN WITH THE NB MAINLINE OF ROUTE 215 AND THE No.3 LANE EXITS TO THE SB 215 CONNECTOR.

C. BOX SPRINGS RD OFF RAMP IS ACCESSED FROM THE NEW BRIDGE CONSTRUCTED IN THE PREVIOUS STAGE.

D. WB 60 OFF RAMP USES NEW ALIGNMENT.

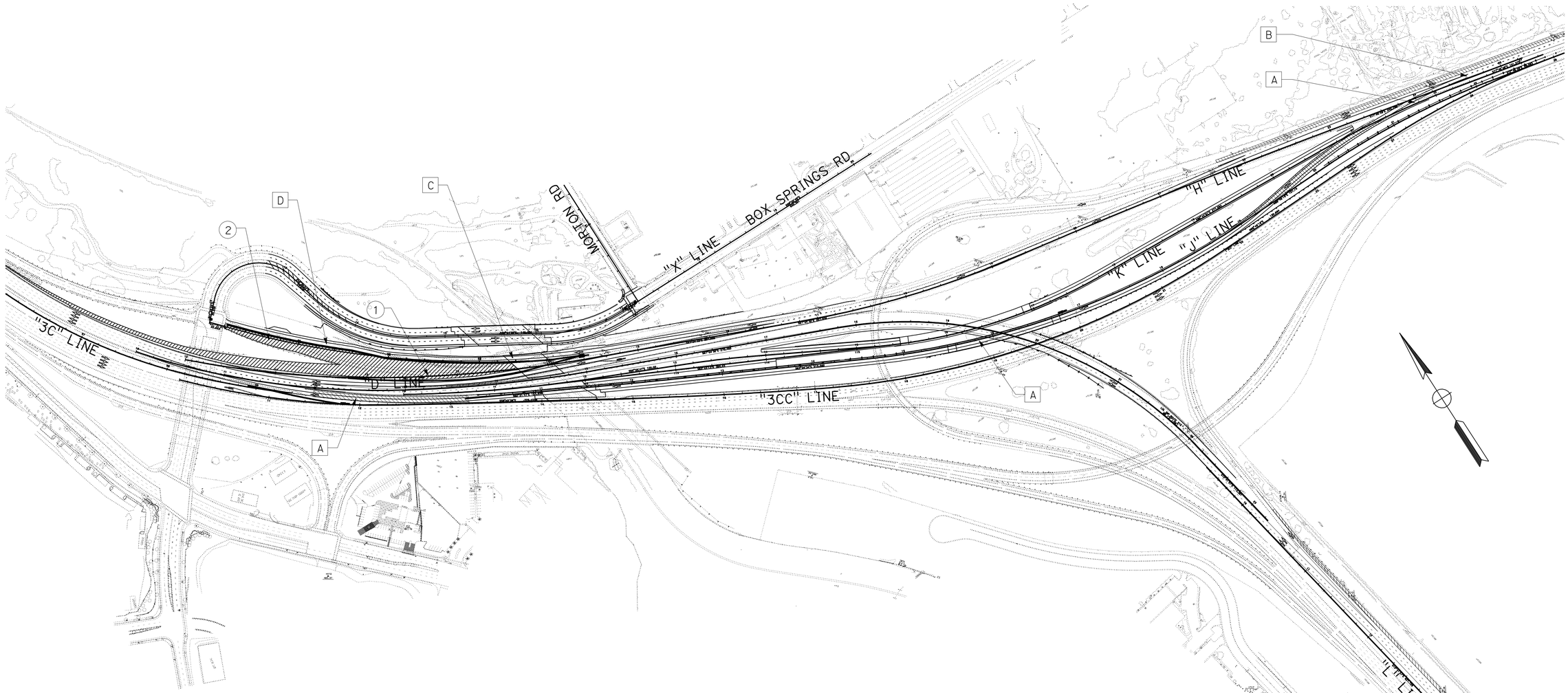

ALL DIMENSIONS ARE IN METERS UNLESS OTHERWISE SHOWN

STAGE CONSTRUCTION
STAGE 3A
NO SCALE

SC-5

THIS PLAN IS ACCURATE FOR STAGE CONSTRUCTION ONLY.

STATE OF CALIFORNIA - DEPARTMENT OF TRANSPORTATION
Caltrans

CONSULTANT FUNCTIONAL SUPERVISOR: NORMAN SUYDAM
CALCULATED-DESIGNED BY: ERIC GIROD, NICOLAS BORRAYO
CHECKED BY: NORMAN SUYDAM
REVISED BY / DATE REVISED

LAST REVISION 11-09-09
DATE PLOTTED => 19-OCT-2010
TIME PLOTTED => 16:04

Dist	COUNTY	ROUTE	KILOMETER POST TOTAL PROJECT	SHEET No.	TOTAL SHEETS
08	Riv	60,215	R19.7/21.9, R61.3/62.7	177	594

REGISTERED CIVIL ENGINEER 1-14-10 DATE

6-28-10
PLANS APPROVAL DATE

REGISTERED PROFESSIONAL ENGINEER
ERIC S. GIROD
No. C57288
Exp.12/31/11
CIVIL
STATE OF CALIFORNIA

THE STATE OF CALIFORNIA OR ITS OFFICERS OR AGENTS SHALL NOT BE RESPONSIBLE FOR THE ACCURACY OR COMPLETENESS OF ELECTRONIC COPIES OF THIS PLAN SHEET.

LAN ENGINEERING CORP
1887 BUSINESS CENTER DR
SUITE 6
SAN BERNARDINO, CA 92408

RIVERSIDE COUNTY
TRANSPORTATION COMMISSION
4080 LEMON STREET
RIVERSIDE, CA 92502

Caltrans Metric

CONSTRUCTION NOTES :
FOR STAGE 3B

1. CONSTRUCT REMAINING ITEMS OF ROUTE 60 WB, CONCRETE BARRIER, SHOULDER AND DRAINAGE FACILITIES.
2. CONSTRUCT REMAINING OVERHEAD (RIGHT) REPLACEMENT OVER RAILROAD.
3. CONSTRUCT REMAINING PORTIONS OF DRAINAGE SYSTEM 8.

TRAFFIC NOTES:
FOR STAGE 3B

A ROUTE 60 WB TRAFFIC SHIFTS SLIGHLY OUTWARDLY AND REMAINS AS ONE LANE TO ALLOW CONSTRUCTION AT THE ROUTE 60 AND 215 MERGE.

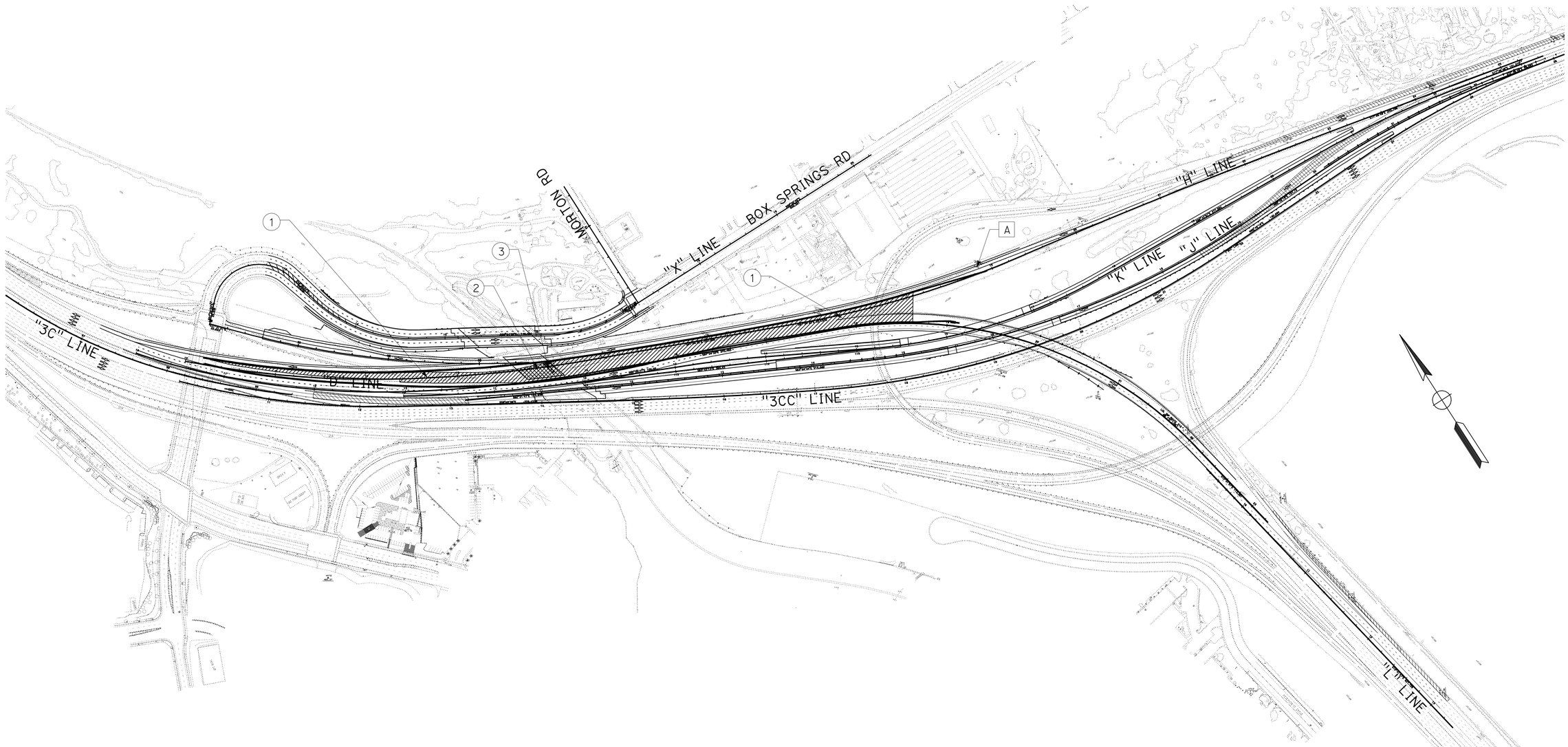

ALL DIMENSIONS ARE IN METERS UNLESS OTHERWISE SHOWN

THIS PLAN IS ACCURATE FOR STAGE CONSTRUCTION ONLY.

STAGE CONSTRUCTION
STAGE 3B
NO SCALE

SC-6

STATE OF CALIFORNIA - DEPARTMENT OF TRANSPORTATION
Caltrans

CONSULTANT FUNCTIONAL SUPERVISOR: NORMAN SUYDAM
CALCULATED-DESIGNED BY: ERIC GIROD, NICOLAS BORRAYO
CHECKED BY: NORMAN SUYDAM
REVISED BY
DATE REVISED

LAST REVISION 11-09-09
DATE PLOTTED => 19-OCT-2010
TIME PLOTTED => 16:04

Dist	COUNTY	ROUTE	KILOMETER POST TOTAL PROJECT	SHEET No.	TOTAL SHEETS
08	Riv	60,215	R19.7/21.9, R61.3/62.7	178	594

REGISTERED CIVIL ENGINEER 1-14-10 DATE

6-28-10
PLANS APPROVAL DATE

REGISTERED PROFESSIONAL ENGINEER
ERIC S. GIROD
No. C57288
Exp.12/31/11
CIVIL
STATE OF CALIFORNIA

THE STATE OF CALIFORNIA OR ITS OFFICERS OR AGENTS SHALL NOT BE RESPONSIBLE FOR THE ACCURACY OR COMPLETENESS OF ELECTRONIC COPIES OF THIS PLAN SHEET.

LAN ENGINEERING CORP
1887 BUSINESS CENTER DR
SUITE 6
SAN BERNARDINO, CA 92408

RIVERSIDE COUNTY
TRANSPORTATION COMMISSION
4080 LEMON STREET
RIVERSIDE, CA 92502

CONSTRUCTION NOTES :
FOR STAGE 3C

1. PAVE THE FINAL ROADWAY IMPROVEMENTS WHERE THE DETOUR A AND DETOUR B WERE.
2. INSTALL MBGR WITH TERMINAL SYSTEM TYPE CAT, REMOVE EXISTING TEMPORARY RAILING (TYPE K) AND TEMPORARY CRASH CUSHION AS SOON AS INSTALLATION IS COMPLETE.
3. CONSTRUCT ALL REMAINING ITEMS.
4. REMOVE TEMPORARY DETOURS AS FINAL ITEMS.

TRAFFIC NOTES:
FOR STAGE 3C

A. SECOND LANE OF ROUTE 60 WB CONNECTOR OPENED TO TRAFFIC PRIOR TO CLOSING HOV "DETOUR".

B. ROUTE 60 EB AND WB HOV LANES CLOSED, ALONG "J" LINE AND "K" LINE RESPECTIVELY.

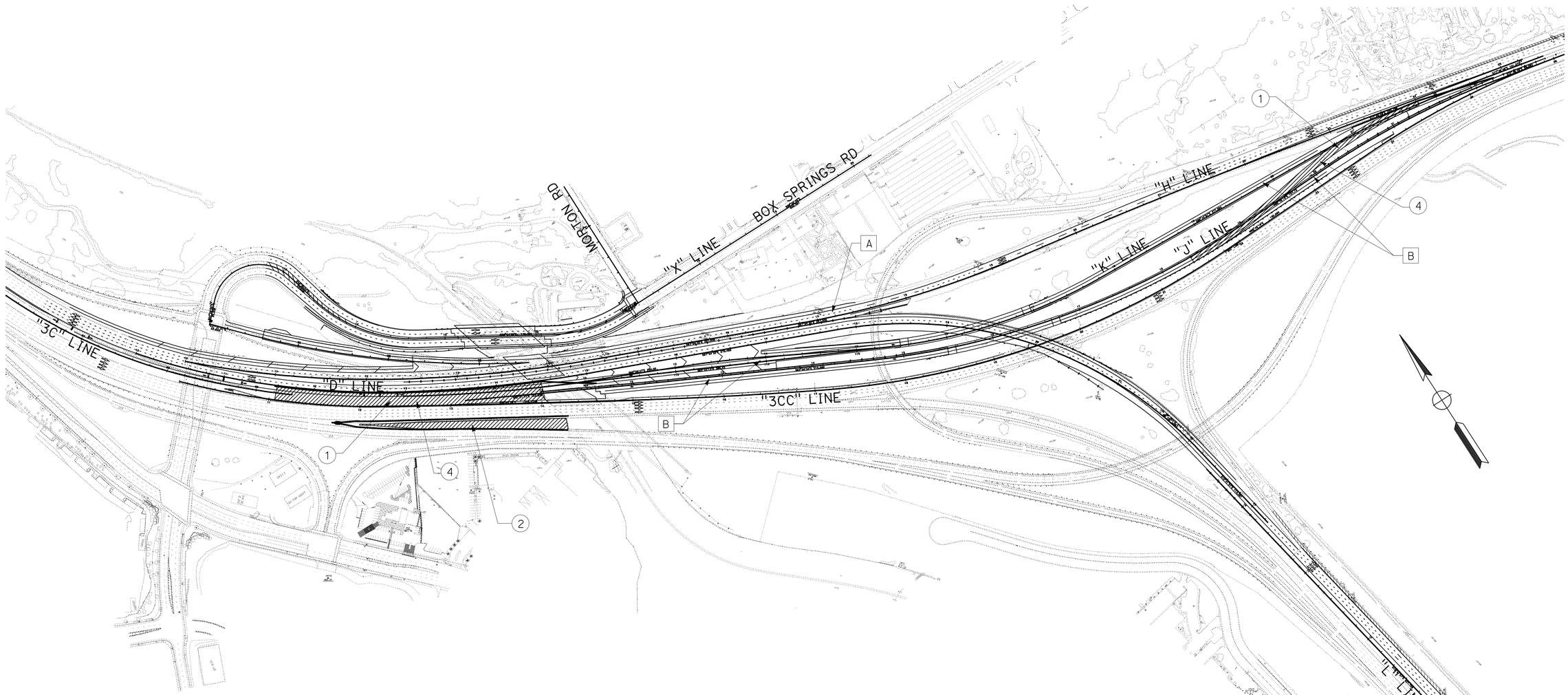

ALL DIMENSIONS ARE IN METERS UNLESS OTHERWISE SHOWN

STAGE CONSTRUCTION
STAGE 3C
NO SCALE

SC-7

THIS PLAN IS ACCURATE FOR STAGE CONSTRUCTION ONLY.

STATE OF CALIFORNIA - DEPARTMENT OF TRANSPORTATION
Caltrans

CONSULTANT FUNCTIONAL SUPERVISOR: NORMAN SUYDAM
CALCULATED-DESIGNED BY: ERIC GIROD, NICOLAS BORRAYO
CHECKED BY: NORMAN SUYDAM
REVISED BY
DATE REVISED

LAST REVISION 11-09-09
DATE PLOTTED => 19-OCT-2010
TIME PLOTTED => 16:05

Dist	COUNTY	ROUTE	KILOMETER POST TOTAL PROJECT	SHEET No.	TOTAL SHEETS
08	Riv	60,215	R19.7/21.9, R61.3/62.7	179	594

REGISTERED CIVIL ENGINEER 1-14-10 DATE

6-28-10
PLANS APPROVAL DATE

REGISTERED PROFESSIONAL ENGINEER ERIC S. GIROD No. C57288 Exp.12/31/11 CIVIL STATE OF CALIFORNIA

THE STATE OF CALIFORNIA OR ITS OFFICERS OR AGENTS SHALL NOT BE RESPONSIBLE FOR THE ACCURACY OR COMPLETENESS OF ELECTRONIC COPIES OF THIS PLAN SHEET.

LAN ENGINEERING CORP
1887 BUSINESS CENTER DR
SUITE 6
SAN BERNARDINO, CA 92408

RIVERSIDE COUNTY
TRANSPORTATION COMMISSION
4080 LEMON STREET
RIVERSIDE, CA 92502

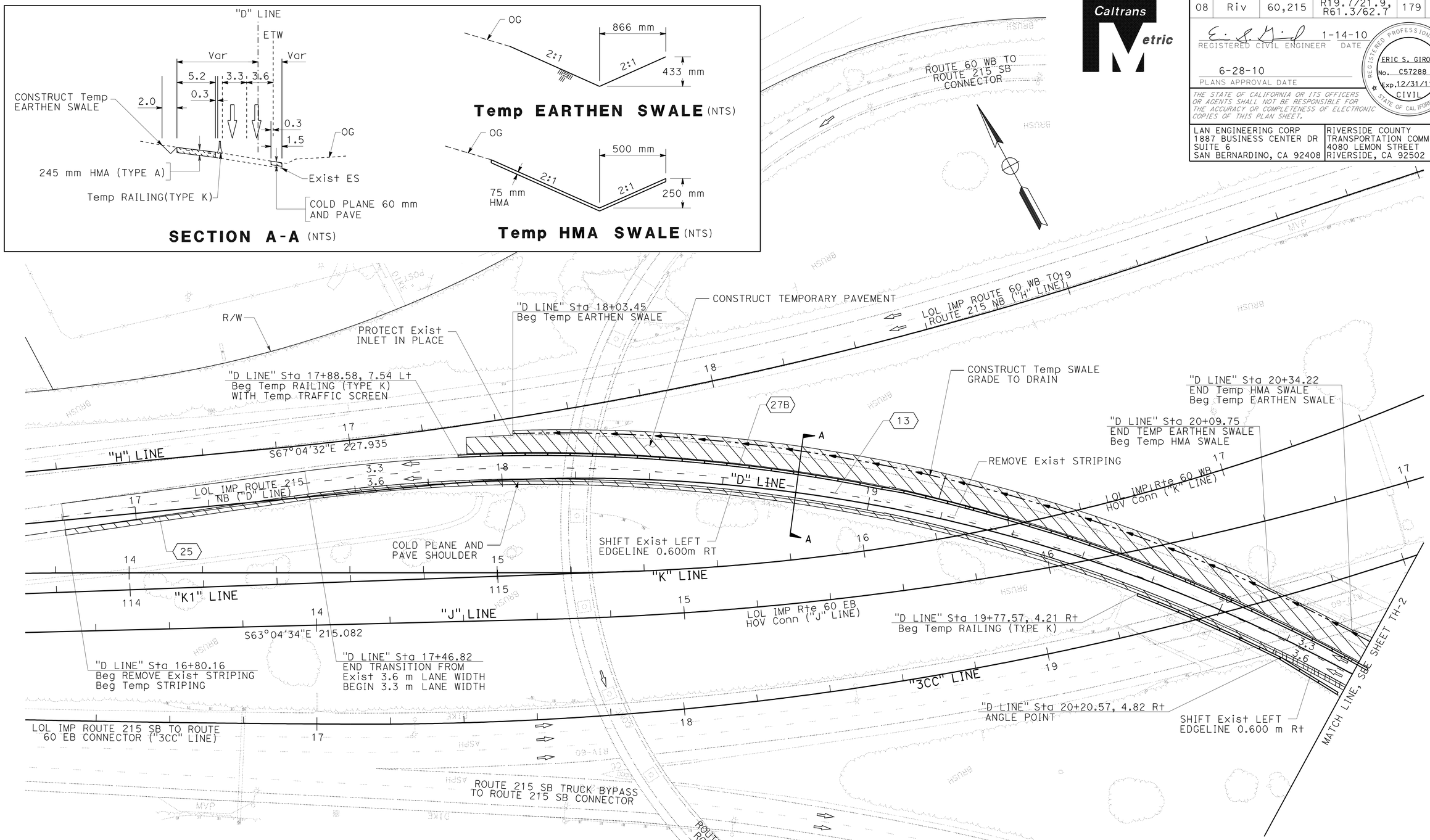

ALL DIMENSIONS ARE IN METERS UNLESS OTHERWISE SHOWN

STAGE 1A
TRAFFIC HANDLING PLAN

THIS PLAN IS ACCURATE FOR STAGE CONSTRUCTION AND TRAFFIC HANDLING ONLY.

SCALE 1:500

TH-1

STATE OF CALIFORNIA - DEPARTMENT OF TRANSPORTATION
Caltrans

CONSULTANT FUNCTIONAL SUPERVISOR: NORMAN SUYDAM
CALCULATED-DESIGNED BY: ERIC GIROD, NICOLAS BORRAYO
CHECKED BY: NORMAN SUYDAM
REVISED BY / DATE REVISED

LAST REVISION 11-09-09
DATE PLOTTED => 19-OCT-2010
TIME PLOTTED => 16:06

Dist	COUNTY	ROUTE	KILOMETER POST TOTAL PROJECT	SHEET No.	TOTAL SHEETS
08	Riv	60,215	R19.7/21.9, R61.3/62.7	180	594

REGISTERED CIVIL ENGINEER 1-14-10 DATE

6-28-10
PLANS APPROVAL DATE

REGISTERED PROFESSIONAL ENGINEER ERIC S. GIROD No. C57288 Exp.12/31/11 CIVIL STATE OF CALIFORNIA

THE STATE OF CALIFORNIA OR ITS OFFICERS OR AGENTS SHALL NOT BE RESPONSIBLE FOR THE ACCURACY OR COMPLETENESS OF ELECTRONIC COPIES OF THIS PLAN SHEET.

LAN ENGINEERING CORP
1887 BUSINESS CENTER DR
SUITE 6
SAN BERNARDINO, CA 92408

RIVERSIDE COUNTY
TRANSPORTATION COMMISSION
4080 LEMON STREET
RIVERSIDE, CA 92502

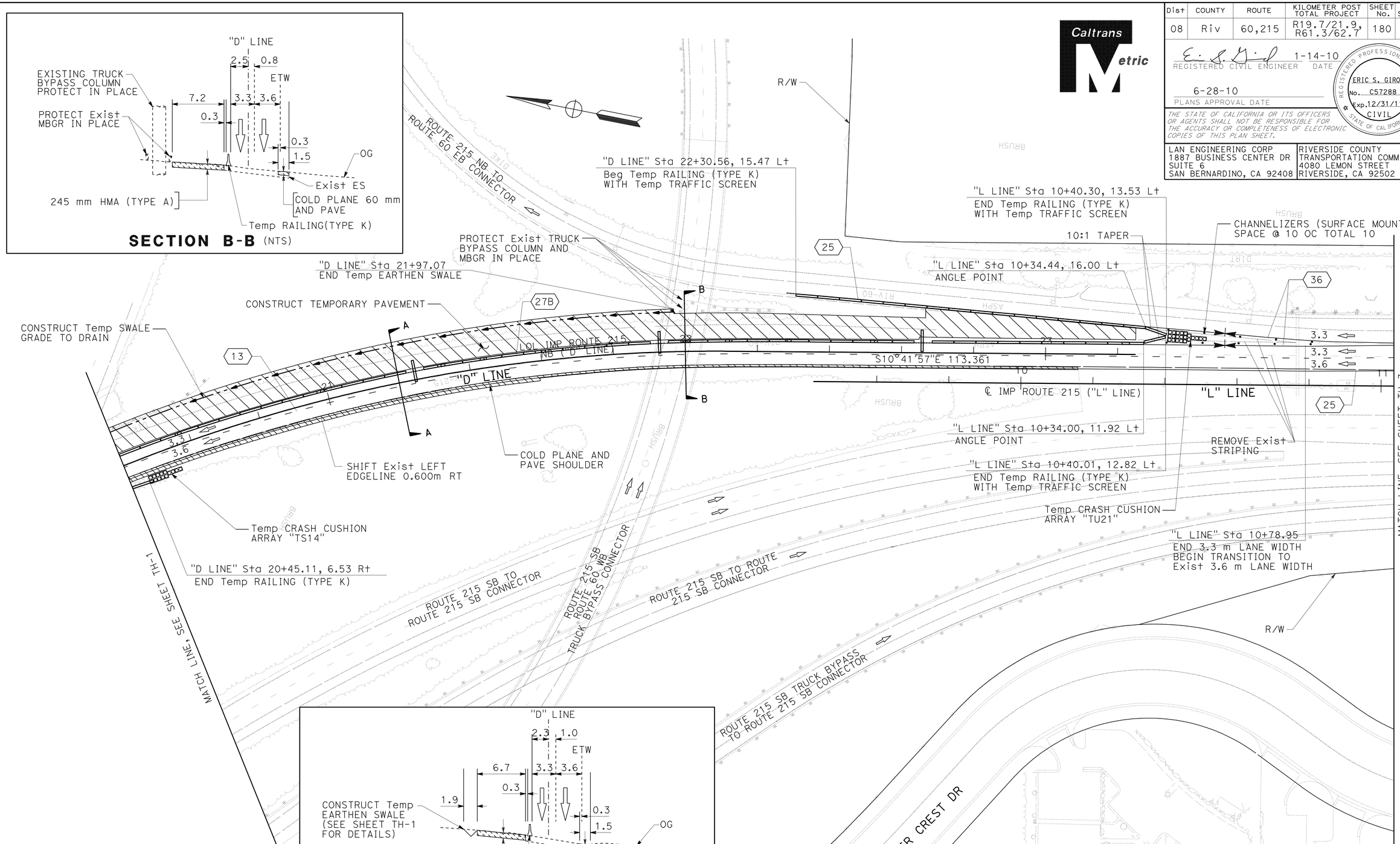

ALL DIMENSIONS ARE IN METERS UNLESS OTHERWISE SHOWN

THIS PLAN IS ACCURATE FOR STAGE CONSTRUCTION AND TRAFFIC HANDLING ONLY.

STAGE 1A
TRAFFIC HANDLING PLAN

SCALE 1:500

TH-2

STATE OF CALIFORNIA - DEPARTMENT OF TRANSPORTATION
Caltrans

CONSULTANT FUNCTIONAL SUPERVISOR: NORMAN SUYDAM
CALCULATED-DESIGNED BY: ERIC GIROD, NICOLAS BORRAYO
CHECKED BY: NORMAN SUYDAM
REVISED BY / DATE REVISED

LAST REVISION 11-09-09 | DATE PLOTTED => 19-OCT-2010 | TIME PLOTTED => 16:06

BORDER LAST REVISED 3/1/2007 | RELATIVE BORDER SCALE IS IN MILLIMETERS 0 20 40 60 80 | USERNAME => trlim | DGN FILE => 844931md002.dgn | CU 08232 | EA 449311

Dist	COUNTY	ROUTE	KILOMETER POST TOTAL PROJECT	SHEET No.	TOTAL SHEETS
08	Riv	60,215	R19.7/21.9, R61.3/62.7	181	594

REGISTERED CIVIL ENGINEER 1-14-10 DATE

6-28-10
PLANS APPROVAL DATE

REGISTERED PROFESSIONAL ENGINEER
ERIC S. GIROD
No. C57288
Exp.12/31/11
CIVIL
STATE OF CALIFORNIA

THE STATE OF CALIFORNIA OR ITS OFFICERS OR AGENTS SHALL NOT BE RESPONSIBLE FOR THE ACCURACY OR COMPLETENESS OF ELECTRONIC COPIES OF THIS PLAN SHEET.

LAN ENGINEERING CORP
1887 BUSINESS CENTER DR
SUITE 6
SAN BERNARDINO, CA 92408

RIVERSIDE COUNTY
TRANSPORTATION COMMISSION
4080 LEMON STREET
RIVERSIDE, CA 92502

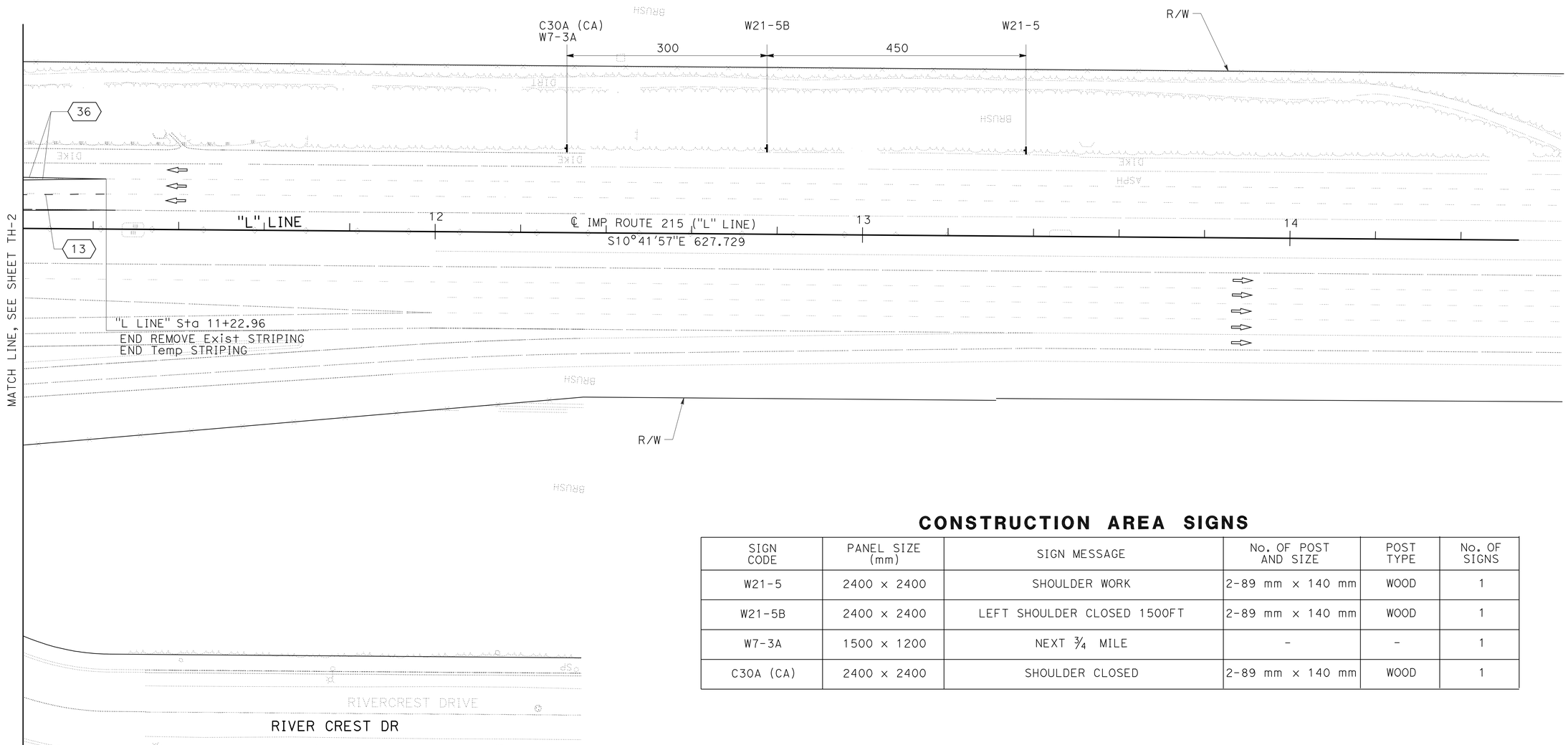

CONSTRUCTION AREA SIGNS

SIGN CODE	PANEL SIZE (mm)	SIGN MESSAGE	No. OF POST AND SIZE	POST TYPE	No. OF SIGNS
W21-5	2400 x 2400	SHOULDER WORK	2-89 mm x 140 mm	WOOD	1
W21-5B	2400 x 2400	LEFT SHOULDER CLOSED 1500FT	2-89 mm x 140 mm	WOOD	1
W7-3A	1500 x 1200	NEXT ¾ MILE	-	-	1
C30A (CA)	2400 x 2400	SHOULDER CLOSED	2-89 mm x 140 mm	WOOD	1

ALL DIMENSIONS ARE IN METERS UNLESS OTHERWISE SHOWN

STAGE 1A
TRAFFIC HANDLING PLAN

THIS PLAN IS ACCURATE FOR STAGE CONSTRUCTION AND TRAFFIC HANDLING ONLY.

SCALE 1:500

TH-3

STATE OF CALIFORNIA - DEPARTMENT OF TRANSPORTATION
Caltrans

CONSULTANT FUNCTIONAL SUPERVISOR: NORMAN SUYDAM
CALCULATED-DESIGNED BY: ERIC GIROD, NICOLAS BORRAYO
CHECKED BY: NORMAN SUYDAM
REVISED BY / DATE REVISED

LAST REVISION 11-09-09 | DATE PLOTTED => 19-OCT-2010 | TIME PLOTTED => 16:06

Dist	COUNTY	ROUTE	KILOMETER POST TOTAL PROJECT	SHEET No.	TOTAL SHEETS
08	Riv	60,215	R19.7/21.9, R61.3/62.7	182	594

REGISTERED CIVIL ENGINEER 1-14-10 DATE

6-28-10
PLANS APPROVAL DATE

REGISTERED PROFESSIONAL ENGINEER ERIC S. GIROD No. C57288 Exp.12/31/11 CIVIL STATE OF CALIFORNIA

THE STATE OF CALIFORNIA OR ITS OFFICERS OR AGENTS SHALL NOT BE RESPONSIBLE FOR THE ACCURACY OR COMPLETENESS OF ELECTRONIC COPIES OF THIS PLAN SHEET.

LAN ENGINEERING CORP
1887 BUSINESS CENTER DR
SUITE 6
SAN BERNARDINO, CA 92408

RIVERSIDE COUNTY
TRANSPORTATION COMMISSION
4080 LEMON STREET
RIVERSIDE, CA 92502

CONSTRUCTION AREA SIGNS

SIGN CODE	PANEL SIZE (mm)	SIGN MESSAGE	No. OF POST AND SIZE	POST TYPE	NO.OF SIGNS
W21-5	2400 x 2400	SHOULDER WORK	2-89 mm x 140 mm	WOOD	1
W21-5B	2400 x 2400	LEFT SHOULDER CLOSED 1500FT	2-89 mm x 140 mm	WOOD	1
W7-3A	1500 x 1200	NEXT 1 MILE	-	-	1
C30A (CA)	2400 x 2400	SHOULDER CLOSED	2-89 mm x 140 mm	WOOD	1
W4-2	900 x 900	LANE ENDS (SYMBOL)	2-89 mm x 140 mm	WOOD	1
-	1200 x 600	MOVE/MERGE RIGHT (FLASHING ARROW)	-	-	1

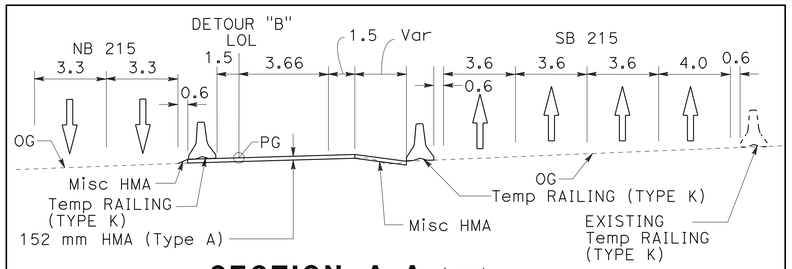

SECTION A-A (NTS)

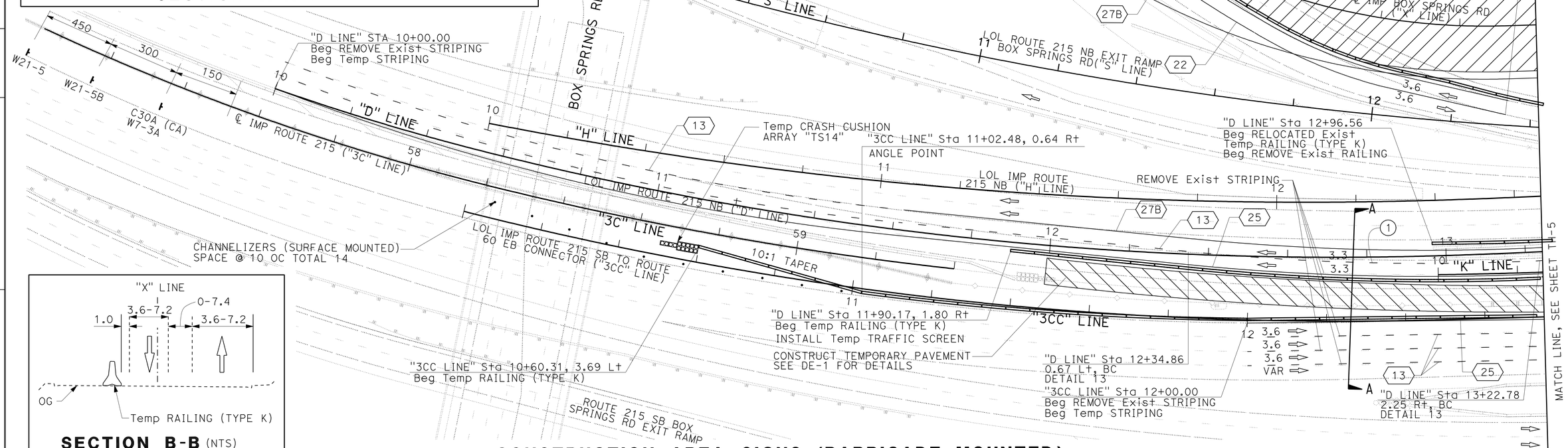

SECTION B-B (NTS)

CURVE DATA				
No.	R	Δ	T	L
1	603.300	8°26'2"	44.483	88.806

CONSTRUCTION AREA SIGNS (BARRICADE MOUNTED)

SIGN CODE	PANEL SIZE (mm)	SIGN MESSAGE	BARRICADE TYPE	No. OF SIGNS
R9-10	1200 X 300	SIDEWALK CLOSED, USE OTHER SIDE	TYPE II	1
W11-1	600 X 600	BICYCLE(SYMBOL)	TYPE II	1
W16-1	500 X 600	SHARE THE ROAD	TYPE II	1

ALL DIMENSIONS ARE IN METERS UNLESS OTHERWISE SHOWN

THIS PLAN IS ACCURATE FOR STAGE CONSTRUCTION AND TRAFFIC HANDLING ONLY.

STAGE 1B

TRAFFIC HANDLING PLAN

SCALE 1:500

TH-4

STATE OF CALIFORNIA - DEPARTMENT OF TRANSPORTATION

Caltrans

CONSULTANT FUNCTIONAL SUPERVISOR: NORMAN SUYDAM

CALCULATED-DESIGNED BY: ERIC GIROD, NICOLAS BORRAYO

CHECKED BY: NORMAN SUYDAM

REVISED BY | DATE REVISED

LAST REVISION DATE PLOTTED => 19-OCT-2010
11-09-09 TIME PLOTTED => 16:06

Dist	COUNTY	ROUTE	KILOMETER POST TOTAL PROJECT	SHEET No.	TOTAL SHEETS
08	Riv	60,215	R19.7/21.9, R61.3/62.7	183	594

REGISTERED CIVIL ENGINEER 1-14-10 DATE

6-28-10
PLANS APPROVAL DATE

REGISTERED PROFESSIONAL ENGINEER ERIC S. GIROD No. C57288 Exp.12/31/11 CIVIL STATE OF CALIFORNIA

THE STATE OF CALIFORNIA OR ITS OFFICERS OR AGENTS SHALL NOT BE RESPONSIBLE FOR THE ACCURACY OR COMPLETENESS OF ELECTRONIC COPIES OF THIS PLAN SHEET.

LAN ENGINEERING CORP
1887 BUSINESS CENTER DR
SUITE 6
SAN BERNARDINO, CA 92408

RIVERSIDE COUNTY
TRANSPORTATION COMMISSION
4080 LEMON STREET
RIVERSIDE, CA 92502

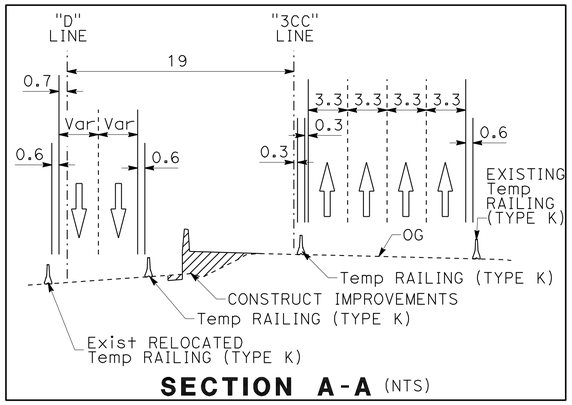

SECTION A-A (NTS)

SECTION B-B (NTS)

CURVE DATA				
No.	R	Δ	T	L
1	988.300	9°54'32"	85.675	170.922

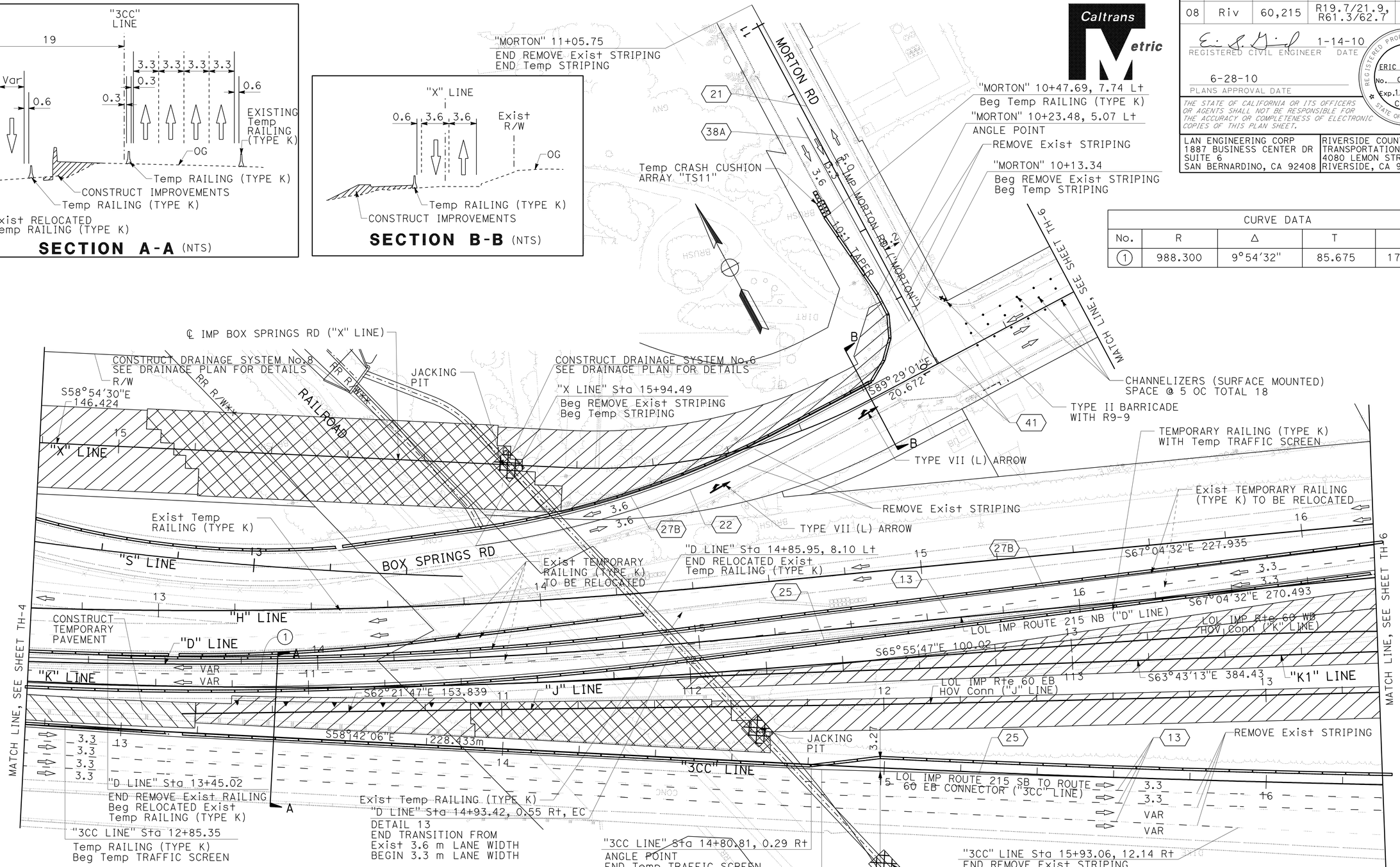

CONSTRUCTION AREA SIGNS (BARRICADE MOUNTED)

SIGN CODE	PANEL SIZE (mm)	SIGN MESSAGE	BARRICADE TYPE	No. OF SIGNS
R9-9	600 x 300	SIDEWALK CLOSED	TYPE II	1

ALL DIMENSIONS ARE IN METERS UNLESS OTHERWISE SHOWN

STAGE 1B
TRAFFIC HANDLING PLAN

THIS PLAN IS ACCURATE FOR STAGE CONSTRUCTION AND TRAFFIC HANDLING ONLY.

SCALE 1:500

TH-5

STATE OF CALIFORNIA - DEPARTMENT OF TRANSPORTATION
Caltrans

CONSULTANT FUNCTIONAL SUPERVISOR: NORMAN SUYDAM
CALCULATED-DESIGNED BY: ERIC GIROD, NICOLAS BORRAYO
CHECKED BY: NORMAN SUYDAM
REVISED BY / DATE REVISED

LAST REVISION 11-09-09
DATE PLOTTED => 19-OCT-2010
TIME PLOTTED => 16:06

Dist	COUNTY	ROUTE	KILOMETER POST TOTAL PROJECT	SHEET No.	TOTAL SHEETS
08	Riv	60,215	R19.7/21.9, R61.3/62.7	184	594

REGISTERED CIVIL ENGINEER 1-14-10 DATE

6-28-10
PLANS APPROVAL DATE

REGISTERED PROFESSIONAL ENGINEER ERIC S. GIROD No. C57288 Exp.12/31/11 CIVIL STATE OF CALIFORNIA

THE STATE OF CALIFORNIA OR ITS OFFICERS OR AGENTS SHALL NOT BE RESPONSIBLE FOR THE ACCURACY OR COMPLETENESS OF ELECTRONIC COPIES OF THIS PLAN SHEET.

LAN ENGINEERING CORP
1887 BUSINESS CENTER DR
SUITE 6
SAN BERNARDINO, CA 92408

RIVERSIDE COUNTY
TRANSPORTATION COMMISSION
4080 LEMON STREET
RIVERSIDE, CA 92502

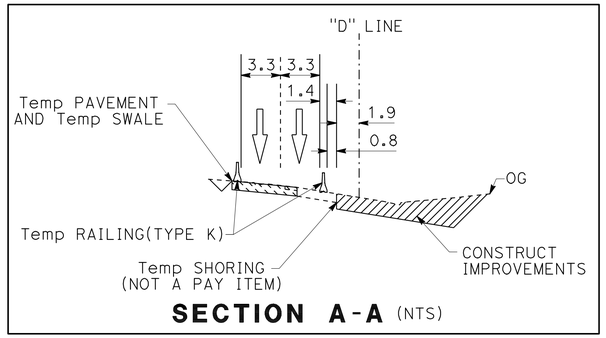

SECTION A-A (NTS)

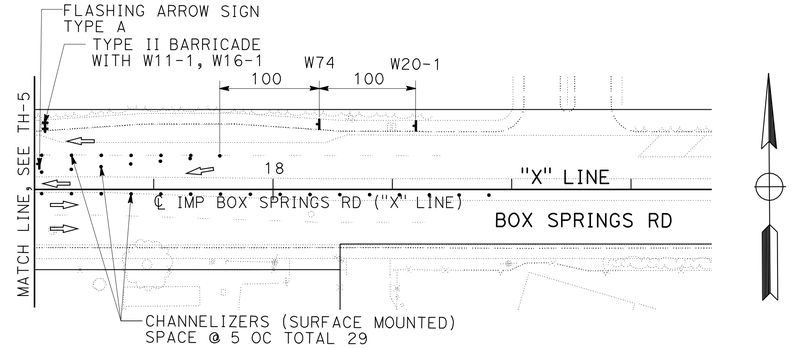

CONSTRUCTION AREA SIGNS (BARRICADE MOUNTED)

SIGN CODE	PANEL SIZE (mm)	SIGN MESSAGE	BARRICADE TYPE	No. OF SIGNS
W11-1	600 x 600	BICYCLE(SYMBOL)	TYPE II	1
W11-16	500 x 600	SHARE THE ROAD	TYPE II	1

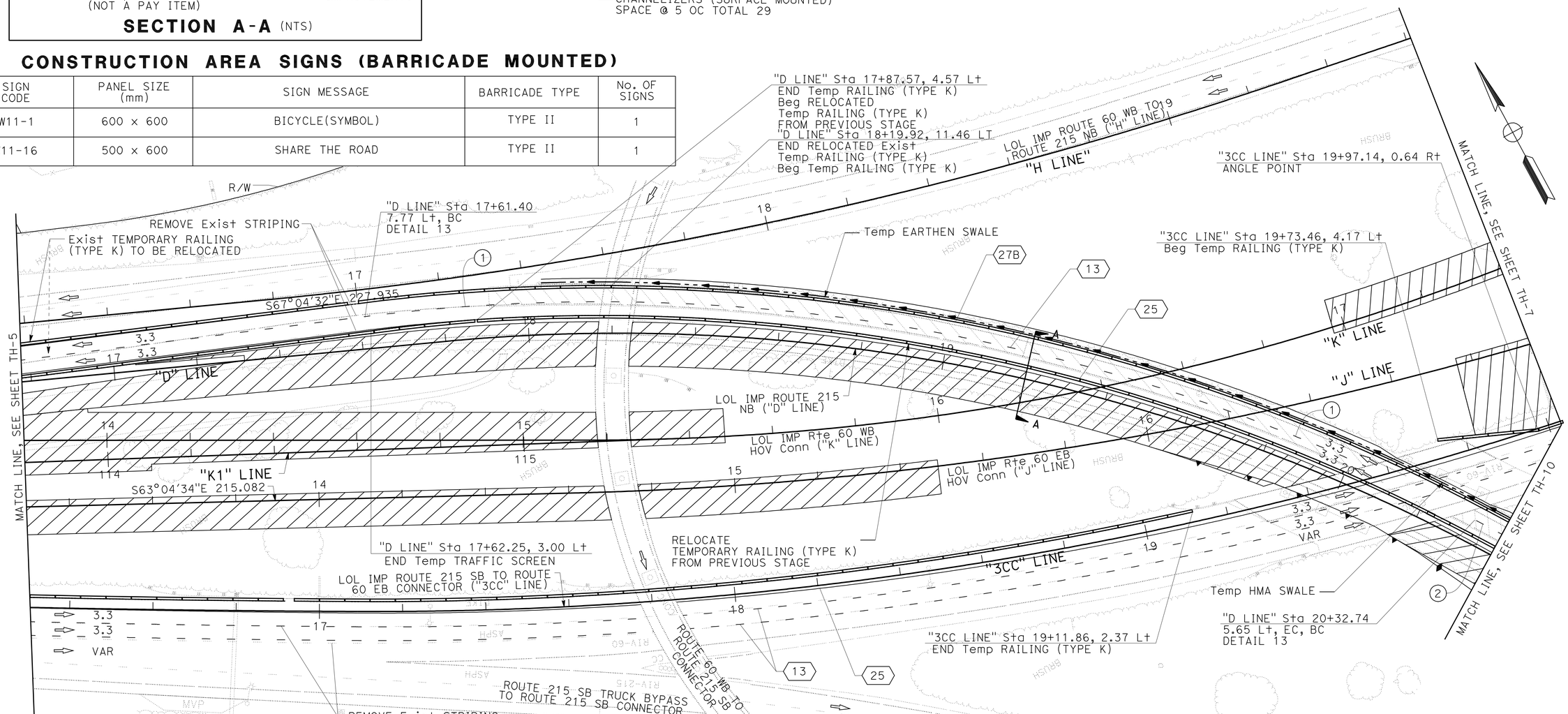

CURVE DATA				
No.	R	Δ	T	L
1	447.899	35°12'31"	142.119	275.237
2	452.124	24°33'40"	98.418	193.813

NOTE: THE CONTRACTOR IS RESPONSIBLE TO DETERMINE THE ACTUAL EXTENT OF SHORING TO BE PROVIDED

CONSTRUCTION AREA SIGNS

SIGN CODE	PANEL SIZE (mm)	SIGN MESSAGE	No. OF POST AND SIZE	POST TYPE	No. OF SIGNS
W74	2400 x 2400	THRU TRAFFIC MERGE LEFT	2-89 mm x 140 mm	WOOD	1
W20-1	2400 x 2400	ROAD WORK AHEAD	2-89 mm x 140 mm	WOOD	1
-	1200 x 600	MOVE/MERGE RIGHT (FLASHING ARROW)	-	-	1

THIS PLAN IS ACCURATE FOR STAGE CONSTRUCTION AND TRAFFIC HANDLING ONLY.

ALL DIMENSIONS ARE IN METERS UNLESS OTHERWISE SHOWN

STAGE 1B

TRAFFIC HANDLING PLAN

SCALE 1:500

TH-6

STATE OF CALIFORNIA - DEPARTMENT OF TRANSPORTATION

Caltrans

CONSULTANT FUNCTIONAL SUPERVISOR: NORMAN SUYDAM

CALCULATED-DESIGNED BY: ERIC GIROD, NICOLAS BORRAYO

CHECKED BY: NORMAN SUYDAM

REVISED BY | DATE REVISED

LAST REVISION DATE PLOTTED => 19-OCT-2010
TIME PLOTTED => 6:06
11-09-09

Dist	COUNTY	ROUTE	KILOMETER POST TOTAL PROJECT	SHEET No.	TOTAL SHEETS
08	Riv	60,215	R19.7/21.9, R61.3/62.7	185	594

REGISTERED CIVIL ENGINEER 1-14-10 DATE

6-28-10
PLANS APPROVAL DATE

REGISTERED PROFESSIONAL ENGINEER
ERIC S. GIROD
No. C57288
Exp.12/31/11
CIVIL
STATE OF CALIFORNIA

THE STATE OF CALIFORNIA OR ITS OFFICERS OR AGENTS SHALL NOT BE RESPONSIBLE FOR THE ACCURACY OR COMPLETENESS OF ELECTRONIC COPIES OF THIS PLAN SHEET.

LAN ENGINEERING CORP
1887 BUSINESS CENTER DR
SUITE 6
SAN BERNARDINO, CA 92408

RIVERSIDE COUNTY
TRANSPORTATION COMMISSION
4080 LEMON STREET
RIVERSIDE, CA 92502

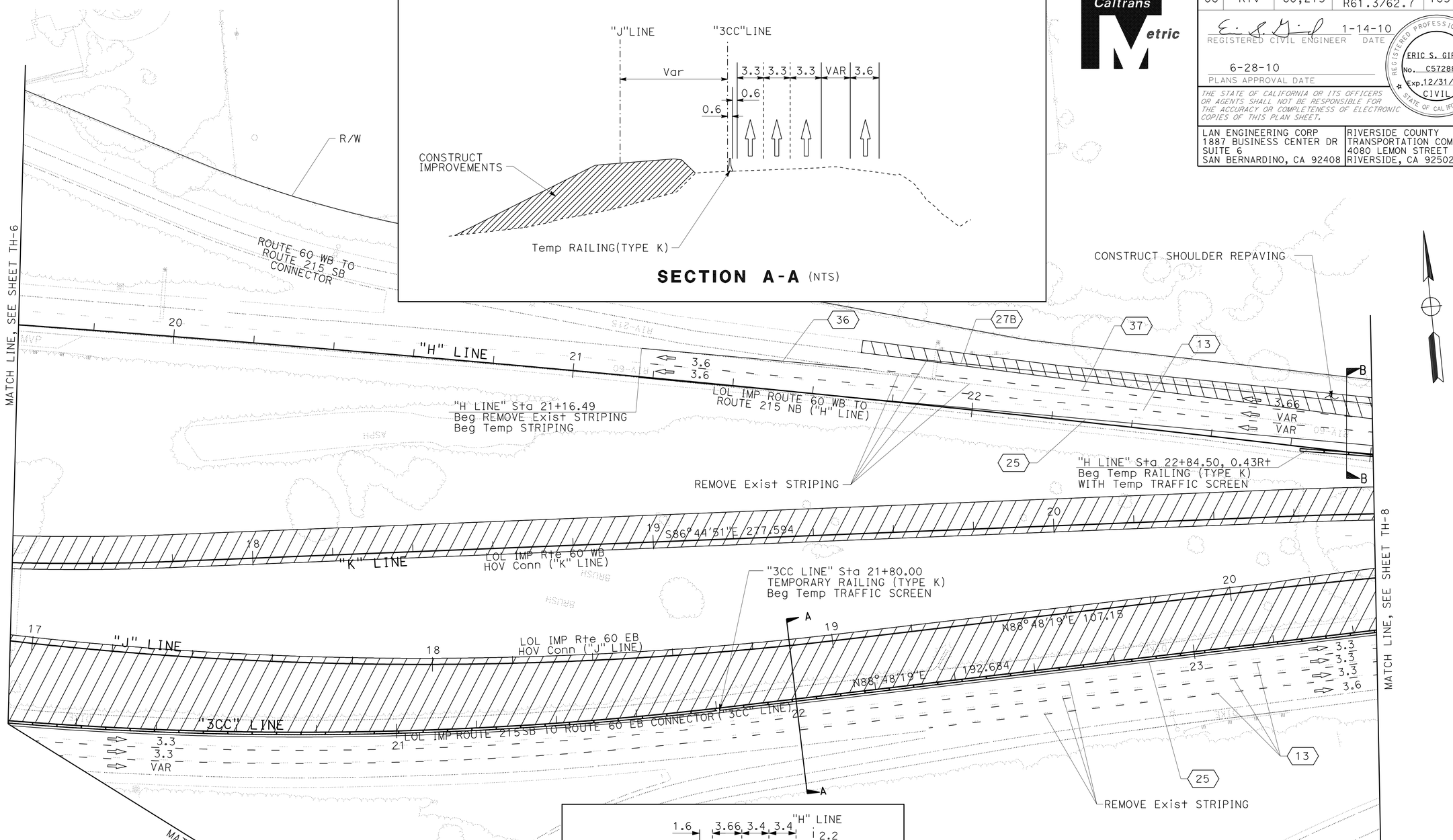

ALL DIMENSIONS ARE IN METERS UNLESS OTHERWISE SHOWN

STAGE 1B
TRAFFIC HANDLING PLAN

SCALE 1:500

TH-7

THIS PLAN IS ACCURATE FOR STAGE CONSTRUCTION AND TRAFFIC HANDLING ONLY.

REVISED BY	DATE REVISED

CALCULATED-DESIGNED BY: ERIC GIROD, NICOLAS BORRAYO
CHECKED BY: NORMAN SUYDAM
CONSULTANT FUNCTIONAL SUPERVISOR: NORMAN SUYDAM

STATE OF CALIFORNIA - DEPARTMENT OF TRANSPORTATION

LAST REVISION DATE PLOTTED => 19-OCT-2010
TIME PLOTTED => 16:07
11-09-09

Dist	COUNTY	ROUTE	KILOMETER POST TOTAL PROJECT	SHEET No.	TOTAL SHEETS
08	Riv	60,215	R19.7/21.9, R61.3/62.7	186	594

REGISTERED CIVIL ENGINEER 1-14-10 DATE

6-28-10
PLANS APPROVAL DATE

REGISTERED PROFESSIONAL ENGINEER ERIC S. GIROD No. C57288 Exp.12/31/11 CIVIL STATE OF CALIFORNIA

THE STATE OF CALIFORNIA OR ITS OFFICERS OR AGENTS SHALL NOT BE RESPONSIBLE FOR THE ACCURACY OR COMPLETENESS OF ELECTRONIC COPIES OF THIS PLAN SHEET.

LAN ENGINEERING CORP
1887 BUSINESS CENTER DR
SUITE 6
SAN BERNARDINO, CA 92408

RIVERSIDE COUNTY
TRANSPORTATION COMMISSION
4080 LEMON STREET
RIVERSIDE, CA 92502

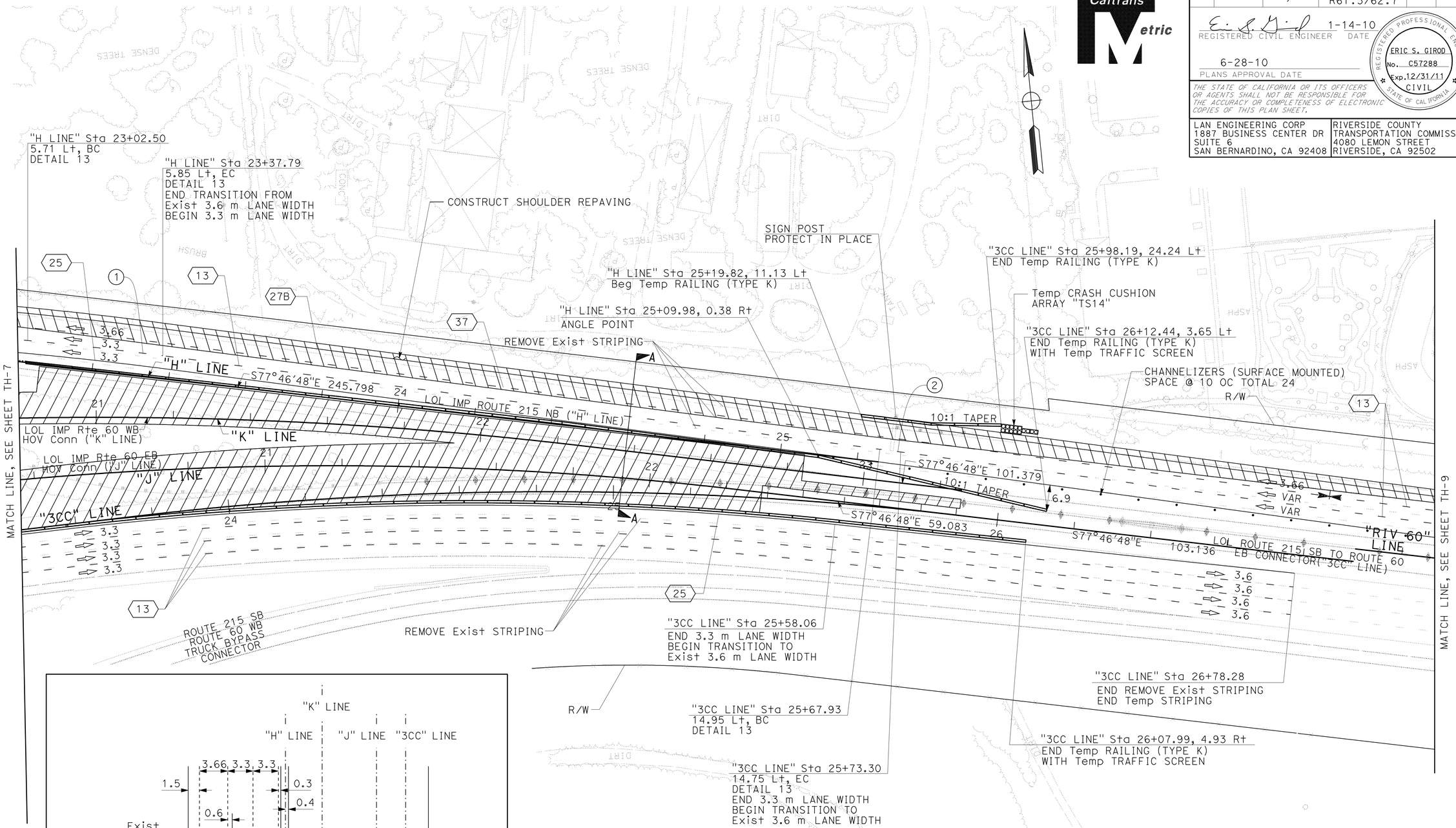

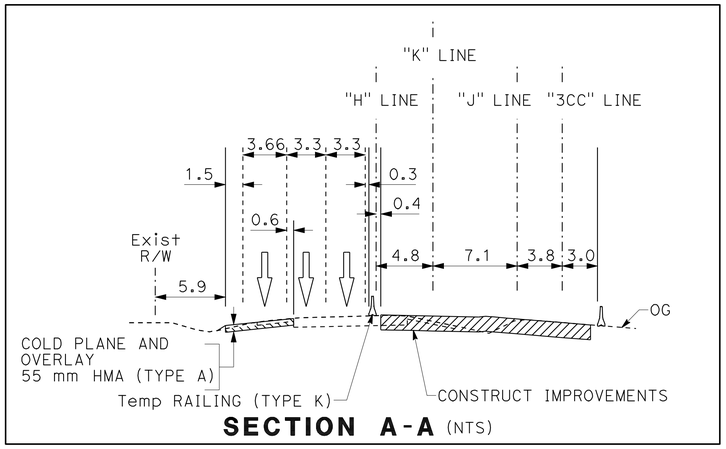

SECTION A-A (NTS)

CURVE DATA				
No.	R	Δ	T	L
1	1003.300	2°00'55"	17.647	35.291
2	1003.300	0°18'43"	2.732	5.463

THIS PLAN IS ACCURATE FOR STAGE CONSTRUCTION AND TRAFFIC HANDLING ONLY.

ALL DIMENSIONS ARE IN METERS UNLESS OTHERWISE SHOWN

STAGE 1B
TRAFFIC HANDLING PLAN

SCALE 1:500

TH-8

STATE OF CALIFORNIA - DEPARTMENT OF TRANSPORTATION
Caltrans

CONSULTANT FUNCTIONAL SUPERVISOR: NORMAN SUYDAM
CALCULATED-DESIGNED BY: ERIC GIROD / NICOLAS BORRAYO
CHECKED BY: NORMAN SUYDAM
REVISED BY / DATE REVISED

LAST REVISION 11-09-09 DATE PLOTTED => 19-OCT-2010 TIME PLOTTED => 16:07

Dist	COUNTY	ROUTE	KILOMETER POST TOTAL PROJECT	SHEET No.	TOTAL SHEETS
08	Riv	60,215	R19.7/21.9, R61.3/62.7	187	594

Caltrans Metric

REGISTERED CIVIL ENGINEER 1-14-10 DATE

6-28-10
PLANS APPROVAL DATE

REGISTERED PROFESSIONAL ENGINEER
ERIC S. GIROD
No. C57288
Exp.12/31/11
CIVIL
STATE OF CALIFORNIA

THE STATE OF CALIFORNIA OR ITS OFFICERS OR AGENTS SHALL NOT BE RESPONSIBLE FOR THE ACCURACY OR COMPLETENESS OF ELECTRONIC COPIES OF THIS PLAN SHEET.

LAN ENGINEERING CORP
1887 BUSINESS CENTER DR
SUITE 6
SAN BERNARDINO, CA 92408

RIVERSIDE COUNTY
TRANSPORTATION COMMISSION
4080 LEMON STREET
RIVERSIDE, CA 92502

CONSTRUCTION AREA SIGNS

SIGN CODE	PANEL SIZE (mm)	SIGN MESSAGE	No. OF POST AND SIZE	POST TYPE	No. OF SIGNS
W21-5	2400 x 2400	SHOULDER WORK	2-89 mm X 140 mm	WOOD	1
W21-5B	2400 x 2400	LEFT SHOULDER CLOSED 1500FT	2-89 mm X 140 mm	WOOD	1
W7-3A	1500 x 1200	NEXT 1/2 MILE	-	-	1
C30A (CA)	2400 x 2400	SHOULDER CLOSED	2-89 mm X 140 mm	WOOD	1

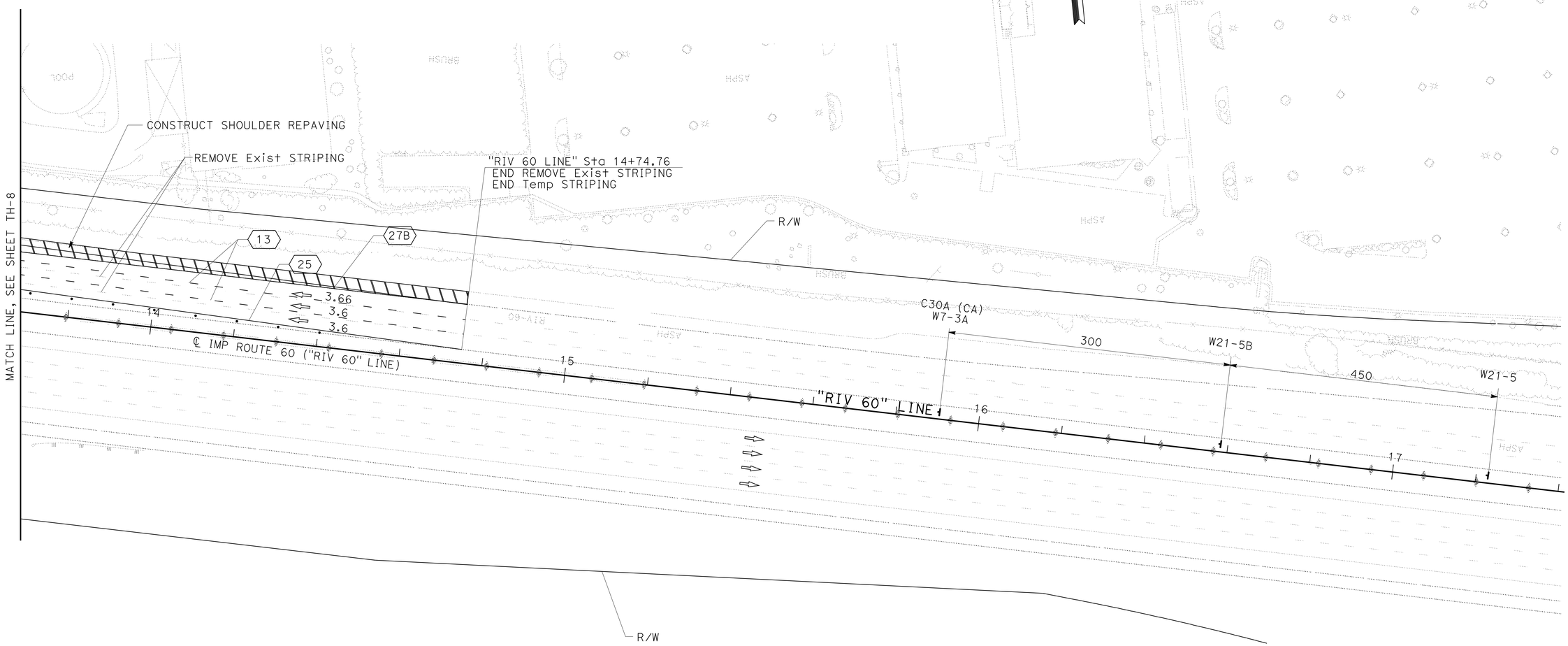

ALL DIMENSIONS ARE IN METERS UNLESS OTHERWISE SHOWN

STAGE 1B
TRAFFIC HANDLING PLAN

THIS PLAN IS ACCURATE FOR STAGE CONSTRUCTION AND TRAFFIC HANDLING ONLY.

SCALE 1:500

TH-9

STATE OF CALIFORNIA - DEPARTMENT OF TRANSPORTATION
Caltrans

CONSULTANT FUNCTIONAL SUPERVISOR: NORMAN SUYDAM
CALCULATED-DESIGNED BY: ERIC GIROD, NICOLAS BORRAYO
CHECKED BY: NORMAN SUYDAM
REVISED BY
DATE REVISED

LAST REVISION 11-09-09
DATE PLOTTED => 19-OCT-2010
TIME PLOTTED => 16:07

Dist	COUNTY	ROUTE	KILOMETER POST TOTAL PROJECT	SHEET No.	TOTAL SHEETS
08	Riv	60,215	R19.7/21.9, R61.3/62.7	188	594

REGISTERED CIVIL ENGINEER 1-14-10 DATE

6-28-10
PLANS APPROVAL DATE

REGISTERED PROFESSIONAL ENGINEER ERIC S. GIROD No. C57288 Exp.12/31/11 CIVIL STATE OF CALIFORNIA

THE STATE OF CALIFORNIA OR ITS OFFICERS OR AGENTS SHALL NOT BE RESPONSIBLE FOR THE ACCURACY OR COMPLETENESS OF ELECTRONIC COPIES OF THIS PLAN SHEET.

LAN ENGINEERING CORP
1887 BUSINESS CENTER DR
SUITE 6
SAN BERNARDINO, CA 92408

RIVERSIDE COUNTY
TRANSPORTATION COMMISSION
4080 LEMON STREET
RIVERSIDE, CA 92502

NOTE: THE CONTRACTOR IS RESPONSIBLE TO DETERMINE THE ACTUAL EXTENT OF SHORING TO BE PROVIDED

CURVE DATA				
No.	R	Δ	T	L
1	452.124	24°33'40"	98.418	193.813

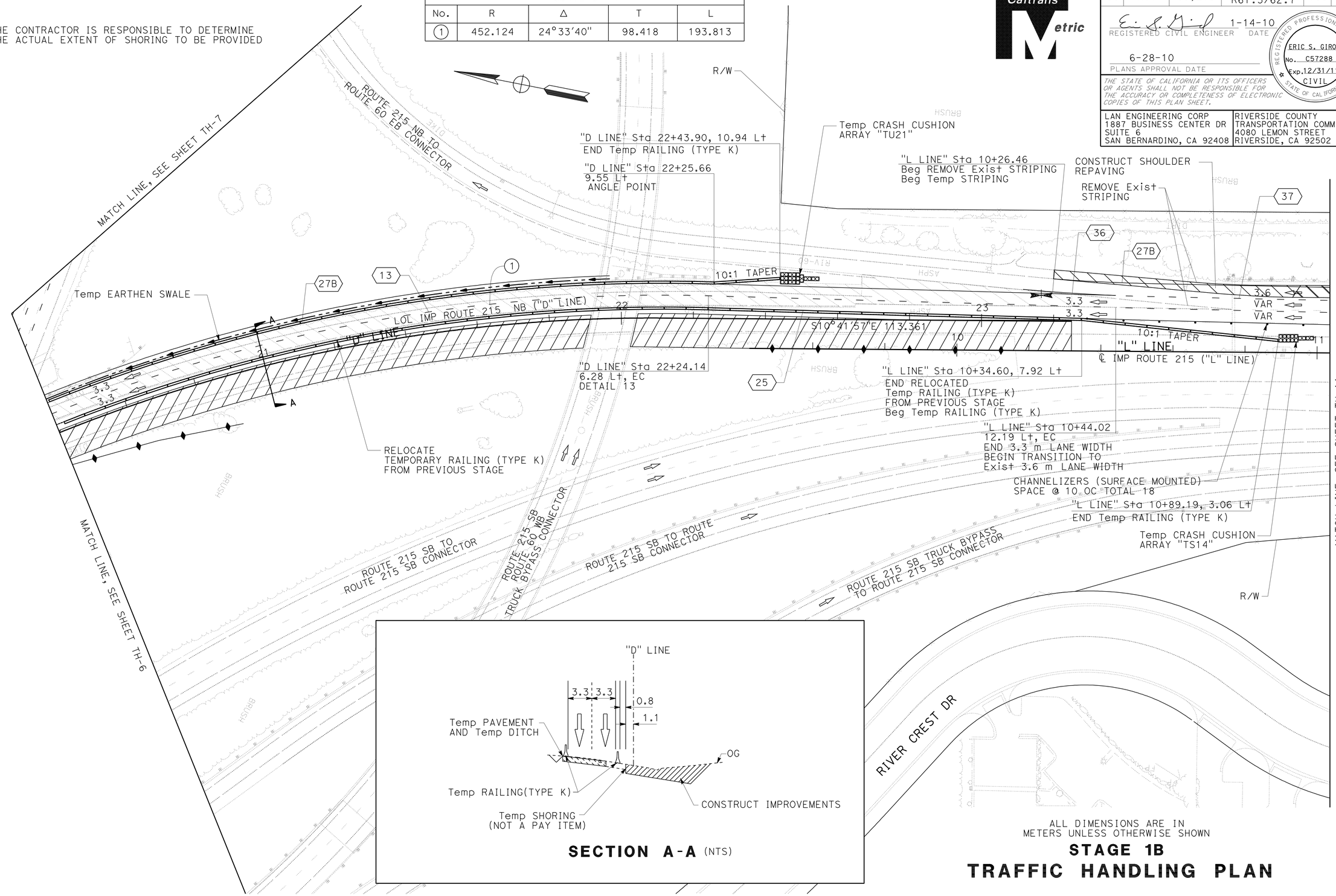

SECTION A-A (NTS)

ALL DIMENSIONS ARE IN METERS UNLESS OTHERWISE SHOWN

THIS PLAN IS ACCURATE FOR STAGE CONSTRUCTION AND TRAFFIC HANDLING ONLY.

STAGE 1B
TRAFFIC HANDLING PLAN

SCALE 1:500

TH-10

REVISED BY	DATE REVISED

CALCULATED-DESIGNED BY: ERIC GIROD, NICOLAS BORRAYO
CHECKED BY: NORMAN SUYDAM

CONSULTANT FUNCTIONAL SUPERVISOR: NORMAN SUYDAM

STATE OF CALIFORNIA - DEPARTMENT OF TRANSPORTATION
Caltrans

LAST REVISION 11-09-09
DATE PLOTTED => 19-OCT-2010
TIME PLOTTED => 16:07

Dist	COUNTY	ROUTE	KILOMETER POST TOTAL PROJECT	SHEET No.	TOTAL SHEETS
08	Riv	60,215	R19.7/21.9, R61.3/62.7	189	594

REGISTERED CIVIL ENGINEER 1-14-10 DATE

6-28-10
PLANS APPROVAL DATE

REGISTERED PROFESSIONAL ENGINEER ERIC S. GIROD No. C57288 Exp.12/31/11 CIVIL STATE OF CALIFORNIA

THE STATE OF CALIFORNIA OR ITS OFFICERS OR AGENTS SHALL NOT BE RESPONSIBLE FOR THE ACCURACY OR COMPLETENESS OF ELECTRONIC COPIES OF THIS PLAN SHEET.

LAN ENGINEERING CORP
1887 BUSINESS CENTER DR
SUITE 6
SAN BERNARDINO, CA 92408

RIVERSIDE COUNTY
TRANSPORTATION COMMISSION
4080 LEMON STREET
RIVERSIDE, CA 92502

CONSTRUCTION AREA SIGNS

SIGN CODE	PANEL SIZE (mm)	SIGN MESSAGE	No. OF POST AND SIZE	POST TYPE	No. OF SIGNS
W21-5	2400 x 2400	SHOULDER WORK	2-89 mm x 140 mm	WOOD	1
W21-5B	2400 x 2400	LEFT SHOULDER CLOSED 1500FT	2-89 mm x 140 mm	WOOD	1
W21-5B	2400 x 2400	RIGHT SHOULDER CLOSED 1500FT	2-89 mm x 140 mm	WOOD	1
W7-3A	1500 x 1200	NEXT 1 MILE	-	-	1
C30A (CA)	2400 x 2400	SHOULDER CLOSED	2-89 mm x 140 mm	WOOD	1

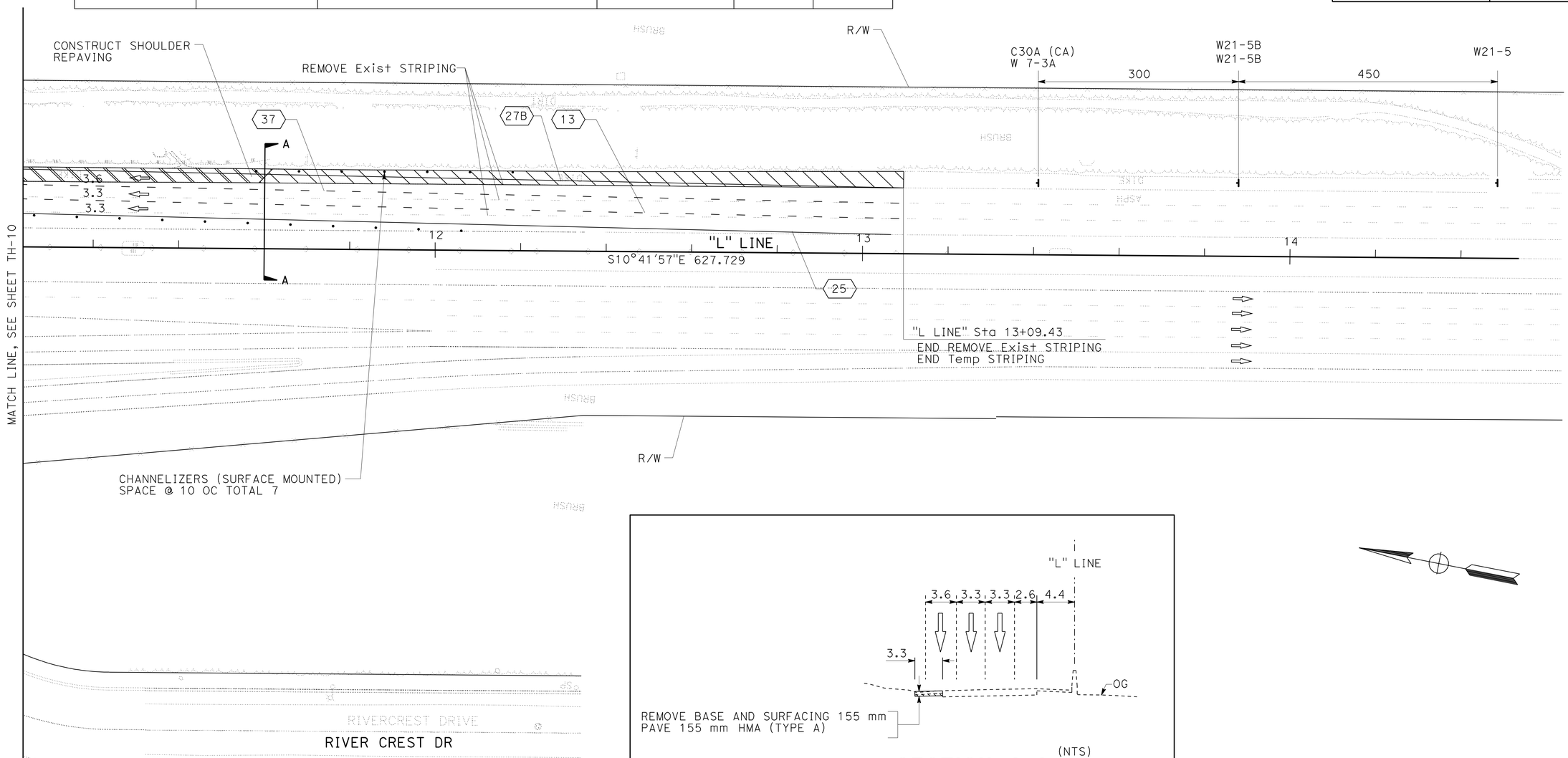

SECTION A-A

ALL DIMENSIONS ARE IN METERS UNLESS OTHERWISE SHOWN

STAGE 1B
TRAFFIC HANDLING PLAN

THIS PLAN IS ACCURATE FOR STAGE CONSTRUCTION AND TRAFFIC HANDLING ONLY.

SCALE 1:500

TH-11

STATE OF CALIFORNIA - DEPARTMENT OF TRANSPORTATION
Caltrans

CONSULTANT FUNCTIONAL SUPERVISOR: NORMAN SUYDAM
CALCULATED-DESIGNED BY: ERIC GIROD, NICOLAS BORRAYO
CHECKED BY: NORMAN SUYDAM
REVISED BY / DATE REVISED

LAST REVISION 11-09-09
DATE PLOTTED => 19-OCT-2010
TIME PLOTTED => 16:07

Dist	COUNTY	ROUTE	KILOMETER POST TOTAL PROJECT	SHEET No.	TOTAL SHEETS
08	Riv	60,215	R19.7/21.9, R61.3/62.7	190	594

REGISTERED CIVIL ENGINEER 1-14-10 DATE

6-28-10
PLANS APPROVAL DATE

REGISTERED PROFESSIONAL ENGINEER
ERIC S. GIROD
No. C57288
Exp.12/31/11
CIVIL
STATE OF CALIFORNIA

THE STATE OF CALIFORNIA OR ITS OFFICERS OR AGENTS SHALL NOT BE RESPONSIBLE FOR THE ACCURACY OR COMPLETENESS OF ELECTRONIC COPIES OF THIS PLAN SHEET.

LAN ENGINEERING CORP
1887 BUSINESS CENTER DR
SUITE 6
SAN BERNARDINO, CA 92408

RIVERSIDE COUNTY
TRANSPORTATION COMMISSION
4080 LEMON STREET
RIVERSIDE, CA 92502

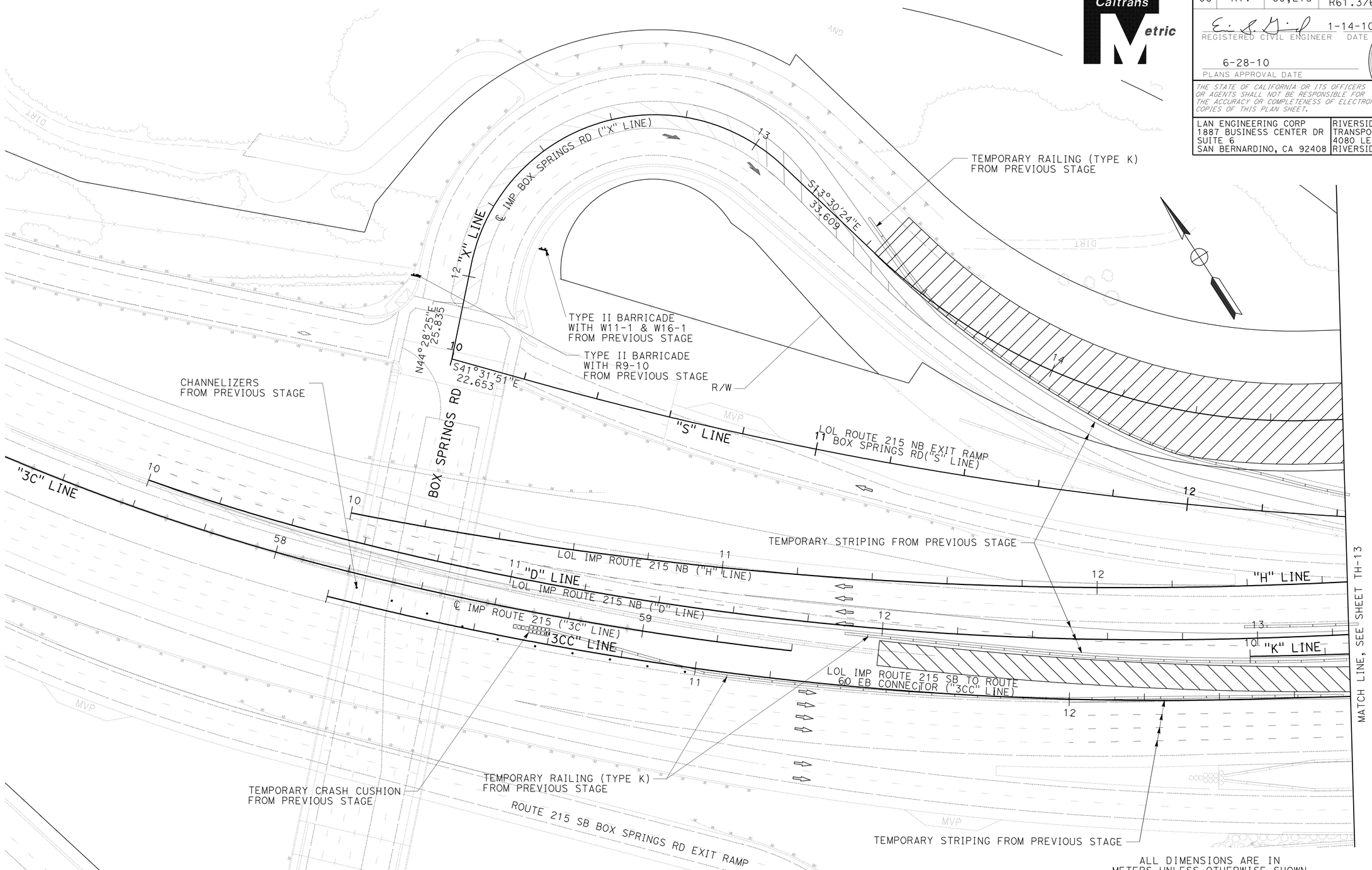

ALL DIMENSIONS ARE IN METERS UNLESS OTHERWISE SHOWN

STAGE 1C
TRAFFIC HANDLING PLAN

THIS PLAN IS ACCURATE FOR STAGE CONSTRUCTION AND TRAFFIC HANDLING ONLY.

SCALE 1:500

TH-12

STATE OF CALIFORNIA - DEPARTMENT OF TRANSPORTATION
Caltrans

CONSULTANT FUNCTIONAL SUPERVISOR: NORMAN SUYDAM
CALCULATED-DESIGNED BY: ERIC GIROD, NICOLAS BORRAYO
CHECKED BY: NORMAN SUYDAM
REVISED BY / DATE REVISED

LAST REVISION DATE PLOTTED => 19-OCT-2010
TIME PLOTTED => 16:07
11-09-09

Dist	COUNTY	ROUTE	KILOMETER POST TOTAL PROJECT	SHEET No.	TOTAL SHEETS
08	Riv	60,215	R19.7/21.9, R61.3/62.7	191	594

REGISTERED CIVIL ENGINEER 1-14-10 DATE

6-28-10
PLANS APPROVAL DATE

REGISTERED PROFESSIONAL ENGINEER
ERIC S. GIROD
No. C57288
Exp.12/31/11
CIVIL
STATE OF CALIFORNIA

THE STATE OF CALIFORNIA OR ITS OFFICERS OR AGENTS SHALL NOT BE RESPONSIBLE FOR THE ACCURACY OR COMPLETENESS OF ELECTRONIC COPIES OF THIS PLAN SHEET.

LAN ENGINEERING CORP
1887 BUSINESS CENTER DR
SUITE 6
SAN BERNARDINO, CA 92408

RIVERSIDE COUNTY
TRANSPORTATION COMMISSION
4080 LEMON STREET
RIVERSIDE, CA 92502

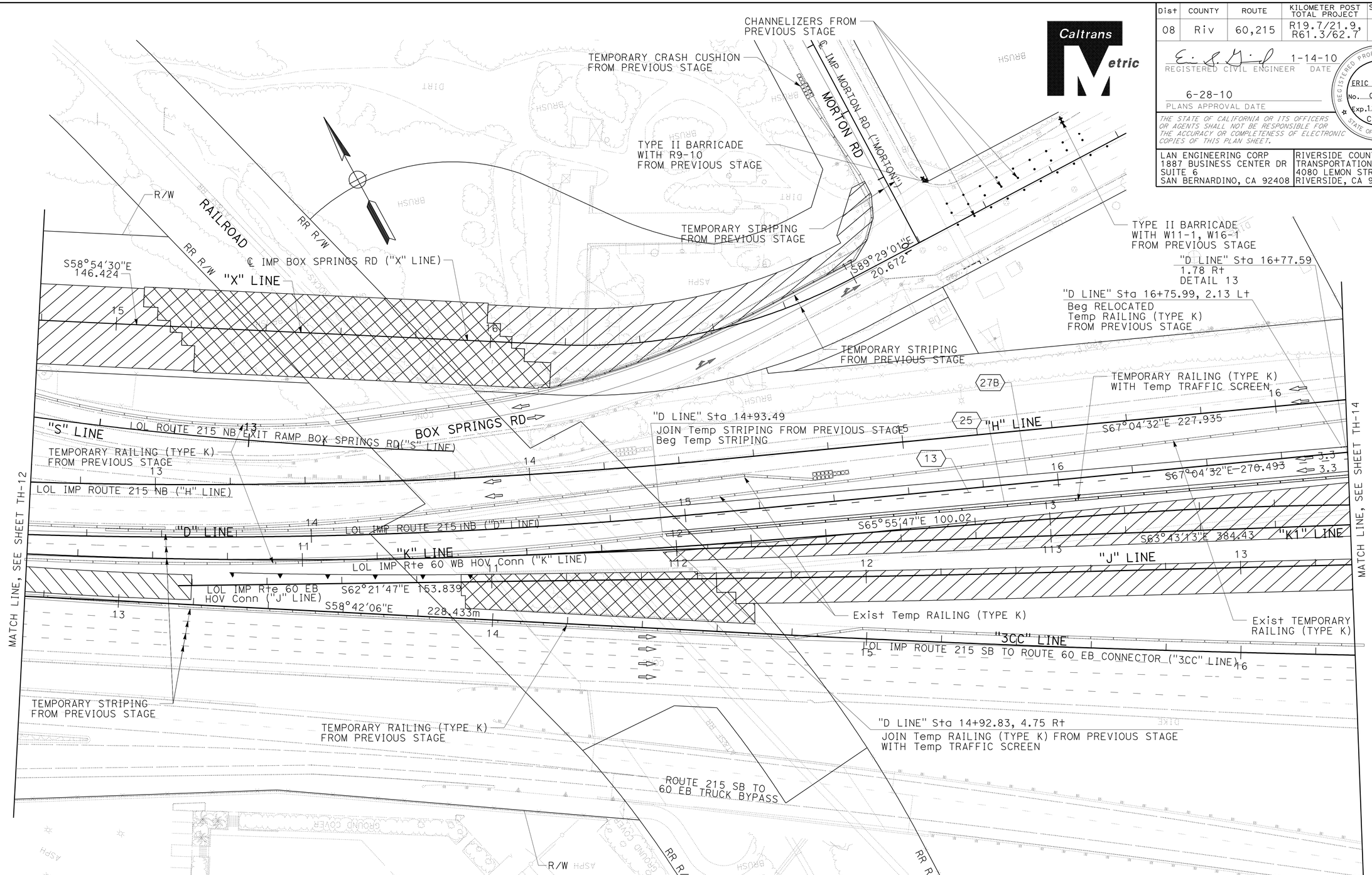

ALL DIMENSIONS ARE IN METERS UNLESS OTHERWISE SHOWN

STAGE 1C
TRAFFIC HANDLING PLAN

SCALE 1:500

TH-13

THIS PLAN IS ACCURATE FOR STAGE CONSTRUCTION AND TRAFFIC HANDLING ONLY.

STATE OF CALIFORNIA - DEPARTMENT OF TRANSPORTATION
Caltrans

CONSULTANT FUNCTIONAL SUPERVISOR: NORMAN SUYDAM
CALCULATED-DESIGNED BY: ERIC GIROD, NICOLAS BORRAYO
CHECKED BY: NORMAN SUYDAM
REVISED BY / DATE REVISED

LAST REVISION 11-09-09
DATE PLOTTED => 19-OCT-2010
TIME PLOTTED => 16:07

Dist	COUNTY	ROUTE	KILOMETER POST TOTAL PROJECT	SHEET No.	TOTAL SHEETS
08	Riv	60,215	R19.7/21.9, R61.3/62.7	192	594

REGISTERED CIVIL ENGINEER 1-14-10 DATE

6-28-10
PLANS APPROVAL DATE

REGISTERED PROFESSIONAL ENGINEER
ERIC S. GIROD
No. C57288
Exp.12/31/11
CIVIL
STATE OF CALIFORNIA

THE STATE OF CALIFORNIA OR ITS OFFICERS OR AGENTS SHALL NOT BE RESPONSIBLE FOR THE ACCURACY OR COMPLETENESS OF ELECTRONIC COPIES OF THIS PLAN SHEET.

LAN ENGINEERING CORP
1887 BUSINESS CENTER DR
SUITE 6
SAN BERNARDINO, CA 92408

RIVERSIDE COUNTY
TRANSPORTATION COMMISSION
4080 LEMON STREET
RIVERSIDE, CA 92502

Caltrans Metric

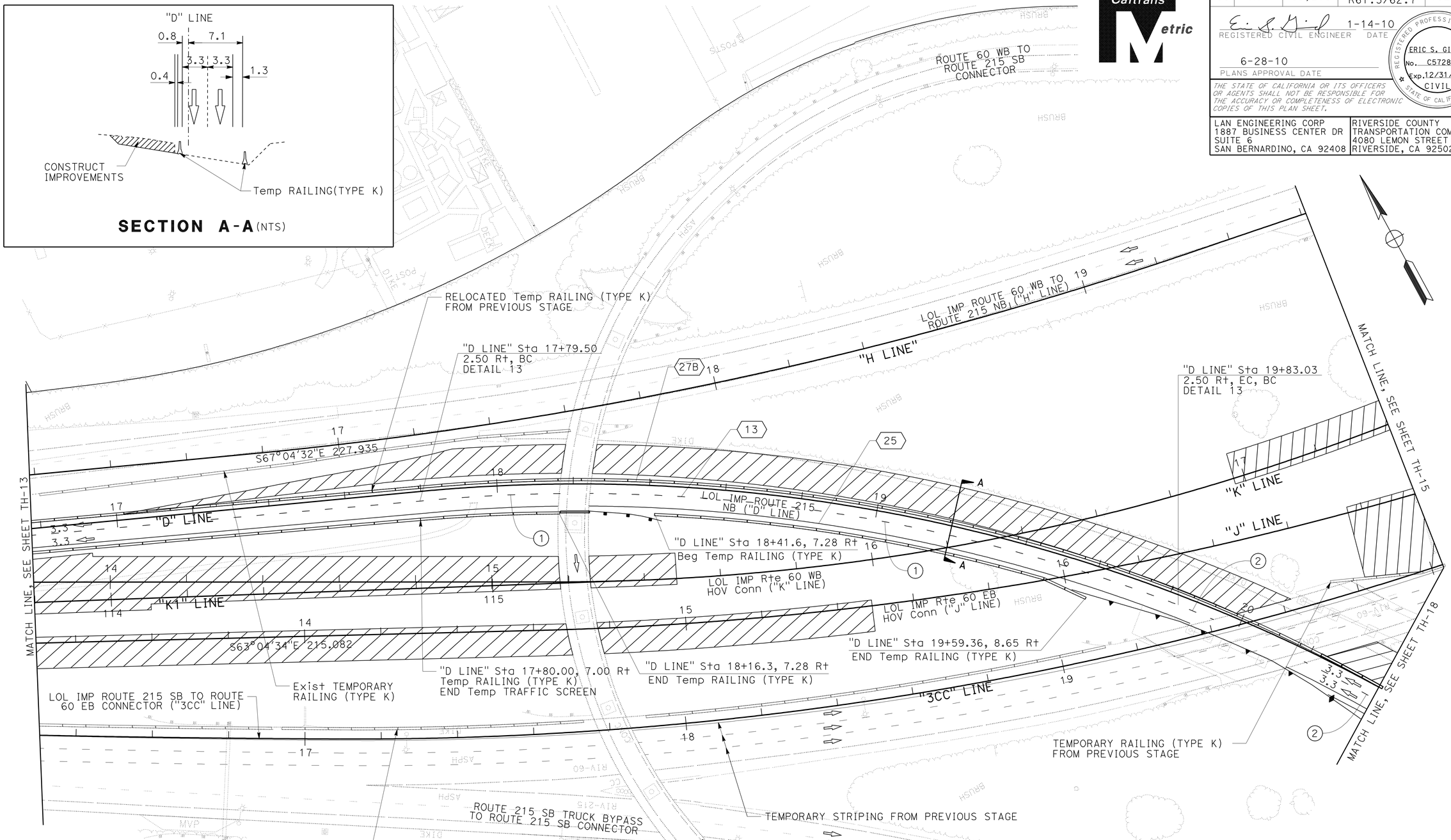

CURVE DATA				
No.	R	Δ	T	L
1	436.501	26°33'48"	103.038	202.371
2	449.592	27°44'38"	111.029	217.703

THIS PLAN IS ACCURATE FOR STAGE CONSTRUCTION AND TRAFFIC HANDLING ONLY.

ALL DIMENSIONS ARE IN METERS UNLESS OTHERWISE SHOWN

STAGE 1C
TRAFFIC HANDLING PLAN

SCALE 1:500

TH-14

REVISED BY	DATE REVISED

ERIC GIROD
NICOLAS BORRAYO
CALCULATED-DESIGNED BY

NORMAN SUYDAM
CHECKED BY

NORMAN SUYDAM
CONSULTANT FUNCTIONAL SUPERVISOR

STATE OF CALIFORNIA - DEPARTMENT OF TRANSPORTATION
Caltrans

LAST REVISION 11-09-09
DATE PLOTTED => 19-OCT-2010
TIME PLOTTED => 16:08

Dist	COUNTY	ROUTE	KILOMETER POST TOTAL PROJECT	SHEET No.	TOTAL SHEETS
08	Riv	60,215	R19.7/21.9, R61.3/62.7	193	594

REGISTERED CIVIL ENGINEER 1-14-10 DATE

6-28-10
PLANS APPROVAL DATE

REGISTERED PROFESSIONAL ENGINEER
ERIC S. GIROD
No. C57288
Exp.12/31/11
CIVIL
STATE OF CALIFORNIA

THE STATE OF CALIFORNIA OR ITS OFFICERS OR AGENTS SHALL NOT BE RESPONSIBLE FOR THE ACCURACY OR COMPLETENESS OF ELECTRONIC COPIES OF THIS PLAN SHEET.

LAN ENGINEERING CORP
1887 BUSINESS CENTER DR
SUITE 6
SAN BERNARDINO, CA 92408

RIVERSIDE COUNTY
TRANSPORTATION COMMISSION
4080 LEMON STREET
RIVERSIDE, CA 92502

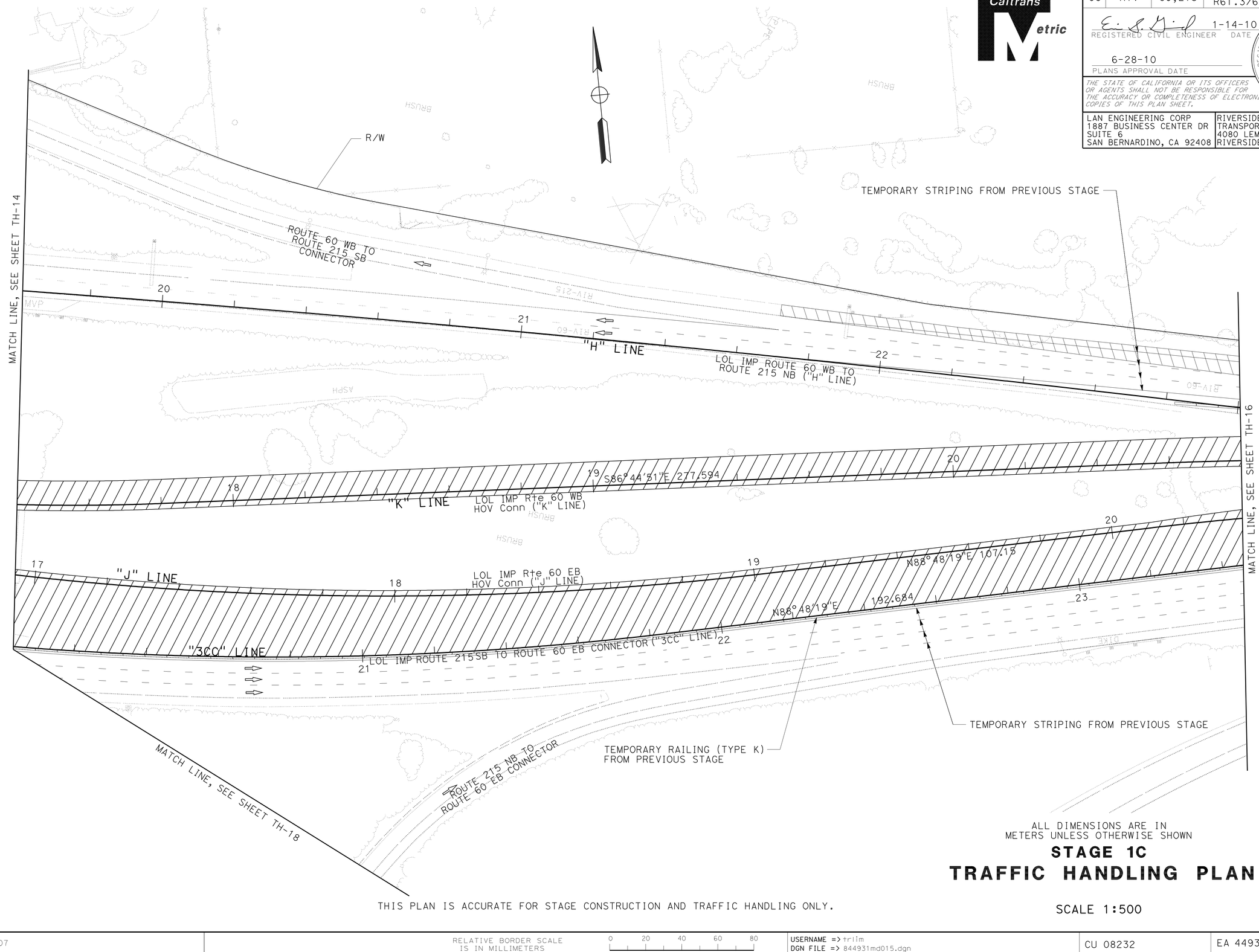

ALL DIMENSIONS ARE IN METERS UNLESS OTHERWISE SHOWN

STAGE 1C
TRAFFIC HANDLING PLAN

THIS PLAN IS ACCURATE FOR STAGE CONSTRUCTION AND TRAFFIC HANDLING ONLY.

SCALE 1:500

TH-15

STATE OF CALIFORNIA - DEPARTMENT OF TRANSPORTATION
Caltrans

CONSULTANT FUNCTIONAL SUPERVISOR: NORMAN SUYDAM
CALCULATED-DESIGNED BY: ERIC GIROD, NICOLAS BORRAYO
CHECKED BY: NORMAN SUYDAM
REVISED BY / DATE REVISED

LAST REVISION DATE PLOTTED => 19-OCT-2010
TIME PLOTTED => 16:08
11-09-09

BORDER LAST REVISED 3/1/2007
RELATIVE BORDER SCALE IS IN MILLIMETERS 0 20 40 60 80
USERNAME => trlim
DGN FILE => 844931md015.dgn
CU 08232
EA 449311

Dist	COUNTY	ROUTE	KILOMETER POST TOTAL PROJECT	SHEET No.	TOTAL SHEETS
08	Riv	60,215	R19.7/21.9, R61.3/62.7	194	594

REGISTERED CIVIL ENGINEER 1-14-10 DATE

6-28-10
PLANS APPROVAL DATE

REGISTERED PROFESSIONAL ENGINEER
ERIC S. GIROD
No. C57288
Exp.12/31/11
CIVIL
STATE OF CALIFORNIA

THE STATE OF CALIFORNIA OR ITS OFFICERS OR AGENTS SHALL NOT BE RESPONSIBLE FOR THE ACCURACY OR COMPLETENESS OF ELECTRONIC COPIES OF THIS PLAN SHEET.

LAN ENGINEERING CORP
1887 BUSINESS CENTER DR
SUITE 6
SAN BERNARDINO, CA 92408

RIVERSIDE COUNTY
TRANSPORTATION COMMISSION
4080 LEMON STREET
RIVERSIDE, CA 92502

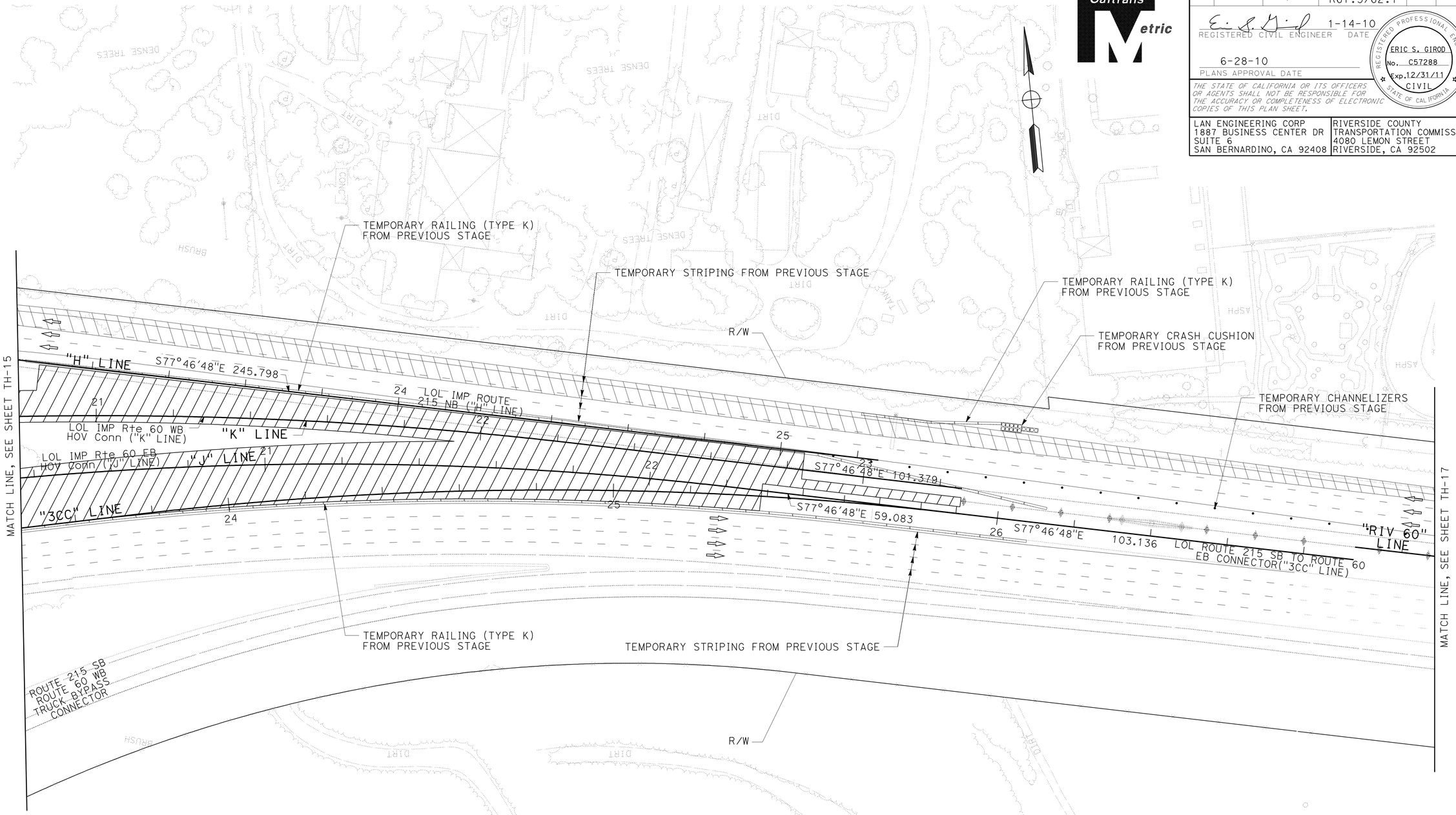

ALL DIMENSIONS ARE IN METERS UNLESS OTHERWISE SHOWN

STAGE 1C
TRAFFIC HANDLING PLAN

THIS PLAN IS ACCURATE FOR STAGE CONSTRUCTION AND TRAFFIC HANDLING ONLY.

SCALE 1:500

TH-16

REVISED BY	DATE REVISED

CALCULATED-DESIGNED BY: ERIC GIROD, NICOLAS BORRAYO
CHECKED BY: NORMAN SUYDAM
CONSULTANT FUNCTIONAL SUPERVISOR: NORMAN SUYDAM

STATE OF CALIFORNIA - DEPARTMENT OF TRANSPORTATION
Caltrans

LAST REVISION 11-09-09 | DATE PLOTTED => 19-OCT-2010 | TIME PLOTTED => 16:08

Dist	COUNTY	ROUTE	KILOMETER POST TOTAL PROJECT	SHEET No.	TOTAL SHEETS
08	Riv	60,215	R19.7/21.9, R61.3/62.7	195	594

REGISTERED CIVIL ENGINEER 1-14-10 DATE

6-28-10
PLANS APPROVAL DATE

REGISTERED PROFESSIONAL ENGINEER
ERIC S. GIROD
No. C57288
Exp.12/31/11
CIVIL
STATE OF CALIFORNIA

THE STATE OF CALIFORNIA OR ITS OFFICERS OR AGENTS SHALL NOT BE RESPONSIBLE FOR THE ACCURACY OR COMPLETENESS OF ELECTRONIC COPIES OF THIS PLAN SHEET.

LAN ENGINEERING CORP
1887 BUSINESS CENTER DR
SUITE 6
SAN BERNARDINO, CA 92408

RIVERSIDE COUNTY
TRANSPORTATION COMMISSION
4080 LEMON STREET
RIVERSIDE, CA 92502

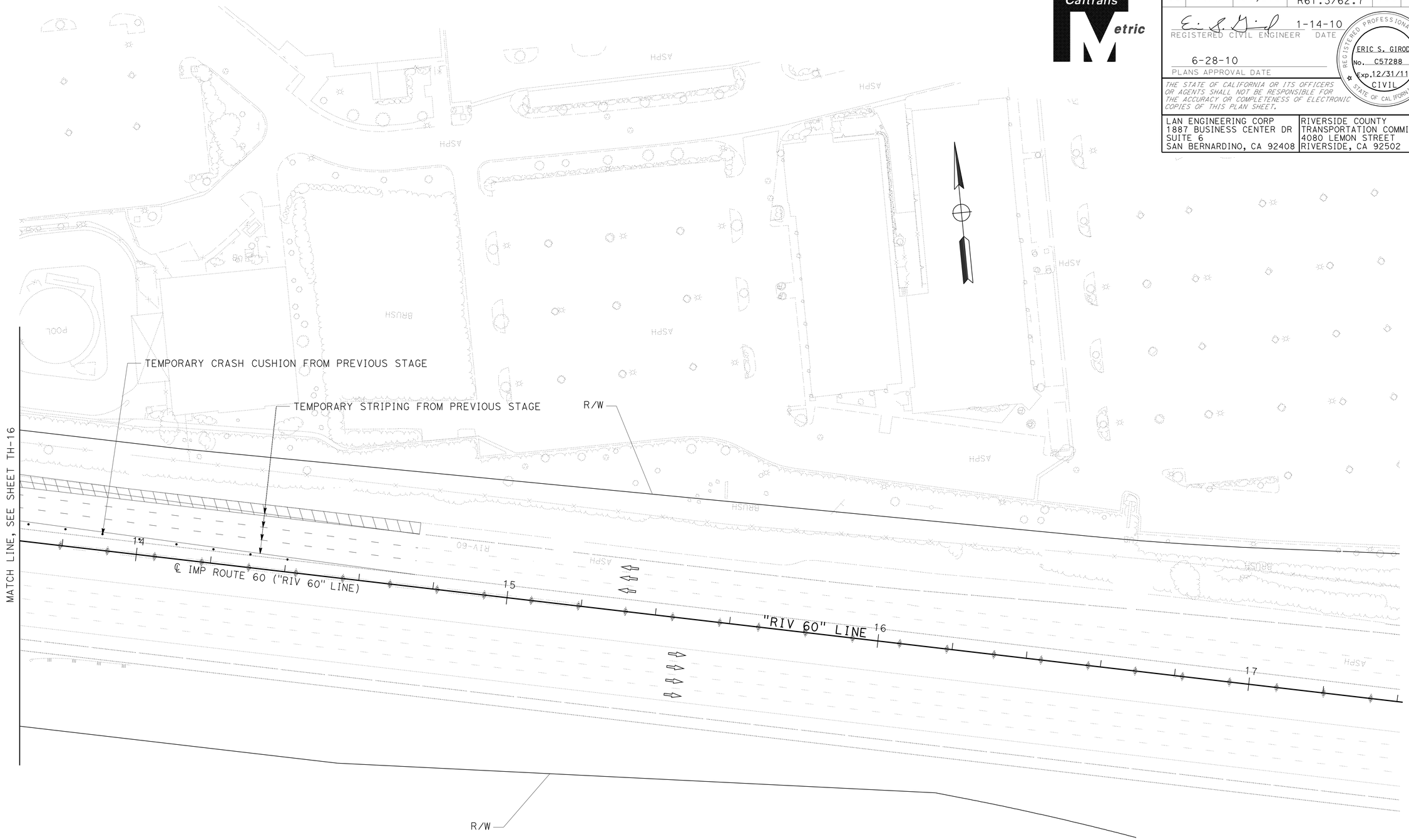

ALL DIMENSIONS ARE IN METERS UNLESS OTHERWISE SHOWN

STAGE 1C
TRAFFIC HANDLING PLAN

THIS PLAN IS ACCURATE FOR STAGE CONSTRUCTION AND TRAFFIC HANDLING ONLY.

SCALE 1:500

TH-17

STATE OF CALIFORNIA - DEPARTMENT OF TRANSPORTATION
Caltrans

CONSULTANT FUNCTIONAL SUPERVISOR: NORMAN SUYDAM
CALCULATED-DESIGNED BY: ERIC GIROD, NICOLAS BORRAYO
CHECKED BY: NORMAN SUYDAM
REVISED BY / DATE REVISED

LAST REVISION DATE PLOTTED => 19-OCT-2010
TIME PLOTTED => 16:08
11-09-09

Dist	COUNTY	ROUTE	KILOMETER POST TOTAL PROJECT	SHEET No.	TOTAL SHEETS
08	Riv	60,215	R19.7/21.9, R61.3/62.7	196	594

REGISTERED CIVIL ENGINEER 1-14-10 DATE

6-28-10
PLANS APPROVAL DATE

REGISTERED PROFESSIONAL ENGINEER ERIC S. GIROD No. C57288 Exp.12/31/11 CIVIL STATE OF CALIFORNIA

THE STATE OF CALIFORNIA OR ITS OFFICERS OR AGENTS SHALL NOT BE RESPONSIBLE FOR THE ACCURACY OR COMPLETENESS OF ELECTRONIC COPIES OF THIS PLAN SHEET.

LAN ENGINEERING CORP
1887 BUSINESS CENTER DR
SUITE 6
SAN BERNARDINO, CA 92408

RIVERSIDE COUNTY
TRANSPORTATION COMMISSION
4080 LEMON STREET
RIVERSIDE, CA 92502

CURVE DATA				
No.	R	Δ	T	L
1	449.592	27°44'38"	111.029	217.703

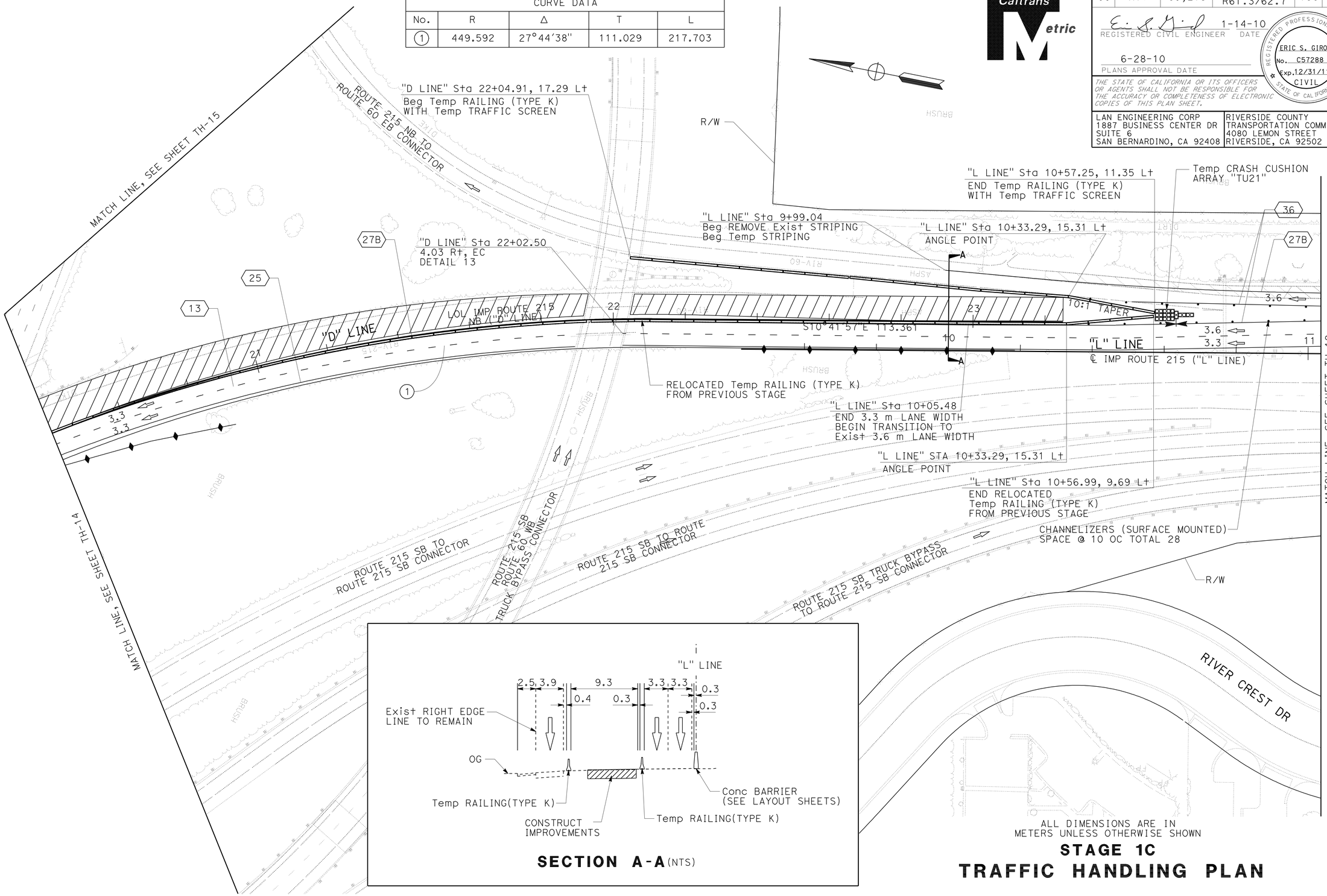

SECTION A-A (NTS)

THIS PLAN IS ACCURATE FOR STAGE CONSTRUCTION AND TRAFFIC HANDLING ONLY.

ALL DIMENSIONS ARE IN METERS UNLESS OTHERWISE SHOWN

STAGE 1C
TRAFFIC HANDLING PLAN

SCALE 1:500

TH-18

STATE OF CALIFORNIA - DEPARTMENT OF TRANSPORTATION
Caltrans

CONSULTANT FUNCTIONAL SUPERVISOR: NORMAN SUYDAM
CALCULATED-DESIGNED BY: ERIC GIROD, NICOLAS BORRAYO
CHECKED BY: NORMAN SUYDAM
REVISED BY / DATE REVISED

LAST REVISION 11-09-09
DATE PLOTTED => 19-OCT-2010
TIME PLOTTED => 16:08

Dist	COUNTY	ROUTE	KILOMETER POST TOTAL PROJECT	SHEET No.	TOTAL SHEETS
08	Riv	60,215	R19.7/21.9, R61.3/62.7	197	594

Caltrans Metric

REGISTERED CIVIL ENGINEER 1-14-10 DATE

6-28-10
PLANS APPROVAL DATE

REGISTERED PROFESSIONAL ENGINEER
ERIC S. GIROD
No. C57288
Exp.12/31/11
CIVIL
STATE OF CALIFORNIA

THE STATE OF CALIFORNIA OR ITS OFFICERS OR AGENTS SHALL NOT BE RESPONSIBLE FOR THE ACCURACY OR COMPLETENESS OF ELECTRONIC COPIES OF THIS PLAN SHEET.

LAN ENGINEERING CORP
1887 BUSINESS CENTER DR
SUITE 6
SAN BERNARDINO, CA 92408

RIVERSIDE COUNTY
TRANSPORTATION COMMISSION
4080 LEMON STREET
RIVERSIDE, CA 92502

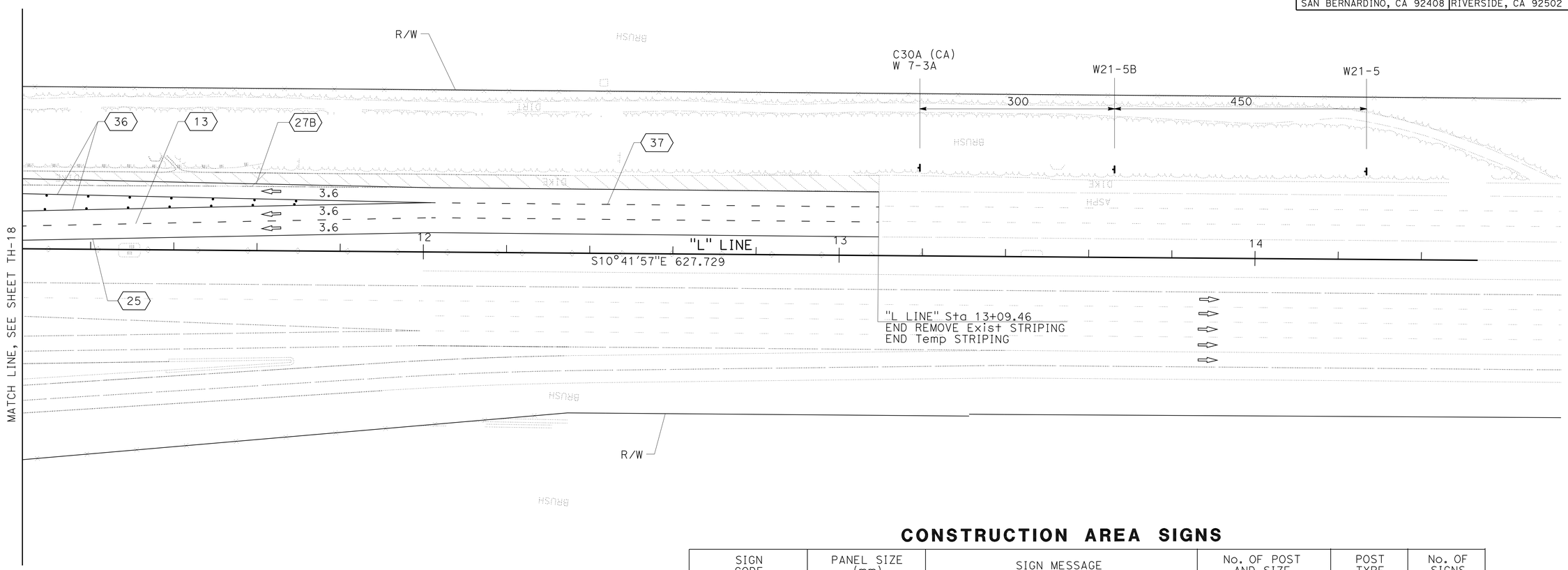

CONSTRUCTION AREA SIGNS

SIGN CODE	PANEL SIZE (mm)	SIGN MESSAGE	No. OF POST AND SIZE	POST TYPE	No. OF SIGNS
W21-5	2400 x 2400	SHOULDER WORK	2-89 mm x 140 mm	WOOD	1
W21-5B	2400 x 2400	RIGHT SHOULDER CLOSED 1500FT	2-89 mm x 140 mm	WOOD	1
W7-3A	1500 x 1200	NEXT ½ MILE	-	-	1
C30A (CA)	2400 x 2400	SHOULDER CLOSED	2-89 mm x 140 mm	WOOD	1

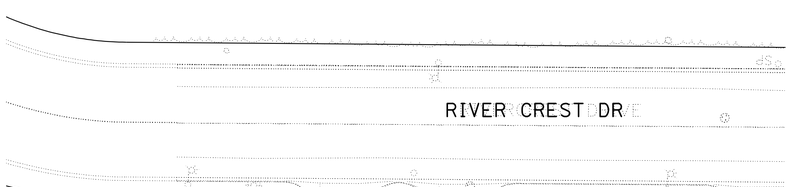

ALL DIMENSIONS ARE IN METERS UNLESS OTHERWISE SHOWN

STAGE 1C

TRAFFIC HANDLING PLAN

THIS PLAN IS ACCURATE FOR STAGE CONSTRUCTION AND TRAFFIC HANDLING ONLY.

SCALE 1:500

TH-19

STATE OF CALIFORNIA - DEPARTMENT OF TRANSPORTATION
Caltrans

CONSULTANT FUNCTIONAL SUPERVISOR: NORMAN SUYDAM

CALCULATED-DESIGNED BY: ERIC GIROD, NICOLAS BORRAYO
CHECKED BY: NORMAN SUYDAM

REVISED BY | DATE REVISED

LAST REVISION 11-09-09 | DATE PLOTTED => 19-OCT-2010 | TIME PLOTTED => 16:08

Dist	COUNTY	ROUTE	KILOMETER POST TOTAL PROJECT	SHEET No.	TOTAL SHEETS
08	Riv	60,215	R19.7/21.9, R61.3/62.7	198	594

REGISTERED CIVIL ENGINEER 1-14-10 DATE

6-28-10
PLANS APPROVAL DATE

REGISTERED PROFESSIONAL ENGINEER
ERIC S. GIROD
No. C57288
Exp.12/31/11
CIVIL
STATE OF CALIFORNIA

THE STATE OF CALIFORNIA OR ITS OFFICERS OR AGENTS SHALL NOT BE RESPONSIBLE FOR THE ACCURACY OR COMPLETENESS OF ELECTRONIC COPIES OF THIS PLAN SHEET.

LAN ENGINEERING CORP
1887 BUSINESS CENTER DR
SUITE 6
SAN BERNARDINO, CA 92408

RIVERSIDE COUNTY
TRANSPORTATION COMMISSION
4080 LEMON STREET
RIVERSIDE, CA 92502

ALL DIMENSIONS ARE IN METERS UNLESS OTHERWISE SHOWN

STAGE 2
TRAFFIC HANDLING PLAN

THIS PLAN IS ACCURATE FOR STAGE CONSTRUCTION AND TRAFFIC HANDLING ONLY.

SCALE 1:500

TH-20

STATE OF CALIFORNIA - DEPARTMENT OF TRANSPORTATION
Caltrans

CONSULTANT FUNCTIONAL SUPERVISOR: NORMAN SUYDAM
CALCULATED-DESIGNED BY: ERIC GIROD, NICOLAS BORRAYO
CHECKED BY: NORMAN SUYDAM
REVISED BY
DATE REVISED

LAST REVISION DATE PLOTTED => 19-OCT-2010
TIME PLOTTED => 16:08
11-09-09

Dist	COUNTY	ROUTE	KILOMETER POST TOTAL PROJECT	SHEET No.	TOTAL SHEETS
08	Riv	60,215	R19.7/21.9, R61.3/62.7	199	594

REGISTERED CIVIL ENGINEER 1-14-10 DATE

6-28-10
PLANS APPROVAL DATE

REGISTERED PROFESSIONAL ENGINEER ERIC S. GIROD No. C57288 Exp.12/31/11 CIVIL STATE OF CALIFORNIA

THE STATE OF CALIFORNIA OR ITS OFFICERS OR AGENTS SHALL NOT BE RESPONSIBLE FOR THE ACCURACY OR COMPLETENESS OF ELECTRONIC COPIES OF THIS PLAN SHEET.

LAN ENGINEERING CORP
1887 BUSINESS CENTER DR
SUITE 6
SAN BERNARDINO, CA 92408

RIVERSIDE COUNTY
TRANSPORTATION COMMISSION
4080 LEMON STREET
RIVERSIDE, CA 92502

CURVE DATA				
No.	R	Δ	T	L
1	621.087	14°46'53"	80.563	160.231
2	146.610	44°39'37"	61.330	116.177

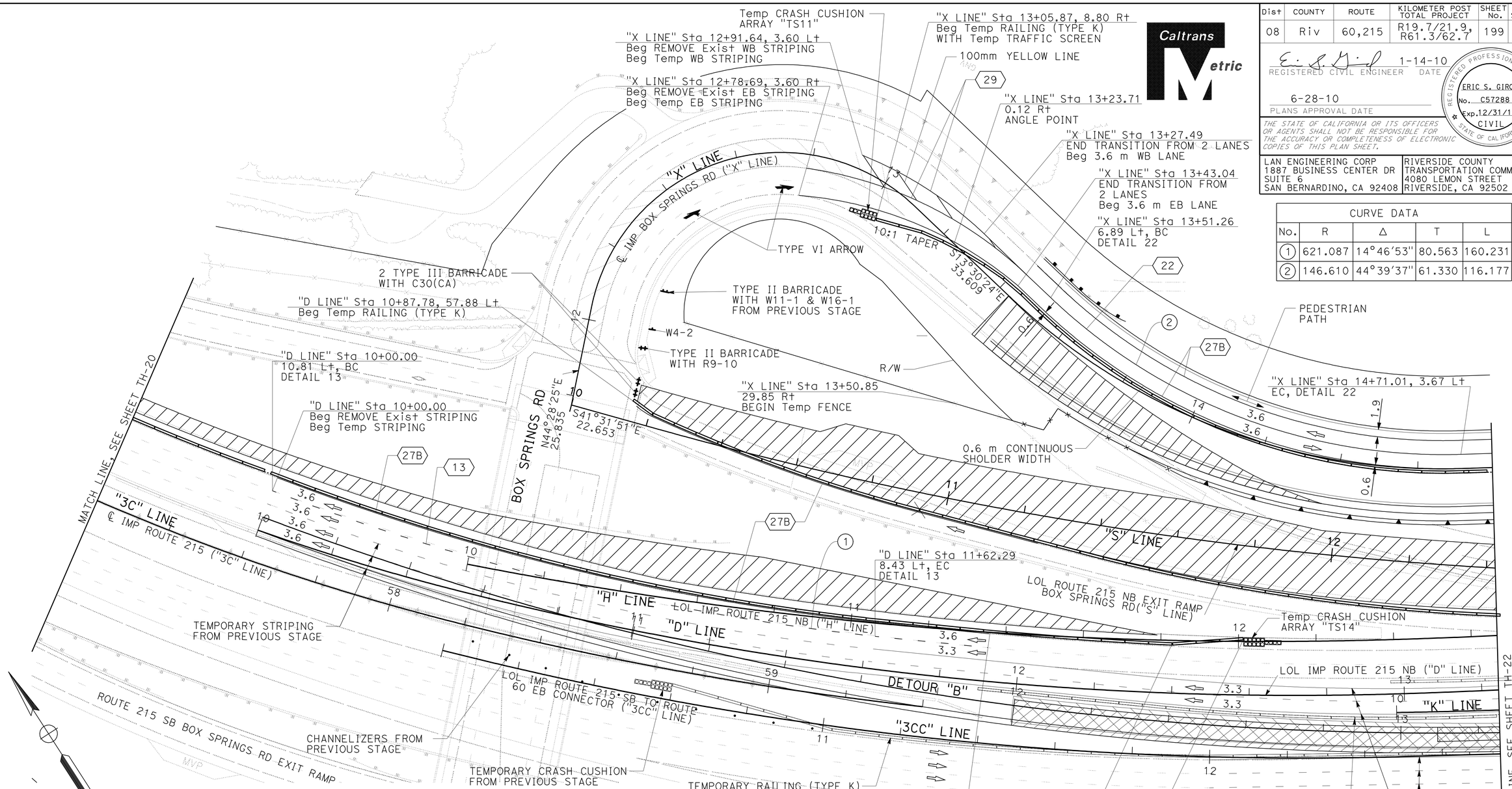

CONSTRUCTION AREA SIGNS (BARRICADE MOUNTED)

SIGN CODE	PANEL SIZE (mm)	SIGN MESSAGE	BARRICADE TYPE	No. OF SIGNS
R9-10	1200 x 300	SIDEWALK CLOSED, USE OTHER SIDE	TYPE II	1
C30 (CA)	1200 x 1200	LANE CLOSED	TYPE III	2

CONSTRUCTION AREA SIGNS

SIGN CODE	PANEL SIZE (mm)	SIGN MESSAGE	No. OF POST AND SIZE	POST TYPE	No. OF SIGNS
W4-2	900 x 900	LANE ENDS (SYMBOL)	2-89 mm x 140 mm	WOOD	1

THIS PLAN IS ACCURATE FOR STAGE CONSTRUCTION AND TRAFFIC HANDLING ONLY.

ALL DIMENSIONS ARE IN METERS UNLESS OTHERWISE SHOWN

STAGE 2
TRAFFIC HANDLING PLAN

SCALE 1:500

TH-21

STATE OF CALIFORNIA - DEPARTMENT OF TRANSPORTATION
Caltrans

CONSULTANT FUNCTIONAL SUPERVISOR: NORMAN SUYDAM
CALCULATED-DESIGNED BY: ERIC GIROD, NICOLAS BORRAYO
CHECKED BY: NORMAN SUYDAM
REVISED BY / DATE REVISED

LAST REVISION DATE PLOTTED => 19-OCT-2010
TIME PLOTTED => 16:09
11-09-09

BORDER LAST REVISED 3/1/2007
RELATIVE BORDER SCALE IS IN MILLIMETERS 0 20 40 60 80
USERNAME => trlim
DGN FILE => 844931md021.dgn
CU 08232
EA 449311

Dist	COUNTY	ROUTE	KILOMETER POST TOTAL PROJECT	SHEET No.	TOTAL SHEETS
08	Riv	60,215	R19.7/21.9, R61.3/62.7	200	594

REGISTERED CIVIL ENGINEER 1-14-10 DATE

6-28-10
PLANS APPROVAL DATE

REGISTERED PROFESSIONAL ENGINEER ERIC S. GIROD No. C57288 Exp.12/31/11 CIVIL STATE OF CALIFORNIA

THE STATE OF CALIFORNIA OR ITS OFFICERS OR AGENTS SHALL NOT BE RESPONSIBLE FOR THE ACCURACY OR COMPLETENESS OF ELECTRONIC COPIES OF THIS PLAN SHEET.

LAN ENGINEERING CORP
1887 BUSINESS CENTER DR
SUITE 6
SAN BERNARDINO, CA 92408

RIVERSIDE COUNTY
TRANSPORTATION COMMISSION
4080 LEMON STREET
RIVERSIDE, CA 92502

CONSTRUCTION AREA SIGNS

SIGN CODE	PANEL SIZE (mm)	SIGN MESSAGE	No. OF POST AND SIZE	POST TYPE	No. OF SIGNS
G85-11	3048 x 2591	BOX SPRINGS RD	2-89 mm x 140 mm	WOOD	1

CURVE DATA				
No.	R	Δ	T	L
1	148.62	59°25'29"	40.620	79.310

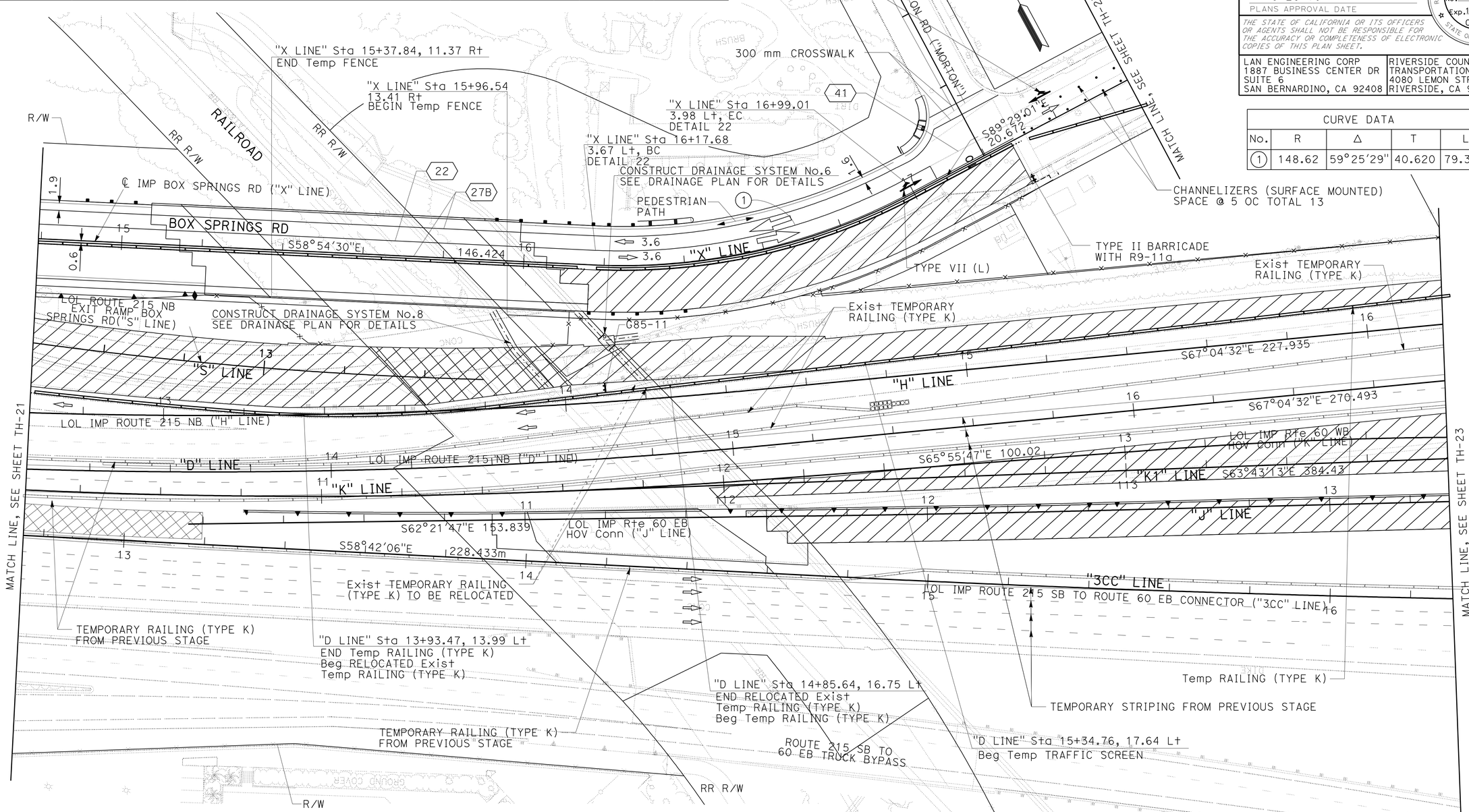

CONSTRUCTION AREA SIGNS (BARRICADE MOUNTED)

SIGN CODE	PANEL SIZE (mm)	SIGN MESSAGE	BARRICADE TYPE	No. OF SIGNS
R9-11a	1200 x 600	SIDEWALK CLOSED, CROSS HERE	TYPE II	1

ALL DIMENSIONS ARE IN METERS UNLESS OTHERWISE SHOWN

STAGE 2
TRAFFIC HANDLING PLAN

THIS PLAN IS ACCURATE FOR STAGE CONSTRUCTION AND TRAFFIC HANDLING ONLY.

SCALE 1:500

TH-22

REVISED BY | DATE REVISED
ERIC GIROD NICOLAS BORRAYO | NORMAN SUYDAM
CALCULATED-DESIGNED BY | CHECKED BY
CONSULTANT FUNCTIONAL SUPERVISOR | NORMAN SUYDAM
STATE OF CALIFORNIA - DEPARTMENT OF TRANSPORTATION
Caltrans

LAST REVISION 11-09-09 | DATE PLOTTED => 19-OCT-2010 | TIME PLOTTED => 16:09