Dist	COUNTY	ROUTE	KILOMETER POST TOTAL PROJECT	SHEET No.	TOTAL SHEETS
08	Riv	60,215	R19.7/21.9, R61.3/62.7	1	594

ACNH-X065(095)N
CMLN-6208(017)

STATE OF CALIFORNIA
DEPARTMENT OF TRANSPORTATION

PROJECT PLANS FOR CONSTRUCTION ON
STATE HIGHWAY
IN RIVERSIDE AND MORENO VALLEY ON
ROUTE 215 FROM 0.9 km NORTH OF EUCALYPTUS AVENUE UNDERCROSSING TO 0.5 km WEST OF BOX SPRINGS ROAD OVERCROSSING AND ON ROUTE 60 FROM 60/215 SEPARATION TO 0.4 KM EAST OF DAY STREET OVERCROSSING

TO BE SUPPLEMENTED BY STANDARD PLANS DATED JULY 2004

INDEX OF SHEETS

SHEET No.	DESCRIPTION
1	TITLE AND LOCATION MAP
2-6	TYPICAL CROSS SECTIONS
7-13	LAYOUTS
14-26	PROFILES AND SUPERELEVATION DIAGRAM
27-67	CONSTRUCTION DETAILS
68-73	TEMPORARY WATER POLLUTION CONTROL PLAN, DETAILS AND QUANTITIES
74-79	EROSION CONTROL PLAN, DETAILS AND QUANTITIES
80-86	CONTOUR GRADING
87-163	DRAINAGE PLANS, PROFILES, DETAILS AND QUANTITIES
164-171	UTILITY PLANS AND DETAILS
172-178	STAGE CONSTRUCTION PLANS
179-232	TRAFFIC HANDLING PLANS AND QUANTITIES
233-235	DETOUR LAYOUTS
236	CONSTRUCTION AREA SIGNS
237-255	PAVEMENT DELINEATION PLANS, DETAILS AND QUANTITIES
256-260	SUMMARY OF QUANTITIES
261-285	SIGN PLANS, DETAILS AND QUANTITIES
286-297	RETAINING WALL PLANS, DETAILS AND QUANTITIES
298-304	MOTORIST INFORMATION PLANS
305-306	IRRIGATION PLANS
307	IRRIGATION QUANTITIES
308-330	ELECTRICAL PLANS
331-404	REVISED AND NEW STANDARD PLANS

STRUCTURE PLANS

405-433	BOX SPRINGS OH (WIDEN) Br No. 56-0082R
434-464	BOX SPRINGS OH (WIDEN) Br No. 56-0082L
465-466	BOX SPRINGS ROAD OC Br No. 56-0804
467-498	WB SR60 HOV CONNECTOR Br No. 56-0841
499-529	EB SR60 HOV CONNECTOR Br No. 56-0842
530-531	WEST CONNECTOR OC Br No. 56-506
532-556	BOX SPRINGS ROAD OH (REPLACE) Br No. 56C0566
557-569	BOX SPRINGS OH (TIEBACK) Br No. 56E0036
570-581	RETAINING WALL No. RW-19 Br No. 56E0060
582-594	RETAINING WALL No. RW-20 Br No. 56E0061

THE STANDARD PLANS LIST APPLICABLE TO THIS CONTRACT IS INCLUDED IN THE NOTICE TO BIDDERS AND SPECIAL PROVISIONS BOOK.

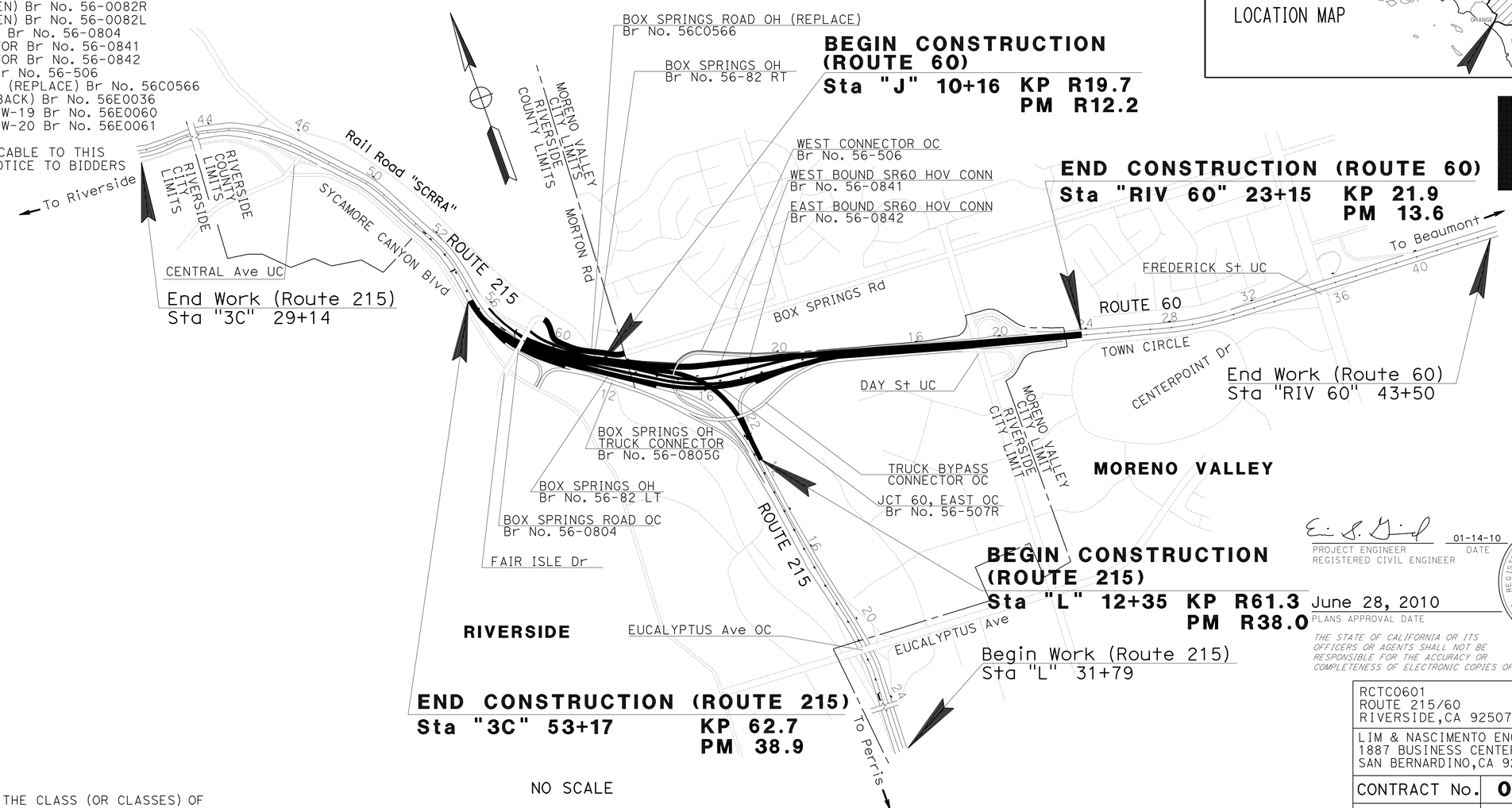

PROJECT ENGINEER REGISTERED CIVIL ENGINEER — 01-14-10 DATE

June 28, 2010
PLANS APPROVAL DATE

REGISTERED PROFESSIONAL ENGINEER — ERIC S. GIROD No. C57288 Exp. 12/31/11 CIVIL — STATE OF CALIFORNIA

THE STATE OF CALIFORNIA OR ITS OFFICERS OR AGENTS SHALL NOT BE RESPONSIBLE FOR THE ACCURACY OR COMPLETENESS OF ELECTRONIC COPIES OF THIS PLAN SHEET.

RCTC0601
ROUTE 215/60
RIVERSIDE,CA 92507

LIM & NASCIMENTO ENGINEERING CORP.
1887 BUSINESS CENTER DR, STE 6
SAN BERNARDINO,CA 92408

CONTRACT No. **08-449314**
PROJECT ID **0800000715**

THE CONTRACTOR SHALL POSSESS THE CLASS (OR CLASSES) OF LICENSE AS SPECIFIED IN THE ''NOTICE TO BIDDERS.''

APPROVED AS TO IMPACT ON STATE FACILITIES AND CONFORMANCE WITH APPLICABLE STATE STANDARDS AND PRACTICES AND THAT TECHNICAL OVERSIGHT WAS PERFORMED.

CONSULTANT DESIGN ENGINEER	REGISTRATION No.	LICENSE Exp DATE	CALTRANS DESIGN OVERSIGHT APPROVAL	DATE SIGNED
ERIC GIROD	C045857	12-31-10	DIBORO KANABOLO	1-12-10

LAST REVISION 1-12-10 — DATE PLOTTED => 19-OCT-2010 — TIME PLOTTED => 14:17

Dist	COUNTY	ROUTE	KILOMETER POST TOTAL PROJECT	SHEET No.	TOTAL SHEETS
08	Riv	60,215	R19.7/21.9, R61.3/62.7	2	594

REGISTERED CIVIL ENGINEER 1-14-10 DATE

6-28-10
PLANS APPROVAL DATE

REGISTERED PROFESSIONAL ENGINEER ERIC S. GIROD No. C57288 Exp.12/31/11 CIVIL STATE OF CALIFORNIA

THE STATE OF CALIFORNIA OR ITS OFFICERS OR AGENTS SHALL NOT BE RESPONSIBLE FOR THE ACCURACY OR COMPLETENESS OF ELECTRONIC COPIES OF THIS PLAN SHEET.

LAN ENGINEERING CORP
1887 BUSINESS CENTER DR
SUITE 6
SAN BERNARDINO, CA 92408

RIVERSIDE COUNTY
TRANSPORTATION COMMISSION
4080 LEMON STREET
RIVERSIDE, CA 92502

1 — 270 mm HMA (TYPE A)
135 mm AB (CL 2)
300 mm AS (CL 1)

2 — 300 mm HMA (TYPE A)
180 mm AB (CL 2)
360mm AS (CL 1)

3 — 150 mm HMA (TYPE A)
135 mm AB (CL 2)
255 mm AS (CL 1)

4 — 200 mm HMA (TYPE A)

5 — 30 mm HMA(OPEN GRADED) OVERLAY

6 — 155 mm HMA (TYPE A)
260 mm AB (CL 2)

7 — COLD PLANE AND OVERLAY PER DETAIL ON THIS SHEET

8 — 155 mm HMA (TYPE A)
170 mm AB (CL 2)
275 mm AS (CL 1)

9 — 95 mm HMA (TYPE A)
110 mm AB (CL 2)
155 mm AS (CL 1)

10 — 270 mm HMA (TYPE A)

11 — 245 mm JPCP
30 mm HMA (TYPE A)
110 mm LCB
155 AS (CL 2)

12 — 40 mm HMA (TYPE B)

13 — 60 mm HMA (TYPE A)
150 mm AB (CL 2)

A — Exist
300 mm AC (TYPE A)
180 mm AB (CL 2)
360 mm AS (CL 2)

B — Exist
12 mm OGAC
76 mm HMA (TYPE B)
205 mm PMCTB (TYPE A) FOR TW
& AB (CL 2) FOR Shld
457 mm AS (CL 4)

C — Exist
100 mm AC
205 mm CTB
230 mm AS

D — Exist
300 mm AC (TYPE A)
180 mm AB (CL 2)
360 mm AS (CL 1)

E — Exist
270 mm AC
135 mm AB
300 mm AS

F — Exist
210 mm AC
240 mm AB
285 mm AS

G — Exist
195 mm AC
360 mm AB

H — Exist SHOULDER
100 mm AC
205 mm PMCTB
230 mm AS

DESIGN DESIGNATION (ROUTE 60)

2002 ADT = 117,760 D = 57%
2020 ADT = 199,600 T = 6%
DHV = 16,540 V = 110 KPH

ESAL
OUTSIDE LANES = 55,000,000 TI_{20} = 14.5
SHOULDERS = 1,000,000 TI_{20} = 9.0

DESIGN DESIGNATION (ROUTE 215)

2002 ADT = 167,500 D = 53%
2020 ADT = 297,300 T = 5%
DHV = 22,770 V = 110 KPH

ESAL
OUTSIDE LANES = 96,000,000 TI_{20} = 15.5
INSIDE LANES = 30,000,000 TI_{20} = 13.5
SHOULDERS = 16,000,000 TI_{20} = 9.5

RAMPS
LANES = 2,400,000 TI_{20} = 10.0
SHOULDERS = 65,000 TI_{20} = 6.5

LOCAL / FRONTAGE ROADS
LANES = 370,000 TI_{20} = 8.0
SHOULDERS = 7,100 TI_{20} = 5.0

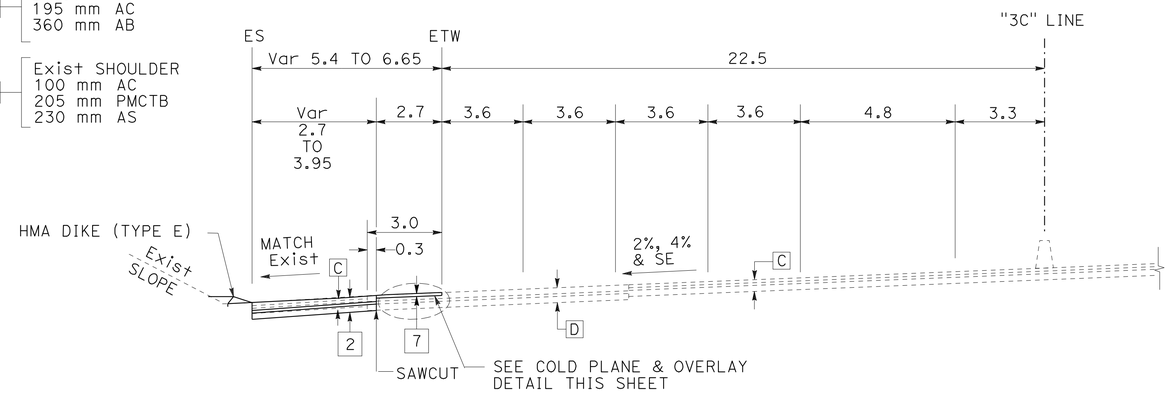

ROUTE 215
Sta "3C" 56+58.4 TO 57+61.6

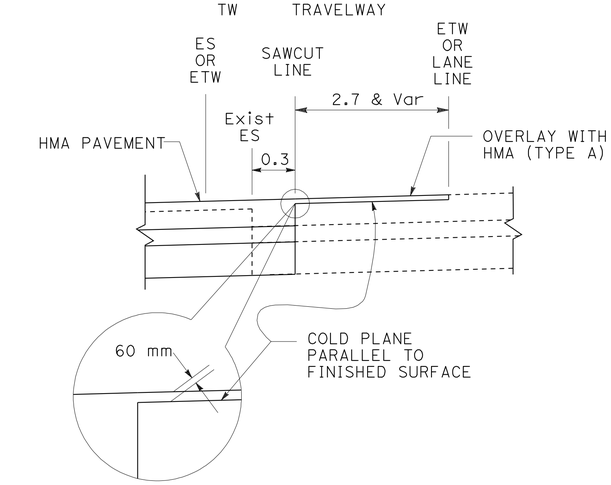

COLD PLANE & OVERLAY DETAIL
(TYPICAL)

ABBREVIATIONS:

HG	HINGE
HMA	HOT MIXED ASPHALT
HOV	HIGH OCCUPANCY VEHICLE LANES
MFL	MIXED FLOW LANES
PMTCB	PLANT-MIXED CEMENT TREATED BASE
SE	SUPERELEVATION
TW	TRAVELWAY

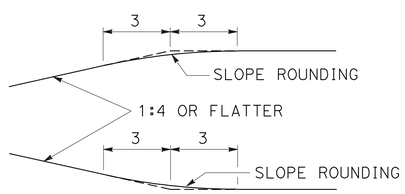

SLOPE ROUNDING DETAIL
(TYPICAL)

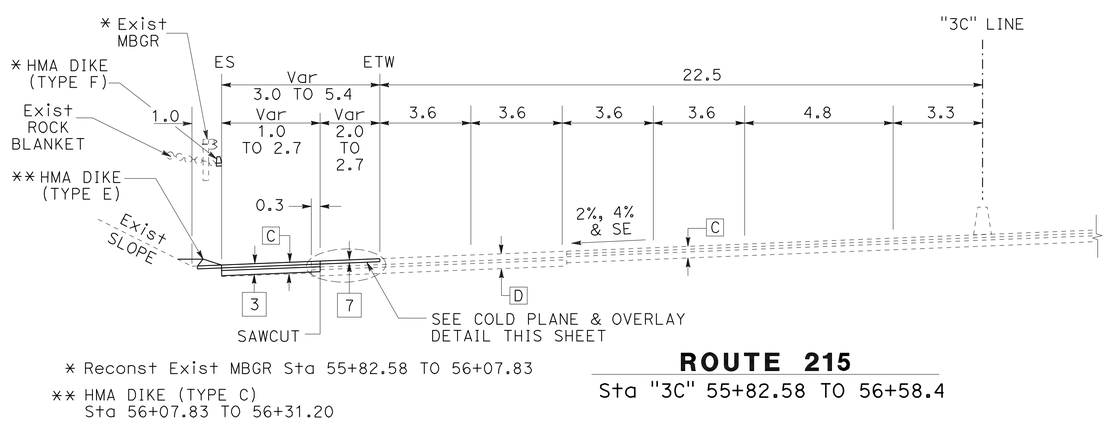

* Reconst Exist MBGR Sta 55+82.58 TO 56+07.83

** HMA DIKE (TYPE C)
Sta 56+07.83 TO 56+31.20

ROUTE 215
Sta "3C" 55+82.58 TO 56+58.4

NOTES:

1. DIMENSIONS OF THE STRUCTURAL SECTIONS ARE SUBJECT TO TOLERANCES SPECIFIED IN THE STANDARD SPECIFICATIONS.
2. SUPERELEVATION AS SHOWN OR AS DIRECTED BY THE ENGINEER.
3. FOR LOCATIONS OF CONCRETE BARRIERS, RETAINING WALLS, THRIE BEAMS, AND METAL BEAM GUARD RAILS, SEE LAYOUT SHEETS.
4. FOR Exist METAL BEAM GUARD RAIL, CONCRETE BARRIERS, THRIE BEAM TO BE REMOVED, SEE QUANTITIES SHEETS.
5. FOR COLD PLANE OF EXISTING CONCRETE PAVEMENT LIMITS, SEE SHEETS C-8 TO C-14.
6. FOR HMA (OPEN GRADED) LIMITS, SEE SHEETS C-24 TO C-26.

ALL DIMENSIONS ARE IN METERS UNLESS OTHERWISE SHOWN

TYPICAL CROSS SECTIONS

NO SCALE

X-1

REVISED BY | DATE REVISED
MIKE FLORES | NORMAN SUYDAM
CALCULATED-DESIGNED BY | CHECKED BY
CONSULTANT FUNCTIONAL SUPERVISOR | NORMAN SUYDAM
STATE OF CALIFORNIA - DEPARTMENT OF TRANSPORTATION
Caltrans

LAST REVISION 11-09-09 | DATE PLOTTED => 19-OCT-2010 | TIME PLOTTED => 15:27

Dist	COUNTY	ROUTE	KILOMETER POST TOTAL PROJECT	SHEET No.	TOTAL SHEETS
08	Riv	60,215	R19.7/21.9, R61.3/62.7	3	594

REGISTERED CIVIL ENGINEER 1-14-10 DATE

6-28-10
PLANS APPROVAL DATE

REGISTERED PROFESSIONAL ENGINEER
ERIC S. GIROD
No. C57288
Exp.12/31/11
CIVIL
STATE OF CALIFORNIA

THE STATE OF CALIFORNIA OR ITS OFFICERS OR AGENTS SHALL NOT BE RESPONSIBLE FOR THE ACCURACY OR COMPLETENESS OF ELECTRONIC COPIES OF THIS PLAN SHEET.

LAN ENGINEERING CORP
1887 BUSINESS CENTER DR
SUITE 6
SAN BERNARDINO, CA 92408

RIVERSIDE COUNTY
TRANSPORTATION COMMISSION
4080 LEMON STREET
RIVERSIDE, CA 92502

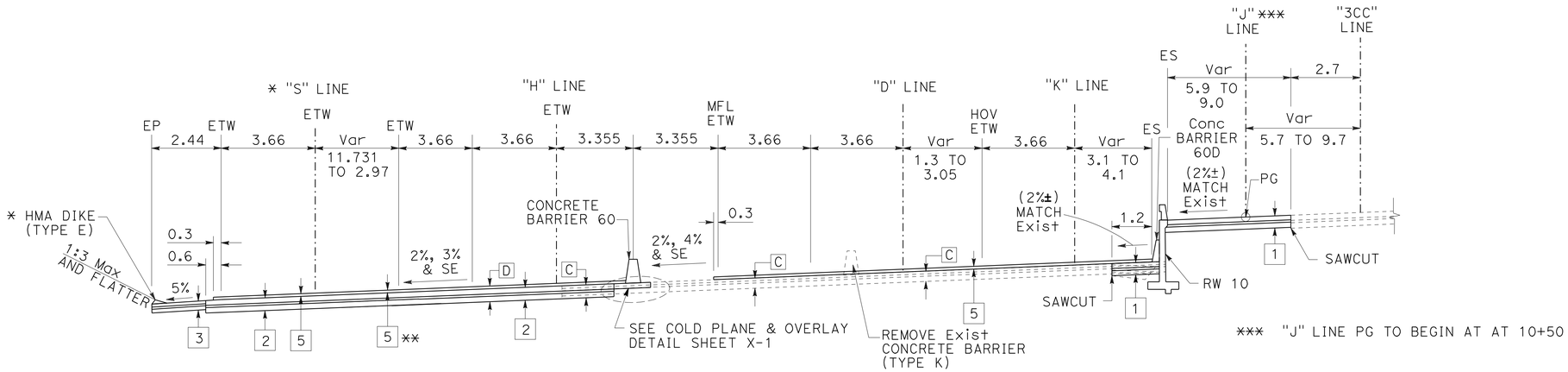

* Sta "S" 12+26.88 TO 13+16.6

** Sta "H" 12+51.5 TO 13+60.2

ROUTE 60 WB Conn
Sta "H" 12+51.5 TO 13+60.18

ROUTE 215 NB
Sta "D" 13+09.3 TO 14+19.25

ROUTE 60 HOV EB Conn
STA "J" 10+30 TO 10+91.83

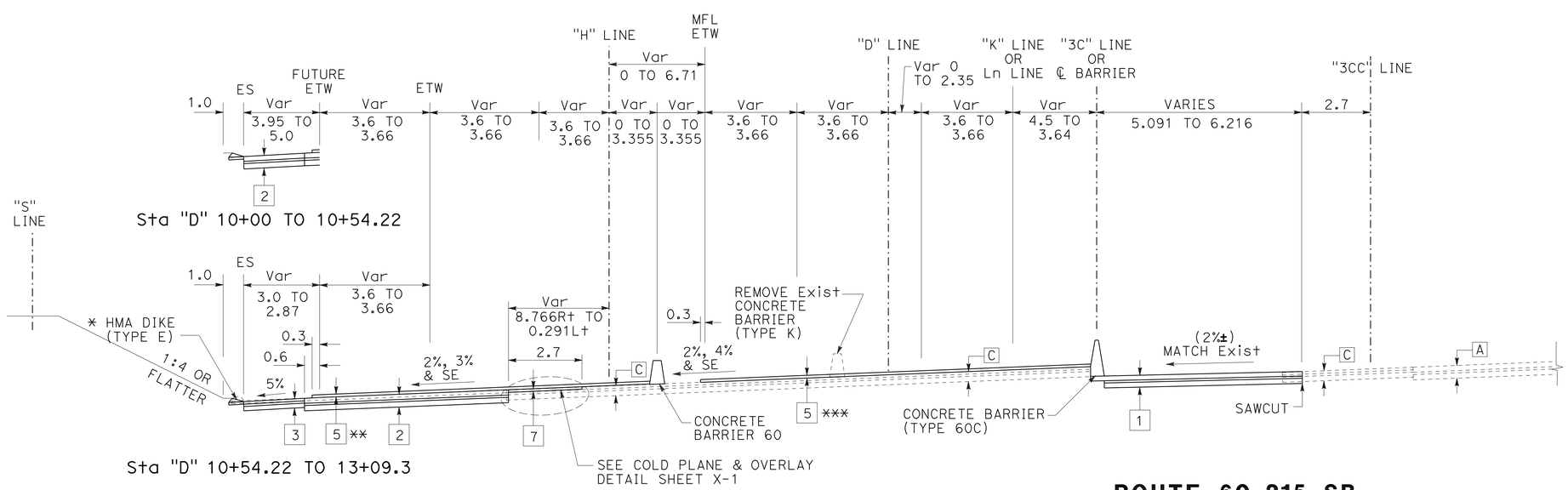

* 1 HMA DIKE (TYPE F) "3C" 58+16.60 TO 58+67.99
  2 HMA DIKE (TYPE C) "3C" 58+67.99 TO 58+93.33
  3 ROCK BLANKET SEE LAYOUT FOR LOCATION

** BEGIN AT "H" Sta 12+36.55 TO 12+26.88

*** BEGIN AT "D" Sta 12+97.865

ROUTE 215 NB
Sta "D" 10+00 TO 13+09.3

ROUTE 60 215 SB
Sta "3CC" 10+84.28 TO 13+29.18
= STA "J" 10+30

ALL DIMENSIONS ARE IN METERS UNLESS OTHERWISE SHOWN

TYPICAL CROSS SECTIONS
NO SCALE

X-2

STATE OF CALIFORNIA - DEPARTMENT OF TRANSPORTATION
Caltrans

CONSULTANT FUNCTIONAL SUPERVISOR: NORMAN SUYDAM
CALCULATED-DESIGNED BY: MIKE FLORES
CHECKED BY: NORMAN SUYDAM
REVISED BY / DATE REVISED

LAST REVISION 11-09-09
DATE PLOTTED => 19-OCT-2010
TIME PLOTTED => 15:27

Dist	COUNTY	ROUTE	KILOMETER POST TOTAL PROJECT	SHEET No.	TOTAL SHEETS
08	Riv	60,215	R19.7/21.9, R61.3/62.7	4	594

Caltrans Metric

REGISTERED CIVIL ENGINEER 1-14-10 DATE

6-28-10
PLANS APPROVAL DATE

REGISTERED PROFESSIONAL ENGINEER ERIC S. GIROD No. C57288 Exp.12/31/11 CIVIL STATE OF CALIFORNIA

THE STATE OF CALIFORNIA OR ITS OFFICERS OR AGENTS SHALL NOT BE RESPONSIBLE FOR THE ACCURACY OR COMPLETENESS OF ELECTRONIC COPIES OF THIS PLAN SHEET.

LAN ENGINEERING CORP
1887 BUSINESS CENTER DR
SUITE 6
SAN BERNARDINO, CA 92408

RIVERSIDE COUNTY
TRANSPORTATION COMMISSION
4080 LEMON STREET
RIVERSIDE, CA 92502

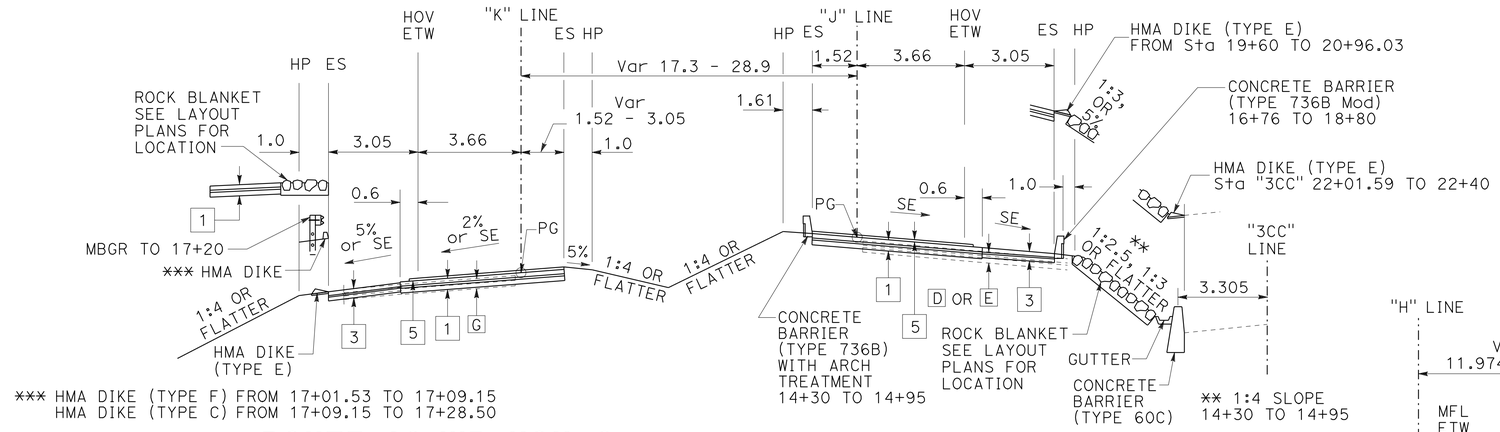

*** HMA DIKE (TYPE F) FROM 17+01.53 TO 17+09.15
HMA DIKE (TYPE C) FROM 17+09.15 TO 17+28.50

ROUTE 60 WB HOV Conn
Sta "K" 16+97.24 TO 21+02.714

ROUTE 60 EB HOV Conn
Sta "J" 16+76.71 TO 20+11.06
Sta "J" 14+30 TO 14+95

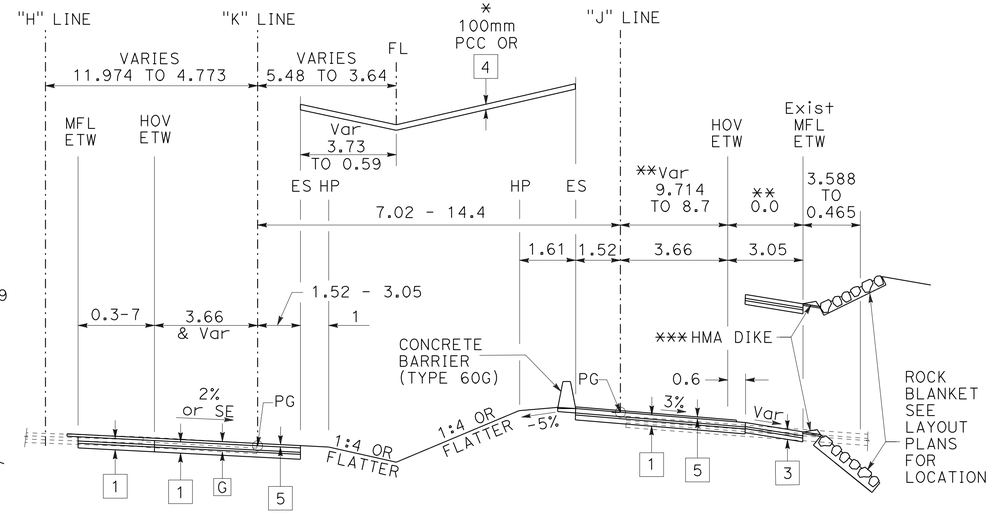

* 100 mm PCC WITH BROOM FINISH FROM Sta "J" 20+81 TO 21+20
PAVEMENT 4 FROM Sta "J" 21+20 TO 21+95.04
** FROM Sta "J" 20+96 TO 21+95.04
*** FROM Sta "J" 20+11.06 TO 20+96

ROUTE 60 WB HOV Conn
Sta "K" 21+02.714 TO 22+39.88

ROUTE 60 EB HOV Conn
Sta "J" 20+11.06 TO 21+95.03

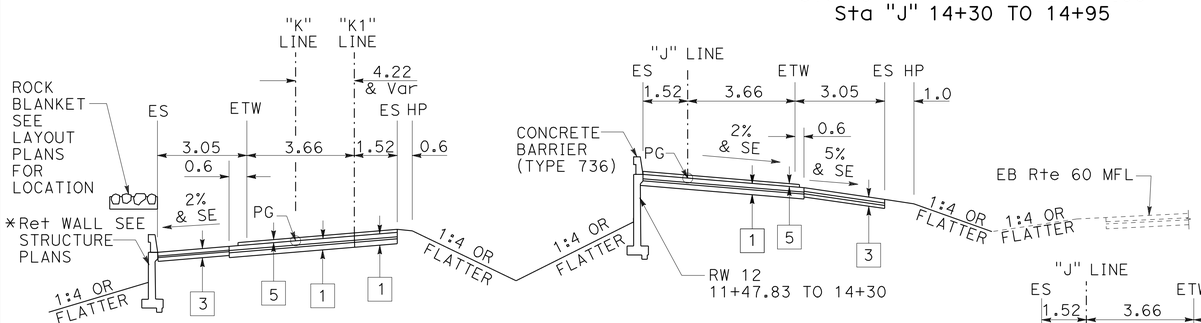

* FROM 14+32.56 TO 15+57.47

ROUTE 60 WB HOV Conn
Sta "K" 13+95.45 TO 15+48.49

ROUTE 60 EB HOV Conn
Sta "J" 13+60 TO 14+30

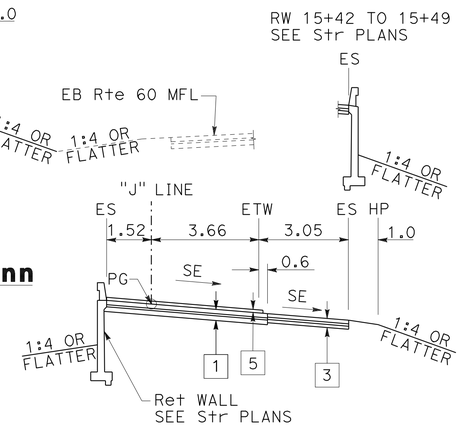

ROUTE 60 EB HOV Conn
Sta "J" 14+95 TO 15+49

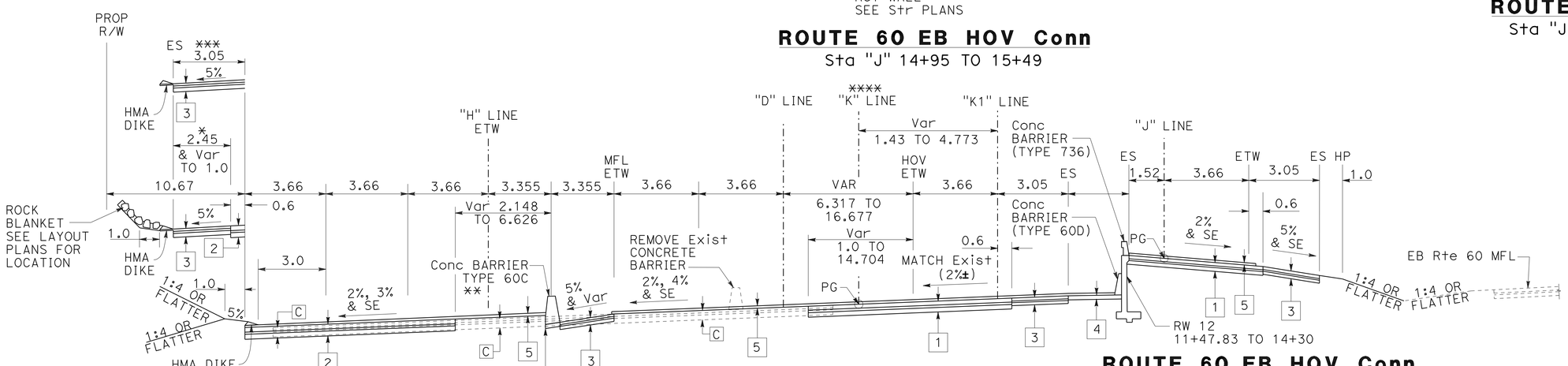

*FROM Sta "H" 14+15.96 TO 15+00
***FROM Sta "H" 15+39.67 TO 15+91.39

** Conc BARRIER TYPE 60 15+97.50 TO 16+21.90

**** "K" LINE PG BEGINS AT 12+44.688

ROUTE 60 WB Conn
Sta "H" 14+15.96 TO 16+21.9

ROUTE 215 NB
Sta "D" 14+90 TO 16+57.185

ROUTE 60 WB HOV Conn
Sta "K" 11+95 TO 13+95.45

ROUTE 60 EB HOV Conn
Sta "J" 11+70.14 TO 13+60

ALL DIMENSIONS ARE IN METERS UNLESS OTHERWISE SHOWN

TYPICAL CROSS SECTIONS
NO SCALE

X-3

STATE OF CALIFORNIA - DEPARTMENT OF TRANSPORTATION
Caltrans

CONSULTANT FUNCTIONAL SUPERVISOR: NORMAN SUYDAM
CALCULATED-DESIGNED BY: MIKE FLORES
CHECKED BY: NORMAN SUYDAM
REVISED BY
DATE REVISED

LAST REVISION DATE PLOTTED => 19-OCT-2010
11-09-09 TIME PLOTTED => 15:27

Dist	COUNTY	ROUTE	KILOMETER POST TOTAL PROJECT	SHEET No.	TOTAL SHEETS
08	Riv	60,215	R19.7/21.9, R61.3/62.7	5	594

REGISTERED CIVIL ENGINEER 1-14-10 DATE

6-28-10
PLANS APPROVAL DATE

REGISTERED PROFESSIONAL ENGINEER ERIC S. GIROD No. C57288 Exp.12/31/11 CIVIL STATE OF CALIFORNIA

THE STATE OF CALIFORNIA OR ITS OFFICERS OR AGENTS SHALL NOT BE RESPONSIBLE FOR THE ACCURACY OR COMPLETENESS OF ELECTRONIC COPIES OF THIS PLAN SHEET.

LAN ENGINEERING CORP
1887 BUSINESS CENTER DR
SUITE 6
SAN BERNARDINO, CA 92408

RIVERSIDE COUNTY
TRANSPORTATION COMMISSION
4080 LEMON STREET
RIVERSIDE, CA 92502

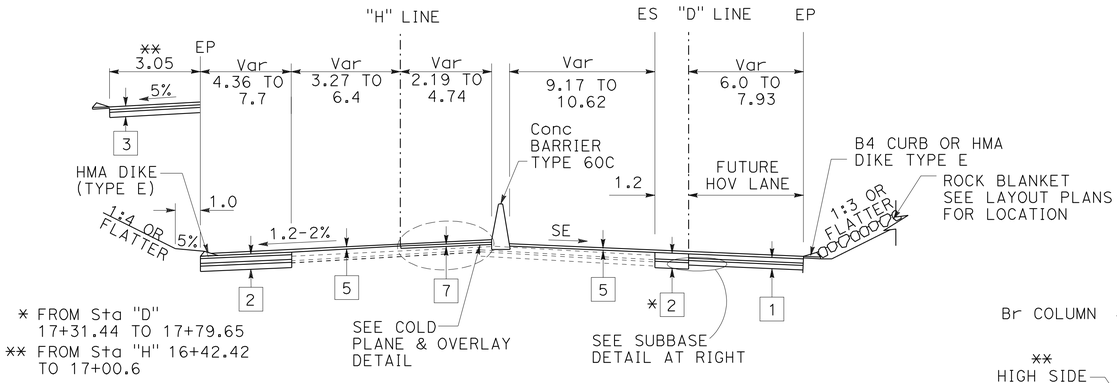

ROUTE 60 WB Conn
Sta "H" 16+21.90 TO 17+36.32

ROUTE 215 NB Conn
Sta "D" 16+89.71 TO 17+79.685

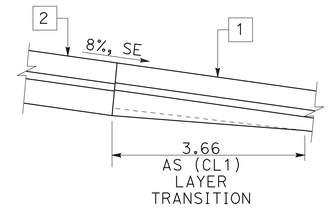

SUBBASE DETAIL
Sta "D" 16+83.92 TO 19+92.41
NTS

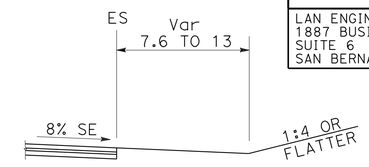

Sta "D" 21+13 TO 21+97.32

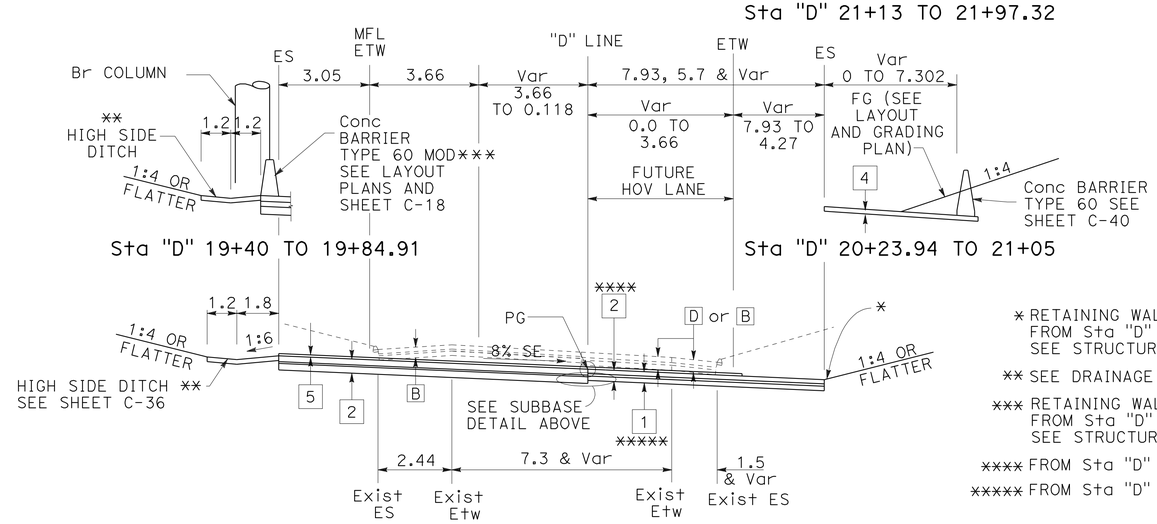

Sta "D" 19+40 TO 19+84.91

Sta "D" 20+23.94 TO 21+05

ROUTE 215 NB Conn
Sta "D" 18+40 TO 21+97.32

* RETAINING WALL No. 56E0060 FROM Sta "D" 19+55 TO 20+23.94 SEE STRUCTURE PLANS

** SEE DRAINAGE PLANS

*** RETAINING WALL No. 56E0061 FROM Sta "D" 20+00 TO 20+70 SEE STRUCTURE PLANS

**** FROM Sta "D" 19+92.41 TO 21+97.32

***** FROM Sta "D" 18+40.00 TO 19+92.41

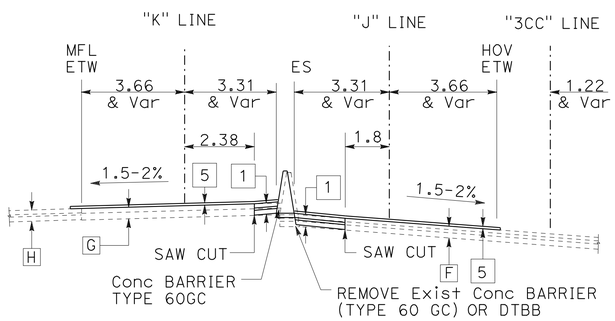

ROUTE 60 WB HOV Conn
Sta "K" 22+84.09 TO 23+25.78

ROUTE 60 EB HOV Conn
Sta "J" 22+29.28 TO 22+80.86

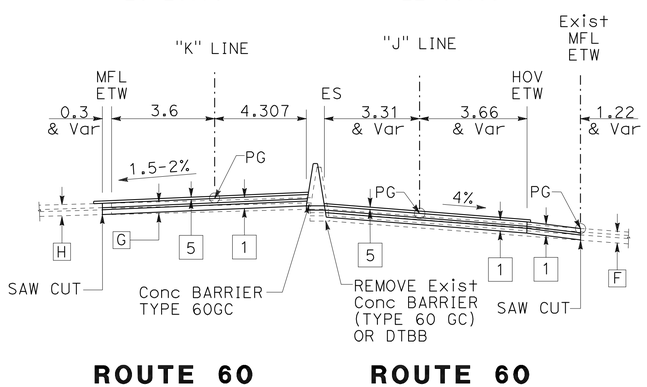

ROUTE 60 WB HOV Conn
Sta "K" 22+39.88 TO 22+84.09

ROUTE 60 EB HOV Conn
Sta "J" 21+95.03 TO 22+29.28

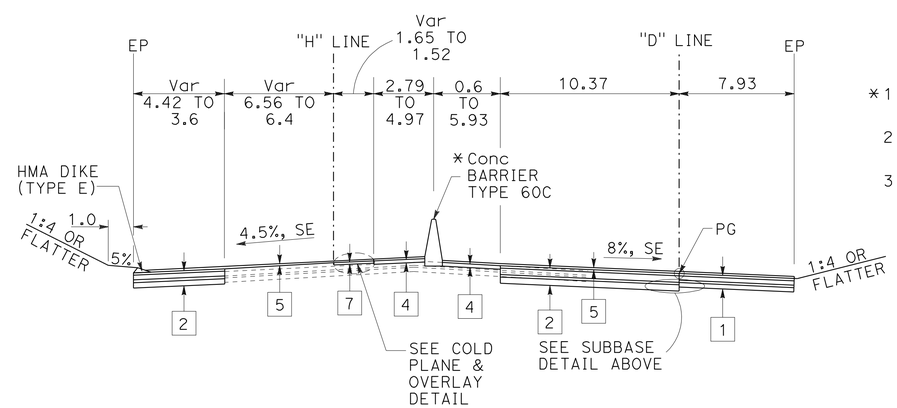

*1 Conc BARRIER TYPE 60E FROM Sta "H" 17+51.01 TO Sta 17+78.10

2 Conc BARRIER TYPE 60 FROM Sta "H" 17+78.10 TO Sta 17+81.07

3 MBGR FROM Sta "H" 17+81.07 TO 18+04.89

ROUTE 60 WB Conn
Sta "H" 17+36.32 TO 18+09

ROUTE 215 NB Conn
Sta "D" 17+79.685 TO 18+40

ALL DIMENSIONS ARE IN METERS UNLESS OTHERWISE SHOWN

TYPICAL CROSS SECTIONS

NO SCALE

X-4

REVISED BY	DATE REVISED
MIKE FLORES	NORMAN SUYDAM
CALCULATED-DESIGNED BY	CHECKED BY
CONSULTANT FUNCTIONAL SUPERVISOR	NORMAN SUYDAM

STATE OF CALIFORNIA - DEPARTMENT OF TRANSPORTATION

LAST REVISION 11-09-09 | DATE PLOTTED => 19-OCT-2010 | TIME PLOTTED => 15:28

Dist	COUNTY	ROUTE	KILOMETER POST TOTAL PROJECT	SHEET No.	TOTAL SHEETS
08	Riv	60,215	R19.7/21.9, R61.3/62.7	6	594

REGISTERED CIVIL ENGINEER 1-14-10 DATE

6-28-10
PLANS APPROVAL DATE

REGISTERED PROFESSIONAL ENGINEER ERIC S. GIROD No. C57288 Exp.12/31/11 CIVIL STATE OF CALIFORNIA

THE STATE OF CALIFORNIA OR ITS OFFICERS OR AGENTS SHALL NOT BE RESPONSIBLE FOR THE ACCURACY OR COMPLETENESS OF ELECTRONIC COPIES OF THIS PLAN SHEET.

LAN ENGINEERING CORP
1887 BUSINESS CENTER DR
SUITE 6
SAN BERNARDINO, CA 92408

RIVERSIDE COUNTY
TRANSPORTATION COMMISSION
4080 LEMON STREET
RIVERSIDE, CA 92502

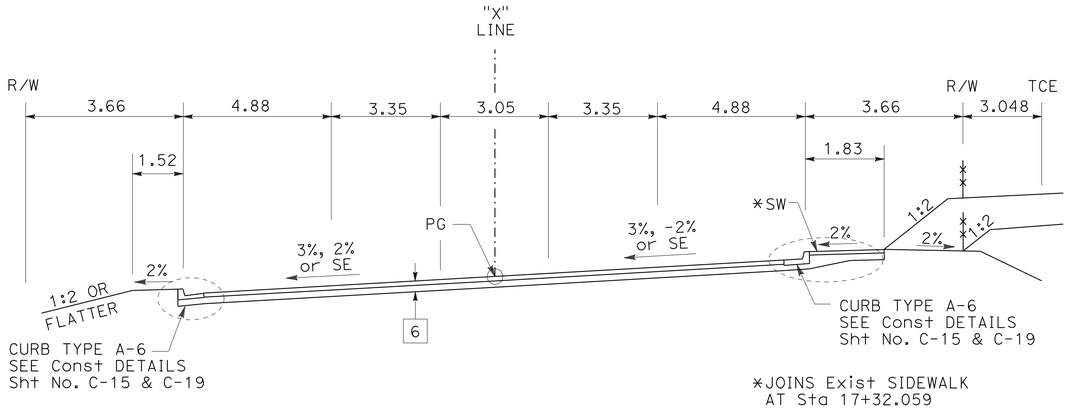

BOX SPRINGS Rd

Sta "X" 16+02.32 TO 17+02.28 **

** FOR STA 17+02.28 THROUGH 17+27.18,
SEE Const DETAILS SHEET C-15

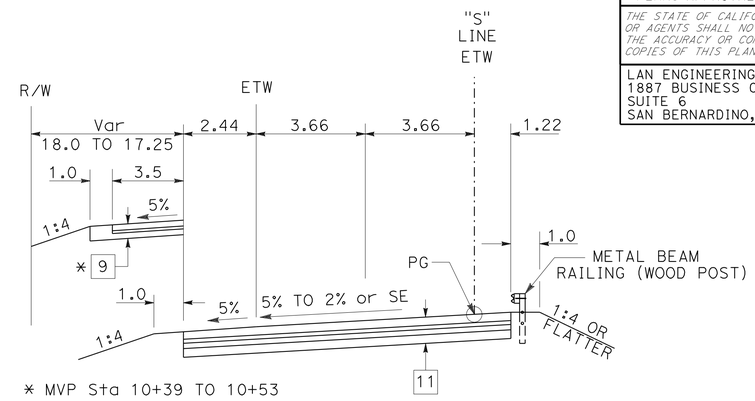

* MVP Sta 10+39 TO 10+53

ROUTE 215 NB EXIT RAMP AT BOX SPRINGS Rd

Sta "S" 10+15.07 TO 10+64.11

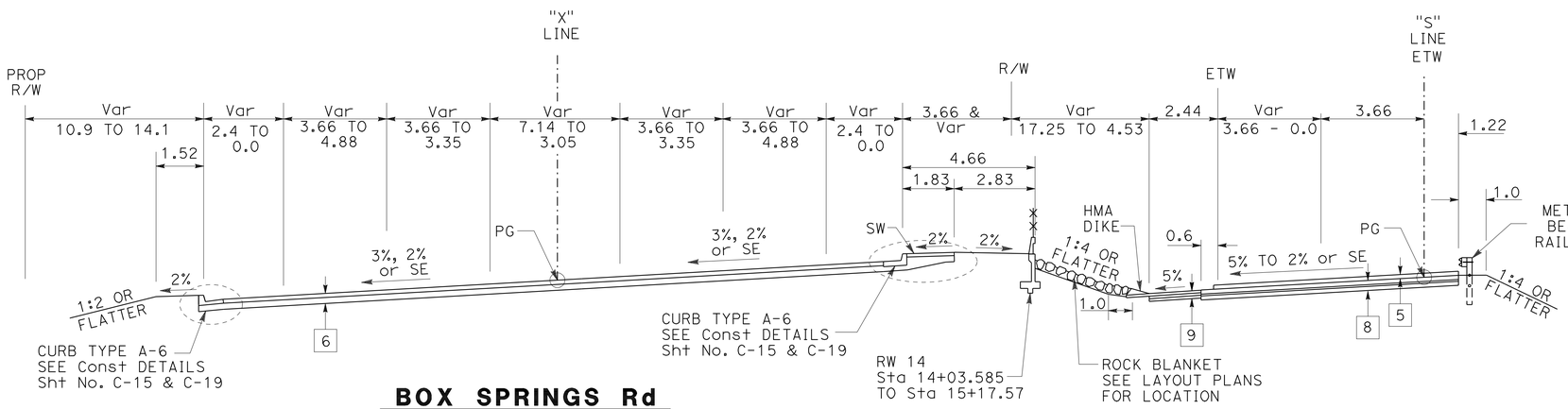

BOX SPRINGS Rd

Sta "X" 13+43.04 TO 15+07

ROUTE 215 NB EXIT RAMP AT BOX SPRINGS Rd

Sta "S" 10+64.11 TO 12+26.88

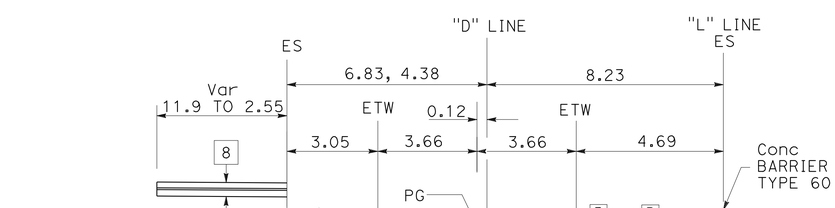

ROUTE 215 NB Conn

Sta "D" 21+97.32 TO 23+25

ALL DIMENSIONS ARE IN
METERS UNLESS OTHERWISE SHOWN

TYPICAL CROSS SECTIONS

NO SCALE

X-5

STATE OF CALIFORNIA - DEPARTMENT OF TRANSPORTATION
Caltrans

CONSULTANT FUNCTIONAL SUPERVISOR: NORMAN SUYDAM
CALCULATED-DESIGNED BY: MIKE FLORES
CHECKED BY: NORMAN SUYDAM
REVISED BY
DATE REVISED

LAST REVISION 11-09-09
DATE PLOTTED => 19-OCT-2010
TIME PLOTTED => 15:28

Dist	COUNTY	ROUTE	KILOMETER POST TOTAL PROJECT	SHEET No.	TOTAL SHEETS
08	Riv	60,215	R19.7/21.9, R61.3/62.7	7	594

REGISTERED CIVIL ENGINEER 1-14-10 DATE

6-28-10
PLANS APPROVAL DATE

REGISTERED PROFESSIONAL ENGINEER ERIC S. GIROD No. C57288 Exp.12/31/11 CIVIL STATE OF CALIFORNIA

THE STATE OF CALIFORNIA OR ITS OFFICERS OR AGENTS SHALL NOT BE RESPONSIBLE FOR THE ACCURACY OR COMPLETENESS OF ELECTRONIC COPIES OF THIS PLAN SHEET.

LAN ENGINEERING CORP
1887 BUSINESS CENTER DR
SUITE 6
SAN BERNARDINO, CA 92408

RIVERSIDE COUNTY
TRANSPORTATION COMMISSION
4080 LEMON STREET
RIVERSIDE, CA 92502

Caltrans Metric

LEGEND:

- (No) CURVE DATA
- [No] HMA PAVEMENT No. SEE SHEET X-1 FOR DESCRIPTIONS
- ESA ENVIRONMENTALLY SENSITIVE AREA - RIPARIAN HABITAT
- SCRRA SOUTHERN CALIFORNIA RAIL ROAD AUTHORITY
- AFTS ALTERNATIVE FLARED TERMINAL SYSTEM
- C/F CUT/FILL
- CF CURB FACE
- MVP MAINTENANCE VEHICLE PULLOUT
- C&G CURB AND GUTTER
- TCE TEMPORARY CONSTRUCTION EASEMENT
- ROCK BLANKET
- HMA PAVEMENT [1]
- HMA PAVEMENT [2]
- HMA PAVEMENT [3]
- HMA PAVEMENT [4]
- HMA PAVEMENT [6]
- HMA PAVEMENT [7] [10]
- HMA PAVEMENT [8]
- HMA PAVEMENT [9]
- JPC PAVEMENT [11]
- HMA PAVEMENT [12] [13]

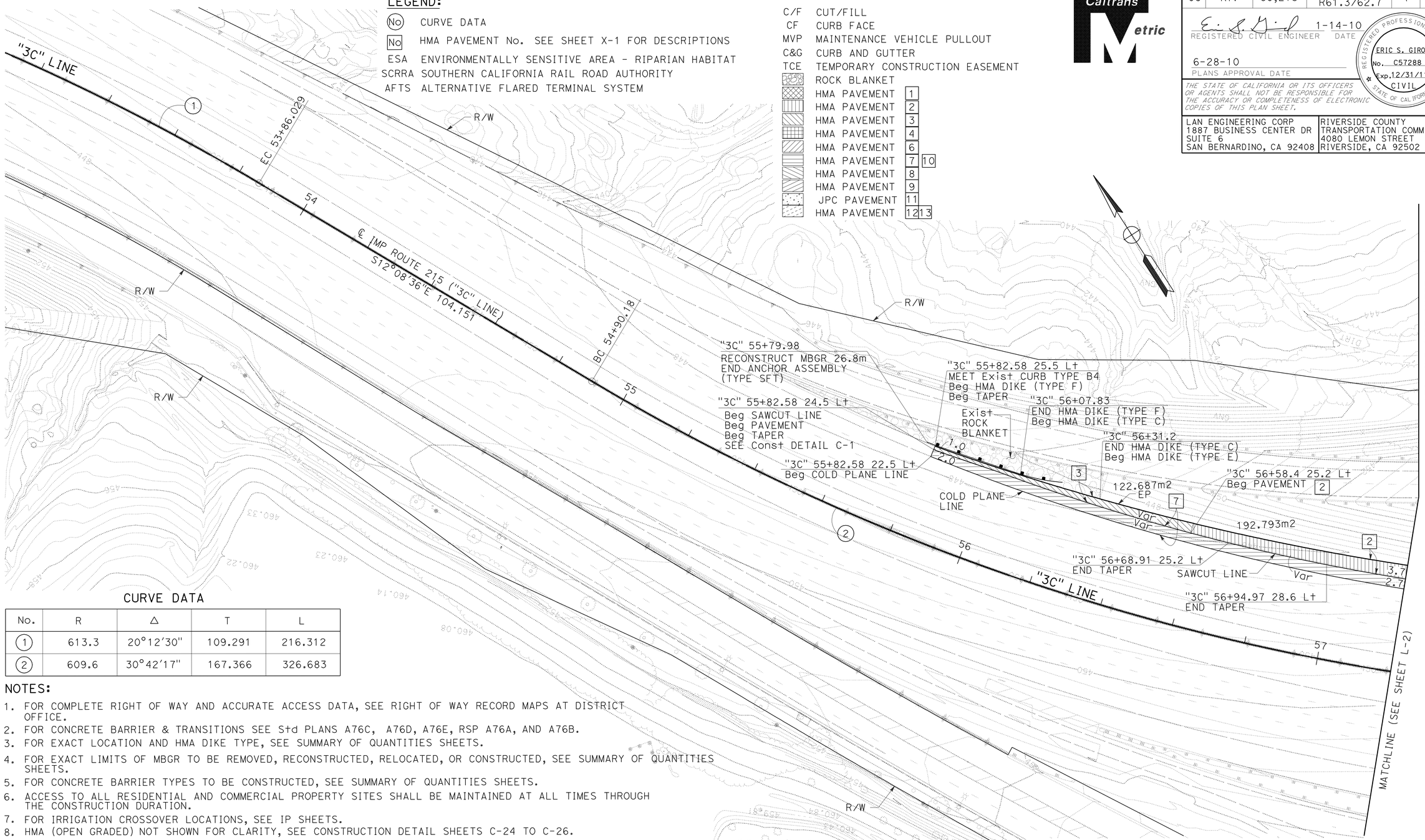

CURVE DATA

No.	R	Δ	T	L
1	613.3	20°12'30"	109.291	216.312
2	609.6	30°42'17"	167.366	326.683

NOTES:

1. FOR COMPLETE RIGHT OF WAY AND ACCURATE ACCESS DATA, SEE RIGHT OF WAY RECORD MAPS AT DISTRICT OFFICE.
2. FOR CONCRETE BARRIER & TRANSITIONS SEE Std PLANS A76C, A76D, A76E, RSP A76A, AND A76B.
3. FOR EXACT LOCATION AND HMA DIKE TYPE, SEE SUMMARY OF QUANTITIES SHEETS.
4. FOR EXACT LIMITS OF MBGR TO BE REMOVED, RECONSTRUCTED, RELOCATED, OR CONSTRUCTED, SEE SUMMARY OF QUANTITIES SHEETS.
5. FOR CONCRETE BARRIER TYPES TO BE CONSTRUCTED, SEE SUMMARY OF QUANTITIES SHEETS.
6. ACCESS TO ALL RESIDENTIAL AND COMMERCIAL PROPERTY SITES SHALL BE MAINTAINED AT ALL TIMES THROUGH THE CONSTRUCTION DURATION.
7. FOR IRRIGATION CROSSOVER LOCATIONS, SEE IP SHEETS.
8. HMA (OPEN GRADED) NOT SHOWN FOR CLARITY, SEE CONSTRUCTION DETAIL SHEETS C-24 TO C-26.
9. FOR EP & SAWCUT LINE SEE CONSTRUCTION DETAIL SHEETS C-8 TO C-14.
10. FOR REMOVALS SEE CONSTRUCTION DETAIL SHEETS C-1 TO C-7.
11. FOR DIKE TRANSITIONS SEE Const DETAIL SHEET C-16.
12. FOR MAINTENANCE VEHICLE PULLOUT (MVP) DETAIL REFER TO Std PLAN H9.
13. FOR REMOVAL/RELOCATION OF K-RAIL, SEE SC SHEETS.
14. ALL BEGIN/END PCC BARRIER TO HAVE 3m ANCHOR PER STD PLAN A76B & A76E.
15. FOR CHAIN LINK FENCE & DOUBLE SWING GATE SEE Std PLAN A85, FOR CHAIN LINK LAYOUT SEE CONSTRUCTION DETAILS.
16. CONTRACTORS ATTENTION IS DIRECTED TOWARD UTILITIES WITH SHALLOW DEPTHS, SEE PROFILE AND UTILITY SHEETS.

ALL DIMENSIONS ARE IN METERS UNLESS OTHERWISE SHOWN

LAYOUT

SCALE 1 : 500

L-1

STATE OF CALIFORNIA - DEPARTMENT OF TRANSPORTATION
Caltrans

CONSULTANT FUNCTIONAL SUPERVISOR: NORMAN SUYDAM
CALCULATED-DESIGNED BY: ERIC GIROD
CHECKED BY: NORMAN SUYDAM
REVISED BY / DATE REVISED

LAST REVISION 11-09-09
DATE PLOTTED => 19-OCT-2010
TIME PLOTTED => 15:28

Dist	COUNTY	ROUTE	KILOMETER POST TOTAL PROJECT	SHEET No.	TOTAL SHEETS
08	Riv	60,215	R19.7/21.9, R61.3/62.7	8	594

REGISTERED CIVIL ENGINEER 1-14-10 DATE

6-28-10
PLANS APPROVAL DATE

REGISTERED PROFESSIONAL ENGINEER ERIC S. GIROD No. C57288 Exp.12/31/11 CIVIL STATE OF CALIFORNIA

THE STATE OF CALIFORNIA OR ITS OFFICERS OR AGENTS SHALL NOT BE RESPONSIBLE FOR THE ACCURACY OR COMPLETENESS OF ELECTRONIC COPIES OF THIS PLAN SHEET.

LAN ENGINEERING CORP
1887 BUSINESS CENTER DR
SUITE 6
SAN BERNARDINO, CA 92408

RIVERSIDE COUNTY
TRANSPORTATION COMMISSION
4080 LEMON STREET
RIVERSIDE, CA 92502

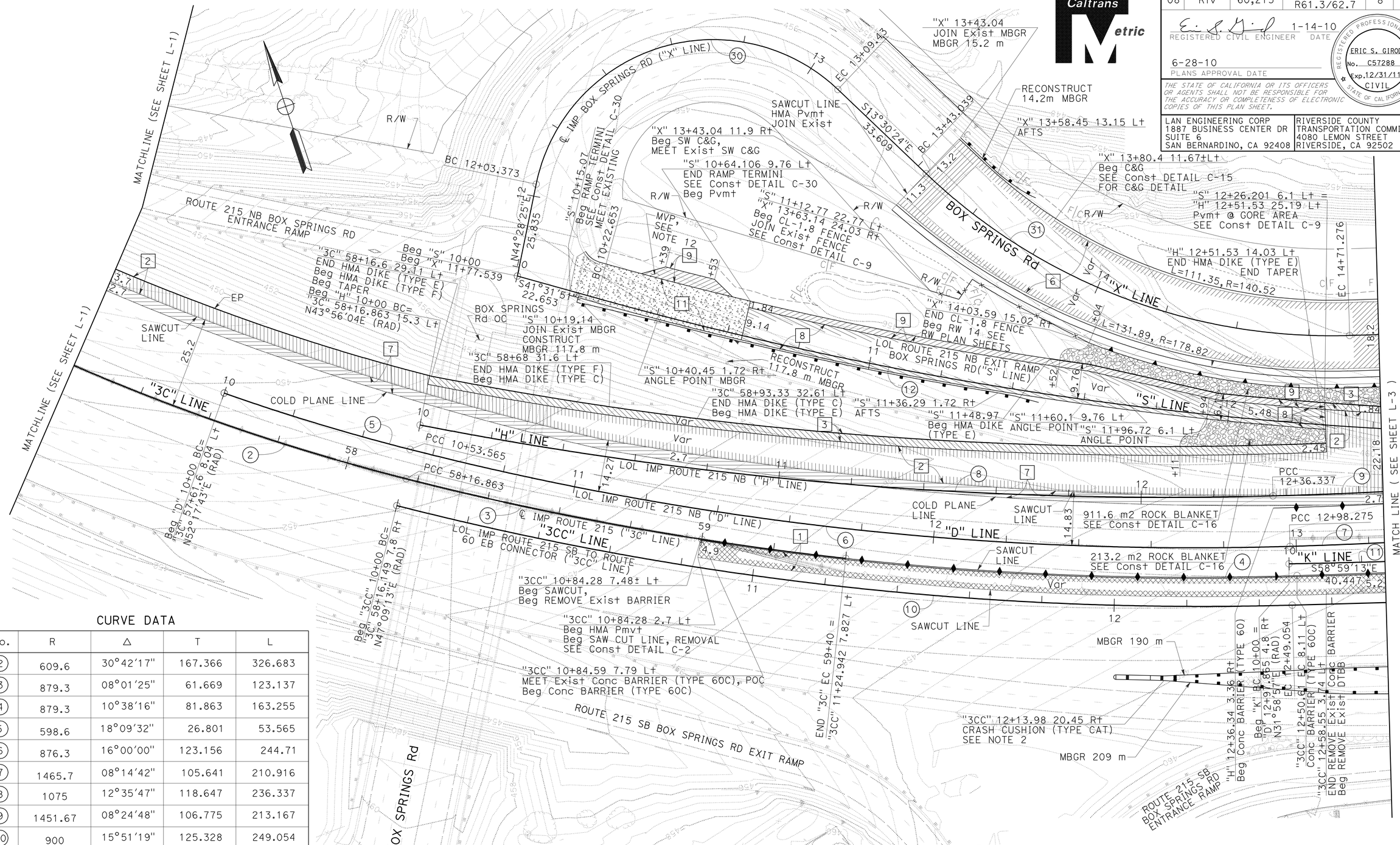

CURVE DATA

No.	R	Δ	T	L
2	609.6	30°42'17"	167.366	326.683
3	879.3	08°01'25"	61.669	123.137
4	879.3	10°38'16"	81.863	163.255
5	598.6	18°09'32"	26.801	53.565
6	876.3	16°00'00"	123.156	244.71
7	1465.7	08°14'42"	105.641	210.916
8	1075	12°35'47"	118.647	236.337
9	1451.67	08°24'48"	106.775	213.167
10	900	15°51'19"	125.328	249.054
11	1536.774	07°54'44"	106.28	212.222
12	1024	18°34'57"	167.525	332.109
30	49.8	122°01'12"	89.878	106.057
31	161.831	45°24'06"	67.698	128.237

ALL DIMENSIONS ARE IN METERS UNLESS OTHERWISE SHOWN

LAYOUT

SCALE 1 : 500 **L-2**

NOTES:
1. FOR COMPLETE RIGHT OF WAY AND ACCURATE ACCESS DATA, SEE RIGHT OF WAY RECORD MAPS AT DISTRICT OFFICE.
2. CONTRACTOR TO BE ADVISED THAT CRASH CUSHION (TYPE CAT)TO BE CONSTRUCTED OVER EXISTING FULL DEPTH AC PAVEMENT.

STATE OF CALIFORNIA - DEPARTMENT OF TRANSPORTATION
Caltrans

CONSULTANT FUNCTIONAL SUPERVISOR: NORMAN SUYDAM
CALCULATED-DESIGNED BY: ERIC GIROD
CHECKED BY: NORMAN SUYDAM
REVISED BY / DATE REVISED

LAST REVISION 11-09-09 DATE PLOTTED => 19-OCT-2010 TIME PLOTTED => 15:28

Dist	COUNTY	ROUTE	KILOMETER POST TOTAL PROJECT	SHEET No.	TOTAL SHEETS
08	Riv	60,215	R19.7/21.9, R61.3/62.7	9	594

REGISTERED CIVIL ENGINEER 1-14-10 DATE

6-28-10
PLANS APPROVAL DATE

REGISTERED PROFESSIONAL ENGINEER ERIC S. GIROD No. C57288 Exp.12/31/11 CIVIL STATE OF CALIFORNIA

THE STATE OF CALIFORNIA OR ITS OFFICERS OR AGENTS SHALL NOT BE RESPONSIBLE FOR THE ACCURACY OR COMPLETENESS OF ELECTRONIC COPIES OF THIS PLAN SHEET.

LAN ENGINEERING CORP
1887 BUSINESS CENTER DR
SUITE 6
SAN BERNARDINO, CA 92408

RIVERSIDE COUNTY
TRANSPORTATION COMMISSION
4080 LEMON STREET
RIVERSIDE, CA 92502

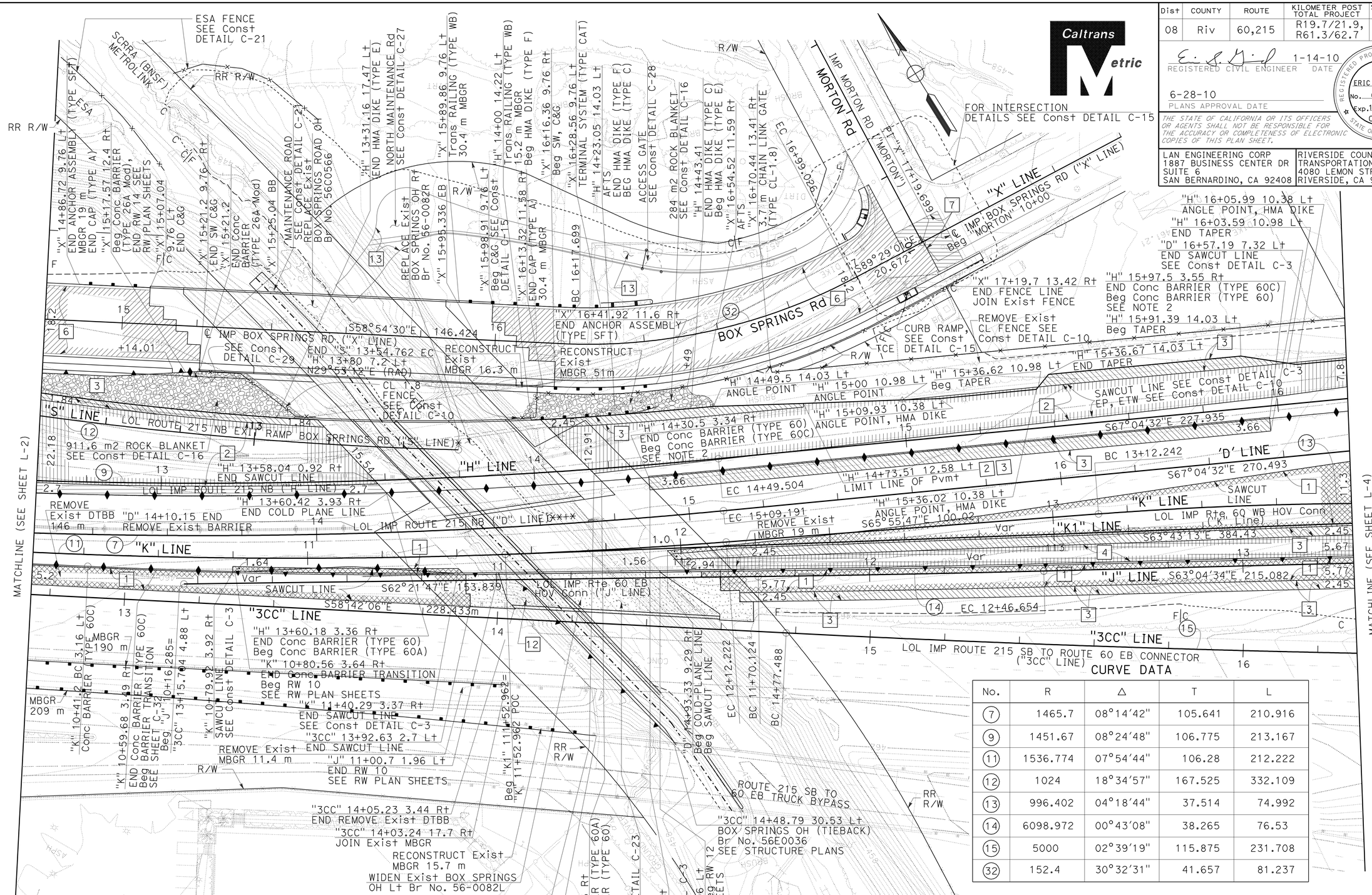

CURVE DATA

No.	R	Δ	T	L
7	1465.7	08°14'42"	105.641	210.916
9	1451.67	08°24'48"	106.775	213.167
11	1536.774	07°54'44"	106.28	212.222
12	1024	18°34'57"	167.525	332.109
13	996.402	04°18'44"	37.514	74.992
14	6098.972	00°43'08"	38.265	76.53
15	5000	02°39'19"	115.875	231.708
32	152.4	30°32'31"	41.657	81.237

ALL DIMENSIONS ARE IN METERS UNLESS OTHERWISE SHOWN

LAYOUT

SCALE 1 : 500

L-3

NOTE:

FOR COMPLETE RIGHT OF WAY AND ACCURATE ACCESS DATA, SEE RIGHT OF WAY RECORD MAPS AT DISTRICT OFFICE.

STATE OF CALIFORNIA - DEPARTMENT OF TRANSPORTATION

Caltrans

CONSULTANT FUNCTIONAL SUPERVISOR: NORMAN SUYDAM

CALCULATED-DESIGNED BY: ERIC GIROD

CHECKED BY: NORMAN SUYDAM

REVISED BY | DATE REVISED

LAST REVISION | DATE PLOTTED => 19-OCT-2010
11-09-09 | TIME PLOTTED => 15:29

Dist	COUNTY	ROUTE	KILOMETER POST TOTAL PROJECT	SHEET No.	TOTAL SHEETS
08	Riv	60,215	R19.7/21.9, R61.3/62.7	10	594

REGISTERED CIVIL ENGINEER 1-14-10 DATE

6-28-10
PLANS APPROVAL DATE

REGISTERED PROFESSIONAL ENGINEER ERIC S. GIROD No. C57288 Exp.12/31/11 CIVIL STATE OF CALIFORNIA

THE STATE OF CALIFORNIA OR ITS OFFICERS OR AGENTS SHALL NOT BE RESPONSIBLE FOR THE ACCURACY OR COMPLETENESS OF ELECTRONIC COPIES OF THIS PLAN SHEET.

LAN ENGINEERING CORP
1887 BUSINESS CENTER DR
SUITE 6
SAN BERNARDINO, CA 92408

RIVERSIDE COUNTY
TRANSPORTATION COMMISSION
4080 LEMON STREET
RIVERSIDE, CA 92502

CURVE DATA

No.	R	Δ	T	L
13	996.402	04°18'44"	37.514	74.992
15	5000	02°39'19"	115.875	231.708
16	1085	13°24'38"	127.56	253.954
17	7375.113	02°42'22"	174.198	348.33
18	439	56°22'34"	235.273	431.955
19	603.601	25°06'23"	134.402	264.49
20	900	28°08'59"	225.645	442.176
21	910	29°50'16"	242.454	473.899
22	420.37	28°36'46"	107.201	209.928

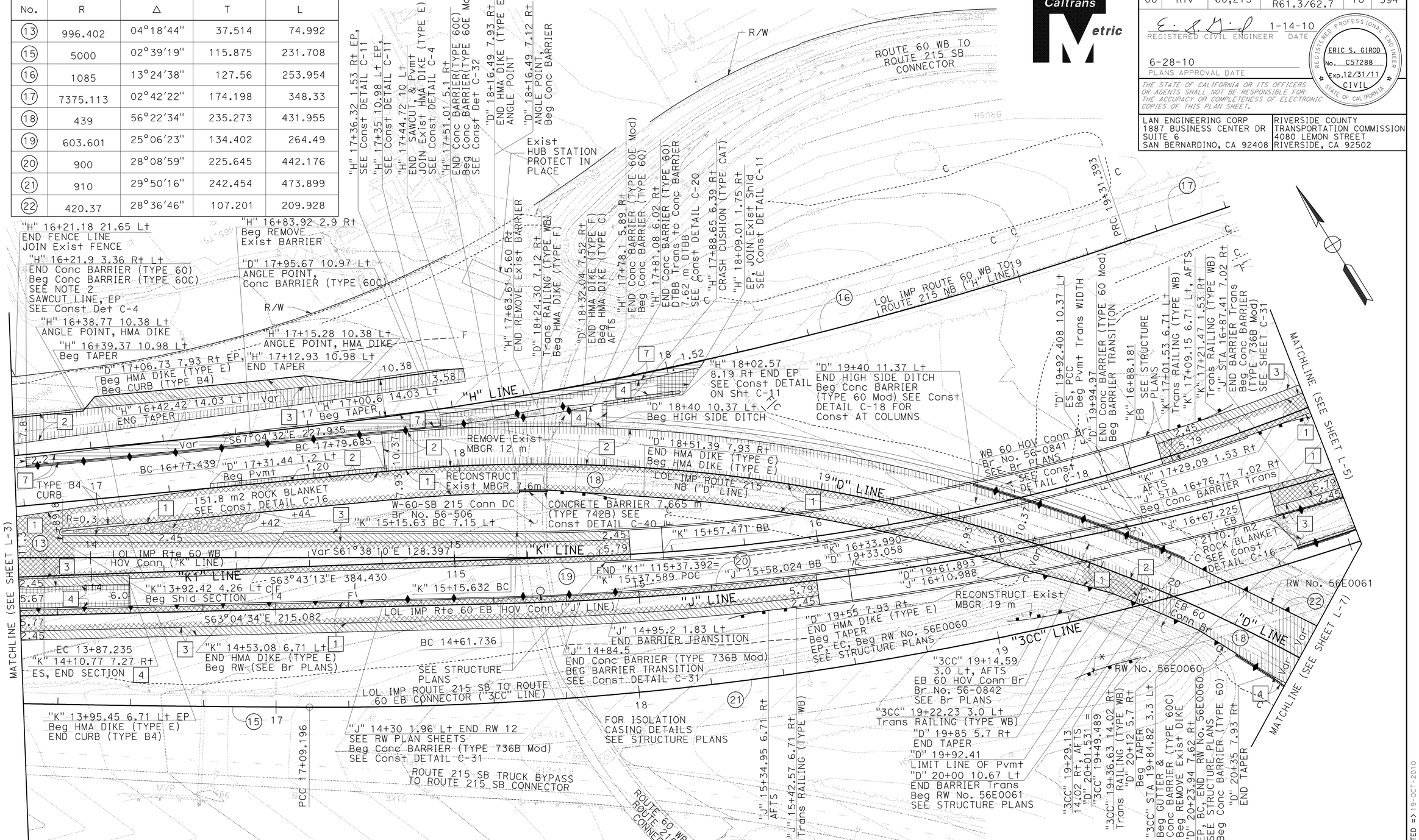

ALL DIMENSIONS ARE IN METERS UNLESS OTHERWISE SHOWN

NOTE:
FOR COMPLETE RIGHT OF WAY AND ACCURATE ACCESS DATA, SEE RIGHT OF WAY RECORD MAPS AT DISTRICT OFFICE.

LAYOUT

SCALE 1 : 500

L-4

STATE OF CALIFORNIA - DEPARTMENT OF TRANSPORTATION
Caltrans

ERIC GIROD — CALCULATED-DESIGNED BY
NORMAN SUYDAM — CHECKED BY
NORMAN SUYDAM — CONSULTANT FUNCTIONAL SUPERVISOR
REVISED BY — DATE REVISED

LAST REVISION 11-09-09 | DATE PLOTTED => 19-OCT-2010 | TIME PLOTTED => 15:29

Dist	COUNTY	ROUTE	KILOMETER POST TOTAL PROJECT	SHEET No.	TOTAL SHEETS
08	Riv	60,215	R19.7/21.9, R61.3/62.7	11	594

Caltrans Metric

REGISTERED CIVIL ENGINEER 1-14-10 DATE

6-28-10
PLANS APPROVAL DATE

REGISTERED PROFESSIONAL ENGINEER ERIC S. GIROD No. C57288 Exp.12/31/11 CIVIL STATE OF CALIFORNIA

THE STATE OF CALIFORNIA OR ITS OFFICERS OR AGENTS SHALL NOT BE RESPONSIBLE FOR THE ACCURACY OR COMPLETENESS OF ELECTRONIC COPIES OF THIS PLAN SHEET.

LAN ENGINEERING CORP
1887 BUSINESS CENTER DR
SUITE 6
SAN BERNARDINO, CA 92408

RIVERSIDE COUNTY
TRANSPORTATION COMMISSION
4080 LEMON STREET
RIVERSIDE, CA 92502

CURVE DATA

No.	R	Δ	T	L
17	7375.113	02°42'22"	174.198	348.33
19	603.601	25°06'23"	134.402	264.49
20	900	28°08'59"	225.645	442.176
21	910	29°50'16"	242.454	473.899
23	1065	08°58'03"	83.513	166.686
24	900.003	13°24'52"	105.842	210.715
25	901.833	07°42'45"	60.789	121.395
28	938.874	08°58'03"	73.623	146.945

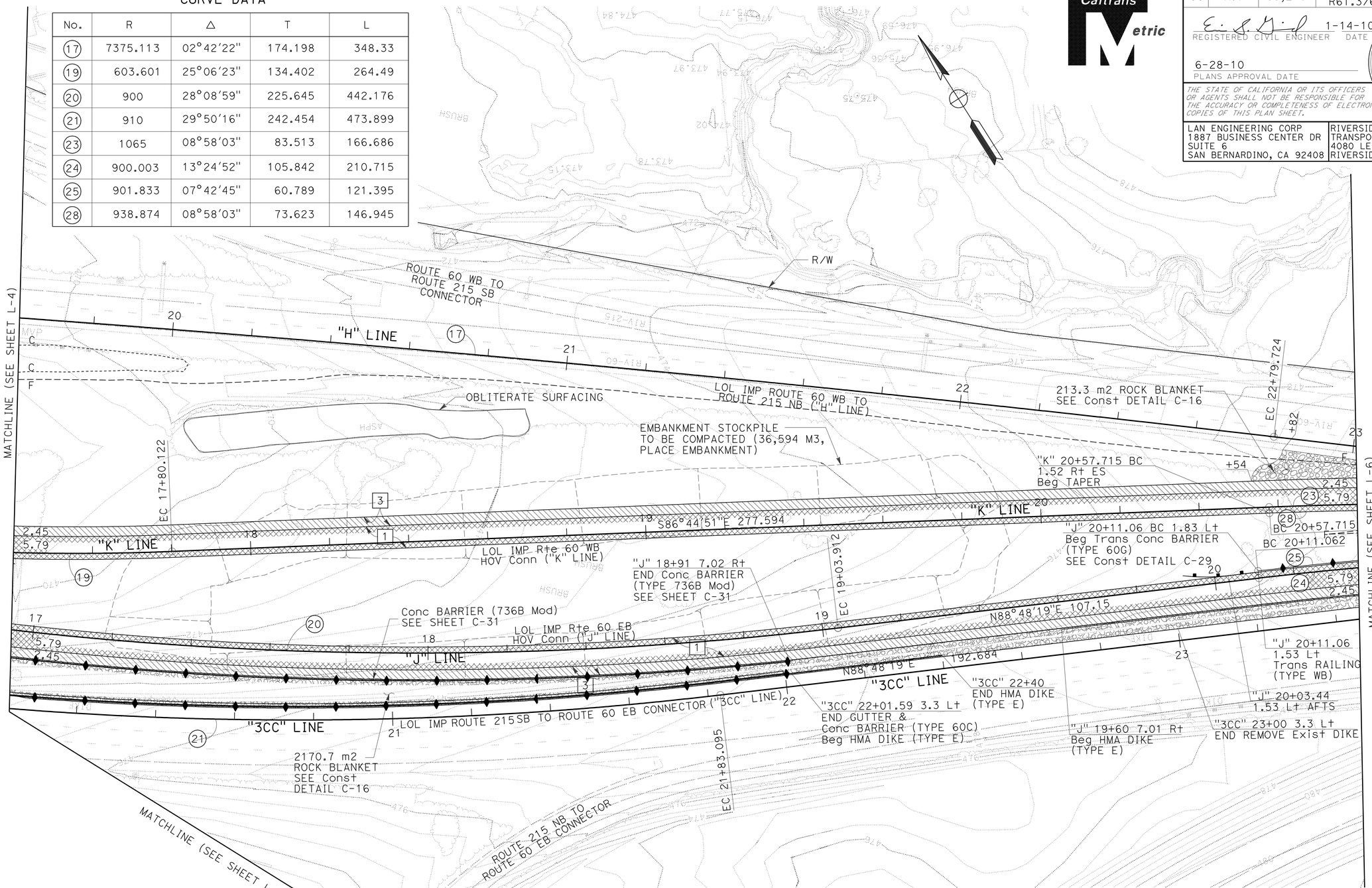

ALL DIMENSIONS ARE IN METERS UNLESS OTHERWISE SHOWN

LAYOUT

SCALE 1 : 500

L-5

NOTE:
FOR COMPLETE RIGHT OF WAY AND ACCURATE ACCESS DATA, SEE RIGHT OF WAY RECORD MAPS AT DISTRICT OFFICE.

STATE OF CALIFORNIA - DEPARTMENT OF TRANSPORTATION
Caltrans

CONSULTANT FUNCTIONAL SUPERVISOR: NORMAN SUYDAM
CALCULATED-DESIGNED BY: ERIC GIROD
CHECKED BY: NORMAN SUYDAM
REVISED BY / DATE REVISED

LAST REVISION 11-09-09 | DATE PLOTTED => 19-OCT-2010 | TIME PLOTTED => 15:29

Dist	COUNTY	ROUTE	KILOMETER POST TOTAL PROJECT	SHEET No.	TOTAL SHEETS
08	Riv	60,215	R19.7/21.9, R61.3/62.7	12	594

Caltrans Metric

1-14-10
REGISTERED CIVIL ENGINEER DATE

6-28-10
PLANS APPROVAL DATE

REGISTERED PROFESSIONAL ENGINEER
ERIC S. GIROD
No. C57288
Exp.12/31/11
CIVIL
STATE OF CALIFORNIA

THE STATE OF CALIFORNIA OR ITS OFFICERS OR AGENTS SHALL NOT BE RESPONSIBLE FOR THE ACCURACY OR COMPLETENESS OF ELECTRONIC COPIES OF THIS PLAN SHEET.

LAN ENGINEERING CORP
1887 BUSINESS CENTER DR
SUITE 6
SAN BERNARDINO, CA 92408

RIVERSIDE COUNTY
TRANSPORTATION COMMISSION
4080 LEMON STREET
RIVERSIDE, CA 92502

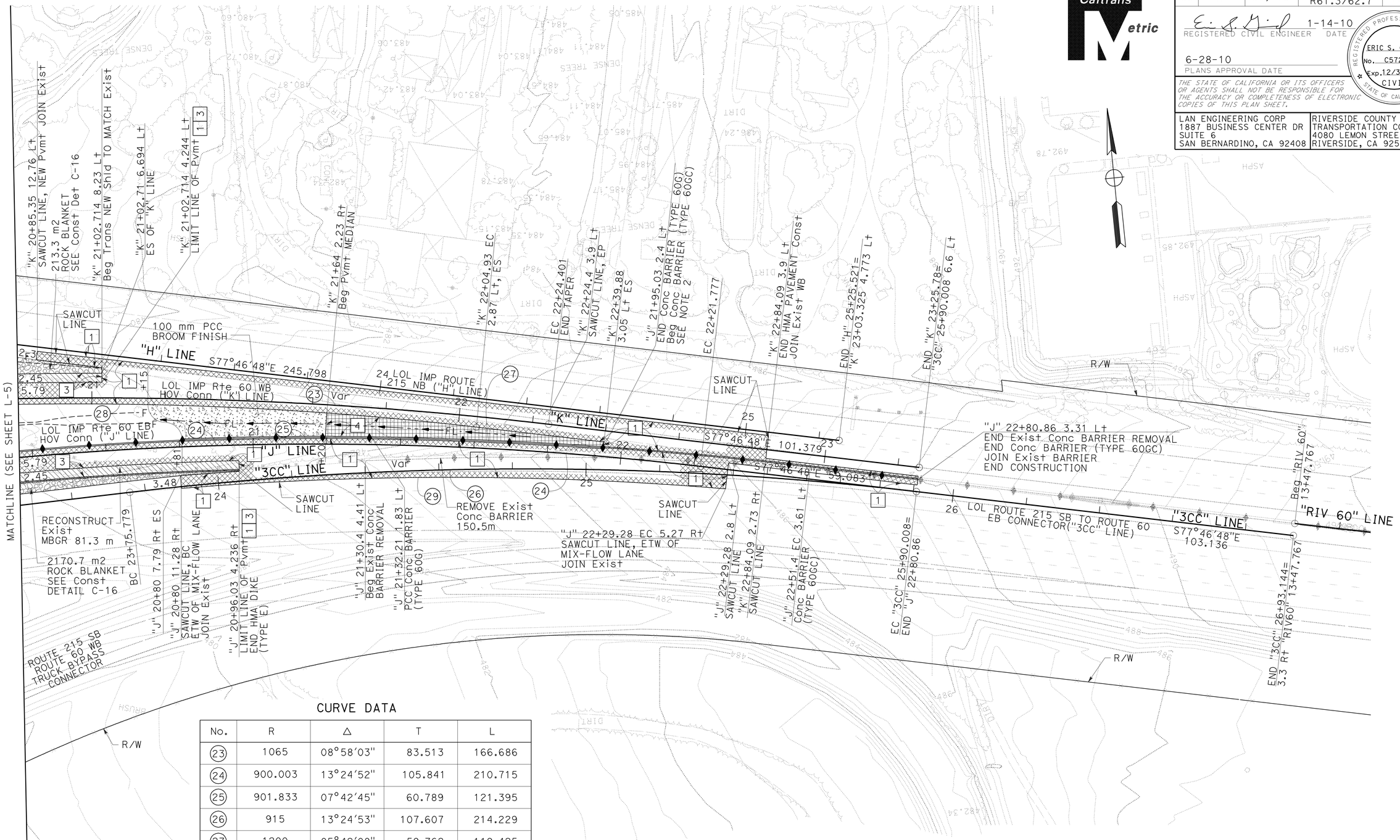

CURVE DATA

No.	R	Δ	T	L
23	1065	08°58′03"	83.513	166.686
24	900.003	13°24′52"	105.841	210.715
25	901.833	07°42′45"	60.789	121.395
26	915	13°24′53"	107.607	214.229
27	1200	05°42′08"	59.762	119.425
28	938.874	08°58′03"	73.623	146.945
29	895	09°28′38"	74.205	148.072

NOTE:
FOR COMPLETE RIGHT OF WAY AND ACCURATE ACCESS DATA, SEE RIGHT OF WAY RECORD MAPS AT DISTRICT OFFICE.

ALL DIMENSIONS ARE IN METERS UNLESS OTHERWISE SHOWN

LAYOUT

SCALE 1 : 500

L-6

STATE OF CALIFORNIA - DEPARTMENT OF TRANSPORTATION
Caltrans

CONSULTANT FUNCTIONAL SUPERVISOR: NORMAN SUYDAM
CALCULATED-DESIGNED BY: ERIC GIROD
CHECKED BY: NORMAN SUYDAM
REVISED BY
DATE REVISED

LAST REVISION 11-09-09
DATE PLOTTED => 19-OCT-2010
TIME PLOTTED => 15:29

Dist	COUNTY	ROUTE	KILOMETER POST TOTAL PROJECT	SHEET No.	TOTAL SHEETS
08	Riv	60,215	R19.7/21.9, R61.3/62.7	13	594

REGISTERED CIVIL ENGINEER 1-14-10 DATE

6-28-10
PLANS APPROVAL DATE

REGISTERED PROFESSIONAL ENGINEER ERIC S. GIROD No. C57288 Exp.12/31/11 CIVIL STATE OF CALIFORNIA

THE STATE OF CALIFORNIA OR ITS OFFICERS OR AGENTS SHALL NOT BE RESPONSIBLE FOR THE ACCURACY OR COMPLETENESS OF ELECTRONIC COPIES OF THIS PLAN SHEET.

LAN ENGINEERING CORP
1887 BUSINESS CENTER DR
SUITE 6
SAN BERNARDINO, CA 92408

RIVERSIDE COUNTY
TRANSPORTATION COMMISSION
4080 LEMON STREET
RIVERSIDE, CA 92502

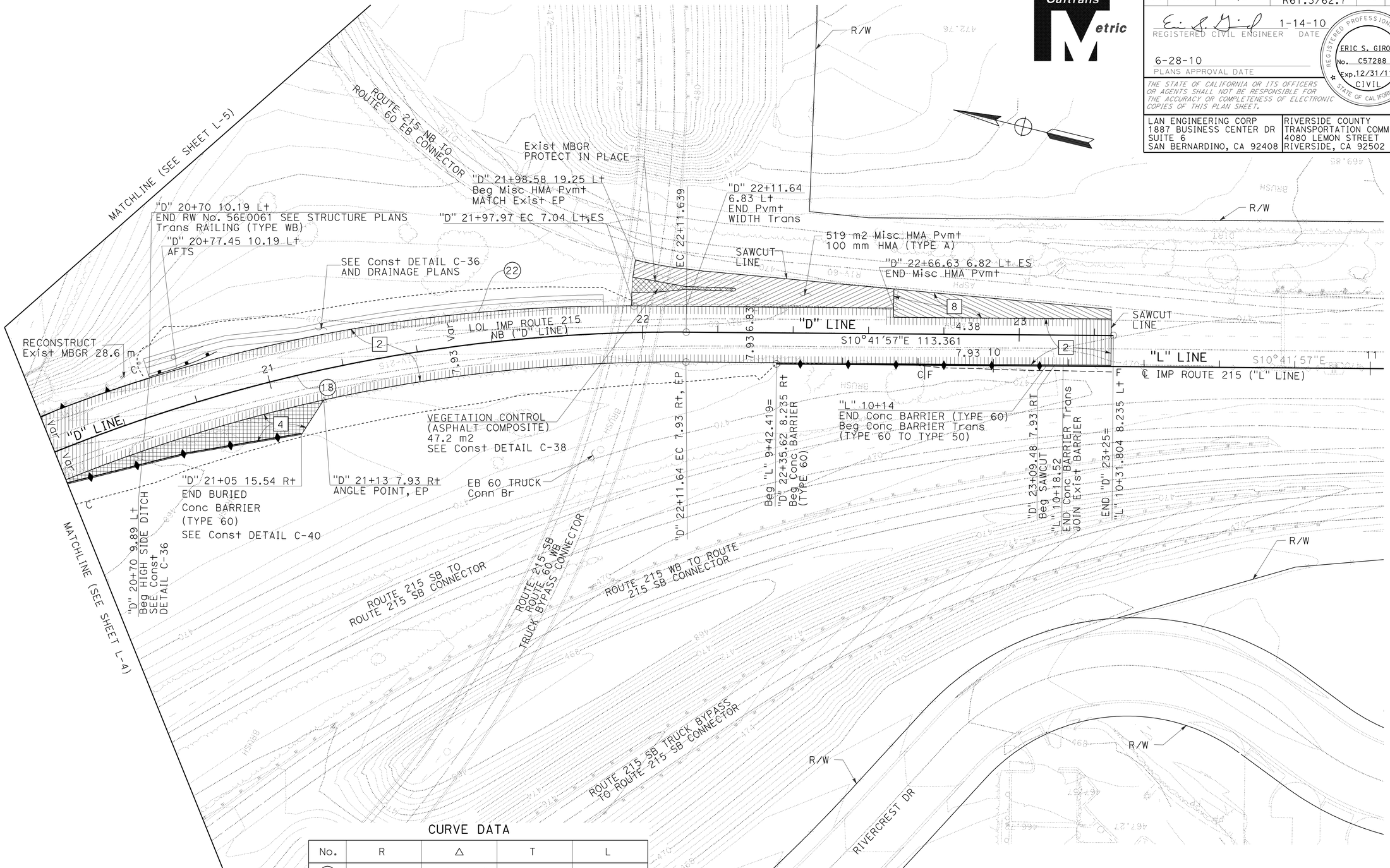

CURVE DATA

No.	R	Δ	T	L
18	439	56°22'34"	235.273	431.955
22	420.37	28°36'46"	107.201	209.928

ALL DIMENSIONS ARE IN METERS UNLESS OTHERWISE SHOWN

LAYOUT

SCALE 1 : 500

L-7

NOTE:
FOR COMPLETE RIGHT OF WAY AND ACCURATE ACCESS DATA, SEE RIGHT OF WAY RECORD MAPS AT DISTRICT OFFICE.

STATE OF CALIFORNIA - DEPARTMENT OF TRANSPORTATION
Caltrans

CONSULTANT FUNCTIONAL SUPERVISOR: NORMAN SUYDAM
CALCULATED-DESIGNED BY: ERIC GIROD
CHECKED BY: NORMAN SUYDAM
REVISED BY
DATE REVISED

LAST REVISION 11-09-09
DATE PLOTTED => 19-OCT-2010
TIME PLOTTED => 15:30

Dist	COUNTY	ROUTE	KILOMETER POST TOTAL PROJECT	SHEET No.	TOTAL SHEETS
08	Riv	60,215	R19.7/21.9, R61.3/62.7	14	594

REGISTERED CIVIL ENGINEER 1-14-10 DATE

6-28-10
PLANS APPROVAL DATE

REGISTERED PROFESSIONAL ENGINEER ERIC S. GIROD No. C57288 Exp.12/31/11 CIVIL STATE OF CALIFORNIA

THE STATE OF CALIFORNIA OR ITS OFFICERS OR AGENTS SHALL NOT BE RESPONSIBLE FOR THE ACCURACY OR COMPLETENESS OF ELECTRONIC COPIES OF THIS PLAN SHEET.

LAN ENGINEERING CORP
1887 BUSINESS CENTER DR
SUITE 6
SAN BERNARDINO, CA 92408

RIVERSIDE COUNTY
TRANSPORTATION COMMISSION
4080 LEMON STREET
RIVERSIDE, CA 92502

LEGEND:

AOR AXIS OF ROTATION

SUPERELEVATION DIAGRAM
ROUTE 215 NB CONNECTOR ("D" LINE)

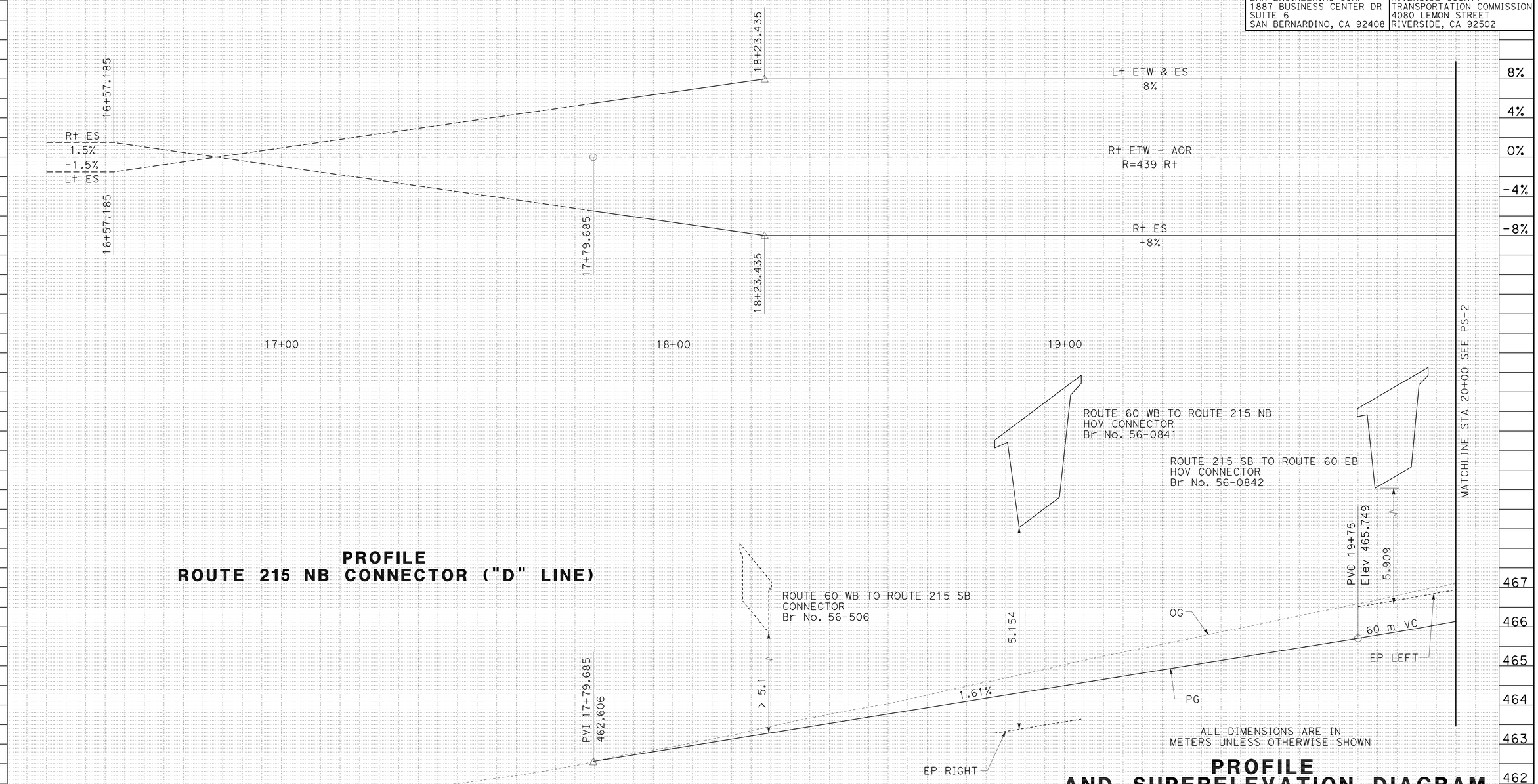

PROFILE
ROUTE 215 NB CONNECTOR ("D" LINE)

ALL DIMENSIONS ARE IN METERS UNLESS OTHERWISE SHOWN

PROFILE AND SUPERELEVATION DIAGRAM

SCALE HORIZ 1 : 500
VERT 1 : 50

PS-1

STATE OF CALIFORNIA - DEPARTMENT OF TRANSPORTATION

Caltrans

CONSULTANT FUNCTIONAL SUPERVISOR: NORMAN SUYDAM

CALCULATED-DESIGNED BY: ERIC GIROD

CHECKED BY: NORMAN SUYDAM

REVISED BY / DATE REVISED

LAST REVISION DATE PLOTTED => 19-OCT-2010 TIME PLOTTED => 15:30

11-09-09

BORDER LAST REVISED 3/1/2007

RELATIVE BORDER SCALE IS IN MILLIMETERS 0 20 40 60 80

USERNAME => trstrk
DGN FILE => 844931fb001.dgn

CU 08232

EA 449311

Dist	COUNTY	ROUTE	KILOMETER POST TOTAL PROJECT	SHEET No.	TOTAL SHEETS
08	Riv	60,215	R19.7/21.9, R61.3/62.7	15	594

REGISTERED CIVIL ENGINEER 1-14-10 DATE

6-28-10
PLANS APPROVAL DATE

REGISTERED PROFESSIONAL ENGINEER
ERIC S. GIROD
No. C57288
Exp.12/31/11
CIVIL
STATE OF CALIFORNIA

THE STATE OF CALIFORNIA OR ITS OFFICERS OR AGENTS SHALL NOT BE RESPONSIBLE FOR THE ACCURACY OR COMPLETENESS OF ELECTRONIC COPIES OF THIS PLAN SHEET.

LAN ENGINEERING CORP
1887 BUSINESS CENTER DR
SUITE 6
SAN BERNARDINO, CA 92408

RIVERSIDE COUNTY
TRANSPORTATION COMMISSION
4080 LEMON STREET
RIVERSIDE, CA 92502

Caltrans Metric

SUPERELEVATION DIAGRAM
ROUTE 215 NB CONNECTOR ("D" LINE)

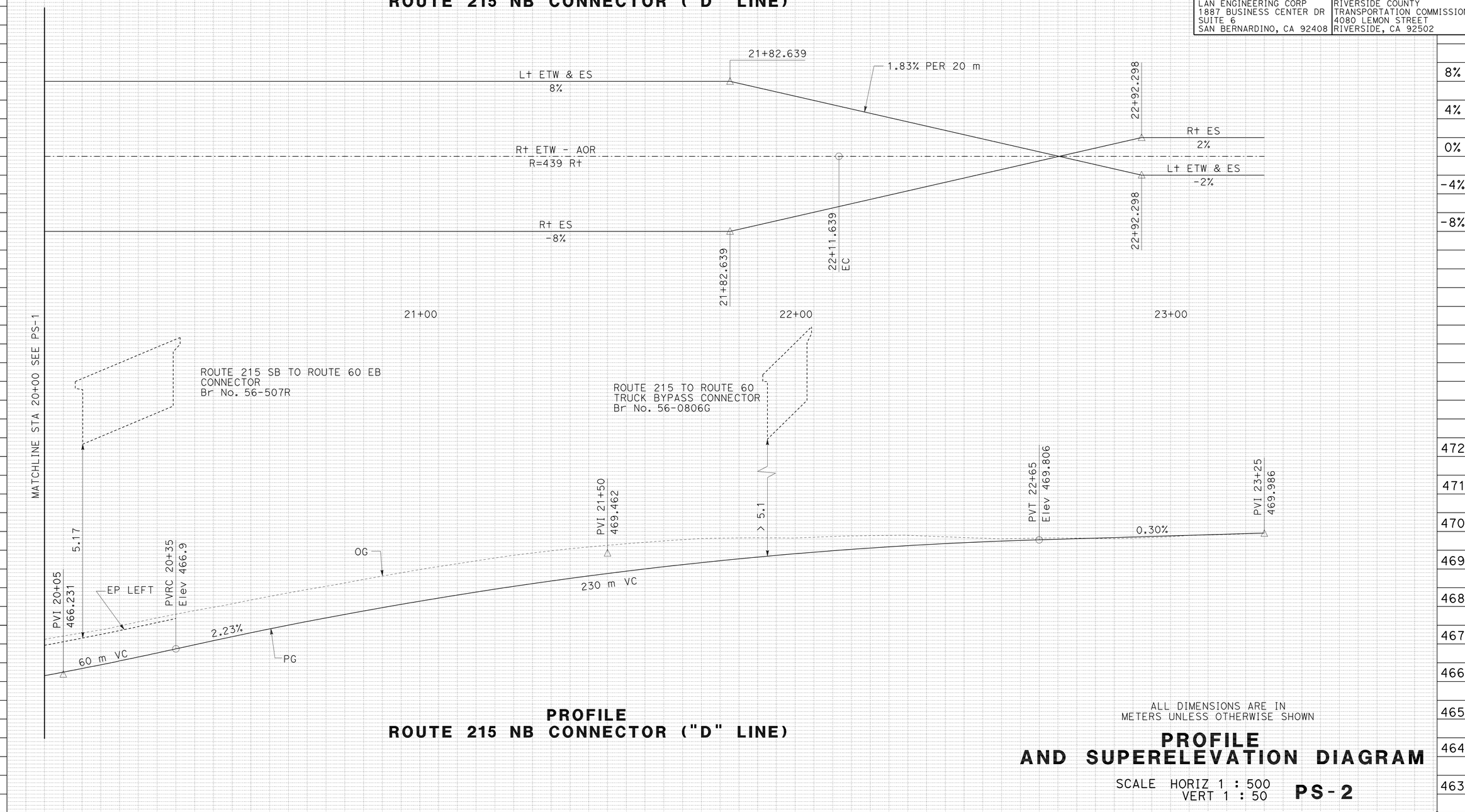

PROFILE
ROUTE 215 NB CONNECTOR ("D" LINE)

ALL DIMENSIONS ARE IN
METERS UNLESS OTHERWISE SHOWN

PROFILE
AND SUPERELEVATION DIAGRAM

SCALE HORIZ 1 : 500
VERT 1 : 50

PS-2

REVISED BY | DATE REVISED

ERIC GIROD | NORMAN SUYDAM

CALCULATED-DESIGNED BY | CHECKED BY

CONSULTANT FUNCTIONAL SUPERVISOR | NORMAN SUYDAM

STATE OF CALIFORNIA - DEPARTMENT OF TRANSPORTATION

Caltrans

LAST REVISION 11-09-09

DATE PLOTTED => 19-OCT-2010
TIME PLOTTED => 15:30

Dist	COUNTY	ROUTE	KILOMETER POST TOTAL PROJECT	SHEET No.	TOTAL SHEETS
08	Riv	60,215	R19.7/21.9, R61.3/62.7	16	594

Caltrans Metric

REGISTERED CIVIL ENGINEER 1-14-10 DATE

6-28-10
PLANS APPROVAL DATE

REGISTERED PROFESSIONAL ENGINEER ERIC S. GIROD No. C57288 Exp.12/31/11 CIVIL STATE OF CALIFORNIA

THE STATE OF CALIFORNIA OR ITS OFFICERS OR AGENTS SHALL NOT BE RESPONSIBLE FOR THE ACCURACY OR COMPLETENESS OF ELECTRONIC COPIES OF THIS PLAN SHEET.

LAN ENGINEERING CORP
1887 BUSINESS CENTER DR
SUITE 6
SAN BERNARDINO, CA 92408

RIVERSIDE COUNTY
TRANSPORTATION COMMISSION
4080 LEMON STREET
RIVERSIDE, CA 92502

SUPERELEVATION DIAGRAM
EASTBOUND ROUTE 60 / ROUTE 215 ("J" LINE)

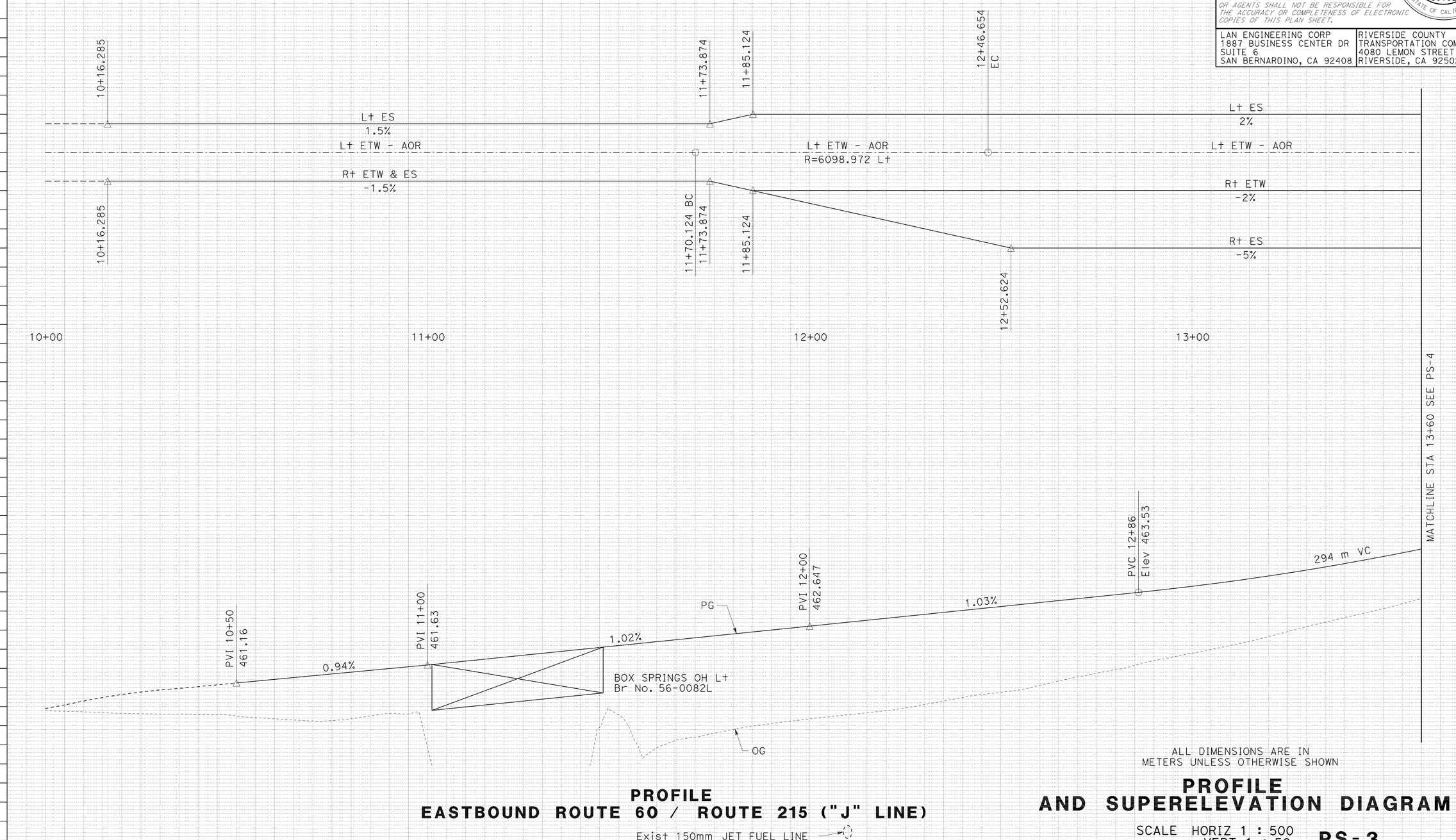

ALL DIMENSIONS ARE IN METERS UNLESS OTHERWISE SHOWN

PROFILE
EASTBOUND ROUTE 60 / ROUTE 215 ("J" LINE)

Exist 150mm JET FUEL LINE (KINDER MORGAN)

PROFILE AND SUPERELEVATION DIAGRAM

SCALE HORIZ 1 : 500
VERT 1 : 50

PS-3

Station		10+00	+20	+40	+60	+80	11+00	+20	+40	+60	+80	12+00	+20	+40	+60	+80	13+00	+20	+40	+60
m^3	Exc						91					0					26			
	Emb						190					0					2324			

REVISED BY | DATE REVISED
ERIC GIROD | NORMAN SUYDAM
CALCULATED-DESIGNED BY | CHECKED BY
CONSULTANT FUNCTIONAL SUPERVISOR: NORMAN SUYDAM
STATE OF CALIFORNIA - DEPARTMENT OF TRANSPORTATION
Caltrans

LAST REVISION 11-09-09 | DATE PLOTTED => 19-OCT-2010 | TIME PLOTTED => 15:30

Dist	COUNTY	ROUTE	KILOMETER POST TOTAL PROJECT	SHEET No.	TOTAL SHEETS
08	Riv	60,215	R19.7/21.9, R61.3/62.7	17	594

REGISTERED CIVIL ENGINEER 1-14-10 DATE

6-28-10
PLANS APPROVAL DATE

REGISTERED PROFESSIONAL ENGINEER ERIC S. GIROD No. C57288 Exp.12/31/11 CIVIL STATE OF CALIFORNIA

THE STATE OF CALIFORNIA OR ITS OFFICERS OR AGENTS SHALL NOT BE RESPONSIBLE FOR THE ACCURACY OR COMPLETENESS OF ELECTRONIC COPIES OF THIS PLAN SHEET.

LAN ENGINEERING CORP
1887 BUSINESS CENTER DR
SUITE 6
SAN BERNARDINO, CA 92408

RIVERSIDE COUNTY
TRANSPORTATION COMMISSION
4080 LEMON STREET
RIVERSIDE, CA 92502

SUPERELEVATION DIAGRAM
EASTBOUND ROUTE 60 / ROUTE 215 ("J" LINE)

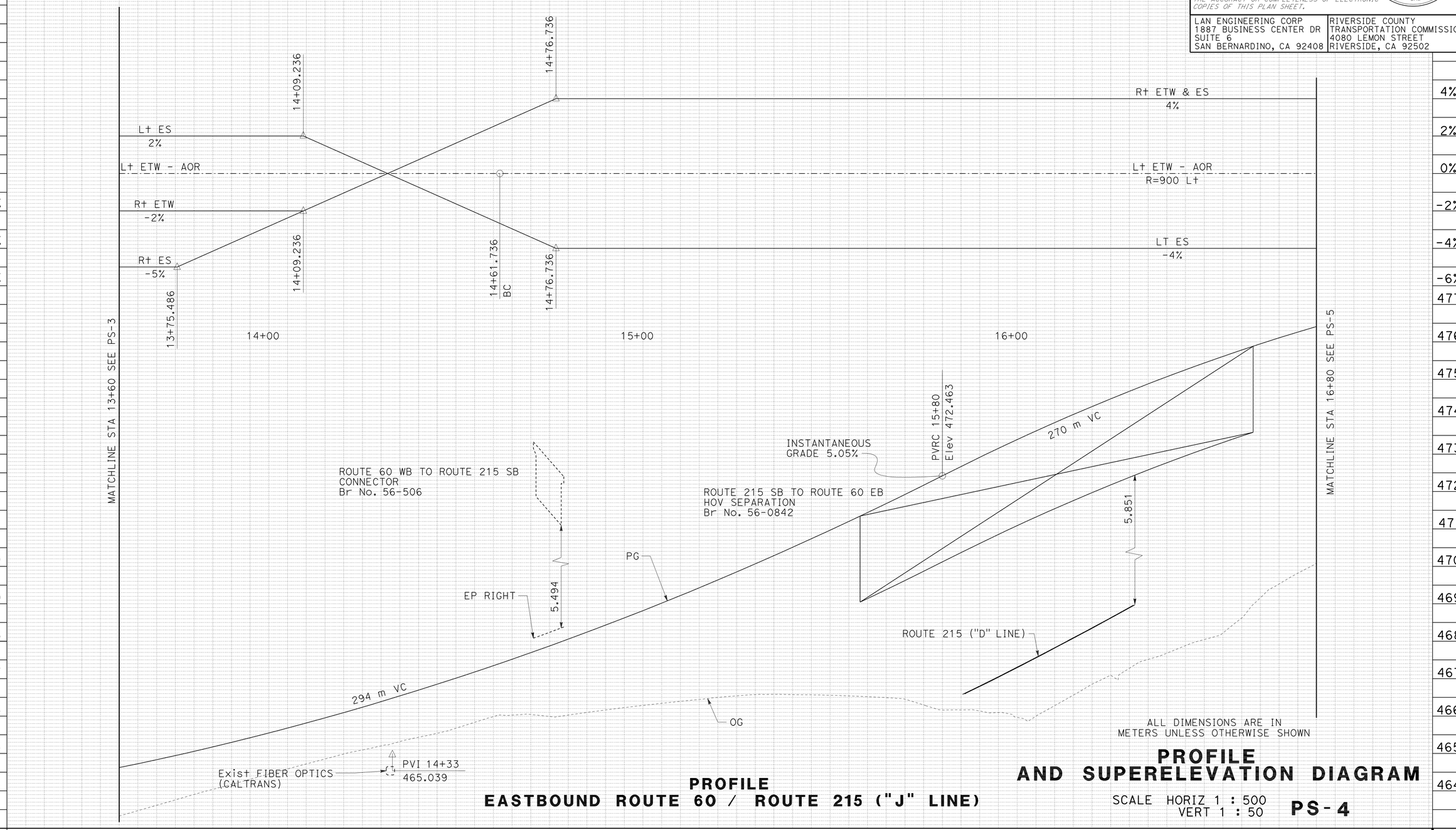

ALL DIMENSIONS ARE IN
METERS UNLESS OTHERWISE SHOWN

PROFILE
EASTBOUND ROUTE 60 / ROUTE 215 ("J" LINE)

PROFILE
AND SUPERELEVATION DIAGRAM

SCALE HORIZ 1 : 500
VERT 1 : 50

PS-4

Station	+60	+80	14+00	+20	+40	+60	+80	15+00	+20	+40	+60	+80	16+00	+20	+40	+60	+80	17+00
m^3 Exc	167										0					118		
m^3 Emb	3747										0					1371		

REVISED BY | DATE REVISED
ERIC GIROD | NORMAN SUYDAM
CALCULATED-DESIGNED BY | CHECKED BY
CONSULTANT FUNCTIONAL SUPERVISOR: NORMAN SUYDAM
STATE OF CALIFORNIA - DEPARTMENT OF TRANSPORTATION
Caltrans

LAST REVISION 11-09-09
DATE PLOTTED => 19-OCT-2010
TIME PLOTTED => 15:30

Dist	COUNTY	ROUTE	KILOMETER POST TOTAL PROJECT	SHEET No.	TOTAL SHEETS
08	Riv	60,215	R19.7/21.9, R61.3/62.7	18	594

REGISTERED CIVIL ENGINEER 1-14-10 DATE

6-28-10
PLANS APPROVAL DATE

REGISTERED PROFESSIONAL ENGINEER
ERIC S. GIROD
No. C57288
Exp.12/31/11
CIVIL
STATE OF CALIFORNIA

THE STATE OF CALIFORNIA OR ITS OFFICERS OR AGENTS SHALL NOT BE RESPONSIBLE FOR THE ACCURACY OR COMPLETENESS OF ELECTRONIC COPIES OF THIS PLAN SHEET.

LAN ENGINEERING CORP
1887 BUSINESS CENTER DR
SUITE 6
SAN BERNARDINO, CA 92408

RIVERSIDE COUNTY
TRANSPORTATION COMMISSION
4080 LEMON STREET
RIVERSIDE, CA 92502

SUPERELEVATION DIAGRAM
EASTBOUND ROUTE 60 / ROUTE 215 ("J" LINE)

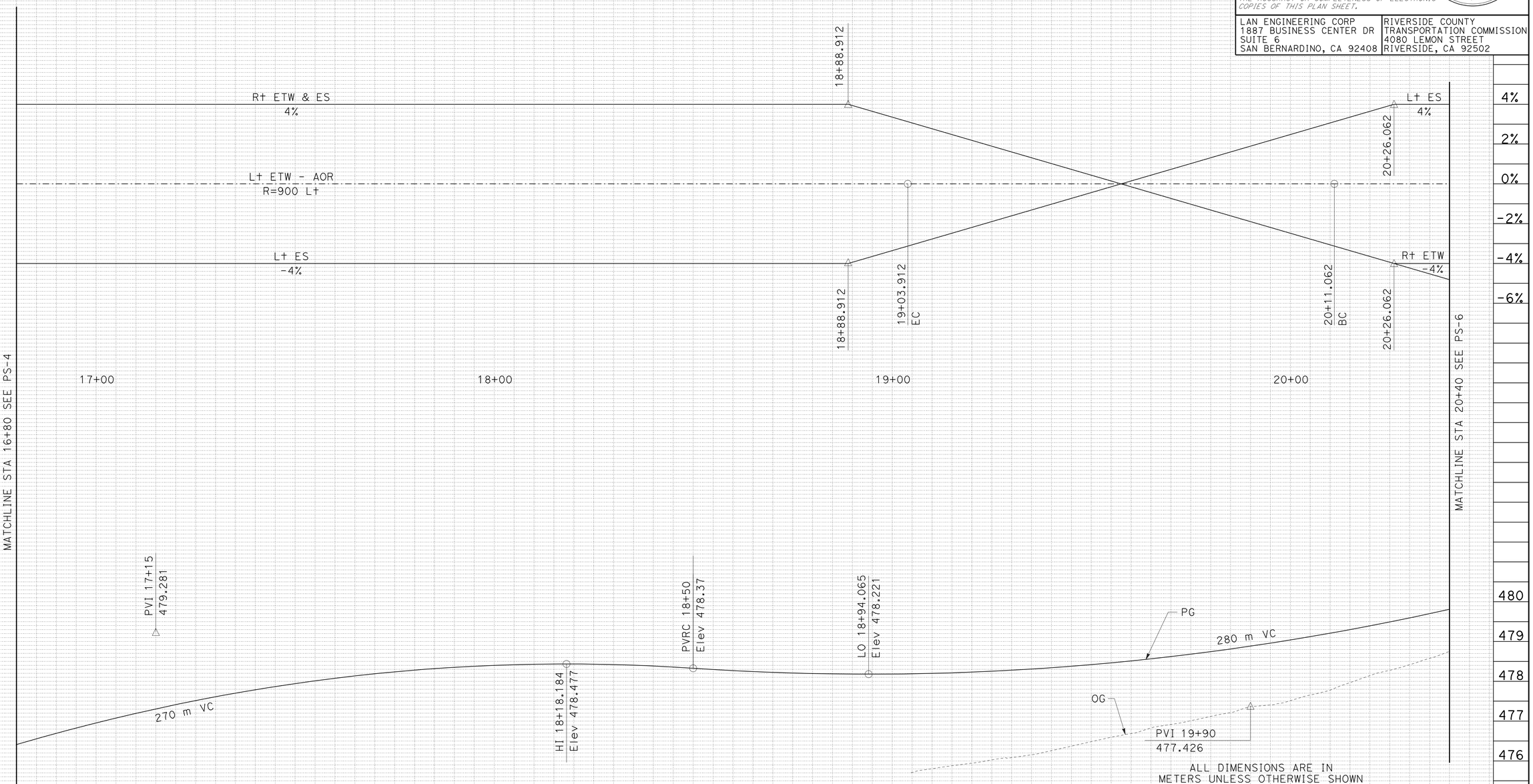

ALL DIMENSIONS ARE IN METERS UNLESS OTHERWISE SHOWN

PROFILE
EASTBOUND ROUTE 60 / ROUTE 215 ("J" LINE)

PROFILE AND SUPERELEVATION DIAGRAM

SCALE HORIZ 1 : 500
VERT 1 : 50

PS-5

Station	+80	17+00	+20	+40	+60	+80	18+00	+20	+40	+60	+80	19+00	+20	+40	+60	+80	20+00	+20	+40
m^3 Exc	13																		
m^3 Emb	20651																		

REVISED BY | DATE REVISED
ERIC GIROD | NORMAN SUYDAM
CALCULATED-DESIGNED BY | CHECKED BY
CONSULTANT FUNCTIONAL SUPERVISOR | NORMAN SUYDAM
STATE OF CALIFORNIA - DEPARTMENT OF TRANSPORTATION
Caltrans

LAST REVISION 11-09-09
DATE PLOTTED => 19-OCT-2010
TIME PLOTTED => 15:30

Dist	COUNTY	ROUTE	KILOMETER POST TOTAL PROJECT	SHEET No.	TOTAL SHEETS
08	Riv	60,215	R19.7/21.9, R61.3/62.7	19	594

REGISTERED CIVIL ENGINEER 1-14-10 DATE

6-28-10
PLANS APPROVAL DATE

REGISTERED PROFESSIONAL ENGINEER
ERIC S. GIROD
No. C57288
Exp.12/31/11
CIVIL
STATE OF CALIFORNIA

THE STATE OF CALIFORNIA OR ITS OFFICERS OR AGENTS SHALL NOT BE RESPONSIBLE FOR THE ACCURACY OR COMPLETENESS OF ELECTRONIC COPIES OF THIS PLAN SHEET.

LAN ENGINEERING CORP
1887 BUSINESS CENTER DR
SUITE 6
SAN BERNARDINO, CA 92408

RIVERSIDE COUNTY
TRANSPORTATION COMMISSION
4080 LEMON STREET
RIVERSIDE, CA 92502

SUPERELEVATION DIAGRAM
EASTBOUND ROUTE 60 / ROUTE 215 ("J" LINE)

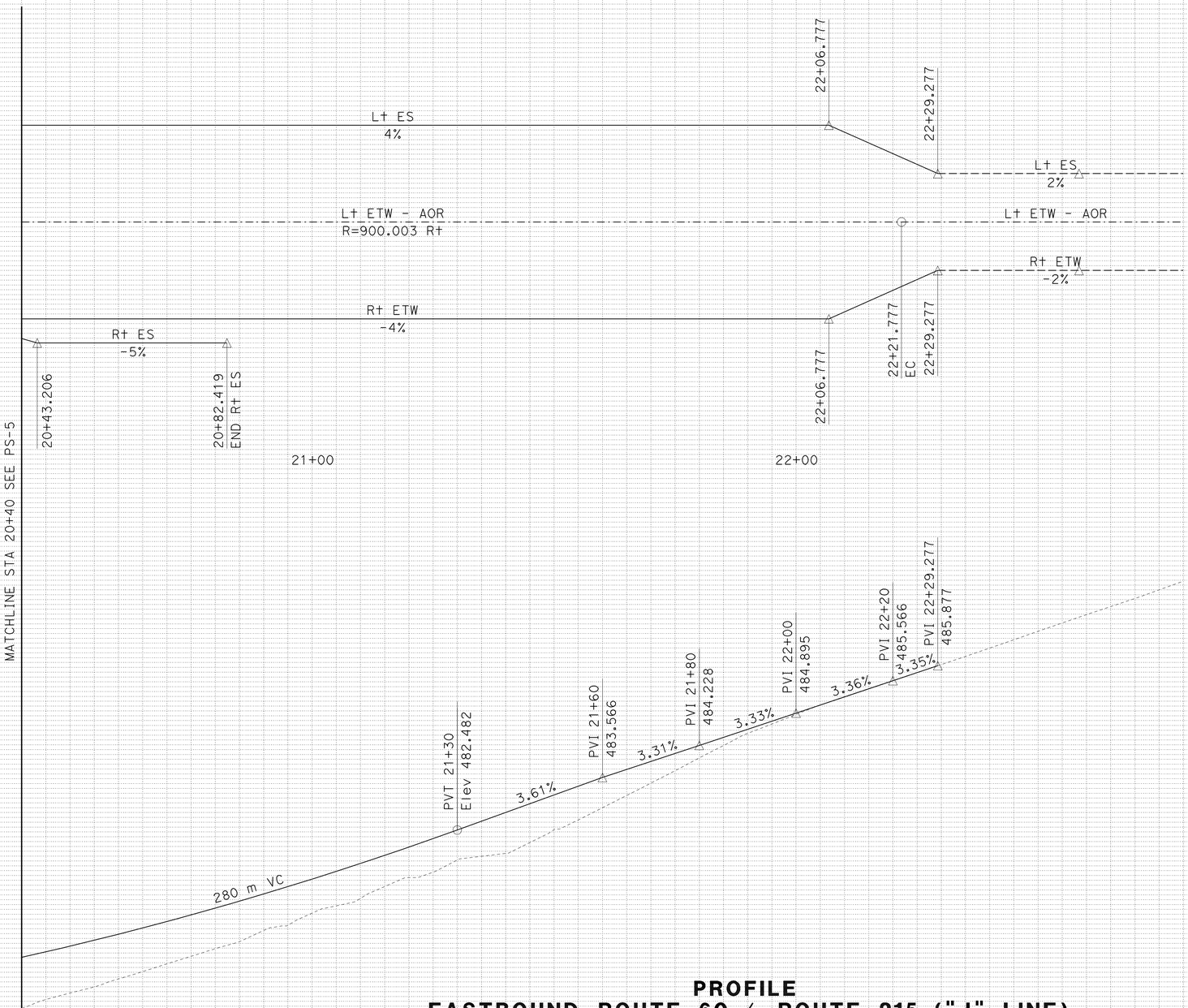

ALL DIMENSIONS ARE IN
METERS UNLESS OTHERWISE SHOWN

PROFILE
EASTBOUND ROUTE 60 / ROUTE 215 ("J" LINE)

PROFILE
AND SUPERELEVATION DIAGRAM

SCALE HORIZ 1 : 500
VERT 1 : 50

PS-6

Station	+40	+60	+80	21+00	+20	+40	+60	+80	22+00	+20	+40	+60	80	23+00	+20	+40	+60	+80	24+00

m^3	
Exc	700
Emb	455

STATE OF CALIFORNIA - DEPARTMENT OF TRANSPORTATION
Caltrans

CONSULTANT FUNCTIONAL SUPERVISOR: NORMAN SUYDAM
CALCULATED-DESIGNED BY: ERIC GIROD
CHECKED BY: NORMAN SUYDAM
REVISED BY
DATE REVISED

LAST REVISION 11-09-09
DATE PLOTTED => 19-OCT-2010
TIME PLOTTED => 15:31

Dist	COUNTY	ROUTE	KILOMETER POST TOTAL PROJECT	SHEET No.	TOTAL SHEETS
08	Riv	60,215	R19.7/21.9, R61.3/62.7	20	594

REGISTERED CIVIL ENGINEER 1-14-10 DATE

6-28-10
PLANS APPROVAL DATE

REGISTERED PROFESSIONAL ENGINEER
ERIC S. GIROD
No. C57288
Exp.12/31/11
CIVIL
STATE OF CALIFORNIA

THE STATE OF CALIFORNIA OR ITS OFFICERS OR AGENTS SHALL NOT BE RESPONSIBLE FOR THE ACCURACY OR COMPLETENESS OF ELECTRONIC COPIES OF THIS PLAN SHEET.

LAN ENGINEERING CORP
1887 BUSINESS CENTER DR
SUITE 6
SAN BERNARDINO, CA 92408

RIVERSIDE COUNTY
TRANSPORTATION COMMISSION
4080 LEMON STREET
RIVERSIDE, CA 92502

Caltrans Metric

SUPERELEVATION DIAGRAM
EASTBOUND ROUTE 60 / ROUTE 215
("K" LINE)

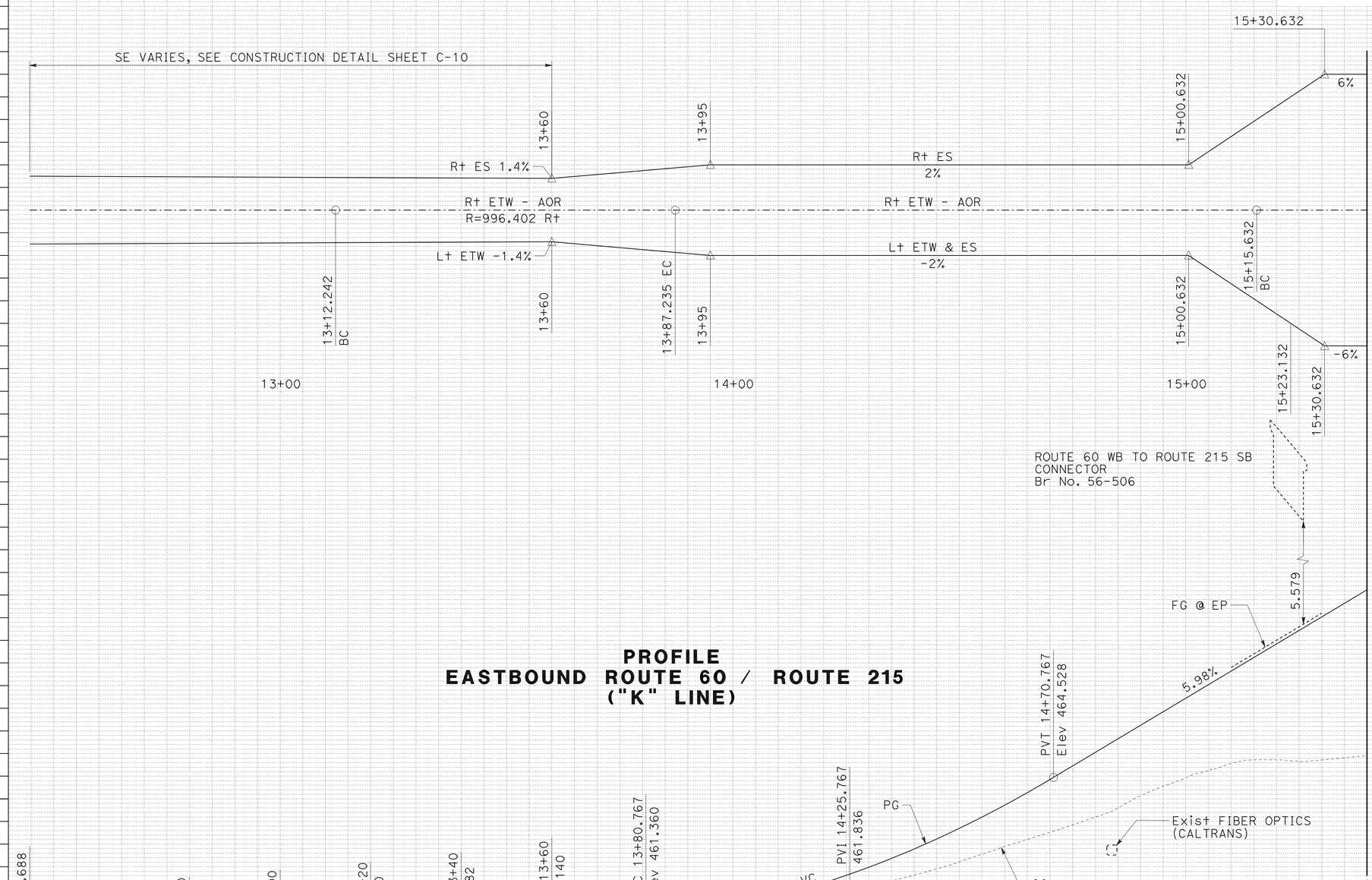

PROFILE
EASTBOUND ROUTE 60 / ROUTE 215
("K" LINE)

Station	+60	+80	13+00	+20	+40	+60	+80	14+00	+20	+40	+60	+80	15+00	+20	+40	+60	+80	16+00

m^3		
Exc	0	518
Emb	31	2136

ALL DIMENSIONS ARE IN METERS UNLESS OTHERWISE SHOWN

PROFILE AND SUPERELEVATION DIAGRAM

SCALE HORIZ 1 : 500
VERT 1 : 50

PS-7

STATE OF CALIFORNIA - DEPARTMENT OF TRANSPORTATION
Caltrans

CONSULTANT FUNCTIONAL SUPERVISOR: NORMAN SUYDAM
CALCULATED-DESIGNED BY: ERIC GIROD
CHECKED BY: NORMAN SUYDAM
REVISED BY / DATE REVISED

LAST REVISION 11-09-09
DATE PLOTTED => 19-OCT-2010
TIME PLOTTED => 15:31

BORDER LAST REVISED 3/1/2007
RELATIVE BORDER SCALE IS IN MILLIMETERS 0 20 40 60 80
USERNAME => trstrk
DGN FILE => 844931fb007.dgn
CU 08232
EA 449311

Dist	COUNTY	ROUTE	KILOMETER POST TOTAL PROJECT	SHEET No.	TOTAL SHEETS
08	Riv	60,215	R19.7/21.9, R61.3/62.7	21	594

REGISTERED CIVIL ENGINEER 1-14-10 DATE

6-28-10
PLANS APPROVAL DATE

REGISTERED PROFESSIONAL ENGINEER
ERIC S. GIROD
No. C57288
Exp.12/31/11
CIVIL
STATE OF CALIFORNIA

THE STATE OF CALIFORNIA OR ITS OFFICERS OR AGENTS SHALL NOT BE RESPONSIBLE FOR THE ACCURACY OR COMPLETENESS OF ELECTRONIC COPIES OF THIS PLAN SHEET.

LAN ENGINEERING CORP
1887 BUSINESS CENTER DR
SUITE 6
SAN BERNARDINO, CA 92408

RIVERSIDE COUNTY
TRANSPORTATION COMMISSION
4080 LEMON STREET
RIVERSIDE, CA 92502

SUPERELEVATION DIAGRAM
EASTBOUND ROUTE 60 / ROUTE 215 ("K" LINE)

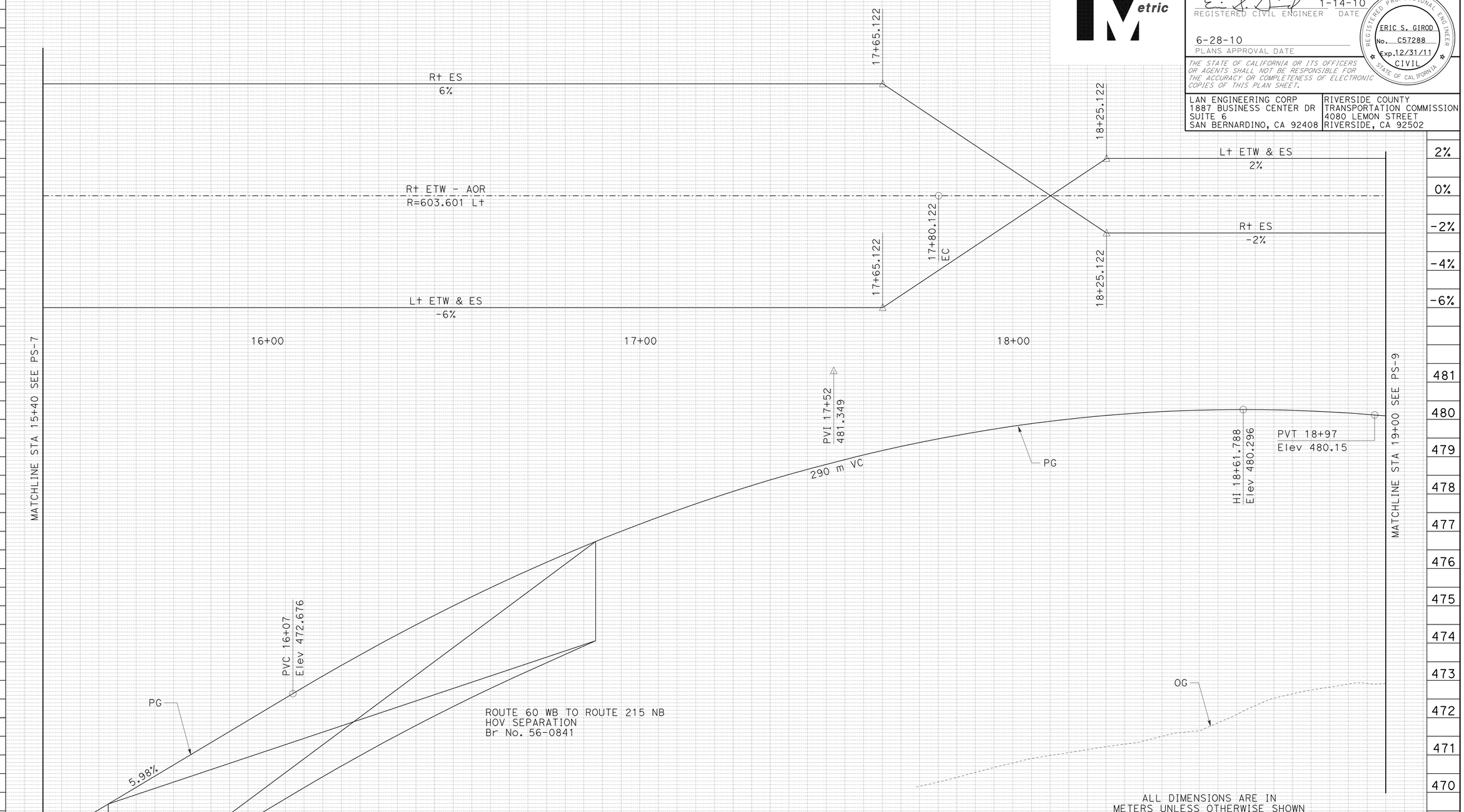

ALL DIMENSIONS ARE IN METERS UNLESS OTHERWISE SHOWN

PROFILE
EASTBOUND ROUTE 60 / ROUTE 215 ("K" LINE)

PROFILE AND SUPERELEVATION DIAGRAM

SCALE HORIZ 1 : 500
VERT 1 : 50

PS-8

Station		+40	+60	+80	16+00	+20	+40	+60	+80	17+00	+20	+40	+60	+80	18+00	+20	+40	+60	+80	19+00
m^3	Exc	0				0									0					
	Emb	622				0									68722					

STATE OF CALIFORNIA - DEPARTMENT OF TRANSPORTATION
Caltrans

CONSULTANT FUNCTIONAL SUPERVISOR: NORMAN SUYDAM
CALCULATED-DESIGNED BY: ERIC GIROD
CHECKED BY: NORMAN SUYDAM
REVISED BY / DATE REVISED

LAST REVISION 11-09-09
DATE PLOTTED => 19-OCT-2010
TIME PLOTTED => 15:31

Dist	COUNTY	ROUTE	KILOMETER POST TOTAL PROJECT	SHEET No.	TOTAL SHEETS
08	Riv	60,215	R19.7/21.9, R61.3/62.7	22	594

REGISTERED CIVIL ENGINEER 1-14-10 DATE

6-28-10
PLANS APPROVAL DATE

REGISTERED PROFESSIONAL ENGINEER
ERIC S. GIROD
No. C57288
Exp.12/31/11
CIVIL
STATE OF CALIFORNIA

THE STATE OF CALIFORNIA OR ITS OFFICERS OR AGENTS SHALL NOT BE RESPONSIBLE FOR THE ACCURACY OR COMPLETENESS OF ELECTRONIC COPIES OF THIS PLAN SHEET.

LAN ENGINEERING CORP
1887 BUSINESS CENTER DR
SUITE 6
SAN BERNARDINO, CA 92408

RIVERSIDE COUNTY
TRANSPORTATION COMMISSION
4080 LEMON STREET
RIVERSIDE, CA 92502

SUPERELEVATION DIAGRAM
EASTBOUND ROUTE 60 / ROUTE 215 ("K" LINE)

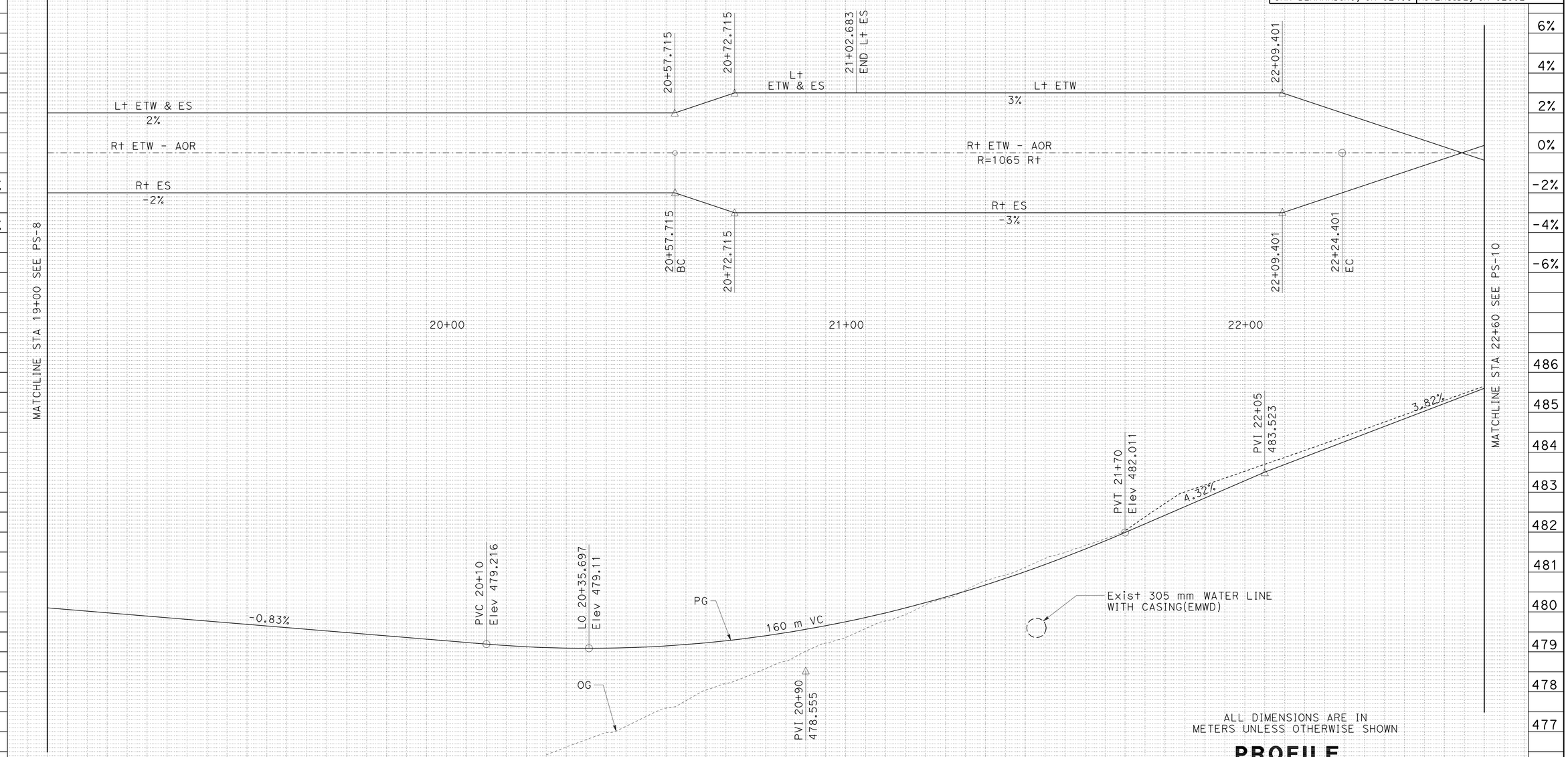

ALL DIMENSIONS ARE IN
METERS UNLESS OTHERWISE SHOWN

PROFILE
EASTBOUND ROUTE 60 / ROUTE 215 ("K" LINE)

PROFILE
AND SUPERELEVATION DIAGRAM

SCALE HORIZ 1 : 500
VERT 1 : 50

PS-9

Station	19+00	+20	+40	+60	+80	20+00	+20	+40	+60	+80	21+00	+20	+40	+60	+80	22+00	+20	+40	+60
m^3 Exc	917																		
m^3 Emb	19465																		

STATE OF CALIFORNIA - DEPARTMENT OF TRANSPORTATION
Caltrans

CONSULTANT FUNCTIONAL SUPERVISOR: NORMAN SUYDAM
CALCULATED-DESIGNED BY: ERIC GIROD
CHECKED BY: NORMAN SUYDAM
REVISED BY / DATE REVISED

LAST REVISION DATE PLOTTED => 19-OCT-2010
TIME PLOTTED => 15:31
11-09-09

Dist	COUNTY	ROUTE	KILOMETER POST TOTAL PROJECT	SHEET No.	TOTAL SHEETS
08	Riv	60,215	R19.7/21.9, R61.3/62.7	23	594

Caltrans Metric

REGISTERED CIVIL ENGINEER 1-14-10 DATE

6-28-10
PLANS APPROVAL DATE

REGISTERED PROFESSIONAL ENGINEER
ERIC S. GIROD
No. C57288
Exp.12/31/11
CIVIL
STATE OF CALIFORNIA

THE STATE OF CALIFORNIA OR ITS OFFICERS OR AGENTS SHALL NOT BE RESPONSIBLE FOR THE ACCURACY OR COMPLETENESS OF ELECTRONIC COPIES OF THIS PLAN SHEET.

LAN ENGINEERING CORP
1887 BUSINESS CENTER DR
SUITE 6
SAN BERNARDINO, CA 92408

RIVERSIDE COUNTY
TRANSPORTATION COMMISSION
4080 LEMON STREET
RIVERSIDE, CA 92502

SUPERELEVATION DIAGRAM
EASTBOUND ROUTE 60 / ROUTE 215 ("K" LINE)

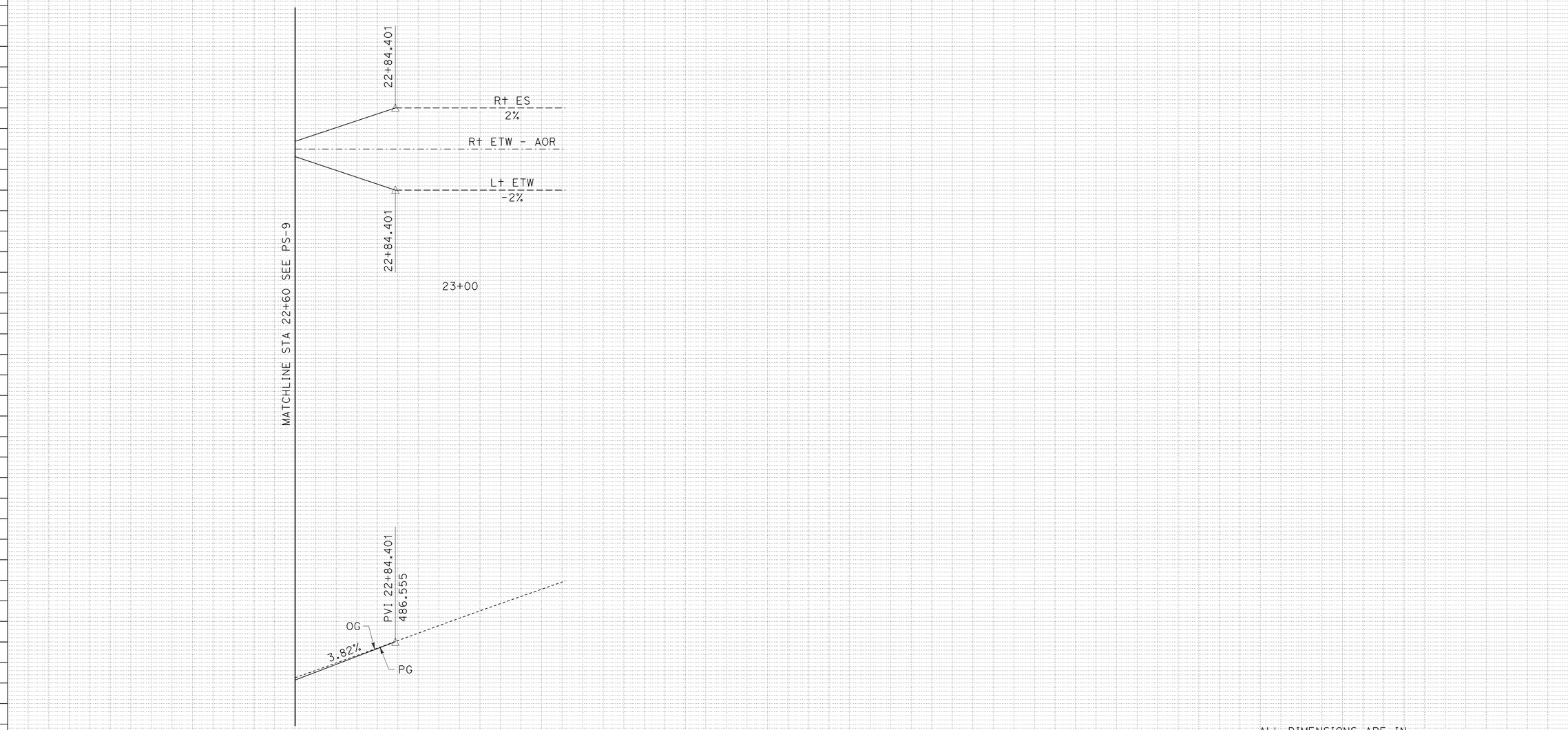

PROFILE
EASTBOUND ROUTE 60 / ROUTE 215 ("K" LINE)

ALL DIMENSIONS ARE IN METERS UNLESS OTHERWISE SHOWN

PROFILE AND SUPERELEVATION DIAGRAM

SCALE HORIZ 1 : 500
VERT 1 : 50

PS-10

Station	22+00	+20	+40	+60	+80	23+00	+20	+40	+60	+80	24+00	+20	+40	+60	+80	25+00	+20	+40	+60
m^3 Exc				73															
m^3 Emb				0															

STATE OF CALIFORNIA - DEPARTMENT OF TRANSPORTATION
Caltrans

CONSULTANT FUNCTIONAL SUPERVISOR: NORMAN SUYDAM
CALCULATED-DESIGNED BY: ERIC GIROD
CHECKED BY: NORMAN SUYDAM
REVISED BY
DATE REVISED

LAST REVISION 11-09-09
DATE PLOTTED => 19-OCT-2010
TIME PLOTTED => 15:31

Dist	COUNTY	ROUTE	KILOMETER POST TOTAL PROJECT	SHEET No.	TOTAL SHEETS
08	Riv	60,215	R19.7/21.9, R61.3/62.7	24	594

REGISTERED CIVIL ENGINEER 1-14-10 DATE

6-28-10
PLANS APPROVAL DATE

REGISTERED PROFESSIONAL ENGINEER
ERIC S. GIROD
No. C57288
Exp.12/31/11
CIVIL
STATE OF CALIFORNIA

THE STATE OF CALIFORNIA OR ITS OFFICERS OR AGENTS SHALL NOT BE RESPONSIBLE FOR THE ACCURACY OR COMPLETENESS OF ELECTRONIC COPIES OF THIS PLAN SHEET.

LAN ENGINEERING CORP
1887 BUSINESS CENTER DR
SUITE 6
SAN BERNARDINO, CA 92408

RIVERSIDE COUNTY
TRANSPORTATION COMMISSION
4080 LEMON STREET
RIVERSIDE, CA 92502

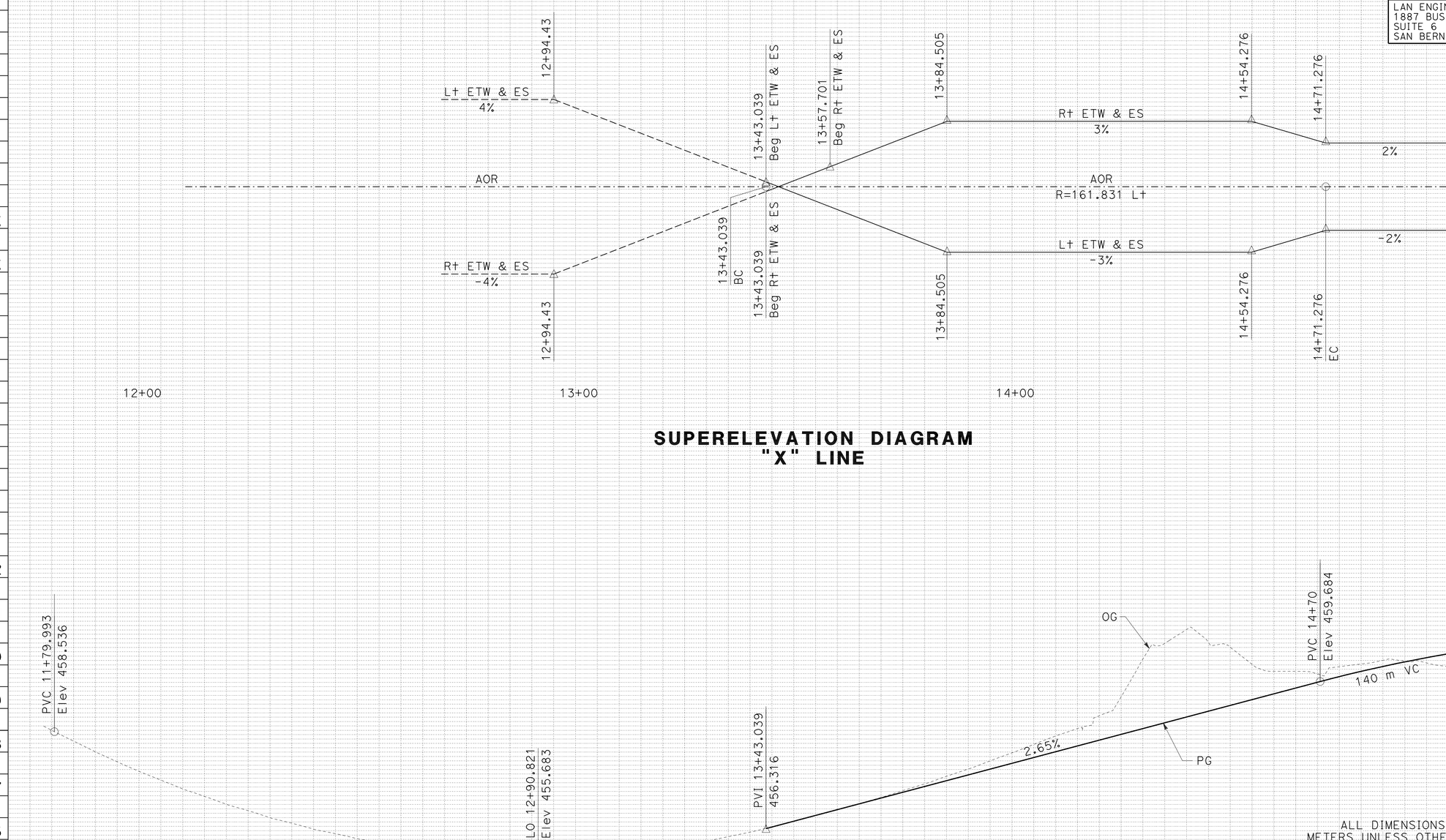

SUPERELEVATION DIAGRAM
"X" LINE

PROFILE
"X" LINE BOX SPRINGS FRONTAGE ROAD

ALL DIMENSIONS ARE IN METERS UNLESS OTHERWISE SHOWN

PROFILE AND SUPERELEVATION DIAGRAM

SCALE HORIZ 1 : 500
VERT 1 : 50

PS- 11

Station	+80	12+00	+20	+40	+60	+80	13+00	+20	+40	+60	+80	14+00	+20	+40	+60	+80	15+00	+20	+40
m^3 Exc									3512										
m^3 Emb									1321										

STATE OF CALIFORNIA - DEPARTMENT OF TRANSPORTATION
Caltrans

CONSULTANT FUNCTIONAL SUPERVISOR: NORMAN SUYDAM
CALCULATED-DESIGNED BY: ERIC GIROD
CHECKED BY: NORMAN SUYDAM
REVISED BY
DATE REVISED

LAST REVISION 11-09-09
DATE PLOTTED => 19-OCT-2010
TIME PLOTTED => 15:31

Dist	COUNTY	ROUTE	KILOMETER POST TOTAL PROJECT	SHEET No.	TOTAL SHEETS
08	Riv	60,215	R19.7/21.9, R61.3/62.7	25	594

REGISTERED CIVIL ENGINEER 1-14-10 DATE

6-28-10
PLANS APPROVAL DATE

REGISTERED PROFESSIONAL ENGINEER
ERIC S. GIROD
No. C57288
Exp.12/31/11
CIVIL
STATE OF CALIFORNIA

THE STATE OF CALIFORNIA OR ITS OFFICERS OR AGENTS SHALL NOT BE RESPONSIBLE FOR THE ACCURACY OR COMPLETENESS OF ELECTRONIC COPIES OF THIS PLAN SHEET.

LAN ENGINEERING CORP
1887 BUSINESS CENTER DR
SUITE 6
SAN BERNARDINO, CA 92408

RIVERSIDE COUNTY
TRANSPORTATION COMMISSION
4080 LEMON STREET
RIVERSIDE, CA 92502

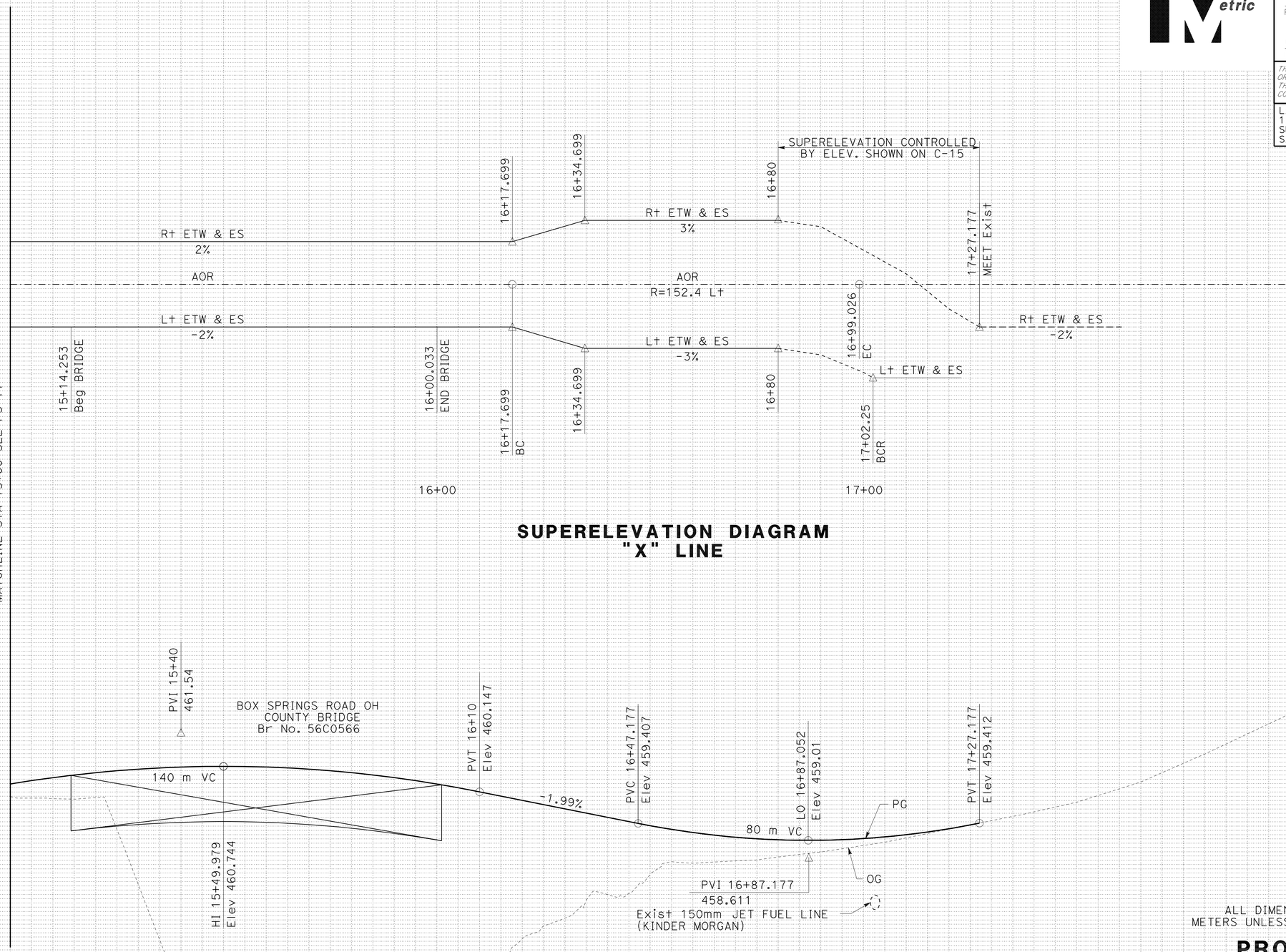

SUPERELEVATION DIAGRAM "X" LINE

PROFILE "X" LINE BOX SPRINGS FRONTAGE ROAD

ALL DIMENSIONS ARE IN METERS UNLESS OTHERWISE SHOWN

PROFILE AND SUPERELEVATION DIAGRAM

SCALE HORIZ 1 : 500
VERT 1 : 50

PS- 12

Station	15+00	+20	+40	+60	+80	16+00	+20	+40	+60	+80	17+00	+20	+40	+60	+80	18+00	+20	+40
m^3 Exc	1950			0					366									
m^3 Emb	318			0					5589									

REVISED BY | DATE REVISED
ERIC GIROD | NORMAN SUYDAM
CALCULATED-DESIGNED BY | CHECKED BY
CONSULTANT FUNCTIONAL SUPERVISOR | NORMAN SUYDAM
STATE OF CALIFORNIA - DEPARTMENT OF TRANSPORTATION
Caltrans

LAST REVISION 11-09-09 | DATE PLOTTED => 19-OCT-2010 | TIME PLOTTED => 15:31

Dist	COUNTY	ROUTE	KILOMETER POST TOTAL PROJECT	SHEET No.	TOTAL SHEETS
08	Riv	60,215	R19.7/21.9, R61.3/62.7	26	594

Caltrans Metric

1-14-10
REGISTERED CIVIL ENGINEER DATE

6-28-10
PLANS APPROVAL DATE

REGISTERED PROFESSIONAL ENGINEER
ERIC S. GIROD
No. C57288
Exp.12/31/11
CIVIL
STATE OF CALIFORNIA

THE STATE OF CALIFORNIA OR ITS OFFICERS OR AGENTS SHALL NOT BE RESPONSIBLE FOR THE ACCURACY OR COMPLETENESS OF ELECTRONIC COPIES OF THIS PLAN SHEET.

LAN ENGINEERING CORP
1887 BUSINESS CENTER DR
SUITE 6
SAN BERNARDINO, CA 92408

RIVERSIDE COUNTY
TRANSPORTATION COMMISSION
4080 LEMON STREET
RIVERSIDE, CA 92502

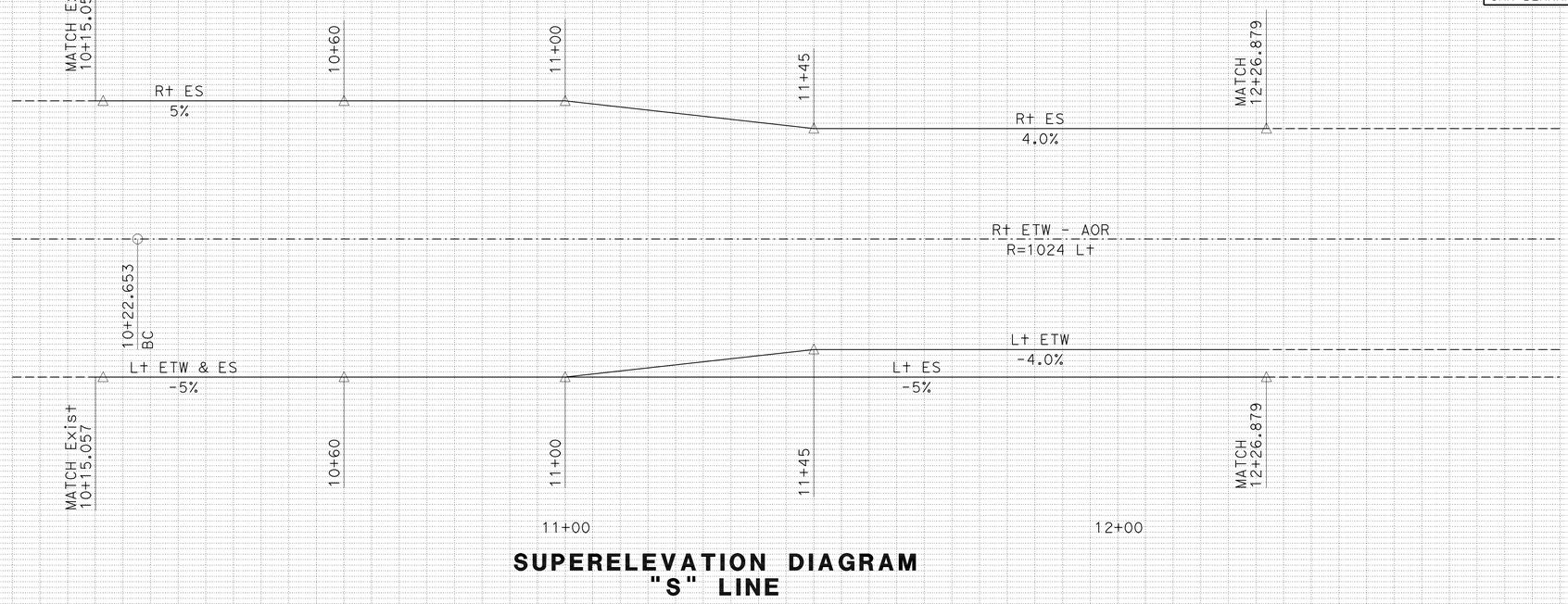

SUPERELEVATION DIAGRAM
"S" LINE

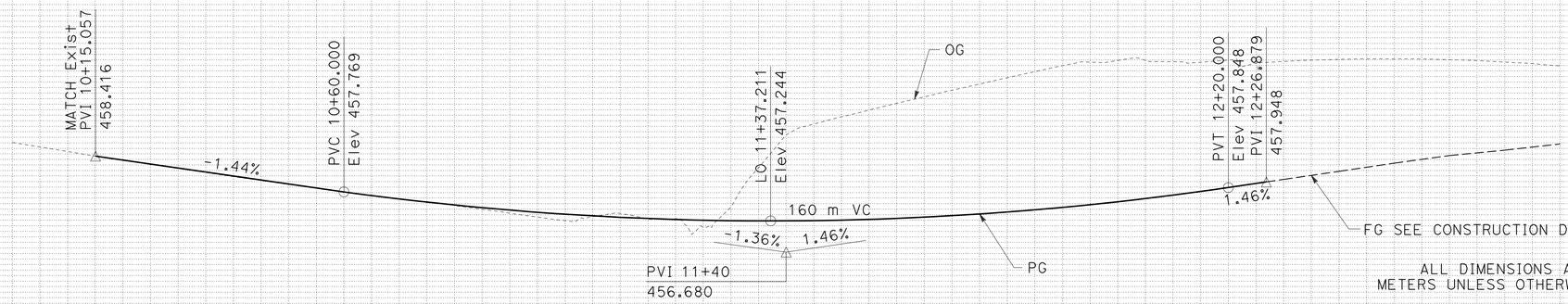

ALL DIMENSIONS ARE IN METERS UNLESS OTHERWISE SHOWN

PROFILE
ROUTE 215 NB BOX SPRINGS RD. EXIST RAMP ("S" LINE)

PROFILE
AND SUPERELEVATION DIAGRAM

SCALE HORIZ 1 : 500
VERT 1 : 50

PS-13

Station	10+00	+20	+40	+60	+80	11+00	+20	+40	+60	+80	12+00	+20	+40	+60	+80	13+00	+20
m^3 Exc	5263																
m^3 Emb	80																

STATE OF CALIFORNIA - DEPARTMENT OF TRANSPORTATION
Caltrans

CONSULTANT FUNCTIONAL SUPERVISOR: NORMAN SUYDAM
CALCULATED-DESIGNED BY: ERIC GIROD
CHECKED BY: NORMAN SUYDAM
REVISED BY
DATE REVISED

LAST REVISION 11-09-09
DATE PLOTTED => 19-OCT-2010
TIME PLOTTED => 15:31

NOTE:
FOR COMPLETE RIGHT OF WAY AND ACCURATE ACCESS DATA, SEE RIGHT OF WAY RECORD MAPS AT DISTRICT OFFICE.

Dist	COUNTY	ROUTE	KILOMETER POST TOTAL PROJECT	SHEET No.	TOTAL SHEETS
08	Riv	60,215	R19.7/21.9, R61.3/62.7	27	594

REGISTERED CIVIL ENGINEER 1-14-10 DATE

6-28-10
PLANS APPROVAL DATE

REGISTERED PROFESSIONAL ENGINEER
ERIC S. GIROD
No. C57288
Exp.12/31/11
CIVIL
STATE OF CALIFORNIA

THE STATE OF CALIFORNIA OR ITS OFFICERS OR AGENTS SHALL NOT BE RESPONSIBLE FOR THE ACCURACY OR COMPLETENESS OF ELECTRONIC COPIES OF THIS PLAN SHEET.

LAN ENGINEERING CORP
1887 BUSINESS CENTER DR
SUITE 6
SAN BERNARDINO, CA 92408

RIVERSIDE COUNTY
TRANSPORTATION COMMISSION
4080 LEMON STREET
RIVERSIDE, CA 92502

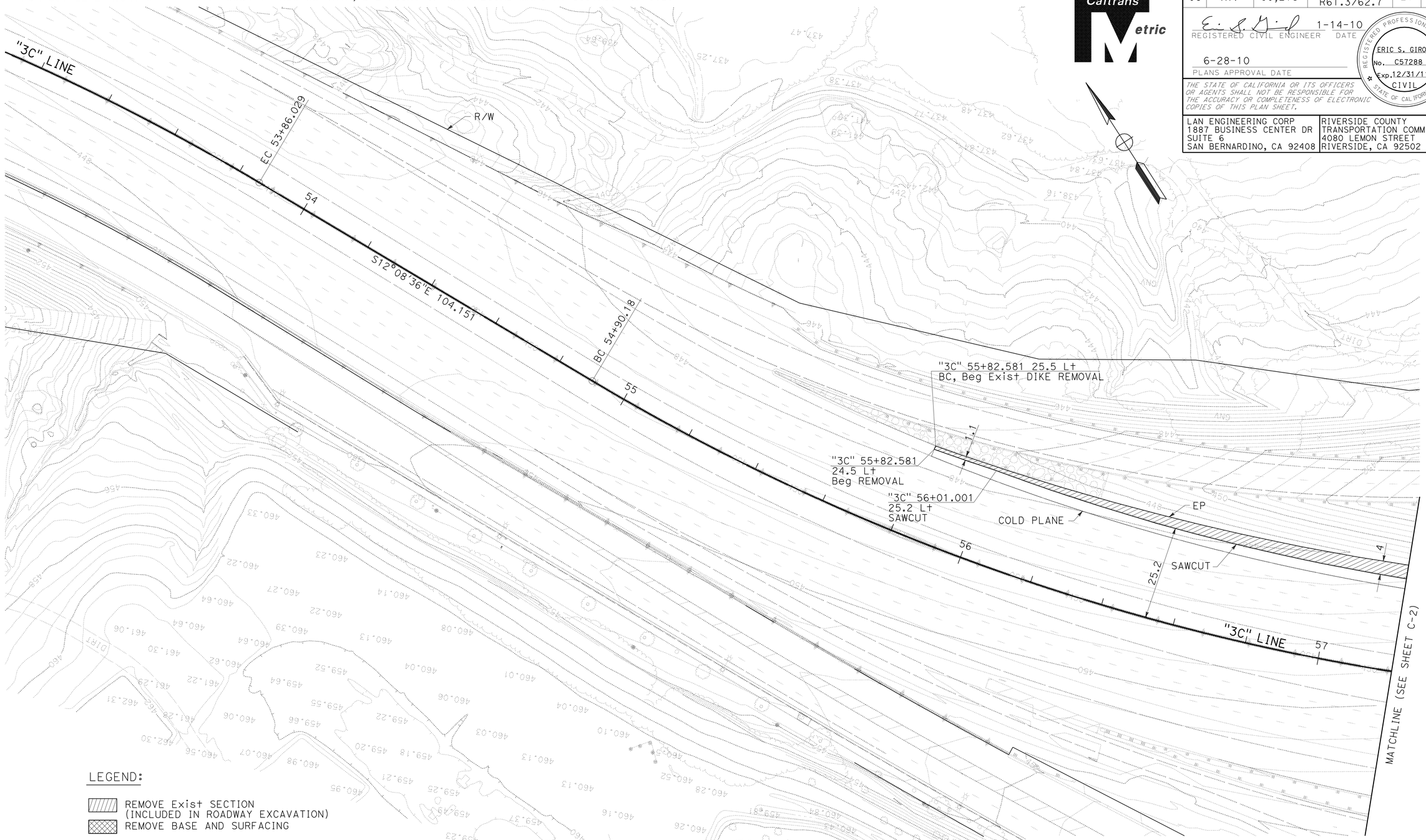

LEGEND:

REMOVE Exist SECTION (INCLUDED IN ROADWAY EXCAVATION)
REMOVE BASE AND SURFACING

ALL DIMENSIONS ARE IN METERS UNLESS OTHERWISE SHOWN

CONSTRUCTION DETAILS
REMOVAL DETAILS
SCALE 1:500

C-1

STATE OF CALIFORNIA - DEPARTMENT OF TRANSPORTATION
Caltrans

CONSULTANT FUNCTIONAL SUPERVISOR: NORMAN SUYDAM
CALCULATED-DESIGNED BY: MIKE FLORES
CHECKED BY: NORMAN SUYDAM
REVISED BY / DATE REVISED

LAST REVISION 11-09-09
DATE PLOTTED => 19-OCT-2010
TIME PLOTTED => 15:32

Dist	COUNTY	ROUTE	KILOMETER POST TOTAL PROJECT	SHEET No.	TOTAL SHEETS
08	Riv	60,215	R19.7/21.9, R61.3/62.7	28	594

REGISTERED CIVIL ENGINEER 1-14-10 DATE

6-28-10
PLANS APPROVAL DATE

REGISTERED PROFESSIONAL ENGINEER ERIC S. GIROD No. C57288 Exp.12/31/11 CIVIL STATE OF CALIFORNIA

THE STATE OF CALIFORNIA OR ITS OFFICERS OR AGENTS SHALL NOT BE RESPONSIBLE FOR THE ACCURACY OR COMPLETENESS OF ELECTRONIC COPIES OF THIS PLAN SHEET.

LAN ENGINEERING CORP
1887 BUSINESS CENTER DR
SUITE 6
SAN BERNARDINO, CA 92408

RIVERSIDE COUNTY
TRANSPORTATION COMMISSION
4080 LEMON STREET
RIVERSIDE, CA 92502

Caltrans Metric

CURVE TABLE

No.	R	Δ	T	L
1	1041.407	14°01'56"	128.166	255.05

LEGEND:

- REMOVE Exist SECTION (INCLUDED IN ROADWAY EXCAVATION)
- REMOVE BASE AND SURFACING

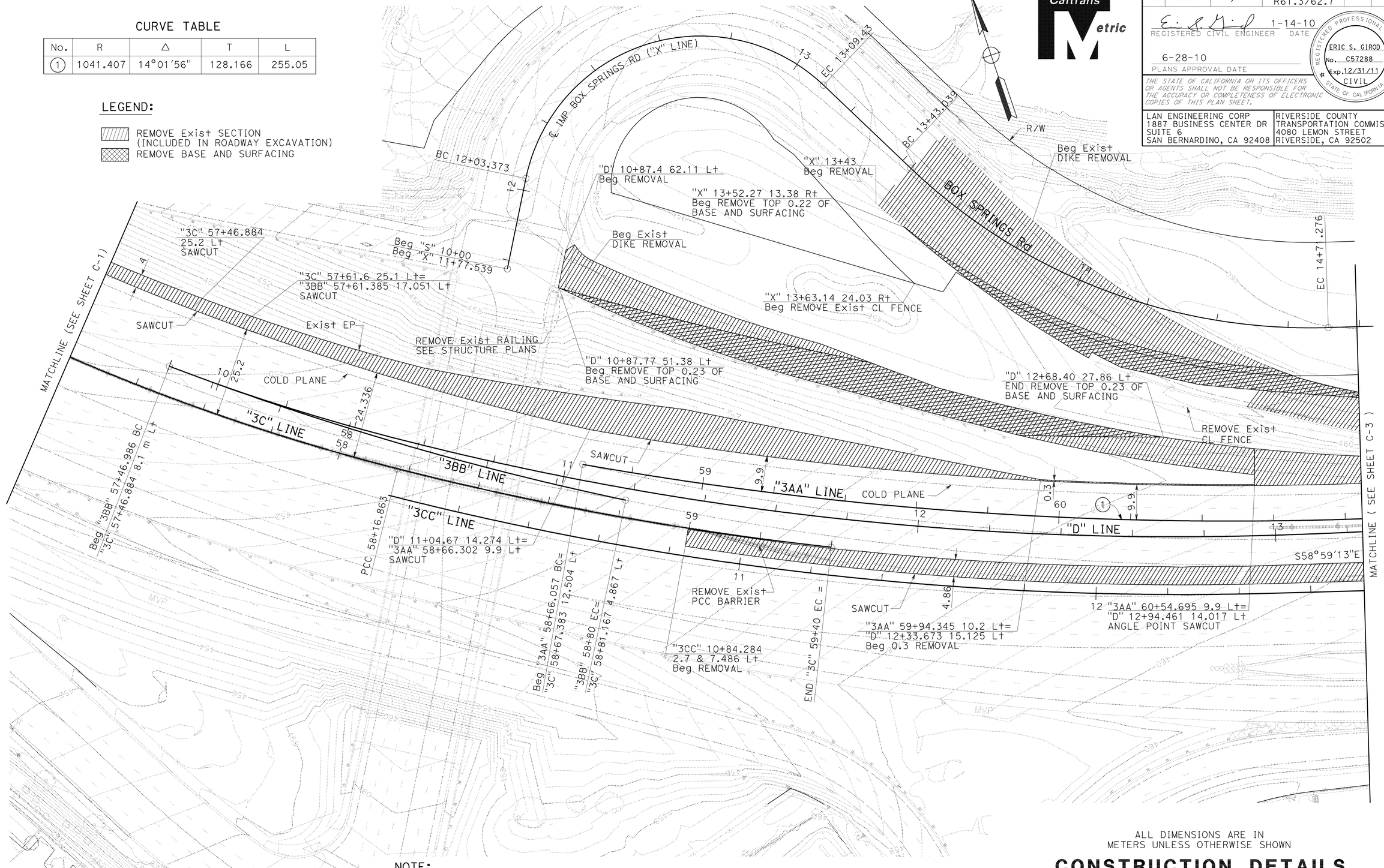

NOTE:
1. FOR COMPLETE RIGHT OF WAY AND ACCURATE ACCESS DATA, SEE RIGHT OF WAY RECORD MAPS AT DISTRICT OFFICE.

ALL DIMENSIONS ARE IN METERS UNLESS OTHERWISE SHOWN

CONSTRUCTION DETAILS
REMOVAL DETAILS
SCALE 1:500 **C-2**

STATE OF CALIFORNIA - DEPARTMENT OF TRANSPORTATION
Caltrans

CONSULTANT FUNCTIONAL SUPERVISOR: NORMAN SUYDAM
CALCULATED-DESIGNED BY: MIKE FLORES
CHECKED BY: NORMAN SUYDAM
REVISED BY / DATE REVISED

LAST REVISION 11-09-09 DATE PLOTTED => 19-OCT-2010 TIME PLOTTED => 15:32

Dist	COUNTY	ROUTE	KILOMETER POST TOTAL PROJECT	SHEET No.	TOTAL SHEETS
08	Riv	60,215	R19.7/21.9, R61.3/62.7	29	594

REGISTERED CIVIL ENGINEER 1-14-10 DATE

6-28-10
PLANS APPROVAL DATE

REGISTERED PROFESSIONAL ENGINEER ERIC S. GIROD No. C57288 Exp.12/31/11 CIVIL STATE OF CALIFORNIA

THE STATE OF CALIFORNIA OR ITS OFFICERS OR AGENTS SHALL NOT BE RESPONSIBLE FOR THE ACCURACY OR COMPLETENESS OF ELECTRONIC COPIES OF THIS PLAN SHEET.

LAN ENGINEERING CORP
1887 BUSINESS CENTER DR
SUITE 6
SAN BERNARDINO, CA 92408

RIVERSIDE COUNTY
TRANSPORTATION COMMISSION
4080 LEMON STREET
RIVERSIDE, CA 92502

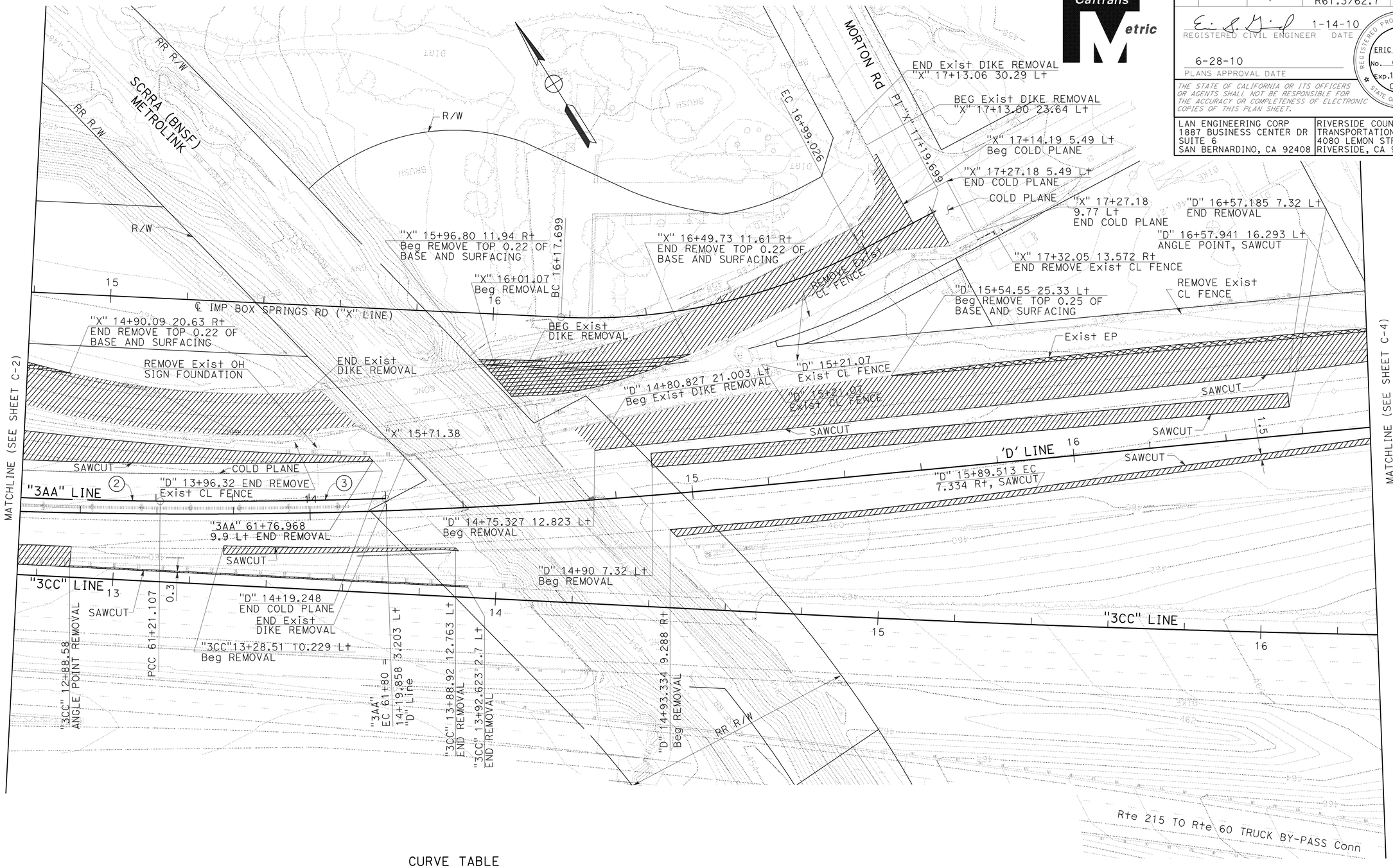

CURVE TABLE

No.	R	Δ	T	L
2	1041.407	14°01'56"	128.166	255.05
3	1462.408	3°55'05"	29.45	58.823

LEGEND:

- REMOVE Exist SECTION (INCLUDED IN ROADWAY EXCAVATION)
- REMOVE BASE AND SURFACING

NOTE:
1. FOR COMPLETE RIGHT OF WAY AND ACCURATE ACCESS DATA, SEE RIGHT OF WAY RECORD MAPS AT DISTRICT OFFICE.

ALL DIMENSIONS ARE IN METERS UNLESS OTHERWISE SHOWN

CONSTRUCTION DETAILS

REMOVAL DETAILS

SCALE 1:500 **C-3**

STATE OF CALIFORNIA - DEPARTMENT OF TRANSPORTATION

CONSULTANT FUNCTIONAL SUPERVISOR: NORMAN SUYDAM
CALCULATED-DESIGNED BY: MIKE FLORES
CHECKED BY: NORMAN SUYDAM
REVISED BY / DATE REVISED

LAST REVISION DATE PLOTTED => 19-OCT-2010
TIME PLOTTED => 15:32
11-09-09

Dist	COUNTY	ROUTE	KILOMETER POST TOTAL PROJECT	SHEET No.	TOTAL SHEETS
08	Riv	60,215	R19.7/21.9, R61.3/62.7	30	594

REGISTERED CIVIL ENGINEER 1-14-10 DATE

6-28-10
PLANS APPROVAL DATE

REGISTERED PROFESSIONAL ENGINEER
ERIC S. GIROD
No. C57288
Exp.12/31/11
CIVIL
STATE OF CALIFORNIA

THE STATE OF CALIFORNIA OR ITS OFFICERS OR AGENTS SHALL NOT BE RESPONSIBLE FOR THE ACCURACY OR COMPLETENESS OF ELECTRONIC COPIES OF THIS PLAN SHEET.

LAN ENGINEERING CORP
1887 BUSINESS CENTER DR
SUITE 6
SAN BERNARDINO, CA 92408

RIVERSIDE COUNTY
TRANSPORTATION COMMISSION
4080 LEMON STREET
RIVERSIDE, CA 92502

LEGEND:

- REMOVE Exist SECTION (INCLUDED IN ROADWAY EXCAVATION)
- REMOVE BASE AND SURFACING

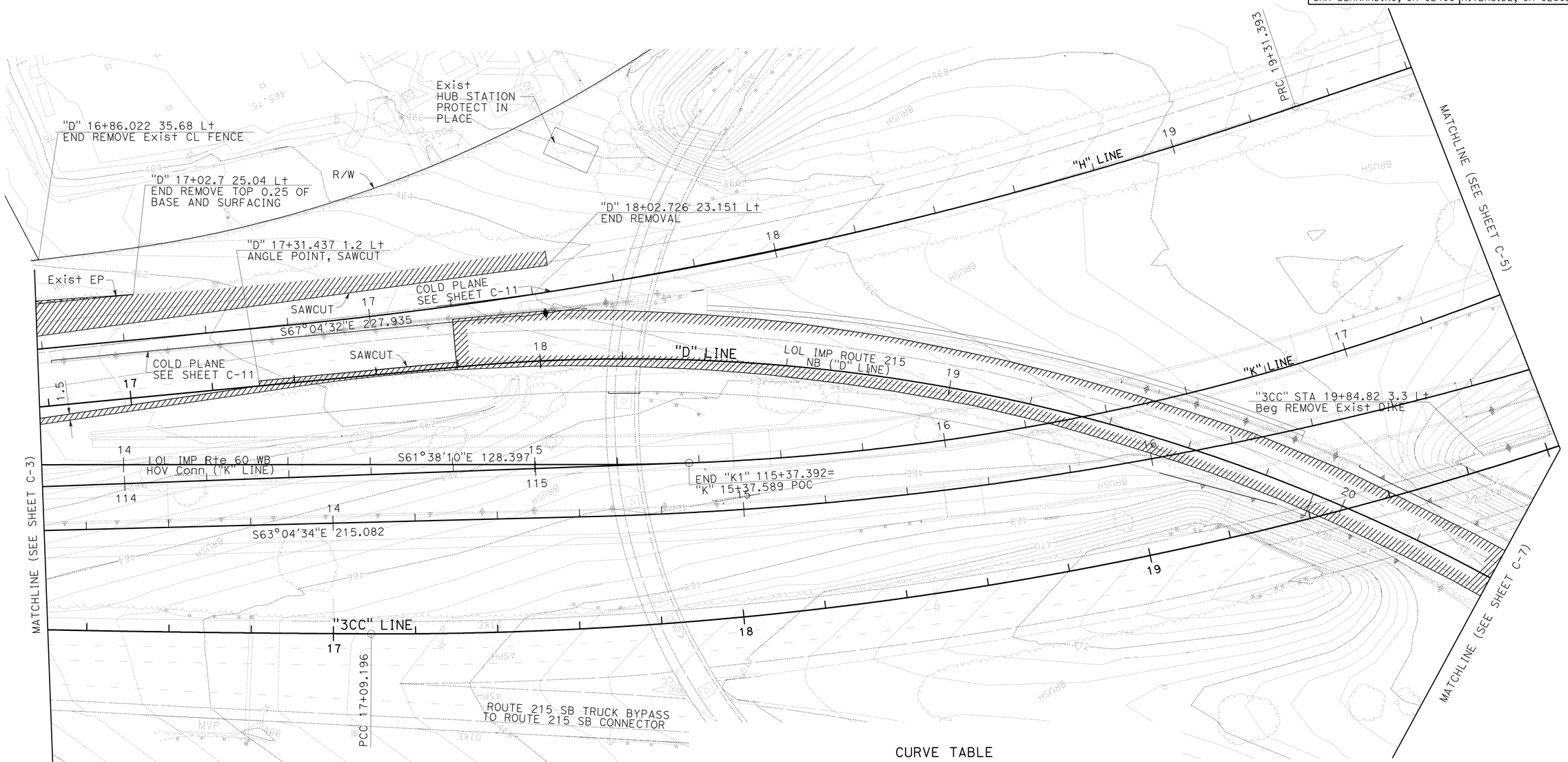

CURVE TABLE

No.	R	Δ	T	L
4	900	5°43'52"	45.049	90.022

NOTE:

1. FOR COMPLETE RIGHT OF WAY AND ACCURATE ACCESS DATA, SEE RIGHT OF WAY RECORD MAPS AT DISTRICT OFFICE.

ALL DIMENSIONS ARE IN METERS UNLESS OTHERWISE SHOWN

CONSTRUCTION DETAILS

REMOVAL DETAILS

SCALE 1:500 **C-4**

REVISED BY | DATE REVISED
MIKE FLORES | NORMAN SUYDAM
CALCULATED-DESIGNED BY | CHECKED BY
CONSULTANT FUNCTIONAL SUPERVISOR
NORMAN SUYDAM

STATE OF CALIFORNIA - DEPARTMENT OF TRANSPORTATION
Caltrans

LAST REVISION 11-09-09
DATE PLOTTED => 19-OCT-2010
TIME PLOTTED => 15:32

Dist	COUNTY	ROUTE	KILOMETER POST TOTAL PROJECT	SHEET No.	TOTAL SHEETS
08	Riv	60,215	R19.7/21.9, R61.3/62.7	31	594

Caltrans Metric

REGISTERED CIVIL ENGINEER 1-14-10 DATE

6-28-10
PLANS APPROVAL DATE

REGISTERED PROFESSIONAL ENGINEER
ERIC S. GIROD
No. C57288
Exp.12/31/11
CIVIL
STATE OF CALIFORNIA

THE STATE OF CALIFORNIA OR ITS OFFICERS OR AGENTS SHALL NOT BE RESPONSIBLE FOR THE ACCURACY OR COMPLETENESS OF ELECTRONIC COPIES OF THIS PLAN SHEET.

LAN ENGINEERING CORP
1887 BUSINESS CENTER DR
SUITE 6
SAN BERNARDINO, CA 92408

RIVERSIDE COUNTY
TRANSPORTATION COMMISSION
4080 LEMON STREET
RIVERSIDE, CA 92502

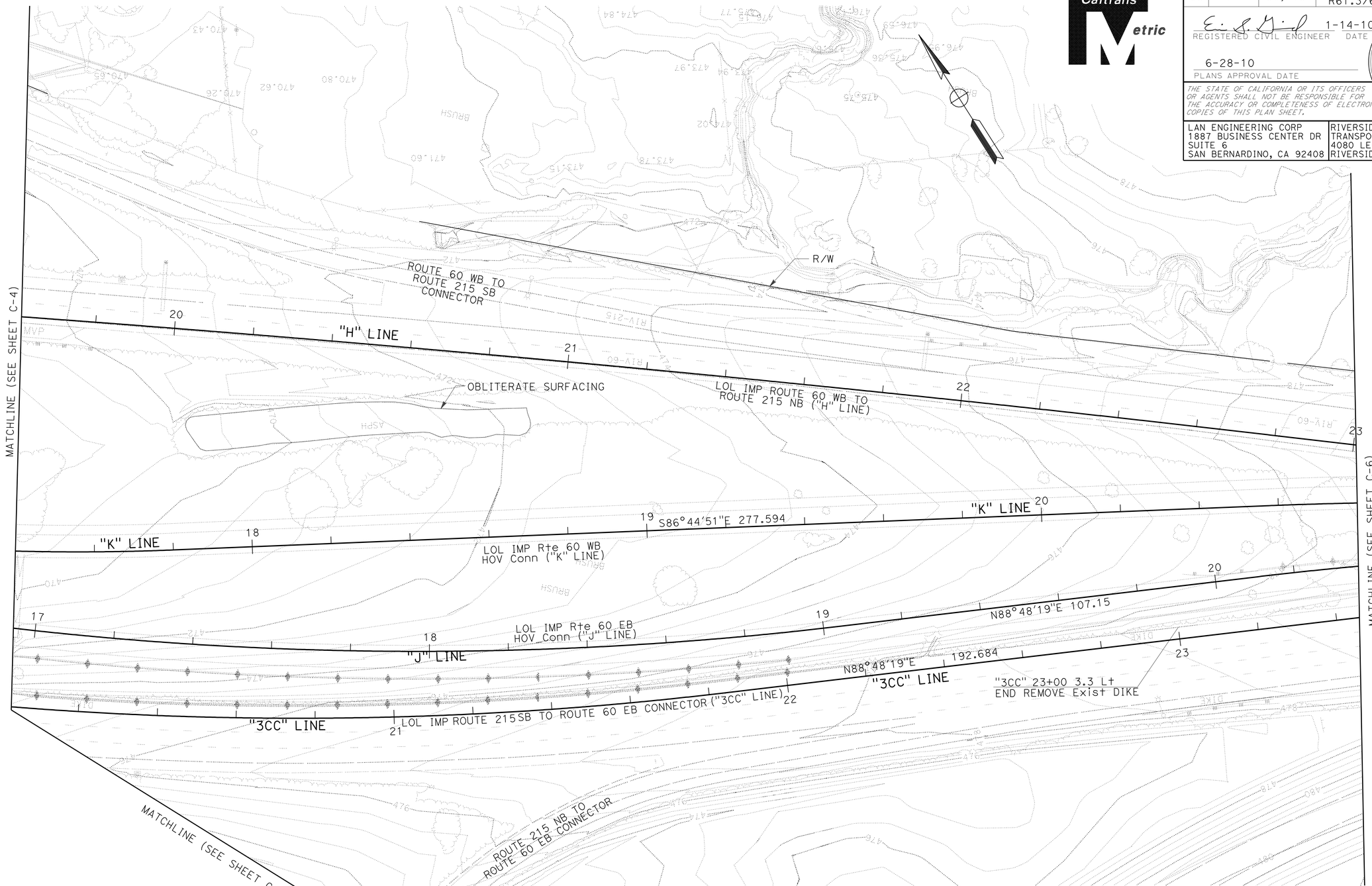

ALL DIMENSIONS ARE IN METERS UNLESS OTHERWISE SHOWN

CONSTRUCTION DETAILS
REMOVAL DETAILS

SCALE 1:500

C-5

NOTE:
FOR COMPLETE RIGHT OF WAY AND ACCURATE ACCESS DATA, SEE RIGHT OF WAY RECORD MAPS AT DISTRICT OFFICE.

STATE OF CALIFORNIA - DEPARTMENT OF TRANSPORTATION
Caltrans

CONSULTANT FUNCTIONAL SUPERVISOR: NORMAN SUYDAM
CALCULATED-DESIGNED BY: MIKE FLORES
CHECKED BY: NORMAN SUYDAM
REVISED BY
DATE REVISED

LAST REVISION 11-09-09
DATE PLOTTED => 19-OCT-2010
TIME PLOTTED => 15:32

Dist	COUNTY	ROUTE	KILOMETER POST TOTAL PROJECT	SHEET No.	TOTAL SHEETS
08	Riv	60,215	R19.7/21.9, R61.3/62.7	32	594

REGISTERED CIVIL ENGINEER 1-14-10 DATE

6-28-10
PLANS APPROVAL DATE

REGISTERED PROFESSIONAL ENGINEER
ERIC S. GIROD
No. C57288
Exp.12/31/11
CIVIL
STATE OF CALIFORNIA

THE STATE OF CALIFORNIA OR ITS OFFICERS OR AGENTS SHALL NOT BE RESPONSIBLE FOR THE ACCURACY OR COMPLETENESS OF ELECTRONIC COPIES OF THIS PLAN SHEET.

LAN ENGINEERING CORP
1887 BUSINESS CENTER DR
SUITE 6
SAN BERNARDINO, CA 92408

RIVERSIDE COUNTY
TRANSPORTATION COMMISSION
4080 LEMON STREET
RIVERSIDE, CA 92502

LEGEND:

REMOVE Exist SECTION (INCLUDED IN ROADWAY EXCAVATION)

REMOVE BASE AND SURFACING

NOTE:
1. FOR COMPLETE RIGHT OF WAY AND ACCURATE ACCESS DATA, SEE RIGHT OF WAY RECORD MAPS AT DISTRICT OFFICE.

ALL DIMENSIONS ARE IN METERS UNLESS OTHERWISE SHOWN

CONSTRUCTION DETAILS

REMOVAL DETAILS

SCALE 1:500 **C-6**

STATE OF CALIFORNIA - DEPARTMENT OF TRANSPORTATION

Caltrans

CONSULTANT FUNCTIONAL SUPERVISOR: NORMAN SUYDAM

CALCULATED-DESIGNED BY: MIKE FLORES

CHECKED BY: NORMAN SUYDAM

REVISED BY | DATE REVISED

LAST REVISION DATE PLOTTED => 19-OCT-2010
11-09-09 TIME PLOTTED => 15:33

Dist	COUNTY	ROUTE	KILOMETER POST TOTAL PROJECT	SHEET No.	TOTAL SHEETS
08	Riv	60,215	R19.7/21.9, R61.3/62.7	33	594

Caltrans Metric

1-14-10
REGISTERED CIVIL ENGINEER DATE

6-28-10
PLANS APPROVAL DATE

REGISTERED PROFESSIONAL ENGINEER
ERIC S. GIROD
No. C57288
Exp.12/31/11
CIVIL
STATE OF CALIFORNIA

THE STATE OF CALIFORNIA OR ITS OFFICERS OR AGENTS SHALL NOT BE RESPONSIBLE FOR THE ACCURACY OR COMPLETENESS OF ELECTRONIC COPIES OF THIS PLAN SHEET.

LAN ENGINEERING CORP
1887 BUSINESS CENTER DR
SUITE 6
SAN BERNARDINO, CA 92408

RIVERSIDE COUNTY
TRANSPORTATION COMMISSION
4080 LEMON STREET
RIVERSIDE, CA 92502

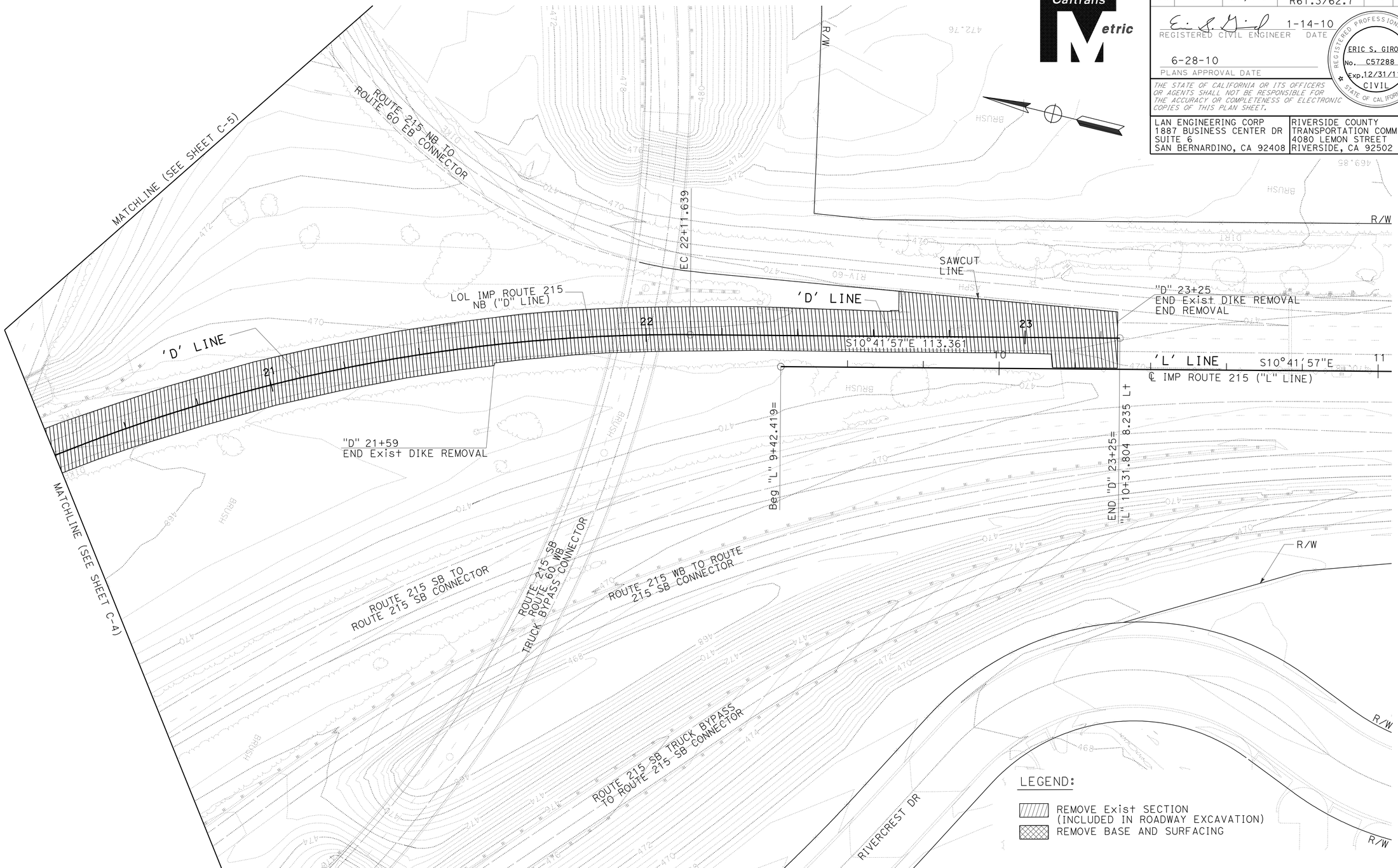

ALL DIMENSIONS ARE IN METERS UNLESS OTHERWISE SHOWN

CONSTRUCTION DETAILS

REMOVAL DETAILS

SCALE 1:500

C-7

NOTE:

1. FOR COMPLETE RIGHT OF WAY AND ACCURATE ACCESS DATA, SEE RIGHT OF WAY RECORD MAPS AT DISTRICT OFFICE.

REVISED BY	DATE REVISED

CALCULATED-DESIGNED BY	MIKE FLORES
CHECKED BY	NORMAN SUYDAM
SUPERVISOR	NORMAN SUYDAM
CONSULTANT FUNCTIONAL SUPERVISOR	

STATE OF CALIFORNIA - DEPARTMENT OF TRANSPORTATION
Caltrans

LAST REVISION 11-09-09 DATE PLOTTED => 19-OCT-2010 TIME PLOTTED => 15:33

NOTE:
FOR COMPLETE RIGHT OF WAY AND ACCURATE ACCESS DATA, SEE RIGHT OF WAY RECORD MAPS AT DISTRICT OFFICE.

Dist	COUNTY	ROUTE	KILOMETER POST TOTAL PROJECT	SHEET No.	TOTAL SHEETS
08	Riv	60,215	R19.7/21.9, R61.3/62.7	34	594

REGISTERED CIVIL ENGINEER 1-14-10 DATE

6-28-10
PLANS APPROVAL DATE

REGISTERED PROFESSIONAL ENGINEER ERIC S. GIROD No. C57288 Exp.12/31/11 CIVIL STATE OF CALIFORNIA

THE STATE OF CALIFORNIA OR ITS OFFICERS OR AGENTS SHALL NOT BE RESPONSIBLE FOR THE ACCURACY OR COMPLETENESS OF ELECTRONIC COPIES OF THIS PLAN SHEET.

LAN ENGINEERING CORP
1887 BUSINESS CENTER DR
SUITE 6
SAN BERNARDINO, CA 92408

RIVERSIDE COUNTY
TRANSPORTATION COMMISSION
4080 LEMON STREET
RIVERSIDE, CA 92502

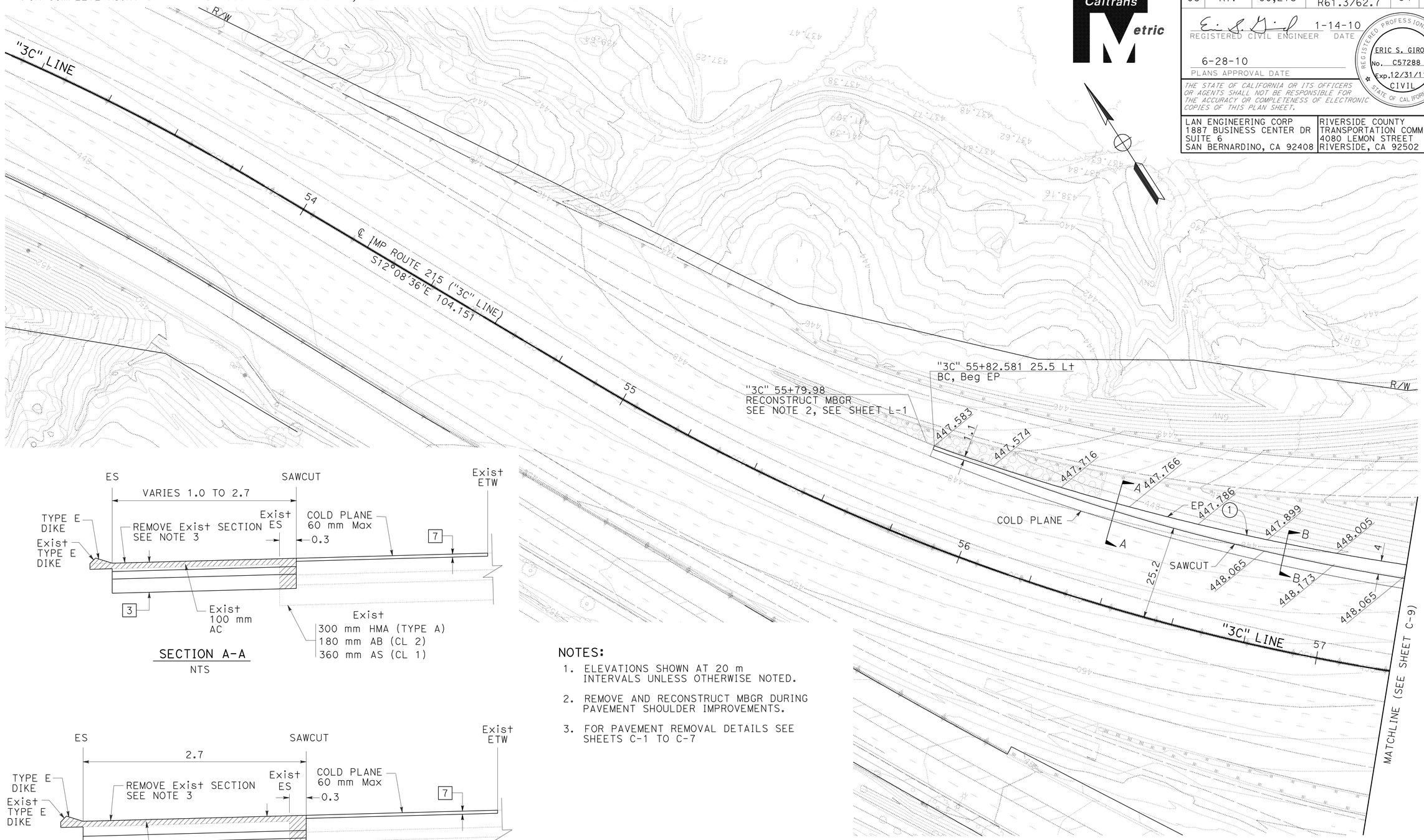

SECTION A-A
NTS

SECTION B-B
NTS

NOTES:

1. ELEVATIONS SHOWN AT 20 m INTERVALS UNLESS OTHERWISE NOTED.
2. REMOVE AND RECONSTRUCT MBGR DURING PAVEMENT SHOULDER IMPROVEMENTS.
3. FOR PAVEMENT REMOVAL DETAILS SEE SHEETS C-1 TO C-7

CURVE TABLE

No.	R	Δ	T	L
1	678.429	14°25'52"	85.893	170.877

ALL DIMENSIONS ARE IN METERS UNLESS OTHERWISE SHOWN

CONSTRUCTION DETAILS
PAVEMENT DETAILS

SCALE 1:500 **C-8**

REVISED BY	DATE REVISED

CALCULATED-DESIGNED BY: MIKE FLORES
CHECKED BY: NORMAN SUYDAM
CONSULTANT FUNCTIONAL SUPERVISOR: NORMAN SUYDAM

STATE OF CALIFORNIA - DEPARTMENT OF TRANSPORTATION
Caltrans

LAST REVISION 11-09-09 | DATE PLOTTED => 19-OCT-2010 | TIME PLOTTED => 15:33

Dist	COUNTY	ROUTE	KILOMETER POST TOTAL PROJECT	SHEET No.	TOTAL SHEETS
08	Riv	60,215	R19.7/21.9, R61.3/62.7	35	594

Caltrans Metric

REGISTERED CIVIL ENGINEER 1-14-10 DATE

6-28-10
PLANS APPROVAL DATE

REGISTERED PROFESSIONAL ENGINEER ERIC S. GIROD No. C57288 Exp.12/31/11 CIVIL STATE OF CALIFORNIA

THE STATE OF CALIFORNIA OR ITS OFFICERS OR AGENTS SHALL NOT BE RESPONSIBLE FOR THE ACCURACY OR COMPLETENESS OF ELECTRONIC COPIES OF THIS PLAN SHEET.

LAN ENGINEERING CORP
1887 BUSINESS CENTER DR
SUITE 6
SAN BERNARDINO, CA 92408

RIVERSIDE COUNTY
TRANSPORTATION COMMISSION
4080 LEMON STREET
RIVERSIDE, CA 92502

CURVE TABLE

No.	R	Δ	T	L
1	678.429	14°25'52"	85.893	170.877
2	580.5	5°09'28"	26.143	52.257
3	1061.7	4°00'23"	37.135	74.241
4	1061.123	8°34'01"	79.478	158.659
5	1437.64	0°35'59"	7.523	15.046
6	1041.407	14°01'56"	128.166	255.05

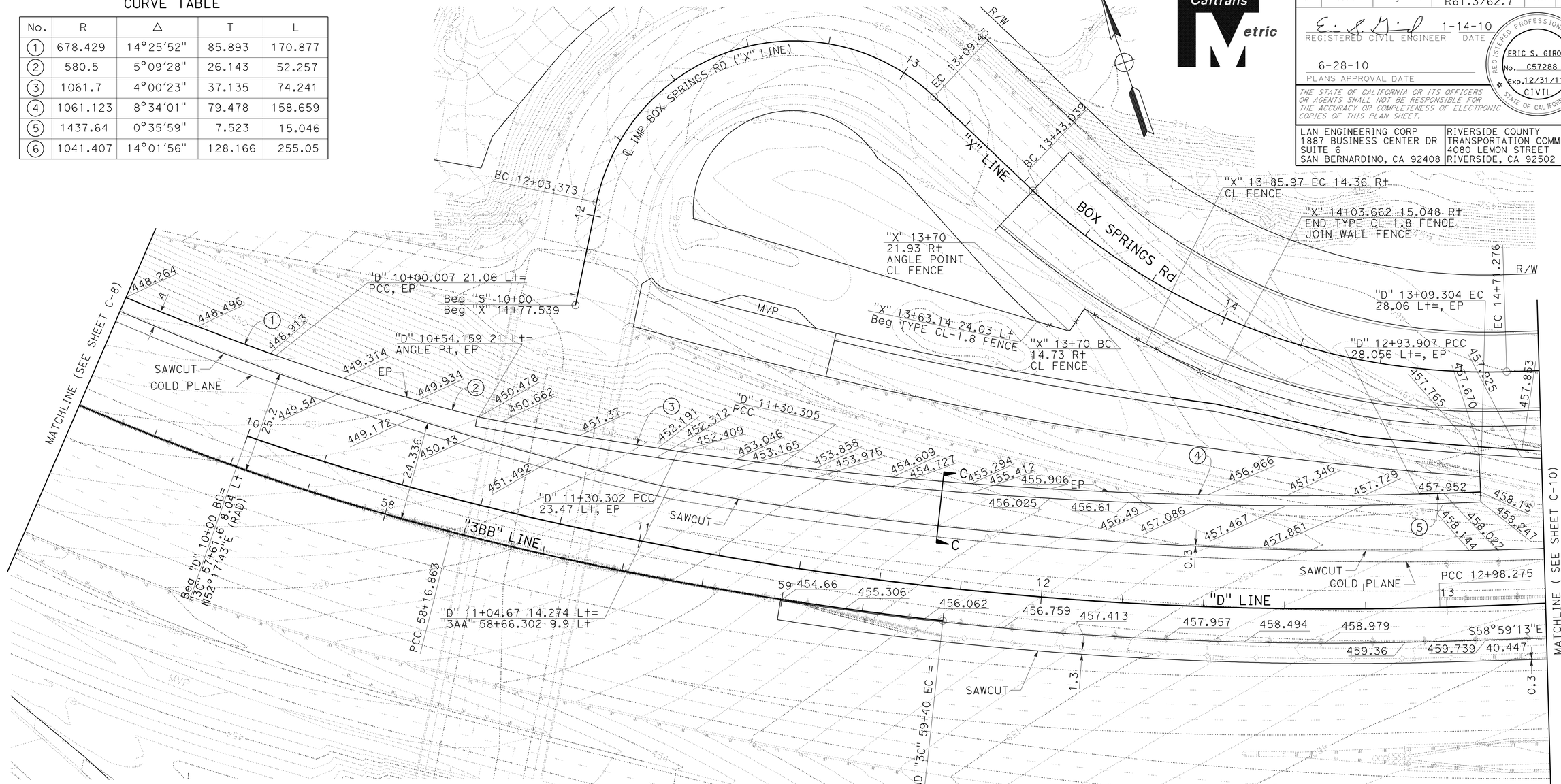

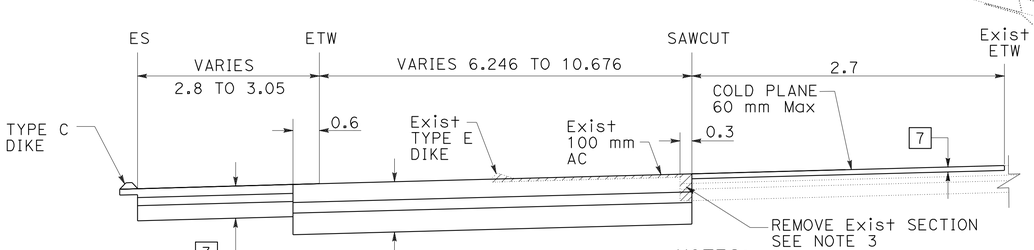

SECTION C-C
NTS

NOTES:

1. ELEVATIONS SHOWN AT 20 m INTERVALS UNLESS OTHERWISE NOTED.
2. FOR COMPLETE RIGHT OF WAY AND ACCURATE ACCESS DATA, SEE RIGHT OF WAY RECORD MAPS AT DISTRICT OFFICE.
3. FOR PAVEMENT REMOVAL DETAILS SEE SHEETS C-1 TO C-7

ALL DIMENSIONS ARE IN METERS UNLESS OTHERWISE SHOWN

CONSTRUCTION DETAILS

PAVEMENT DETAILS

SCALE 1:500

C-9

STATE OF CALIFORNIA - DEPARTMENT OF TRANSPORTATION
Caltrans

CONSULTANT FUNCTIONAL SUPERVISOR: NORMAN SUYDAM
CALCULATED-DESIGNED BY: MIKE FLORES
CHECKED BY: NORMAN SUYDAM
REVISED BY
DATE REVISED

LAST REVISION 11-09-09
DATE PLOTTED => 19-OCT-2010
TIME PLOTTED => 15:33

Dist	COUNTY	ROUTE	KILOMETER POST TOTAL PROJECT	SHEET No.	TOTAL SHEETS
08	Riv	60,215	R19.7/21.9, R61.3/62.7	36	594

REGISTERED CIVIL ENGINEER 1-14-10 DATE

6-28-10
PLANS APPROVAL DATE

REGISTERED PROFESSIONAL ENGINEER ERIC S. GIROD No. C57288 Exp.12/31/11 CIVIL STATE OF CALIFORNIA

THE STATE OF CALIFORNIA OR ITS OFFICERS OR AGENTS SHALL NOT BE RESPONSIBLE FOR THE ACCURACY OR COMPLETENESS OF ELECTRONIC COPIES OF THIS PLAN SHEET.

LAN ENGINEERING CORP
1887 BUSINESS CENTER DR
SUITE 6
SAN BERNARDINO, CA 92408

RIVERSIDE COUNTY
TRANSPORTATION COMMISSION
4080 LEMON STREET
RIVERSIDE, CA 92502

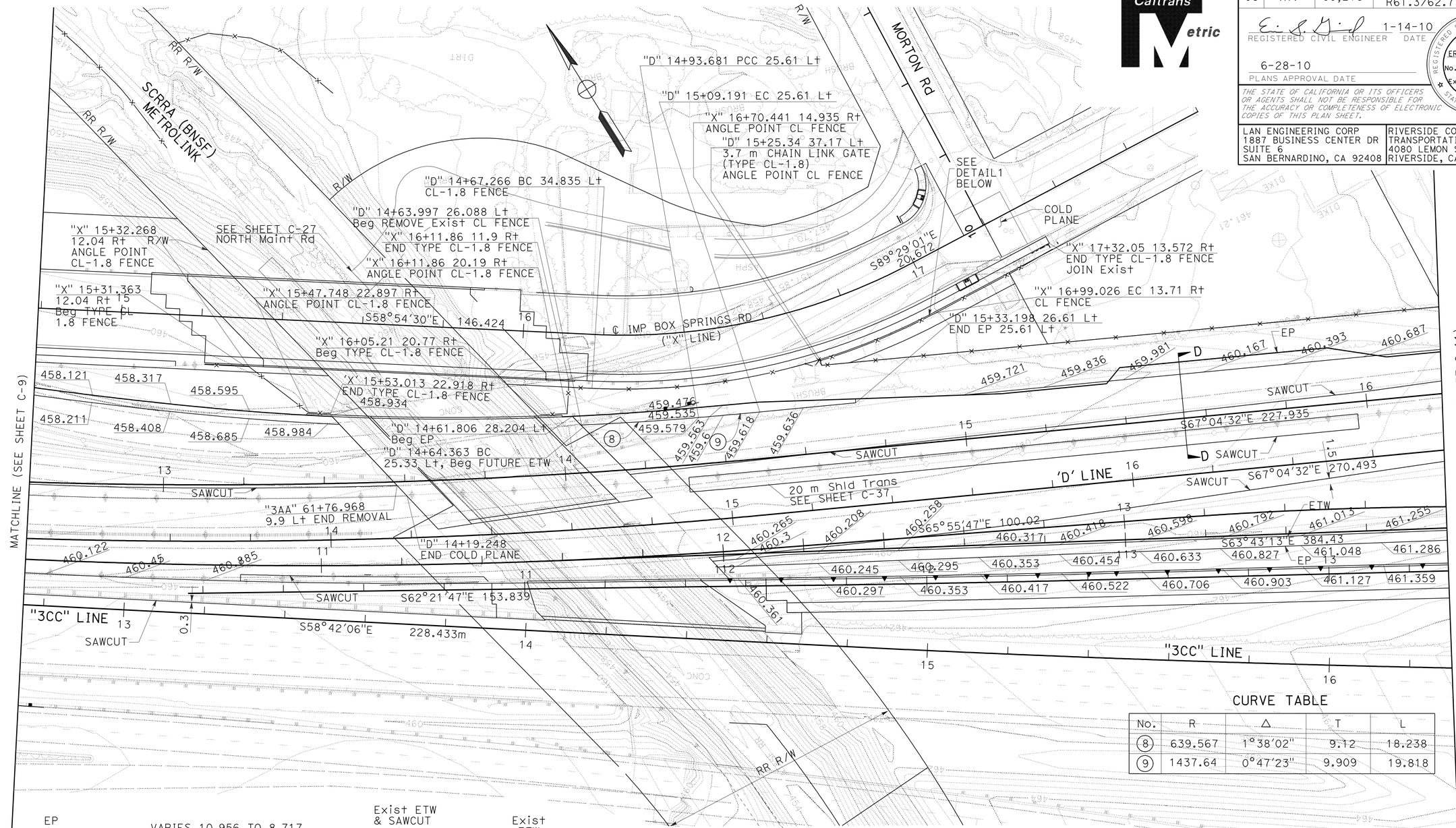

CURVE TABLE

No.	R	Δ	T	L
8	639.567	1°38'02"	9.12	18.238
9	1437.64	0°47'23"	9.909	19.818

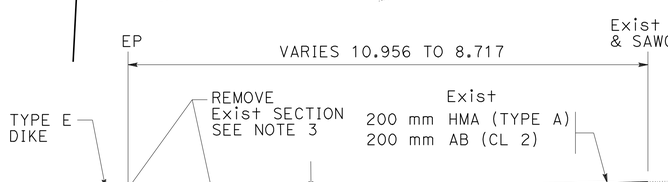

SECTION D-D
NTS

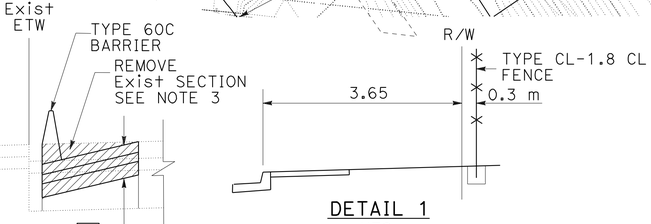

DETAIL 1
NTS

NOTES:
1. ELEVATIONS SHOWN AT 20 m INTERVALS UNLESS OTHERWISE NOTED.
2. FOR COMPLETE RIGHT OF WAY AND ACCURATE ACCESS DATA, SEE RIGHT OF WAY RECORD MAPS AT DISTRICT OFFICE.
3. FOR PAVEMENT REMOVAL DETAILS SEE SHEETS C-1 TO C-7

ALL DIMENSIONS ARE IN METERS UNLESS OTHERWISE SHOWN

CONSTRUCTION DETAILS

PAVEMENT DETAILS

SCALE 1:500

C-10

REVISED BY | DATE REVISED
MIKE FLORES | NORMAN SUYDAM
CALCULATED-DESIGNED BY | CHECKED BY
CONSULTANT FUNCTIONAL SUPERVISOR
NORMAN SUYDAM
STATE OF CALIFORNIA - DEPARTMENT OF TRANSPORTATION
Caltrans

LAST REVISION 11-09-09 | DATE PLOTTED => 19-OCT-2010 | TIME PLOTTED => 15:33

Dist	COUNTY	ROUTE	KILOMETER POST TOTAL PROJECT	SHEET No.	TOTAL SHEETS
08	Riv	60,215	R19.7/21.9, R61.3/62.7	37	594

REGISTERED CIVIL ENGINEER 1-14-10 DATE

6-28-10
PLANS APPROVAL DATE

REGISTERED PROFESSIONAL ENGINEER ERIC S. GIROD No. C57288 Exp.12/31/11 CIVIL STATE OF CALIFORNIA

THE STATE OF CALIFORNIA OR ITS OFFICERS OR AGENTS SHALL NOT BE RESPONSIBLE FOR THE ACCURACY OR COMPLETENESS OF ELECTRONIC COPIES OF THIS PLAN SHEET.

LAN ENGINEERING CORP
1887 BUSINESS CENTER DR
SUITE 6
SAN BERNARDINO, CA 92408

RIVERSIDE COUNTY
TRANSPORTATION COMMISSION
4080 LEMON STREET
RIVERSIDE, CA 92502

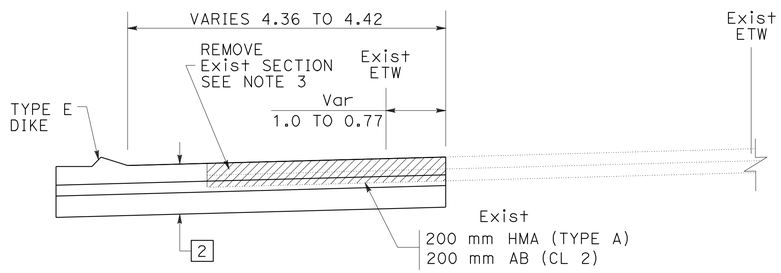

SECTION E-E
NTS

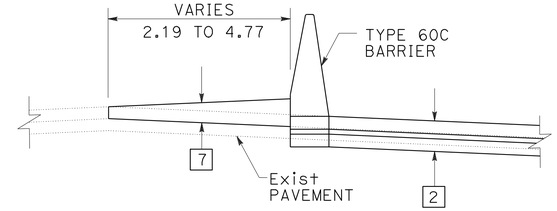

SECTION F-F
NTS

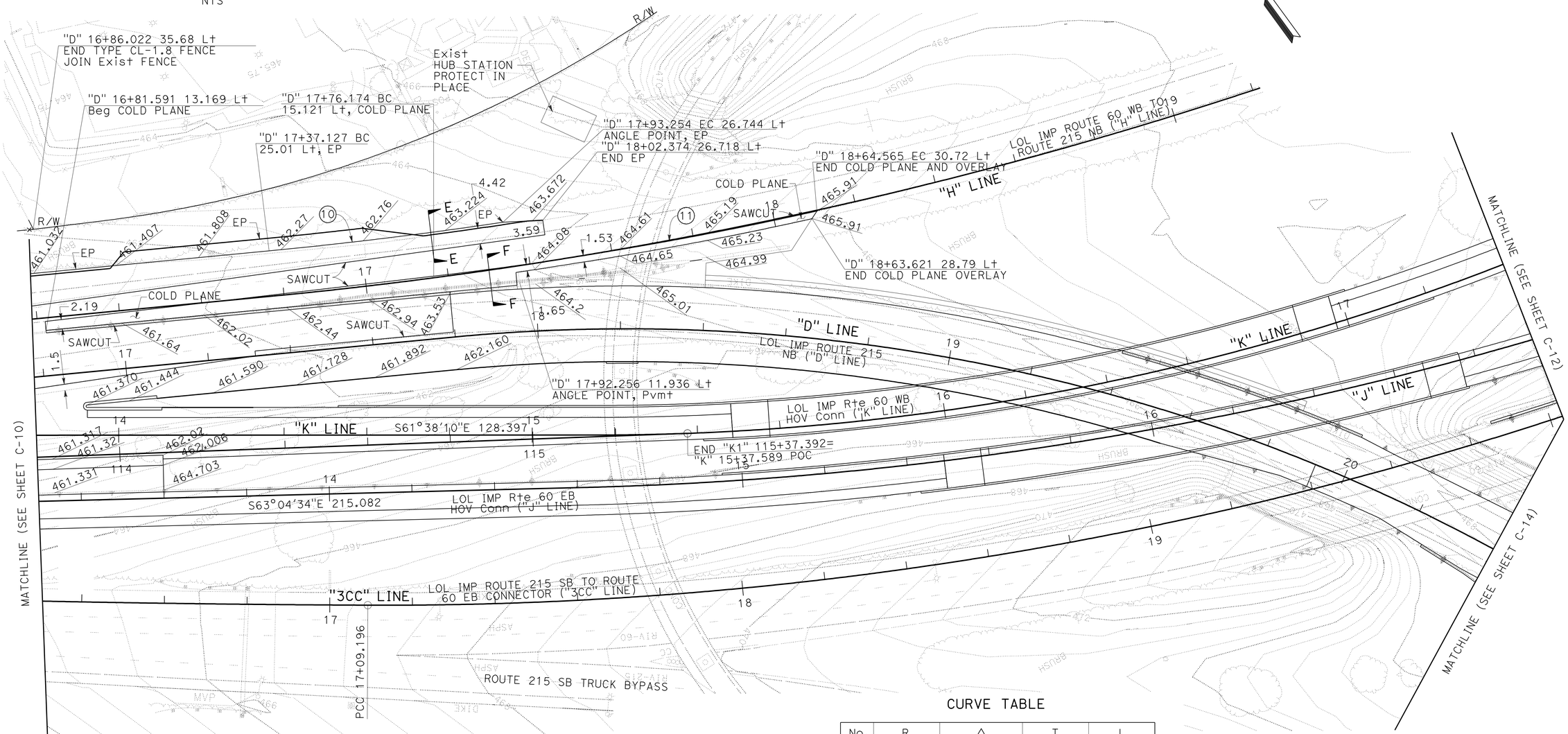

CURVE TABLE

No.	R	Δ	T	L
10	1074.02	3°02'23"	28.496	56.978
11	900	5°43'52"	45.049	90.022

NOTES:
1. ELEVATIONS SHOWN AT 20 m INTERVALS UNLESS OTHERWISE NOTED.
2. FOR COMPLETE RIGHT OF WAY AND ACCURATE ACCESS DATA, SEE RIGHT OF WAY RECORD MAPS AT DISTRICT OFFICE.
3. FOR PAVEMENT REMOVAL DETAILS SEE SHEETS C-1 TO C-7

ALL DIMENSIONS ARE IN METERS UNLESS OTHERWISE SHOWN

CONSTRUCTION DETAILS

PAVEMENT DETAILS

SCALE 1:500 **C-11**

REVISED BY | DATE REVISED
MIKE FLORES | NORMAN SUYDAM
CALCULATED-DESIGNED BY | CHECKED BY
CONSULTANT FUNCTIONAL SUPERVISOR
NORMAN SUYDAM
STATE OF CALIFORNIA - DEPARTMENT OF TRANSPORTATION
Caltrans

LAST REVISION DATE PLOTTED => 19-OCT-2010
11-09-09 TIME PLOTTED => 15:34

Dist	COUNTY	ROUTE	KILOMETER POST TOTAL PROJECT	SHEET No.	TOTAL SHEETS
08	Riv	60,215	R19.7/21.9, R61.3/62.7	38	594

Caltrans Metric

1-14-10
REGISTERED CIVIL ENGINEER DATE

6-28-10
PLANS APPROVAL DATE

REGISTERED PROFESSIONAL ENGINEER
ERIC S. GIROD
No. C57288
Exp.12/31/11
CIVIL
STATE OF CALIFORNIA

THE STATE OF CALIFORNIA OR ITS OFFICERS OR AGENTS SHALL NOT BE RESPONSIBLE FOR THE ACCURACY OR COMPLETENESS OF ELECTRONIC COPIES OF THIS PLAN SHEET.

LAN ENGINEERING CORP
1887 BUSINESS CENTER DR
SUITE 6
SAN BERNARDINO, CA 92408

RIVERSIDE COUNTY
TRANSPORTATION COMMISSION
4080 LEMON STREET
RIVERSIDE, CA 92502

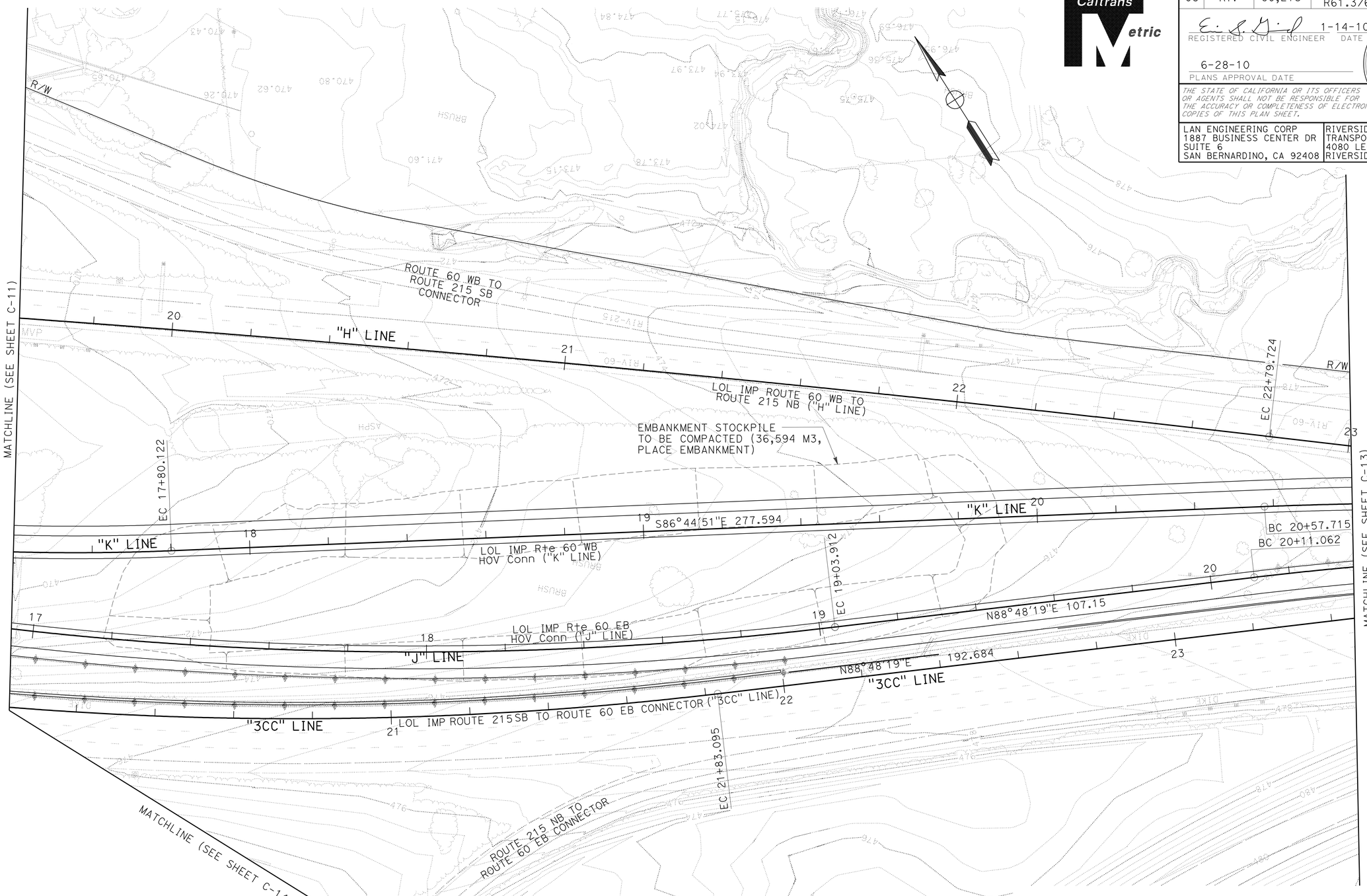

NOTE:
FOR COMPLETE RIGHT OF WAY AND ACCURATE ACCESS DATA, SEE RIGHT OF WAY RECORD MAPS AT DISTRICT OFFICE.

ALL DIMENSIONS ARE IN
METERS UNLESS OTHERWISE SHOWN

CONSTRUCTION DETAILS

PAVEMENT DETAILS

SCALE 1:500 **C-12**

REVISED BY	MIKE FLORES
DATE REVISED	
CALCULATED-DESIGNED BY	NORMAN SUYDAM
CHECKED BY	
CONSULTANT FUNCTIONAL SUPERVISOR	NORMAN SUYDAM

STATE OF CALIFORNIA - DEPARTMENT OF TRANSPORTATION
Caltrans

LAST REVISION 11-09-09
DATE PLOTTED => 19-OCT-2010
TIME PLOTTED => 15:34

Dist	COUNTY	ROUTE	KILOMETER POST TOTAL PROJECT	SHEET No.	TOTAL SHEETS
08	Riv	60,215	R19.7/21.9, R61.3/62.7	39	594

REGISTERED CIVIL ENGINEER 1-14-10 DATE

6-28-10
PLANS APPROVAL DATE

REGISTERED PROFESSIONAL ENGINEER ERIC S. GIROD No. C57288 Exp.12/31/11 CIVIL STATE OF CALIFORNIA

THE STATE OF CALIFORNIA OR ITS OFFICERS OR AGENTS SHALL NOT BE RESPONSIBLE FOR THE ACCURACY OR COMPLETENESS OF ELECTRONIC COPIES OF THIS PLAN SHEET.

LAN ENGINEERING CORP
1887 BUSINESS CENTER DR
SUITE 6
SAN BERNARDINO, CA 92408

RIVERSIDE COUNTY
TRANSPORTATION COMMISSION
4080 LEMON STREET
RIVERSIDE, CA 92502

ALL DIMENSIONS ARE IN METERS UNLESS OTHERWISE SHOWN

NOTE:
1. FOR COMPLETE RIGHT OF WAY AND ACCURATE ACCESS DATA, SEE RIGHT OF WAY RECORD MAPS AT DISTRICT OFFICE.

CONSTRUCTION DETAILS

PAVEMENT DETAILS

SCALE 1:500 **C-13**

STATE OF CALIFORNIA - DEPARTMENT OF TRANSPORTATION
Caltrans

CONSULTANT FUNCTIONAL SUPERVISOR: NORMAN SUYDAM
CALCULATED-DESIGNED BY: MIKE FLORES
CHECKED BY: NORMAN SUYDAM
REVISED BY
DATE REVISED

LAST REVISION 11-09-09
DATE PLOTTED => 19-OCT-2010
TIME PLOTTED => 15:34

Dist	COUNTY	ROUTE	KILOMETER POST TOTAL PROJECT	SHEET No.	TOTAL SHEETS
08	Riv	60,215	R19.7/21.9, R61.3/62.7	40	594

Caltrans Metric

1-14-10
REGISTERED CIVIL ENGINEER DATE

6-28-10
PLANS APPROVAL DATE

REGISTERED PROFESSIONAL ENGINEER
ERIC S. GIROD
No. C57288
Exp.12/31/11
CIVIL
STATE OF CALIFORNIA

THE STATE OF CALIFORNIA OR ITS OFFICERS OR AGENTS SHALL NOT BE RESPONSIBLE FOR THE ACCURACY OR COMPLETENESS OF ELECTRONIC COPIES OF THIS PLAN SHEET.

LAN ENGINEERING CORP
1887 BUSINESS CENTER DR
SUITE 6
SAN BERNARDINO, CA 92408

RIVERSIDE COUNTY
TRANSPORTATION COMMISSION
4080 LEMON STREET
RIVERSIDE, CA 92502

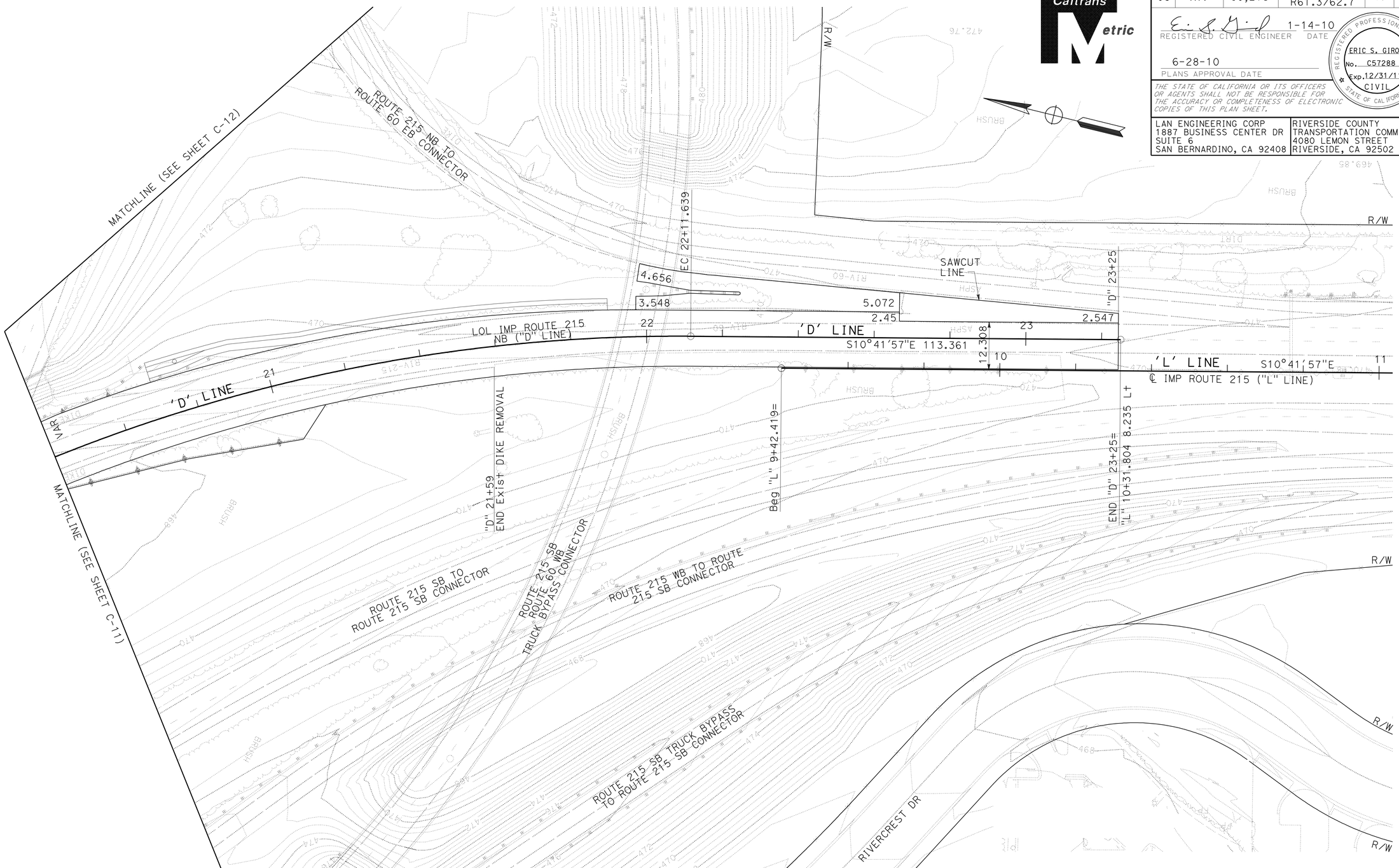

NOTE:
1. FOR COMPLETE RIGHT OF WAY AND ACCURATE ACCESS DATA, SEE RIGHT OF WAY RECORD MAPS AT DISTRICT OFFICE.

ALL DIMENSIONS ARE IN METERS UNLESS OTHERWISE SHOWN

CONSTRUCTION DETAILS

PAVEMENT DETAILS

SCALE 1:500 **C-14**

STATE OF CALIFORNIA - DEPARTMENT OF TRANSPORTATION
Caltrans

CONSULTANT FUNCTIONAL SUPERVISOR: NORMAN SUYDAM
CALCULATED-DESIGNED BY: MIKE FLORES
CHECKED BY: NORMAN SUYDAM
REVISED BY
DATE REVISED

LAST REVISION 11-09-09 DATE PLOTTED => 19-OCT-2010 TIME PLOTTED => 15:34

Dist	COUNTY	ROUTE	KILOMETER POST TOTAL PROJECT	SHEET No.	TOTAL SHEETS
08	Riv	60,215	R19.7/21.9, R61.3/62.7	41	594

REGISTERED CIVIL ENGINEER 1-14-10 DATE

6-28-10
PLANS APPROVAL DATE

REGISTERED PROFESSIONAL ENGINEER ERIC S. GIROD No. C57288 Exp.12/31/11 CIVIL STATE OF CALIFORNIA

THE STATE OF CALIFORNIA OR ITS OFFICERS OR AGENTS SHALL NOT BE RESPONSIBLE FOR THE ACCURACY OR COMPLETENESS OF ELECTRONIC COPIES OF THIS PLAN SHEET.

LAN ENGINEERING CORP
1887 BUSINESS CENTER DR
SUITE 6
SAN BERNARDINO, CA 92408

RIVERSIDE COUNTY
TRANSPORTATION COMMISSION
4080 LEMON STREET
RIVERSIDE, CA 92502

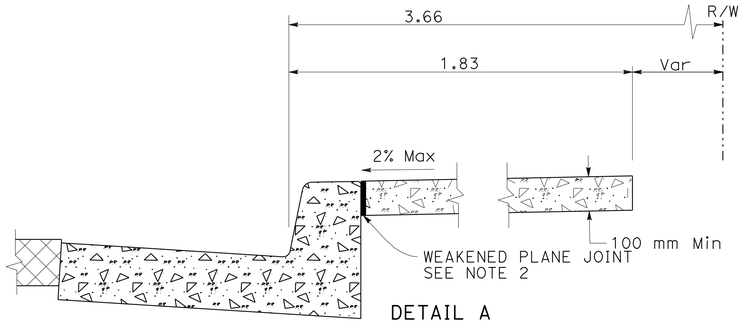

DETAIL A
SIDEWALK
NO SCALE

	A	B	C	D
102 mm CURB FACE	0.102	0.163	0.268	26mm
152 mm CURB FACE	0.152	0.15	0.318	38mm

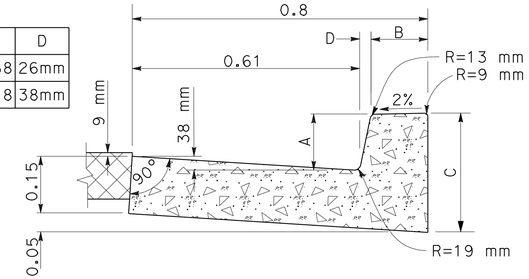

DETAIL B
TYPE A-6 P.C.C CURB & GUTTER
MINOR CONCRETE 0.149 m³/m
NO SCALE

NOTE:
1. FOR WEAKENED PLANE JOINTS AND EXPANSION JOINTS SEE SHEET C-19

CURVE DATA				
No.	R	Δ	T	L
1	152.4	30°32'31"	41.657	81.237
2	162.16	30°34'31"	44.324	86.535
3	142.64	30°34'31"	38.989	76.118
4	10.668	89°27'19"	10.567	16.656

LEGEND:
HMA PAVEMENT
COLD PLANE

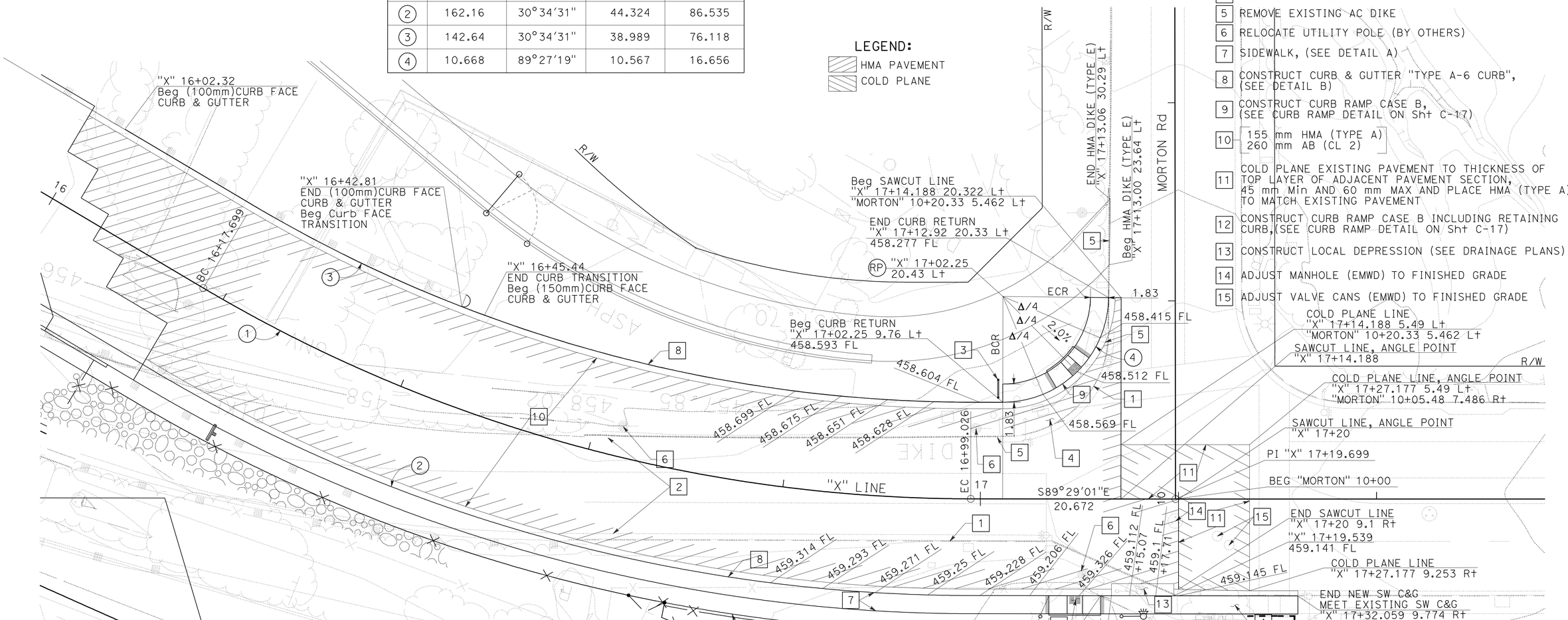

SHEET C-15 CONSTRUCTION NOTES:

1. REMOVE EXISTING CURB AND GUTTER
2. REMOVE PAVEMENT
3. INSTALL (TYPE I) PEDESTRIAN BARRICADE WITH SIGN R9-3b, SEE Std PLAN No. ES-7P
4. REMOVE SIDEWALK
5. REMOVE EXISTING AC DIKE
6. RELOCATE UTILITY POLE (BY OTHERS)
7. SIDEWALK, (SEE DETAIL A)
8. CONSTRUCT CURB & GUTTER "TYPE A-6 CURB", (SEE DETAIL B)
9. CONSTRUCT CURB RAMP CASE B, (SEE CURB RAMP DETAIL ON Sht C-17)
10. 155 mm HMA (TYPE A)
    260 mm AB (CL 2)
11. COLD PLANE EXISTING PAVEMENT TO THICKNESS OF TOP LAYER OF ADJACENT PAVEMENT SECTION, 45 mm Min AND 60 mm MAX AND PLACE HMA (TYPE A) TO MATCH EXISTING PAVEMENT
12. CONSTRUCT CURB RAMP CASE B INCLUDING RETAINING CURB,(SEE CURB RAMP DETAIL ON Sht C-17)
13. CONSTRUCT LOCAL DEPRESSION (SEE DRAINAGE PLANS)
14. ADJUST MANHOLE (EMWD) TO FINISHED GRADE
15. ADJUST VALVE CANS (EMWD) TO FINISHED GRADE

NOTES:
1. ELEVATIONS SHOWN AT 5 m INTERVALS UNLESS OTHERWISE NOTED.
2. SEE PROFILE & SUPERELEVATION SHEET PS-12 FOR SUPERELEVATION RATES.
3. FOR COMPLETE RIGHT OF WAY AND ACCURATE ACCESS DATA, SEE RIGHT OF WAY RECORD MAPS AT DISTRICT OFFICE.

CONSTRUCTION DETAILS

BOX SPRINGS Rd AND MORTON Rd INTERSECTION

SCALE 1:200 **C-15**

STATE OF CALIFORNIA - DEPARTMENT OF TRANSPORTATION
Caltrans

CONSULTANT FUNCTIONAL SUPERVISOR: NORMAN SUYDAM
CALCULATED-DESIGNED BY: MIKE FLORES
CHECKED BY: NORMAN SUYDAM
REVISED BY / DATE REVISED

LAST REVISION 11-09-09 DATE PLOTTED => 19-OCT-2010 TIME PLOTTED => 15:34

Dist	COUNTY	ROUTE	KILOMETER POST TOTAL PROJECT	SHEET No.	TOTAL SHEETS
08	Riv	60,215	R19.7/21.9, R61.3/62.7	42	594

REGISTERED CIVIL ENGINEER 1-14-10 DATE

6-28-10
PLANS APPROVAL DATE

REGISTERED PROFESSIONAL ENGINEER ERIC S. GIROD No. C57288 Exp.12/31/11 CIVIL STATE OF CALIFORNIA

THE STATE OF CALIFORNIA OR ITS OFFICERS OR AGENTS SHALL NOT BE RESPONSIBLE FOR THE ACCURACY OR COMPLETENESS OF ELECTRONIC COPIES OF THIS PLAN SHEET.

LAN ENGINEERING CORP
1887 BUSINESS CENTER DR
SUITE 6
SAN BERNARDINO, CA 92408

RIVERSIDE COUNTY
TRANSPORTATION COMMISSION
4080 LEMON STREET
RIVERSIDE, CA 92502

Caltrans Metric

1-14-10

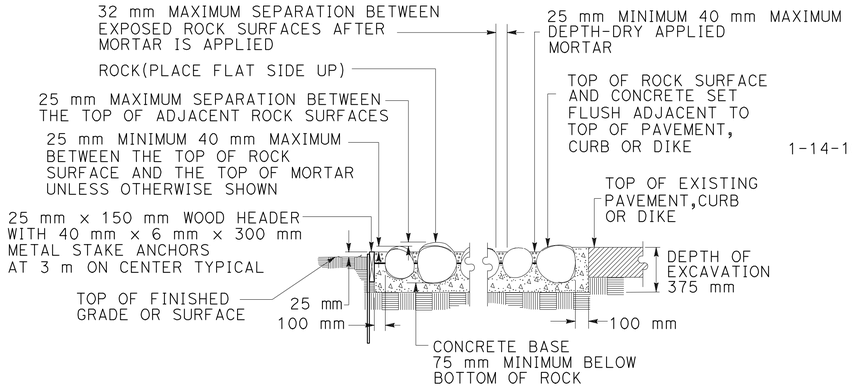

ROCK BLANKET
SECTION

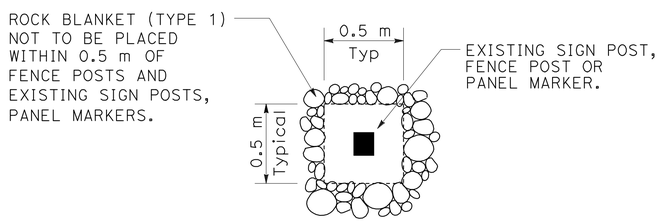

ROCK BLANKET APPLICATION AT POST
PLAN

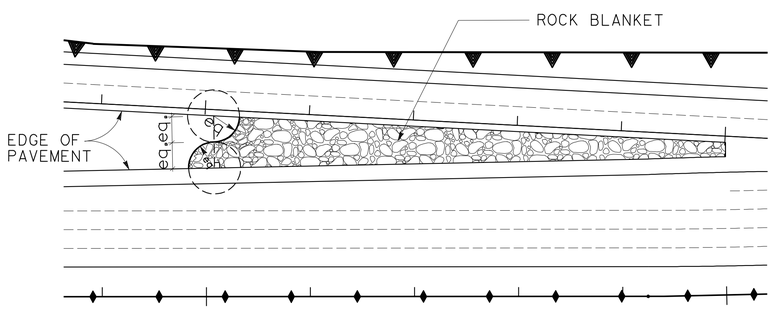

TYPICAL ROCK BLANKET APPLICATION AT GORE AREA

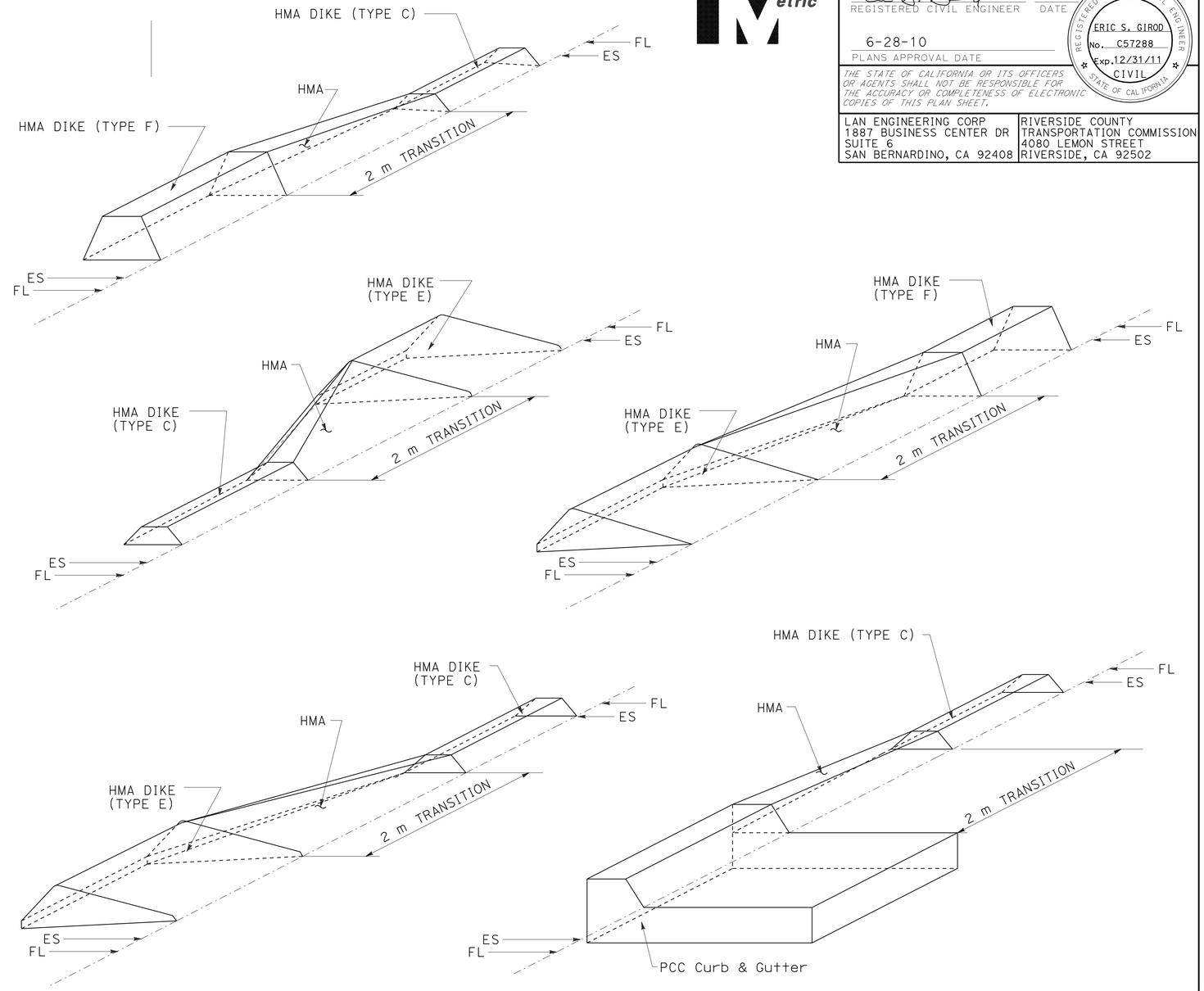

CURB AND DIKE TRANSITION

ALL DIMENSIONS ARE IN METERS UNLESS OTHERWISE SHOWN

CONSTRUCTION DETAILS
MISCELLANEOUS DETAILS

NO SCALE

C-16

REVISED BY	DATE REVISED
MIKE FLORES	NORMAN SUYDAM

CALCULATED-DESIGNED BY	CHECKED BY
NORMAN SUYDAM	

CONSULTANT FUNCTIONAL SUPERVISOR

STATE OF CALIFORNIA - DEPARTMENT OF TRANSPORTATION
Caltrans

LAST REVISION 11-09-09 | DATE PLOTTED => 19-OCT-2010 | TIME PLOTTED => 15:35

Dist	COUNTY	ROUTE	KILOMETER POST TOTAL PROJECT	SHEET No.	TOTAL SHEETS
08	Riv	60,215	R19.7/21.9, R61.3/62.7	43	594

REGISTERED CIVIL ENGINEER 1-14-10 DATE

6-28-10
PLANS APPROVAL DATE

REGISTERED PROFESSIONAL ENGINEER ERIC S. GIROD No. C57288 Exp.12/31/11 CIVIL STATE OF CALIFORNIA

THE STATE OF CALIFORNIA OR ITS OFFICERS OR AGENTS SHALL NOT BE RESPONSIBLE FOR THE ACCURACY OR COMPLETENESS OF ELECTRONIC COPIES OF THIS PLAN SHEET.

LAN ENGINEERING CORP
1887 BUSINESS CENTER DR
SUITE 6
SAN BERNARDINO, CA 92408

RIVERSIDE COUNTY
TRANSPORTATION COMMISSION
4080 LEMON STREET
RIVERSIDE, CA 92502

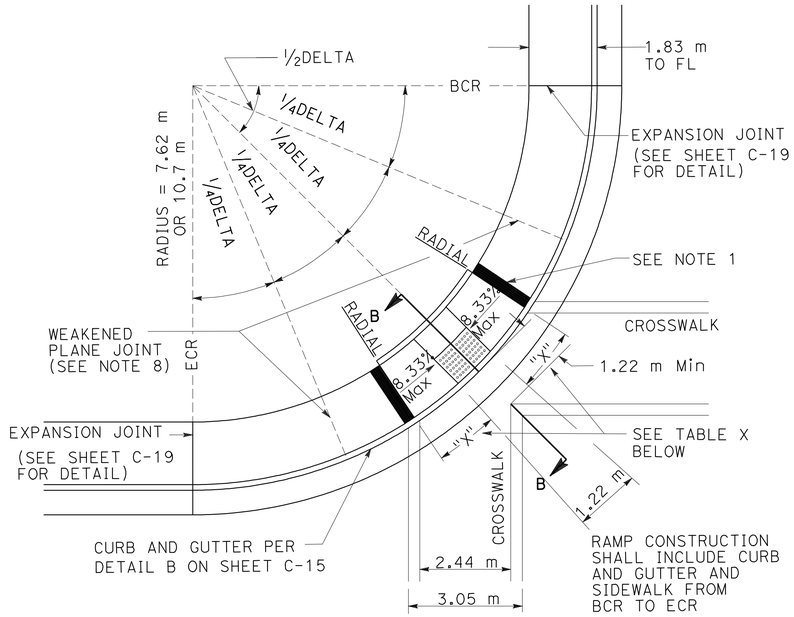

CURB RAMP (CASE B)

NTS

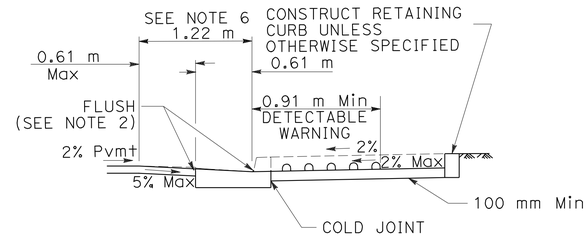

SECTION B - B

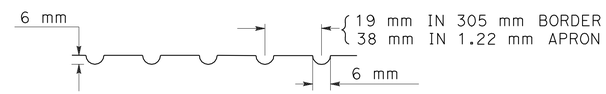

GROOVING DETAIL

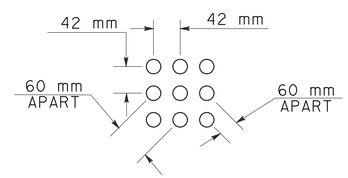

RAISED TRUNCATED
DOME PATTERN

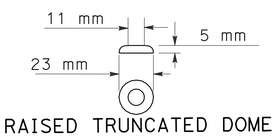

RAISED TRUNCATED DOME
DETECTABLE WARNING SURFACE
SEE NOTE 7

CONSTRUCTION NOTES :

1. THE RAMP SHALL HAVE A 305 mm WIDE BORDER WITH GROOVES 6 mm WIDE AND 6 mm DEEP APPROXIMATELY 19 mm ON CENTER. SEE GROOVING DETAIL.
2. TRANSITIONS FROM RAMPS TO WALKS, GUTTERS, OR STREETS SHALL BE FLUSH AND FREE OF ABRUPT CHANGES.
3. RAMP SIDE SLOPES VARIES UNIFORMLY FROM A MAXIMUM OF UP TO 10% AT CURB TO CONFORM WITH LONGITUDINAL SIDEWALK SLOPE ADJACENT TO TOP OF THE RAMP (EXCEPT IN CASE B).
4. CURB RAMPS THAT HAVE A RAMP SLOPE FLATTER THAN 6.67% SHALL HAVE A DETECTABLE WARNING SURFACE THAT EXTENDS THE FULL WIDTH OF THE RAMP AND 0.61 m MINIMUM LENGTH, SIMILAR TO THAT SHOWN ON CASE B WITH DETAIL. DETECTABLE SURFACES, AT THE OPTION OF THE CONTRACTOR, SHALL BE WARNING CONSTRUCTED BY CAST-IN-PLACE OR STAMPED METHOD.
5. MAXIMUM SLOPES OF ADJOINING GUTTERS: THE ROAD SURFACE IMMEDIATELY ADJACENT TO THE CURB RAMP AND CONTINUOUS PASSAGE TO THE CURB RAMP SHALL NOT EXCEED 5% WITHIN 1.22 m OF THE BOTTOM OF THE CURB RAMP.
6. MAXIMUM SLOPES OF ADJOINING GUTTERS: THE ROAD SURFACE IMMEDIATELY ADJACENT TO THE CURB RAMP AND CONTINUOUS PASSAGE TO THE CURB RAMP SHALL NOT EXCEED 5% WITHIN 1.22 m OF THE BOTTOM OF THE CURB RAMP.
7. DETECTABLE WARNING SURFACES ARE REQUIRED ON ALL CURB RAMPS THAT ENTER INTO A VEHICULAR TRAVEL WAY.
8. WHERE SPACE LIMITATIONS PROHIBIT THE USE OF A 8.33% RAMP SLOPE, THE SLOPE MAY BE INCREASED UP TO 10% FOR A MAXIMUM RISE OF 152 mm. [REDUCES RAMP LENGTH Y DIMENSION BY 0.40 m].
9. CONSTRUCT WEAKENED PLANE JOINTS AT 1/4 DELTAS WHEN RADIUS EQUALS 10.7 m AND AT INSIDE EDGE OF GROOVED BORDER WHEN RADIUS EQUALS 7.62 MM.

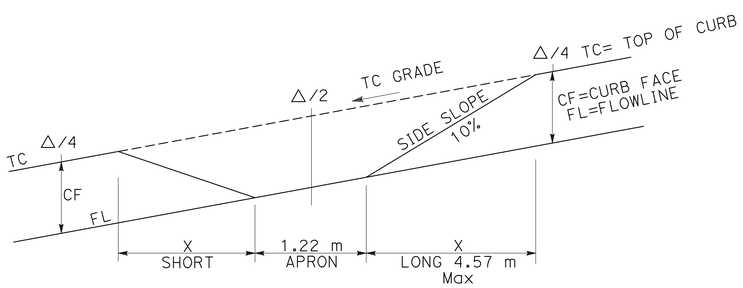

CASE B
CURB RAMP

TABLE Y

CF	Y
150 mm	2.41 m
200 mm	3.21 m

$$Y = \frac{\text{CURB FACE}}{6.33\%}$$

TABLE X

CF	RADIUS	SIDE SLOPE	X	TC GRADE (ALONG CURB RETURN)					
				1%	2%	3%	4%	5%	6%
150 mm	10.7 m	10%	X_S	1.4	1.28	1.19	1.1	1.04	0.98
			X_L	1.71	1.92	2.19	2.56	3.05	3.81
200 mm	10.7 m	10%	X_S	1.86	1.71	1.58	1.46	1.37	1.28
			X_L	2.29	2.56	2.93	3.41	4.08	4.57
150 mm	7.62 m	8.33%	X_S	1.65	1.49	1.37	1.25	1.16	1.07
			X_L	2.10	2.41	2.86	3.54	4.57	4.57
200 mm	7.62 m OR 10.7 m	8.33%	X_S	2.19	1.98	1.80	1.68	1.52	1.43
			X_L	2.77	3.23	3.81	4.57	4.57	4.57

PROFILE

TO CALCULATE "X" DIMENSION:

SHORT SIDE (DOWN SLOPE) : LONG SIDE (UP SLOPE):

$$X_S = \frac{\text{CURB FACE}}{\text{SIDE SLOPE + TC GRADE}} \qquad X_L = \frac{\text{CURB FACE}}{\text{SIDE SLOPE + TC GRADE}}$$

ENGINEER TO SHOW X_S AND X_L ON IMPROVEMENT PLANS

ALL DIMENSIONS ARE IN METERS UNLESS OTHERWISE SHOWN

CONSTRUCTION DETAILS

CURB RAMP DETAILS

NO SCALE **C-17**

REVISED BY	DATE REVISED
MIKE FLORES	NORMAN SUYDAM

CALCULATED-DESIGNED BY / CHECKED BY

CONSULTANT FUNCTIONAL SUPERVISOR: NORMAN SUYDAM

STATE OF CALIFORNIA - DEPARTMENT OF TRANSPORTATION

Caltrans

LAST REVISION 11-09-09 | DATE PLOTTED => 19-OCT-2010 | TIME PLOTTED => 15:35

Dist	COUNTY	ROUTE	KILOMETER POST TOTAL PROJECT	SHEET No.	TOTAL SHEETS
08	Riv	60,215	R19.7/21.9, R61.3/62.7	44	594

Caltrans Metric

REGISTERED CIVIL ENGINEER 1-14-10 DATE

6-28-10
PLANS APPROVAL DATE

REGISTERED PROFESSIONAL ENGINEER ERIC S. GIROD No. C57288 Exp.12/31/11 CIVIL STATE OF CALIFORNIA

THE STATE OF CALIFORNIA OR ITS OFFICERS OR AGENTS SHALL NOT BE RESPONSIBLE FOR THE ACCURACY OR COMPLETENESS OF ELECTRONIC COPIES OF THIS PLAN SHEET.

LAN ENGINEERING CORP
1887 BUSINESS CENTER DR
SUITE 6
SAN BERNARDINO, CA 92408

RIVERSIDE COUNTY
TRANSPORTATION COMMISSION
4080 LEMON STREET
RIVERSIDE, CA 92502

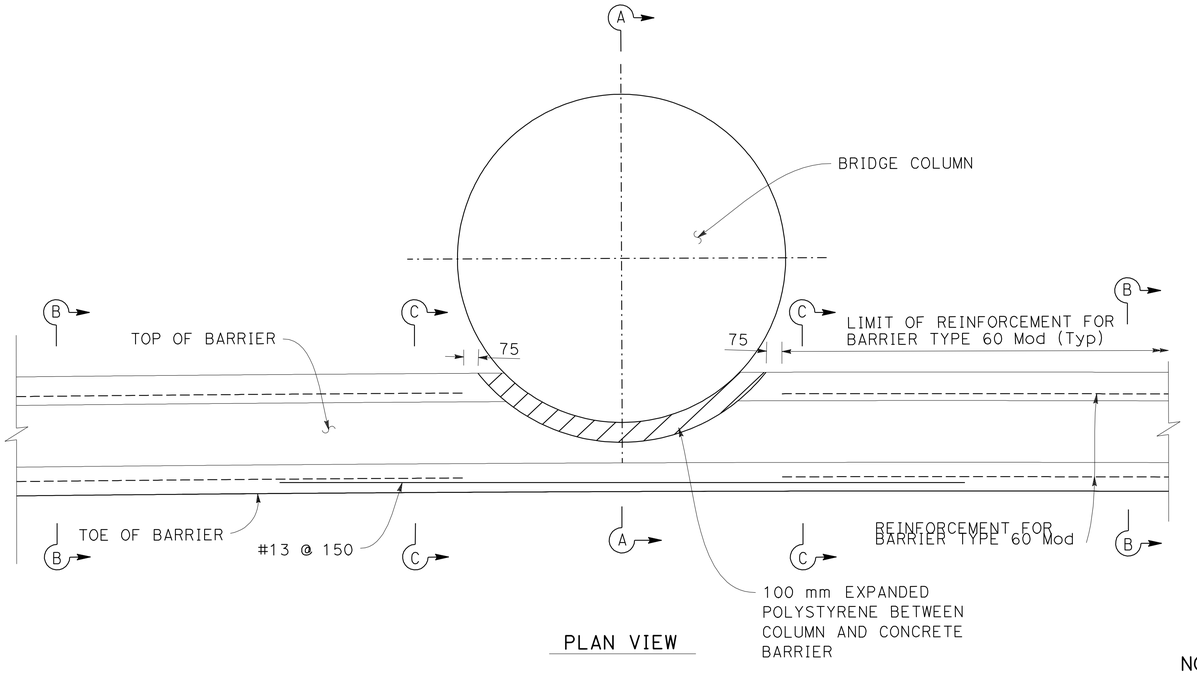

PLAN VIEW

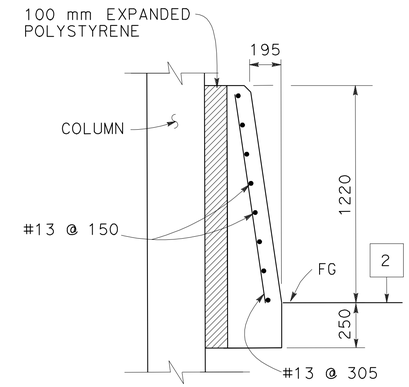

SECTION A-A

NOTES:

1. ADJUST HEIGHT OF CONCRETE BARRIER WALL ON LOW SIDE OF OFFSET OR SUPERELEVATED ROADWAYS TO PROVIDE LEVEL GRADE ACROSS TOP OF CONCRETE BARRIER CAP.
2. NOT ALL REINFORCEMENT SHOWN FOR CLARITY.

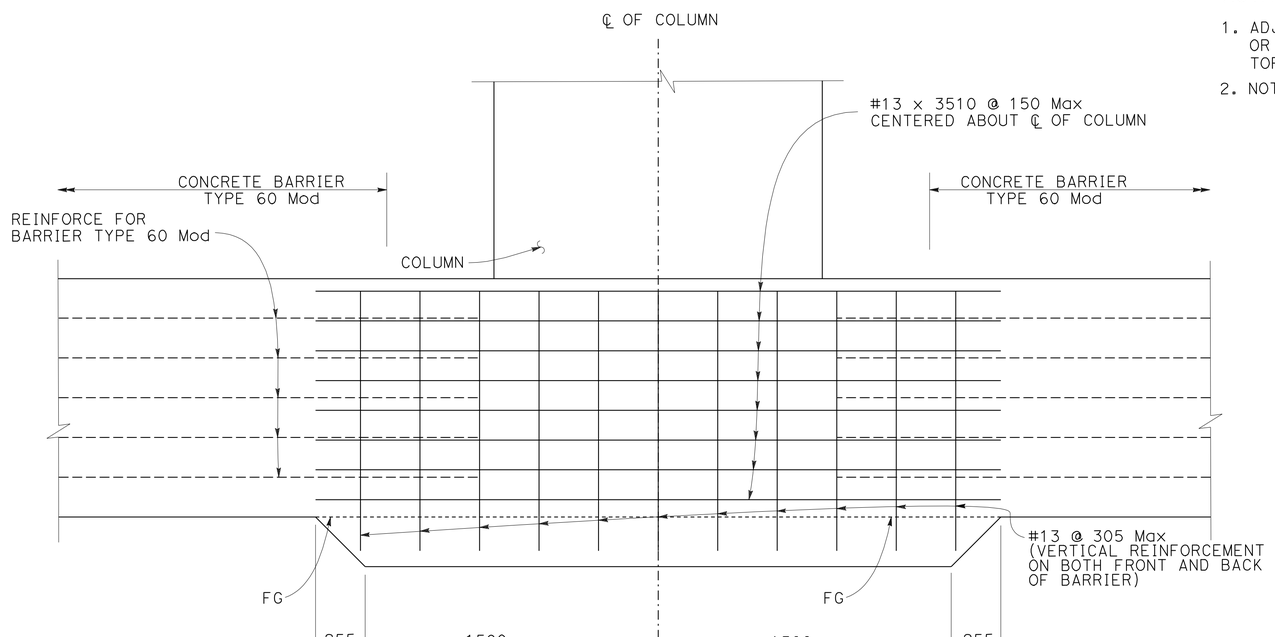

ELEVATION VIEW

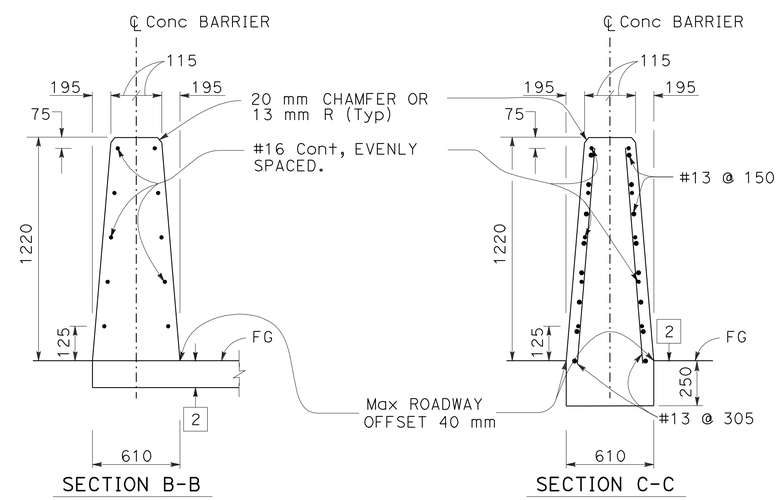

SECTION B-B SECTION C-C

CONCRETE BARRIER TYPE 60 Mod

CONCRETE BARRIER AT BRIDGE COLUMN

ALL DIMENSIONS ARE IN MILLIMETERS UNLESS OTHERWISE SHOWN

CONSTRUCTION DETAILS

BARRIER AT COLUMN DETAIL

NO SCALE

C-18

STATE OF CALIFORNIA - DEPARTMENT OF TRANSPORTATION
Caltrans

CONSULTANT FUNCTIONAL SUPERVISOR: NORMAN SUYDAM

CALCULATED-DESIGNED BY: MIKE FLORES
CHECKED BY: NORMAN SUYDAM

REVISED BY | DATE REVISED

LAST REVISION 11-09-09 | DATE PLOTTED => 19-OCT-2010 | TIME PLOTTED => 15:35

Dist	COUNTY	ROUTE	KILOMETER POST TOTAL PROJECT	SHEET No.	TOTAL SHEETS
08	Riv	60,215	R19.7/21.9, R61.3/62.7	45	594

Caltrans Metric

REGISTERED CIVIL ENGINEER 1-14-10 DATE

6-28-10
PLANS APPROVAL DATE

REGISTERED PROFESSIONAL ENGINEER ERIC S. GIROD No. C57288 Exp.12/31/11 CIVIL STATE OF CALIFORNIA

THE STATE OF CALIFORNIA OR ITS OFFICERS OR AGENTS SHALL NOT BE RESPONSIBLE FOR THE ACCURACY OR COMPLETENESS OF ELECTRONIC COPIES OF THIS PLAN SHEET.

LAN ENGINEERING CORP
1887 BUSINESS CENTER DR
SUITE 6
SAN BERNARDINO, CA 92408

RIVERSIDE COUNTY
TRANSPORTATION COMMISSION
4080 LEMON STREET
RIVERSIDE, CA 92502

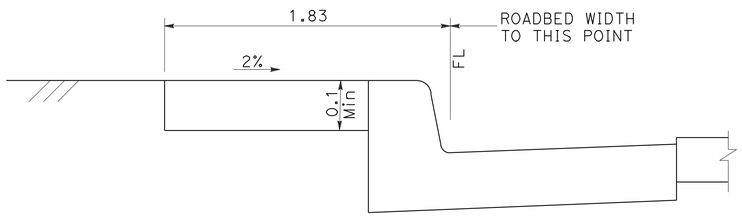

SIDEWALK ADJACENT TO CURB

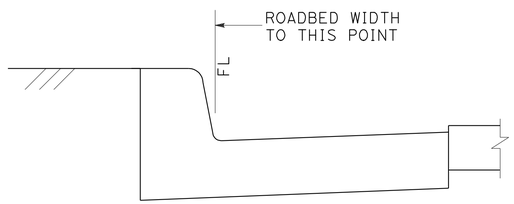

SIDEWALK NOT ADJACENT TO CURB

SIDEWALK AND CURB DETAIL

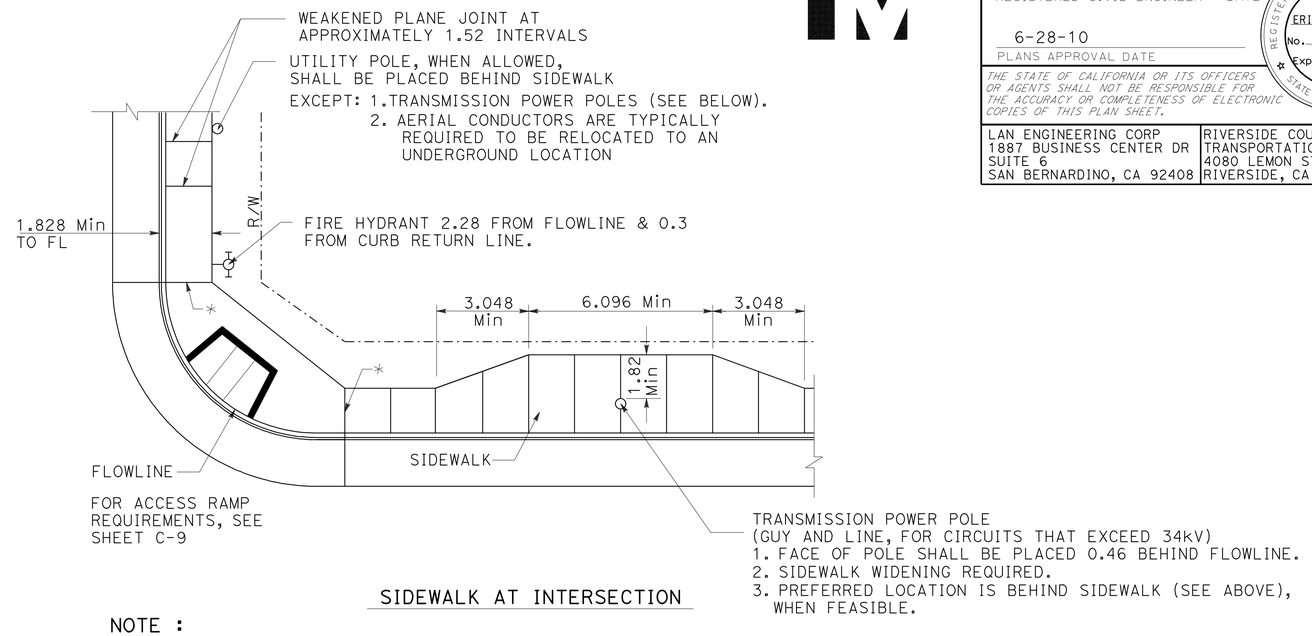

SIDEWALK AT INTERSECTION

NOTE :

1. VARIABLE DISTANCES TO BE SHOWN ON APPLICABLE TYPICAL ROAD SECTION STANDARD

* 0.025 EXPANSION MATERIAL

SIDEWALK FLARE OUT AROUND OBSTRUCTIONS

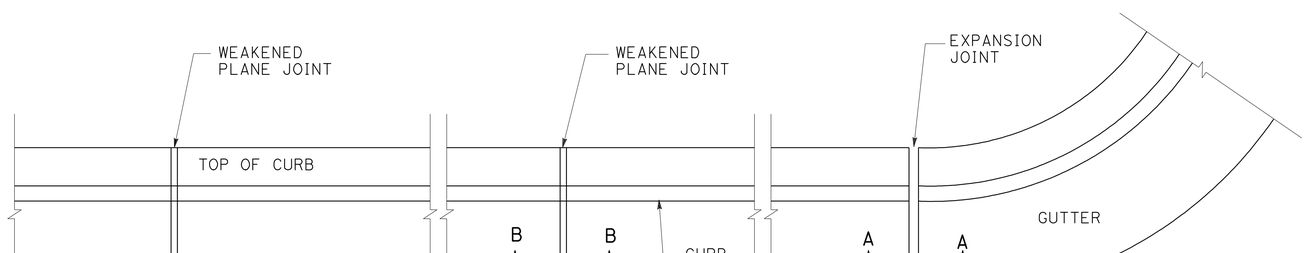

TYPICAL PLAN VIEW

CURB AND GUTTER JOINTS

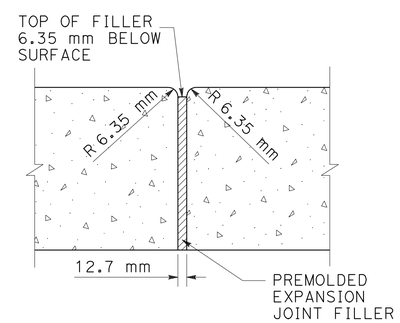

SECTION "A-A"
EXPANSION JOINT

EXPANSION JOINTS TO BE INSTALLED AT ALL B.C.'S, E.C.'S, CURB RETURNS, AND STRUCTURES.

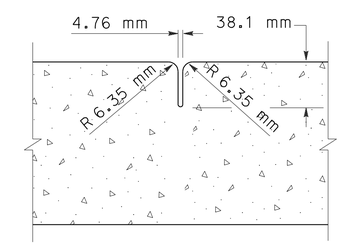

SECTION "B-B"
WEAKENED PLANE JOINT

3.048 m INTERVAL BETWEEN TRANSVERSE JOINTS MAY BE VARIED TO ALLOW MATCHING OF JOINTS IN ADJACENT EXISTING IMPROVEMENTS.

ALL DIMENSIONS ARE IN
METERS UNLESS OTHERWISE SHOWN

CONSTRUCTION DETAILS

SIDEWALK DETAILS

NO SCALE

C-19

STATE OF CALIFORNIA - DEPARTMENT OF TRANSPORTATION
Caltrans

CONSULTANT FUNCTIONAL SUPERVISOR: NORMAN SUYDAM
CALCULATED-DESIGNED BY: MIKE FLORES
CHECKED BY: NORMAN SUYDAM
REVISED BY
DATE REVISED

LAST REVISION 11-09-09
DATE PLOTTED => 19-OCT-2010
TIME PLOTTED => 15:35

Dist	COUNTY	ROUTE	KILOMETER POST TOTAL PROJECT	SHEET No.	TOTAL SHEETS
08	Riv	60,215	R19.7/21.9, R61.3/62.7	46	594

Caltrans Metric

REGISTERED CIVIL ENGINEER 1-14-10 DATE

6-28-10
PLANS APPROVAL DATE

REGISTERED PROFESSIONAL ENGINEER
ERIC S. GIROD
No. C57288
Exp.12/31/11
CIVIL
STATE OF CALIFORNIA

THE STATE OF CALIFORNIA OR ITS OFFICERS OR AGENTS SHALL NOT BE RESPONSIBLE FOR THE ACCURACY OR COMPLETENESS OF ELECTRONIC COPIES OF THIS PLAN SHEET.

LAN ENGINEERING CORP
1887 BUSINESS CENTER DR
SUITE 6
SAN BERNARDINO, CA 92408

RIVERSIDE COUNTY
TRANSPORTATION COMMISSION
4080 LEMON STREET
RIVERSIDE, CA 92502

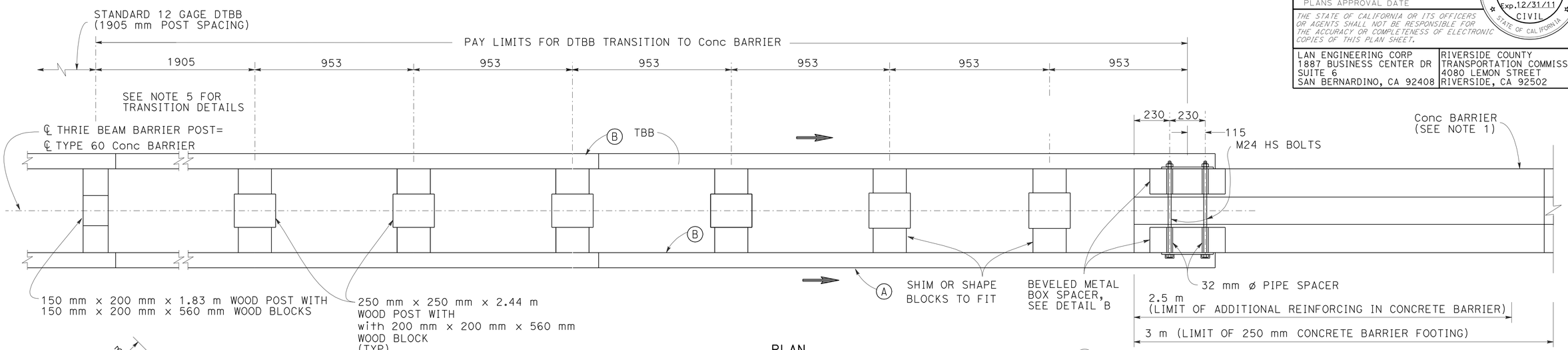

PLAN

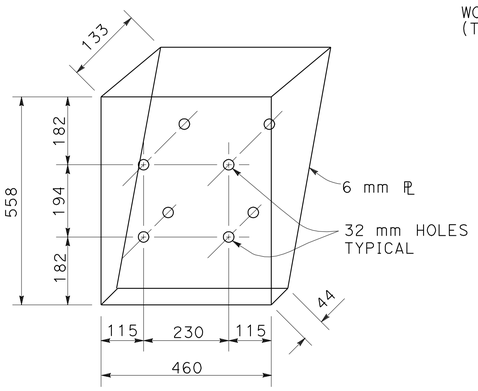

DETAIL B

BEVELED METAL BOX SPACER
SEE NOTE 3

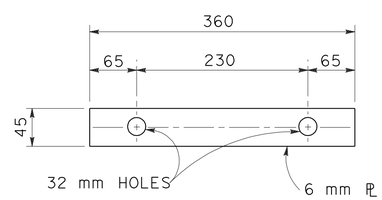

DETAIL C

PLATE 'A'

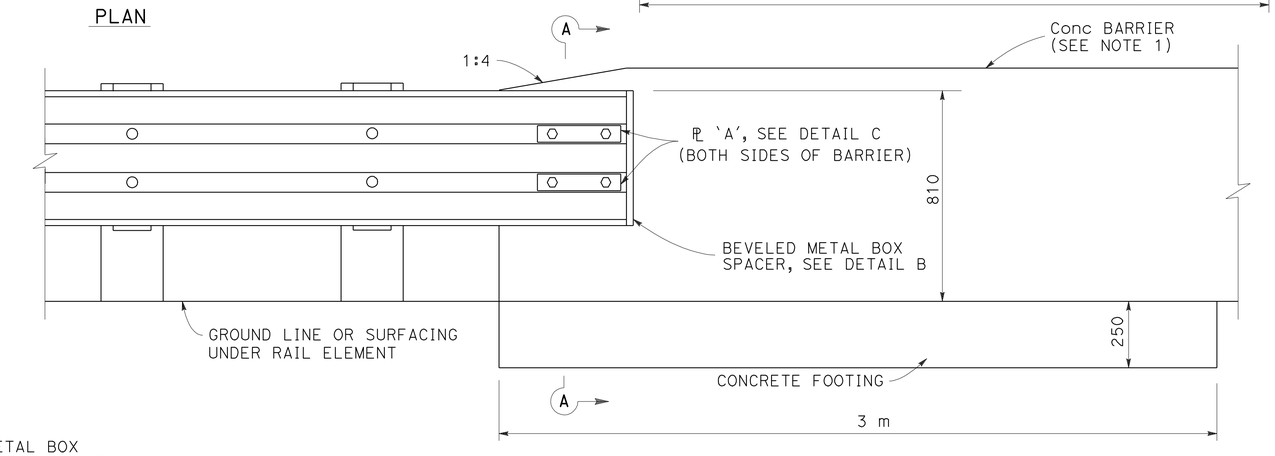

ELEVATION

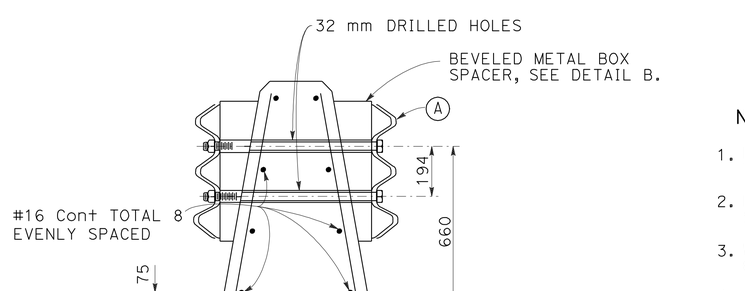

SECTION A-A

(TYPE 60 Conc BARRIER SHOWN)

LEGEND

(A) NESTED THRIE BEAM ELEMENTS (ONE 12 GAGE ELEMENT NESTED OVER ONE 10 GAGE ELEMENT).

(B) ONE 10 GAGE THRIE BEAM ELEMENT.
10 Gage = 3.43 mm THICK
12 Gage = 2.67 mm THICK

NOTES

1. FOR DETAILS OF CONCRETE BARRIER TYPE 60, SEE STANDARD PLAN RSP A76A. THRIE BEAM BARRIER CONNECTIONS TO CONCRETE BARRIER TYPE 60S AND TYPE 60G ARE SIMILAR TO DETAILS SHOWN ON THIS PLAN.
2. FOR ADDITIONAL THRIE BEAM BARRIER DETAILS, SEE STANDARD PLAN A78A, REVISED STANDARD PLAN AND STANDARD PLANS A78C1 AND A78C2.
3. WHERE BEVELED METAL BOX SPACER IS INSTALLED, PLACE 32 MM O X 82 MM AND 32 MM O X 51 MM PIPE SPACERS ON M24 HS BOLTS PASSING THROUGH INTERIOR OF BOX.
4. DIRECTION OF TRAFFIC INDICATED BY ⟶.
5. TRANSITION TO DOUBLE THRIE BEAM BARRIER CRASH CUSHION END TREATMENT, SEE STANDARD PLAN A78E3.

ALL DIMENSIONS ARE IN
MILLIMETERS UNLESS OTHERWISE SHOWN

CONSTRUCTION DETAILS

DTBB TRANSITION

NO SCALE

C-20

REVISED BY | DATE REVISED
MIKE FLORES | NORMAN SUYDAM
CALCULATED-DESIGNED BY | CHECKED BY
CONSULTANT FUNCTIONAL SUPERVISOR | NORMAN SUYDAM
STATE OF CALIFORNIA - DEPARTMENT OF TRANSPORTATION
Caltrans

LAST REVISION 11-09-09 | DATE PLOTTED => 19-OCT-2010 | TIME PLOTTED => 15:35

Dist	COUNTY	ROUTE	KILOMETER POST TOTAL PROJECT	SHEET No.	TOTAL SHEETS
08	Riv	60,215	R19.7/21.9, R61.3/62.7	47	594

REGISTERED CIVIL ENGINEER 1-14-10 DATE

6-28-10
PLANS APPROVAL DATE

REGISTERED PROFESSIONAL ENGINEER ERIC S. GIROD No. C57288 Exp.12/31/11 CIVIL STATE OF CALIFORNIA

THE STATE OF CALIFORNIA OR ITS OFFICERS OR AGENTS SHALL NOT BE RESPONSIBLE FOR THE ACCURACY OR COMPLETENESS OF ELECTRONIC COPIES OF THIS PLAN SHEET.

LAN ENGINEERING CORP
1887 BUSINESS CENTER DR
SUITE 6
SAN BERNARDINO, CA 92408

RIVERSIDE COUNTY
TRANSPORTATION COMMISSION
4080 LEMON STREET
RIVERSIDE, CA 92502

Caltrans Metric

CURVE DATA

No.	R	Δ	T	L
1	425	4°55'22"	18.269	36.504
2	288.083	15°27'30"	39.099	77.724

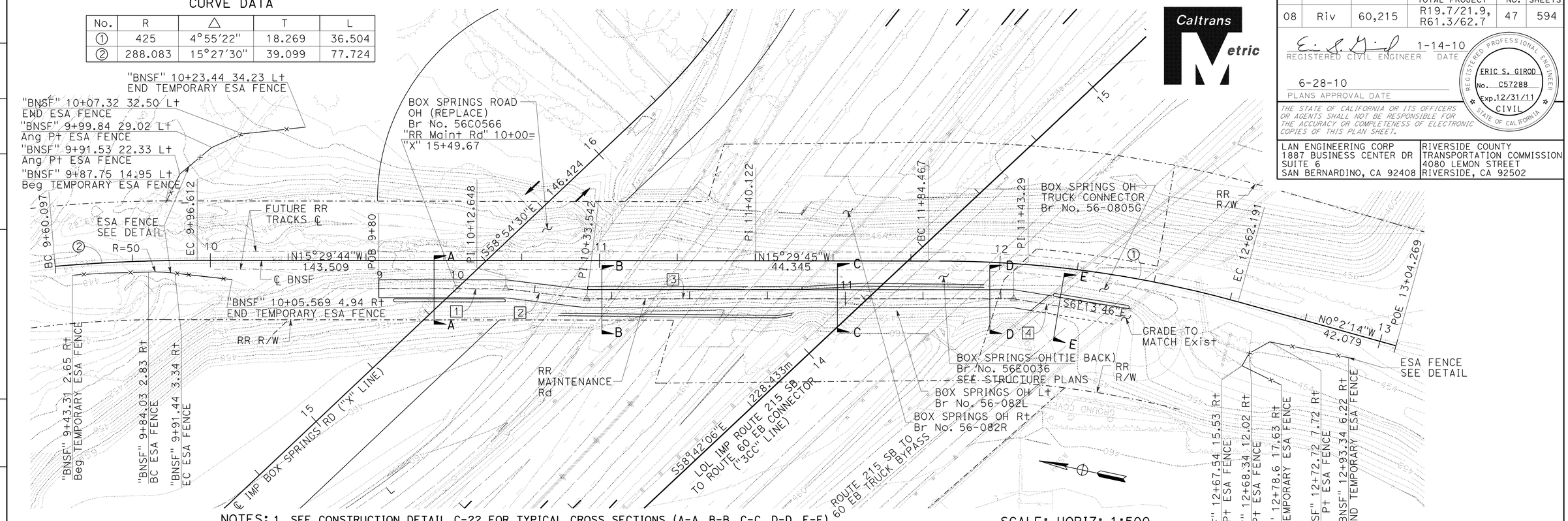

NOTES: 1. SEE CONSTRUCTION DETAIL C-22 FOR TYPICAL CROSS SECTIONS (A-A, B-B, C-C, D-D, E-E)
2. FOR COMPLETE RIGHT OF WAY AND ACCURATE ACCESS DATA, SEE RIGHT OF WAY RECORD MAPS AT DISTRICT OFFICE.

SCALE: HORIZ: 1:500

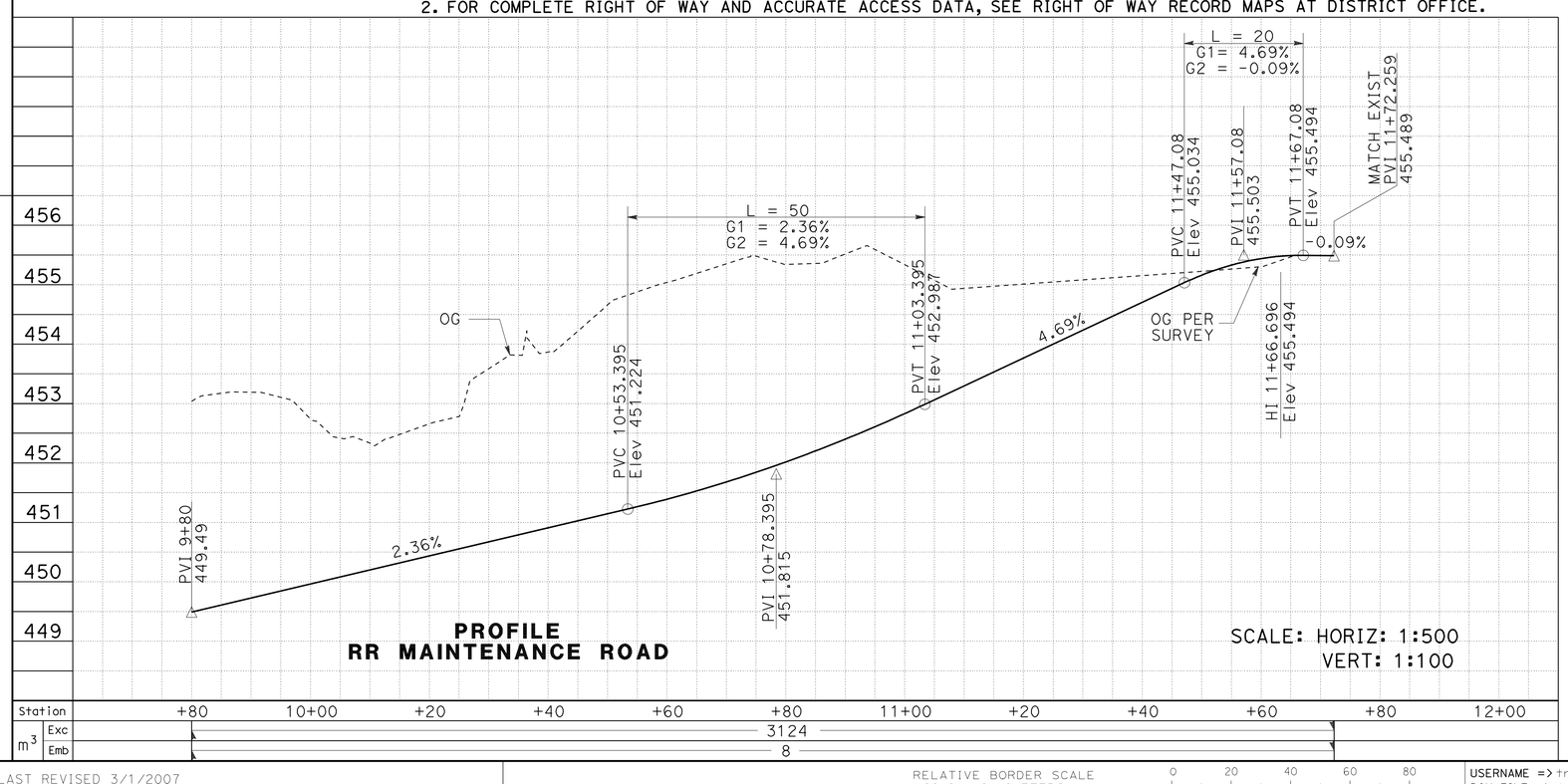

PROFILE
RR MAINTENANCE ROAD

SCALE: HORIZ: 1:500
VERT: 1:100

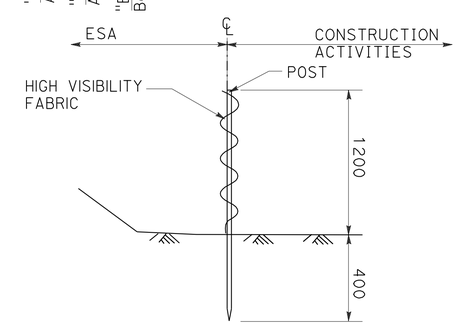

TEMPORARY FENCE(TYPE ESA)
SECTION

ALIGNMENT DATA

No.	BEARING	L	Sta	Elev
1	S15°29'44"E	32.65	9+80	449.49
2	S8°32'17"E	20.89	10+12.65	450.26
3	S15°33'00"E	109.75	10+33.54	450.75
4	S6°13'46"E	33.49	11+43.29	454.86

ALL DIMENSIONS ARE IN
METERS UNLESS OTHERWISE SHOWN

CONSTRUCTION DETAILS
RR MAINTENANCE ROAD
(SHEET 1 OF 2)

SCALE AS SHOWN **C-21**

REVISED BY | DATE REVISED
MIKE FLORES | NORMAN SUYDAM
CALCULATED-DESIGNED BY | CHECKED BY
CONSULTANT FUNCTIONAL SUPERVISOR
NORMAN SUYDAM

STATE OF CALIFORNIA - DEPARTMENT OF TRANSPORTATION
Caltrans

LAST REVISION 11-09-09 | DATE PLOTTED => 19-OCT-2010 | TIME PLOTTED => 15:35

Dist	COUNTY	ROUTE	KILOMETER POST TOTAL PROJECT	SHEET No.	TOTAL SHEETS
08	Riv	60,215	R19.7/21.9, R61.3/62.7	48	594

Caltrans Metric

REGISTERED CIVIL ENGINEER 1-14-10 DATE

6-28-10
PLANS APPROVAL DATE

REGISTERED PROFESSIONAL ENGINEER
ERIC S. GIROD
No. C57288
Exp.12/31/11
CIVIL
STATE OF CALIFORNIA

THE STATE OF CALIFORNIA OR ITS OFFICERS OR AGENTS SHALL NOT BE RESPONSIBLE FOR THE ACCURACY OR COMPLETENESS OF ELECTRONIC COPIES OF THIS PLAN SHEET.

LAN ENGINEERING CORP
1887 BUSINESS CENTER DR
SUITE 6
SAN BERNARDINO, CA 92408

RIVERSIDE COUNTY
TRANSPORTATION COMMISSION
4080 LEMON STREET
RIVERSIDE, CA 92502

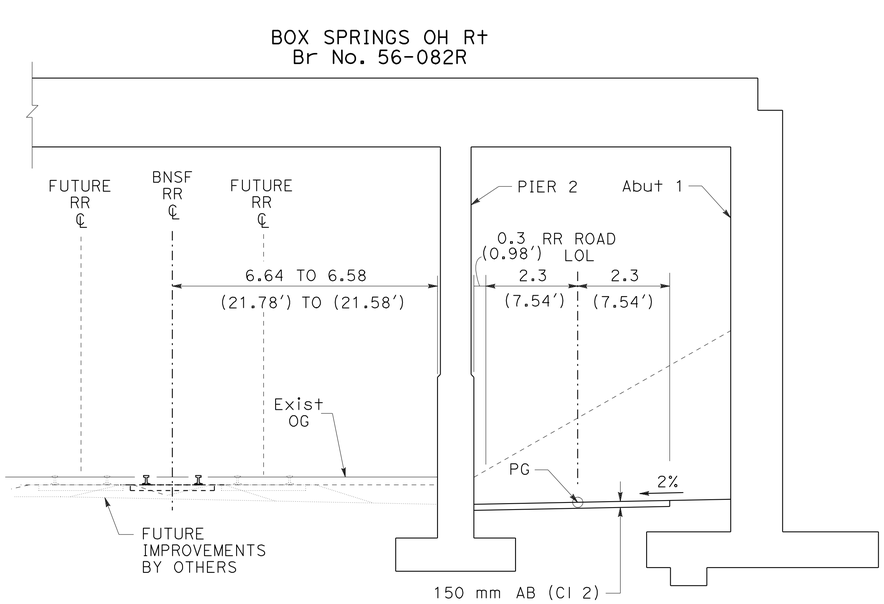

SECTION B-B

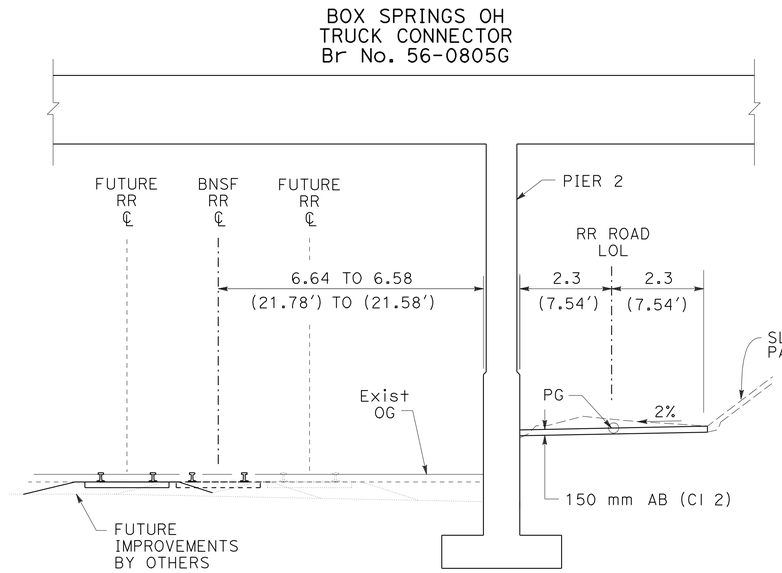

SECTION E-E

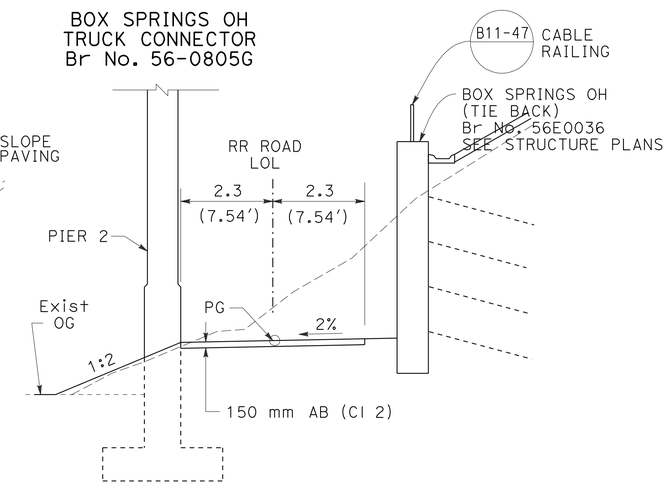

SECTION D-D

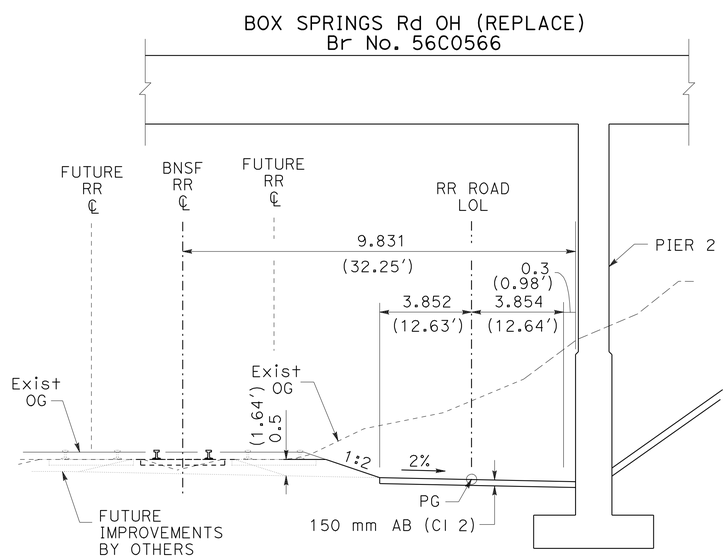

SECTION A-A

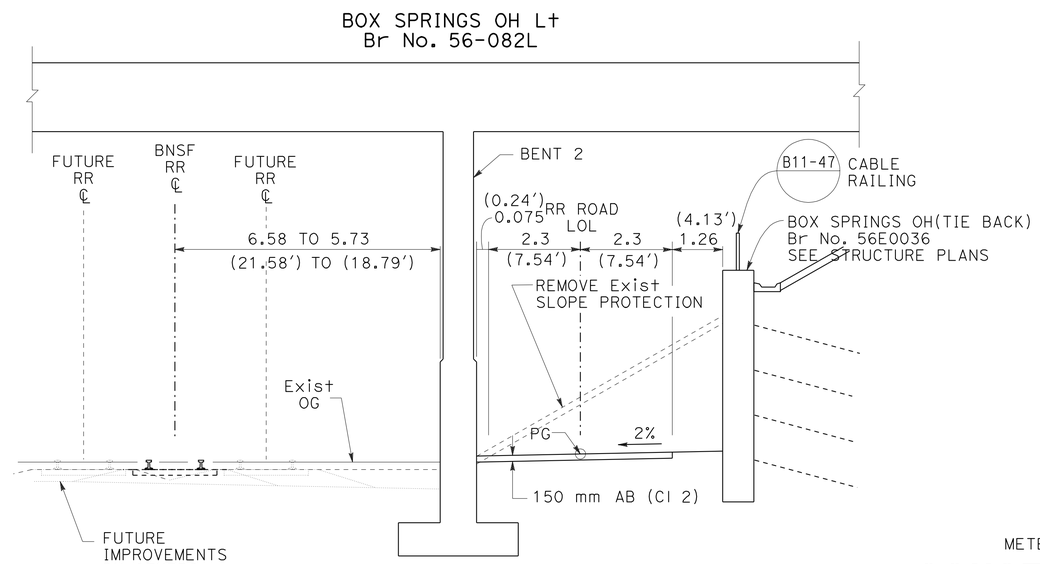

SECTION C-C

NOTE:

1. FOR PROFILE GRADE, SEE CONSTRUCTION DETAIL SHEET C-21

ALL DIMENSIONS ARE IN METERS UNLESS OTHERWISE SHOWN

CONSTRUCTION DETAILS

RR MAINTENANCE ROAD TYPICAL CROSS SECTIONS (SHEET 2 OF 2)

NO SCALE

C-22

STATE OF CALIFORNIA - DEPARTMENT OF TRANSPORTATION
Caltrans

CONSULTANT FUNCTIONAL SUPERVISOR: NORMAN SUYDAM
CALCULATED-DESIGNED BY: MIKE FLORES
CHECKED BY: NORMAN SUYDAM
REVISED BY
DATE REVISED

LAST REVISION 11-09-09
DATE PLOTTED => 19-OCT-2010
TIME PLOTTED => 15:35

Dist	COUNTY	ROUTE	KILOMETER POST TOTAL PROJECT	SHEET No.	TOTAL SHEETS
08	Riv	60,215	R19.7/21.9, R61.3/62.7	49	594

REGISTERED CIVIL ENGINEER 1-14-10 DATE

6-28-10
PLANS APPROVAL DATE

REGISTERED PROFESSIONAL ENGINEER
ERIC S. GIROD
No. C57288
Exp.12/31/11
CIVIL
STATE OF CALIFORNIA

THE STATE OF CALIFORNIA OR ITS OFFICERS OR AGENTS SHALL NOT BE RESPONSIBLE FOR THE ACCURACY OR COMPLETENESS OF ELECTRONIC COPIES OF THIS PLAN SHEET.

LAN ENGINEERING CORP
1887 BUSINESS CENTER DR
SUITE 6
SAN BERNARDINO, CA 92408

RIVERSIDE COUNTY
TRANSPORTATION COMMISSION
4080 LEMON STREET
RIVERSIDE, CA 92502

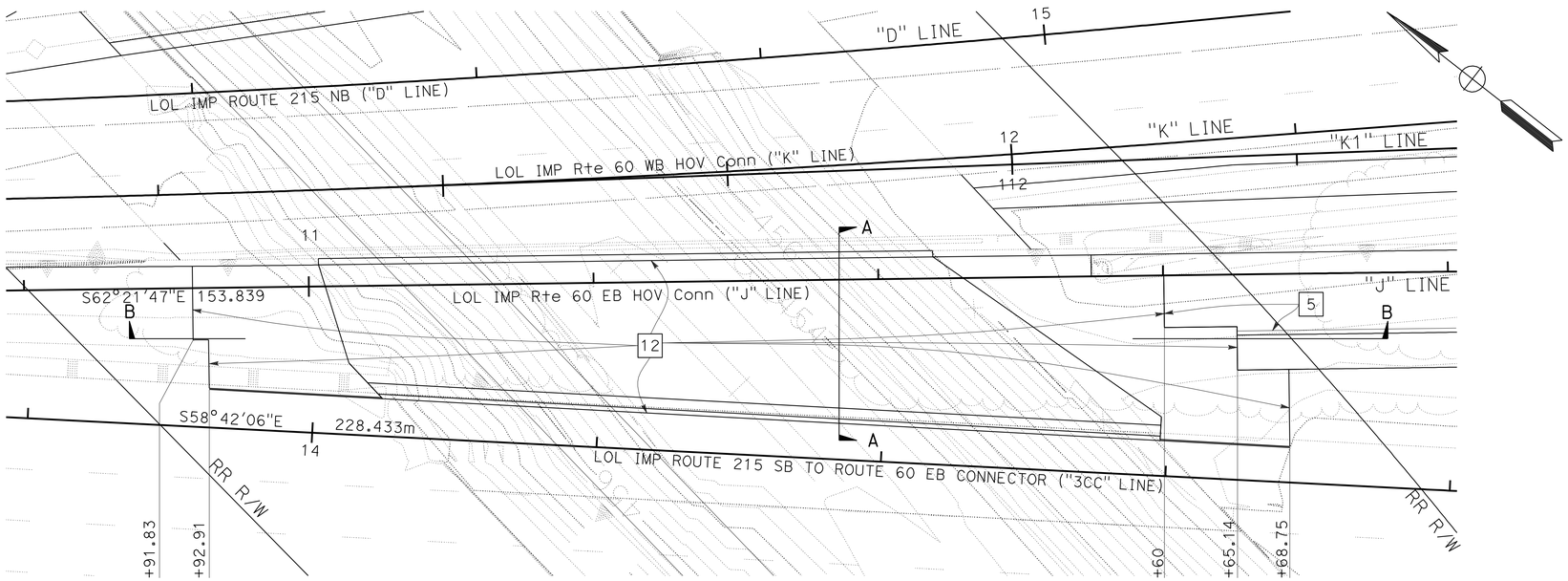

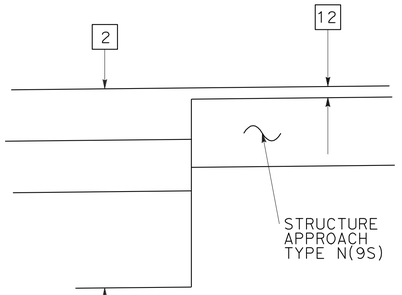

DETAIL B

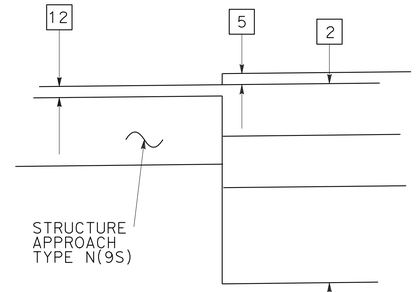

DETAIL C

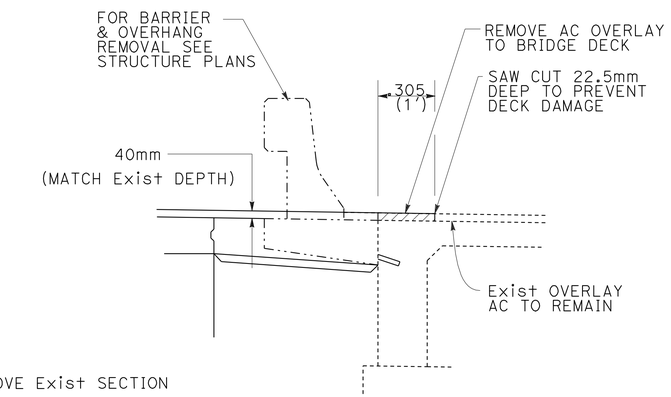

LEGEND:

REMOVE Exist SECTION

X PAVEMENT TYPE SEE SHEET X-1

DETAIL A

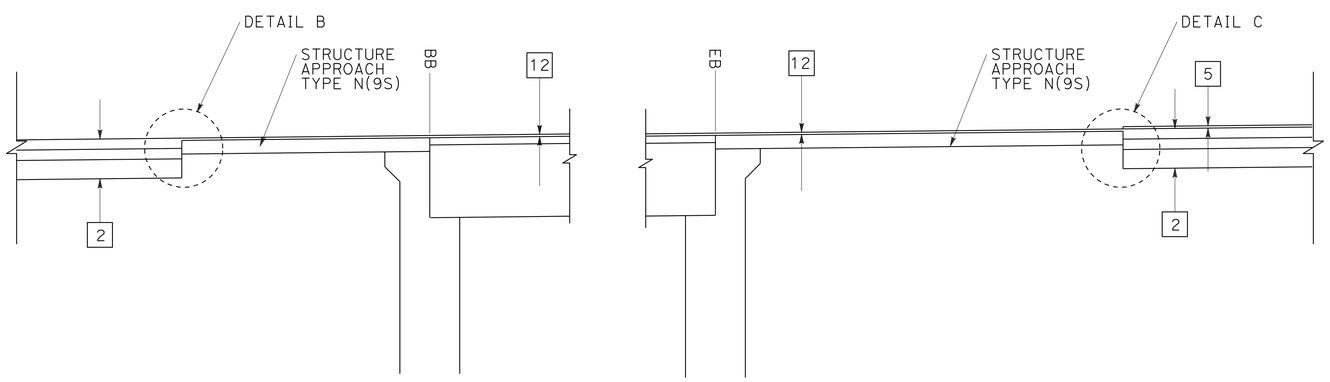

SECTION B-B

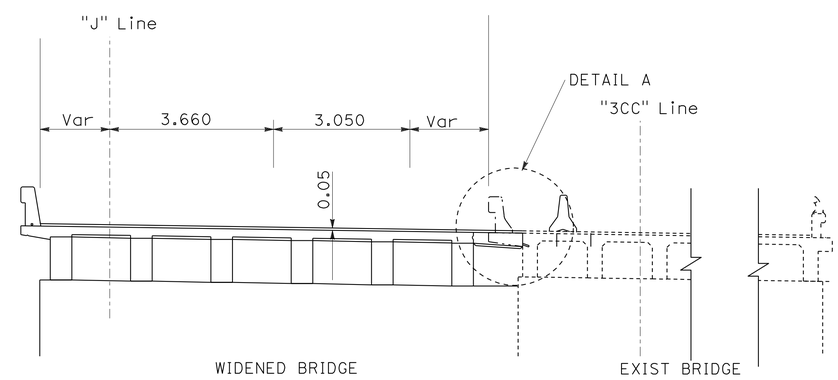

SECTION A-A

NOTE:

FOR COMPLETE RIGHT OF WAY AND ACCURATE ACCESS DATA, SEE RIGHT OF WAY RECORD MAPS AT DISTRICT OFFICE.

ALL DIMENSIONS ARE IN METERS UNLESS OTHERWISE SHOWN

CONSTRUCTION DETAILS

BOX SPRINGS OVERHEAD LEFT (WIDEN)
Br. No. 56-0082L HMA OVERLAY

NO SCALE

C-23

REVISED BY | DATE REVISED
MIKE FLORES | NORMAN SUYDAM
CALCULATED-DESIGNED BY | CHECKED BY
CONSULTANT FUNCTIONAL SUPERVISOR
NORMAN SUYDAM

STATE OF CALIFORNIA - DEPARTMENT OF TRANSPORTATION

LAST REVISION 11-09-09 | DATE PLOTTED => 19-OCT-2010 | TIME PLOTTED => 15:35

Dist	COUNTY	ROUTE	KILOMETER POST TOTAL PROJECT	SHEET No.	TOTAL SHEETS
08	Riv	60,215	R19.7/21.9, R61.3/62.7	50	594

REGISTERED CIVIL ENGINEER 1-14-10 DATE

6-28-10
PLANS APPROVAL DATE

REGISTERED PROFESSIONAL ENGINEER
ERIC S. GIROD
No. C57288
Exp.12/31/11
CIVIL
STATE OF CALIFORNIA

THE STATE OF CALIFORNIA OR ITS OFFICERS OR AGENTS SHALL NOT BE RESPONSIBLE FOR THE ACCURACY OR COMPLETENESS OF ELECTRONIC COPIES OF THIS PLAN SHEET.

LAN ENGINEERING CORP
1887 BUSINESS CENTER DR
SUITE 6
SAN BERNARDINO, CA 92408

RIVERSIDE COUNTY
TRANSPORTATION COMMISSION
4080 LEMON STREET
RIVERSIDE, CA 92502

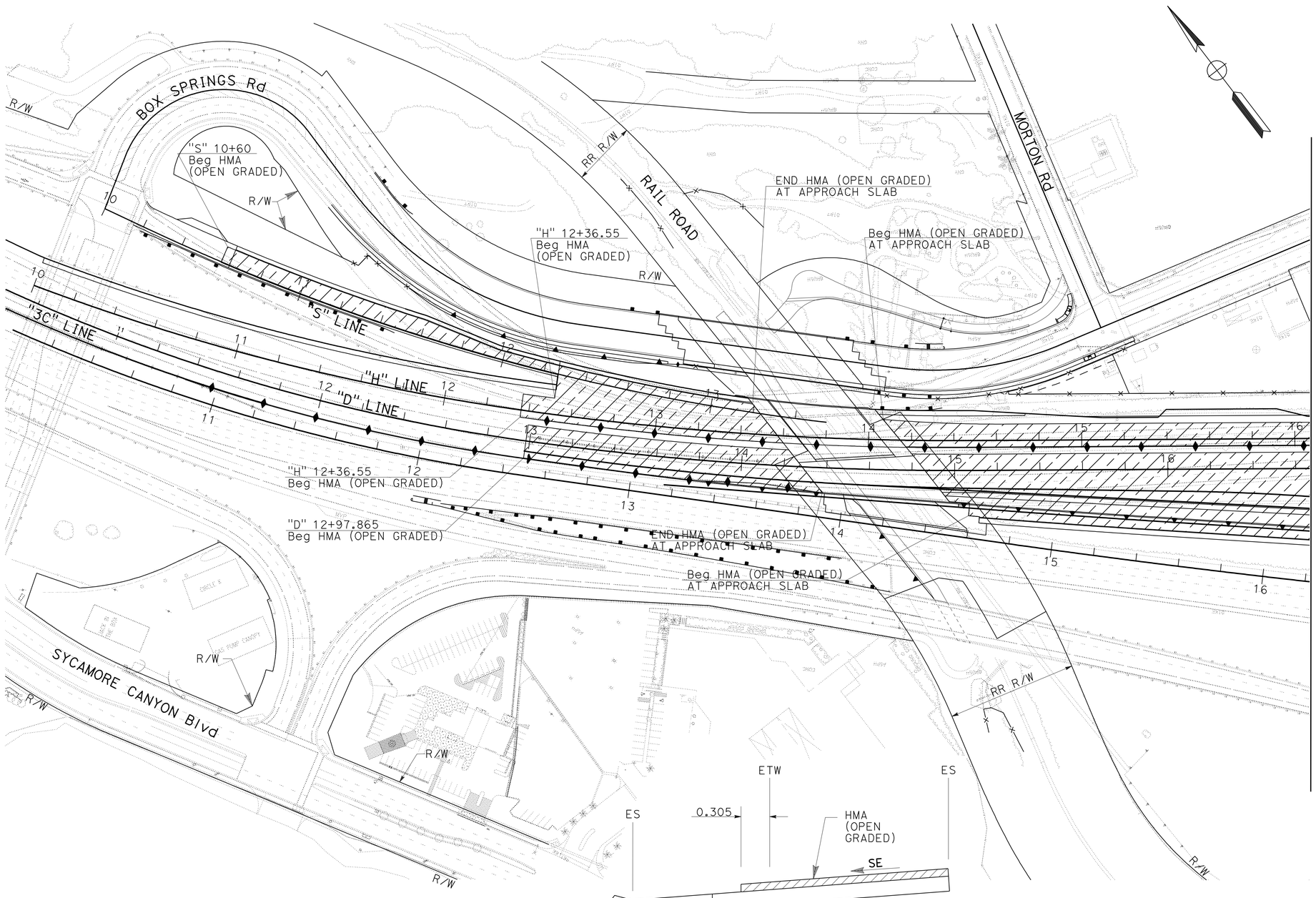

TYPICAL HMA (OPEN GRADED)
AT SUPER ELEVATED AREAS

LEGEND:

LIMITS OF HMA
(OPEN GRADED)

NOTE:
1. FOR COMPLETE RIGHT OF WAY AND ACCURATE ACCESS DATA, SEE RIGHT OF WAY RECORD MAPS AT DISTRICT OFFICE.

ALL DIMENSIONS ARE IN
METERS UNLESS OTHERWISE SHOWN

CONSTRUCTION DETAILS
OPEN GRADED HMA

NO SCALE

C-24

REVISED BY | DATE REVISED
MIKE FLORES | NORMAN SUYDAM
CALCULATED-DESIGNED BY | CHECKED BY
CONSULTANT FUNCTIONAL SUPERVISOR | NORMAN SUYDAM
STATE OF CALIFORNIA - DEPARTMENT OF TRANSPORTATION
Caltrans

LAST REVISION 11-09-09 | DATE PLOTTED => 19-OCT-2010 | TIME PLOTTED => 15:36

Dist	COUNTY	ROUTE	KILOMETER POST TOTAL PROJECT	SHEET No.	TOTAL SHEETS
08	Riv	60,215	R19.7/21.9, R61.3/62.7	51	594

REGISTERED CIVIL ENGINEER 1-14-10 DATE

6-28-10
PLANS APPROVAL DATE

REGISTERED PROFESSIONAL ENGINEER
ERIC S. GIROD
No. C57288
Exp.12/31/11
CIVIL
STATE OF CALIFORNIA

THE STATE OF CALIFORNIA OR ITS OFFICERS OR AGENTS SHALL NOT BE RESPONSIBLE FOR THE ACCURACY OR COMPLETENESS OF ELECTRONIC COPIES OF THIS PLAN SHEET.

LAN ENGINEERING CORP
1887 BUSINESS CENTER DR
SUITE 6
SAN BERNARDINO, CA 92408

RIVERSIDE COUNTY
TRANSPORTATION COMMISSION
4080 LEMON STREET
RIVERSIDE, CA 92502

Caltrans Metric

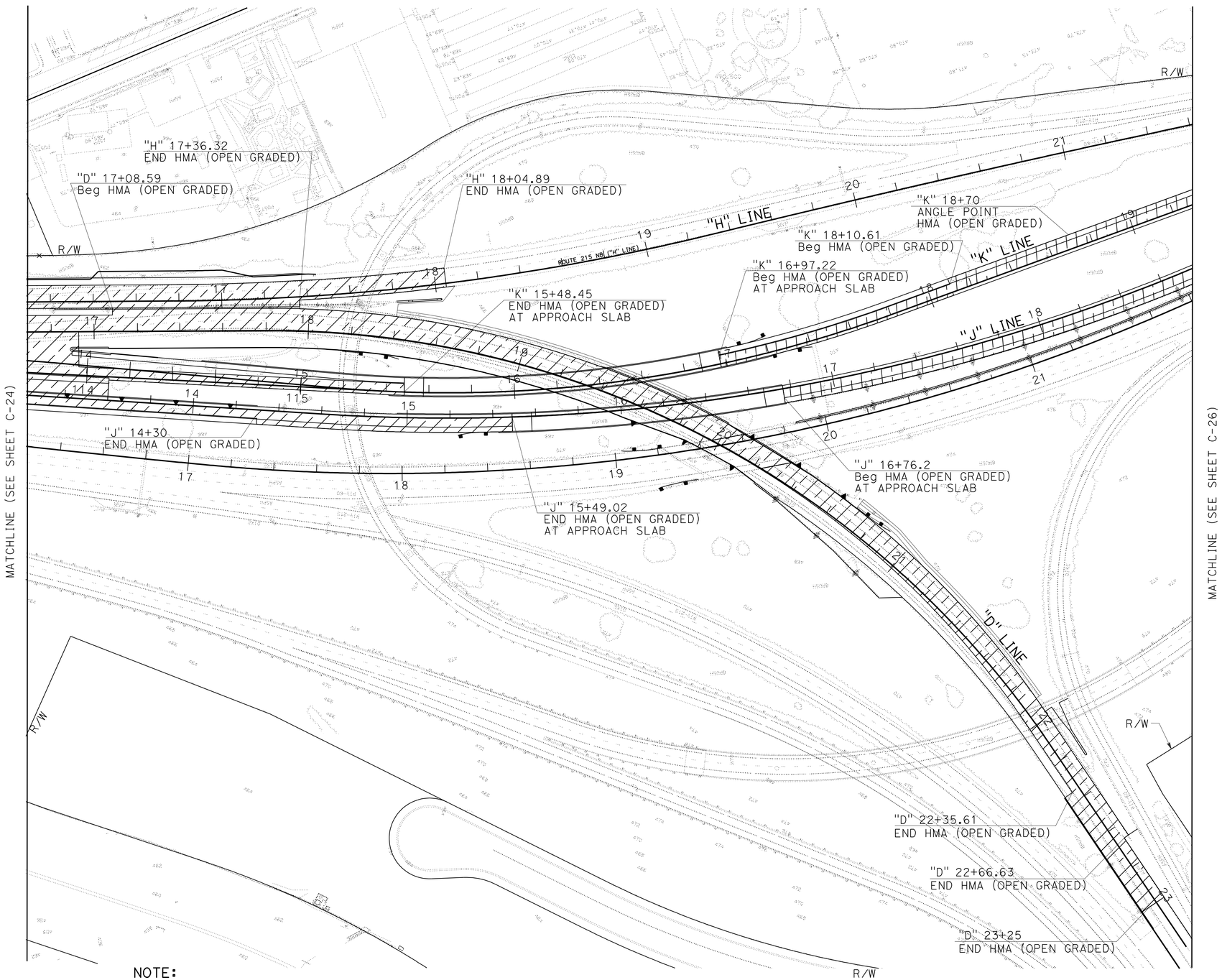

LEGEND:

LIMITS OF HMA (OPEN GRADED)

NOTE:
1. FOR COMPLETE RIGHT OF WAY AND ACCURATE ACCESS DATA, SEE RIGHT OF WAY RECORD MAPS AT DISTRICT OFFICE.

ALL DIMENSIONS ARE IN METERS UNLESS OTHERWISE SHOWN

CONSTRUCTION DETAILS
OPEN GRADED HMA

NO SCALE

C-25

REVISED BY	DATE REVISED
MIKE FLORES	NORMAN SUYDAM

CALCULATED-DESIGNED BY / CHECKED BY

CONSULTANT FUNCTIONAL SUPERVISOR: NORMAN SUYDAM

STATE OF CALIFORNIA - DEPARTMENT OF TRANSPORTATION
Caltrans

LAST REVISION 11-09-09 | DATE PLOTTED => 19-OCT-2010 | TIME PLOTTED => 15:36

Dist	COUNTY	ROUTE	KILOMETER POST TOTAL PROJECT	SHEET No.	TOTAL SHEETS
08	Riv	60,215	R19.7/21.9, R61.3/62.7	52	594

REGISTERED CIVIL ENGINEER 1-14-10 DATE

6-28-10
PLANS APPROVAL DATE

REGISTERED PROFESSIONAL ENGINEER
ERIC S. GIROD
No. C57288
Exp.12/31/11
CIVIL
STATE OF CALIFORNIA

THE STATE OF CALIFORNIA OR ITS OFFICERS OR AGENTS SHALL NOT BE RESPONSIBLE FOR THE ACCURACY OR COMPLETENESS OF ELECTRONIC COPIES OF THIS PLAN SHEET.

LAN ENGINEERING CORP
1887 BUSINESS CENTER DR
SUITE 6
SAN BERNARDINO, CA 92408

RIVERSIDE COUNTY
TRANSPORTATION COMMISSION
4080 LEMON STREET
RIVERSIDE, CA 92502

Caltrans Metric

LEGEND:

LIMITS OF HMA (OPEN GRADED)

NOTE:
1. FOR COMPLETE RIGHT OF WAY AND ACCURATE ACCESS DATA, SEE RIGHT OF WAY RECORD MAPS AT DISTRICT OFFICE.

ALL DIMENSIONS ARE IN METERS UNLESS OTHERWISE SHOWN

CONSTRUCTION DETAILS

OPEN GRADED HMA

NO SCALE

C-26

STATE OF CALIFORNIA - DEPARTMENT OF TRANSPORTATION
Caltrans

CONSULTANT FUNCTIONAL SUPERVISOR: NORMAN SUYDAM
CALCULATED-DESIGNED BY: MIKE FLORES
CHECKED BY: NORMAN SUYDAM
REVISED BY
DATE REVISED

LAST REVISION DATE PLOTTED => 19-OCT-2010
TIME PLOTTED => 15:36

Dist	COUNTY	ROUTE	KILOMETER POST TOTAL PROJECT	SHEET No.	TOTAL SHEETS
08	Riv	60,215	R19.7/21.9, R61.3/62.7	53	594

REGISTERED CIVIL ENGINEER 1-14-10 DATE

6-28-10
PLANS APPROVAL DATE

REGISTERED PROFESSIONAL ENGINEER ERIC S. GIROD No. C57288 Exp.12/31/11 CIVIL STATE OF CALIFORNIA

THE STATE OF CALIFORNIA OR ITS OFFICERS OR AGENTS SHALL NOT BE RESPONSIBLE FOR THE ACCURACY OR COMPLETENESS OF ELECTRONIC COPIES OF THIS PLAN SHEET.

LAN ENGINEERING CORP
1887 BUSINESS CENTER DR
SUITE 6
SAN BERNARDINO, CA 92408

RIVERSIDE COUNTY
TRANSPORTATION COMMISSION
4080 LEMON STREET
RIVERSIDE, CA 92502

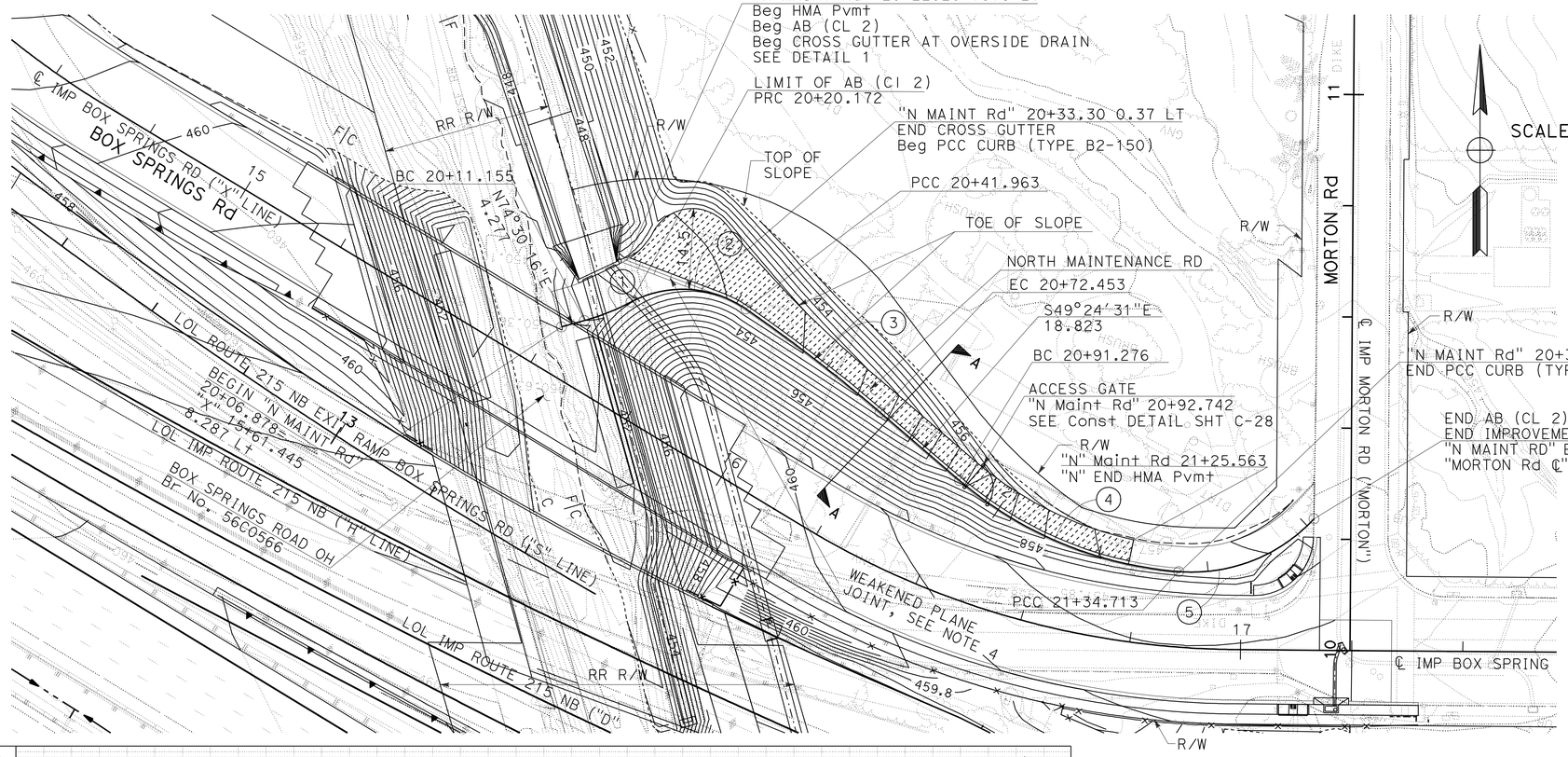

LEGEND:

HMA (TYPE A)

LIMITS	HMA	AB (CL 2)
20+22.23 TO 21+25.56	60 mm	150 mm
21+25.56 TO 21+61.749	N/A	150 mm

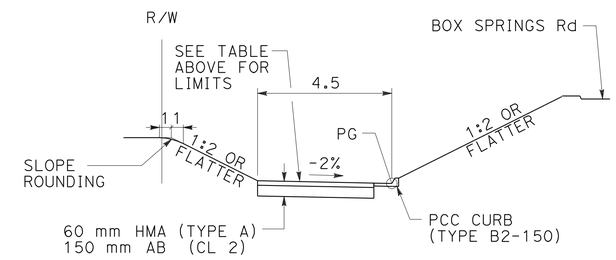

SECTION A-A

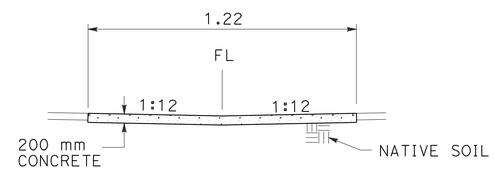

DETAIL 1

NOTES:

1. FOR COMPLETE RIGHT OF WAY AND ACCURATE ACCESS DATA, SEE RIGHT OF WAY RECORD MAPS AT DISTRICT OFFICE.
2. FOR PCC CURB, SEE Std PLANS A87A.
3. CONSTRUCT CONCRETE CROSS GUTTER ON NATIVE SOIL.
4. CONSTRUCT WEAKENED PLANE JOINT AT 3m INTERVALS, SEE WEAKENED PLANE JOINT ON C-19.

CURVE DATA TABLE

No.	R	Δ	T	L
1	42.000	12°18'04"	4.526	9.017
2	20.000	62°25'33"	12.119	21.791
3	293.000	5°57'44"	15.259	30.490
4	69.000	36°04'10"	22.466	43.438
5	30.000	51°38'02"	14.514	27.036

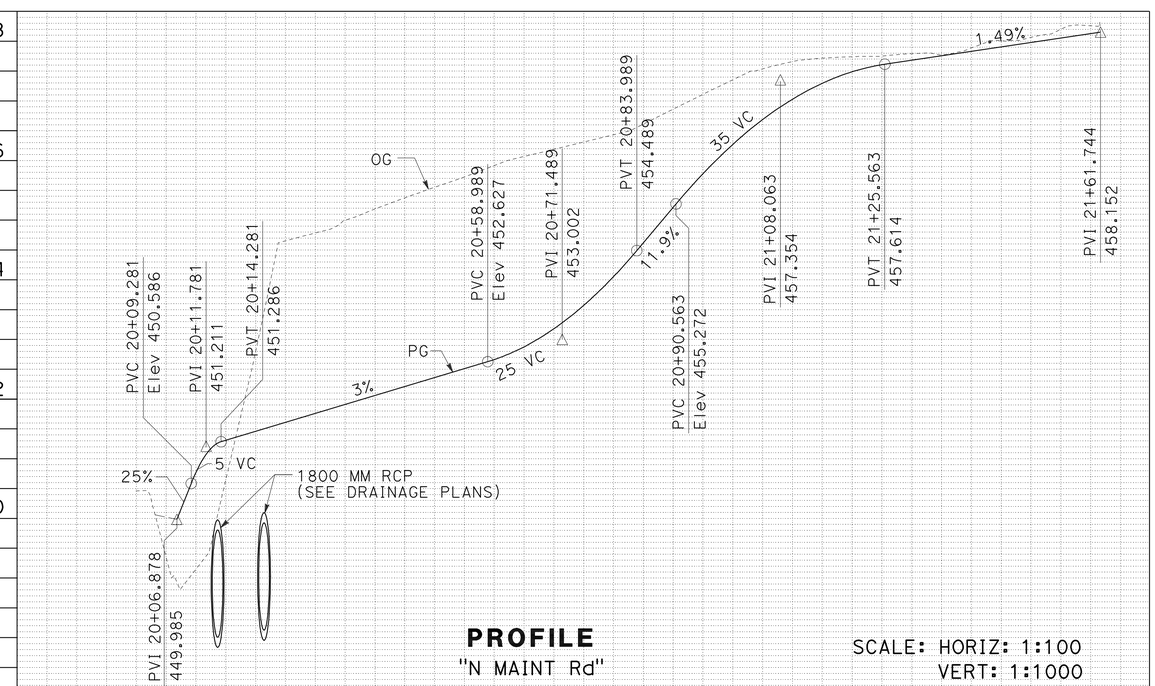

PROFILE
"N MAINT Rd"

SCALE: HORIZ: 1:100
VERT: 1:1000

ALL DIMENSIONS ARE IN METERS UNLESS OTHERWISE SHOWN

CONSTRUCTION DETAILS
NORTH MAINTENANCE Rd

SCALE AS SHOWN **C-27**

STATE OF CALIFORNIA - DEPARTMENT OF TRANSPORTATION
Caltrans

CONSULTANT FUNCTIONAL SUPERVISOR: NORMAN SUYDAM
CALCULATED-DESIGNED BY: NORMAN SUYDAM
CHECKED BY
REVISED BY: MIKE FLORES
DATE REVISED

DATE PLOTTED => 19-OCT-2010
TIME PLOTTED => 15:56
11-09-09

Dist	COUNTY	ROUTE	KILOMETER POST TOTAL PROJECT	SHEET No.	TOTAL SHEETS
08	Riv	60,215	R19.7/21.9, R61.3/62.7	54	594

Caltrans Metric

REGISTERED CIVIL ENGINEER 1-14-10 DATE

6-28-10
PLANS APPROVAL DATE

REGISTERED PROFESSIONAL ENGINEER
ERIC S. GIROD
No. C57288
Exp.12/31/11
CIVIL
STATE OF CALIFORNIA

THE STATE OF CALIFORNIA OR ITS OFFICERS OR AGENTS SHALL NOT BE RESPONSIBLE FOR THE ACCURACY OR COMPLETENESS OF ELECTRONIC COPIES OF THIS PLAN SHEET.

LAN ENGINEERING CORP
1887 BUSINESS CENTER DR
SUITE 6
SAN BERNARDINO, CA 92408

RIVERSIDE COUNTY
TRANSPORTATION COMMISSION
4080 LEMON STREET
RIVERSIDE, CA 92502

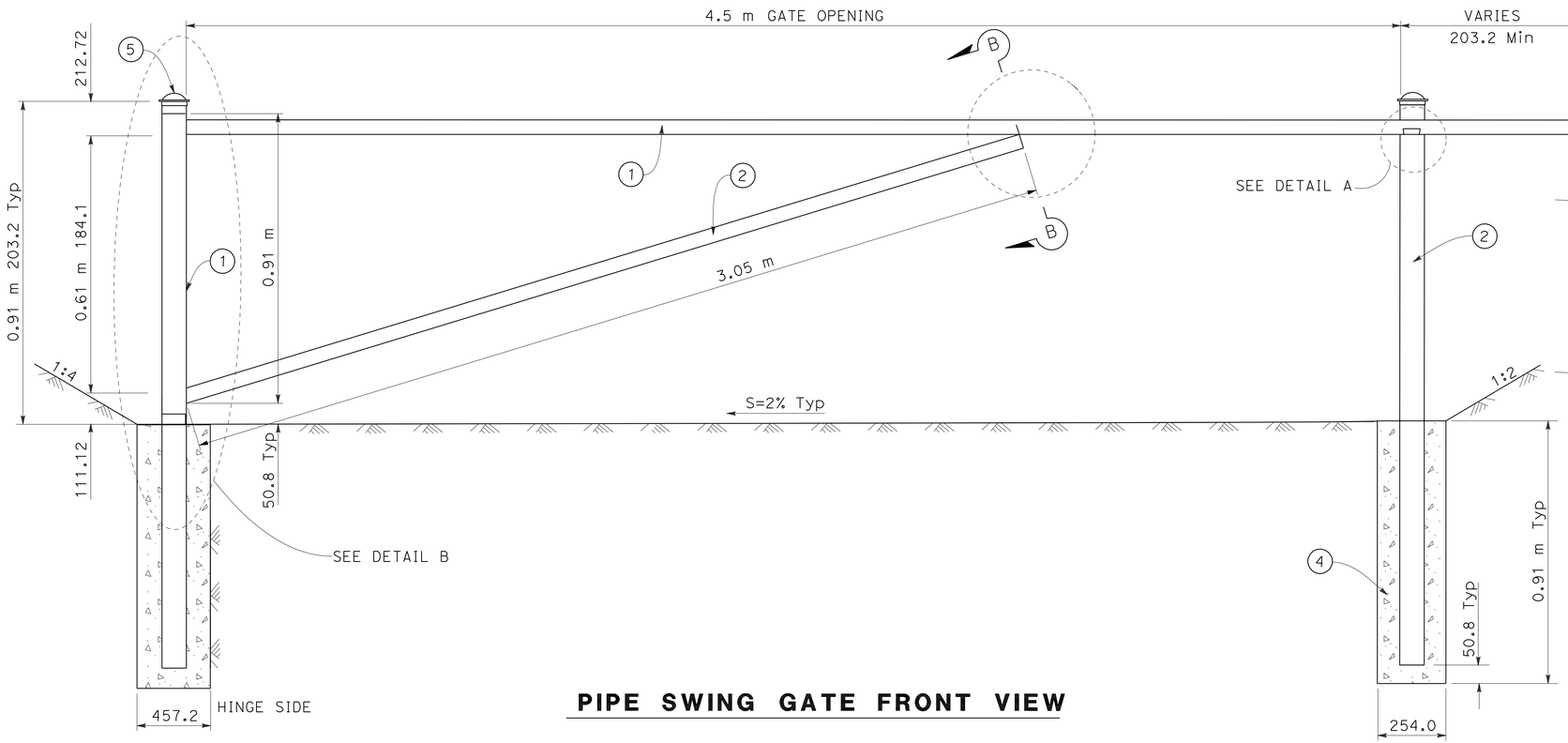

PIPE SWING GATE FRONT VIEW

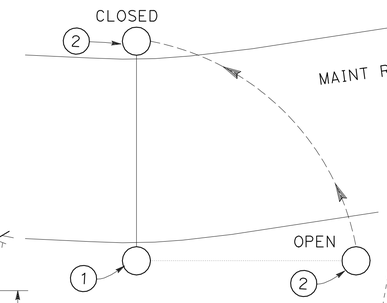

POST DETAIL
PLAN VIEW
NTS
SEE NOTE 8

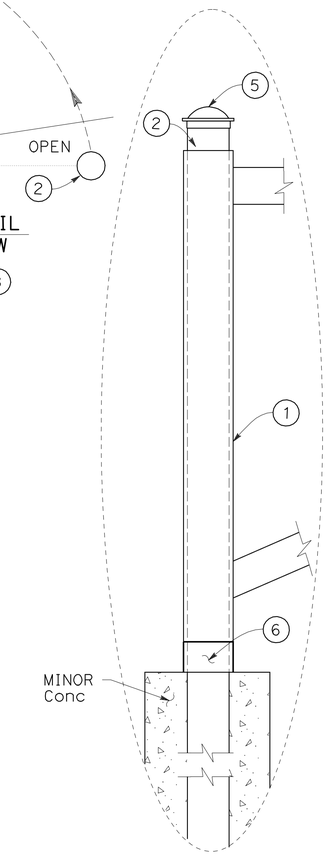

REVISED GATE & HINGE
DETAIL B

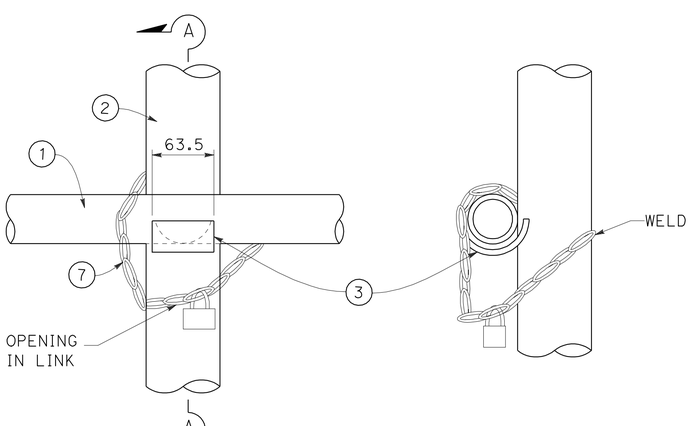

DETAIL A

SECTION A-A

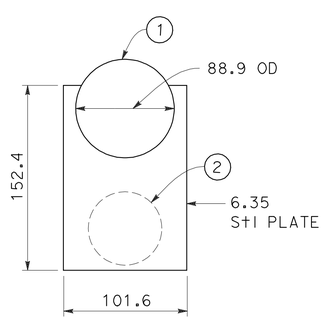

SECTION B-B

NOTES:

1. GALVANIZED IRON PIPE 88.9 OD WALL THICKNESS 8.077.
2. GALVANIZED IRON PIPE 73.02 OD WALL THICKNESS 7.01.
3. GATE REST ONE-HALF OF GALVANIZED IRON PIPE 88.9 OD GRIND TO FIT VERTICAL POST. FIELD WELD.
4. MINOR CONCRETE (MISCELLANEOUS CONSTRUCTION).
5. POST ANCHORED IN CONCRETE SHALL HAVE CAPS.
6. 50.80 FREE STANDING PIVOT SLEEVE 88.9 WALL THICKNESS 8.077.
7. 9.5 mm GALVANIZED CHAIN. FIELD WELD ONE LINK TO VERTICAL POST. PROVIDE OPENINGS IN LINKS FOR MULTIPLE PADLOCKS. CHAIN SHALL BE OF SUFFICIENT LENGTH TO ENCIRCLE HORIZONTAL PIPE.
8. SECOND POST REQUIRED TO KEEP GATE OPEN WHEN IN USE.

ALL DIMENSIONS ARE IN
MILLIMETERS UNLESS OTHERWISE SHOWN

CONSTRUCTION DETAILS
ACCESS GATE DETAILS

NO SCALE

C-28

REVISED BY	DATE REVISED
MIKE FLORES	
NORMAN SUYDAM	

CALCULATED-DESIGNED BY
CHECKED BY

CONSULTANT FUNCTIONAL SUPERVISOR
NORMAN SUYDAM

STATE OF CALIFORNIA - DEPARTMENT OF TRANSPORTATION
Caltrans

LAST REVISION 11-09-09
DATE PLOTTED => 19-OCT-2010
TIME PLOTTED => 15:37

Dist	COUNTY	ROUTE	KILOMETER POST TOTAL PROJECT	SHEET No.	TOTAL SHEETS
08	Riv	60,215	R19.7/21.9, R61.3/62.7	55	594

Caltrans Metric

REGISTERED CIVIL ENGINEER 1-14-10 DATE

PLANS APPROVAL DATE 6-28-10

REGISTERED PROFESSIONAL ENGINEER ERIC S. GIROD No. C57288 Exp.12/31/11 CIVIL STATE OF CALIFORNIA

THE STATE OF CALIFORNIA OR ITS OFFICERS OR AGENTS SHALL NOT BE RESPONSIBLE FOR THE ACCURACY OR COMPLETENESS OF ELECTRONIC COPIES OF THIS PLAN SHEET.

LAN ENGINEERING CORP
1887 BUSINESS CENTER DR
SUITE 6
SAN BERNARDINO, CA 92408

RIVERSIDE COUNTY
TRANSPORTATION COMMISSION
4080 LEMON STREET
RIVERSIDE, CA 92502

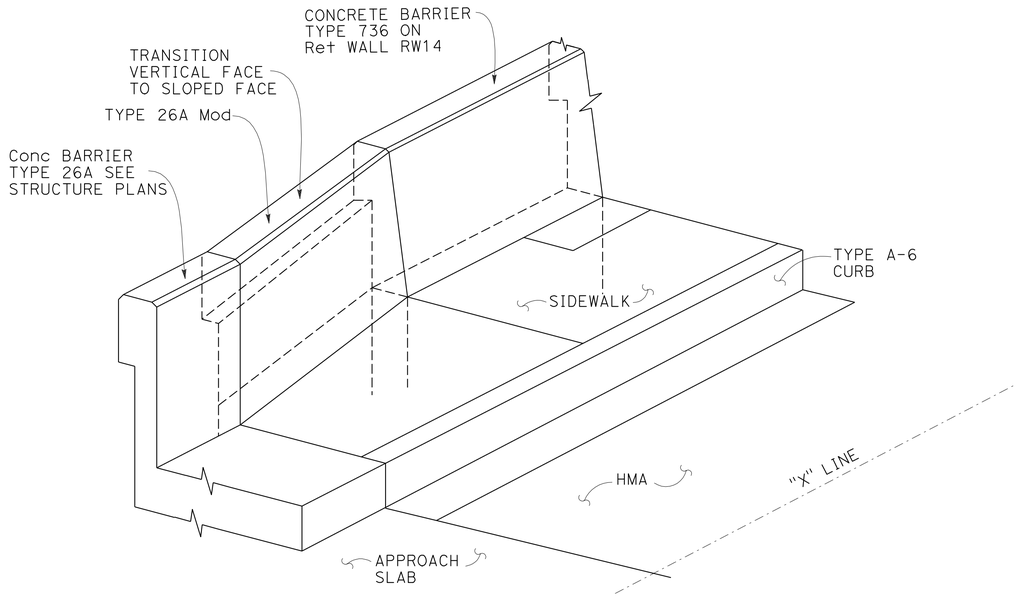

TYPE 26 TO TYPE 736 BARRIER TRANSITION

NOTES:

1. SEE STANDARD PLAN A76D FOR CONCRETE BARRIER TYPE 60G.
2. FOOTING MONOLITHIC OR DOWELED WITH 2-#25x205 mm @ 610 mm. THE FOOTING IS REQUIRED AT CONCRETE BARRIER ENDS AND AT INTERRUPTIONS IN CONCRETE BARRIER.
3. EXPANSION JOINTS IN CONCRETE BARRIER SHALL BE LOCATED AT ALL DECK, PAVEMENT AND PRINCIPAL WALL JOINTS. EXPANSION JOINT FILLER MATERIAL SHALL BE THE SAME SIZE AS JOINT OR 13 mm MINIMUM.
4. SEE STANDARD PLAN A77J4 FOR TRANSITION TO TRANSITION RAILING (TYPE WB).

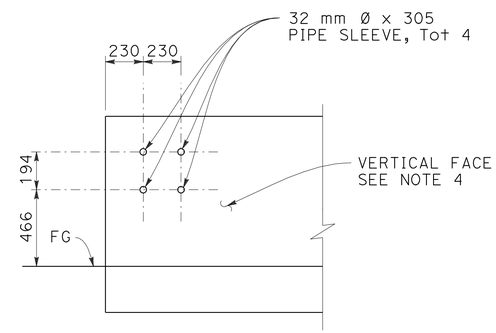

DETAIL A

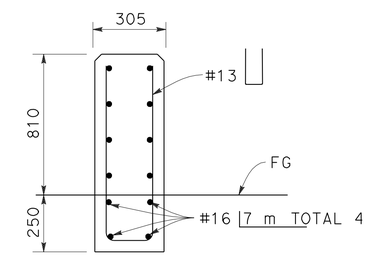

SECTION A-A

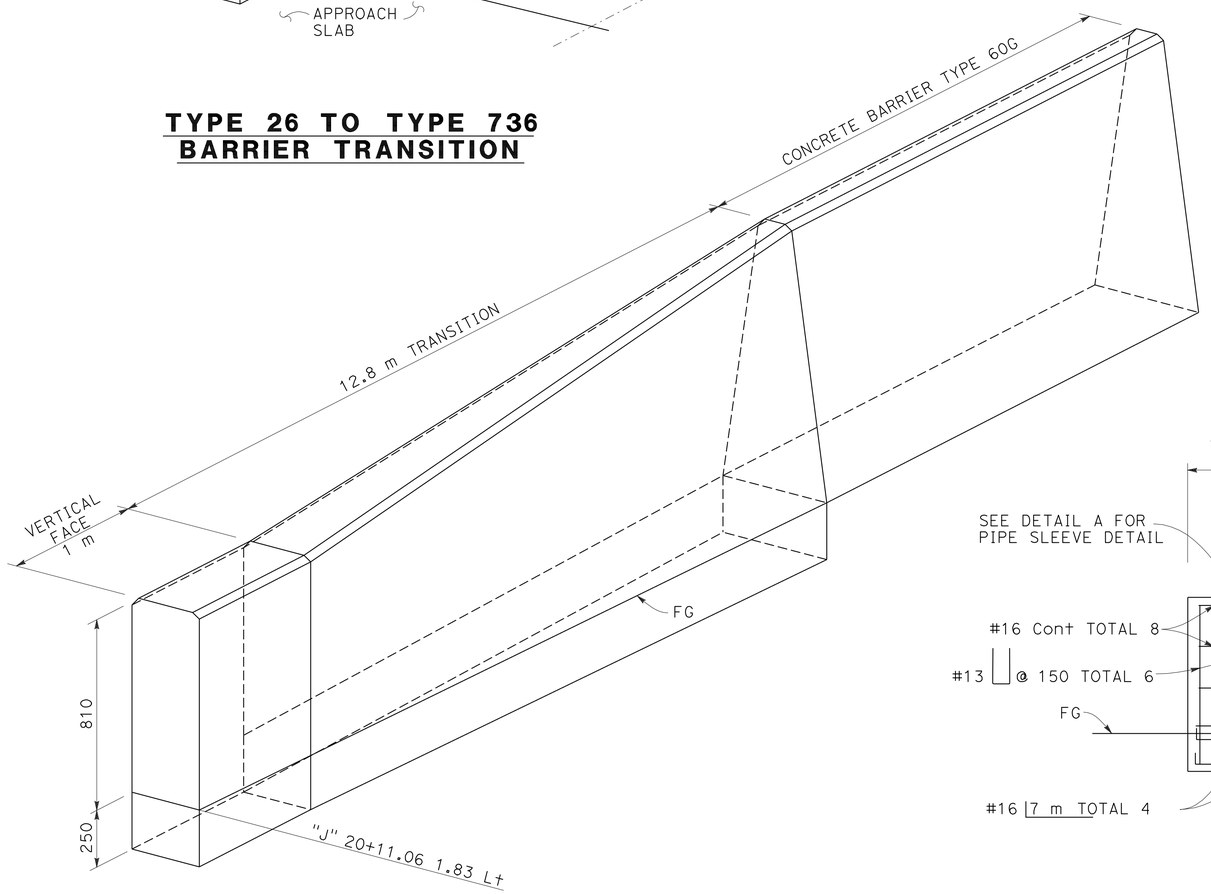

CONCRETE BARRIER TYPE 60G

CONCRETE BARRIER END ANCHORAGE

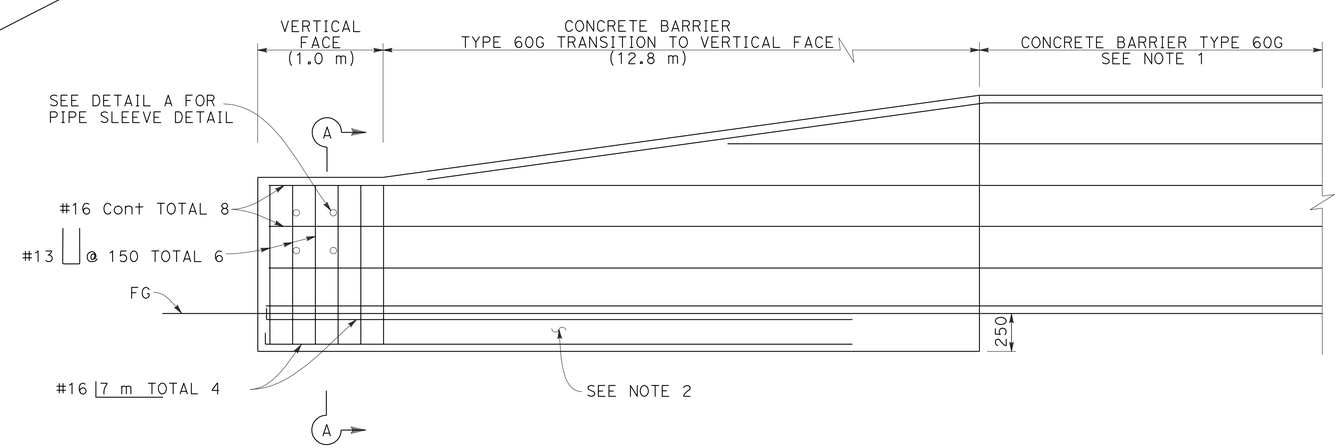

ALL DIMENSIONS ARE IN METERS UNLESS OTHERWISE SHOWN

CONSTRUCTION DETAILS

CONCRETE BARRIER TRANSITIONS

NO SCALE

C-29

STATE OF CALIFORNIA - DEPARTMENT OF TRANSPORTATION

Caltrans

CONSULTANT FUNCTIONAL SUPERVISOR: NORMAN SUYDAM

CALCULATED-DESIGNED BY: MIKE FLORES

CHECKED BY: NORMAN SUYDAM

REVISED BY | DATE REVISED

LAST REVISION 11-09-09

DATE PLOTTED => 19-OCT-2010
TIME PLOTTED => 15:37

Dist	COUNTY	ROUTE	KILOMETER POST TOTAL PROJECT	SHEET No.	TOTAL SHEETS
08	Riv	60,215	R19.7/21.9, R61.3/62.7	56	594

Caltrans Metric

REGISTERED CIVIL ENGINEER 1-14-10 DATE

6-28-10
PLANS APPROVAL DATE

REGISTERED PROFESSIONAL ENGINEER
ERIC S. GIROD
No. C57288
Exp.12/31/11
CIVIL
STATE OF CALIFORNIA

THE STATE OF CALIFORNIA OR ITS OFFICERS OR AGENTS SHALL NOT BE RESPONSIBLE FOR THE ACCURACY OR COMPLETENESS OF ELECTRONIC COPIES OF THIS PLAN SHEET.

LAN ENGINEERING CORP
1887 BUSINESS CENTER DR
SUITE 6
SAN BERNARDINO, CA 92408

RIVERSIDE COUNTY
TRANSPORTATION COMMISSION
4080 LEMON STREET
RIVERSIDE, CA 92502

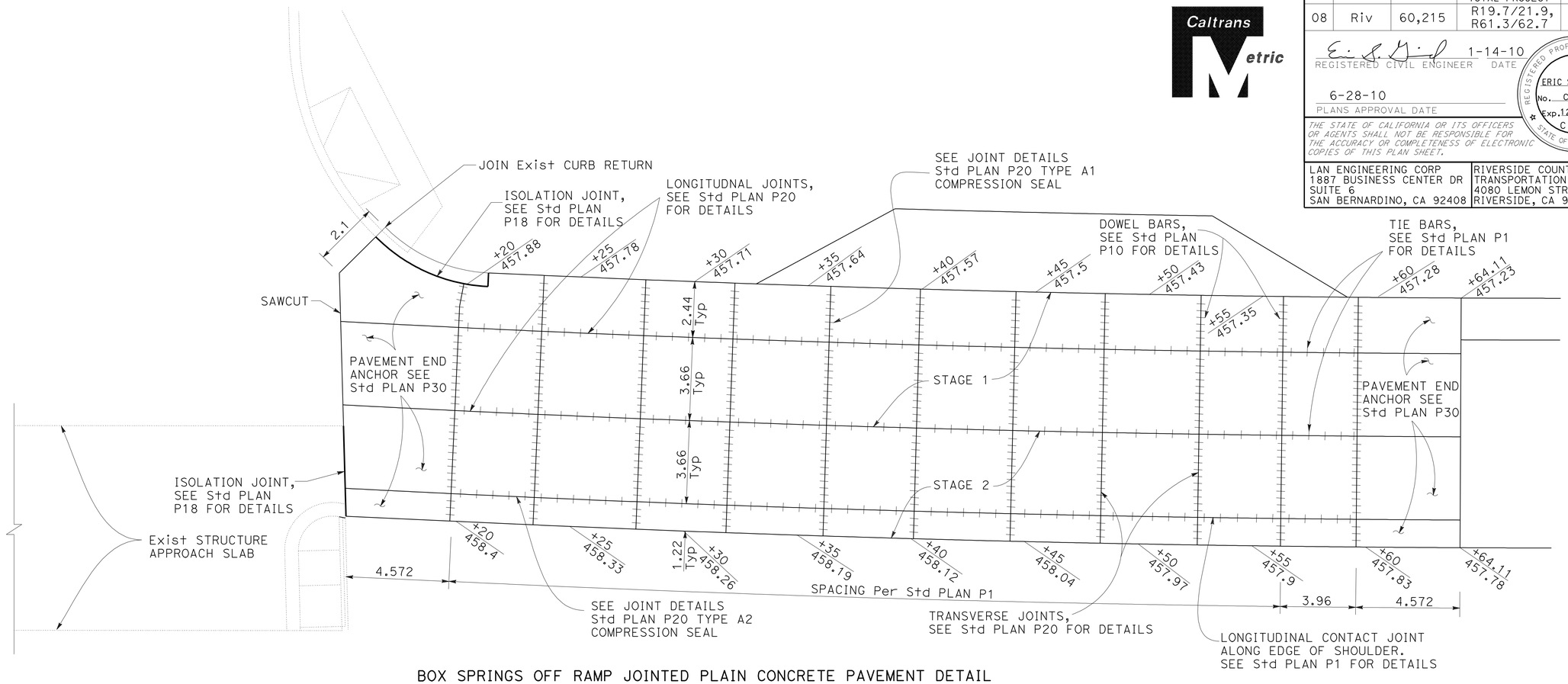

BOX SPRINGS OFF RAMP JOINTED PLAIN CONCRETE PAVEMENT DETAIL

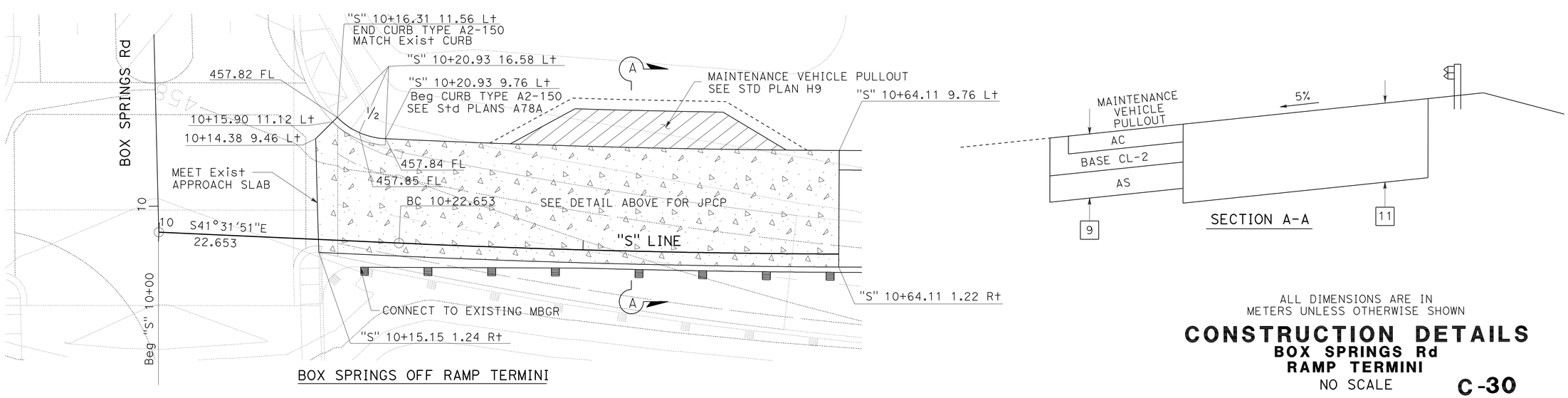

BOX SPRINGS OFF RAMP TERMINI

SECTION A-A

ALL DIMENSIONS ARE IN METERS UNLESS OTHERWISE SHOWN

CONSTRUCTION DETAILS
BOX SPRINGS Rd
RAMP TERMINI
NO SCALE

C-30

REVISED BY	DATE REVISED
MIKE FLORES	NORMAN SUYDAM

CALCULATED-DESIGNED BY / CHECKED BY

CONSULTANT FUNCTIONAL SUPERVISOR: NORMAN SUYDAM

STATE OF CALIFORNIA - DEPARTMENT OF TRANSPORTATION

Caltrans

LAST REVISION 11-09-09 | DATE PLOTTED => 19-OCT-2010 | TIME PLOTTED => 15:37

Dist	COUNTY	ROUTE	KILOMETER POST TOTAL PROJECT	SHEET No.	TOTAL SHEETS
08	Riv	60,215	R19.7/21.9, R61.3/62.7	57	594

REGISTERED CIVIL ENGINEER 1-14-10 DATE

6-28-10
PLANS APPROVAL DATE

REGISTERED PROFESSIONAL ENGINEER ERIC S. GIROD No. C57288 Exp.12/31/11 CIVIL STATE OF CALIFORNIA

THE STATE OF CALIFORNIA OR ITS OFFICERS OR AGENTS SHALL NOT BE RESPONSIBLE FOR THE ACCURACY OR COMPLETENESS OF ELECTRONIC COPIES OF THIS PLAN SHEET.

LAN ENGINEERING CORP
1887 BUSINESS CENTER DR
SUITE 6
SAN BERNARDINO, CA 92408

RIVERSIDE COUNTY
TRANSPORTATION COMMISSION
4080 LEMON STREET
RIVERSIDE, CA 92502

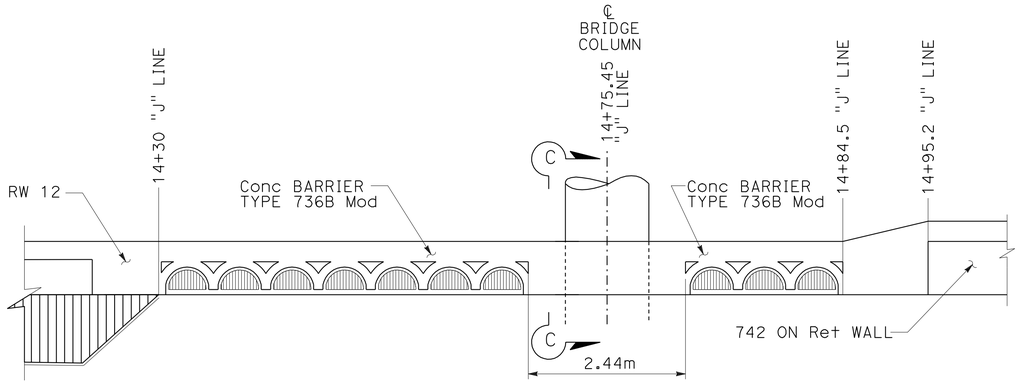

BARRIER DETAIL
FROM "J" LINE STA 14+30 TO STA 14+95.2

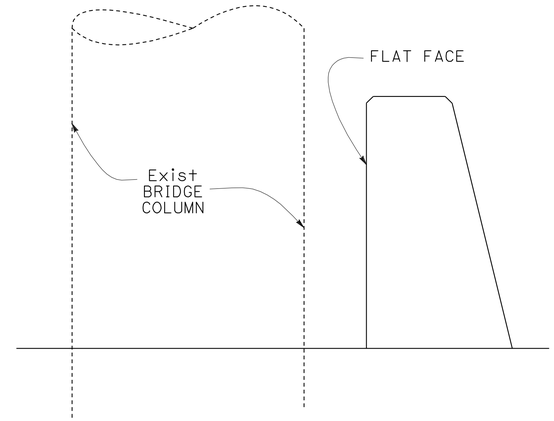

SECTION C-C AT COLUMN

LEGEND:

INDICATES FRACTURE RIB TEXTURE

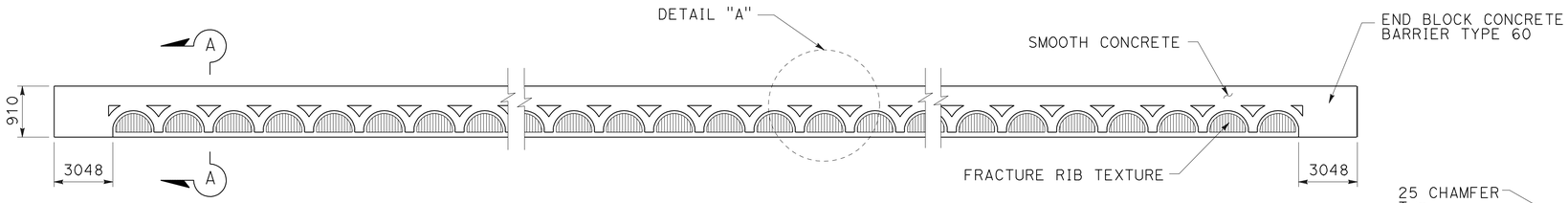

DEVELOPED ELEVATION CONCRETE BARRIER TYPE 736B Mod

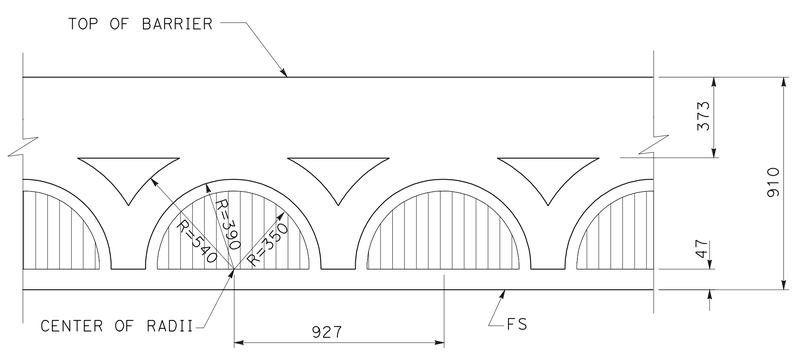

DETAIL A

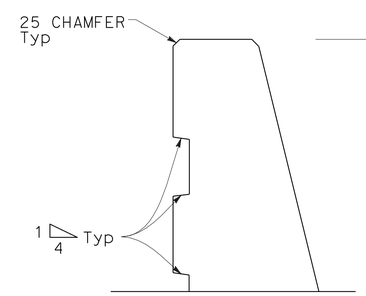

SECTION A-A

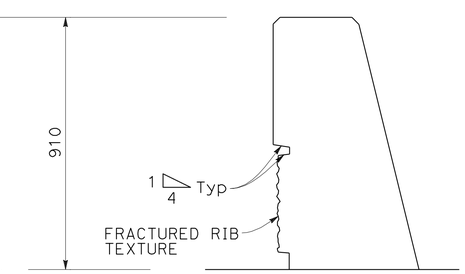

SECTION B-B

ALL DIMENSIONS ARE IN MILLIMITERS UNLESS OTHERWISE SHOWN

CONSTRUCTION DETAILS
ARCHITECTURAL BARRIER DETAILS

NO SCALE **C-31**

REVISED BY | DATE REVISED
MIKE FLORES | NORMAN SUYDAM
CALCULATED-DESIGNED BY | CHECKED BY
CONSULTANT FUNCTIONAL SUPERVISOR | NORMAN SUYDAM
STATE OF CALIFORNIA - DEPARTMENT OF TRANSPORTATION
Caltrans

LAST REVISION 11-09-09 | DATE PLOTTED => 19-OCT-2010 | TIME PLOTTED => 15:37

Dist	COUNTY	ROUTE	KILOMETER POST TOTAL PROJECT	SHEET No.	TOTAL SHEETS
08	Riv	60,215	R19.7/21.9, R61.3/62.7	58	594

REGISTERED CIVIL ENGINEER 1-14-10 DATE

6-28-10
PLANS APPROVAL DATE

REGISTERED PROFESSIONAL ENGINEER ERIC S. GIROD No. C57288 Exp.12/31/11 CIVIL STATE OF CALIFORNIA

THE STATE OF CALIFORNIA OR ITS OFFICERS OR AGENTS SHALL NOT BE RESPONSIBLE FOR THE ACCURACY OR COMPLETENESS OF ELECTRONIC COPIES OF THIS PLAN SHEET.

LAN ENGINEERING CORP
1887 BUSINESS CENTER DR
SUITE 6
SAN BERNARDINO, CA 92408

RIVERSIDE COUNTY
TRANSPORTATION COMMISSION
4080 LEMON STREET
RIVERSIDE, CA 92502

Caltrans Metric

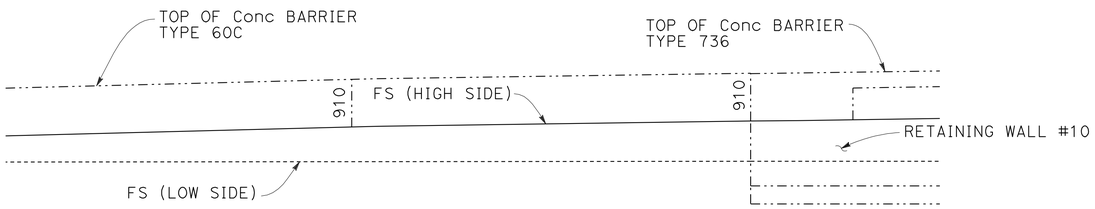

ELEVATION

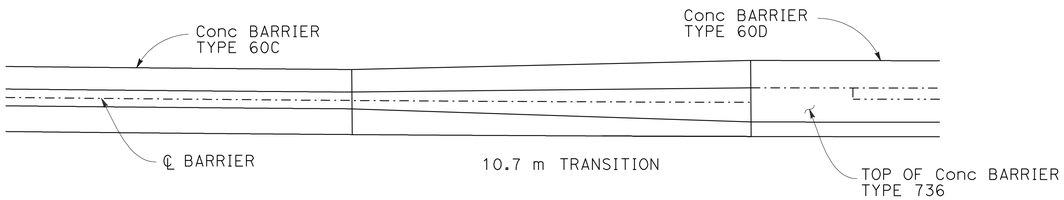

PLAN

CONCRETE BARRIER TRANSITION DETAIL TO WALL RW-10

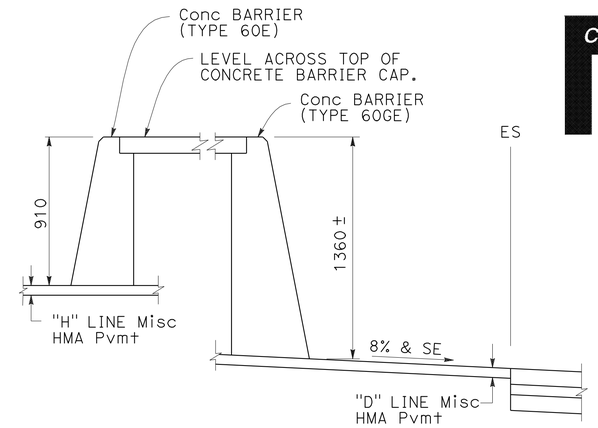

SECTION A-A
"D" 18+10.2 TO 18+30

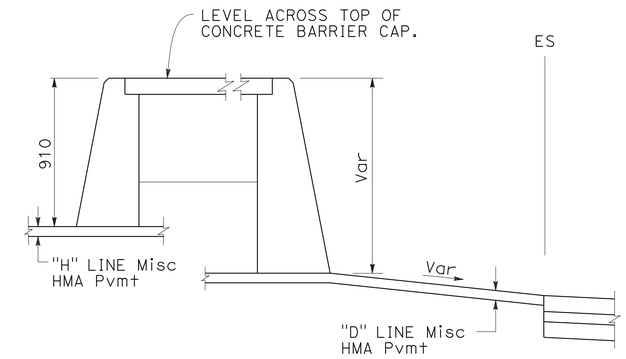

SECTION B-B
"D" 18+30 TO 18+36.2

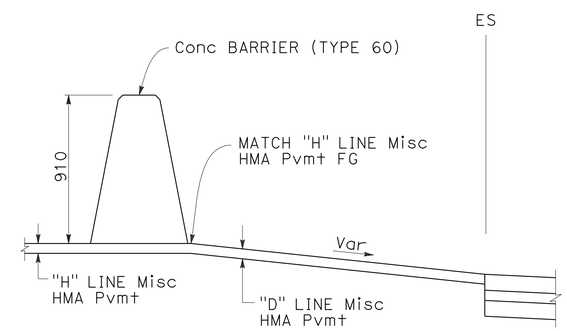

SECTION C-C
"D" 18+36.2 TO 18+40

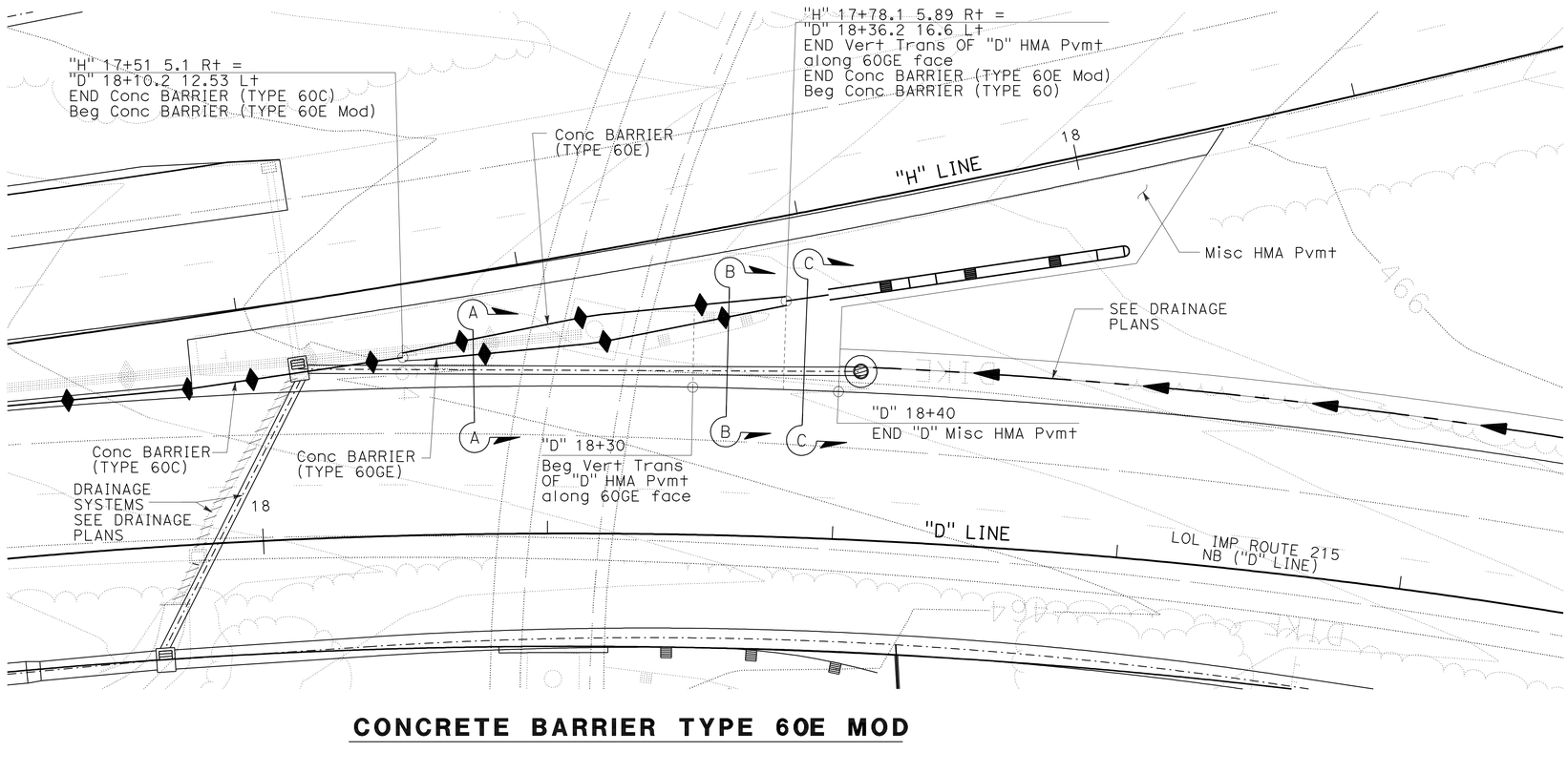

CONCRETE BARRIER TYPE 60E MOD

ALL DIMENSIONS ARE IN MILLIMITERS UNLESS OTHERWISE SHOWN

CONSTRUCTION DETAILS
BARRIER DETAILS AND TRANSITIONS

NO SCALE **C-32**

THIS PLAN ACCURATE FOR RETAINING WALL WORK ONLY

STATE OF CALIFORNIA - DEPARTMENT OF TRANSPORTATION
Caltrans

CONSULTANT FUNCTIONAL SUPERVISOR: NORMAN SUYDAM
CALCULATED-DESIGNED BY
CHECKED BY
REVISED BY
DATE REVISED

LAST REVISION 11-09-09
DATE PLOTTED => 19-OCT-2010
TIME PLOTTED => 15:37

Dist	COUNTY	ROUTE	KILOMETER POST TOTAL PROJECT	SHEET No.	TOTAL SHEETS
08	Riv	60,215	R19.7/21.9, R61.3/62.7	59	594

REGISTERED CIVIL ENGINEER 1-14-10 DATE

6-28-10
PLANS APPROVAL DATE

REGISTERED PROFESSIONAL ENGINEER
ERIC S. GIROD
No. C57288
Exp.12/31/11
CIVIL
STATE OF CALIFORNIA

THE STATE OF CALIFORNIA OR ITS OFFICERS OR AGENTS SHALL NOT BE RESPONSIBLE FOR THE ACCURACY OR COMPLETENESS OF ELECTRONIC COPIES OF THIS PLAN SHEET.

LAN ENGINEERING CORP
1887 BUSINESS CENTER DR
SUITE 6
SAN BERNARDINO, CA 92408

RIVERSIDE COUNTY
TRANSPORTATION COMMISSION
4080 LEMON STREET
RIVERSIDE, CA 92502

NOTES:

1. SEE STANDARD PLAN T51 for TEMPORARY SILT FENCE.
2. DIMENSIONS MAY VARY TO FIT FIELD CONDITIONS.

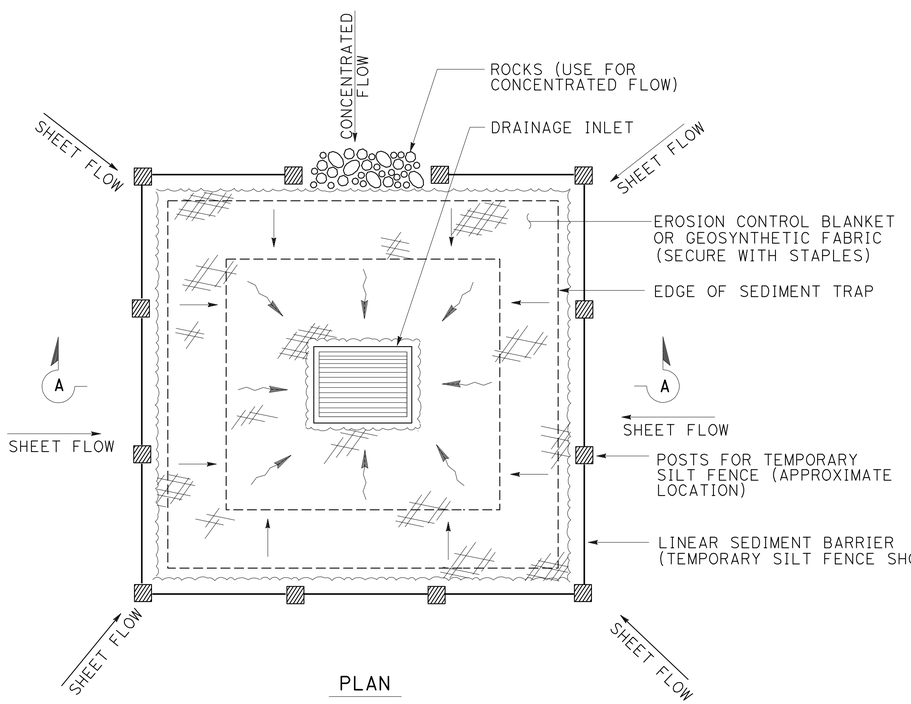

PLAN

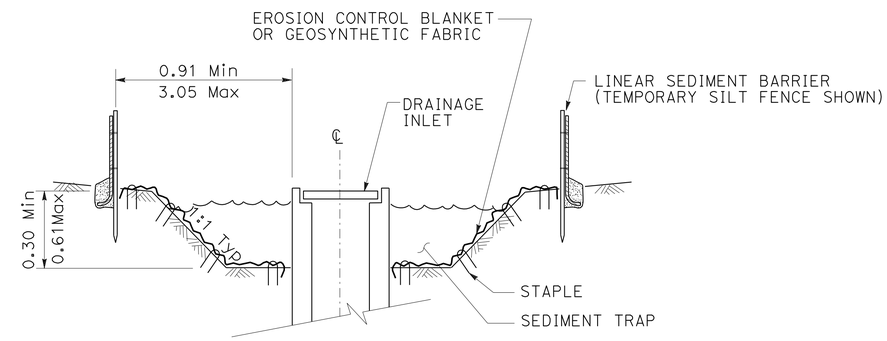

SECTION A-A

TEMPORARY DRAINAGE INLET PROTECTION (TYPE 2) (EXCAVATED SEDIMENT TRAP)

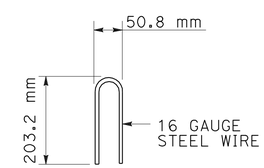

STAPLE DETAIL

TEMPORARY WATER POLLUTION CONTROL DETAILS (TEMPORARY DRAINAGE INLET PROTECTION)

ALL DIMENSIONS ARE IN METERS UNLESS OTHERWISE SHOWN

CONSTRUCTION DETAILS

NO SCALE **C-33**

STATE OF CALIFORNIA - DEPARTMENT OF TRANSPORTATION
Caltrans

CONSULTANT FUNCTIONAL SUPERVISOR: NORMAN SUYDAM
CALCULATED-DESIGNED BY: MIKE FLORES
CHECKED BY: NORMAN SUYDAM
REVISED BY
DATE REVISED

LAST REVISION 11-09-09
DATE PLOTTED => 19-OCT-2010
TIME PLOTTED => 15:37

Dist	COUNTY	ROUTE	KILOMETER POST TOTAL PROJECT	SHEET No.	TOTAL SHEETS
08	Riv	60,215	R19.7/21.9, R61.3/62.7	60	594

Caltrans Metric

REGISTERED CIVIL ENGINEER 1-14-10 DATE

6-28-10
PLANS APPROVAL DATE

REGISTERED PROFESSIONAL ENGINEER ERIC S. GIROD No. C57288 Exp.12/31/11 CIVIL STATE OF CALIFORNIA

THE STATE OF CALIFORNIA OR ITS OFFICERS OR AGENTS SHALL NOT BE RESPONSIBLE FOR THE ACCURACY OR COMPLETENESS OF ELECTRONIC COPIES OF THIS PLAN SHEET.

LAN ENGINEERING CORP
1887 BUSINESS CENTER DR
SUITE 6
SAN BERNARDINO, CA 92408

RIVERSIDE COUNTY
TRANSPORTATION COMMISSION
4080 LEMON STREET
RIVERSIDE, CA 92502

GRAVEL BAG BERM (TYPE 3A) SPACING TABLE

SLOPE OF ROADWAY (PERCENT)	1 to 3.9	4 to 5.9	6 to 7.9	8 to 10	10+
INTERVAL BETWEEN BERM	30.48	22.86	15.24	7.62	3.66

FOR SLOPE OF LESS THAN 1%, INSTALL BARRIERS ONLY IF EROSION/SEDIMENT IS PREVALENT

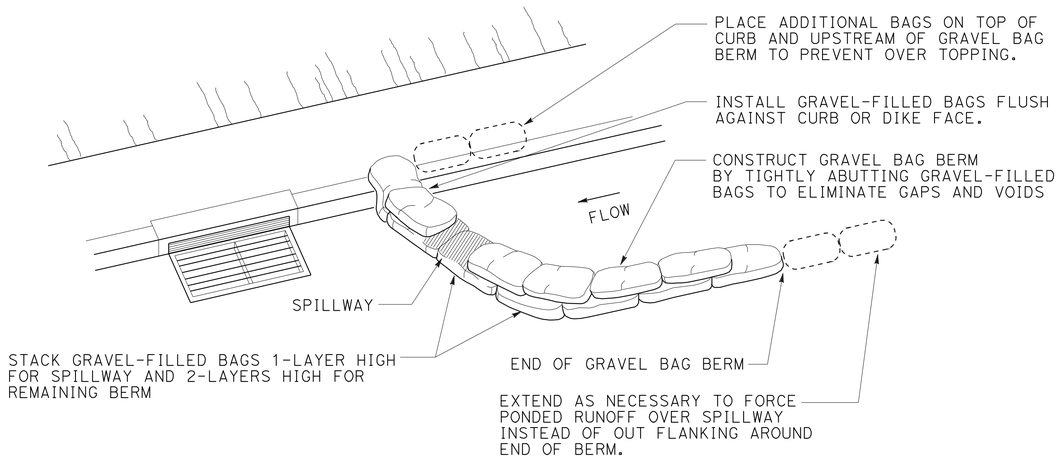

PERSPECTIVE

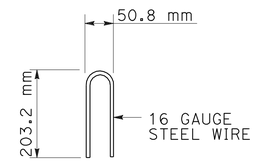

STAPLE DETAIL

NOTES:

1. PLACE SAFETY CONES ADJACENT TO DRAINAGE INLET PROTECTION.
2. DIMENSIONS MAY VARY TO FIT FIELD CONDITIONS.
3. INSTALL A MINIMUM OF 3 GRAVEL BAG BERMS UPSTREAM OF EACH DRAINAGE INLET TO BE PROTECTED.
4. POSITION EROSION CONTROL BLANKET OR GEOSYNTHETIC FABRIC AT EDGE OF CONCRETE APRON AND SECURE IN TRENCH.
5. EROSION CONTROL BLANKET OR GEOSYNTHETIC FABRIC IS NOT REQUIRED IF THE AREA ADJACENT TO THE DRAINAGE INLET IS VEGETATED OR PAVED.

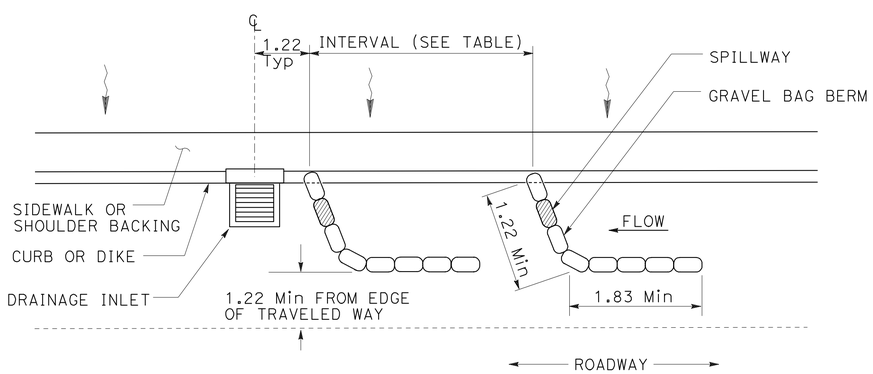

PLAN

TEMPORARY DRAINAGE INLET PROTECTION (TYPE 3A)

(GRAVEL BAG BERM)

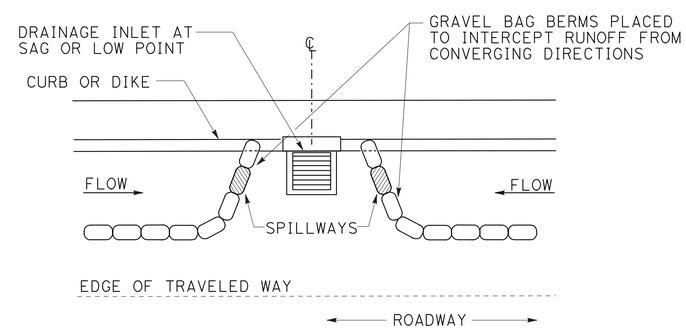

PLAN

CONFIGURATION FOR SAG POINT INLET

(GRAVEL BAG BERM)

TEMPORARY WATER POLLUTION CONTROL DETAILS (TEMPORARY DRAINAGE INLET PROTECTION)

ALL DIMENSIONS ARE IN METERS UNLESS OTHERWISE SHOWN

CONSTRUCTION DETAILS

NO SCALE **C-34**

STATE OF CALIFORNIA - DEPARTMENT OF TRANSPORTATION
Caltrans

CONSULTANT FUNCTIONAL SUPERVISOR NORMAN SUYDAM
CALCULATED-DESIGNED BY NORMAN SUYDAM
CHECKED BY MIKE FLORES
REVISED BY
DATE REVISED

LAST REVISION 11-09-09
DATE PLOTTED => 19-OCT-2010
TIME PLOTTED => 15:37

Dist	COUNTY	ROUTE	KILOMETER POST TOTAL PROJECT	SHEET No.	TOTAL SHEETS
08	Riv	60,215	R19.7/21.9, R61.3/62.7	61	594

REGISTERED CIVIL ENGINEER 1-14-10 DATE

6-28-10
PLANS APPROVAL DATE

REGISTERED PROFESSIONAL ENGINEER ERIC S. GIROD No. C57288 Exp.12/31/11 CIVIL STATE OF CALIFORNIA

THE STATE OF CALIFORNIA OR ITS OFFICERS OR AGENTS SHALL NOT BE RESPONSIBLE FOR THE ACCURACY OR COMPLETENESS OF ELECTRONIC COPIES OF THIS PLAN SHEET.

LAN ENGINEERING CORP
1887 BUSINESS CENTER DR
SUITE 6
SAN BERNARDINO, CA 92408

RIVERSIDE COUNTY
TRANSPORTATION COMMISSION
4080 LEMON STREET
RIVERSIDE, CA 92502

Caltrans Metric

FLEXIBLE SEDIMENT BARRIER SPACING TABLE

SLOPE OF ROADWAY (PERCENT)	0 to 0.9	1 to 1.9	2 to 2.9	3 to 4	5+
INTERVAL BETWEEN BARRIERS	15.24	10.67	9.14	7.62	6.10
ANGLE FROM FACE OF CURB	70°	70°	70°	45°	45°
SUGGESTED BARRIER LENGTH	1.83	1.83	1.83	1.83	1.83

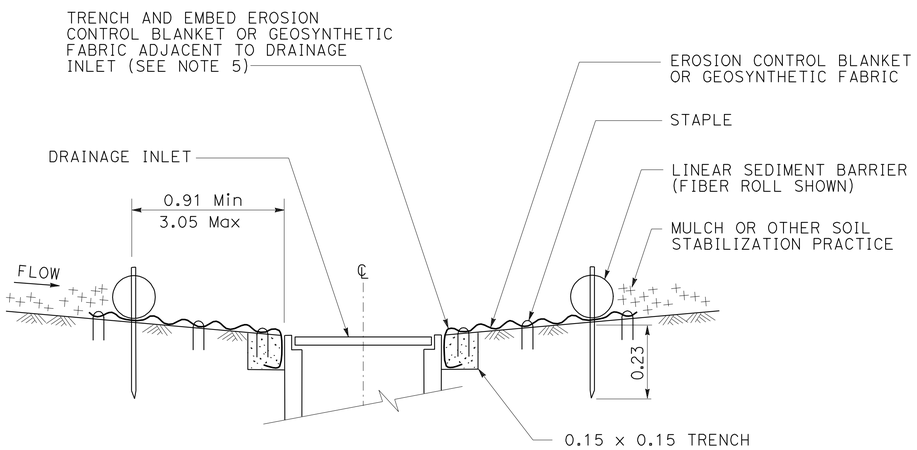

SECTION A-A

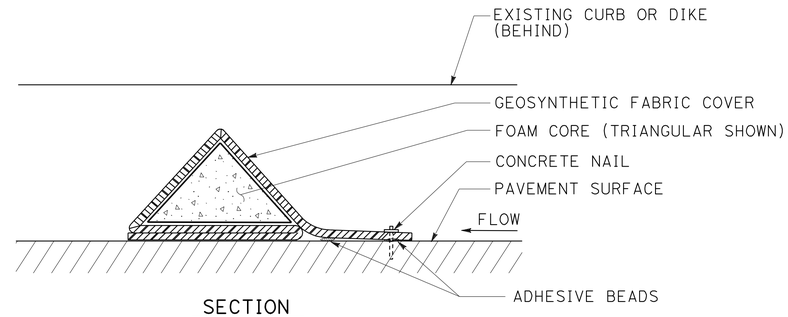

SECTION

FLEXIBLE SEDIMENT BARRIER DETAIL

(FOAM BARRIER SHOWN)

NOTES:

1. SEE STANDARD PLAN T51 FOR TEMPORARY SILT FENCE.
2. DIMENSIONS MAY VARY TO FIT FIELD CONDITIONS.
3. INSTALL A MINIMUM OF 3 FLEXIBLE SEDIMENT BARRIERS UPSTREAM OF EACH DRAINAGE INLET TO BE PROTECTED.
4. POSITION EROSION CONTROL BLANKET OR GEOSYNTHETIC FABRIC AT EDGE OF CONCRETE APRON AND SECURE IN TRENCH.
5. EROSION CONTROL BLANKET OR GEOSYNTHETIC FABRIC IS NOT REQUIRED IF THE AREA ADJACENT TO THE DRAINAGE INLET IS VEGETATED.

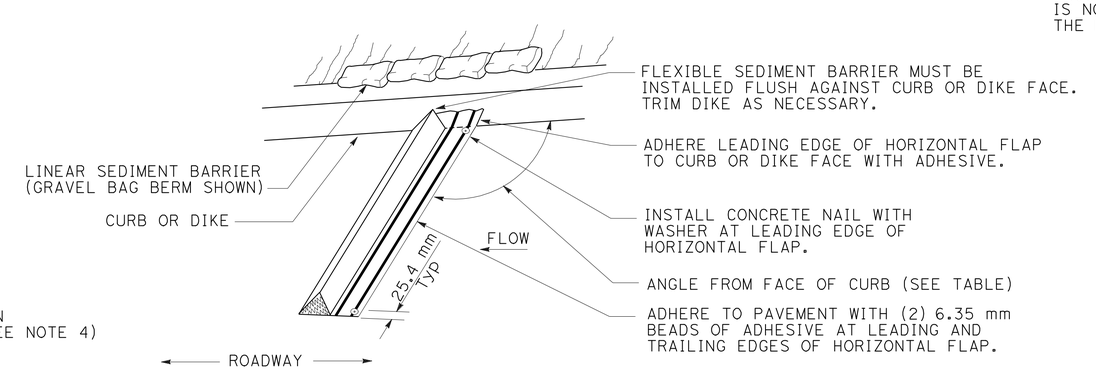

PERSPECTIVE

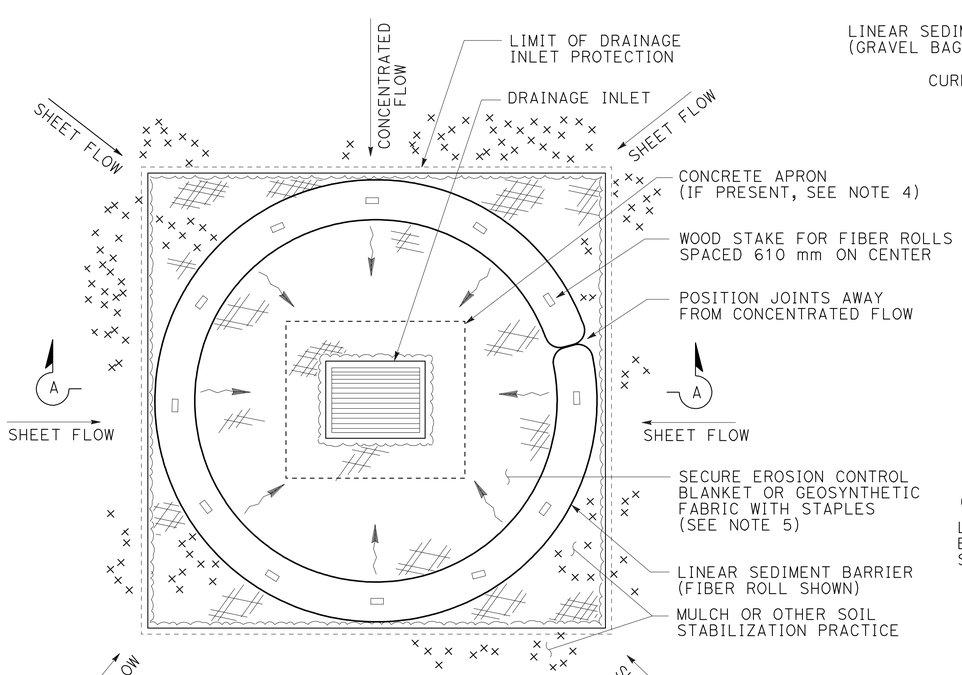

PLAN

TEMPORARY DRAINAGE INLET PROTECTION (TYPE 4A)

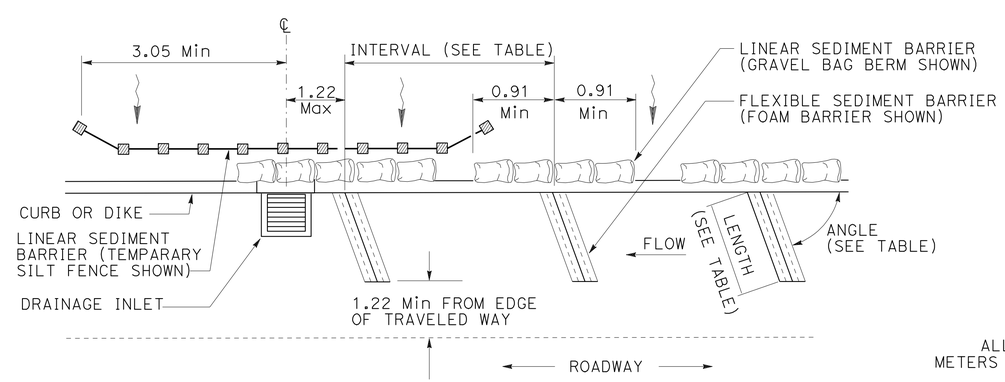

PLAN

TEMPORARY DRAINAGE INLET PROTECTION (TYPE 4B)

FLEXIBLE SEDIMENT BARRIER

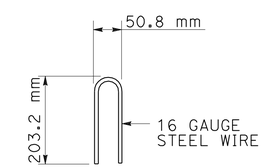

STAPLE DETAIL

ALL DIMENSIONS ARE IN METERS UNLESS OTHERWISE SHOWN

CONSTRUCTION DETAILS

TEMPORARY WATER POLLUTION CONTROL DETAILS (TEMPORARY DRAINAGE INLET PROTECTION)

NO SCALE

C-35

STATE OF CALIFORNIA - DEPARTMENT OF TRANSPORTATION

Caltrans

CONSULTANT FUNCTIONAL SUPERVISOR: NORMAN SUYDAM

CALCULATED-DESIGNED BY: MIKE FLORES

CHECKED BY: NORMAN SUYDAM

REVISED BY

DATE REVISED

LAST REVISION 11-09-09 | DATE PLOTTED => 19-OCT-2010 | TIME PLOTTED => 15:37

Dist	COUNTY	ROUTE	KILOMETER POST TOTAL PROJECT	SHEET No.	TOTAL SHEETS
08	Riv	60,215	R19.7/21.9, R61.3/62.7	62	594

Caltrans Metric

REGISTERED CIVIL ENGINEER 1-14-10 DATE

6-28-10
PLANS APPROVAL DATE

REGISTERED PROFESSIONAL ENGINEER
ERIC S. GIROD
No. C57288
Exp.12/31/11
CIVIL
STATE OF CALIFORNIA

THE STATE OF CALIFORNIA OR ITS OFFICERS OR AGENTS SHALL NOT BE RESPONSIBLE FOR THE ACCURACY OR COMPLETENESS OF ELECTRONIC COPIES OF THIS PLAN SHEET.

LAN ENGINEERING CORP
1887 BUSINESS CENTER DR
SUITE 6
SAN BERNARDINO, CA 92408

RIVERSIDE COUNTY
TRANSPORTATION COMMISSION
4080 LEMON STREET
RIVERSIDE, CA 92502

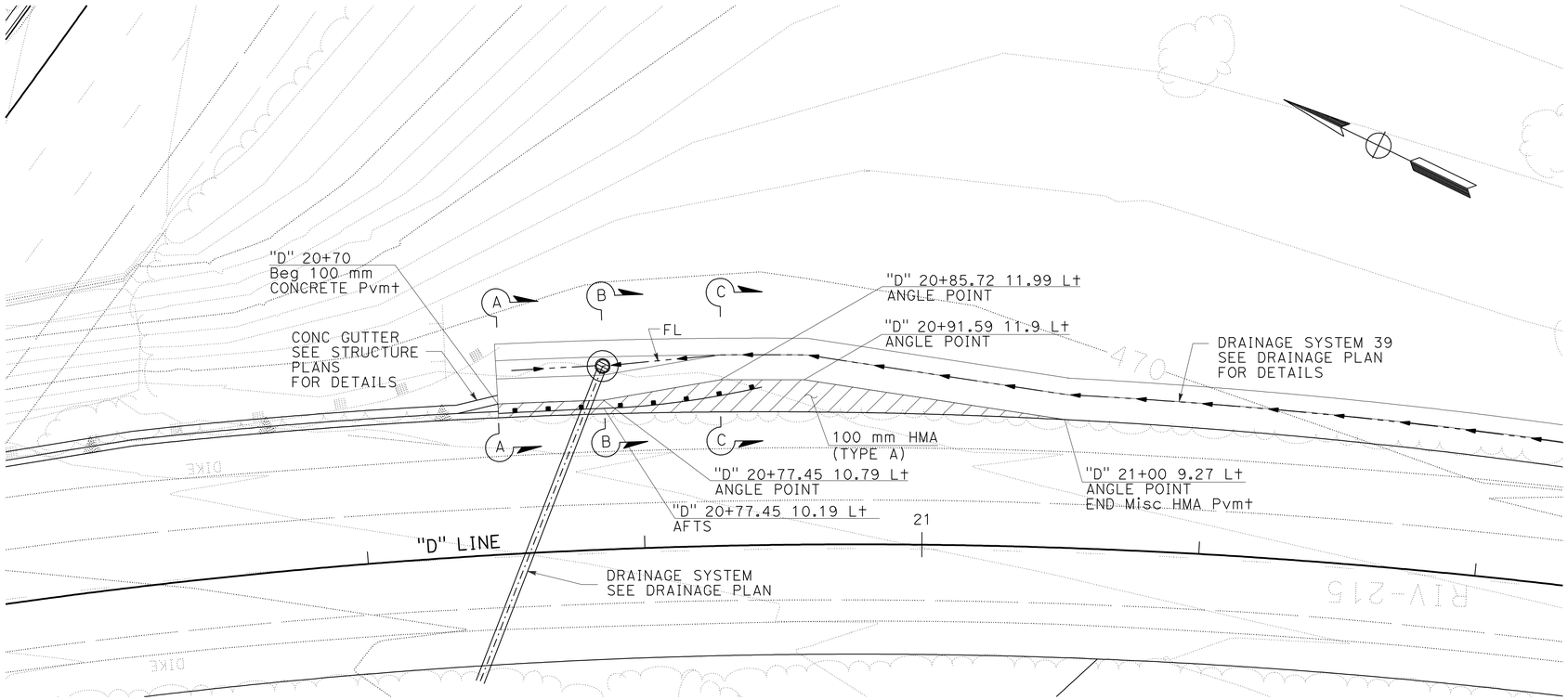

NOTE:

1. FOR COMPLETE RIGHT OF WAY AND ACCURATE ACCESS DATA, SEE RIGHT OF WAY RECORD MAPS AT DISTRICT OFFICE.

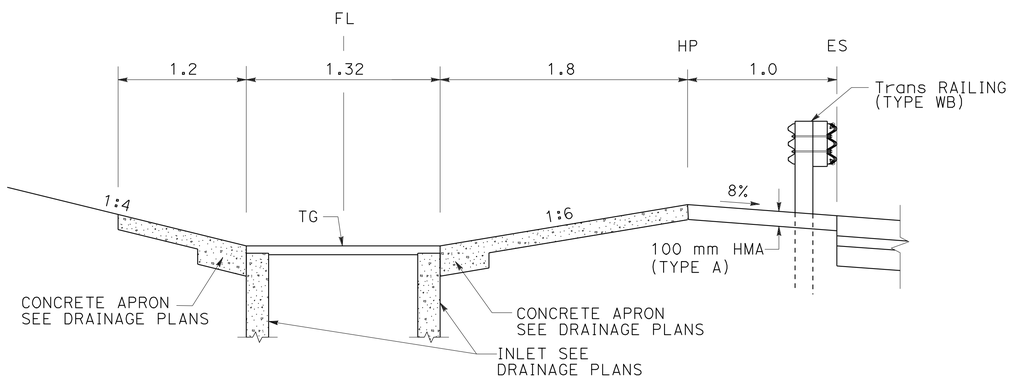

SECTION B-B

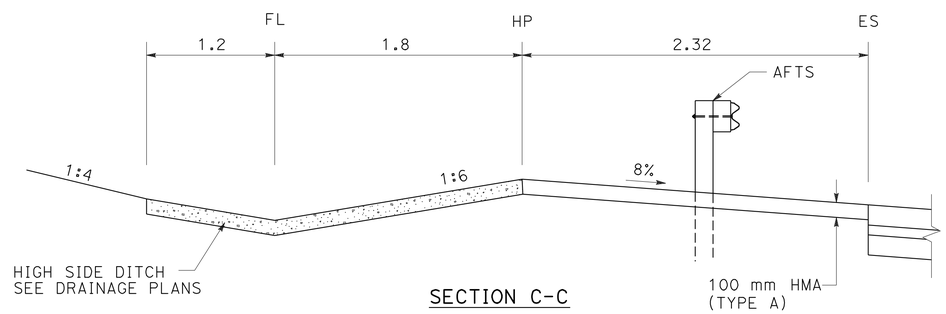

SECTION C-C

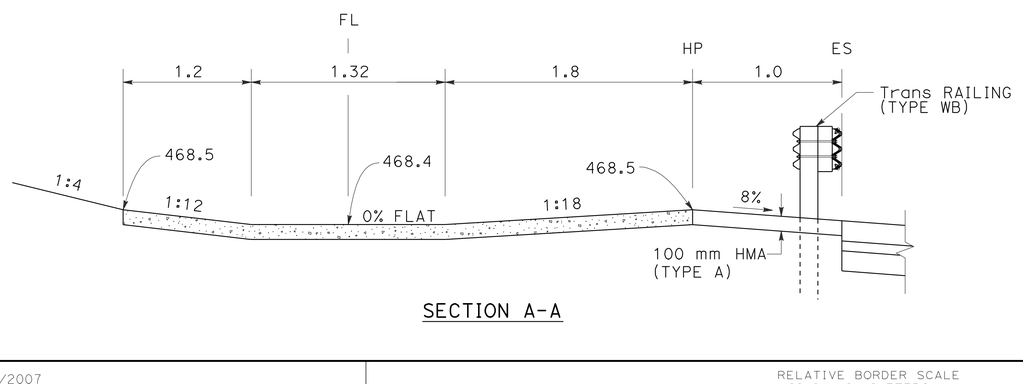

SECTION A-A

ALL DIMENSIONS ARE IN METERS UNLESS OTHERWISE SHOWN

CONSTRUCTION DETAILS

MISC HMA PAVEMENT

NO SCALE

C-36

REVISED BY	DATE REVISED
MIKE FLORES	NORMAN SUYDAM

CALCULATED-DESIGNED BY NORMAN SUYDAM
CHECKED BY

CONSULTANT FUNCTIONAL SUPERVISOR

STATE OF CALIFORNIA - DEPARTMENT OF TRANSPORTATION
Caltrans

LAST REVISION 11-09-09 DATE PLOTTED => 19-OCT-2010 TIME PLOTTED => 15:38

Dist	COUNTY	ROUTE	KILOMETER POST TOTAL PROJECT	SHEET No.	TOTAL SHEETS
08	Riv	60,215	R19.7/21.9, R61.3/62.7	63	594

REGISTERED CIVIL ENGINEER 1-14-10 DATE

6-28-10
PLANS APPROVAL DATE

REGISTERED PROFESSIONAL ENGINEER
ERIC S. GIROD
No. C57288
Exp.12/31/11
CIVIL
STATE OF CALIFORNIA

THE STATE OF CALIFORNIA OR ITS OFFICERS OR AGENTS SHALL NOT BE RESPONSIBLE FOR THE ACCURACY OR COMPLETENESS OF ELECTRONIC COPIES OF THIS PLAN SHEET.

LAN ENGINEERING CORP
1887 BUSINESS CENTER DR
SUITE 6
SAN BERNARDINO, CA 92408

RIVERSIDE COUNTY
TRANSPORTATION COMMISSION
4080 LEMON STREET
RIVERSIDE, CA 92502

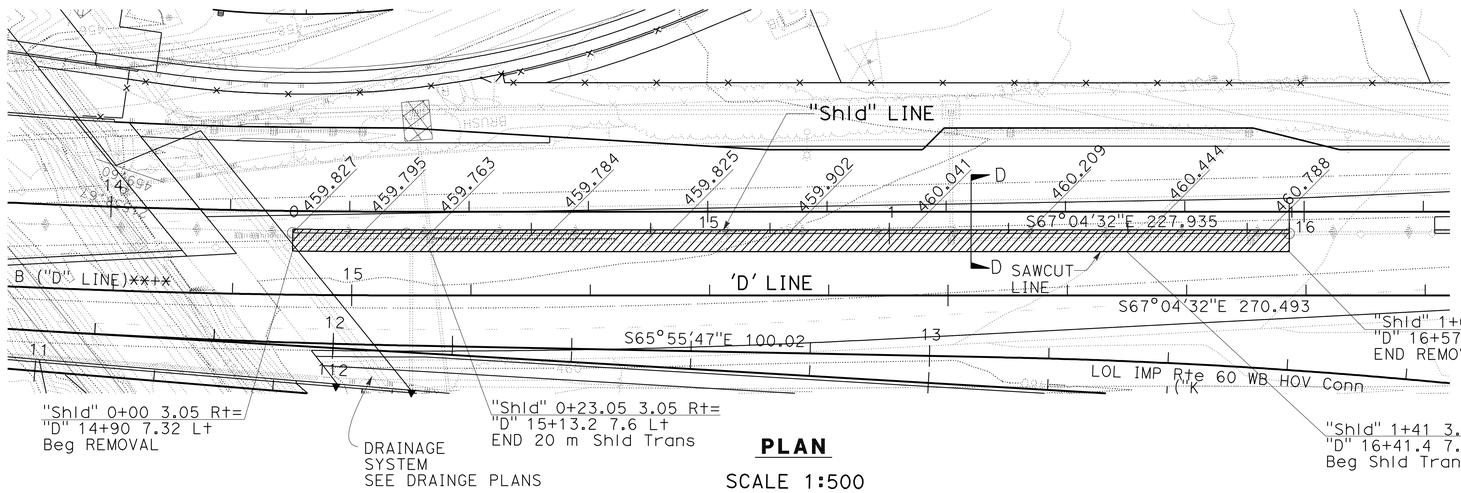

PLAN

SCALE 1:500

LEGEND:

REMOVE Exist AC PAVEMENT

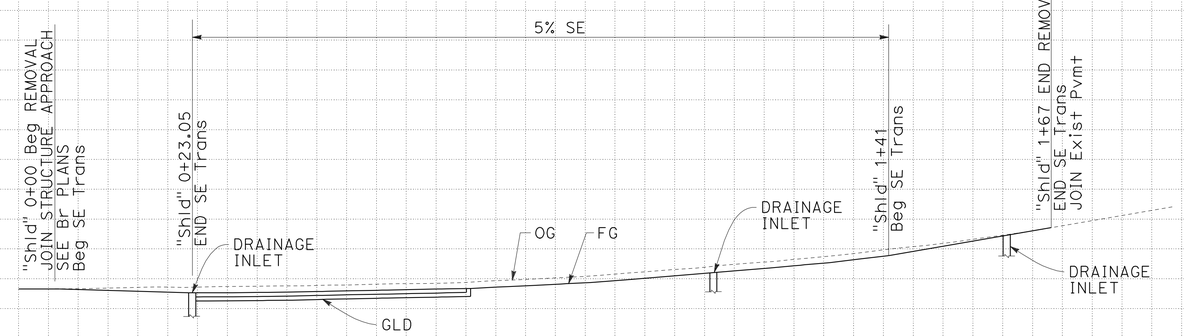

PROFILE
"Shld" LINE

SCALE HORIZ 1:500
VERT: 1:100

Station	0+00	+20	+40	+60	+80	1+00	+20	+40	+60	+80
m^3 Exc										
m^3 Emb										

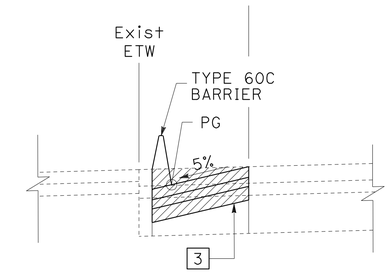

SECTION "D-D"
NO SCALE

NOTES:

1. ELEVATIONS SHOWN AT 20m INTERVALS UNLESS OTHER NOTED.
2. PROFILE SHOWN REPRESENTS ELEVATIONS ALONG FG SURFACE AND EDGE OF CONCRETE BARRIER (TYPE 60C)
3. SEE TYPICAL CROSS SECTION SHEET FOR HMA PAVEMENT [3]
4. FOR DRAINAGE INLET DETAILS, SEE DRAINAGE PLANS SHEETS
5. FOR COMPLETE RIGHT OF WAY AND ACCURATE ACCESS DATA, SEE RIGHT OF WAY RECORD MAPS AT DISTRICT OFFICE.

ALL DIMENSIONS ARE IN METERS UNLESS OTHERWISE SHOWN

CONSTRUCTION DETAILS
SHOULDER PAVEMENT DETAILS

SCALE AS SHOWN **C- 37**

REVISED BY | DATE REVISED
MIKE FLORES | NORMAN SUYDAM
CALCULATED-DESIGNED BY | CHECKED BY
CONSULTANT FUNCTIONAL SUPERVISOR: NORMAN SUYDAM
STATE OF CALIFORNIA - DEPARTMENT OF TRANSPORTATION

LAST REVISION 11-09-09 | DATE PLOTTED => 19-OCT-2010 | TIME PLOTTED => 15:38

Dist	COUNTY	ROUTE	KILOMETER POST TOTAL PROJECT	SHEET No.	TOTAL SHEETS
08	Riv	60,215	R19.7/21.9, R61.3/62.7	64	594

REGISTERED CIVIL ENGINEER 1-14-10 DATE

6-28-10
PLANS APPROVAL DATE

REGISTERED PROFESSIONAL ENGINEER ERIC S. GIROD No. C57288 Exp.12/31/11 CIVIL STATE OF CALIFORNIA

THE STATE OF CALIFORNIA OR ITS OFFICERS OR AGENTS SHALL NOT BE RESPONSIBLE FOR THE ACCURACY OR COMPLETENESS OF ELECTRONIC COPIES OF THIS PLAN SHEET.

LAN ENGINEERING CORP
1887 BUSINESS CENTER DR
SUITE 6
SAN BERNARDINO, CA 92408

RIVERSIDE COUNTY
TRANSPORTATION COMMISSION
4080 LEMON STREET
RIVERSIDE, CA 92502

NOTES:

1. WHERE PAVED SHOULDER IS CONSTRUCTED WITHIN 610 mm IN FRONT OF THE POST, CONSTRUCT VEGETATION CONTROL TO THE EDGE OF PAVED SHOULDER.
2. DIRECTION OF ADJACENT TRAFFIC INDICATED BY

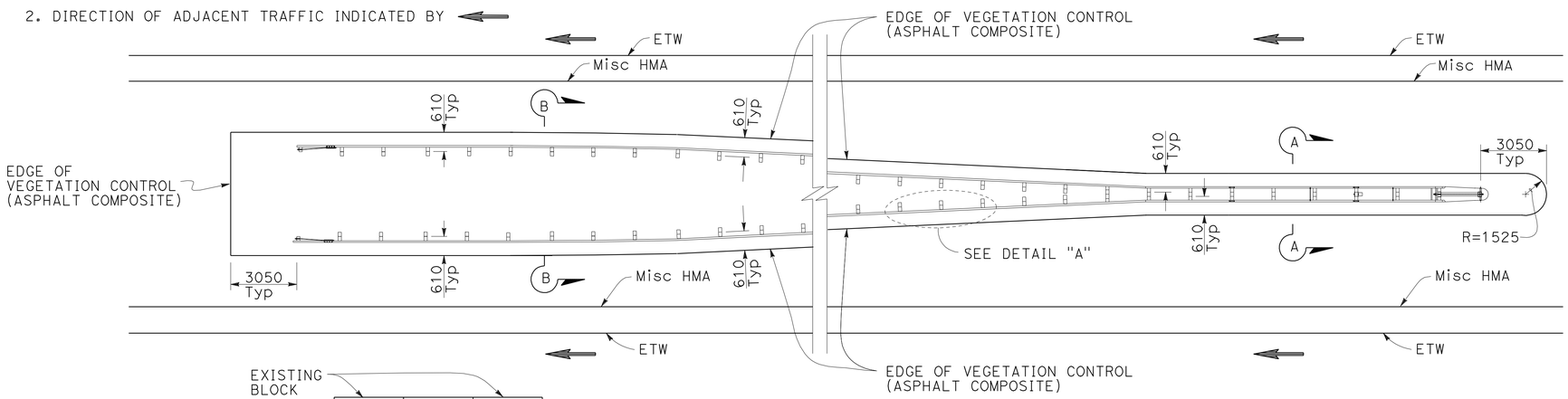

PLAN
(ONE-WAY TRAFFIC)

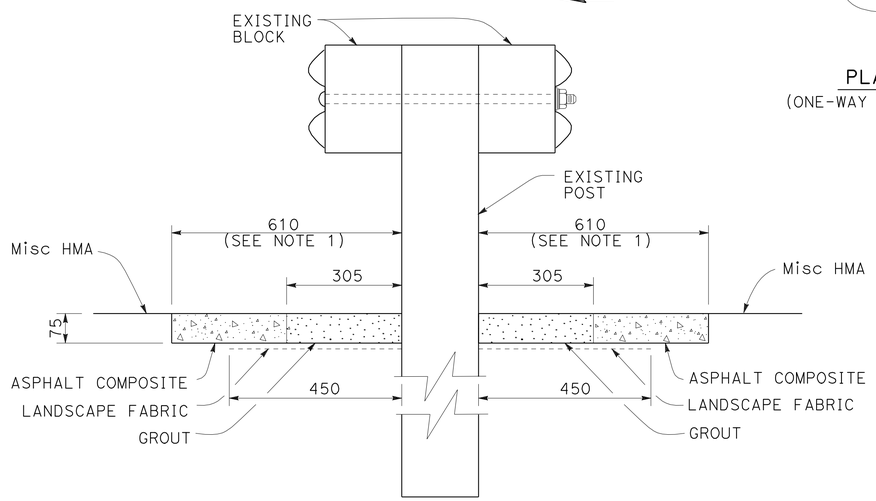

SECTION A-A

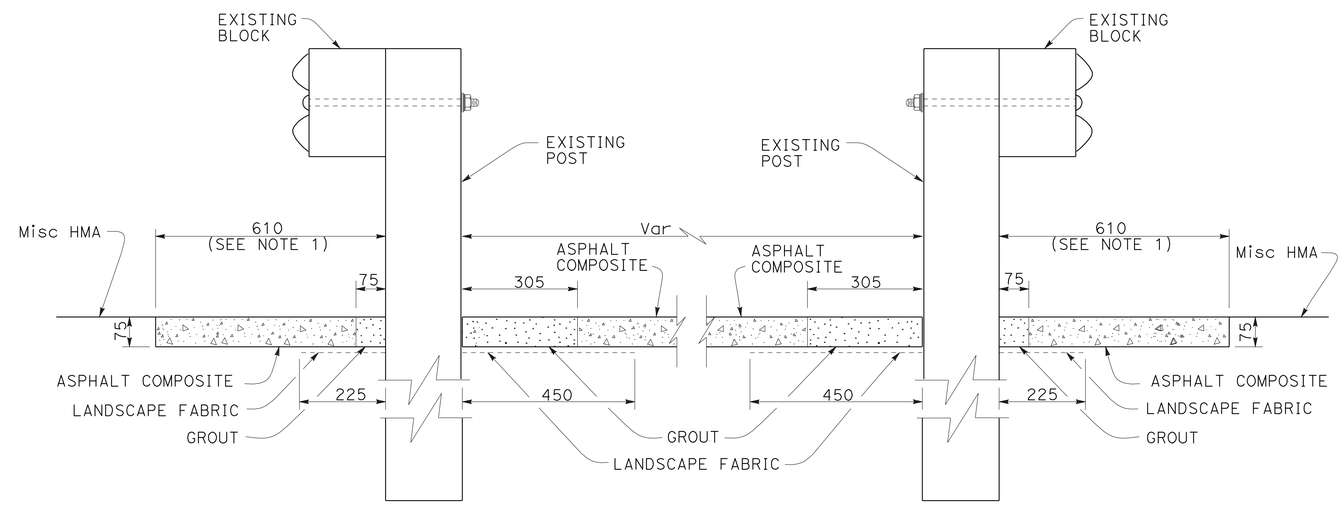

SECTION B-B

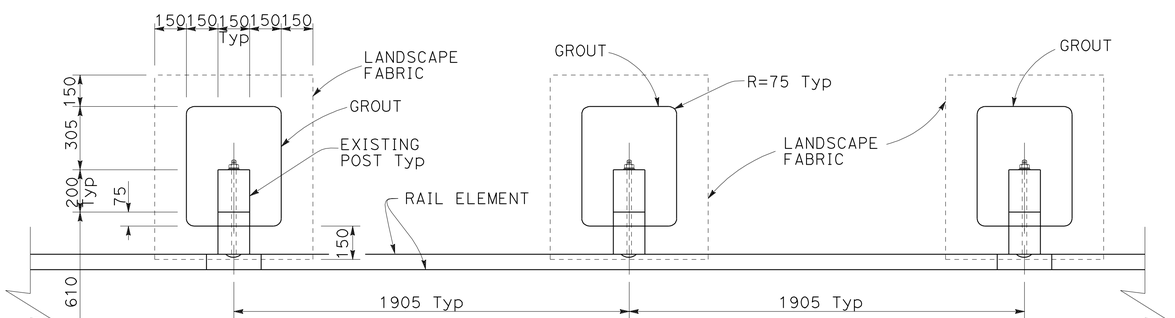

DETAIL "A"

METAL BEAM GUARD RAILING TYPICAL VEGETATION CONTROL AT FIXED OBJECT

ALL DIMENSIONS ARE IN MILLIMETERS UNLESS OTHERWISE SHOWN

CONSTRUCTION DETAILS

NO SCALE

C-38

STATE OF CALIFORNIA - DEPARTMENT OF TRANSPORTATION
Caltrans

CONSULTANT FUNCTIONAL SUPERVISOR: NORMAN SUYDAM
CALCULATED-DESIGNED BY: MIKE FLORES
CHECKED BY: NORMAN SUYDAM
REVISED BY
DATE REVISED

LAST REVISION 11-09-09
DATE PLOTTED => 19-OCT-2010
TIME PLOTTED => 15:38

Dist	COUNTY	ROUTE	KILOMETER POST TOTAL PROJECT	SHEET No.	TOTAL SHEETS
08	Riv	60,215	R19.7/21.9, R61.3/62.7	65	594

REGISTERED CIVIL ENGINEER 1-14-10 DATE

6-28-10
PLANS APPROVAL DATE

REGISTERED PROFESSIONAL ENGINEER
ERIC S. GIROD
No. C57288
Exp.12/31/11
CIVIL
STATE OF CALIFORNIA

THE STATE OF CALIFORNIA OR ITS OFFICERS OR AGENTS SHALL NOT BE RESPONSIBLE FOR THE ACCURACY OR COMPLETENESS OF ELECTRONIC COPIES OF THIS PLAN SHEET.

LAN ENGINEERING CORP
1887 BUSINESS CENTER DR
SUITE 6
SAN BERNARDINO, CA 92408

RIVERSIDE COUNTY
TRANSPORTATION COMMISSION
4080 LEMON STREET
RIVERSIDE, CA 92502

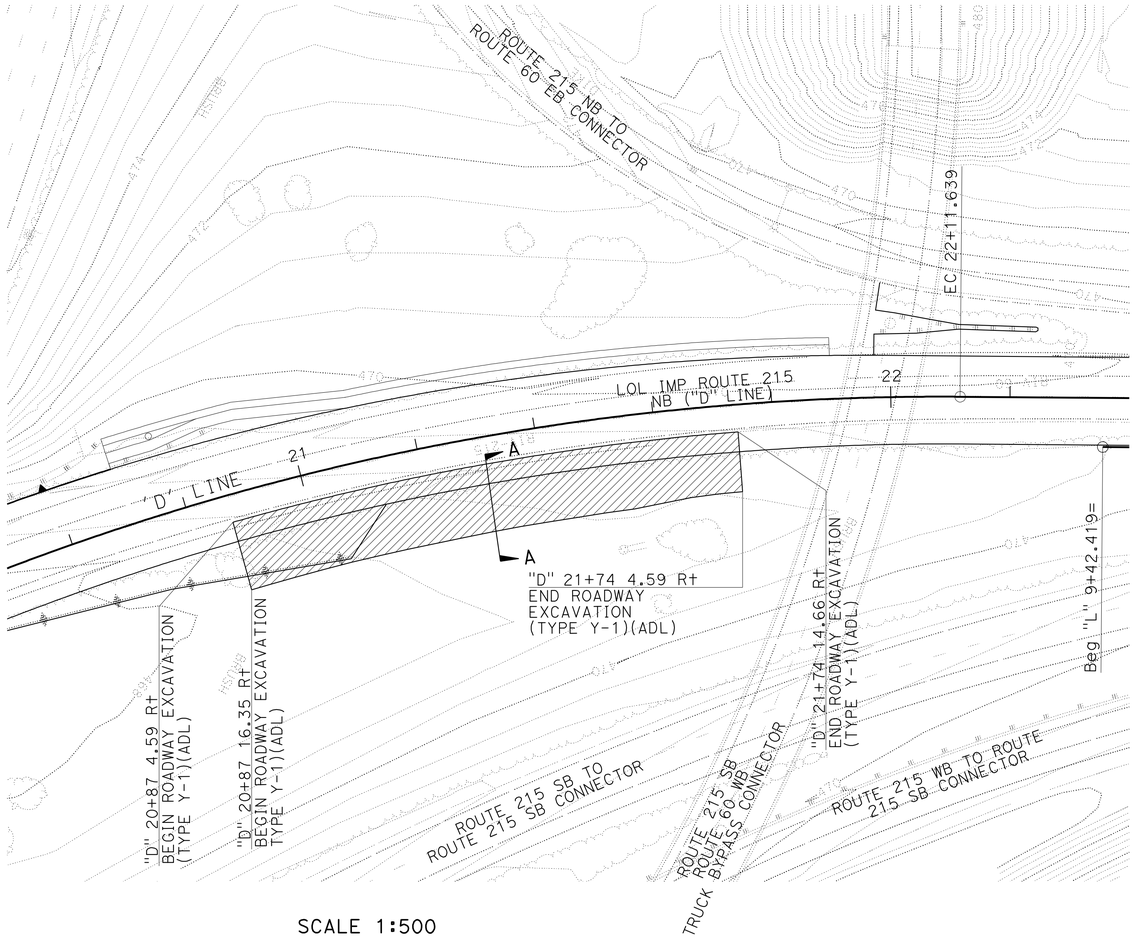

SCALE 1:500

LEGEND:

ROADWAY EXCAVATION
(TYPE Y-1)
(AERIALLY DEPOSITED LEAD)

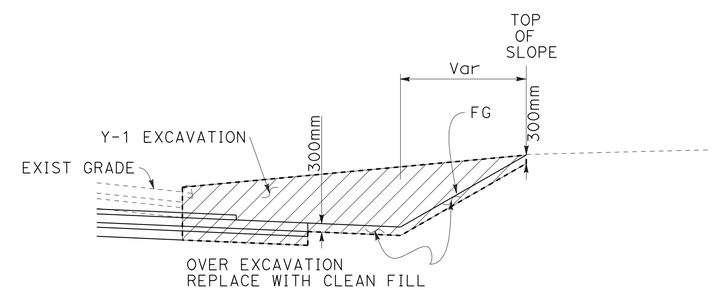

SECTION A-A
NO SCALE

NOTE:

EXCAVATED SOIL TO BE PLACED IN EMBANKMENT AS SHOWN ON SHEET G-5 AND IN ACCORDANCE WITH THE SPECIAL PROVISIONS.

ALL DIMENSIONS ARE IN METERS UNLESS OTHERWISE SHOWN

CONSTRUCTION DETAILS

ROADWAY EXCAVATION (TYPE Y-1) (AERIALLY DEPOSITED LEAD) LIMITS OF WORK

SCALE AS SHOWN **C-39**

NOTE:
1. FOR COMPLETE RIGHT OF WAY AND ACCURATE ACCESS DATA, SEE RIGHT OF WAY RECORD MAPS AT DISTRICT OFFICE.

STATE OF CALIFORNIA - DEPARTMENT OF TRANSPORTATION
Caltrans

CONSULTANT FUNCTIONAL SUPERVISOR: NORMAN SUYDAM
CALCULATED-DESIGNED BY: MIKE FLORES
CHECKED BY: NORMAN SUYDAM
REVISED BY
DATE REVISED

LAST REVISION 11-09-09
DATE PLOTTED => 19-OCT-2010
TIME PLOTTED => 15:38

Dist	COUNTY	ROUTE	KILOMETER POST TOTAL PROJECT	SHEET No.	TOTAL SHEETS
08	Riv	60,215	R19.7/21.9, R61.3/62.7	66	594

Caltrans Metric

REGISTERED CIVIL ENGINEER 1-14-10 DATE

6-28-10
PLANS APPROVAL DATE

REGISTERED PROFESSIONAL ENGINEER
ERIC S. GIROD
No. C57288
Exp.12/31/11
CIVIL
STATE OF CALIFORNIA

THE STATE OF CALIFORNIA OR ITS OFFICERS OR AGENTS SHALL NOT BE RESPONSIBLE FOR THE ACCURACY OR COMPLETENESS OF ELECTRONIC COPIES OF THIS PLAN SHEET.

LAN ENGINEERING CORP
1887 BUSINESS CENTER DR
SUITE 6
SAN BERNARDINO, CA 92408

RIVERSIDE COUNTY
TRANSPORTATION COMMISSION
4080 LEMON STREET
RIVERSIDE, CA 92502

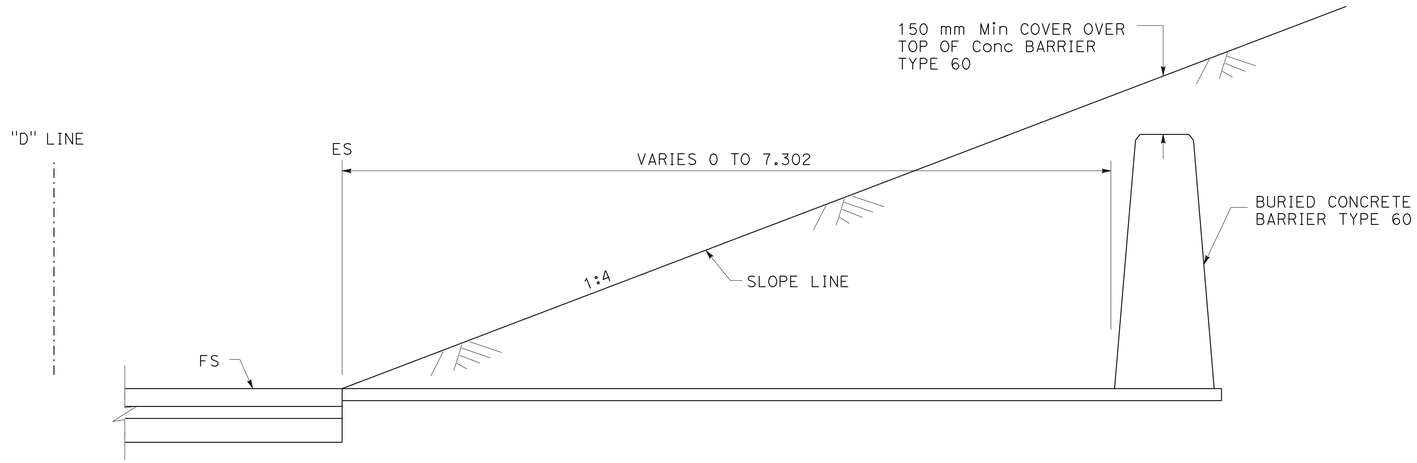

SECTION VIEW

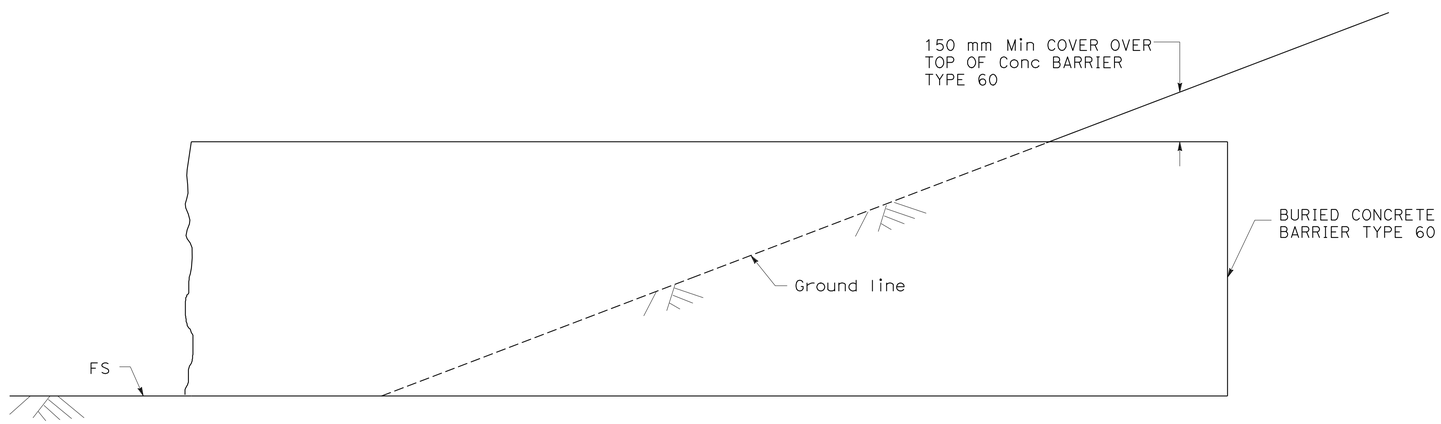

ELEVATION VIEW

CONCRETE BARRIER (TYPE 60) BURIED END

(FOR SHEET L-7)

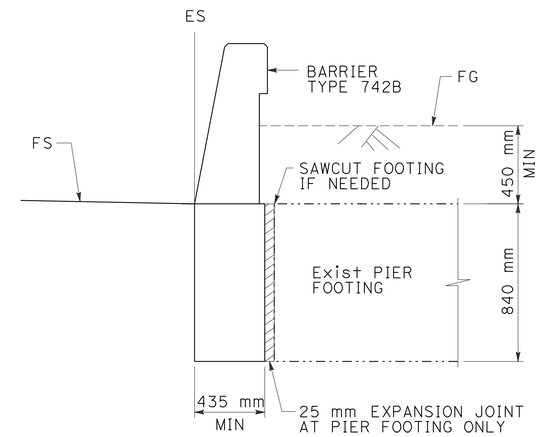

CONCRETE BARRIER (TYPE 742B) DETAIL

(FOR SHEET L-4)

ALL DIMENSIONS ARE IN
METERS UNLESS OTHERWISE SHOWN

CONSTRUCTION DETAILS

CONCRETE BARRIER DETAILS

NO SCALE

C-40

REVISED BY | DATE REVISED

MIKE FLORES | NORMAN SUYDAM

CALCULATED-DESIGNED BY | CHECKED BY

CONSULTANT FUNCTIONAL SUPERVISOR: NORMAN SUYDAM

STATE OF CALIFORNIA - DEPARTMENT OF TRANSPORTATION
Caltrans

LAST REVISION 11-09-09 | DATE PLOTTED => 19-OCT-2010 | TIME PLOTTED => 15:38

Dist	COUNTY	ROUTE	KILOMETER POST TOTAL PROJECT	SHEET No.	TOTAL SHEETS
08	Riv	60,215	R19.7/21.9, R61.3/62.7	67	594

REGISTERED CIVIL ENGINEER 1-14-10 DATE

6-28-10
PLANS APPROVAL DATE

REGISTERED PROFESSIONAL ENGINEER
ERIC S. GIROD
No. C57288
Exp.12/31/11
CIVIL
STATE OF CALIFORNIA

THE STATE OF CALIFORNIA OR ITS OFFICERS OR AGENTS SHALL NOT BE RESPONSIBLE FOR THE ACCURACY OR COMPLETENESS OF ELECTRONIC COPIES OF THIS PLAN SHEET.

LAN ENGINEERING CORP
1887 BUSINESS CENTER DR
SUITE 6
SAN BERNARDINO, CA 92408

RIVERSIDE COUNTY
TRANSPORTATION COMMISSION
4080 LEMON STREET
RIVERSIDE, CA 92502

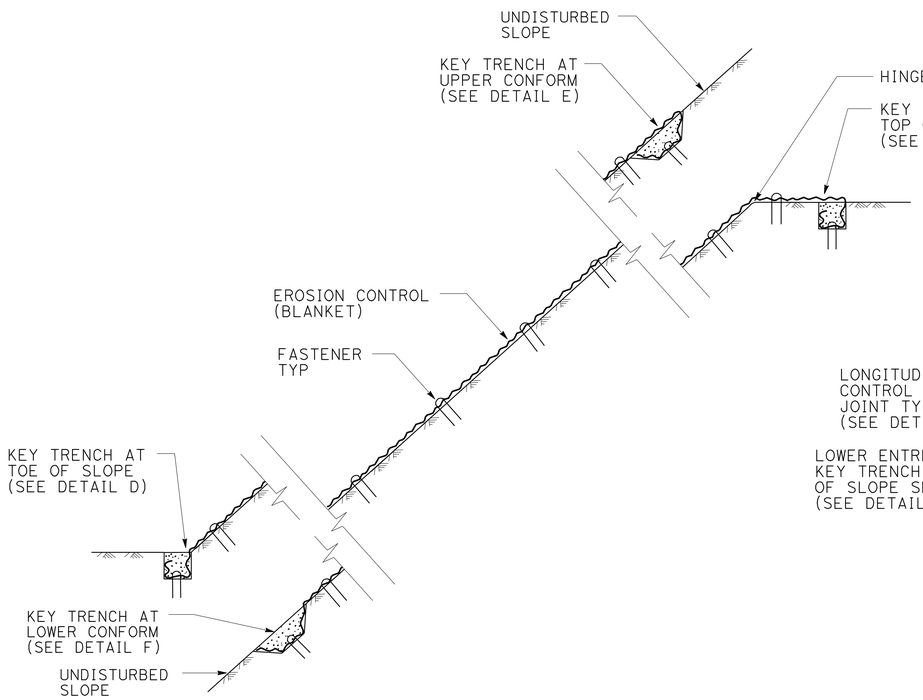

EROSION CONTROL (BLANKET)
ON SLOPE WITH VARIOUS KEY ENTRENCHMENTS
SECTION

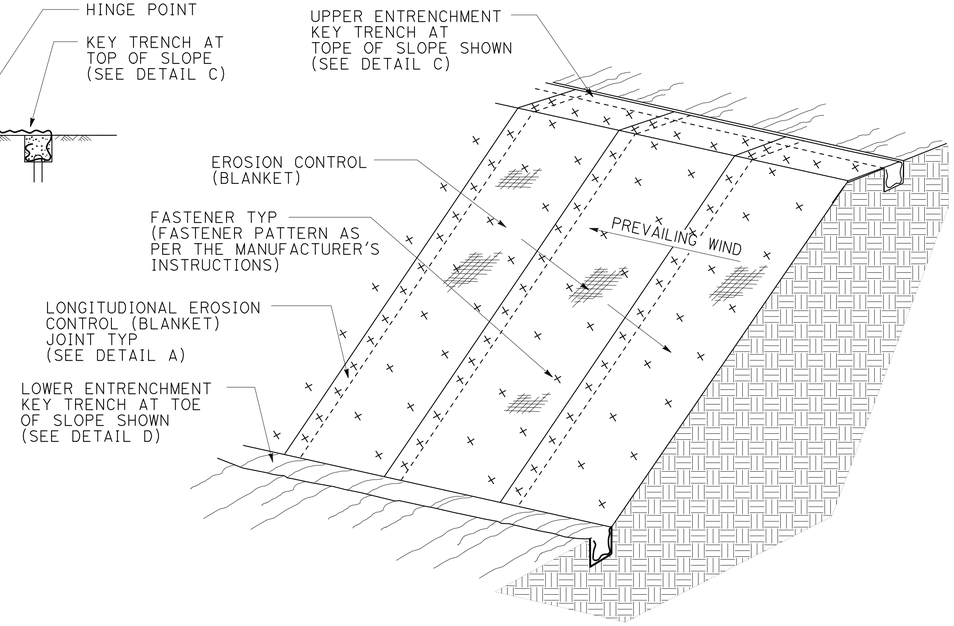

EROSION CONTROL (BLANKET)
ON SLOPE
ISOMETRIC

NOTE:

1. IF TRANSVERSE ROLLED EROSION CONTROL PRODUCT JOINTS ARE REQUIRED ON SLOPES, SEE DETAIL B.

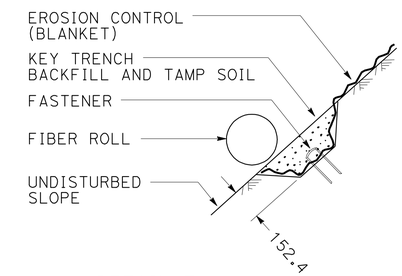

DETAIL F
KEY TRENCH AT
LOWER CONFORM
SECTION

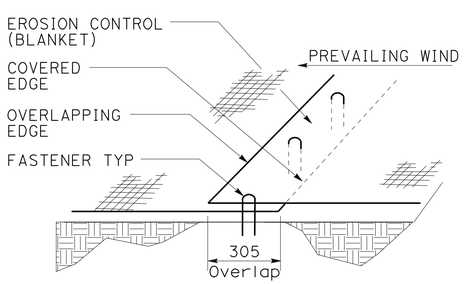

DETAIL A
LONGITUDINAL EROSION
CONTROL (BLANKET) JOINT
PERSPECTIVE

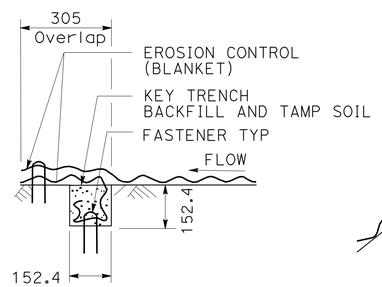

DETAIL B
TRANSVERSE EROSION
CONTROL (BLANKET) JOINT
SECTION

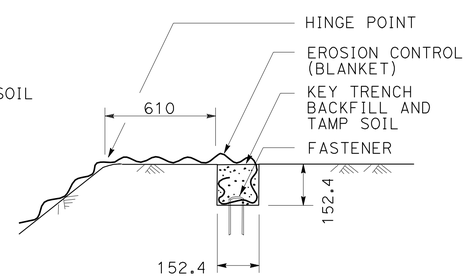

DETAIL C
KEY TRENCH AT
TOP OF SLOPE
SECTION

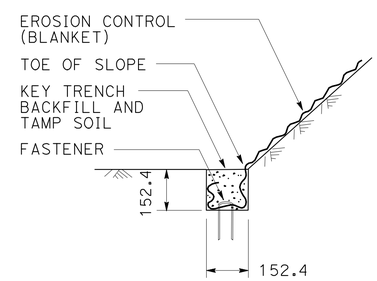

DETAIL D
KEY TRENCH AT
TOE OF SLOPE
SECTION

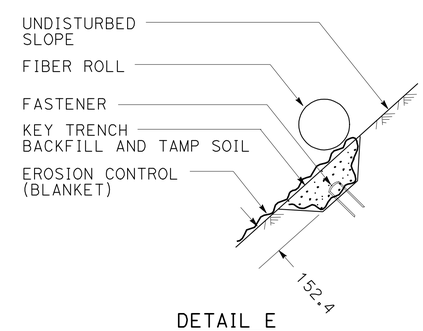

DETAIL E
KEY TRENCH AT
UPPER CONFORM
SECTION

ALL DIMENSIONS ARE IN
MILLIMETERS UNLESS OTHERWISE SHOWN

CONSTRUCTION DETAILS

EROSION CONTROL (BLANKET)

NO SCALE

C-41

REVISED BY | DATE REVISED

NORMAN SUYDAM

CALCULATED-DESIGNED BY | CHECKED BY

CONSULTANT FUNCTIONAL SUPERVISOR

DIBORO KANABOLO

STATE OF CALIFORNIA - DEPARTMENT OF TRANSPORTATION

Caltrans

LAST REVISION 11-09-09 | DATE PLOTTED => 19-OCT-2010 | TIME PLOTTED => 15:38

Dist	COUNTY	ROUTE	KILOMETER POST TOTAL PROJECT	SHEET No.	TOTAL SHEETS
08	Riv	60,215	R19.7/21.9, R61.3/62.7	68	594

REGISTERED CIVIL ENGINEER 1-14-10 DATE

6-28-10
PLANS APPROVAL DATE

REGISTERED PROFESSIONAL ENGINEER EDWARD NG No. 46767 Exp. 6/30/11 CIVIL STATE OF CALIFORNIA

THE STATE OF CALIFORNIA OR ITS OFFICERS OR AGENTS SHALL NOT BE RESPONSIBLE FOR THE ACCURACY OR COMPLETENESS OF ELECTRONIC COPIES OF THIS PLAN SHEET.

LAN ENGINEERING CORP
1887 BUSINESS CENTER DR
SUITE 6
SAN BERNARDINO, CA 92408

RIVERSIDE COUNTY
TRANSPORTATION COMMISSION
4080 LEMON STREET
RIVERSIDE, CA 92502

Caltrans Metric

LEGEND:

- TSF — TEMPORARY SILT FENCE
- TFR — TEMPORARY FIBER ROLL (INLET PROTECTION)
- TEMPORARY CONCRETE WASHOUT FACILITY (LOCATION TO BE DETERMINED BY ENGINEER)
- TEMPORARY CONSTRUCTION ENTRANCE LOCATION TO BE APPROVED BY THE ENGINEER
- TEMPORARY SOIL BINDER
- CD — TEMPORARY CHECK DAMS

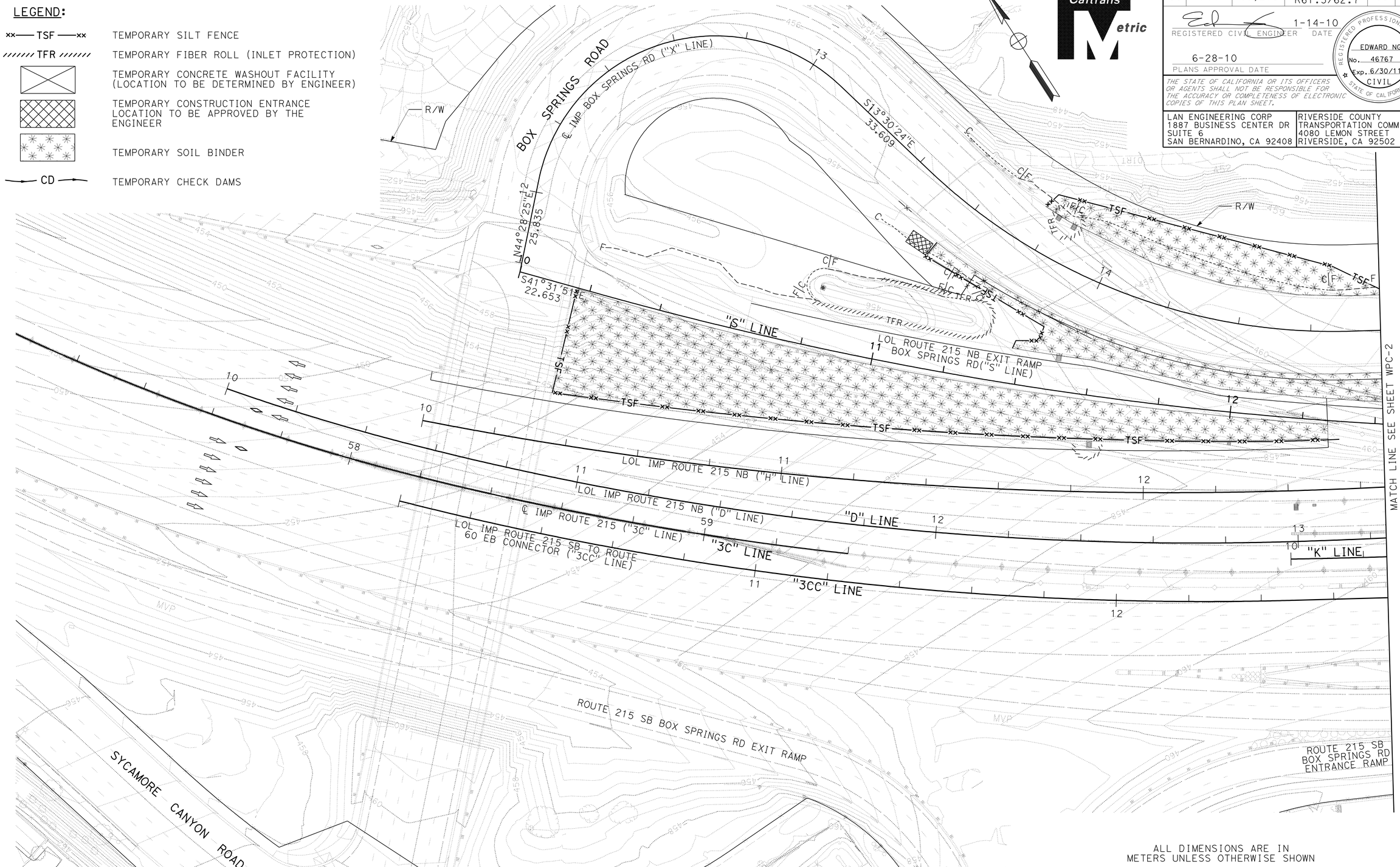

ALL DIMENSIONS ARE IN METERS UNLESS OTHERWISE SHOWN

TEMPORARY WATER POLLUTION CONTROL PLAN

SCALE 1:500 **WPC-1**

REVISED BY	DATE REVISED

ED NG — NORMAN SUYDAM — CALCULATED-DESIGNED BY / CHECKED BY

CONSULTANT FUNCTIONAL SUPERVISOR — NORMAN SUYDAM

STATE OF CALIFORNIA - DEPARTMENT OF TRANSPORTATION — Caltrans

LAST REVISION 11-09-09 — DATE PLOTTED => 19-OCT-2010 — TIME PLOTTED => 15:38

Dist	COUNTY	ROUTE	KILOMETER POST TOTAL PROJECT	SHEET No.	TOTAL SHEETS
08	Riv	60,215	R19.7/21.9, R61.3/62.7	69	594

REGISTERED CIVIL ENGINEER 1-14-10 DATE

6-28-10
PLANS APPROVAL DATE

REGISTERED PROFESSIONAL ENGINEER
EDWARD NG
No. 46767
Exp. 6/30/11
CIVIL
STATE OF CALIFORNIA

THE STATE OF CALIFORNIA OR ITS OFFICERS OR AGENTS SHALL NOT BE RESPONSIBLE FOR THE ACCURACY OR COMPLETENESS OF ELECTRONIC COPIES OF THIS PLAN SHEET.

LAN ENGINEERING CORP
1887 BUSINESS CENTER DR
SUITE 6
SAN BERNARDINO, CA 92408

RIVERSIDE COUNTY
TRANSPORTATION COMMISSION
4080 LEMON STREET
RIVERSIDE, CA 92502

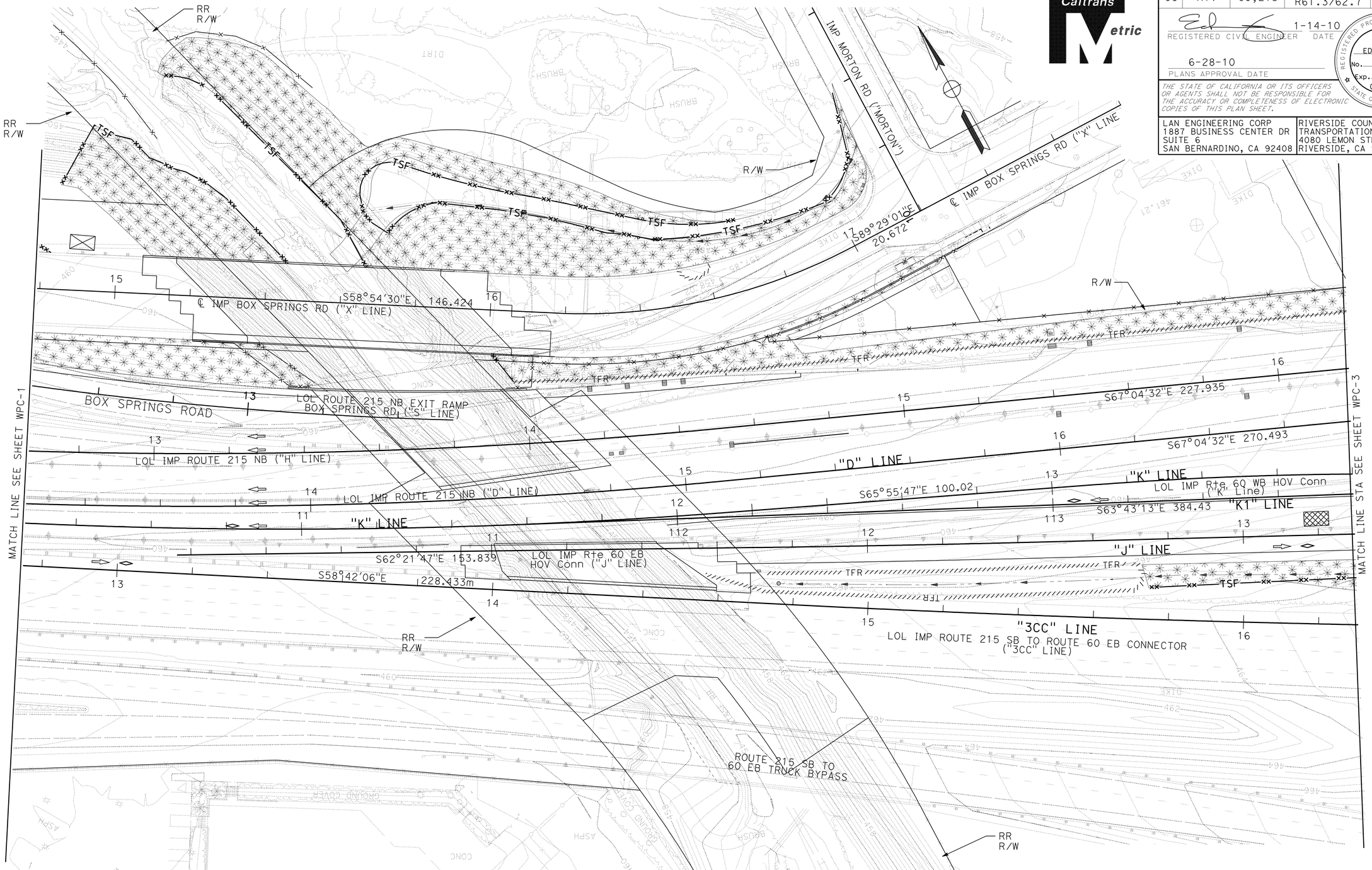

ALL DIMENSIONS ARE IN METERS UNLESS OTHERWISE SHOWN

TEMPORARY WATER POLLUTION CONTROL PLAN

SCALE 1:500 **WPC-2**

STATE OF CALIFORNIA - DEPARTMENT OF TRANSPORTATION

Caltrans

CONSULTANT FUNCTIONAL SUPERVISOR: NORMAN SUYDAM

CALCULATED-DESIGNED BY: ED NG

CHECKED BY: NORMAN SUYDAM

REVISED BY | DATE REVISED

LAST REVISION 11-09-09 | DATE PLOTTED => 19-OCT-2010 | TIME PLOTTED => 15:39

Dist	COUNTY	ROUTE	KILOMETER POST TOTAL PROJECT	SHEET No.	TOTAL SHEETS
08	Riv	60,215	R19.7/21.9, R61.3/62.7	70	594

REGISTERED CIVIL ENGINEER 1-14-10 DATE

6-28-10
PLANS APPROVAL DATE

REGISTERED PROFESSIONAL ENGINEER
EDWARD NG
No. 46767
Exp. 6/30/11
CIVIL
STATE OF CALIFORNIA

THE STATE OF CALIFORNIA OR ITS OFFICERS OR AGENTS SHALL NOT BE RESPONSIBLE FOR THE ACCURACY OR COMPLETENESS OF ELECTRONIC COPIES OF THIS PLAN SHEET.

LAN ENGINEERING CORP
1887 BUSINESS CENTER DR
SUITE 6
SAN BERNARDINO, CA 92408

RIVERSIDE COUNTY
TRANSPORTATION COMMISSION
4080 LEMON STREET
RIVERSIDE, CA 92502

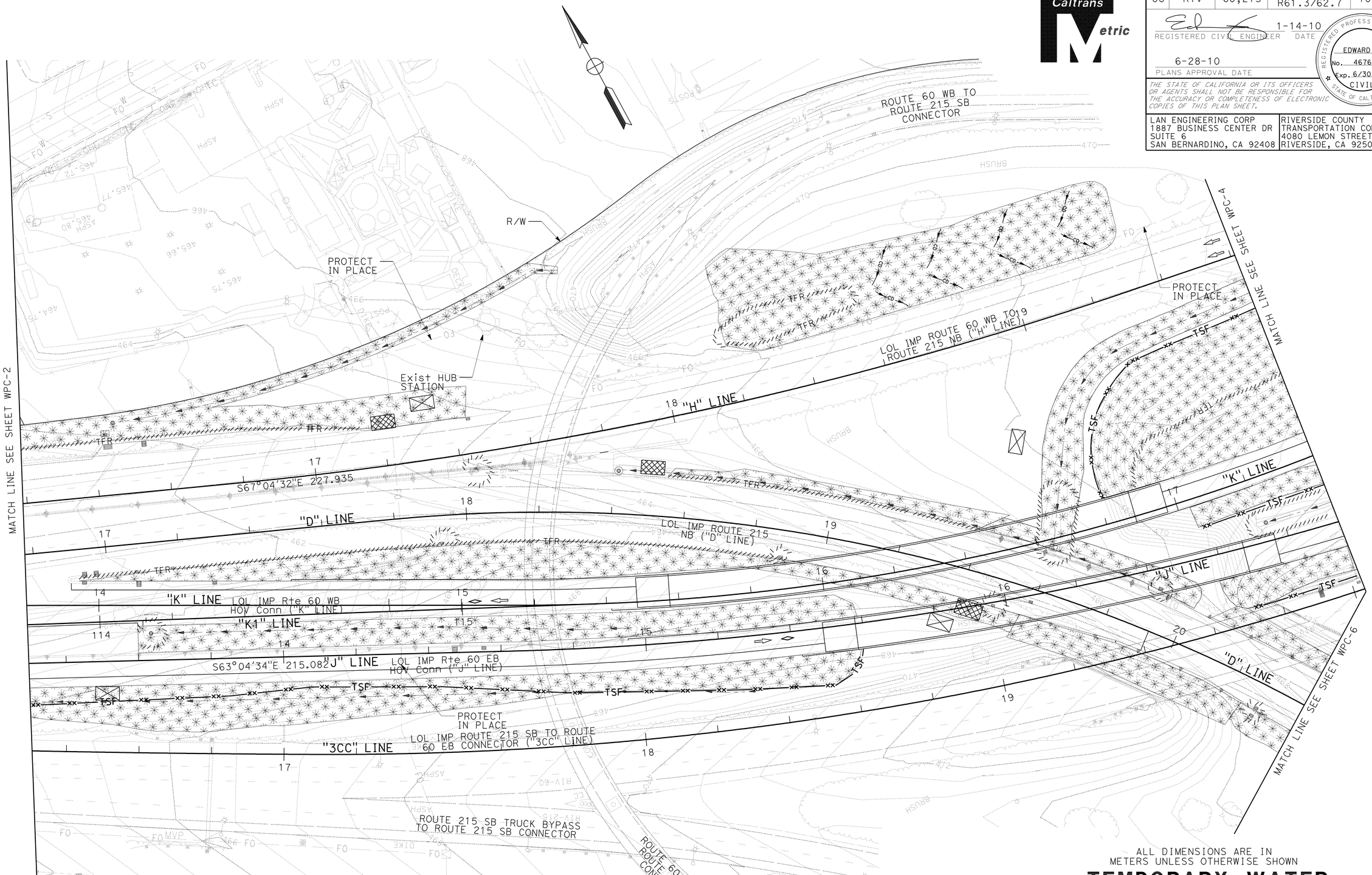

ALL DIMENSIONS ARE IN METERS UNLESS OTHERWISE SHOWN

TEMPORARY WATER POLLUTION CONTROL PLAN

SCALE 1:500 **WPC-3**

STATE OF CALIFORNIA - DEPARTMENT OF TRANSPORTATION

Caltrans

CONSULTANT FUNCTIONAL SUPERVISOR: NORMAN SUYDAM

CALCULATED-DESIGNED BY: ED NG

CHECKED BY: NORMAN SUYDAM

REVISED BY | DATE REVISED

LAST REVISION 11-09-09 | DATE PLOTTED => 19-OCT-2010 | TIME PLOTTED => 15:39

Dist	COUNTY	ROUTE	KILOMETER POST TOTAL PROJECT	SHEET No.	TOTAL SHEETS
08	Riv	60,215	R19.7/21.9, R61.3/62.7	71	594

Caltrans Metric

REGISTERED CIVIL ENGINEER 1-14-10 DATE

6-28-10
PLANS APPROVAL DATE

REGISTERED PROFESSIONAL ENGINEER
EDWARD NG
No. 46767
Exp. 6/30/11
CIVIL
STATE OF CALIFORNIA

THE STATE OF CALIFORNIA OR ITS OFFICERS OR AGENTS SHALL NOT BE RESPONSIBLE FOR THE ACCURACY OR COMPLETENESS OF ELECTRONIC COPIES OF THIS PLAN SHEET.

LAN ENGINEERING CORP
1887 BUSINESS CENTER DR
SUITE 6
SAN BERNARDINO, CA 92408

RIVERSIDE COUNTY
TRANSPORTATION COMMISSION
4080 LEMON STREET
RIVERSIDE, CA 92502

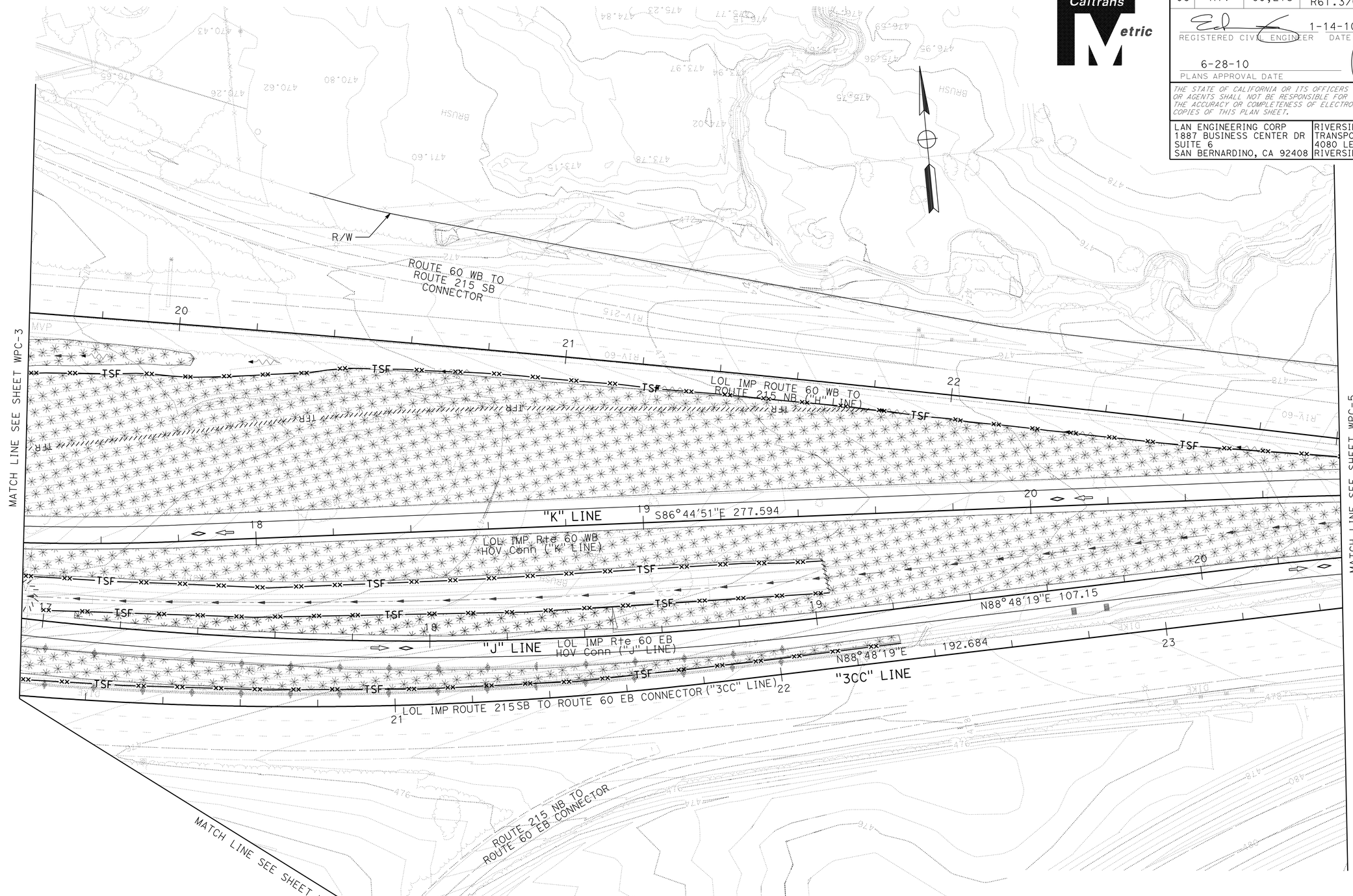

ALL DIMENSIONS ARE IN METERS UNLESS OTHERWISE SHOWN

TEMPORARY WATER POLLUTION CONTROL PLAN

SCALE 1:500 **WPC-4**

STATE OF CALIFORNIA - DEPARTMENT OF TRANSPORTATION
Caltrans

CONSULTANT FUNCTIONAL SUPERVISOR: NORMAN SUYDAM
CALCULATED-DESIGNED BY: ED NG
CHECKED BY: NORMAN SUYDAM
REVISED BY
DATE REVISED

LAST REVISION 11-09-09
DATE PLOTTED => 19-OCT-2010
TIME PLOTTED => 15:39

Dist	COUNTY	ROUTE	KILOMETER POST TOTAL PROJECT	SHEET No.	TOTAL SHEETS
08	Riv	60,215	R19.7/21.9, R61.3/62.7	72	594

REGISTERED CIVIL ENGINEER 1-14-10 DATE

6-28-10
PLANS APPROVAL DATE

REGISTERED PROFESSIONAL ENGINEER
EDWARD NG
No. 46767
Exp. 6/30/11
CIVIL
STATE OF CALIFORNIA

THE STATE OF CALIFORNIA OR ITS OFFICERS OR AGENTS SHALL NOT BE RESPONSIBLE FOR THE ACCURACY OR COMPLETENESS OF ELECTRONIC COPIES OF THIS PLAN SHEET.

LAN ENGINEERING CORP
1887 BUSINESS CENTER DR
SUITE 6
SAN BERNARDINO, CA 92408

RIVERSIDE COUNTY
TRANSPORTATION COMMISSION
4080 LEMON STREET
RIVERSIDE, CA 92502

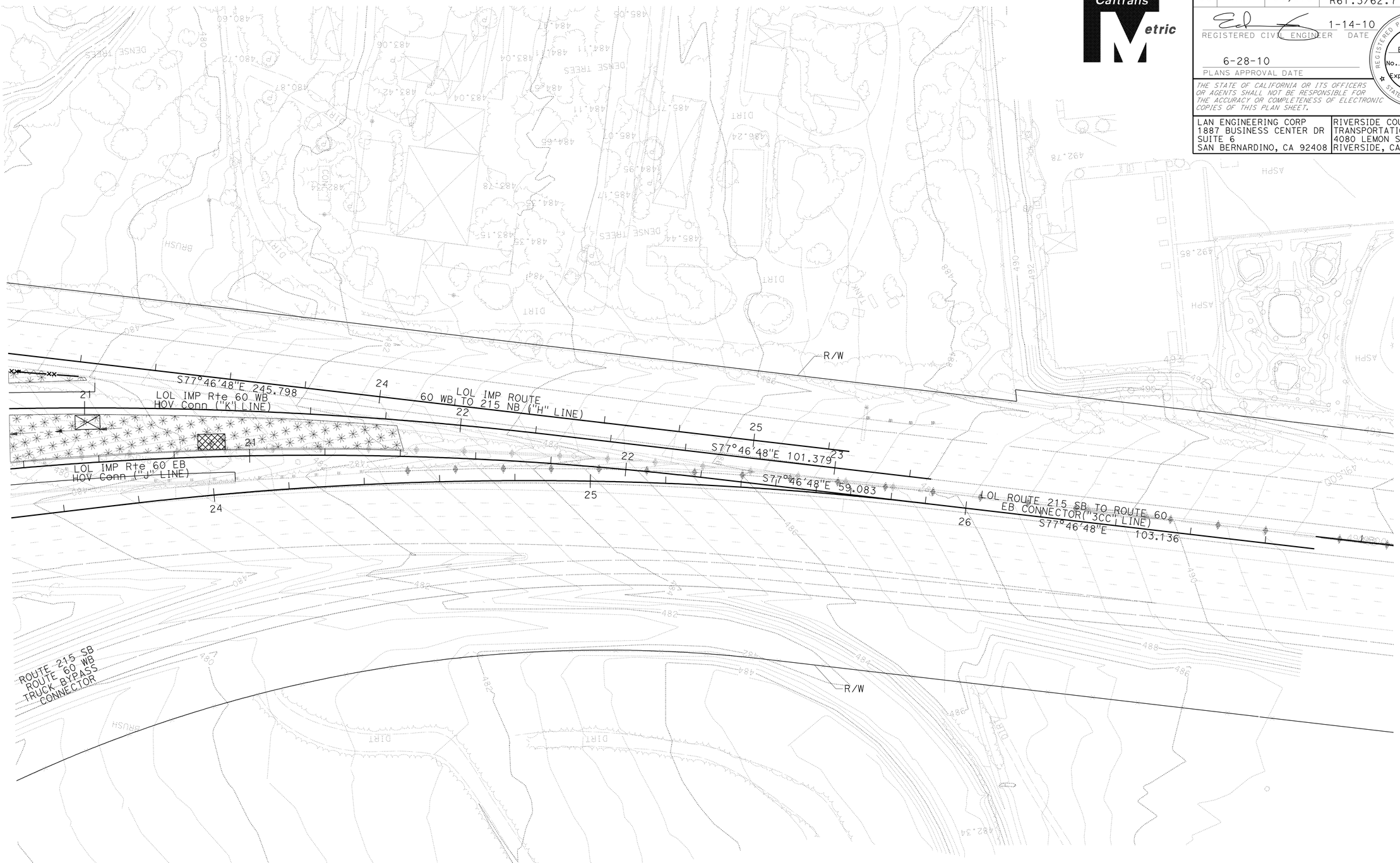

ALL DIMENSIONS ARE IN
METERS UNLESS OTHERWISE SHOWN

TEMPORARY WATER POLLUTION CONTROL PLAN

SCALE 1:500 **WPC-5**

STATE OF CALIFORNIA - DEPARTMENT OF TRANSPORTATION
Caltrans

CONSULTANT FUNCTIONAL SUPERVISOR: NORMAN SUYDAM
CALCULATED-DESIGNED BY: ED NG
CHECKED BY: NORMAN SUYDAM
REVISED BY
DATE REVISED

LAST REVISION 11-09-09
DATE PLOTTED => 19-OCT-2010
TIME PLOTTED => 15:39

Dist	COUNTY	ROUTE	KILOMETER POST TOTAL PROJECT	SHEET No.	TOTAL SHEETS
08	Riv	60,215	R19.7/21.9, R61.3/62.7	73	594

REGISTERED CIVIL ENGINEER 1-14-10 DATE

6-28-10
PLANS APPROVAL DATE

REGISTERED PROFESSIONAL ENGINEER EDWARD NG No. 46767 Exp. 6/30/11 CIVIL STATE OF CALIFORNIA

THE STATE OF CALIFORNIA OR ITS OFFICERS OR AGENTS SHALL NOT BE RESPONSIBLE FOR THE ACCURACY OR COMPLETENESS OF ELECTRONIC COPIES OF THIS PLAN SHEET.

LAN ENGINEERING CORP
1887 BUSINESS CENTER DR
SUITE 6
SAN BERNARDINO, CA 92408

RIVERSIDE COUNTY
TRANSPORTATION COMMISSION
4080 LEMON STREET
RIVERSIDE, CA 92502

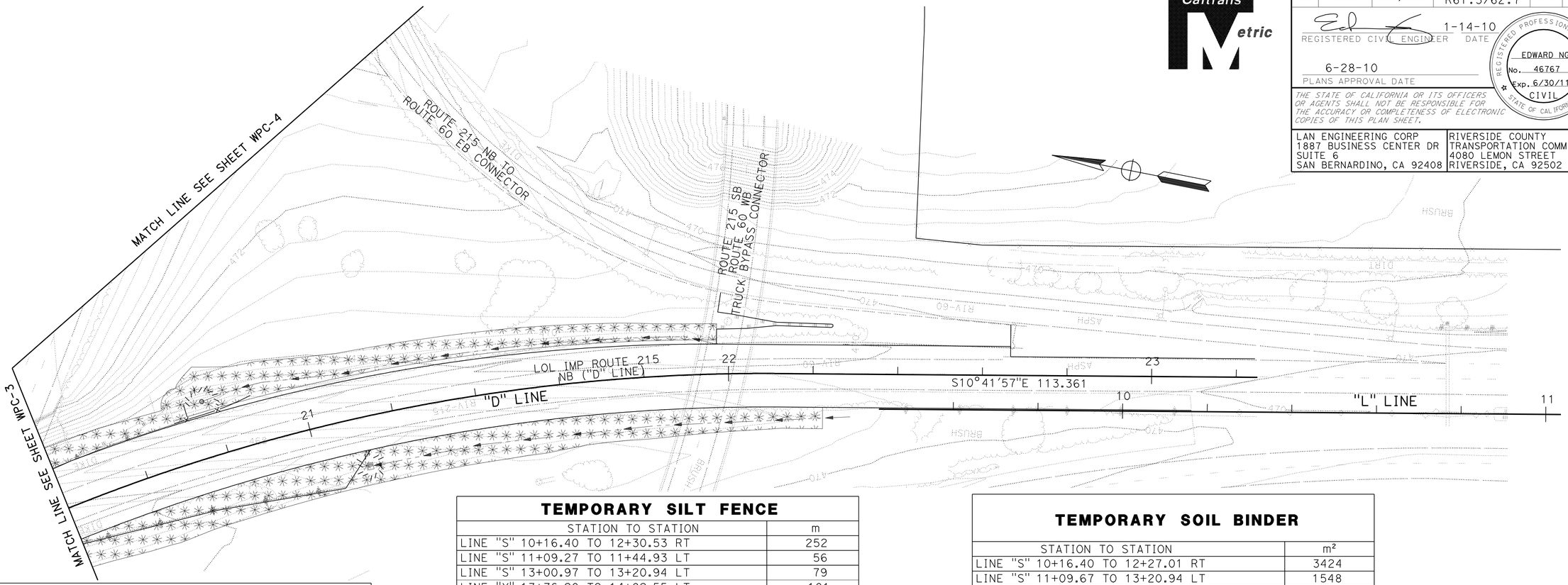

TEMPORARY FIBER ROLL

STATION TO STATION	m
LINE "S" 10+80.00 TO 11+31.50 LT	90
LINE "X" 13+78.15 TO 13+87.44 RT	27
LINE "H" 11+80.50 TO 11+87.94 LT	12
LINE "H" 13+96.70 TO 17+14.00 LT	317
LINE "J" 11+56.80 TO 12+72.84 RT	221
LINE "D" 16+91.95 TO 18+94.14 RT	212
LINE "H" 17+40.47 TO 17+47.69 RT	24
LINE "H" 18+12.99 TO 18+54.87 LT	89
LINE "D" 18+54.83 TO 19+40.00 LT	88
LINE "D" 19+50.23 TO 19+56.83 RT	21
LINE "K" 16+60.00 TO 16+73.88	57
LINE "J" 16+46.54 TO 16+51.78 RT	19
LINE "J" 16+69.81 TO 16+97.36 LT	65
LINE "D" 20+26.30 TO 20+31.16 RT	16
LINE "D" 20+66.44 TO 20+73.23 LT	12
LINE "K" 16+89.87 TO 19+59.58 LT	288
LINE "J" 19+03.21 TO 19+04.08 LT	9
LINE "D" 21+09.32 TO 21+14.86 RT	16
TOTAL	1583

TEMPORARY CHECK DAMS

STATION TO STATION	m
LINE "H" 18+60.00 TO 19+80.00 LT	123
TOTAL	123

TEMPORARY CONCRETE WASHOUT FACILITY

	EA (N)
TOTAL	6

TEMPORARY CONSTRUCTION ENTRANCE

	EA
TOTAL	6

TEMPORARY SILT FENCE

STATION TO STATION	m
LINE "S" 10+16.40 TO 12+30.53 RT	252
LINE "S" 11+09.27 TO 11+44.93 LT	56
LINE "S" 13+00.97 TO 13+20.94 LT	79
LINE "X" 13+76.20 TO 14+82.55 LT	101
LINE "X" 14+97.54 TO 15+45.72 LT	73
LINE "X" 15+09.10 TO 17+14.31 LT	244
LINE "H" 13+91.07 TO 13+96.70 LT	10
LINE "H" 14+71.05 TO 15+13.75 LT	58
LINE "K1" 114+10.41 TO LINE "K" 16+08.47 RT	205
LINE "3CC" 15+74.49 TO 18+63.32 LT	292
LINE "H" 19+06.09 TO 23+21.51 RT	440
LINE "J" 16+57.37 TO 19+03.27 LT	886
LINE "3CC" 19+64.62 TO 22+31.27 LT	266
TOTAL	2962

TEMPORARY DRAINAGE INLET PROTECTION

STATION	EA
LINE "X" 13+82.22 LT	1
LINE "X" 16+56.23 LT	1
LINE "S" 11+20.52 LT	1
LINE "H" 11+84.78 LT	1
LINE "H" 17+43.64 RT	1
LINE "D" 18+00.46 RT	1
LINE "D" 18+87.76 RT	1
LINE "D" 19+98.77 LT	1
LINE "D" 20+29.42 RT	1
LINE "D" 20+71.00 LT	1
TOTAL	10

MOVE IN/MOVE OUT (TEMPORARY EROSION CONTROL)

	EA
TOTAL	12

(N) NOT A SEPARATE PAY ITEM, FOR INFORMATION ONLY

NOTE: LOCATION OF WATER POLLUTION CONTROL MEASURES ARE APPROXIMATE, ACTUAL LOCATION TO BE DETERMINED BY ENGINEER OF CONTRACTOR.

TEMPORARY SOIL BINDER

STATION TO STATION	m²
LINE "S" 10+16.40 TO 12+27.01 RT	3424
LINE "S" 11+09.67 TO 13+20.94 LT	1548
LINE "X" 13+76.20 TO 14+82.55 LT	872
LINE "X" 14+97.57 TO 15+45.72 LT	1015
LINE "X" 15+10.09 TO 17+14.79 LT	3107
LINE "H" 13+91.07 TO 17+76.15 LT	2660
LINE "D" 16+91.95 TO 19+57.11 RT	1588
LINE "J" 13+60.00 TO 15+58.78 LT	1408
LINE "J" 12+72.84 TO 15+58.76 RT	2420
LINE "D" 18+54.83 TO 19+46.61 LT	323
LINE "K" 16+81.06 TO 21+00.00 LT	9998
LINE "K" 17+03.27 TO 21+83.16 RT	6428
LINE "J" 16+58.61 TO 19+20.54 RT	1311
LINE "D" 20+06.77 TO 21+97.44 LT	1105
LINE "D" 19+57.11 TO 20+23.99 RT	545
LINE "D" 20+31.21 TO 22+22.31 RT	1438
LINE "H" 18+18.14 TO 19+33.51 LT	2380
LINE "D" 19+46.61 TO 20+01.90 LT	1349
TOTAL	42919

TEMPORARY COVER

STATION TO STATION	m²
LINE "X" 15+20 TO 17+15	5678
LINE "D" 19+60 TO 20+20	1641
STORAGE	1000
TOTAL	8319

TEMPORARY WATER POLLUTION CONTROL PLAN & QUANTITIES

SCALE 1:500 **WPC-6**

REVISED BY	DATE REVISED
ED NG	NORMAN SUYDAM

CALCULATED-DESIGNED BY / CHECKED BY

CONSULTANT FUNCTIONAL SUPERVISOR: NORMAN SUYDAM

STATE OF CALIFORNIA - DEPARTMENT OF TRANSPORTATION

LAST REVISION 11-09-09 | DATE PLOTTED => 19-OCT-2010 | TIME PLOTTED => 15:40

Dist	COUNTY	ROUTE	KILOMETER POST TOTAL PROJECT	SHEET No.	TOTAL SHEETS
08	Riv	60,215	R19.7/21.9, R61.3/62.7	74	594

Caltrans Metric

REGISTERED CIVIL ENGINEER 1-14-10 DATE

6-28-10
PLANS APPROVAL DATE

REGISTERED PROFESSIONAL ENGINEER
ERIC S. GIROD
No. C57288
Exp.12/31/11
CIVIL
STATE OF CALIFORNIA

THE STATE OF CALIFORNIA OR ITS OFFICERS OR AGENTS SHALL NOT BE RESPONSIBLE FOR THE ACCURACY OR COMPLETENESS OF ELECTRONIC COPIES OF THIS PLAN SHEET.

LAN ENGINEERING CORP
1887 BUSINESS CENTER DR
SUITE 6
SAN BERNARDINO, CA 92408

RIVERSIDE COUNTY
TRANSPORTATION COMMISSION
4080 LEMON STREET
RIVERSIDE, CA 92502

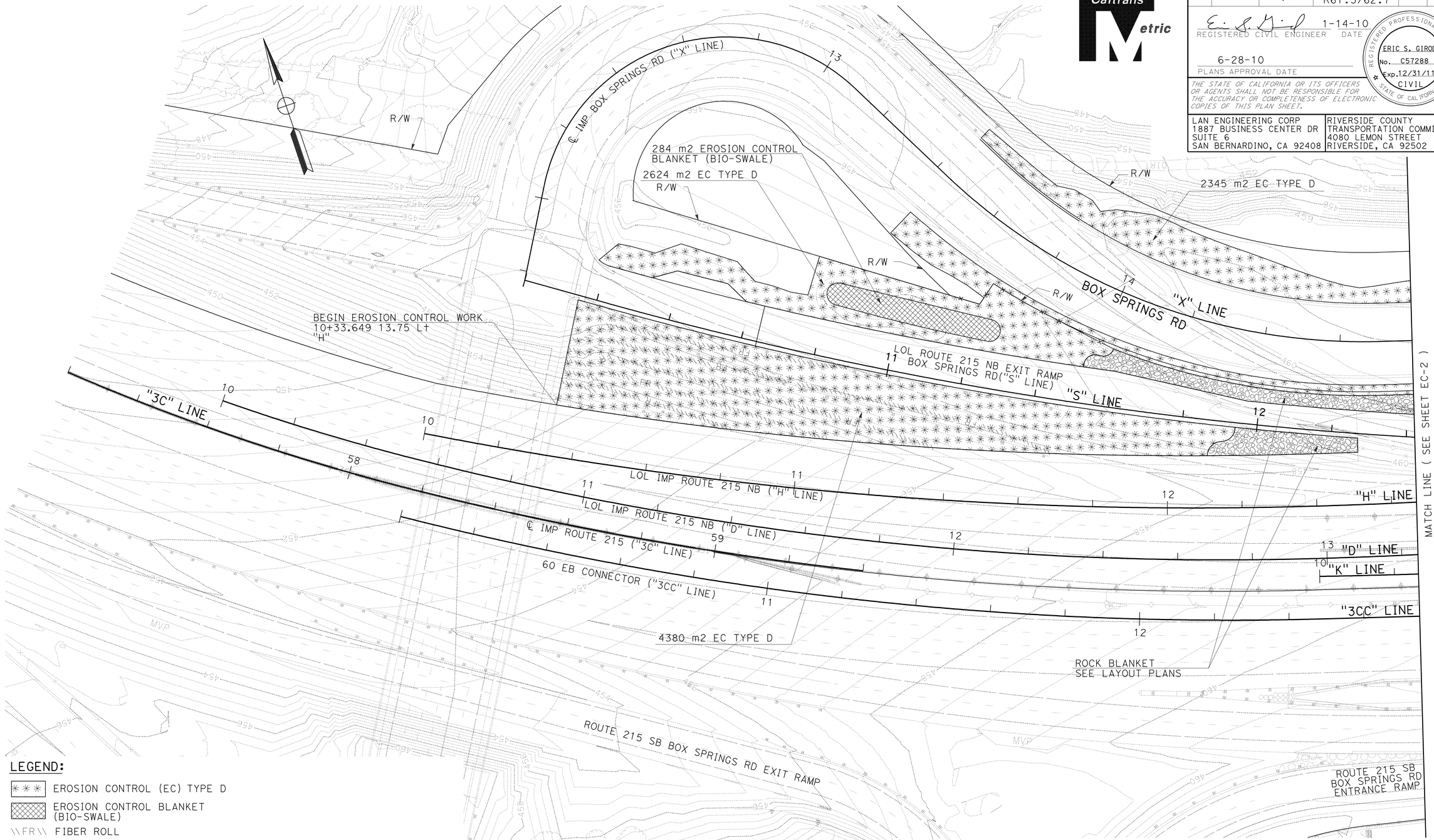

LEGEND:

- EROSION CONTROL (EC) TYPE D
- EROSION CONTROL BLANKET (BIO-SWALE)
- \\FR\\ FIBER ROLL

NOTES:

1. FOR COMPLETE RIGHT OF WAY AND ACCURATE ACCESS DATA, SEE RIGHT OF WAY RECORD MAPS AT DISTRICT OFFICE.
2. FOR ROCK BLANKET DETAILS SEE CONSTRUCTION DETAIL SHEET C-16.
3. FOR IRRIGATION CROSSOVER LOCATIONS SEE IP SHEETS.

THIS PLAN IS ACCURATE FOR EROSION CONTROL WORK ONLY.

ALL DIMENSIONS ARE IN METERS UNLESS OTHERWISE SHOWN

EROSION CONTROL PLAN

SCALE 1:500 **EC-1**

STATE OF CALIFORNIA - DEPARTMENT OF TRANSPORTATION
Caltrans

CONSULTANT FUNCTIONAL SUPERVISOR: NORMAN SUYDAM
CALCULATED-DESIGNED BY: NOELLE LOYOLA
CHECKED BY: NORMAN SUYDAM
REVISED BY
DATE REVISED

LAST REVISION 11-09-09
DATE PLOTTED => 19-OCT-2010
TIME PLOTTED => 15:40

Dist	COUNTY	ROUTE	KILOMETER POST TOTAL PROJECT	SHEET No.	TOTAL SHEETS
08	Riv	60,215	R19.7/21.9, R61.3/62.7	75	594

REGISTERED CIVIL ENGINEER 1-14-10 DATE

6-28-10
PLANS APPROVAL DATE

REGISTERED PROFESSIONAL ENGINEER
ERIC S. GIROD
No. C57288
Exp.12/31/11
CIVIL
STATE OF CALIFORNIA

THE STATE OF CALIFORNIA OR ITS OFFICERS OR AGENTS SHALL NOT BE RESPONSIBLE FOR THE ACCURACY OR COMPLETENESS OF ELECTRONIC COPIES OF THIS PLAN SHEET.

LAN ENGINEERING CORP
1887 BUSINESS CENTER DR
SUITE 6
SAN BERNARDINO, CA 92408

RIVERSIDE COUNTY
TRANSPORTATION COMMISSION
4080 LEMON STREET
RIVERSIDE, CA 92502

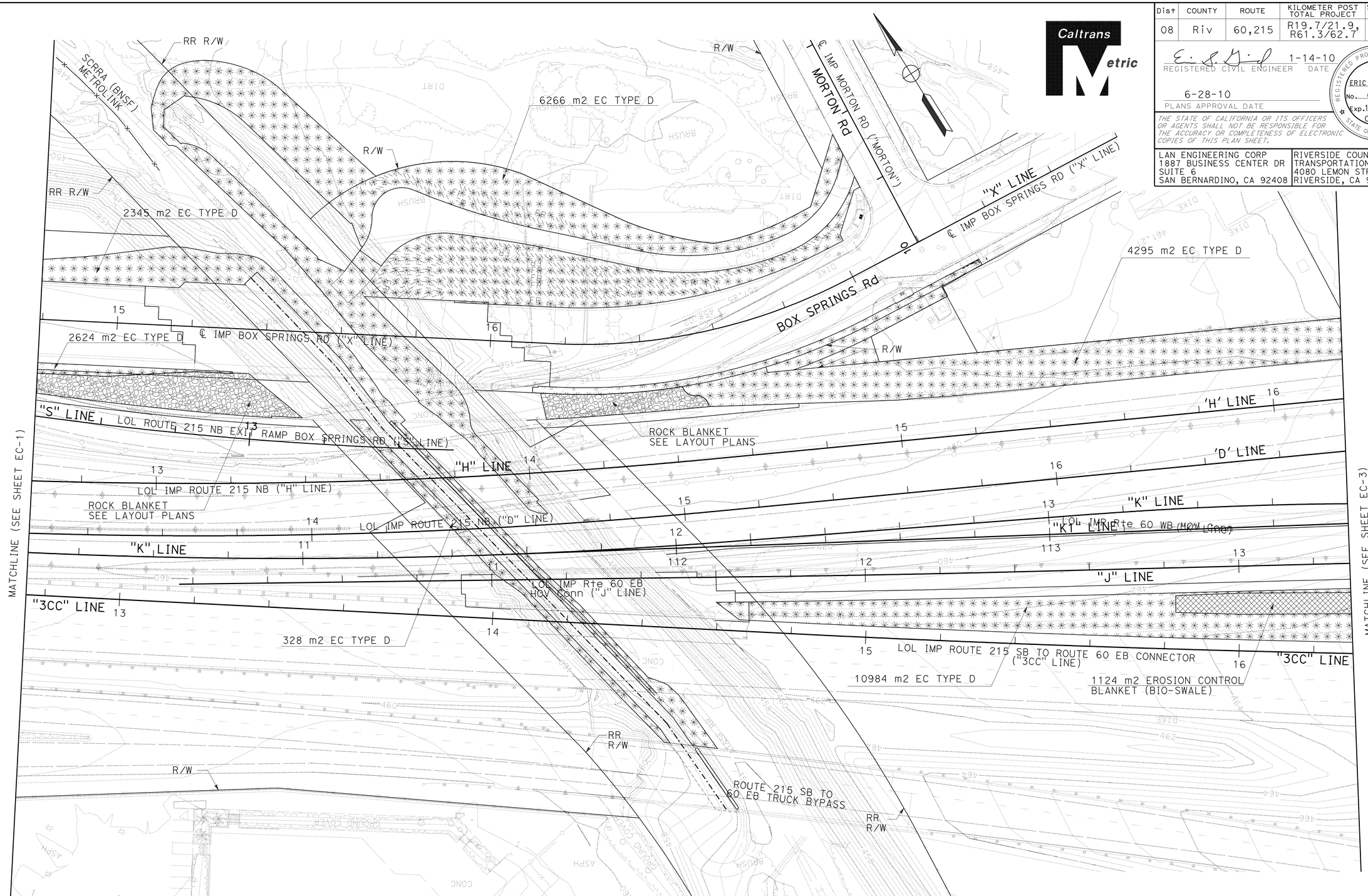

ALL DIMENSIONS ARE IN
METERS UNLESS OTHERWISE SHOWN

EROSION CONTROL PLAN

SCALE 1:500

EC-2

THIS PLAN IS ACCURATE FOR EROSION CONTROL WORK ONLY.

REVISED BY	DATE REVISED
NOELLE LOYOLA	NORMAN SUYDAM

CALCULATED-DESIGNED BY / CHECKED BY

CONSULTANT FUNCTIONAL SUPERVISOR: NORMAN SUYDAM

STATE OF CALIFORNIA - DEPARTMENT OF TRANSPORTATION

Caltrans

LAST REVISION 11-09-09 | DATE PLOTTED => 19-OCT-2010 | TIME PLOTTED => 15:40

Dist	COUNTY	ROUTE	KILOMETER POST TOTAL PROJECT	SHEET No.	TOTAL SHEETS
08	Riv	60,215	R19.7/21.9, R61.3/62.7	76	594

Caltrans Metric

1-14-10
REGISTERED CIVIL ENGINEER DATE

6-28-10
PLANS APPROVAL DATE

REGISTERED PROFESSIONAL ENGINEER
ERIC S. GIROD
No. C57288
Exp.12/31/11
CIVIL
STATE OF CALIFORNIA

THE STATE OF CALIFORNIA OR ITS OFFICERS OR AGENTS SHALL NOT BE RESPONSIBLE FOR THE ACCURACY OR COMPLETENESS OF ELECTRONIC COPIES OF THIS PLAN SHEET.

LAN ENGINEERING CORP
1887 BUSINESS CENTER DR
SUITE 6
SAN BERNARDINO, CA 92408

RIVERSIDE COUNTY
TRANSPORTATION COMMISSION
4080 LEMON STREET
RIVERSIDE, CA 92502

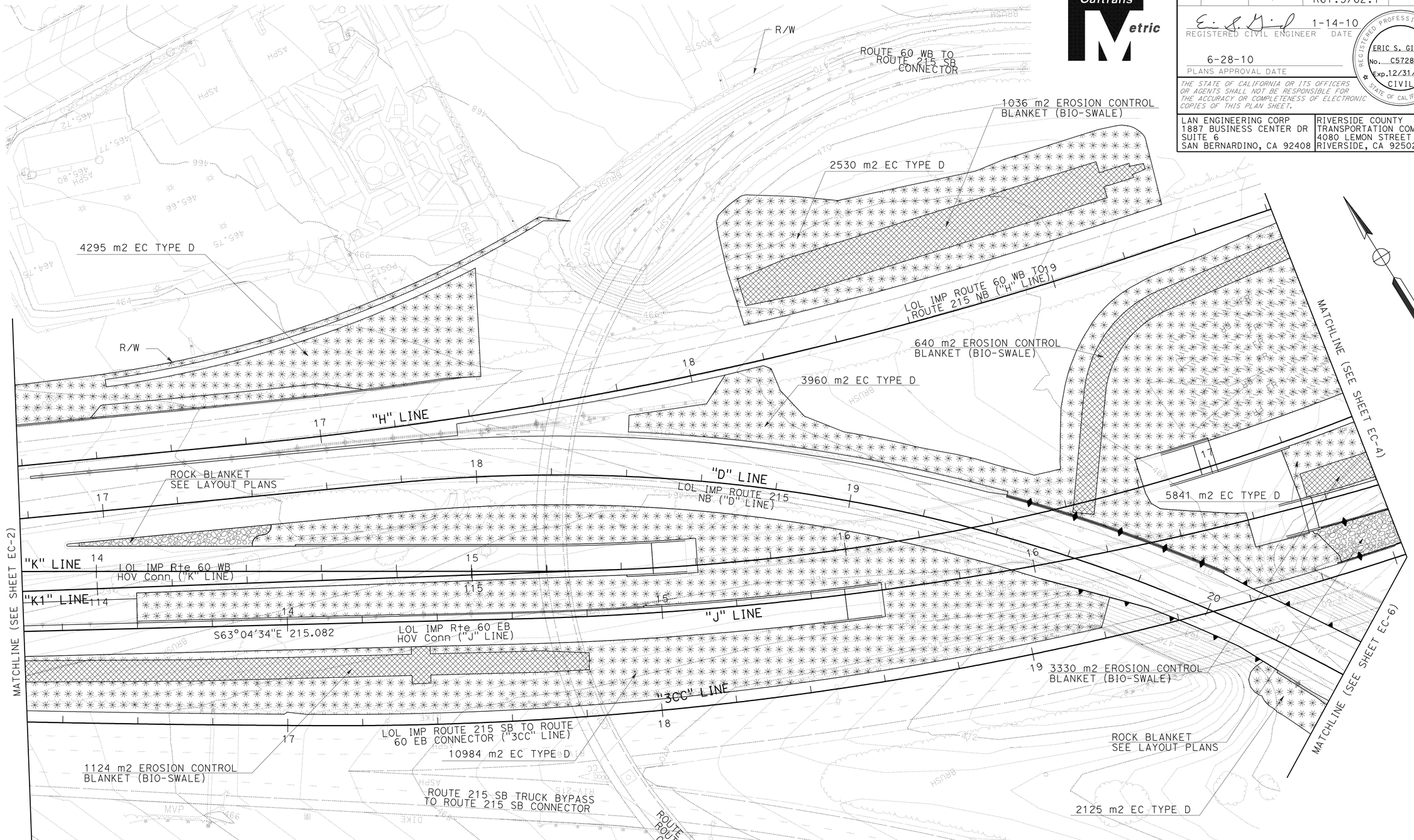

ALL DIMENSIONS ARE IN METERS UNLESS OTHERWISE SHOWN

EROSION CONTROL PLAN

SCALE 1:500

EC-3

THIS PLAN IS ACCURATE FOR EROSION CONTROL WORK ONLY.

REVISED BY	DATE REVISED
NOELLE LOYOLA	NORMAN SUYDAM

CALCULATED-DESIGNED BY: NOELLE LOYOLA
CHECKED BY: NORMAN SUYDAM
CONSULTANT FUNCTIONAL SUPERVISOR: NORMAN SUYDAM

STATE OF CALIFORNIA - DEPARTMENT OF TRANSPORTATION
Caltrans

LAST REVISION 11-09-09
DATE PLOTTED => 19-OCT-2010
TIME PLOTTED => 15:40

Dist	COUNTY	ROUTE	KILOMETER POST TOTAL PROJECT	SHEET No.	TOTAL SHEETS
08	Riv	60,215	R19.7/21.9, R61.3/62.7	77	594

REGISTERED CIVIL ENGINEER 1-14-10 DATE

6-28-10
PLANS APPROVAL DATE

REGISTERED PROFESSIONAL ENGINEER
ERIC S. GIROD
No. C57288
Exp.12/31/11
CIVIL
STATE OF CALIFORNIA

THE STATE OF CALIFORNIA OR ITS OFFICERS OR AGENTS SHALL NOT BE RESPONSIBLE FOR THE ACCURACY OR COMPLETENESS OF ELECTRONIC COPIES OF THIS PLAN SHEET.

LAN ENGINEERING CORP
1887 BUSINESS CENTER DR
SUITE 6
SAN BERNARDINO, CA 92408

RIVERSIDE COUNTY
TRANSPORTATION COMMISSION
4080 LEMON STREET
RIVERSIDE, CA 92502

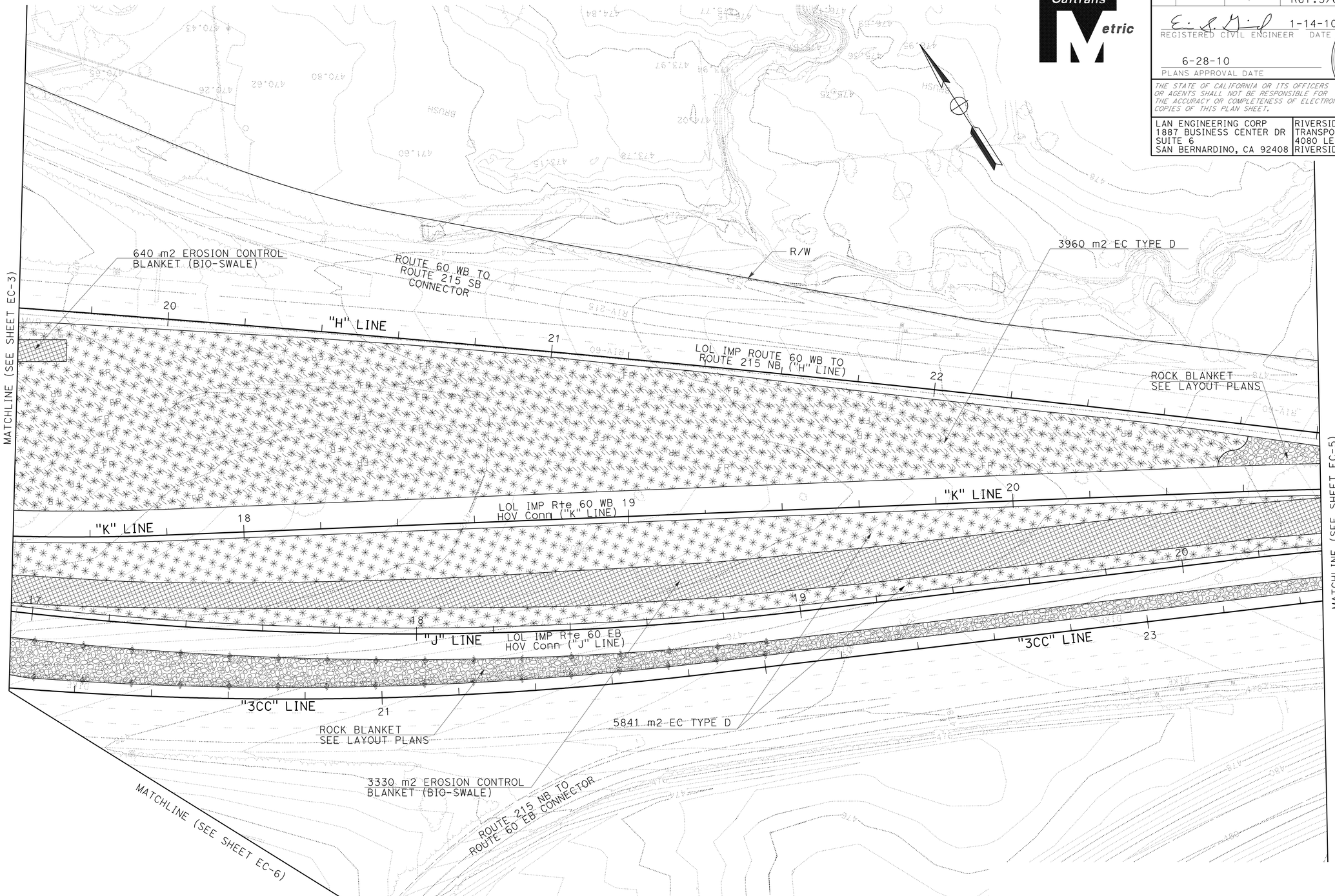

ALL DIMENSIONS ARE IN METERS UNLESS OTHERWISE SHOWN

EROSION CONTROL PLAN

SCALE 1:500

EC-4

THIS PLAN IS ACCURATE FOR EROSION CONTROL WORK ONLY.

STATE OF CALIFORNIA - DEPARTMENT OF TRANSPORTATION

Caltrans

CONSULTANT FUNCTIONAL SUPERVISOR: NORMAN SUYDAM

CALCULATED-DESIGNED BY: NOELLE LOYOLA

CHECKED BY: NORMAN SUYDAM

REVISED BY | DATE REVISED

LAST REVISION 11-09-09 | DATE PLOTTED => 19-OCT-2010 | TIME PLOTTED => 15:40

Dist	COUNTY	ROUTE	KILOMETER POST TOTAL PROJECT	SHEET No.	TOTAL SHEETS
08	Riv	60,215	R19.7/21.9, R61.3/62.7	78	594

Caltrans Metric

REGISTERED CIVIL ENGINEER 1-14-10 DATE

6-28-10
PLANS APPROVAL DATE

REGISTERED PROFESSIONAL ENGINEER
ERIC S. GIROD
No. C57288
Exp.12/31/11
CIVIL
STATE OF CALIFORNIA

THE STATE OF CALIFORNIA OR ITS OFFICERS OR AGENTS SHALL NOT BE RESPONSIBLE FOR THE ACCURACY OR COMPLETENESS OF ELECTRONIC COPIES OF THIS PLAN SHEET.

LAN ENGINEERING CORP
1887 BUSINESS CENTER DR
SUITE 6
SAN BERNARDINO, CA 92408

RIVERSIDE COUNTY
TRANSPORTATION COMMISSION
4080 LEMON STREET
RIVERSIDE, CA 92502

ALL DIMENSIONS ARE IN
METERS UNLESS OTHERWISE SHOWN

EROSION CONTROL PLAN

SCALE 1:500

EC-5

THIS PLAN IS ACCURATE FOR EROSION CONTROL WORK ONLY.

REVISED BY	NOELLE LOYOLA
DATE REVISED	NORMAN SUYDAM
CALCULATED-DESIGNED BY	NORMAN SUYDAM
CHECKED BY	NORMAN SUYDAM
CONSULTANT FUNCTIONAL SUPERVISOR	NORMAN SUYDAM

STATE OF CALIFORNIA - DEPARTMENT OF TRANSPORTATION

Caltrans

LAST REVISION 11-09-09 DATE PLOTTED => 19-OCT-2010 TIME PLOTTED => 15:41

Dist	COUNTY	ROUTE	KILOMETER POST TOTAL PROJECT	SHEET No.	TOTAL SHEETS
08	Riv	60,215	R19.7/21.9, R61.3/62.7	79	594

REGISTERED CIVIL ENGINEER 1-14-10 DATE

6-28-10
PLANS APPROVAL DATE

REGISTERED PROFESSIONAL ENGINEER ERIC S. GIROD No. C57288 Exp.12/31/11 CIVIL STATE OF CALIFORNIA

THE STATE OF CALIFORNIA OR ITS OFFICERS OR AGENTS SHALL NOT BE RESPONSIBLE FOR THE ACCURACY OR COMPLETENESS OF ELECTRONIC COPIES OF THIS PLAN SHEET.

LAN ENGINEERING CORP
1887 BUSINESS CENTER DR
SUITE 6
SAN BERNARDINO, CA 92408

RIVERSIDE COUNTY
TRANSPORTATION COMMISSION
4080 LEMON STREET
RIVERSIDE, CA 92502

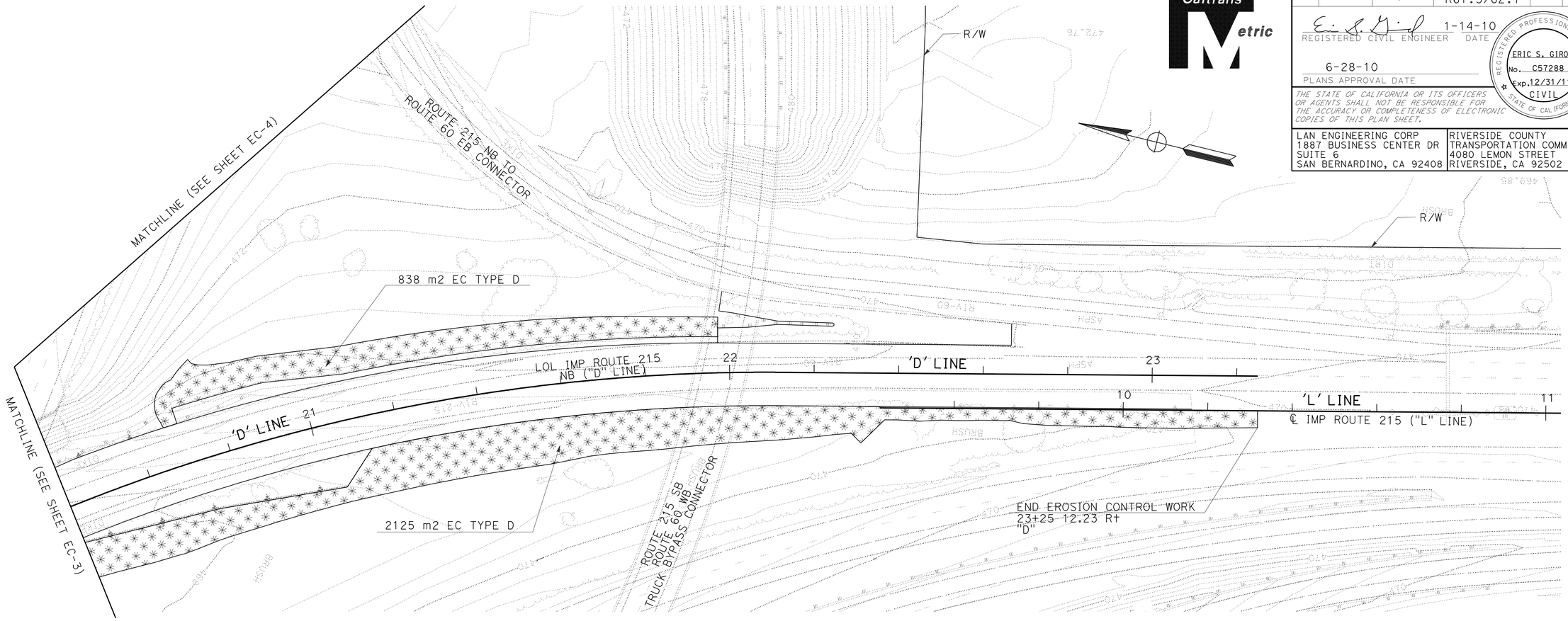

EROSION CONTROL

SHEET	STATION	LOCATION	EROSION CONTROL (TYPE D)	EROSION CONTROL (BLANKET)
			m²	m²
EC-1	"S" LINE 10+15.16 TO 11+94.20	Rt	4380	
EC-1, EC-2	"S" LINE 10+17.67 TO 11+59.17	Lt	2624	
EC-1	"S" LINE 10+79.98 TO 11+27.80	Lt		284
EC-1, EC-2	"X" LINE 13+43.04 TO 15+57.76	Lt	2345	
EC-2	"X" LINE 15+56.14 TO 17+13.02	Lt	6266	
EC-2, EC-3	"H" LINE 14+42.87 TO 17+44.68	Lt	4295	
EC-2, EC-3	"D" LINE 15+06.18 TO 19+74.25	Rt	10984	
EC-2	"J" LINE 11+77.40 TO 12+68.87	Rt		1124
EC-3	"H" LINE 18+16.86 TO 19+33.94	Lt	2530	
EC-3	"H" LINE 18+17.79 TO 19+33.94	Lt		1036
EC-3, EC-4	"H" LINE 17+80.82 TO 22+82.31	Rt	3960	
EC-3, EC-4	"H" LINE 18+87.41 TO 19+74.21	Rt		640
EC-3, EC-4, EC-5	"J" LINE 16+73.32 TO 20+80.72	Lt	5841	
EC-3, EC-4, EC-5	"J" LINE 16+75.14 TO 20+80.53	Lt		3330
EC-3, EC-6	"D" LINE 20+15.42 TO 23+25.00	Rt	2125	
EC-6	"D" LINE 20+65.62 TO 21+97.37	Lt	838	
EC-2	R.R. MAINTENANCE ROAD	Rt	328	
		TOTAL	46516	6414

FIBER ROLLS

SHEET	m
EC-1	430.3
EC-2	720
EC-3	315.4
EC-4	2214.3
TOTAL	3680

THIS PLAN IS ACCURATE FOR EROSION CONTROL WORK ONLY.

ALL DIMENSIONS ARE IN METERS UNLESS OTHERWISE SHOWN

EROSION CONTROL PLAN & QUANTITIES

SCALE 1:500 **EC-6**

STATE OF CALIFORNIA - DEPARTMENT OF TRANSPORTATION
Caltrans

CONSULTANT FUNCTIONAL SUPERVISOR: NORMAN SUYDAM
CALCULATED-DESIGNED BY: NOELLE LOYOLA
CHECKED BY: NORMAN SUYDAM
REVISED BY
DATE REVISED

LAST REVISION 11-09-09
DATE PLOTTED => 19-OCT-2010
TIME PLOTTED => 15:41

Dist	COUNTY	ROUTE	KILOMETER POST TOTAL PROJECT	SHEET No.	TOTAL SHEETS
08	Riv	60,215	R19.7/21.9, R61.3/62.7	80	594

Caltrans Metric

1-14-10
REGISTERED CIVIL ENGINEER DATE

6-28-10
PLANS APPROVAL DATE

REGISTERED PROFESSIONAL ENGINEER
ERIC S. GIROD
No. C57288
Exp.12/31/11
CIVIL
STATE OF CALIFORNIA

THE STATE OF CALIFORNIA OR ITS OFFICERS OR AGENTS SHALL NOT BE RESPONSIBLE FOR THE ACCURACY OR COMPLETENESS OF ELECTRONIC COPIES OF THIS PLAN SHEET.

LAN ENGINEERING CORP
1887 BUSINESS CENTER DR
SUITE 6
SAN BERNARDINO, CA 92408

RIVERSIDE COUNTY
TRANSPORTATION COMMISSION
4080 LEMON STREET
RIVERSIDE, CA 92502

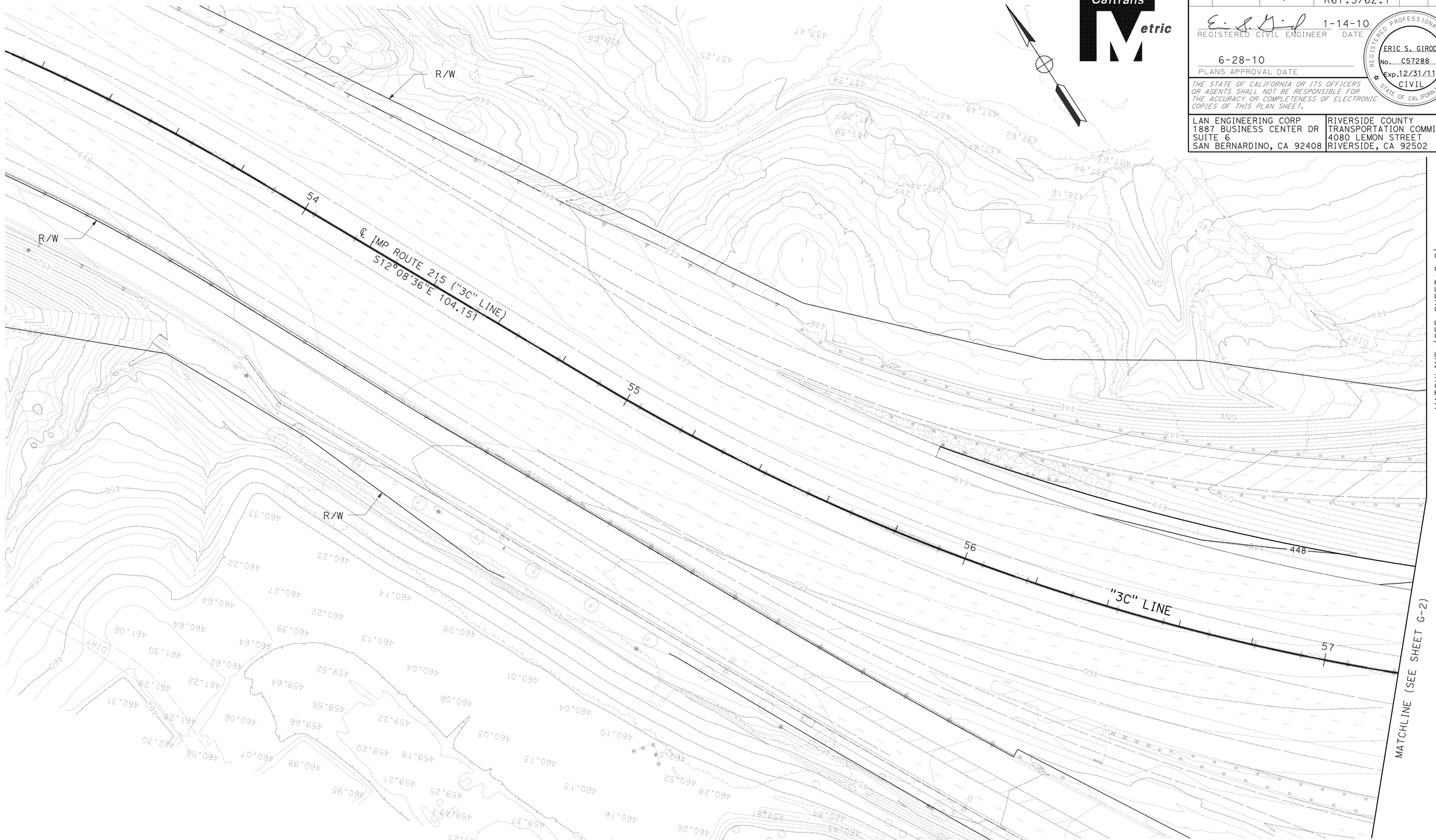

NOTES:

FOR COMPLETE RIGHT OF WAY AND ACCURATE ACCESS DATA, SEE RIGHT OF WAY RECORD MAPS AT DISTRICT OFFICE.

THIS PLAN IS ACCURATE FOR CONTOUR GRADING WORK ONLY

ALL DIMENSIONS ARE IN METERS UNLESS OTHERWISE SHOWN

CONTOUR GRADING

SCALE 1:500

G-1

STATE OF CALIFORNIA - DEPARTMENT OF TRANSPORTATION

Caltrans

CONSULTANT FUNCTIONAL SUPERVISOR: NORMAN SUYDAM

CALCULATED-DESIGNED BY: ERIC GIROD

CHECKED BY: NORMAN SUYDAM

REVISED BY

DATE REVISED

LAST REVISION DATE PLOTTED => 19-OCT-2010
TIME PLOTTED => 15:41

NOTE:
FOR COMPLETE RIGHT OF WAY AND ACCURATE ACCESS DATA, SEE RIGHT OF WAY RECORD MAPS AT DISTRICT OFFICE.

Dist	COUNTY	ROUTE	KILOMETER POST TOTAL PROJECT	SHEET No.	TOTAL SHEETS
08	Riv	60,215	R19.7/21.9, R61.3/62.7	81	594

REGISTERED CIVIL ENGINEER 1-14-10 DATE

6-28-10
PLANS APPROVAL DATE

REGISTERED PROFESSIONAL ENGINEER
ERIC S. GIROD
No. C57288
Exp.12/31/11
CIVIL
STATE OF CALIFORNIA

THE STATE OF CALIFORNIA OR ITS OFFICERS OR AGENTS SHALL NOT BE RESPONSIBLE FOR THE ACCURACY OR COMPLETENESS OF ELECTRONIC COPIES OF THIS PLAN SHEET.

LAN ENGINEERING CORP
1887 BUSINESS CENTER DR
SUITE 6
SAN BERNARDINO, CA 92408

RIVERSIDE COUNTY
TRANSPORTATION COMMISSION
4080 LEMON STREET
RIVERSIDE, CA 92502

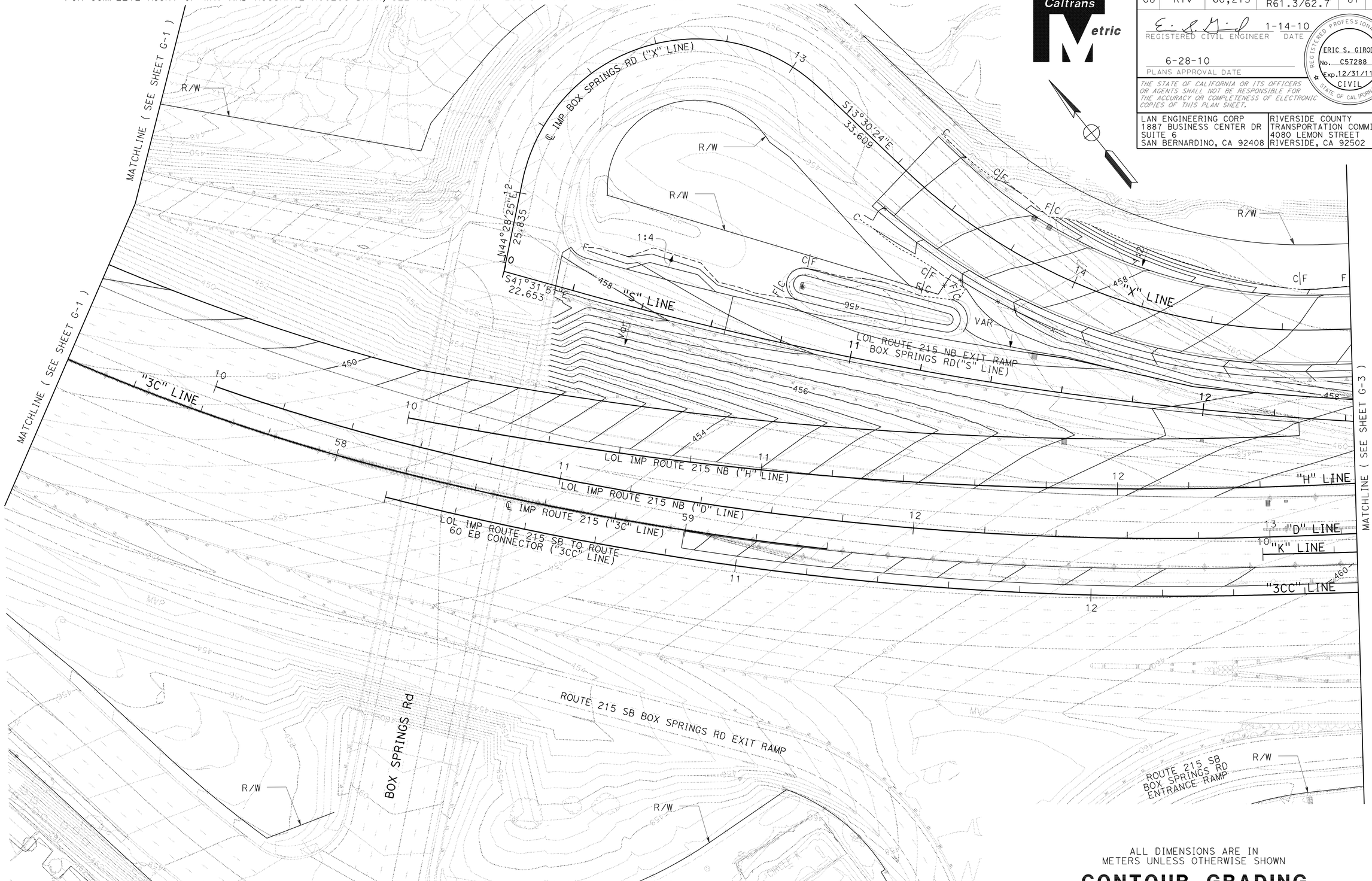

ALL DIMENSIONS ARE IN
METERS UNLESS OTHERWISE SHOWN

CONTOUR GRADING

SCALE 1:500

G-2

THIS PLAN IS ACCURATE FOR CONTOUR GRADING WORK ONLY

STATE OF CALIFORNIA - DEPARTMENT OF TRANSPORTATION
Caltrans

CONSULTANT FUNCTIONAL SUPERVISOR: NORMAN SUYDAM
CALCULATED-DESIGNED BY: ERIC GIROD
CHECKED BY: NORMAN SUYDAM
REVISED BY
DATE REVISED

LAST REVISION 11-09-09
DATE PLOTTED => 19-OCT-2010
TIME PLOTTED => 15:41

Dist	COUNTY	ROUTE	KILOMETER POST TOTAL PROJECT	SHEET No.	TOTAL SHEETS
08	Riv	60,215	R19.7/21.9, R61.3/62.7	82	594

REGISTERED CIVIL ENGINEER 1-14-10 DATE

6-28-10
PLANS APPROVAL DATE

REGISTERED PROFESSIONAL ENGINEER
ERIC S. GIROD
No. C57288
Exp.12/31/11
CIVIL
STATE OF CALIFORNIA

THE STATE OF CALIFORNIA OR ITS OFFICERS OR AGENTS SHALL NOT BE RESPONSIBLE FOR THE ACCURACY OR COMPLETENESS OF ELECTRONIC COPIES OF THIS PLAN SHEET.

LAN ENGINEERING CORP
1887 BUSINESS CENTER DR
SUITE 6
SAN BERNARDINO, CA 92408

RIVERSIDE COUNTY
TRANSPORTATION COMMISSION
4080 LEMON STREET
RIVERSIDE, CA 92502

NOTE:
FOR COMPLETE RIGHT OF WAY AND ACCURATE ACCESS DATA, SEE RIGHT OF WAY RECORD MAPS AT DISTRICT OFFICE.

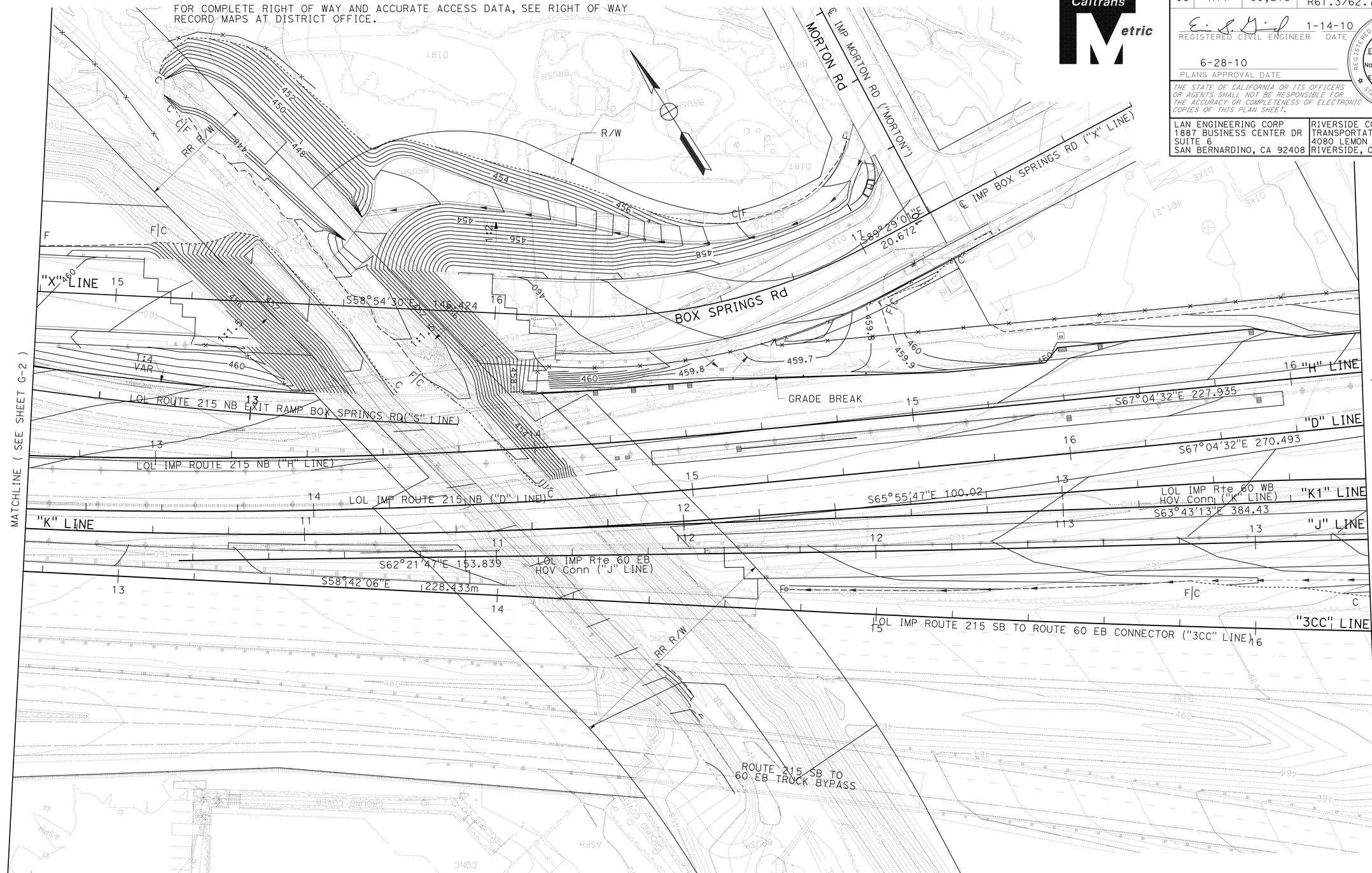

ALL DIMENSIONS ARE IN METERS UNLESS OTHERWISE SHOWN

CONTOUR GRADING

SCALE 1:500

G-3

THIS PLAN IS ACCURATE FOR CONTOUR GRADING WORK ONLY

STATE OF CALIFORNIA - DEPARTMENT OF TRANSPORTATION
Caltrans

CONSULTANT FUNCTIONAL SUPERVISOR: NORMAN SUYDAM
CALCULATED-DESIGNED BY: ERIC GIROD
CHECKED BY: NORMAN SUYDAM
REVISED BY
DATE REVISED

LAST REVISION 11-09-09
DATE PLOTTED => 19-OCT-2010
TIME PLOTTED => 15:42

Dist	COUNTY	ROUTE	KILOMETER POST TOTAL PROJECT	SHEET No.	TOTAL SHEETS
08	Riv	60,215	R19.7/21.9, R61.3/62.7	83	594

REGISTERED CIVIL ENGINEER 1-14-10 DATE

6-28-10
PLANS APPROVAL DATE

REGISTERED PROFESSIONAL ENGINEER
ERIC S. GIROD
No. C57288
Exp.12/31/11
CIVIL
STATE OF CALIFORNIA

THE STATE OF CALIFORNIA OR ITS OFFICERS OR AGENTS SHALL NOT BE RESPONSIBLE FOR THE ACCURACY OR COMPLETENESS OF ELECTRONIC COPIES OF THIS PLAN SHEET.

LAN ENGINEERING CORP
1887 BUSINESS CENTER DR
SUITE 6
SAN BERNARDINO, CA 92408

RIVERSIDE COUNTY
TRANSPORTATION COMMISSION
4080 LEMON STREET
RIVERSIDE, CA 92502

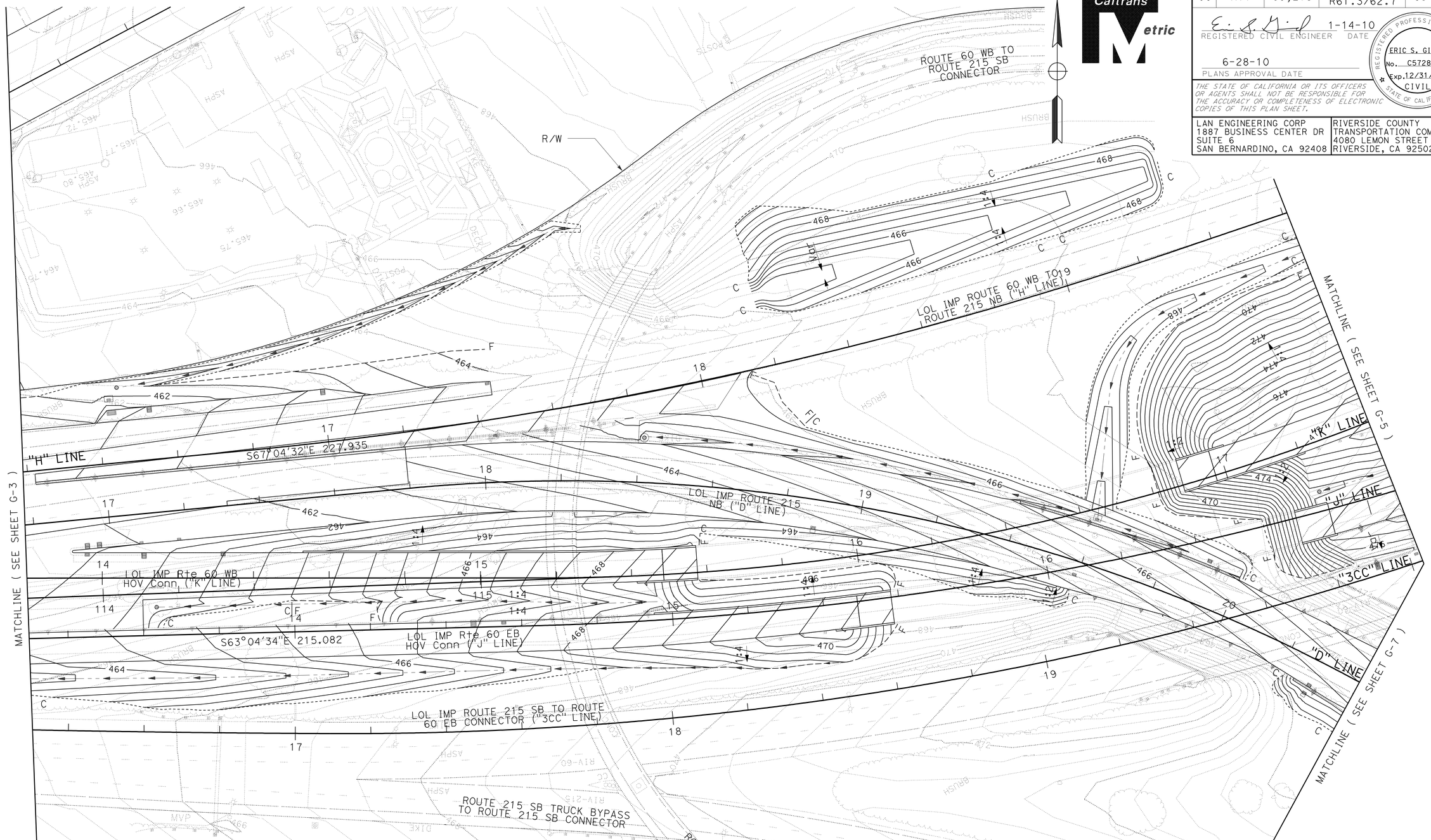

NOTE:
FOR COMPLETE RIGHT OF WAY AND ACCURATE ACCESS DATA, SEE RIGHT OF WAY RECORD MAPS AT DISTRICT OFFICE.

ALL DIMENSIONS ARE IN METERS UNLESS OTHERWISE SHOWN

CONTOUR GRADING

SCALE 1:500

G-4

THIS PLAN IS ACCURATE FOR CONTOUR GRADING WORK ONLY

STATE OF CALIFORNIA - DEPARTMENT OF TRANSPORTATION
Caltrans

CONSULTANT FUNCTIONAL SUPERVISOR: NORMAN SUYDAM
CALCULATED-DESIGNED BY: ERIC GIROD
CHECKED BY: NORMAN SUYDAM
REVISED BY
DATE REVISED

LAST REVISION 11-09-09
DATE PLOTTED => 19-OCT-2010
TIME PLOTTED => 15:42

Dist	COUNTY	ROUTE	KILOMETER POST TOTAL PROJECT	SHEET No.	TOTAL SHEETS
08	Riv	60,215	R19.7/21.9, R61.3/62.7	84	594

REGISTERED CIVIL ENGINEER 1-14-10 DATE

6-28-10
PLANS APPROVAL DATE

REGISTERED PROFESSIONAL ENGINEER
ERIC S. GIROD
No. C57288
Exp.12/31/11
CIVIL
STATE OF CALIFORNIA

THE STATE OF CALIFORNIA OR ITS OFFICERS OR AGENTS SHALL NOT BE RESPONSIBLE FOR THE ACCURACY OR COMPLETENESS OF ELECTRONIC COPIES OF THIS PLAN SHEET.

LAN ENGINEERING CORP
1887 BUSINESS CENTER DR
SUITE 6
SAN BERNARDINO, CA 92408

RIVERSIDE COUNTY
TRANSPORTATION COMMISSION
4080 LEMON STREET
RIVERSIDE, CA 92502

Caltrans Metric

NOTE:
FOR COMPLETE RIGHT OF WAY AND ACCURATE ACCESS DATA, SEE RIGHT OF WAY RECORD MAPS AT DISTRICT OFFICE.

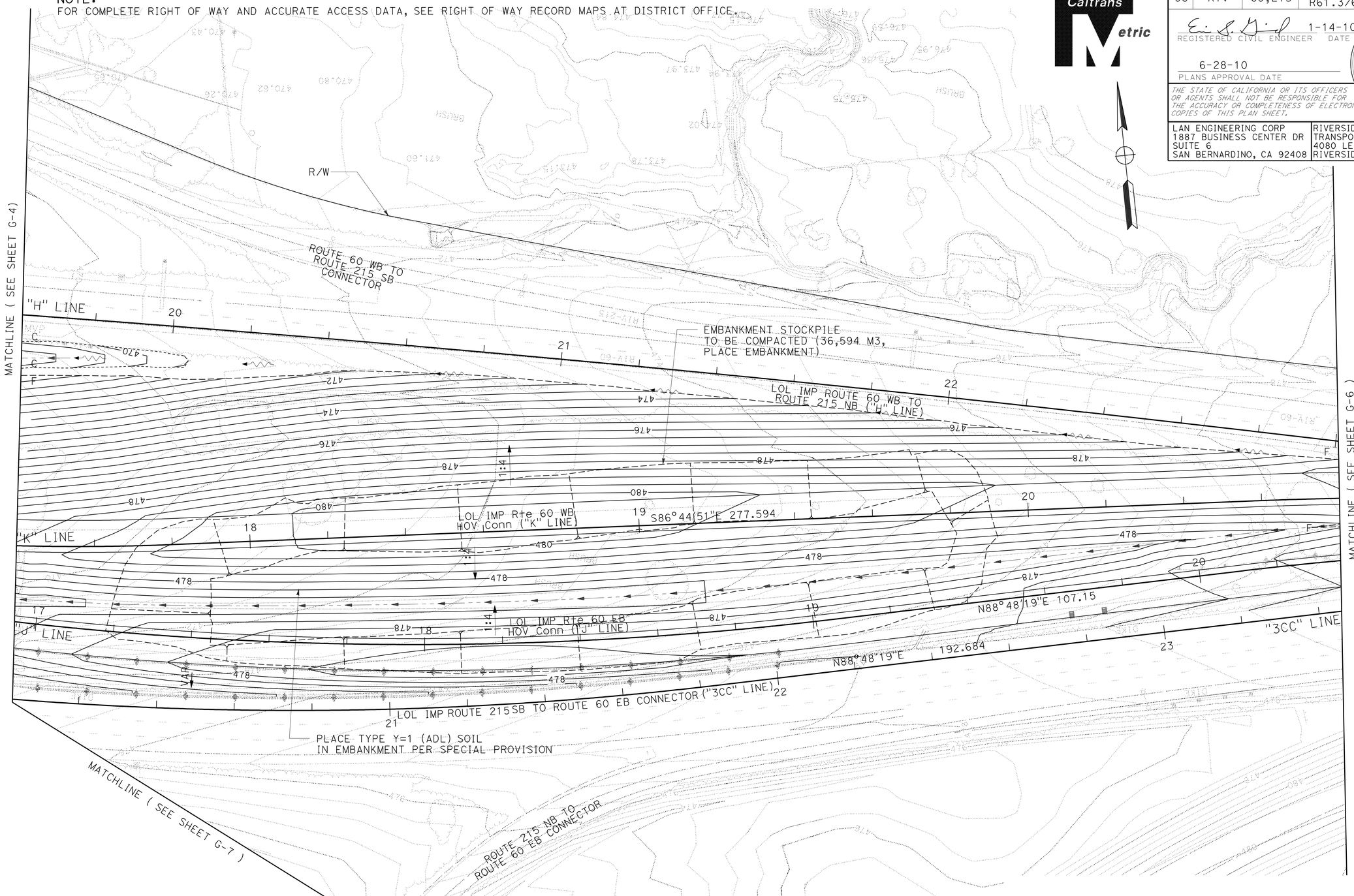

ALL DIMENSIONS ARE IN METERS UNLESS OTHERWISE SHOWN

CONTOUR GRADING

SCALE 1:500

G-5

THIS PLAN IS ACCURATE FOR CONTOUR GRADING WORK ONLY

STATE OF CALIFORNIA - DEPARTMENT OF TRANSPORTATION
Caltrans

CONSULTANT FUNCTIONAL SUPERVISOR: NORMAN SUYDAM
CALCULATED-DESIGNED BY: ERIC GIROD
CHECKED BY: NORMAN SUYDAM
REVISED BY
DATE REVISED

LAST REVISION 11-09-09
DATE PLOTTED => 19-OCT-2010
TIME PLOTTED => 15:42

Dist	COUNTY	ROUTE	KILOMETER POST TOTAL PROJECT	SHEET No.	TOTAL SHEETS
08	Riv	60,215	R19.7/21.9, R61.3/62.7	85	594

REGISTERED CIVIL ENGINEER 1-14-10 DATE

6-28-10
PLANS APPROVAL DATE

REGISTERED PROFESSIONAL ENGINEER
ERIC S. GIROD
No. C57288
Exp.12/31/11
CIVIL
STATE OF CALIFORNIA

THE STATE OF CALIFORNIA OR ITS OFFICERS OR AGENTS SHALL NOT BE RESPONSIBLE FOR THE ACCURACY OR COMPLETENESS OF ELECTRONIC COPIES OF THIS PLAN SHEET.

LAN ENGINEERING CORP
1887 BUSINESS CENTER DR
SUITE 6
SAN BERNARDINO, CA 92408

RIVERSIDE COUNTY
TRANSPORTATION COMMISSION
4080 LEMON STREET
RIVERSIDE, CA 92502

Caltrans Metric

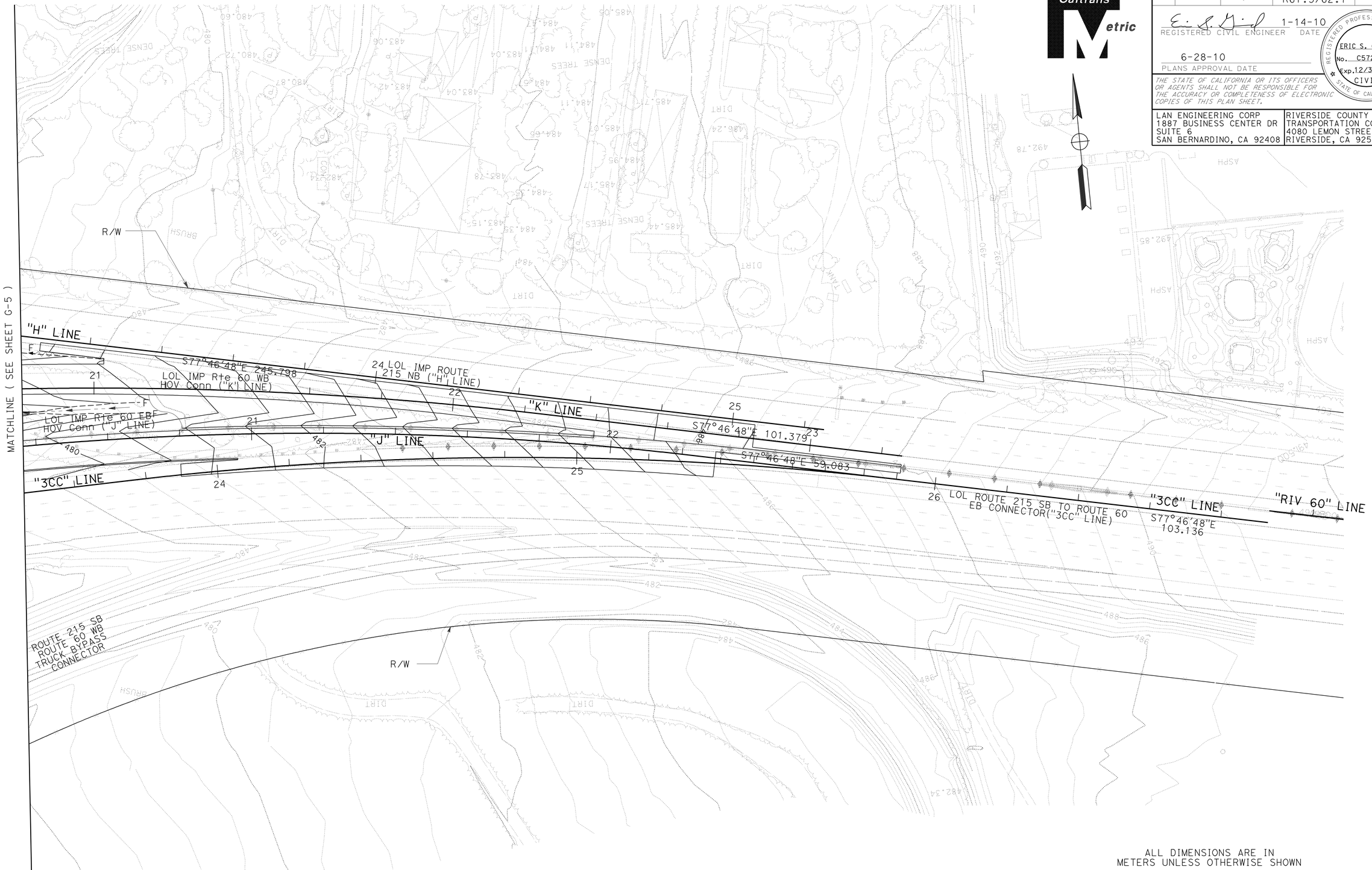

NOTE:
FOR COMPLETE RIGHT OF WAY AND ACCURATE ACCESS DATA, SEE RIGHT OF WAY RECORD MAPS AT DISTRICT OFFICE.

THIS PLAN IS ACCURATE FOR CONTOUR GRADING WORK ONLY

ALL DIMENSIONS ARE IN
METERS UNLESS OTHERWISE SHOWN

CONTOUR GRADING

SCALE 1:500

G-6

STATE OF CALIFORNIA - DEPARTMENT OF TRANSPORTATION
Caltrans

CONSULTANT FUNCTIONAL SUPERVISOR: NORMAN SUYDAM
CALCULATED-DESIGNED BY: ERIC GIROD
CHECKED BY: NORMAN SUYDAM
REVISED BY
DATE REVISED

LAST REVISION 11-09-09
DATE PLOTTED => 19-OCT-2010
TIME PLOTTED => 15:42

NOTE:
FOR COMPLETE RIGHT OF WAY AND ACCURATE ACCESS DATA, SEE RIGHT OF WAY RECORD MAPS AT DISTRICT OFFICE.

Dist	COUNTY	ROUTE	KILOMETER POST TOTAL PROJECT	SHEET No.	TOTAL SHEETS
08	Riv	60,215	R19.7/21.9, R61.3/62.7	86	594

Caltrans Metric

REGISTERED CIVIL ENGINEER 1-14-10 DATE

6-28-10
PLANS APPROVAL DATE

REGISTERED PROFESSIONAL ENGINEER
ERIC S. GIROD
No. C57288
Exp.12/31/11
CIVIL
STATE OF CALIFORNIA

THE STATE OF CALIFORNIA OR ITS OFFICERS OR AGENTS SHALL NOT BE RESPONSIBLE FOR THE ACCURACY OR COMPLETENESS OF ELECTRONIC COPIES OF THIS PLAN SHEET.

LAN ENGINEERING CORP
1887 BUSINESS CENTER DR
SUITE 6
SAN BERNARDINO, CA 92408

RIVERSIDE COUNTY
TRANSPORTATION COMMISSION
4080 LEMON STREET
RIVERSIDE, CA 92502

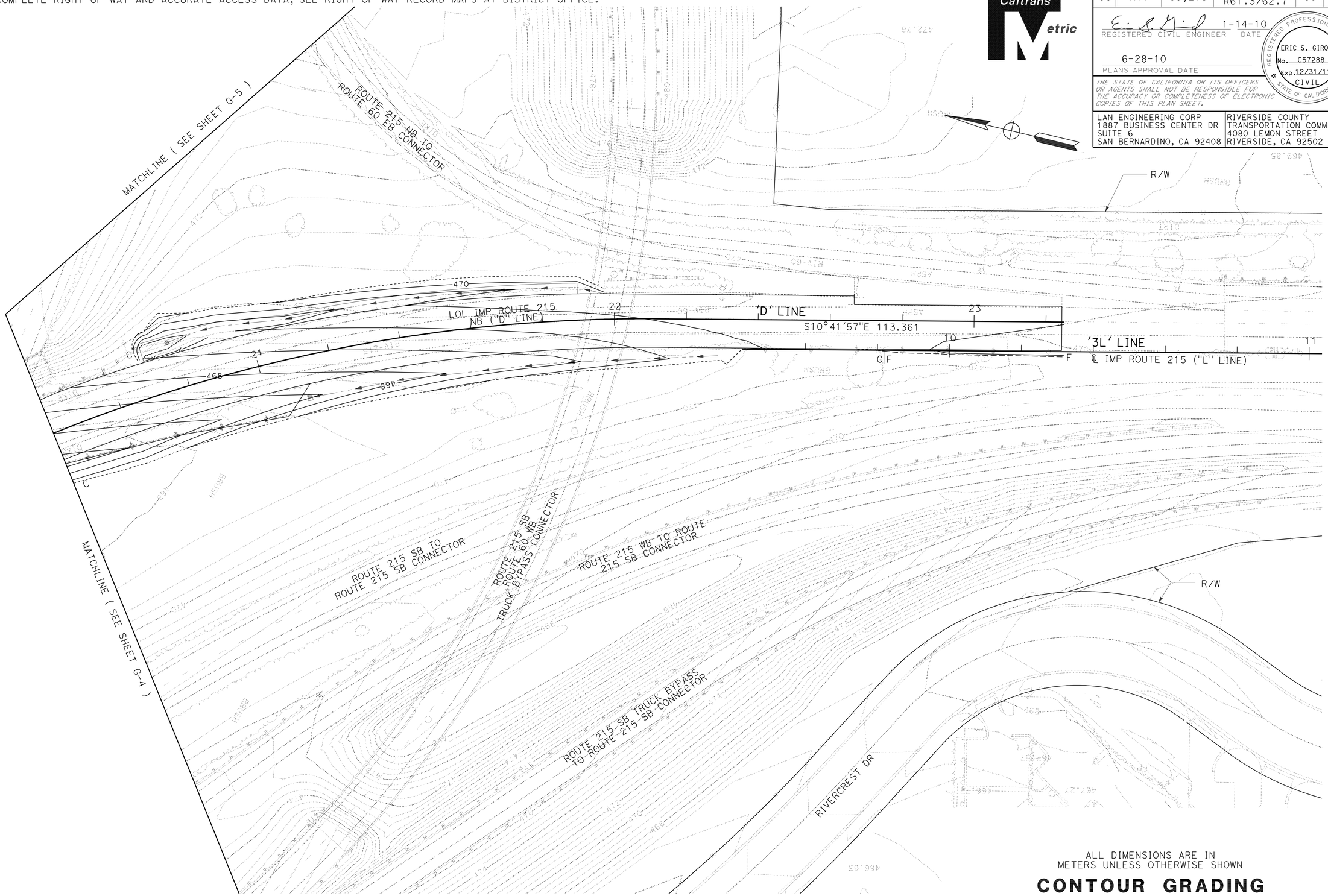

ALL DIMENSIONS ARE IN METERS UNLESS OTHERWISE SHOWN

CONTOUR GRADING

SCALE 1:500 **G-7**

THIS PLAN IS ACCURATE FOR CONTOUR GRADING WORK ONLY

REVISED BY	DATE REVISED
ERIC GIROD	
NORMAN SUYDAM	
CALCULATED-DESIGNED BY	
CHECKED BY	
CONSULTANT FUNCTIONAL SUPERVISOR	
NORMAN SUYDAM	

STATE OF CALIFORNIA - DEPARTMENT OF TRANSPORTATION
Caltrans

LAST REVISION 11-09-09
DATE PLOTTED => 19-OCT-2010
TIME PLOTTED => 15:42

Dist	COUNTY	ROUTE	KILOMETER POST TOTAL PROJECT	SHEET No.	TOTAL SHEETS
08	Riv	60,215	R19.7/21.9, R61.3/62.7	87	594

Robert Wong 1-14-10
REGISTERED CIVIL ENGINEER DATE

6-28-10
PLANS APPROVAL DATE

REGISTERED PROFESSIONAL ENGINEER ROBERT WONG No. C64734 Exp.06/30/11 CIVIL STATE OF CALIFORNIA

THE STATE OF CALIFORNIA OR ITS OFFICERS OR AGENTS SHALL NOT BE RESPONSIBLE FOR THE ACCURACY OR COMPLETENESS OF ELECTRONIC COPIES OF THIS PLAN SHEET.

LAN ENGINEERING CORP
1887 BUSINESS CENTER DR
SUITE 6
SAN BERNARDINO, CA 92408

RIVERSIDE COUNTY
TRANSPORTATION COMMISSION
4080 LEMON STREET
RIVERSIDE, CA 92502

DRAINAGE CURVE DATA

NO.	R	Δ	T	L
1	6.860	48°15'48"	3.073	5.778
2	6.858	69°59'13"	4.801	8.377
3	27.432	8°3'20"	1.932	3.857
4	879.605	03°39'28"	28.087	56.154

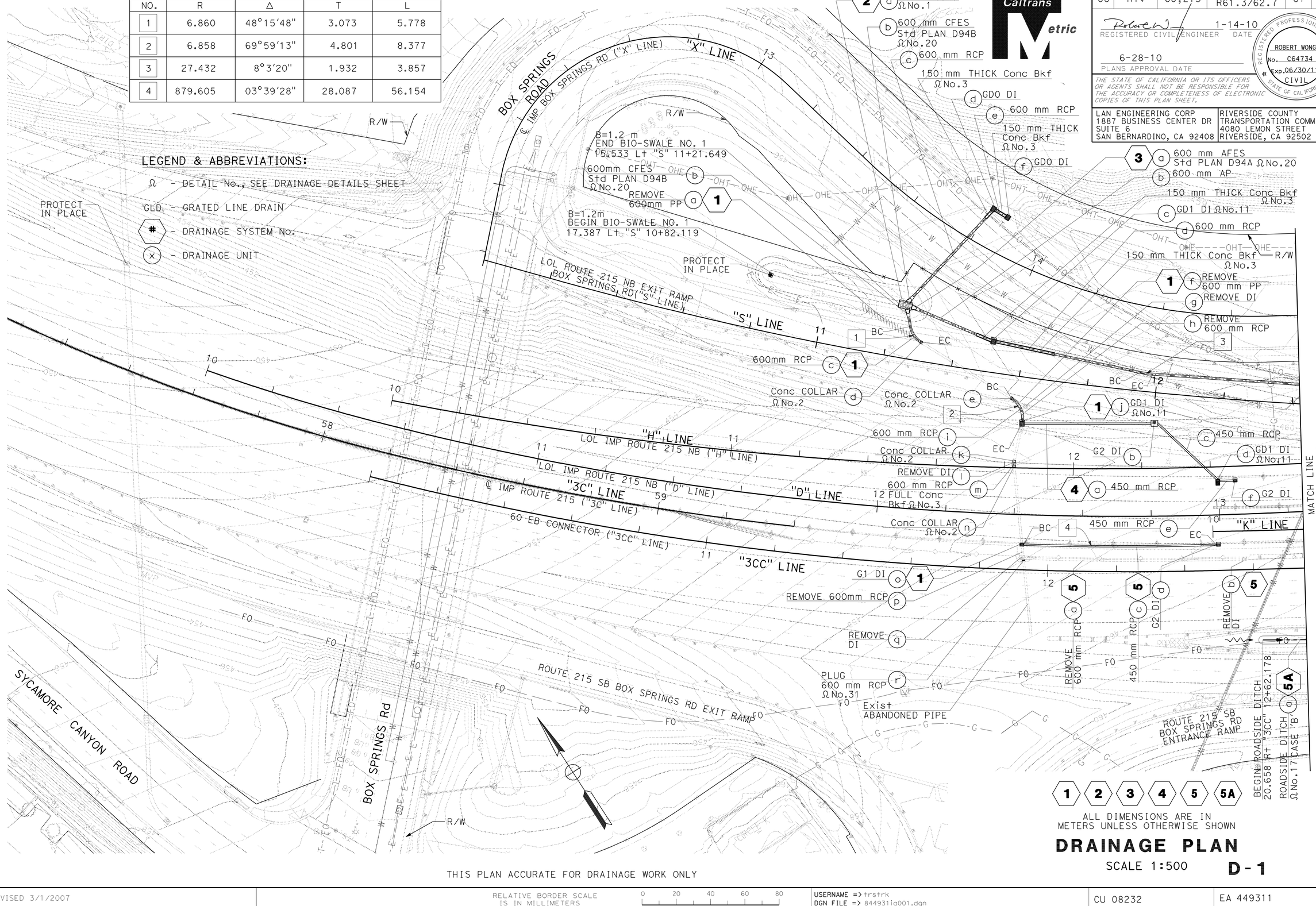

ALL DIMENSIONS ARE IN METERS UNLESS OTHERWISE SHOWN

DRAINAGE PLAN

SCALE 1:500 **D-1**

THIS PLAN ACCURATE FOR DRAINAGE WORK ONLY

STATE OF CALIFORNIA - DEPARTMENT OF TRANSPORTATION
Caltrans

CONSULTANT FUNCTIONAL SUPERVISOR: NORMAN SUYDAM
CALCULATED-DESIGNED BY: ROBERT WONG
CHECKED BY: NORMAN SUYDAM
REVISED BY / DATE REVISED

LAST REVISION 11-09-09
DATE PLOTTED => 19-OCT-2010
TIME PLOTTED => 15:42

Dist	COUNTY	ROUTE	KILOMETER POST TOTAL PROJECT	SHEET No.	TOTAL SHEETS
08	Riv	60,215	R19.7/21.9, R61.3/62.7	88	594

Robert Wong 1-14-10
REGISTERED CIVIL ENGINEER DATE

6-28-10
PLANS APPROVAL DATE

REGISTERED PROFESSIONAL ENGINEER ROBERT WONG No. C64734 Exp.06/30/11 CIVIL STATE OF CALIFORNIA

THE STATE OF CALIFORNIA OR ITS OFFICERS OR AGENTS SHALL NOT BE RESPONSIBLE FOR THE ACCURACY OR COMPLETENESS OF ELECTRONIC COPIES OF THIS PLAN SHEET.

LAN ENGINEERING CORP
1887 BUSINESS CENTER DR
SUITE 6
SAN BERNARDINO, CA 92408

RIVERSIDE COUNTY
TRANSPORTATION COMMISSION
4080 LEMON STREET
RIVERSIDE, CA 92502

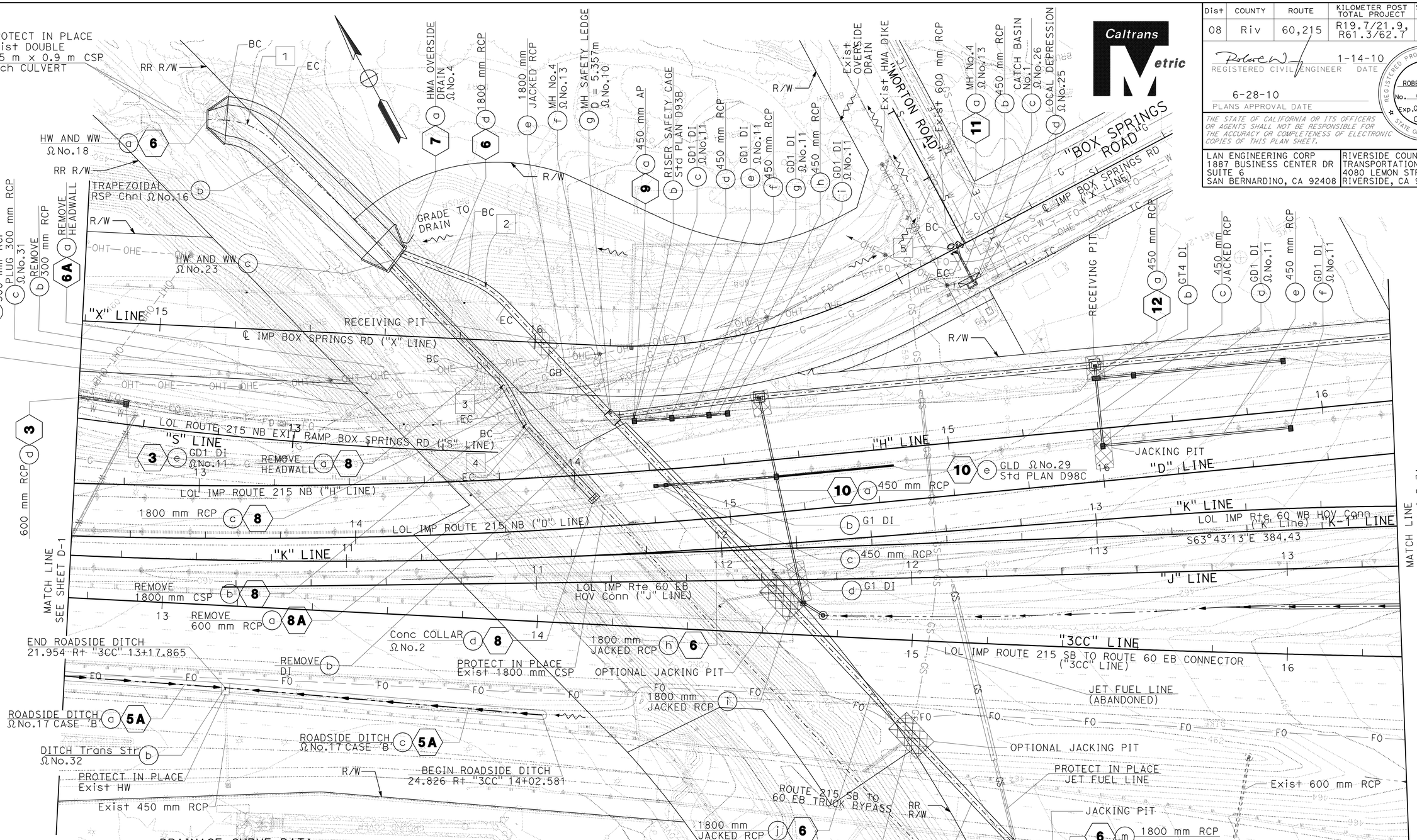

DRAINAGE CURVE DATA

NO.	R	Δ	T	L
1	20.000	41°08'32"	7.506	14.361
2	27.500	25°43'25"	6.279	12.346
3	13.500	14°42'58"	1.743	3.467
4	13.500	10°31'48"	1.244	2.481
5	6.750	21°01'06"	1.252	2.476

THIS PLAN ACCURATE FOR DRAINAGE WORK ONLY

ALL DIMENSIONS ARE IN METERS UNLESS OTHERWISE SHOWN

DRAINAGE PLAN

SCALE 1:500

D-2

STATE OF CALIFORNIA - DEPARTMENT OF TRANSPORTATION
Caltrans

CONSULTANT FUNCTIONAL SUPERVISOR: NORMAN SUYDAM
CALCULATED-DESIGNED BY: ROBERT WONG
CHECKED BY: NORMAN SUYDAM
REVISED BY / DATE REVISED

LAST REVISION 11-09-09 | DATE PLOTTED => 19-OCT-2010 | TIME PLOTTED => 15:43

Dist	COUNTY	ROUTE	KILOMETER POST TOTAL PROJECT	SHEET No.	TOTAL SHEETS
08	Riv	60,215	R19.7/21.9, R61.3/62.7	89	594

Robert Wong 1-14-10
REGISTERED CIVIL ENGINEER DATE

6-28-10
PLANS APPROVAL DATE

REGISTERED PROFESSIONAL ENGINEER ROBERT WONG No. C64734 Exp.06/30/11 CIVIL STATE OF CALIFORNIA

THE STATE OF CALIFORNIA OR ITS OFFICERS OR AGENTS SHALL NOT BE RESPONSIBLE FOR THE ACCURACY OR COMPLETENESS OF ELECTRONIC COPIES OF THIS PLAN SHEET.

LAN ENGINEERING CORP
1887 BUSINESS CENTER DR
SUITE 6
SAN BERNARDINO, CA 92408

RIVERSIDE COUNTY
TRANSPORTATION COMMISSION
4080 LEMON STREET
RIVERSIDE, CA 92502

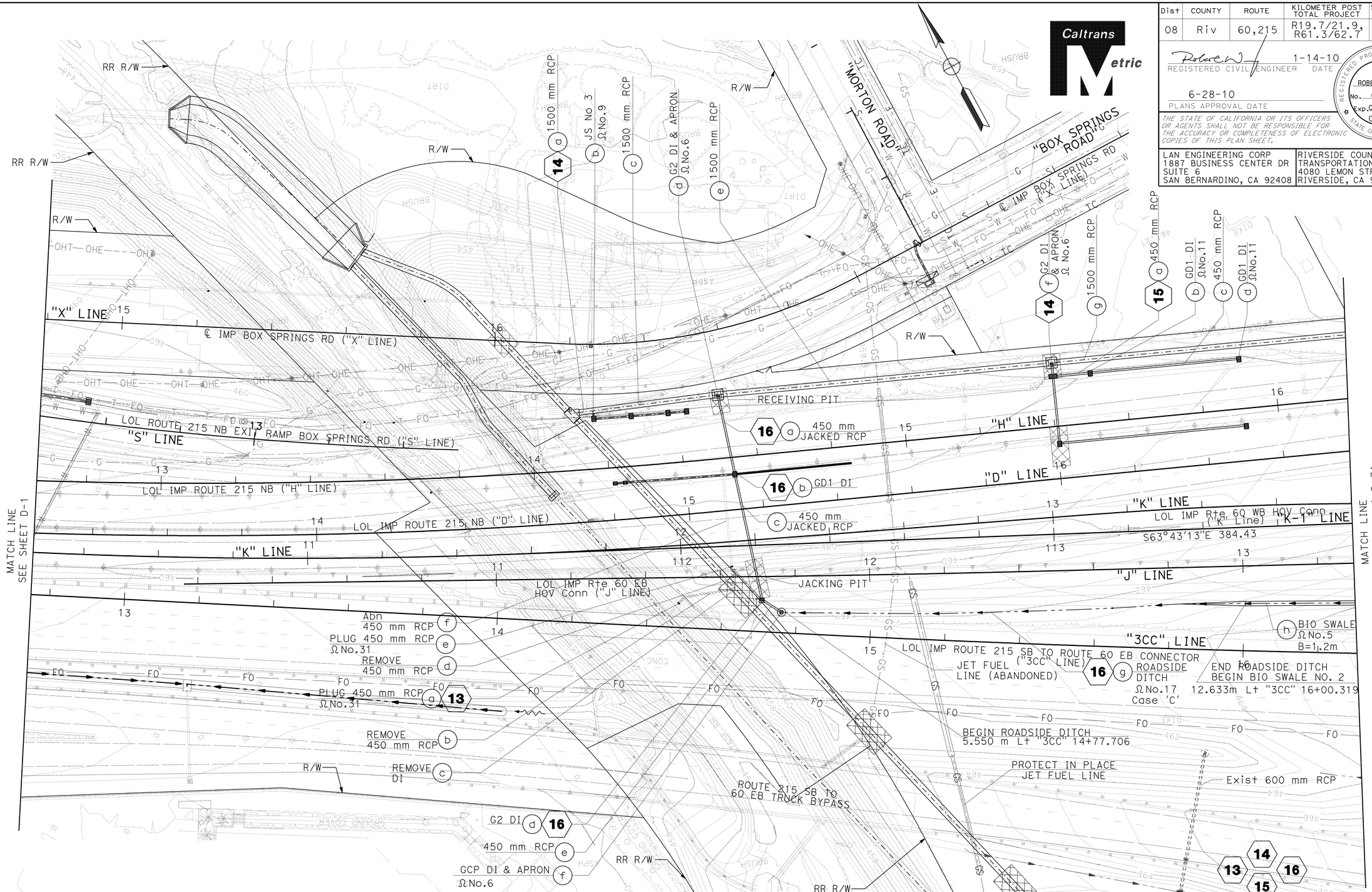

ALL DIMENSIONS ARE IN METERS UNLESS OTHERWISE SHOWN

DRAINAGE PLAN

SCALE 1:500

D-2A

THIS PLAN ACCURATE FOR DRAINAGE WORK ONLY

STATE OF CALIFORNIA - DEPARTMENT OF TRANSPORTATION

Caltrans

CONSULTANT FUNCTIONAL SUPERVISOR: NORMAN SUYDAM

CALCULATED-DESIGNED BY: ROBERT WONG

CHECKED BY: NORMAN SUYDAM

REVISED BY / DATE REVISED

LAST REVISION 11-09-09 | DATE PLOTTED => 19-OCT-2010 | TIME PLOTTED => 15:43

Dist	COUNTY	ROUTE	KILOMETER POST TOTAL PROJECT	SHEET No.	TOTAL SHEETS
08	Riv	60,215	R19.7/21.9, R61.3/62.7	90	594

Robert W 1-14-10
REGISTERED CIVIL ENGINEER DATE

6-28-10
PLANS APPROVAL DATE

REGISTERED PROFESSIONAL ENGINEER ROBERT WONG No. C64734 Exp.06/30/11 CIVIL STATE OF CALIFORNIA

THE STATE OF CALIFORNIA OR ITS OFFICERS OR AGENTS SHALL NOT BE RESPONSIBLE FOR THE ACCURACY OR COMPLETENESS OF ELECTRONIC COPIES OF THIS PLAN SHEET.

LAN ENGINEERING CORP
1887 BUSINESS CENTER DR
SUITE 6
SAN BERNARDINO, CA 92408

RIVERSIDE COUNTY
TRANSPORTATION COMMISSION
4080 LEMON STREET
RIVERSIDE, CA 92502

Caltrans Metric

DRAINAGE CURVE DATA

NO.	R	Δ	T	L
1	13.715	37°06'15"	4.603	8.882
2	13.716	12°18'50"	1.480	2.948
3	6.858	40°45'48"	2.548	4.879
4	300.000	07°19'57"	19.222	38.392
5	13.716	27°22'56"	3.341	6.555
6	27.432	21°11'29"	5.132	10.146
7	219.450	05°44'28"	11.004	21.989
8	409.000	08°06'51"	29.010	57.923
9	13.716	17°10'50"	2.072	4.113
10	13.716	20°21'34"	2.463	4.874
11	13.716	16°04'41"	1.937	3.849
12	13.716	14°52'29"	1.790	3.561

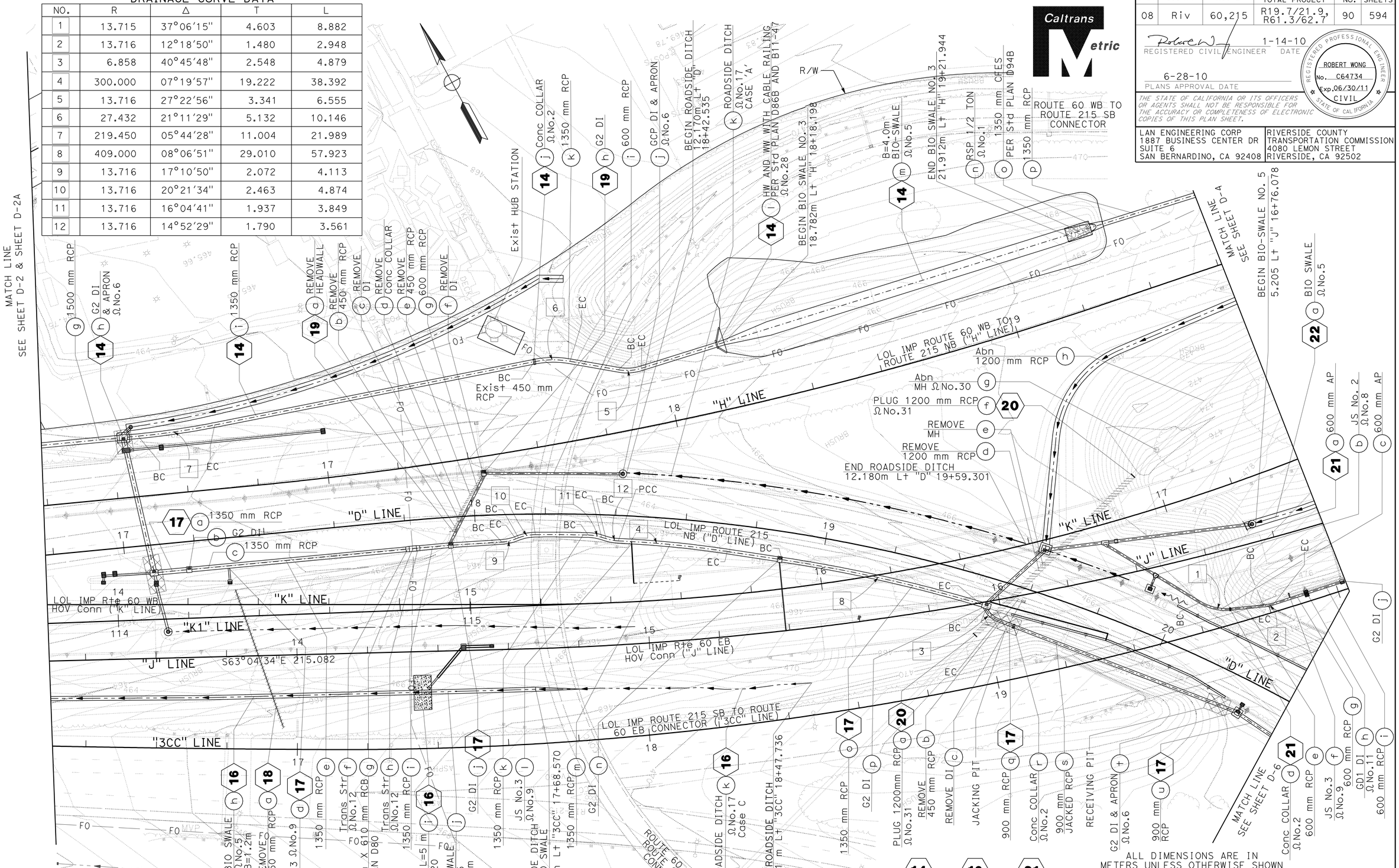

ALL DIMENSIONS ARE IN METERS UNLESS OTHERWISE SHOWN

THIS PLAN ACCURATE FOR DRAINAGE WORK ONLY

DRAINAGE PLAN

SCALE 1:500

D-3

ROBERT WONG	REVISED BY
NORMAN SUYDAM	DATE REVISED
CALCULATED-DESIGNED BY	
CHECKED BY	
SUPERVISOR	CONSULTANT FUNCTIONAL SUPERVISOR
NORMAN SUYDAM	

STATE OF CALIFORNIA - DEPARTMENT OF TRANSPORTATION

Caltrans

LAST REVISION 11-09-09 DATE PLOTTED => 19-OCT-2010 TIME PLOTTED => 15:43

Dist	COUNTY	ROUTE	KILOMETER POST TOTAL PROJECT	SHEET No.	TOTAL SHEETS
08	Riv	60,215	R19.7/21.9, R61.3/62.7	91	594

Robert W 1-14-10
REGISTERED CIVIL ENGINEER DATE

6-28-10
PLANS APPROVAL DATE

REGISTERED PROFESSIONAL ENGINEER ROBERT WONG No. C64734 Exp.06/30/11 CIVIL STATE OF CALIFORNIA

THE STATE OF CALIFORNIA OR ITS OFFICERS OR AGENTS SHALL NOT BE RESPONSIBLE FOR THE ACCURACY OR COMPLETENESS OF ELECTRONIC COPIES OF THIS PLAN SHEET.

LAN ENGINEERING CORP
1887 BUSINESS CENTER DR
SUITE 6
SAN BERNARDINO, CA 92408

RIVERSIDE COUNTY
TRANSPORTATION COMMISSION
4080 LEMON STREET
RIVERSIDE, CA 92502

Caltrans Metric

DRAINAGE CURVE DATA

NO.	R	Δ	T	L
1	30.000	61°38'32"	17.890	32.276
2	307.301	23°01'10"	62.575	123.462

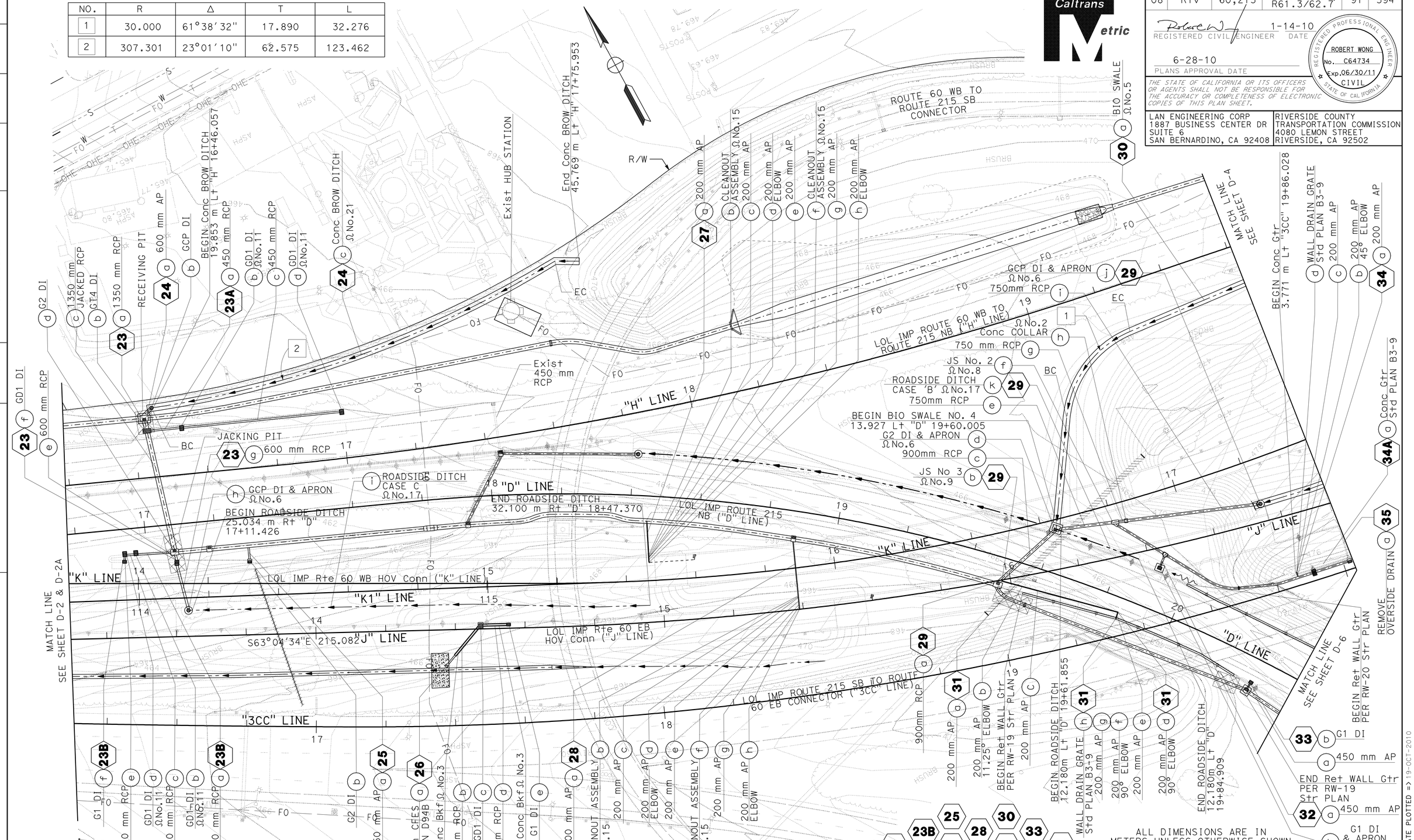

ALL DIMENSIONS ARE IN METERS UNLESS OTHERWISE SHOWN

THIS PLAN ACCURATE FOR DRAINAGE WORK ONLY

DRAINAGE PLAN

SCALE 1:500

D-3A

STATE OF CALIFORNIA - DEPARTMENT OF TRANSPORTATION

Caltrans

CONSULTANT FUNCTIONAL SUPERVISOR: NORMAN SUYDAM

CALCULATED-DESIGNED BY: ROBERT WONG

CHECKED BY: NORMAN SUYDAM

REVISED BY / DATE REVISED

LAST REVISION 11-09-09 DATE PLOTTED => 19-OCT-2010 TIME PLOTTED => 15:44

BORDER LAST REVISED 3/1/2007

RELATIVE BORDER SCALE IS IN MILLIMETERS 0 20 40 60 80

USERNAME => trstrk
DGN FILE => 8449311a003a.dgn

CU 08232

EA 449311

Dist	COUNTY	ROUTE	KILOMETER POST TOTAL PROJECT	SHEET No.	TOTAL SHEETS
08	Riv	60,215	R19.7/21.9, R61.3/62.7	92	594

REGISTERED CIVIL ENGINEER 1-14-10 DATE

6-28-10
PLANS APPROVAL DATE

REGISTERED PROFESSIONAL ENGINEER ROBERT WONG No. C64734 Exp.06/30/11 CIVIL STATE OF CALIFORNIA

THE STATE OF CALIFORNIA OR ITS OFFICERS OR AGENTS SHALL NOT BE RESPONSIBLE FOR THE ACCURACY OR COMPLETENESS OF ELECTRONIC COPIES OF THIS PLAN SHEET.

LAN ENGINEERING CORP
1887 BUSINESS CENTER DR
SUITE 6
SAN BERNARDINO, CA 92408

RIVERSIDE COUNTY
TRANSPORTATION COMMISSION
4080 LEMON STREET
RIVERSIDE, CA 92502

Caltrans Metric

DRAINAGE CURVE DATA

NO.	R	Δ	T	L
1	13.715	36°41'08"	4.547	8.782
2	6.858	38°17'38"	2.381	4.584
3	40.000	8°47'07"	3.073	6.133

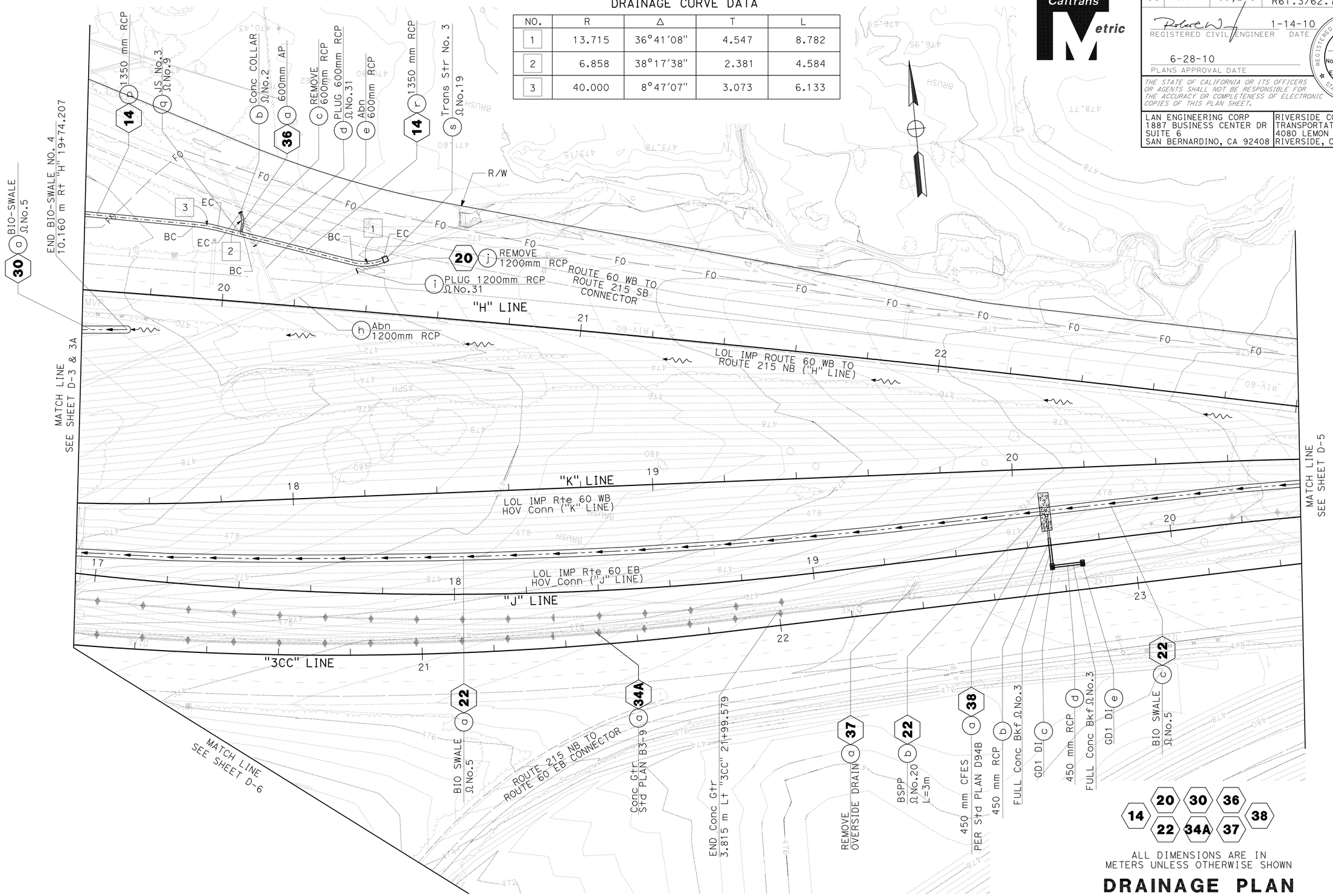

14 20 30 36 38
22 34A 37

ALL DIMENSIONS ARE IN METERS UNLESS OTHERWISE SHOWN

DRAINAGE PLAN

SCALE 1:500

D-4

THIS PLAN ACCURATE FOR DRAINAGE WORK ONLY

ROBERT WONG	REVISED BY		
NORMAN SUYDAM	DATE REVISED		
CALCULATED-DESIGNED BY			
CHECKED BY			
CONSULTANT FUNCTIONAL SUPERVISOR			
NORMAN SUYDAM			

STATE OF CALIFORNIA - DEPARTMENT OF TRANSPORTATION
Caltrans

LAST REVISION 11-09-09
DATE PLOTTED => 19-OCT-2010
TIME PLOTTED => 15:44

Dist	COUNTY	ROUTE	KILOMETER POST TOTAL PROJECT	SHEET No.	TOTAL SHEETS
08	Riv	60,215	R19.7/21.9, R61.3/62.7	93	594

Robert Wong 1-14-10
REGISTERED CIVIL ENGINEER DATE

6-28-10
PLANS APPROVAL DATE

REGISTERED PROFESSIONAL ENGINEER
ROBERT WONG
No. C64734
Exp.06/30/11
CIVIL
STATE OF CALIFORNIA

THE STATE OF CALIFORNIA OR ITS OFFICERS OR AGENTS SHALL NOT BE RESPONSIBLE FOR THE ACCURACY OR COMPLETENESS OF ELECTRONIC COPIES OF THIS PLAN SHEET.

LAN ENGINEERING CORP
1887 BUSINESS CENTER DR
SUITE 6
SAN BERNARDINO, CA 92408

RIVERSIDE COUNTY
TRANSPORTATION COMMISSION
4080 LEMON STREET
RIVERSIDE, CA 92502

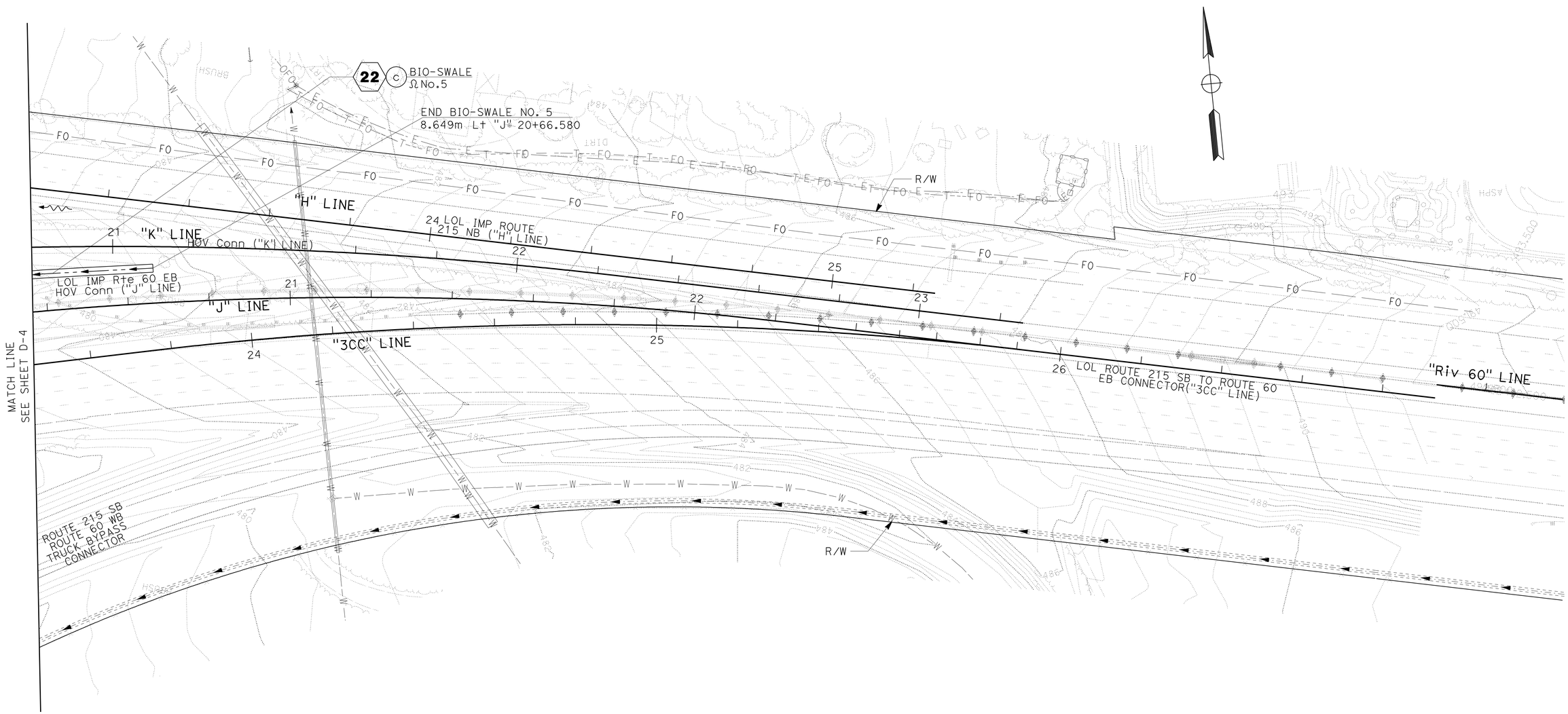

22

ALL DIMENSIONS ARE IN
METERS UNLESS OTHERWISE SHOWN

DRAINAGE PLAN

SCALE 1:500 **D-5**

THIS PLAN ACCURATE FOR DRAINAGE WORK ONLY

STATE OF CALIFORNIA - DEPARTMENT OF TRANSPORTATION
Caltrans

CONSULTANT FUNCTIONAL SUPERVISOR: NORMAN SUYDAM
CALCULATED-DESIGNED BY: ROBERT WONG
CHECKED BY: NORMAN SUYDAM
REVISED BY
DATE REVISED

LAST REVISION 11-09-09
DATE PLOTTED => 19-OCT-2010
TIME PLOTTED => 15:44

Dist	COUNTY	ROUTE	KILOMETER POST TOTAL PROJECT	SHEET No.	TOTAL SHEETS
08	Riv	60,215	R19.7/21.9, R61.3/62.7	94	594

REGISTERED CIVIL ENGINEER 1-14-10 DATE

6-28-10
PLANS APPROVAL DATE

REGISTERED PROFESSIONAL ENGINEER
ROBERT WONG
No. C64734
Exp.06/30/11
CIVIL
STATE OF CALIFORNIA

THE STATE OF CALIFORNIA OR ITS OFFICERS OR AGENTS SHALL NOT BE RESPONSIBLE FOR THE ACCURACY OR COMPLETENESS OF ELECTRONIC COPIES OF THIS PLAN SHEET.

LAN ENGINEERING CORP
1887 BUSINESS CENTER DR
SUITE 6
SAN BERNARDINO, CA 92408

RIVERSIDE COUNTY
TRANSPORTATION COMMISSION
4080 LEMON STREET
RIVERSIDE, CA 92502

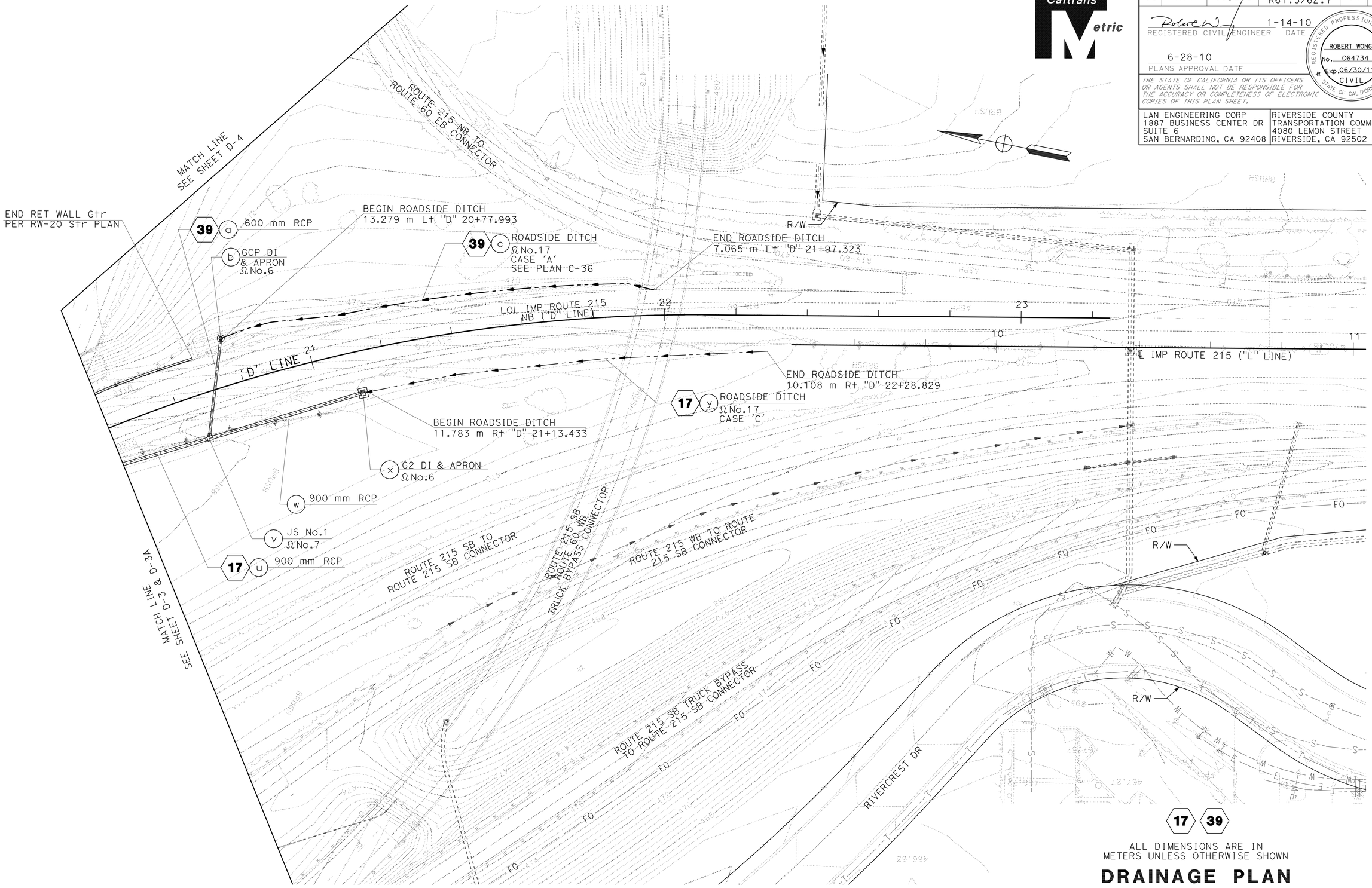

17 39

ALL DIMENSIONS ARE IN
METERS UNLESS OTHERWISE SHOWN

DRAINAGE PLAN

SCALE 1:500

D-6

THIS PLAN ACCURATE FOR DRAINAGE WORK ONLY

STATE OF CALIFORNIA - DEPARTMENT OF TRANSPORTATION
Caltrans

CONSULTANT FUNCTIONAL SUPERVISOR: NORMAN SUYDAM
CALCULATED-DESIGNED BY: ROBERT WONG
CHECKED BY: NORMAN SUYDAM
REVISED BY
DATE REVISED

LAST REVISION
DATE PLOTTED => 19-OCT-2010
TIME PLOTTED => 15:44
11-09-09

Dist	COUNTY	ROUTE	KILOMETER POST TOTAL PROJECT	SHEET No.	TOTAL SHEETS
08	Riv	60,215	R19.7/21.9, R61.3/62.7	95	594

Caltrans Metric

REGISTERED CIVIL ENGINEER 1-14-10 DATE

6-28-10
PLANS APPROVAL DATE

REGISTERED PROFESSIONAL ENGINEER ROBERT WONG No. C64734 Exp.06/30/11 CIVIL STATE OF CALIFORNIA

THE STATE OF CALIFORNIA OR ITS OFFICERS OR AGENTS SHALL NOT BE RESPONSIBLE FOR THE ACCURACY OR COMPLETENESS OF ELECTRONIC COPIES OF THIS PLAN SHEET.

LAN ENGINEERING CORP
1887 BUSINESS CENTER DR
SUITE 6
SAN BERNARDINO, CA 92408

RIVERSIDE COUNTY
TRANSPORTATION COMMISSION
4080 LEMON STREET
RIVERSIDE, CA 92502

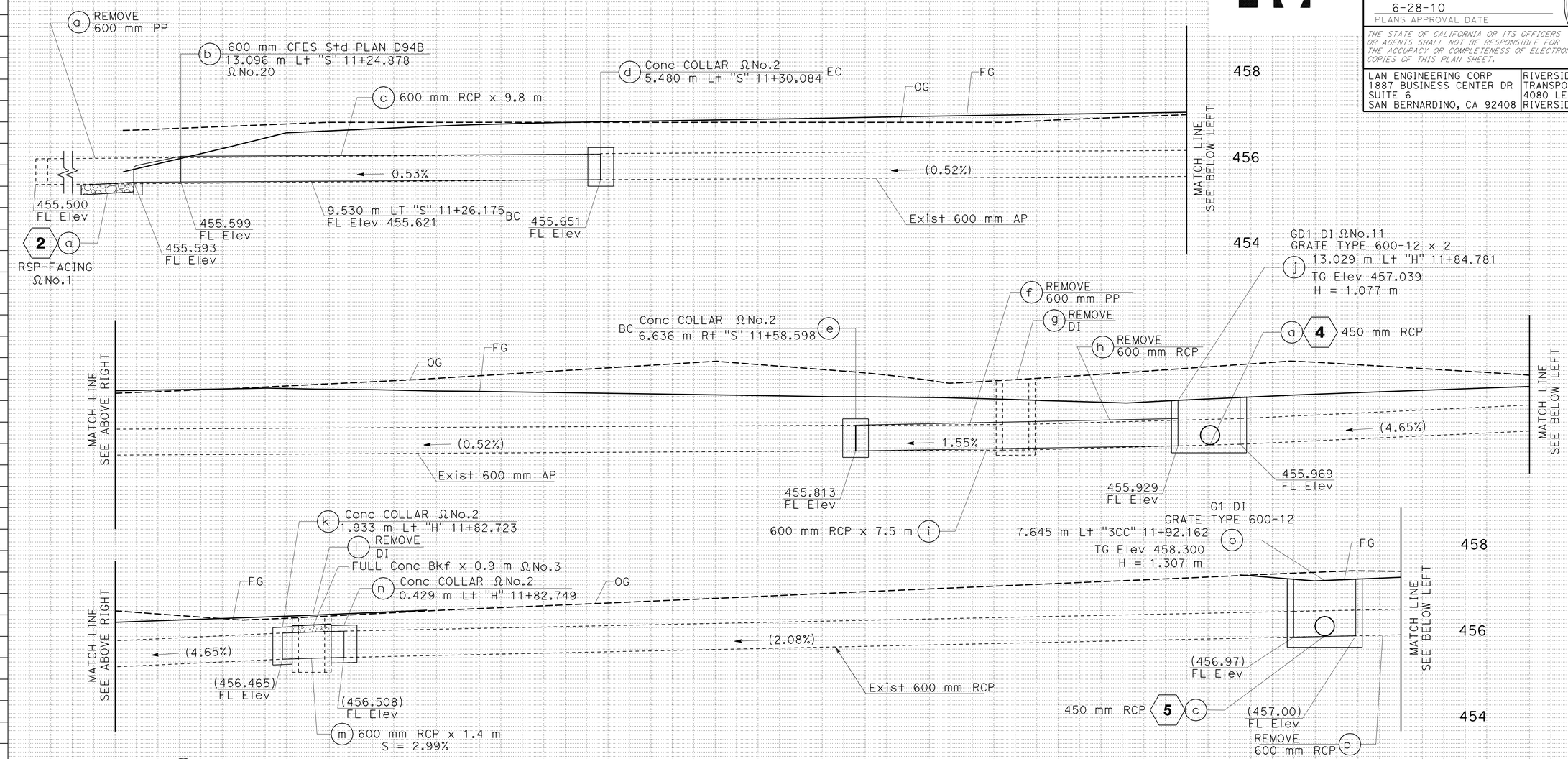

1

ALL DIMENSIONS ARE IN METERS UNLESS OTHERWISE SHOWN

DRAINAGE PROFILE

SCALE: HORIZ 1:50
VERT 1:50

DP-1

DRAINAGE SYSTEM NO. 1

Station	
m^3	Exc
	Emb

REVISED BY | DATE REVISED
ROBERT WONG | NORMAN SUYDAM
CALCULATED-DESIGNED BY | CHECKED BY
NORMAN SUYDAM
CONSULTANT FUNCTIONAL SUPERVISOR

STATE OF CALIFORNIA - DEPARTMENT OF TRANSPORTATION
Caltrans

LAST REVISION 11-09-09 | DATE PLOTTED => 19-OCT-2010 | TIME PLOTTED => 15:44

Dist	COUNTY	ROUTE	KILOMETER POST TOTAL PROJECT	SHEET No.	TOTAL SHEETS
08	Riv	60,215	R19.7/21.9, R61.3/62.7	96	594

Robert Wong 1-14-10
REGISTERED CIVIL ENGINEER DATE

6-28-10
PLANS APPROVAL DATE

REGISTERED PROFESSIONAL ENGINEER
ROBERT WONG
No. C64734
Exp.06/30/11
CIVIL
STATE OF CALIFORNIA

THE STATE OF CALIFORNIA OR ITS OFFICERS OR AGENTS SHALL NOT BE RESPONSIBLE FOR THE ACCURACY OR COMPLETENESS OF ELECTRONIC COPIES OF THIS PLAN SHEET.

LAN ENGINEERING CORP
1887 BUSINESS CENTER DR
SUITE 6
SAN BERNARDINO, CA 92408

RIVERSIDE COUNTY
TRANSPORTATION COMMISSION
4080 LEMON STREET
RIVERSIDE, CA 92502

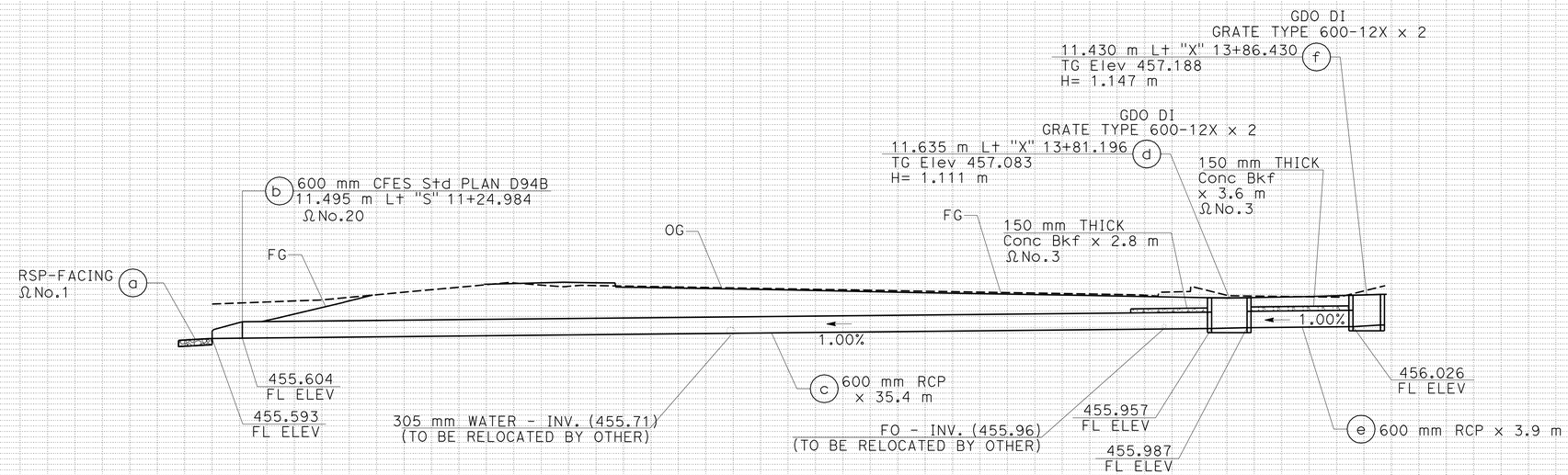

DRAINAGE SYSTEM NO. 2

2

ALL DIMENSIONS ARE IN
METERS UNLESS OTHERWISE SHOWN

DRAINAGE PROFILE

SCALE: HORIZ 1:100
VERT 1:100

DP-2

REVISED BY | DATE REVISED
ROBERT WONG | NORMAN SUYDAM
CALCULATED-DESIGNED BY | CHECKED BY
CONSULTANT FUNCTIONAL SUPERVISOR | NORMAN SUYDAM
STATE OF CALIFORNIA - DEPARTMENT OF TRANSPORTATION
Caltrans

Station
m^3 Exc
Emb

LAST REVISION 11-09-09
DATE PLOTTED => 19-OCT-2010
TIME PLOTTED => 15:44

Dist	COUNTY	ROUTE	KILOMETER POST TOTAL PROJECT	SHEET No.	TOTAL SHEETS
08	Riv	60,215	R19.7/21.9, R61.3/62.7	97	594

REGISTERED CIVIL ENGINEER 1-14-10 DATE

6-28-10
PLANS APPROVAL DATE

REGISTERED PROFESSIONAL ENGINEER ROBERT WONG No. C64734 Exp.06/30/11 CIVIL STATE OF CALIFORNIA

THE STATE OF CALIFORNIA OR ITS OFFICERS OR AGENTS SHALL NOT BE RESPONSIBLE FOR THE ACCURACY OR COMPLETENESS OF ELECTRONIC COPIES OF THIS PLAN SHEET.

LAN ENGINEERING CORP
1887 BUSINESS CENTER DR
SUITE 6
SAN BERNARDINO, CA 92408

RIVERSIDE COUNTY
TRANSPORTATION COMMISSION
4080 LEMON STREET
RIVERSIDE, CA 92502

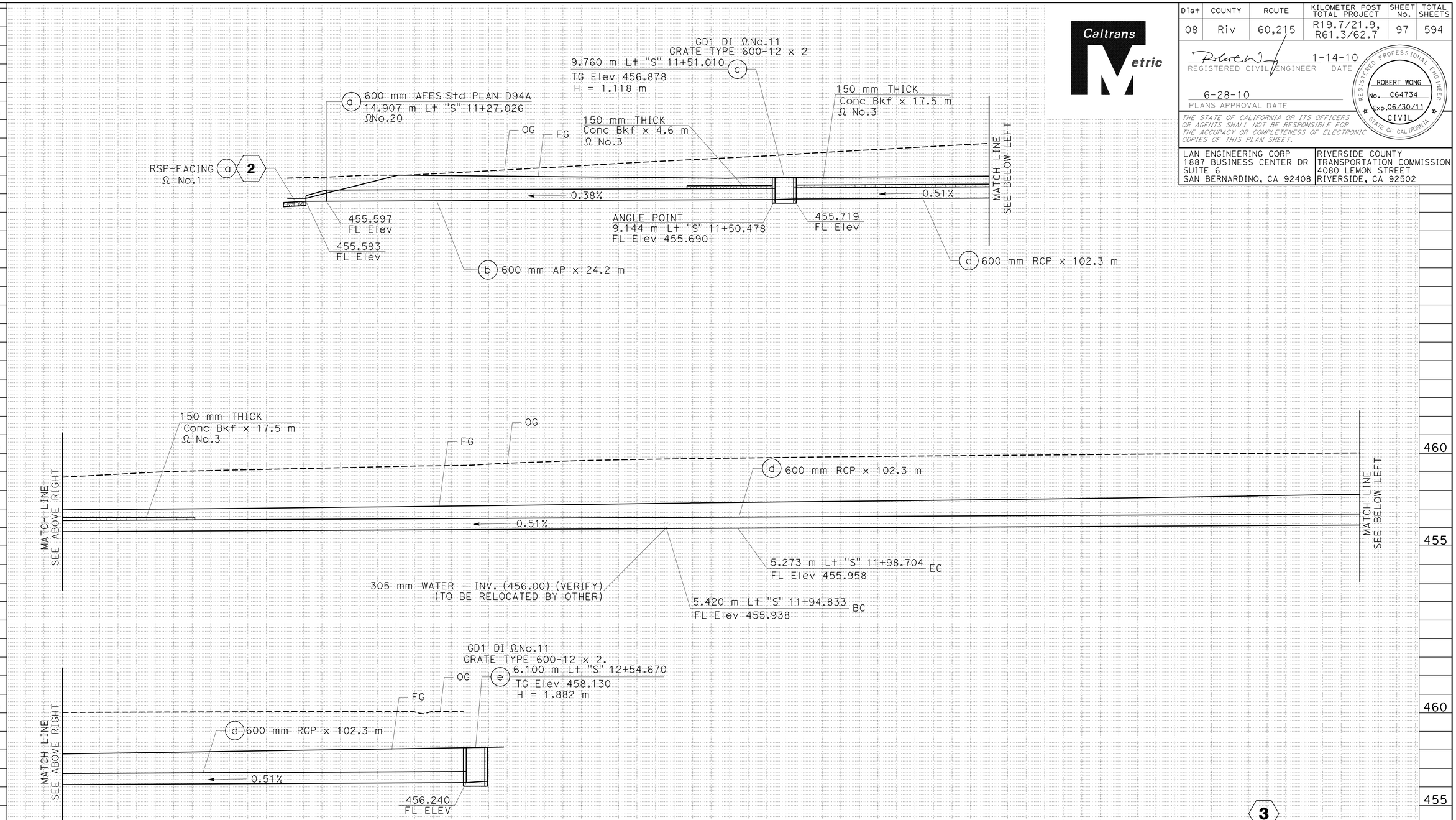

DRAINAGE SYSTEM NO. 3

3

ALL DIMENSIONS ARE IN METERS UNLESS OTHERWISE SHOWN

DRAINAGE PROFILE

SCALE: HORIZ 1:100
VERT 1:100

DP-3

STATE OF CALIFORNIA - DEPARTMENT OF TRANSPORTATION
Caltrans

CONSULTANT FUNCTIONAL SUPERVISOR: NORMAN SUYDAM
CALCULATED-DESIGNED BY: ROBERT WONG
CHECKED BY: NORMAN SUYDAM
REVISED BY / DATE REVISED

Station
m³ Exc / Emb

LAST REVISION 11-09-09
DATE PLOTTED => 19-OCT-2010
TIME PLOTTED => 15:44

Dist	COUNTY	ROUTE	KILOMETER POST TOTAL PROJECT	SHEET No.	TOTAL SHEETS
08	Riv	60,215	R19.7/21.9, R61.3/62.7	98	594

Robert W 1-14-10
REGISTERED CIVIL ENGINEER DATE

6-28-10
PLANS APPROVAL DATE

REGISTERED PROFESSIONAL ENGINEER ROBERT WONG No. C64734 Exp.06/30/11 CIVIL STATE OF CALIFORNIA

THE STATE OF CALIFORNIA OR ITS OFFICERS OR AGENTS SHALL NOT BE RESPONSIBLE FOR THE ACCURACY OR COMPLETENESS OF ELECTRONIC COPIES OF THIS PLAN SHEET.

LAN ENGINEERING CORP
1887 BUSINESS CENTER DR
SUITE 6
SAN BERNARDINO, CA 92408

RIVERSIDE COUNTY
TRANSPORTATION COMMISSION
4080 LEMON STREET
RIVERSIDE, CA 92502

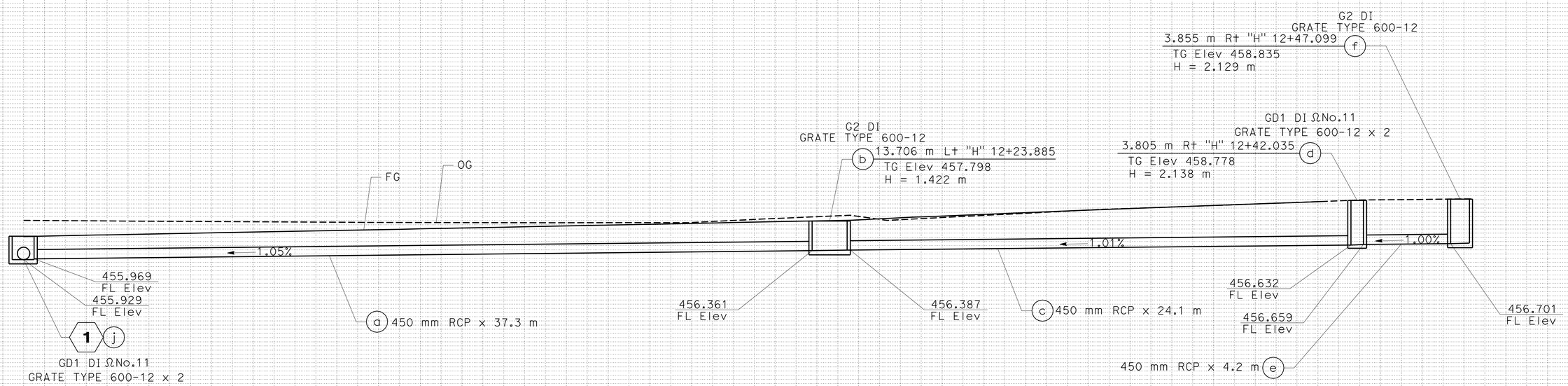

DRAINAGE SYSTEM NO. 4

4

ALL DIMENSIONS ARE IN METERS UNLESS OTHERWISE SHOWN

DRAINAGE PROFILE

SCALE: HORIZ 1:100
VERT 1:100

DP-4

Station	
m^3	Exc
	Emb

REVISED BY | DATE REVISED
ROBERT WONG | NORMAN SUYDAM
CALCULATED-DESIGNED BY | CHECKED BY
CONSULTANT FUNCTIONAL SUPERVISOR
NORMAN SUYDAM

STATE OF CALIFORNIA - DEPARTMENT OF TRANSPORTATION
Caltrans

LAST REVISION 11-09-09
DATE PLOTTED => 19-OCT-2010
TIME PLOTTED => 15:45

Dist	COUNTY	ROUTE	KILOMETER POST TOTAL PROJECT	SHEET No.	TOTAL SHEETS
08	Riv	60,215	R19.7/21.9, R61.3/62.7	99	594

Robert Wong 1-14-10
REGISTERED CIVIL ENGINEER DATE

6-28-10
PLANS APPROVAL DATE

REGISTERED PROFESSIONAL ENGINEER ROBERT WONG No. C64734 Exp.06/30/11 CIVIL STATE OF CALIFORNIA

THE STATE OF CALIFORNIA OR ITS OFFICERS OR AGENTS SHALL NOT BE RESPONSIBLE FOR THE ACCURACY OR COMPLETENESS OF ELECTRONIC COPIES OF THIS PLAN SHEET.

LAN ENGINEERING CORP
1887 BUSINESS CENTER DR
SUITE 6
SAN BERNARDINO, CA 92408

RIVERSIDE COUNTY
TRANSPORTATION COMMISSION
4080 LEMON STREET
RIVERSIDE, CA 92502

Caltrans Metric

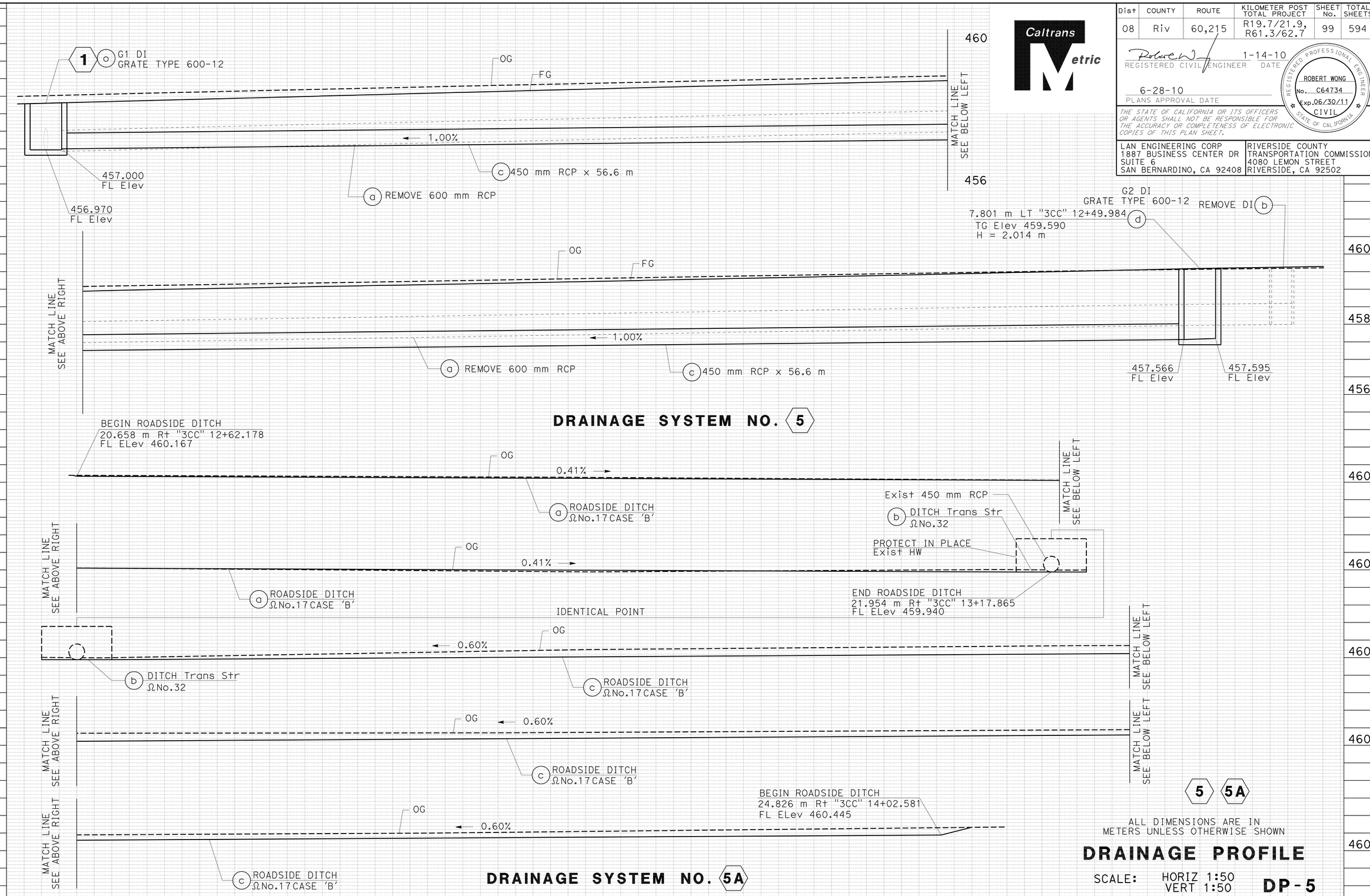

5 5A

ALL DIMENSIONS ARE IN METERS UNLESS OTHERWISE SHOWN

DRAINAGE PROFILE

SCALE: HORIZ 1:50
VERT 1:50

DP-5

Station	
m^3	Exc
	Emb

REVISED BY | DATE REVISED
ROBERT WONG | NORMAN SUYDAM
CALCULATED-DESIGNED BY | CHECKED BY
CONSULTANT FUNCTIONAL SUPERVISOR
NORMAN SUYDAM

STATE OF CALIFORNIA - DEPARTMENT OF TRANSPORTATION
Caltrans

LAST REVISION 11-09-09 DATE PLOTTED => 19-OCT-2010 TIME PLOTTED => 15:45

Dist	COUNTY	ROUTE	KILOMETER POST TOTAL PROJECT	SHEET No.	TOTAL SHEETS
08	Riv	60,215	R19.7/21.9, R61.3/62.7	100	594

Robert Wong 1-14-10
REGISTERED CIVIL ENGINEER DATE

6-28-10
PLANS APPROVAL DATE

REGISTERED PROFESSIONAL ENGINEER ROBERT WONG No. C64734 Exp.06/30/11 CIVIL STATE OF CALIFORNIA

THE STATE OF CALIFORNIA OR ITS OFFICERS OR AGENTS SHALL NOT BE RESPONSIBLE FOR THE ACCURACY OR COMPLETENESS OF ELECTRONIC COPIES OF THIS PLAN SHEET.

LAN ENGINEERING CORP
1887 BUSINESS CENTER DR
SUITE 6
SAN BERNARDINO, CA 92408

RIVERSIDE COUNTY
TRANSPORTATION COMMISSION
4080 LEMON STREET
RIVERSIDE, CA 92502

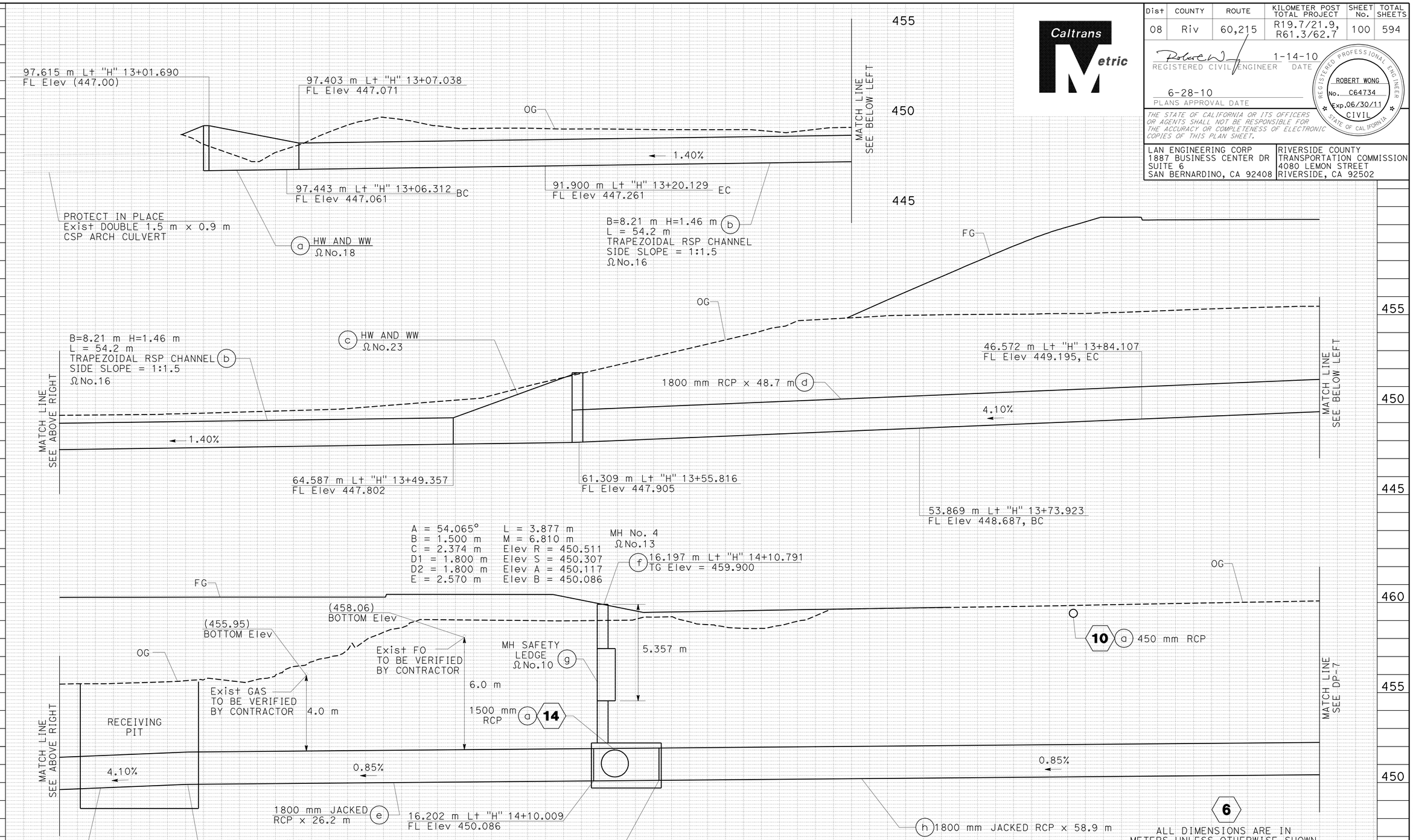

6

ALL DIMENSIONS ARE IN METERS UNLESS OTHERWISE SHOWN

DRAINAGE PROFILE

SCALE: HORIZ 1:50
VERT 1:50

DP-6

DRAINAGE SYSTEM NO. 6

Station	
m^3	Exc
	Emb

REVISED BY | DATE REVISED
ROBERT WONG | NORMAN SUYDAM
CALCULATED-DESIGNED BY | CHECKED BY
CONSULTANT FUNCTIONAL SUPERVISOR | NORMAN SUYDAM

STATE OF CALIFORNIA - DEPARTMENT OF TRANSPORTATION
Caltrans

LAST REVISION 11-09-09 DATE PLOTTED => 19-OCT-2010 TIME PLOTTED => 15:45