DIST.	COUNTY	ROUTE	MILE POST TOTAL PROJECT	SHEET NO.	TOTAL SHEETS
08	Riv	91	15.6/21.6	1901	2028

REGISTERED ENGINEER - CIVIL 11-30-10

4-25-11
PLANS APPROVAL DATE

REGISTERED PROFESSIONAL ENGINEER HUAN VU No. 60696 Exp. 12-31-10 CIVIL STATE OF CALIFORNIA

The State of California or its officers or agents shall not be responsible for the accuracy or completeness of electronic copies of this plan sheet.

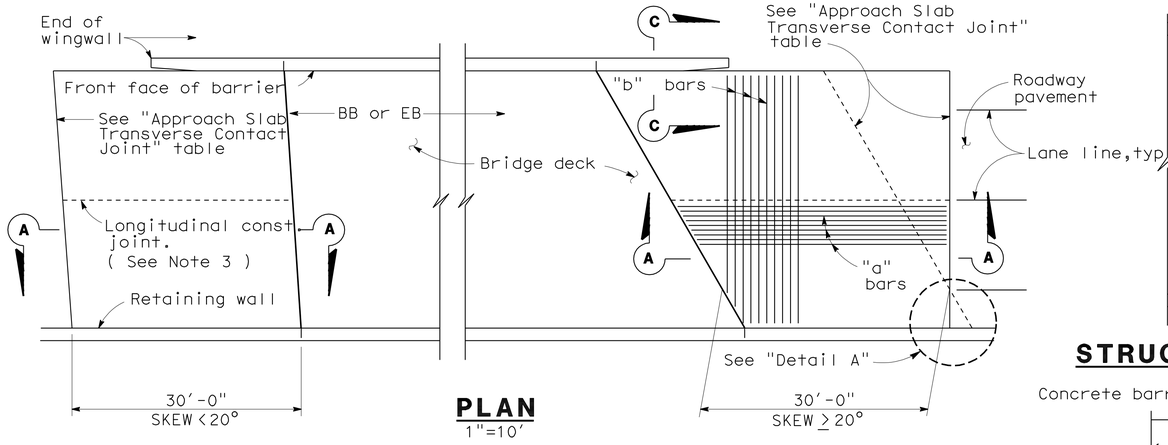

PLAN
1"=10'

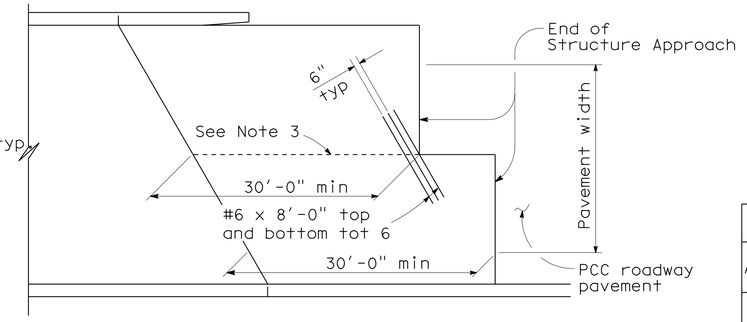

STRUCTURE APPROACH - END STAGGER DETAIL
No Scale

APPROACH SLAB TRANSVERSE CONTACT JOINT		
APPROACH SKEW	WITH AC ROADWAY PAVEMENT	WITH PCC ROADWAY PAVEMENT
< 20°	Parallel to face of paving notch	Parallel to face of paving notch
20° - 45°	Parallel to face of P N use (Detail A)	Stagger lines 24' to 36' apart.
> 45°	Parallel to face of P N use (Detail A)	Stagger at each lane line.

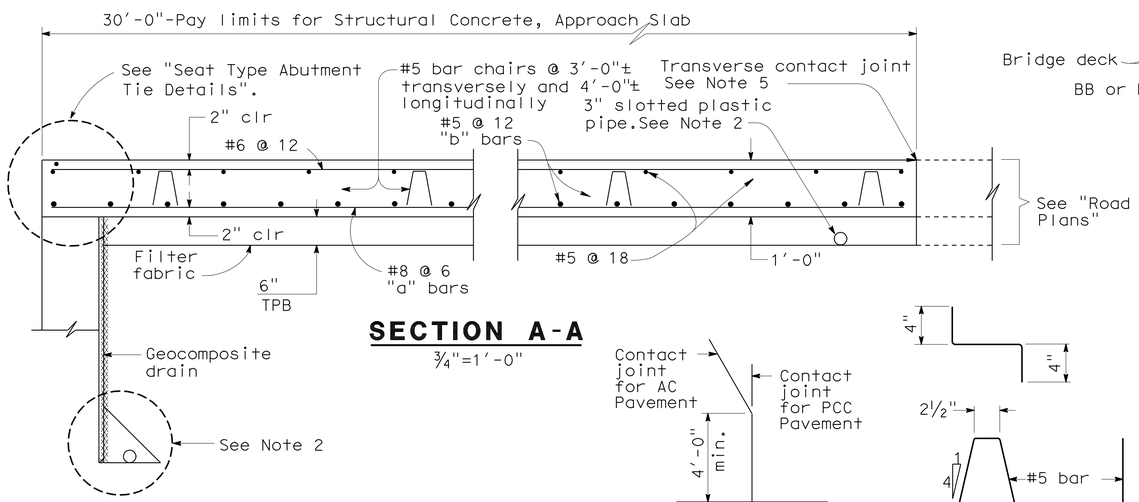

SECTION A-A
¾"=1'-0"

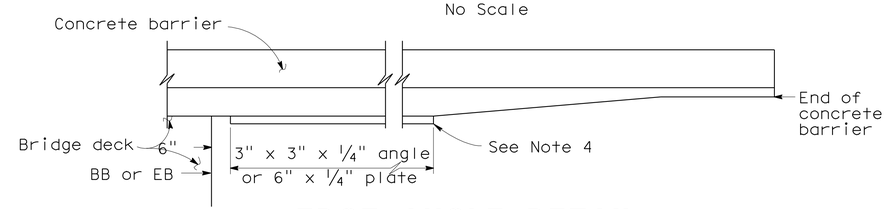

EDGE ANGLE DETAIL
½"=1'-0"

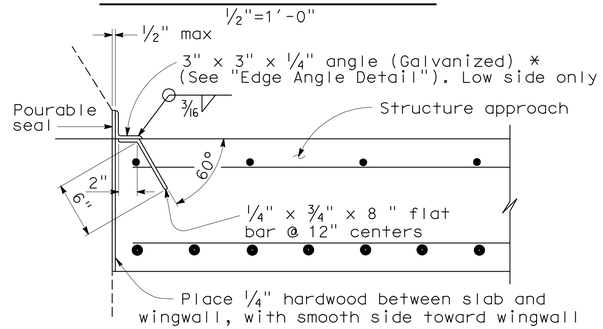

*(TO BE USED WITH TYPE 25 OR TYPE 27 CONCRETE BARRIER)

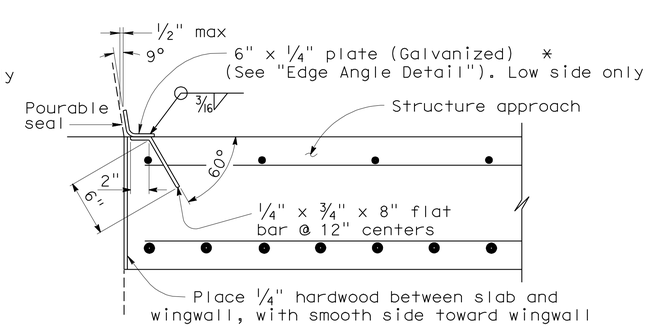

*(TO BE USED WITH TYPE 732 OR TYPE 736 CONCRETE BARRIER)

DETAIL A
No Scale

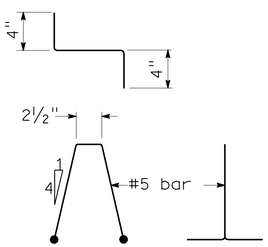

BAR CHAIR DETAIL
1½"=1'-0"

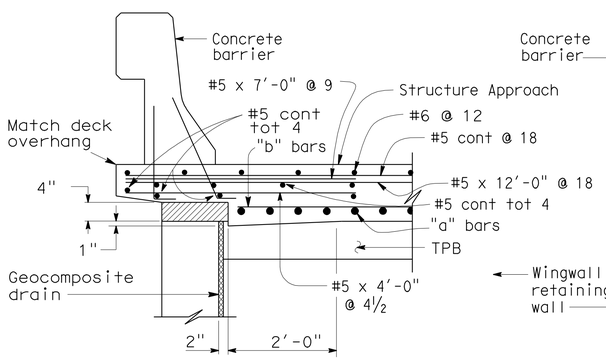

TYPE E-1

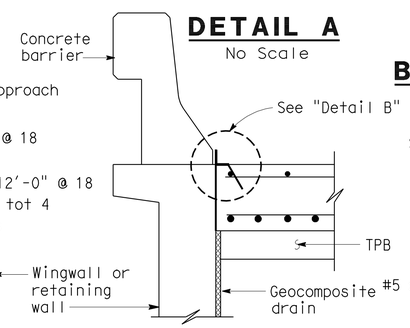

TYPE E-2

SECTION C-C
¾"=1'-0"

(Type E-1 to be used,unless otherwise shown on plans)

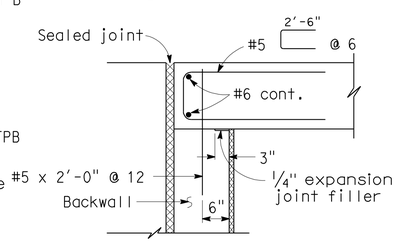

MR ≤ 2"

DETAIL B
1½"=1'-0"

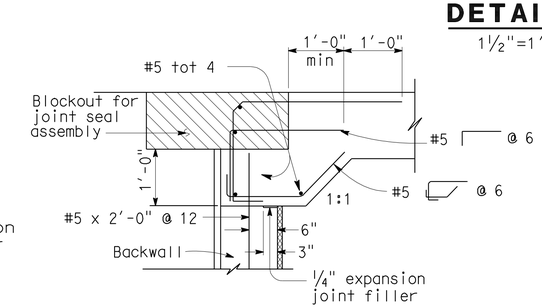

MR > 2"

SEAT TYPE ABUTMENT TIE DETAILS (SEE NOTE 1)
¾"=1'-0"

NOTES:

1. For details not shown,see Structure Plans. For MR ≤ 2",adjust bar reinforcement to clear a sawcut for sealed joint,when required.
2. For drainage details,see "Structure Approach Drainage Details" sheet.
3. Longitudinal construction joints,when permitted by the Engineer, shall be located on lane lines.
4. End angle or plate at beginning of barrier transition, end of wingwall or end of structure approach as applicable.
5. For transverse contact joint with new PCC paving, refer to Standard Plan P10.
6. At the contractor's option, approach slab transverse reinforcement may be placed parallel to paving notch. Spacing of transverse reinforcement is measured along ℄ roadway.

Remove all polystyrene.

STANDARD DRAWING				
RELEASE DATE 3/14/05	DESIGN	BY M.TRAFFALIS	CHECKED E.THORKILDSEN	RELEASED BY
FILE NO. xs3-120e	DETAILS	BY R.YEE	CHECKED E.THORKILDSEN	
	SUBMITTED	BY M.HA	DRAWING DATE 4/98	OFFICE CHIEF

STATE OF CALIFORNIA DEPARTMENT OF TRANSPORTATION

DIVISION OF ENGINEERING SERVICES

BRIDGE NO. 56-0838S

MILE POST 20.10

14TH STREET EASTBOUND ENTRANCE RAMP

STRUCTURE APPROACH TYPE N(30S)

DS OSD 2147A (ENGLISH) (REV. X/XX/XX)

ORIGINAL SCALE IN INCHES FOR REDUCED PLANS 0 1 2 3

CU 08
EA 448401

DISREGARD PRINTS BEARING EARLIER REVISION DATES

REVISION DATES (PRELIMINARY STAGE ONLY) 1-12-09

SHEET 23 OF 32

USERNAME => trstrk

560838ssa23.dgn

DATE PLOTTED => 30-APR-2011 TIME PLOTTED => 14:03

DIST.	COUNTY	ROUTE	MILE POST TOTAL PROJECT	SHEET NO.	TOTAL SHEETS
08	Riv	91	15.6/21.6	1902	2028

REGISTERED ENGINEER - CIVIL 11-30-10

4-25-11
PLANS APPROVAL DATE

REGISTERED PROFESSIONAL ENGINEER HUAN VU No. 60696 Exp. 12-31-10 CIVIL STATE OF CALIFORNIA

The State of California or its officers or agents shall not be responsible for the accuracy or completeness of electronic copies of this plan sheet.

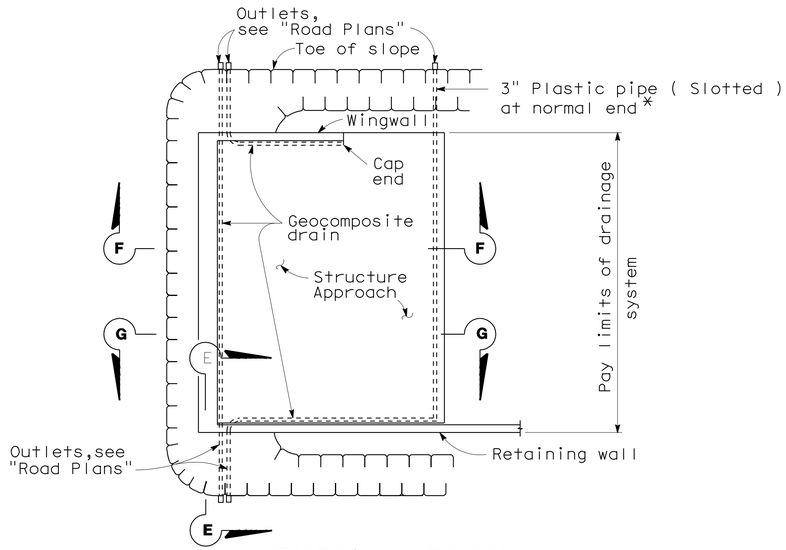

TYPICAL PLAN

1"=10'

*For pipe layout at staggered end, see "Detail B".

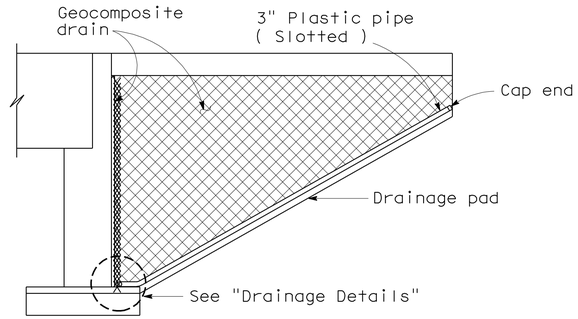

CANTILEVER WINGWALL SECTION F-F

1/4"=1'-0"

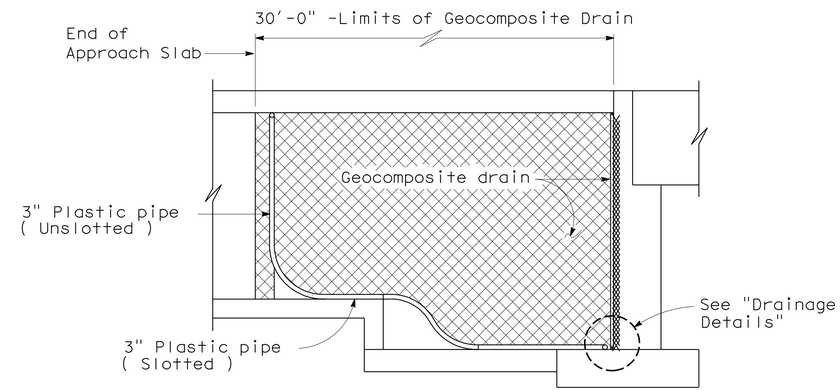

RETAINING WALL WINGWALL SECTION G-G

1/4"=1'-0"

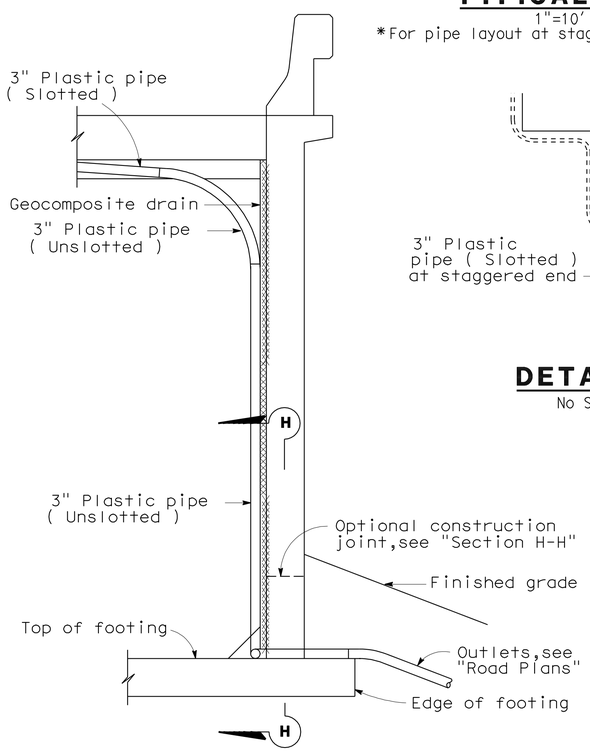

SECTION E-E

1/2"=1'-0"

NOTE: Bends and junctions in 3" plastic pipe are 30" radius min.

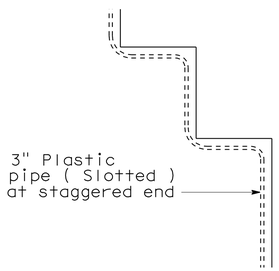

DETAIL B

No Scale

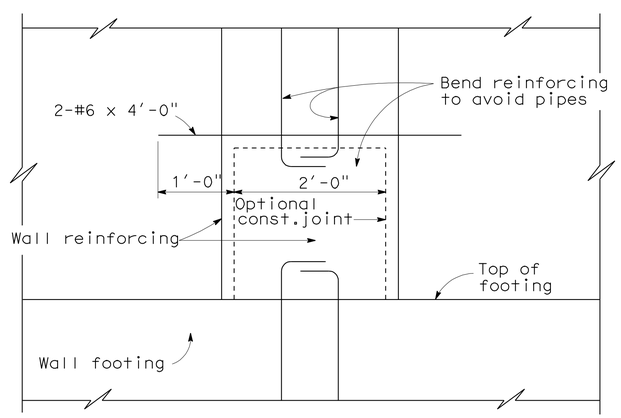

SECTION H-H

1"=1'-0"

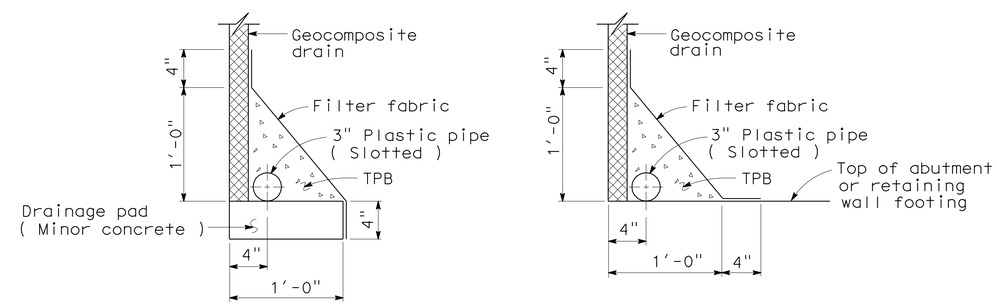

WITHOUT FOOTING WITH FOOTING

DRAINAGE DETAILS

1 1/2"=1'-0"

STANDARD DRAWING

RELEASE DATE 4/23/98	DESIGN BY M.TRAFFALIS	CHECKED E.THORKILDSEN	RELEASED BY
FILE NO. xs3-110e	DETAILS BY R.YEE	CHECKED E.THORKILDSEN	
	SUBMITTED BY M.HA	DRAWING DATE 4/98	OFFICE CHIEF

STATE OF CALIFORNIA DEPARTMENT OF TRANSPORTATION

DIVISION OF ENGINEERING SERVICES

BRIDGE NO. 56-0838S

MILE POST 20.10

14TH STREET EASTBOUND ENTRANCE RAMP

STRUCTURE APPROACH DRAINAGE DETAILS

DS OSD 2147A (ENGLISH) (REV. X/XX/XX)

ORIGINAL SCALE IN INCHES FOR REDUCED PLANS 0 1 2 3

CU 08
EA 448401

DISREGARD PRINTS BEARING EARLIER REVISION DATES 1-12-09

REVISION DATES (PRELIMINARY STAGE ONLY)

SHEET 24 OF 32

USERNAME => trstrk

560838ssadd24.dgn

DATE PLOTTED => 30-APR-2011 TIME PLOTTED => 13:59

DIST.	COUNTY	ROUTE	POST MILES TOTAL PROJECT	SHEET NO.	TOTAL SHEETS
08	Riv	91	15.6/21.6	1903	2028

REGISTERED ENGINEER - CIVIL 11-30-10

4-25-11
PLANS APPROVAL DATE

REGISTERED PROFESSIONAL ENGINEER HUAN VU No. 60696 Exp. 12-31-10 CIVIL STATE OF CALIFORNIA

The State of California or its officers or agents shall not be responsible for the accuracy or completeness of electronic copies of this plan sheet.

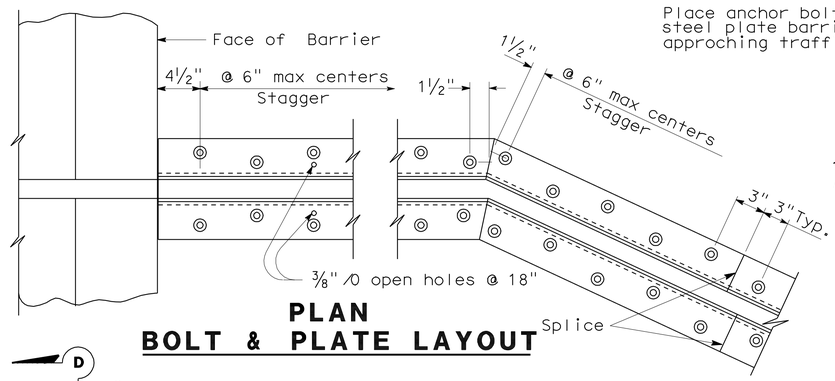

PLAN
BOLT & PLATE LAYOUT

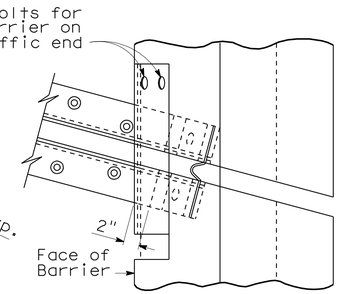

SKEW ≤ 20°

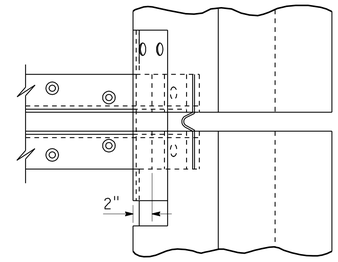

SKEW > 20°

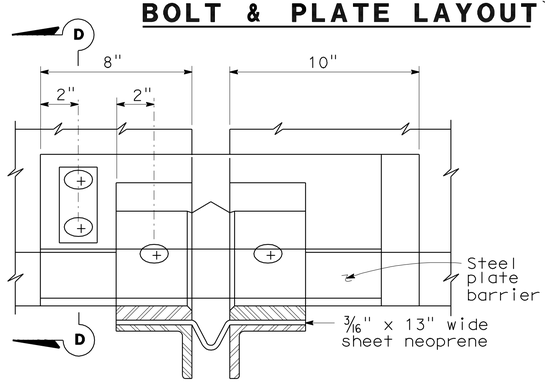

VIEW B-B

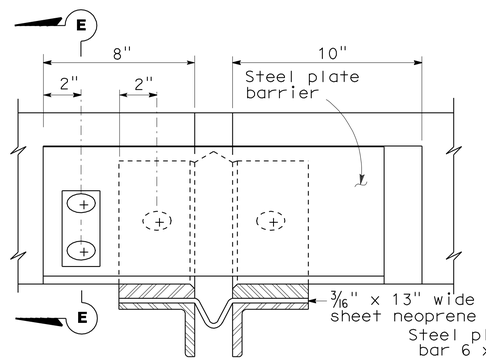

VIEW C-C

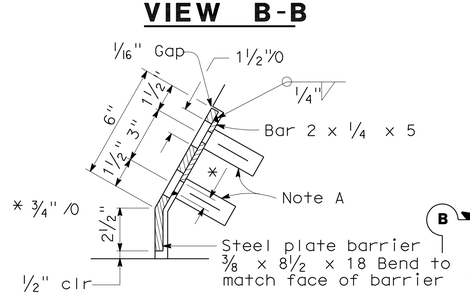

SECTION D-D

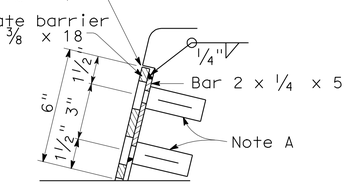

SECTION E-E

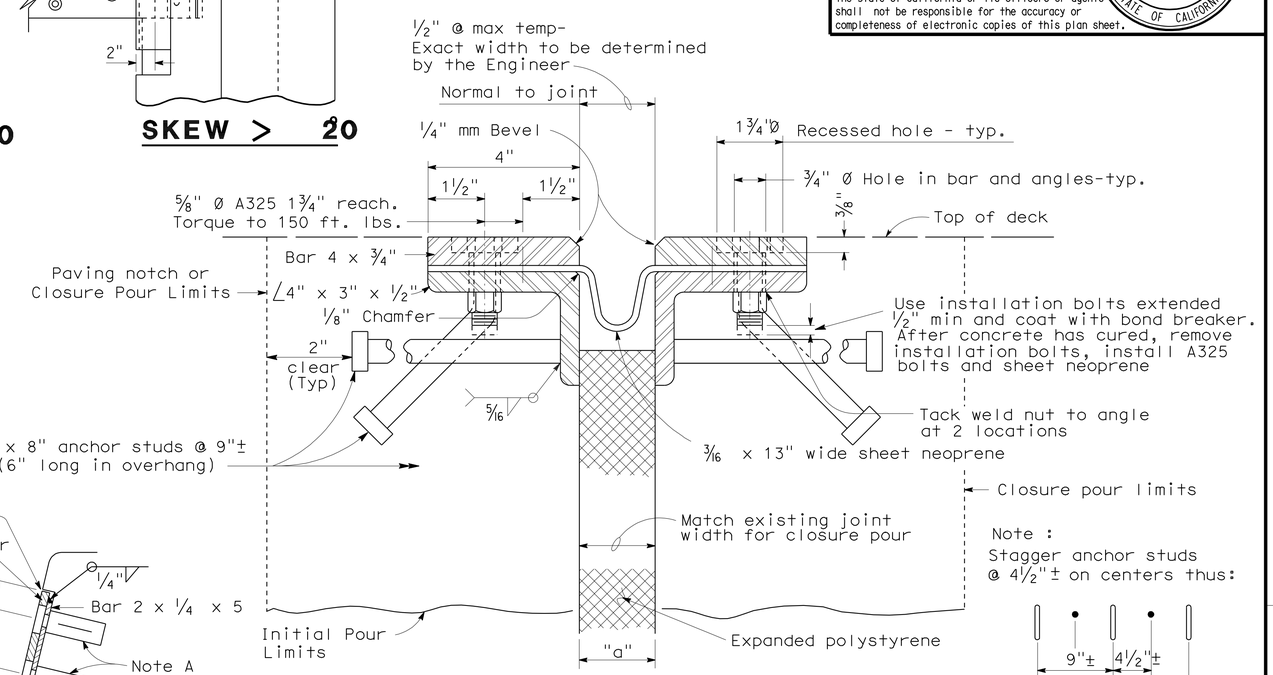

SECTION A-A

Note :
Stagger anchor studs @ 4½"± on centers thus:

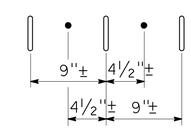

Joint Information			"a" Dimensions		
Location	Movement Rating (MR)	Skew	Winter	Spring & Fall	Summer
Abut 1	4.0"	0	2.00"	1.50"	1.00"
Abut 4	3.0"	0	1.75"	1.25"	1.00"

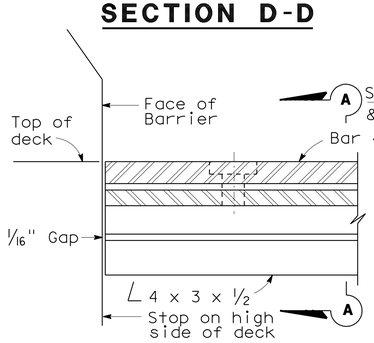

HIGH SIDE BARRIER DETAIL

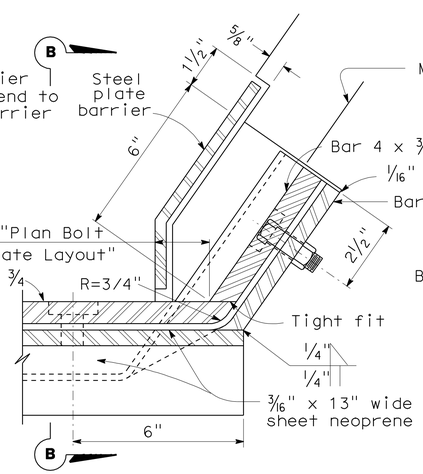

LOW SIDE BARRIER DETAIL
(See Note B)

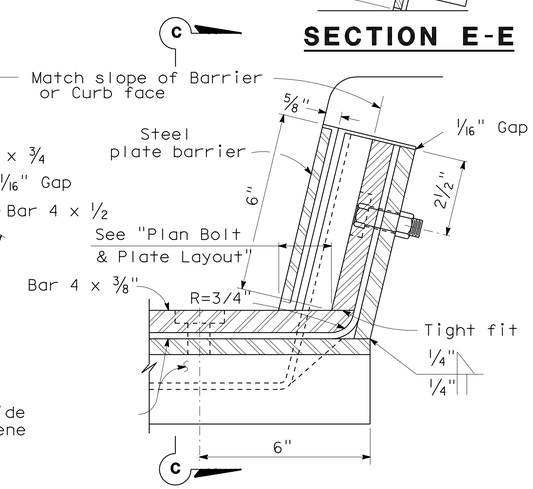

SIDEWALK DETAIL
(See Note B)

NOTES:

Full penetration butt welds may be substituted for fillet welds on all anchor studs.

Alternate types of anchor studs may be permitted subject to the approval by the Engineer.

Joint seal assembly to be used in conjunction with closure pour. (See other sheets for limits). Closure pour shall not be placed until final deck surface is within the tolerances specified.

Use joint at crown of roadway, at any change in traverse slope in deck and at changes in horizontal direction. Place other joints at or near lanes. All metal parts to be painted or galvanized after fabrication.

Sheet neoprene shall be fabricated in one continuous piece or joints shall be vulcanized. Neoprene shall be fabricated to bend around corners. 1" holes in neoprene sheets shall be drilled or punched so that the neoprene is not distorted at the time of installation.

NOTE A

Insert assembly or expansion anchorage for ⅝" x 1¾" A325 bolt.

NOTE B

Use the sidewalk Detail at all sidewalk joints. Use the Barrier Detail at both sides if the roadway is crowned or if the difference in elevation between the ends of the seal is 0.5' or less.

NO SCALE

STANDARD DRAWING

FILE NO. xs8-010e

APPROVED BY T. DELIS — RESPONSIBLE TECHNICAL SPECIALIST
APPROVAL DATE 5-8-08

RELEASED BY ROBERTO LACALLE — RESPONSIBLE OFFICE CHIEF
RELEASE DATE 5-8-08

STATE OF CALIFORNIA
DEPARTMENT OF TRANSPORTATION

DIVISION OF ENGINEERING SERVICES

BRIDGE NO. 56-0838S
POST MILE 20.10

14TH STREET EASTBOUND ENTRANCE RAMP
JOINT SEAL ASSEMBLY (MAXIMUM MOVEMENT RATING = 4")

DS OSD 2147A (ENGLISH STANDARD DRAWING "XS" BORDER REV. 01/11/08)

ORIGINAL SCALE IN INCHES FOR REDUCED PLANS 0 1 2 3

CU 08
EA 448401

DISREGARD PRINTS BEARING EARLIER REVISION DATES 1-12-09

REVISION DATES (PRELIMINARY STAGE ONLY)

SHEET 25 OF 32

USERNAME => trstrk

560838ssjntdt25.dgn

DATE PLOTTED => 30-APR-2011 TIME PLOTTED => 13:53

Dist	COUNTY	ROUTE	POST MILES TOTAL PROJECT	SHEET No.	TOTAL SHEETS
08	Riv	91	15.6/21.6	1904	2028

11-30-10
LICENSED LANDSCAPE ARCHITECT

4-25-11
PLANS APPROVAL DATE

LICENSED LANDSCAPE ARCHITECT Matthew Harry Hall No. 2522 Signature 10/31/2011 Renewal Date Date STATE OF CALIFORNIA

THE STATE OF CALIFORNIA OR ITS OFFICERS OR AGENTS SHALL NOT BE RESPONSIBLE FOR THE ACCURACY OR COMPLETENESS OF SCANNED COPIES OF THIS PLAN SHEET.

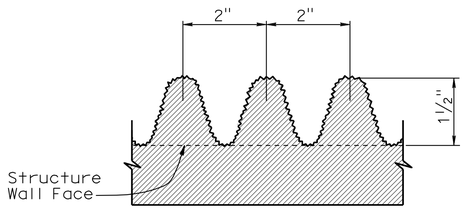

FRACTURED RIB TEXTURE (TYP)

No Scale

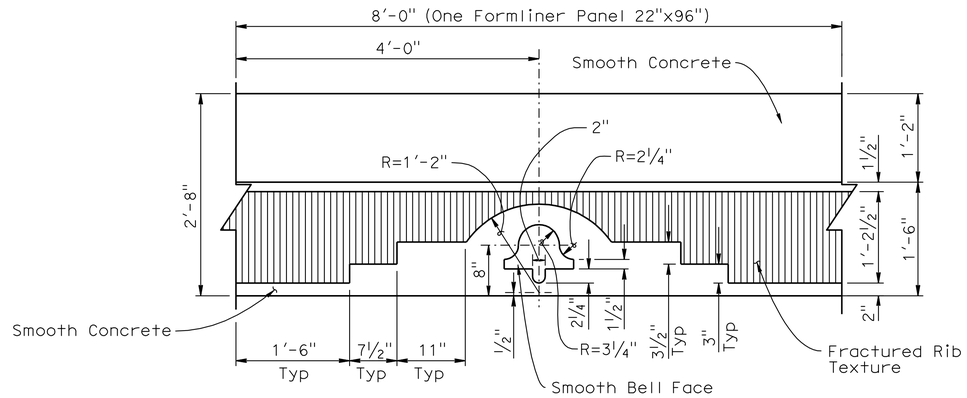

ELEVATION

1"=1'-0"

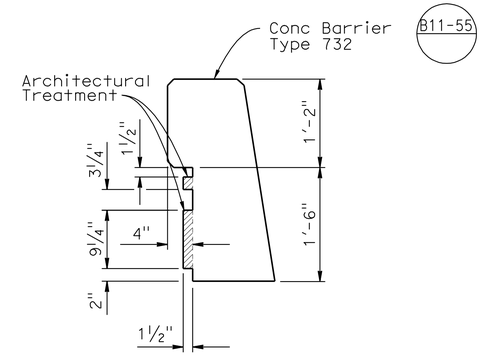

SECTION AT CENTER OF PANEL-BELL

1"=1'-0"

CONCRETE BARRIER TYPE 732 (MOD)

Note:

For split slate texture, see "ARCHITECTURAL DETAILS NO. 2" sheet.

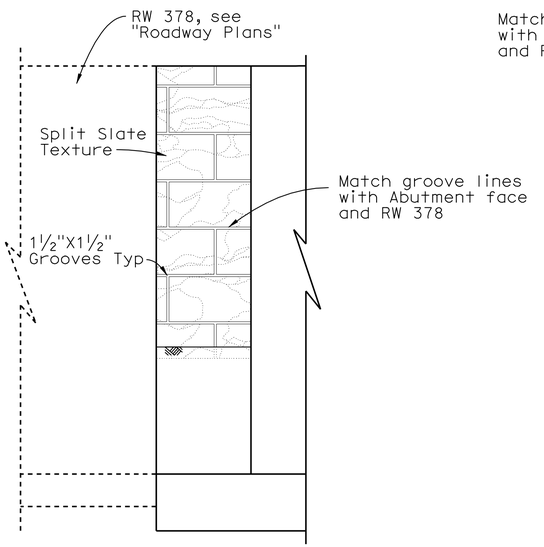

ABUTMENT 1 RIGHT FRONT WALL ELEVATION

¼"=1'-0"

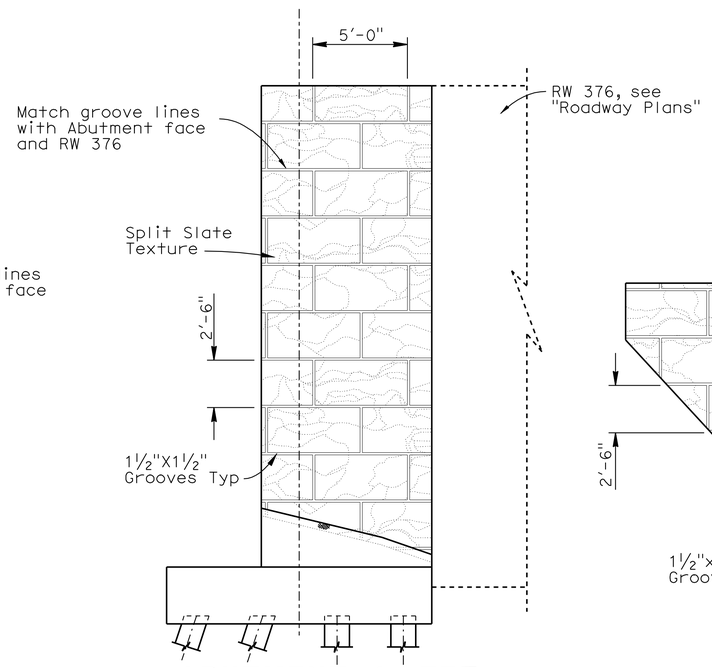

ABUTMENT 1 LEFT WINGWALL ELEVATION

¼"=1'-0"

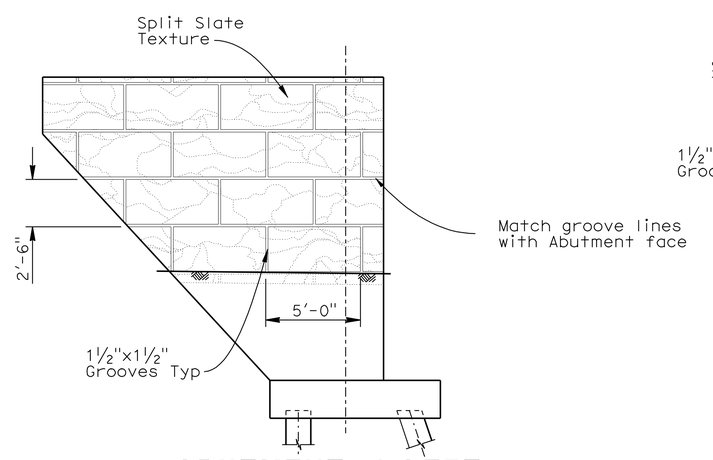

ABUTMENT 4 LEFT WINGWALL ELEVATION

¼"=1'-0"

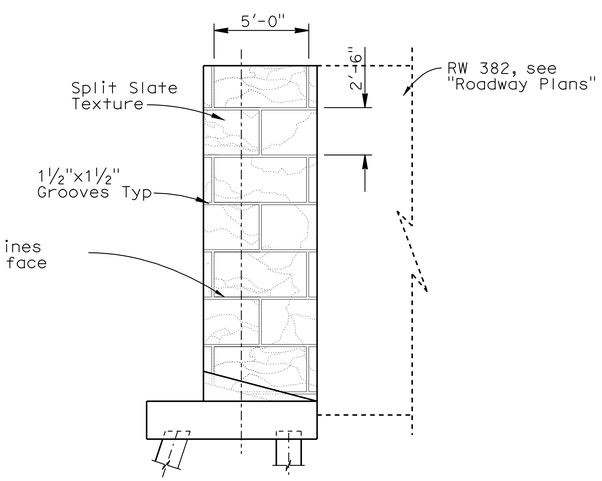

ABUTMENT 4 RIGHT WINGWALL ELEVATION

¼"=1'-0"

DESIGN	BY M. Hall	CHECKED M. Bishop	
DETAILS	BY Y. Tang	CHECKED M. Bishop	
QUANTITIES	BY M. Crete	CHECKED R. Melko	

STATE OF CALIFORNIA DEPARTMENT OF TRANSPORTATION

DIVISION OF ENGINEERING SERVICES STRUCTURE DESIGN DESIGN BRANCH 10

BRIDGE NO. 56-0838S
POST MILE 20.10

14TH STREET EASTBOUND ENTRANCE RAMP
ARCHITECTURAL DETAILS NO. 1

STRUCTURES DESIGN DETAIL SHEET (ENGLISH) (REV. 10/25/05)

ORIGINAL SCALE IN INCHES FOR REDUCED PLANS 0 1 2 3

CU 08
EA 448401

DISREGARD PRINTS BEARING EARLIER REVISION DATES

REVISION DATES: 9-28-10 11-16-10 11-30-10

SHEET 26 OF 32

FILE => 560838suarchdt01_26.dgn

USERNAME => trestrk DATE PLOTTED => 30-APR-2011 TIME PLOTTED => 14:00

Dist	COUNTY	ROUTE	POST MILES TOTAL PROJECT	SHEET No.	TOTAL SHEETS
08	Riv	91	15.6/21.6	1905	2028

11-30-10
LICENSED LANDSCAPE ARCHITECT

4-25-11
PLANS APPROVAL DATE

LICENSED LANDSCAPE ARCHITECT
Matthew Harry Hall
No. 4504
Signature
10/31/2011
Renewal Date
Date
STATE OF CALIFORNIA

THE STATE OF CALIFORNIA OR ITS OFFICERS OR AGENTS SHALL NOT BE RESPONSIBLE FOR THE ACCURACY OR COMPLETENESS OF SCANNED COPIES OF THIS PLAN SHEET.

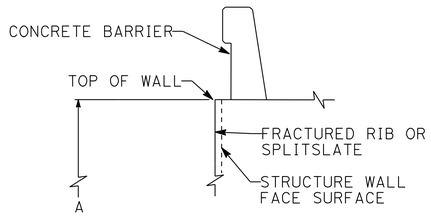

TOP OF WALL DETAIL TYPICAL WITH CONCRETE BARRIER

NO SCALE

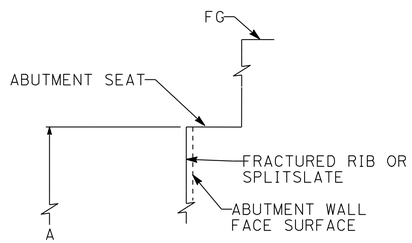

TOP OF ABUTMENT WALL DETAIL TYPICAL BRIDGE SOFFIT

NO SCALE

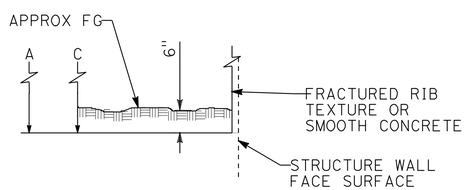

FINISH GROUND DETAIL TYPICAL DETAIL AT FINISH GRADE

NO SCALE

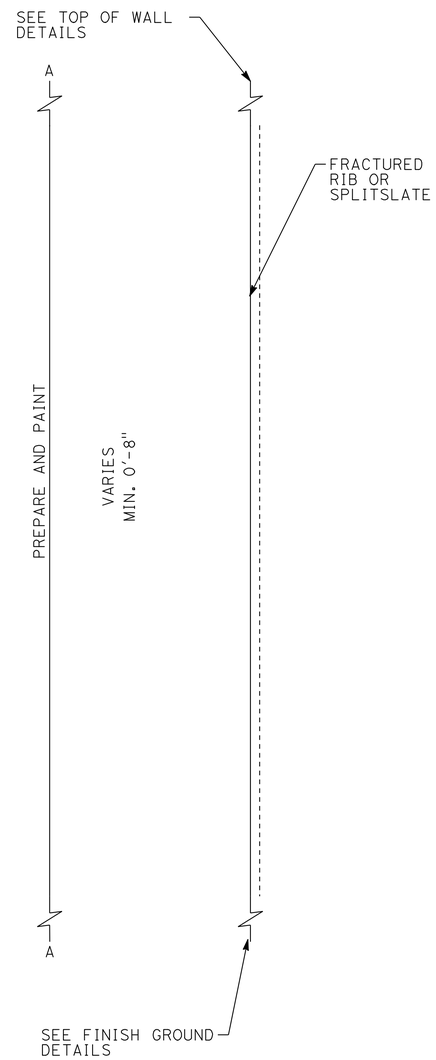

SECTION

½"=1'-0"

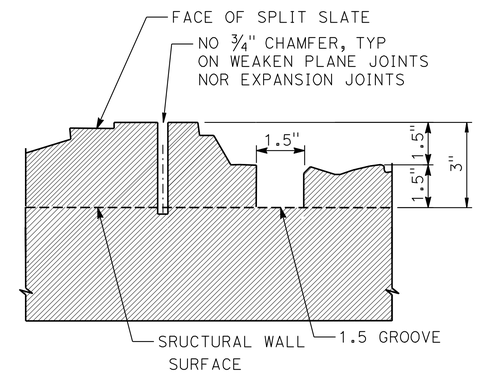

TYPICAL SPLIT SLATE TEXTURE

NO SCALE

SPLIT SLATE TEXTURE

DESIGN	BY M. Hall	CHECKED M. Bishop
DETAILS	BY Y. Tang	CHECKED M. Bishop
QUANTITIES	BY M. Crete	CHECKED R. Melko

STATE OF CALIFORNIA
DEPARTMENT OF TRANSPORTATION

DIVISION OF ENGINEERING SERVICES
STRUCTURE DESIGN
DESIGN BRANCH 10

BRIDGE NO. 56-0838S
POST MILE 20.10

14TH STREET EASTBOUND ENTRANCE RAMP
ARCHITECTURAL DETAILS NO. 2

STRUCTURES DESIGN DETAIL SHEET (ENGLISH) (REV. 10/25/05)

ORIGINAL SCALE IN INCHES FOR REDUCED PLANS 0 1 2 3

CU 08
EA 448401

DISREGARD PRINTS BEARING EARLIER REVISION DATES

REVISION DATES: ~~11-16-10~~ 11-30-10

SHEET 27 OF 32

FILE => 560838suarchdt02_27.dgn

USERNAME => trestrk DATE PLOTTED => 30-APR-2011 TIME PLOTTED => 14:00

DIST	COUNTY	ROUTE	POST MILES TOTAL PROJECT	SHEET No	TOTAL SHEETS
08	Riv	91	15.6/21.6	1906	2028

REGISTERED CIVIL ENGINEER 7-14-10

4-25-11
PLANS APPROVAL DATE

REGISTERED PROFESSIONAL ENGINEER Yeo Yoon No. 73532 Exp. 12-31-10 CIVIL STATE OF CALIFORNIA

The State of California or its officers or agents shall not be responsible for the accuracy or completeness of electronic copies of this plan sheet.

This LOTB sheet was prepared in accordance with the Caltrans Soil & Rock Logging, Classification, & Presentation Manual (June 2007).

BENCH MARK

PNO 556-Set PK/CT Washer
N 2300237.349
E 6221545.515
Elev = 867.72' NGVD 29

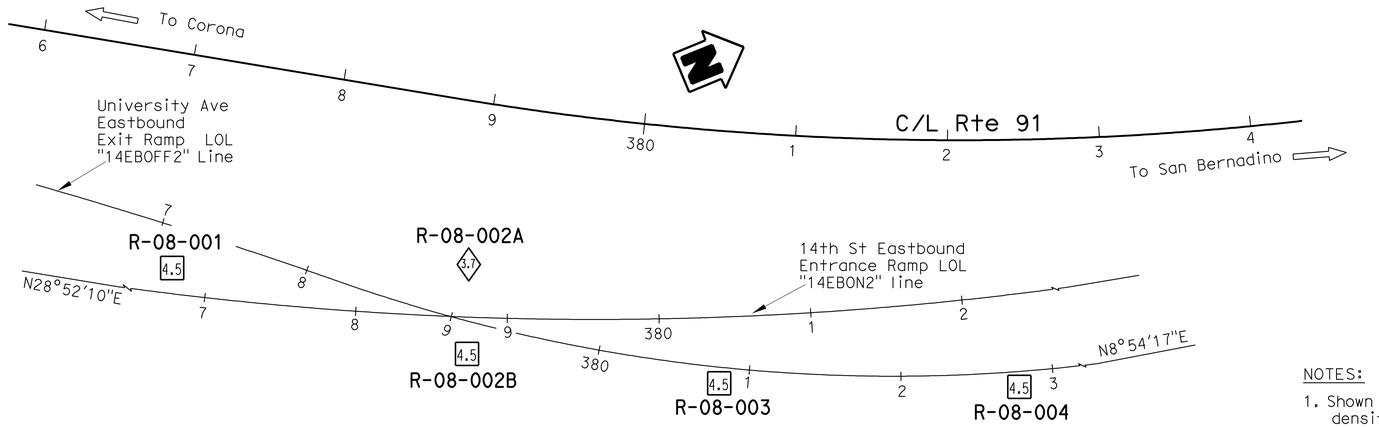

PLAN

1" = 50'

NOTES:

1. Shown are the actual blow counts recorded in the field. Apparent densities of soils shown on the LOTB sheets are based on the corrected SPT N-values for hammer efficiency.
2. A groundwater table measurement was not made at Boring R-08-001, R-08-002A and R-08-003 since the bore holes were backfilled immediately after completion of drilling.

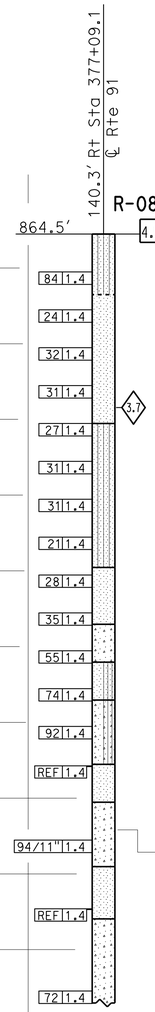

860 — Asphaltic Concrete 4" thick.
SILTY SAND (SM); very dense; brown; dry; about 60% fine to medium SAND; about 40% fines; weak cementation.

Poorly-graded SAND (SP); dense; brown; dry; about 5% fine gravel; subangular; about 90% fine to medium sand; about 5% fines; weak cementation.

850

840 — -about 6" thick lense of SILTY SAND (SM), grayish brown; moist; about 60% fine to medium sand; about 40% fines; moderate cementation.

SILTY SAND (SM); dense; brown; moist; about 80% fine to medium sand; about 20% fines; weak cementation.

830 — -trace coarse sand.

-trace fine gravel, subrounded.

-medium dense.

820 — Poorly-graded SAND (SP); dense; grayish brown; moist; about 95% fine to medium sand; about 5% fines; weak cementation.

810 — Well-graded SAND (SW); very dense; grayish brown; moist; about 5% fine gravel, subrounded; about 85% sand; about 5% fines; weak cementation.

Poorly-graded SAND with SILT and GRAVEL (SP-SM); very dense; brown; moist; about 30% fine to coarse gravel, subangular to subrounded; about 60% fine to medium sand; about 10% fines; weak cementation.

800 — Well-graded SAND with SILT and GRAVEL (SW-SM); very dense; brown; moist; about 35% fine to coarse gravel, subangular to subrounded; about 55% sand; about 10% fines; weak cementation.

790 — Poorly-graded SAND with GRAVEL (SP); very dense; grayish brown; moist; about 20% fine gravel, subrounded; about 75% fine to medium sand; about 5% fines; weak cementation.

Well-graded SAND with GRAVEL (SW); very dense; grayish brown; moist; about 20% fine to coarse gravel, subrounded; about 75% sand; about 5% fines; weak cementation.

780 — -2.5' thick zone of poorly-graded SAND (SP); very dense; grayish brown; moist; medium sand.

Poorly-graded SAND (SP); very dense; grayish brown; moist; about 10% fine gravel, subrounded; about 85% fine to medium sand; about 5% fines; weak cementation.

770 — Well-graded SAND with GRAVEL (SW); very dense; grayish brown; moist; about 20% fine to coarse gravel, subangular to subrounded; about 75% sand; about 5% fines; weak cementation.

760

377+00 378+00 379+00

PROFILE

Horiz 1" = 10'
Vert 1" = 10'

ENGINEERING SERVICES		GEOTECHNICAL SERVICES	STATE OF CALIFORNIA DEPARTMENT OF TRANSPORTATION	DIVISION OF ENGINEERING SERVICES STRUCTURE DESIGN DESIGN BRANCH	BRIDGE NO. 56-0838S / POST MILES 20.10	14TH STREET EASTBOUND ENTRANCE RAMP LOG OF TEST BORINGS 1 OF 5
FUNCTIONAL SUPERVISOR NAME: M. DeSalvatore	DRAWN BY: I.G-Remmen, 12/08 CHECKED BY: J. Klamecki	FIELD INVESTIGATION BY: T.M.Liao				

OGS CIVIL LOG OF TEST BORINGS SHEET — ORIGINAL SCALE IN INCHES FOR REDUCED PLANS 0 1 2 3 — CU 08 EA 448401 — DISREGARD PRINTS BEARING EARLIER REVISION DATES — REVISION DATES 03-05-10 04-07-10 05-04-10 — SHEET 28 OF 32

FILE => 560838szltb28.dgn

USERNAME => ttrflcnf DATE PLOTTED => 30-APR-2011 TIME PLOTTED => 13:54

DIST	COUNTY	ROUTE	POST MILES TOTAL PROJECT	SHEET No	TOTAL SHEETS
08	Riv	91	15.6/21.6	1907	2028

REGISTERED CIVIL ENGINEER 7-14-10

4-25-11
PLANS APPROVAL DATE

REGISTERED PROFESSIONAL ENGINEER Yeo Yoon No. 73532 Exp. 12-31-10 CIVIL STATE OF CALIFORNIA

The State of California or its officers or agents shall not be responsible for the accuracy or completeness of electronic copies of this plan sheet.

This LOTB sheet was prepared in accordance with the Caltrans Soil & Rock Logging, Classification, & Presentation Manual (June 2007).

FOR PLAN VIEW, SEE
"LOG OF TEST BORINGS 1 OF 5"

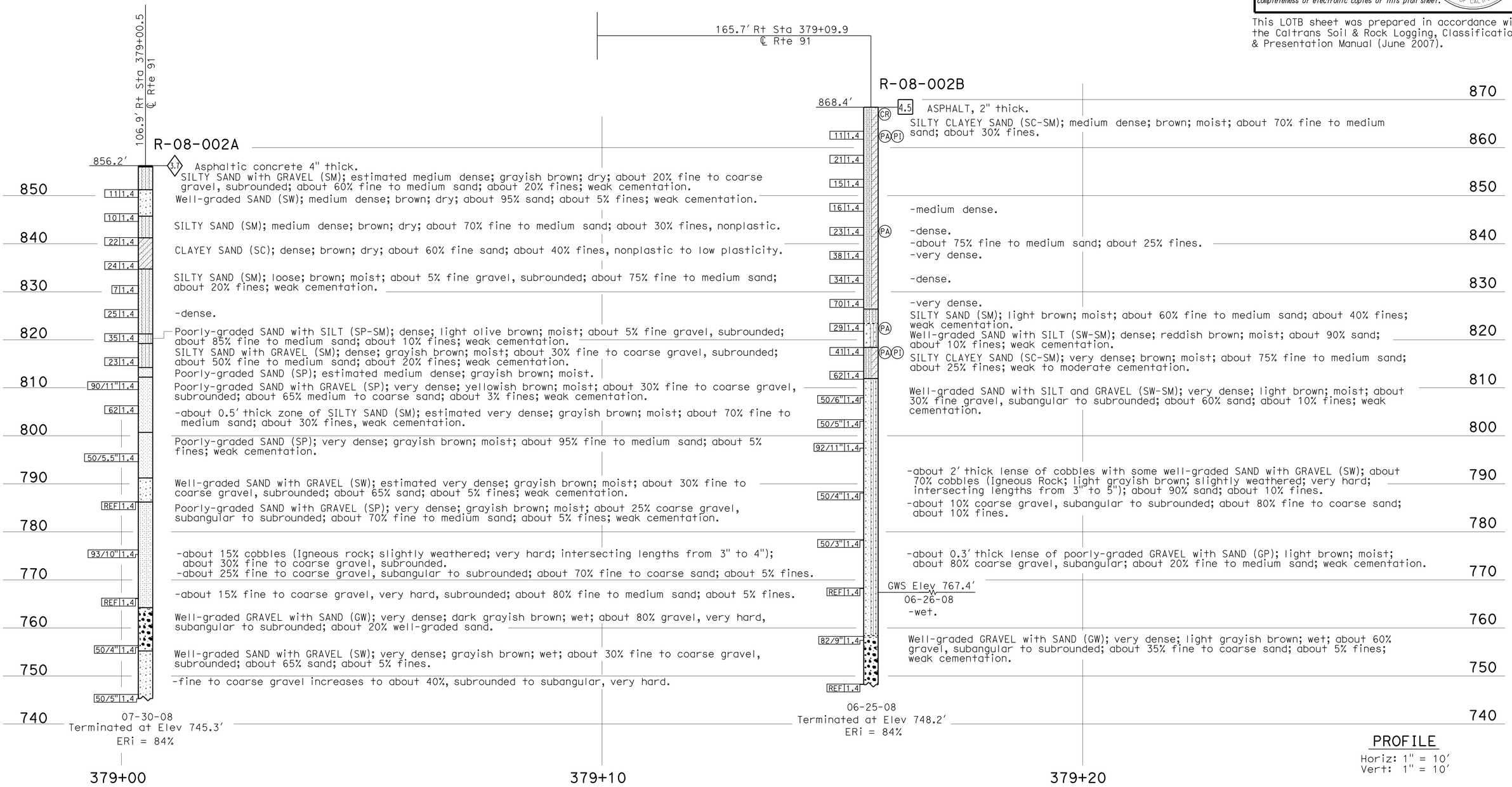

PROFILE
Horiz: 1" = 10'
Vert: 1" = 10'

ENGINEERING SERVICES	GEOTECHNICAL SERVICES	STATE OF CALIFORNIA DEPARTMENT OF TRANSPORTATION	DIVISION OF ENGINEERING SERVICES STRUCTURE DESIGN DESIGN BRANCH	BRIDGE NO. 56-0838S POST MILES 20.10	14TH STREET EASTBOUND ENTRANCE RAMP
FUNCTIONAL SUPERVISOR NAME: M. DeSalvatore	DRAWN BY: I.G-Remmen, 12/08 CHECKED BY: J. Klamecki	FIELD INVESTIGATION BY: T.M.Liao, Y. Yoon			LOG OF TEST BORINGS 2 OF 5

OGS CIVIL LOG OF TEST BORINGS SHEET

ORIGINAL SCALE IN INCHES FOR REDUCED PLANS 0 1 2 3

CU 08
EA 448401

DISREGARD PRINTS BEARING EARLIER REVISION DATES → REVISION DATES 03-08-10 04-07-10 05-04-10 06-23-10

SHEET 29 OF 32

FILE => 560838szltb29.dgn

USERNAME => tttrichf DATE PLOTTED => 30-APR-2011 TIME PLOTTED => 13:54

DIST	COUNTY	ROUTE	POST MILES TOTAL PROJECT	SHEET No	TOTAL SHEETS
08	Riv	91	15.6/21.6	1908	2028

REGISTERED CIVIL ENGINEER 7-14-10

4-25-11
PLANS APPROVAL DATE

REGISTERED PROFESSIONAL ENGINEER Yeo Yoon No. 73532 Exp. 12-31-10 CIVIL STATE OF CALIFORNIA

The State of California or its officers or agents shall not be responsible for the accuracy or completeness of electronic copies of this plan sheet.

This LOTB sheet was prepared in accordance with the Caltrans Soil & Rock Logging, Classification, & Presentation Manual (June 2007).

FOR PLAN VIEW, SEE
"LOG OF TEST BORINGS 1 OF 5"

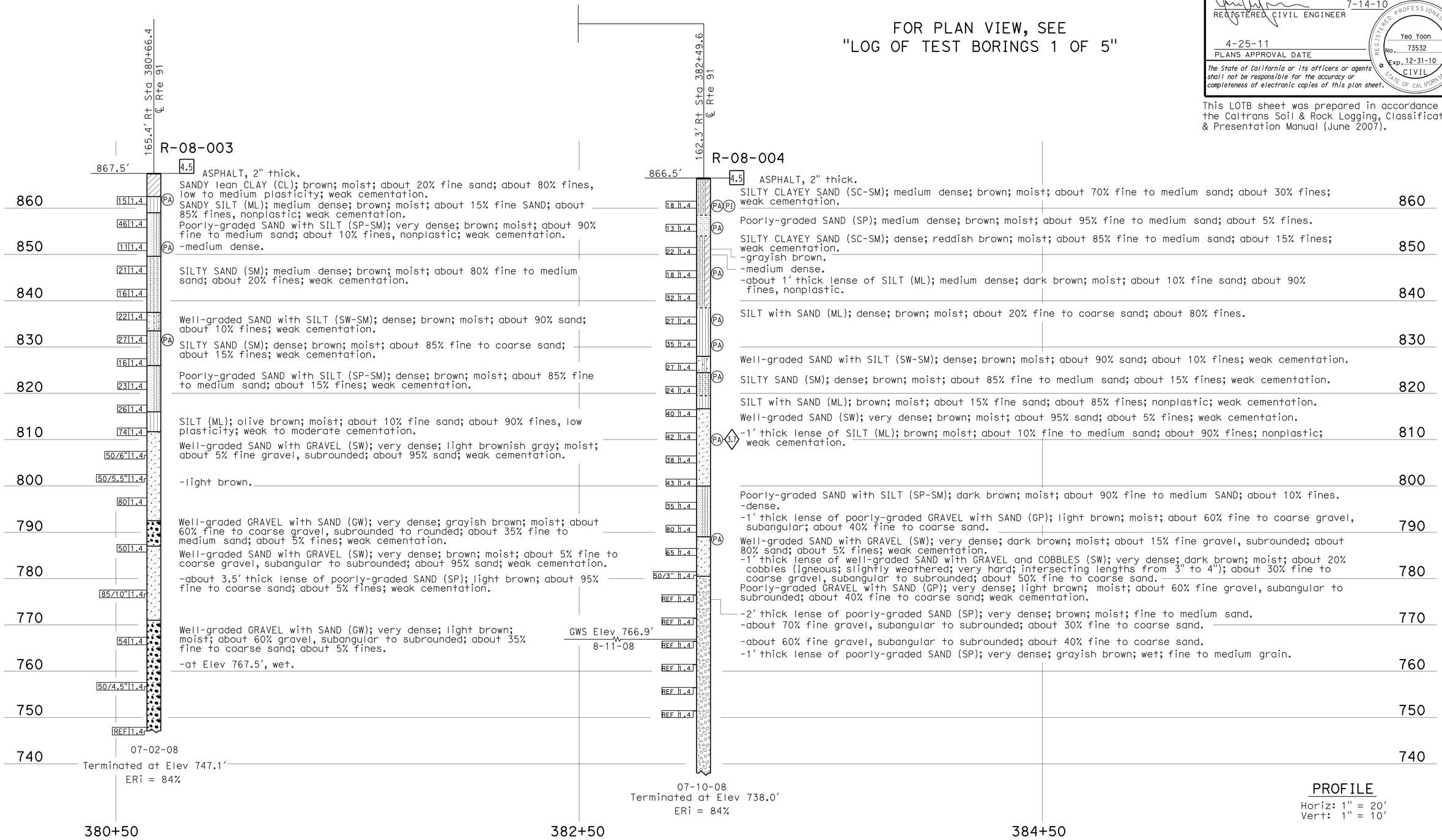

ENGINEERING SERVICES	GEOTECHNICAL SERVICES	STATE OF CALIFORNIA DEPARTMENT OF TRANSPORTATION	DIVISION OF ENGINEERING SERVICES STRUCTURE DESIGN DESIGN BRANCH	BRIDGE NO. 56-0838S POST MILES 20.10	14TH STREET EASTBOUND ENTRANCE RAMP LOG OF TEST BORINGS 3 OF 5
FUNCTIONAL SUPERVISOR NAME: M. DeSalvatore	DRAWN BY: I.G-Remmen, 12/08 CHECKED BY: J. Klamecki	FIELD INVESTIGATION BY: Y. Yoon, C. Manansala			

OGS CIVIL LOG OF TEST BORINGS SHEET

ORIGINAL SCALE IN INCHES FOR REDUCED PLANS 0 1 2 3

CU 08
EA 448401

DISREGARD PRINTS BEARING EARLIER REVISION DATES

REVISION DATES: 03-08-10 04-07-10 05-04-10 05-13-10 06-23-10

SHEET 30 OF 32

FILE => 560838szltb30.dgn

USERNAME => TFFright DATE PLOTTED => 30-APR-2011 TIME PLOTTED => 13:55

DIST	COUNTY	ROUTE	POST MILES TOTAL PROJECT	SHEET No	TOTAL SHEETS
08	Riv	91	15.6/21.6	1909	2028

REGISTERED CIVIL ENGINEER 7-14-10

4-25-11
PLANS APPROVAL DATE

REGISTERED PROFESSIONAL ENGINEER Yeo Yoon No. 73532 Exp. 12-31-10 CIVIL STATE OF CALIFORNIA

The State of California or its officers or agents shall not be responsible for the accuracy or completeness of electronic copies of this plan sheet.

REFERENCE: CALTRANS SOIL & ROCK LOGGING, CLASSIFICATION, AND PRESENTATION MANUAL (JUNE 2007)

CEMENTATION

Description	Criteria
Weak	Crumbles or breaks with handling or little finger pressure.
Moderate	Crumbles or breaks with considerable finger pressure.
Strong	Will not crumble or break with finger pressure.

CONSISTENCY OF COHESIVE SOILS

Description	Unconfined Compressive Strength (tsf)	Pocket Penetrometer Measurement (tsf)	Torvane Measurement (tsf)	Field Approximation
Very Soft	< 0.25	< 0.25	< 0.12	Easily penetrated several inches by fist
Soft	0.25 to 0.50	0.25 to 0.50	0.12 to 0.25	Easily penetrated several inches by thumb
Medium Stiff	0.50 to 1.0	0.50 to 1.0	0.25 to 0.50	Penetrated several inches by thumb with moderate effort
Stiff	1 to 2	1 to 2	0.50 to 1.0	Readily indented by thumb but penetrated only with great effort
Very Stiff	2 to 4	2 to 4	1.0 to 2.0	Readily indented by thumbnail
Hard	> 4.0	> 4.0	> 2.0	Indented by thumbnail with difficulty

BOREHOLE IDENTIFICATION

Symbol	Hole Type	Description
Size	A	Auger Boring
Size	R P	Rotary drilled boring Rotary percussion boring (air)
Size	R	Rotary drilled diamond core
Size	HD HA	Hand driven (1-inch soil tube) Hand Auger
●	D	Dynamic Cone Penetration Boring
▲	CPT	Cone Penetration Test (ASTM D 5778-95)
⬚	O	Other

Note: Size in inches.

PLASTICITY OF FINE-GRAINED SOILS

Description	Criteria
Nonplastic	A 1/8-inch thread cannot be rolled at any water content.
Low	The thread can barely be rolled and the lump cannot be formed when drier than the plastic limit.
Medium	The thread is easy to roll and not much time is required to reach the plastic limit. The thread cannot be rerolled after reaching the plastic limit. The lump crumbles when drier than the plastic limit.
High	It takes considerable time rolling and kneading to reach the plastic limit. The thread can be rerolled several times after reaching the plastic limit. The lump can be formed without crumbling when drier than the plastic limit.

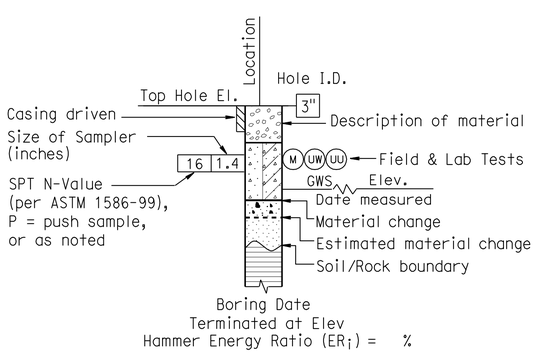

ROTARY BORING

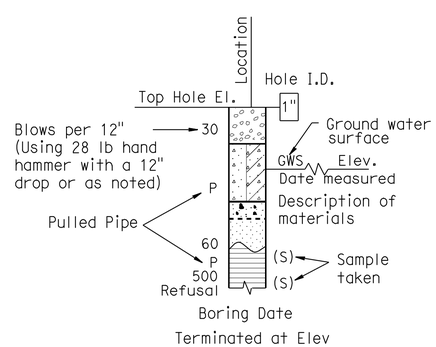

HAND BORING

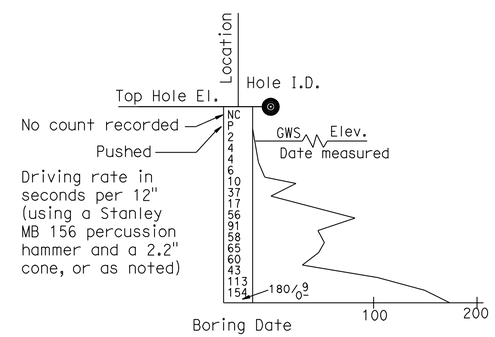

DYNAMIC CONE PENETRATION BORING

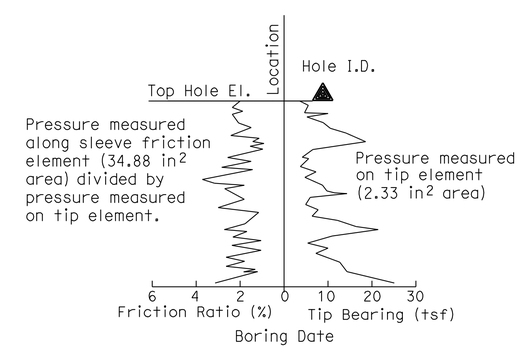

CONE PENETRATION TEST (CPT) SOUNDING

ENGINEERING SERVICES	GEOTECHNICAL SERVICES	STATE OF CALIFORNIA DEPARTMENT OF TRANSPORTATION	DIVISION OF ENGINEERING SERVICES STRUCTURE DESIGN DESIGN BRANCH	BRIDGE NO. 56-0838S / POST MILE 20.10	14TH STREET EASTBOUND ENTRANCE RAMP LOG OF TEST BORINGS 4 OF 5
	PREPARED BY: I.G-Remmen, 4/10				

GS LOTB SOIL LEGEND

ORIGINAL SCALE IN INCHES FOR REDUCED PLANS 0 1 2 3

CU 08
EA 448401

DISREGARD PRINTS BEARING EARLIER REVISION DATES → 05-13-10

REVISION DATES

SHEET 31 OF 32

FILE => 560838sztb31.dgn

USERNAME => trrfrchf DATE PLOTTED => 30-APR-2011 TIME PLOTTED => 13:55

REFERENCE: CALTRANS SOIL & ROCK LOGGING, CLASSIFICATION, AND PRESENTATION MANUAL (JUNE 2007)

DIST	COUNTY	ROUTE	POST MILES TOTAL PROJECT	SHEET No	TOTAL SHEETS
08	Riv	91	15.6/21.6	1910	2028

REGISTERED CIVIL ENGINEER 7-14-10

4-25-11
PLANS APPROVAL DATE

REGISTERED PROFESSIONAL ENGINEER Yeo Yoon No. 73532 Exp. 12-31-10 CIVIL STATE OF CALIFORNIA

The State of California or its officers or agents shall not be responsible for the accuracy or completeness of electronic copies of this plan sheet.

GROUP SYMBOLS AND NAMES

Graphic/Symbol	Group Names	Graphic/Symbol	Group Names
GW	Well-graded GRAVEL Well-graded GRAVEL with SAND	CL	Lean CLAY Lean CLAY with SAND Lean CLAY with GRAVEL SANDY lean CLAY SANDY lean CLAY with GRAVEL GRAVELLY lean CLAY GRAVELLY lean CLAY with SAND
GP	Poorly graded GRAVEL Poorly graded GRAVEL with SAND		
GW-GM	Well-graded GRAVEL with SILT Well-graded GRAVEL with SILT and SAND	CL-ML	SILTY CLAY SILTY CLAY with SAND SILTY CLAY with GRAVEL SANDY SILTY CLAY SANDY SILTY CLAY with GRAVEL GRAVELLY SILTY CLAY GRAVELLY SILTY CLAY with SAND
GW-GC	Well-graded GRAVEL with CLAY (or SILTY CLAY) Well-graded GRAVEL with CLAY and SAND (or SILTY CLAY and SAND)		
GP-GM	Poorly graded GRAVEL with SILT Poorly graded GRAVEL with SILT and SAND	ML	SILT SILT with SAND SILT with GRAVEL SANDY SILT SANDY SILT with GRAVEL GRAVELLY SILT GRAVELLY SILT with SAND
GP-GC	Poorly graded GRAVEL with CLAY (or SILTY CLAY) Poorly graded GRAVEL with CLAY and SAND (or SILTY CLAY and SAND)		
GM	SILTY GRAVEL SILTY GRAVEL with SAND	OL	ORGANIC lean CLAY ORGANIC lean CLAY with SAND ORGANIC lean CLAY with GRAVEL SANDY ORGANIC lean CLAY SANDY ORGANIC lean CLAY with GRAVEL GRAVELLY ORGANIC lean CLAY GRAVELLY ORGANIC lean CLAY with SAND
GC	CLAYEY GRAVEL CLAYEY GRAVEL with SAND		
GC-GM	SILTY, CLAYEY GRAVEL SILTY, CLAYEY GRAVEL with SAND	OL	ORGANIC SILT ORGANIC SILT with SAND ORGANIC SILT with GRAVEL SANDY ORGANIC SILT SANDY ORGANIC SILT with GRAVEL GRAVELLY ORGANIC SILT GRAVELLY ORGANIC SILT with SAND
SW	Well-graded SAND Well-graded SAND with GRAVEL		
SP	Poorly graded SAND Poorly graded SAND with GRAVEL	CH	Fat CLAY Fat CLAY with SAND Fat CLAY with GRAVEL SANDY fat CLAY SANDY fat CLAY with GRAVEL GRAVELLY fat CLAY GRAVELLY fat CLAY with SAND
SW-SM	Well-graded SAND with SILT Well-graded SAND with SILT and GRAVEL		
SW-SC	Well-graded SAND with CLAY (or SILTY CLAY) Well-graded SAND with CLAY and GRAVEL (or SILTY CLAY and GRAVEL)	MH	Elastic SILT Elastic SILT with SAND Elastic SILT with GRAVEL SANDY elastic SILT SANDY elastic SILT with GRAVEL GRAVELLY elastic SILT GRAVELLY elastic SILT with SAND
SP-SM	Poorly graded SAND with SILT Poorly graded SAND with SILT and GRAVEL		
SP-SC	Poorly graded SAND with CLAY (or SILTY CLAY) Poorly graded SAND with CLAY and GRAVEL (or SILTY CLAY and GRAVEL)	OH	ORGANIC fat CLAY ORGANIC fat CLAY with SAND ORGANIC fat CLAY with GRAVEL SANDY ORGANIC fat CLAY SANDY ORGANIC fat CLAY with GRAVEL GRAVELLY ORGANIC fat CLAY GRAVELLY ORGANIC fat CLAY with SAND
SM	SILTY SAND SILTY SAND with GRAVEL		
SC	CLAYEY SAND CLAYEY SAND with GRAVEL	OH	ORGANIC elastic SILT ORGANIC elastic SILT with SAND ORGANIC elastic SILT with GRAVEL SANDY ORGANIC elastic SILT SANDY ORGANIC elastic SILT with GRAVEL GRAVELLY ORGANIC elastic SILT GRAVELLY ORGANIC elastic SILT with SAND
SC-SM	SILTY, CLAYEY SAND SILTY, CLAYEY SAND with GRAVEL		
PT	PEAT	OL/OH	ORGANIC SOIL ORGANIC SOIL with SAND ORGANIC SOIL with GRAVEL SANDY ORGANIC SOIL SANDY ORGANIC SOIL with GRAVEL GRAVELLY ORGANIC SOIL GRAVELLY ORGANIC SOIL with SAND
	COBBLES COBBLES and BOULDERS BOULDERS		

FIELD AND LABORATORY TESTING

- (C) Consolidation (ASTM D 2435)
- (CL) Collapse Potential (ASTM D 5333)
- (CP) Compaction Curve (CTM 216)
- (CR) Corrosivity Testing (CTM 643, CTM 422, CTM 417)
- (CU) Consolidated Undrained Triaxial (ASTM D 4767)
- (DS) Direct Shear (ASTM D 3080)
- (EI) Expansion Index (ASTM D 4829)
- (M) Moisture Content (ASTM D 2216)
- (OC) Organic Content-% (ASTM D 2974)
- (P) Permeability (CTM 220)
- (PA) Particle Size Analysis (ASTM D 422)
- (PI) Plasticity Index (AASHTO T 90) Liquid Limit (AASHTO T 89)
- (PL) Point Load Index (ASTM D 5731)
- (PM) Pressure Meter
- (PP) Pocket Penetrometer
- (R) R-Value (CTM 301)
- (SE) Sand Equivalent (CTM 217)
- (SG) Specific Gravity (AASHTO T 100)
- (SL) Shrinkage Limit (ASTM D 427)
- (SW) Swell Potential (ASTM D 4546)
- (TV) Pocket Torvane
- (UC) Unconfined Compression-Soil (ASTM D 2166) Unconfined Compression-Rock (ASTM D 2938)
- (UU) Unconsolidated Undrained Triaxial (ASTM D 2850)
- (UW) Unit Weight (ASTM D 4767)
- (VS) Vane Shear (AASHTO T 223)

APPARENT DENSITY OF COHESIONLESS SOILS

Description	SPT N_{60} (Blows / 12 inches)
Very loose	0 - 4
Loose	5 - 10
Medium Dense	11 - 30
Dense	31 - 50
Very Dense	> 50

MOISTURE

Description	Criteria
Dry	Absence of moisture, dusty, dry to the touch
Moist	Damp but no visible water
Wet	Visible free water, usually soil is below water table

PERCENT OR PROPORTION OF SOILS

Description	Criteria
Trace	Particles are present but estimated to be less than 5%
Few	5 to 10%
Little	15 to 25%
Some	30 to 45%
Mostly	50 to 100%

PARTICLE SIZE

Description		Size
Boulder		> 12"
Cobble		3" to 12"
Gravel	Coarse	3/4" to 3"
	Fine	No. 4 to 3/4"
Sand	Coarse	No. 10 to No. 4
	Medium	No. 40 to No. 10
	Fine	No. 200 to No. 40

ENGINEERING SERVICES

GEOTECHNICAL SERVICES
PREPARED BY: I.G-Remmen, 4/10

STATE OF CALIFORNIA DEPARTMENT OF TRANSPORTATION

DIVISION OF ENGINEERING SERVICES STRUCTURE DESIGN
DESIGN BRANCH

BRIDGE NO. 56-0838S
POST MILE 20.10

14TH STREET EASTBOUND ENTRANCE RAMP
LOG OF TEST BORINGS 5 OF 5

GS LOTB SOIL LEGEND

ORIGINAL SCALE IN INCHES FOR REDUCED PLANS 0 1 2 3

CU 08
EA 448401

DISREGARD PRINTS BEARING EARLIER REVISION DATES 05-13-10

REVISION DATES

SHEET 32 OF 32

FILE => 560838szltb32.dgn

USERNAME => rtrrichf DATE PLOTTED => 30-APR-2011 TIME PLOTTED => 13:55

DIST	COUNTY	ROUTE	POST MILES TOTAL PROJECT	SHEET No	TOTAL SHEETS
08	Riv	91	15.6/21.6	1911	2028

REGISTERED CIVIL ENGINEER 11-30-10 DATE

4-25-11
PLANS APPROVAL DATE

The State of California or its officers or agents shall not be responsible for the accuracy or completeness of electronic copies of this plan sheet.

REGISTERED PROFESSIONAL ENGINEER HUAN D. VU No. C60696 Exp. 12/31/10 CIVIL STATE OF CALIFORNIA

NOTES:

1. Paint "BR.NO. 56-0839"
2. Paint "PACHAPPA UP" and year Const
3. Concrete Barrier Type 60GE see "Roadway Plans".
4. Ballast and Track work, see "Roadway Plans".
5. Pachappa UP (Shoofly) is to remain operational during construction of new underpass.
6. For curve data, see "FOUNDATION PLAN" sheet, and "Roadway Plans".
7. Concrete Barrier Type 60D (Mod)
8. Cable Railing
9. Clean & Paint structural steel.
10. Pachappa UP (Shoofly) superstructure is to be removed once the Pachappa UP (Replace) is operational.

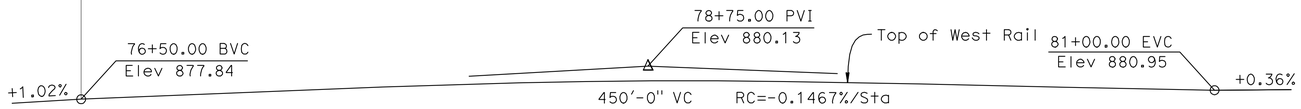

PROFILE GRADE

No Scale

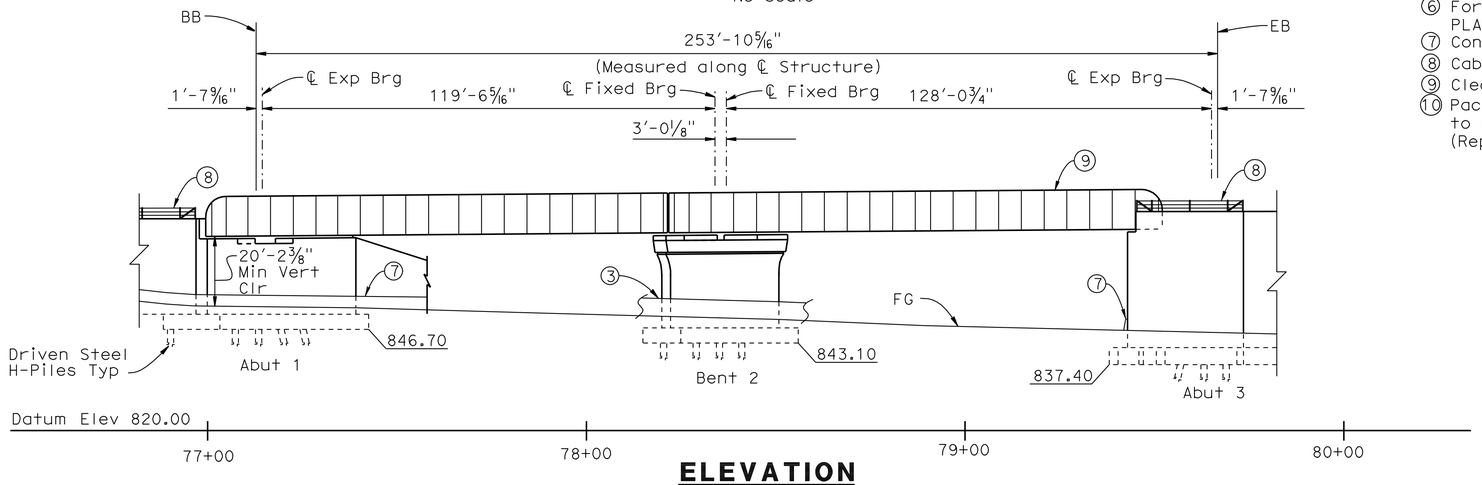

ELEVATION

1" = 20'

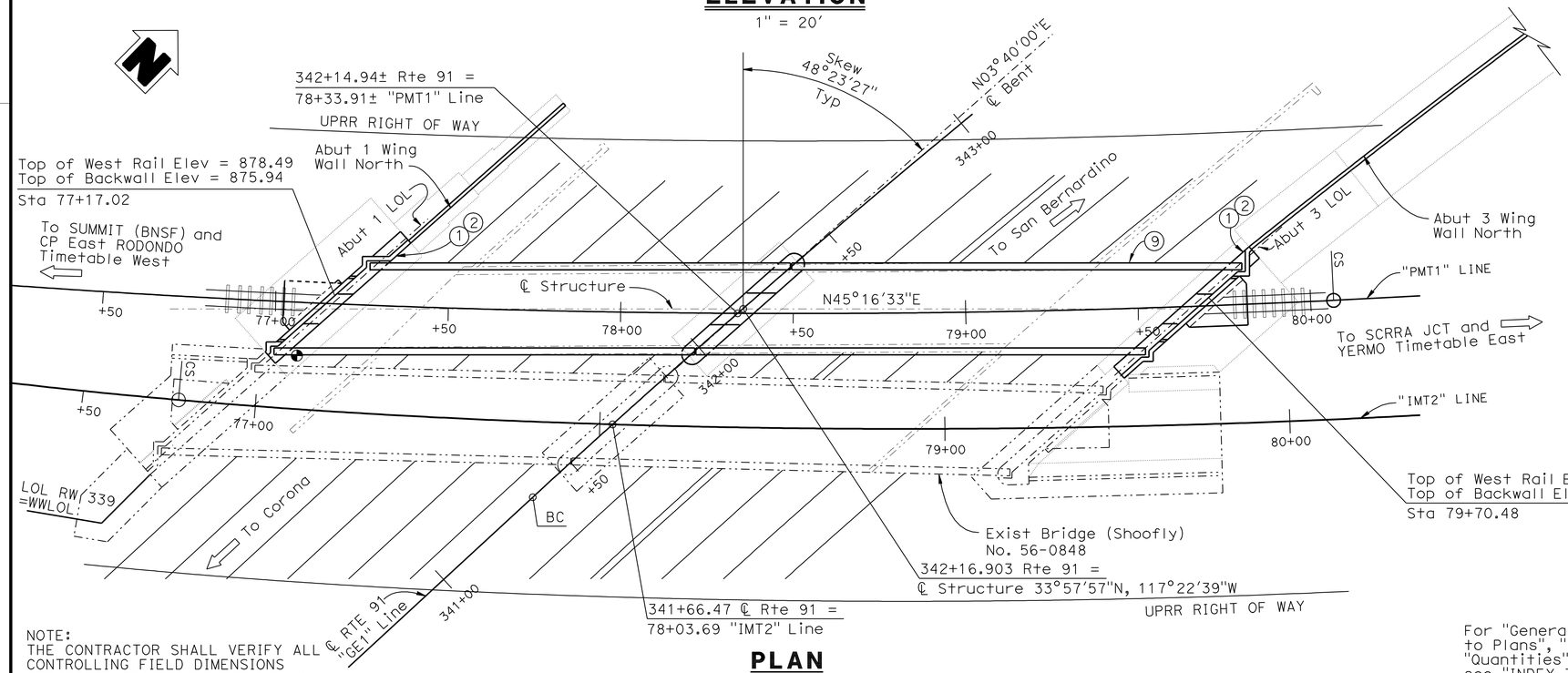

PLAN

1" = 20'

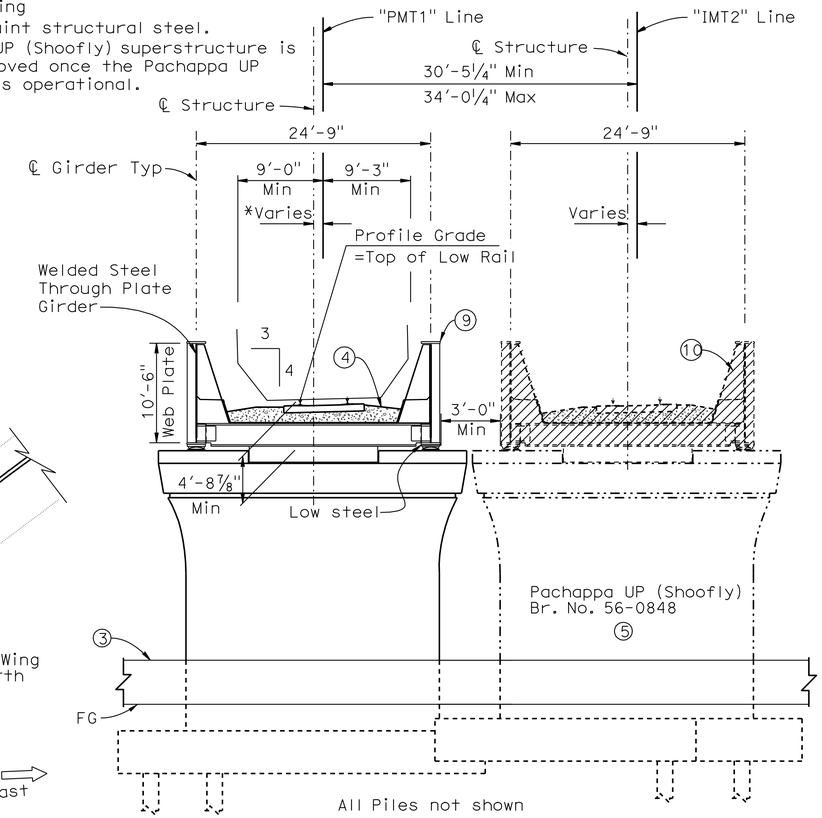

TYPICAL SECTION

1/8"=1'-0"

*Variable dimension measured along ℄ Brg
Abutment 1 = -2'-3 7/8"
Bent 2 = 1'-11"
Abutment 3 = -1'-1 3/4"

NOTE:
THE CONTRACTOR SHALL VERIFY ALL CONTROLLING FIELD DIMENSIONS BEFORE ORDERING OR FABRICATING ANY MATERIAL.

For "General Notes", "Index to Plans", "Standard Plans", "Quantities", and "Pile Data", see "INDEX TO PLANS" Sheet.

LEGEND:
- Indicates existing structure
- Indicates new construction
- Indicates direction of traffic flow
- Indicates point of minimum Vert Clr
- Indicates Bridge Removal Portion

DANIEL T. ADAMS
DESIGN ENGINEER

	BY	CHECKED
DESIGN	B. Addlespurger	G. Slocum
DETAILS	G. Hallstrom	G. Slocum
QUANTITIES	T. Sanderson	R. Anderson

LOAD FACTOR DESIGN — LIVE LOADING: AREMA COOPER E-80 AND ALTERNATIVE LIVE LOAD

	BY	CHECKED
LAYOUT	J. Yang	B. Addlespurger
SPECIFICATIONS	D. Klein	PLANS AND SPECS COMPARED D. Klein

STATE OF CALIFORNIA
DEPARTMENT OF TRANSPORTATION

DIVISION OF ENGINEERING SERVICES
STRUCTURE DESIGN
DESIGN BRANCH 10

BRIDGE NO. 56-0839
POST MILE 19.39

PACHAPPA UP (REPLACE)
GENERAL PLAN

ORIGINAL SCALE IN INCHES FOR REDUCED PLANS 0 1 2 3

CU 08
EA 448401

DISREGARD PRINTS BEARING EARLIER REVISION DATES

REVISION DATES: 6-09-09, 6-19-11, 11-18-09, 1-14-10, 8-16-10, 9-09-10, 9-29-10, 11-08-10

SHEET 1 OF 44

STRUCTURES DESIGN GENERAL PLAN SHEET (ENGLISH) (REV.07-24-06)

FILE => 560839agp01.dgn

USERNAME => trrright DATE PLOTTED => 30-APR-2011 TIME PLOTTED => 13:55

DIST	COUNTY	ROUTE	POST MILES TOTAL PROJECT	SHEET No	TOTAL SHEETS
08	Riv	91	15.6/21.6	1912	2028

REGISTERED CIVIL ENGINEER 11-30-10 DATE

4-25-11
PLANS APPROVAL DATE

REGISTERED PROFESSIONAL ENGINEER HUAN D. VU No. C60696 Exp. 12/31/10 CIVIL STATE OF CALIFORNIA

The State of California or its officers or agents shall not be responsible for the accuracy or completeness of electronic copies of this plan sheet.

NOTE:
THE CONTRACTOR SHALL VERIFY ALL CONTROLLING FIELD DIMENSIONS BEFORE ORDERING OR FABRICATING ANY MATERIAL.

INDEX TO PLANS

Sheet No.	Title
1.	GENERAL PLAN
2.	INDEX TO PLANS
3.	FOUNDATION PLAN NO. 1
4.	FOUNDATION PLAN NO. 2
5.	ABUTMENT 1 LAYOUT
6.	ABUTMENT 3 LAYOUT
7.	ABUTMENT DETAILS NO. 1
8.	ABUTMENT DETAILS NO. 2
9.	ABUTMENT 1 FOOTING DETAILS
10.	ABUTMENT 3 FOOTING DETAILS
11.	APRON SLAB DETAILS
12.	WING WALL ABUT 1 NORTH
13.	WING WALL ABUT 3 NORTH
14.	WING WALL DETAILS NO.1
15.	WING WALL DETAILS NO.2
16.	BENT LAYOUT
17.	BENT DETAILS
18.	SHEAR KEY BEAM LAYOUT
19.	SHEAR KEY BEAM DETAILS
20.	TYPICAL SECTION
21.	GIRDER LAYOUT NO. 1
22.	GIRDER LAYOUT NO. 2
23.	GIRDER DETAILS NO. 1
24.	GIRDER DETAILS NO. 2
25.	GIRDER DETAILS NO. 3
26.	GIRDER DETAILS NO. 4
27.	GIRDER DETAILS NO. 5
28.	GIRDER DETAILS NO. 6
29.	GIRDER DETAILS NO. 7
30.	DECK PLATING AND SIDEWALK LAYOUT
31.	DECK PLATING AND SIDEWALK DETAILS NO. 1
32.	DECK PLATING AND SIDEWALK DETAILS NO. 2
33.	ARCHITECTURAL DETAILS NO. 1
34.	ARCHITECTURAL DETAILS NO. 2
35.	ARCHITECTURAL DETAILS NO. 3
36.	PTFE/SPHERICAL EXPANSION BEARING DETAILS
37.	PTFE/SPHERICAL FIXED BEARING DETAILS
38.	PTFE/SPHERICAL ANCHORAGE DETAILS
39.	DECK DRAINAGE LAYOUT AND DETAILS
40.	BRIDGE REMOVAL
41.	BRIDGE REMOVAL (PORTION)
42.	LOG OF TEST BORINGS SHEET 1 OF 3
43.	LOG OF TEST BORINGS SHEET 2 OF 3
44.	LOG OF TEST BORINGS SHEET 3 OF 3

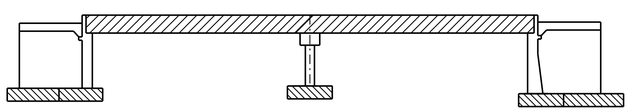

Structural Concrete, Bridge (fc'=4,000psi)

Structural Concrete, Bridge Footing (fc'=4,000psi)

Welded Steel Through Plate Girders

STANDARD PLANS DATED MAY 2006

A10A	ACRONYMS AND ABBREVIATIONS (SHEET 1 OF 2)
A10B	ACRONYMS AND ABBREVIATIONS (SHEET 2 OF 2)
A10C	SYMBOLS (SHEET 1 OF 2)
A10D	SYMBOLS (SHEET 2 OF 2)
A62B	LIMITS OF PAYMENT FOR EXCAVATION AND BACKFILL-BRIDGE SURCHARGE AND WALL
A62C	LIMITS OF PAYMENT FOR EXCAVATION AND BACKFILL-BRIDGE
BO-3	BRIDGE DETAILS
B3-1	RETAINING WALL TYPE 1-H=4' THROUGH 30'
B3-2	RETAINING WALL TYPE 1-H=32' THROUGH 36'
B3-8	RETAINING WALL DETAILS NO. 1
B3-9	RETAINING WALL DETAILS NO. 2
B7-6	DECK DRAINS TYPES D-1 AND D-2
B11-47	CABLE RAILING
B11-57	CONCRETE BARRIER TYPE 742

QUANTITIES

BRIDGE REMOVAL (PORTION), LOCATION K	LUMP	SUM
BRIDGE REMOVAL, LOCATION J	LUMP	SUM
STRUCTURE EXCAVATION (BRIDGE)	6,823	CY
STRUCTURE BACKFILL (BRIDGE)	5,087	CY
PERVIOUS BACKFILL MATERIAL	184	CY
FURNISH STEEL PILING (HP 14 X 89)	15,190	LF
DRIVE STEEL PILE (HP 14 X 89)	215	EA
STRUCTURAL CONCRETE, BRIDGE FOOTING	448	CY
STRUCTURAL CONCRETE, BRIDGE	725	CY
STRUCTURAL CONCRETE, APRON SLAB	57	CY
ARCHITECTURAL SURFACE(TEXTURED CONCRETE) FRACTURED RIB TEXTURE	620	SQFT
ARCHITECTURAL SURFACE(TEXTURED CONCRETE) FRACTURED RIB SPLIT SLATE TEXTURE	3,697	SQFT
PTFE SPHERICAL BEARING	8	EA
BAR REINFORCING STEEL (BRIDGE)	180,390	LB
WATERPROOFING AND COVER	5,820	SQFT
FURNISH STRUCTURAL STEEL (BRIDGE)	1,103,755	LB
ERECT STRUCTURAL STEEL (BRIDGE)	1,103,755	LB
CLEAN AND PAINT STRUCTURAL STEEL	LUMP	SUM
MINOR CONCRETE (GUTTER)	126	LF
MISCELLANEOUS METAL (BRIDGE)	3,442	LB
BRIDGE DECK DRAINAGE SYSTEM	2,518	LB
CABLE RAILING	147	LF
CONCRETE BARRIER (TYPE 742)	126	LF
CONCRETE BARRIER (TYPE 60D MODIFIED)	371	LF

GENERAL NOTES

DESIGN:
1. "MANUAL FOR RAILWAY ENGINEERING" A.R.E.M.A 2010 EDITION.
2. BNSF RAILWAY-UNION PACIFIC RAILROAD, "GUIDELINES FOR RAILROAD GRADE SEPARATION PROJECTS" - 2007
3. STEEL CONSTRUCTION MANUAL - AISC 13th EDITION.
4. BRIDGE WELDING CODE AWS D1.5-2008
5. BRIDGE DESIGN SPECIFICATIONS" LFD VERSION, APRIL 2000 (1996 16th Edition AASHTO with Interims and Revisions by CALTRANS)

SEISMIC DESIGN: AREMA Chapter 9, Seismic Design for Railway Structures

LIVE LOADING: COOPER E-80 with Diesel Impact and Alternate Live Load

SHORING: All Shoring shall conform to UPRR Guidelines for Temporary Shoring

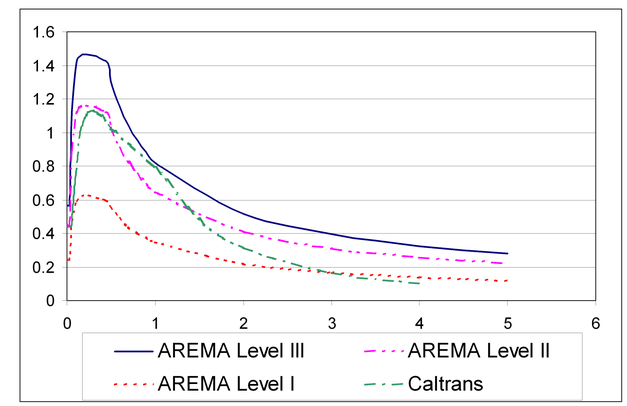

REINFORCED CONCRETE:
Load Factor Design
f_y = 60,000 psi n = 8.04

STRUCTURAL STEEL:
Service Load Design
1. All main member structural steel shall be ASTM A709 Grade 50. Other structural steel may be ASTM A 588 or ASTM A572, except sidewalk checkered plates and flashing which may be ASTM A36 galvanized steel, and deck plates, which shall be ASTM A709 Grade 36. Anchor Rods shall conform to ASTM F1554; and shall be galvanized per ASTM A123. Anchor Rod Washers shall be zinc coated per ASTM A153.
2. Unless noted otherwise, HS bolts, including nuts and washers shall be ⅞" Ø ASTM A325X for slip critical connections "SC Class B" Type 1 Bolts with bolt heads toward the outside or the underside of the bridge.
3. The bottom flanges and lower half portions of the webs of through plate girders, all floor beams, and end floor beams shall meet the requirements for fracture critical members. Through plate girders, all floor beams, and end floor beams are considered "main" members. Primary components of "main" members are flanges, webs, transverse stiffeners, bearing stiffeners, gussets, shear tabs, and floor beam hangers. All members not designated as FCM or Main Members are considered Secondary Members.
4. Electrodes shall be E70XX unless noted otherwise.

CONCRETE STRENGTH AND TYPE LIMITS

No Scale

PILE DATA TABLE

	Location	Pile Type	Design Loading (WSD)	Load Factor Design (LFD) Nominal Resistance		Cut-off Elevations (ft)	Design Tip Elevation (ft)	Specified Tip Elevation (ft)
				Compression	Tension			
	Abut 1	HP14x89	200 kips	400 kips	0	847.1	777 (1)	777 (3)
*	Bent 2	HP14x89	175 kips	345 kips	175 kips	843.5	774 (2)	774 (3)
	Abut 3	HP14x89	200 kips	400 kips	0	837.8	768 (1)	768 (3)
	Abut 3 Wingwall	HP14x89	165 kips	N/A	N/A	834.5	769.5 (1)	769.5

NOTE: Design tip elevations are controlled by the following demands:
(1) Compression
(2) Tension
(3) Specified tip elevation shall not be raised above the design tip elevations.

* Piles at bent shall be ASTM A572 Grade 50

	BY	CHECKED
DESIGN	B. Addlespurger	G. Slocum
DETAILS	G. Hallstrom	G. Slocum
QUANTITIES	T. Sanderson	R. Anderson

STATE OF CALIFORNIA
DEPARTMENT OF TRANSPORTATION

DIVISION OF ENGINEERING SERVICES
STRUCTURE DESIGN
DESIGN BRANCH 10

BRIDGE NO. 56-0839
POST MILE 19.39

PACHAPPA UP (REPLACE)
INDEX TO PLANS

STRUCTURES DESIGN DETAIL SHEET (ENGLISH) (REV. 10/25/05)

ORIGINAL SCALE IN INCHES FOR REDUCED PLANS 0 1 2 3

CU 08
EA 448401

DISREGARD PRINTS BEARING EARLIER REVISION DATES

REVISION DATES: 06-04-10 7-08-10 9-03-10 9-29-10 11-04-10

SHEET 2 OF 44

FILE => 560839aitp02.dgn

USERNAME => trrichf DATE PLOTTED => 30-APR-2011 TIME PLOTTED => 13:56

SPIRAL CURVE DATA				
No.	Δs	Ls	TL	Ts
AA	0°45′54′	85′	56.67′	28.33′
BB	2°54′53"	110′	50.86′	59.16′

NOTES:

1. Bottom of footing elevations shown thus XXX.XX
2. ℄ Abutment and ℄ Bent layout lines are parallel to N03°40′00"E.
3. Not all piles shown.
4. Underground utilities as shown are approximate.
5. Shoring locations

CURVE DATA				
No.	R	Δ	T	L
1	3183.23	15°17′47"	427.46	849.83
2	1763.18	04°41′47"	72.30	144.53
3	2795.07	07°22′39"	180.20	359.89
4	3000.00	26°22′56"	703.15	1381.36
7	2821.60	02°24′06"	59.14	118.26
8	2810.00	04°35′04"	112.84	224.84
9	3078.26	02°11′00"	58.66	117.31
10	3194.17	10°18′58"	288.33	575.11

DIST	COUNTY	ROUTE	POST MILES TOTAL PROJECT	SHEET No	TOTAL SHEETS
08	Riv	91	15.6/21.6	1913	2028

REGISTERED CIVIL ENGINEER 11-30-10 DATE

4-25-11
PLANS APPROVAL DATE

The State of California or its officers or agents shall not be responsible for the accuracy or completeness of electronic copies of this plan sheet.

REGISTERED PROFESSIONAL ENGINEER HUAN D. VU No. C60696 Exp. 12/31/10 CIVIL STATE OF CALIFORNIA

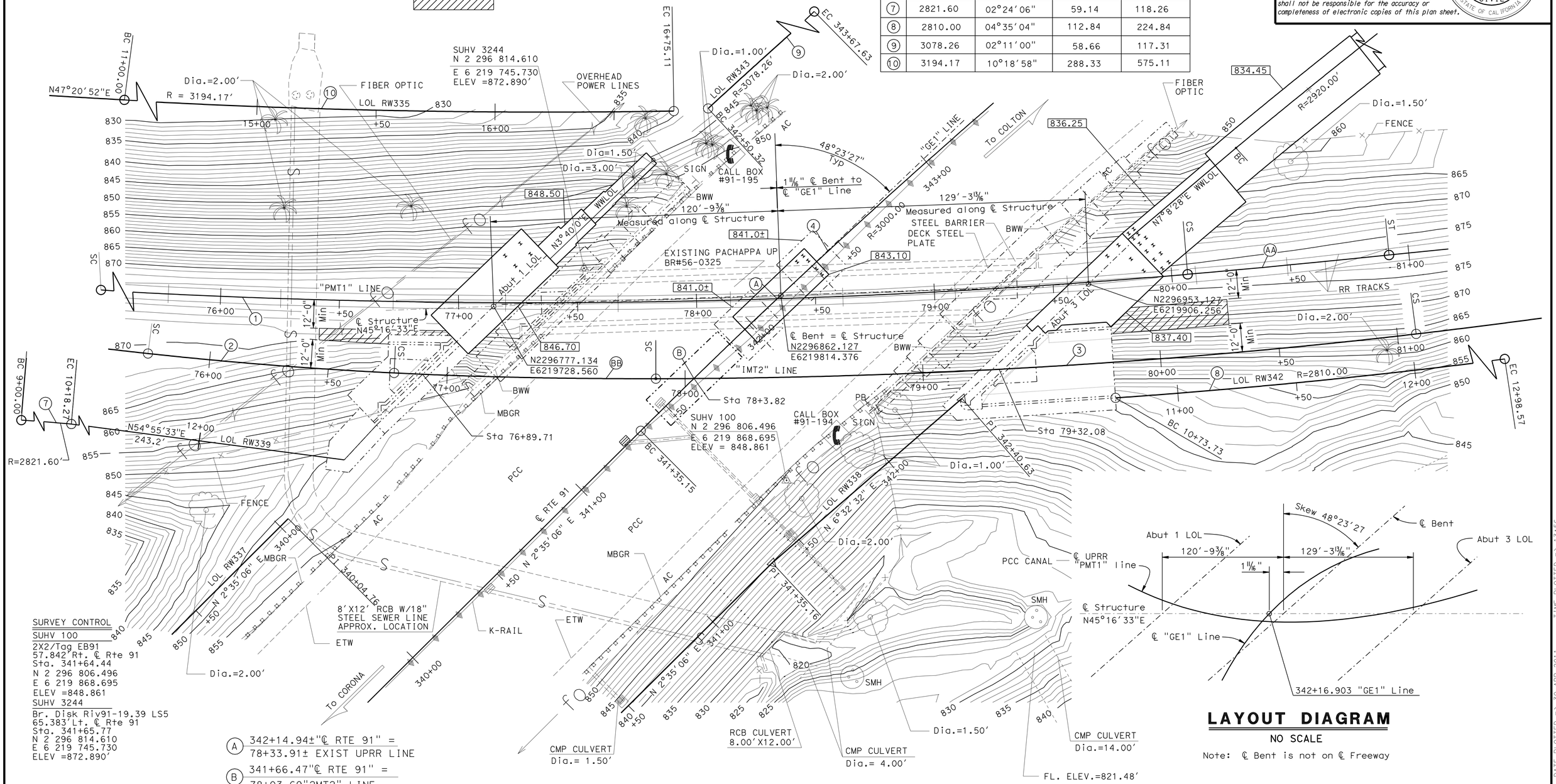

SURVEY CONTROL

SUHV 100
2X2/Tag EB91
57.842′Rt. ℄ Rte 91
Sta. 341+64.44
N 2 296 806.496
E 6 219 868.695
ELEV =848.861

SUHV 3244
Br. Disk Riv91-19.39 LS5
65.383′Lt. ℄ Rte 91
Sta. 341+65.77
N 2 296 814.610
E 6 219 745.730
ELEV =872.890′

(A) 342+14.94±"℄ RTE 91" = 78+33.91± EXIST UPRR LINE

(B) 341+66.47"℄ RTE 91" = 78+03.69"2MT2" LINE

LAYOUT DIAGRAM

NO SCALE

Note: ℄ Bent is not on ℄ Freeway

PRELIMINARY INVESTIGATION SECTION							
SCALE 1:20	VERT.DATUM NAVD 88	PHOTOGRAMMETRY AS OF: X					
	HORZ.DATUM NAD 83 (1991.35)	SURVEYED	BY T.PHONG / C.STEWART	CHECKED	BY C. STEWART 01/2009		
ALIGNMENT TIES Dist. Trav. Sheets		DRAFTED	BY S.ABASSY 01/2009	CHECKED	BY L.MANABO 01/2009		

	BY	CHECKED
DESIGN	B. Addlespurger	G. Slocum
DETAILS	G. Hallstrom	G. Slocum
QUANTITIES	T Sanderson	R. Anderson

STATE OF CALIFORNIA
DEPARTMENT OF TRANSPORTATION

DIVISION OF ENGINEERING SERVICES
STRUCTURE DESIGN
DESIGN BRANCH 10

BRIDGE NO. 56-0839
POST MILE 19.39

PACHAPPA UP (REPLACE)
FOUNDATION PLAN NO. 1

STRUCTURES FOUNDATION PLAN SHEET (ENGLISH) (REV. 10/25/05)

ORIGINAL SCALE IN INCHES FOR REDUCED PLANS 0 1 2 3

CU 08-227
EA 448401

DISREGARD PRINTS BEARING EARLIER REVISION DATES

REVISION DATES: 01/22/09 02/19/09 12/24/09 06/30/10 08/16/10 09/22/10 11/15/10

SHEET 3 OF 44

FILE => 560839efdp103.dgn

USERNAME => trrright DATE PLOTTED => 30-APR-2011 TIME PLOTTED => 13:56

DIST	COUNTY	ROUTE	POST MILES TOTAL PROJECT	SHEET No	TOTAL SHEETS
08	Riv	91	15.6/21.6	1914	2028

REGISTERED CIVIL ENGINEER 11-30-10 DATE

4-25-11
PLANS APPROVAL DATE

REGISTERED PROFESSIONAL ENGINEER HUAN D. VU No. C60696 Exp. 12/31/10 CIVIL STATE OF CALIFORNIA

The State of California or its officers or agents shall not be responsible for the accuracy or completeness of electronic copies of this plan sheet.

CURVE DATA				
No.	R	Δ	T	L
1	3183.23	15°17′47″	427.46	849.83
3	2795.07	07°22′39″	180.20	359.89
4	3000.00	26°22′55″	703.15	1381.36
11	2920.00	03°16′06″	83.31	166.55
12	2915.00	03°32′11″	89.99	179.91

SPIRAL CURVE DATA				
No.	Δs	Ls	TL	Ts
AA	0°45′54′	85′	56.67′	28.33′
CC	1°07′39″	110′	36.67′	73.33′

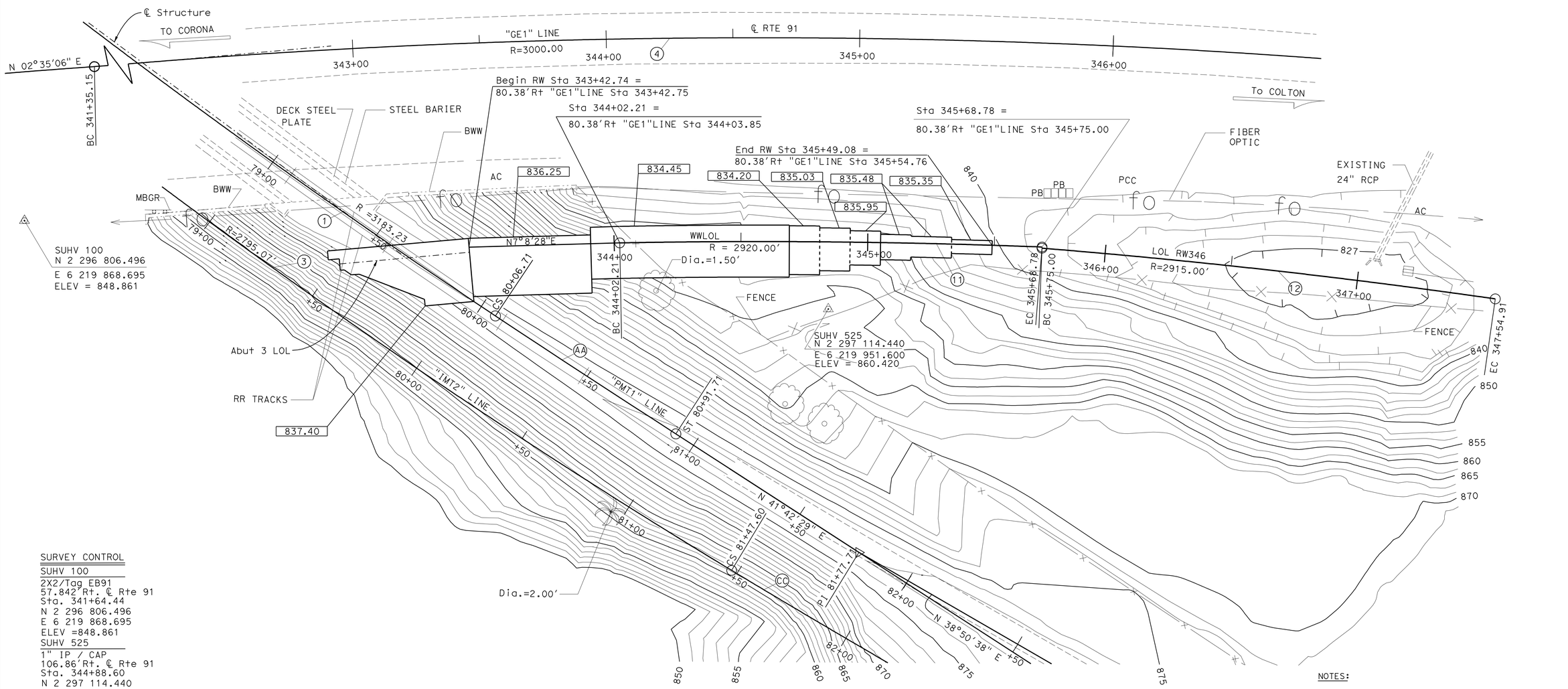

SURVEY CONTROL

SUHV 100
2X2/Tag EB91
57.842′Rt. ℄ Rte 91
Sta. 341+64.44
N 2 296 806.496
E 6 219 868.695
ELEV =848.861

SUHV 525
1" IP / CAP
106.86′Rt. ℄ Rte 91
Sta. 344+88.60
N 2 297 114.440
E 6 219 951.600
ELEV = 860.420

NOTES:

UNDERGROUND UTILITIES AS SHOWN ARE APPROXIMATE

xxx.xx Indicates bottom of footing elevation

PRELIMINARY INVESTIGATION SECTION

SCALE	VERT.DATUM NAVD 88	PHOTOGRAMMETRY AS OF: X		
1:20	HORZ.DATUM NAD 83 (1991.35)	SURVEYED	BY T.PHONG / C.STEWART	CHECKED BY C. STEWART 01/2009
ALIGNMENT TIES Dist. Trav. Sheets		DRAFTED	BY S.ABASSY 03/2010	CHECKED BY L.MANABO 03/2010

	BY	CHECKED
DESIGN	B. Addlespurger	G. Slocum
DETAILS	G. Hallstrom	G. Slocum
QUANTITIES	T. Sanderson	R. Anderson

STATE OF CALIFORNIA
DEPARTMENT OF TRANSPORTATION

DIVISION OF ENGINEERING SERVICES
STRUCTURE DESIGN
DESIGN BRANCH 10

BRIDGE NO. 56-0839
POST MILE 19.39

PACHAPPA UP (REPLACE)
FOUNDATION PLAN NO. 2

STRUCTURES FOUNDATION PLAN SHEET (ENGLISH) (REV. 10/25/05)

ORIGINAL SCALE IN INCHES FOR REDUCED PLANS 0 1 2 3

CU 08-227
EA 448401

DISREGARD PRINTS BEARING EARLIER REVISION DATES

REVISION DATES 03/11/10 06/30/10 08/16/10 11/10/10

SHEET 4 OF 44

FILE => 560839efdp104.dgn

USERNAME => trrichf DATE PLOTTED => 30-APR-2011 TIME PLOTTED => 13:57

DIST	COUNTY	ROUTE	POST MILES TOTAL PROJECT	SHEET No	TOTAL SHEETS
08	Riv	91	15.6/21.6	1915	2028

REGISTERED CIVIL ENGINEER 11-30-10 DATE

4-25-11
PLANS APPROVAL DATE

REGISTERED PROFESSIONAL ENGINEER HUAN D. VU No. C60696 Exp. 12/31/10 CIVIL STATE OF CALIFORNIA

The State of California or its officers or agents shall not be responsible for the accuracy or completeness of electronic copies of this plan sheet.

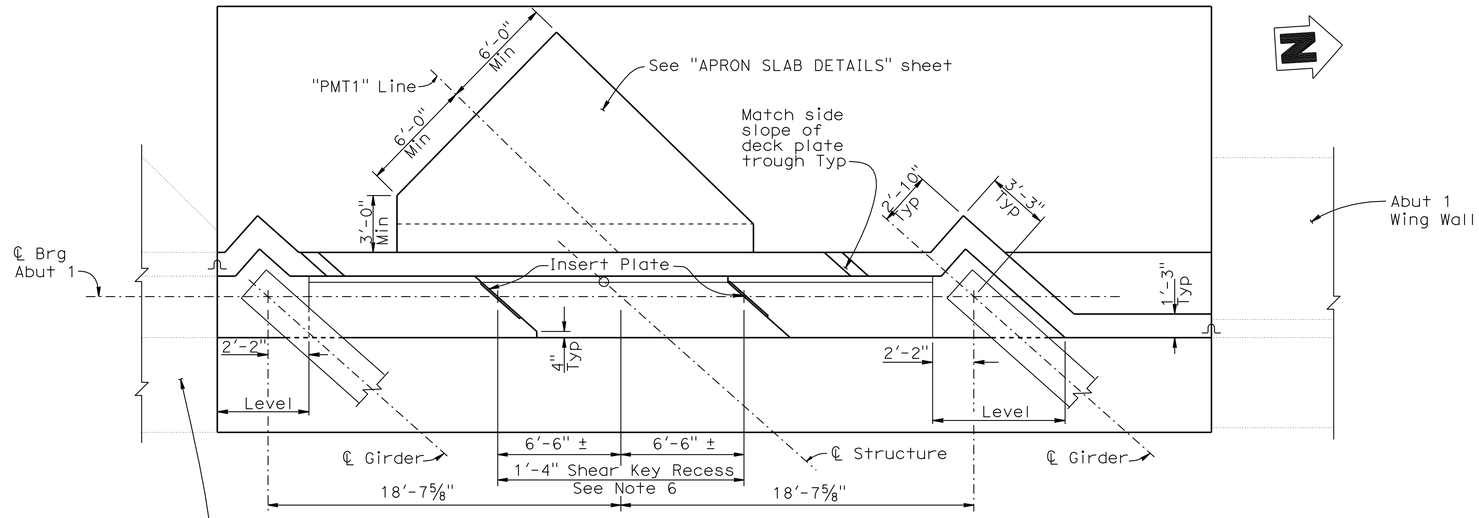

PLAN

¼" = 1'-0"

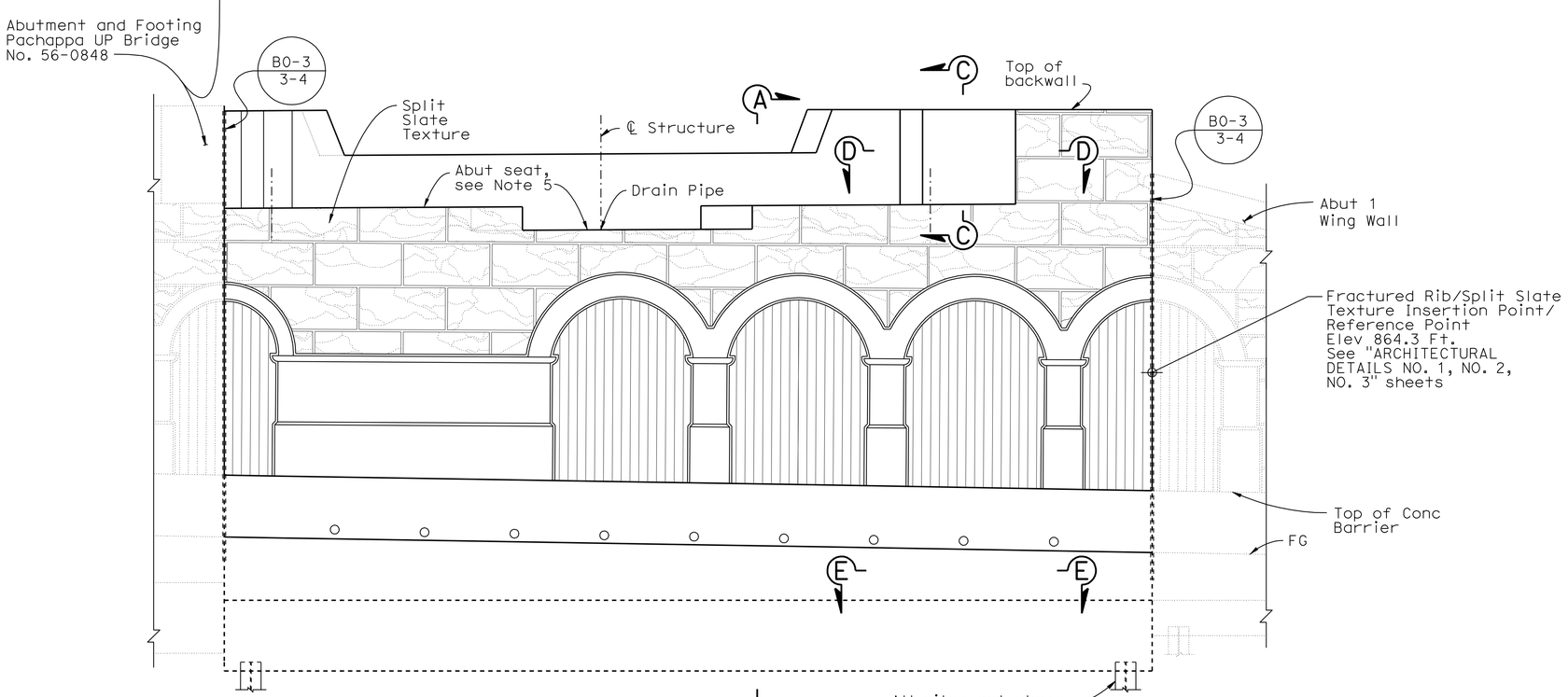

ELEVATION

¼" = 1'-0"

NOTES:

1. For Sections A-A and C-C, see "ABUTMENT DETAILS NO. 1" sheet.
2. For Footing Reinforcement and Layout, see "ABUTMENT 1 FOOTING DETAILS" and "ABUTMENT DETAILS NO. 1" sheets.
3. For Sections D-D, E-E, and Key Reinforcement, see "ABUTMENT DETAILS NO. 2" sheet.
4. For Insert Plate Details, see "SHEAR KEY BEAM LAYOUT" and "SHEAR KEY BEAM DETAILS" sheet.
5. For Elevations, see "PTFE/SPHERICAL ANCHORAGE DETAILS" sheet. Slope finished seat to drain towards ℄ structure, see "DECK DRAINAGE LAYOUT AND DETAILS" sheet.
6. Recess width to match fit Shear Key Beam, see "SHEAR KEY BEAM LAYOUT" sheet.

NOTE:
THE CONTRACTOR SHALL VERIFY ALL CONTROLLING FIELD DIMENSIONS BEFORE ORDERING OR FABRICATING ANY MATERIAL.

	BY	CHECKED
DESIGN	B. Addlespurger	G. Slocum
DETAILS	J. Yang	G. Slocum
QUANTITIES	T. Sanderson	R. Anderson

STATE OF CALIFORNIA
DEPARTMENT OF TRANSPORTATION

DIVISION OF ENGINEERING SERVICES
STRUCTURE DESIGN
DESIGN BRANCH 10

BRIDGE NO. 56-0839
POST MILE 19.39

PACHAPPA UP (REPLACE)
ABUTMENT 1 LAYOUT

STRUCTURES DESIGN DETAIL SHEET (ENGLISH) (REV. 10/25/05)

ORIGINAL SCALE IN INCHES FOR REDUCED PLANS 0 1 2 3

CU 08
EA 448401

DISREGARD PRINTS BEARING EARLIER REVISION DATES

REVISION DATES: 01-14-10 02-11-10 02-25-10 05-12-10 6-14-10 9-08-10 9-28-10 11-04-10 11-30-10

SHEET 5 OF 44

FILE => 560839fa01_1o05.dgn

USERNAME => trrichf DATE PLOTTED => 30-APR-2011 TIME PLOTTED => 13:57

DIST	COUNTY	ROUTE	POST MILES TOTAL PROJECT	SHEET No	TOTAL SHEETS
08	Riv	91	15.6/21.6	1916	2028

REGISTERED CIVIL ENGINEER 11-30-10 DATE

4-25-11
PLANS APPROVAL DATE

REGISTERED PROFESSIONAL ENGINEER HUAN D. VU No. C60696 Exp. 12/31/10 CIVIL STATE OF CALIFORNIA

The State of California or its officers or agents shall not be responsible for the accuracy or completeness of electronic copies of this plan sheet.

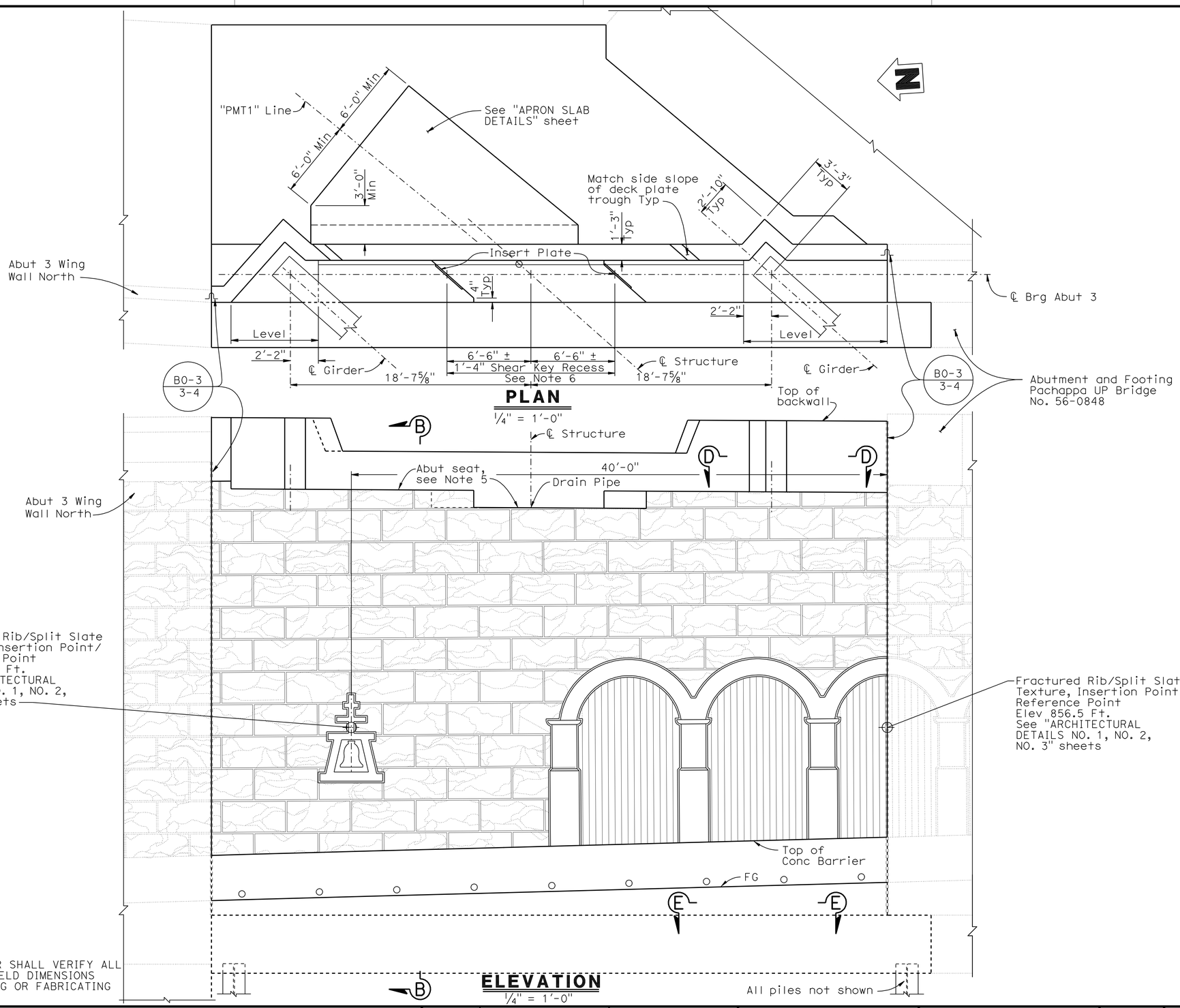

NOTES:

1. For Section B-B, see "ABUTMENT DETAILS NO. 1" sheet.
2. For Footing Reinforcement and Layout, see "ABUTMENT 3 FOOTING DETAILS" and "ABUTMENT DETAILS NO. 1" sheets.
3. For Sections D-D, E-E, and Key Reinforcement, see "ABUTMENT DETAILS NO. 2" sheet.
4. For Insert Plate Details, see "SHEAR KEY BEAM LAYOUT" and "SHEAR KEY BEAM DETAILS" sheet.
5. For Elevations, see "PTFE/SPHERICAL ANCHORAGE DETAILS" sheet. Slope finished seat to drain towards ℄ structure, see "DECK DRAINAGE LAYOUT AND DETAILS" sheet.
6. Recess width to match fit Shear Key Beam, see "SHEAR KEY BEAM LAYOUT" sheet.

NOTE:
THE CONTRACTOR SHALL VERIFY ALL CONTROLLING FIELD DIMENSIONS BEFORE ORDERING OR FABRICATING ANY MATERIAL.

	BY	CHECKED
DESIGN	B. Addlespurger	G. Slocum
DETAILS	J. Yang	G. Slocum
QUANTITIES	T. Sanderson	R. Anderson

STATE OF CALIFORNIA
DEPARTMENT OF TRANSPORTATION

DIVISION OF ENGINEERING SERVICES
STRUCTURE DESIGN
DESIGN BRANCH 10

BRIDGE NO. 56-0839
POST MILE 19.39

PACHAPPA UP (REPLACE)
ABUTMENT 3 LAYOUT

STRUCTURES DESIGN DETAIL SHEET (ENGLISH) (REV. 10/25/05)

ORIGINAL SCALE IN INCHES FOR REDUCED PLANS 0 1 2 3

CU 08
EA 448401

DISREGARD PRINTS BEARING EARLIER REVISION DATES

REVISION DATES: 01-13-10 02-11-10 02-25-10 6-14-10 9-09-10 9-23-10 11-04-10 11-30-10

SHEET 6 OF 44

FILE => 560839fa03_1o06.dgn

USERNAME => trrichf DATE PLOTTED => 30-APR-2011 TIME PLOTTED => 13:57

DIST	COUNTY	ROUTE	POST MILES TOTAL PROJECT	SHEET No	TOTAL SHEETS
08	Riv	91	15.6/21.6	1917	2028

REGISTERED CIVIL ENGINEER 11-30-10 DATE

4-25-11
PLANS APPROVAL DATE

REGISTERED PROFESSIONAL ENGINEER HUAN D. VU No. C60696 Exp. 12/31/10 CIVIL STATE OF CALIFORNIA

The State of California or its officers or agents shall not be responsible for the accuracy or completeness of electronic copies of this plan sheet.

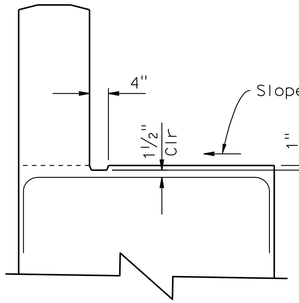

GUTTER DETAIL

3/4" = 1'-0"

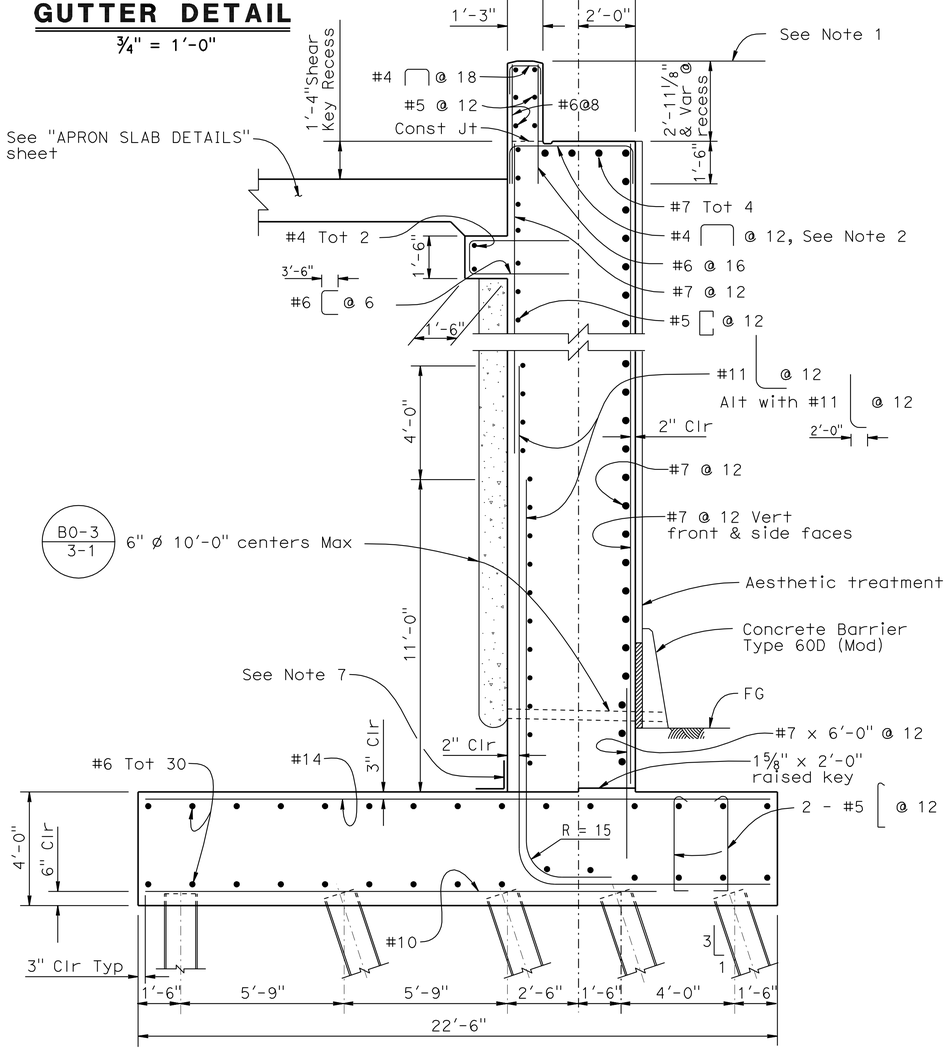

NOTE:
THE CONTRACTOR SHALL VERIFY ALL CONTROLLING FIELD DIMENSIONS BEFORE ORDERING OR FABRICATING ANY MATERIAL.

SECTION A-A

3/8" = 1'-0"

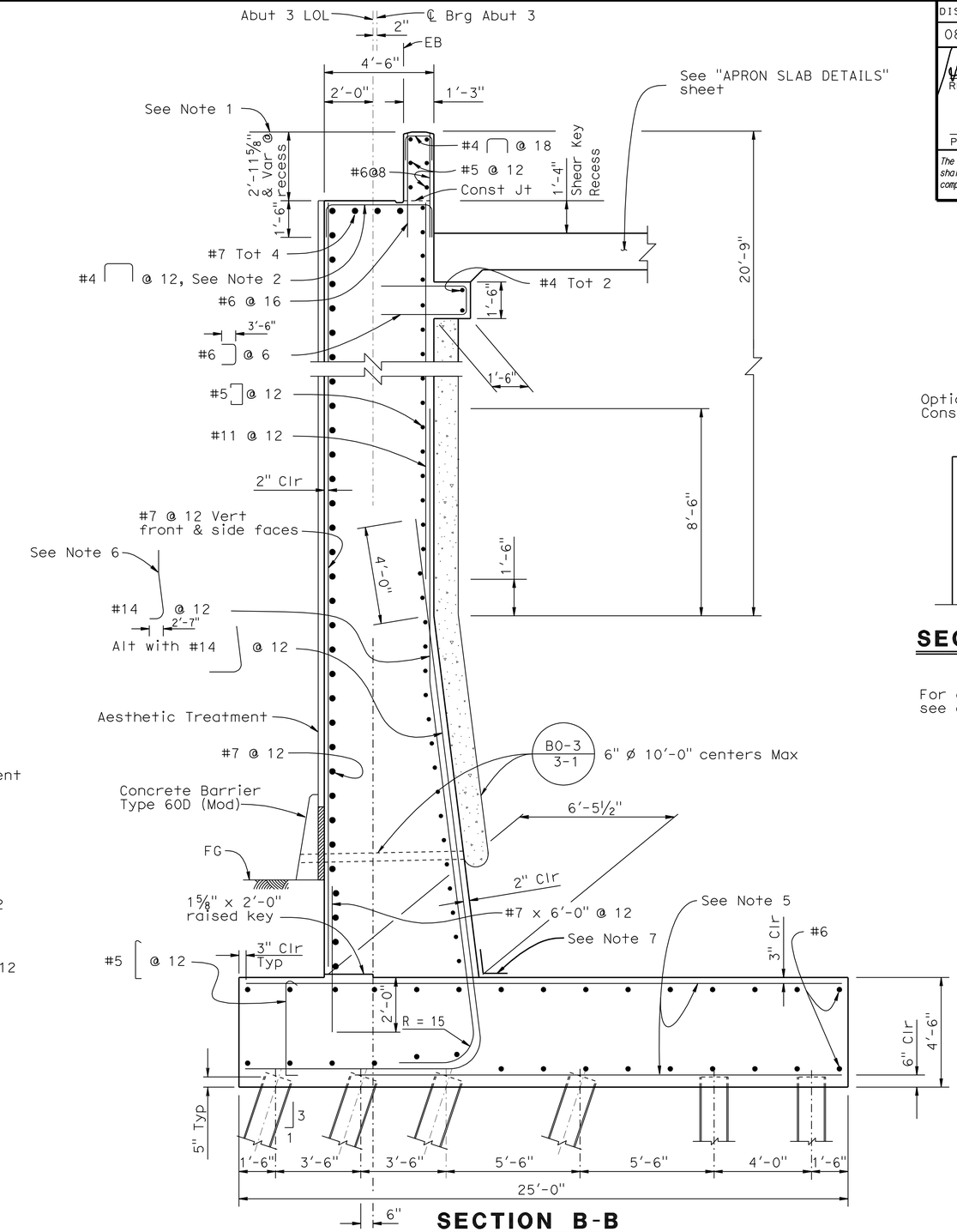

SECTION B-B

3/8" = 1'-0"

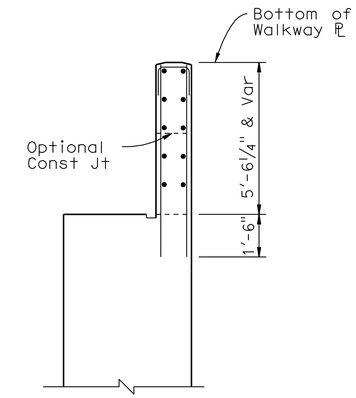

SECTION C-C

3/8" = 1'-0"

For details not shown see other sections.

NOTES:

1. Top of back wall to be at same elevation as top of floor beams after erection, and const before deck ℄ is placed.
2. Reinf to be splayed at top of seat before Shear Key Recess
3. For location of Section A-A and C-C, see "ABUTMENT 1 LAYOUT" sheet.
4. For location of Section B-B, see "ABUTMENT 3 LAYOUT" sheet.
5. See "ABUTMENT 3 FOOTING DETAILS" sheet.
6. Permissible service splice
7. 2'-0" wide band of dampproofing centered on the joint.

	BY	CHECKED
DESIGN	B. Addlespurger	G. Slocum
DETAILS	J. Yang	G. Slocum
QUANTITIES	T. Sanderson	R. Anderson

STATE OF CALIFORNIA
DEPARTMENT OF TRANSPORTATION

DIVISION OF ENGINEERING SERVICES
STRUCTURE DESIGN
DESIGN BRANCH 10

BRIDGE NO. 56-0839
POST MILE 19.39

PACHAPPA UP (REPLACE)
ABUTMENT DETAILS NO. 1

STRUCTURES DESIGN DETAIL SHEET (ENGLISH) (REV. 10/25/05)

ORIGINAL SCALE IN INCHES FOR REDUCED PLANS 0 1 2 3

CU 08
EA 448401

DISREGARD PRINTS BEARING EARLIER REVISION DATES

REVISION DATES: 08-22-08, 11-05-09, 11-19-09, 02-12-10, 05-14-10, 05-12-10, 9-02-10, 9-23-10

SHEET 7 OF 44

FILE => 560839fadt07.dgn

USERNAME => trright DATE PLOTTED => 30-APR-2011 TIME PLOTTED => 13:57

DIST	COUNTY	ROUTE	POST MILES TOTAL PROJECT	SHEET No	TOTAL SHEETS
08	Riv	91	15.6/21.6	1918	2028

REGISTERED CIVIL ENGINEER 11-30-10 DATE

4-25-11
PLANS APPROVAL DATE

The State of California or its officers or agents shall not be responsible for the accuracy or completeness of electronic copies of this plan sheet.

REGISTERED PROFESSIONAL ENGINEER HUAN D. VU No. C60696 Exp. 12/31/10 CIVIL STATE OF CALIFORNIA

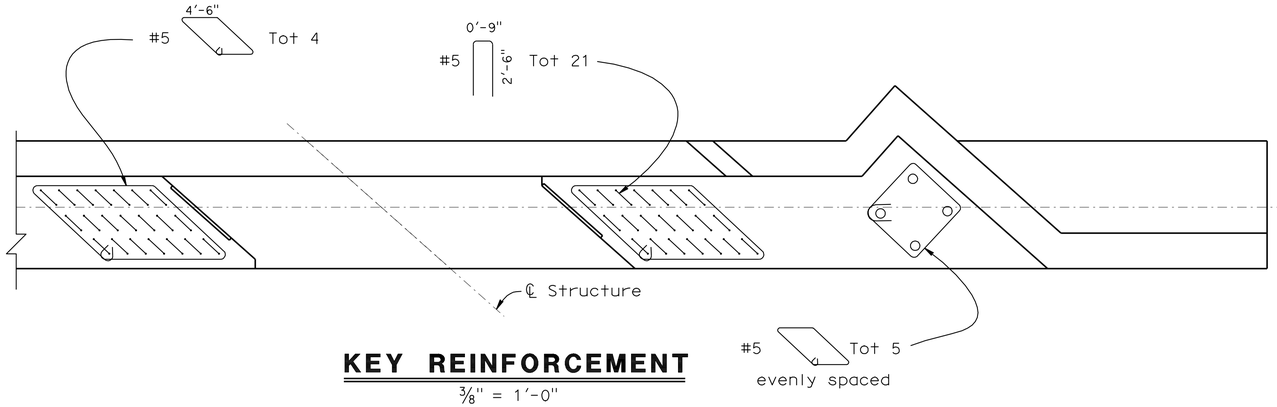

KEY REINFORCEMENT

3/8" = 1'-0"

Reinf is sym to ℄ structure

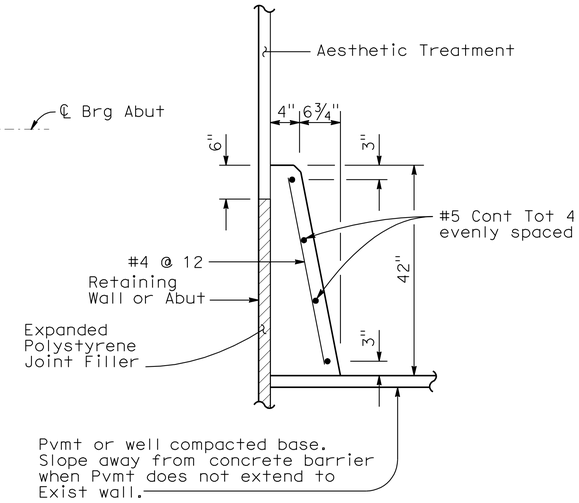

CONCRETE BARRIER TYPE 60D (MOD)

NOTES:

1. For Abutment Reinf, see "ABUTMENT DETAILS NO. 1" sheet.
2. For location of Section D-D and Section E-E, see "ABUTMENT 1 LAYOUT" and "ABUTMENT 3 LAYOUT" sheets.
3. Bearing Anchorage Details are shown on "PTFE/SPHERICAL ANCHORAGE DETAILS" sheet.

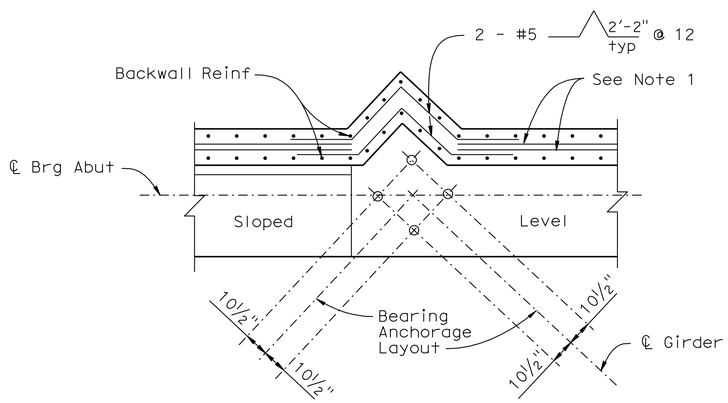

SECTION D-D

3/8" = 1'-0"

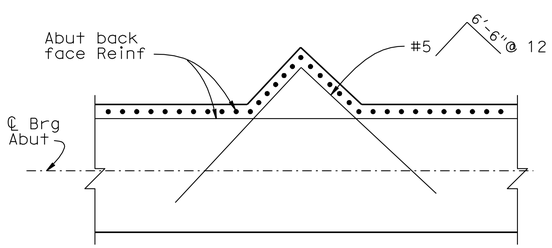

SECTION E-E

3/8" = 1'-0"

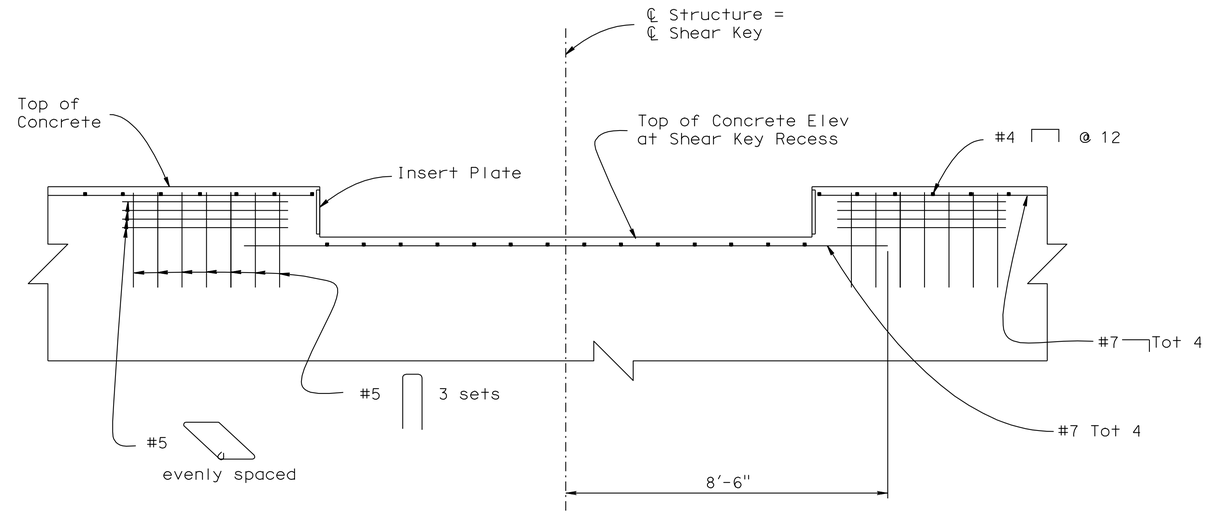

SHEAR KEY ELEVATION

ABUTMENT NO.1 SHOWN, ABUTMENT NO.3 SIMILAR

1/2" = 1'-0"

NOTE:
THE CONTRACTOR SHALL VERIFY ALL CONTROLLING FIELD DIMENSIONS BEFORE ORDERING OR FABRICATING ANY MATERIAL.

	BY	CHECKED
DESIGN	B. Addlespurger	G. Slocum
DETAILS	J. Yang\R. Kirkland	G. Slocum
QUANTITIES	T. Sanderson	R. Anderson

STATE OF CALIFORNIA
DEPARTMENT OF TRANSPORTATION

DIVISION OF ENGINEERING SERVICES
STRUCTURE DESIGN
DESIGN BRANCH 10

BRIDGE NO. 56-0839
POST MILE 19.39

PACHAPPA UP (REPLACE)
ABUTMENT DETAILS NO. 2

STRUCTURES DESIGN DETAIL SHEET (ENGLISH) (REV. 10/25/05)

ORIGINAL SCALE IN INCHES FOR REDUCED PLANS 0 1 2 3

CU 08
EA 448401

DISREGARD PRINTS BEARING EARLIER REVISION DATES

REVISION DATES: 02-12-10 02-25-10 6-14-10 9-23-10 11-04-10

SHEET 8 OF 44

FILE => 560839fadt08.dgn

USERNAME => trrichf DATE PLOTTED => 30-APR-2011 TIME PLOTTED => 13:57

DIST	COUNTY	ROUTE	POST MILES TOTAL PROJECT	SHEET No	TOTAL SHEETS
08	Riv	91	15.6/21.6	1919	2028

REGISTERED CIVIL ENGINEER — DATE 11-30-10

4-25-11
PLANS APPROVAL DATE

REGISTERED PROFESSIONAL ENGINEER — HUAN D. VU — No. C60696 — Exp. 12/31/10 — CIVIL — STATE OF CALIFORNIA

The State of California or its officers or agents shall not be responsible for the accuracy or completeness of electronic copies of this plan sheet.

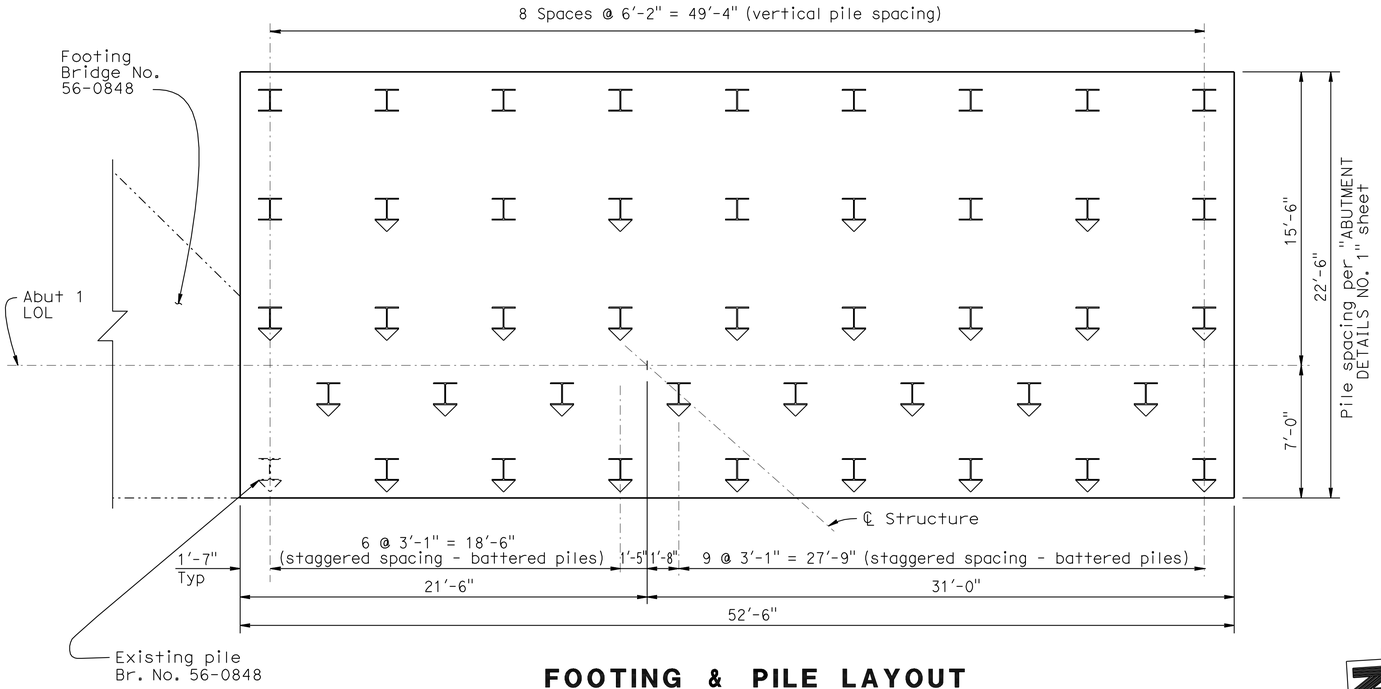

FOOTING & PILE LAYOUT

1/4" = 1'-0'

I Indicates vertical steel pile

I Indicates battered steel pile at 1:3

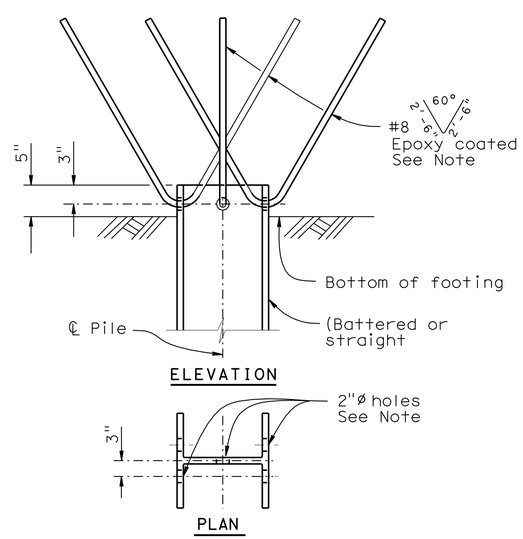

STEEL PILE ANCHOR

NO SCALE

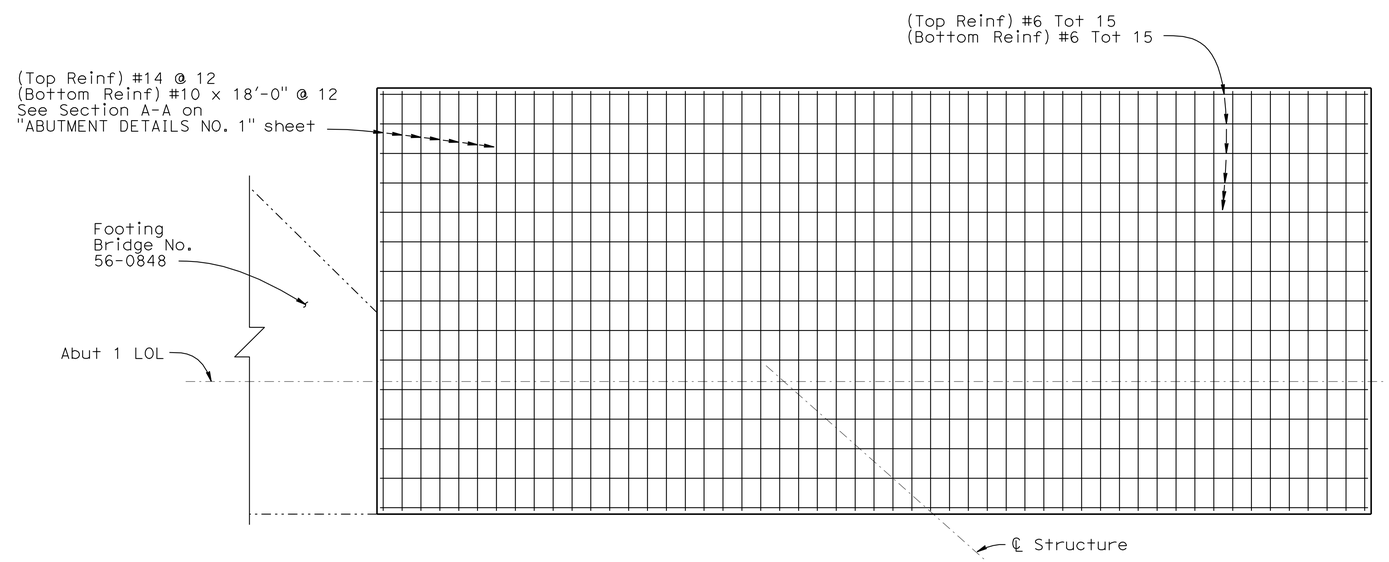

FOOTING REINFORCEMENT

1/4" = 1'-0'

NOTE:
THE CONTRACTOR SHALL VERIFY ALL CONTROLLING FIELD DIMENSIONS BEFORE ORDERING OR FABRICATING ANY MATERIAL.

NOTE:
1. For both Abut 1 & Abut 3, Steel pile anchor required for rear row of piles only, with 3 bars.
2. For Bent 2, Steel pile anchor required at all piles, with 5 bars.

	BY	CHECKED
DESIGN	B. Addlespurger	G. Slocum
DETAILS	J. Yang	G. Slocum
QUANTITIES	T. Sanderson	R. Anderson

STATE OF CALIFORNIA
DEPARTMENT OF TRANSPORTATION

DIVISION OF ENGINEERING SERVICES
STRUCTURE DESIGN
DESIGN BRANCH 10

BRIDGE NO. 56-0839
POST MILE 19.39

PACHAPPA UP (REPLACE)
ABUTMENT 1 FOOTING DETAILS

STRUCTURES DESIGN DETAIL SHEET (ENGLISH) (REV. 10/25/05)

ORIGINAL SCALE IN INCHES FOR REDUCED PLANS 0 1 2 3

CU 08
EA 448401

DISREGARD PRINTS BEARING EARLIER REVISION DATES

REVISION DATES: 01-14-10 02-12-10 6-14-10 9-06-10 9-23-10

SHEET 9 OF 44

FILE => 560839fafdt09.dgn

USERNAME => trrichf DATE PLOTTED => 30-APR-2011 TIME PLOTTED => 13:58

DIST	COUNTY	ROUTE	POST MILES TOTAL PROJECT	SHEET No	TOTAL SHEETS
08	Riv	91	15.6/21.6	1920	2028

REGISTERED CIVIL ENGINEER 11-30-10 DATE

4-25-11
PLANS APPROVAL DATE

REGISTERED PROFESSIONAL ENGINEER HUAN D. VU No. C60696 Exp. 12/31/10 CIVIL STATE OF CALIFORNIA

The State of California or its officers or agents shall not be responsible for the accuracy or completeness of electronic copies of this plan sheet.

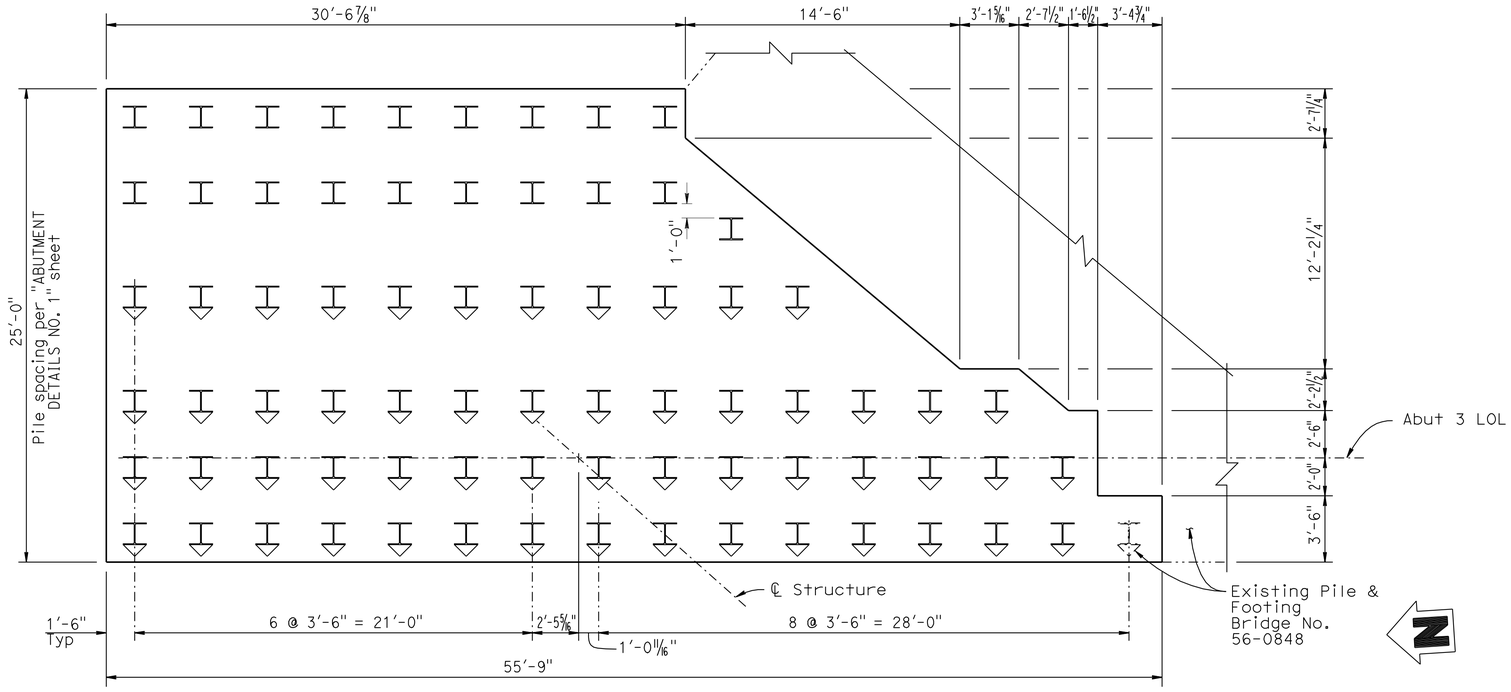

FOOTING AND PILE LAYOUT

1/4" = 1'-0'

I Indicates vertical steel pile

I Indicates battered steel pile at 1:3

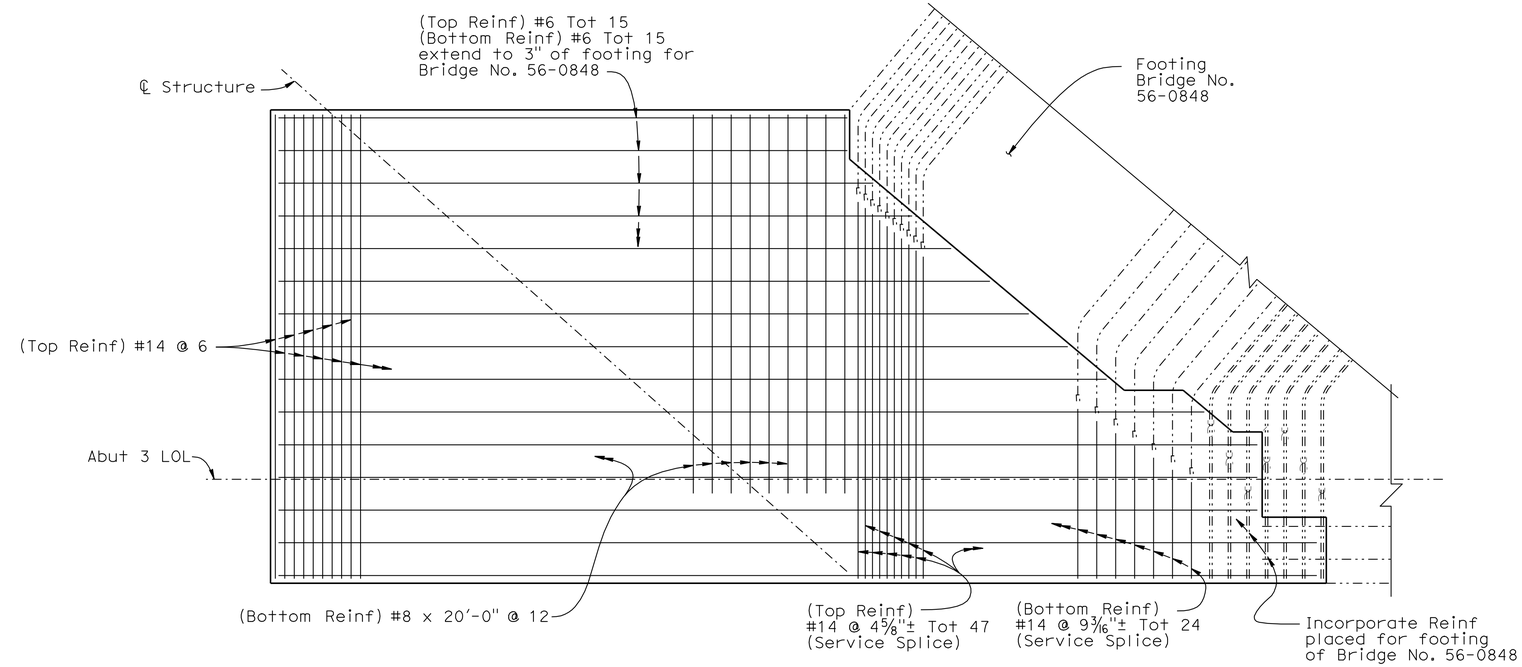

FOOTING REINFORCEMENT

1/4" = 1'-0'

Note: 1 1/2" maximum aggregate allowed for this Ftg only

NOTE:
THE CONTRACTOR SHALL VERIFY ALL CONTROLLING FIELD DIMENSIONS BEFORE ORDERING OR FABRICATING ANY MATERIAL.

	BY	CHECKED
DESIGN	B. Addlespurger	G. Slocum
DETAILS	J. Yang	G. Slocum
QUANTITIES	T. Sanderson	R. Anderson

STATE OF CALIFORNIA
DEPARTMENT OF TRANSPORTATION

DIVISION OF ENGINEERING SERVICES
STRUCTURE DESIGN
DESIGN BRANCH 10

BRIDGE NO. 56-0839
POST MILE 19.39

PACHAPPA UP (REPLACE)
ABUTMENT 3 FOOTING DETAILS

STRUCTURES DESIGN DETAIL SHEET (ENGLISH) (REV. 10/25/05)

ORIGINAL SCALE IN INCHES FOR REDUCED PLANS 0 1 2 3

CU 08
EA 448401

DISREGARD PRINTS BEARING EARLIER REVISION DATES

REVISION DATES: 01-14-10 6-14-10

SHEET 10 OF 44

FILE => 560839fafdt10.dgn

USERNAME => trrright DATE PLOTTED => 30-APR-2011 TIME PLOTTED => 13:58

DIST	COUNTY	ROUTE	POST MILES TOTAL PROJECT	SHEET No	TOTAL SHEETS
08	Riv	91	15.6/21.6	1921	2028

REGISTERED CIVIL ENGINEER 11-30-10 DATE

4-25-11
PLANS APPROVAL DATE

The State of California or its officers or agents shall not be responsible for the accuracy or completeness of electronic copies of this plan sheet.

REGISTERED PROFESSIONAL ENGINEER HUAN D. VU No. C60696 Exp. 12/31/10 CIVIL STATE OF CALIFORNIA

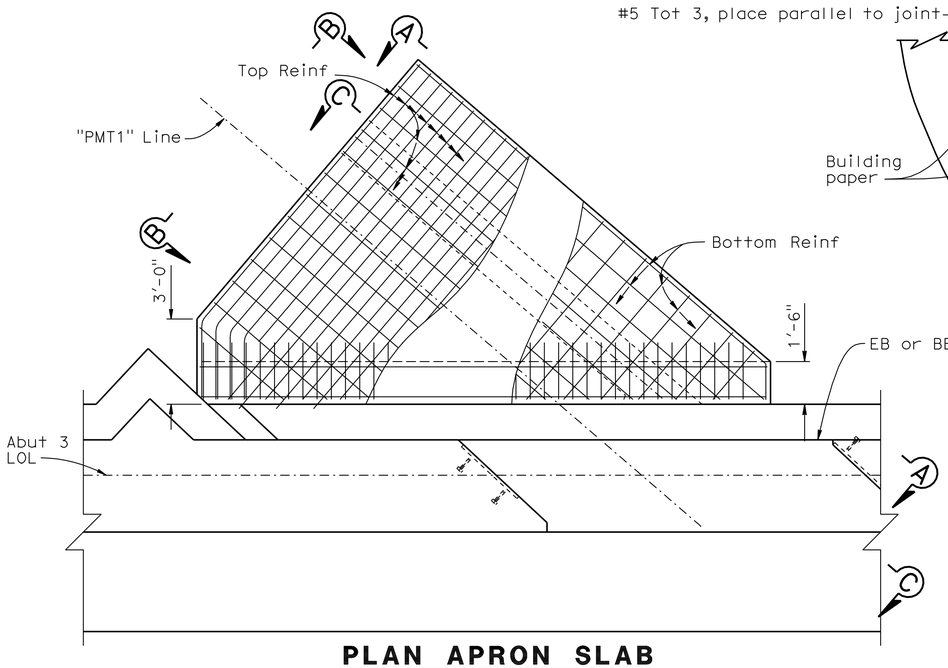

PLAN APRON SLAB

3/8" = 1'-0"

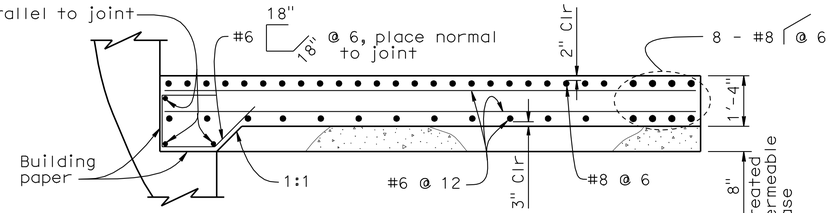

PART VIEW A-A

1/2" = 1'-0"

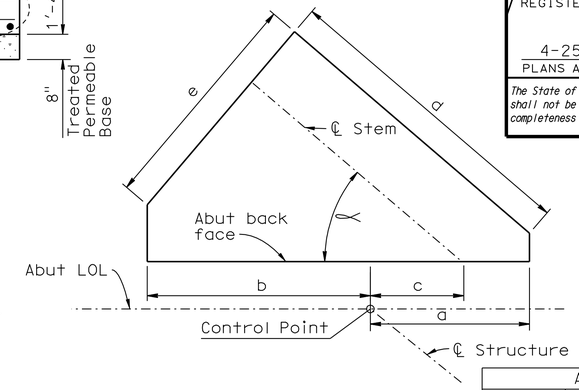

APRON SLAB LAYOUT

NO SCALE

APRON SLAB LAYOUT TABLE						
Location	a	b	c	d	e	∝
Abut 1	8.25	12.01	3.28	16.60	12.00	44°10'02"
Abut 3	5.30	17.18	-0.20	19.35	12.00	39°23'34"

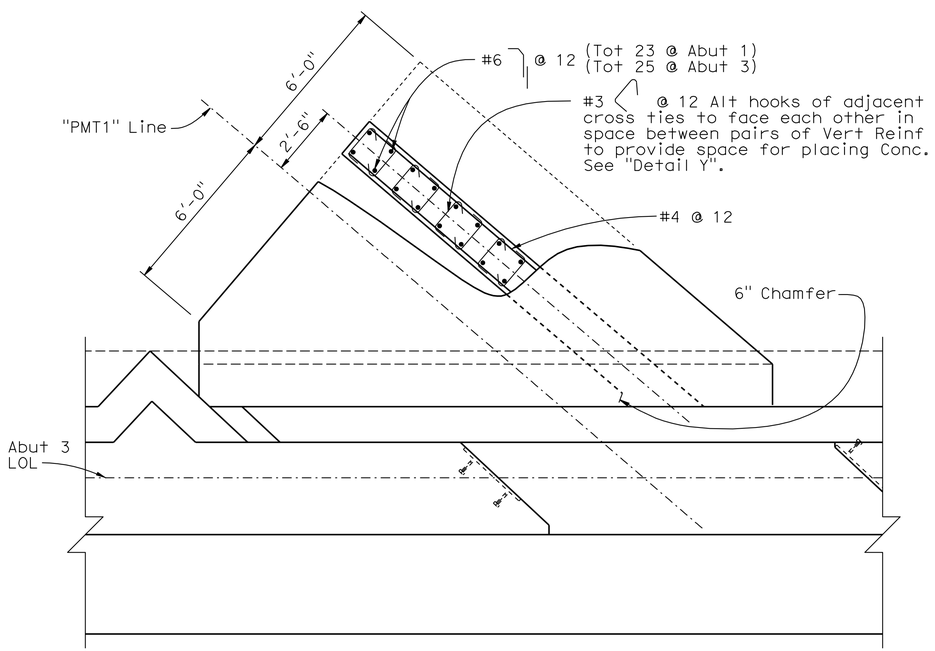

PLAN LAYOUT AND STEM

3/8" = 1'-0"
Abut 3 shown, Abut 1 similar

NOTE:
THE CONTRACTOR SHALL VERIFY ALL CONTROLLING FIELD DIMENSIONS BEFORE ORDERING OR FABRICATING ANY MATERIAL.

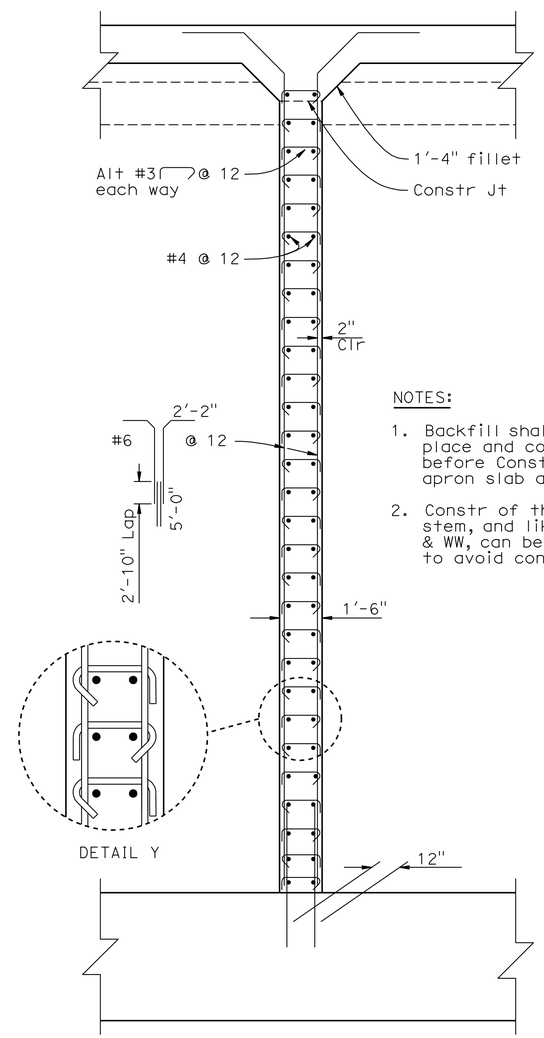

NOTES:

1. Backfill shall be in place and compacted before Constr the apron slab and fillet.
2. Constr of the Apron slab stem, and likely the Abut & WW, can be done in lifts, to avoid confined spaces.

SECTION B-B

3/8" = 1'-0"

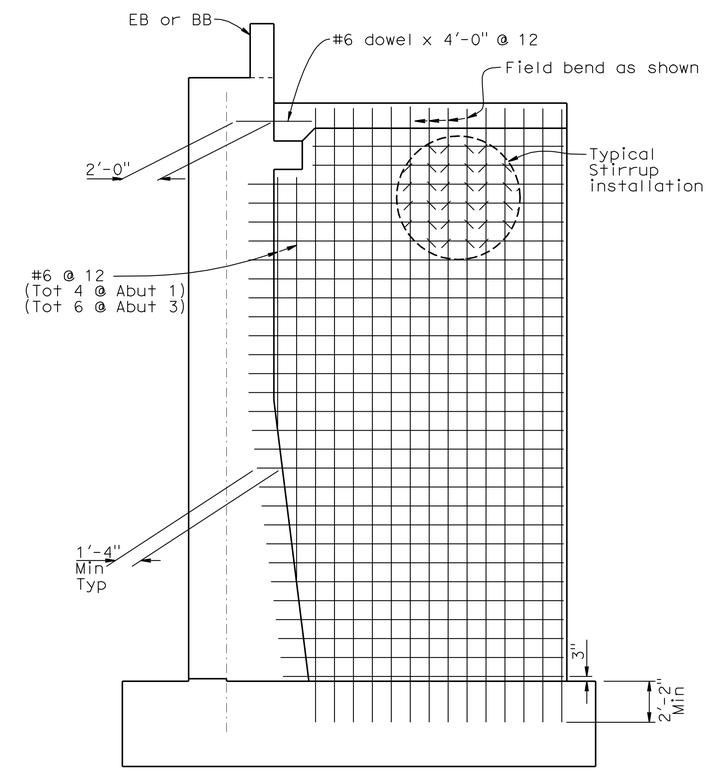

VIEW C-C

1/4" = 1'-0"
Abut 3 shown, Abut 1 similar

	BY	CHECKED
DESIGN	B. Addlespurger	G. Slocum
DETAILS	J. Yang	G. Slocum
QUANTITIES	T. Sanderson	R. Anderson

STATE OF CALIFORNIA
DEPARTMENT OF TRANSPORTATION

DIVISION OF ENGINEERING SERVICES
STRUCTURE DESIGN
DESIGN BRANCH 10

BRIDGE NO. 56-0839
POST MILE 19.39

PACHAPPA UP (REPLACE)
APRON SLAB DETAILS

STRUCTURES DESIGN DETAIL SHEET (ENGLISH) (REV. 10/25/05)

ORIGINAL SCALE IN INCHES FOR REDUCED PLANS 0 1 2 3

CU 08
EA 448401

DISREGARD PRINTS BEARING EARLIER REVISION DATES 03-04-10 03-17-09

REVISION DATES

SHEET 11 OF 44

FILE => 560839gasdt11.dgn

USERNAME => trrichf DATE PLOTTED => 30-APR-2011 TIME PLOTTED => 13:58

DIST	COUNTY	ROUTE	POST MILES TOTAL PROJECT	SHEET No	TOTAL SHEETS
08	Riv	91	15.6/21.6	1922	2028

REGISTERED CIVIL ENGINEER — DATE 11-30-10

4-25-11
PLANS APPROVAL DATE

REGISTERED PROFESSIONAL ENGINEER — HUAN D. VU — No. C60696 — Exp. 12/31/10 — CIVIL — STATE OF CALIFORNIA

The State of California or its officers or agents shall not be responsible for the accuracy or completeness of electronic copies of this plan sheet.

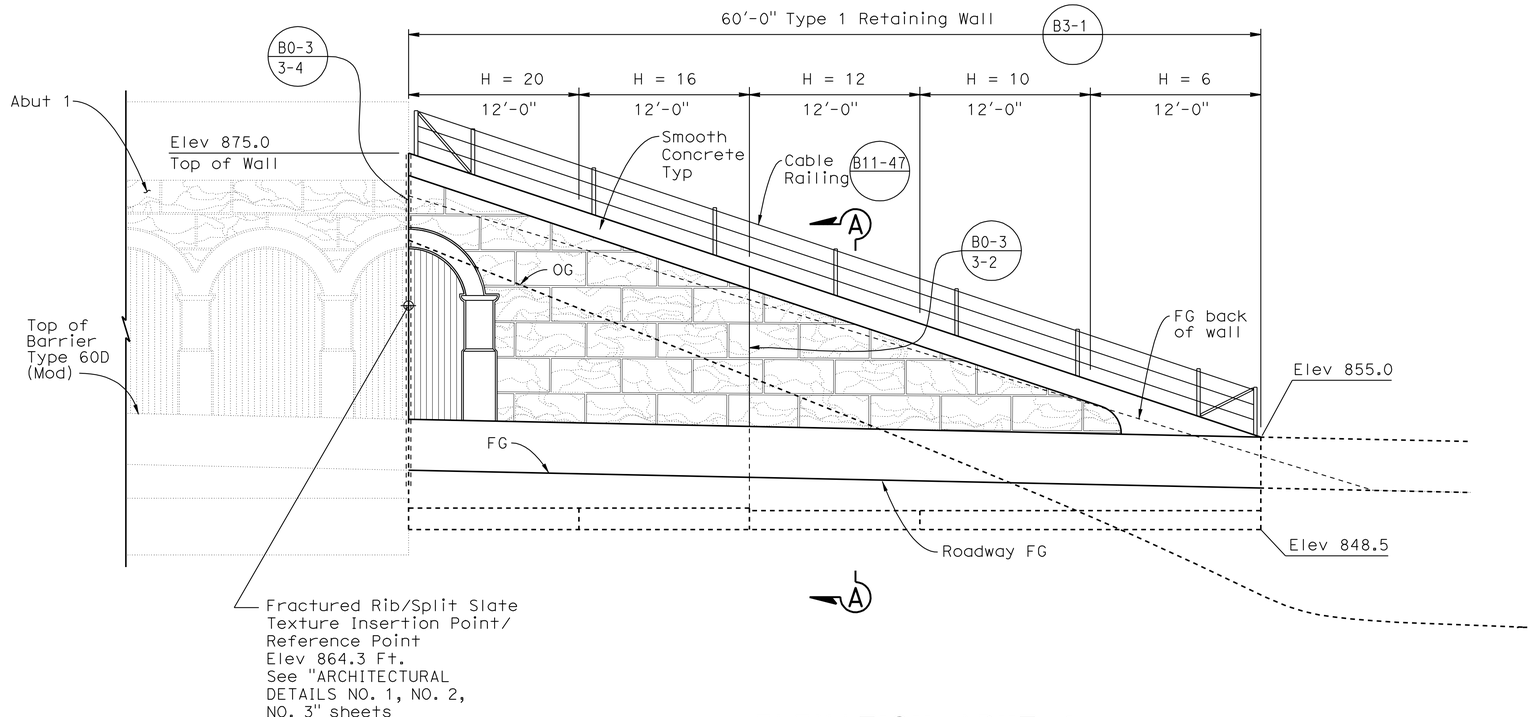

ELEVATION ABUT 1
WING WALL NORTH

3/16"=1'-0"

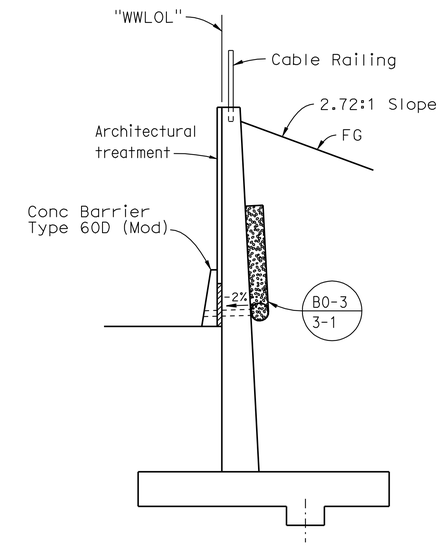

TYPICAL SECTION A-A

No Scale

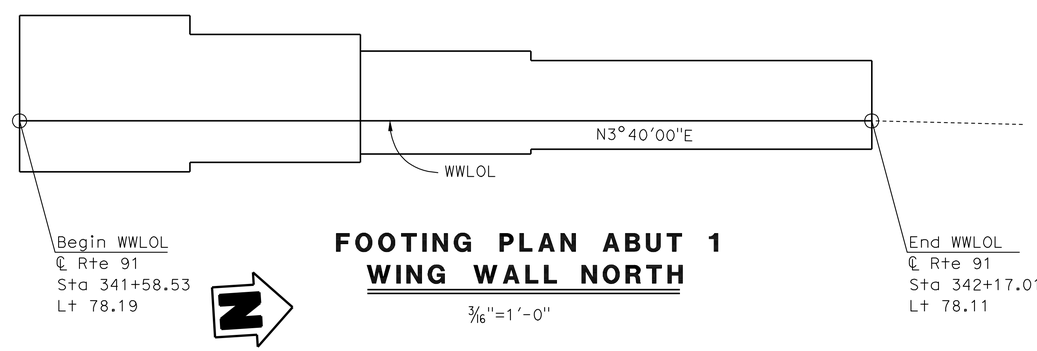

FOOTING PLAN ABUT 1
WING WALL NORTH

3/16"=1'-0"

DESIGN	BY B. Addlespurger	CHECKED G. Slocum	
DETAILS	BY G. Hallstrom	CHECKED G. Slocum	
QUANTITIES	BY T. Sanderson	CHECKED R. Anderson	

STATE OF CALIFORNIA
DEPARTMENT OF TRANSPORTATION

DIVISION OF ENGINEERING SERVICES
STRUCTURE DESIGN
DESIGN BRANCH 10

BRIDGE NO. 56-0839
POST MILE 19.39

PACHAPPA UP (REPLACE)
ABUTMENT 1 WING WALL NORTH

STRUCTURES DESIGN DETAIL SHEET (ENGLISH) (REV. 10/25/05)

ORIGINAL SCALE IN INCHES FOR REDUCED PLANS 0 1 2 3

CU 08
EA 448401

DISREGARD PRINTS BEARING EARLIER REVISION DATES

REVISION DATES: 12-02-09 | 01-11-10 | 6-17-10 | 9-23-10 | 11-30-10

SHEET 12 OF 44

FILE => 560839gww_lo12.dgn

USERNAME => trrichf DATE PLOTTED => 30-APR-2011 TIME PLOTTED => 13:58

DIST	COUNTY	ROUTE	POST MILES TOTAL PROJECT	SHEET No	TOTAL SHEETS
08	Riv	91	15.6/21.6	1923	2028

REGISTERED CIVIL ENGINEER — DATE 11-30-10

4-25-11
PLANS APPROVAL DATE

REGISTERED PROFESSIONAL ENGINEER — HUAN D. VU — No. C60696 — Exp. 12/31/10 — CIVIL — STATE OF CALIFORNIA

The State of California or its officers or agents shall not be responsible for the accuracy or completeness of electronic copies of this plan sheet.

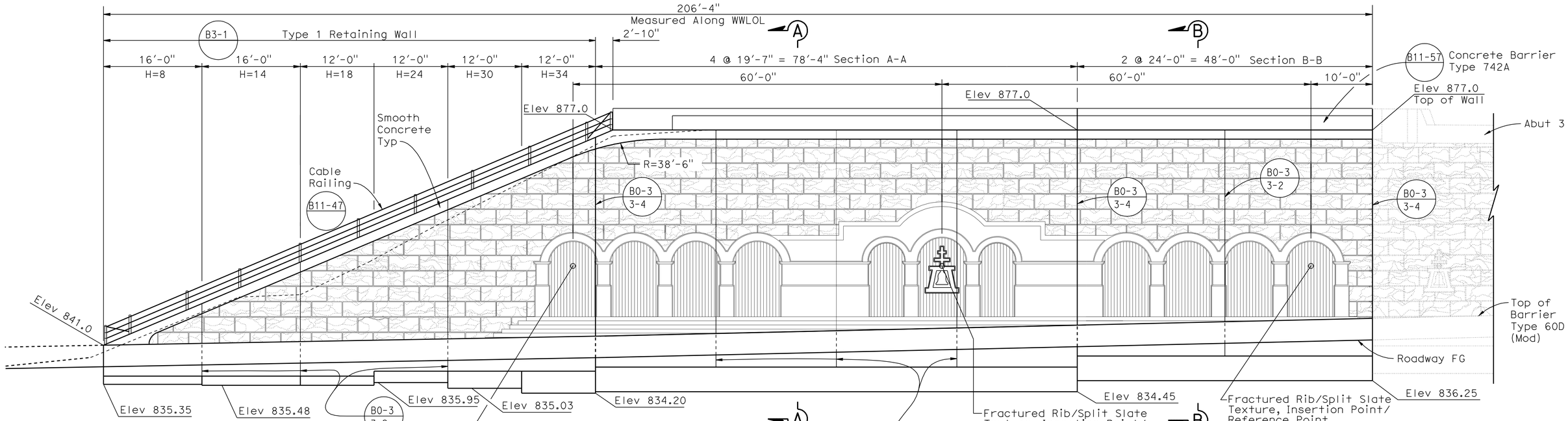

ELEVATION ABUT 3 WING WALL NORTH

1/8"=1'-0"

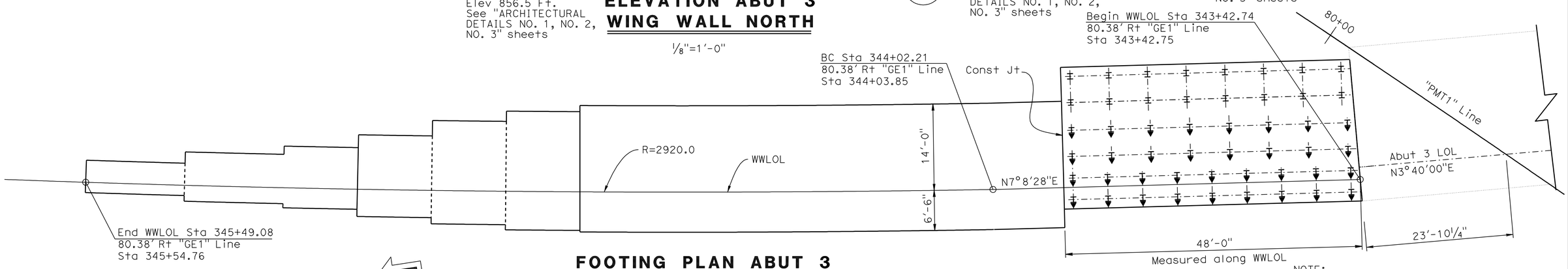

FOOTING PLAN ABUT 3 WING WALL NORTH

1/8"=1'-0"

NOTE:

For "Section A-A" and "Section B-B", see "WING WALL DETAILS NO. 2" sheet.

	BY	CHECKED
DESIGN	H. Vu	B. Addlespurger
DETAILS	G. Hallstrom	B. Addlespruger
QUANTITIES	T. Sanderson	R. Anderson

STATE OF CALIFORNIA
DEPARTMENT OF TRANSPORTATION

DIVISION OF ENGINEERING SERVICES
STRUCTURE DESIGN
DESIGN BRANCH 10

BRIDGE NO. 56-0839
POST MILE 19.39

PACHAPPA UP (REPLACE)
ABUTMENT 3 WING WALL NORTH

STRUCTURES DESIGN DETAIL SHEET (ENGLISH) (REV. 10/25/05)

ORIGINAL SCALE IN INCHES FOR REDUCED PLANS 0 1 2 3

CU 08
EA 448401

DISREGARD PRINTS BEARING EARLIER REVISION DATES

REVISION DATES: 01-06-10, 7-01-10, 9-08-10, 9-23-10, 11-02-10, 11-30-10

SHEET 13 OF 44

FILE => 560839gww_1o13.dgn

USERNAME => trrright DATE PLOTTED => 30-APR-2011 TIME PLOTTED => 13:58

DIST	COUNTY	ROUTE	POST MILES TOTAL PROJECT	SHEET No	TOTAL SHEETS
08	Riv	91	15.6/21.6	1924	2028

REGISTERED CIVIL ENGINEER 11-30-10 DATE

4-25-11
PLANS APPROVAL DATE

REGISTERED PROFESSIONAL ENGINEER HUAN D. VU No. C60696 Exp. 12/31/10 CIVIL STATE OF CALIFORNIA

The State of California or its officers or agents shall not be responsible for the accuracy or completeness of electronic copies of this plan sheet.

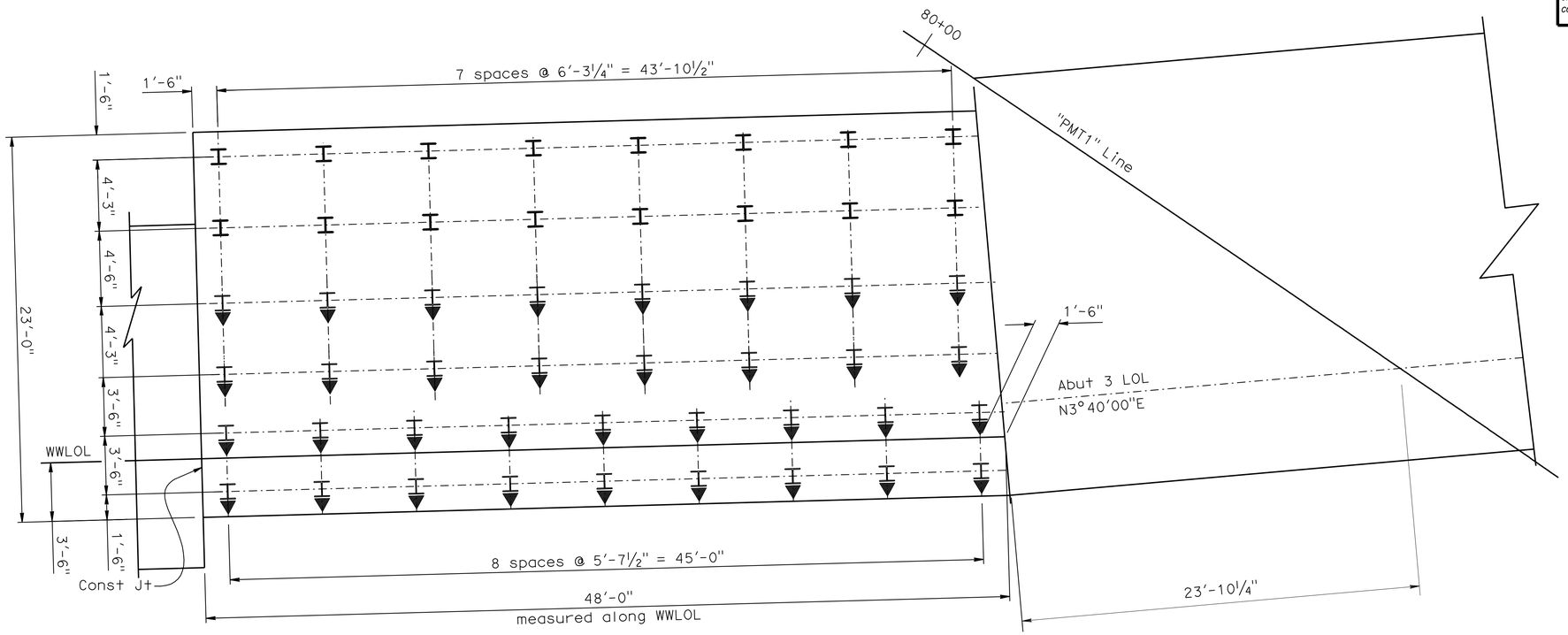

ABUT 3 FOOTING LAYOUT
WING WALL NORTH

¼"=1'-0"

LEGEND:

I Indicates Vertical Steel Pile

I ▼ Indicates Battered Steel Pile at 1:3

NOTE:

For location of Section A-A and Section B-B, see "ABUTMENT 3 WING WALL NORTH" sheet.

DESIGN	BY H. Vu	CHECKED B. Addlespurger	
DETAILS	BY G. Hallstrom	CHECKED B. Addlespurger	
QUANTITIES	BY T. Sanderson	CHECKED R. Anderson	

STATE OF CALIFORNIA
DEPARTMENT OF TRANSPORTATION

DIVISION OF ENGINEERING SERVICES
STRUCTURE DESIGN
DESIGN BRANCH 10

BRIDGE NO. 56-0839
POST MILE 19.39

PACHAPPA UP (REPLACE)
WING WALL DETAILS NO. 1

STRUCTURES DESIGN DETAIL SHEET (ENGLISH) (REV. 10/25/05)

ORIGINAL SCALE IN INCHES FOR REDUCED PLANS 0 1 2 3

CU 08
EA 448401

DISREGARD PRINTS BEARING EARLIER REVISION DATES

REVISION DATES: 7-01-10 11-10-10

SHEET 14 OF 44

FILE => 560839gwwdt14.dgn

USERNAME => trrichf DATE PLOTTED => 30-APR-2011 TIME PLOTTED => 13:58

DIST	COUNTY	ROUTE	POST MILES TOTAL PROJECT	SHEET No	TOTAL SHEETS
08	Riv	91	15.6/21.6	1925	2028

REGISTERED CIVIL ENGINEER 11-30-10 DATE

4-25-11
PLANS APPROVAL DATE

REGISTERED PROFESSIONAL ENGINEER HUAN D. VU No. C60696 Exp. 12/31/10 CIVIL STATE OF CALIFORNIA

The State of California or its officers or agents shall not be responsible for the accuracy or completeness of electronic copies of this plan sheet.

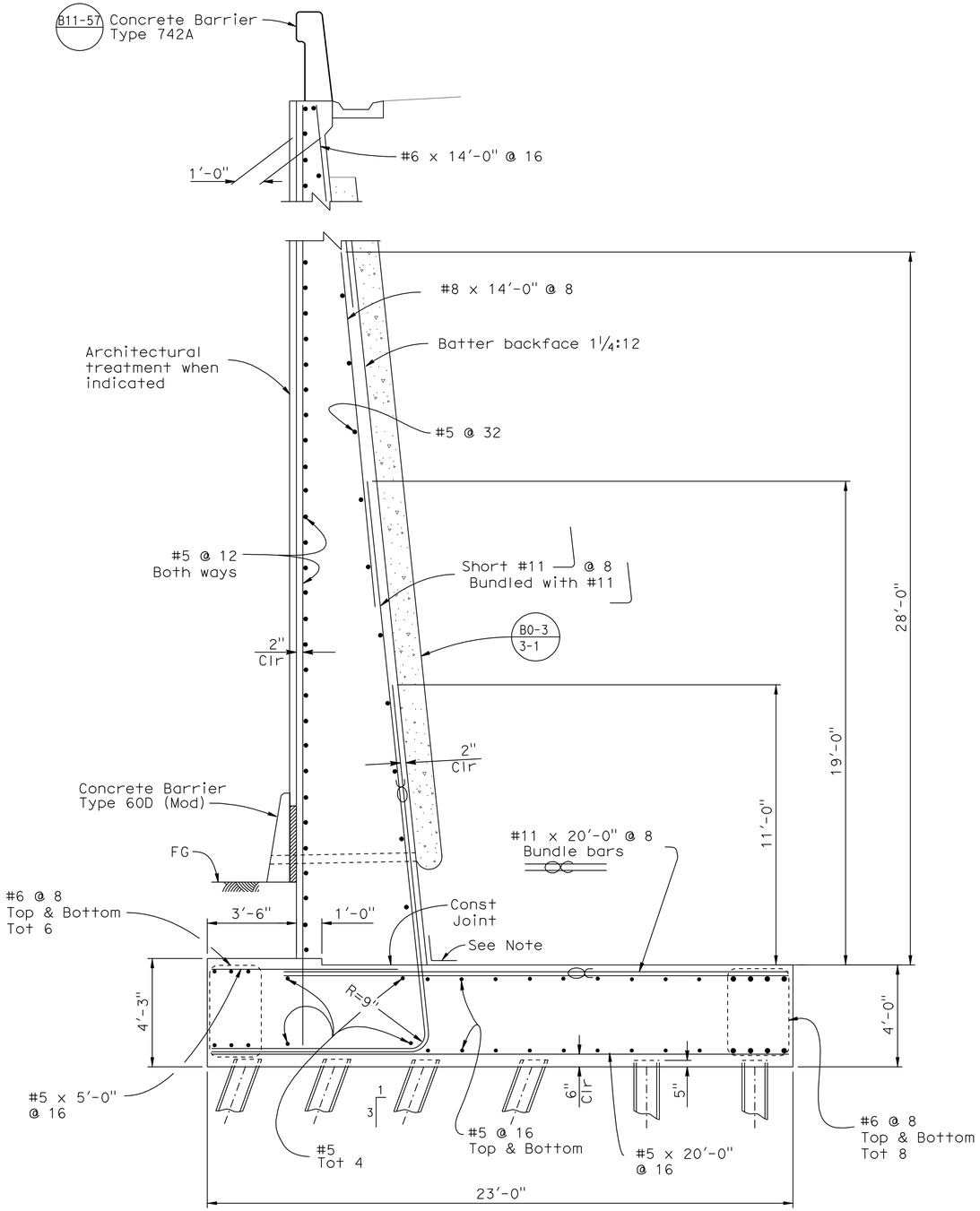

SECTION B-B

⅜" = 1'-0"

NOTE: 2'-0" wide band of dampprofing centered on the joint.

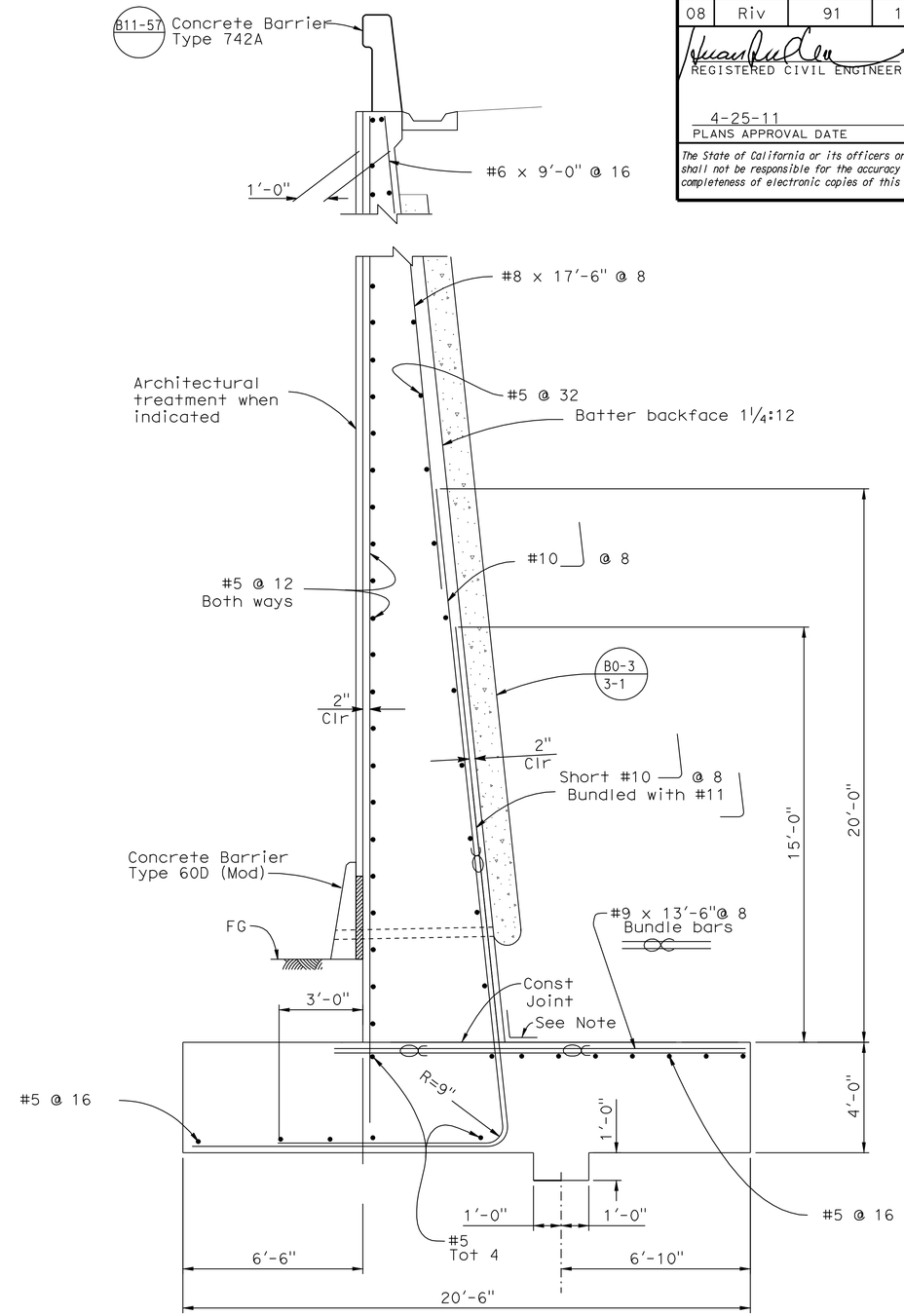

SECTION A-A

⅜" = 1'-0"

DESIGN	BY H. Vu	CHECKED B. Addlespurger	
DETAILS	BY G. Hallstrom	CHECKED B. Addlespurger	
QUANTITIES	BY T. Sanderson	CHECKED R. Anderson	

STATE OF CALIFORNIA
DEPARTMENT OF TRANSPORTATION

DIVISION OF ENGINEERING SERVICES
STRUCTURE DESIGN
DESIGN BRANCH 10

BRIDGE NO. 56-0839
POST MILE 19.39

PACHAPPA UP (REPLACE)
WING WALL DETAILS NO. 2

STRUCTURES DESIGN DETAIL SHEET (ENGLISH) (REV. 10/25/05)

ORIGINAL SCALE IN INCHES FOR REDUCED PLANS 0 1 2 3

CU 08
EA 448401

DISREGARD PRINTS BEARING EARLIER REVISION DATES → 7-01-10 11-02-10

REVISION DATES

SHEET 15 OF 44

FILE => 560839gwwdt15.dgn

USERNAME => trrichf DATE PLOTTED => 30-APR-2011 TIME PLOTTED => 13:59

DIST	COUNTY	ROUTE	POST MILES TOTAL PROJECT	SHEET No	TOTAL SHEETS
08	Riv	91	15.6/21.6	1926	2028

REGISTERED CIVIL ENGINEER 11-30-10 DATE

4-25-11
PLANS APPROVAL DATE

REGISTERED PROFESSIONAL ENGINEER HUAN D. VU No. C60696 Exp. 12/31/10 CIVIL STATE OF CALIFORNIA

The State of California or its officers or agents shall not be responsible for the accuracy or completeness of electronic copies of this plan sheet.

NOTES:

1. For Section B-B and Pier Wall Cap Details see "BENT DETAILS" sheet.
2. The placement of horizontal reinforcement shall clear any construction joint by 2" Min.
3. For "Detail X" see "BENT DETAILS" sheet.
4. For elevations see "PTFE/ SPHERICAL ANCHORAGE DETAILS" sheet.
5. For Insert Plate details see "SHEAR KEY BEAM DETAILS" sheet.
6. Reinf is Sym to ℄ structure. Not all Reinf shown for clarity.
7. Recess to match fit Shear Key Beam, see "SHEAR KEY BEAM LAYOUT" sheet.

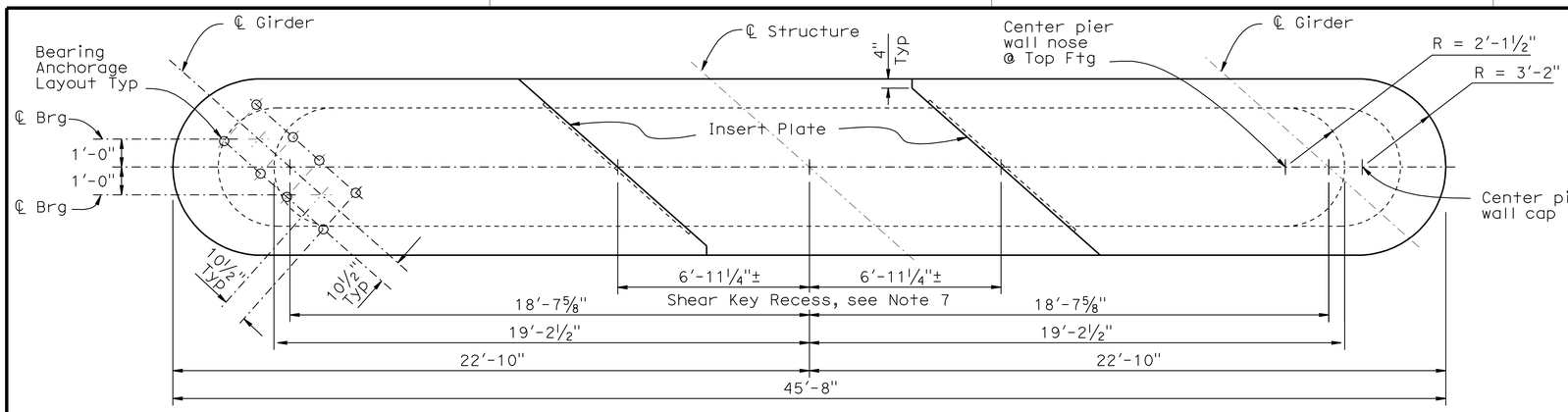

PLAN

⅜" = 1'-0"

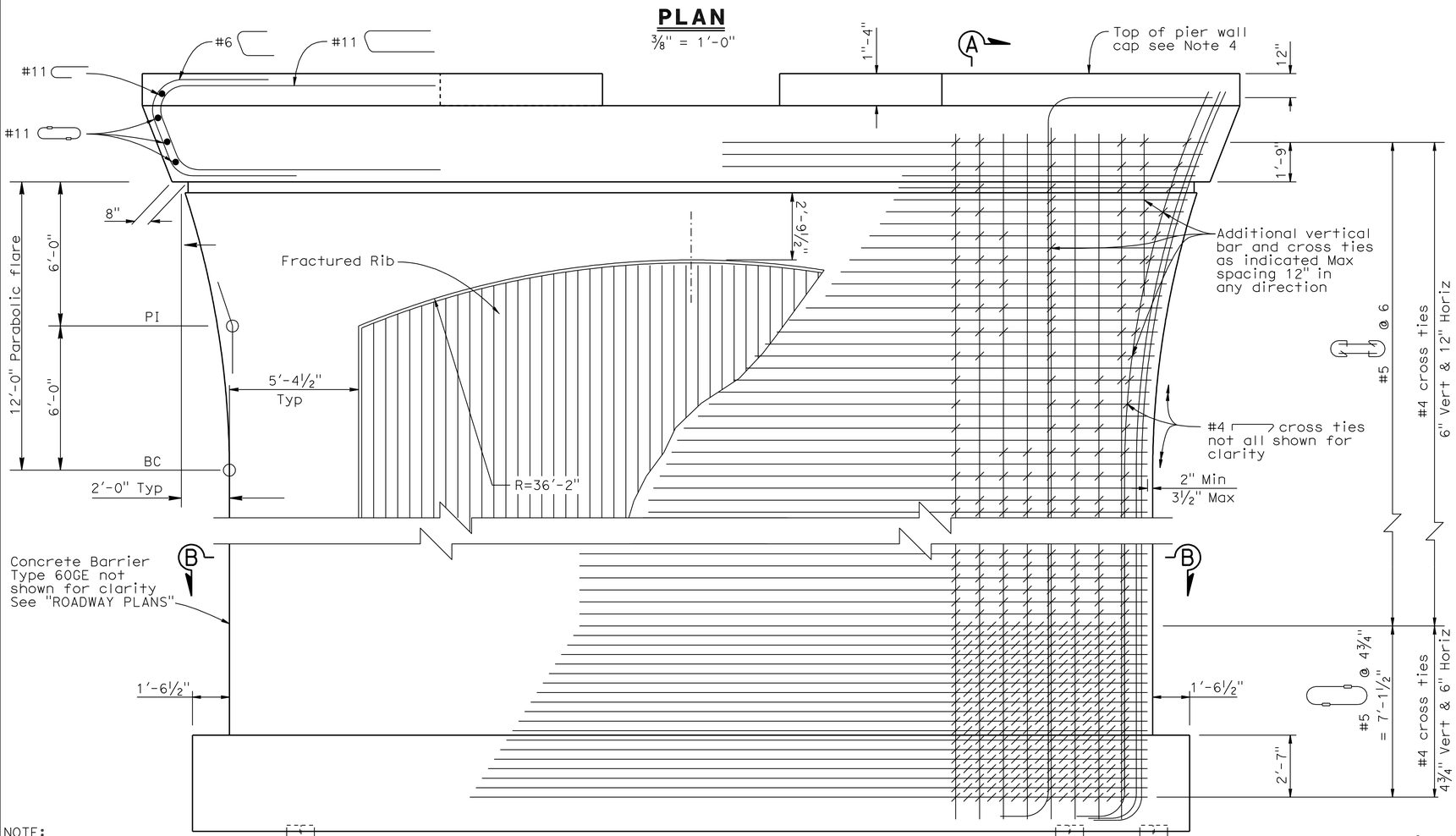

NOTE:
THE CONTRACTOR SHALL VERIFY ALL CONTROLLING FIELD DIMENSIONS BEFORE ORDERING OR FABRICATING ANY MATERIAL.

ELEVATION

⅜" = 1'

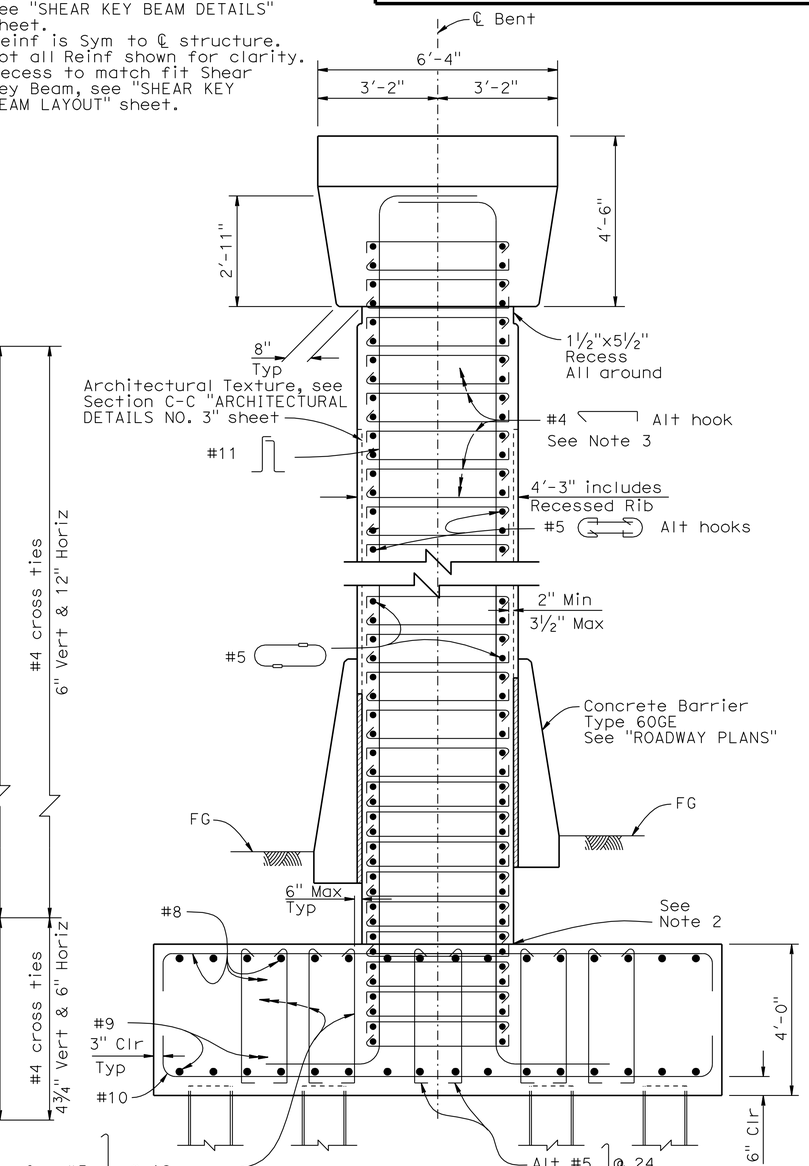

SECTION A-A

½" = 1'

DESIGN	BY B. Addlespurger	CHECKED G. Slocum	
DETAILS	BY J. Yang	CHECKED G. Slocum	
QUANTITIES	BY T. Sanderson	CHECKED R. Anderson	

STATE OF CALIFORNIA
DEPARTMENT OF TRANSPORTATION

DIVISION OF ENGINEERING SERVICES
STRUCTURE DESIGN
DESIGN BRANCH 10

BRIDGE NO. 56-0839
POST MILE 19.39

PACHAPPA UP (REPLACE)
BENT LAYOUT

STRUCTURES DESIGN DETAIL SHEET (ENGLISH) (REV. 10/25/05)

ORIGINAL SCALE IN INCHES FOR REDUCED PLANS 0 1 2 3

CU 08
EA 448401

DISREGARD PRINTS BEARING EARLIER REVISION DATES

REVISION DATES: 01-11-10 05-12-10 6-04-10 8-30-10 9-28-10

SHEET 16 OF 44

FILE => 560839hb_lo16.dgn

USERNAME => trright DATE PLOTTED => 30-APR-2011 TIME PLOTTED => 13:59

DIST	COUNTY	ROUTE	POST MILES TOTAL PROJECT	SHEET No	TOTAL SHEETS
08	Riv	91	15.6/21.6	1927	2028

REGISTERED CIVIL ENGINEER 11-30-10 DATE

4-25-11
PLANS APPROVAL DATE

The State of California or its officers or agents shall not be responsible for the accuracy or completeness of electronic copies of this plan sheet.

REGISTERED PROFESSIONAL ENGINEER HUAN D. VU No. C60696 Exp. 12/31/10 CIVIL STATE OF CALIFORNIA

NOTES:

1. For location of "Section B-B" and other details, see "BENT LAYOUT" sheet.
2. Adjust location to accommodate bearing anchorage.
3. Reinf is Sym to ℄ Structure. Not all Reinf shown for clarity.
4. All ties at bar intersections to hook all bars. All bars to be adjusted for positive contact and snug fit.
5. Steel pile anchor shown on "Abutment 1 Footing Details" sheet.
6. One additional Bar to be placed at the last pile rows.

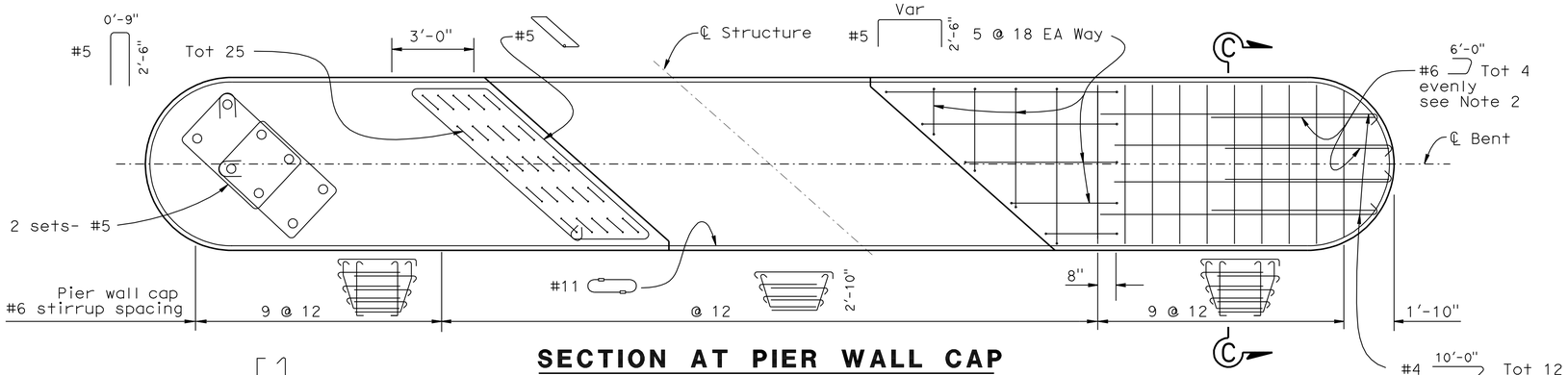

SECTION AT PIER WALL CAP

3/8" = 1'-0"

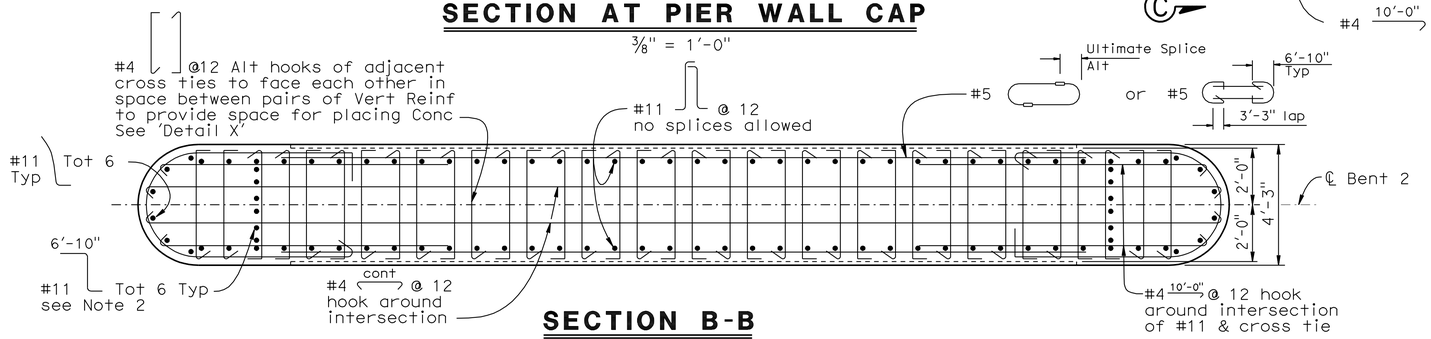

SECTION B-B

3/8" = 1'-0"

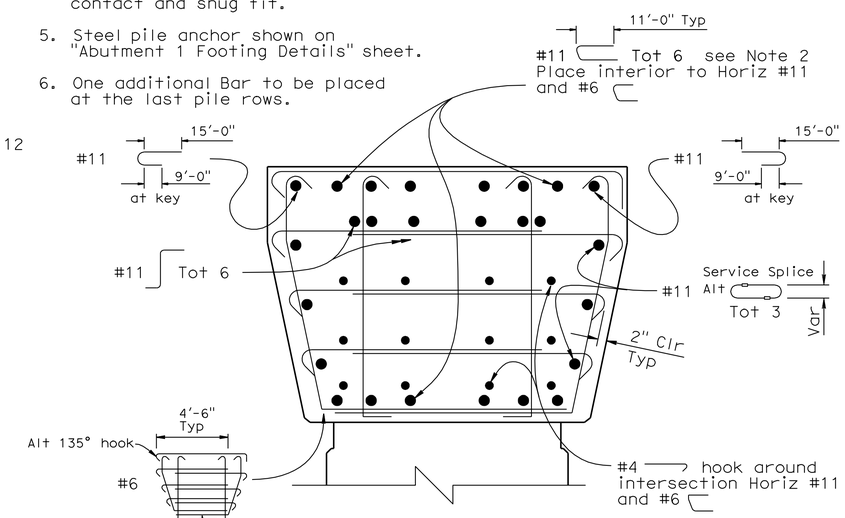

SECTION C-C

3/4" = 1'-0"

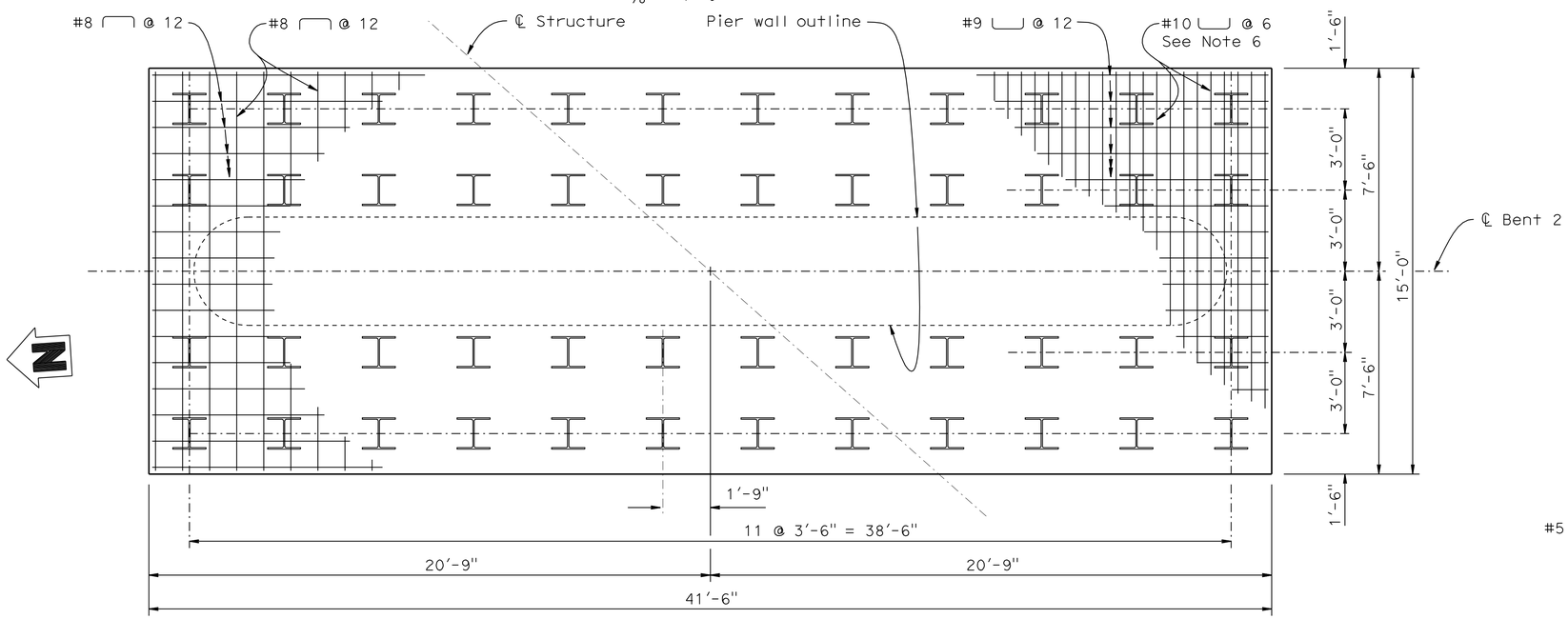

TOP MAT REINFORCEMENT

FOOTING PLAN

3/8" = 1'-0"

BOTTOM MAT REINFORCEMENT

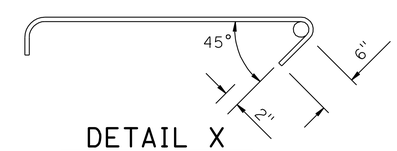

DETAIL X

NO SCALE

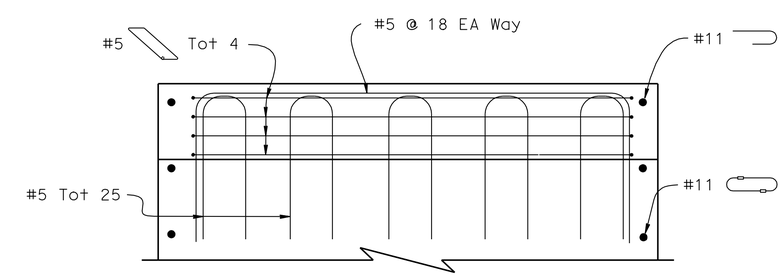

KEY SECTION

3/4" = 1'-0"

NOTE:
THE CONTRACTOR SHALL VERIFY ALL CONTROLLING FIELD DIMENSIONS BEFORE ORDERING OR FABRICATING ANY MATERIAL.

	BY	CHECKED
DESIGN	B. Addlespurger	G. Slocum
DETAILS	J. Yang	G. Slocum
QUANTITIES	T. Sanderson	R. Anderson

STATE OF CALIFORNIA
DEPARTMENT OF TRANSPORTATION

DIVISION OF ENGINEERING SERVICES
STRUCTURE DESIGN
DESIGN BRANCH 10

BRIDGE NO. 56-0839
POST MILE 19.39

PACHAPPA UP (REPLACE)
BENT DETAILS

STRUCTURES DESIGN DETAIL SHEET (ENGLISH) (REV. 10/25/05)

ORIGINAL SCALE IN INCHES FOR REDUCED PLANS 0 1 2 3

CU 08
EA 448401

DISREGARD PRINTS BEARING EARLIER REVISION DATES

REVISION DATES: 01-11-10 6-04-10 9-28-10

SHEET 17 OF 44

FILE => 560839hbdt17.dgn

USERNAME => trrichf DATE PLOTTED => 30-APR-2011 TIME PLOTTED => 13:59

DIST	COUNTY	ROUTE	POST MILES TOTAL PROJECT	SHEET No	TOTAL SHEETS
08	Riv	91	15.6/21.6	1928	2028

REGISTERED CIVIL ENGINEER 11-30-10 DATE

4-25-11
PLANS APPROVAL DATE

REGISTERED PROFESSIONAL ENGINEER HUAN D. VU No. C60696 Exp. 12/31/10 CIVIL STATE OF CALIFORNIA

The State of California or its officers or agents shall not be responsible for the accuracy or completeness of electronic copies of this plan sheet.

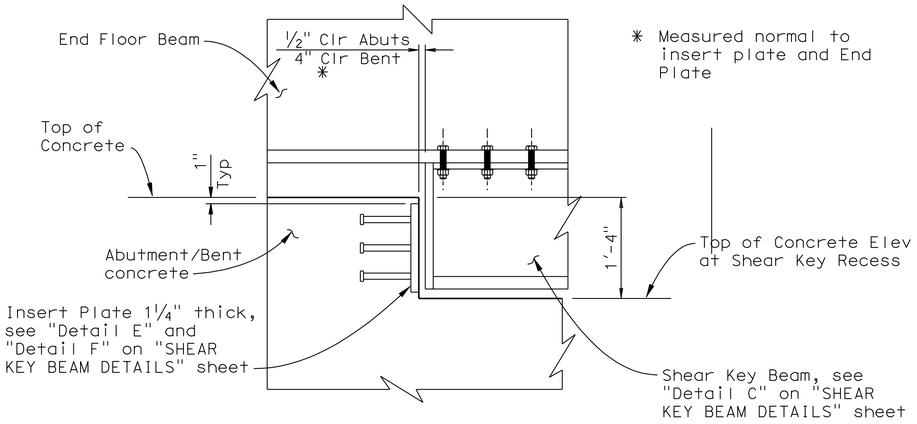

DETAIL A

1"= 1'-0"

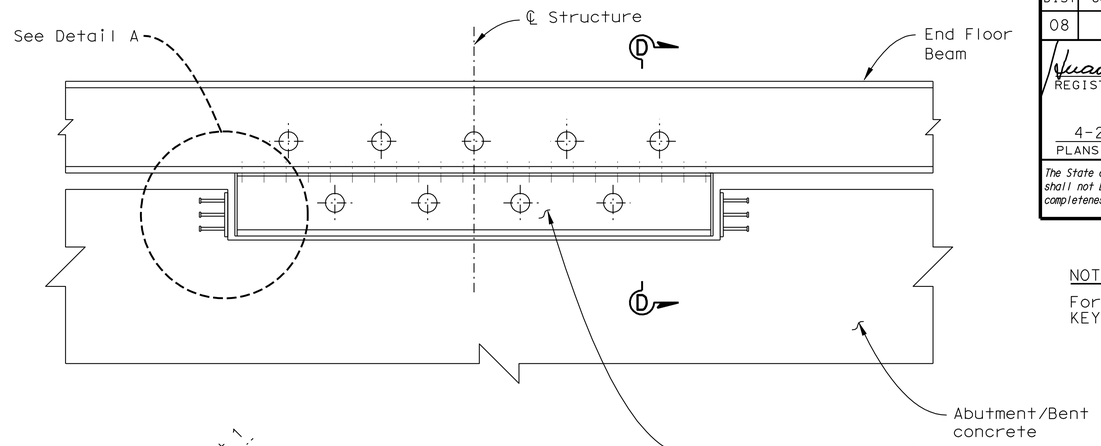

SECTION B-B

½"=1'-0"

NOTE:

For "Section D-D", see "SHEAR KEY BEAM DETAILS" sheet.

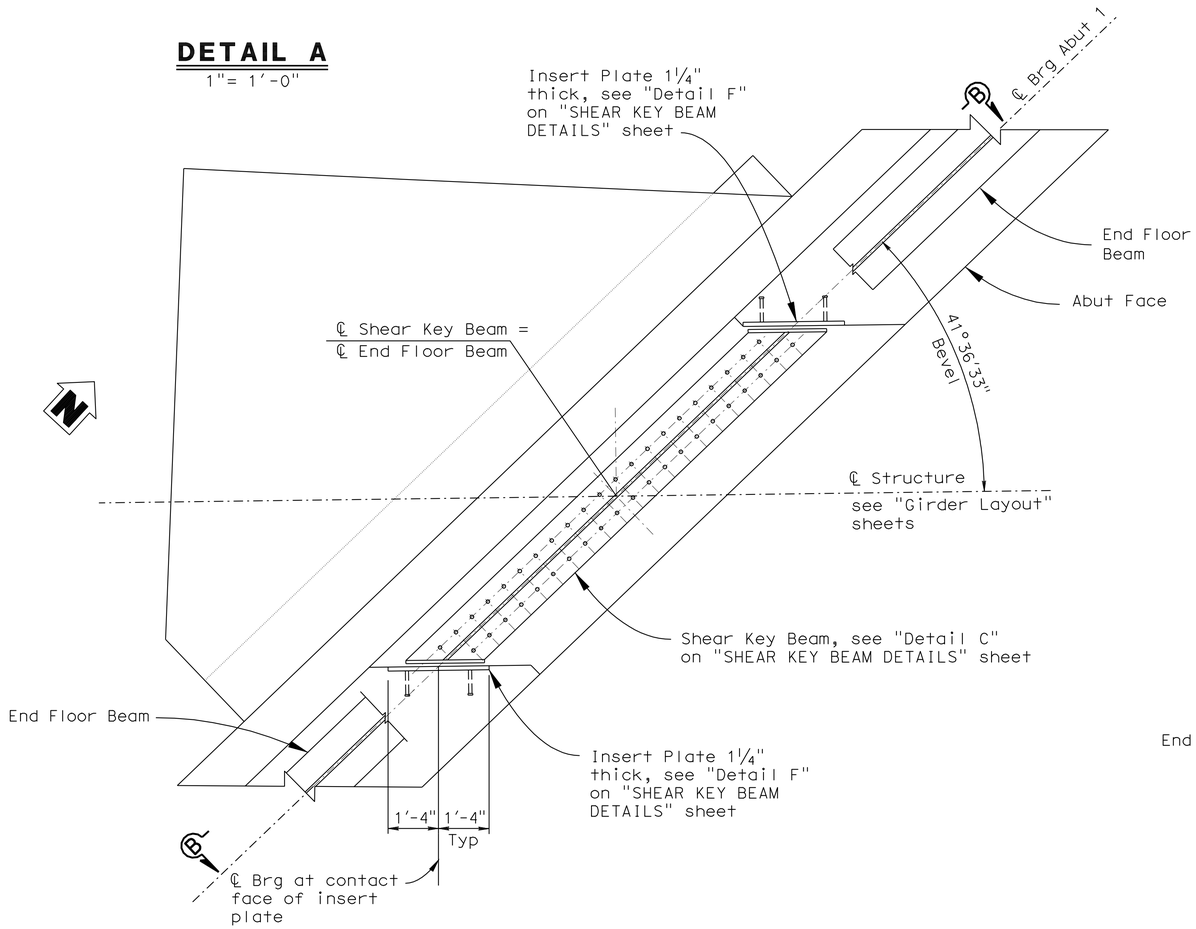

PART PLAN - SHEAR KEY ABUT 1 (ABUT 3 SIMILAR)

½" = 1'-0"

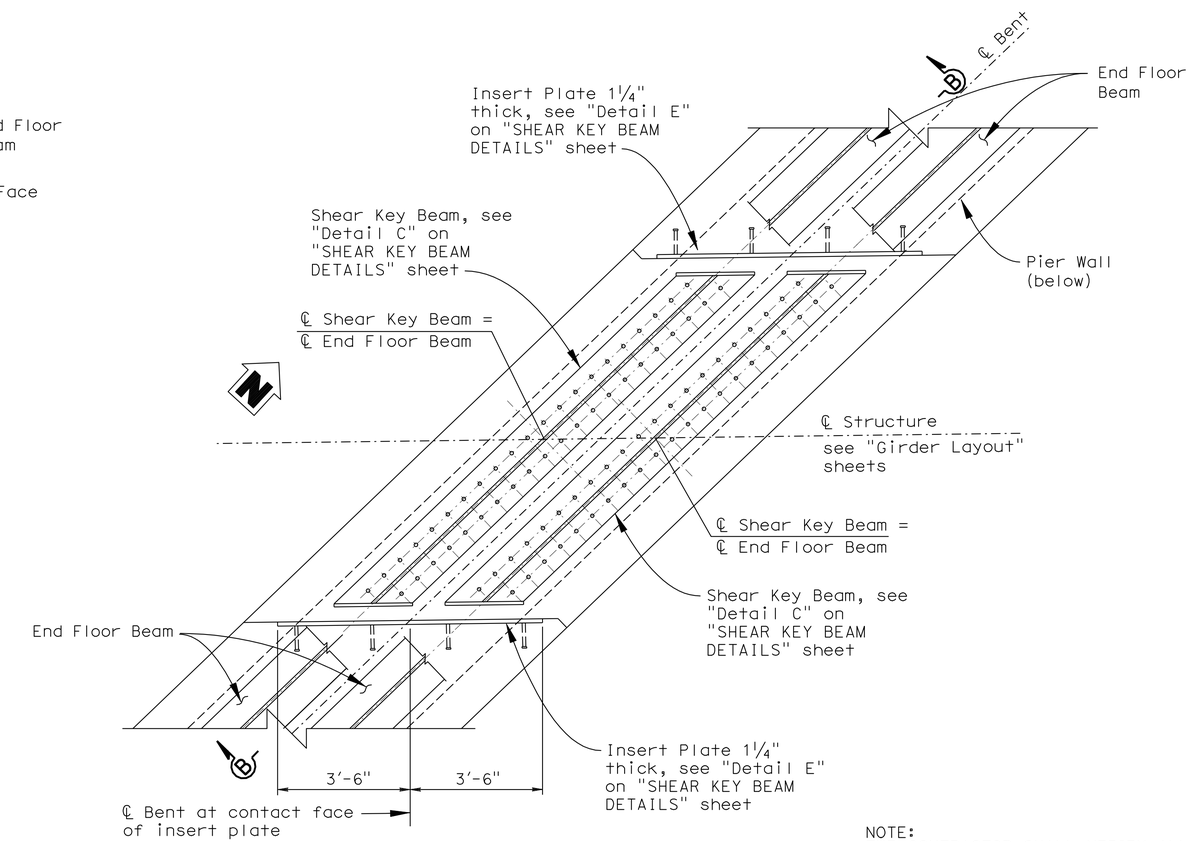

PART PLAN - SHEAR KEY BENT

½" = 1'-0"

NOTE:
THE CONTRACTOR SHALL VERIFY ALL CONTROLLING FIELD DIMENSIONS BEFORE ORDERING OR FABRICATING ANY MATERIAL.

	BY	CHECKED
DESIGN	B. Addlespurger	G. Slocum
DETAILS	D.Wooten	G. Slocum
QUANTITIES	T. Sanderson	R. Anderson

STATE OF CALIFORNIA
DEPARTMENT OF TRANSPORTATION

DIVISION OF ENGINEERING SERVICES
STRUCTURE DESIGN
DESIGN BRANCH 10

BRIDGE NO. 56-0839
POST MILE 19.39

PACHAPPA UP (REPLACE)
SHEAR KEY BEAM LAYOUT

STRUCTURES DESIGN DETAIL SHEET (ENGLISH) (REV. 10/25/05)

ORIGINAL SCALE IN INCHES FOR REDUCED PLANS 0 1 2 3

CU 08
EA 448401

DISREGARD PRINTS BEARING EARLIER REVISION DATES

REVISION DATES: 1-29-10 2-08-10 2-09-10 5-26-10 6-04-10 7-15-10 10-21-10

SHEET 18 OF 44

FILE => 560839ishearkey_1o18.dgn

USERNAME => trright DATE PLOTTED => 30-APR-2011 TIME PLOTTED => 13:53

DIST	COUNTY	ROUTE	POST MILES TOTAL PROJECT	SHEET No	TOTAL SHEETS
08	Riv	91	15.6/21.6	1929	2028

REGISTERED CIVIL ENGINEER 11-30-10 DATE

4-25-11
PLANS APPROVAL DATE

The State of California or its officers or agents shall not be responsible for the accuracy or completeness of electronic copies of this plan sheet.

REGISTERED PROFESSIONAL ENGINEER HUAN D. VU No. C60696 Exp. 12/31/10 CIVIL STATE OF CALIFORNIA

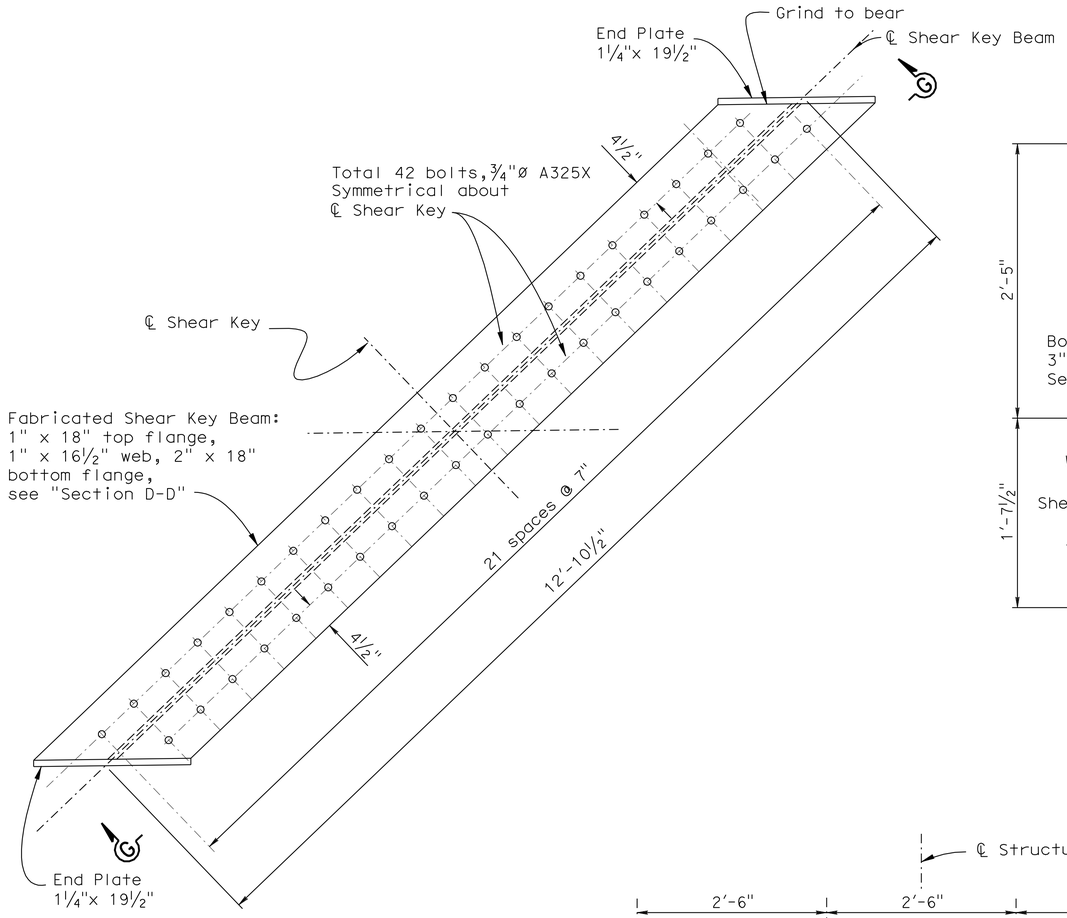

SHEAR KEY BEAM DETAIL C

1"= 1'-0"

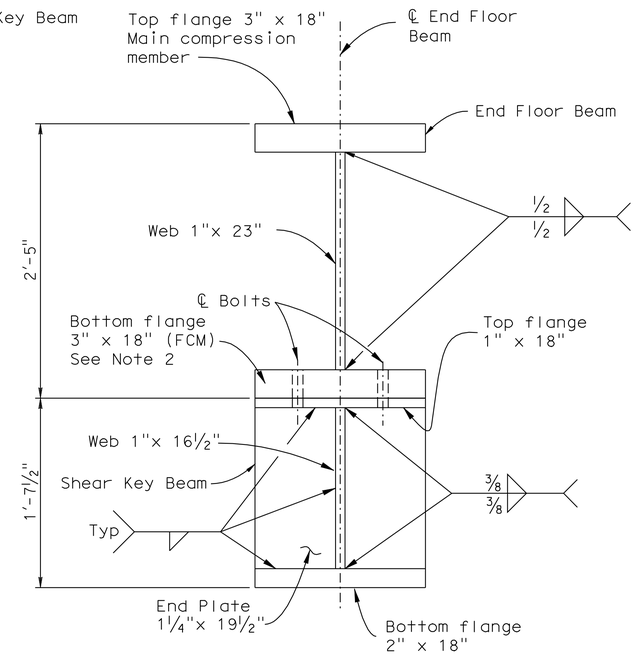

SECTION D-D

1½"= 1'-0"

NOTES:

1. For locations of "Section D-D", "Detail C", "Detail E", and "Detail F", see "SHEAR KEY LAYOUT" sheet.
2. FCM and compression zones extend to the middle depth of the web.
3. Type 3 FB Hanger not shown for clarity. See "GIRDER DETAILS NO. 3" and "GIRDER DETAILS NO. 4" sheets.

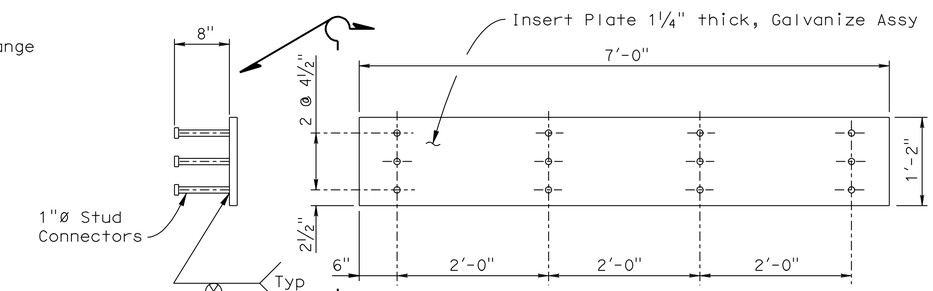

DETAIL E

1"= 1'-0"

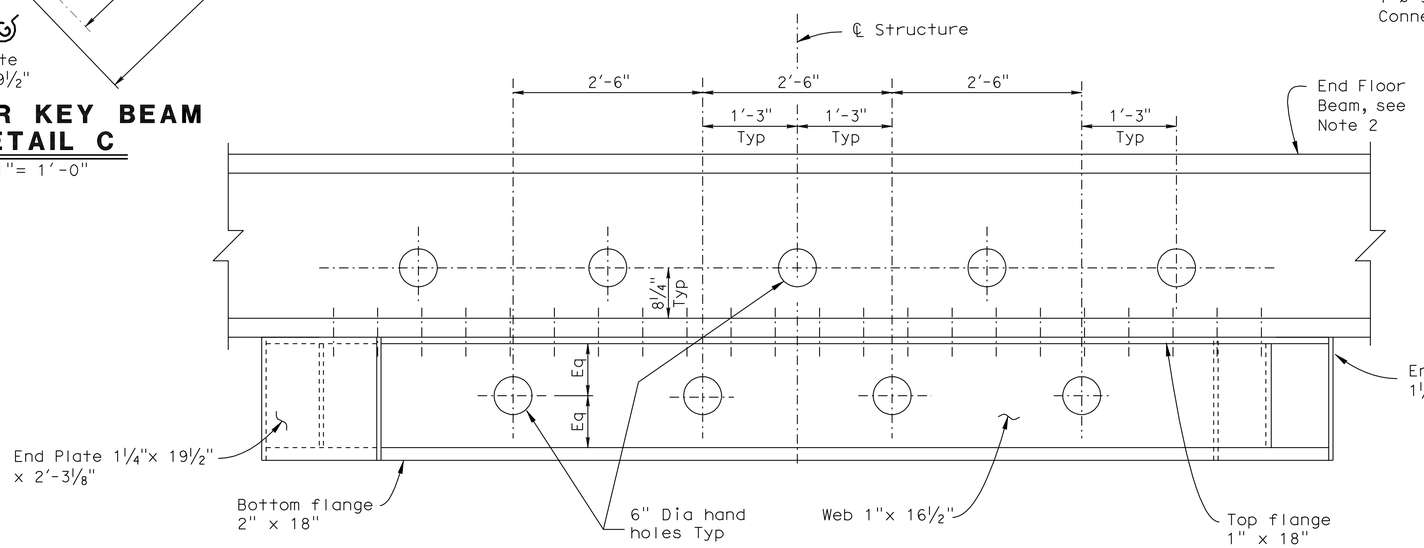

SECTION G-G

1"=1'-0"

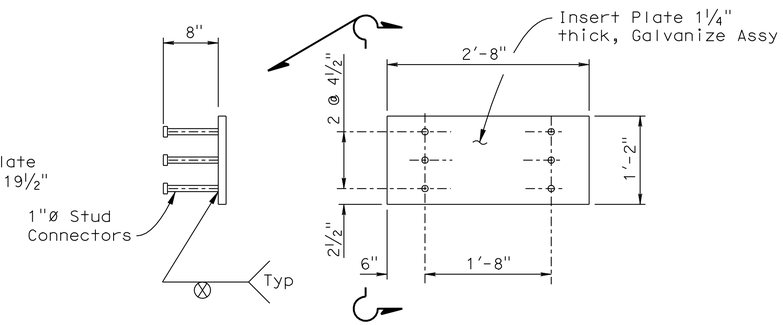

DETAIL F

1"= 1'-0"

NOTE:
THE CONTRACTOR SHALL VERIFY ALL CONTROLLING FIELD DIMENSIONS BEFORE ORDERING OR FABRICATING ANY MATERIAL.

	BY	CHECKED
DESIGN	B. Addlespurger	G. Slocum
DETAILS	D.Wooten	G. Slocum
QUANTITIES	T. Sanderson	R. Anderson

STATE OF CALIFORNIA
DEPARTMENT OF TRANSPORTATION

DIVISION OF ENGINEERING SERVICES
STRUCTURE DESIGN
DESIGN BRANCH 10

BRIDGE NO. 56-0839
POST MILE 19.39

PACHAPPA UP (REPLACE)
SHEAR KEY BEAM DETAILS

STRUCTURES DESIGN DETAIL SHEET (ENGLISH) (REV. 10/25/05)

ORIGINAL SCALE IN INCHES FOR REDUCED PLANS 0 1 2 3

CU 08
EA 448401

DISREGARD PRINTS BEARING EARLIER REVISION DATES

REVISION DATES: 2-08-10, 2-09-10, 5-29-10, 6-04-10, 7-15-10, 9-09-10, 9-28-10, 10-21-10

SHEET 19 OF 44

FILE => 560839ishearkeydt19.dgn

USERNAME => trright DATE PLOTTED => 30-APR-2011 TIME PLOTTED => 13:53

DIST	COUNTY	ROUTE	POST MILES TOTAL PROJECT	SHEET No	TOTAL SHEETS
08	Riv	91	15.6/21.6	1930	2028

REGISTERED CIVIL ENGINEER 11-30-10 DATE

4-25-11
PLANS APPROVAL DATE

REGISTERED PROFESSIONAL ENGINEER HUAN D. VU No. C60696 Exp. 12/31/10 CIVIL STATE OF CALIFORNIA

The State of California or its officers or agents shall not be responsible for the accuracy or completeness of electronic copies of this plan sheet.

NOTES:

1. For Details A, B and D, see "GIRDER DETAILS NO. 1" sheet.
2. For Detail C, see "GIRDER DETAILS NO. 2" sheet.
3. For Detail E, see "GIRDER DETAILS NO. 3" sheet.
4. Actual ballast depth below the tie is 12" Min. Max design ballast shown as 30" from top of deck to the top of tie at the low rail.
5. Bar 6" x 1" Jacking Stiffeners, NS & FS clip and weld per "Detail C" on "GIRDER DETAILS NO. 2" sheet. Place 3'-9" from terminus of End Floor Beam along the End Floor Beam ℄.
6. Intermediate Stiffeners placed as matching pairs. Exceptions shown on "GIRDER LAYOUT" sheets.
7. (FCM) indicates Fracture Critical Members. See notes on "INDEX TO PLANS" sheet.
8. See "GIRDER DETAILS NO. 6" sheet.

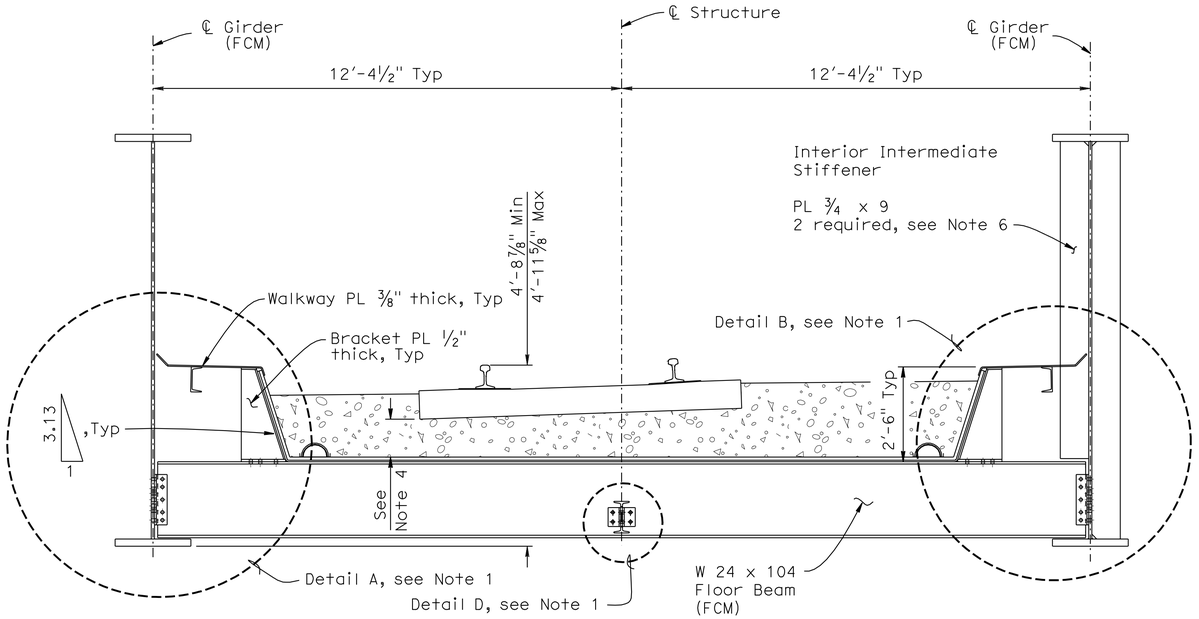

BETWEEN INTERMEDIATE STIFFENERS

AT INTERMEDIATE STIFFENERS (NO KNEE BRACE)

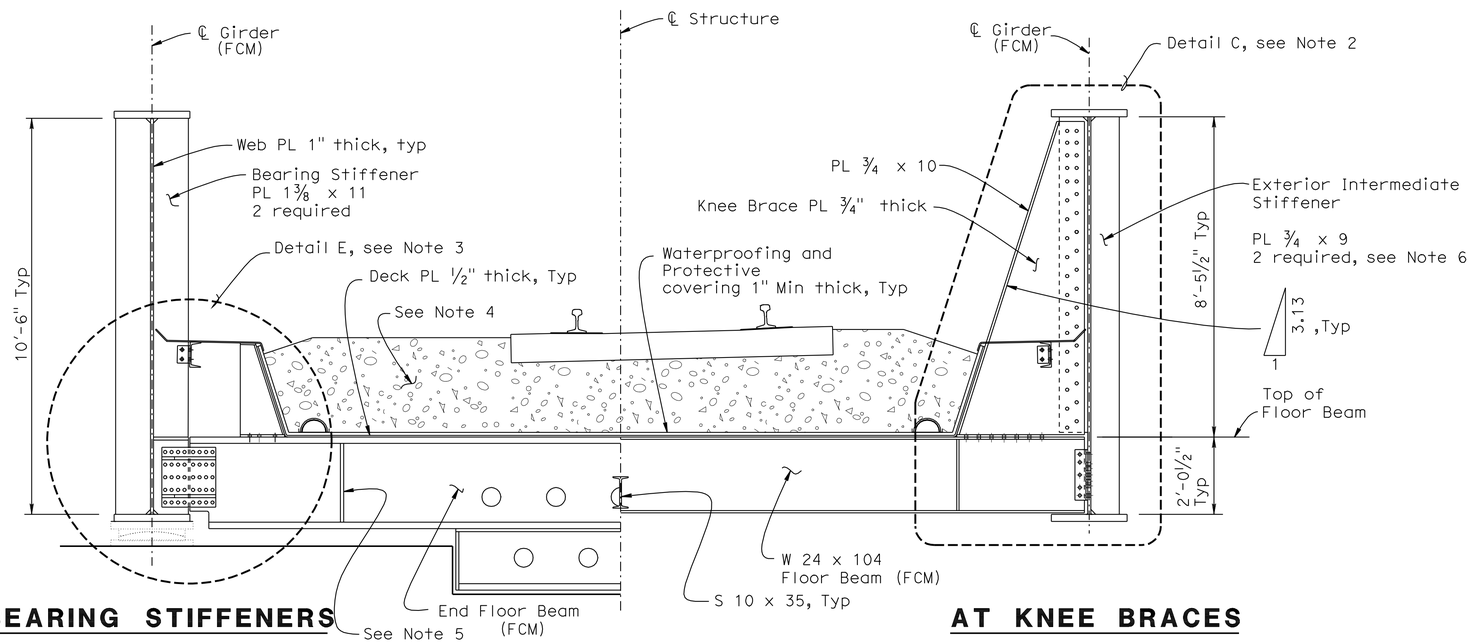

AT BEARING STIFFENERS

AT KNEE BRACES

TYPICAL SECTION

½" = 1"-0"

NOTE:
THE CONTRACTOR SHALL VERIFY ALL CONTROLLING FIELD DIMENSIONS BEFORE ORDERING OR FABRICATING ANY MATERIAL.

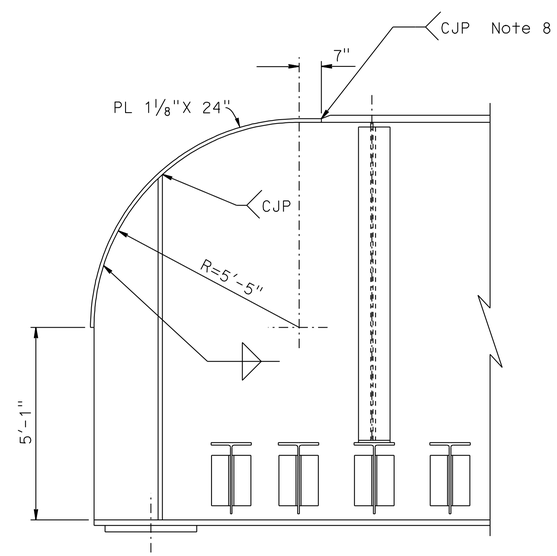

GIRDER NOSE AT ABUTMENT

½" = 1"-0"

NOTE: Interior Elevation of Abutment 1 shown, Abutment 3 similar.

DESIGN	BY B. Addlespurger	CHECKED G. Slocum	
DETAILS	BY E. Montevirgen	CHECKED G. Slocum	
QUANTITIES	BY T. Sanderson	CHECKED R. Anderson	

STATE OF CALIFORNIA
DEPARTMENT OF TRANSPORTATION

DIVISION OF ENGINEERING SERVICES
STRUCTURE DESIGN
DESIGN BRANCH 10

BRIDGE NO. 56-0839
POST MILE 19.39

PACHAPPA UP (REPLACE)
TYPICAL SECTION

STRUCTURES DESIGN DETAIL SHEET (ENGLISH) (REV. 10/25/05)

ORIGINAL SCALE IN INCHES FOR REDUCED PLANS 0 1 2 3

CU 08
EA 448401

DISREGARD PRINTS BEARING EARLIER REVISION DATES

REVISION DATES: 10-29-09, 11-18-09, 5-25-10, 6-04-10, 7-15-10, 9-28-10

SHEET 20 OF 44

FILE => 560839kts20.dgn

USERNAME => trrichf DATE PLOTTED => 30-APR-2011 TIME PLOTTED => 13:53

DIST	COUNTY	ROUTE	POST MILES TOTAL PROJECT	SHEET No	TOTAL SHEETS
08	Riv	91	15.6/21.6	1931	2028

REGISTERED CIVIL ENGINEER 11-30-10 DATE

4-25-11
PLANS APPROVAL DATE

REGISTERED PROFESSIONAL ENGINEER HUAN D. VU No. C60696 Exp. 12/31/10 CIVIL STATE OF CALIFORNIA

The State of California or its officers or agents shall not be responsible for the accuracy or completeness of electronic copies of this plan sheet.

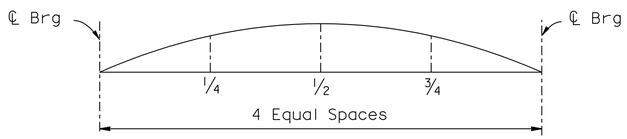

DEAD LOAD CAMBER DIAGRAM

Camber Components \ Ordinates	1/4	1/2	3/4
PL Girder & Stiffeners	0.16	0.22	0.16
Added Steel Components	0.19	0.27	0.19
Ballast,Track & Ties (Min)	0.33	0.46	0.33
Ballast,Track & Ties (Max)	0.49	0.68	0.48
Total Camber (inch)	0.84	1.17	0.83

NOTES:
1. Welds for stiffeners and girder splices and transitions are shown on "GIRDER DETAILS NO. 6" sheet.
2. Single sided intermediate stiffener region. Single Exterior stiffeners to be centered on ℄ Floor beams as shown.
3. FCM and compression zones extend to the middle depth of the web.
4. Left and Right Girder stiffener placements are identical by rotation. The terminus beyond the ℄ Brg and the nose at the Abutment are specific to the individual girder. See "TYPICAL SECTION" sheet.
5. Camber Diagram View is an Interior Elevation of each Girder.
6. Optional bolted splices shall be designed per AREMA. Contractor to submit calculations and details to the engineer for approval.

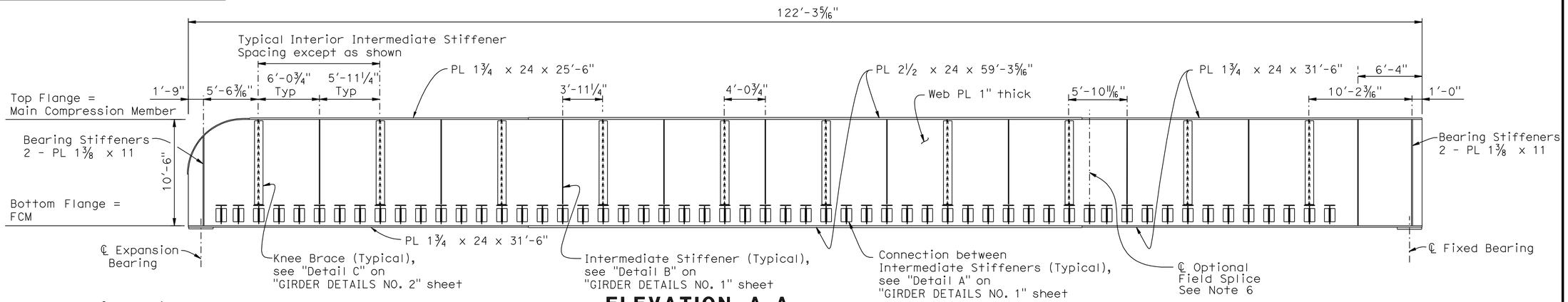

ELEVATION A-A

3/16" = 1'-0"

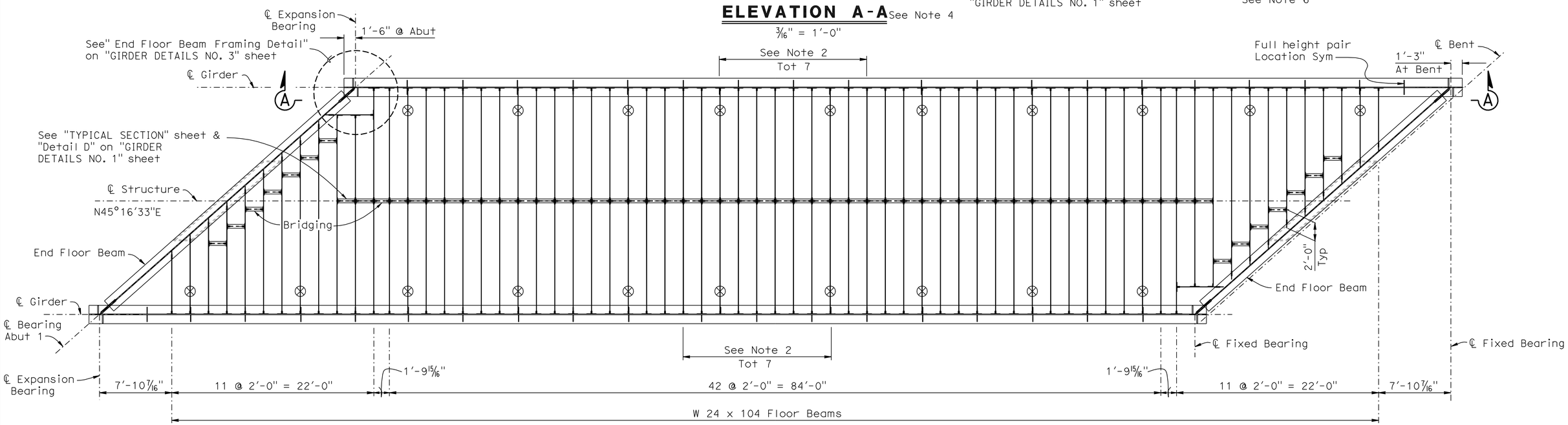

SPAN 1

3/16" = 1'-0"

NOTE:
THE CONTRACTOR SHALL VERIFY ALL CONTROLLING FIELD DIMENSIONS BEFORE ORDERING OR FABRICATING ANY MATERIAL.

LEGEND:

⊗ = Indicates location of Knee Braces.

	BY	CHECKED
DESIGN	B. Addlespurger	G. Slocum
DETAILS	E. Montevirgen	G. Slocum
QUANTITIES	T. Sanderson	R. Anderson

STATE OF CALIFORNIA
DEPARTMENT OF TRANSPORTATION

DIVISION OF ENGINEERING SERVICES
STRUCTURE DESIGN
DESIGN BRANCH 10

BRIDGE NO. 56-0839
POST MILE 19.39

PACHAPPA UP (REPLACE)
GIRDER LAYOUT NO. 1

STRUCTURES DESIGN DETAIL SHEET (ENGLISH) (REV. 10/25/05)

ORIGINAL SCALE IN INCHES FOR REDUCED PLANS 0 1 2 3

CU 08
EA 448401

DISREGARD PRINTS BEARING EARLIER REVISION DATES

REVISION DATES: 10-22-09 5-28-10 6-09-10 7-16-10 9-09-10 9-29-10 10-21-10 11-01-10

SHEET 21 OF 44

FILE => 5608391g_lo21.dgn

USERNAME => jtright DATE PLOTTED => 30-APR-2011 TIME PLOTTED => 14:00

DIST	COUNTY	ROUTE	POST MILES TOTAL PROJECT	SHEET No	TOTAL SHEETS
08	Riv	91	15.6/21.6	1932	2028

REGISTERED CIVIL ENGINEER 11-30-10 DATE

4-25-11
PLANS APPROVAL DATE

REGISTERED PROFESSIONAL ENGINEER HUAN D. VU No. C60696 Exp. 12/31/10 CIVIL STATE OF CALIFORNIA

The State of California or its officers or agents shall not be responsible for the accuracy or completeness of electronic copies of this plan sheet.

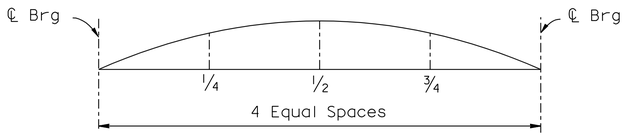

DEAD LOAD CAMBER DIAGRAM

Camber Components \ Ordinates	1/4	1/2	3/4
PL Girder & Stiffeners	0.19	0.27	0.19
Added Steel Components	0.22	0.31	0.22
Ballast,Track & Ties (Min)	0.38	0.53	0.37
Ballast,Track & Ties (Max)	0.56	0.78	0.55
Total Camber (inch)	0.97	1.36	0.96

NOTES:
1. Welds for stiffeners and girder splices and transitions are shown on "GIRDER DETAILS NO. 6" sheet.
2. Single sided intermediate stiffener region. Single Exterior Stiffeners to be centered on ℄ Floorbeams as shown.
3. FCM and compression zones extend to the middle depth of the web.
4. Left and Right Girder stiffener placements are identical by rotation. The terminus beyond the ℄ Brg and the nose at the Abutment are specific to the individual girder. See "TYPICAL SECTION" sheet.
5. Camber Diagram View is an Interior Elevation of each Girder.
6. Optional bolted splices shall be designed per AREME. Contractor to submit calculations and details to the Engineer for approval.

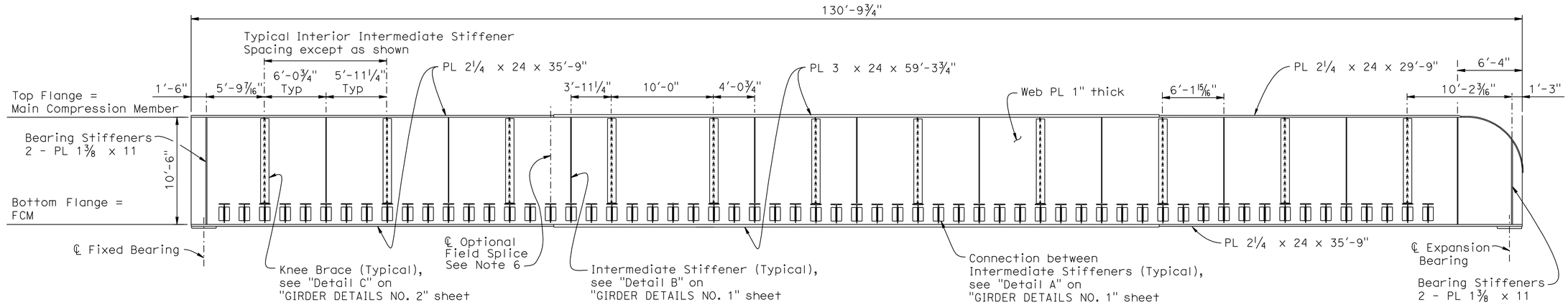

ELEVATION B-B See Note 4

3⁄16" = 1'-0"

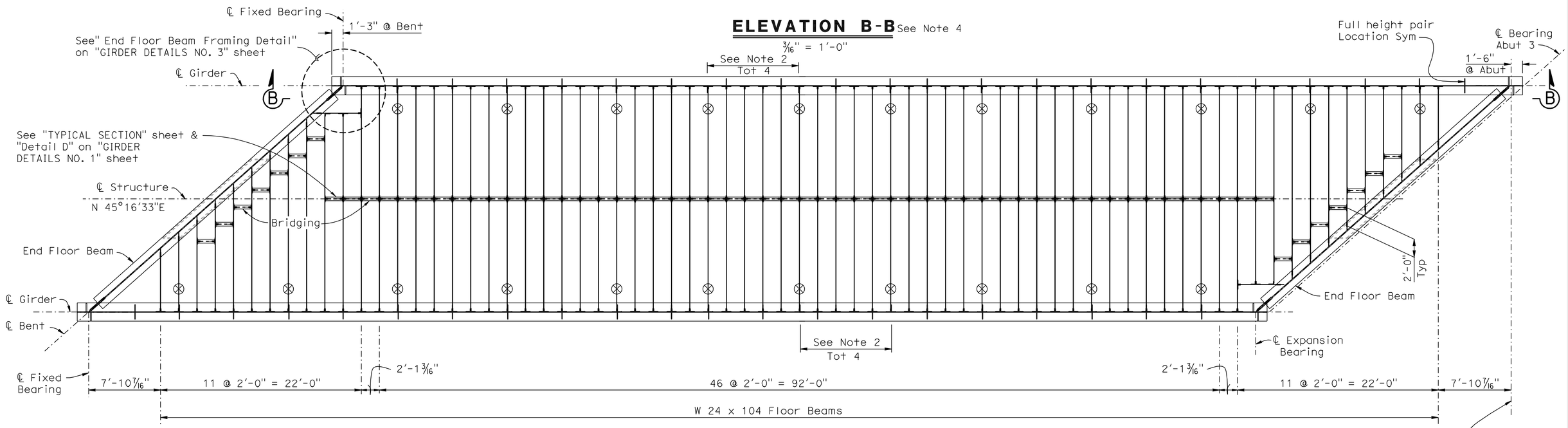

SPAN 2

3⁄16" = 1'-0"

NOTE:
THE CONTRACTOR SHALL VERIFY ALL CONTROLLING FIELD DIMENSIONS BEFORE ORDERING OR FABRICATING ANY MATERIAL.

LEGEND:

⊗ = Indicates location of Knee Braces.

	BY	CHECKED
DESIGN	B. Addlespurger	G. Slocum
DETAILS	E. Montevirgen	G. Slocum
QUANTITIES	T. Sanderson	R. Anderson

STATE OF CALIFORNIA
DEPARTMENT OF TRANSPORTATION

DIVISION OF ENGINEERING SERVICES
STRUCTURE DESIGN
DESIGN BRANCH 10

BRIDGE NO. 56-0839
POST MILE 19.39

PACHAPPA UP (REPLACE)
GIRDER LAYOUT NO. 2

STRUCTURES DESIGN DETAIL SHEET (ENGLISH) (REV. 10/25/05)

ORIGINAL SCALE IN INCHES FOR REDUCED PLANS 0 1 2 3

CU 08
EA 448401

DISREGARD PRINTS BEARING EARLIER REVISION DATES

REVISION DATES: 1-29-10 5-28-10 6-04-10 7-16-10 9-07-10 9-29-10 10-21-10

SHEET 22 OF 44

FILE => 5608391g_1o22.dgn

USERNAME => trrichf DATE PLOTTED => 30-APR-2011 TIME PLOTTED => 14:00

DIST	COUNTY	ROUTE	POST MILES TOTAL PROJECT	SHEET No	TOTAL SHEETS
08	Riv	91	15.6/21.6	1933	2028

REGISTERED CIVIL ENGINEER 11-30-10 DATE

4-25-11
PLANS APPROVAL DATE

REGISTERED PROFESSIONAL ENGINEER HUAN D. VU No. C60696 Exp. 12/31/10 CIVIL STATE OF CALIFORNIA

The State of California or its officers or agents shall not be responsible for the accuracy or completeness of electronic copies of this plan sheet.

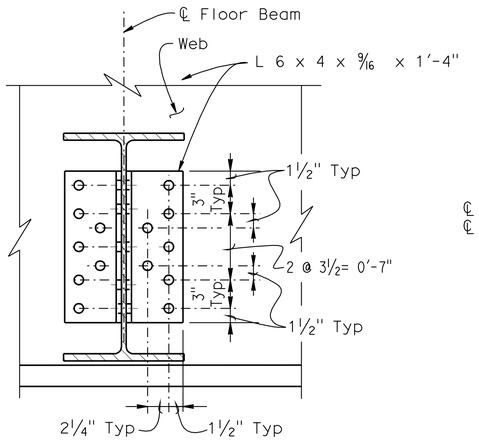

TYPE 1 FB HANGER

SECTION A-A

1½" = 1'-0"

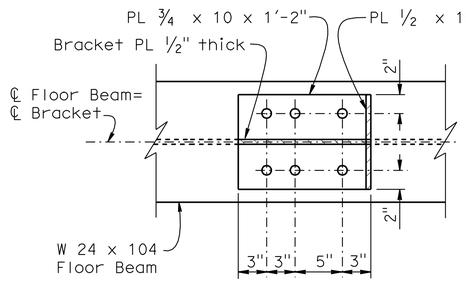

TYPE 1 BRACKET

SECTION B-B

1½" = 1'-0"

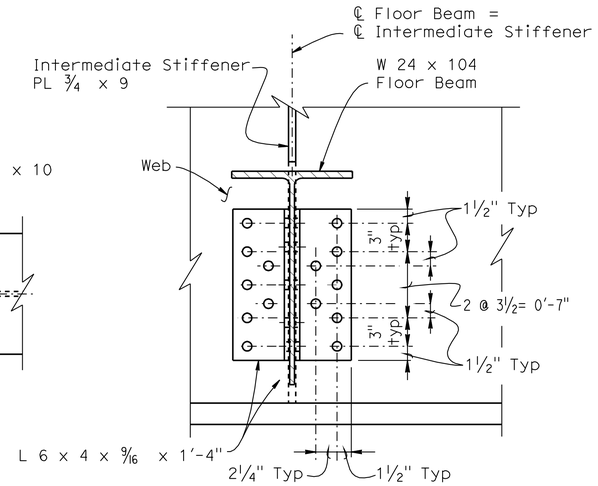

SECTION C-C

1½" = 1'-0"

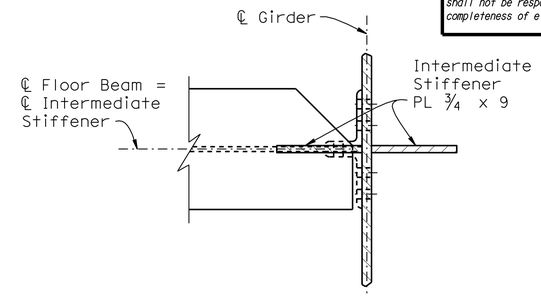

SECTION D-D

1½" = 1'-0"

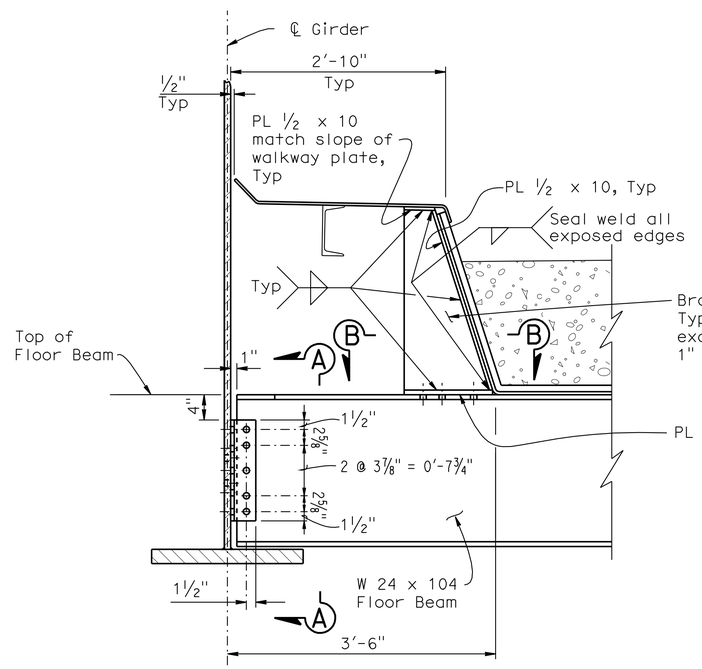

DETAIL A

1" = 1'-0"

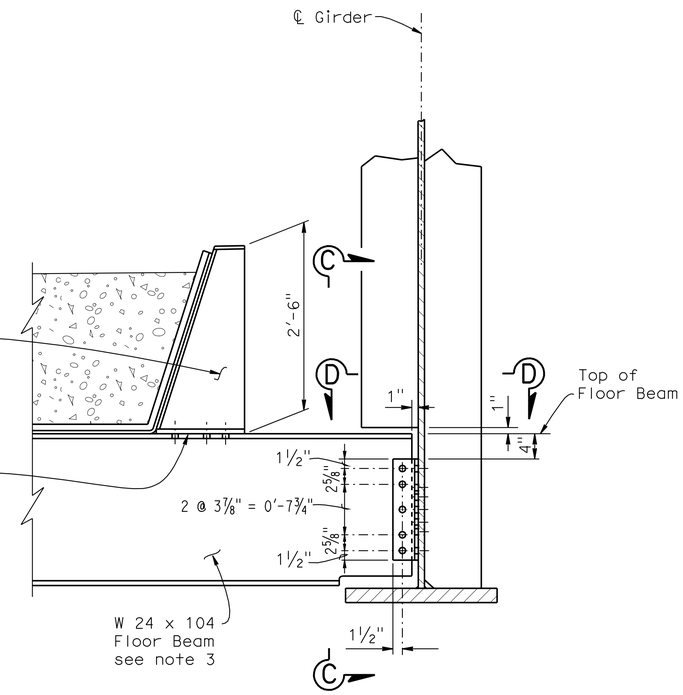

DETAIL B

1" = 1'-0"

Walkway plate & support not shown for clarity

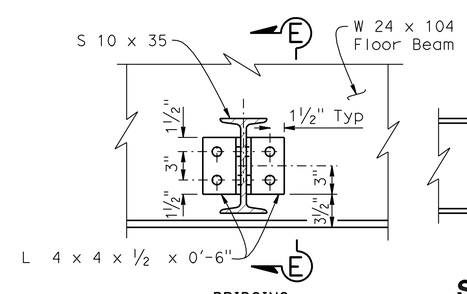

BRIDGING

DETAIL D

1½" = 1'-0"

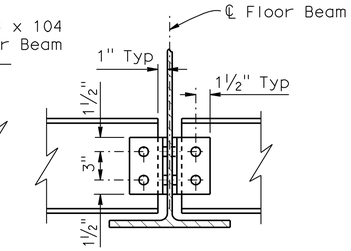

SECTION E-E

1½" = 1'-0"

NOTES:

1. For locations of "Detail A", "Detail B" and "Detail D", see "TYPICAL SECTION" sheet.
2. For Floor Beam Intermediate Stiffener and bridging locations, see "GIRDER LAYOUT" sheets.
3. Optional cope of FB shown in "Detail B" applies consistently, but is mandatory with field splices.
4. See "DECK PLATING & SIDEWALK LAYOUT" sheet for additional information.

	BY	CHECKED
DESIGN	B. Addlespurger	G. Slocum
DETAILS	E. Montevirgen	G. Slocum
QUANTITIES	T. Sanderson	R. Anderson

STATE OF CALIFORNIA
DEPARTMENT OF TRANSPORTATION

DIVISION OF ENGINEERING SERVICES
STRUCTURE DESIGN
DESIGN BRANCH 10

BRIDGE NO. 56-0839
POST MILE 19.39

PACHAPPA UP (REPLACE)
GIRDER DETAILS NO. 1

STRUCTURES DESIGN DETAIL SHEET (ENGLISH) (REV. 10/25/05)

ORIGINAL SCALE IN INCHES FOR REDUCED PLANS 0 1 2 3

CU 08
EA 448401

DISREGARD PRINTS BEARING EARLIER REVISION DATES

REVISION DATES: 9-1-09, 10-28-09, 11-12-09, 5-25-10, 6-08-10, 10-21-10, 11-10-10

SHEET 23 OF 44

FILE => 5608391gdt23.dgn

USERNAME => trright DATE PLOTTED => 30-APR-2011 TIME PLOTTED => 14:00

NOTE:
THE CONTRACTOR SHALL VERIFY ALL CONTROLLING FIELD DIMENSIONS BEFORE ORDERING OR FABRICATING ANY MATERIAL.

DIST	COUNTY	ROUTE	POST MILES TOTAL PROJECT	SHEET No	TOTAL SHEETS
08	Riv	91	15.6/21.6	1934	2028

REGISTERED CIVIL ENGINEER — DATE 11-30-10

4-25-11
PLANS APPROVAL DATE

REGISTERED PROFESSIONAL ENGINEER — HUAN D. VU — No. C60696 — Exp. 12/31/10 — CIVIL — STATE OF CALIFORNIA

The State of California or its officers or agents shall not be responsible for the accuracy or completeness of electronic copies of this plan sheet.

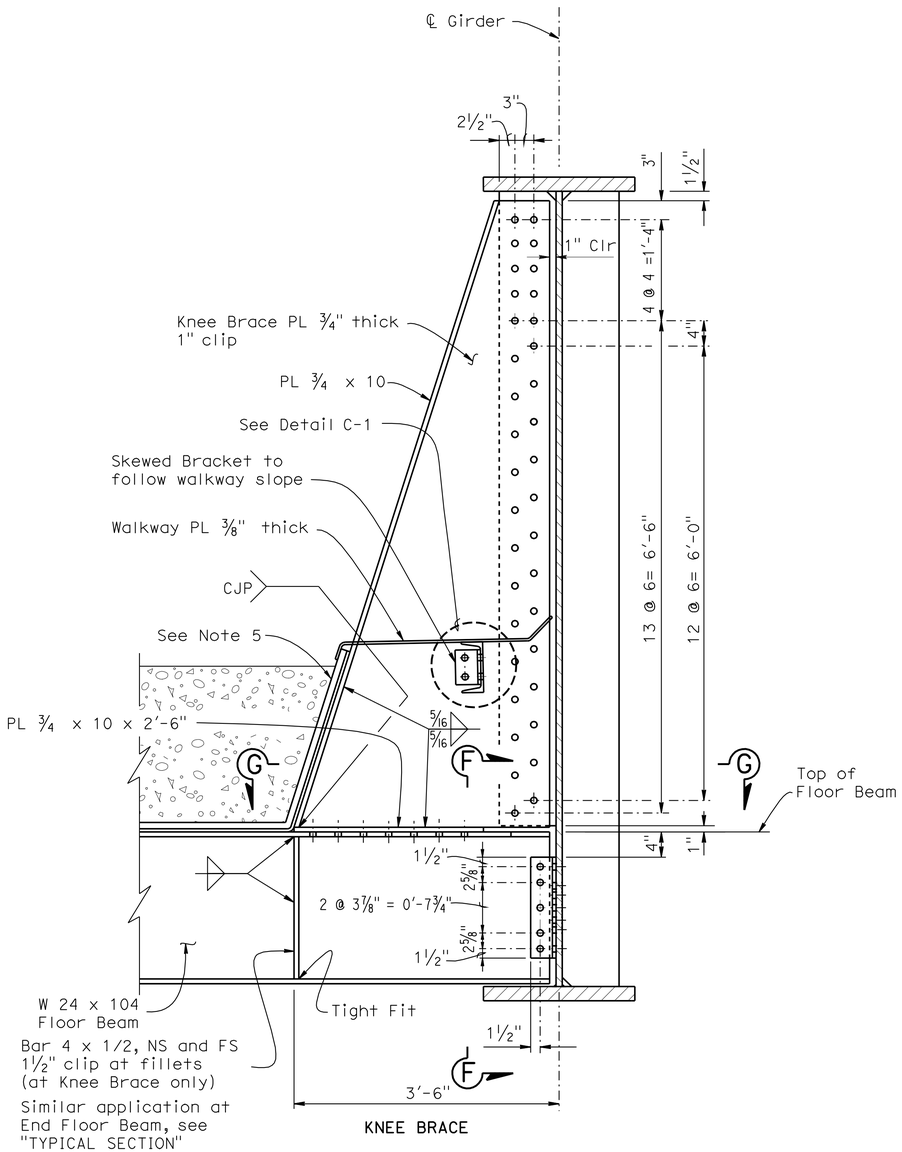

DETAIL C
1" = 1'-0"

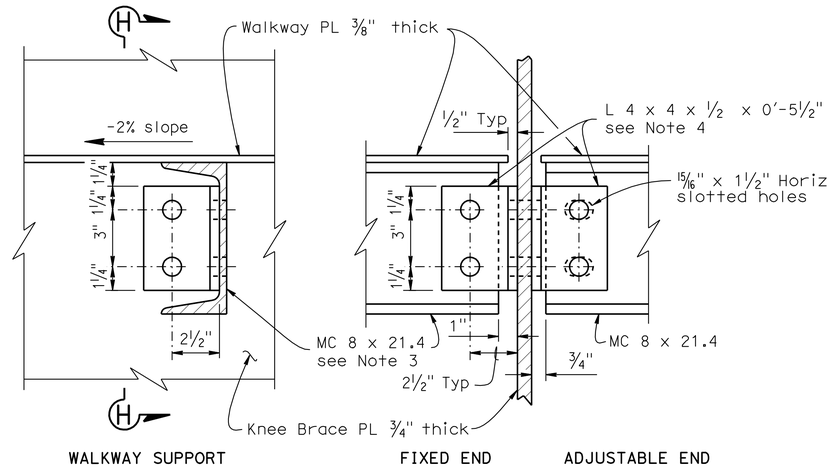

DETAIL C-1
3" = 1'-0"

SECTION H-H
3" = 1'-0"

NOTES:

1. For location of Detail C, see "TYPICAL SECTION" sheet.
2. For knee brace, floor beam and intermediate stiffener locations, see "GIRDER LAYOUT" sheets.
3. Walkway supports shall have one fixed end and one adjustable end.
4. Angle 4 x 4 x ½ x 0'-5½" shall be fastened to the Knee Brace PL and field bolted to MC8, see "DECK PLATING & SIDEWALK DETAILS NO. 2" sheet.
5. Curb flashing detail not shown for clarity. See "DECK PLATING & SIDEWALK DETAILS NO. 1" sheet.

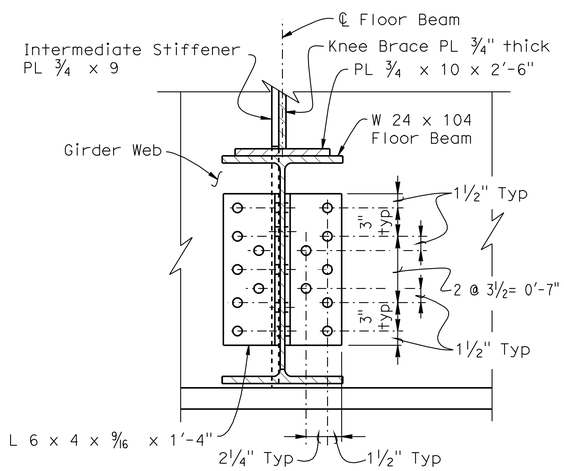

SECTION F-F
1½" = 1'-0"

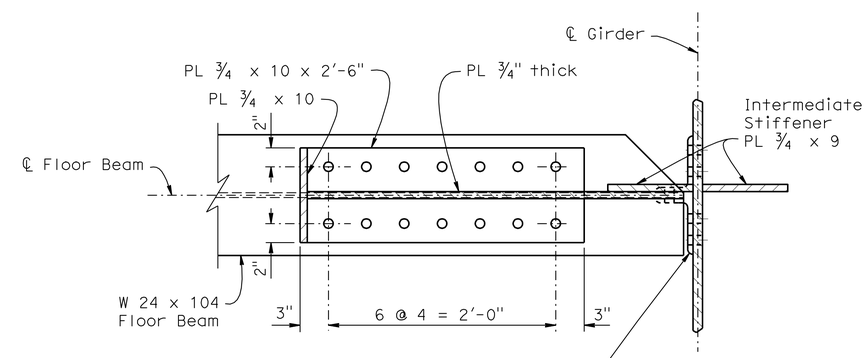

SECTION G-G
1½" = 1'-0"

	BY	CHECKED
DESIGN	B. Addlespurger	G. Slocum
DETAILS	E. Montevirgen	G. Slocum
QUANTITIES	T. Sanderson	R. Anderson

STATE OF CALIFORNIA
DEPARTMENT OF TRANSPORTATION

DIVISION OF ENGINEERING SERVICES
STRUCTURE DESIGN
DESIGN BRANCH 10

BRIDGE NO. 56-0839
POST MILE 19.39

PACHAPPA UP (REPLACE)
GIRDER DETAILS NO. 2

STRUCTURES DESIGN DETAIL SHEET (ENGLISH) (REV. 10/25/05)

ORIGINAL SCALE IN INCHES FOR REDUCED PLANS 0 1 2 3

CU 08
EA 448401

DISREGARD PRINTS BEARING EARLIER REVISION DATES

REVISION DATES: 9-1-09 | 10-29-09 | 11-12-09 | 5-27-10 | 6-08-10 | 7-16-10 | 10-21-10

SHEET 24 OF 44

FILE => 560839lgdt24.dgn

USERNAME => trright DATE PLOTTED => 30-APR-2011 TIME PLOTTED => 14:00

DIST	COUNTY	ROUTE	POST MILES TOTAL PROJECT	SHEET No	TOTAL SHEETS
08	Riv	91	15.6/21.6	1935	2028

REGISTERED CIVIL ENGINEER 11-30-10 DATE

4-25-11
PLANS APPROVAL DATE

The State of California or its officers or agents shall not be responsible for the accuracy or completeness of electronic copies of this plan sheet.

REGISTERED PROFESSIONAL ENGINEER HUAN D. VU No. C60696 Exp. 12/31/10 CIVIL STATE OF CALIFORNIA

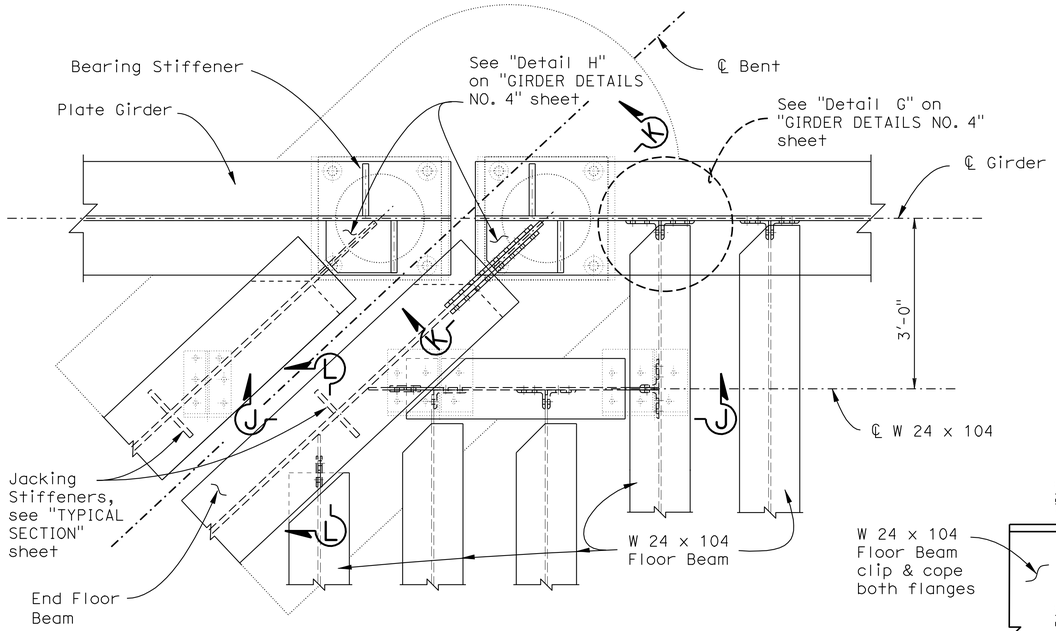

END FLOOR BEAM FRAMING DETAIL

3/4" = 1'-0"

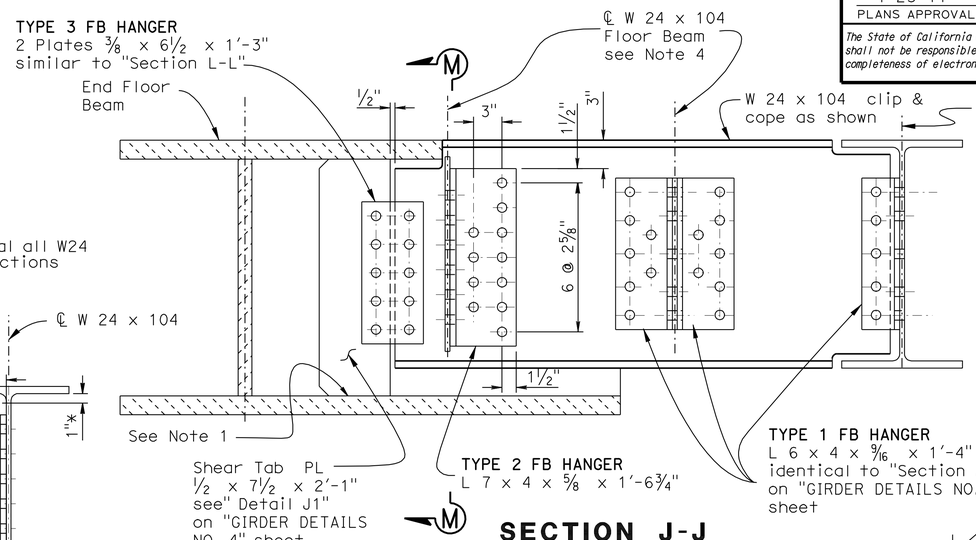

NOTES:

1. Grind to bear
2. For "View N-N" see "GIRDER DETAILS NO. 4" sheet
3. For walkway support see "GIRDER DETAILS NO. 5" & "DECK PLATING & SIDEWALK DETAILS NO. 2" sheets
4. Tops of W 24 to be flush with End Floor Beam & each other

SECTION J-J

1 1/2" = 1'-0"

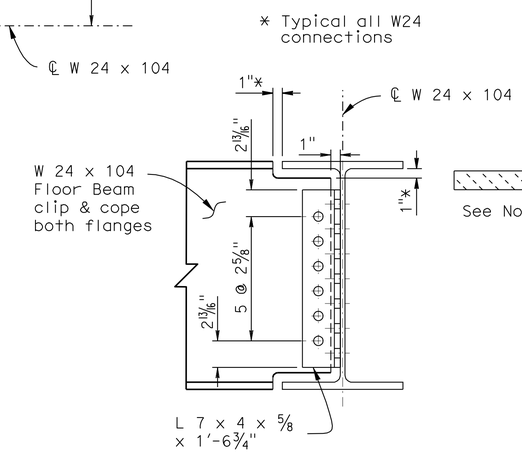

VIEW M-M

1 1/2" = 1'-0"

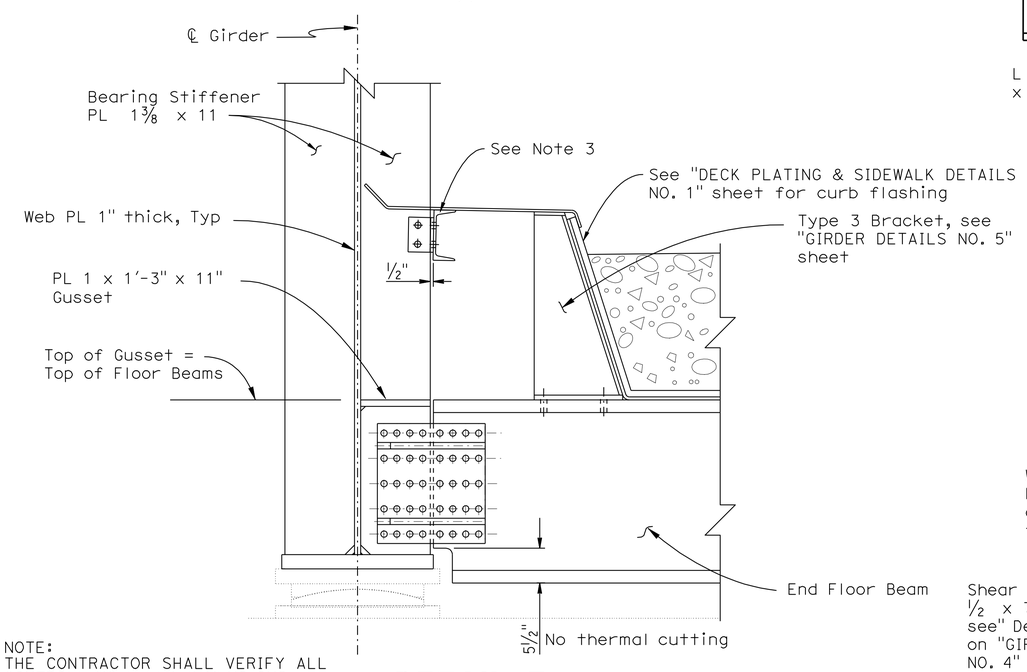

NOTE:
THE CONTRACTOR SHALL VERIFY ALL CONTROLLING FIELD DIMENSIONS BEFORE ORDERING OR FABRICATING ANY MATERIAL.

DETAIL E

1" = 1'-0"

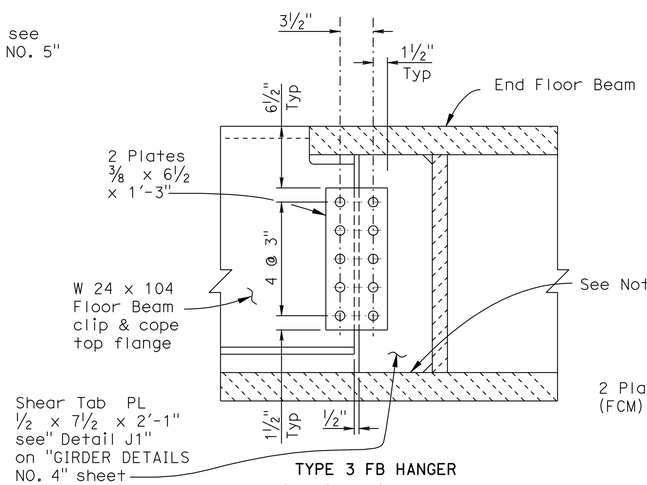

TYPE 3 FB HANGER

SECTION L-L

1 1/2" = 1'-0"

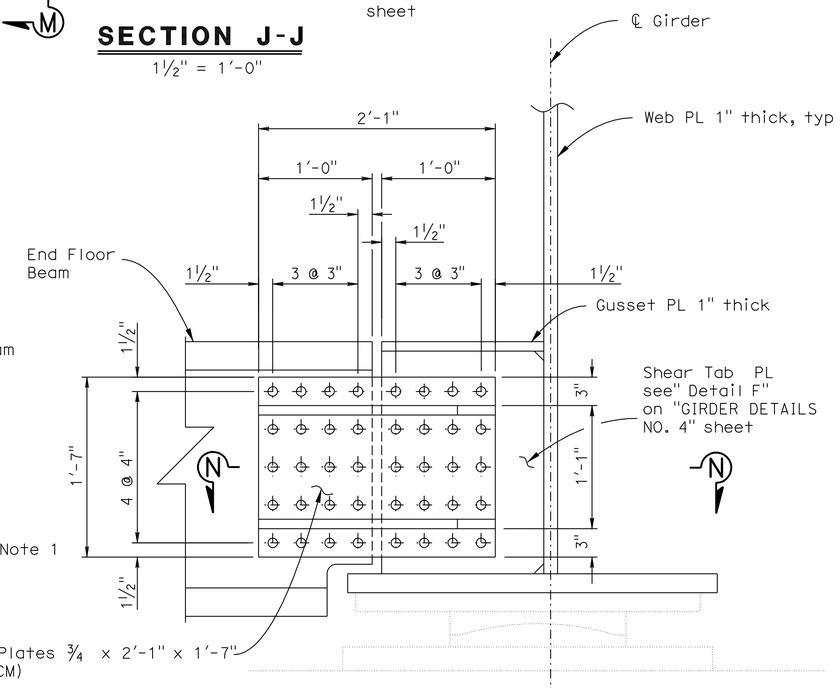

TYPE 4 FB HANGER

SECTION K-K

1 1/2" = 1'-0"

DESIGN	BY B. Addlespurger	CHECKED G. Slocum	
DETAILS	BY D.Wooten	CHECKED G. Slocum	
QUANTITIES	BY T. Sanderson	CHECKED R. Anderson	

STATE OF CALIFORNIA
DEPARTMENT OF TRANSPORTATION

DIVISION OF ENGINEERING SERVICES
STRUCTURE DESIGN
DESIGN BRANCH 10

BRIDGE NO. 56-0839
POST MILE 19.39

PACHAPPA UP (REPLACE)
GIRDER DETAILS NO. 3

STRUCTURES DESIGN DETAIL SHEET (ENGLISH) (REV. 10/25/05)

ORIGINAL SCALE IN INCHES FOR REDUCED PLANS 0 1 2 3

CU 08
EA 448401

DISREGARD PRINTS BEARING EARLIER REVISION DATES

REVISION DATES: 6-08-10 7-16-10 10-21-10

SHEET 25 OF 44

FILE => 5608391gdt25.dgn

USERNAME => trrichf DATE PLOTTED => 30-APR-2011 TIME PLOTTED => 14:00

NOTE:
THE CONTRACTOR SHALL VERIFY ALL CONTROLLING FIELD DIMENSIONS BEFORE ORDERING OR FABRICATING ANY MATERIAL.

NOTES:

1. For location of "Detail F","Detail G", "Detail H", "Detail J1", and "View N-N", see "GIRDER DETAILS NO. 3" sheet.
2. Detail J1 is the preferred connection detail for W24 & End Floor Beam. Detail J2 occurs if bolts interfere with connection. See "SHEAR KEY BEAM DETAILS" sheet.

DIST	COUNTY	ROUTE	POST MILES TOTAL PROJECT	SHEET No	TOTAL SHEETS
08	Riv	91	15.6/21.6	1936	2028

REGISTERED CIVIL ENGINEER 11-30-10 DATE

4-25-11
PLANS APPROVAL DATE

REGISTERED PROFESSIONAL ENGINEER HUAN D. VU No. C60696 Exp. 12/31/10 CIVIL STATE OF CALIFORNIA

The State of California or its officers or agents shall not be responsible for the accuracy or completeness of electronic copies of this plan sheet.

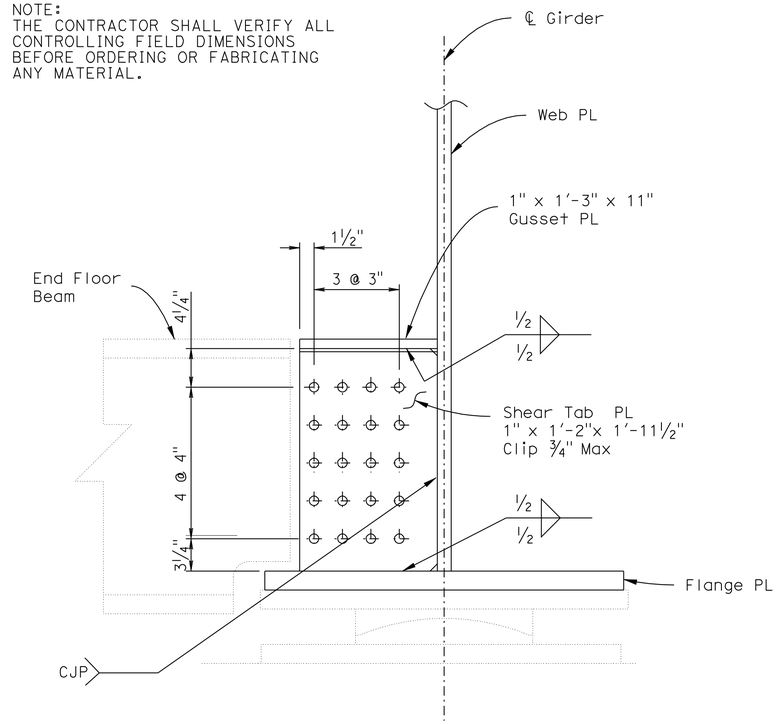

DETAIL F
1½" = 1'-0"

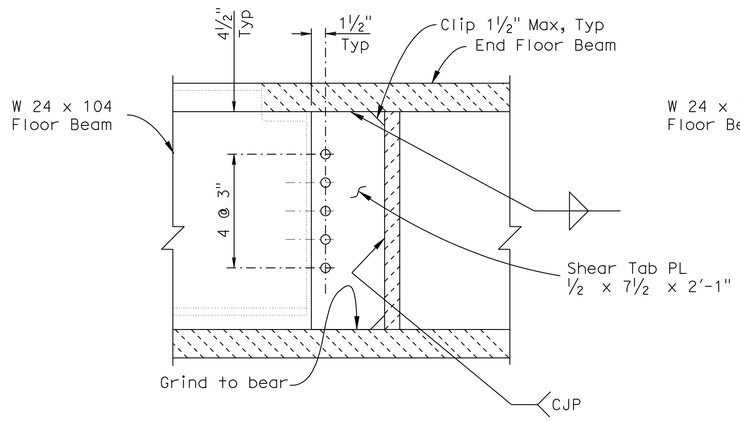

DETAIL J1
1½" = 1'-0"

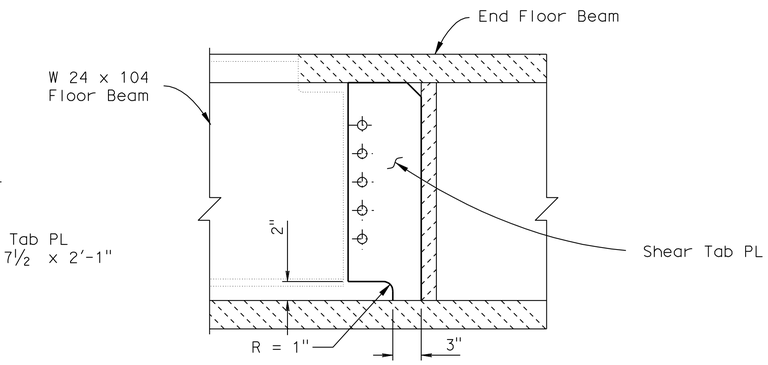

DETAIL J2
1½" = 1'-0"
See Note 2

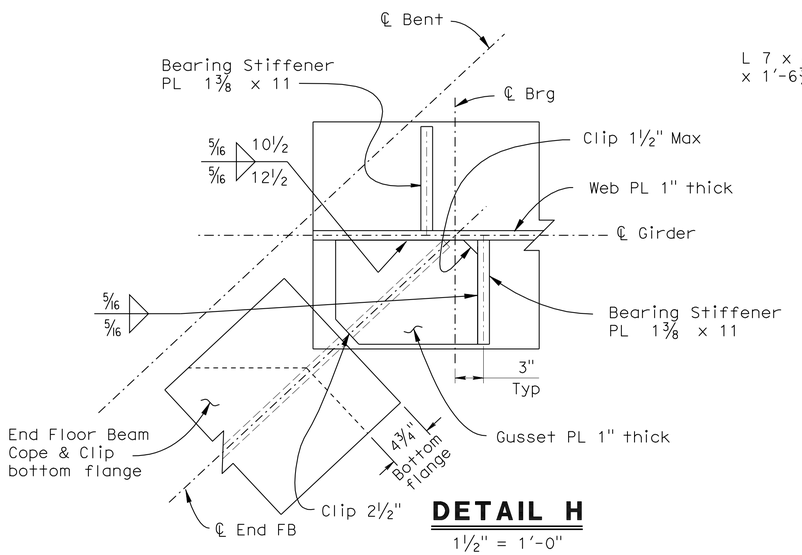

DETAIL H
1½" = 1'-0"

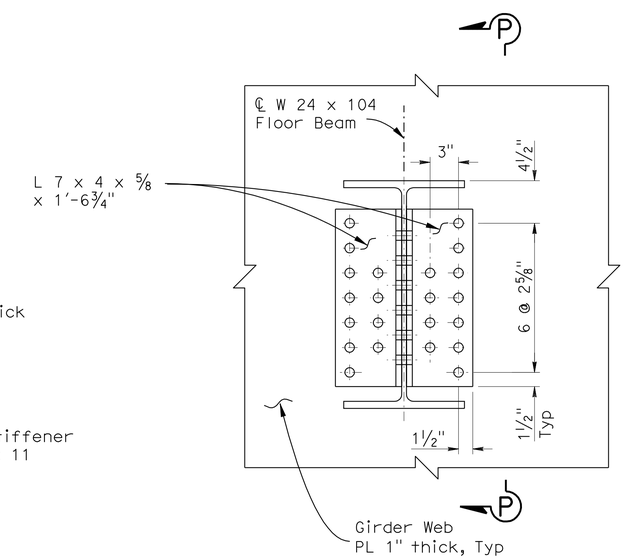

TYPE 2 FB HANGER

DETAIL G
1½" = 1'-0"

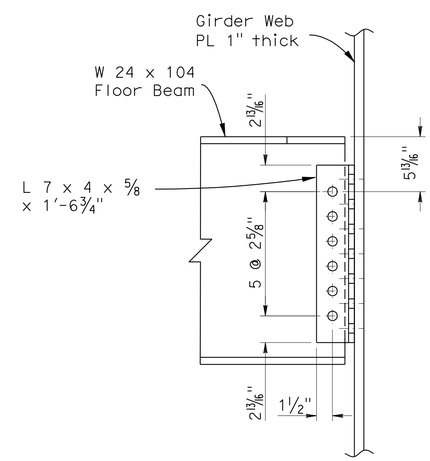

SECTION P-P
1½" = 1'-0"

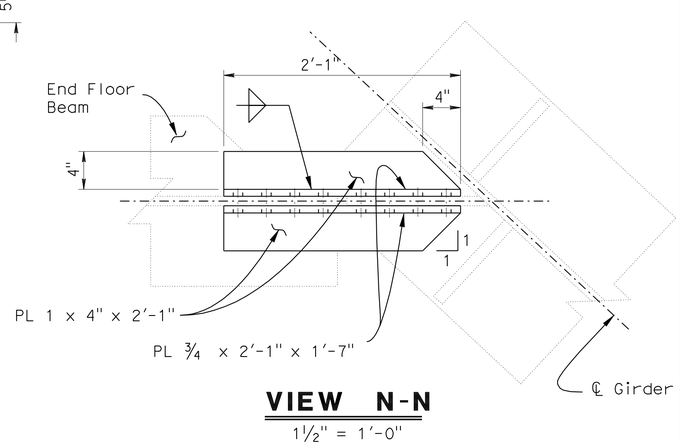

VIEW N-N
1½" = 1'-0"

DESIGN	BY B. Addlespurger	CHECKED G. Slocum	
DETAILS	BY D. Wooten	CHECKED G. Slocum	
QUANTITIES	BY T. Sanderson	CHECKED R. Anderson	

STATE OF CALIFORNIA
DEPARTMENT OF TRANSPORTATION

DIVISION OF ENGINEERING SERVICES
STRUCTURE DESIGN
DESIGN BRANCH 10

BRIDGE NO. 56-0839
POST MILE 19.39

PACHAPPA UP (REPLACE)
GIRDER DETAILS NO. 4

STRUCTURES DESIGN DETAIL SHEET (ENGLISH) (REV. 10/25/05)

ORIGINAL SCALE IN INCHES FOR REDUCED PLANS 0 1 2 3

CU 08
EA 448401

DISREGARD PRINTS BEARING EARLIER REVISION DATES

REVISION DATES: 5-25-10 6-08-10 7-16-10

SHEET 26 OF 44

FILE => 5608391gdt26.dgn

USERNAME => trpierce DATE PLOTTED => 30-APR-2011 TIME PLOTTED => 14:12

DIST	COUNTY	ROUTE	POST MILES TOTAL PROJECT	SHEET No	TOTAL SHEETS
08	Riv	91	15.6/21.6	1937	2028

REGISTERED CIVIL ENGINEER — DATE 11-30-10

4-25-11
PLANS APPROVAL DATE

REGISTERED PROFESSIONAL ENGINEER — HUAN D. VU — No. C60696 — Exp. 12/31/10 — CIVIL — STATE OF CALIFORNIA

The State of California or its officers or agents shall not be responsible for the accuracy or completeness of electronic copies of this plan sheet.

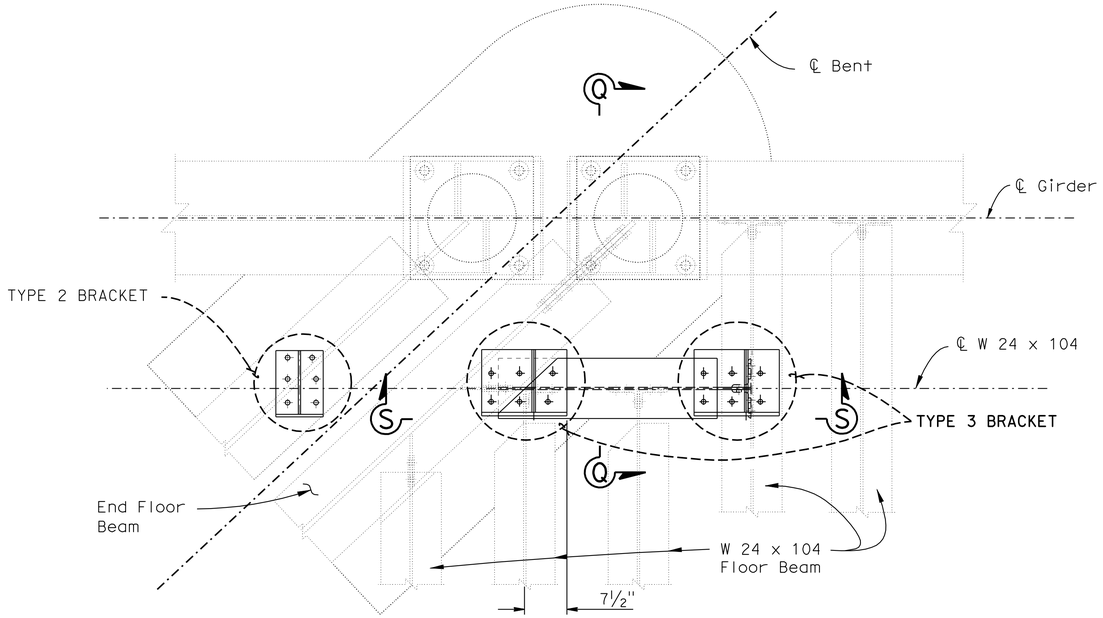

BRACKET LAYOUT

¾" = 1'-0"

NOTES:

1. Weldments and assembly for Type 1, Type 2, & Type 2 Brackets are shown on "GIRDER DETAILS NO. 1" sheet.
2. For Type 2 & Type 3 Brackets, top flanges to be shop sub punched & field reamed.
3. Angle 4 x 4 x ½ x 0'-5½" shall be fastened to the bearing stiffeners and field bolted to MC8, see "DECK PLATING & SIDEWALK DETAILS NO. 2" sheet.

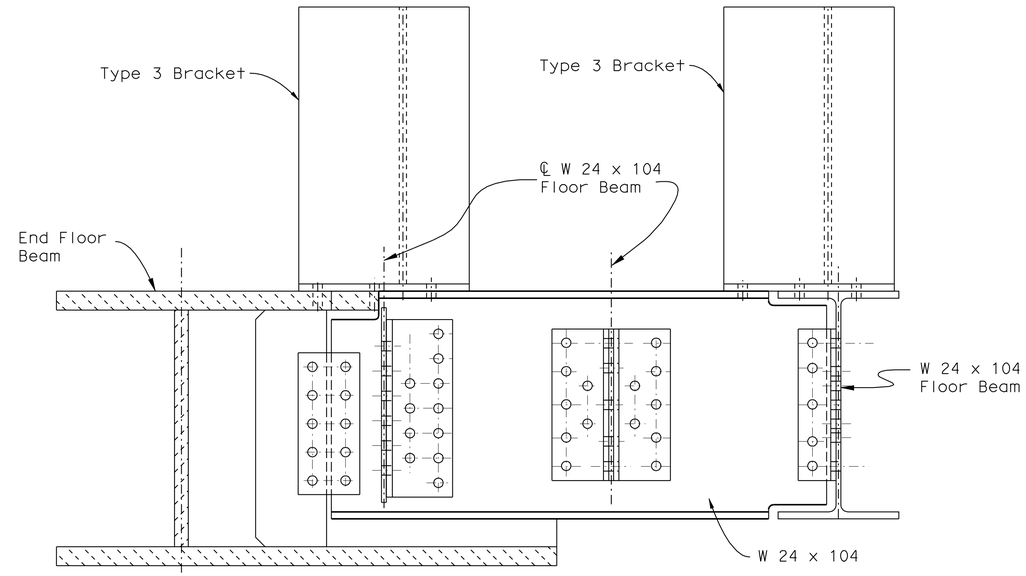

SECTION S-S

1½" = 1'-0"

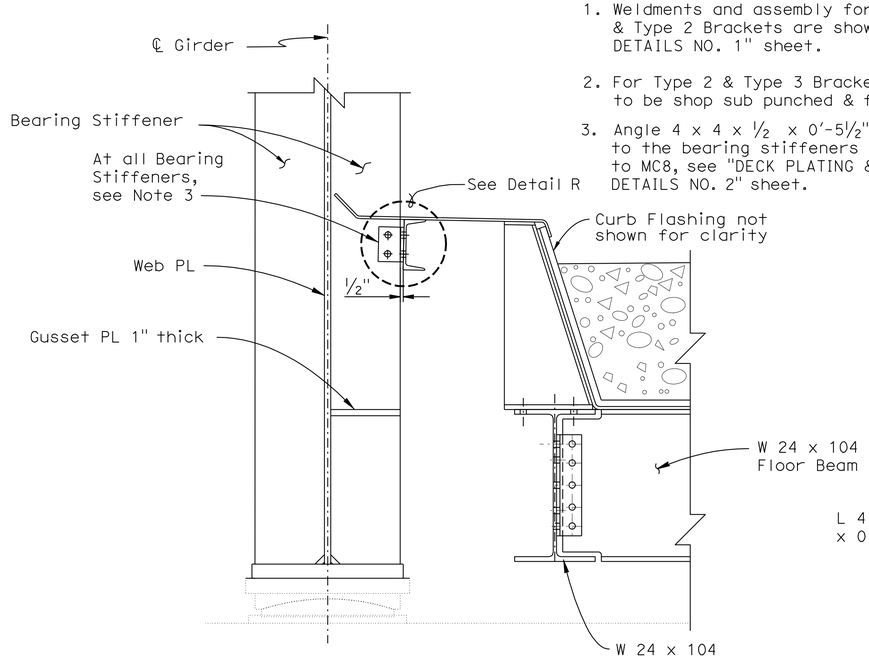

SECTION Q-Q

1" = 1'-0"

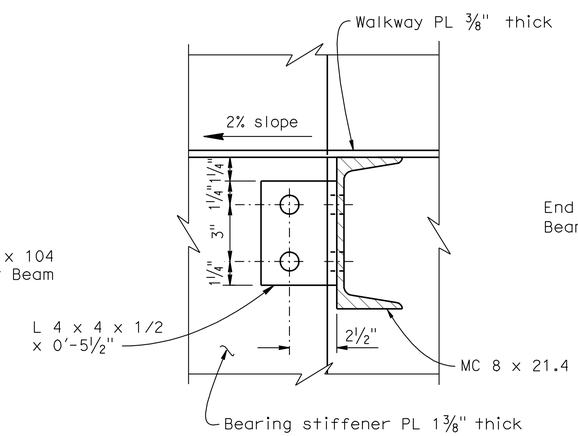

WALKWAY SUPPORT

DETAIL R

3" = 1'-0"

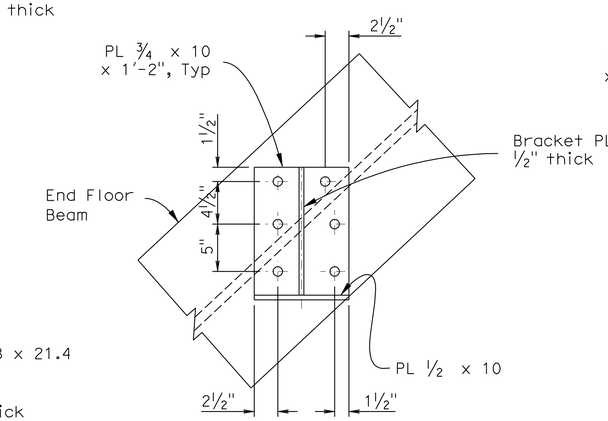

TYPE 2 BRACKET
1½" = 1'-0"

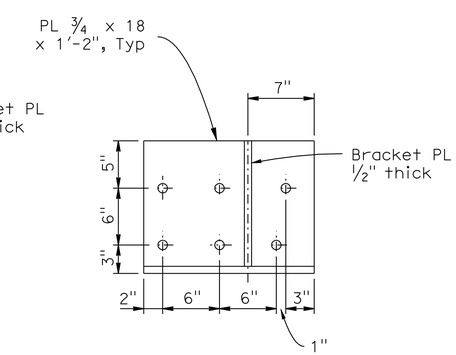

TYPE 3 BRACKET
1½" = 1'-0"

NOTE:
THE CONTRACTOR SHALL VERIFY ALL CONTROLLING FIELD DIMENSIONS BEFORE ORDERING OR FABRICATING ANY MATERIAL.

	BY	CHECKED
DESIGN	B. Addlespurger	G. Slocum
DETAILS	D. Wooten	G. Slocum
QUANTITIES	T. Sanderson	R. Anderson

STATE OF CALIFORNIA
DEPARTMENT OF TRANSPORTATION

DIVISION OF ENGINEERING SERVICES
STRUCTURE DESIGN
DESIGN BRANCH 10

BRIDGE NO. 56-0839
POST MILE 19.39

PACHAPPA UP (REPLACE)
GIRDER DETAILS NO. 5

STRUCTURES DESIGN DETAIL SHEET (ENGLISH) (REV. 10/25/05)

ORIGINAL SCALE IN INCHES FOR REDUCED PLANS 0 1 2 3

CU 08
EA 448401

DISREGARD PRINTS BEARING EARLIER REVISION DATES

REVISION DATES: 5-24-10 6-08-10 10-31-10 11-10-10

SHEET 27 OF 44

FILE => 560839lgdt27.dgn

USERNAME => trpierce DATE PLOTTED => 30-APR-2011 TIME PLOTTED => 14:12

DIST	COUNTY	ROUTE	POST MILES TOTAL PROJECT	SHEET No	TOTAL SHEETS
08	Riv	91	15.6/21.6	1938	2028

REGISTERED CIVIL ENGINEER 11-30-10 DATE

4-25-11
PLANS APPROVAL DATE

REGISTERED PROFESSIONAL ENGINEER HUAN D. VU No. C60696 Exp. 12/31/10 CIVIL STATE OF CALIFORNIA

The State of California or its officers or agents shall not be responsible for the accuracy or completeness of electronic copies of this plan sheet.

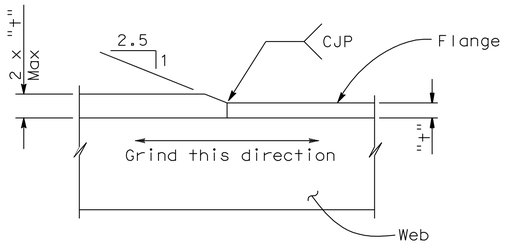

FLANGE THICKNESS

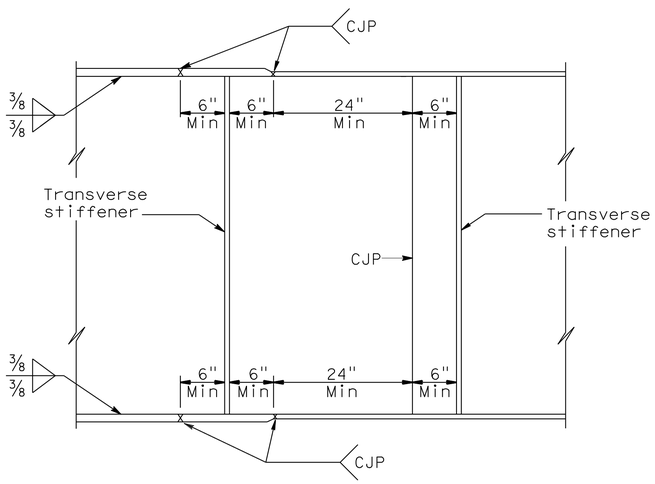

GIRDER SHOP SPLICE

NOTES:

1. Alternative girder splices may be permitted subject to approval by the Engineer.
2. Web splices:
   Grind all weld surfaces flush on the exterior face of exterior girders.
3. Flange splices:
   Grind all weld surfaces flush on tension flanges.
   Grind all weld surfaces flush on compression flanges when required for non-destructive testing (NDT).

NOTE:
THE CONTRACTOR SHALL VERIFY ALL CONTROLLING FIELD DIMENSIONS BEFORE ORDERING OR FABRICATING ANY MATERIAL.

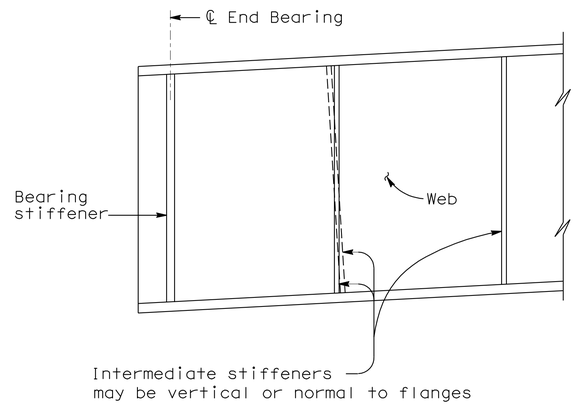

TRANSVERSE STIFFENERS

NOTES:

1. Under full dead load as shown on the camber diagram, girder ends and bearing stiffeners shall be vertical except they may be normal to grade for grades less than 2 percent.
2. For stiffener sizes see Project Plan sheets.
3. Fillet Weld size to be minimum size from Project Specifications unless otherwise shown on Project Plan sheets.

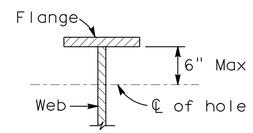

1" Max diameter hole at 4' ± Min spacing to be used for falsework support when specified by the Contractor. Contractor to determine location, size and spacing.

2" Max diameter hole to be drilled where lighting conduit passes through girder web. For location and size of hole see "Road Plans".

HOLES FOR CONDUIT AND FALSEWORK

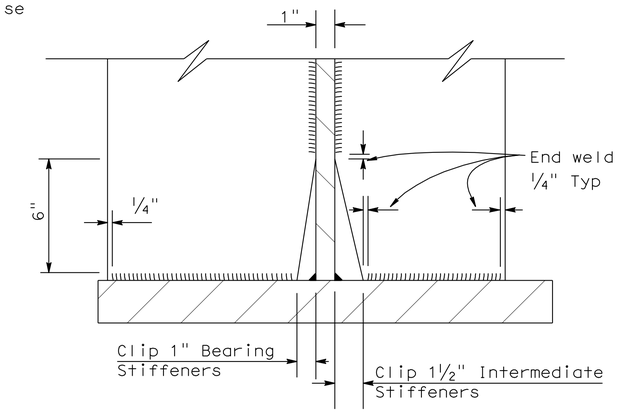

COPE AND WELDING DETAIL

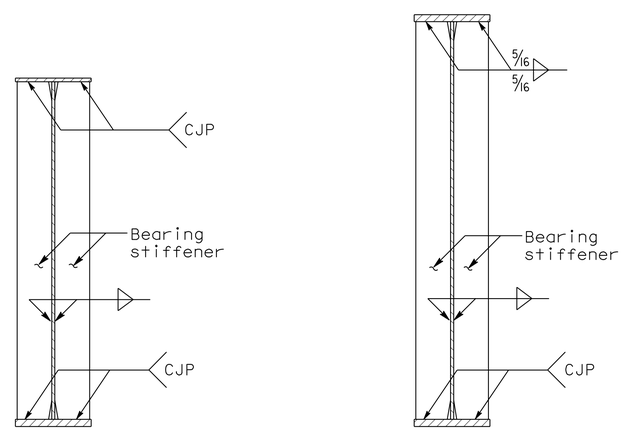

ABUTMENT

BENT

BEARING STIFFENERS

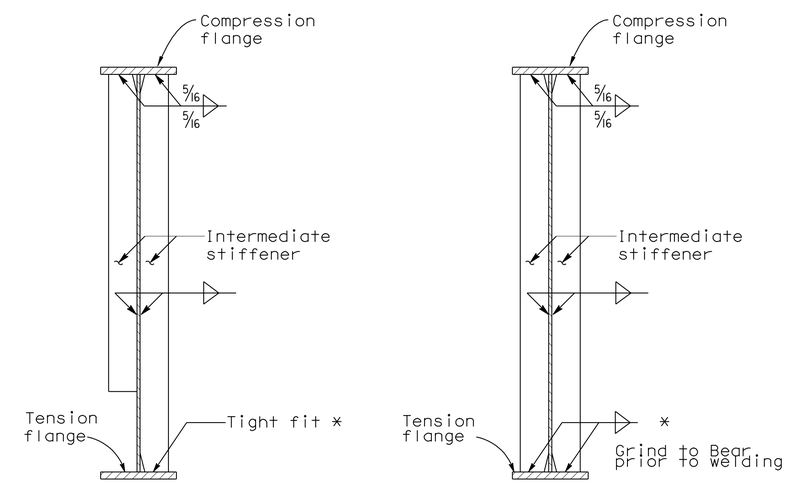

INTERMEDIATE STIFFENERS

* Stiffeners located within 10'-6" from the bearing shall be also welded to the tension flange

NO SCALE

DESIGN	BY B. Addlespurger	CHECKED G. Slocum	
DETAILS	BY G. Hallstrom	CHECKED G. Slocum	
QUANTITIES	BY T. Sanderson	CHECKED R. Anderson	

STATE OF CALIFORNIA
DEPARTMENT OF TRANSPORTATION

DIVISION OF ENGINEERING SERVICES
STRUCTURE DESIGN
DESIGN BRANCH 10

BRIDGE NO. 56-0839
POST MILE 19.39

PACHAPPA UP (REPLACE)
GIRDER DETAILS NO. 6

STRUCTURES DESIGN DETAIL SHEET (ENGLISH) (REV. 10/25/05)

ORIGINAL SCALE IN INCHES FOR REDUCED PLANS 0 1 2 3

CU 08
EA 448401

DISREGARD PRINTS BEARING EARLIER REVISION DATES

REVISION DATES: 7-08-10 9-29-10 10-21-10 11-10-10

SHEET 28 OF 44

FILE => 5608391gdt28.dgn

USERNAME => trpierce DATE PLOTTED => 30-APR-2011 TIME PLOTTED => 14:12

DIST	COUNTY	ROUTE	POST MILES TOTAL PROJECT	SHEET No	TOTAL SHEETS
08	Riv	91	15.6/21.6	1939	2028

REGISTERED CIVIL ENGINEER 11-30-10 DATE

4-25-11
PLANS APPROVAL DATE

REGISTERED PROFESSIONAL ENGINEER HUAN D. VU No. C60696 Exp. 12/31/10 CIVIL STATE OF CALIFORNIA

The State of California or its officers or agents shall not be responsible for the accuracy or completeness of electronic copies of this plan sheet.

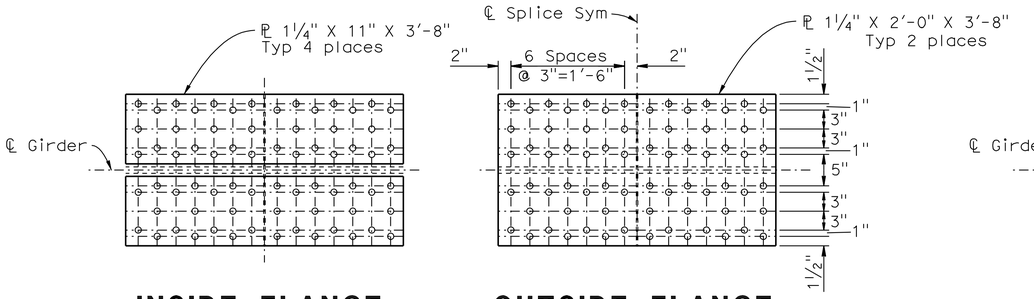

INSIDE FLANGE **OUTSIDE FLANGE**

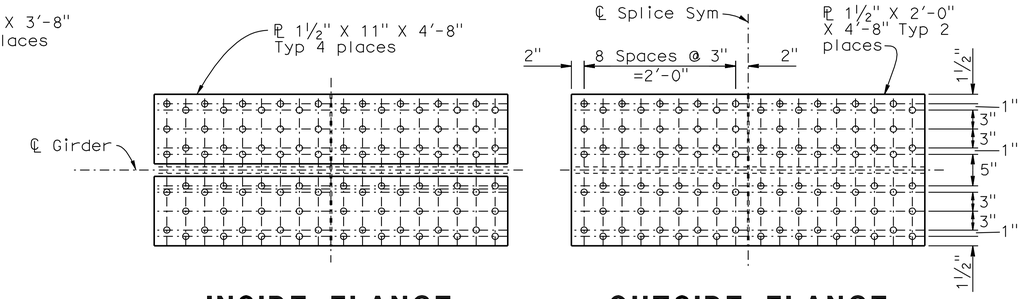

INSIDE FLANGE **OUTSIDE FLANGE**

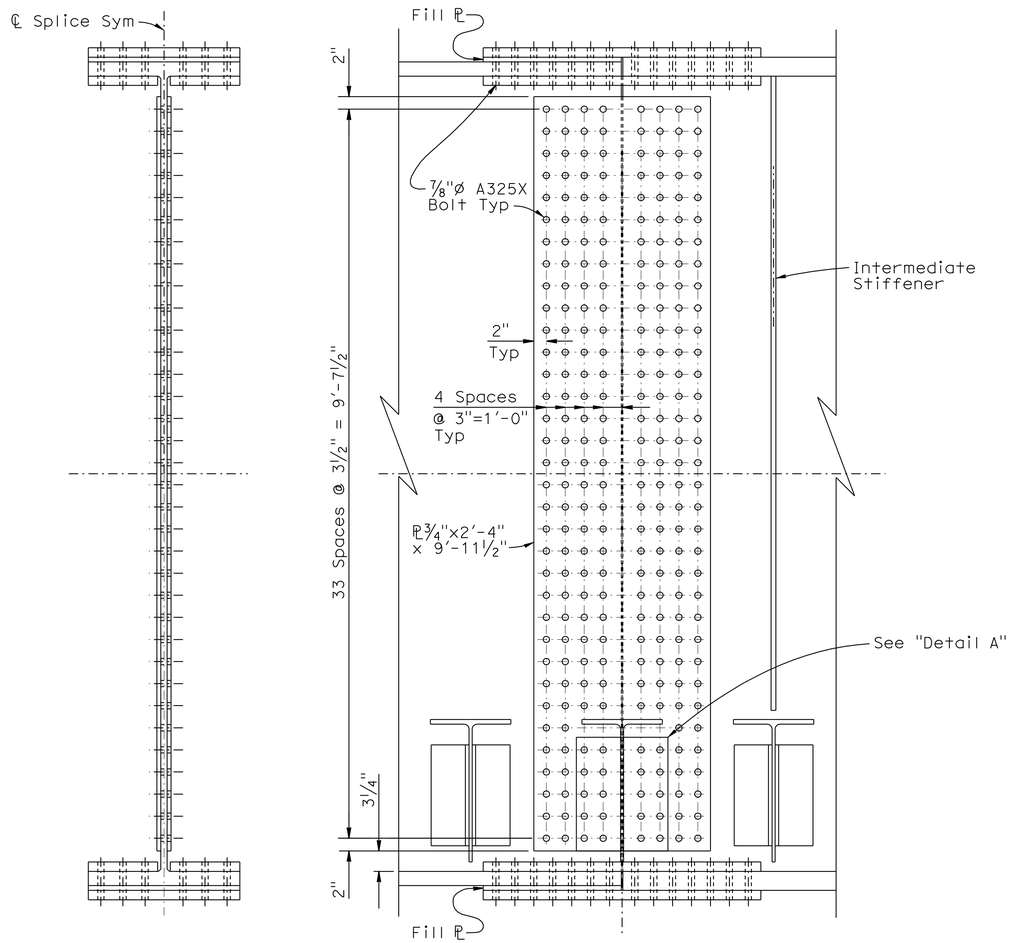

SECTION **ELEVATION**

OPTIONAL SPLICE PLATE
DETAIL SPAN 1
1" = 1'-0"

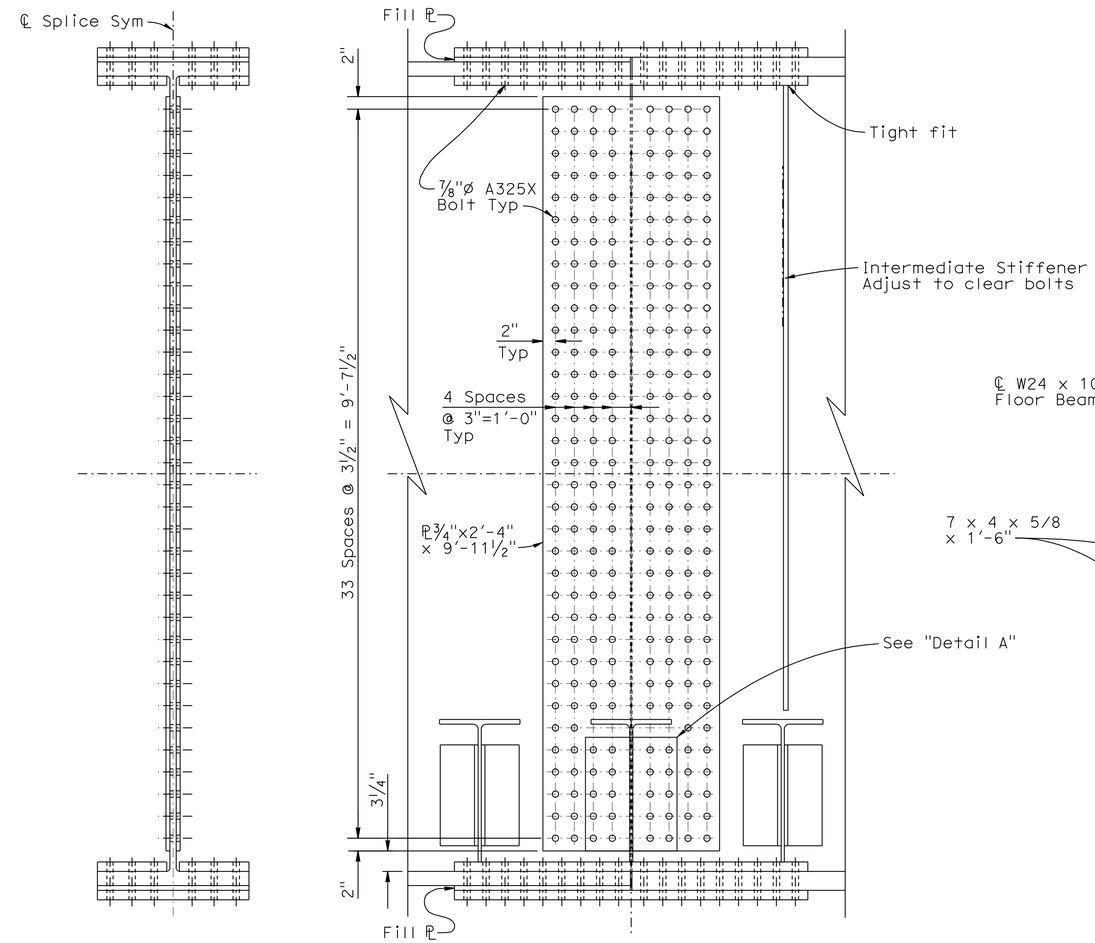

SECTION **ELEVATION**

OPTIONAL SPLICE PLATE
DETAIL SPAN 2
1" = 1'-0"

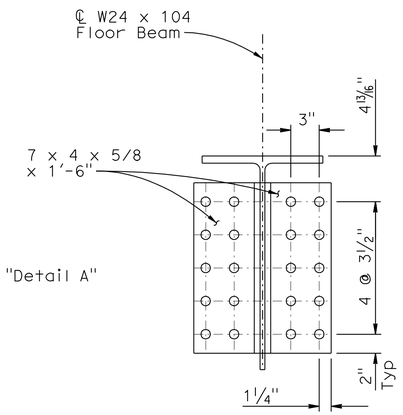

DETAIL A
½" = 1'-0"

DESIGN	BY B. Addlespurger	CHECKED G. Slocum	
DETAILS	BY G. Hallstrom	CHECKED G. Slocum	
QUANTITIES	BY T. Sanderson	CHECKED R. Anderson	

STATE OF **CALIFORNIA** DEPARTMENT OF TRANSPORTATION

DIVISION OF ENGINEERING SERVICES STRUCTURE DESIGN
DESIGN BRANCH **10**

BRIDGE NO. 56-0839
POST MILE 19.39

PACHAPPA UP (REPLACE)
GIRDER DETAILS NO. 7

STRUCTURES DESIGN DETAIL SHEET (ENGLISH) (REV. 10/25/05)

ORIGINAL SCALE IN INCHES FOR REDUCED PLANS 0 1 2 3

CU 08
EA 448401

DISREGARD PRINTS BEARING EARLIER REVISION DATES 11-10-10

REVISION DATES

SHEET 29 OF 44

FILE => 5608391gdt29.dgn

USERNAME => trpierce DATE PLOTTED => 30-APR-2011 TIME PLOTTED => 14:13

DIST	COUNTY	ROUTE	POST MILES TOTAL PROJECT	SHEET No	TOTAL SHEETS
08	Riv	91	15.6/21.6	1940	2028

REGISTERED CIVIL ENGINEER 11-30-10 DATE

4-25-11
PLANS APPROVAL DATE

REGISTERED PROFESSIONAL ENGINEER HUAN D. VU No. C60696 Exp. 12/31/10 CIVIL STATE OF CALIFORNIA

The State of California or its officers or agents shall not be responsible for the accuracy or completeness of electronic copies of this plan sheet.

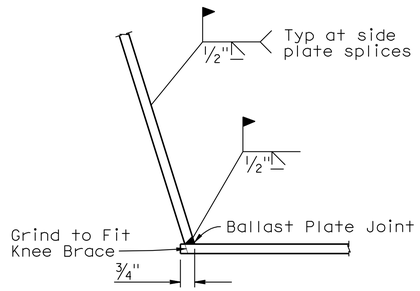

TYPICAL BALLAST PLATE WELDING DETAIL

NO SCALE

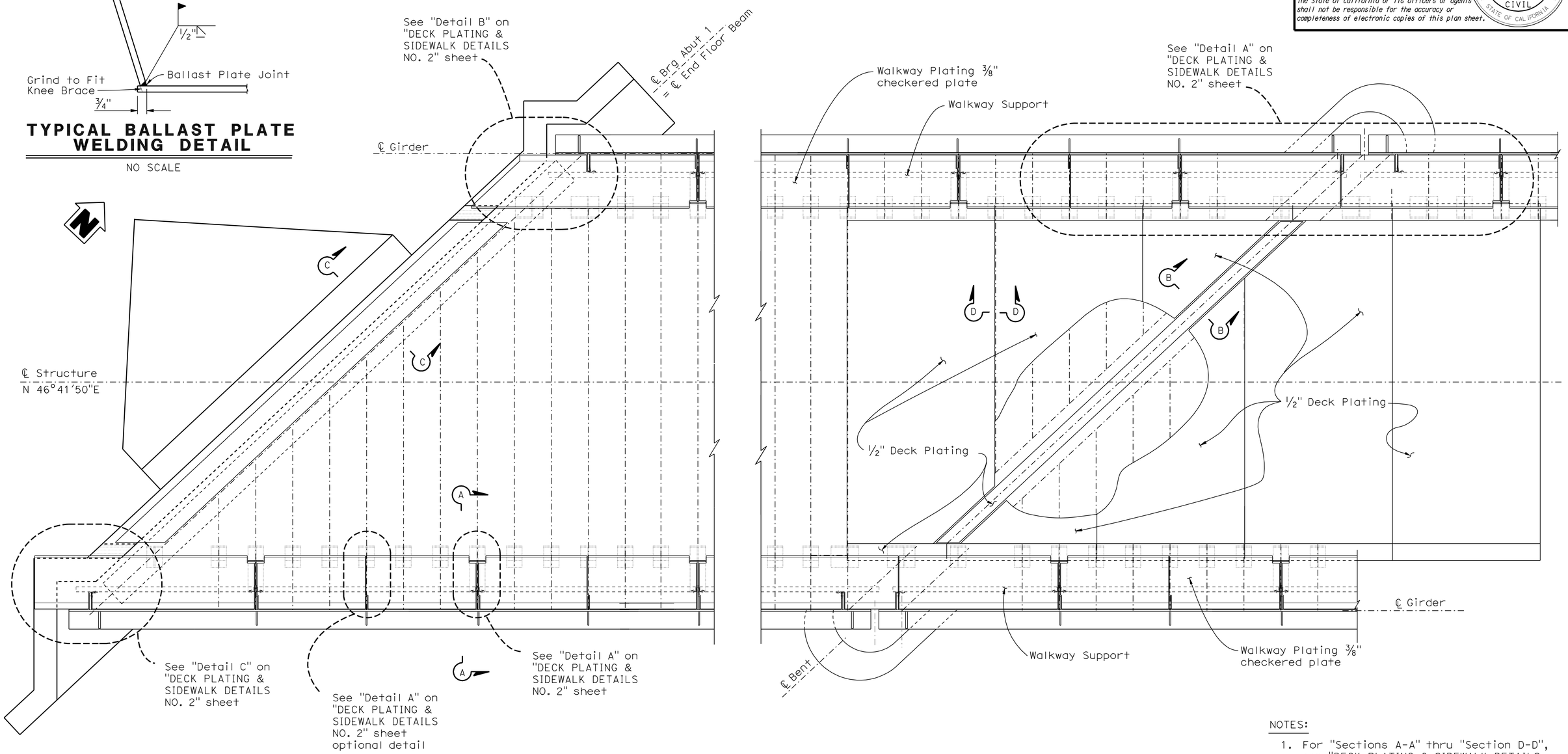

PART PLAN DECK PLATING & SIDEWALK

3/8"=1'-0"

NOTES:

1. For "Sections A-A" thru "Section D-D", see "DECK PLATING & SIDEWALK DETAILS NO. 1" sheet.
2. For Details A thru Detail C, see "DECK PLATING & SIDEWALK DETAILS NO. 2" sheet.

NOTE:
THE CONTRACTOR SHALL VERIFY ALL CONTROLLING FIELD DIMENSIONS BEFORE ORDERING OR FABRICATING ANY MATERIAL.

	BY	CHECKED
DESIGN	B. Addlespurger	G. Slocum
DETAILS	G. Hallstrom	G. Slocum
QUANTITIES	T. Sanderson	R. Anderson

STATE OF CALIFORNIA
DEPARTMENT OF TRANSPORTATION

DIVISION OF ENGINEERING SERVICES
STRUCTURE DESIGN
DESIGN BRANCH 10

BRIDGE NO. 56-0839
POST MILE 19.39

PACHAPPA UP (REPLACE)

DECK PLATING & SIDEWALK LAYOUT

STRUCTURES DESIGN DETAIL SHEET (ENGLISH) (REV. 10/25/05)

ORIGINAL SCALE IN INCHES FOR REDUCED PLANS 0 1 2 3

CU 08
EA 448401

DISREGARD PRINTS BEARING EARLIER REVISION DATES

REVISION DATES: 12-09-09 3-11-10 5-05-10 5-26-10 6-08-10 7-16-10 11-16-10

SHEET 30 OF 44

FILE => 560839lgdtdeckside_lo30.dgn

USERNAME => trpierce DATE PLOTTED => 30-APR-2011 TIME PLOTTED => 14:13

DIST	COUNTY	ROUTE	POST MILES TOTAL PROJECT	SHEET No	TOTAL SHEETS
08	Riv	91	15.6/21.6	1941	2028

REGISTERED CIVIL ENGINEER 11-30-10 DATE

4-25-11
PLANS APPROVAL DATE

The State of California or its officers or agents shall not be responsible for the accuracy or completeness of electronic copies of this plan sheet.

REGISTERED PROFESSIONAL ENGINEER HUAN D. VU No. C60696 Exp. 12/31/10 CIVIL STATE OF CALIFORNIA

NOTE: EPDM=Ethylene-propylene-diene-monomer

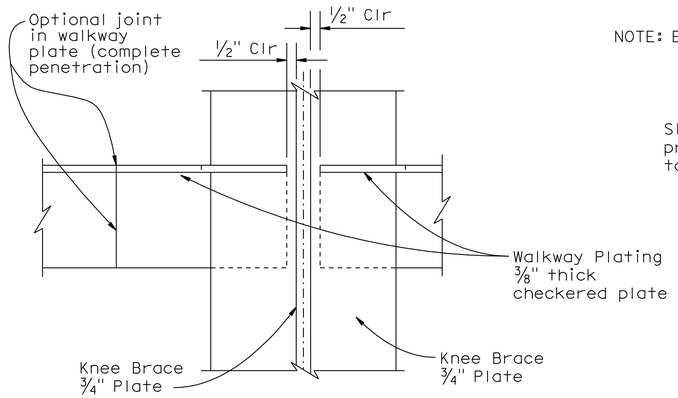

SECTION E-E
3"=1'-0"

NOTES:

1. Weld all around with ⅜" fillet weld in 1"Ø hole in plate. Space holes @ 1'-3" Max
2. For location of "Section A-A" thru "Section D-D", see "DECK PLATING & SIDEWALK LAYOUT" sheet.

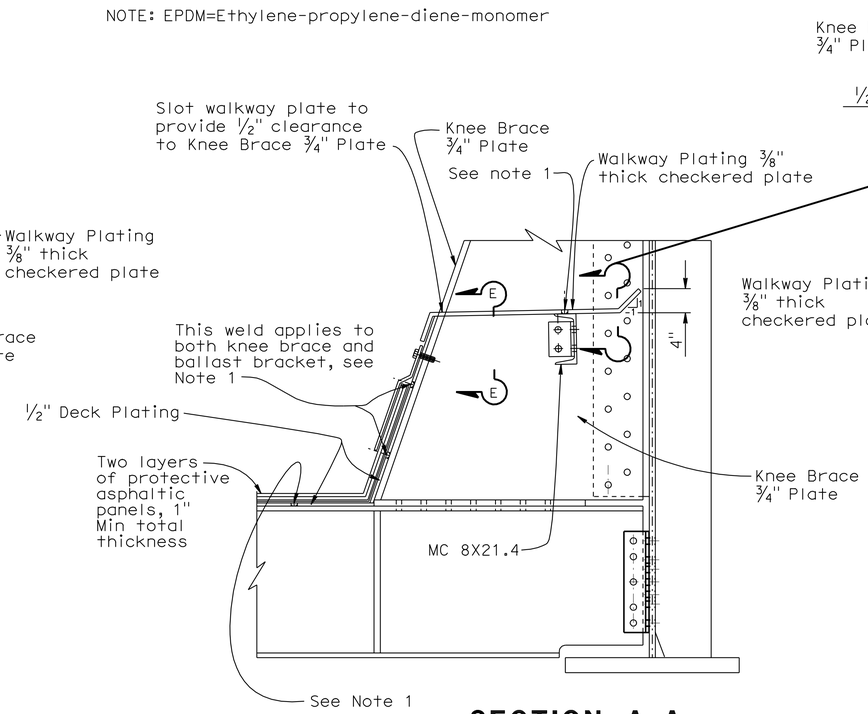

SECTION A-A
1"=1'-0"

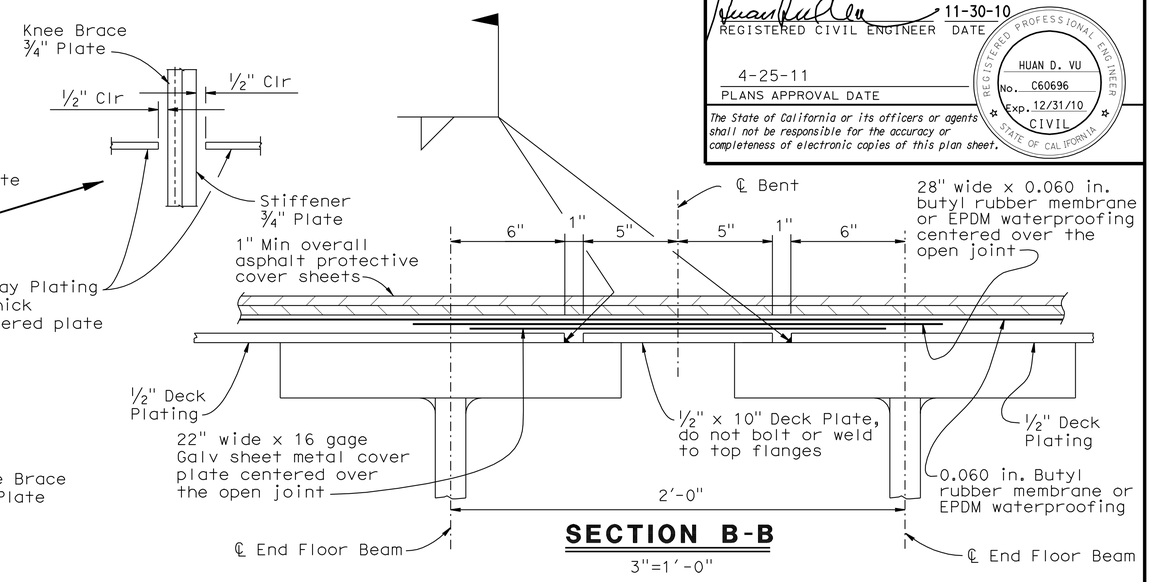

SECTION B-B
3"=1'-0"

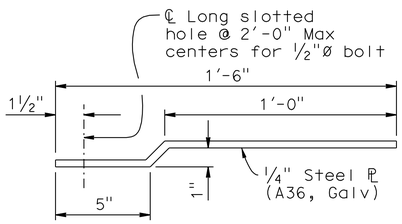

CURB FLASHING DETAIL
3"=1'-0"

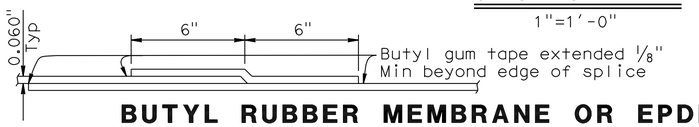

BUTYL RUBBER MEMBRANE OR EPDM WATERPROOFING SPLICE DETAIL
NO SCALE

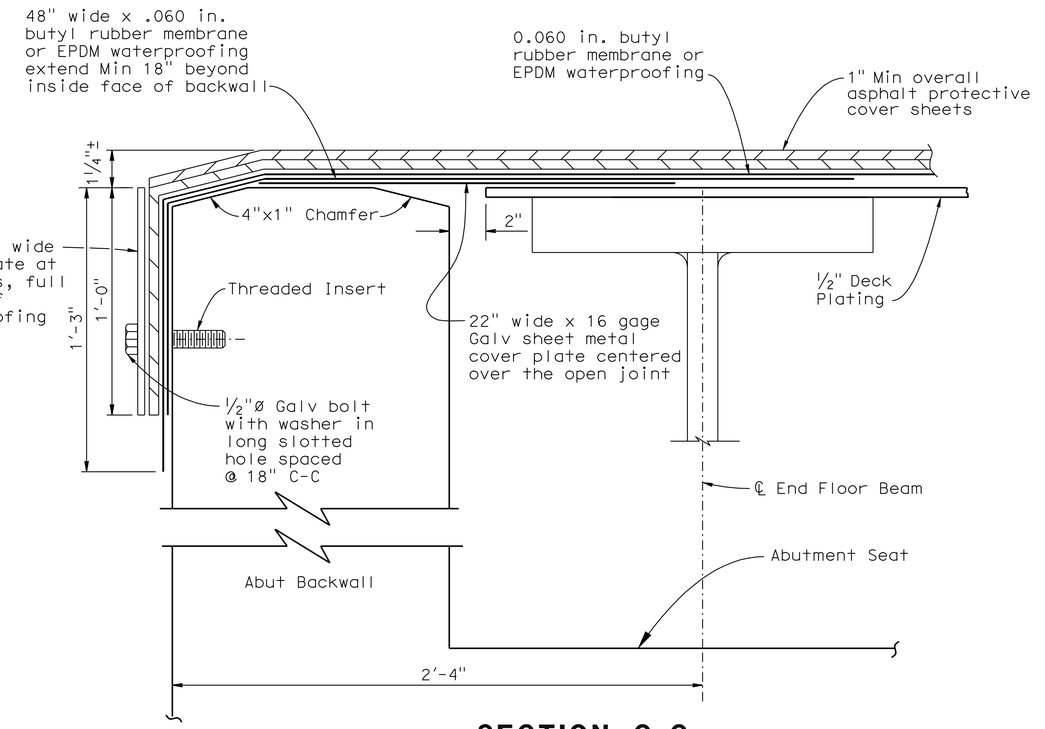

SECTION C-C
3"=1'-0"

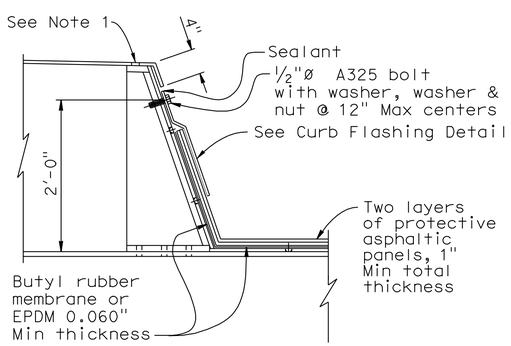

DECK SECTION
1"=1'-0"

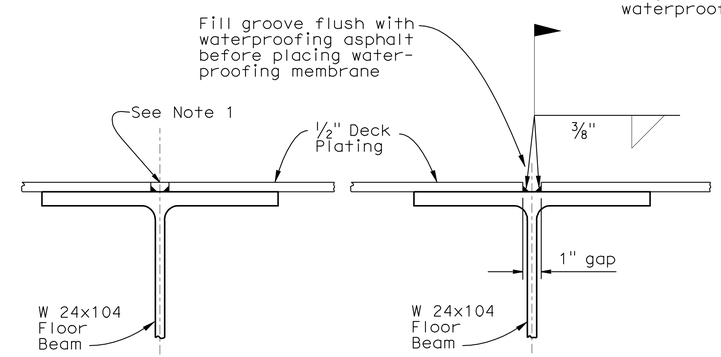

DECK PLATE CONTINUOUS SPLICE IN DECK PLATE

SECTION D-D
3"=1'-0"

NOTE:
THE CONTRACTOR SHALL VERIFY ALL CONTROLLING FIELD DIMENSIONS BEFORE ORDERING OR FABRICATING ANY MATERIAL.

	BY	CHECKED
DESIGN	B. Addlespurger	G. Slocum
DETAILS	G. Hallstrom	G. Slocum
QUANTITIES	T. Sanderson	R. Anderson

STATE OF CALIFORNIA
DEPARTMENT OF TRANSPORTATION

DIVISION OF ENGINEERING SERVICES
STRUCTURE DESIGN
DESIGN BRANCH 10

BRIDGE NO. 56-0839
POST MILE 19.39

PACHAPPA UP (REPLACE)
DECK PLATING & SIDEWALK DETAILS NO. 1

STRUCTURES DESIGN DETAIL SHEET (ENGLISH) (REV. 10/25/05)

ORIGINAL SCALE IN INCHES FOR REDUCED PLANS 0 1 2 3

CU 08
EA 448401

DISREGARD PRINTS BEARING EARLIER REVISION DATES

REVISION DATES: 12-09-09 3-11-10 5-04-10 5-26-10 6-08-10 7-16-10 9-29-10

SHEET 31 OF 44

FILE => 5608391gdtdecksidedt31.dgn

USERNAME => trpierce DATE PLOTTED => 30-APR-2011 TIME PLOTTED => 14:13

DIST	COUNTY	ROUTE	POST MILES TOTAL PROJECT	SHEET No	TOTAL SHEETS
08	Riv	91	15.6/21.6	1942	2028

REGISTERED CIVIL ENGINEER 11-30-10 DATE

4-25-11
PLANS APPROVAL DATE

The State of California or its officers or agents shall not be responsible for the accuracy or completeness of electronic copies of this plan sheet.

REGISTERED PROFESSIONAL ENGINEER HUAN D. VU No. C60696 Exp. 12/31/10 CIVIL STATE OF CALIFORNIA

NOTES:

1. For locations of Details "A" through "C", see "DECK PLATING & SIDEWALK LAYOUT" sheet.
2. Walkway Support details are shown on "GIRDER DETAILS NO. 2" and "GIRDER DETAILS NO. 5" sheets.
3. Clearance between Walkway plate and others is ½".

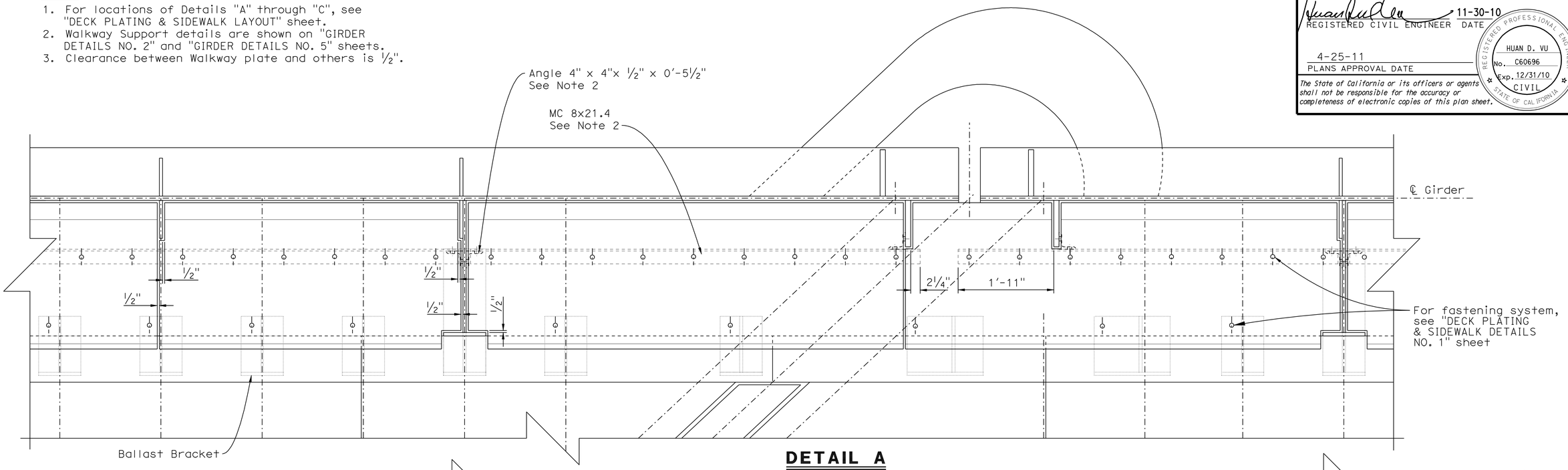

DETAIL A
1"=1'-0"

NOTE:
THE CONTRACTOR SHALL VERIFY ALL CONTROLLING FIELD DIMENSIONS BEFORE ORDERING OR FABRICATING ANY MATERIAL.

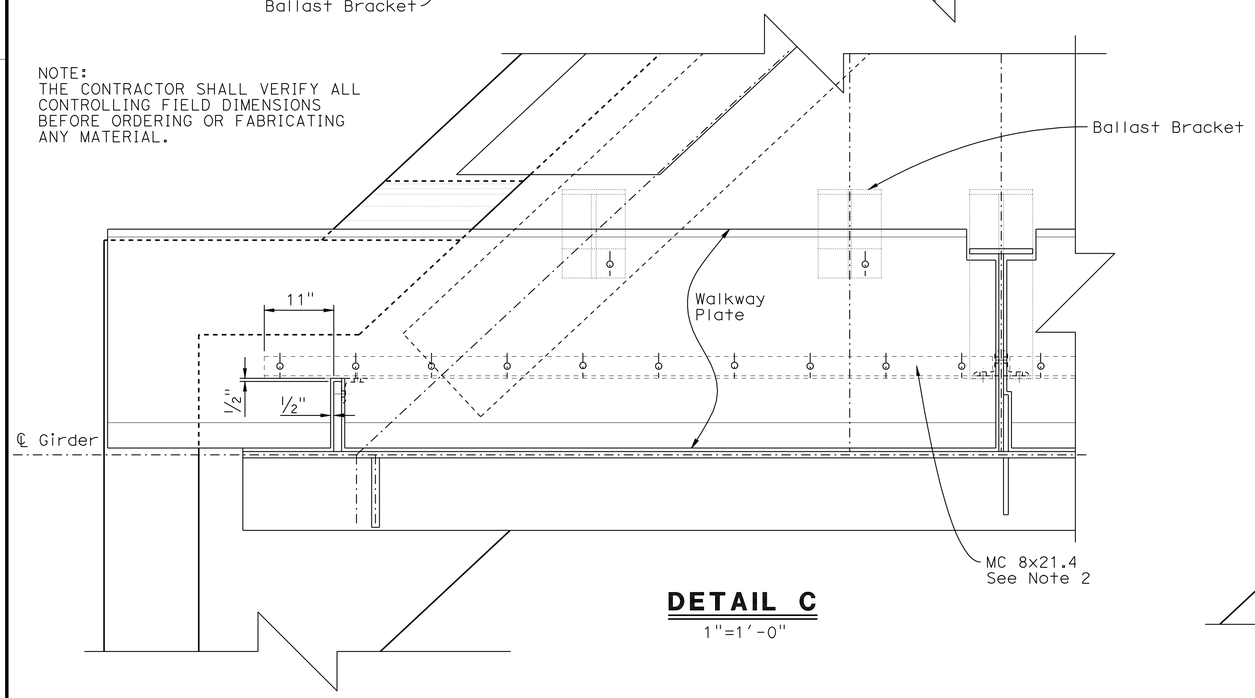

DETAIL C
1"=1'-0"

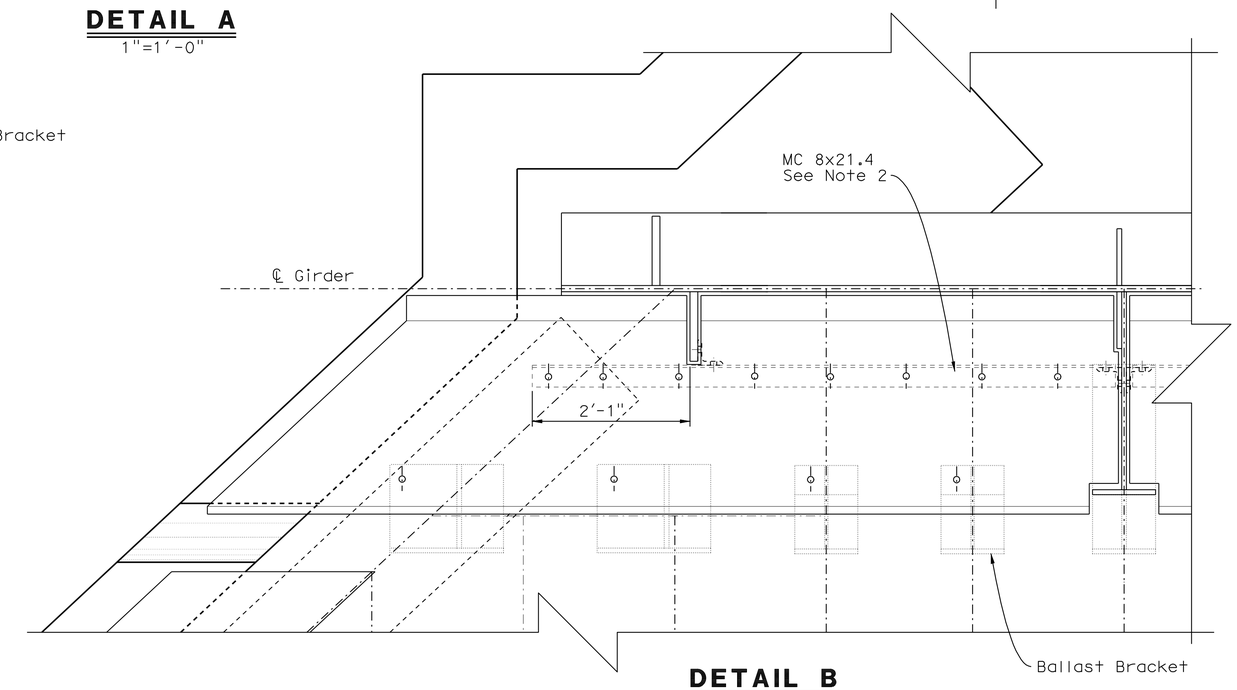

DETAIL B
1"=1'-0"

DESIGN	BY B. Addlespurger	CHECKED G. Slocum	
DETAILS	BY G. Hallstrom	CHECKED G. Slocum	
QUANTITIES	BY T. Sanderson	CHECKED R. Anderson	

STATE OF CALIFORNIA
DEPARTMENT OF TRANSPORTATION

DIVISION OF ENGINEERING SERVICES
STRUCTURE DESIGN
DESIGN BRANCH 10

BRIDGE NO. 56-0839
POST MILE 19.39

PACHAPPA UP (REPLACE)
DECK PLATING & SIDEWALK DETAILS NO. 2

STRUCTURES DESIGN DETAIL SHEET (ENGLISH) (REV. 10/25/05)

ORIGINAL SCALE IN INCHES FOR REDUCED PLANS 0 1 2 3

CU 08
EA 448401

DISREGARD PRINTS BEARING EARLIER REVISION DATES

REVISION DATES: 12-08-09 3-11-10 5-06-10 5-26-10 6-08-10 7-16-10 11-16-10

SHEET 32 OF 44

FILE => 560839lgdtdecksidedt32.dgn

USERNAME => trpierce DATE PLOTTED => 30-APR-2011 TIME PLOTTED => 14:13

Dist	COUNTY	ROUTE	POST MILES TOTAL PROJECT	SHEET No.	TOTAL SHEETS
08	Riv	91	15.6/21.6	1943	2028

11-30-10
LICENSED LANDSCAPE ARCHITECT

4-25-11
PLANS APPROVAL DATE

LICENSED LANDSCAPE ARCHITECT
Matthew Harry Hall
No. 2500
Signature
10/31/2011
Renewal Date
Date
STATE OF CALIFORNIA

THE STATE OF CALIFORNIA OR ITS OFFICERS OR AGENTS SHALL NOT BE RESPONSIBLE FOR THE ACCURACY OR COMPLETENESS OF SCANNED COPIES OF THIS PLAN SHEET.

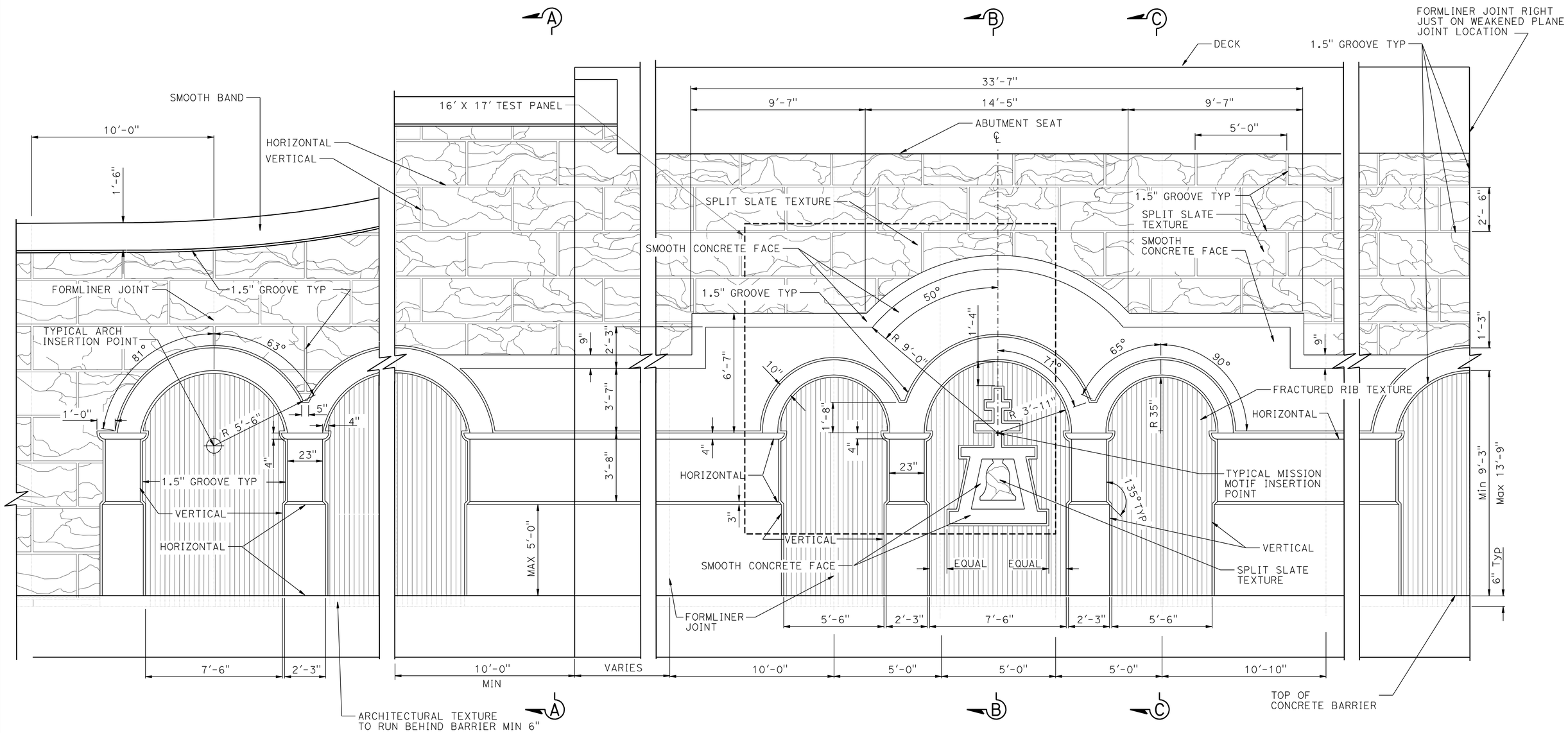

TYPICAL MISSION MOTIF ELEVATION

3/8"=1'-0"

DESIGN	BY M. Hall	CHECKED M. Bishop	
DETAILS	BY G. Hallstrom/Y. Tang	CHECKED M. Bishop	
QUANTITIES	BY T. Sanderson	CHECKED R. Anderson	

STATE OF CALIFORNIA
DEPARTMENT OF TRANSPORTATION

DIVISION OF ENGINEERING SERVICES
STRUCTURE DESIGN
DESIGN BRANCH 10

BRIDGE NO. 56-0839
POST MILE 19.39

FRACTURED RIB/SPLIT SLATE TEXTURE
PACHAPPA UP (REPLACE)
ARCHITECTURAL DETAILS NO. 1

STRUCTURES DESIGN DETAIL SHEET (ENGLISH) (REV. 10/25/05)

ORIGINAL SCALE IN INCHES FOR REDUCED PLANS 0 1 2 3

CU 08
EA 448401

DISREGARD PRINTS BEARING EARLIER REVISION DATES

REVISION DATES: 7-08-10 8-24-10 11-12-10

SHEET 33 OF 44

FILE => 560839narchdt33.dgn

USERNAME => tripierce DATE PLOTTED => 30-APR-2011 TIME PLOTTED => 14:13

Dist	COUNTY	ROUTE	POST MILES TOTAL PROJECT	SHEET No.	TOTAL SHEETS
08	Riv	91	15.6/21.6	1944	2028

11-30-10
LICENSED LANDSCAPE ARCHITECT

4-25-11
PLANS APPROVAL DATE

LICENSED LANDSCAPE ARCHITECT
Matthew Harry Hall
Signature
10/31/2011
Renewal Date
Date
STATE OF CALIFORNIA

THE STATE OF CALIFORNIA OR ITS OFFICERS OR AGENTS SHALL NOT BE RESPONSIBLE FOR THE ACCURACY OR COMPLETENESS OF SCANNED COPIES OF THIS PLAN SHEET.

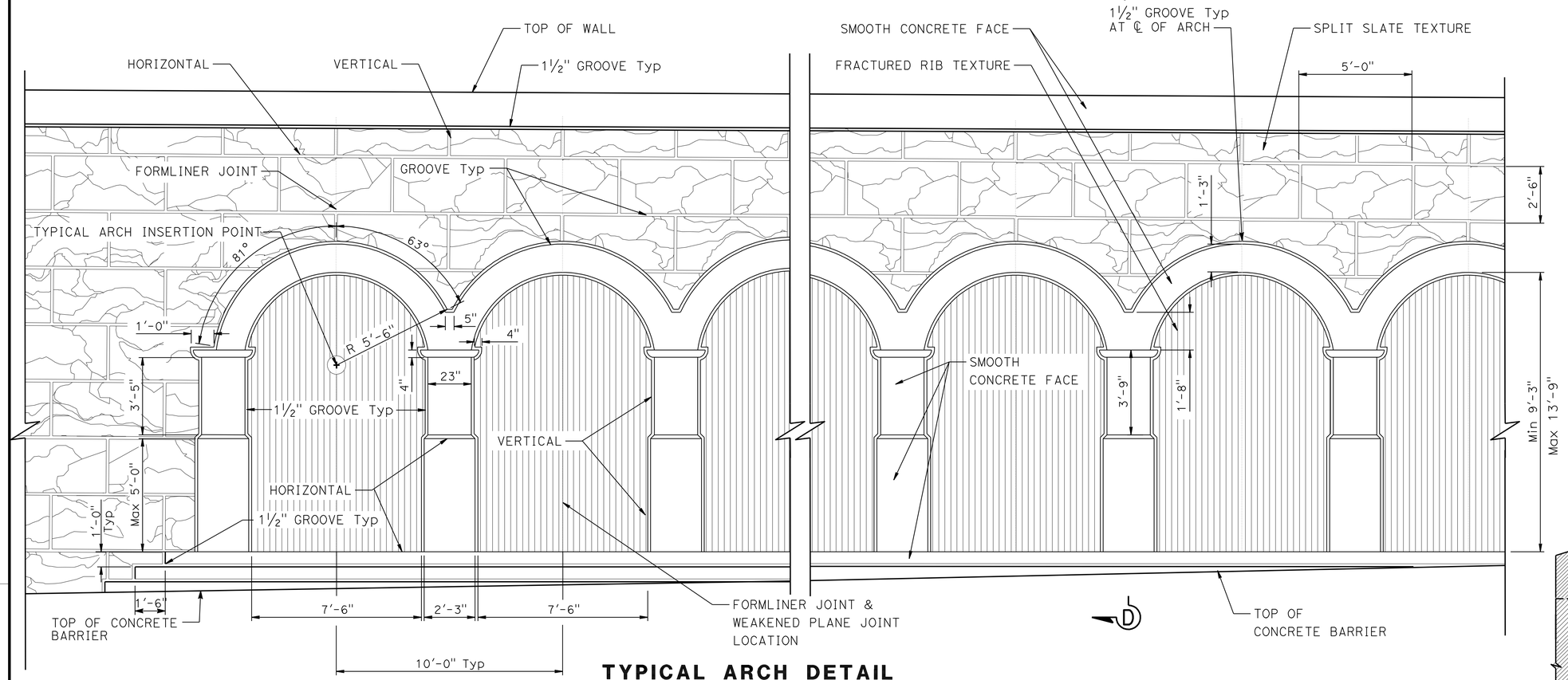

TYPICAL ARCH DETAIL

⅜"=1'-0"

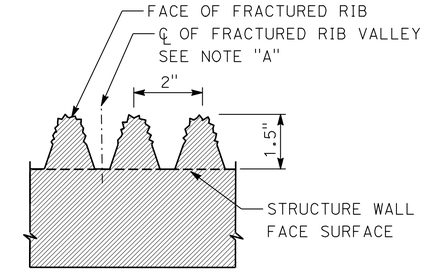

TYPICAL FRACTURED RIB TEXTURE

NO SCALE

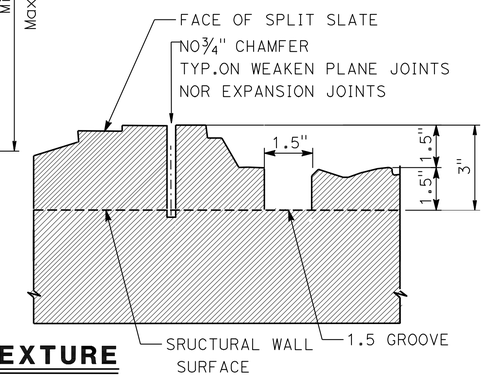

TYPICAL SPLIT SLATE TEXTURE

NO SCALE

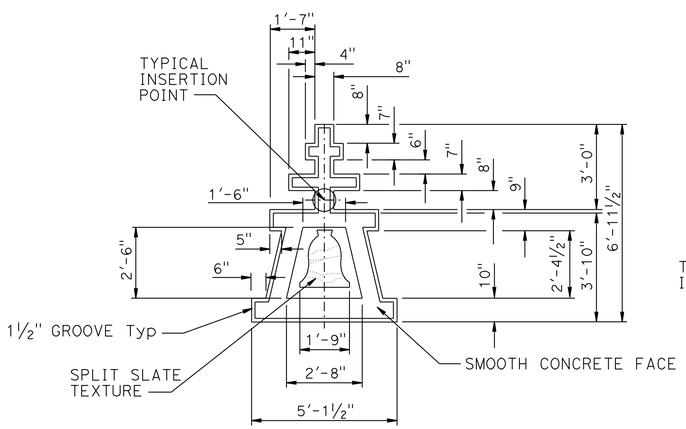

TYPICAL RAINCROSS DETAIL

⅜"=1'-0"

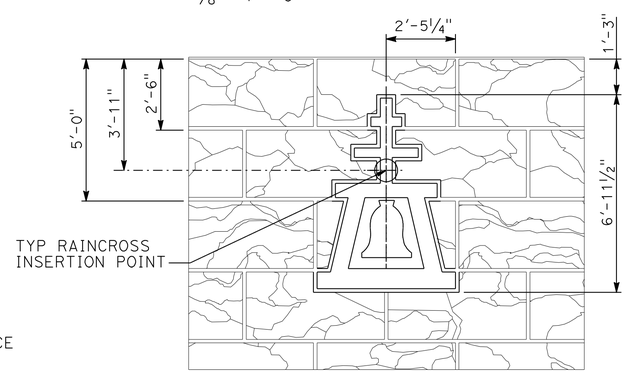

TYPICAL RAINCROSS DETAIL/ SPLIT SLATE TEXTURE

⅜"=1'-0"

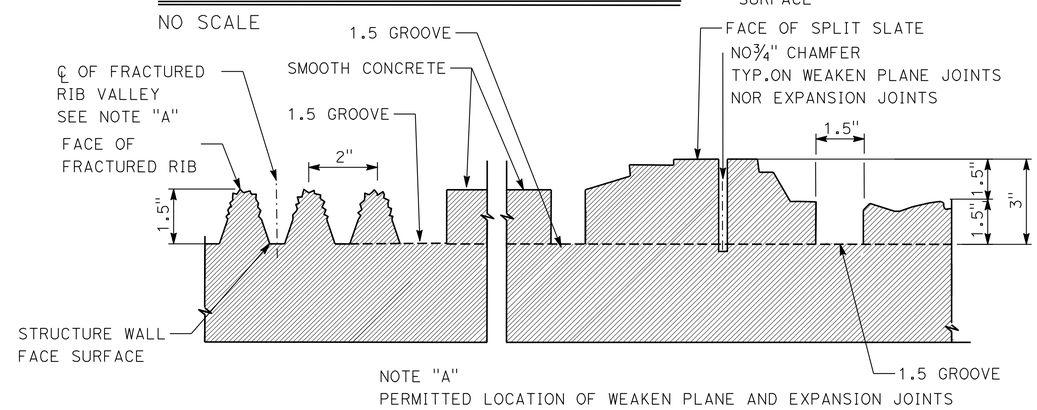

TYPICAL FRACTURED RIB WITH SPLIT SLATE TEXTURE

NO SCALE

	BY	CHECKED
DESIGN	M. Hall	M. Bishop
DETAILS	G. Hallstrom/Y. Tang	M. Bishop
QUANTITIES	T. Sanderson	R. Anderson

STATE OF CALIFORNIA
DEPARTMENT OF TRANSPORTATION

DIVISION OF ENGINEERING SERVICES
STRUCTURE DESIGN
DESIGN BRANCH 10

BRIDGE NO. 56-0839
POST MILE 19.39

FRACTURED RIB/SPLIT SLATE TEXTURE
PACHAPPA UP (REPLACE)
ARCHITECTURAL DETAILS NO. 2

STRUCTURES DESIGN DETAIL SHEET (ENGLISH) (REV. 10/25/05)

ORIGINAL SCALE IN INCHES FOR REDUCED PLANS 0 1 2 3

CU 08
EA 448401

DISREGARD PRINTS BEARING EARLIER REVISION DATES

REVISION DATES: 7-09-10 8-24-10 11-12-10

SHEET 34 OF 44

FILE => 560839narchdt34.dgn

USERNAME => trpierce DATE PLOTTED => 30-APR-2011 TIME PLOTTED => 14:14

Dist	COUNTY	ROUTE	POST MILES TOTAL PROJECT	SHEET No.	TOTAL SHEETS
08	Riv	91	15.6/21.6	1945	2028

11-30-10
LICENSED LANDSCAPE ARCHITECT

4-25-11
PLANS APPROVAL DATE

LICENSED LANDSCAPE ARCHITECT
Matthew Harry Hall
No. 4945
Signature
10/31/2011
Renewal Date
Date
STATE OF CALIFORNIA

THE STATE OF CALIFORNIA OR ITS OFFICERS OR AGENTS SHALL NOT BE RESPONSIBLE FOR THE ACCURACY OR COMPLETENESS OF SCANNED COPIES OF THIS PLAN SHEET.

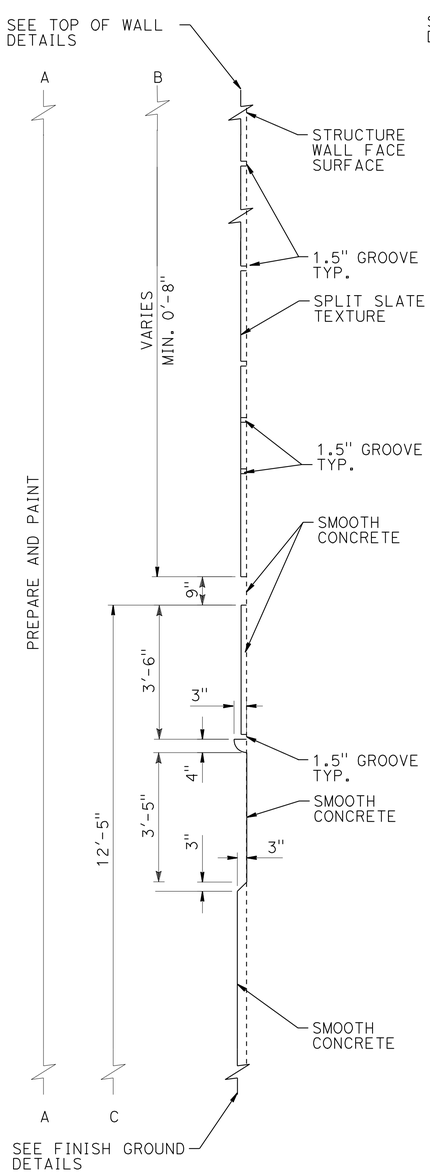

SECTION A-A

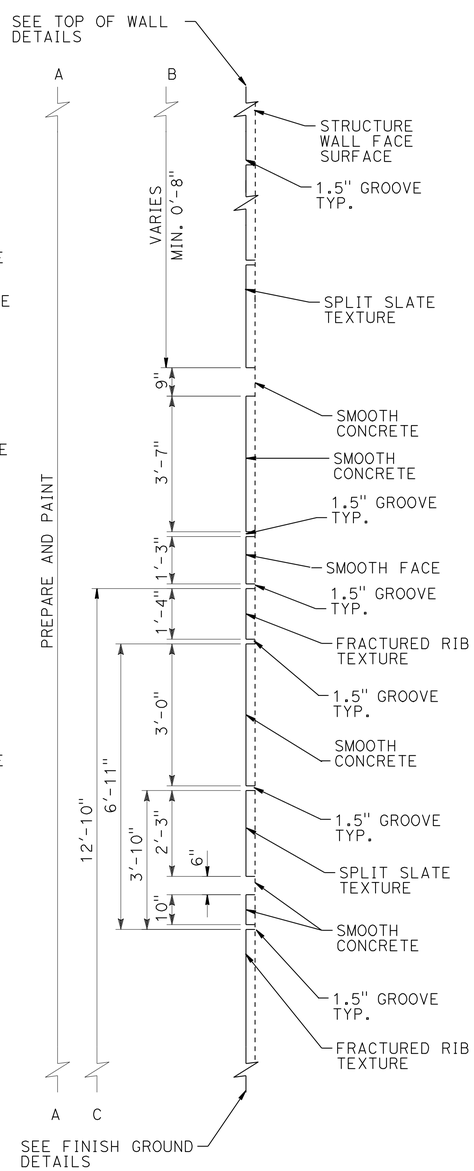

SECTION B-B

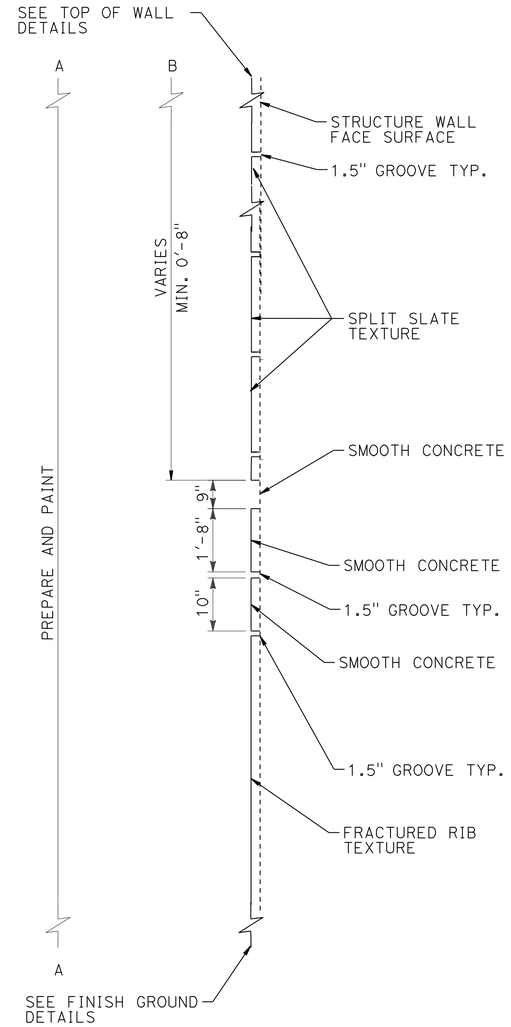

SECTION C-C

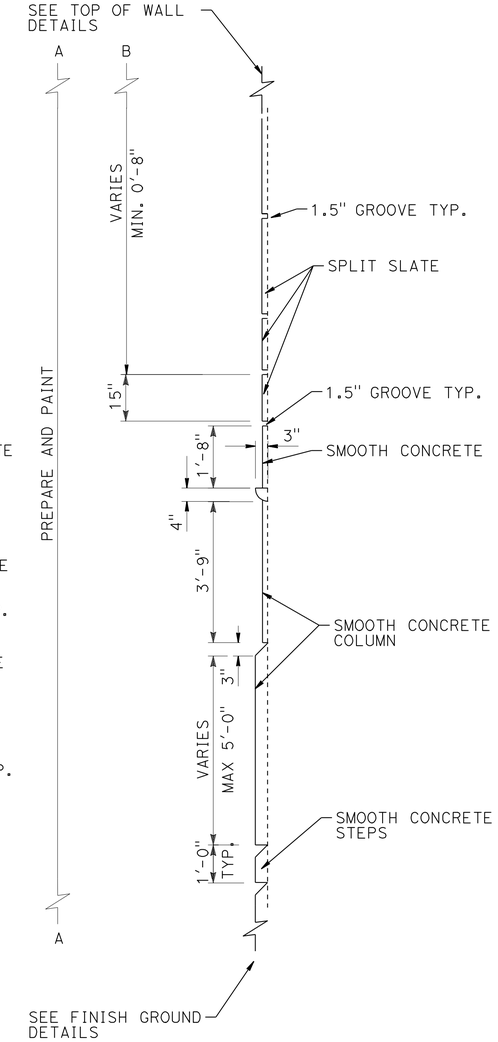

SECTION D-D

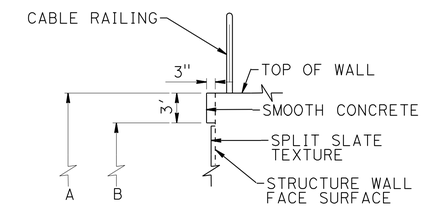

TOP OF WALL DETAIL TYPICAL WITH CABLE RAIL

NO SCALE

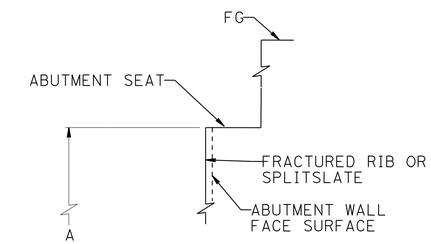

TOP OF ABUTMENT WALL DETAIL TYPICAL BRIDGE SOFFIT

NO SCALE

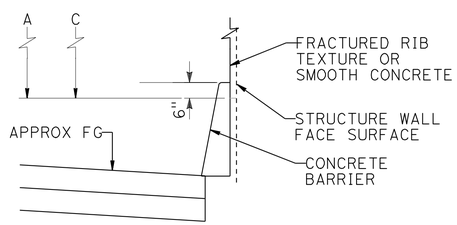

FINISH GROUND DETAIL WITH CONCRETE BARRIER

NO SCALE

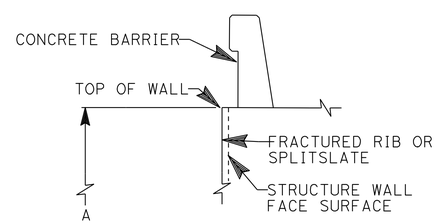

TOP OF WALL DETAIL WITH CONCRETE BARRIER

NO SCALE

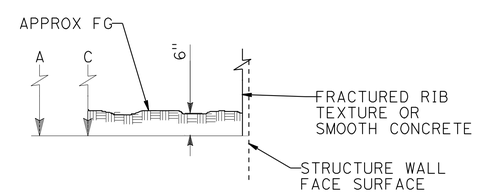

FINISH GROUND DETAIL DETAIL AT FINISH GRADE

NO SCALE

	BY	CHECKED
DESIGN	M. Halla	M. Bishop
DETAILS	G. Hallstrom/Y. Tang	M. Bishop
QUANTITIES	T. Sanderson	R. Anderson

STATE OF CALIFORNIA
DEPARTMENT OF TRANSPORTATION

DIVISION OF ENGINEERING SERVICES
STRUCTURE DESIGN
DESIGN BRANCH 10

BRIDGE NO. 56-0839
POST MILE 19.39

FRACTURED RIB/SPLIT SLATE TEXTURE
PACHAPPA UP (REPLACE)
ARCHITECTURAL DETAILS NO. 3

STRUCTURES DESIGN DETAIL SHEET (ENGLISH) (REV. 10/25/05)

ORIGINAL SCALE IN INCHES FOR REDUCED PLANS 0 1 2 3

CU 08
EA 448401

DISREGARD PRINTS BEARING EARLIER REVISION DATES

REVISION DATES: 7-09-10 8-25-10 11-12-10

SHEET 35 OF 44

FILE => 560839narchdt35.dgn

USERNAME => tripierce DATE PLOTTED => 30-APR-2011 TIME PLOTTED => 14:14

DIST.	COUNTY	ROUTE	KILOMETER POST TOTAL PROJECT	SHEET NO.	TOTAL SHEETS
08	Riv	91	15.6/21.6	1946	2028

REGISTERED ENGINEER - CIVIL 11-30-10

4-25-11
PLANS APPROVAL DATE

PROFESSIONAL ENGINEER REGISTERED HUAN D. VU No. C60696 Exp. 12/31/10 CIVIL STATE OF CALIFORNIA

The State of California or its officers or agents shall not be responsible for the accuracy or completeness of electronic copies of this plan sheet.

TABLE FOR PLATE SETTING DATA EXPANSION BRGS POSITION OF SOLE PLATE RELATIVE TO BASE PLATES ②

TEMP @ TIME OF SETTING	20°F	70°F	120°F
ADJUSTMENT ALONG ℄ WEB TOWARDS BENT 2	+0.5"	0"	-0.5"

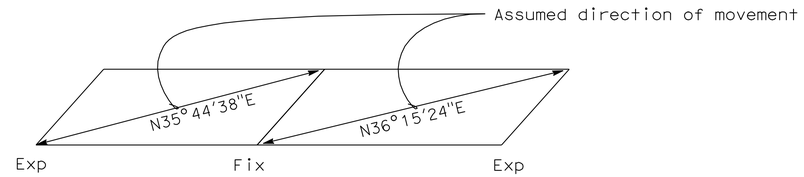

Slotted holes for expansion, bearings shall be oriented parallel to assumed direction for movement. ②

EXPANSION BEARING TABLE ③

LOCATION	MAXIMUM VERTICAL LOAD (kips)	MINIMUM DEAD LOAD (kips)	DESIGN ROTATION (Radians)	CONCAVE PLATE						CONVEX PLATE		MASONRY PLATE			SOLE PLATE			ASSEMBLY HEIGHT
				WIDTH / LENGTH	FLAT PTFE AREA (in^2)	DIAMETER	SPHERICAL RADIUS	MINIMUM THICKNESS	MAXIMUM THICKNESS	DIAMETER	MAXIMUM THICKNESS	WIDTH	LENGTH	THICKNESS	WIDTH	LENGTH	THICKNESS	
				L_{cp}	A_{PTFE}	D_m	R_{act}	T_{min}	T_{max}	C_m	H_{act}	W_{mp}	L_{mp}	T_{mp}	W_{sp}	L_{sp}	T_{sp}	A_h
Abut 1	1150	260	0.037	19.125	256	18.0	20.5	0.75	3.125	19.375	3.45	28	28	2.5	26	38	2.0	8.76
Abut 3	1150	260	0.037	19.125	256	18.0	20.5	0.75	3.125	19.375	3.45	28	28	2.5	26	38	2.0	8.76

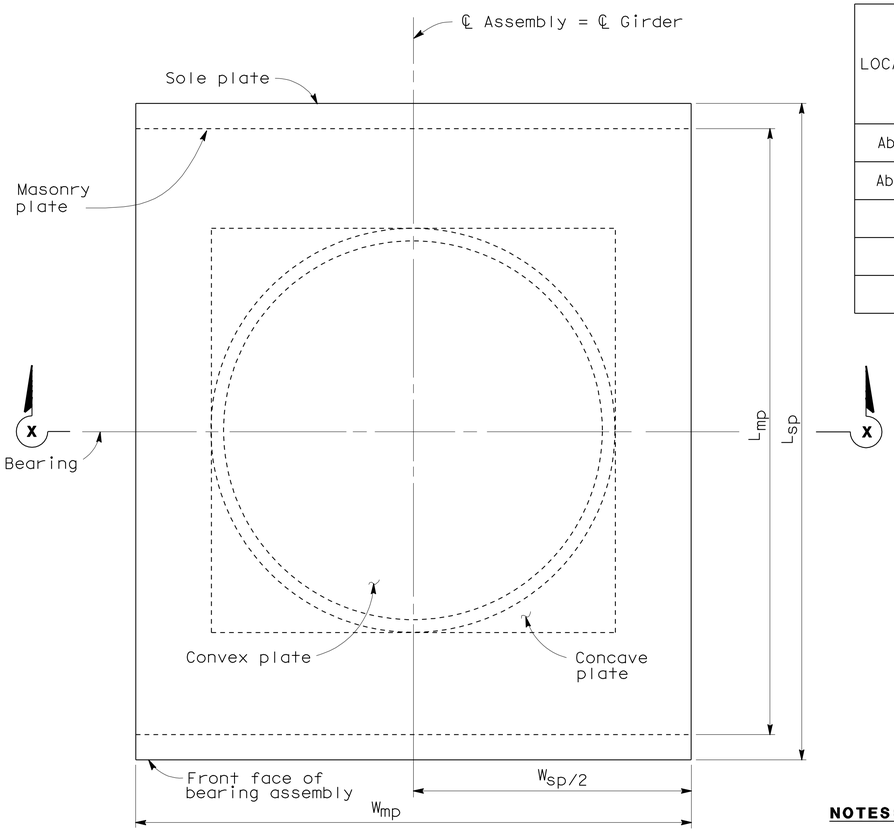

PLAN ③

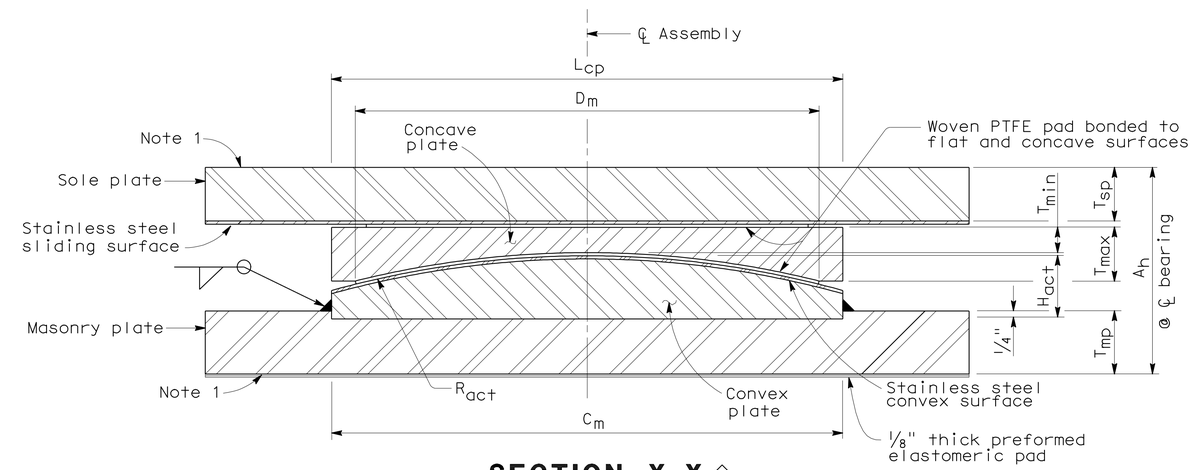

SECTION X-X ③

NOTE:
THE CONTRACTOR SHALL VERIFY ALL CONTROLLING FIELD DIMENSIONS BEFORE ORDERING OR FABRICATING ANY MATERIAL.

NOTES: ①

1. Anchorage method shown on "PTFE/SPHERICAL ANCHORAGE DETAILS" sheet.
2. All units in inches unless otherwise noted.
3. All dimensions shown are steel only unless otherwise noted.
4. H_{act} includes stainless steel.
5. A_h includes PTFE, substratum and stainless steel, (Varies).
6. R_{act} is to sliding surface.
7. All bearings shall be marked prior to shipping. The marks shall indicate the bearing location and direction on the bridge, and a direction arrow that points up station. All marks shall be permanent and visible after the bearing is installed.

SPECIAL DETAILS
NO SCALE

STANDARD DRAWING

RELEASE DATE	Revised	DESIGN	BY ROBERTO LACALLE	CHECKED ROD SIMMONS	RELEASED BY
		DETAILS	BY R. YEE	CHECKED ROD SIMMONS	
FILE NO.	xs9-010	SUBMITTED	BY ROBERTO LACALLE	DRAWING DATE 11/93	OFFICE CHIEF

① Notes modified
② Details added
③ Details modified

STATE OF CALIFORNIA
DEPARTMENT OF TRANSPORTATION

DIVISION OF ENGINEERING SERVICES

BRIDGE NO. 56-0839
KILOMETER POST 19.39

PACHAPPA UP (REPLACE)
PTFE/SPHERICAL EXPANSION BEARING DETAILS

DS OSD 2147A (METRIC) (REV. 2/25/97)

ORIGINAL SCALE IN MILLIMETERS FOR REDUCED PLANS 0 10 20 30 40 50 60 70 80 90 100

CU 08
EA 448401

DISREGARD PRINTS BEARING EARLIER REVISION DATES

REVISION DATES (PRELIMINARY STAGE ONLY): 10-21-09 11-02-09 1-28-10 5-26-10 6-08-10 7-15-10

SHEET 36 OF 44

USERNAME => trpierce

560839qbrgdt36.dgn

DATE PLOTTED => 30-APR-2011 TIME PLOTTED => 14:14

DIST.	COUNTY	ROUTE	KILOMETER POST TOTAL PROJECT	SHEET NO.	TOTAL SHEETS
08	Riv	91	15.6/21.6	1947	2028

11-30-10
REGISTERED ENGINEER - CIVIL

4-25-11
PLANS APPROVAL DATE

REGISTERED PROFESSIONAL ENGINEER
HUAN D. VU
No. C60696
Exp. 12/31/10
CIVIL
STATE OF CALIFORNIA

The State of California or its officers or agents shall not be responsible for the accuracy or completeness of electronic copies of this plan sheet.

FIXED BEARING TABLE ②

LOCATION	MAXIMUM VERTICAL LOAD (kips)	MINIMUM DEAD LOAD (kips)	DESIGN ROTATION (Radians)	CONCAVE PLATE						CONVEX PLATE		MASONRY PLATE			SOLE PLATE			ASSEMBLY HEIGHT
				WIDTH / LENGTH	FLAT PTFE AREA (in^2)	DIAMETER	SPHERICAL RADIUS	MINIMUM THICKNESS	MAXIMUM THICKNESS	DIAMETER	MAXIMUM THICKNESS	WIDTH	LENGTH	THICKNESS	WIDTH	LENGTH	THICKNESS	
				L_{cp}	A_{PTFE}	D_m	R_{act}	T_{min}	T_{max}	C_m	H_{act}	W_{mp}	L_{mp}	T_{mp}	W_{sp}	L_{sp}	T_{sp}	A_h
Bent 2 Span 1	1150	260	0.037	19.125	N/A	18.0	20.5	0.75	3.125	19.375	3.45	28	28	2.5	26	26	2.0	8.54
Bent 2 Span 2	1150	260	0.037	19.125	N/A	18.0	20.5	0.75	3.125	19.375	3.45	28	28	2.5	26	26	1.5	8.04

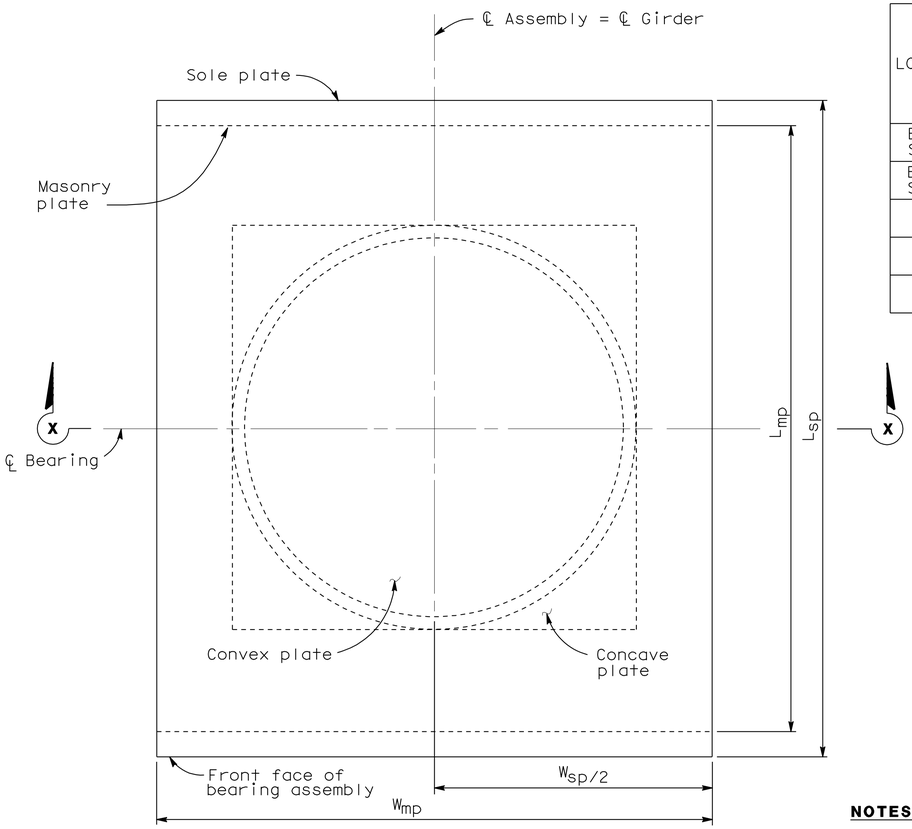

PLAN ②

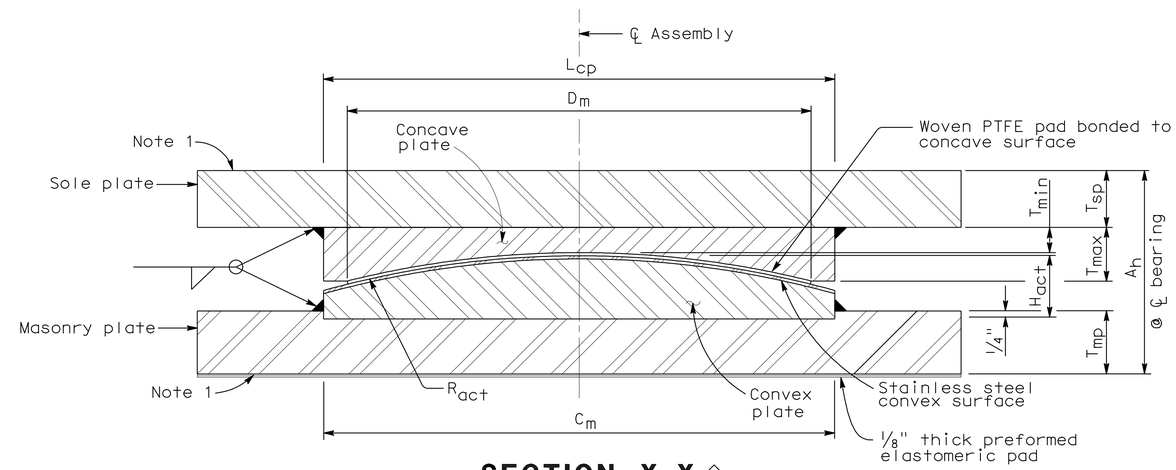

SECTION X-X ②

NOTES: ①

1. Anchorage method shown on "PTFE/SPHERICAL ANCHORAGE DETAILS" sheet.
2. All units in inches unless otherwise noted.
3. All dimensions shown are steel only unless otherwise noted.
4. H_{act} includes stainless steel.
5. A_h includes PTFE, substratum and stainless steel, (Varies).
6. R_{act} is to sliding surface.
7. All bearings shall be marked prior to shipping. The marks shall indicate the bearing location and direction on the bridge, and a direction arrow that points up station. All marks shall be permanent and visible after the bearing is installed.

NOTE:
THE CONTRACTOR SHALL VERIFY ALL CONTROLLING FIELD DIMENSIONS BEFORE ORDERING OR FABRICATING ANY MATERIAL.

SPECIAL DETAILS
NO SCALE

STANDARD DRAWING

RELEASE DATE	Revised	DESIGN	BY ROBERTO LACALLE	CHECKED ROD SIMMONS	RELEASED BY
		DETAILS	BY R. YEE	CHECKED ROD SIMMONS	
FILE NO.	xs9-020	SUBMITTED	BY ROBERTO LACALLE	DRAWING DATE 11/93	OFFICE CHIEF

① Notes modified
② Details modified

STATE OF CALIFORNIA
DEPARTMENT OF TRANSPORTATION

DIVISION OF ENGINEERING SERVICES

BRIDGE NO. 56-0839
KILOMETER POST 19.39

PACHAPPA UP (REPLACE)
PTFE/SPHERICAL FIXED BEARING DETAILS

DS OSD 2147A (METRIC) (REV. 2/25/97)

ORIGINAL SCALE IN MILLIMETERS FOR REDUCED PLANS 0 10 20 30 40 50 60 70 80 90 100

CU 08
EA 448401

DISREGARD PRINTS BEARING EARLIER REVISION DATES

REVISION DATES (PRELIMINARY STAGE ONLY): 10-21-09 11-02-09 1-29-10 5-26-10 6-08-10 7-15-10 9-29-10

SHEET 37 OF 44

USERNAME => trpierce

560839qbrgdt37.dgn

DATE PLOTTED => 30-APR-2011 TIME PLOTTED => 14:14

DIST	COUNTY	ROUTE	POST MILES TOTAL PROJECT	SHEET No	TOTAL SHEETS
08	Riv	91	15.6/21.6	1948	2028

REGISTERED CIVIL ENGINEER 11-30-10 DATE

4-25-11
PLANS APPROVAL DATE

REGISTERED PROFESSIONAL ENGINEER HUAN D. VU No. C60696 Exp. 12/31/10 CIVIL STATE OF CALIFORNIA

The State of California or its officers or agents shall not be responsible for the accuracy or completeness of electronic copies of this plan sheet.

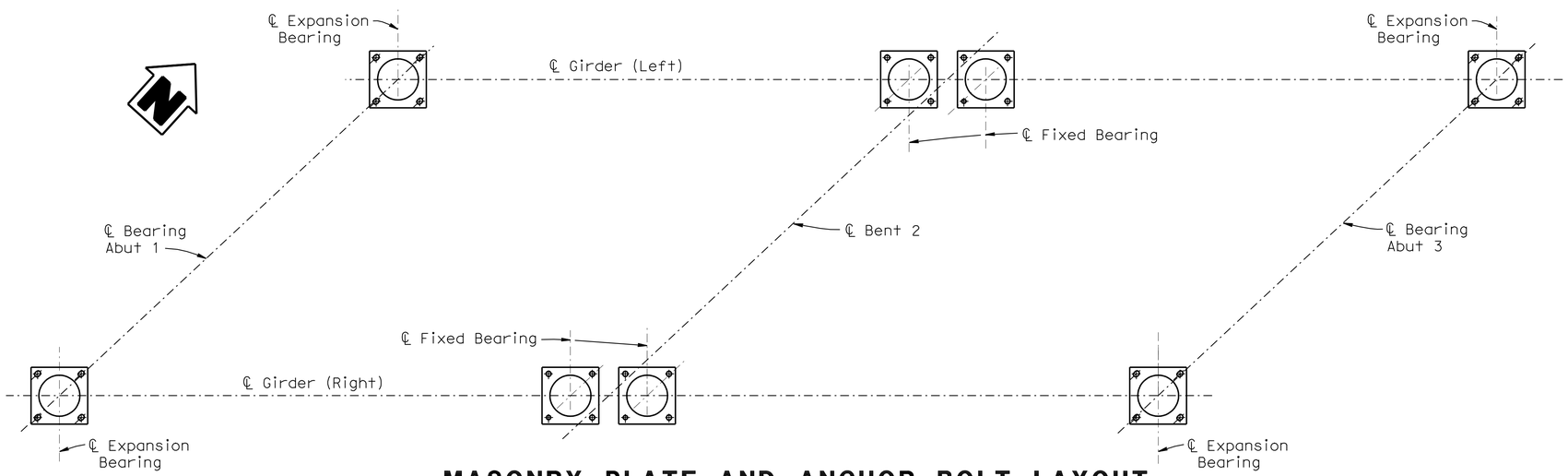

MASONRY PLATE AND ANCHOR BOLT LAYOUT

NO SCALE

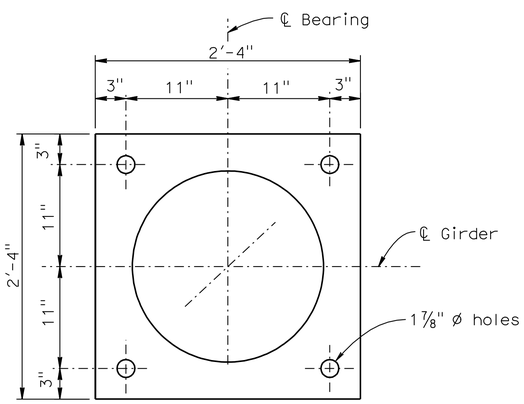

PLAN - MASONRY PLATES (FIXED BEARINGS)

NO SCALE

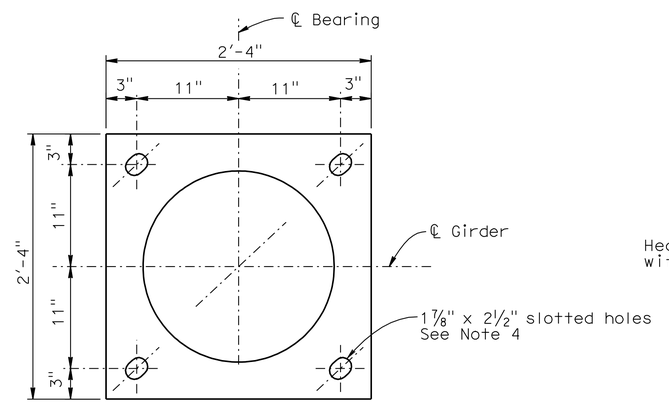

PLAN - MASONRY PLATES (EXPANSION BEARINGS)

NO SCALE

CONCRETE ELEVATION DATA

LOCATIONS		ELEVATIONS
(Left) Girder:	Abut 1	873.095
	Bent 2	874.008
	Abut 3	874.905
(Right) Girder:	Abut 1	872.889
	Bent 2	873.802
	Abut 3	874.699

NOTE:
THE CONTRACTOR SHALL VERIFY ALL CONTROLLING FIELD DIMENSIONS BEFORE ORDERING OR FABRICATING ANY MATERIAL.

NOTES:

1. The welding operation shall be performed at an ambient temperature between 55°F to 85°F
2. If grouting is performed after welding sole plate to flange plate, then grout should be placed at the ambient temperature requirement of Note 1.
3. Welds for sole plates are longitudinal to girder axis only, and may be shop welded. Transverse joints shall be sealed with an approved caulking material.
4. Slotted holes shall be oriented as shown on "PTFE/SPHERICAL EXPANSION BEARING DETAILS" sheet.

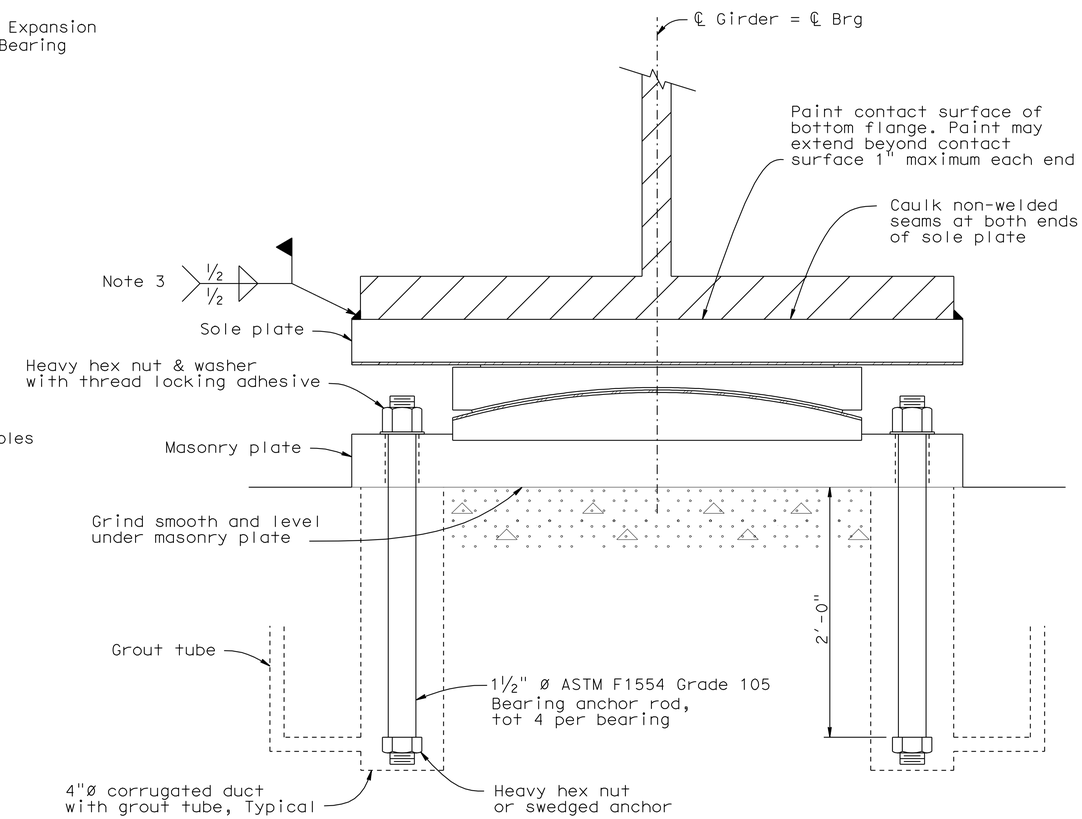

PTFE/SPHERICAL ANCHORAGE DETAILS

NO SCALE

	BY	CHECKED
DESIGN	B. Addlespurger	G. Slocum
DETAILS	J. Yang/E. Montevirgen	G. Slocum
QUANTITIES	T. Sanderson	R. Anderson

STATE OF CALIFORNIA
DEPARTMENT OF TRANSPORTATION

DIVISION OF ENGINEERING SERVICES
STRUCTURE DESIGN
DESIGN BRANCH 10

BRIDGE NO. 56-0839
POST MILE 19.39

PACHAPPA UP (REPLACE)
PTFE/SPHERICAL ANCHORAGE DETAILS

STRUCTURES DESIGN DETAIL SHEET (ENGLISH) (REV. 10/25/05)

ORIGINAL SCALE IN INCHES FOR REDUCED PLANS 0 1 2 3

CU 08
EA 448401

DISREGARD PRINTS BEARING EARLIER REVISION DATES

REVISION DATES: 10-26-09 | 12-01-09 | 1-29-10 | 2-05-10 | 5-26-10 | 6-08-10 | 7-15-10 | 8-30-10

SHEET 38 OF 44

FILE => 560839qbrgdt38.dgn

USERNAME => trpierce DATE PLOTTED => 30-APR-2011 TIME PLOTTED => 14:14

DIST	COUNTY	ROUTE	POST MILES TOTAL PROJECT	SHEET No	TOTAL SHEETS
08	Riv	91	15.6/21.6	1949	2028

REGISTERED CIVIL ENGINEER 11-30-10 DATE

4-25-11
PLANS APPROVAL DATE

REGISTERED PROFESSIONAL ENGINEER HUAN D. VU No. C60696 Exp. 12/31/10 CIVIL STATE OF CALIFORNIA

The State of California or its officers or agents shall not be responsible for the accuracy or completeness of electronic copies of this plan sheet.

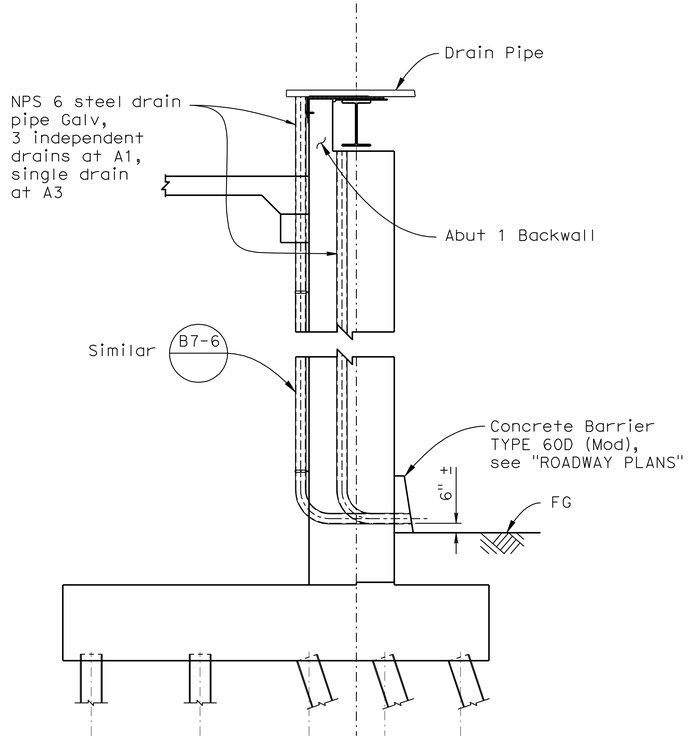

SECTION A-A

1/4"=1'-0"

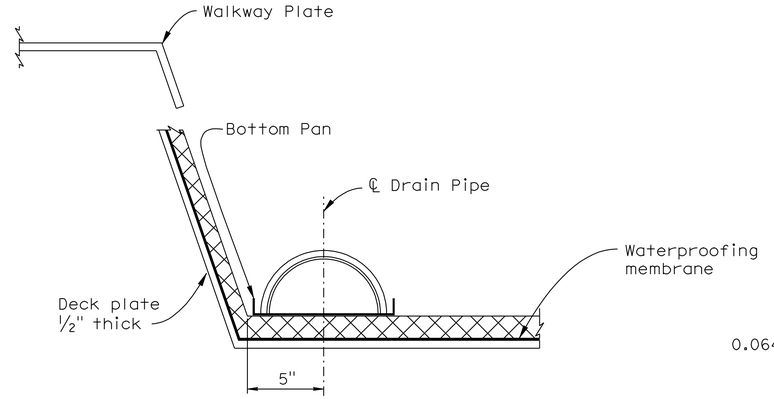

TYPICAL DRAIN SECTION

NO SCALE

NOTE:
Welded pieces shall be hot-dipped Galvanized after fabrication

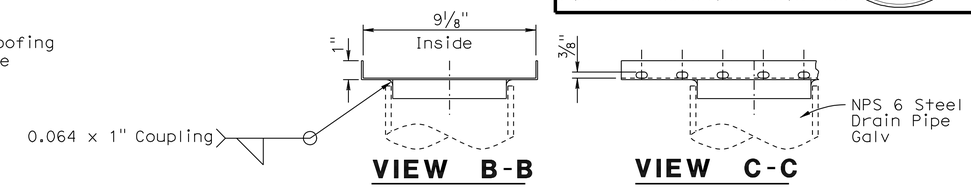

VIEW B-B

VIEW C-C

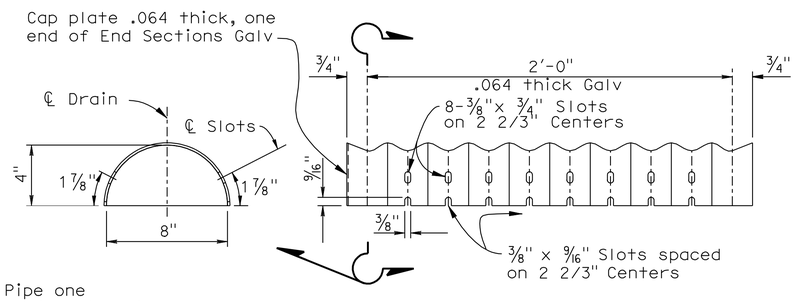

NOTE:
Lap Drain Pipe one corrugation at each end

DETAIL - DRAIN PIPE

NO SCALE

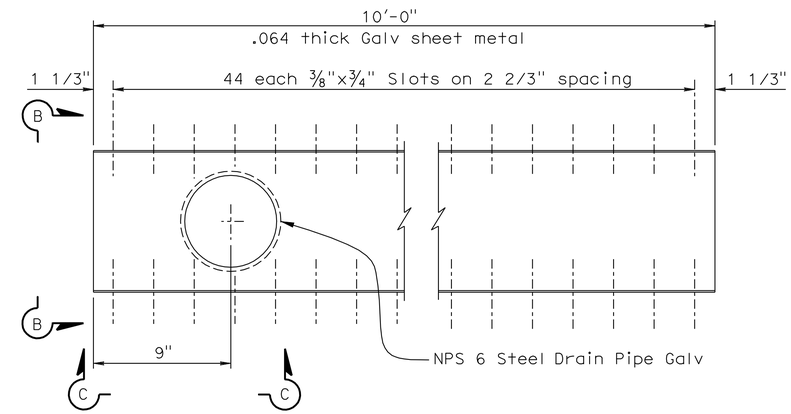

DETAIL - BOTTOM PAN

NO SCALE

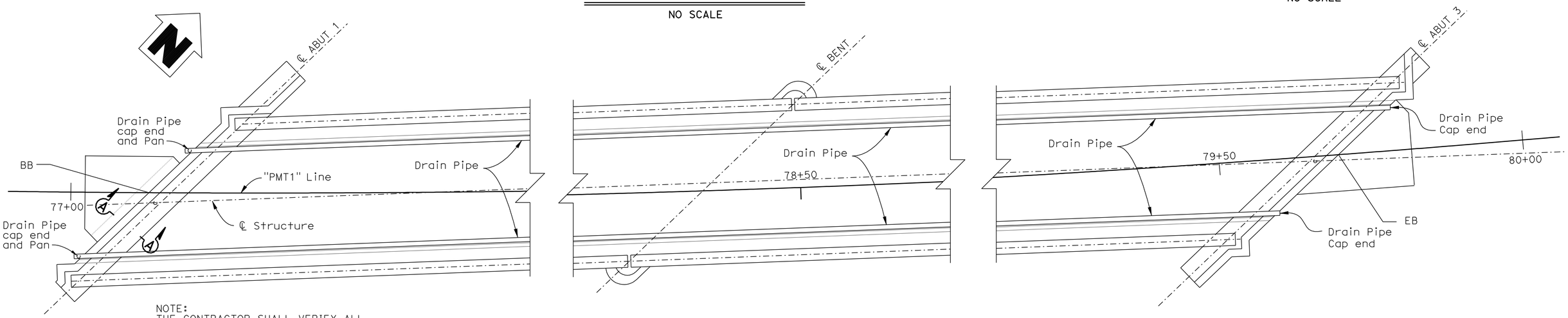

NOTE:
THE CONTRACTOR SHALL VERIFY ALL CONTROLLING FIELD DIMENSIONS BEFORE ORDERING OR FABRICATING ANY MATERIAL.

DECK DRAINAGE LAYOUT

1/8"=1'-0"

	BY	CHECKED
DESIGN	B. Addlespurger	G. Slocum
DETAILS	D. Wooten	G. Slocum
QUANTITIES	T. Sanderson	R. Anderson

STATE OF CALIFORNIA
DEPARTMENT OF TRANSPORTATION

DIVISION OF ENGINEERING SERVICES
STRUCTURE DESIGN
DESIGN BRANCH 10

BRIDGE NO. 56-0839
POST MILE 19.39

PACHAPPA UP (REPLACE)
DECK DRAINAGE LAYOUT AND DETAILS

STRUCTURES DESIGN DETAIL SHEET (ENGLISH) (REV. 10/25/05)

ORIGINAL SCALE IN INCHES FOR REDUCED PLANS 0 1 2 3

CU 08
EA 448401

DISREGARD PRINTS BEARING EARLIER REVISION DATES

REVISION DATES: 3-09-10 5-19-10 6-08-10 8-16-10 9-29-10

SHEET 39 OF 44

FILE => 560839rdd_det39.dgn

USERNAME => trpierce DATE PLOTTED => 30-APR-2011 TIME PLOTTED => 14:15

DIST	COUNTY	ROUTE	POST MILES TOTAL PROJECT	SHEET No	TOTAL SHEETS
08	Riv	91	15.6/21.6	1950	2028

REGISTERED CIVIL ENGINEER — DATE 11-30-10

4-25-11
PLANS APPROVAL DATE

REGISTERED PROFESSIONAL ENGINEER — HUAN D. VU — No. C60696 — Exp. 12/31/10 — CIVIL — STATE OF CALIFORNIA

The State of California or its officers or agents shall not be responsible for the accuracy or completeness of electronic copies of this plan sheet.

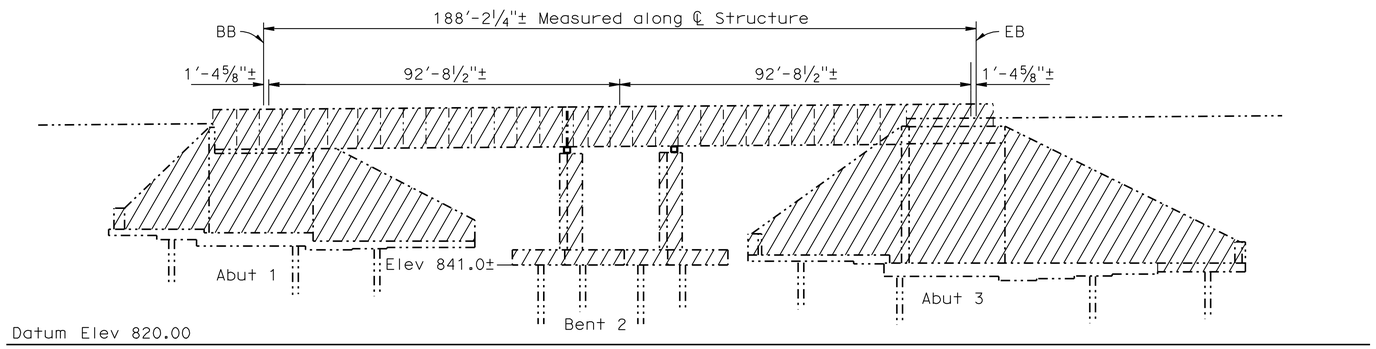

ELEVATION

1" = 20'

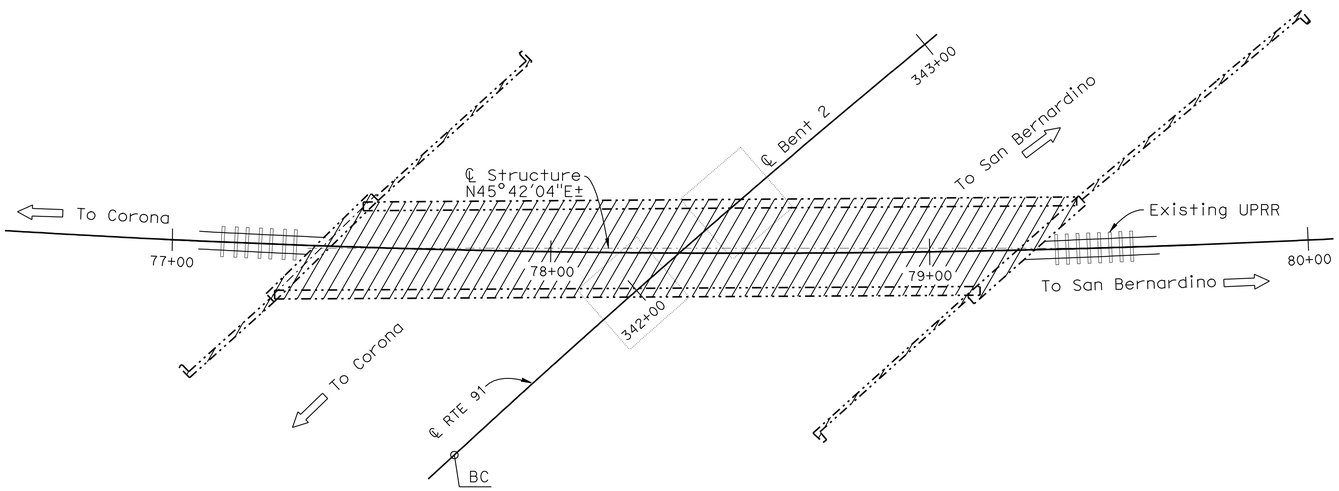

PLAN

1" = 20'

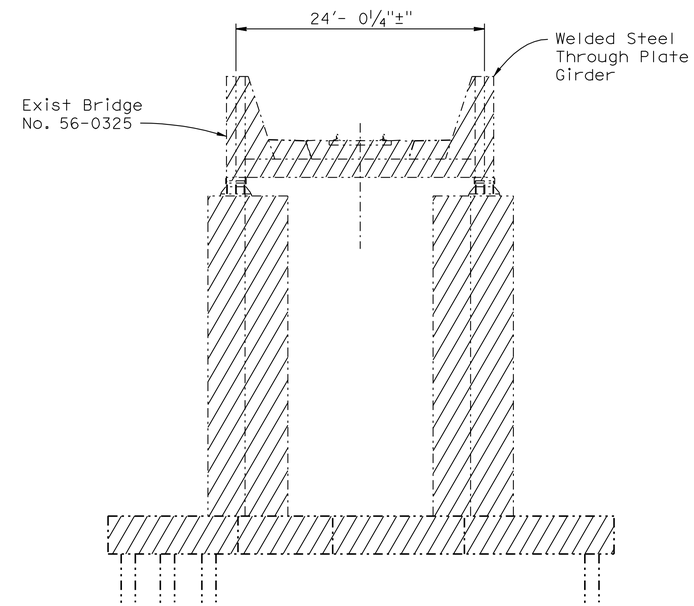

TYPICAL SECTION

⅛" = 1'-0"

NOTE: All dimensions are approximate.

LEGEND:

-·-·-·- Indicates existing structure

Indicates limits of Bridge Removal

NOTE:
THE CONTRACTOR SHALL VERIFY ALL CONTROLLING FIELD DIMENSIONS BEFORE ORDERING OR FABRICATING ANY MATERIAL.

	BY	CHECKED
DESIGN	B. Addlespurger	G. Slocum
DETAILS	G. Hallstrom	G. Slocum
QUANTITIES	T. Sanderson	R. Anderson

STATE OF CALIFORNIA
DEPARTMENT OF TRANSPORTATION

DIVISION OF ENGINEERING SERVICES
STRUCTURE DESIGN
DESIGN BRANCH 10

BRIDGE NO. 56-0839
POST MILE 19.39

PACHAPPA UP (REPLACE)
BRIDGE REMOVAL

STRUCTURES DESIGN DETAIL SHEET (ENGLISH) (REV. 10/25/05)

ORIGINAL SCALE IN INCHES FOR REDUCED PLANS 0 1 2 3

CU 08
EA 448401

DISREGARD PRINTS BEARING EARLIER REVISION DATES

REVISION DATES: 9-01-10 9-29-10 11-10-10 11-17-10

SHEET 40 OF 44

FILE => 560839uremoval40.dgn

USERNAME => trpierce DATE PLOTTED => 30-APR-2011 TIME PLOTTED => 14:15

DIST	COUNTY	ROUTE	POST MILES TOTAL PROJECT	SHEET No	TOTAL SHEETS
08	Riv	91	15.6/21.6	1951	2028

REGISTERED CIVIL ENGINEER 11-30-10 DATE

4-25-11
PLANS APPROVAL DATE

REGISTERED PROFESSIONAL ENGINEER HUAN D. VU No. C60696 Exp. 12/31/10 CIVIL STATE OF CALIFORNIA

The State of California or its officers or agents shall not be responsible for the accuracy or completeness of electronic copies of this plan sheet.

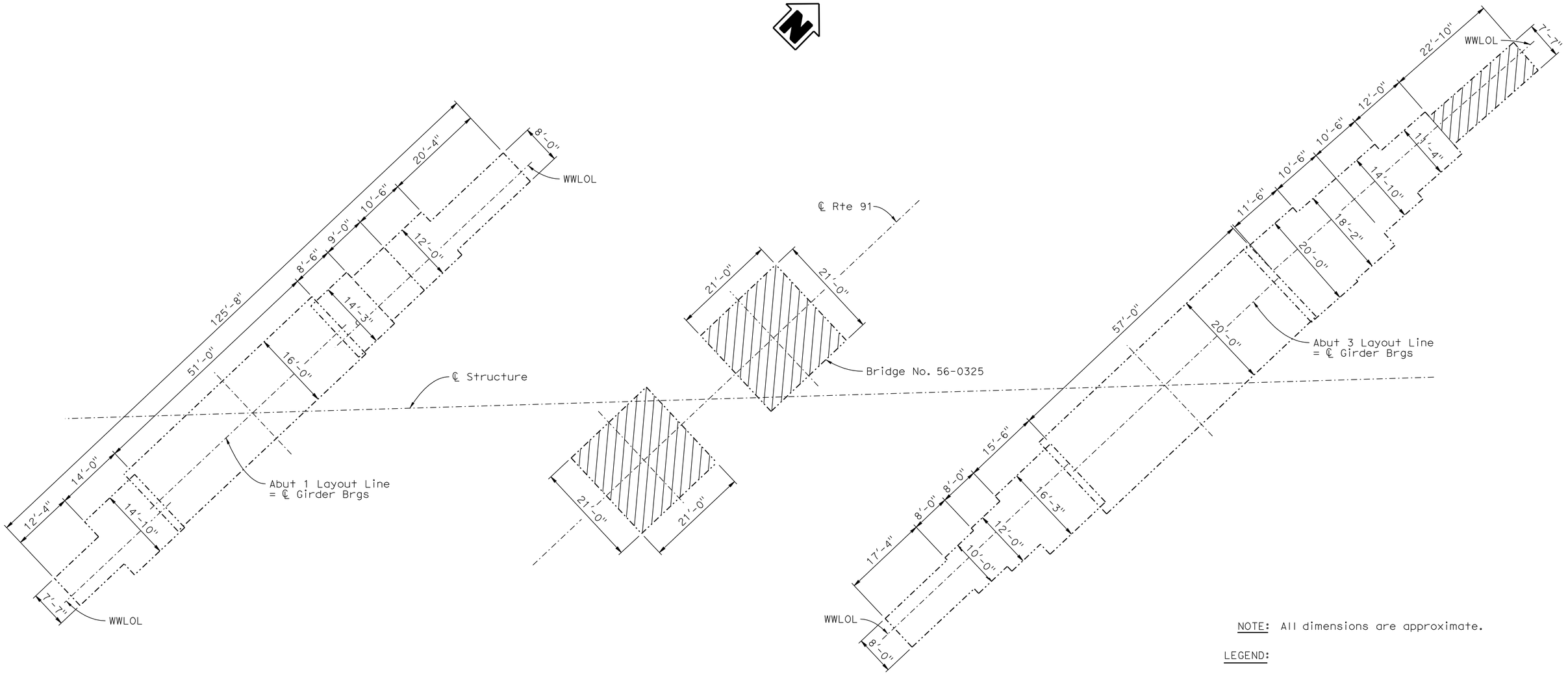

NOTE: All dimensions are approximate.

LEGEND:

Incicates existing structure

Incicates limits of Bridge Removal (Portion)

NOTE:
THE CONTRACTOR SHALL VERIFY ALL CONTROLLING FIELD DIMENSIONS BEFORE ORDERING OR FABRICATING ANY MATERIAL.

FOOTING LAYOUT

1" = 10'

	BY	CHECKED
DESIGN	B. Addlespurger	G. Slocum
DETAILS	G. Hallstrom	G. Slocum
QUANTITIES	T. Sanderson	R. Anderson

STATE OF CALIFORNIA DEPARTMENT OF TRANSPORTATION

DIVISION OF ENGINEERING SERVICES STRUCTURE DESIGN DESIGN BRANCH 10

BRIDGE NO. 56-0839
POST MILE 19.39

PACHAPPA UP (REPLACE) BRIDGE REMOVAL (PORTION)

STRUCTURES DESIGN DETAIL SHEET (ENGLISH) (REV. 10/25/05)

ORIGINAL SCALE IN INCHES FOR REDUCED PLANS 0 1 2 3

CU 08
EA 448401

DISREGARD PRINTS BEARING EARLIER REVISION DATES 9-28-10 11-17-10

REVISION DATES

SHEET 41 OF 44

FILE => 560839uremoval41.dgn

USERNAME => trpierce DATE PLOTTED => 30-APR-2011 TIME PLOTTED => 14:15

DIST	COUNTY	ROUTE	POST MILES TOTAL PROJECT	SHEET No	TOTAL SHEETS
08	Riv	91	15.6/21.6	1952	2028

K. Douglas Cook 9-22-10
CERTIFIED ENGINEERING GEOLOGIST

4-25-11
PLANS APPROVAL DATE

PROFESSIONAL GEOLOGIST K. Douglas Cook No. 1391 Exp. 12-31-11 CERTIFIED ENGINEERING GEOLOGIST STATE OF CALIFORNIA

The State of California or its officers or agents shall not be responsible for the accuracy or completeness of electronic copies of this plan sheet.

This LOTB sheet was prepared in accordance with the Caltrans Soil & Rock Logging, Classification, & Presentation Manual (June 2007).

BENCH MARK

SUHV 100
2X2/Tag EB91
57.842'Rt. ℄ Rte 91
Sta. 341+64.44
N 2 296 806.496
E 6 219 868.695
Elev =848.861

SUHV 3244
Br. Disk Riv91-19.39 LS5
65.383'Lt. ℄ Rte 91
Sta. 341+65.77
N 2 296 814.610
E 6 219 745.730
Elev =872.890'

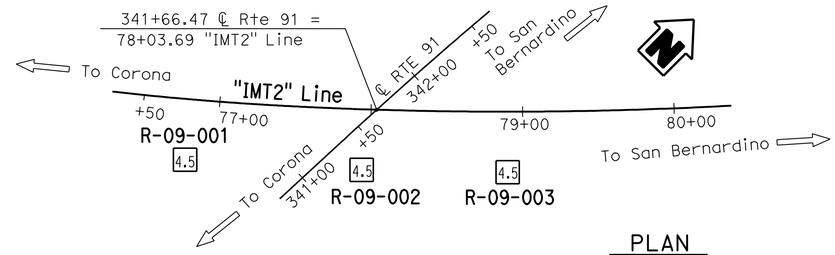

PLAN

1" = 50'

R-09-001

40.0' Rt Sta 76+80.0
"2MT2" Line

854.0'

4.5 Asphalt concrete/shoulder 7" thick (FILL).

SILTY SAND (SM); brown; moist; mostly fine grained; few medium; few coarse; some SILT fines; trace CLAY; nonplastic.
-medium dense; mostly fine grained; few medium; few to little coarse; little SILT; non-cohesive.
-loose; mostly fine grained; some SILT; trace few medium to coarse SAND; homogenous (Fill material).
-mostly fine grained; medium dense; trace medium; trace coarse; some SILT fines; non-cohesive; moderate dilatency; (FILL).
-native (ALLUVIUM).
-veinlets of moderate calcite cementation; few medium to coarse grains; mostly fine grained; trace medium to coarse; some SILT fines.
-medium dense; brown; moist; trace medium; non-cohesive.
-few to little medium to coarse grains; few fine to medium GRAVEL; subangular grains.
SAND with some SILT (SP); very dense; light brown; moist; fine to coarse increased gradiation; little fine; little medium; little coarse; little fine SILT; trace of GRAVEL.
-thin layer (~3") of Well-graded SAND (SW; dense.
-GRAVELly layer few fine SAND.
Poorly-graded SAND (SP); very dense; brown; moist; some fine; little medium; few to little coarse; little SILT; few GRAVEL fine to medium subangular; non-cohesive.
Well graded SAND (SW); very dense; light brown; moist; trace very fine GRAVEL; trace few fines.
-non-cohesive.
Poorly-graded medium to coarse SAND (SP); very dense; light brown; moist; few fines; trace of fine GRAVEL in top.
-with GRAVEL; light grayish brown.

Elev	Blows/Depth	Type
850	11/1.4	
	6/1.4	
840	9/1.4	
	8/1.4	
830	12/1.4	
	10/1.4	
820	14/1.4	
	10/1.4	
810	16/1.4	
	65/1.4	
800	32/1.4	
	82/1.4	
790	50/5.5"/1.4	
	50/5"/1.4	
780	50/2.5"/1.4	
770		
	50/2"/1.4	
	50/3"/1.4	
760	70/5"/1.4	
750	50/4"/1.4	

2-19-09
Terminated at Elev 754.0'
ERi = 82%
Ground water not measured.

290+50

R-09-002

40.0' Rt Sta 77+95.0
"2MT2" Line

848.0'

4.5 8" Asphalt concrete over 4" GRAVEL base.

SILTY SAND (SM); loose; brown; dry; with trace clay; little fines; fine to medium grained SAND; (FILL).
-medium dense; (Native ALLUVIUM).
-loose.
-dense.
Poorly-graded SAND (SP); very dense; gray; moist; few fines; medium to coarse SAND.
SILTY SAND (SM); dense; brownish gray; moist; little fines; fine to medium SAND.
Poorly-graded SAND (SP); very dense; gray; moist; few fines; medium to coarse SAND.
-grayish brown; some GRAVEL.
-increasing GRAVEL content.
Well-graded SAND with GRAVEL (SW); very dense; gray; moist;few fines; coarse SAND.
-more SAND content; medium to coarse grained.
-mostly medium grained (SAND).

Elev	Blows/Depth	Type
	5/1.4	
	5/1.4	
	4/1.4	
	5/1.4	
	17/1.4	
	5/1.4	
	28/1.4	
	62/1.4	
	29/1.4	
	90/11"/1.4	
	65/1.4	
	50/3"/1.4	
	97/1.4	
	50/4.5"/1.4	
	50/4.5"/1.4	
	50/5"/1.4	
	50/5"/1.4	
	50/5.9"/1.4	
	50/5.5"/1.4	
	50/5"/1.4	
	50/3"/1.4	
	50/3"/1.4	
	50/3"/1.4	

2-19-09
Terminated at Elev 725.7'
ERi = 82%
Ground water not measured.

291+00

R-09-003

40.0' Rt Sta 78+90.0
"2MT2" Line

845.0'

4.5 Asphalt concrete/shoulder 7" thick (FILL).

SILTY SAND (SM); loose; brown; dry; little fines; fine to medium grained SAND; (FILL).
-becomes medium dense; (NATIVE).
-trace GRAVEL; dense.
SILTY SAND with trace GRAVEL (SM); medium dense; moist; little fines; fine SAND.
-loose.
-medium dense; no GRAVEL.
GWS Elev 796'
2-25-09
Poorly graded SAND with GRAVEL (SP); very dense; gray; moist; few fines medium to coarse SAND; few GRAVEL.
-poorly graded SAND; trace GRAVEL.
-increasing GRAVEL content.
SILTY SAND (SM); very dense; gray; moist; some fines; fine SAND.
GRAVEL with SAND (GP); very dense; gray; moist; few fines; medium to coarse SAND; with some GRAVEL.

Elev	Blows/Depth	Type
	14/1.4	
	16/1.4	
	13/1.4	
	24/1.4	
	14/1.4	
	7/1.4	
	8/1.4	
	8/1.4	
	11/1.4	
	59/1.4	
	86/1.4	
	88/11"/1.4	
	94/1.4	
	74/1.4	
	50/4"/1.4	
	50/9"/1.4	
	50/2"/1.4	
	50/4"/1.4	
	50/5"/1.4	
	45/1.4	
	45/1.4	
	50/5"/1.4	
	50/5"/1.4	

2-24-09
Terminated at Elev 718.0'
ERi = 82%

291+50

PROFILE

HOR. 1" = 10'
VER. 1" = 10'

ENGINEERING SERVICES		GEOTECHNICAL SERVICES	STATE OF CALIFORNIA DEPARTMENT OF TRANSPORTATION	DIVISION OF ENGINEERING SERVICES STRUCTURE DESIGN	BRIDGE NO. 56-0325	PACHAPPA UP (REPLACE)
FUNCTIONAL SUPERVISOR	DRAWN BY: F. Nguyen 03/10	FIELD INVESTIGATION BY:		DESIGN BRANCH	POST MILES 19.5	LOG OF TEST BORINGS 1 OF 3
NAME: A. Perez-Cobo	CHECKED BY: W. Levine	S. Logeswaran				

OGS CIVIL LOG OF TEST BORINGS SHEET

ORIGINAL SCALE IN INCHES FOR REDUCED PLANS 0 1 2 3

CU 08
EA 448401

DISREGARD PRINTS BEARING EARLIER REVISION DATES 09-22-10

REVISION DATES

SHEET 42 OF 44

FILE => 560839zltb42.dgn

USERNAME => trpierce DATE PLOTTED => 30-APR-2011 TIME PLOTTED => 14:15

DIST	COUNTY	ROUTE	POST MILES TOTAL PROJECT	SHEET No	TOTAL SHEETS
08	Riv	91	15.6/21.6	1953	2028

K. Douglas Cook 9-22-10
CERTIFIED ENGINEERING GEOLOGIST

4-25-11
PLANS APPROVAL DATE

PROFESSIONAL GEOLOGIST K. Douglas Cook No. 1391 Exp. 12-31-11 CERTIFIED ENGINEERING GEOLOGIST STATE OF CALIFORNIA

The State of California or its officers or agents shall not be responsible for the accuracy or completeness of electronic copies of this plan sheet.

REFERENCE: CALTRANS SOIL & ROCK LOGGING, CLASSIFICATION, AND PRESENTATION MANUAL (JUNE 2007)

CEMENTATION

Description	Criteria
Weak	Crumbles or breaks with handling or little finger pressure.
Moderate	Crumbles or breaks with considerable finger pressure.
Strong	Will not crumble or break with finger pressure.

CONSISTENCY OF COHESIVE SOILS

Description	Unconfined Compressive Strength (tsf)	Pocket Penetrometer Measurement (tsf)	Torvane Measurement (tsf)	Field Approximation
Very Soft	< 0.25	< 0.25	< 0.12	Easily penetrated several inches by fist
Soft	0.25 to 0.50	0.25 to 0.50	0.12 to 0.25	Easily penetrated several inches by thumb
Medium Stiff	0.50 to 1.0	0.50 to 1.0	0.25 to 0.50	Penetrated several inches by thumb with moderate effort
Stiff	1 to 2	1 to 2	0.50 to 1.0	Readily indented by thumb but penetrated only with great effort
Very Stiff	2 to 4	2 to 4	1.0 to 2.0	Readily indented by thumbnail
Hard	> 4.0	> 4.0	> 2.0	Indented by thumbnail with difficulty

BOREHOLE IDENTIFICATION

Symbol	Hole Type	Description
Size	A	Auger Boring
Size	R P	Rotary drilled boring Rotary percussion boring (air)
Size	R	Rotary drilled diamond core
Size	HD HA	Hand driven (1-inch soil tube) Hand Auger
●	D	Dynamic Cone Penetration Boring
▲	CPT	Cone Penetration Test (ASTM D 5778-95)
⬚	O	Other

Note: Size in inches.

PLASTICITY OF FINE-GRAINED SOILS

Description	Criteria
Nonplastic	A 1/8-inch thread cannot be rolled at any water content.
Low	The thread can barely be rolled and the lump cannot be formed when drier than the plastic limit.
Medium	The thread is easy to roll and not much time is required to reach the plastic limit. The thread cannot be rerolled after reaching the plastic limit. The lump crumbles when drier than the plastic limit.
High	It takes considerable time rolling and kneading to reach the plastic limit. The thread can be rerolled several times after reaching the plastic limit. The lump can be formed without crumbling when drier than the plastic limit.

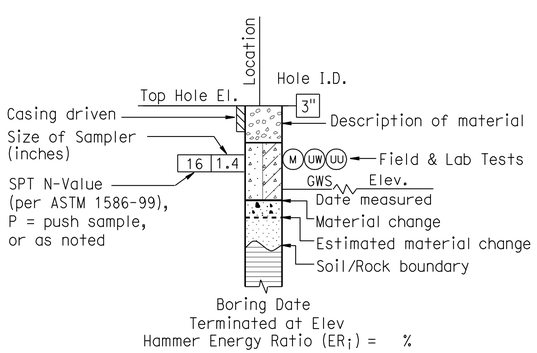

ROTARY BORING

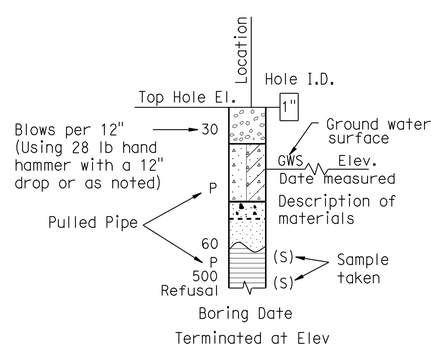

HAND BORING

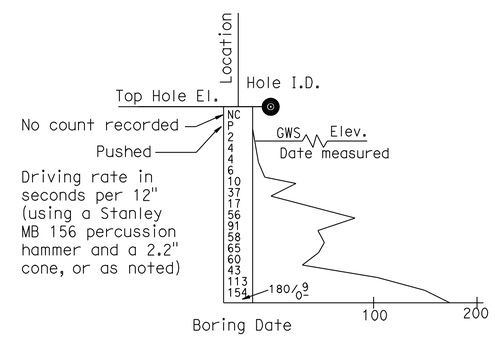

DYNAMIC CONE PENETRATION BORING

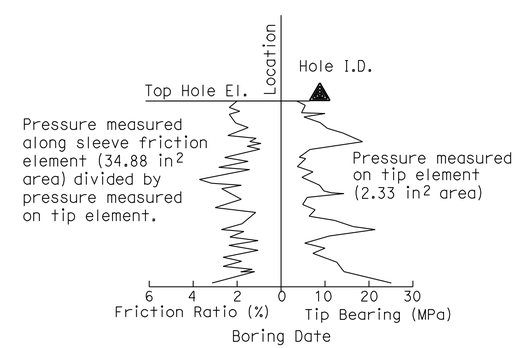

CONE PENETRATION TEST (CPT) SOUNDING

ENGINEERING SERVICES	GEOTECHNICAL SERVICES	STATE OF CALIFORNIA DEPARTMENT OF TRANSPORTATION	DIVISION OF ENGINEERING SERVICES STRUCTURE DESIGN DESIGN BRANCH	BRIDGE NO. 56-0325 / POST MILE 19.5	PACHAPPA UP (REPLACE) LOG OF TEST BORINGS 2 OF 3
	PREPARED BY: F. Nguyen 03/10				

GS LOTB SOIL LEGEND

ORIGINAL SCALE IN INCHES FOR REDUCED PLANS 0 1 2 3

CU 08
EA 448401

DISREGARD PRINTS BEARING EARLIER REVISION DATES → 09-22-10

REVISION DATES

SHEET 43 OF 44

FILE => 560839zltb43.dgn

USERNAME => tripierce DATE PLOTTED => 30-APR-2011 TIME PLOTTED => 14:15

REFERENCE: CALTRANS SOIL & ROCK LOGGING, CLASSIFICATION, AND PRESENTATION MANUAL (JUNE 2007)

DIST	COUNTY	ROUTE	POST MILES TOTAL PROJECT	SHEET No	TOTAL SHEETS
08	Riv	91	15.6/21.6	1954	2028

K. Douglas Cook 9-22-10
CERTIFIED ENGINEERING GEOLOGIST

4-25-11
PLANS APPROVAL DATE

PROFESSIONAL GEOLOGIST K. Douglas Cook No. 1391 Exp. 12-31-11 CERTIFIED ENGINEERING GEOLOGIST STATE OF CALIFORNIA

The State of California or its officers or agents shall not be responsible for the accuracy or completeness of electronic copies of this plan sheet.

GROUP SYMBOLS AND NAMES

Graphic/Symbol	Group Names	Graphic/Symbol	Group Names
GW	Well-graded GRAVEL Well-graded GRAVEL with SAND	CL	Lean CLAY Lean CLAY with SAND Lean CLAY with GRAVEL SANDY lean CLAY SANDY lean CLAY with GRAVEL GRAVELLY lean CLAY GRAVELLY lean CLAY with SAND
GP	Poorly graded GRAVEL Poorly graded GRAVEL with SAND		
GW-GM	Well-graded GRAVEL with SILT Well-graded GRAVEL with SILT and SAND	CL-ML	SILTY CLAY SILTY CLAY with SAND SILTY CLAY with GRAVEL SANDY SILTY CLAY SANDY SILTY CLAY with GRAVEL GRAVELLY SILTY CLAY GRAVELLY SILTY CLAY with SAND
GW-GC	Well-graded GRAVEL with CLAY (or SILTY CLAY) Well-graded GRAVEL with CLAY and SAND (or SILTY CLAY and SAND)		
GP-GM	Poorly graded GRAVEL with SILT Poorly graded GRAVEL with SILT and SAND	ML	SILT SILT with SAND SILT with GRAVEL SANDY SILT SANDY SILT with GRAVEL GRAVELLY SILT GRAVELLY SILT with SAND
GP-GC	Poorly graded GRAVEL with CLAY (or SILTY CLAY) Poorly graded GRAVEL with CLAY and SAND (or SILTY CLAY and SAND)		
GM	SILTY GRAVEL SILTY GRAVEL with SAND	OL	ORGANIC lean CLAY ORGANIC lean CLAY with SAND ORGANIC lean CLAY with GRAVEL SANDY ORGANIC lean CLAY SANDY ORGANIC lean CLAY with GRAVEL GRAVELLY ORGANIC lean CLAY GRAVELLY ORGANIC lean CLAY with SAND
GC	CLAYEY GRAVEL CLAYEY GRAVEL with SAND		
GC-GM	SILTY, CLAYEY GRAVEL SILTY, CLAYEY GRAVEL with SAND	OL	ORGANIC SILT ORGANIC SILT with SAND ORGANIC SILT with GRAVEL SANDY ORGANIC SILT SANDY ORGANIC SILT with GRAVEL GRAVELLY ORGANIC SILT GRAVELLY ORGANIC SILT with SAND
SW	Well-graded SAND Well-graded SAND with GRAVEL		
SP	Poorly graded SAND Poorly graded SAND with GRAVEL	CH	Fat CLAY Fat CLAY with SAND Fat CLAY with GRAVEL SANDY fat CLAY SANDY fat CLAY with GRAVEL GRAVELLY fat CLAY GRAVELLY fat CLAY with SAND
SW-SM	Well-graded SAND with SILT Well-graded SAND with SILT and GRAVEL		
SW-SC	Well-graded SAND with CLAY (or SILTY CLAY) Well-graded SAND with CLAY and GRAVEL (or SILTY CLAY and GRAVEL)	MH	Elastic SILT Elastic SILT with SAND Elastic SILT with GRAVEL SANDY elastic SILT SANDY elastic SILT with GRAVEL GRAVELLY elastic SILT GRAVELLY elastic SILT with SAND
SP-SM	Poorly graded SAND with SILT Poorly graded SAND with SILT and GRAVEL		
SP-SC	Poorly graded SAND with CLAY (or SILTY CLAY) Poorly graded SAND with CLAY and GRAVEL (or SILTY CLAY and GRAVEL)	OH	ORGANIC fat CLAY ORGANIC fat CLAY with SAND ORGANIC fat CLAY with GRAVEL SANDY ORGANIC fat CLAY SANDY ORGANIC fat CLAY with GRAVEL GRAVELLY ORGANIC fat CLAY GRAVELLY ORGANIC fat CLAY with SAND
SM	SILTY SAND SILTY SAND with GRAVEL		
SC	CLAYEY SAND CLAYEY SAND with GRAVEL	OH	ORGANIC elastic SILT ORGANIC elastic SILT with SAND ORGANIC elastic SILT with GRAVEL SANDY ORGANIC elastic SILT SANDY ORGANIC elastic SILT with GRAVEL GRAVELLY ORGANIC elastic SILT GRAVELLY ORGANIC elastic SILT with SAND
SC-SM	SILTY, CLAYEY SAND SILTY, CLAYEY SAND with GRAVEL		
PT	PEAT	OL/OH	ORGANIC SOIL ORGANIC SOIL with SAND ORGANIC SOIL with GRAVEL SANDY ORGANIC SOIL SANDY ORGANIC SOIL with GRAVEL GRAVELLY ORGANIC SOIL GRAVELLY ORGANIC SOIL with SAND
	COBBLES COBBLES and BOULDERS BOULDERS		

FIELD AND LABORATORY TESTING

- (C) Consolidation (ASTM D 2435)
- (CL) Collapse Potential (ASTM D 5333)
- (CP) Compaction Curve (CTM 216)
- (CR) Corrosivity Testing (CTM 643, CTM 422, CTM 417)
- (CU) Consolidated Undrained Triaxial (ASTM D 4767)
- (DS) Direct Shear (ASTM D 3080)
- (EI) Expansion Index (ASTM D 4829)
- (M) Moisture Content (ASTM D 2216)
- (OC) Organic Content-% (ASTM D 2974)
- (P) Permeability (CTM 220)
- (PA) Particle Size Analysis (ASTM D 422)
- (PI) Plasticity Index (AASHTO T 90) Liquid Limit (AASHTO T 89)
- (PL) Point Load Index (ASTM D 5731)
- (PM) Pressure Meter
- (PP) Pocket Penetrometer
- (R) R-Value (CTM 301)
- (SE) Sand Equivalent (CTM 217)
- (SG) Specific Gravity (AASHTO T 100)
- (SL) Shrinkage Limit (ASTM D 427)
- (SW) Swell Potential (ASTM D 4546)
- (TV) Pocket Torvane
- (UC) Unconfined Compression-Soil (ASTM D 2166) Unconfined Compression-Rock (ASTM D 2938)
- (UU) Unconsolidated Undrained Triaxial (ASTM D 2850)
- (UW) Unit Weight (ASTM D 4767)
- (VS) Vane Shear (AASHTO T 223)

APPARENT DENSITY OF COHESIONLESS SOILS

Description	SPT N_{60} (Blows / 12 inches)
Very loose	0 - 4
Loose	5 - 10
Medium Dense	11 - 30
Dense	31 - 50
Very Dense	> 50

MOISTURE

Description	Criteria
Dry	Absence of moisture, dusty, dry to the touch
Moist	Damp but no visible water
Wet	Visible free water, usually soil is below water table

PERCENT OR PROPORTION OF SOILS

Description	Criteria
Trace	Particles are present but estimated to be less than 5%
Few	5 to 10%
Little	15 to 25%
Some	30 to 45%
Mostly	50 to 100%

PARTICLE SIZE

Description		Size
Boulder		> 12"
Cobble		3" to 12"
Gravel	Coarse	3/4" to 3"
	Fine	No. 4 to 3/4"
Sand	Coarse	No. 10 to No. 4
	Medium	No. 40 to No. 10
	Fine	No. 200 to No. 40

ENGINEERING SERVICES

GEOTECHNICAL SERVICES
PREPARED BY: F. Nguyen 03/10

STATE OF CALIFORNIA DEPARTMENT OF TRANSPORTATION

DIVISION OF ENGINEERING SERVICES STRUCTURE DESIGN
DESIGN BRANCH

BRIDGE NO. 56-0325
POST MILE 19.5

PACHAPPA UP (REPLACE)
LOG OF TEST BORINGS 3 OF 3

GS LOTB SOIL LEGEND

ORIGINAL SCALE IN INCHES FOR REDUCED PLANS 0 1 2 3

CU 08
EA 448401

DISREGARD PRINTS BEARING EARLIER REVISION DATES 09-22-10

REVISION DATES

SHEET 44 OF 44

FILE => 560839zltb44.dgn

USERNAME => trpierce DATE PLOTTED => 30-APR-2011 TIME PLOTTED => 14:16

DIST	COUNTY	ROUTE	POST MILES TOTAL PROJECT	SHEET No	TOTAL SHEETS
08	Riv	91	15.6/21.6	1955	2028

REGISTERED CIVIL ENGINEER 11-30-10 DATE

4-25-11
PLANS APPROVAL DATE

REGISTERED PROFESSIONAL ENGINEER HUAN VU No. 60696 Exp. 12-31-10 CIVIL STATE OF CALIFORNIA

The State of California or its officers or agents shall not be responsible for the accuracy or completeness of electronic copies of this plan sheet.

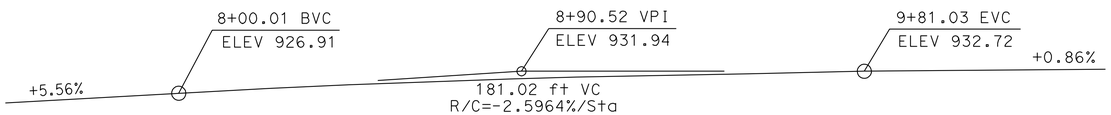

PROFILE GRADE

No Scale

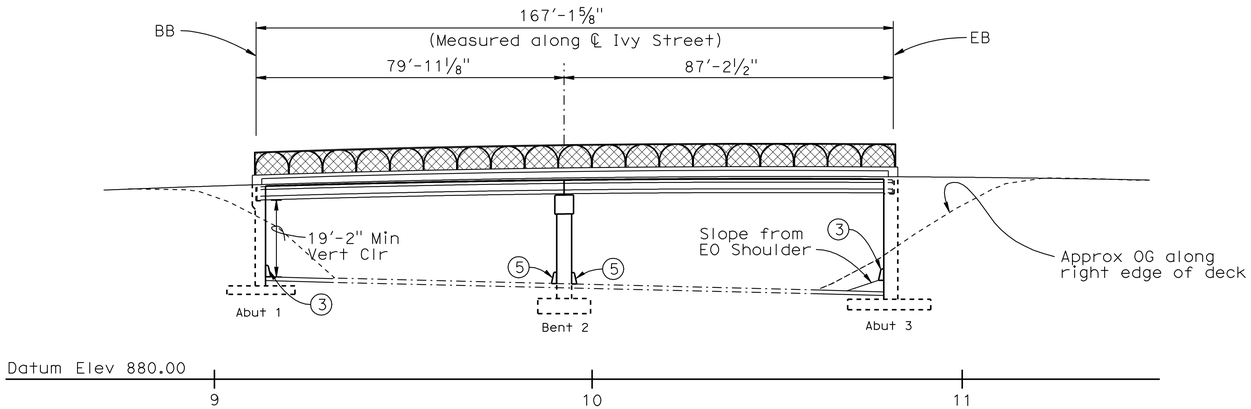

ELEVATION

1"=20'

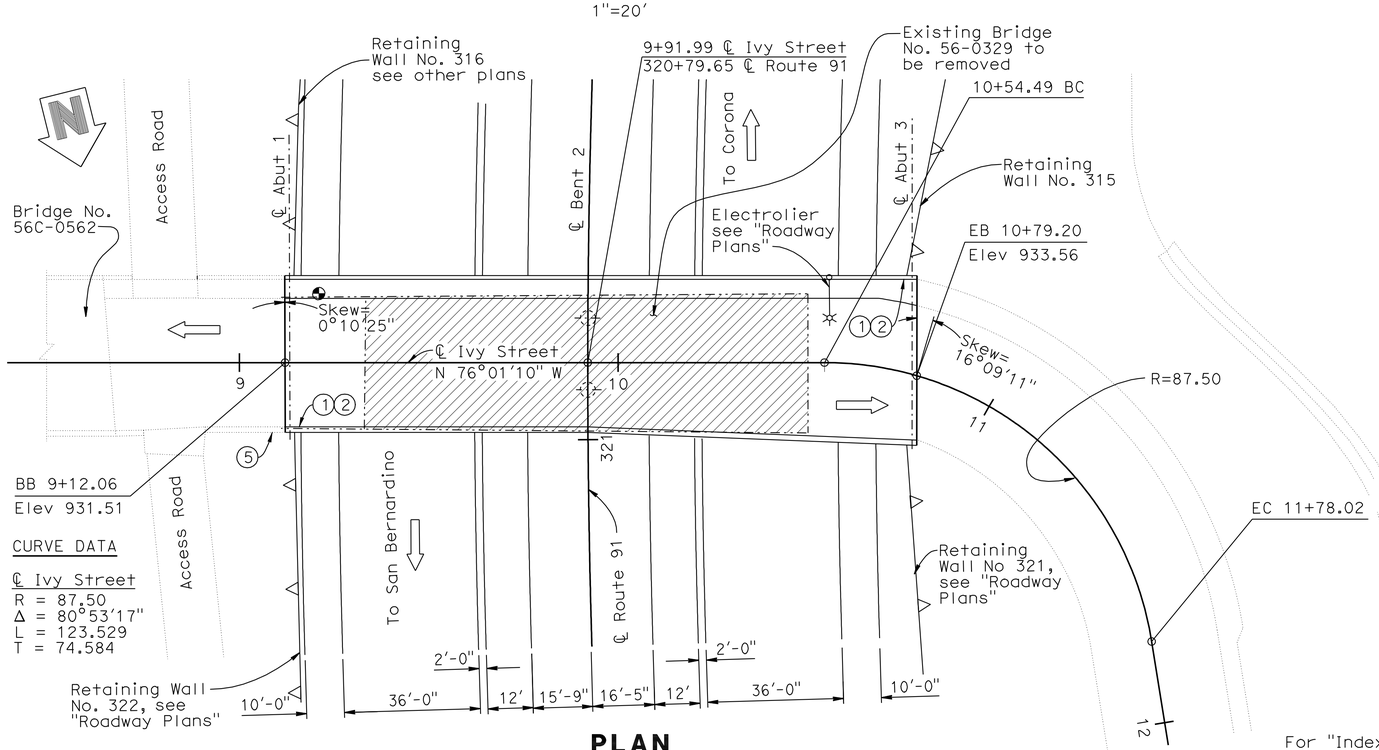

PLAN

1"=20'

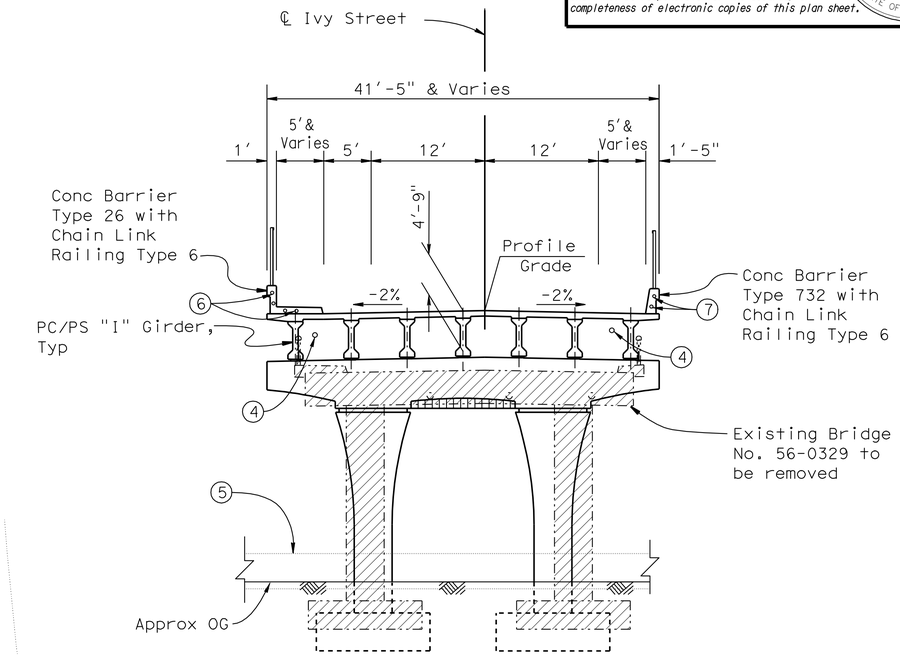

TYPICAL SECTION

1/8" =1'-0"

For "Index to Plans", "General Notes", "Standard Plans", and "Quantities", see "INDEX TO PLANS" sheet.

NOTES:

1. Paint "BR. NO. 56-0840"
2. Paint "IVY STREET OC"
3. Concrete Barrier Type 60D (Mod).
4. 3" ø irrigation line, see "Roadway Plans".
5. Concrete Barrier Type 60E, see "Roadway Plans".
6. 4-2" ø electrical conduits, see "Roadway Plans".
7. 2-2" ø electrical conduits, see "Roadway Plans".

LEGEND:

- Indicates existing structure
- Indicates new construction
- Indicates direction of traffic flow
- Indicates point of minimum Vert Clr
- Indicates bridge removal

DANILE T. ADAMS
DESIGN ENGINEER

	BY	CHECKED
DESIGN	M. Vo	J. Delgado
DETAILS	Y. Tang/G. Hallstrom	J. Delgado
QUANTITIES	A. McPhee	J. Szabo

LOAD & RESISTANCE FACTOR DESIGN — LIVE LOADING: HL93 W/"LOW-BOY"; PERMIT DESIGN VEHICLE
LAYOUT BY M. Vo CHECKED J. Delgado
SPECIFICATIONS BY PLANS AND SPECS COMPARED

ORIGINAL SCALE IN INCHES FOR REDUCED PLANS 0 1 2 3

STATE OF CALIFORNIA
DEPARTMENT OF TRANSPORTATION

DIVISION OF ENGINEERING SERVICES
STRUCTURE DESIGN
DESIGN BRANCH 10

CU 08
EA 448401

BRIDGE NO. 56-0840
POST MILE 19.0

IVY STREET OC (REPLACE)
GENERAL PLAN

DISREGARD PRINTS BEARING EARLIER REVISION DATES
REVISION DATES: 8-24-08, 6-19-09, 2-24-10, 4-30-10, 8-04-10, 8-25-10, 10-04-10
SHEET 1 OF 27

STRUCTURES DESIGN GENERAL PLAN SHEET (ENGLISH) (REV.07-24-06)

FILE => 560840agp01.dgn

USERNAME => trpierce DATE PLOTTED => 30-APR-2011 TIME PLOTTED => 14:16

DIST	COUNTY	ROUTE	POST MILES TOTAL PROJECT	SHEET No	TOTAL SHEETS
08	Riv	91	15.6/21.6	1956	2028

REGISTERED CIVIL ENGINEER 11-30-10 DATE

4-25-11
PLANS APPROVAL DATE

REGISTERED PROFESSIONAL ENGINEER HUAN VU No. 60696 Exp. 12-31-10 CIVIL STATE OF CALIFORNIA

The State of California or its officers or agents shall not be responsible for the accuracy or completeness of electronic copies of this plan sheet.

INDEX TO PLANS

Sheet No.	Title
1.	GENERAL PLAN
2.	INDEX TO PLANS
3.	DECK CONTOURS
4.	FOUNDATION PLAN
5.	ABUTMENT 1 LAYOUT
6.	ABUTMENT 3 LAYOUT
7.	ABUTMENT DETAILS
8.	BENT LAYOUT
9.	BENT DETAILS NO. 1
10.	BENT DETAILS NO. 2
11.	BENT DETAILS NO. 3
12.	TYPICAL SECTION
13.	GIRDER LAYOUT
14.	PRECAST PRESTRESSED I GIRDER (LRFD)
15.	GIRDER REINFORCEMENT
16.	ARCHITECTURAL DETAILS NO. 1
17.	ARCHITECTURAL DETAILS NO. 2
18.	ARCHITECTURAL DETAILS NO. 3
19.	CHAIN LINK RAILING TYPE 6
20.	LOG OF TEST BORINGS 1 OF 8
21.	LOG OF TEST BORINGS 2 OF 8
22.	LOG OF TEST BORINGS 3 OF 8
23.	LOG OF TEST BORINGS 4 OF 8
24.	LOG OF TEST BORINGS 5 OF 8
25.	LOG OF TEST BORINGS 6 OF 8
26.	LOG OF TEST BORINGS 7 OF 8
27.	LOG OF TEST BORINGS 8 OF 8

STANDARD PLANS DATED MAY 2006

A10A	ACRONYMS AND ABBREVIATIONS (SHEET 1 OF 2)
A10B	ACRONYMS AND ABBREVIATIONS (SHEET 2 OF 2)
A10C	SYMBOLS (SHEET 1 OF 2)
A10D	SYMBOLS (SHEET 2 OF 2)
A62-C	LIMITS OF PAYMENT FOR EXCAVATION AND BACKFILL - BRIDGE
B0-1	BRIDGE DETAILS
B0-3	BRIDGE DETAILS
B0-5	BRIDGE DETAILS
B0-13	BRIDGE DETAILS
B6-10	UTILITY OPENINGS T-BEAM
RSP B6-21	JOINT SEALS (MAXIMUM MOVEMENT RATING = 2")
B11-54	CONCRETE BARRIER TYPE 26
B11-55	CONCRETE BARRIER TYPE 732
B14-4	
B14-5	

STANDARD PLAN SHEET NO.

DETAIL NO.

QUANTITIES

BRIDGE REMOVAL, LOCATION G	LUMP	SUM
STRUCTURE EXCAVATION (BRIDGE)	1,056	CY
STRUCTURE BACKFILL (BRIDGE)	1,056	CY
PERVIOUS BACKFILL MATERIAL	81	CY
3" SUPPLY LINE (BRIDGE)	334	LF
TIEDOWN ANCHOR	16	EA
STRUCTURAL CONCRETE, BRIDGE FOOTING	238	CY
STRUCTURAL CONCRETE, BRIDGE	563	CY
ARCHITECTURAL SURFACE (TEXTURED CONCRETE) FRACTURED RIB TEXTURE	76	SQFT
ARCHITECTURAL SURFACE(TEXTURED CONCRETE) FRACTURED RIB SPLIT SLATE TEXTURE	1,748	SQFT
FURNISH PRECAST PRESTRESSED CONCRETE GIRDER (70'-80')	7	EA
FURNISH PRECAST PRESTRESSED CONCRETE GIRDER (80'-90')	7	EA
ERECT PRECAST PRESTRESSED CONCRETE GIRDER	14	EA
JOINT SEAL (MR 1")	86	LF
BAR REINFORCING STEEL (BRIDGE)	159,727	LB
CHAIN LINK RAILING (TYPE 6)	338	LF
CONCRETE BARRIER (TYPE 26)	167	LF
CONCRETE BARRIER (TYPE 732)	167	LF
CONCRETE BARRIER (TYPE 60D MODIFIED)	87	LF

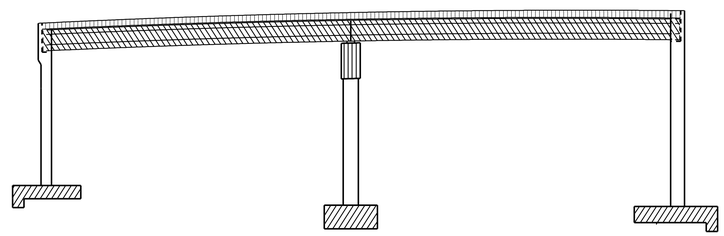

Precast Prestressed I- Girders

Structural Concrete, Bridge

Structural Concrete, Bridge Footing

Structural Concrete, Bridge (4000 psi @ 28 days)

CONCRETE STRENGTH AND TYPE LIMITS

No Scale

GENERAL NOTES
LOAD AND RESISTANCE FACTOR DESIGN

DESIGN: AASHTO LRFD BRIDGE DESIGN SPECIFICATIONS, 4th Edition and the CALTRANS Amendments preface dated Dec. 2008.

SEISMIC DESIGN: Caltrans Seismic Design Criteria (SDC) Version 1.4, July, 2006

DEAD LOAD: Includes 35 Psf for future wearing surface. Includes 10% of the additional deck dead load between girders for stay in place deck form.

LIVE LOADING: HL93 with alternative and permit design load.

SEISMIC LOADING: Soil Profile Type C, Magnitude Group 7.25±0.25, Peak Rock Acceleration = 0.4 g.

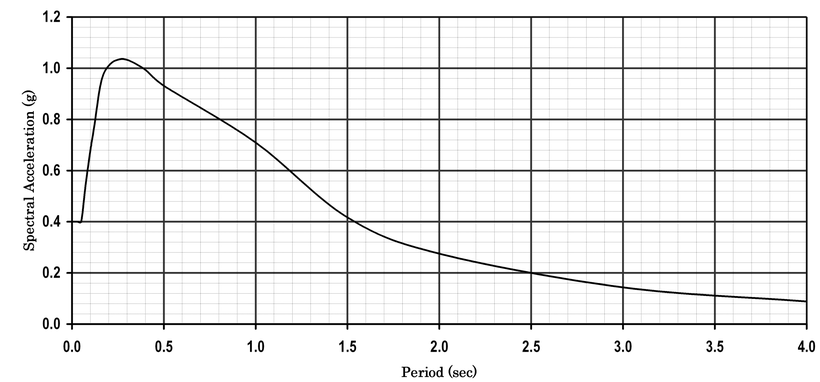

Modified CALTRANS SDC ARS Curve: Soil Profile Type C, Magnitude Mw=7.5, 5% Damping

REINFORCED CONCRETE: f_y = 60 ksi
f'_c = 3600 psi, unless otherwise noted
n = 8

PRESTRESSED CONCRETE: See "Prestressing Notes" on "PRECAST PRESTRESSED I GIRDER (LRFD)" sheet.

SPREAD FOOTING DATA TABLE

SUPPORT LOCATION	WORKING STRESS DESIGN (WSD)		LOAD AND RESISTANCE FACTOR DESIGN (LRFD)		
			SERVICE	STRENGTH	EXTREME EVENT
	PERMISSIBLE GROSS CONTACT STRESS (SETTLEMENT) (ksf)	ALLOWABLE GROSS BEARING CAPACITY (ksf)	PERMISSIBLE NET CONTACT STRESS (SETTLEMENT) (ksf)	FACTORED GROSS NOMINAL BEARING RESISTANCE $\varphi_b = 0.45$ (ksf)	FACTORED GROSS NOMINAL BEARING RESISTANCE $\varphi_b = 1.00$ (ksf)
Abut 1	6.1	14.2	N/A	N/A	N/A
Bent 2	N/A	N/A	19.6	26.6	59.1
Abut 3	8.0	18.3	N/A	N/A	N/A

	BY	CHECKED
DESIGN	M. Vo	J. Delgado
DETAILS	R. Kirkland	J. Delgado
QUANTITIES	A. McPhee	J. Szabo

STATE OF CALIFORNIA
DEPARTMENT OF TRANSPORTATION

DIVISION OF ENGINEERING SERVICES
STRUCTURE DESIGN
DESIGN BRANCH 10

BRIDGE NO. 56-0840
POST MILE 19.0

IVY STREET OC (REPLACE)
INDEX TO PLANS

STRUCTURES DESIGN DETAIL SHEET (ENGLISH) (REV. 10/25/05)

ORIGINAL SCALE IN INCHES FOR REDUCED PLANS 0 1 2 3

CU 08
EA 448401

DISREGARD PRINTS BEARING EARLIER REVISION DATES

REVISION DATES: 6-19-09, 2-23-10, 4-29-10, 8-04-10, 8-23-10

SHEET 2 OF 27

FILE => 560840aitp02.dgn

USERNAME => trmikes1 DATE PLOTTED => 02-MAY-2011 TIME PLOTTED => 08:57

DIST	COUNTY	ROUTE	POST MILES TOTAL PROJECT	SHEET No	TOTAL SHEETS
08	Riv	91	15.6/21.6	1957	2028

REGISTERED CIVIL ENGINEER 11-30-10 DATE

4-25-11
PLANS APPROVAL DATE

REGISTERED PROFESSIONAL ENGINEER HUAN VU No. 60696 Exp. 12-31-10 CIVIL STATE OF CALIFORNIA

The State of California or its officers or agents shall not be responsible for the accuracy or completeness of electronic copies of this plan sheet.

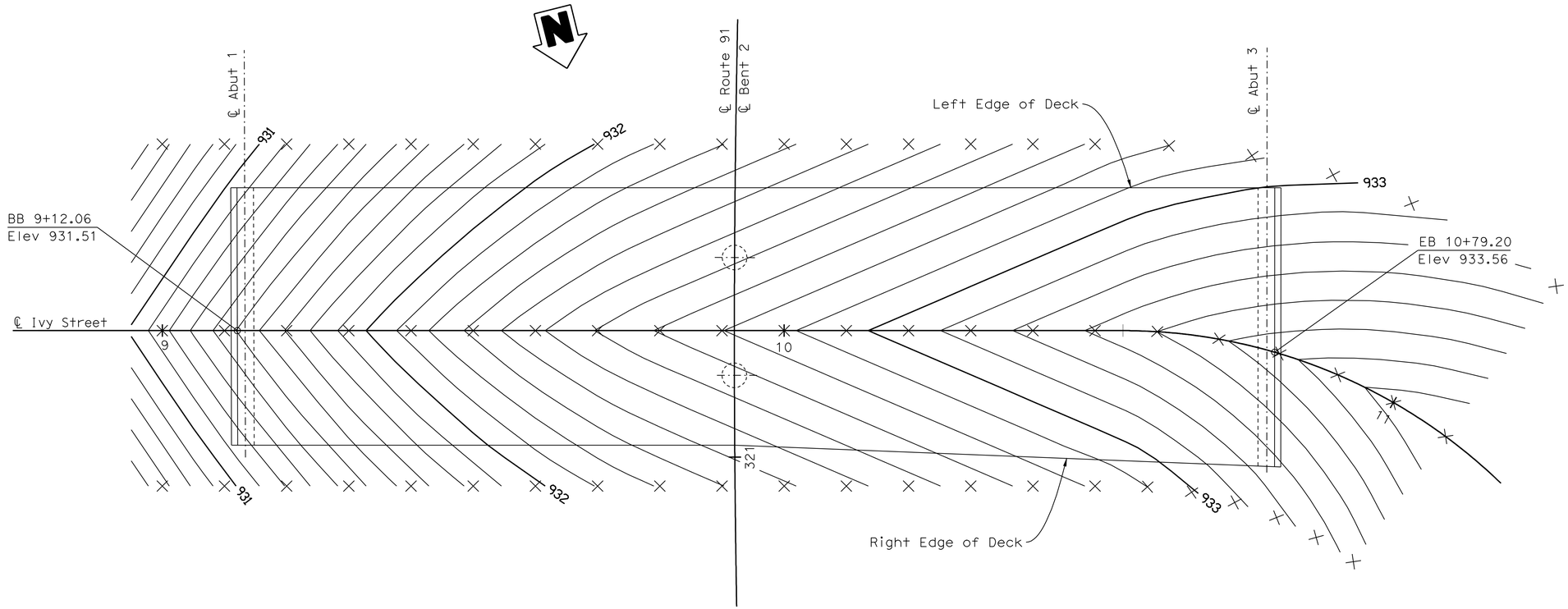

DECK CONTOURS

1"=10'-0"

NOTES:

1. X - 10' intervals along station line.
2. Contour interval = 0.1'.
3. Contours do not include camber.

	BY	CHECKED
DESIGN	M. Vo	J. Delgado
DETAILS	G. Hallstrom	J. Delgado
QUANTITIES	A. McPhee	J. Szabo

STATE OF CALIFORNIA
DEPARTMENT OF TRANSPORTATION

DIVISION OF ENGINEERING SERVICES
STRUCTURE DESIGN
DESIGN BRANCH 10

BRIDGE NO. 56-0840
POST MILE 19.0

IVY STREET OC (REPLACE)
DECK CONTOURS

STRUCTURES DESIGN DETAIL SHEET (ENGLISH) (REV. 10/25/05)

ORIGINAL SCALE IN INCHES FOR REDUCED PLANS 0 1 2 3

CU 08
EA 448401

DISREGARD PRINTS BEARING EARLIER REVISION DATES

REVISION DATES: 6-19-09, 2-24-10, 4-29-10

SHEET 3 OF 27

FILE => 560840ddc03.dgn

USERNAME => trpierce DATE PLOTTED => 30-APR-2011 TIME PLOTTED => 14:16

DIST	COUNTY	ROUTE	POST MILES TOTAL PROJECT	SHEET No	TOTAL SHEETS
08	Riv	91	15.6/21.6	1958	2028

REGISTERED CIVIL ENGINEER — DATE 11-30-10

4-25-11
PLANS APPROVAL DATE

REGISTERED PROFESSIONAL ENGINEER — HUAN VU — No. 60696 — Exp. 12-31-10 — CIVIL — STATE OF CALIFORNIA

The State of California or its officers or agents shall not be responsible for the accuracy or completeness of electronic copies of this plan sheet.

CURVE DATA

No.	R	Δ	T	L
1	2583.431	12°49'51"	290.484	578.538
2	2499.998	47°18'51"	1095.191	2064.471
3	2403.720	11°07'46"	234.194	466.914
4	87.500	80°53'17"	74.584	123.529
5	2577.431	10°59'22"	247.936	494.351
6	2423.690	6°38'50"	140.751	281.186

(AA) STA. 320+79.654 ℄ ROUTE 91 =
STA. 9+91.988 ℄ IVY St.

Bridge Location
(A) - 11.467 Lt. ℄, Sta.9+33.027, Elev.=925.155 ±
(B) - 11.951 Lt. ℄, Sta.10+50.836, Elev.=928.391 ±
(C) - 16.001 Rt. ℄, Sta.10+50.807, Elev.=928.415 ±
(D) - 16.082 Rt. ℄, Sta.9+32.976, Elev.=925.116 ±

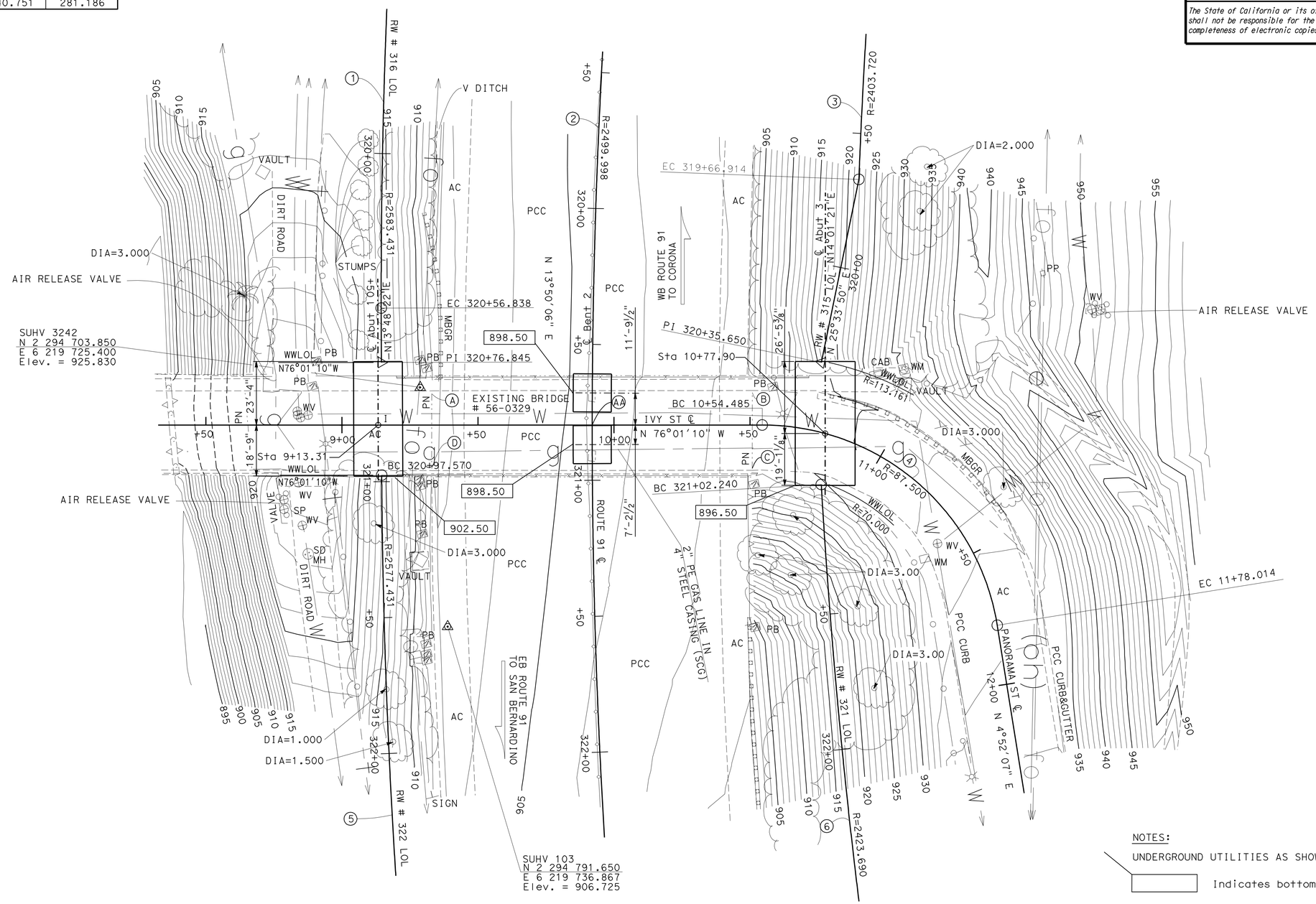

SURVEY CONTROL

SUHV 3242
Fnd Br. Disk RIV91-18.98LS5679
63.272 Rt. ℄ Rte 91
Sta. 320+66.200
N 2 294 703.850
E 6 219 725.400
Elev. = 925.830

SUHV 103
Fnd PK/AC Shdr. EB-91
54.174 Rt. ℄ Rte 91
Sta. 321+52.260
N 2 294 791.650
E 6 219 736.867
Elev. = 906.725

NOTES:
UNDERGROUND UTILITIES AS SHOWN ARE APPROXIMATE
Indicates bottom of footing elevation

PRELIMINARY INVESTIGATION SECTION

SCALE	VERT.DATUM NGVD 29	PHOTOGRAMMETRY AS OF: X		
1"=20'	HORZ.DATUM NAD 83	SURVEYED	BY C. Stewart 12/08	CHECKED BY L. Manabo 12/08
ALIGNMENT TIES DIST TRAV SHEETS		DRAFTED	BY M. Sadaghiani 03/09	CHECKED BY L. Manabo 03/09

DESIGN	BY M. Vo	CHECKED J. Delgado
DETAILS	BY D. Wooten	CHECKED J. Delgado
QUANTITIES	BY	CHECKED

STATE OF CALIFORNIA
DEPARTMENT OF TRANSPORTATION

DIVISION OF ENGINEERING SERVICES
STRUCTURE DESIGN
DESIGN BRANCH 10

BRIDGE NO. 56-0840
POST MILE 19.0

IVY STREET OC (REPLACE)
FOUNDATION PLAN

STRUCTURES FOUNDATION PLAN SHEET (ENGLISH) (REV. 10/25/05)

ORIGINAL SCALE IN INCHES FOR REDUCED PLANS 0 1 2 3

CU 08
EA 448401

DISREGARD PRINTS BEARING EARLIER REVISION DATES

REVISION DATES: 3/18/09 6/12/09 4/29/10

SHEET 4 OF 27

FILE => 560840efdp04.dgn

USERNAME => trimmguye DATE PLOTTED => 30-APR-2011 TIME PLOTTED => 14:11

DIST	COUNTY	ROUTE	POST MILES TOTAL PROJECT	SHEET No	TOTAL SHEETS
08	Riv	91	15.6/21.6	1959	2028

REGISTERED CIVIL ENGINEER 11-30-10 DATE

4-25-11
PLANS APPROVAL DATE

The State of California or its officers or agents shall not be responsible for the accuracy or completeness of electronic copies of this plan sheet.

REGISTERED PROFESSIONAL ENGINEER HUAN VU No. 60696 Exp. 12-31-10 CIVIL STATE OF CALIFORNIA

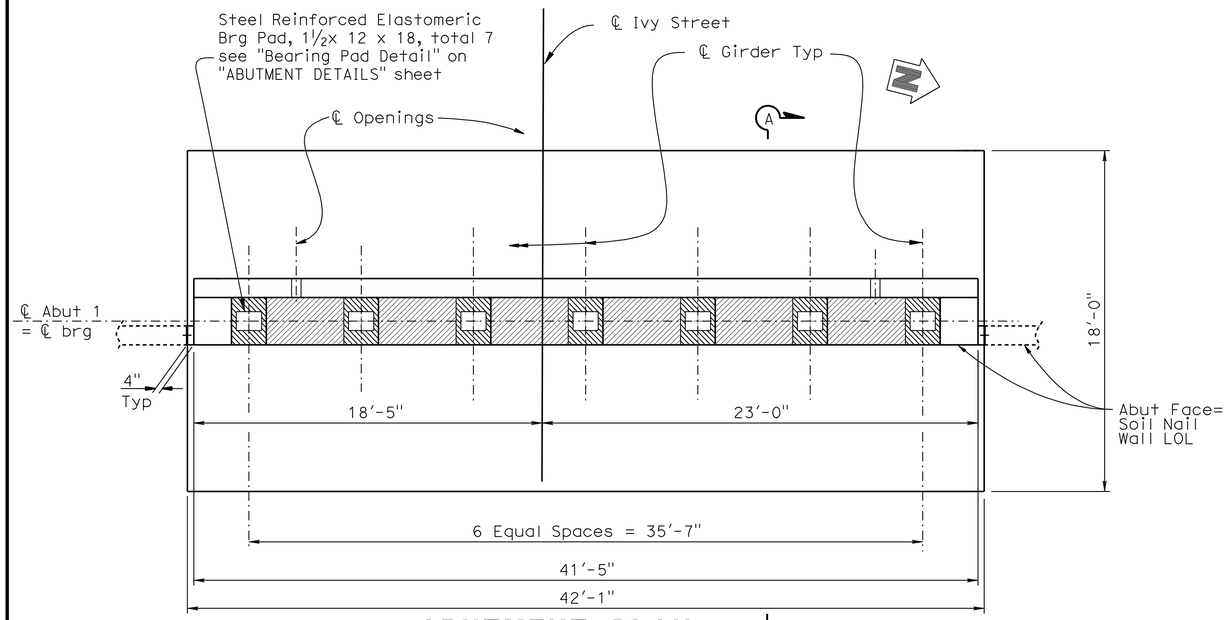

ABUTMENT PLAN

¼"=1'-0"

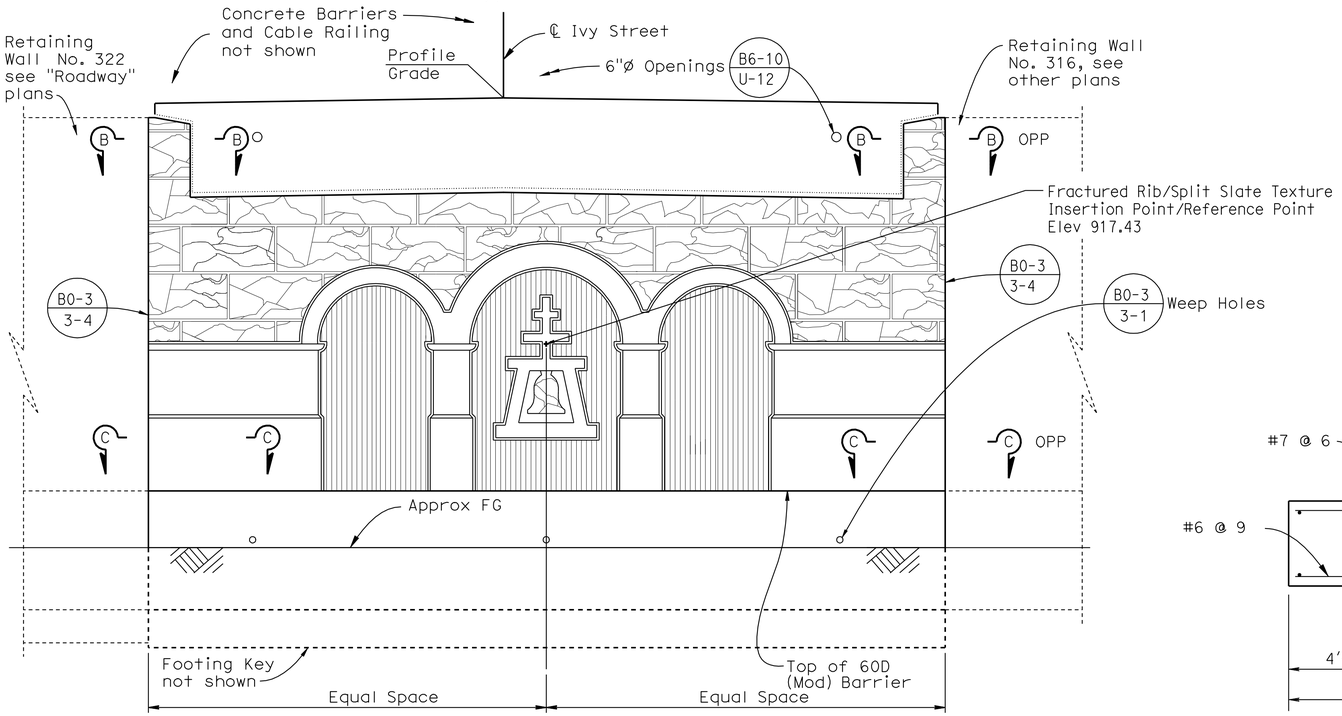

ELEVATION

¼" = 1'-0"

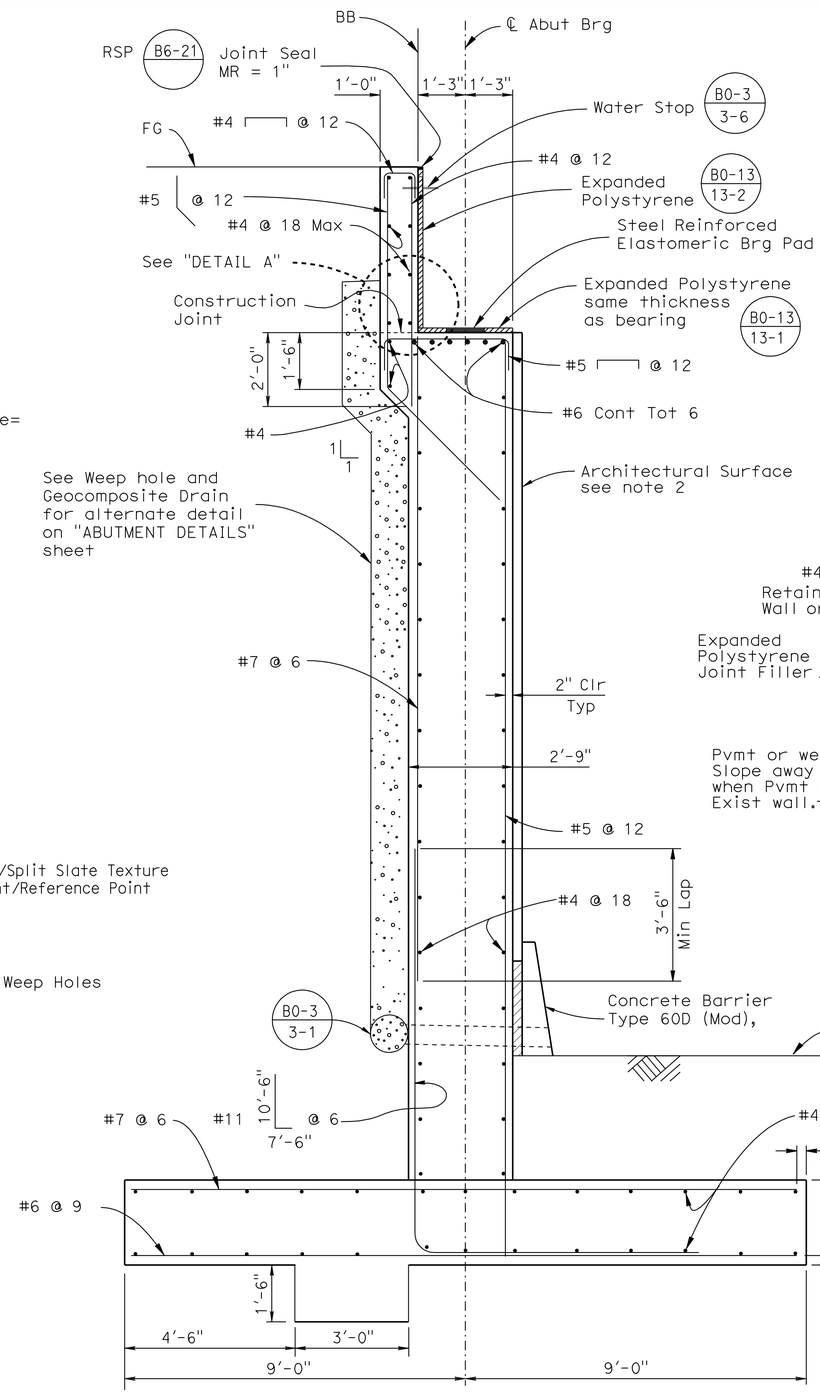

SECTION A-A

½" = 1'-0"

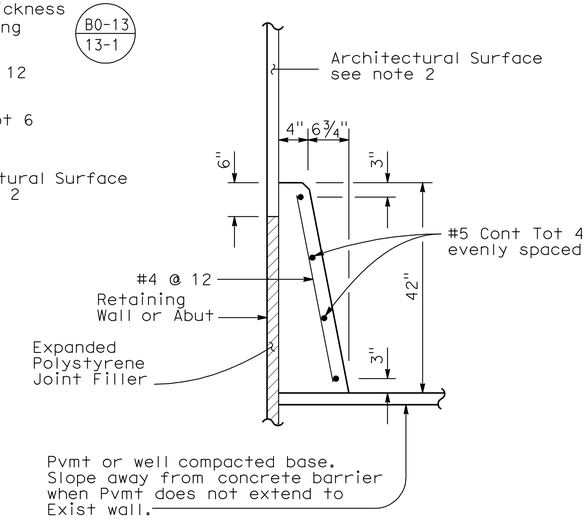

CONCRETE BARRIER TYPE 60D (MOD)

NOTES:

1. For Sections B-B, C-C, and Detail "A", see "ABUTMENT DETAILS" sheet.
2. For Fractured RIB/Split Slate Texture, See "ARCHITECTURAL DETAILS NO. 1" "ARCHITECTURAL DETAILS NO. 2" "ARCHITECTURAL DETAILS NO. 3" sheets.

DESIGN	BY M. Vo	CHECKED J. Delgado	
DETAILS	BY D.Wooten/G.Hallstrom	CHECKED J. Delgado	
QUANTITIES	BY A. McPhee	CHECKED J. Szabo	

STATE OF CALIFORNIA
DEPARTMENT OF TRANSPORTATION

DIVISION OF ENGINEERING SERVICES
STRUCTURE DESIGN
DESIGN BRANCH 10

BRIDGE NO. 56-0840
POST MILE 19.0

IVY STREET OC (REPLACE)
ABUTMENT 1 LAYOUT

STRUCTURES DESIGN DETAIL SHEET (ENGLISH) (REV. 10/25/05)

ORIGINAL SCALE IN INCHES FOR REDUCED PLANS 0 1 2 3

CU 08
EA 448401

DISREGARD PRINTS BEARING EARLIER REVISION DATES

REVISION DATES: 6-19-09 2-23-10 4-30-10 7-29-10 10-08-10 11-30-10

SHEET 5 OF 27

FILE => 560840fa11o05.dgn

USERNAME => trmnguye DATE PLOTTED => 30-APR-2011 TIME PLOTTED => 14:11

DIST	COUNTY	ROUTE	POST MILES TOTAL PROJECT	SHEET No	TOTAL SHEETS
08	Riv	91	15.6/21.6	1960	2028

REGISTERED CIVIL ENGINEER 11-30-10 DATE

4-25-11
PLANS APPROVAL DATE

REGISTERED PROFESSIONAL ENGINEER HUAN VU No. 60696 Exp. 12-31-10 CIVIL STATE OF CALIFORNIA

The State of California or its officers or agents shall not be responsible for the accuracy or completeness of electronic copies of this plan sheet.

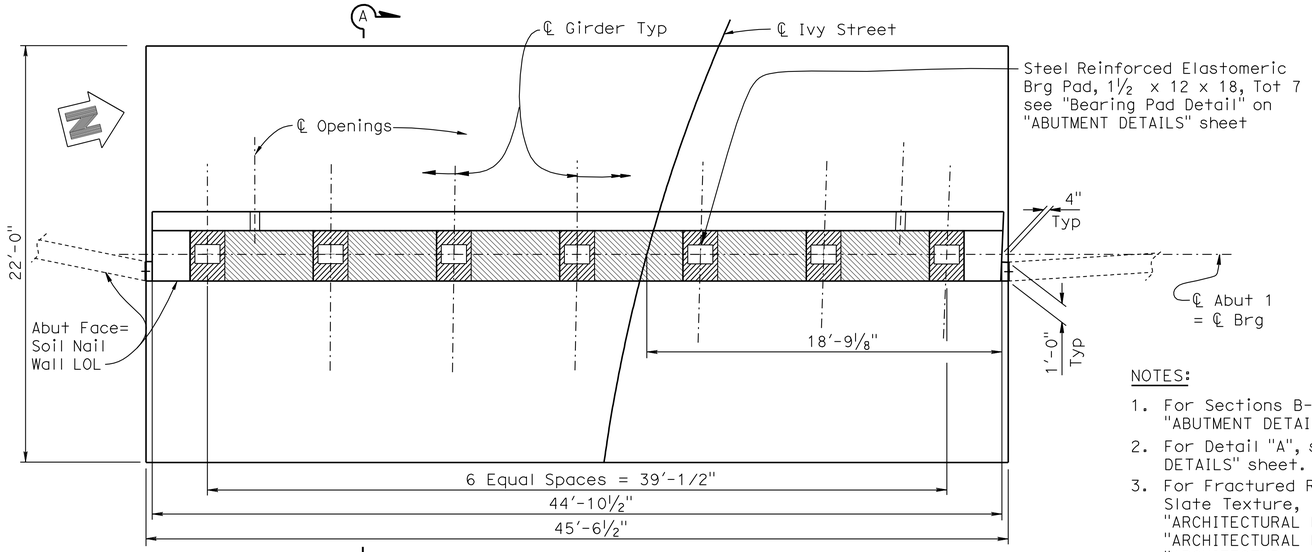

ABUTMENT PLAN

¼"=1'-0"

NOTES:

1. For Sections B-B and C-C, see "ABUTMENT DETAILS" sheet.
2. For Detail "A", see "ABUTMENT DETAILS" sheet.
3. For Fractured RIB/Split Slate Texture, See "ARCHITECTURAL DETAILS NO. 1" "ARCHITECTURAL DETAILS NO. 2" "ARCHITECTURAL DETAILS NO. 3" sheets.

Indicates bundled rebar

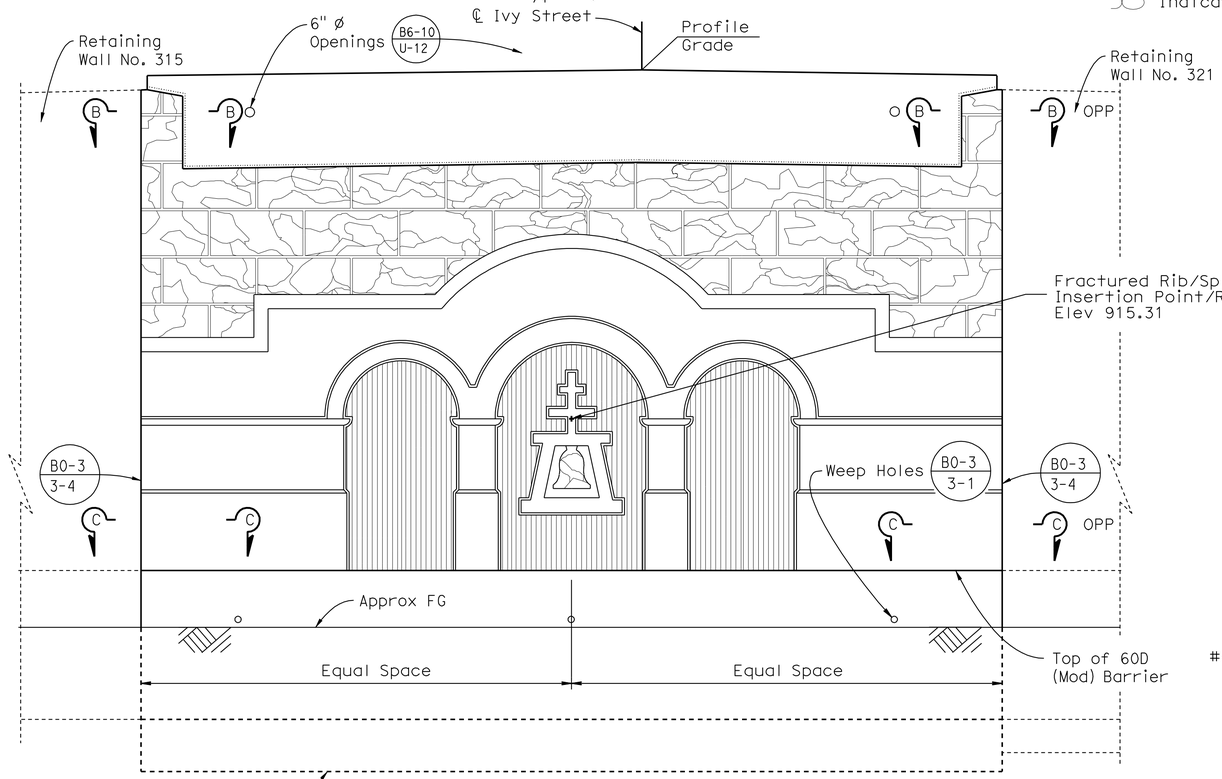

ELEVATION

¼" = 1'-0"

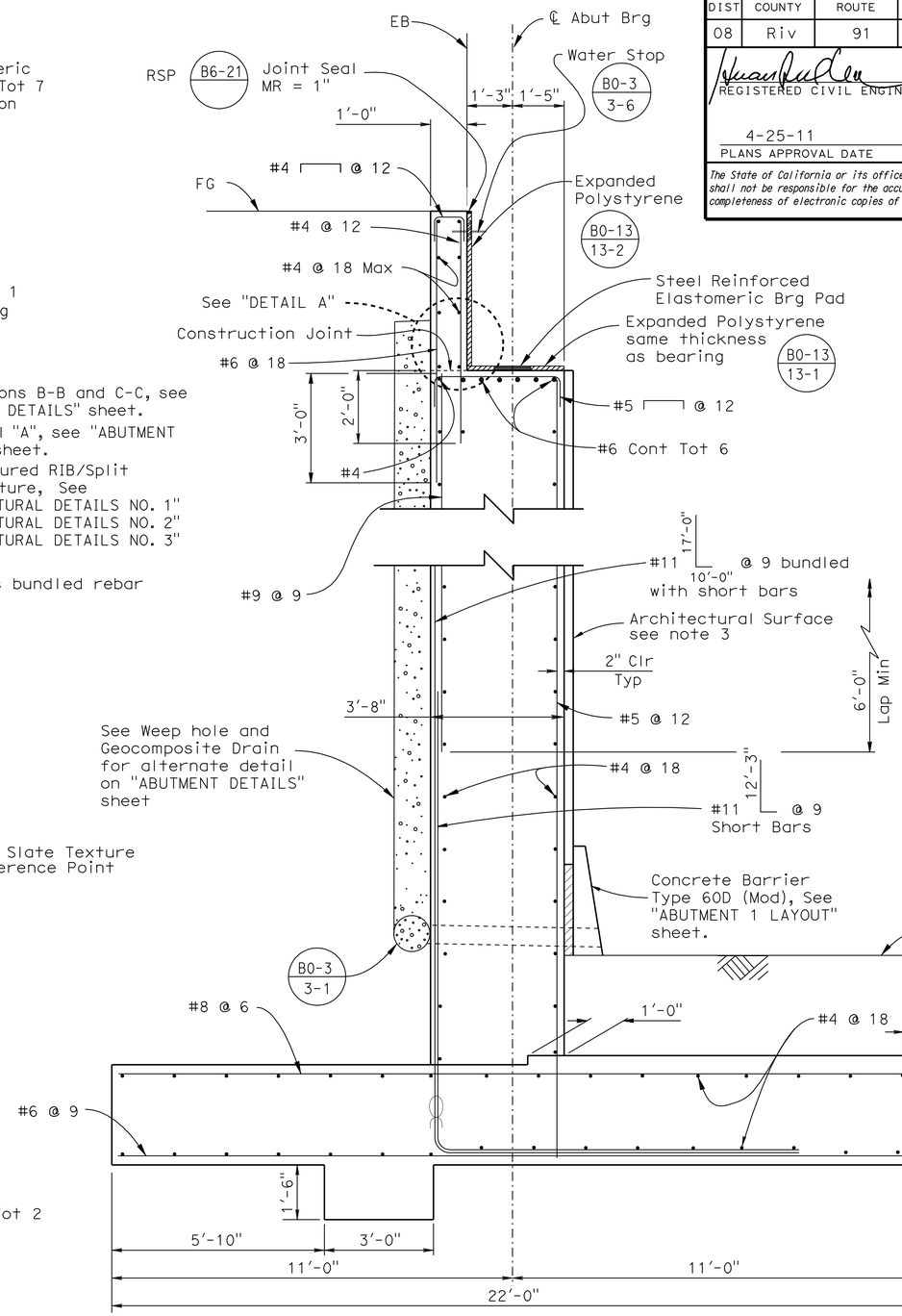

SECTION A-A

½" = 1'-0"

DESIGN	BY M. Vo / H. Vu	CHECKED J. Delgado	
DETAILS	BY D.Wooten/G.Hallstrom	CHECKED J. Delgado	
QUANTITIES	BY A. McPhee	CHECKED J. Szabo	

STATE OF CALIFORNIA
DEPARTMENT OF TRANSPORTATION

DIVISION OF ENGINEERING SERVICES
STRUCTURE DESIGN
DESIGN BRANCH 10

BRIDGE NO. 56-0840
POST MILE 19.0

IVY STREET OC (REPLACE)
ABUTMENT 3 LAYOUT

STRUCTURES DESIGN DETAIL SHEET (ENGLISH) (REV. 10/25/05)

ORIGINAL SCALE IN INCHES FOR REDUCED PLANS 0 1 2 3

CU 08
EA 448401

DISREGARD PRINTS BEARING EARLIER REVISION DATES

REVISION DATES: 6-19-09 | 2-24-10 | 4-26-10 | 7-26-10 | 10-28-10 | 11-30-10

SHEET 6 OF 27

FILE => 560840fa31o06.dgn

USERNAME => trmnguye DATE PLOTTED => 30-APR-2011 TIME PLOTTED => 14:11

DIST	COUNTY	ROUTE	POST MILES TOTAL PROJECT	SHEET No	TOTAL SHEETS
08	Riv	91	15.6/21.6	1961	2028

REGISTERED CIVIL ENGINEER 11-30-10 DATE

4-25-11
PLANS APPROVAL DATE

REGISTERED PROFESSIONAL ENGINEER HUAN VU No. 60696 Exp. 12-31-10 CIVIL STATE OF CALIFORNIA

The State of California or its officers or agents shall not be responsible for the accuracy or completeness of electronic copies of this plan sheet.

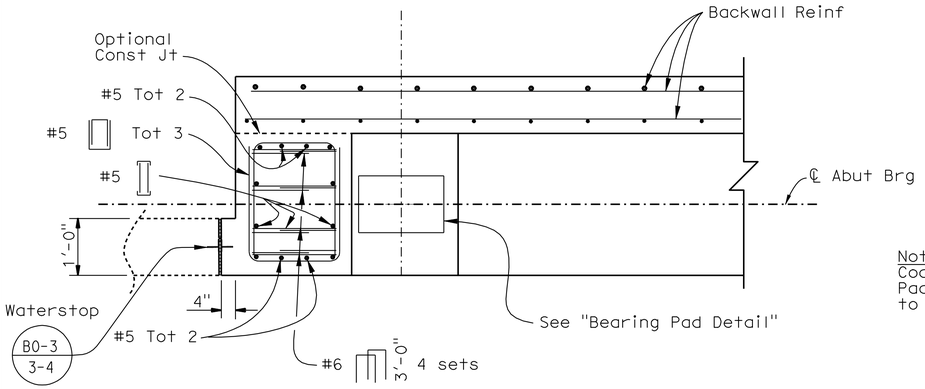

SECTION B-B

¾"=1'-0"

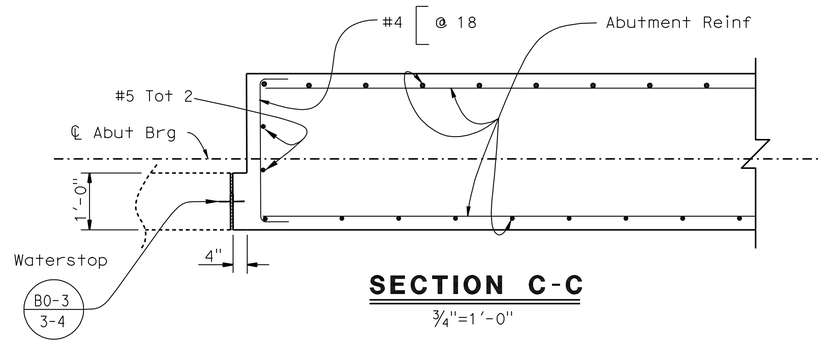

SECTION C-C

¾"=1'-0"

NOTE: For details and Reinf not shown see Section A-A

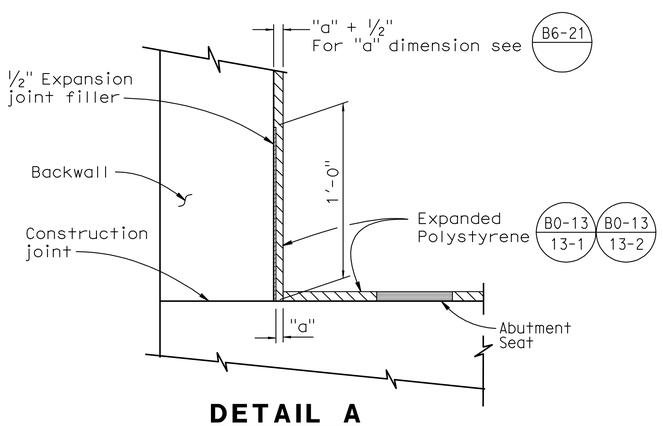

DETAIL A

No Scale

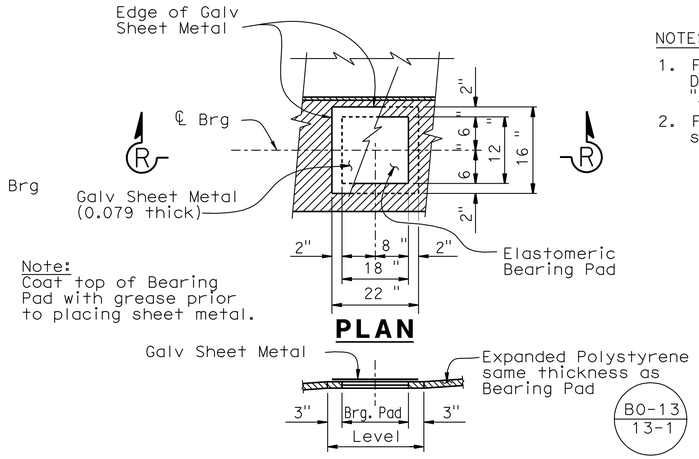

Note:
Coat top of Bearing Pad with grease prior to placing sheet metal.

PLAN

SECTION R-R

BEARING PAD DETAIL

No Scale
Details typical at all bearing pads

NOTES:

1. For location of Sections B-B, C-C, and Detail A, see "ABUTMENT 1 LAYOUT", and "ABUTMENT 3 LAYOUT" sheets.
2. For Section A-A, see "ABUTMENT 1 LAYOUT" sheet.

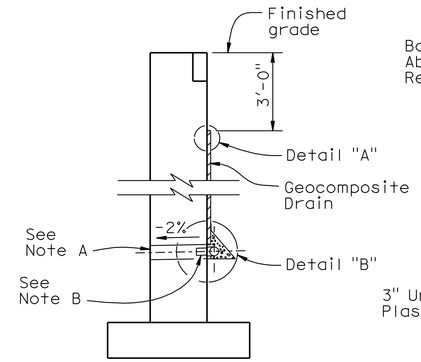

WALL SECTION

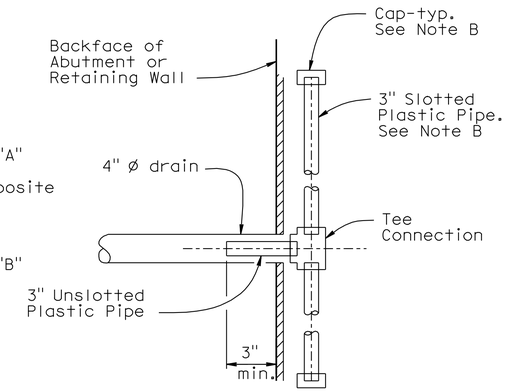

SECTION A-A

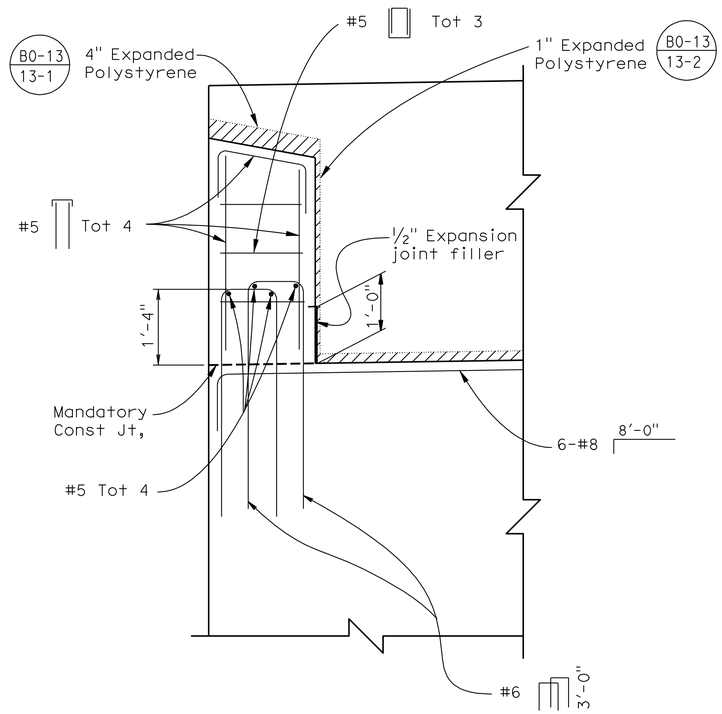

SHEAR KEY ELEVATION

¾"=1'-0"

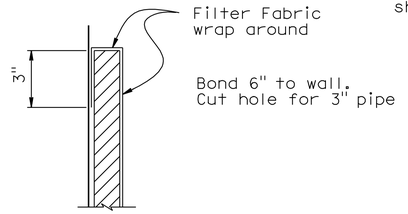

DETAIL "A"

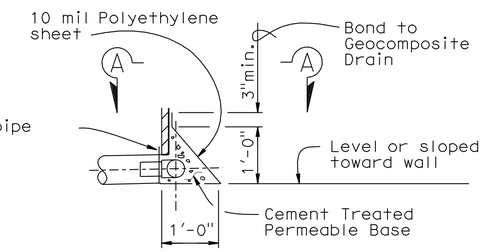

DETAIL "B"

WEEP HOLE AND GEOCOMPOSITE DRAIN

ALTERNATIVE TO BRIDGE DETAIL B0-3 / 3-1

Notes:

A. 4" ø drains at intermediate sag points and at 25' max center to center (9' c-c for Type 3 and 9'-3" c-c for Type 4 retaining walls).
For walls adjacent to sidewalks or curbs, provide 4" cast iron or asbestos cement pipe under the sidewalk to discharge through curb face.
Exposed wall drains shall be located 3"± above finished grade.

B. Geocomposite drain, cement treated permeable base, and 3"ø slotted plastic pipe continuous behind retaining wall or abutment. Cap ends of pipe. Provide "Tee" connection at each 4" ø drain.

C. Connect the low end of plastic pipe to the main outlet pipe as apprlicable.

DESIGN	BY M. Vo	CHECKED J. Delgado	
DETAILS	BY D.Wooten	CHECKED J. Delgado	
QUANTITIES	BY A. McPhee	CHECKED J. Szabo	

STATE OF CALIFORNIA
DEPARTMENT OF TRANSPORTATION

DIVISION OF ENGINEERING SERVICES
STRUCTURE DESIGN
DESIGN BRANCH 10

BRIDGE NO. 56-0840
POST MILE 19.0

IVY STREET OC (REPLACE)
ABUTMENT DETAILS

STRUCTURES DESIGN DETAIL SHEET (ENGLISH) (REV. 10/25/05)

ORIGINAL SCALE IN INCHES FOR REDUCED PLANS 0 1 2 3

CU 08
EA 448401

DISREGARD PRINTS BEARING EARLIER REVISION DATES

REVISION DATES: 6-19-09 | 2-25-10 | 4-29-10 | 10-28-10

SHEET 7 OF 27

FILE => 560840fadt107.dgn

USERNAME => trmnguye DATE PLOTTED => 30-APR-2011 TIME PLOTTED => 14:11

DIST	COUNTY	ROUTE	POST MILES TOTAL PROJECT	SHEET No	TOTAL SHEETS
08	Riv	91	15.6/21.6	1962	2028

REGISTERED CIVIL ENGINEER — DATE 11-30-10

4-25-11
PLANS APPROVAL DATE

REGISTERED PROFESSIONAL ENGINEER — HUAN VU — No. 60696 — Exp. 12-31-10 — CIVIL — STATE OF CALIFORNIA

The State of California or its officers or agents shall not be responsible for the accuracy or completeness of electronic copies of this plan sheet.

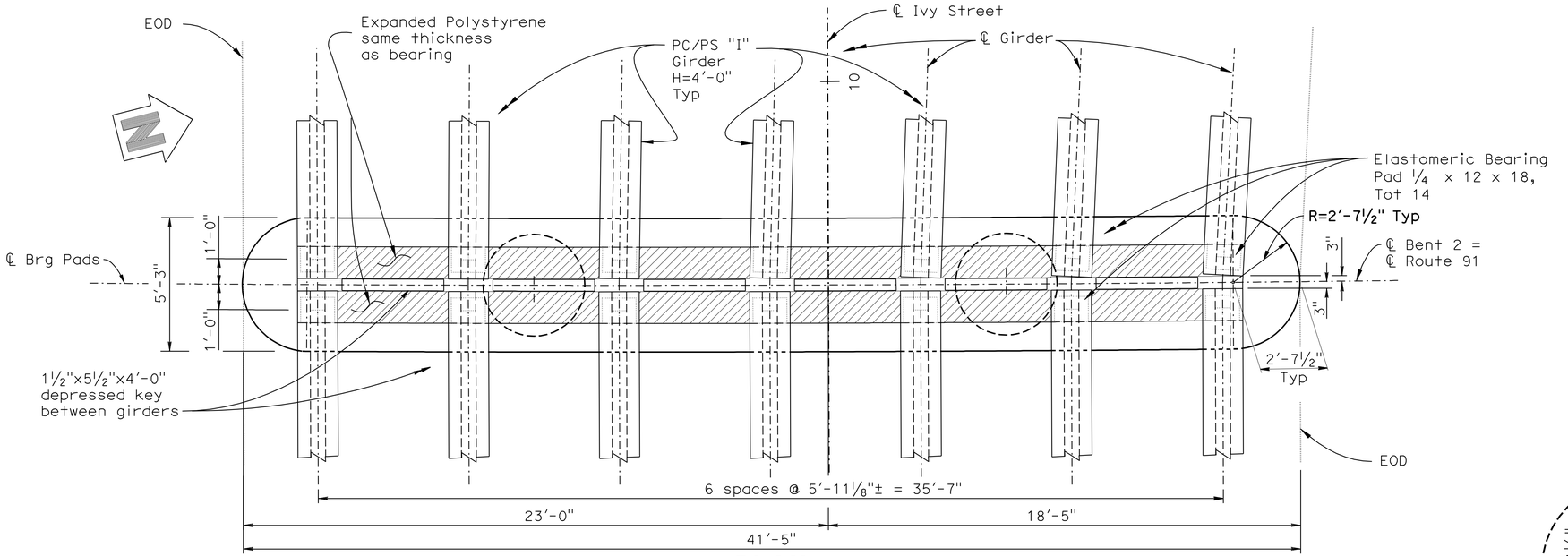

PLAN

3/8"=1'-0"

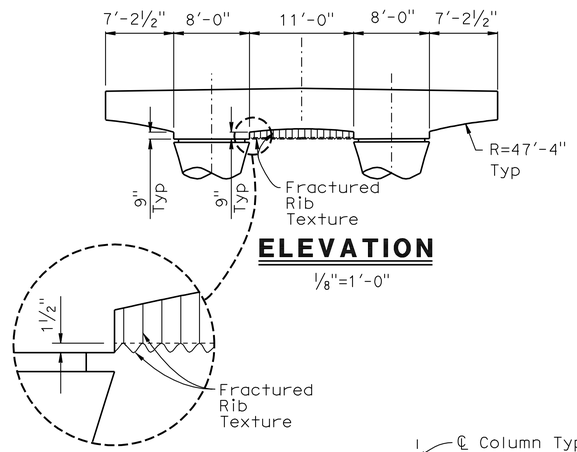

ELEVATION

1/8"=1'-0"

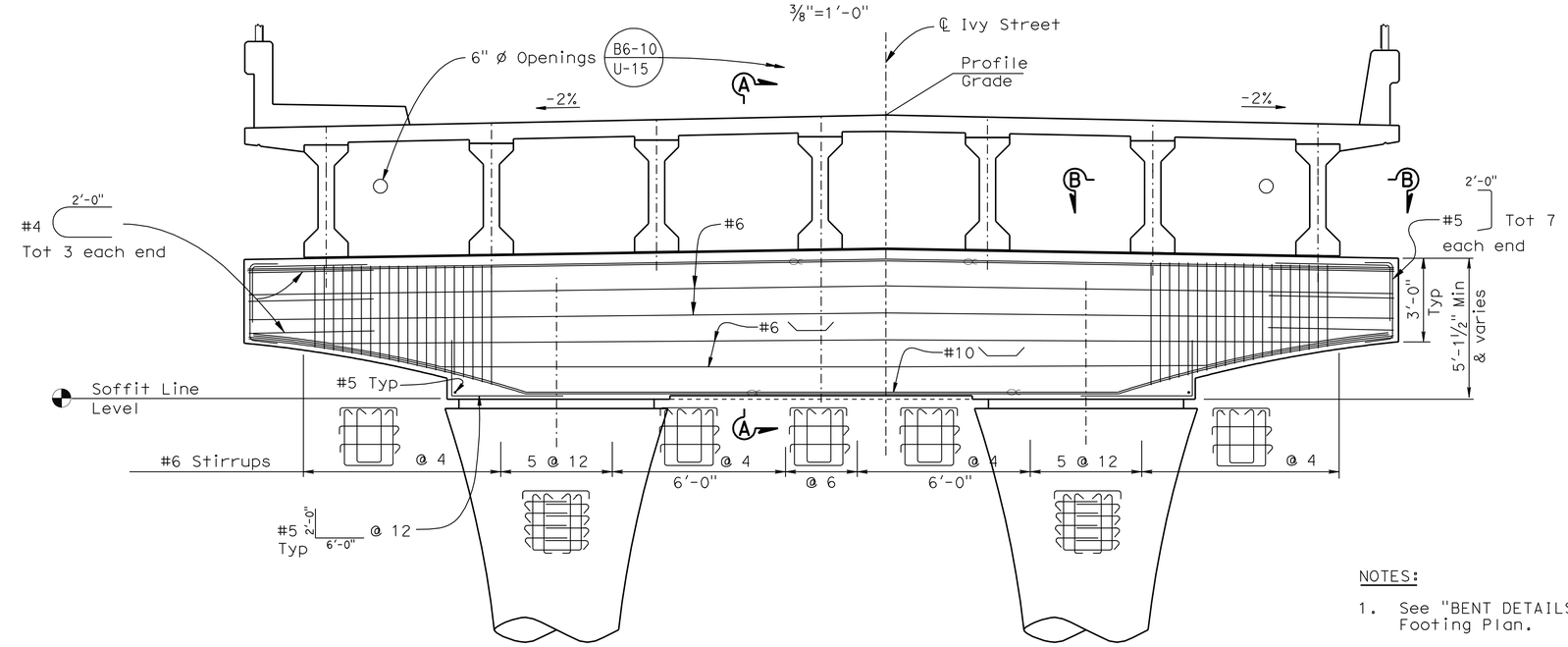

ELEVATION

3/8"=1'-0"

NOTES:

1. See "BENT DETAILS NO. 3" sheet for Footing Plan.
2. For Section A-A and Section B-B, see "BENT DETAILS NO. 2" sheet.

Indicates bundled rebar

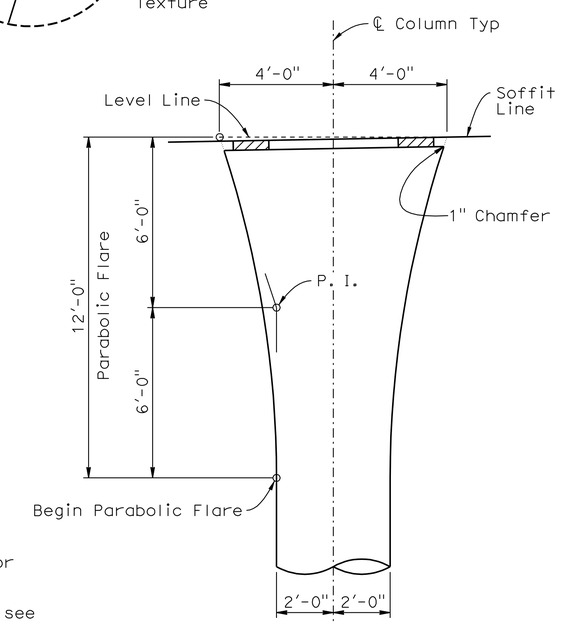

COLUMN GEOMETRICS

3/8"=1'-0"

DESIGN	BY M. Vo / H. Vu	CHECKED J. Delgado	
DETAILS	BY D.Wooten/G.Hallstrom	CHECKED J. Delgado	
QUANTITIES	BY A. McPhee	CHECKED J. Szabo	

STATE OF CALIFORNIA
DEPARTMENT OF TRANSPORTATION

DIVISION OF ENGINEERING SERVICES
STRUCTURE DESIGN
DESIGN BRANCH 10

BRIDGE NO. 56-0840
POST MILE 19.0

IVY STREET OC (REPLACE)
BENT LAYOUT

STRUCTURES DESIGN DETAIL SHEET (ENGLISH) (REV. 10/25/05)

ORIGINAL SCALE IN INCHES FOR REDUCED PLANS 0 1 2 3

CU 08
EA 448401

DISREGARD PRINTS BEARING EARLIER REVISION DATES

REVISION DATES: 6-19-09, 2-23-10, 7-30-10, 10-04-10, 10-29-10

SHEET 8 OF 27

FILE => 560840hb21o08.dgn

USERNAME => trmnguye DATE PLOTTED => 30-APR-2011 TIME PLOTTED => 14:12

DIST	COUNTY	ROUTE	POST MILES TOTAL PROJECT	SHEET No	TOTAL SHEETS
08	Riv	91	15.6/21.6	1963	2028

REGISTERED CIVIL ENGINEER 11-30-10 DATE

4-25-11
PLANS APPROVAL DATE

REGISTERED PROFESSIONAL ENGINEER HUAN VU No. 60696 Exp. 12-31-10 CIVIL STATE OF CALIFORNIA

The State of California or its officers or agents shall not be responsible for the accuracy or completeness of electronic copies of this plan sheet.

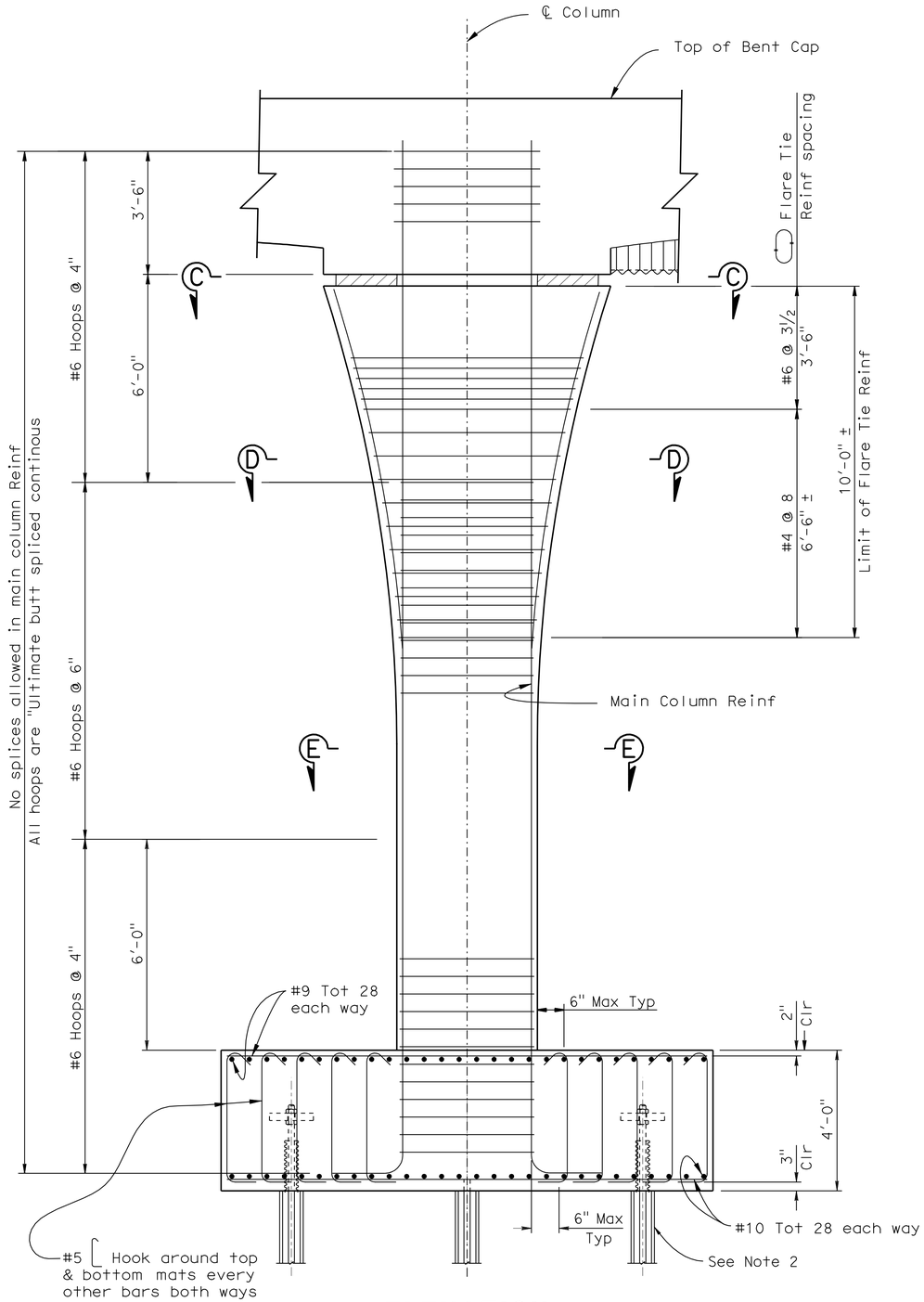

ELEVATION

½"=1'-0"

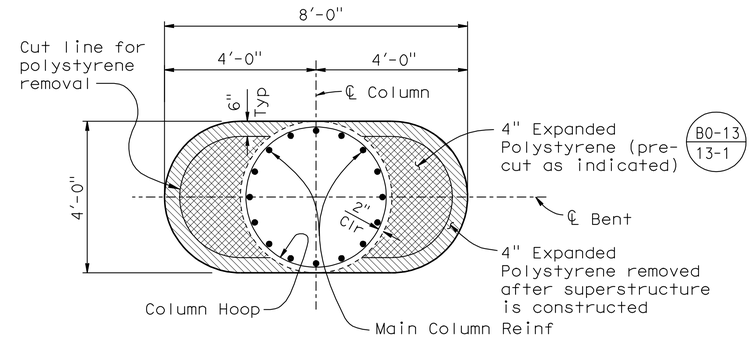

SECTION C-C

½"=1'-0"

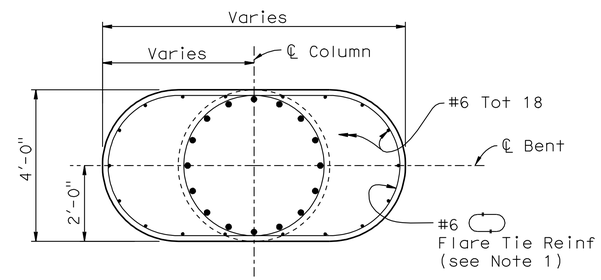

SECTION D-D

½"=1'-0"

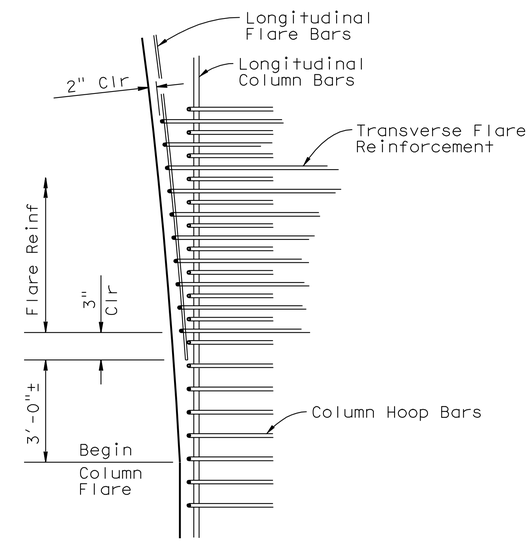

COLUMN FLARE HOOP AND TIE DETAIL

NO SCALE

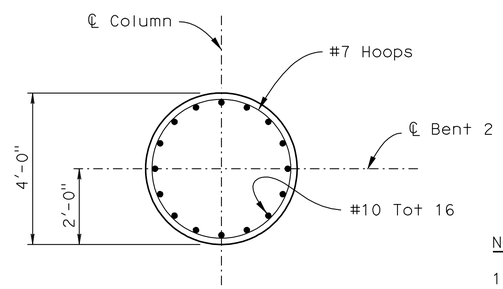

SECTION E-E

½" =1'-0"

NOTES:

1. Splice Flare Tie Reinforcement with mechanical couplers. Stagger location of couplers.
2. For Tiedown Anchor Details, see "BENT DETAILS NO. 3" sheet.

DESIGN	BY M. Vo / H. Vu	CHECKED J. Delgado	
DETAILS	BY G. Hallstrom	CHECKED J. Delgado	
QUANTITIES	BY A. McPhee	CHECKED J. Szabo	

STATE OF CALIFORNIA
DEPARTMENT OF TRANSPORTATION

DIVISION OF ENGINEERING SERVICES
STRUCTURE DESIGN
DESIGN BRANCH 10

BRIDGE NO. 56-0840
POST MILE 19.0

IVY STREET OC (REPLACE)
BENT DETAILS NO. 1

STRUCTURES DESIGN DETAIL SHEET (ENGLISH) (REV. 10/25/05)

ORIGINAL SCALE IN INCHES FOR REDUCED PLANS 0 1 2 3

CU 08
EA 448401

DISREGARD PRINTS BEARING EARLIER REVISION DATES

REVISION DATES: 6-19-09, 2-26-10, 4-29-10, 7-29-10, 9-29-10, 10-29-10

SHEET 9 OF 27

FILE => 560840hbdt09.dgn

USERNAME => trmnguye DATE PLOTTED => 30-APR-2011 TIME PLOTTED => 14:12

DIST	COUNTY	ROUTE	POST MILES TOTAL PROJECT	SHEET No	TOTAL SHEETS
08	Riv	91	15.6/21.6	1964	2028

REGISTERED CIVIL ENGINEER 11-30-10 DATE

4-25-11
PLANS APPROVAL DATE

REGISTERED PROFESSIONAL ENGINEER HUAN VU No. 60696 Exp. 12-31-10 CIVIL STATE OF CALIFORNIA

The State of California or its officers or agents shall not be responsible for the accuracy or completeness of electronic copies of this plan sheet.

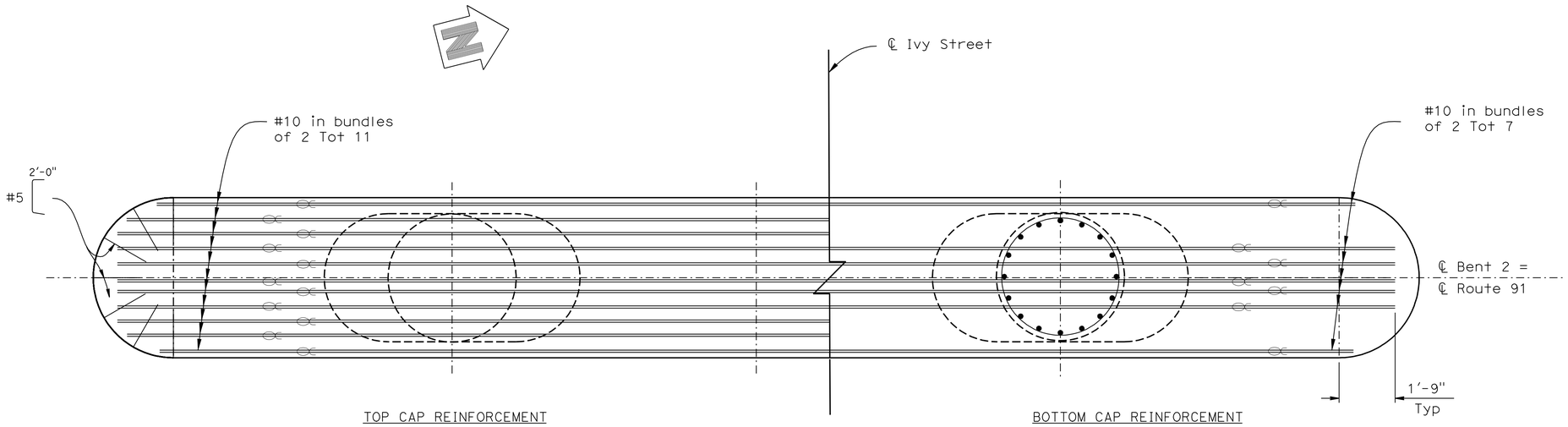

PLAN-BENT CAP

½"=1'-0"

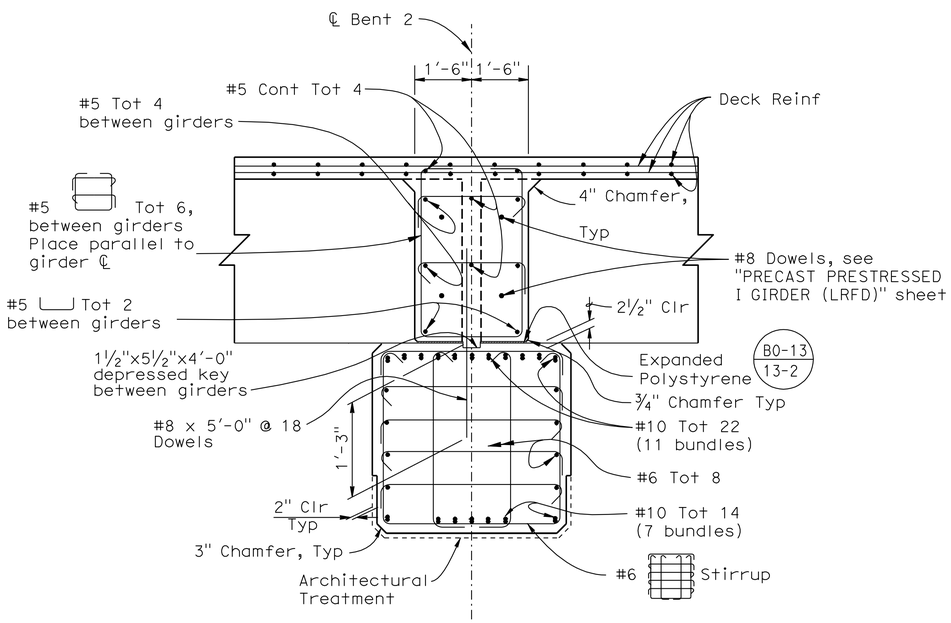

SECTION A-A

½" =1'-0"

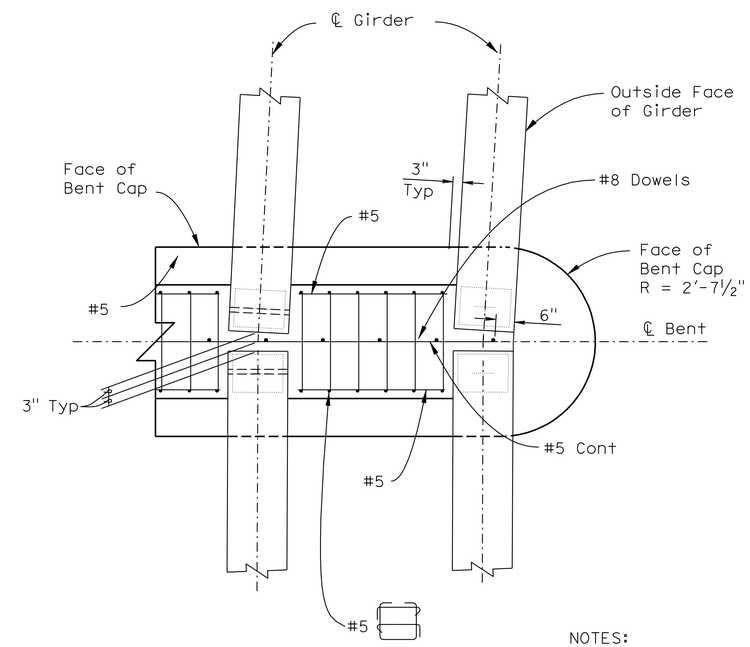

SECTION B-B

½" =1'-0"

NOTES:

1. For location of Section A-A and Section B-B, see "BENT LAYOUT" sheet.

Indicates bundled rebar

DESIGN	BY M. Vo / H. Vu	CHECKED J. Delgado	
DETAILS	BY D.Wooten	CHECKED J. Delgado	
QUANTITIES	BY A. McPhee	CHECKED J. Szabo	

STATE OF CALIFORNIA
DEPARTMENT OF TRANSPORTATION

DIVISION OF ENGINEERING SERVICES
STRUCTURE DESIGN
DESIGN BRANCH 10

BRIDGE NO. 56-0840
POST MILE 19.0

IVY STREET OC (REPLACE)
BENT DETAILS NO. 2

STRUCTURES DESIGN DETAIL SHEET (ENGLISH) (REV. 10/25/05)

ORIGINAL SCALE IN INCHES FOR REDUCED PLANS 0 1 2 3

CU 08
EA 448401

DISREGARD PRINTS BEARING EARLIER REVISION DATES

REVISION DATES: 6-19-09 2-22-10 8-09-10 10-04-10 10-29-10

SHEET 10 OF 27

FILE => 560840hbdt10.dgn

USERNAME => trmmgoye DATE PLOTTED => 30-APR-2011 TIME PLOTTED => 14:12

DIST	COUNTY	ROUTE	POST MILES TOTAL PROJECT	SHEET No	TOTAL SHEETS
08	Riv	91	15.6/21.6	1965	2028

REGISTERED CIVIL ENGINEER 11-30-10 DATE

4-25-11
PLANS APPROVAL DATE

REGISTERED PROFESSIONAL ENGINEER HUAN VU No. 60696 Exp. 12-31-10 CIVIL STATE OF CALIFORNIA

The State of California or its officers or agents shall not be responsible for the accuracy or completeness of electronic copies of this plan sheet.

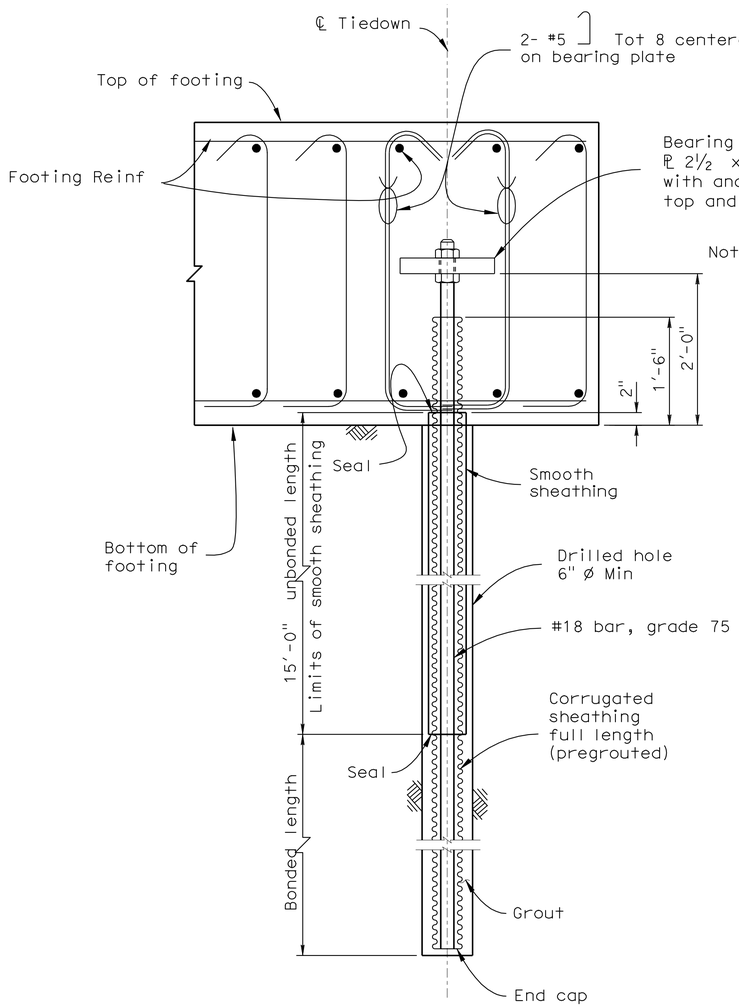

Note : The bonded length is to be determined by the contractor.

T = Design force per tiedown = 270 kips

Lock-off force per tiedown = 0 kips

TIEDOWN ANCHOR DETAIL

1"=1'-0"

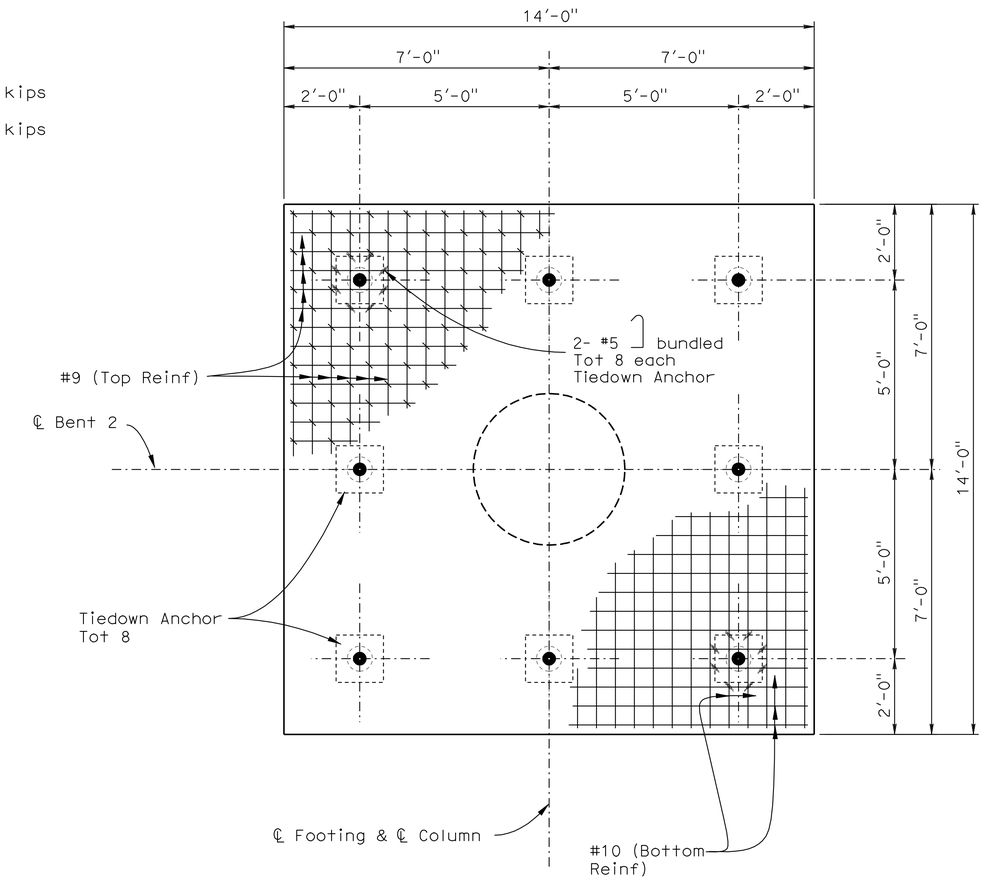

FOOTING PLAN

½"=1'-0"

DESIGN	BY M. Vo	CHECKED J. Delgado	
DETAILS	BY G. Hallstrom	CHECKED J. Delgado	
QUANTITIES	BY A. McPhee	CHECKED J. Szabo	

STATE OF CALIFORNIA
DEPARTMENT OF TRANSPORTATION

DIVISION OF ENGINEERING SERVICES
STRUCTURE DESIGN
DESIGN BRANCH 10

BRIDGE NO. 56-0840
POST MILE 19.0

IVY STREET OC (REPLACE)
BENT DETAILS NO. 3

STRUCTURES DESIGN DETAIL SHEET (ENGLISH) (REV. 10/25/05)

ORIGINAL SCALE IN INCHES FOR REDUCED PLANS 0 1 2 3

CU 08
EA 448401

DISREGARD PRINTS BEARING EARLIER REVISION DATES → 8-04-10

REVISION DATES

SHEET 11 OF 27

FILE => 560840hbdt11.dgn

USERNAME => trmnguye DATE PLOTTED => 30-APR-2011 TIME PLOTTED => 14:12

DIST	COUNTY	ROUTE	POST MILES TOTAL PROJECT	SHEET No	TOTAL SHEETS
08	Riv	91	15.6/21.6	1966	2028

REGISTERED CIVIL ENGINEER 11-30-10 DATE

4-25-11
PLANS APPROVAL DATE

REGISTERED PROFESSIONAL ENGINEER HUAN VU No. 60696 Exp. 12-31-10 CIVIL STATE OF CALIFORNIA

The State of California or its officers or agents shall not be responsible for the accuracy or completeness of electronic copies of this plan sheet.

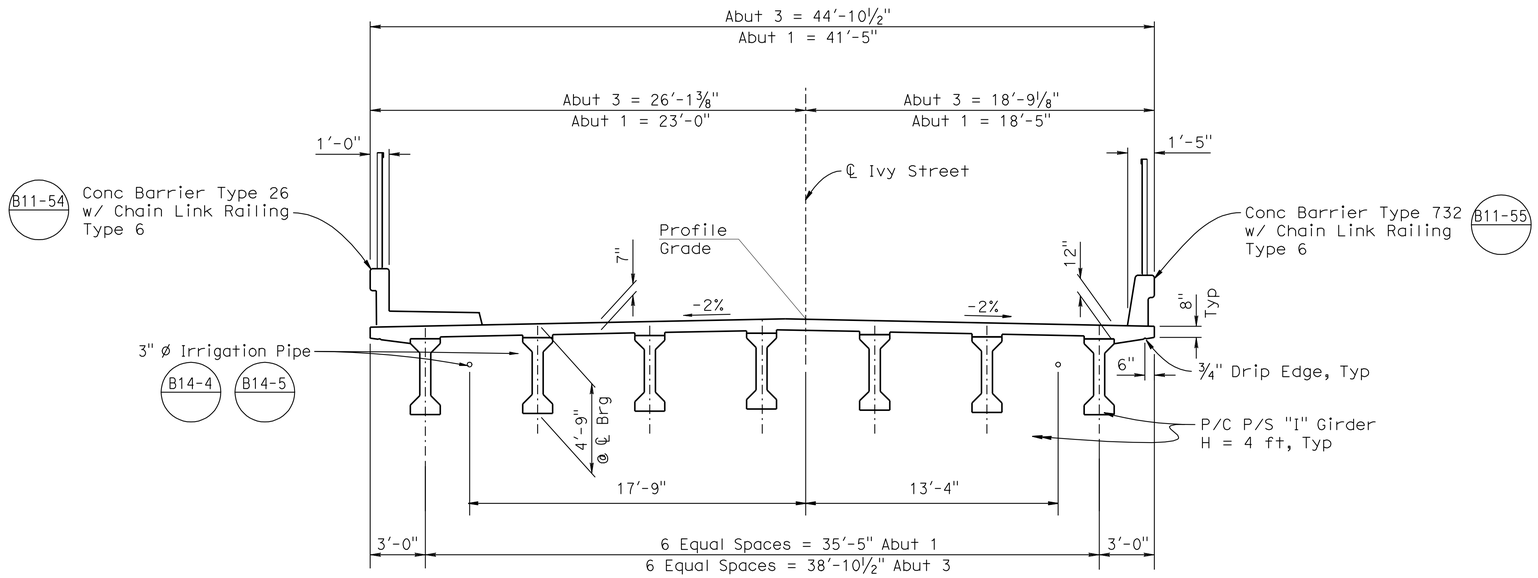

TYPICAL SECTION

¼"=1'-0"

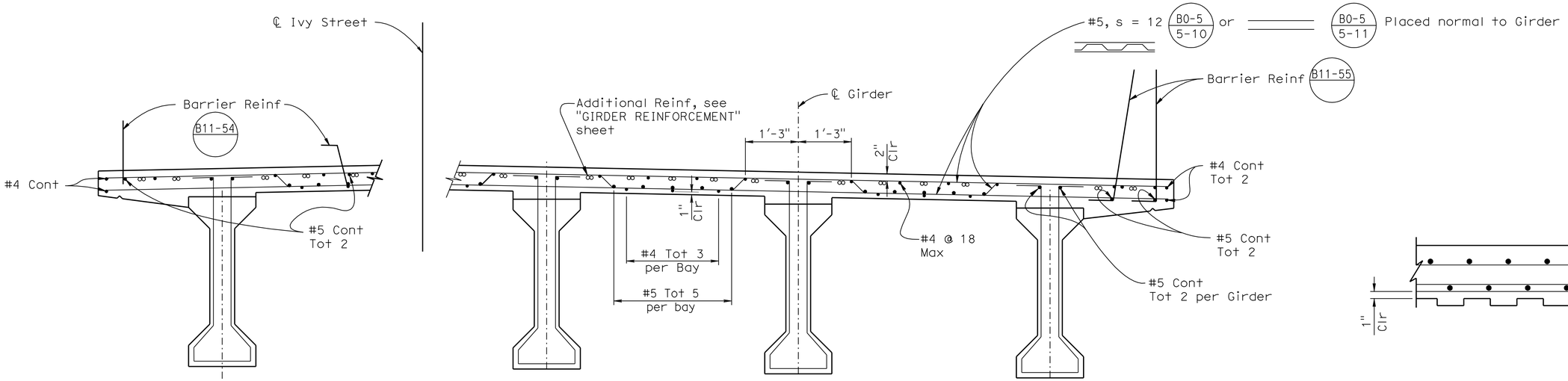

PART TYPICAL SECTION

B0-5

¾"=1'-0"

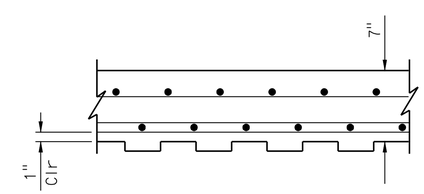

CONCRETE DECK WITH OPTIONAL PERMANENT STEEL DECK FORM

1½"=1'-0"

DESIGN	BY M. Vo	CHECKED J. Delgado	
DETAILS	BY R. Kirkland	CHECKED J. Delgado	
QUANTITIES	BY A. McPhee	CHECKED J. Szabo	

STATE OF CALIFORNIA
DEPARTMENT OF TRANSPORTATION

DIVISION OF ENGINEERING SERVICES
STRUCTURE DESIGN
DESIGN BRANCH 10

BRIDGE NO. 56-0840
POST MILE 19.0

IVY STREET OC (REPLACE)
TYPICAL SECTION

STRUCTURES DESIGN DETAIL SHEET (ENGLISH) (REV. 10/25/05)

ORIGINAL SCALE IN INCHES FOR REDUCED PLANS 0 1 2 3

CU 08
EA 448401

DISREGARD PRINTS BEARING EARLIER REVISION DATES

REVISION DATES: 6-19-09 2-23-10 4-29-10 8-04-10 10-28-10

SHEET 12 OF 27

FILE => 560840kts12.dgn

USERNAME => rrmmguye DATE PLOTTED => 30-APR-2011 TIME PLOTTED => 14:12

DIST	COUNTY	ROUTE	POST MILES TOTAL PROJECT	SHEET No	TOTAL SHEETS
08	Riv	91	15.6/21.6	1967	2028

REGISTERED CIVIL ENGINEER 11-30-10 DATE

4-25-11
PLANS APPROVAL DATE

REGISTERED PROFESSIONAL ENGINEER HUAN VU No. 60696 Exp. 12-31-10 CIVIL STATE OF CALIFORNIA

The State of California or its officers or agents shall not be responsible for the accuracy or completeness of electronic copies of this plan sheet.

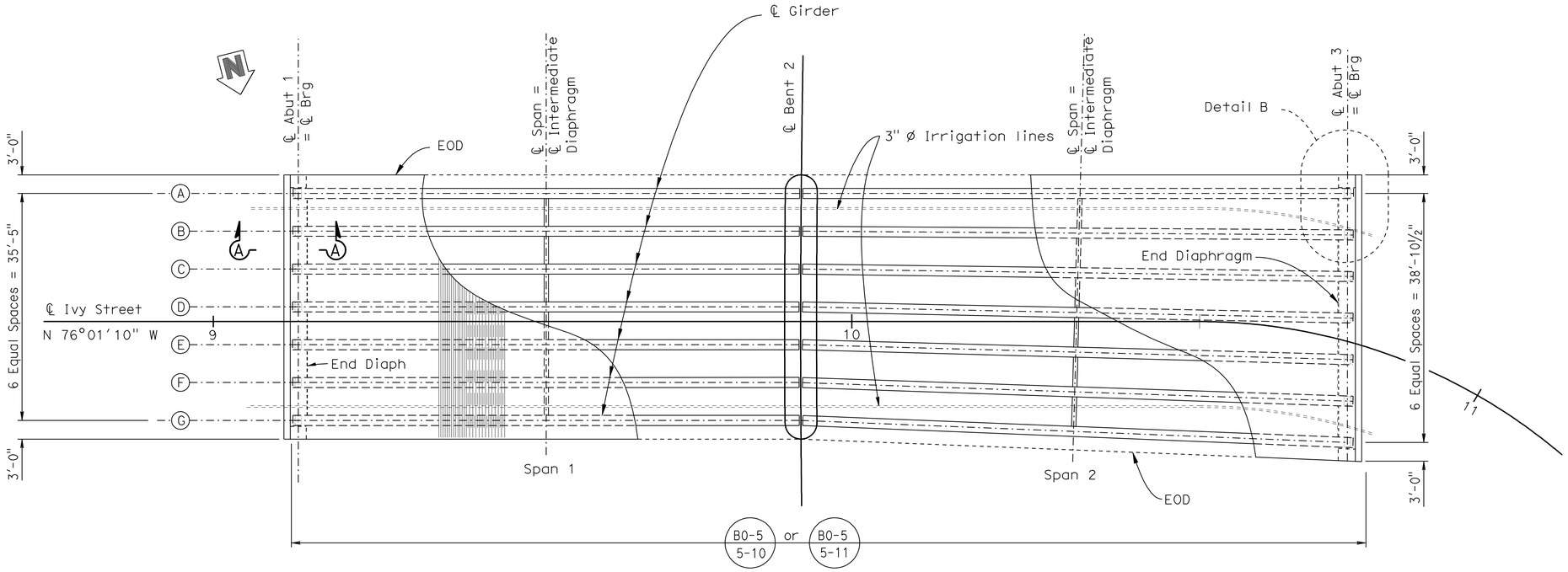

GIRDER LAYOUT

1"=10'

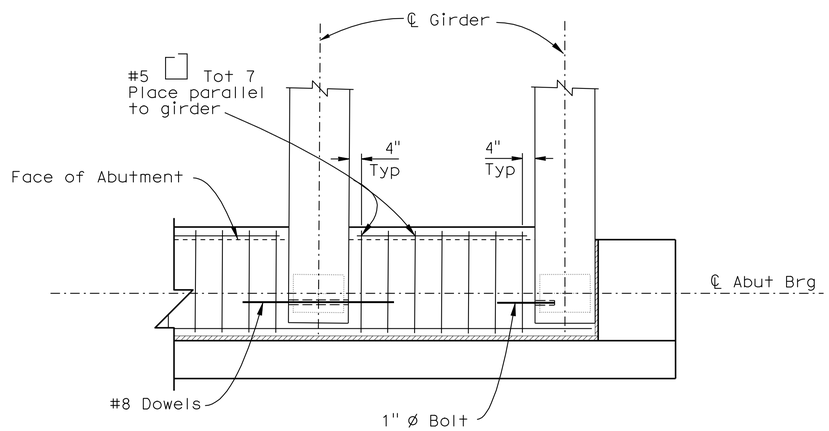

DETAIL B

½"=1'-0"

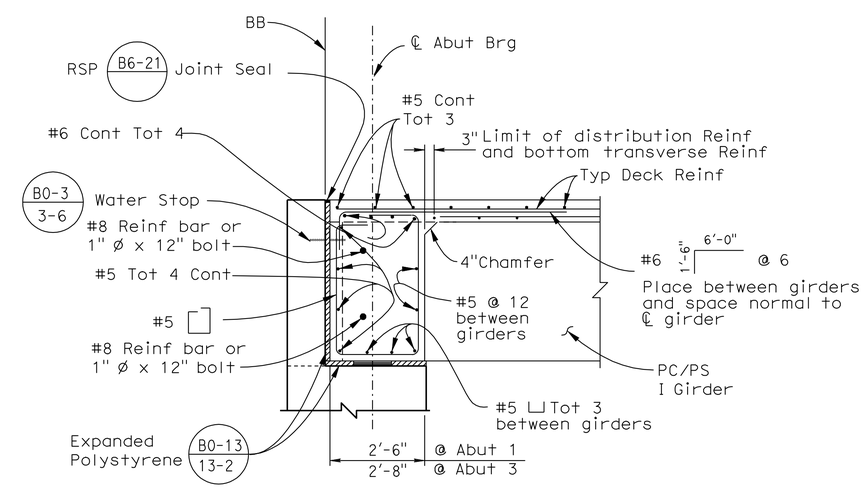

SECTION A-A
END DIAPHRAGM

½"=1'-0"

NOTE:

For Details of intermediate diaphragm, see "PRECAST PRESTRESSED I GIRDER (LRFD)" sheet.

DESIGN	BY M. Vo	CHECKED J. Delgado	
DETAILS	BY D. Wooten	CHECKED J. Delgado	
QUANTITIES	BY A. McPhee	CHECKED J. Szabo	

STATE OF CALIFORNIA
DEPARTMENT OF TRANSPORTATION

DIVISION OF ENGINEERING SERVICES
STRUCTURE DESIGN
DESIGN BRANCH 10

BRIDGE NO. 56-0840
POST MILE 19.0

IVY STREET OC (REPLACE)
GIRDER LAYOUT

STRUCTURES DESIGN DETAIL SHEET (ENGLISH) (REV. 10/25/05)

ORIGINAL SCALE IN INCHES FOR REDUCED PLANS 0 1 2 3

CU 08
EA 448401

DISREGARD PRINTS BEARING EARLIER REVISION DATES

REVISION DATES: 6-19-09 2-23-10 4-23-10 8-04-10

SHEET 13 OF 27

FILE => 5608401g_lo13.dgn

USERNAME => trmnguye DATE PLOTTED => 30-APR-2011 TIME PLOTTED => 14:12

DIST.	COUNTY	ROUTE	POST MILES TOTAL PROJECT	SHEET NO.	TOTAL SHEETS
08	Riv	91	15.6/21.6	1968	2028

REGISTERED ENGINEER - CIVIL 11-30-10

4-25-11
PLANS APPROVAL DATE

REGISTERED PROFESSIONAL ENGINEER HUAN VU No. 60696 Exp. 12-31-10 CIVIL STATE OF CALIFORNIA

The State of California or its officers or agents shall not be responsible for the accuracy or completeness of electronic copies of this plan sheet.

The State of California or its officers or agents shall not be responsible for the accuracy or completeness of electronic copies of this plan sheet.

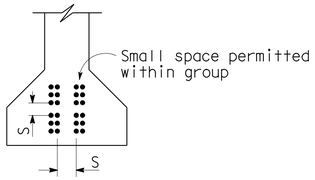

CLEARANCES FOR PRETENSIONED STRANDS

1. Strands may be bundled in groups consisting of 3 vertically 2 horizontally, and separated at the ends.
2. The min distance "S" between groups or individual strands is 1½" for ⅜" strands, 1¾" for 7/16" strands and ½" strands, 2" for 0.6" strands.
3. "S" is measured between centers of adjacent strands.
4. Approval of Engineer is required for deviation.

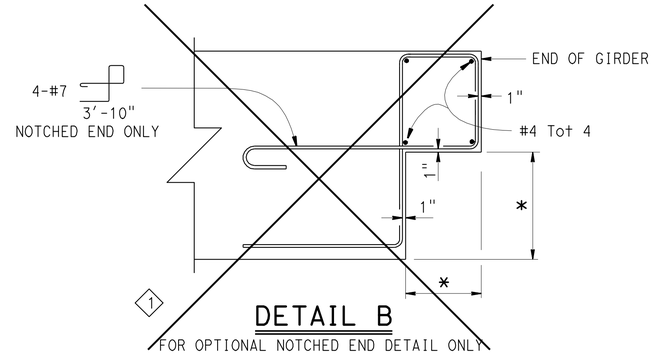

1 DETAIL B
FOR OPTIONAL NOTCHED END DETAIL ONLY

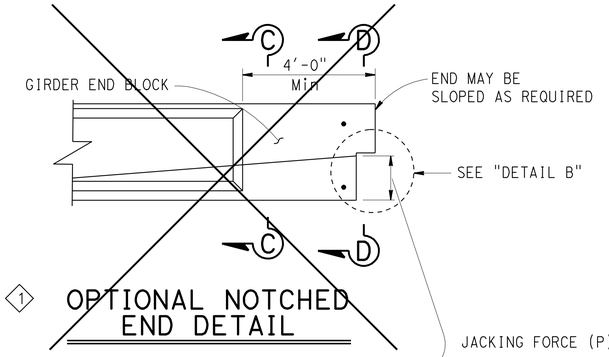

1 OPTIONAL NOTCHED END DETAIL

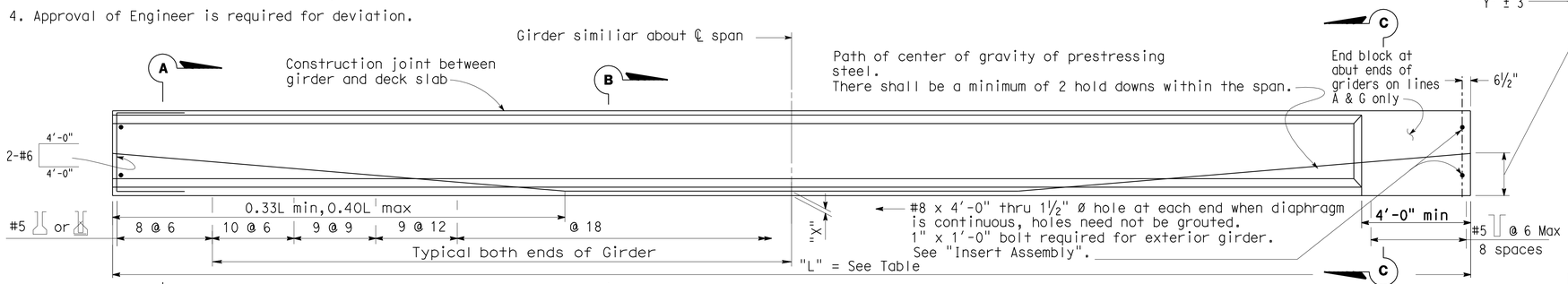

ELEVATION

PRESTRESSING NOTES

JACKING FORCE (P): The manufacture jacking force required at point of control along the span. The jacking force does not include any fabrication specific losses.

The maximum tensile stress in the prestressing steel upon release shall not exceed 75 percent of the specified minimum ultimate tensile strength of the prestressing steel.

The maximum temporary tensile stress (jacking stress) in the prestressing steel shall not exceed 80 percent of the specified minimum ultimate tensile strength of the prestressing steel.

CONCRETE STRENGTH: f'ci (Ksi) is at time of initial stressing.
f'c (ksi) is at 28 days

DEFLECTION COMPONENTS: Informational - to be used in setting screed line elevations.

Screed line elevations for deck concrete will be determined by the Engineer.

Contractor may interpolate "P" and "X" values between limits shown, as approved by the Engineer.

Girder Location			Jacking Force (P) (Kips)		"Y" (in)	Concrete Strength (Ksi)		Deflection Components in Inches	
Span	Designator	Length Ft	"X" (in)			f'ci	f'c	1 Deck DL	2 Rail DL
1	A - F	79.33	4	650	15	5.0	8.0	0.7	0.04
			6	680					
2	A - F	86.25	4	750	15	5.0	8.0	1.0	0.06
			6	780					

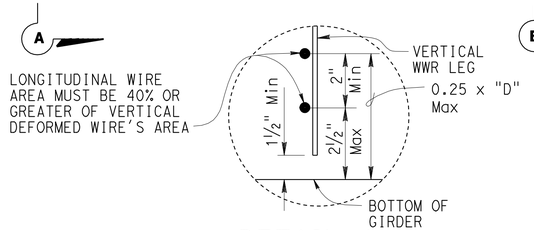

DETAIL A

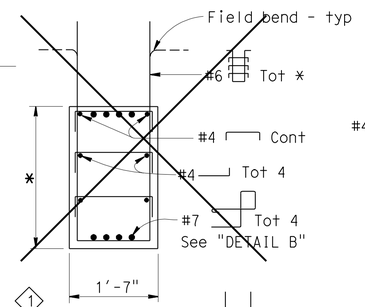

1 SECTION D-D

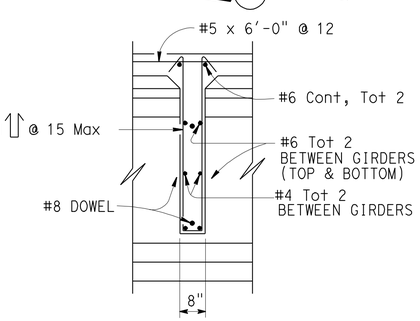

SECTION E-E

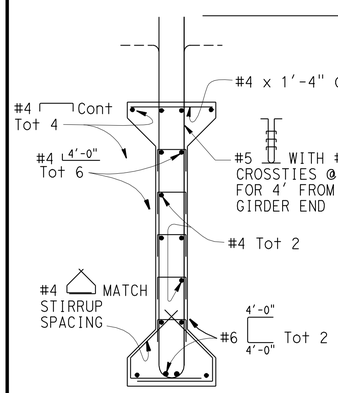

SECTION A-A

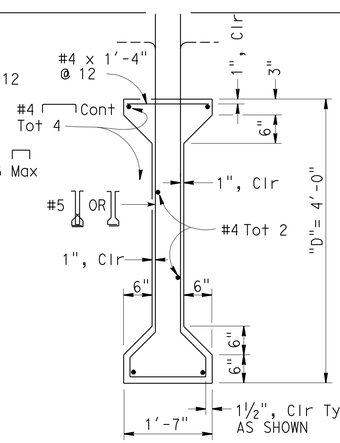

SECTION B-B

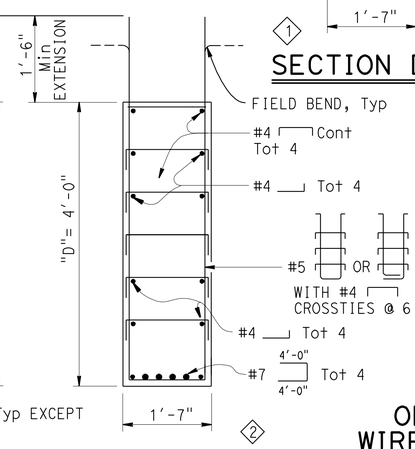

2 SECTION C-C

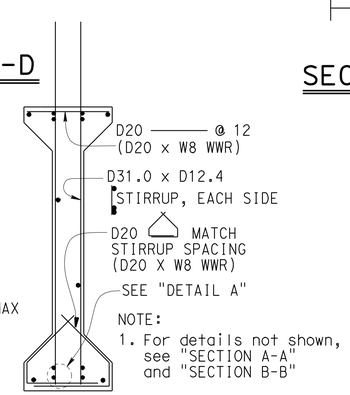

NOTE:
1. For details not shown, see "SECTION A-A" and "SECTION B-B"

OPTIONAL WELDED WIRE REINFORCEMENT (WWR) DETAIL

WWR NOTE: MANUFACTURER'S SHOP DRAWING SHALL CONFORM TO THE REINFORCEMENT SHOWN ON THIS SHEET AS NOTED AND THE SPECIAL PROVISIONS

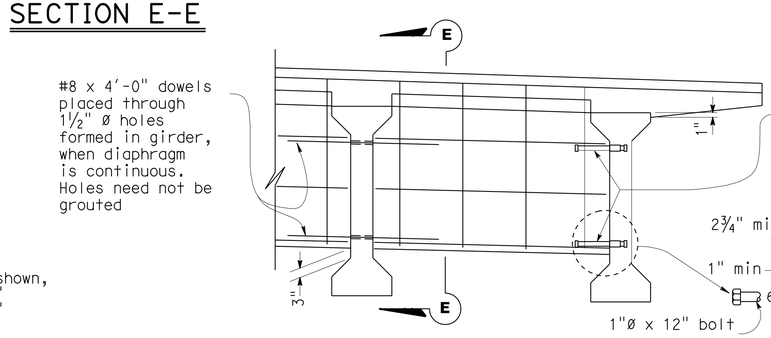

INTERMEDIATE DIAPHRAGM

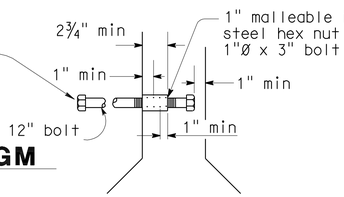

INSERT ASSEMBLY

STANDARD DRAWING

FILE NO. xs 1-120-e

APPROVED BY Jim Ma (RESPONSIBLE TECHNICAL SPECIALIST)
APPROVAL DATE 02-01-10

RELEASED BY Susan Hida (RESPONSIBLE OFFICE CHIEF)
RELEASE DATE 02-01-10

1 Detail not used
2 Revised detail

STATE OF CALIFORNIA
DEPARTMENT OF TRANSPORTATION

DIVISION OF ENGINEERING SERVICES

BRIDGE NO. 56-0840
POST MILE 19.0

IVY STREET OC (REPLACE)
PRECAST PRESTRESSED I GIRDER

DS OSD 2147A (ENGLISH STANDARD DRAWING "XS" BORDER REV. 01/11/08)

ORIGINAL SCALE IN INCHES FOR REDUCED PLANS 0 1 2 3

CU 08
EA 448401

DISREGARD PRINTS BEARING EARLIER REVISION DATES

REVISION DATES (PRELIMINARY STAGE ONLY) 6-19-09 2-24-10 4-28-10 10-29-10

SHEET 14 OF 27

USERNAME => trmnguye

5608401gdt14.dgn

DATE PLOTTED => 30-APR-2011 TIME PLOTTED => 14:12

DIST	COUNTY	ROUTE	POST MILES TOTAL PROJECT	SHEET No	TOTAL SHEETS
08	Riv	91	15.6/21.6	1969	2028

REGISTERED CIVIL ENGINEER 11-30-10 DATE

4-25-11
PLANS APPROVAL DATE

REGISTERED PROFESSIONAL ENGINEER HUAN VU No. 60696 Exp. 12-31-10 CIVIL STATE OF CALIFORNIA

The State of California or its officers or agents shall not be responsible for the accuracy or completeness of electronic copies of this plan sheet.

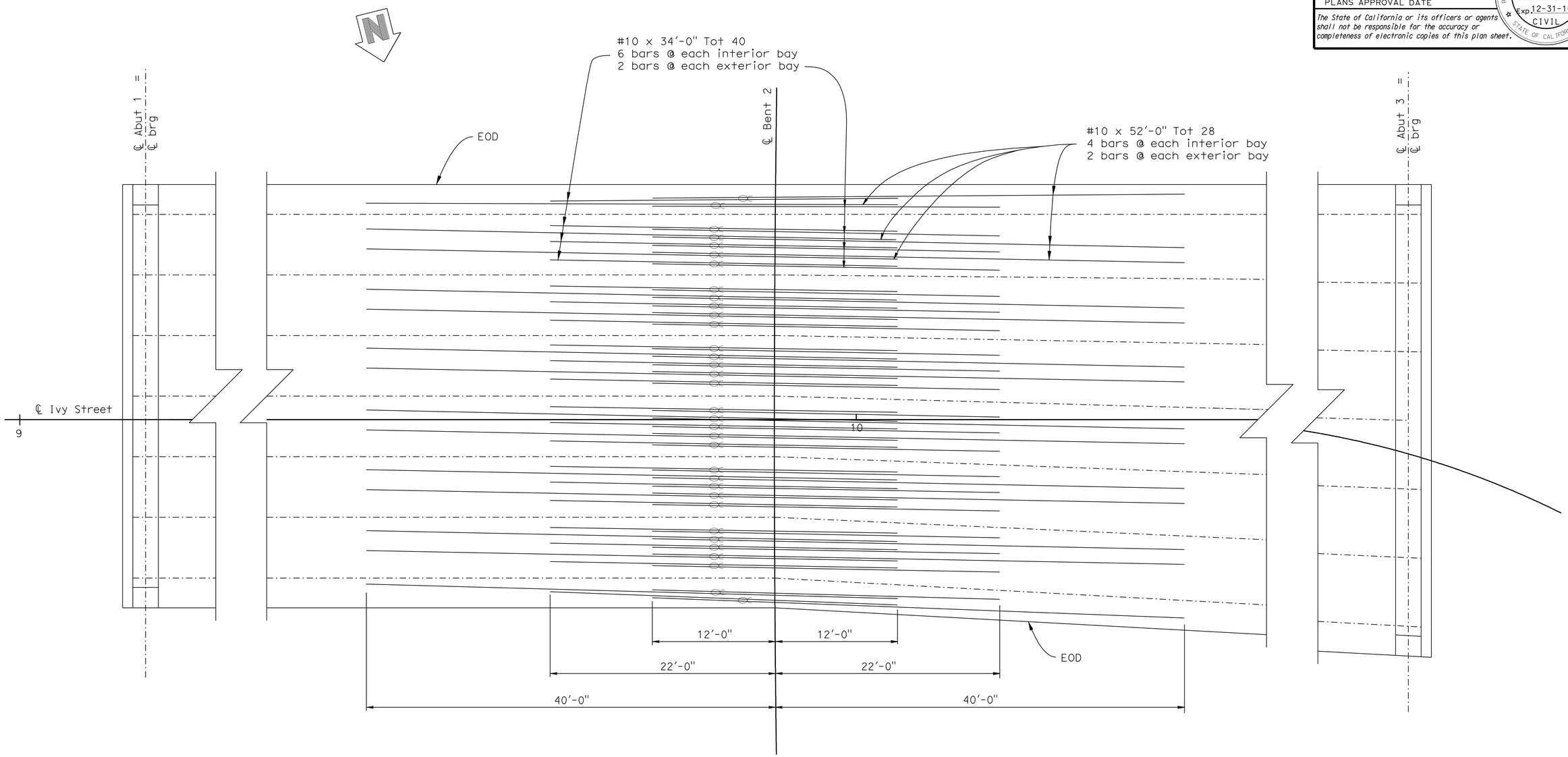

ADDITIONAL TOP GIRDER REINFORCEMENT

1"=5'

Indicates bundled rebar

DESIGN	BY M. Vo	CHECKED J. Delgado	
DETAILS	BY G. Hallstrom	CHECKED J. Delgado	
QUANTITIES	BY A. McPhee	CHECKED J. Szabo	

STATE OF CALIFORNIA
DEPARTMENT OF TRANSPORTATION

DIVISION OF ENGINEERING SERVICES
STRUCTURE DESIGN
DESIGN BRANCH 10

BRIDGE NO. 56-0840
POST MILE 19.0

IVY STREET OC (REPLACE)
GIRDER REINFORCEMENT

STRUCTURES DESIGN DETAIL SHEET (ENGLISH) (REV. 10/25/05)

ORIGINAL SCALE IN INCHES FOR REDUCED PLANS 0 1 2 3

CU 08
EA 448401

DISREGARD PRINTS BEARING EARLIER REVISION DATES

REVISION DATES: 6-19-09, 2-25-10, 4-29-10, 8-04-10

SHEET 15 OF 27

FILE => 560840ogirrf15.dgn

USERNAME => trmnguye DATE PLOTTED => 30-APR-2011 TIME PLOTTED => 14:13

Dist	COUNTY	ROUTE	POST MILES TOTAL PROJECT	SHEET No.	TOTAL SHEETS
08	Riv	91	15.6/21.6	1970	2028

11-30-10
LICENSED LANDSCAPE ARCHITECT

4-25-11
PLANS APPROVAL DATE

LICENSED LANDSCAPE ARCHITECT
Matthew Harry Hall
No. 2522
Signature
10/31/2011
Renewal Date
Date
STATE OF CALIFORNIA

THE STATE OF CALIFORNIA OR ITS OFFICERS OR AGENTS SHALL NOT BE RESPONSIBLE FOR THE ACCURACY OR COMPLETENESS OF SCANNED COPIES OF THIS PLAN SHEET.

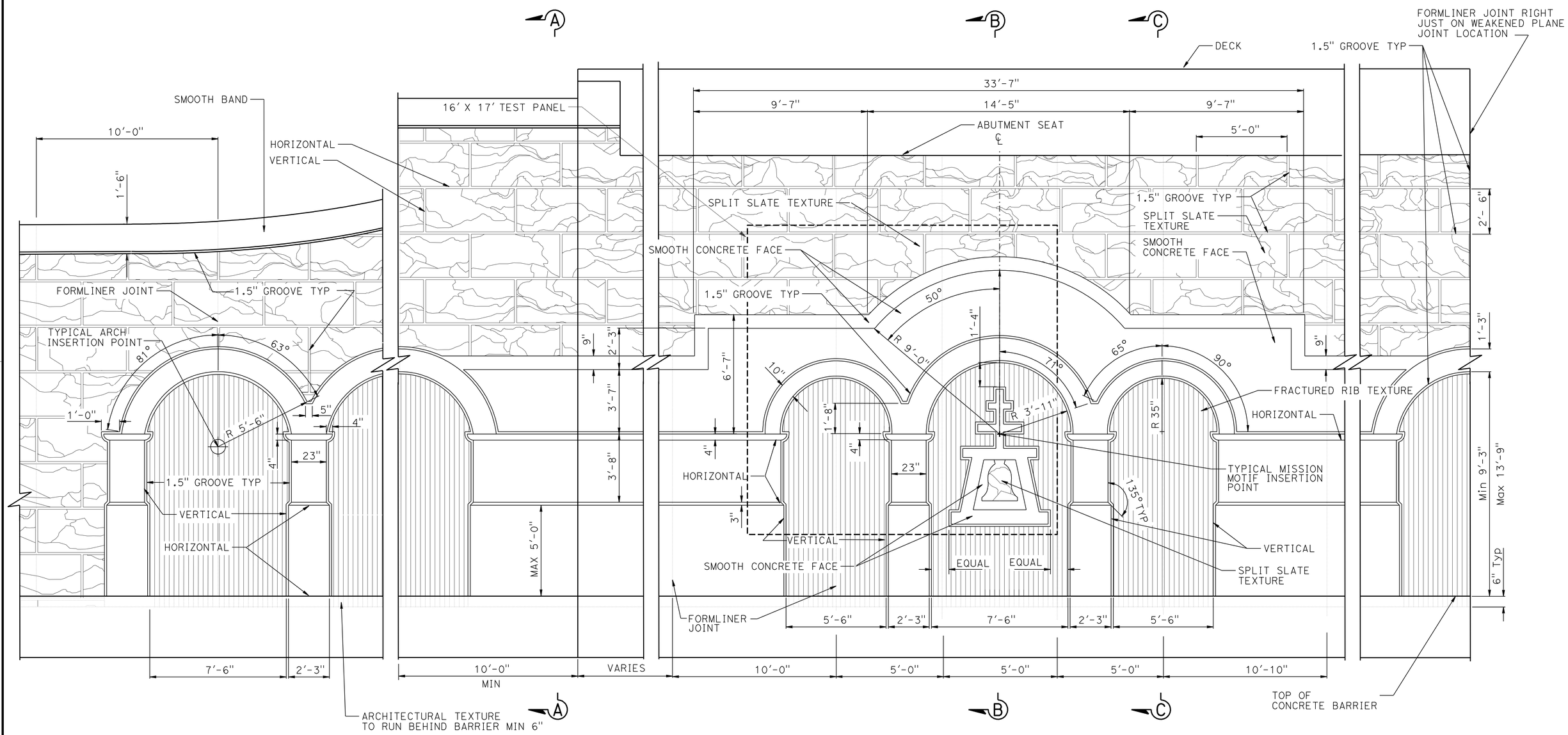

TYPICAL MISSION MOTIF ELEVATION

3/8"=1'-0"

DESIGN	BY M. Hall	CHECKED M. Bishop	
DETAILS	BY G.Hallstrom/Y.Tang	CHECKED M. Bishop	
QUANTITIES	BY A. McPhee	CHECKED J. Szabo	

STATE OF CALIFORNIA
DEPARTMENT OF TRANSPORTATION

DIVISION OF ENGINEERING SERVICES
STRUCTURE DESIGN
DESIGN BRANCH 10

BRIDGE NO. 56-0840
POST MILE 19.0

FRACTURED RIB/SPLIT SLATE TEXTURE
IVY STREET OC (REPLACE)
ARCHITECTURAL DETAILS NO. 1

STRUCTURES DESIGN DETAIL SHEET (ENGLISH) (REV. 10/25/05)

ORIGINAL SCALE IN INCHES FOR REDUCED PLANS 0 1 2 3

CU 08
EA 448401

DISREGARD PRINTS BEARING EARLIER REVISION DATES 8-24-10 11-12-10

REVISION DATES

SHEET 16 OF 27

FILE => 560840sardt16.dgn

USERNAME => trmmguye DATE PLOTTED => 30-APR-2011 TIME PLOTTED => 14:13

Dist	COUNTY	ROUTE	POST MILES TOTAL PROJECT	SHEET No.	TOTAL SHEETS
08	Riv	91	15.6/21.6	1971	2028

11-30-10
LICENSED LANDSCAPE ARCHITECT

4-25-11
PLANS APPROVAL DATE

LICENSED LANDSCAPE ARCHITECT
Matthew Harry Hall
No. 4401
Signature
10/31/2011
Renewal Date
Date
STATE OF CALIFORNIA

THE STATE OF CALIFORNIA OR ITS OFFICERS OR AGENTS SHALL NOT BE RESPONSIBLE FOR THE ACCURACY OR COMPLETENESS OF SCANNED COPIES OF THIS PLAN SHEET.

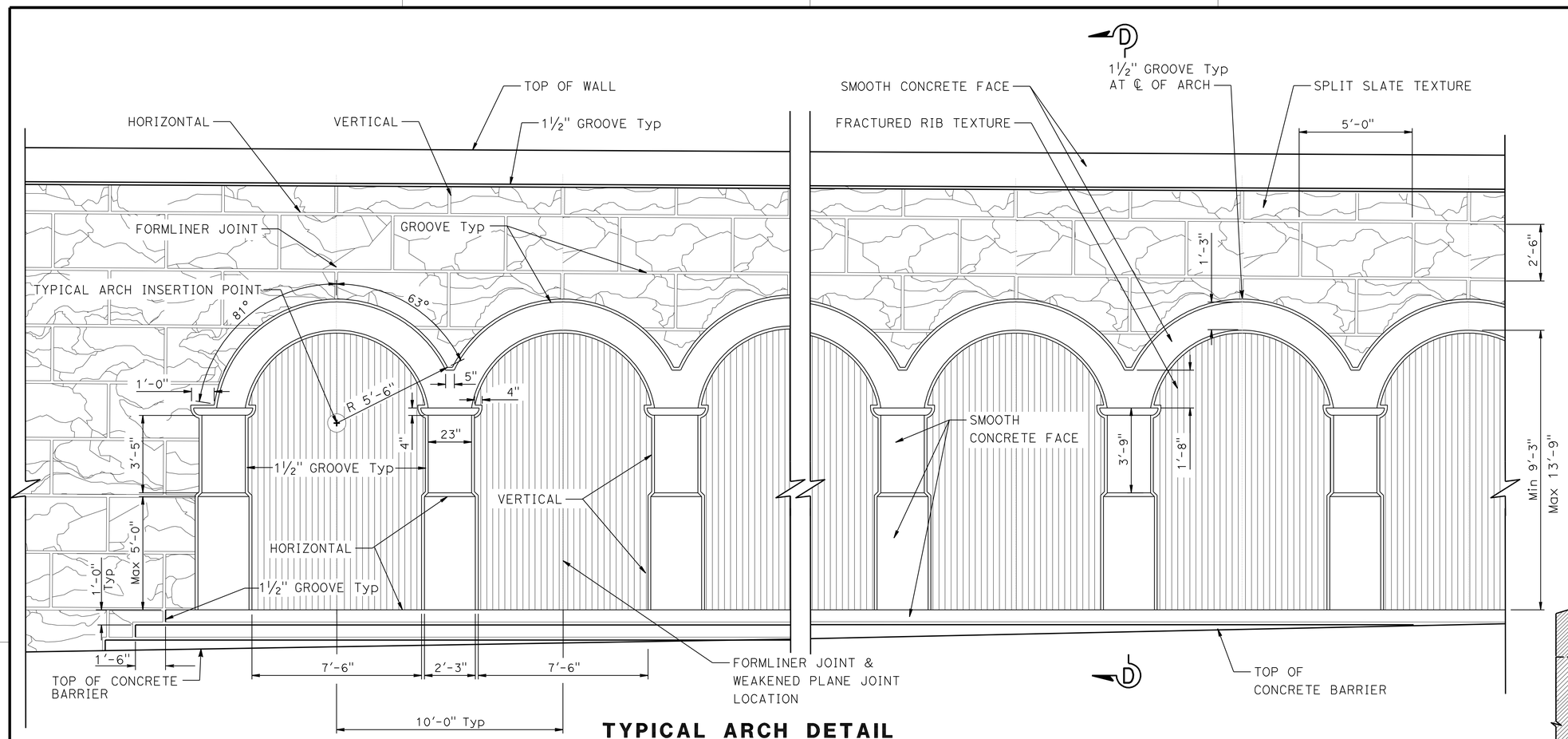

TYPICAL ARCH DETAIL

3/8"=1'-0"

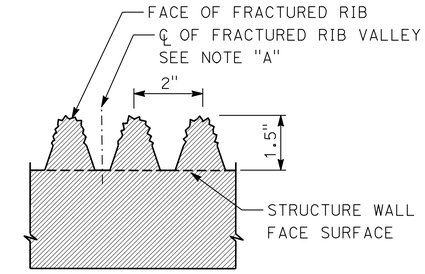

TYPICAL FRACTURED RIB TEXTURE

NO SCALE

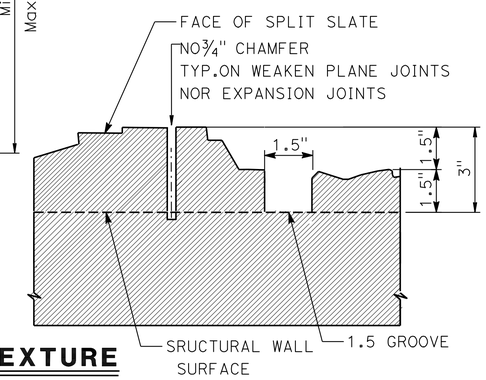

TYPICAL SPLIT SLATE TEXTURE

NO SCALE

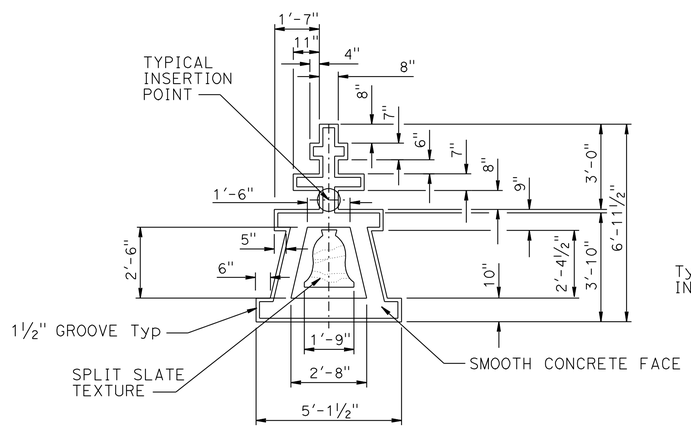

TYPICAL RAINCROSS DETAIL

3/8"=1'-0"

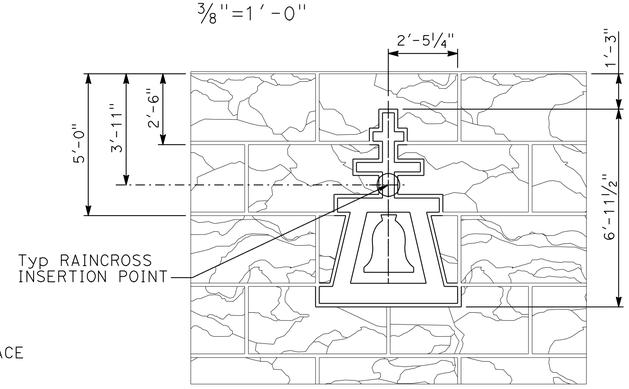

TYPICAL RAINCROSS DETAIL/ SPLIT SLATE TEXTURE

3/8"=1'-0"

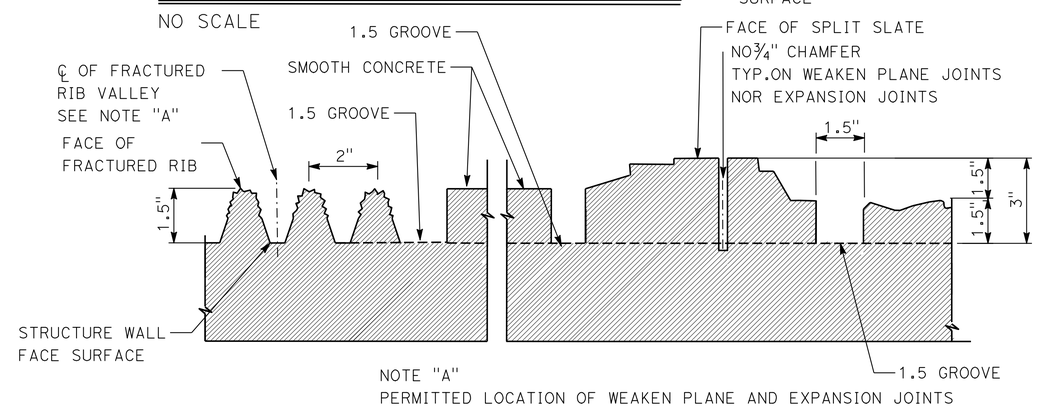

TYPICAL FRACTURED RIB WITH SPLIT SLATE TEXTURE

NO SCALE

	BY	CHECKED
DESIGN	M. Hall	M. Bishop
DETAILS	G. Hallstrom/Y. Tang	M. Bishop
QUANTITIES	A. McPhee	J. Szabo

STATE OF CALIFORNIA
DEPARTMENT OF TRANSPORTATION

DIVISION OF ENGINEERING SERVICES
STRUCTURE DESIGN
DESIGN BRANCH 10

BRIDGE NO. 56-0840
POST MILE 19.0

FRACTURED RIB/SPLIT SLATE TEXTURE
IVY STREET OC (REPLACE)
ARCHITECTURAL DETAILS NO. 2

STRUCTURES DESIGN DETAIL SHEET (ENGLISH) (REV. 10/25/05)

ORIGINAL SCALE IN INCHES FOR REDUCED PLANS 0 1 2 3

CU 08
EA 448401

DISREGARD PRINTS BEARING EARLIER REVISION DATES 8-24-10 11-12-10

REVISION DATES

SHEET 17 OF 27

FILE => 560840sardt17.dgn

USERNAME => trmrguye DATE PLOTTED => 30-APR-2011 TIME PLOTTED => 14:13

Dist	COUNTY	ROUTE	POST MILES TOTAL PROJECT	SHEET No.	TOTAL SHEETS
08	Riv	91	15.6/21.6	1972	2028

11-30-10
LICENSED LANDSCAPE ARCHITECT

4-25-11
PLANS APPROVAL DATE

LICENSED LANDSCAPE ARCHITECT
Matthew Harry Hall
No. 4900
Signature
10/31/2011
Renewal Date
Date
STATE OF CALIFORNIA

THE STATE OF CALIFORNIA OR ITS OFFICERS OR AGENTS SHALL NOT BE RESPONSIBLE FOR THE ACCURACY OR COMPLETENESS OF SCANNED COPIES OF THIS PLAN SHEET.

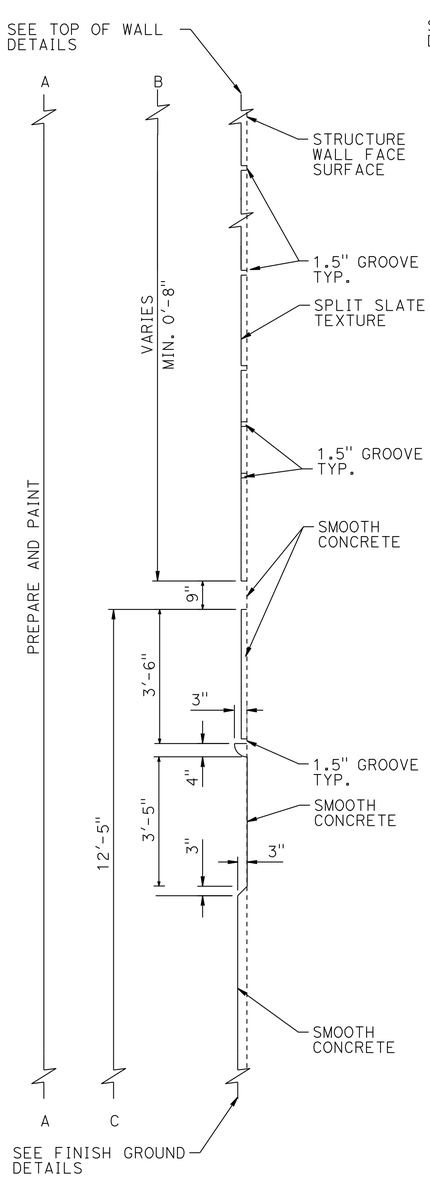

SECTION A-A

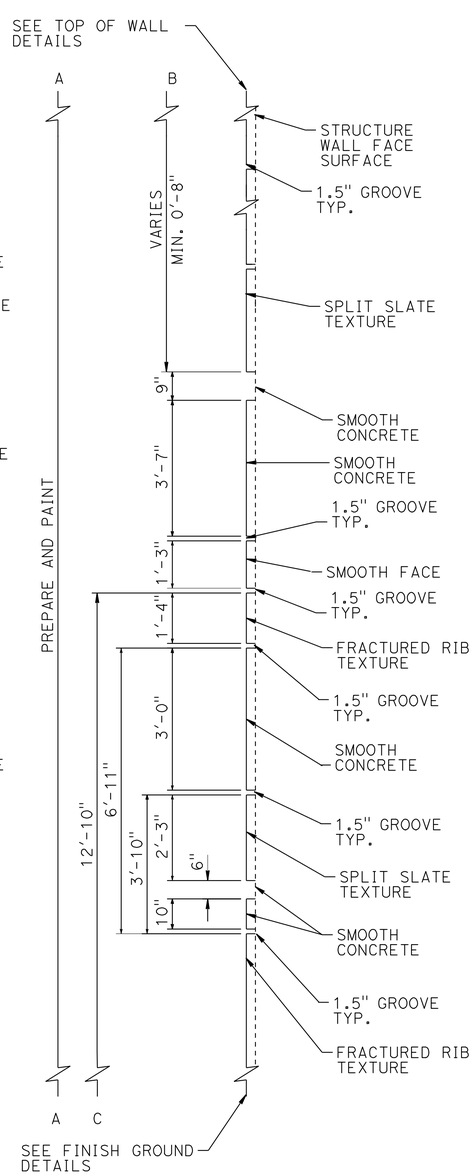

SECTION B-B

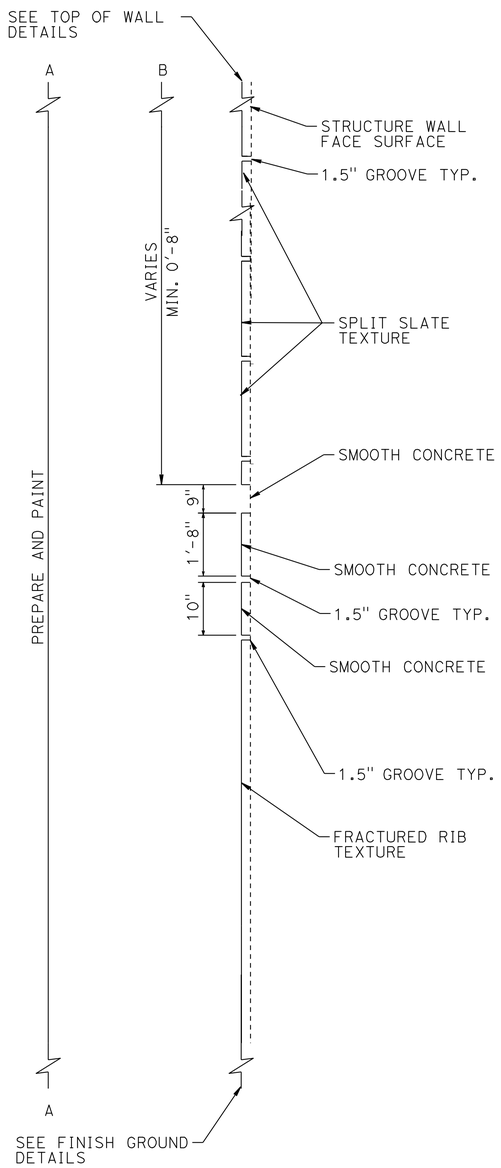

SECTION C-C

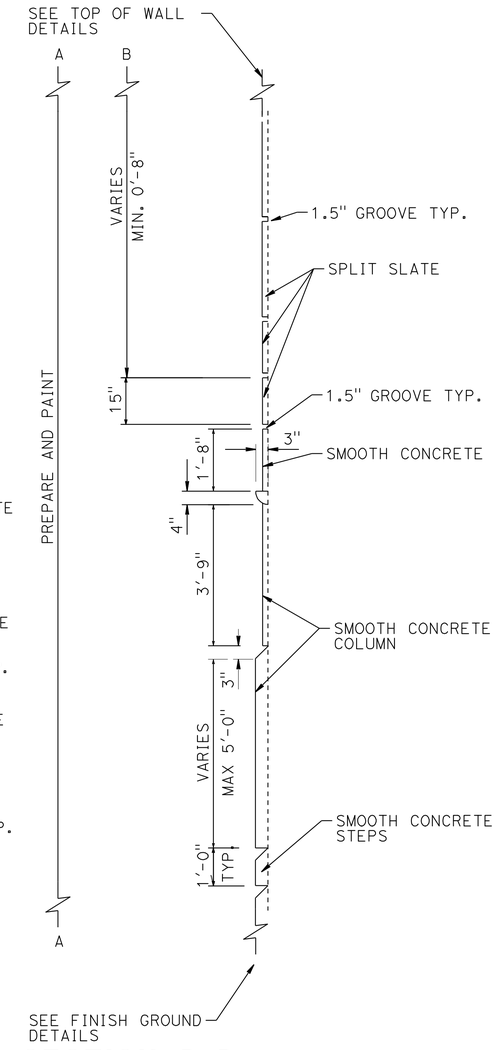

SECTION D-D

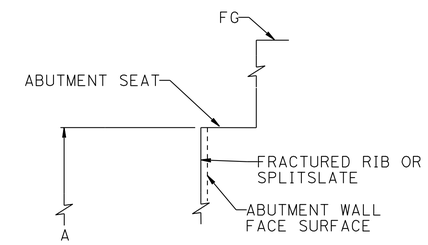

TOP OF BRODGE ABUTMENT WALL DETAIL TYPICAL BRIDGE SOFFIT

NO SCALE

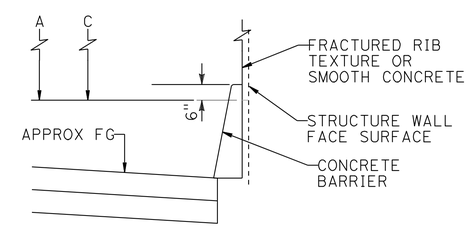

FINISH GROUND DETAIL TYPICAL WITH CONCRETE BARRIER

NO SCALE

	BY	CHECKED
DESIGN	M. Hall	M. Bishop
DETAILS	G. Hallstrom/Y.Tang	M. Bishop
QUANTITIES	A. McPhee	J. Szabo

STATE OF CALIFORNIA
DEPARTMENT OF TRANSPORTATION

DIVISION OF ENGINEERING SERVICES
STRUCTURE DESIGN
DESIGN BRANCH 10

BRIDGE NO. 56-0840
POST MILE 19.0

FRACTURED RIB/SPLIT SLATE TEXTURE
IVY STREET OC (REPLACE)
ARCHITECTURAL DETAILS NO. 3

STRUCTURES DESIGN DETAIL SHEET (ENGLISH) (REV. 10/25/05)

ORIGINAL SCALE IN INCHES FOR REDUCED PLANS 0 1 2 3

CU 08
EA 448401

DISREGARD PRINTS BEARING EARLIER REVISION DATES → 8-25-10 11-12-10

REVISION DATES

SHEET 18 OF 27

FILE => 560840sardt18.dgn

USERNAME => frmnguye DATE PLOTTED => 30-APR-2011 TIME PLOTTED => 14:13

DIST.	COUNTY	ROUTE	POST MILES TOTAL PROJECT	SHEET NO.	TOTAL SHEETS
08	Riv	91	15.6/21.6	1973	2028

REGISTERED ENGINEER - CIVIL 11-30-10

4-25-11
PLANS APPROVAL DATE

REGISTERED PROFESSIONAL ENGINEER HUAN VU No. 60696 Exp. 12-31-10 CIVIL STATE OF CALIFORNIA

The State of California or its officers or agents shall not be responsible for the accuracy or completeness of electronic copies of this plan sheet.

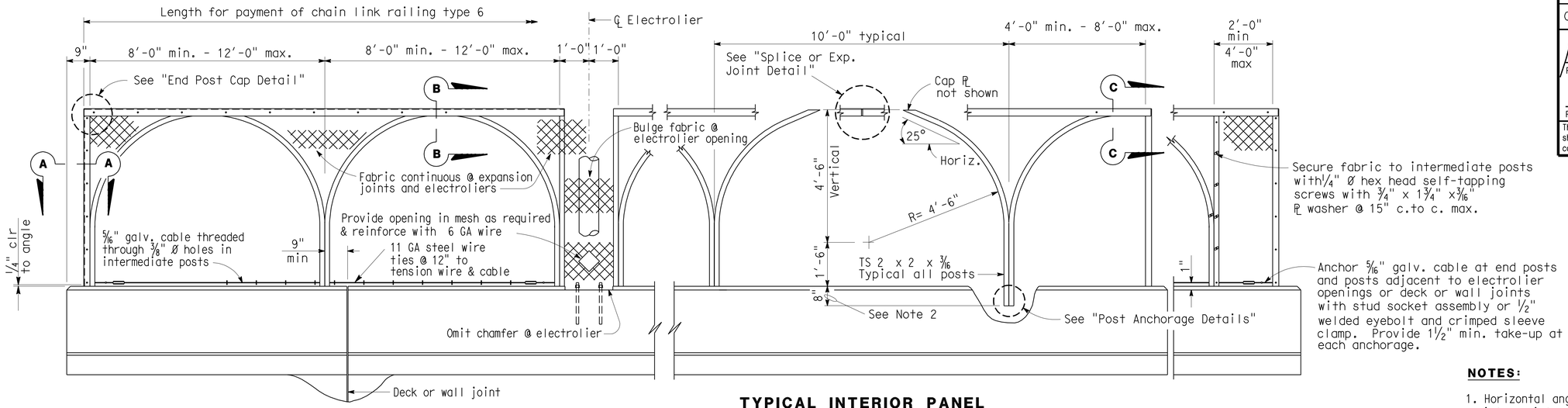

ELEVATION

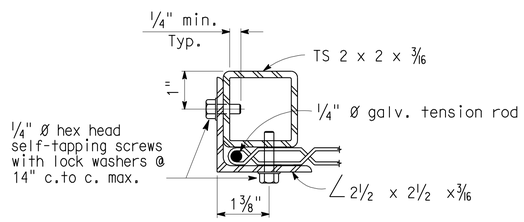

SECTION A-A

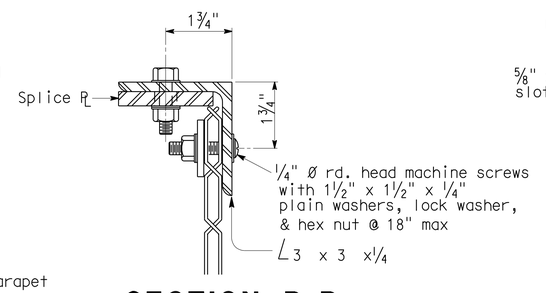

SECTION B-B

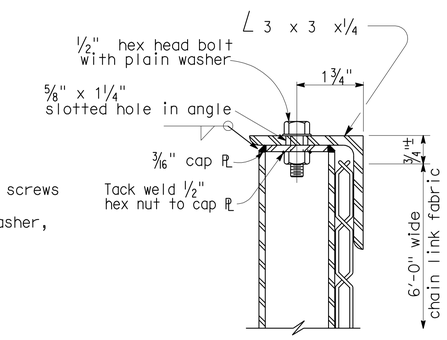

SECTION C-C

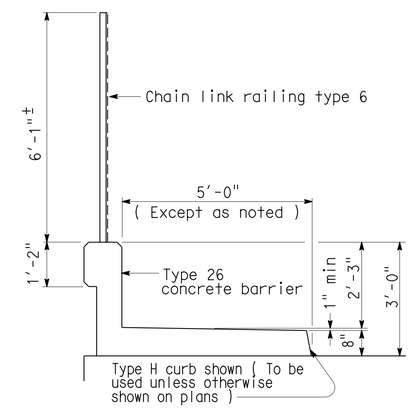

TYPICAL SECTION

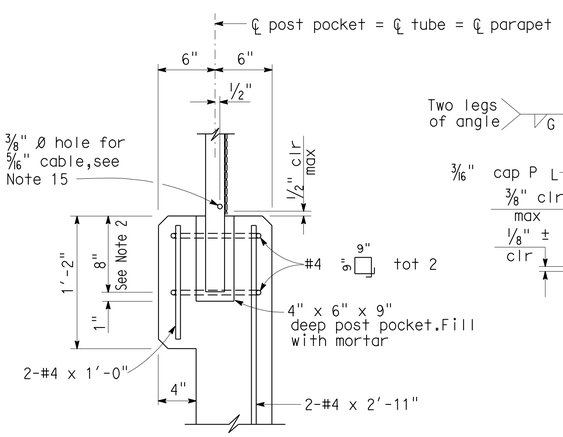

POST ANCHORAGE DETAIL

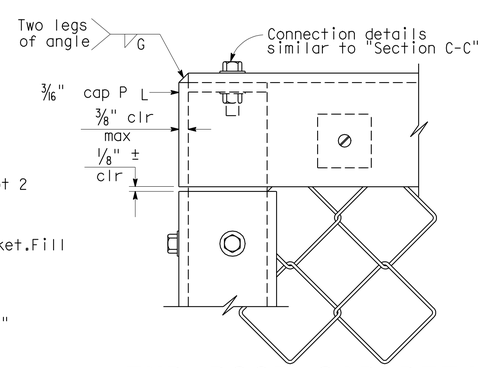

END POST CAP DETAIL

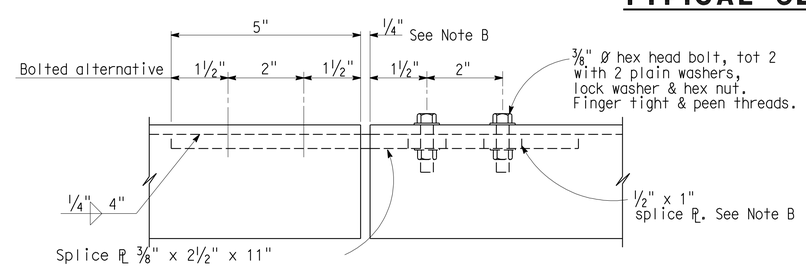

SPLICE OR EXPANSION JOINT DETAIL

Note B: Expansion joint same dimension as expansion joint in deck or wall. Increase slotted hole length and splice PL length correspondingly.

NOTES:

1. Horizontal angle shall be continuous over not less than two intermediate posts except that a shorter length is permitted at expansion joints, electroliers and other rail discontinuities.
2. One post may be embedded 6" minimum to accomodate grade changes, otherwise fabricate post lengths as required.
3. Curved posts may be rotated in plan within its post pocket to accomodate curved horizontal alignment.
4. Straight posts and straight portions of curved posts shall be installed normal to bridge profile grade.
5. Top horizontal angle shall be parallel to bridge profile grade and shall be shop bent to fit horizontal curves.
6. When railing is on slope, fabric shall be placed parallel to slope.
7. Alternative details may be submitted by Contractor for Engineer's approval.
8. Railing assembly except chain link fabric shall be galvanized after fabrication.
9. For details and reinforcement not shown, see "Concrete Barrier Type 26" sheet.
10. See Bridge Plans for limits of Chain Link Railing Type 6.
11. Provide thimbles at all cable loops.
12. Chain link fabric to be 6'-0" wide with 1" mesh and with knuckled selvage top and bottom.
13. When railing is placed on a horizontal alignment with a radius of 150'-0" or less, thread 5/16" cable through 3/8" Ø welded eye rods embedded 4" into the top of the concrete parapet and equally spaced to limit the middle ordinate distance between the 5/16" cable and the curve to 1" max.
14. Splices and expansion joints shall be located at ℄ panel.
15. Holes in posts for 5/16" cable and its anchorage may be field drilled and painted with zinc rich paint.

STANDARD DRAWING

FILE NO. xs16-340e

APPROVED BY T SATTER
RESPONSIBLE TECHNICAL SPECIALIST
APPROVAL DATE 4-15-08

RELEASED BY ROBERTO LACALLE
RESPONSIBLE OFFICE CHIEF
RELEASE DATE 4-15-08

STATE OF CALIFORNIA
DEPARTMENT OF TRANSPORTATION

DIVISION OF ENGINEERING SERVICES

BRIDGE NO. 56-0840
POST MILE 19.0

IVY STREET OC (REPLACE)
CHAIN LINK RAILING TYPE 6

DS OSD 2147A (ENGLISH STANDARD DRAWING "XS" BORDER REV. 01/11/08)

ORIGINAL SCALE IN INCHES FOR REDUCED PLANS 0 1 2 3

CU 08
EA 448401

DISREGARD PRINTS BEARING EARLIER REVISION DATES 8-04-10

REVISION DATES (PRELIMINARY STAGE ONLY)

SHEET 19 OF 27

USERNAME => trmnguye

560840tclrdt19.dgn

DATE PLOTTED => 30-APR-2011 TIME PLOTTED => 14:13

DIST	COUNTY	ROUTE	POST MILES TOTAL PROJECT	SHEET No	TOTAL SHEETS
08	Riv	91	15.6/21.6	1974	2028

K. Douglas Cook 9-23-10
CERTIFIED ENGINEERING GEOLOGIST

4-25-11
PLANS APPROVAL DATE

PROFESSIONAL GEOLOGIST K. Douglas Cook No. 1391 Exp. 12-31-11 CERTIFIED ENGINEERING GEOLOGIST STATE OF CALIFORNIA

The State of California or its officers or agents shall not be responsible for the accuracy or completeness of electronic copies of this plan sheet.

This LOTB sheet was prepared in accordance with the Caltrans Soil & Rock Logging, Classification, & Presentation Manual (June 2007).

BENCH MARK

FD STD Br Disk Stamped
"RIV91-18.98 LS 5679 1990"
in Conc Sidewalk Sly Side
Ivey St Overpass
N 2,294,906.88
E 6,219,561.51
Elev 934.14′
Set PK Nail w/CT Washer
E'ly Side Panorama,
Approx 300′ along CL from Ivy OC

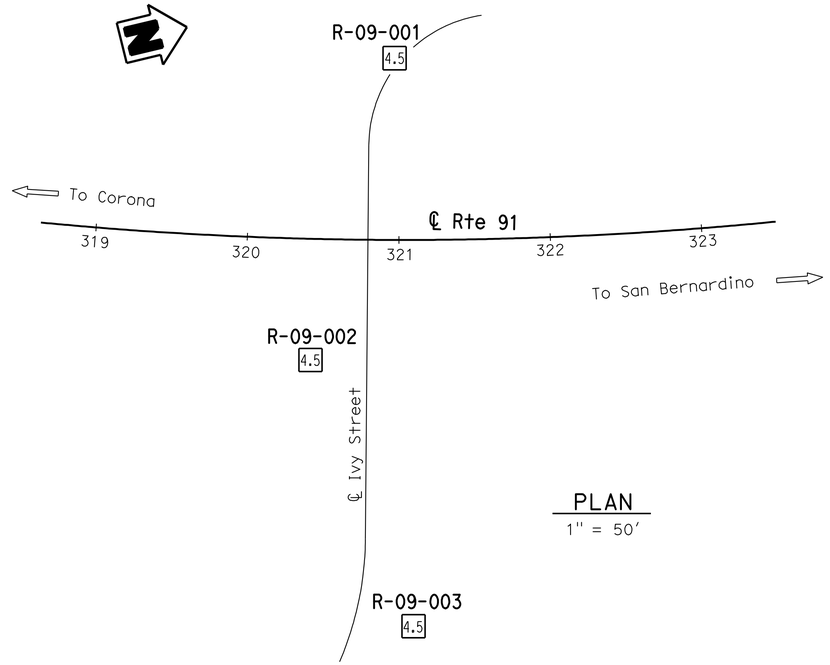

PLAN
1" = 50′

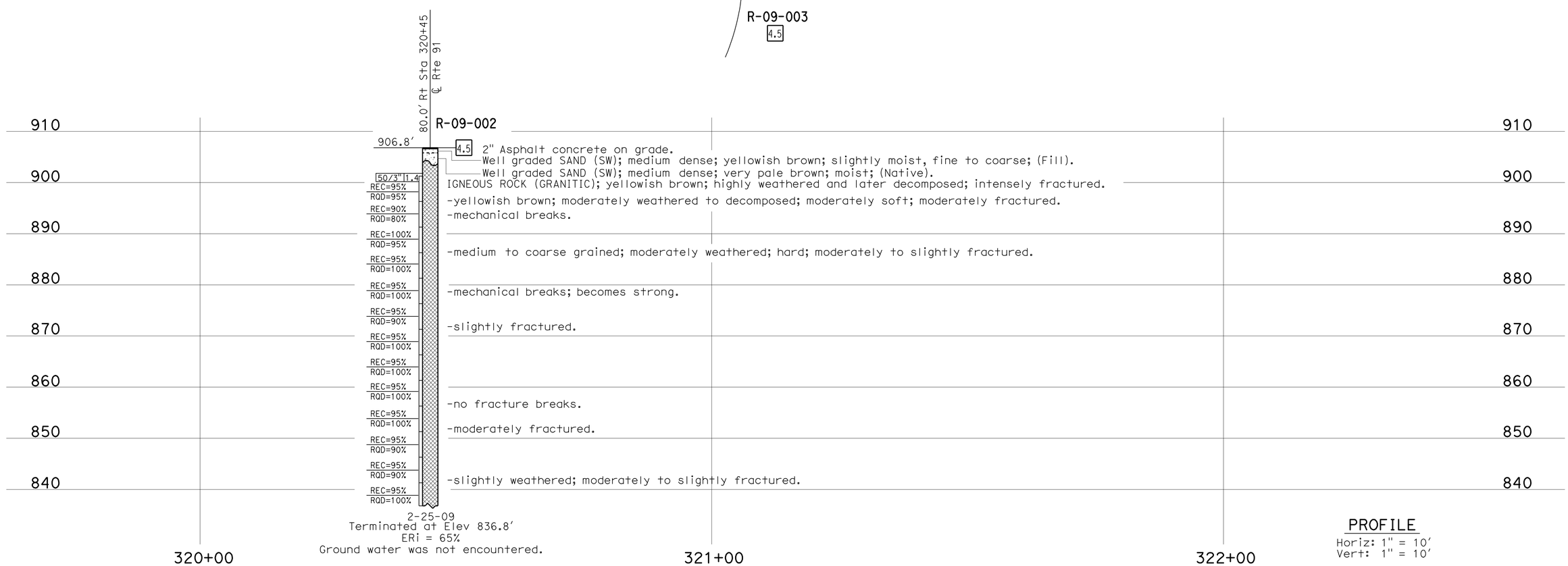

PROFILE
Horiz: 1" = 10′
Vert: 1" = 10′

ENGINEERING SERVICES	GEOTECHNICAL SERVICES	STATE OF CALIFORNIA DEPARTMENT OF TRANSPORTATION	DIVISION OF ENGINEERING SERVICES STRUCTURE DESIGN	BRIDGE NO. 56-0840	IVY STREET OC (REPLACE)
FUNCTIONAL SUPERVISOR	DRAWN BY: F. Nguyen 02/10	FIELD INVESTIGATION BY:	DESIGN BRANCH	POST MILES 19.1	LOG OF TEST BORINGS 1 OF 8
NAME: A. Perez-Cobo	CHECKED BY: W. J. Levine	D. Cook			

OGS CIVIL LOG OF TEST BORINGS SHEET

ORIGINAL SCALE IN INCHES FOR REDUCED PLANS 0 1 2 3

CU 08
EA 448401

DISREGARD PRINTS BEARING EARLIER REVISION DATES 03-16-10

REVISION DATES

SHEET 20 OF 27

FILE => 560840zltb20.dgn

USERNAME => trmnguye DATE PLOTTED => 30-APR-2011 TIME PLOTTED => 14:14

DIST	COUNTY	ROUTE	POST MILES TOTAL PROJECT	SHEET No	TOTAL SHEETS
08	Riv	91	15.6/21.6	1975	2028

K. Douglas Cook 9-23-10
CERTIFIED ENGINEERING GEOLOGIST

4-25-11
PLANS APPROVAL DATE

PROFESSIONAL GEOLOGIST
K. Douglas Cook
No. 1391
Exp. 12-31-11
CERTIFIED ENGINEERING GEOLOGIST
STATE OF CALIFORNIA

The State of California or its officers or agents shall not be responsible for the accuracy or completeness of electronic copies of this plan sheet.

This LOTB sheet was prepared in accordance with the Caltrans Soil & Rock Logging, Classification, & Presentation Manual (June 2007).

FOR PLAN VIEW, SEE
"LOG OF TEST BORINGS 1 OF 8"

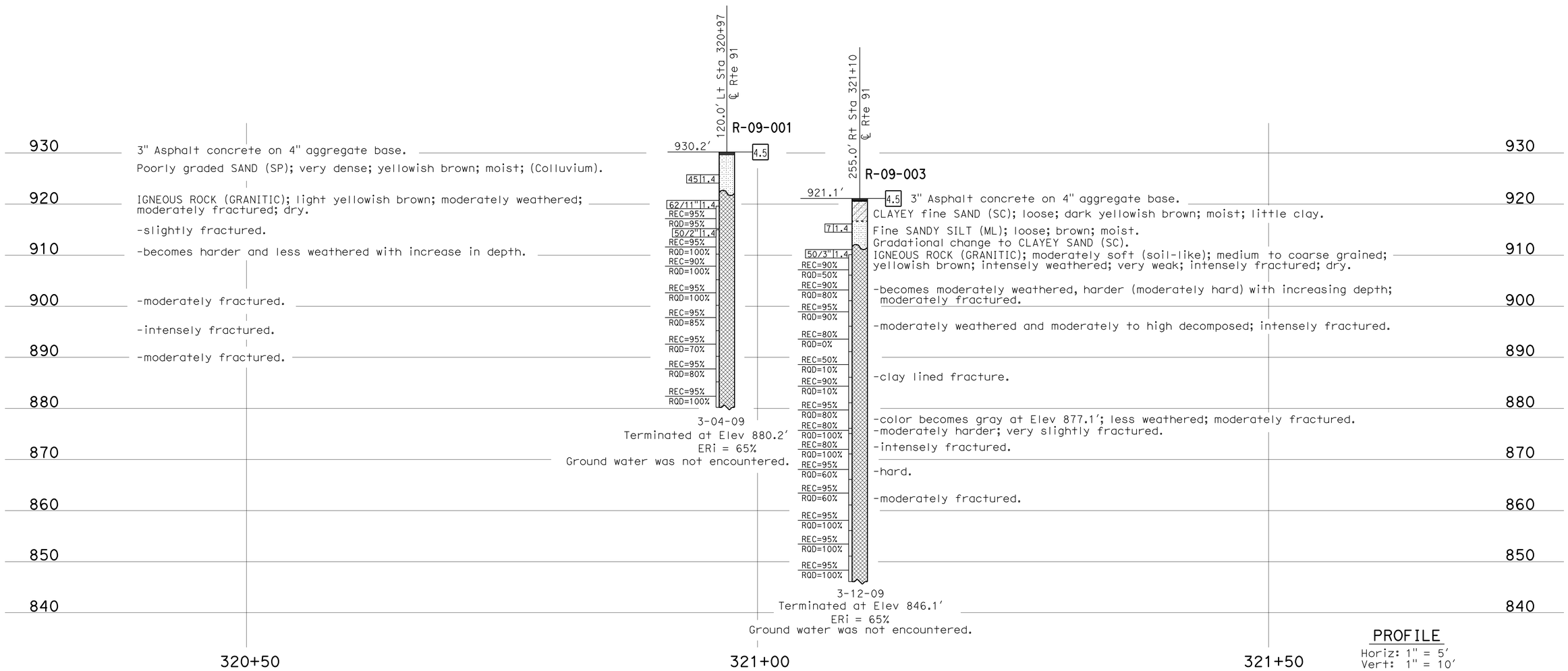

ENGINEERING SERVICES	GEOTECHNICAL SERVICES	STATE OF CALIFORNIA DEPARTMENT OF TRANSPORTATION	DIVISION OF ENGINEERING SERVICES STRUCTURE DESIGN	BRIDGE NO. 56-0840	IVY STREET OC (REPLACE)
FUNCTIONAL SUPERVISOR	DRAWN BY: F. Nguyen 01/10	FIELD INVESTIGATION BY:	DESIGN BRANCH	POST MILES 19.1	LOG OF TEST BORINGS 2 OF 8
NAME: A. Perez-Cobo	CHECKED BY: W. J. Levine	D. Cook			

OGS CIVIL LOG OF TEST BORINGS SHEET

ORIGINAL SCALE IN INCHES FOR REDUCED PLANS 0 1 2 3

CU 08
EA 448401

DISREGARD PRINTS BEARING EARLIER REVISION DATES → 03-16-10

REVISION DATES

SHEET 21 OF 27

FILE => 560840zltb21.dgn

USERNAME => trmnguye DATE PLOTTED => 30-APR-2011 TIME PLOTTED => 14:14

DIST	COUNTY	ROUTE	POST MILES TOTAL PROJECT	SHEET No	TOTAL SHEETS
08	Riv	91	15.6/21.6	1976	2028

K. Douglas Cook 9-23-10
CERTIFIED ENGINEERING GEOLOGIST

4-25-11
PLANS APPROVAL DATE

PROFESSIONAL GEOLOGIST K. Douglas Cook No. 1391 Exp. 12-31-11 CERTIFIED ENGINEERING GEOLOGIST STATE OF CALIFORNIA

The State of California or its officers or agents shall not be responsible for the accuracy or completeness of electronic copies of this plan sheet.

REFERENCE: CALTRANS SOIL & ROCK LOGGING, CLASSIFICATION, AND PRESENTATION MANUAL (JUNE 2007)

CEMENTATION

Description	Criteria
Weak	Crumbles or breaks with handling or little finger pressure.
Moderate	Crumbles or breaks with considerable finger pressure.
Strong	Will not crumble or break with finger pressure.

CONSISTENCY OF COHESIVE SOILS

Description	Unconfined Compressive Strength (tsf)	Pocket Penetrometer Measurement (tsf)	Torvane Measurement (tsf)	Field Approximation
Very Soft	< 0.25	< 0.25	< 0.12	Easily penetrated several inches by fist
Soft	0.25 to 0.50	0.25 to 0.50	0.12 to 0.25	Easily penetrated several inches by thumb
Medium Stiff	0.50 to 1.0	0.50 to 1.0	0.25 to 0.50	Penetrated several inches by thumb with moderate effort
Stiff	1 to 2	1 to 2	0.50 to 1.0	Readily indented by thumb but penetrated only with great effort
Very Stiff	2 to 4	2 to 4	1.0 to 2.0	Readily indented by thumbnail
Hard	> 4.0	> 4.0	> 2.0	Indented by thumbnail with difficulty

BOREHOLE IDENTIFICATION

Symbol	Hole Type	Description
Size	A	Auger Boring
Size	R P	Rotary drilled boring Rotary percussion boring (air)
Size	R	Rotary drilled diamond core
Size	HD HA	Hand driven (1-inch soil tube) Hand Auger
●	D	Dynamic Cone Penetration Boring
▲	CPT	Cone Penetration Test (ASTM D 5778-95)
⬚	O	Other

Note: Size in inches.

PLASTICITY OF FINE-GRAINED SOILS

Description	Criteria
Nonplastic	A 1/8-inch thread cannot be rolled at any water content.
Low	The thread can barely be rolled and the lump cannot be formed when drier than the plastic limit.
Medium	The thread is easy to roll and not much time is required to reach the plastic limit. The thread cannot be rerolled after reaching the plastic limit. The lump crumbles when drier than the plastic limit.
High	It takes considerable time rolling and kneading to reach the plastic limit. The thread can be rerolled several times after reaching the plastic limit. The lump can be formed without crumbling when drier than the plastic limit.

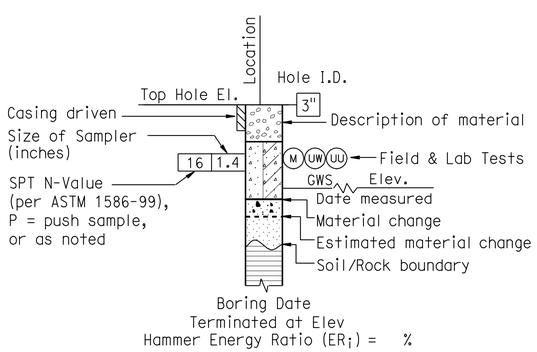

ROTARY BORING

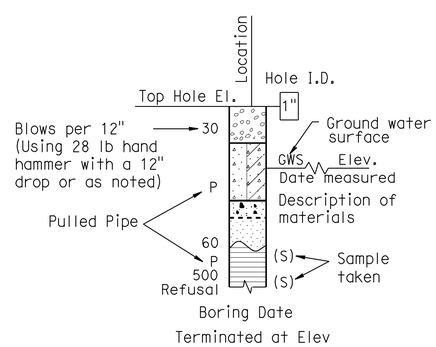

HAND BORING

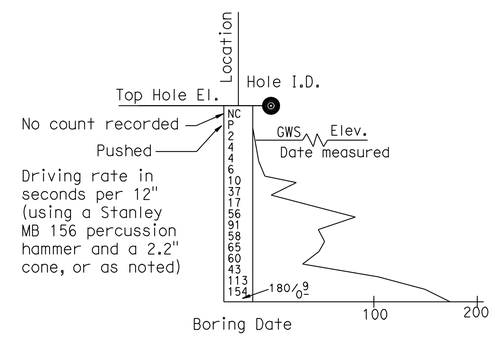

DYNAMIC CONE PENETRATION BORING

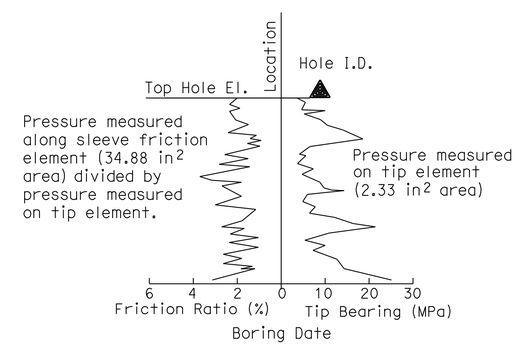

CONE PENETRATION TEST (CPT) SOUNDING

ENGINEERING SERVICES	GEOTECHNICAL SERVICES	STATE OF CALIFORNIA DEPARTMENT OF TRANSPORTATION	DIVISION OF ENGINEERING SERVICES STRUCTURE DESIGN DESIGN BRANCH	BRIDGE NO. 56-0840 / POST MILE 19.1	IVY STREET OC (REPLACE) LOG OF TEST BORINGS 3 OF 8
	PREPARED BY: F. Nguyen 02/10				

GS LOTB SOIL LEGEND

ORIGINAL SCALE IN INCHES FOR REDUCED PLANS 0 1 2 3

CU 08
EA 448401

DISREGARD PRINTS BEARING EARLIER REVISION DATES → 03-16-10

REVISION DATES

SHEET 22 OF 27

FILE => 560840zltb22.dgn

USERNAME => trmnguye DATE PLOTTED => 30-APR-2011 TIME PLOTTED => 14:14

REFERENCE: CALTRANS SOIL & ROCK LOGGING, CLASSIFICATION, AND PRESENTATION MANUAL (JUNE 2007)

DIST	COUNTY	ROUTE	POST MILES TOTAL PROJECT	SHEET No	TOTAL SHEETS
08	Riv	91	15.6/21.6	1977	2028

K. Douglas Cook 9-23-10
CERTIFIED ENGINEERING GEOLOGIST

4-25-11
PLANS APPROVAL DATE

PROFESSIONAL GEOLOGIST K. Douglas Cook No. 1391 Exp. 12-31-11 CERTIFIED ENGINEERING GEOLOGIST STATE OF CALIFORNIA

The State of California or its officers or agents shall not be responsible for the accuracy or completeness of electronic copies of this plan sheet.

GROUP SYMBOLS AND NAMES

Graphic/Symbol	Group Names	Graphic/Symbol	Group Names
GW	Well-graded GRAVEL Well-graded GRAVEL with SAND	CL	Lean CLAY Lean CLAY with SAND Lean CLAY with GRAVEL SANDY lean CLAY SANDY lean CLAY with GRAVEL GRAVELLY lean CLAY GRAVELLY lean CLAY with SAND
GP	Poorly graded GRAVEL Poorly graded GRAVEL with SAND		
GW-GM	Well-graded GRAVEL with SILT Well-graded GRAVEL with SILT and SAND	CL-ML	SILTY CLAY SILTY CLAY with SAND SILTY CLAY with GRAVEL SANDY SILTY CLAY SANDY SILTY CLAY with GRAVEL GRAVELLY SILTY CLAY GRAVELLY SILTY CLAY with SAND
GW-GC	Well-graded GRAVEL with CLAY (or SILTY CLAY) Well-graded GRAVEL with CLAY and SAND (or SILTY CLAY and SAND)		
GP-GM	Poorly graded GRAVEL with SILT Poorly graded GRAVEL with SILT and SAND	ML	SILT SILT with SAND SILT with GRAVEL SANDY SILT SANDY SILT with GRAVEL GRAVELLY SILT GRAVELLY SILT with SAND
GP-GC	Poorly graded GRAVEL with CLAY (or SILTY CLAY) Poorly graded GRAVEL with CLAY and SAND (or SILTY CLAY and SAND)		
GM	SILTY GRAVEL SILTY GRAVEL with SAND	OL	ORGANIC lean CLAY ORGANIC lean CLAY with SAND ORGANIC lean CLAY with GRAVEL SANDY ORGANIC lean CLAY SANDY ORGANIC lean CLAY with GRAVEL GRAVELLY ORGANIC lean CLAY GRAVELLY ORGANIC lean CLAY with SAND
GC	CLAYEY GRAVEL CLAYEY GRAVEL with SAND		
GC-GM	SILTY, CLAYEY GRAVEL SILTY, CLAYEY GRAVEL with SAND	OL	ORGANIC SILT ORGANIC SILT with SAND ORGANIC SILT with GRAVEL SANDY ORGANIC SILT SANDY ORGANIC SILT with GRAVEL GRAVELLY ORGANIC SILT GRAVELLY ORGANIC SILT with SAND
SW	Well-graded SAND Well-graded SAND with GRAVEL		
SP	Poorly graded SAND Poorly graded SAND with GRAVEL	CH	Fat CLAY Fat CLAY with SAND Fat CLAY with GRAVEL SANDY fat CLAY SANDY fat CLAY with GRAVEL GRAVELLY fat CLAY GRAVELLY fat CLAY with SAND
SW-SM	Well-graded SAND with SILT Well-graded SAND with SILT and GRAVEL		
SW-SC	Well-graded SAND with CLAY (or SILTY CLAY) Well-graded SAND with CLAY and GRAVEL (or SILTY CLAY and GRAVEL)	MH	Elastic SILT Elastic SILT with SAND Elastic SILT with GRAVEL SANDY elastic SILT SANDY elastic SILT with GRAVEL GRAVELLY elastic SILT GRAVELLY elastic SILT with SAND
SP-SM	Poorly graded SAND with SILT Poorly graded SAND with SILT and GRAVEL		
SP-SC	Poorly graded SAND with CLAY (or SILTY CLAY) Poorly graded SAND with CLAY and GRAVEL (or SILTY CLAY and GRAVEL)	OH	ORGANIC fat CLAY ORGANIC fat CLAY with SAND ORGANIC fat CLAY with GRAVEL SANDY ORGANIC fat CLAY SANDY ORGANIC fat CLAY with GRAVEL GRAVELLY ORGANIC fat CLAY GRAVELLY ORGANIC fat CLAY with SAND
SM	SILTY SAND SILTY SAND with GRAVEL		
SC	CLAYEY SAND CLAYEY SAND with GRAVEL	OH	ORGANIC elastic SILT ORGANIC elastic SILT with SAND ORGANIC elastic SILT with GRAVEL SANDY ORGANIC elastic SILT SANDY ORGANIC elastic SILT with GRAVEL GRAVELLY ORGANIC elastic SILT GRAVELLY ORGANIC elastic SILT with SAND
SC-SM	SILTY, CLAYEY SAND SILTY, CLAYEY SAND with GRAVEL		
PT	PEAT	OL/OH	ORGANIC SOIL ORGANIC SOIL with SAND ORGANIC SOIL with GRAVEL SANDY ORGANIC SOIL SANDY ORGANIC SOIL with GRAVEL GRAVELLY ORGANIC SOIL GRAVELLY ORGANIC SOIL with SAND
	COBBLES COBBLES and BOULDERS BOULDERS		

FIELD AND LABORATORY TESTING

- (C) Consolidation (ASTM D 2435)
- (CL) Collapse Potential (ASTM D 5333)
- (CP) Compaction Curve (CTM 216)
- (CR) Corrosivity Testing (CTM 643, CTM 422, CTM 417)
- (CU) Consolidated Undrained Triaxial (ASTM D 4767)
- (DS) Direct Shear (ASTM D 3080)
- (EI) Expansion Index (ASTM D 4829)
- (M) Moisture Content (ASTM D 2216)
- (OC) Organic Content-% (ASTM D 2974)
- (P) Permeability (CTM 220)
- (PA) Particle Size Analysis (ASTM D 422)
- (PI) Plasticity Index (AASHTO T 90) Liquid Limit (AASHTO T 89)
- (PL) Point Load Index (ASTM D 5731)
- (PM) Pressure Meter
- (PP) Pocket Penetrometer
- (R) R-Value (CTM 301)
- (SE) Sand Equivalent (CTM 217)
- (SG) Specific Gravity (AASHTO T 100)
- (SL) Shrinkage Limit (ASTM D 427)
- (SW) Swell Potential (ASTM D 4546)
- (TV) Pocket Torvane
- (UC) Unconfined Compression-Soil (ASTM D 2166) Unconfined Compression-Rock (ASTM D 2938)
- (UU) Unconsolidated Undrained Triaxial (ASTM D 2850)
- (UW) Unit Weight (ASTM D 4767)
- (VS) Vane Shear (AASHTO T 223)

APPARENT DENSITY OF COHESIONLESS SOILS

Description	SPT N_{60} (Blows / 12 inches)
Very loose	0 - 4
Loose	5 - 10
Medium Dense	11 - 30
Dense	31 - 50
Very Dense	> 50

MOISTURE

Description	Criteria
Dry	Absence of moisture, dusty, dry to the touch
Moist	Damp but no visible water
Wet	Visible free water, usually soil is below water table

PERCENT OR PROPORTION OF SOILS

Description	Criteria
Trace	Particles are present but estimated to be less than 5%
Few	5 to 10%
Little	15 to 25%
Some	30 to 45%
Mostly	50 to 100%

PARTICLE SIZE

Description		Size
Boulder		> 12"
Cobble		3" to 12"
Gravel	Coarse	3/4" to 3"
	Fine	No. 4 to 3/4"
Sand	Coarse	No. 10 to No. 4
	Medium	No. 40 to No. 10
	Fine	No. 200 to No. 40

ENGINEERING SERVICES

GEOTECHNICAL SERVICES
PREPARED BY: F. Nguyen 02/10

STATE OF CALIFORNIA DEPARTMENT OF TRANSPORTATION

DIVISION OF ENGINEERING SERVICES STRUCTURE DESIGN
DESIGN BRANCH

BRIDGE NO. 56-0840
POST MILE 19.1

IVY STREET OC (REPLACE)
LOG OF TEST BORINGS 4 OF 8

GS LOTB SOIL LEGEND

ORIGINAL SCALE IN INCHES FOR REDUCED PLANS 0 1 2 3

CU 08
EA 448401

DISREGARD PRINTS BEARING EARLIER REVISION DATES 03-16-10
REVISION DATES

SHEET 23 OF 27

FILE => 560840zltb23.gdn

USERNAME => trmnguye DATE PLOTTED => 30-APR-2011 TIME PLOTTED => 14:14

DIST	COUNTY	ROUTE	POST MILES TOTAL PROJECT	SHEET No	TOTAL SHEETS
08	Riv	91	15.6/21.6	1978	2028

K. Douglas Cook 9-23-10
CERTIFIED ENGINEERING GEOLOGIST

4-25-11
PLANS APPROVAL DATE

PROFESSIONAL GEOLOGIST K. Douglas Cook No. 1391 Exp. 12-31-11 CERTIFIED ENGINEERING GEOLOGIST STATE OF CALIFORNIA

The State of California or its officers or agents shall not be responsible for the accuracy or completeness of electronic copies of this plan sheet.

REFERENCE: CALTRANS SOIL & ROCK LOGGING, CLASSIFICATION, AND PRESENTATION MANUAL (JUNE 2007)

PERCENT CORE RECOVERY (REC) & ROCK QUALITY DESIGNATION (RQD)

$$REC = \frac{\sum \text{Length of the recovered core pieces (inches)}}{\text{Total length of core run (inches)}} \times 100\%$$

$$RQD = \frac{\sum \text{Length of intact core pieces} \geq 4''}{\text{Total length of core run (inches)}} \times 100\%$$

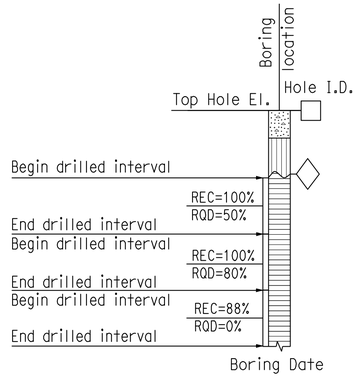

RELATIVE STRENGTH OF INTACT ROCK

Term	Uniaxial Compressive Strength (PSI)
Extremely Strong	> 30,000
Very Strong	14,500 - 30,000
Strong	7,000 - 14,500
Medium Strong	3,500 - 7,000
Weak	700 - 3,500
Very Weak	150 - 700
Extremely Weak	< 150

BEDDING SPACING

Description	Thickness / Spacing
Massive	Greater than 10 ft
Very thickly bedded	3 to 10 ft
Thickly bedded	1 to 3 ft
Moderately bedded	3-5/8" to 1 ft
Thinly bedded	1-1/4" to 3-5/8"
Very thinly bedded	3/8" to 1-1/4"
Laminated	Less than 3/8"

LEGEND OF ROCK MATERIALS

- IGNEOUS ROCK
- SEDIMENTARY ROCK
- METAMORPHIC ROCK

ROCK HARDNESS

Description	Criteria
Extremely Hard	Specimen cannot be scratched with a pocket knife or sharp pick; can only be chipped with repeated heavy hammer blows.
Very Hard	Specimen cannot be scratched with a pocket knife or sharp pick. Breaks with repeated heavy hammer blows.
Hard	Specimen can be scratched with a pocket knife or sharp pick with difficulty (heavy pressure). Heavy hammer blows required to break specimen.
Moderately Hard	Specimen can be scratched with pocket knife or sharp pick with light or moderate pressure. Core breaks with moderate hammer blows.
Moderately Soft	Specimen can be grooved 1/6" deep with a pocket knife or sharp pick with moderate or heavy pressure. Breaks with light hammer blow or heavy manual pressure.
Soft	Specimen can be grooved or gouged easily by a pocket knife or sharp pick with light pressure, can be scratched with fingernail. Breaks with light to moderate manual pressure.
Very Soft	Specimen can be readily indented, grooved or gouged with fingernail, or carved with a pocket knife. Breaks with light manual pressure.

FRACTURE DENSITY

Description	Observed Fracture Density
Unfractured	No fractures.
Very slightly fractured	Lengths greater than 3 feet.
Slightly fractured	Lengths from 1 to 3 feet with few lengths less than 1 foot or greater than 3 feet.
Moderately fractured	Lengths mostly in 4" to 1 foot range with most lengths about 8"
Intensely fractured	Lengths average from 1 to 4" with scattered fragmented intervals with lengths less than 4"
Very intensely fractured	Mostly chips and fragments with a few scattered short core lengths.

Combination descriptors (such as "Very intensely to intensely fractured") are used where equal distribution of both fracture density characteristics is present over a significant interval or exposure, or where characteristics are "in between" the descriptor definitions. Only two adjacent descriptors may be combined.

WEATHERING DESCRIPTORS FOR INTACT ROCK

Description	Diagnostic features					General Characteristics
	Chemical Weathering-Discoloration and/or oxidation		Mechanical Weathering-Grain boundary conditions (disaggregation) primarily for granitics and some coarse-grained sediments	Texture and Solutioning		
	Body of Rock	Fracture Surfaces		Texture	Solutioning	
Fresh	No discoloration, not oxidized.	No discoloration or oxidation.	No separation, intact (tight).	No change.	No solutioning.	Hammer rings when crystalline rocks are struck.
Slightly Weathered	Discoloration or oxidation is limited to surface of, or short distance from, fractures; some feldspar crystals are dull.	Minor to complete discoloration or oxidation of most surfaces.	No visible separation, intact (tight).	Preserved.	Minor leaching of some soluble minerals may be noted.	Hammer rings when crystalline rocks are struck. Body of rock not weakened.
Moderately Weathered	Discoloration or oxidation extends from fractures usually throughout; Fe-Mg minerals are "rusty," feldspar crystals are "cloudy."	All fracture surfaces are discolored or oxidized.	Partial separation of boundaries visible.	Generally preserved.	Soluble minerals may be mostly leached.	Hammer does not ring when rock is struck. Body of rock is slightly weakened.
Intensely Weathered	Discoloration or oxidation throughout; all feldspars and Fe-Mg minerals are altered to clay to some extent; or chemical alteration produces in-situ disaggregation, see grain boundary conditions.	All fracture surfaces are discolored or oxidized, surfaces friable.	Partial separation, rock is friable; in semiarid conditions granitics are disaggregated.	Texture altered by chemical disintegration (hydration, argillation).	Leaching of soluble minerals may be complete.	Dull sound when struck with hammer, usually can be broken with moderate to heavy manual pressure or by light hammer blow without reference to planes of weakness such as incipient or hairline fractures, or veinlets. Rock is significantly weakened.
Decomposed	Discolored or oxidized throughout, but resistant minerals such as quartz may be unaltered; all feldspars and Fe-Mg minerals are completely altered to clay.		Complete separation of grain boundaries (disaggregated).	Resembles a soil, partial or complete remnant rock structure may be preserved; leaching of soluble minerals usually complete.		Can be granulated by hand. Resistant minerals such as quartz may be present as "stringers" or "dikes."

Combination descriptors (such as "slightly weathered to fresh") are permissible where equal distribution of both weathering characteristics is present over significant intervals or where characteristics present are "in between" the diagnostic feature. However, combination descriptors should not be used where significant, identifiable zones can be delineated. Only two adjacent descriptors may be combined. "Very intensely weathered" is the combination descriptor for "intensely weathered to decomposed."

ENGINEERING SERVICES	GEOTECHNICAL SERVICES	STATE OF CALIFORNIA DEPARTMENT OF TRANSPORTATION	DIVISION OF ENGINEERING SERVICES STRUCTURE DESIGN DESIGN BRANCH	BRIDGE NO. 56-0840 POST MILE 19.1	IVY STREET OC (REPLACE) LOG OF TEST BORINGS 5 OF 8
	PREPARED BY: F. Nguyen 02/10		CU 08 EA 448401	DISREGARD PRINTS BEARING EARLIER REVISION DATES	REVISION DATES 03-16-10 SHEET 24 OF 27

GS LOTB ROCK LEGEND

ORIGINAL SCALE IN INCHES FOR REDUCED PLANS 0 1 2 3

FILE => 560840zltb24.dgn

USERNAME => trmnguye DATE PLOTTED => 30-APR-2011 TIME PLOTTED => 14:14

DIST	COUNTY	ROUTE	POST MILES TOTAL PROJECT	SHEET No	TOTAL SHEETS
08	RIV	91	15.6/21.6		

GEOTECHNICAL PROFESSIONAL DATE 10/2008

PLANS APPROVAL DATE

REGISTERED PROFESSIONAL ENGINEER ANDREW C. LEE No. 2616 Exp. 6-30-10 GEOTECHNICAL STATE OF CALIFORNIA

The State of California or its officers or agents shall not be responsible for the accuracy or completeness of electronic copies of this plan sheet.

California Department of Transportation
5900 Folsom Boulevard
Sacramento, CA 95819

URS Corporation
2020 East First Street, Suite 400
Santa Ana, CA 92705

FOR PLAN VIEW, SEE
"LOG OF TEST BORINGS" 8 OF 83

NOTE: 1. This LOTB sheet was prepared in accordance with the Caltrans Soil & Rock Logging, Classification, and Presentation Manual (June 2007).

2. For legend, see "Log of Test Borings" 1 of 83

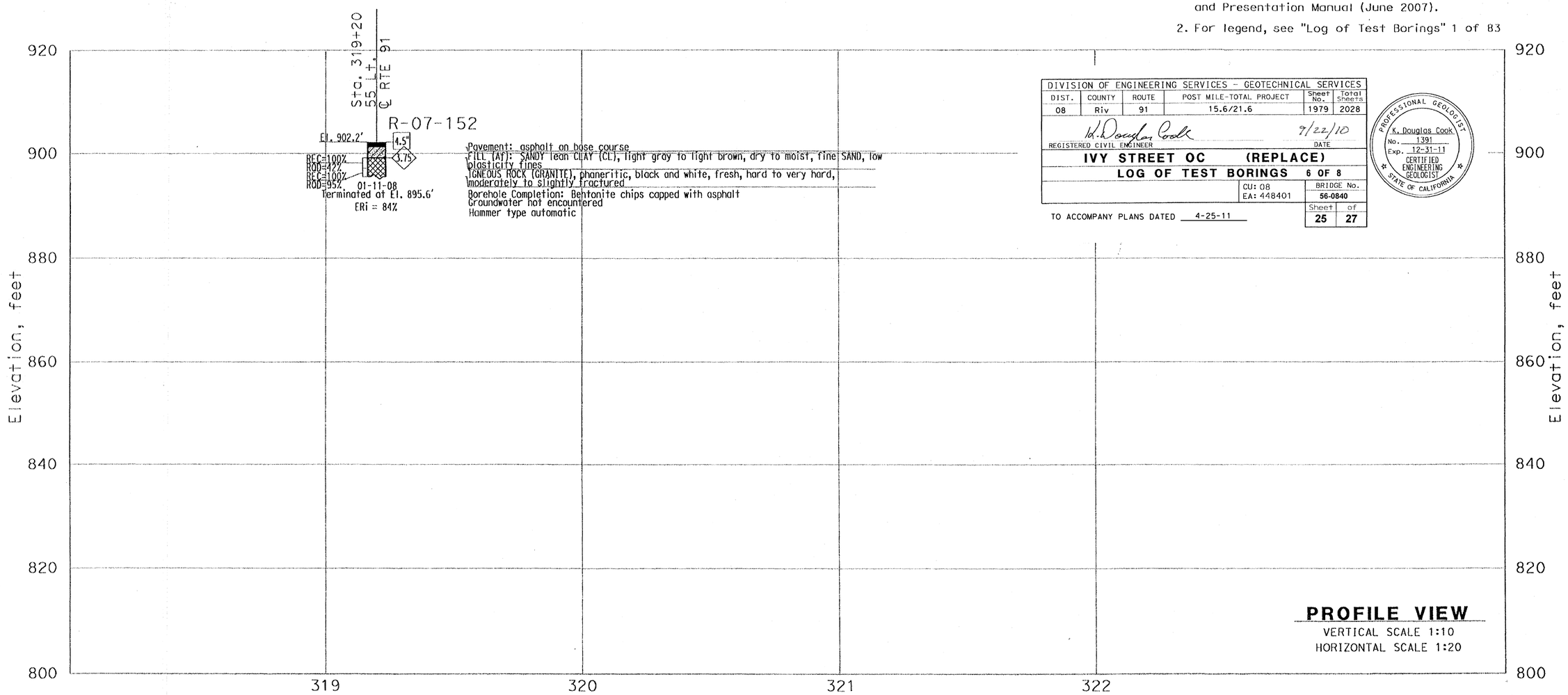

DIVISION OF ENGINEERING SERVICES - GEOTECHNICAL SERVICES					
DIST.	COUNTY	ROUTE	POST MILE-TOTAL PROJECT	Sheet No.	Total Sheets
08	Riv	91	15.6/21.6	1979	2028

REGISTERED CIVIL ENGINEER K. Douglas Cook DATE 9/22/10

IVY STREET OC (REPLACE)

LOG OF TEST BORINGS 6 OF 8

CU: 08 EA: 448401 BRIDGE No. 56-0840 Sheet 25 of 27

TO ACCOMPANY PLANS DATED 4-25-11

PROFESSIONAL GEOLOGIST K. Douglas Cook No. 1391 Exp. 12-31-11 CERTIFIED ENGINEERING GEOLOGIST STATE OF CALIFORNIA

THIS PLAN ACCURATE FOR SOUND WALL AND RETAINING WALL WORK ONLY

GINA PURSELL DESIGN OVERSIGHT	FUNCTIONAL SUPERVISOR	DRAWN BY	P. QUACH	P.CHAU/D.WADER/C.CARBINO FIELD INVESTIGATION BY:	PREPARED FOR THE STATE OF CALIFORNIA DEPARTMENT OF TRANSPORTATION	A. LEE PROJECT ENGINEER	BRIDGE NO. X	Retaining Wall 315
X SIGN OFF DATE		CHECKED BY	S. PIRATHIVIRAJ	DATE: Nov 6 2007 to March 7 2008			POST MILE X	LOG OF TEST BORINGS

OSF GEOTECHNICAL LOG OF TEST BORINGS SHEET (ENGLISH) (REV. 2/25/05)

ORIGINAL SCALE IN INCHES FOR REDUCED PLANS 0 1 2 3

CU 59A0590
EA 08-448400

FILE => ...\lotb_rw315.dgn

DISREGARD PRINTS BEARING EARLIER REVISION DATES

REVISION DATES (PRELIMINARY STAGE ONLY) X

SHEET 52 OF 83

560840zltb25.tif

DIST	COUNTY	ROUTE	POST MILES TOTAL PROJECT	SHEET No	TOTAL SHEETS
08	RIV	91	15.6/21.6		

GEOTECHNICAL PROFESSIONAL DATE 10/2008

PLANS APPROVAL DATE

REGISTERED PROFESSIONAL ENGINEER ANDREW C. LEE No. 2616 Exp. 6-30-10 GEOTECHNICAL STATE OF CALIFORNIA

The State of California or its officers or agents shall not be responsible for the accuracy or completeness of electronic copies of this plan sheet.

California Department of Transportation
5900 Folsom Boulevard
Sacramento, CA 95819

URS Corporation
2020 East First Street, Suite 400
Santa Ana, CA 92705

FOR PLAN VIEW, SEE
"LOG OF TEST BORINGS" 8 OF 83

NOTE: 1. This LOTB sheet was prepared in accordance with the Caltrans Soil & Rock Logging, Classification, and Presentation Manual (June 2007).

2. For legend, see "Log of Test Borings" 1 of 83

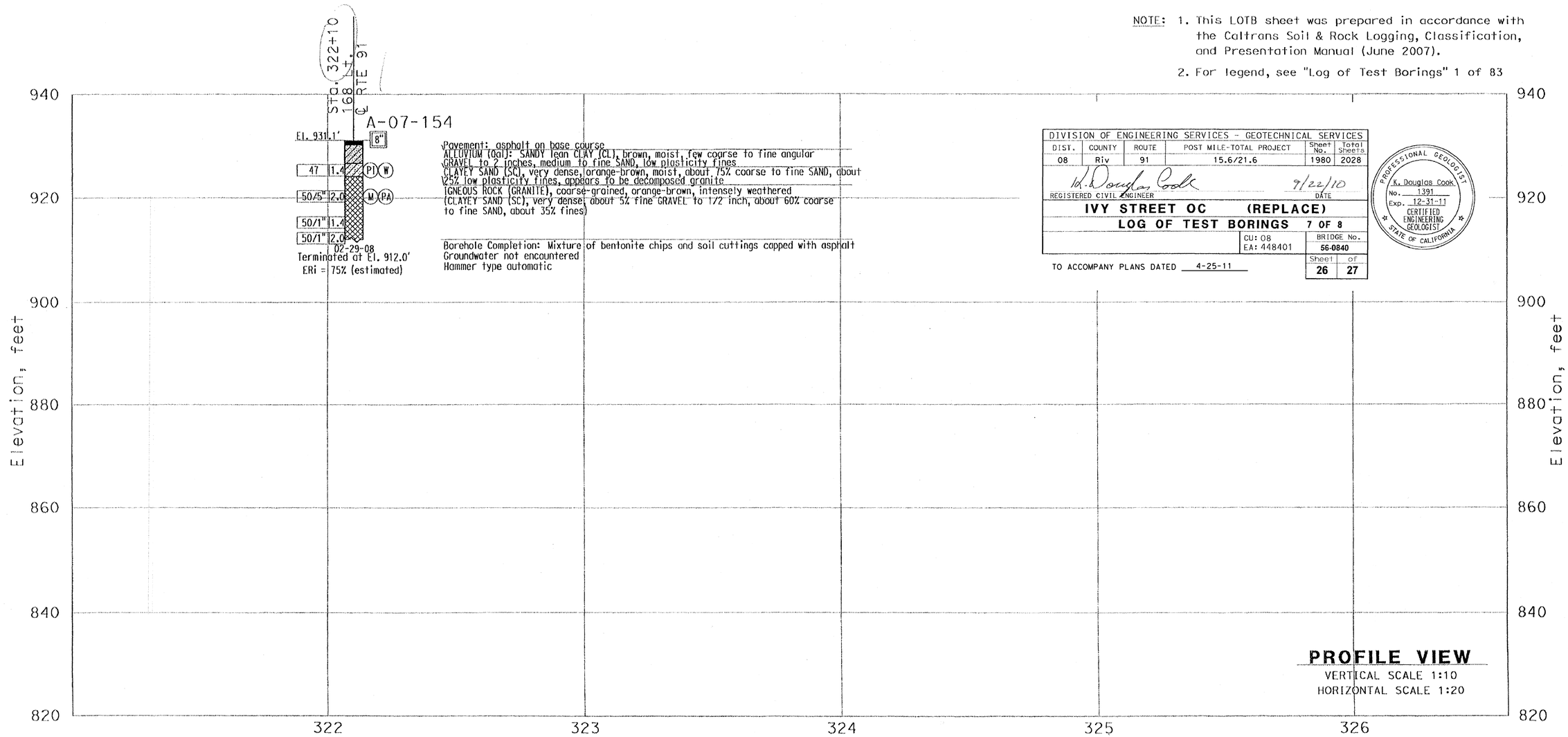

DIVISION OF ENGINEERING SERVICES - GEOTECHNICAL SERVICES					
DIST.	COUNTY	ROUTE	POST MILE-TOTAL PROJECT	Sheet No.	Total Sheets
08	Riv	91	15.6/21.6	1980	2028

REGISTERED CIVIL ENGINEER K. Douglas Cook DATE 9/22/10

PROFESSIONAL GEOLOGIST K. Douglas Cook No. 1391 Exp. 12-31-11 CERTIFIED ENGINEERING GEOLOGIST STATE OF CALIFORNIA

IVY STREET OC (REPLACE)

LOG OF TEST BORINGS 7 OF 8

CU: 08
EA: 448401

BRIDGE No. 56-0840

Sheet 26 of 27

TO ACCOMPANY PLANS DATED 4-25-11

THIS PLAN ACCURATE FOR SOUND WALL AND RETAINING WALL WORK ONLY

GINA PURSELL DESIGN OVERSIGHT	FUNCTIONAL SUPERVISOR	DRAWN BY	P. QUACH	P.CHAU/D.WADER/C.CARBINO FIELD INVESTIGATION BY:	PREPARED FOR THE STATE OF CALIFORNIA DEPARTMENT OF TRANSPORTATION	A. LEE PROJECT ENGINEER	BRIDGE NO. X
X SIGN OFF DATE		CHECKED BY	S. PIRATHIVIRAJ	DATE: Nov 6 2007 to March 7 2008			POST MILE X

Retaining Wall 321

LOG OF TEST BORINGS SHEET 1 OF 3

OSF GEOTECHNICAL LOG OF TEST BORINGS SHEET (ENGLISH) (REV. 2/25/05)

ORIGINAL SCALE IN INCHES FOR REDUCED PLANS 0 1 2 3

CU 59A0590
EA 08-448400

DISREGARD PRINTS BEARING EARLIER REVISION DATES

REVISION DATES (PRELIMINARY STAGE ONLY) 1

SHEET 54 OF 83

FILE => ...\lotb_rw321_1.dgn

560840zltb26.tif

DIST	COUNTY	ROUTE	POST MILES TOTAL PROJECT	SHEET No	TOTAL SHEETS
08	RIV	91	15.6/21.6		

GEOTECHNICAL PROFESSIONAL DATE 10/2008

REGISTERED PROFESSIONAL ENGINEER ANDREW C. LEE No. 2616 Exp. 6-30-10 GEOTECHNICAL STATE OF CALIFORNIA

PLANS APPROVAL DATE

The State of California or its officers or agents shall not be responsible for the accuracy or completeness of electronic copies of this plan sheet.

California Department of Transportation
5900 Folsom Boulevard
Sacramento, CA 95819

URS Corporation
2020 East First Street, Suite 400
Santa Ana, CA 92705

FOR PLAN VIEW, SEE
"LOG OF TEST BORINGS" 8 OF 83

NOTE: 1. This LOTB sheet was prepared in accordance with the Caltrans Soil & Rock Logging, Classification, and Presentation Manual (June 2007).

2. For legend, see "Log of Test Borings" 1 of 83

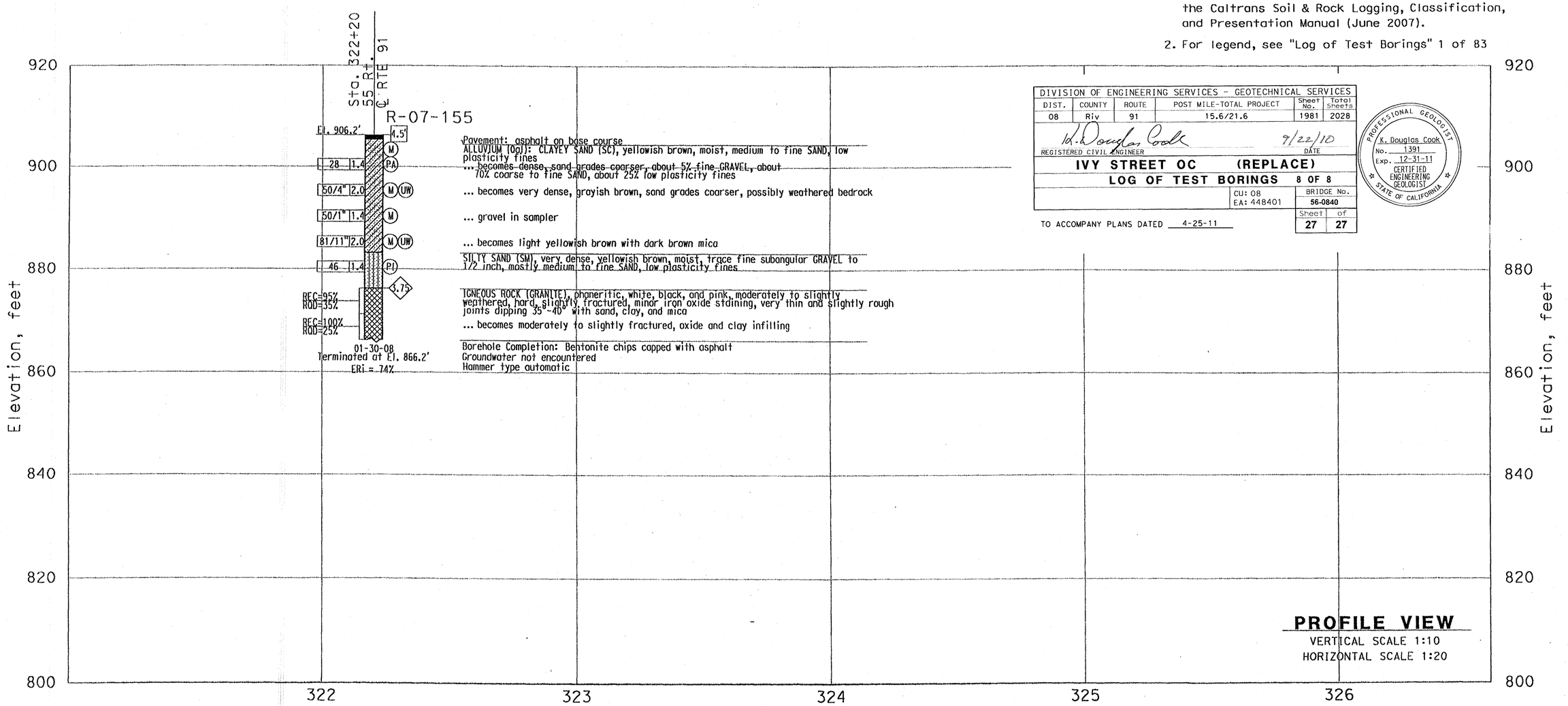

DIVISION OF ENGINEERING SERVICES - GEOTECHNICAL SERVICES					
DIST.	COUNTY	ROUTE	POST MILE-TOTAL PROJECT	Sheet No.	Total Sheets
08	Riv	91	15.6/21.6	1981	2028

REGISTERED CIVIL ENGINEER K. Douglas Cook DATE 9/22/10

PROFESSIONAL GEOLOGIST K. Douglas Cook No. 1391 Exp. 12-31-11 CERTIFIED ENGINEERING GEOLOGIST STATE OF CALIFORNIA

IVY STREET OC (REPLACE)

LOG OF TEST BORINGS 8 OF 8

CU: 08
EA: 448401

BRIDGE No. 56-0840

Sheet 27 of 27

TO ACCOMPANY PLANS DATED 4-25-11

THIS PLAN ACCURATE FOR SOUND WALL AND RETAINING WALL WORK ONLY

GINA PURSELL DESIGN OVERSIGHT X SIGN OFF DATE	FUNCTIONAL SUPERVISOR	DRAWN BY P. QUACH CHECKED BY S. PIRATHIVIRAJ	P.CHAU/D.WADER/C.CARBINO FIELD INVESTIGATION BY: DATE: Nov 6 2007 to March 7 2008	PREPARED FOR THE STATE OF CALIFORNIA DEPARTMENT OF TRANSPORTATION	A. LEE PROJECT ENGINEER	BRIDGE NO. X POST MILE X	Retaining Wall 322 **LOG OF TEST BORINGS SHEET 1 OF 3**

OSF GEOTECHNICAL LOG OF TEST BORINGS SHEET (ENGLISH) (REV. 2/25/05)

ORIGINAL SCALE IN INCHES FOR REDUCED PLANS 0 1 2 3

CU 59A0590
EA 08-448400

DISREGARD PRINTS BEARING EARLIER REVISION DATES

REVISION DATES (PRELIMINARY STAGE ONLY) X

SHEET 57 OF 83

FILE => ...\lotb_rw322_1.dgn

USERNAME => pnuong_quach DATE PLOTTED => 12/1/2008 TIME PLOTTED =>

560840zltb27.tif

DIST	COUNTY	ROUTE	POST MILES TOTAL PROJECT	SHEET No	TOTAL SHEETS
08	Riv	91	15.6/21.6	1982	2028

REGISTERED CIVIL ENGINEER 11-30-10 DATE

4-25-11
PLANS APPROVAL DATE

REGISTERED PROFESSIONAL ENGINEER HUAN D. VU No. C60696 Exp. 12/31/10 CIVIL STATE OF CALIFORNIA

The State of California or its officers or agents shall not be responsible for the accuracy or completeness of electronic copies of this plan sheet.

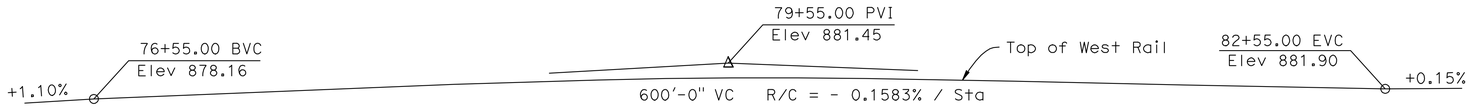

PROFILE GRADE

NO SCALE

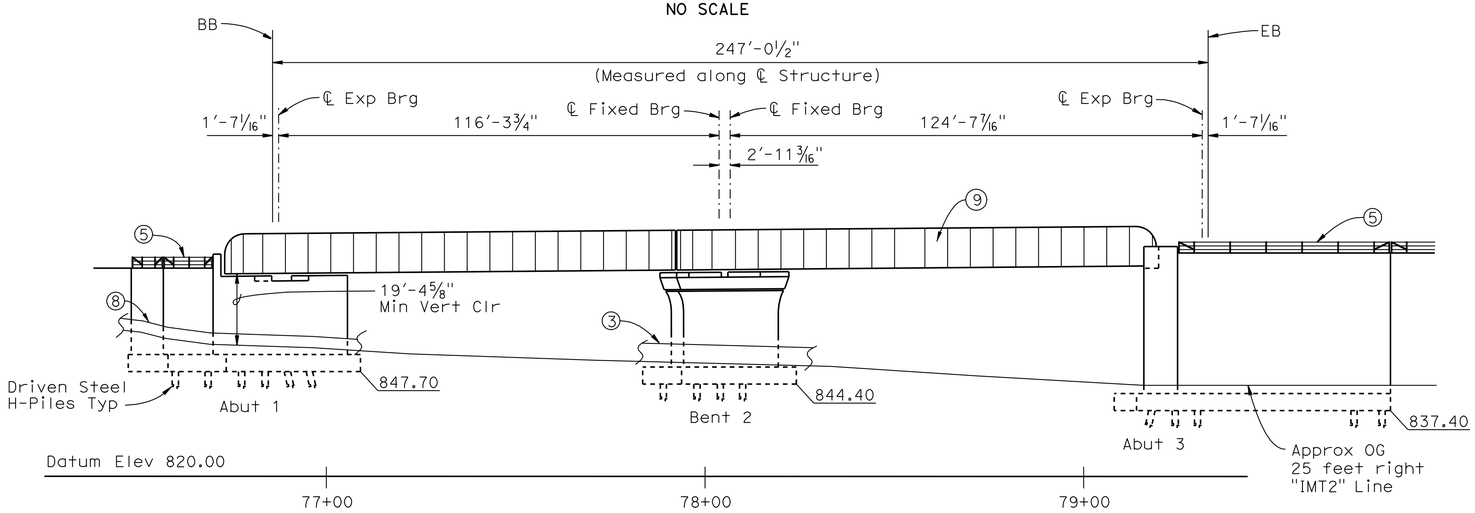

ELEVATION

1" = 20'

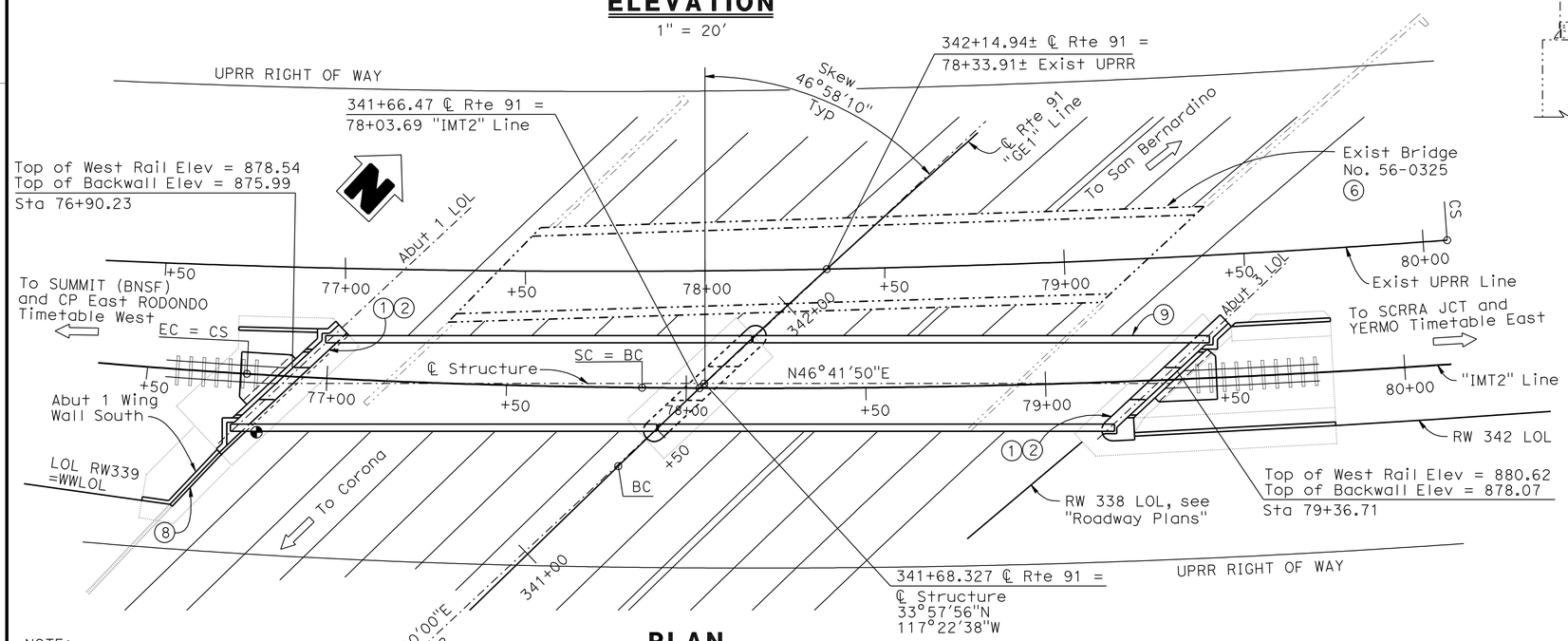

PLAN

1" = 20'

NOTE:
THE CONTRACTOR SHALL VERIFY ALL CONTROLLING FIELD DIMENSIONS BEFORE ORDERING OR FABRICATING ANY MATERIAL.

NOTES:

1. Paint "BR.NO. 56-0848"
2. Paint "PACHAPPA UP" and year Const
3. Concrete Barrier Type 60GE, see "Roadway Plans".
4. Ballast and Track work, see "Roadway Plans".
5. Cable Railing
6. Existing Underpass is to remain operational during construction of Shoofly Underpass.
7. For curve data, see "FOUNDATION PLAN" sheet, and "Roadway Plans."
8. Concrete Barrier Type 60D (Mod)
9. Clean & Paint structural steel.

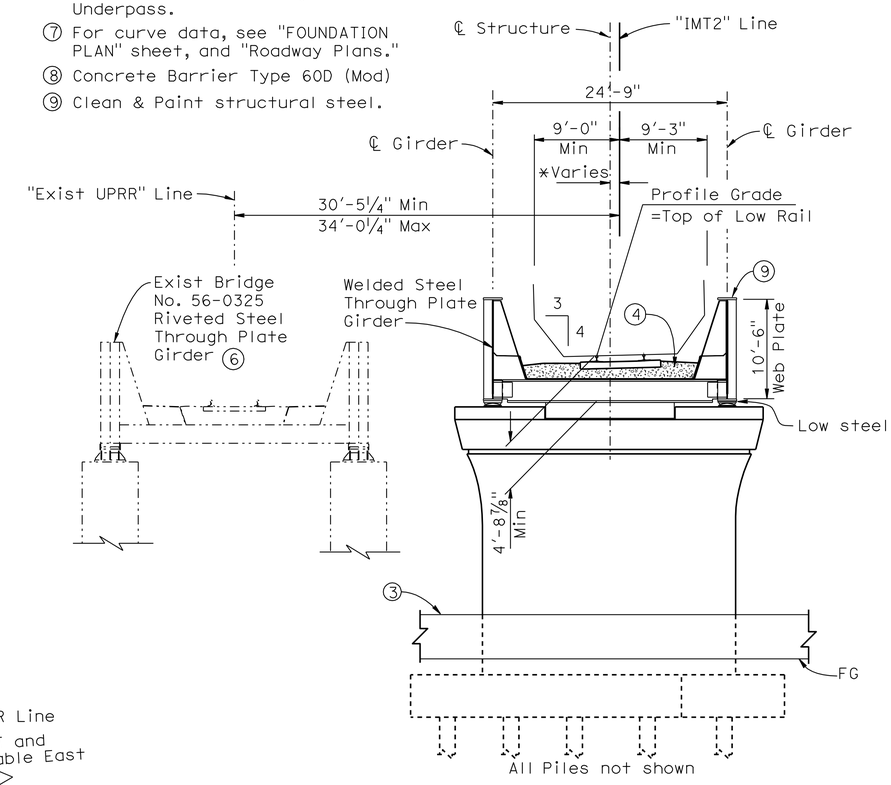

TYPICAL SECTION

⅛" = 1'-0"

* Variable dimension measured along ℄ Brg
Abutment 1 = -2'-11⅛"
Bent 2 = +1'-10½"
Abutment 3 = -1'-4¾"

For "General Notes", "Index to Plans", "Standard Plans", "Quantities", and "Pile Data", see "INDEX TO PLANS" Sheet.

LEGEND:
- - - Indicates existing structure
——— Indicates new construction
⇨ Indicates direction of traffic flow
◐ Indicates point of minimum Vert Clr

DANIEL T. ADAMS
DESIGN ENGINEER

	BY	CHECKED			
DESIGN	B. Addlespurger	G. Slocum	LOAD FACTOR DESIGN	LIVE LOADING:	AREMA COOPER E-80 AND ALTERNATIVE LIVE LOAD
DETAILS	G. Hallstrom	G. Slocum	LAYOUT	J. Yang	B. Addlespurger
QUANTITIES	T. Sanderson	B. Addlespurger	SPECIFICATIONS	D. Klein	PLANS AND SPECS COMPARED D. Klein

ORIGINAL SCALE IN INCHES FOR REDUCED PLANS 0 1 2 3

STATE OF CALIFORNIA
DEPARTMENT OF TRANSPORTATION

DIVISION OF ENGINEERING SERVICES
STRUCTURE DESIGN
DESIGN BRANCH 10

CU 08
EA 448401

BRIDGE NO. 56-0848
POST MILE 19.39

PACHAPPA UP (SHOOFLY)
GENERAL PLAN

DISREGARD PRINTS BEARING EARLIER REVISION DATES

REVISION DATES: 5-14-08 5-13-10 6-08-10 7-09-10 08-06-10 9-29-10 10-20-10 11-04-10 5-13-10

SHEET 1 OF 39

STRUCTURES DESIGN GENERAL PLAN SHEET (ENGLISH) (REV.07-24-06)

FILE => 560848agp01.dgn

USERNAME => trmartin DATE PLOTTED => 30-APR-2011 TIME PLOTTED => 14:33

DIST	COUNTY	ROUTE	POST MILES TOTAL PROJECT	SHEET No	TOTAL SHEETS
08	Riv	91	15.6/21.6	1983	2028

REGISTERED CIVIL ENGINEER 11-30-10 DATE

4-25-11
PLANS APPROVAL DATE

REGISTERED PROFESSIONAL ENGINEER HUAN D. VU No. C60696 Exp. 12/31/10 CIVIL STATE OF CALIFORNIA

The State of California or its officers or agents shall not be responsible for the accuracy or completeness of electronic copies of this plan sheet.

INDEX TO PLANS

SHEET NO.	TITLE
1.	GENERAL PLAN
2.	INDEX TO PLANS
3.	FOUNDATION PLAN
4.	ABUTMENT 1 LAYOUT
5.	ABUTMENT 3 LAYOUT
6.	ABUTMENT DETAILS NO. 1
7.	ABUTMENT DETAILS NO. 2
8.	ABUTMENT DETAILS NO. 3
9.	ABUTMENT 1 FOOTING DETAILS
10.	ABUTMENT 3 FOOTING DETAILS
11.	APRON SLAB DETAILS
12.	ABUTMENT 1 WING WALL SOUTH
13.	BENT LAYOUT
14.	BENT DETAILS
15.	SHEAR KEY BEAM LAYOUT
16.	SHEAR KEY BEAM DETAILS
17.	TYPICAL SECTION
18.	GIRDER LAYOUT NO. 1
19.	GIRDER LAYOUT NO. 2
20.	GIRDER DETAILS NO. 1
21.	GIRDER DETAILS NO. 2
22.	GIRDER DETAILS NO. 3
23.	GIRDER DETAILS NO. 4
24.	GIRDER DETAILS NO. 5
25.	GIRDER DETAILS NO. 6
26.	GIRDER DETAILS NO. 7
27.	DECK PLATING AND SIDEWALK LAYOUT
28.	DECK PLATING AND SIDEWALK DETAILS NO. 1
29.	DECK PLATING AND SIDEWALK DETAILS NO. 2
30.	ARCHITECTURAL DETAILS NO. 1
31.	ARCHITECTURAL DETAILS NO. 2
32.	ARCHITECTURAL DETAILS NO. 3
33.	PTFE/SPHERICAL EXPANSION BEARING DETAILS
34.	PTFE/SPHERICAL FIXED BEARING DETAILS
35.	PTFE/SPHERICAL ANCHORAGE DETAILS
36.	DECK DRAINAGE LAYOUT AND DETAILS
37.	LOG OF TEST BORINGS SHEET 1 OF 3
38.	LOG OF TEST BORINGS SHEET 2 OF 3
39.	LOG OF TEST BORINGS SHEET 3 OF 3

STANDARD PLANS DATED MAY 2006

A10A	ACRONYMS AND ABBREVIATIONS (SHEET 1 OF 2)
A10B	ACRONYMS AND ABBREVIATIONS (SHEET 2 OF 2)
A10C	SYMBOLS (SHEET 1 OF 2)
A10D	SYMBOLS (SHEET 2 OF 2)
A62B	LIMITS OF PAYMENT FOR EXCAVATION AND BACKFILL-BRIDGE SURCHARGE AND WALL
A62C	LIMITS OF PAYMENT FOR EXCAVATION AND BACKFILL-BRIDGE
BO-3	BRIDGE DETAILS
B3-1	RETAINING WALL TYPE 1-H=4′ THROUGH 30′
B3-8	RETAINING WALL DETAILS NO. 1
B3-9	RETAINING WALL DETAILS NO. 2
B7-6	DECK DRAINS TYPES D-1 AND D-2
B11-47	CABLE RAILING

NOTE:
THE CONTRACTOR SHALL VERIFY ALL CONTROLLING FIELD DIMENSIONS BEFORE ORDERING OR FABRICATING ANY MATERIAL.

GENERAL NOTES

DESIGN:
1. "MANUAL FOR RAILWAY ENGINEERING" A.R.E.M.A 2010 EDITION
2. BNSF RAILWAY-UNION PACIFIC RAILROAD, "GUIDELINES FOR RAILROAD GRADE SEPARATION PROJECTS" - 2007
3. STEEL CONSTRUCTION MANUAL-AISC 13th EDITION
4. BRIDGE WELDING CODE AWS D1.5-2008
5. BRIDGE DESIGN SPECIFICATIONS" LFD VERSION, APRIL 2000 (1996 16th Edition AASHTO with Interims and Revisions by CALTRANS)

SEISMIC DESIGN: AREMA Chapter 9, Seismic design for railway Structures

LIVE LOADING: COOPER E-80 with Diesel Impact and Alternate Live Load

SHORING: All shoring shall conform to UPRR Guidelines for Temporary Shoring

QUANTITIES

STRUCTURE EXCAVATION (BRIDGE)	2,821	CY
STRUCTURE BACKFILL (BRIDGE)	2,089	CY
PERVIOUS BACKFILL MATERIAL	162	CY
FURNISH STEEL PILING (HP 14 X 89)	17,311	LF
DRIVE STEEL PILE (HP 14 X 89)	243	EA
STRUCTURAL CONCRETE, BRIDGE FOOTING	590	CY
STRUCTURAL CONCRETE, BRIDGE	1,173	CY
STRUCTURAL CONCRETE, APRON SLAB	54	CY
ARCHITECTURAL SURFACE(TEXTURED CONCRETE) FRACTURED RIB TEXTURE	520	SQFT
ARCHITECTURAL SURFACE(TEXTURED CONCRETE) FRACTURED RIB SPLIT SLATE TEXTURE	5,861	SQFT
DRILL AND BOND DOWEL	7	LF
PTFE SPHERICAL BEARING	8	EA
BAR REINFORCING STEEL (BRIDGE)	301,766	LB
WATERPROOFING AND COVER	5,682	SQFT
FURNISH STRUCTURAL STEEL (BRIDGE)	1,064,660	LB
ERECT STRUCTURAL STEEL (BRIDGE)	1,064,660	LB
CLEAN AND PAINT STRUCTURAL STEEL	LUMP	SUM
MINOR CONCRETE (GUTTER)	142	LF
MISCELLANEOUS METAL (BRIDGE)	3,378	LB
BRIDGE DECK DRAINAGE SYSTEM	2,454	LB
CABLE RAILING	162	LF
CONCRETE BARRIER (TYPE 60D MODIFIED)	114	LF

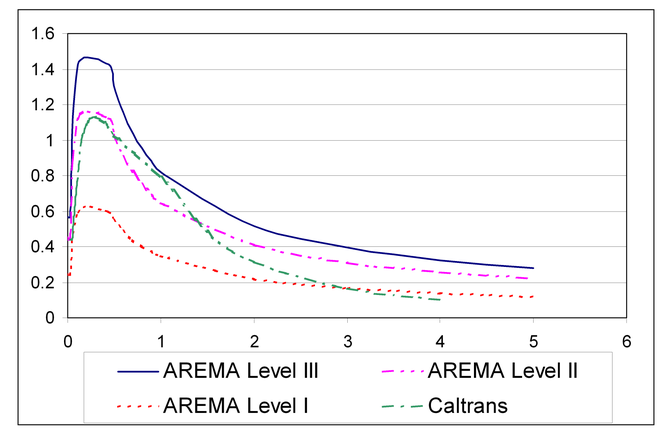

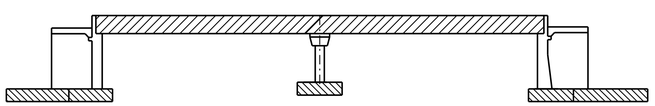

Structural Concrete, Bridge (fc′=4,000psi)

Structural Concrete, Bridge Footing (fc′=4,000psi)

Welded Steel Through Plate Girders

CONCRETE STRENGTH AND TYPE LIMITS

No Scale

REINFORCED CONCRETE: Load Factor Design
f_y = 60,000 psi n = 8.04

STRUCTURAL STEEL: Service Load Design

1. All main member structural steel shall be ASTM A709 Grade 50. Other structural steel may be ASTM A 588 or ASTM A572, except sidewalk checkered plates and flashing which may be ASTM A36 galvanized steel, and deck plates, which shall be ASTM A709 Grade 36. Anchor Rods shall conform to ASTM F1554; and shall be galvanized per ASTM A123. Anchor Rod Washers shall be zinc coated per ASTM A153.
2. Unless noted otherwise, HS bolts, including nuts and washers shall be ⅞" Ø ASTM A325X for slip critical connections "SC Class B" Type 1 Bolts, with bolt heads toward the outside or the underside of the bridge.
3. The bottom flanges and lower half portions of the webs of through plate girders, all floor beams, and end floor beams shall meet the requirements for fracture critical members. Through plate girders, all floor beams, and end floor beams are considered "main" members. Primary components of "main" members are flanges, webs, transverse stiffeners, bearing stiffeners, gussets, shear tabs, and floor beam hangers. All members not designated as FCM or Main Members are considered Secondary Members.
4. Electrodes shall be E70XX unless noted otherwise.

PILE DATA TABLE

	Location	Pile Type	Design Loading (WSD)	Nominal Resistance		Cut-off Elevations (ft)	Design Tip Elevation (ft)	Specified Tip Elevation (ft)
				Compression	Tension			
	Abut 1	HP14x89	200 kips	400 kips	0	848.1	778 (1)	778 (3)
	Abut 1 Wing Wall South	HP14x89	90 kips	180 kips	0	848.1	788 (1)	788
✳	Bent 2	HP14x89	175 kips	345 kips	175 kips	844.8	775 (2)	775 (3)
	Abut 3	HP14x89	200 kips	400 kips	0	837.8	768 (1)	768 (3)

NOTE: Design tip elevations are controlled by the following demands:
(1) Compression
(2) Tension
(3) Specified tip elevation shall not be raised above the design tip elevations.

✳ Piles at bent shall be ASTM A572 Grade 50

	BY	CHECKED
DESIGN	B. Addlespurger	G. Slocum
DETAILS	G. Hallstrom	G. Slocum
QUANTITIES	T. Sanderson	R. Anderson

STATE OF CALIFORNIA
DEPARTMENT OF TRANSPORTATION

DIVISION OF ENGINEERING SERVICES
STRUCTURE DESIGN
DESIGN BRANCH 10

BRIDGE NO. 56-0848
POST MILE 19.39

PACHAPPA UP (SHOOFLY)
INDEX TO PLANS

STRUCTURES DESIGN DETAIL SHEET (ENGLISH) (REV. 10/25/05)

ORIGINAL SCALE IN INCHES FOR REDUCED PLANS 0 1 2 3

CU 08
EA 448401

DISREGARD PRINTS BEARING EARLIER REVISION DATES

REVISION DATES: 11-16-09 11-16-10 6-04-10 7-16-10 8-19-10 9-02-10 9-30-10 11-04-10

SHEET 2 OF 39

FILE => 560848aitp02.dgn

USERNAME => trmartin DATE PLOTTED => 30-APR-2011 TIME PLOTTED => 14:37

DIST	COUNTY	ROUTE	POST MILES TOTAL PROJECT	SHEET No	TOTAL SHEETS
08	Riv	91	15.6/21.6	1984	2028

REGISTERED CIVIL ENGINEER 11-30-10 DATE

4-25-11
PLANS APPROVAL DATE

REGISTERED PROFESSIONAL ENGINEER HUAN D. VU No. C60696 Exp. 12/31/10 CIVIL STATE OF CALIFORNIA

The State of California or its officers or agents shall not be responsible for the accuracy or completeness of electronic copies of this plan sheet.

SPIRAL CURVE DATA				
No.	Δs	Ls	TL	Ts
AA	0°45′54′	85′	56.67′	28.33′
BB	2°54′53"	110′	50.86′	59.16′

(A) 342+14.94± "℄ RTE 91" = 78+33.91± EXIST UPRR LINE

(B) 341+66.47"℄ RTE 91" = 78+03.69"2MT2" LINE

NOTES:

1. Bottom of footing elevations shown thus xxx.xx
2. ℄ Abutment and ℄ Bent layout lines are parallel to N03°40′00"E.
3. Not all piles shown.
4. Underground utilities as shown are approximate.
5. Shoring locations

CURVE DATA				
No.	R	Δ	T	L
1	3183.23	15°17′47"	427.46	849.83
2	1763.18	04°41′47"	72.30	144.53
3	2795.07	07°22′39"	180.20	359.89
4	3000.00	26°22′56"	703.15	1381.36
7	2821.60	02°24′06"	59.14	118.26
8	2810.00	04°35′04"	112.84	224.84
9	3078.26	02°11′00"	58.66	117.31
10	3194.17	10°18′58"	288.33	575.11

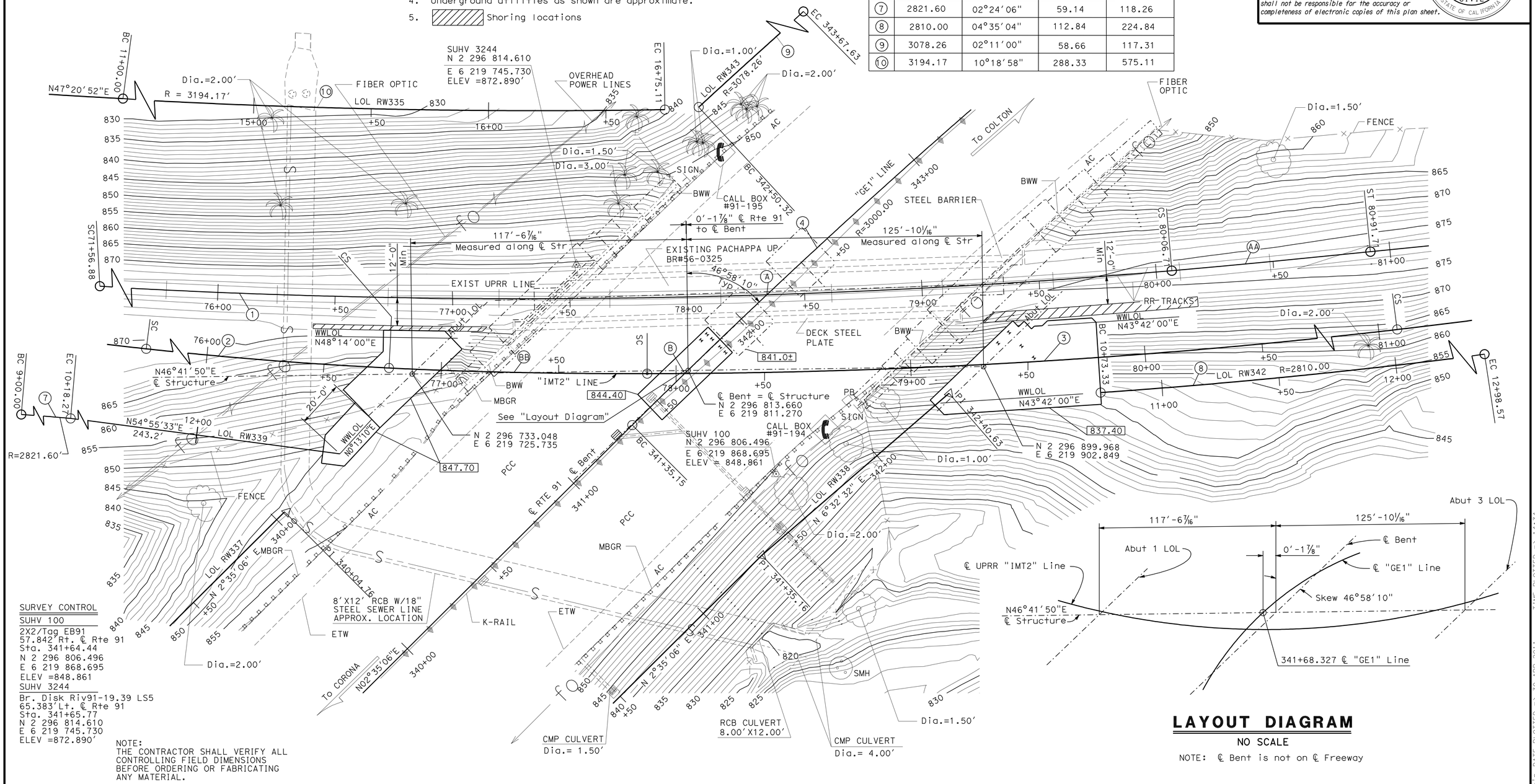

SURVEY CONTROL

SUHV 100
2X2/Tag EB91
57.842′Rt. ℄ Rte 91
Sta. 341+64.44
N 2 296 806.496
E 6 219 868.695
ELEV =848.861
SUHV 3244
Br. Disk Riv91-19.39 LS5
65.383′Lt. ℄ Rte 91
Sta. 341+65.77
N 2 296 814.610
E 6 219 745.730
ELEV =872.890′

NOTE:
THE CONTRACTOR SHALL VERIFY ALL CONTROLLING FIELD DIMENSIONS BEFORE ORDERING OR FABRICATING ANY MATERIAL.

LAYOUT DIAGRAM

NO SCALE

NOTE: ℄ Bent is not on ℄ Freeway

PRELIMINARY INVESTIGATION SECTION

SCALE	VERT.DATUM NAVD 88	PHOTOGRAMMETRY AS OF: X			
1:20	HORZ.DATUM NAD 83 (1991.35)	SURVEYED	BY T.PHONG / C.STEWART	CHECKED	BY C. STEWART 01/2009
ALIGNMENT TIES Dist. Trav. Sheets		DRAFTED	BY S.ABASSY 01/2009	CHECKED	BY L.MANABO 01/2009

	BY	CHECKED
DESIGN	B. Addlespurger	G. Slocum
DETAILS	G. Hallstrom	G. Slocum
QUANTITIES	T. Sanderson	R. Anderson

STATE OF CALIFORNIA
DEPARTMENT OF TRANSPORTATION

DIVISION OF ENGINEERING SERVICES
STRUCTURE DESIGN
DESIGN BRANCH 10

BRIDGE NO. 56-0848
POST MILE 19.39

PACHAPPA UP (SHOOFLY)
FOUNDATION PLAN

STRUCTURES FOUNDATION PLAN SHEET (ENGLISH) (REV. 10/25/05)

ORIGINAL SCALE IN INCHES FOR REDUCED PLANS 0 1 2 3

CU 08
EA 448401

DISREGARD PRINTS BEARING EARLIER REVISION DATES

REVISION DATES: 01/29/09 02/19/09 12/28/09 05-14-10 06-01-10 09-01-10 11-08-10

SHEET 3 OF 39

FILE => 560848efdpl03.dgn

USERNAME => trmorrtin DATE PLOTTED => 30-APR-2011 TIME PLOTTED => 14:34

DIST	COUNTY	ROUTE	POST MILES TOTAL PROJECT	SHEET No	TOTAL SHEETS
08	Riv	91	15.6/21.6	1985	2028

REGISTERED CIVIL ENGINEER 11-30-10 DATE

4-25-11
PLANS APPROVAL DATE

REGISTERED PROFESSIONAL ENGINEER HUAN D. VU No. C60696 Exp. 12/31/10 CIVIL STATE OF CALIFORNIA

The State of California or its officers or agents shall not be responsible for the accuracy or completeness of electronic copies of this plan sheet.

NOTE:
THE CONTRACTOR SHALL VERIFY ALL CONTROLLING FIELD DIMENSIONS BEFORE ORDERING OR FABRICATING ANY MATERIAL.

NOTES:

1. For Sections A-A and C-C, see "ABUTMENT DETAILS NO. 1" sheet.
2. For Footing Reinforcement and Layout, see "ABUTMENT 1 FOOTING DETAILS" and "ABUTMENT DETAILS No. 1" sheets.
3. For Sections D-D, E-E, H-H, and Key Reinforcement, see "ABUTMENT DETAILS No. 2" sheets.
4. For Insert Plate Details, see "SHEAR KEY BEAM LAYOUT" and "SHEAR KEY BEAM DETAILS" sheets.
5. For Elevations, see "PTFE/SPHERICAL ANCHORAGE DETAILS" sheet. Slope finished seat to drain towards ℄ structure, see "DECK DRAINAGE LAYOUT AND DETAILS" sheet.
6. Recess width to match fit Shear Key Beam, see "SHEAR KEY BEAM LAYOUT" sheet.

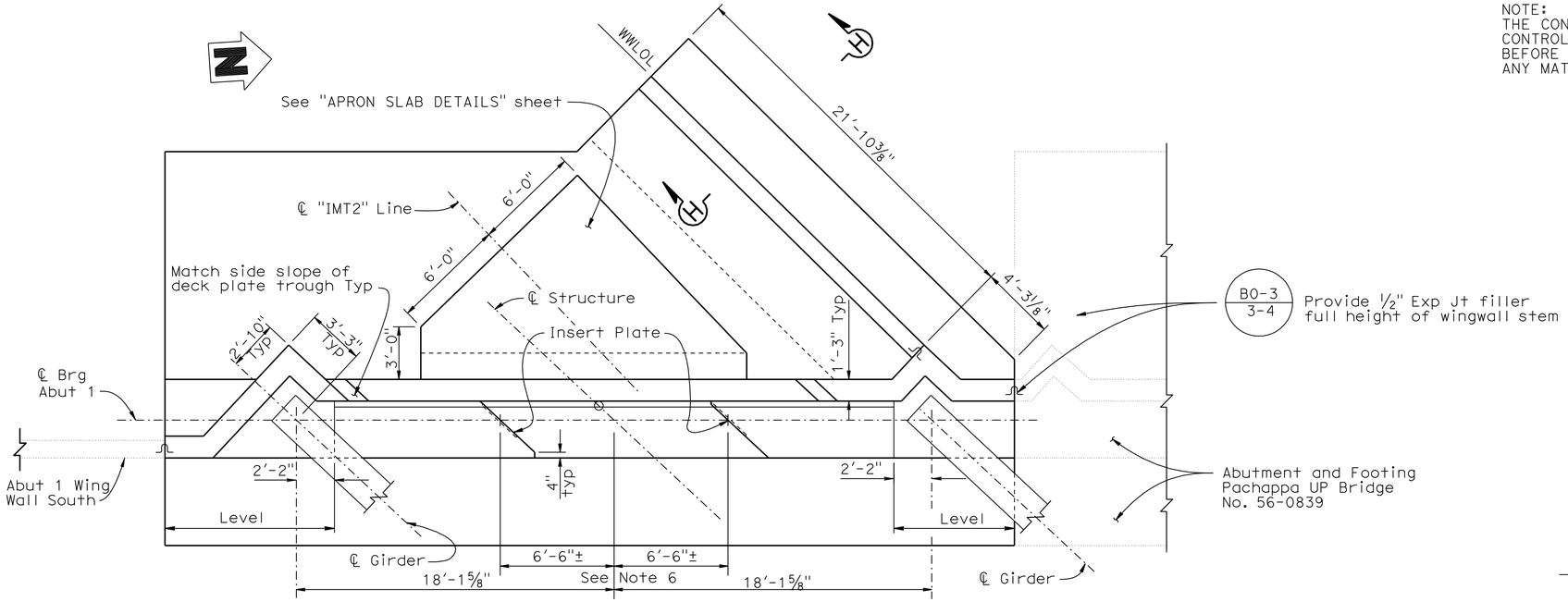

PLAN

1/4" = 1'-0"

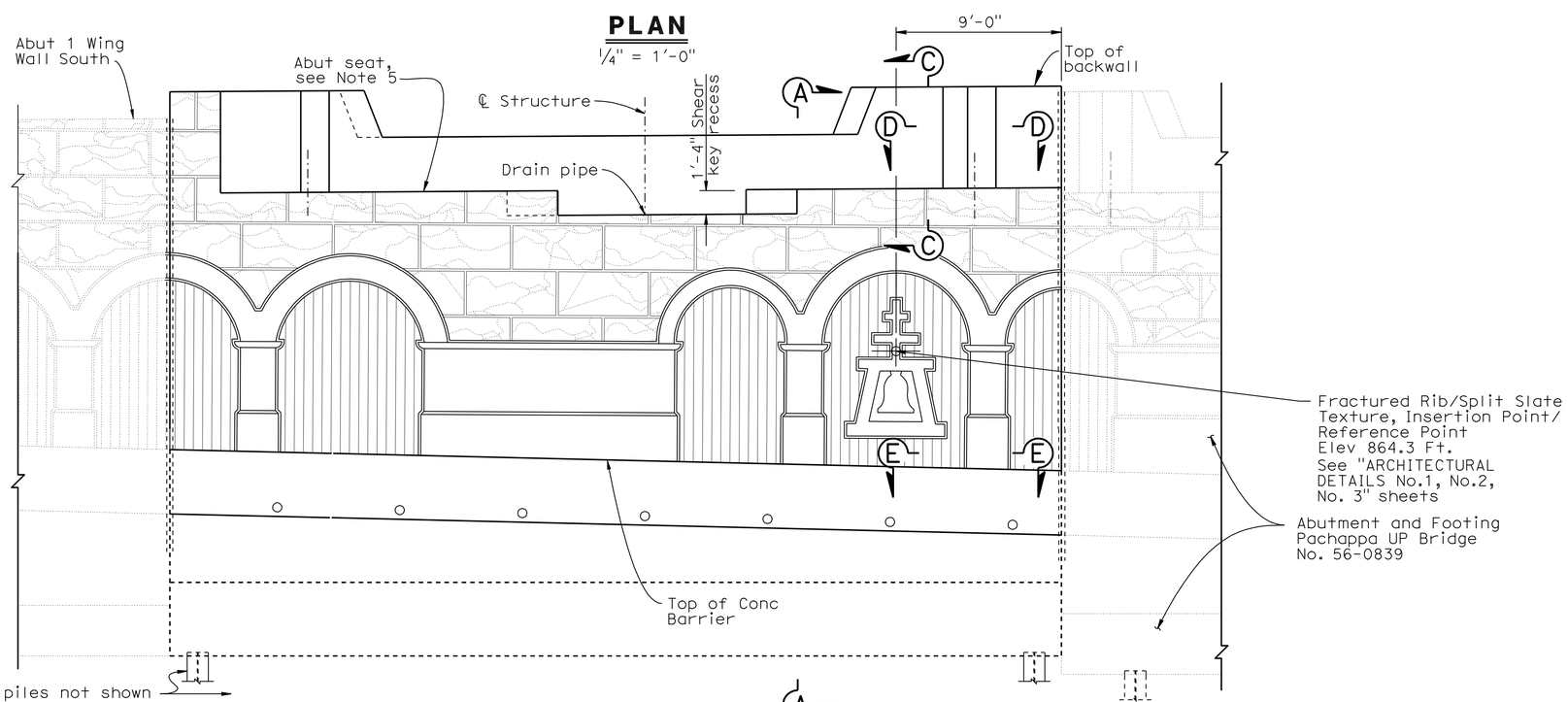

ELEVATION

1/4" = 1'-0"

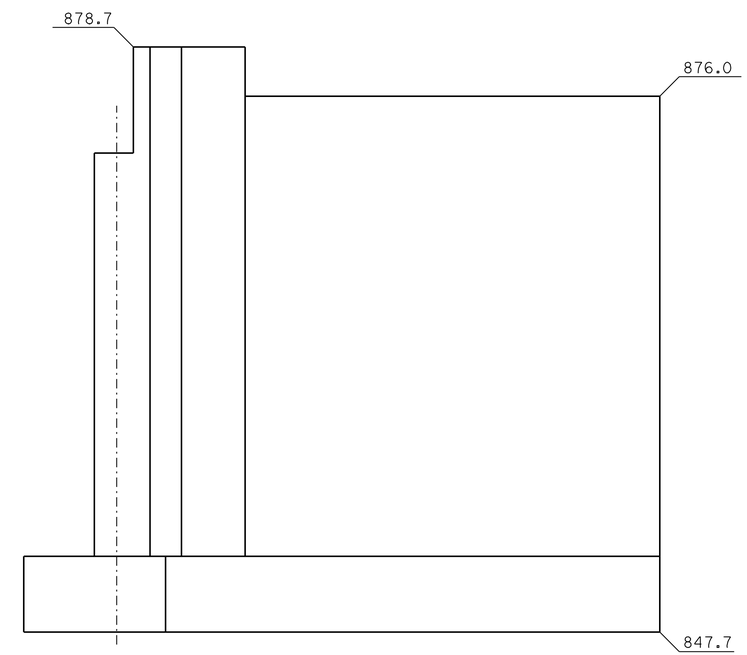

WINGWALL ELEVATION FACING RTE 91 SB TRAFFIC

1/4" = 1'-0"

DESIGN	BY B. Addlespurger	CHECKED G. Slocum	
DETAILS	BY J. Yang	CHECKED G. Slocum	
QUANTITIES	BY T. Sanderson	CHECKED R. Anderson	

STATE OF CALIFORNIA
DEPARTMENT OF TRANSPORTATION

DIVISION OF ENGINEERING SERVICES
STRUCTURE DESIGN
DESIGN BRANCH 10

BRIDGE NO. 56-0848
POST MILE 19.39

PACHAPPA UP (SHOOFLY)
ABUTMENT 1 LAYOUT

STRUCTURES DESIGN DETAIL SHEET (ENGLISH) (REV. 10/25/05)

ORIGINAL SCALE IN INCHES FOR REDUCED PLANS 0 1 2 3

CU 08
EA 448401

DISREGARD PRINTS BEARING EARLIER REVISION DATES

REVISION DATES: 10-06-09 8-02-10 9-28-10 11-30-10 03-18-10 05-14-10 05-14-10 6-01-10 7-19-10

SHEET 4 OF 39

FILE => 560848fa01_lo04.dgn

USERNAME => trmart1n DATE PLOTTED => 30-APR-2011 TIME PLOTTED => 14:34

DIST	COUNTY	ROUTE	POST MILES TOTAL PROJECT	SHEET No	TOTAL SHEETS
08	Riv	91	15.6/21.6	1986	2028

REGISTERED CIVIL ENGINEER 11-30-10 DATE

4-25-11
PLANS APPROVAL DATE

REGISTERED PROFESSIONAL ENGINEER HUAN D. VU No. C60696 Exp. 12/31/10 CIVIL STATE OF CALIFORNIA

The State of California or its officers or agents shall not be responsible for the accuracy or completeness of electronic copies of this plan sheet.

NOTE:
THE CONTRACTOR SHALL VERIFY ALL CONTROLLING FIELD DIMENSIONS BEFORE ORDERING OR FABRICATING ANY MATERIAL.

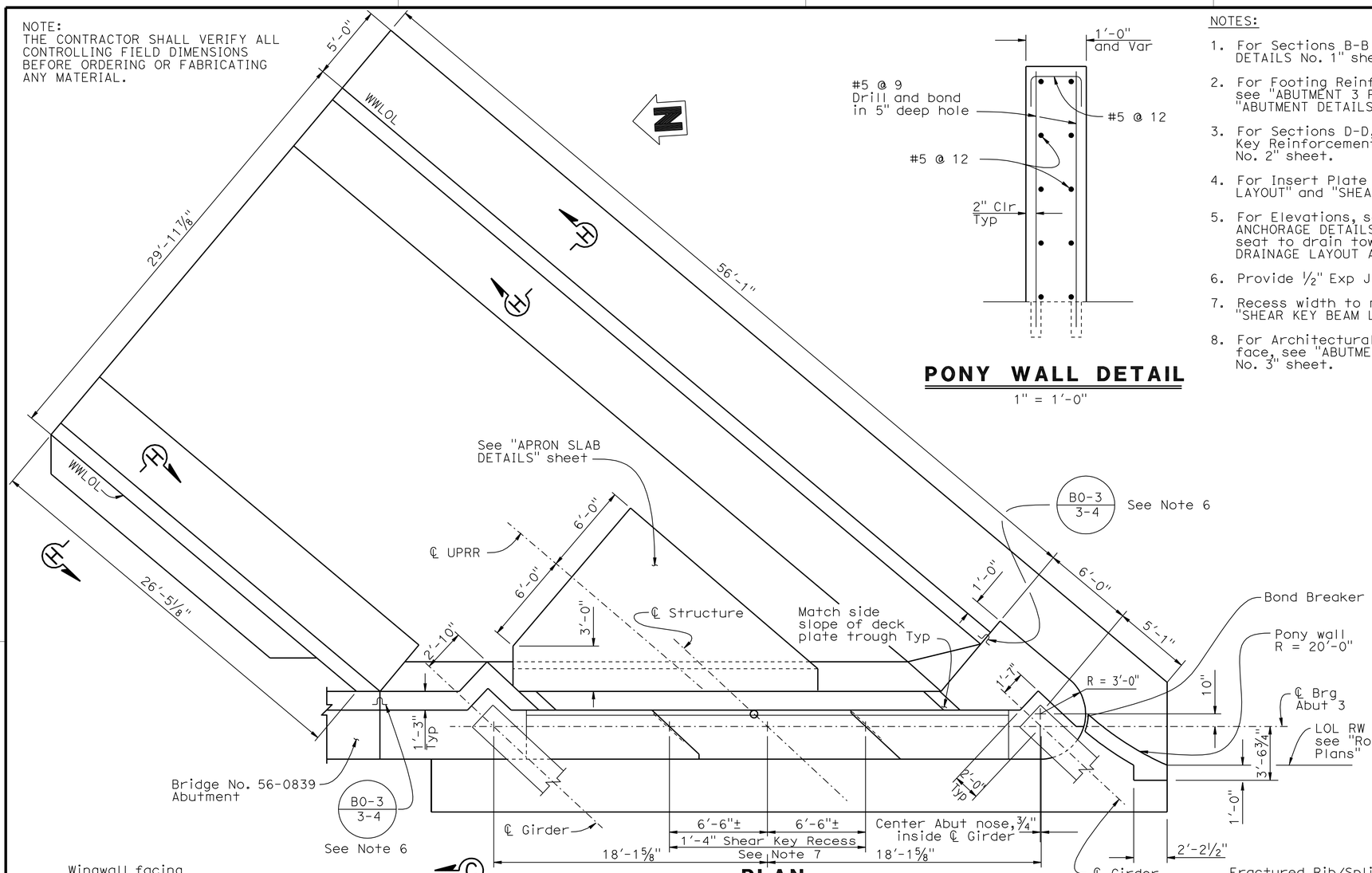

PLAN

¼" = 1'-0"

PONY WALL DETAIL

1" = 1'-0"

NOTES:

1. For Sections B-B and C-C see "ABUTMENT DETAILS No. 1" sheet.
2. For Footing Reinforcement and Layout, see "ABUTMENT 3 FOOTING DETAILS" and "ABUTMENT DETAILS No. 1" sheets.
3. For Sections D-D, E-E, F-F, G-G, H-H, and Key Reinforcement, see "ABUTMENT DETAILS No. 2" sheet.
4. For Insert Plate Details, see "SHEAR KEY BEAM LAYOUT" and "SHEAR KEY BEAM DETAILS" sheets.
5. For Elevations, see "PTFE/SPHERICAL ANCHORAGE DETAILS" sheet. Slope finished seat to drain towards ℄ structure, see "DECK DRAINAGE LAYOUT AND DETAILS" sheet.
6. Provide ½" Exp Jt filler full height of wingwall stem.
7. Recess width to match fit Shear Key Beam, see "SHEAR KEY BEAM LAYOUT" sheet.
8. For Architectural Details of Abutment face, see "ABUTMENT DETAILS No. 3" sheet.

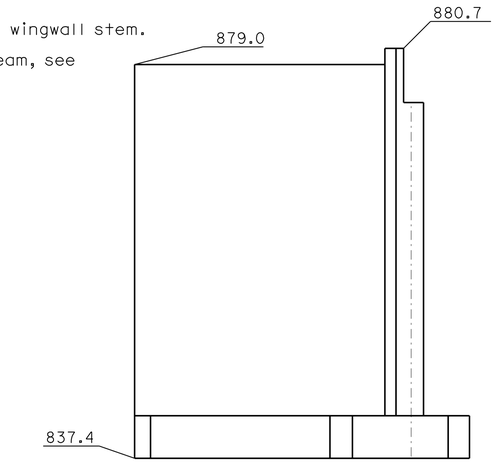

WINGWALL ELEVATION FACING RTE 91 SB TRAFFIC

⅛" = 1'-0"

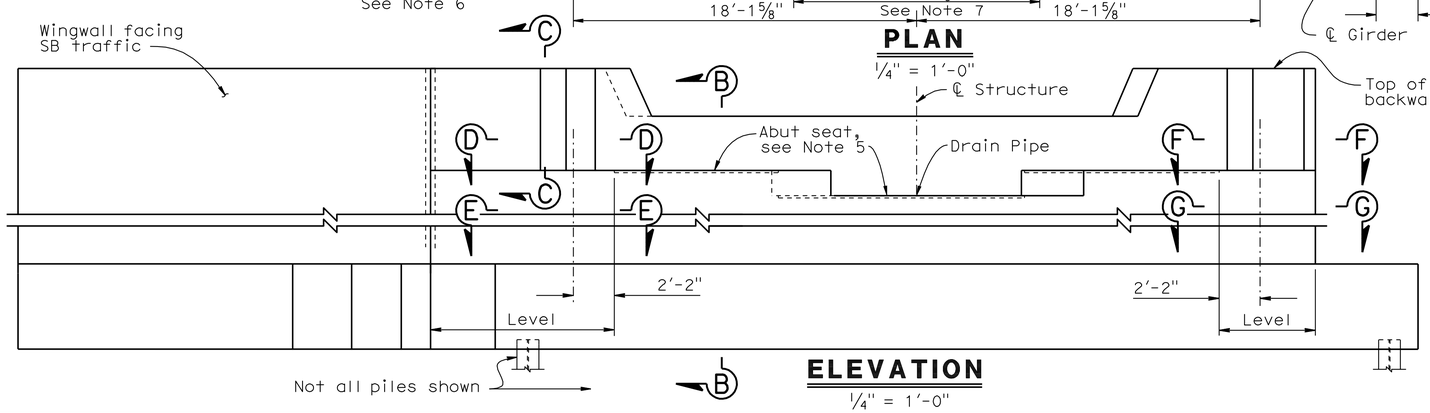

ELEVATION

¼" = 1'-0"

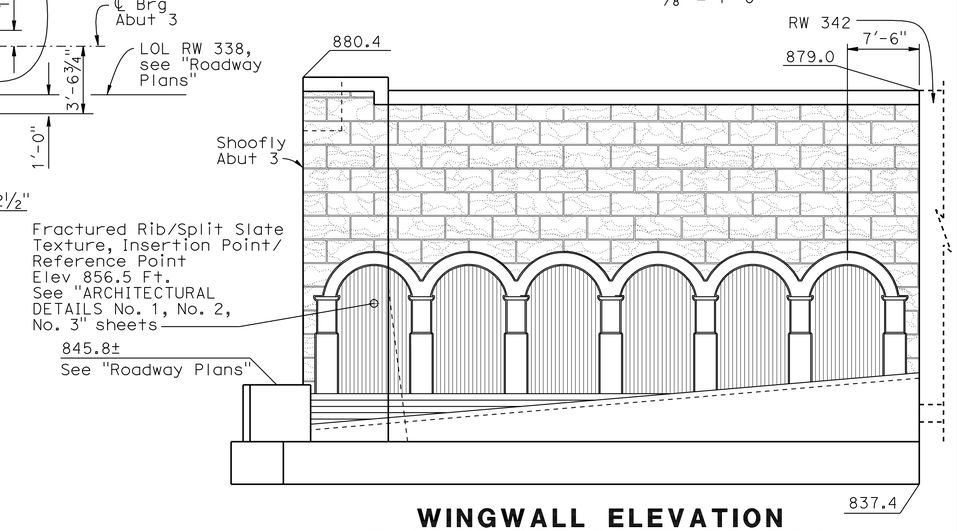

WINGWALL ELEVATION FACING RTE 91 NB TRAFFIC

⅛" = 1'-0"

DESIGN	BY B. Addlespurger	CHECKED G. Slocum	
DETAILS	BY J. Yang	CHECKED G. Slocum	
QUANTITIES	BY T. Sanderson	CHECKED R. Anderson	

STATE OF CALIFORNIA
DEPARTMENT OF TRANSPORTATION

DIVISION OF ENGINEERING SERVICES
STRUCTURE DESIGN
DESIGN BRANCH 10

BRIDGE NO. 56-0848
POST MILE 19.39

PACHAPPA UP (SHOOFLY)
ABUTMENT 3 LAYOUT

STRUCTURES DESIGN DETAIL SHEET (ENGLISH) (REV. 10/25/05)

ORIGINAL SCALE IN INCHES FOR REDUCED PLANS 0 1 2 3

CU 08
EA 448401

DISREGARD PRINTS BEARING EARLIER REVISION DATES

REVISION DATES: 10-16-09 10-30-09 11-02-09 11-18-09 02-12-10 05-11-10 6-04-10 7-16-10 8-09-10 11-30-10

SHEET 5 OF 39

FILE => 560848fa03_lo05.dgn

USERNAME => rtmartin DATE PLOTTED => 30-APR-2011 TIME PLOTTED => 14:34

DIST	COUNTY	ROUTE	POST MILES TOTAL PROJECT	SHEET No	TOTAL SHEETS
08	Riv	91	15.6/21.6	1987	2028

REGISTERED CIVIL ENGINEER 11-30-10 DATE

4-25-11
PLANS APPROVAL DATE

REGISTERED PROFESSIONAL ENGINEER HUAN D. VU No. C60696 Exp. 12/31/10 CIVIL STATE OF CALIFORNIA

The State of California or its officers or agents shall not be responsible for the accuracy or completeness of electronic copies of this plan sheet.

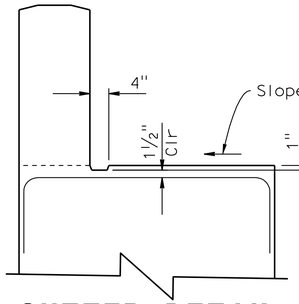

GUTTER DETAIL

3/4" = 1'-0"

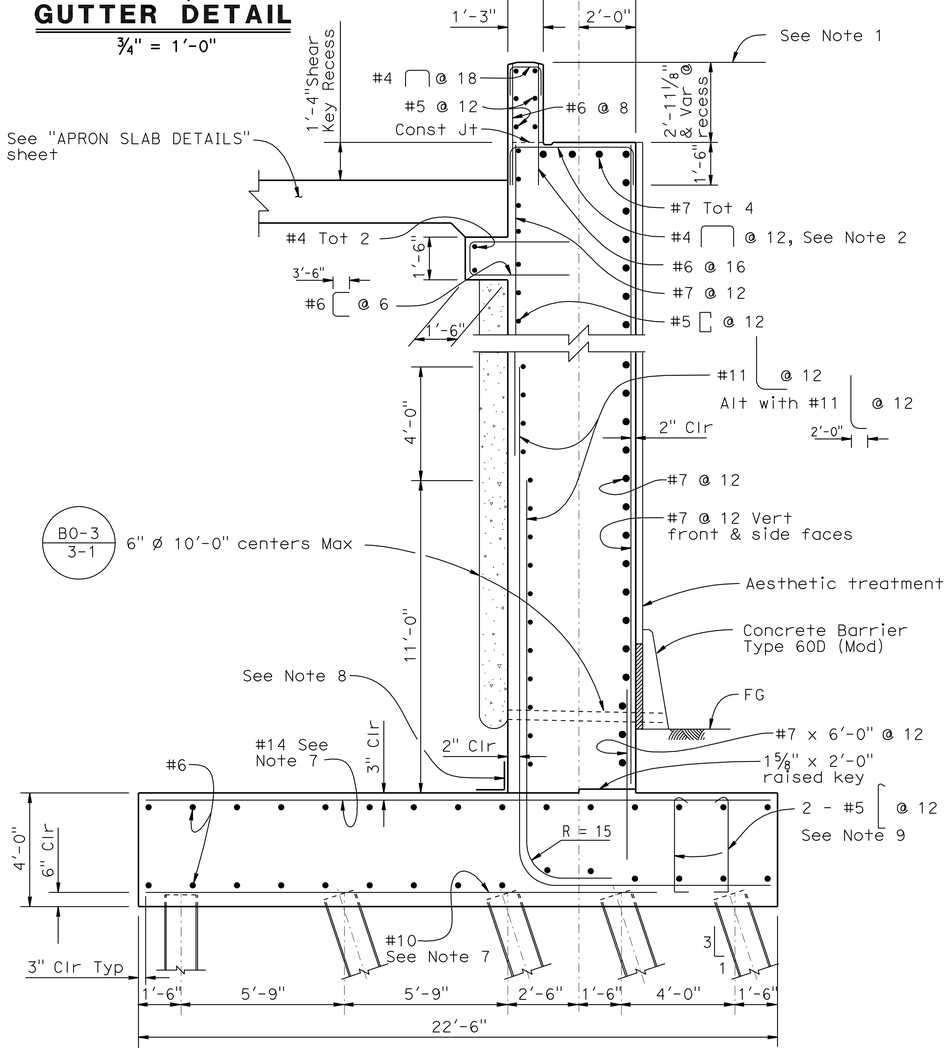

NOTE:
THE CONTRACTOR SHALL VERIFY ALL CONTROLLING FIELD DIMENSIONS BEFORE ORDERING OR FABRICATING ANY MATERIAL.

SECTION A-A

3/8" = 1'-0"

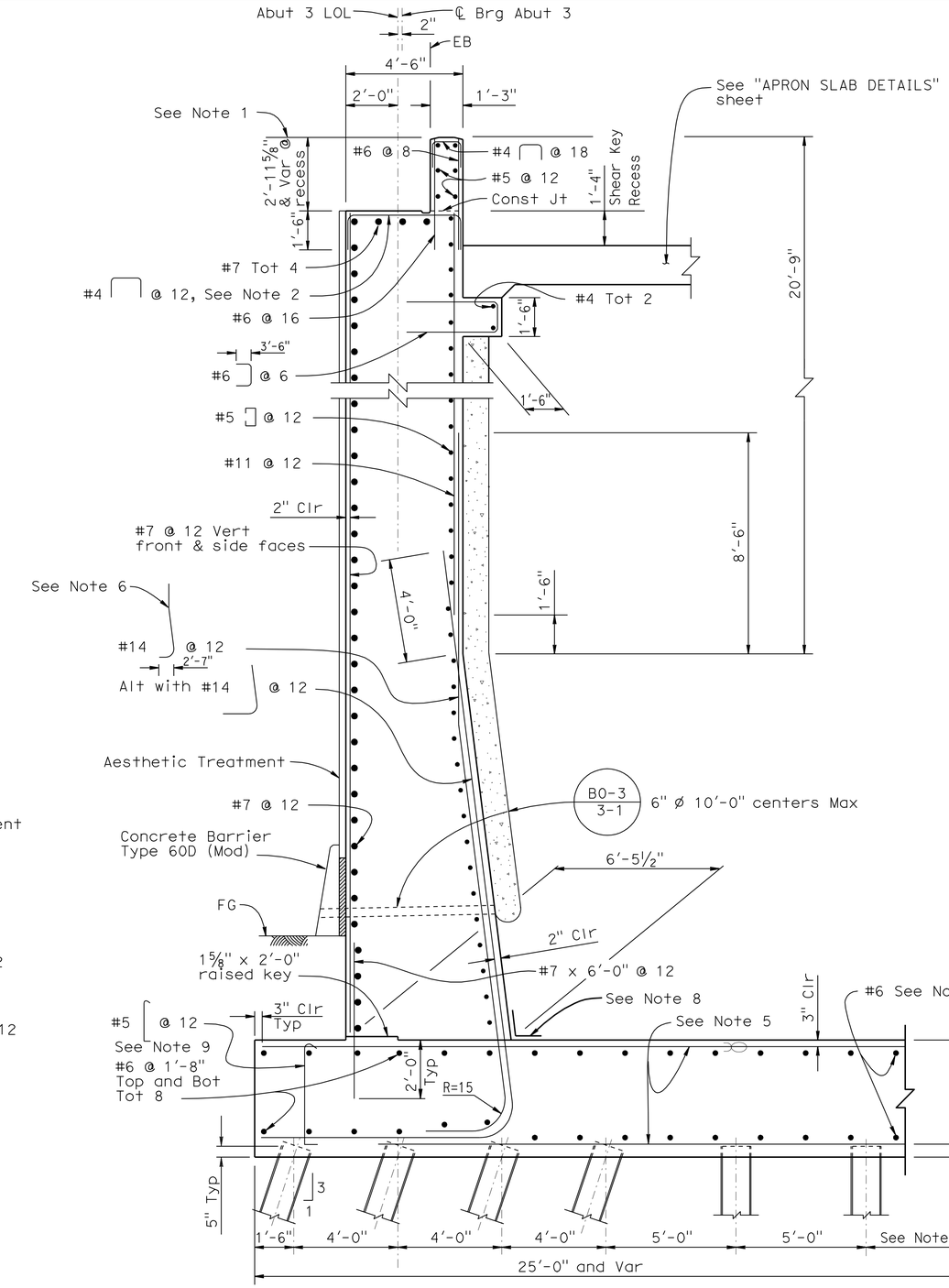

SECTION B-B

3/8" = 1'-0"

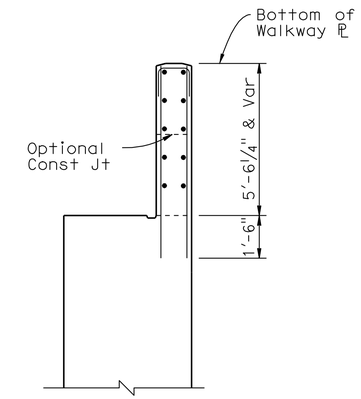

SECTION C-C

3/8" = 1'-0"

For details not shown see other sections.

NOTES:

1. Top of back wall to be at same elevation as top of floor beams after erection, and const before deck ℄ is placed.
2. Reinf to be splayed at top of seat before and within Shear Key Recess.
3. For location of Section A-A and C-C, see "ABUTMENT 1 LAYOUT" sheet.
4. For location of Section B-B, see "ABUTMENT 3 LAYOUT" sheet.
5. See "ABUTMENT 3 FOOTING DETAILS" sheet.
6. Permissible service splice.
7. See "ABUTMENT 1 FOOTING DETAILS" sheet.
8. 2'-0" wide band of dampproofing centered on the joint.
9. Stirrups shall extend to the edge of the footing.

Indicates bundled rebar

DESIGN	BY B. Addlespurger	CHECKED G. Slocum	
DETAILS	BY J. Yang	CHECKED G. Slocum	
QUANTITIES	BY T. Sanderson	CHECKED R. Anderson	

STATE OF CALIFORNIA
DEPARTMENT OF TRANSPORTATION

DIVISION OF ENGINEERING SERVICES
STRUCTURE DESIGN
DESIGN BRANCH 10

BRIDGE NO. 56-0848
POST MILE 19.39

PACHAPPA UP (SHOOFLY)
ABUTMENT DETAILS NO. 1

STRUCTURES DESIGN DETAIL SHEET (ENGLISH) (REV. 10/25/05)

ORIGINAL SCALE IN INCHES FOR REDUCED PLANS 0 1 2 3

CU 08
EA 448401

DISREGARD PRINTS BEARING EARLIER REVISION DATES

REVISION DATES: 10-20-09 9-23-10 02-12-10 05-11-10 05-12-10 6-01-10 7-16-10 8-06-10 9-01-10

SHEET 6 OF 39

FILE => 560848fadt06.dgn

USERNAME => frmartin DATE PLOTTED => 30-APR-2011 TIME PLOTTED => 14:34

DIST	COUNTY	ROUTE	POST MILES TOTAL PROJECT	SHEET No	TOTAL SHEETS
08	Riv	91	15.6/21.6	1988	2028

REGISTERED CIVIL ENGINEER 11-30-10 DATE

4-25-11
PLANS APPROVAL DATE

REGISTERED PROFESSIONAL ENGINEER HUAN D. VU No. C60696 Exp. 12/31/10 CIVIL STATE OF CALIFORNIA

The State of California or its officers or agents shall not be responsible for the accuracy or completeness of electronic copies of this plan sheet.

NOTE:
THE CONTRACTOR SHALL VERIFY ALL CONTROLLING FIELD DIMENSIONS BEFORE ORDERING OR FABRICATING ANY MATERIAL.

TABLE 1	
℄"IMT2" Line to face of Cable Railing	
Abut 3 WW facing NB 91	14'-6"
Abut 3 WW facing SB 91	14'-6"
Abut 1 WW facing SB 91	12'-6"

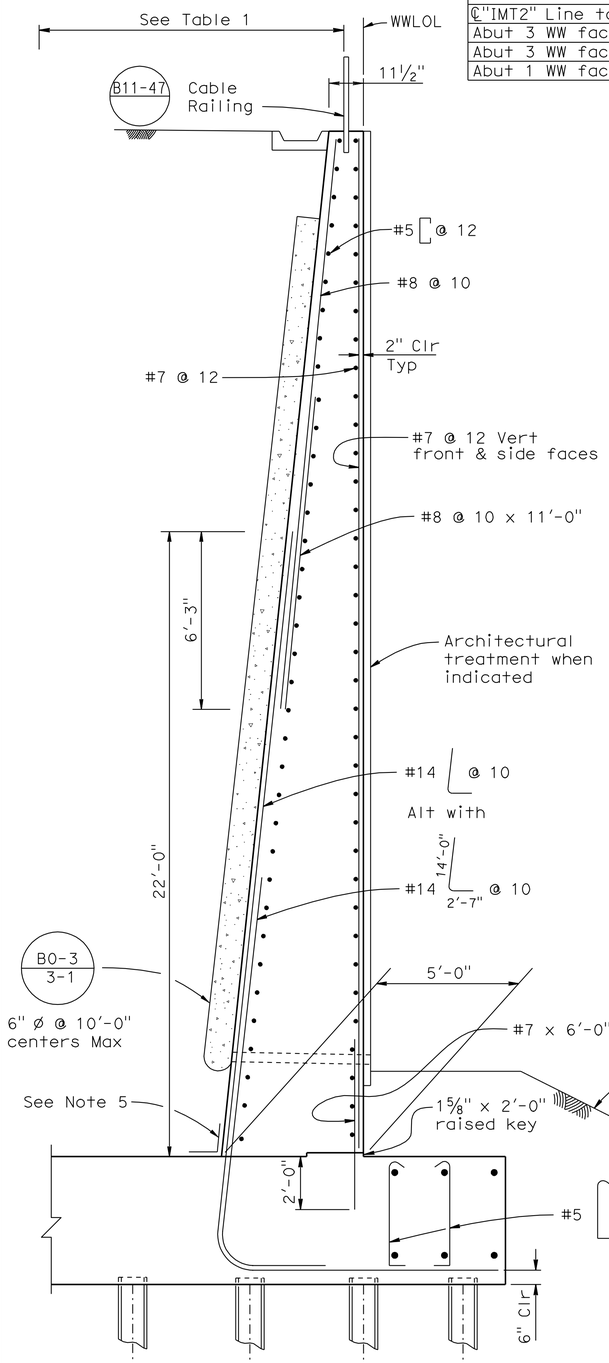

SECTION H-H

⅜" = 1'-0"

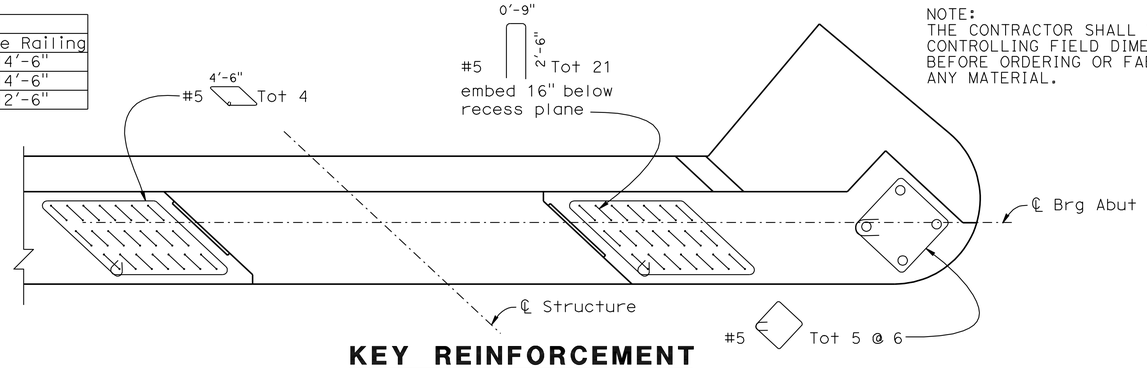

KEY REINFORCEMENT

⅜" = 1'-0"

Reinf is sym to ℄ structure

NOTES:

1. For Abutment Reinf, see "ABUTMENT DETAILS No. 1" sheet.
2. For location of Section D-D, E-E, and H-H, see "ABUTMENT 1 LAYOUT" and "ABUTMENT 3 LAYOUT" sheets.
3. For location of Section F-F and G-G, see "ABUTMENT 3 LAYOUT" sheet.
4. For additional Key Reinforcement details, see "ABUTMENT DETAILS No. 3" sheet.
5. 2'-0" wide band of damp proofing centered on the joint.
6. Bearing anchorage details are shown on "PTFE/SPHERICAL ANCHORAGE DETAILS" sheet.

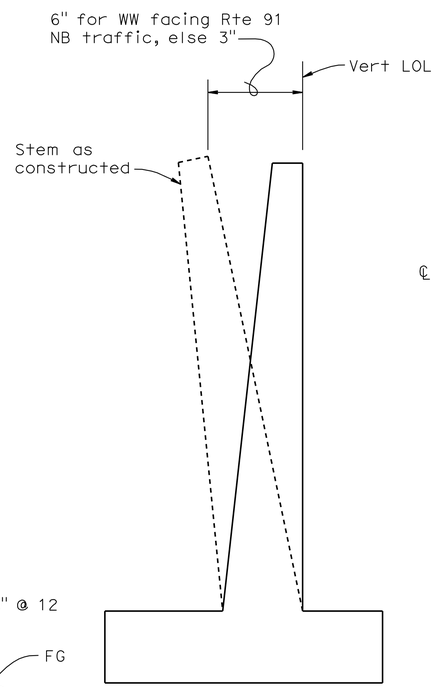

WINGWALL OFFSET

NO SCALE

NOTES:

1. For Footing Reinforcement and Pile Layout, see "ABUTMENT 1 FOOTING DETAILS" and "ABUTMENT 3 FOOTING DETAILS" sheets.
2. Abut 3 RIGHT WINGWALL Shown, Abut 1 & 3 LEFT WINGWALL Simular.

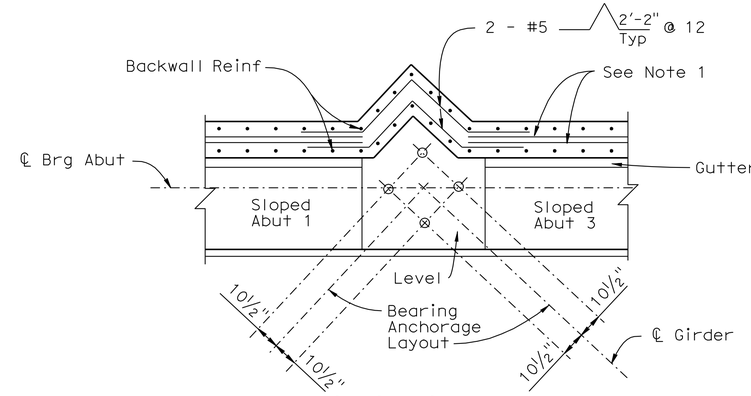

SECTION D-D

⅜" = 1'-0"

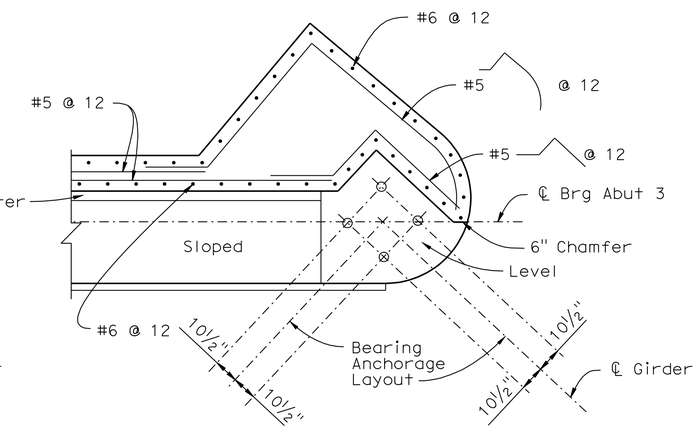

SECTION F-F

⅜" = 1'-0"

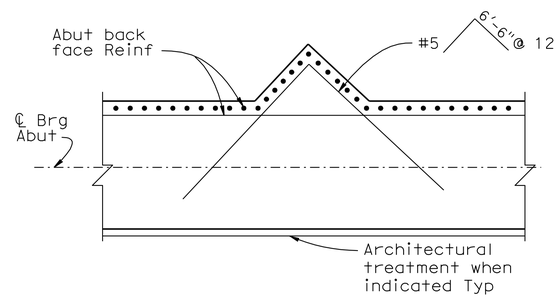

SECTION E-E

⅜" = 1'-0"

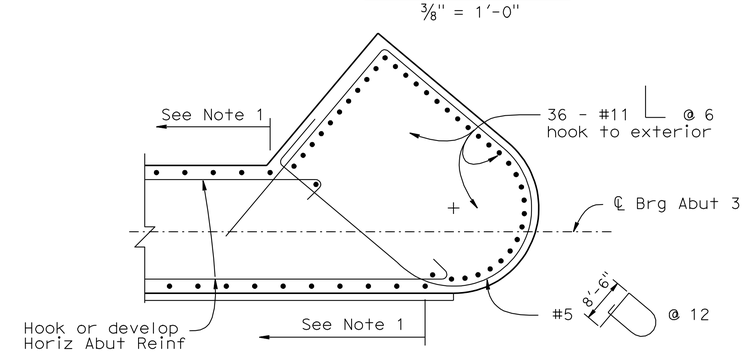

SECTION G-G

⅜" = 1'-0"

DESIGN	BY B. Addlespurger	CHECKED G. Slocum	
DETAILS	BY J. Yang	CHECKED G. Slocum	
QUANTITIES	BY T. Sanderson	CHECKED R. Anderson	

STATE OF CALIFORNIA
DEPARTMENT OF TRANSPORTATION

DIVISION OF ENGINEERING SERVICES
STRUCTURE DESIGN
DESIGN BRANCH 10

BRIDGE NO. 56-0848
POST MILE 19.39

PACHAPPA UP (SHOOFLY)
ABUTMENT DETAILS NO. 2

STRUCTURES DESIGN DETAIL SHEET (ENGLISH) (REV. 10/25/05)

ORIGINAL SCALE IN INCHES FOR REDUCED PLANS 0 1 2 3

CU 08
EA 448401

DISREGARD PRINTS BEARING EARLIER REVISION DATES

REVISION DATES: 11-09-09 11-19-09 01-06-10 02-09-10 02-26-10 05-12-10 6-04-10 9-01-10 9-23-10 11-04-10

SHEET 7 OF 39

FILE => 560848fadt07.dgn

USERNAME => trmartin DATE PLOTTED => 30-APR-2011 TIME PLOTTED => 14:34

DIST	COUNTY	ROUTE	POST MILES TOTAL PROJECT	SHEET No	TOTAL SHEETS
08	Riv	91	15.6/21.6	1989	2028

REGISTERED CIVIL ENGINEER 11-30-10 DATE

4-25-11
PLANS APPROVAL DATE

REGISTERED PROFESSIONAL ENGINEER HUAN D. VU No. C60696 Exp. 12/31/10 CIVIL STATE OF CALIFORNIA

The State of California or its officers or agents shall not be responsible for the accuracy or completeness of electronic copies of this plan sheet.

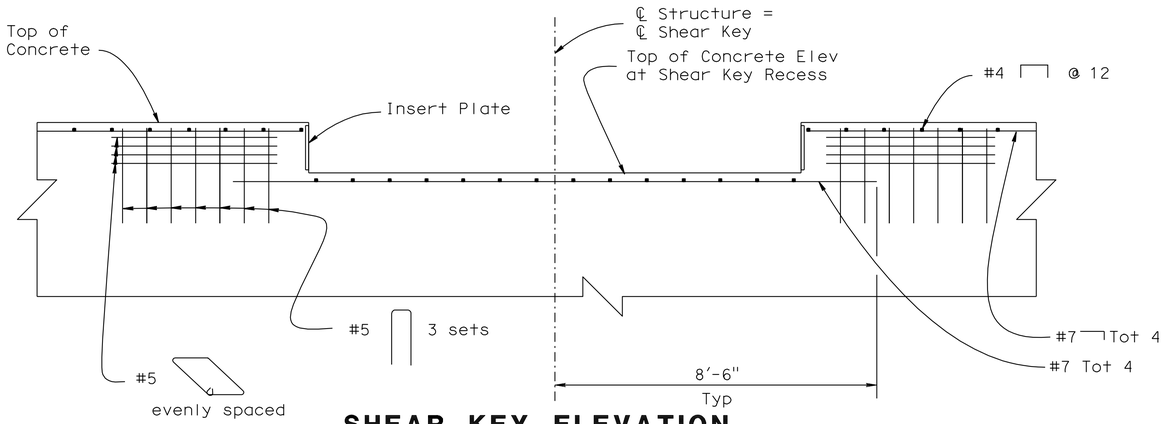

SHEAR KEY ELEVATION

ABUTMENT NO.1 SHOWN, ABUTMENT NO.3 SIMILAR
1/2" = 1'-0"

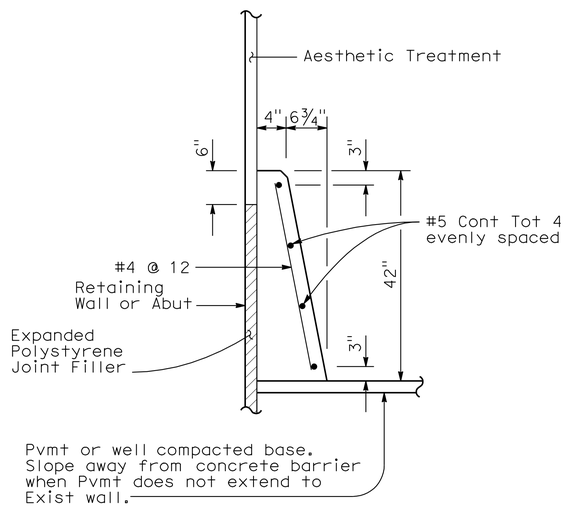

CONCRETE BARRIER TYPE 60D (MOD)

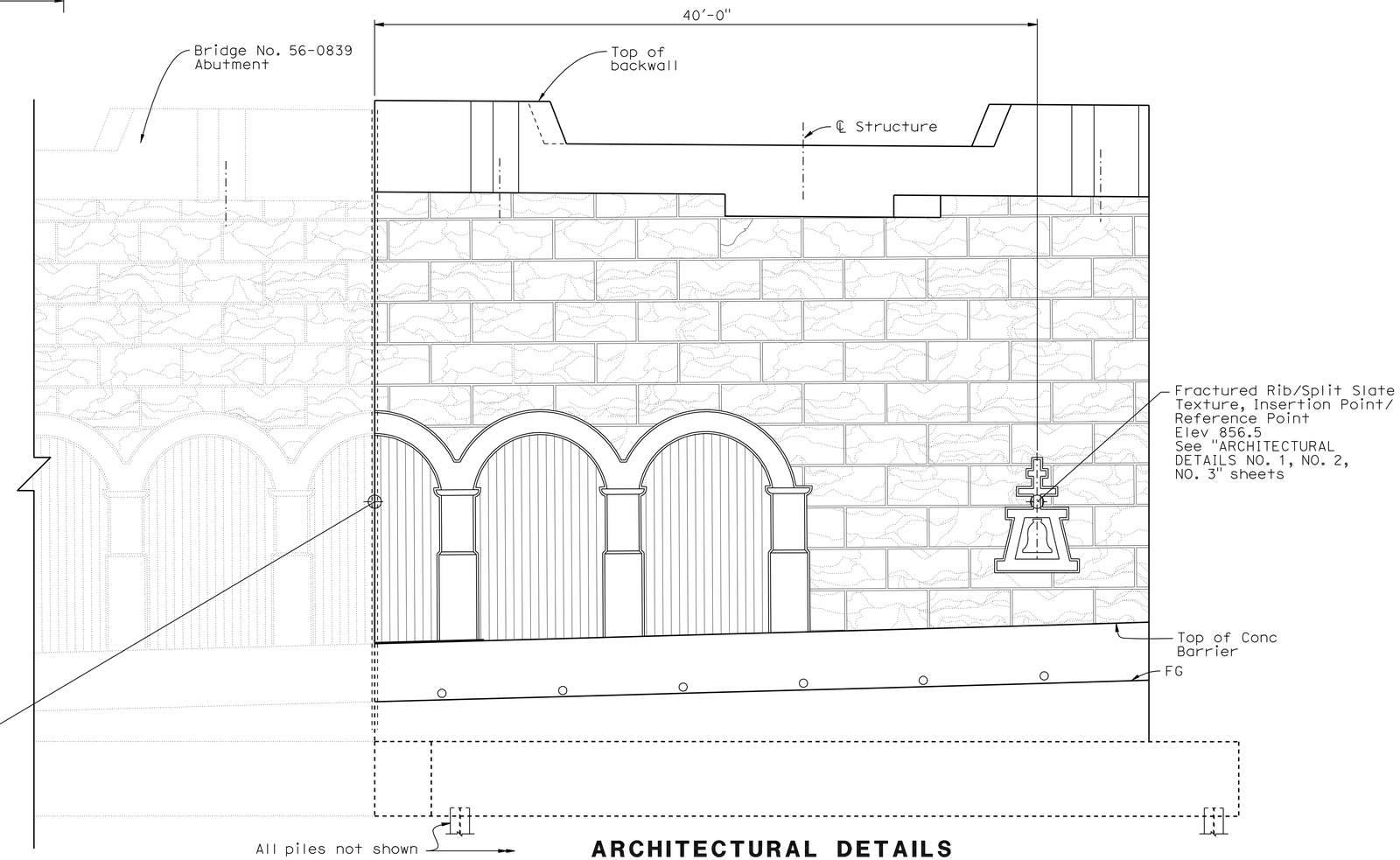

ARCHITECTURAL DETAILS ELEVATION ABUTMENT 3

1/4" = 1'-0"

	BY	CHECKED
DESIGN	B. Addlespurger	G. Slocum
DETAILS	G. Hallstrom	G. Slocum
QUANTITIES	T. Sanderson	R. Anderson

STATE OF CALIFORNIA
DEPARTMENT OF TRANSPORTATION

DIVISION OF ENGINEERING SERVICES
STRUCTURE DESIGN
DESIGN BRANCH 10

BRIDGE NO. 56-0848
POST MILE 19.39

PACHAPPA UP (SHOOFLY)
ABUTMENT DETAILS NO. 3

STRUCTURES DESIGN DETAIL SHEET (ENGLISH) (REV. 10/25/05)

ORIGINAL SCALE IN INCHES FOR REDUCED PLANS 0 1 2 3

CU 08
EA 448401

DISREGARD PRINTS BEARING EARLIER REVISION DATES

REVISION DATES: 9-01-10 9-23-10 11-04-10 11-30-10

SHEET 8 OF 39

FILE => 560848fadt08.dgn

USERNAME => trmartin DATE PLOTTED => 30-APR-2011 TIME PLOTTED => 14:35

DIST	COUNTY	ROUTE	POST MILES TOTAL PROJECT	SHEET No	TOTAL SHEETS
08	Riv	91	15.6/21.6	1990	2028

REGISTERED CIVIL ENGINEER 11-30-10 DATE

4-25-11
PLANS APPROVAL DATE

REGISTERED PROFESSIONAL ENGINEER HUAN D. VU No. C60696 Exp. 12/31/10 CIVIL STATE OF CALIFORNIA

The State of California or its officers or agents shall not be responsible for the accuracy or completeness of electronic copies of this plan sheet.

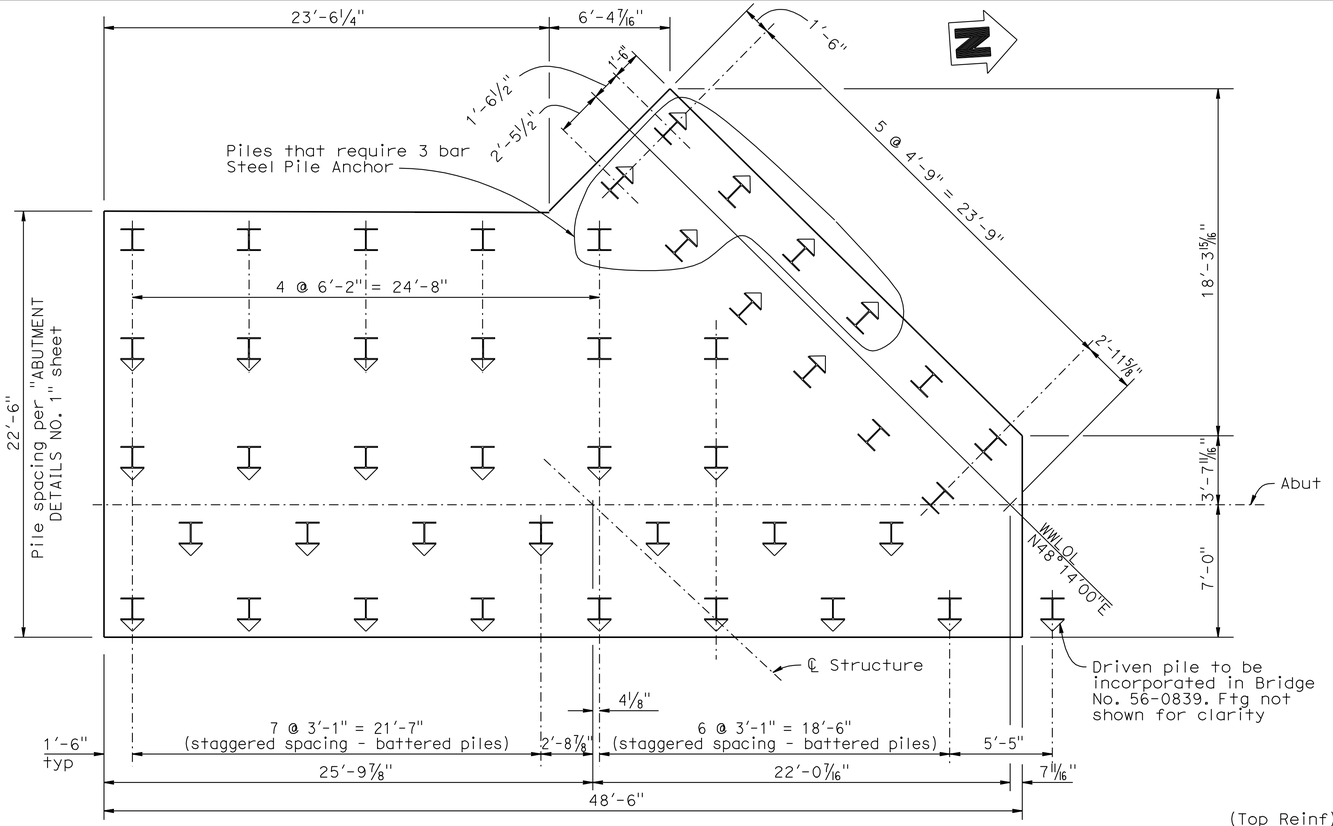

FOOTING & PILE LAYOUT

¼" = 1'-0'

I Indicates vertical steel pile

I Indicates battered steel pile at 1:3

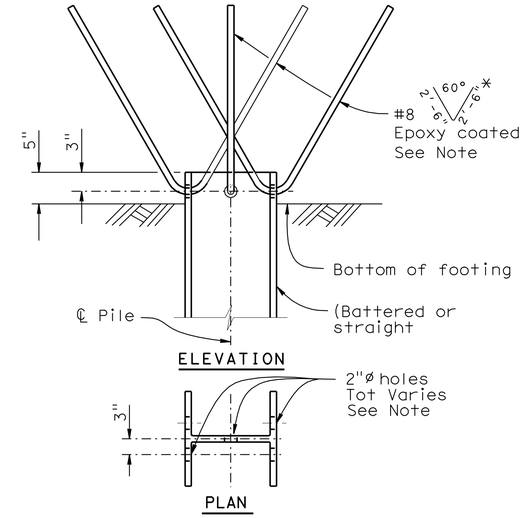

STEEL PILE ANCHOR

NO SCALE

NOTES: For Abut 1 - Steel pile anchor required at piles indicated, with 3 bars.
For Abut 3 - Steel pile anchor required at piles indicated, with 3 bars.
For Bent 2 - Steel pile anchor required at all piles, with 5 bars, *8'-0" long.

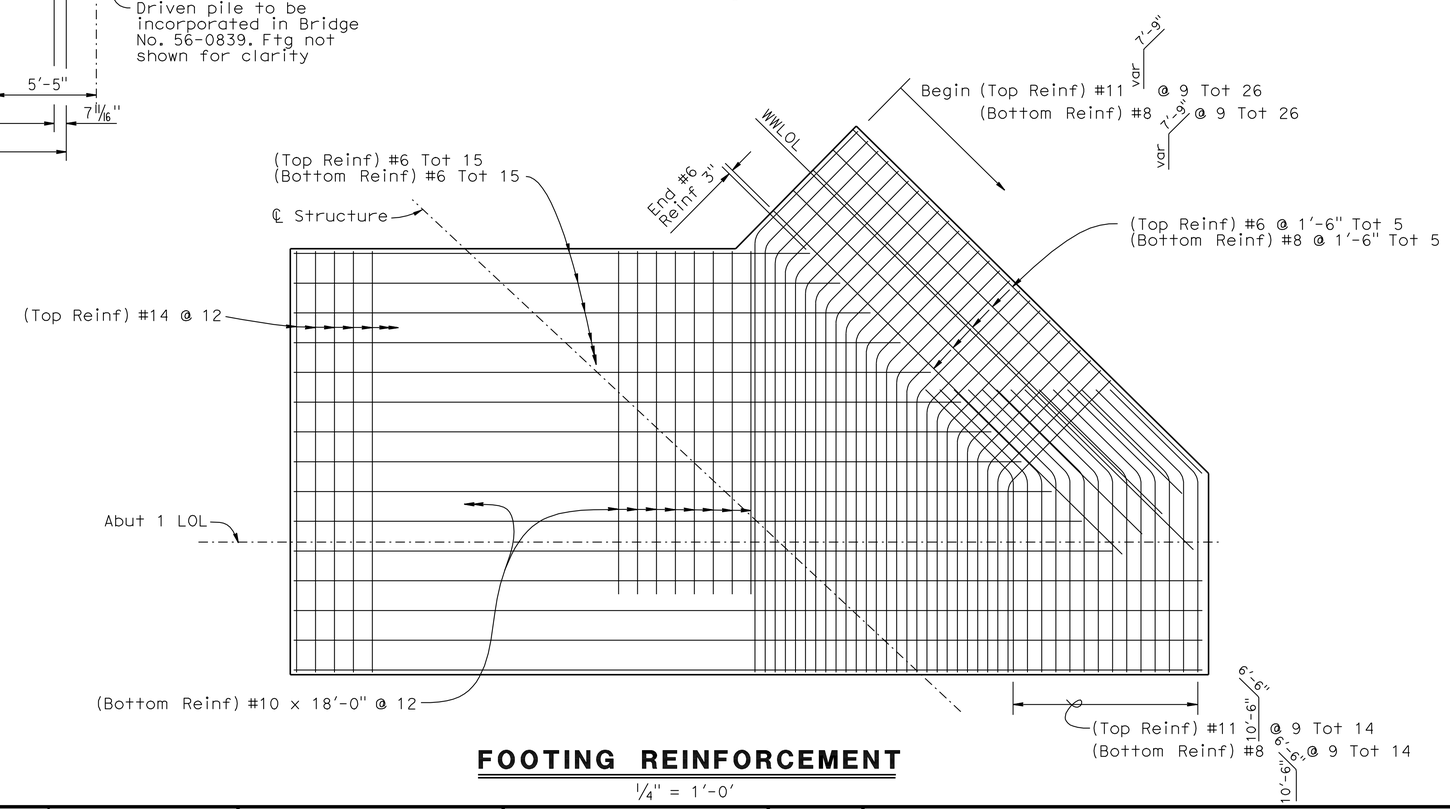

FOOTING REINFORCEMENT

¼" = 1'-0'

NOTE:
THE CONTRACTOR SHALL VERIFY ALL CONTROLLING FIELD DIMENSIONS BEFORE ORDERING OR FABRICATING ANY MATERIAL.

	BY	CHECKED
DESIGN	B. Addlespurger	G. Slocum
DETAILS	J. Yang	G. Slocum
QUANTITIES	T. Sanderson	R. Anderson

STATE OF CALIFORNIA
DEPARTMENT OF TRANSPORTATION

DIVISION OF ENGINEERING SERVICES
STRUCTURE DESIGN
DESIGN BRANCH 10

BRIDGE NO. 56-0848
POST MILE 19.39

PACHAPPA UP (SHOOFLY)
ABUTMENT 1 FOOTING DETAILS

STRUCTURES DESIGN DETAIL SHEET (ENGLISH) (REV. 10/25/05)

ORIGINAL SCALE IN INCHES FOR REDUCED PLANS 0 1 2 3

CU 08
EA 448401

DISREGARD PRINTS BEARING EARLIER REVISION DATES

REVISION DATES: 11-16-09 11-19-09 12-21-09 02-09-10 02-26-10 05-11-10 7-06-10 8-18-10 9-02-10

SHEET 9 OF 39

FILE => 560848fafdt09.dgn

USERNAME => trmartin DATE PLOTTED => 30-APR-2011 TIME PLOTTED => 14:35

DIST	COUNTY	ROUTE	POST MILES TOTAL PROJECT	SHEET No	TOTAL SHEETS
08	Riv	91	15.6/21.6	1991	2028

REGISTERED CIVIL ENGINEER 11-30-10 DATE

4-25-11
PLANS APPROVAL DATE

REGISTERED PROFESSIONAL ENGINEER HUAN D. VU No. C60696 Exp. 12/31/10 CIVIL STATE OF CALIFORNIA

The State of California or its officers or agents shall not be responsible for the accuracy or completeness of electronic copies of this plan sheet.

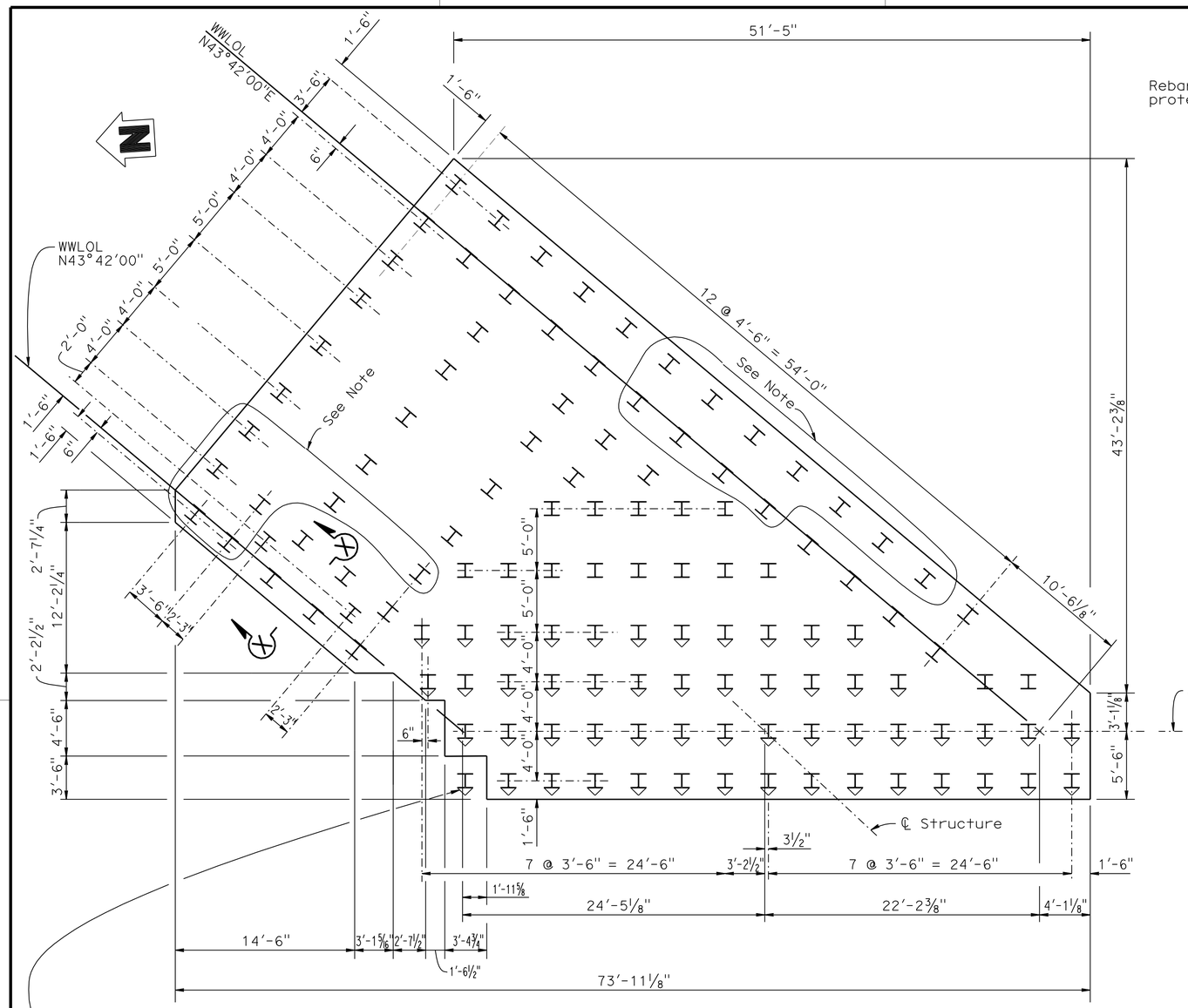

Driven pile to be incorporated into bridge No. 56-0839. Ftg not shown for clarity.

FOOTING AND PILE LAYOUT

3/16" = 1'-0'

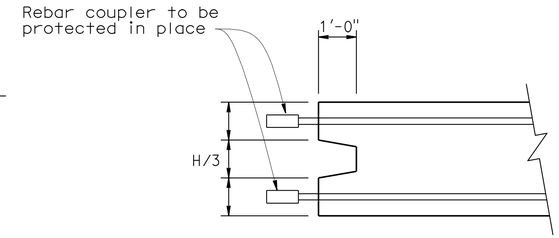

SECTION X-X

NO SCALE

Ftg key schematic through wingwall toe

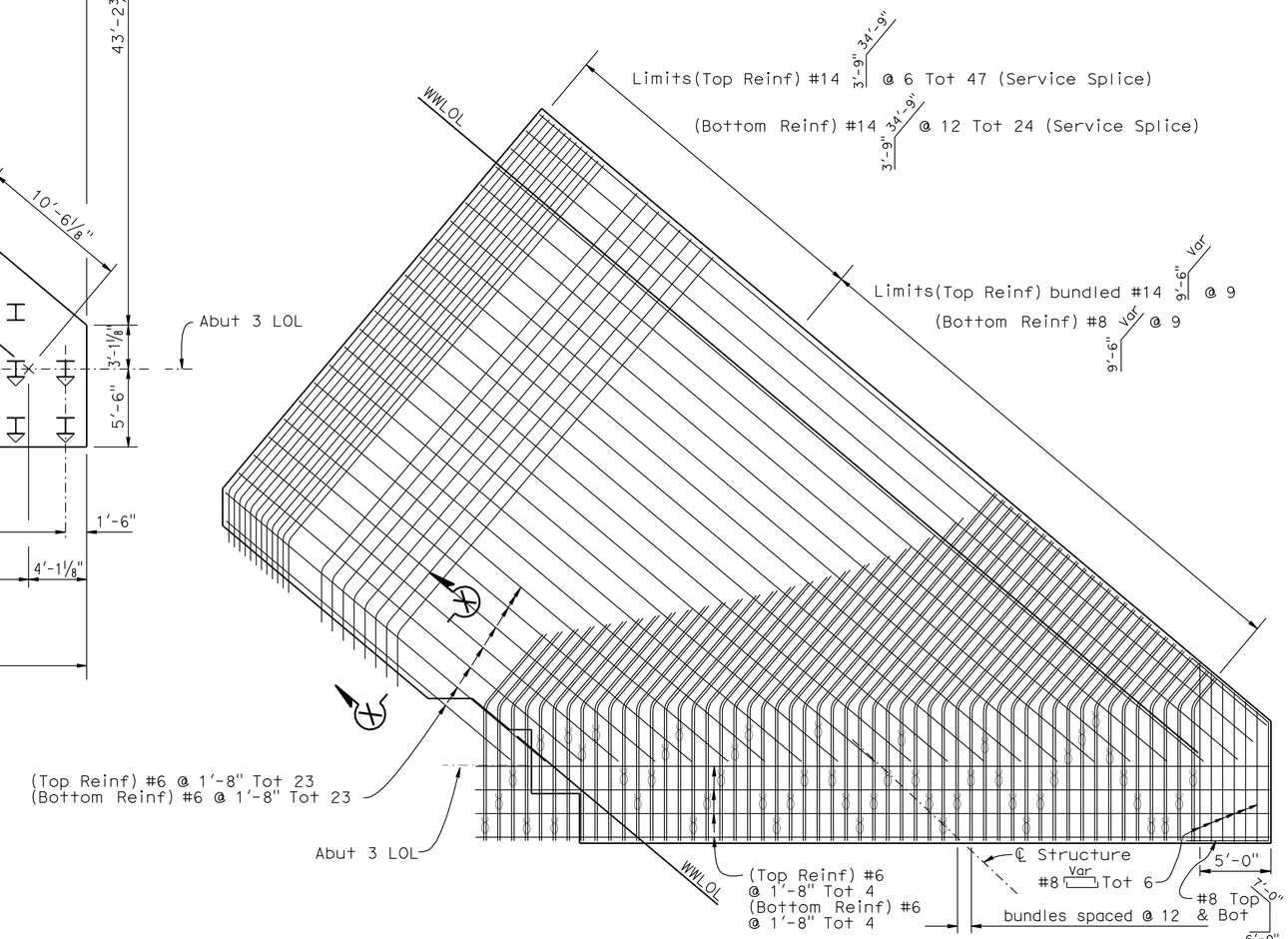

FOOTING REINFORCEMENT

3/16" = 1'-0'

NOTE:

Piles indicated require 3 bar Steel Pile Anchor. See "ABUTMENT 1 FOOTING DETAILS" sheet for Steel Pile Anchor Detail.

I Indicates vertical steel pile

I Indicates battered steel pile at 1:3

NOTE:
THE CONTRACTOR SHALL VERIFY ALL CONTROLLING FIELD DIMENSIONS BEFORE ORDERING OR FABRICATING ANY MATERIAL.

	BY	CHECKED
DESIGN	B. Addlespurger	G. Slocum
DETAILS	J. Yang	G. Slocum
QUANTITIES	T. Sanderson	R. Anderson

STATE OF CALIFORNIA
DEPARTMENT OF TRANSPORTATION

DIVISION OF ENGINEERING SERVICES
STRUCTURE DESIGN
DESIGN BRANCH 10

BRIDGE NO. 56-0848
POST MILE 19.39

PACHAPPA UP (SHOOFLY)
ABUTMENT 3 FOOTING DETAILS

STRUCTURES DESIGN DETAIL SHEET (ENGLISH) (REV. 10/25/05)

ORIGINAL SCALE IN INCHES FOR REDUCED PLANS 0 1 2 3

CU 08
EA 448401

DISREGARD PRINTS BEARING EARLIER REVISION DATES

REVISION DATES: 11-14-09 11-19-09 02-12-10 02-25-10 05-12-10 6-01-10 9-02-10

SHEET 10 OF 39

FILE => 560848fafdt10.dgn

USERNAME => trmartin DATE PLOTTED => 30-APR-2011 TIME PLOTTED => 14:35

DIST	COUNTY	ROUTE	POST MILES TOTAL PROJECT	SHEET No	TOTAL SHEETS
08	Riv	91	15.6/21.6	1992	2028

REGISTERED CIVIL ENGINEER — DATE 11-30-10

4-25-11
PLANS APPROVAL DATE

The State of California or its officers or agents shall not be responsible for the accuracy or completeness of electronic copies of this plan sheet.

REGISTERED PROFESSIONAL ENGINEER — HUAN D. VU — No. C60696 — Exp. 12/31/10 — CIVIL — STATE OF CALIFORNIA

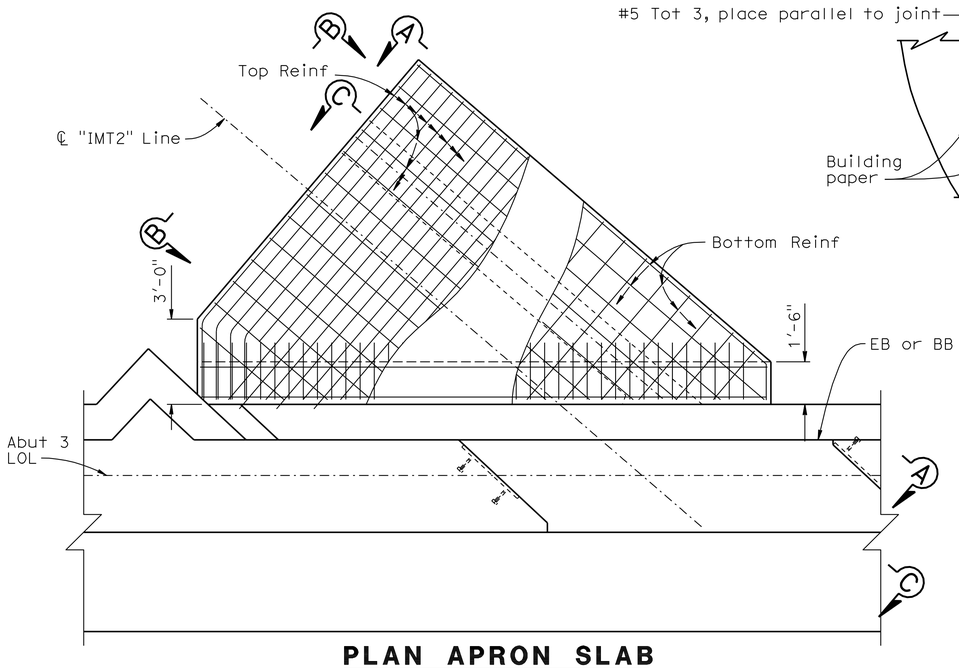

PLAN APRON SLAB

3/8" = 1'-0"

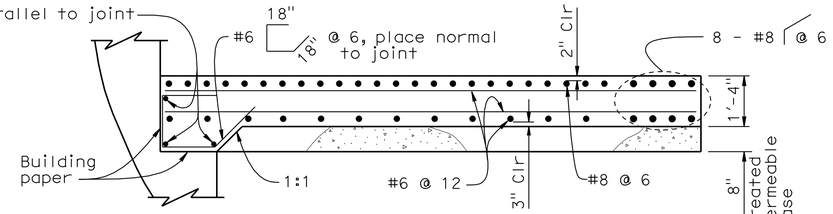

PART VIEW A-A

1/2" = 1'-0"

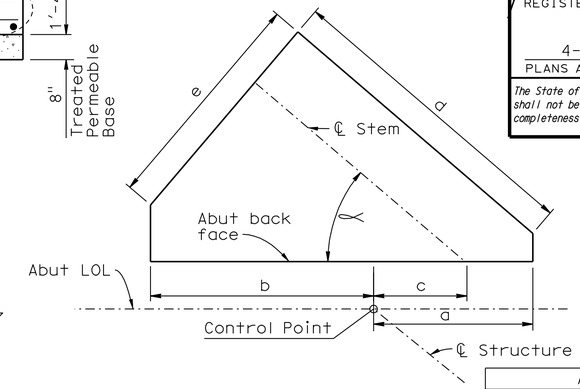

APRON SLAB LAYOUT

NO SCALE

APRON SLAB LAYOUT TABLE						
Location	a	b	c	d	e	∝
Abut 1	12.37	11.21	3.55	16.09	12.48	45°50'44"
Abut 3	4.91	16.66	-0.42	18.65	12.00	40°11'28"

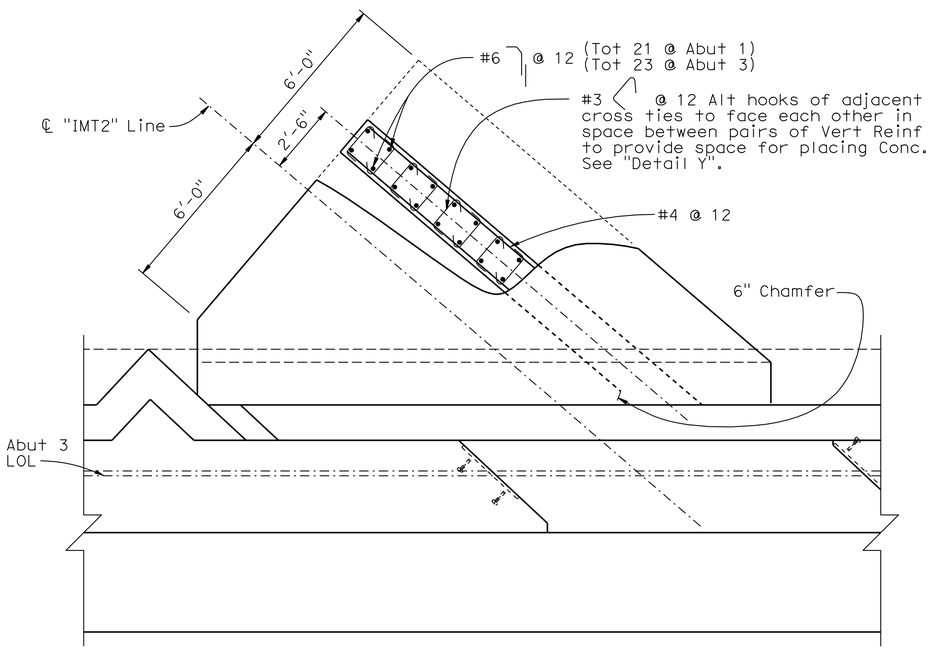

PLAN LAYOUT AND STEM

3/8" = 1'-0"
Abut 3 shown, Abut 1 similar

NOTE:
THE CONTRACTOR SHALL VERIFY ALL CONTROLLING FIELD DIMENSIONS BEFORE ORDERING OR FABRICATING ANY MATERIAL.

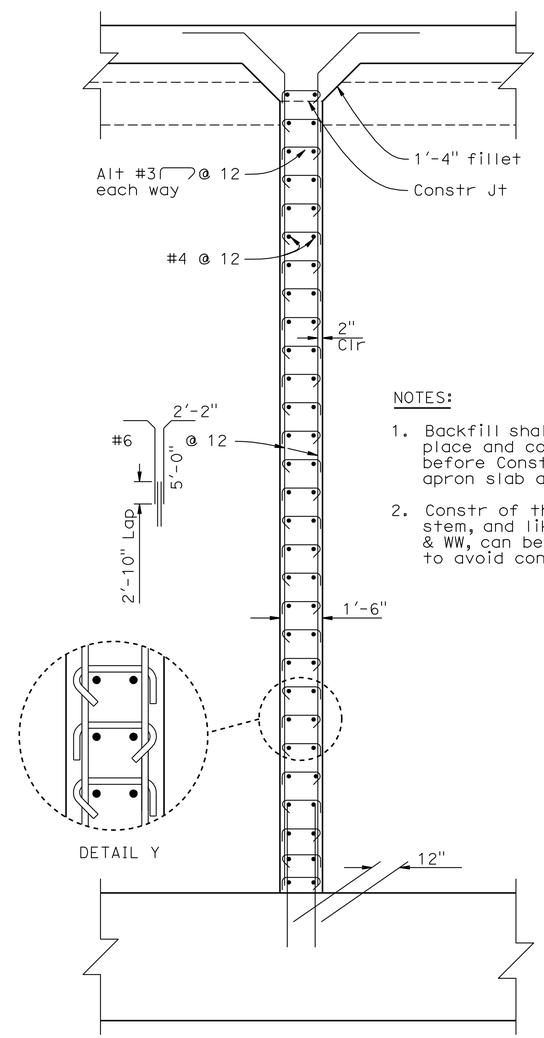

NOTES:

1. Backfill shall be in place and compacted before Constr the apron slab and fillet.
2. Constr of the Apron slab stem, and likely the Abut & WW, can be done in lifts, to avoid confined spaces.

SECTION B-B

3/8" = 1'-0"

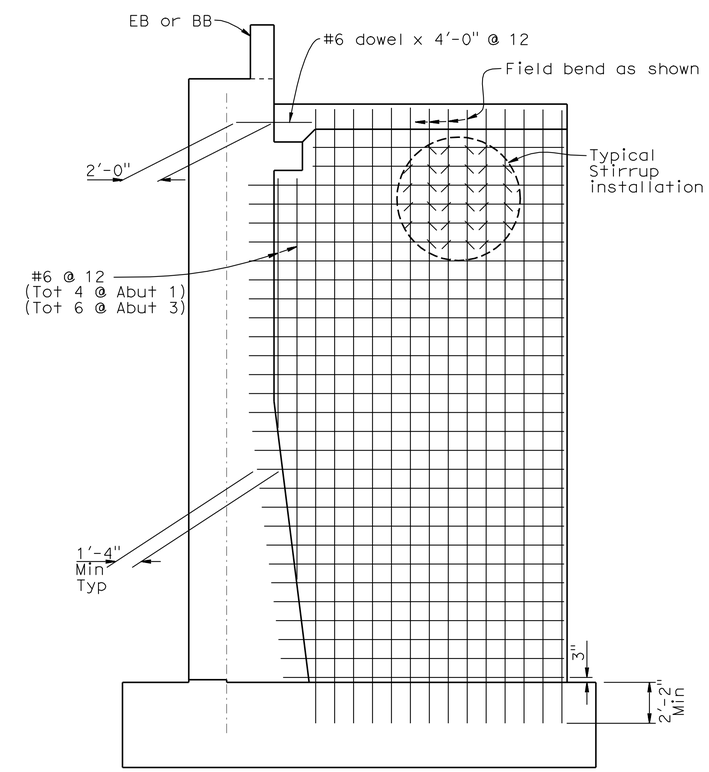

VIEW C-C

1/4" = 1'-0"
Abut 3 shown, Abut 1 similar

DESIGN	BY B. Addlespurger	CHECKED G. Slocum	
DETAILS	BY J. Yang	CHECKED G. Slocum	
QUANTITIES	BY T. Sanderson	CHECKED R. Anderson	

STATE OF CALIFORNIA
DEPARTMENT OF TRANSPORTATION

DIVISION OF ENGINEERING SERVICES
STRUCTURE DESIGN
DESIGN BRANCH 10

BRIDGE NO. 56-0848
POST MILE 19.39

PACHAPPA UP (SHOOFLY)
APRON SLAB DETAILS

STRUCTURES DESIGN DETAIL SHEET (ENGLISH) (REV. 10/25/05)

ORIGINAL SCALE IN INCHES FOR REDUCED PLANS 0 1 2 3

CU 08
EA 448401

DISREGARD PRINTS BEARING EARLIER REVISION DATES

REVISION DATES: 03-26-10 | 03-12-09 | 6-04-10 | 7-13-10

SHEET 11 OF 39

FILE => 560848grwdt11.dgn

USERNAME => trmartin DATE PLOTTED => 30-APR-2011 TIME PLOTTED => 14:35

DIST	COUNTY	ROUTE	POST MILES TOTAL PROJECT	SHEET No	TOTAL SHEETS
08	Riv	91	15.6/21.6	1993	2028

REGISTERED CIVIL ENGINEER 11-30-10 DATE

4-25-11
PLANS APPROVAL DATE

REGISTERED PROFESSIONAL ENGINEER HUAN D. VU No. C60696 Exp. 12/31/10 CIVIL STATE OF CALIFORNIA

The State of California or its officers or agents shall not be responsible for the accuracy or completeness of electronic copies of this plan sheet.

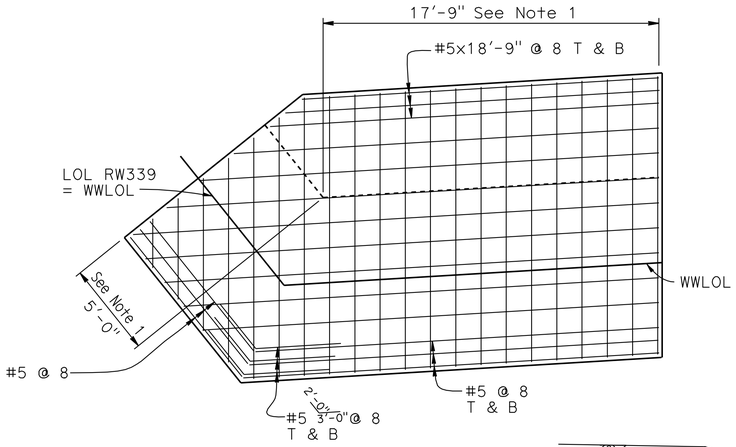

FOOTING REINFORCING

¼" = 1'-0'

NOTES:

1. Dimension indicates limit of Section I-I, #10L Wall Reinf & #10 Ftg Top Reinf.
2. 2'-0" wide band of dampproofing centered on the joint.

I Indicates vertical steel pile

I Indicates battered steel pile at 1:3

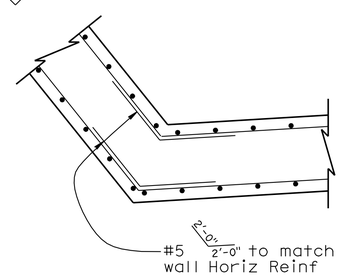

WALL CORNER DETAIL

½" = 1'-0"

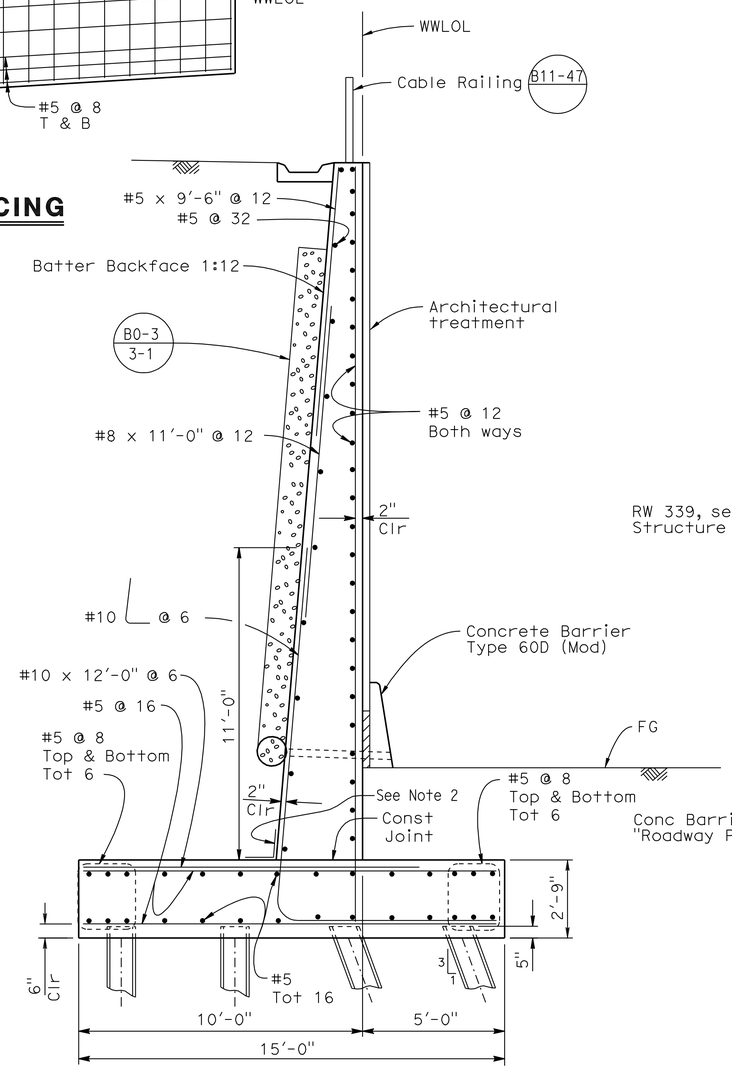

SECTION I-I

⅜" = 1'-0"

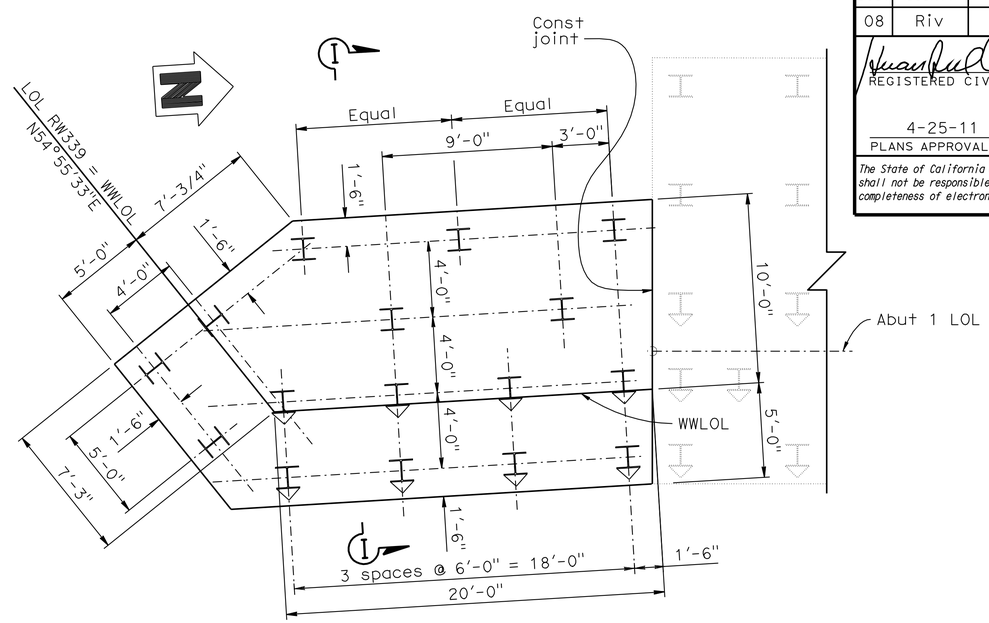

FOOTING & PILE LAYOUT

¼" = 1'-0'

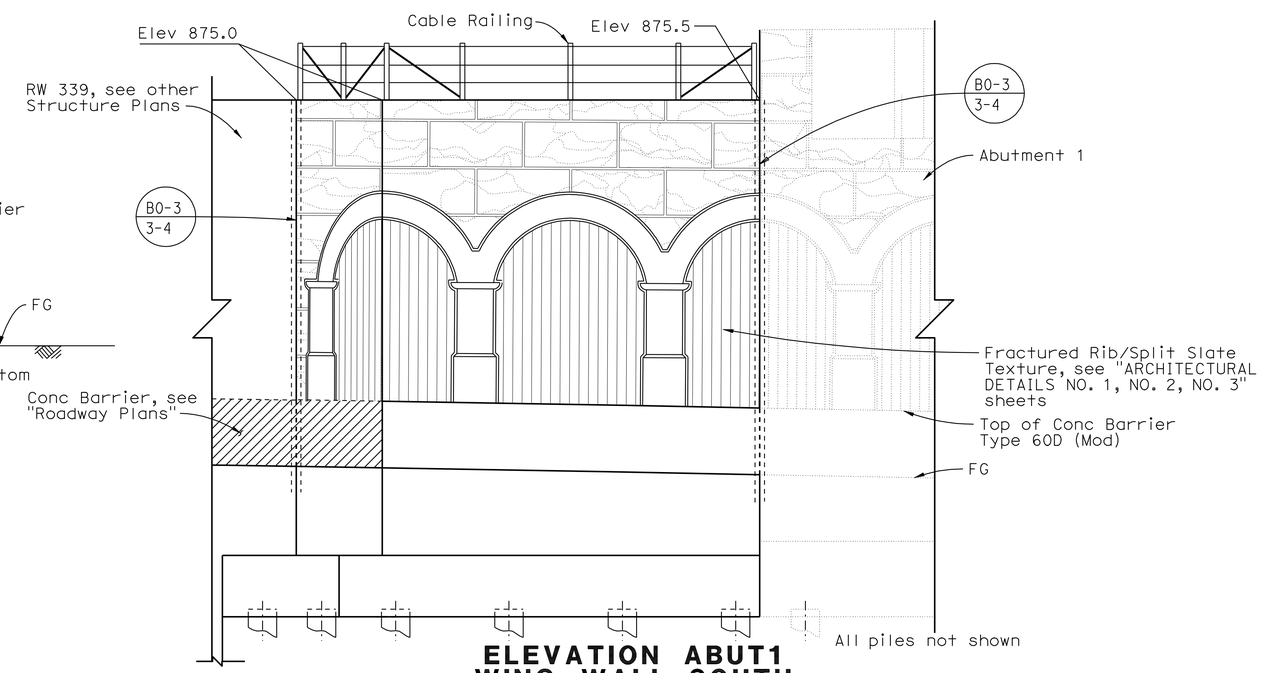

ELEVATION ABUT1 WING WALL SOUTH

¼" = 1'-0'

DESIGN	BY H. Vu	CHECKED B. Addlespurger	
DETAILS	BY G. Hallstrom	CHECKED B. Addlespurger	
QUANTITIES	BY T. Sanderson	CHECKED R. Anderson	

STATE OF CALIFORNIA
DEPARTMENT OF TRANSPORTATION

DIVISION OF ENGINEERING SERVICES
STRUCTURE DESIGN
DESIGN BRANCH 10

BRIDGE NO. 56-0848
POST MILE 19.39

PACHAPPA UP (SHOOFLY)
ABUTMENT 1 WING WALL SOUTH

STRUCTURES DESIGN DETAIL SHEET (ENGLISH) (REV. 10/25/05)

ORIGINAL SCALE IN INCHES FOR REDUCED PLANS 0 1 2 3

CU 08
EA 448401

DISREGARD PRINTS BEARING EARLIER REVISION DATES

REVISION DATES: 8-18-10 9-23-10 10-20-10 11-10-10 11-30-10

SHEET 12 OF 39

FILE => 560848grwdt12.dgn

USERNAME => trmartin DATE PLOTTED => 30-APR-2011 TIME PLOTTED => 14:35

DIST	COUNTY	ROUTE	POST MILES TOTAL PROJECT	SHEET No	TOTAL SHEETS
08	Riv	91	15.6/21.6	1994	2028

REGISTERED CIVIL ENGINEER 11-30-10 DATE

4-25-11
PLANS APPROVAL DATE

REGISTERED PROFESSIONAL ENGINEER HUAN D. VU No. C60696 Exp. 12/31/10 CIVIL STATE OF CALIFORNIA

The State of California or its officers or agents shall not be responsible for the accuracy or completeness of electronic copies of this plan sheet.

NOTES:

1. For Section B-B and Pier Wall Cap Details see "BENT DETAILS" sheet.
2. The placement of horizontal reinforcement shall clear any construction joint by 2" Min.
3. See "Detail X" on "BENT DETAILS" sheet.
4. For elevations see "PTFE/ SPHERICAL ANCHORAGE DETAILS" sheet.
5. For Insert Plate details see "SHEAR KEY BEAM DETAILS" sheet.
6. Reinf is Sym to ℄ structure. Not all Reinf shown for clarity.
7. Recess to match fit Shear Key Beam, see "SHEAR KEY BEAM LAYOUT" sheet.

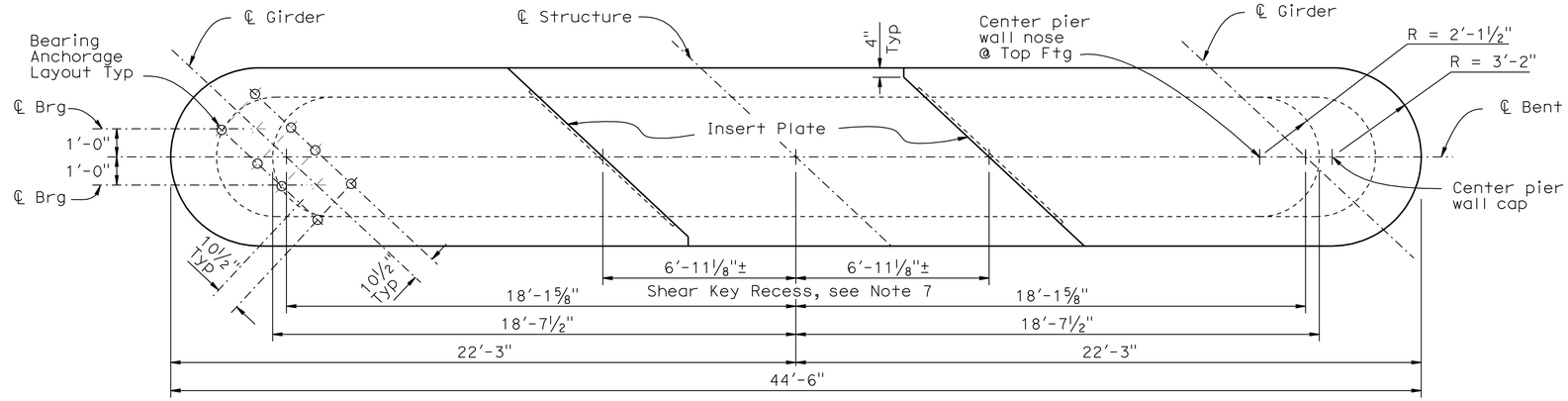

PLAN

⅜" = 1'-0"

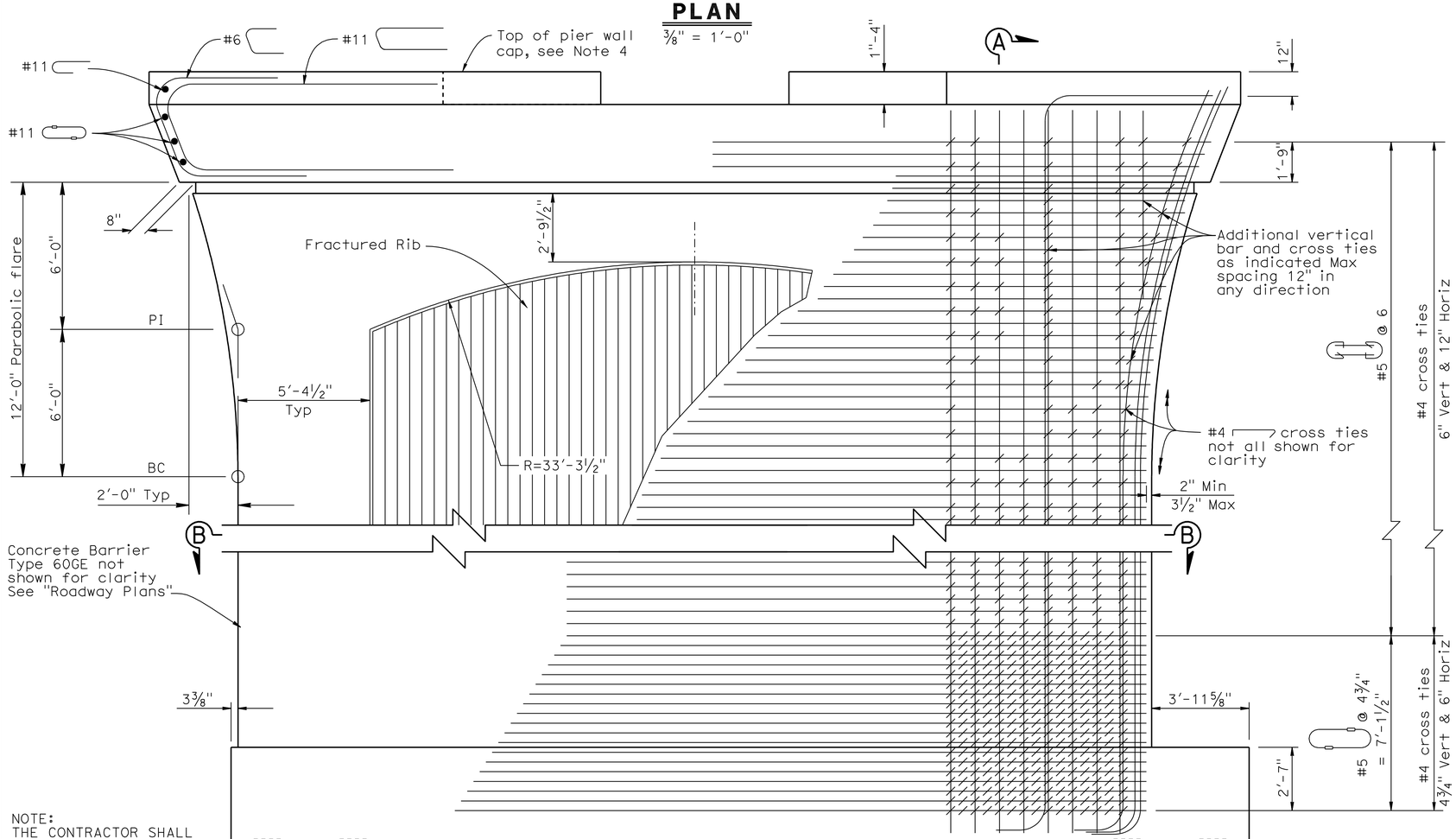

NOTE:
THE CONTRACTOR SHALL VERIFY ALL CONTROLLING FIELD DIMENSIONS BEFORE ORDERING OR FABRICATING ANY MATERIAL.

ELEVATION

⅜" = 1'-0"

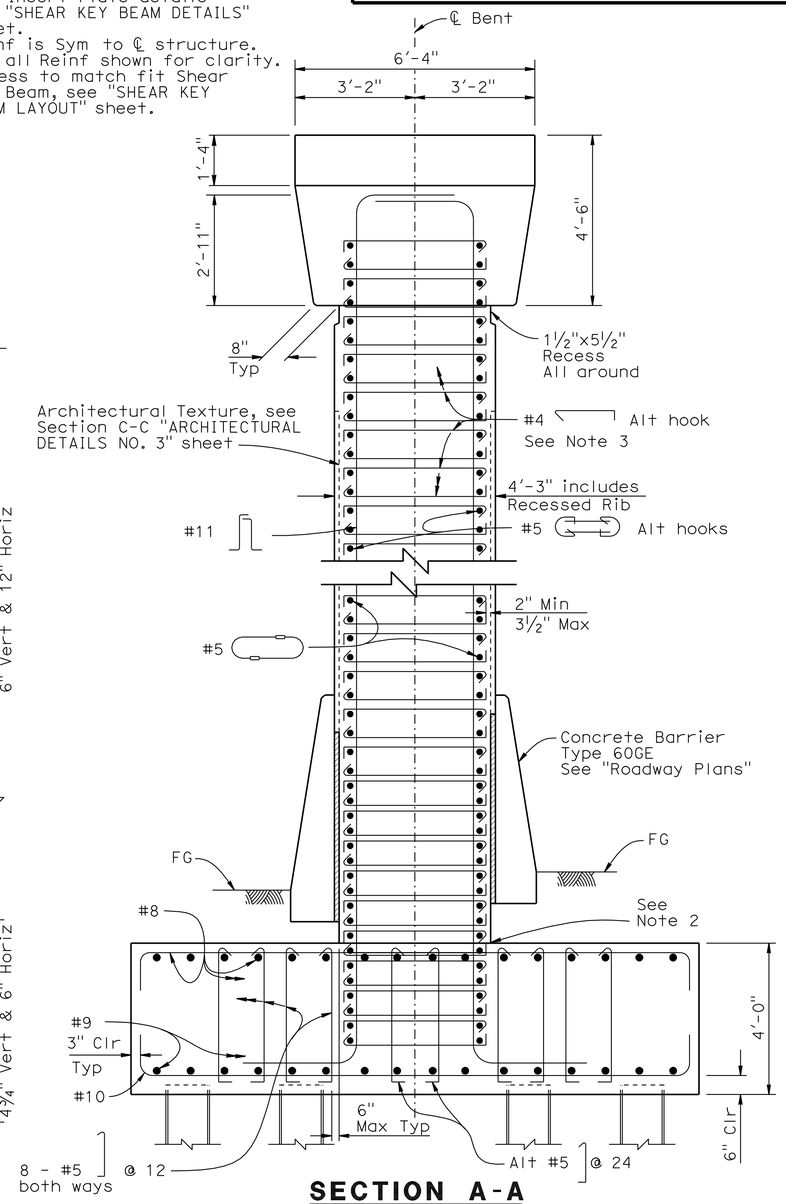

SECTION A-A

½" = 1'-0"

DESIGN	BY B. Addlespurger	CHECKED G. Slocum	
DETAILS	BY J. Yang	CHECKED G. Slocum	
QUANTITIES	BY T. Sanderson	CHECKED R. Anderson	

STATE OF CALIFORNIA
DEPARTMENT OF TRANSPORTATION

DIVISION OF ENGINEERING SERVICES
STRUCTURE DESIGN
DESIGN BRANCH 10

BRIDGE NO. 56-0848
POST MILE 19.39

PACHAPPA UP (SHOOFLY)
BENT LAYOUT

STRUCTURES DESIGN DETAIL SHEET (ENGLISH) (REV. 10/25/05)

ORIGINAL SCALE IN INCHES FOR REDUCED PLANS 0 1 2 3

CU 08
EA 448401

DISREGARD PRINTS BEARING EARLIER REVISION DATES

REVISION DATES: 8-24-09 9-28-09 10-14-09 11-02-09 11-19-09 02-02-10 6-08-10 7-13-10 9-08-10 9-28-10

SHEET 13 OF 39

FILE => 560848hb_1o13.dgn

USERNAME => trmartin DATE PLOTTED => 30-APR-2011 TIME PLOTTED => 14:35

DIST	COUNTY	ROUTE	POST MILES TOTAL PROJECT	SHEET No	TOTAL SHEETS
08	Riv	91	15.6/21.6	1995	2028

REGISTERED CIVIL ENGINEER 11-30-10 DATE

4-25-11
PLANS APPROVAL DATE

REGISTERED PROFESSIONAL ENGINEER HUAN D. VU No. C60696 Exp. 12/31/10 CIVIL STATE OF CALIFORNIA

The State of California or its officers or agents shall not be responsible for the accuracy or completeness of electronic copies of this plan sheet.

NOTES:

1. For location of "Section B-B" and other details, see "BENT LAYOUT" sheet.
2. Adjust location to accommodate bearing anchorage.
3. Reinf is Sym to ℄ Structure. Not all Reinf shown for clarity.
4. All ties at bar intersections to hook all bars. All bars to be adjusted for positive contact and snug fit.
5. Steel pile anchor shown on "Abutment 1 Footing Details" sheet.
6. One additional Bar to be placed at the last pile rows.

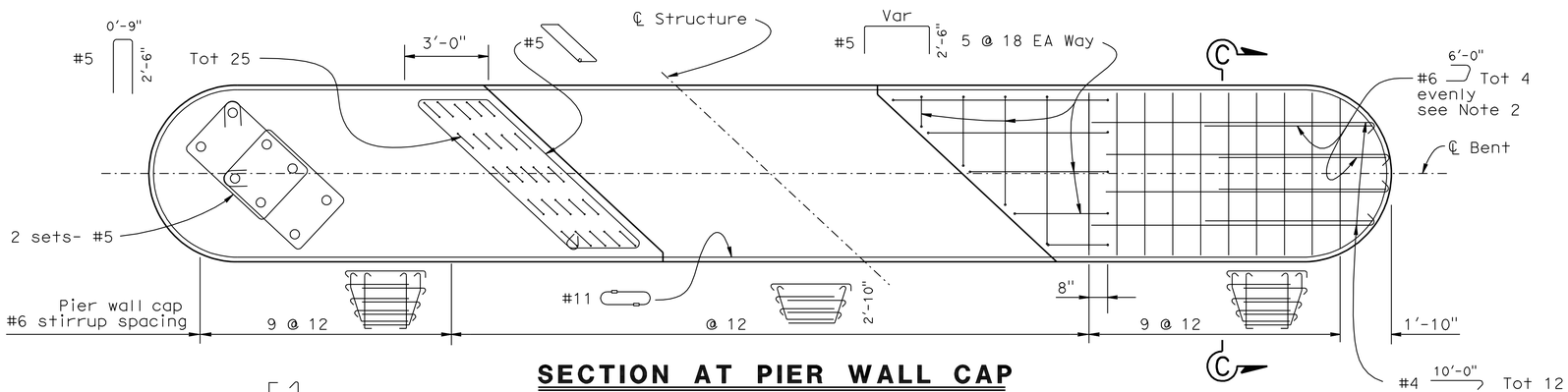

SECTION AT PIER WALL CAP

NO SCALE

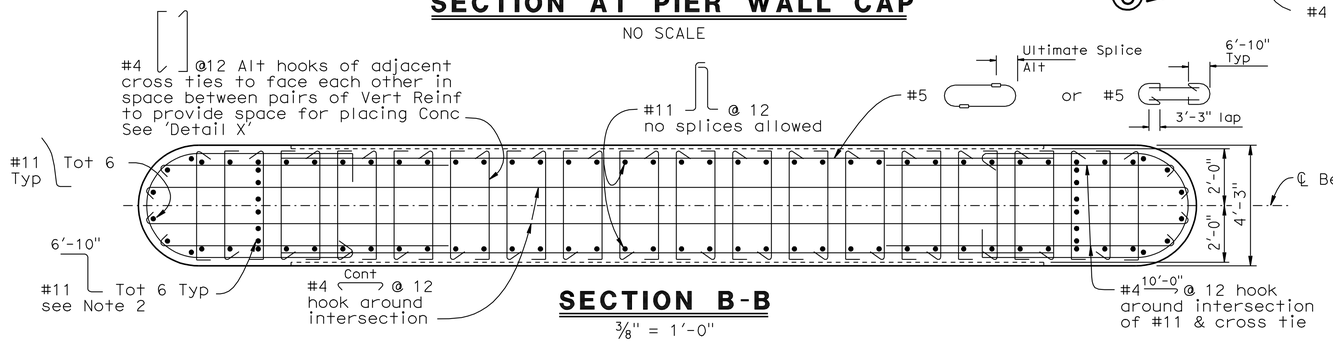

SECTION B-B

3/8" = 1'-0"

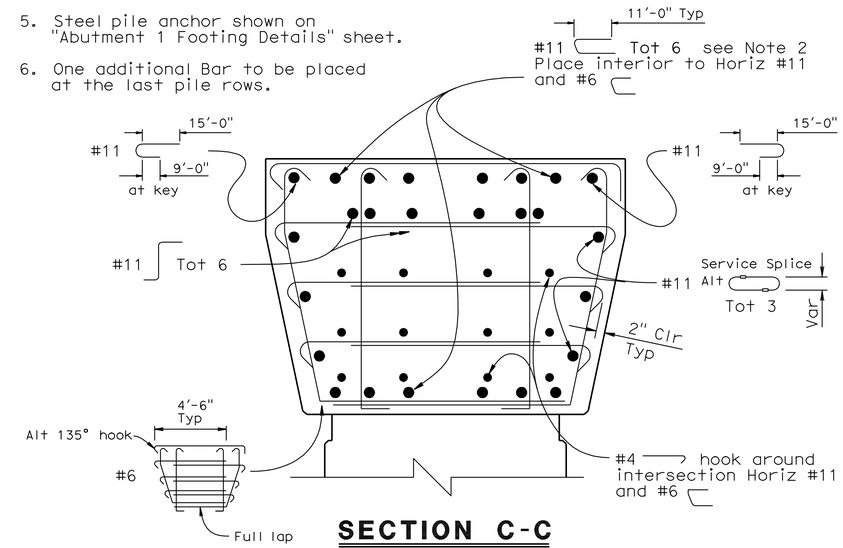

SECTION C-C

3/4" = 1'-0"

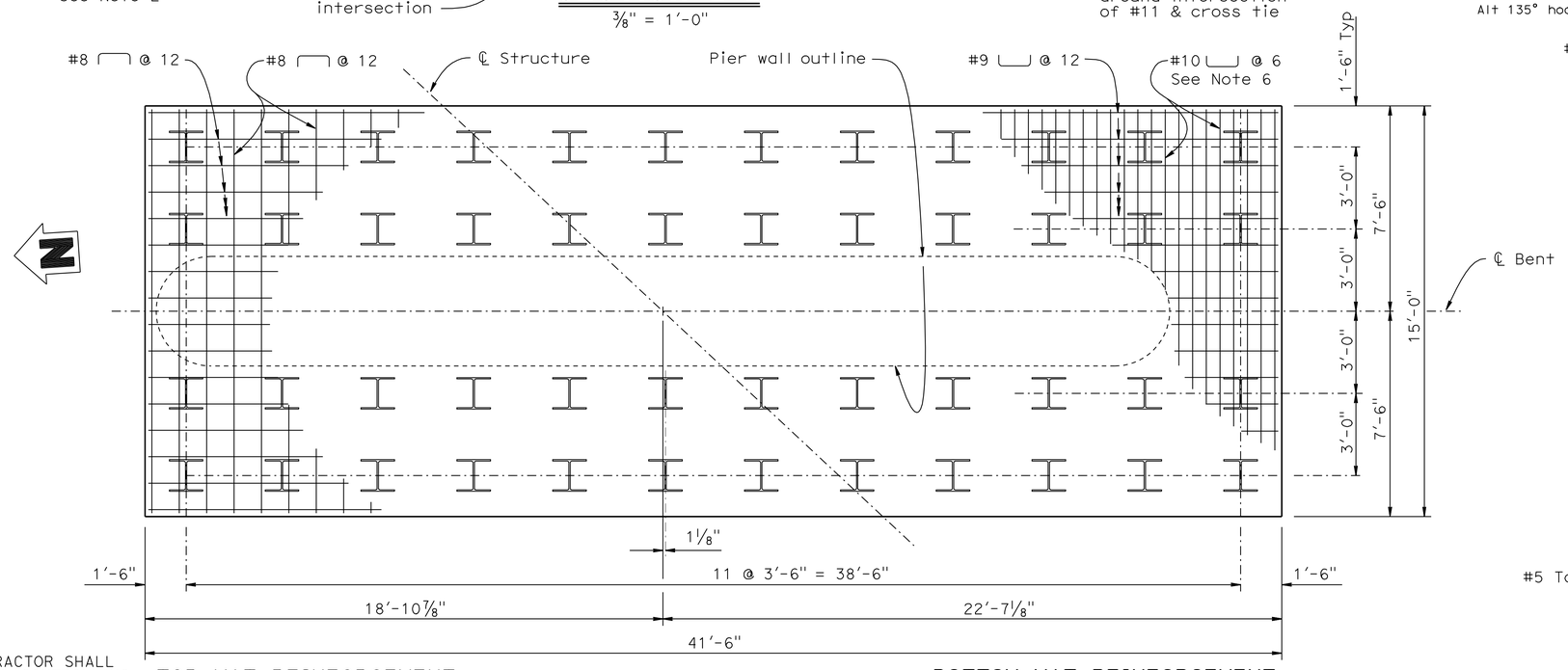

FOOTING PLAN

3/8" = 1'-0"

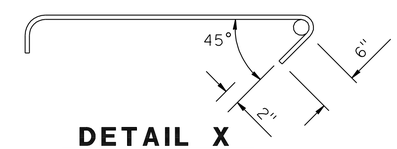

DETAIL X

NO SCALE

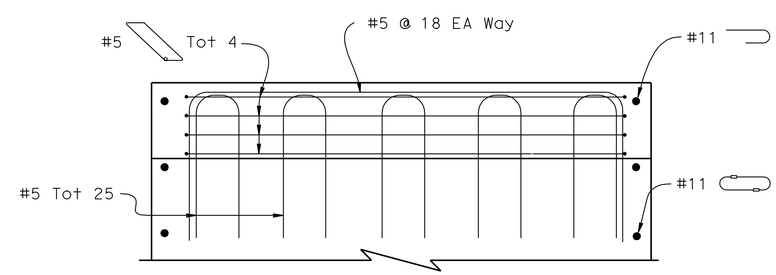

KEY SECTION

3/4" = 1'-0"

NOTE:
THE CONTRACTOR SHALL VERIFY ALL CONTROLLING FIELD DIMENSIONS BEFORE ORDERING OR FABRICATING ANY MATERIAL.

	BY	CHECKED
DESIGN	B. Addlespurger	G. Slocum
DETAILS	J. Yang	G. Slocum
QUANTITIES	T. Sanderson	R. Anderson

STATE OF CALIFORNIA
DEPARTMENT OF TRANSPORTATION

DIVISION OF ENGINEERING SERVICES
STRUCTURE DESIGN
DESIGN BRANCH 10

BRIDGE NO. 56-0848
POST MILE 19.39

PACHAPPA UP (SHOOFLY)
BENT DETAILS

STRUCTURES DESIGN DETAIL SHEET (ENGLISH) (REV. 10/25/05)

ORIGINAL SCALE IN INCHES FOR REDUCED PLANS 0 1 2 3

CU 08
EA 448401

DISREGARD PRINTS BEARING EARLIER REVISION DATES

REVISION DATES: 9-08-09 9-11-09 9-29-09 10-13-09 11-02-09 11-19-09 02-02-10 05-12-10 6-08-10 9-28-10

SHEET 14 OF 39

FILE => 560848hbdt14.dgn

USERNAME => trmartin DATE PLOTTED => 30-APR-2011 TIME PLOTTED => 14:36

DIST	COUNTY	ROUTE	POST MILES TOTAL PROJECT	SHEET No	TOTAL SHEETS
08	Riv	91	15.6/21.6	1996	2028

REGISTERED CIVIL ENGINEER 11-30-10 DATE

4-25-11
PLANS APPROVAL DATE

REGISTERED PROFESSIONAL ENGINEER HUAN D. VU No. C60696 Exp. 12/31/10 CIVIL STATE OF CALIFORNIA

The State of California or its officers or agents shall not be responsible for the accuracy or completeness of electronic copies of this plan sheet.

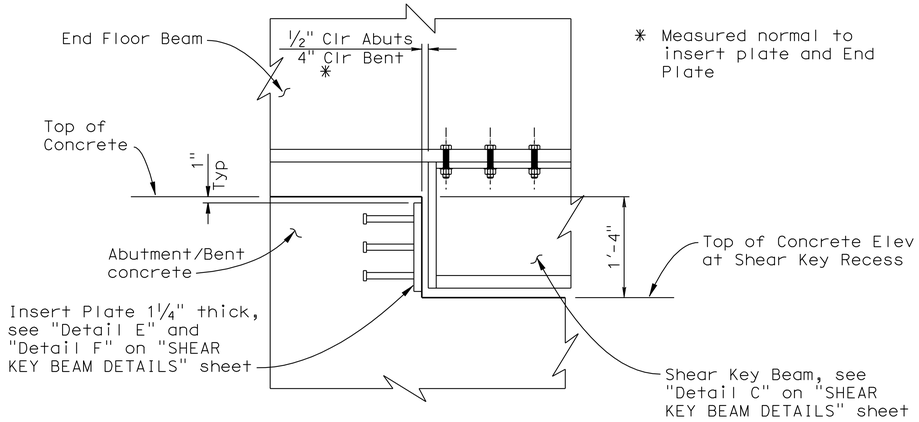

DETAIL A

1"=1'-0"

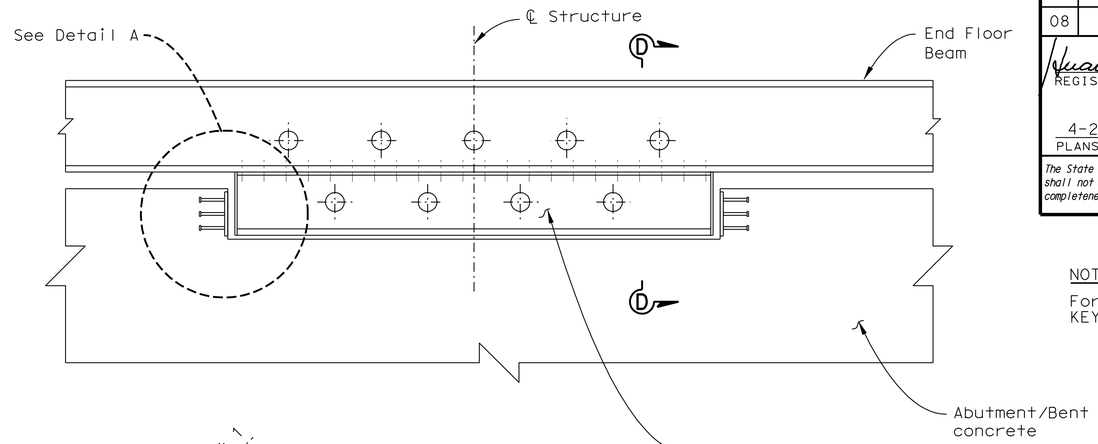

SECTION B-B

½"=1'-0"

NOTE:
For "Section D-D", see "SHEAR KEY BEAM DETAILS" sheet.

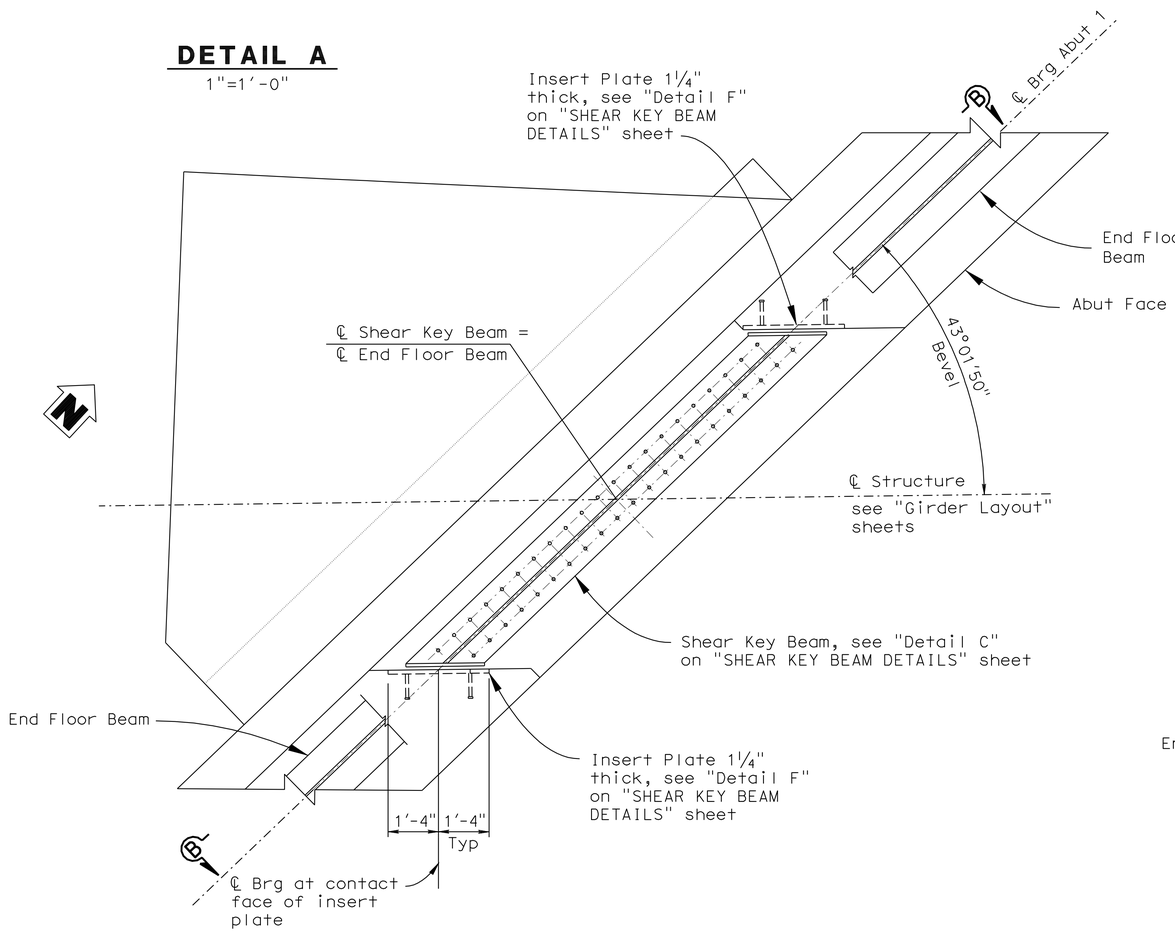

PART PLAN - SHEAR KEY ABUT 1 (ABUT 3 SIMILAR)

½"=1'-0"

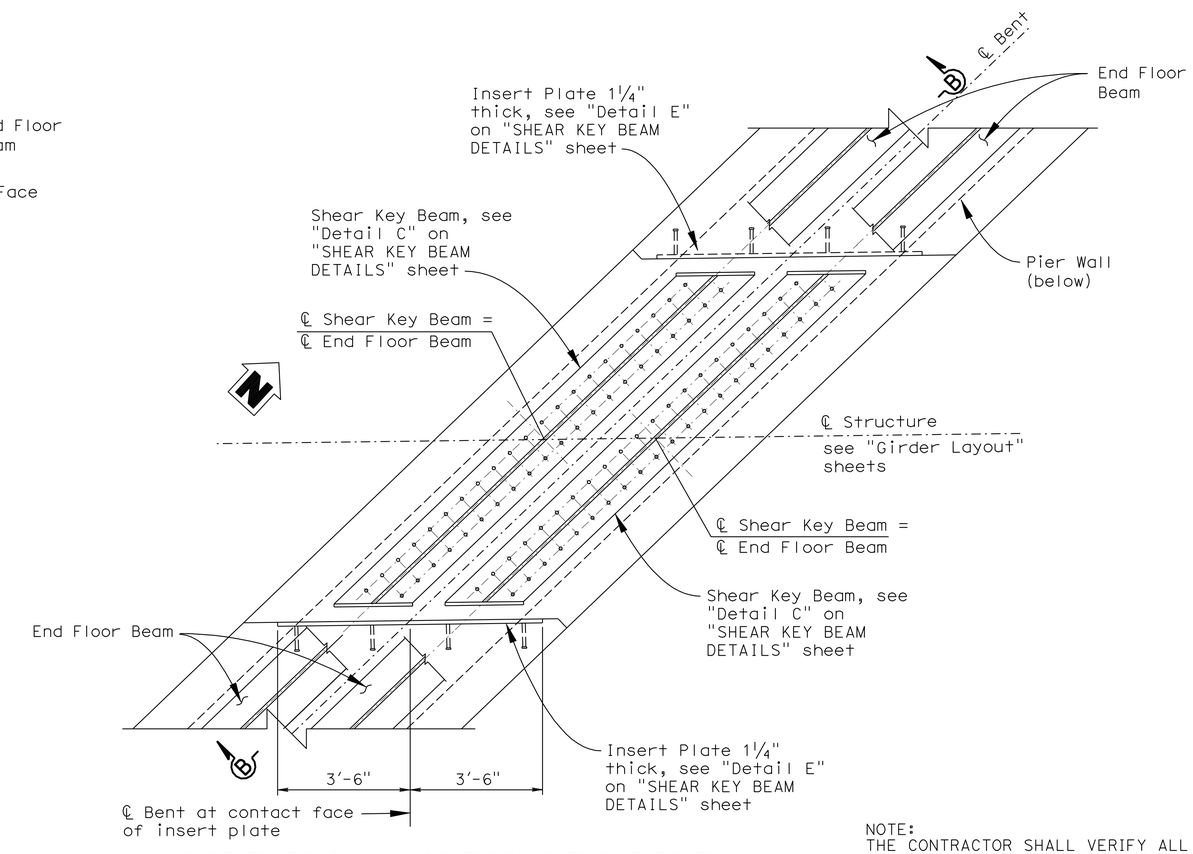

PART PLAN - SHEAR KEY BENT

½"=1'-0"

NOTE:
THE CONTRACTOR SHALL VERIFY ALL CONTROLLING FIELD DIMENSIONS BEFORE ORDERING OR FABRICATING ANY MATERIAL.

	BY	CHECKED
DESIGN	B. Addlespurger	G. Slocum
DETAILS	D.Wooten	G. Slocum
QUANTITIES	T. Sanderson	R. Anderson

STATE OF CALIFORNIA
DEPARTMENT OF TRANSPORTATION

DIVISION OF ENGINEERING SERVICES
STRUCTURE DESIGN
DESIGN BRANCH 10

BRIDGE NO. 56-0848
POST MILE 19.39

PACHAPPA UP (SHOOFLY)
SHEAR KEY BEAM LAYOUT

STRUCTURES DESIGN DETAIL SHEET (ENGLISH) (REV. 10/25/05)

ORIGINAL SCALE IN INCHES FOR REDUCED PLANS 0 1 2 3

CU 08
EA 448401

DISREGARD PRINTS BEARING EARLIER REVISION DATES

REVISION DATES: 1-29-10 2-08-10 2-26-10 5-26-10 6-08-10 10-20-10

SHEET 15 OF 39

FILE => 560848ishearkey_lo15.dgn

USERNAME => trcarol DATE PLOTTED => 30-APR-2011 TIME PLOTTED => 14:33

DIST	COUNTY	ROUTE	POST MILES TOTAL PROJECT	SHEET No	TOTAL SHEETS
08	Riv	91	15.6/21.6	1997	2028

REGISTERED CIVIL ENGINEER 11-30-10 DATE

4-25-11
PLANS APPROVAL DATE

REGISTERED PROFESSIONAL ENGINEER HUAN D. VU No. C60696 Exp. 12/31/10 CIVIL STATE OF CALIFORNIA

The State of California or its officers or agents shall not be responsible for the accuracy or completeness of electronic copies of this plan sheet.

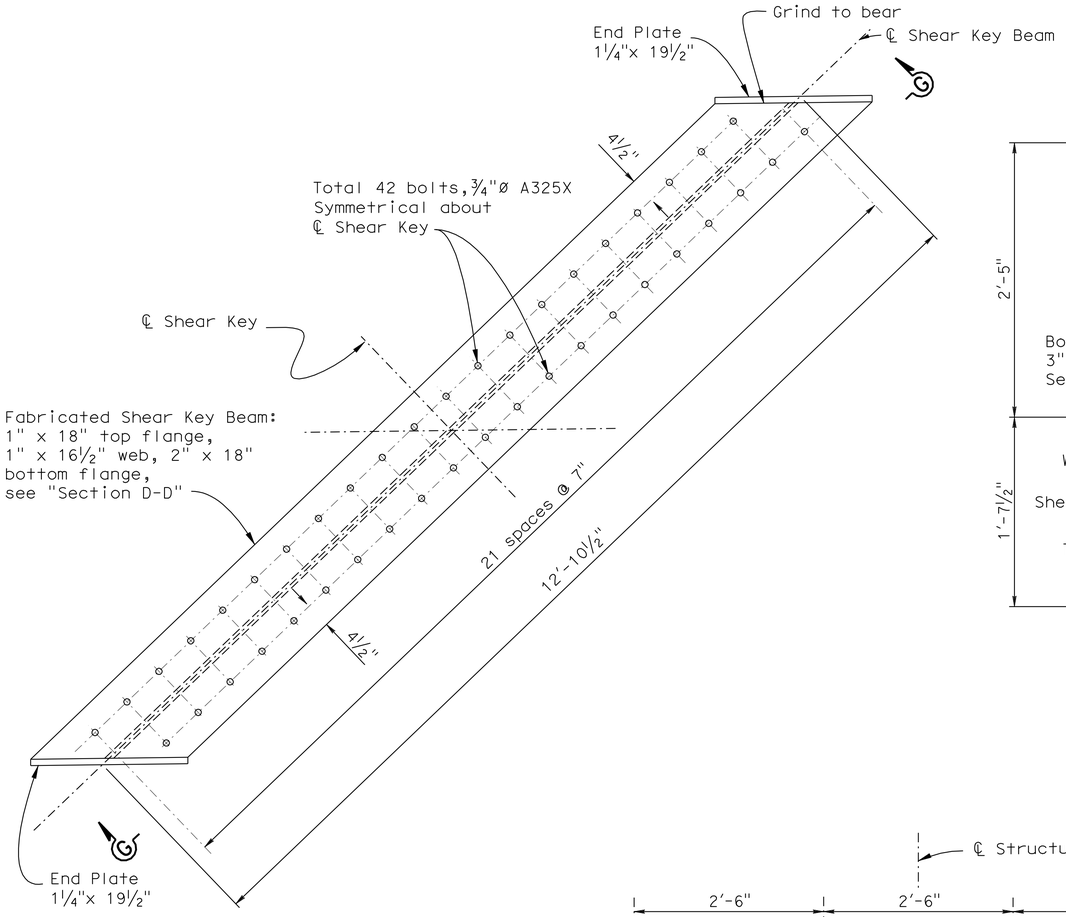

SHEAR KEY BEAM DETAIL C

1"= 1'-0"

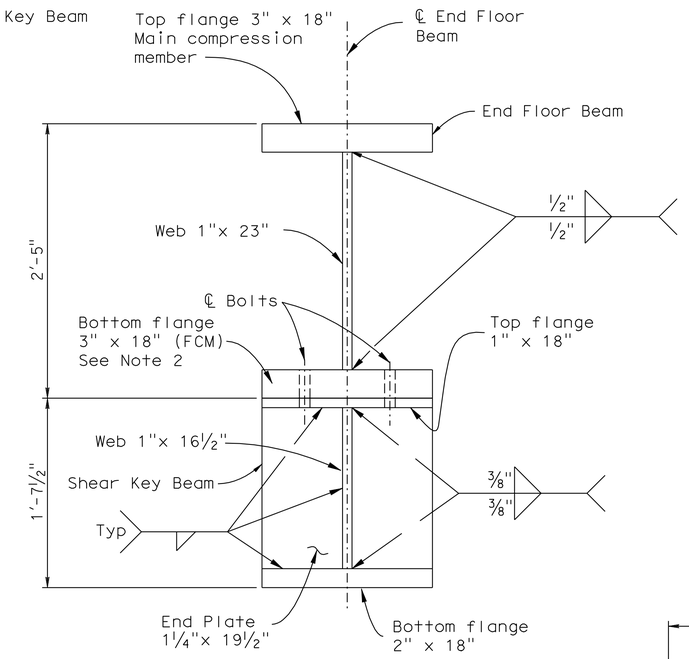

SECTION D-D

1½"= 1'-0"

NOTES:

1. For locations of "Section D-D", "Detail C", "Detail E", and "Detail F", see "SHEAR KEY BEAM LAYOUT" sheet.
2. FCM and compression zones extend to the middle depth of the web.
3. Type 3 FB Hanger not shown for clarity. See "GIRDER DETAILS NO. 3" and "GIRDER DETAILS NO. 4" sheets.

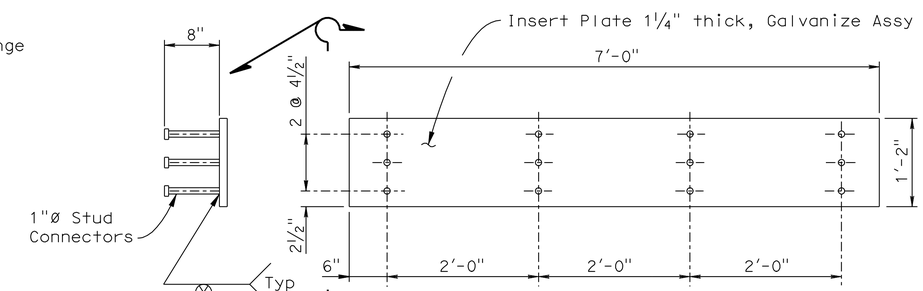

DETAIL E

1"= 1'-0"

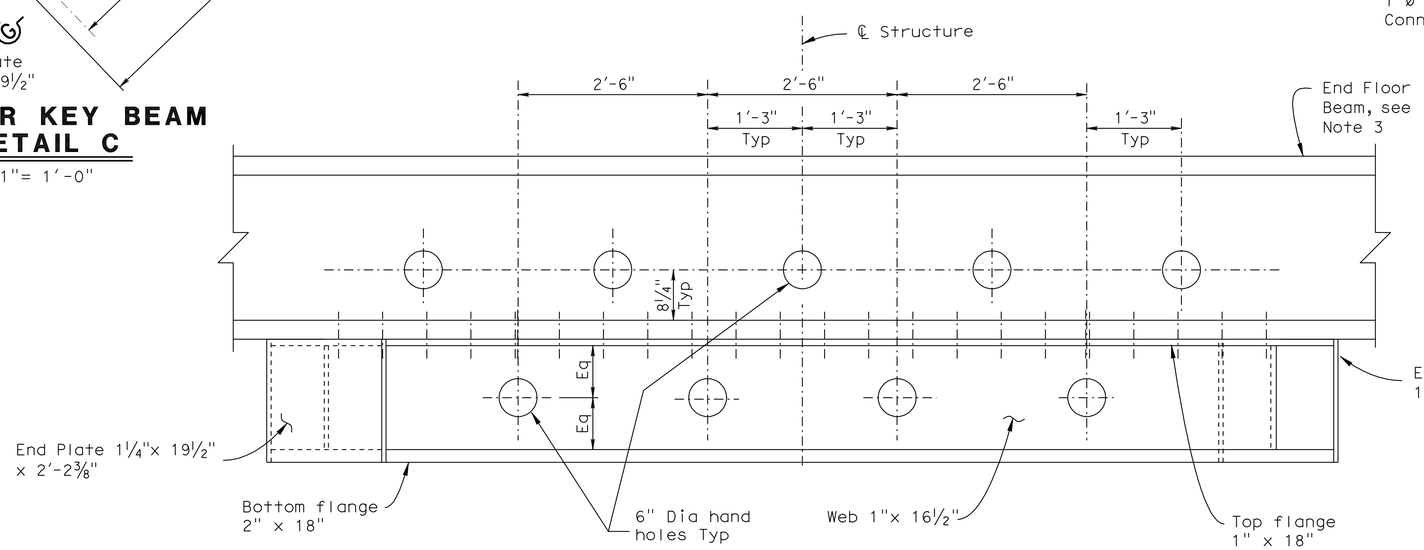

SECTION G-G

1"=1'-0"

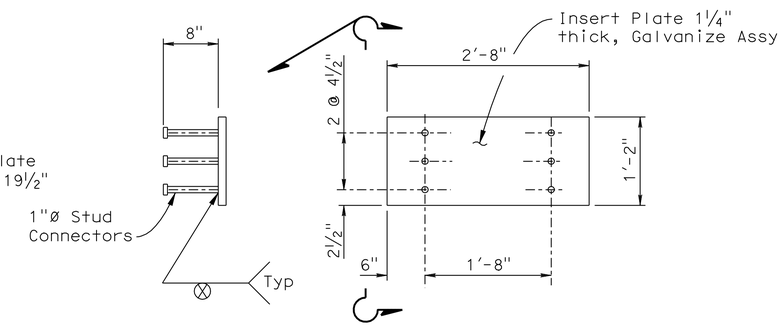

DETAIL F

1"= 1'-0"

NOTE:
THE CONTRACTOR SHALL VERIFY ALL CONTROLLING FIELD DIMENSIONS BEFORE ORDERING OR FABRICATING ANY MATERIAL.

	BY	CHECKED
DESIGN	B. Addlespurger	G. Slocum
DETAILS	D.Wooten	G. Slocum
QUANTITIES	T. Sanderson	R. Anderson

STATE OF CALIFORNIA
DEPARTMENT OF TRANSPORTATION

DIVISION OF ENGINEERING SERVICES
STRUCTURE DESIGN
DESIGN BRANCH 10

BRIDGE NO. 56-0848
POST MILE 19.39

PACHAPPA UP (SHOOFLY)
SHEAR KEY BEAM DETAILS

STRUCTURES DESIGN DETAIL SHEET (ENGLISH) (REV. 10/25/05)

ORIGINAL SCALE IN INCHES FOR REDUCED PLANS 0 1 2 3

CU 08
EA 448401

DISREGARD PRINTS BEARING EARLIER REVISION DATES

REVISION DATES: 2-08-10 2-09-10 5-28-10 6-09-10 7-14-10 9-28-10 10-20-10

SHEET 16 OF 39

FILE => 560848ishearkeydt16.dgn

USERNAME => trcarol DATE PLOTTED => 30-APR-2011 TIME PLOTTED => 14:33

DIST	COUNTY	ROUTE	POST MILES TOTAL PROJECT	SHEET No	TOTAL SHEETS
08	Riv	91	15.6/21.6	1998	2028

REGISTERED CIVIL ENGINEER 11-30-10 DATE

4-25-11
PLANS APPROVAL DATE

REGISTERED PROFESSIONAL ENGINEER HUAN D. VU No. C60696 Exp. 12/31/10 CIVIL STATE OF CALIFORNIA

The State of California or its officers or agents shall not be responsible for the accuracy or completeness of electronic copies of this plan sheet.

NOTES:

1. For Details A, B and D, see "GIRDER DETAILS NO. 1" sheet.
2. For Detail C, see "GIRDER DETAILS NO. 2" sheet.
3. For Detail E, see "GIRDER DETAILS NO. 3" sheet.
4. Actual ballast depth below the tie is 12" Min. Max design ballast shown as 30" from top of deck to the top of tie at the low rail.
5. Bar 6" x 1" Jacking Stiffeners, NS & FS clip and weld per "Detail C" on "GIRDER DETAILS NO. 2" sheet. Place 3'-9" from terminus of End Floor Beam along the End Floor Beam ℄.
6. Intermediate Stiffeners placed as matching pairs. Exceptions shown on "GIRDER LAYOUT" sheets.
7. (FCM) indicates Fracture Critical Members. See notes on "INDEX TO PLANS" sheet.
8. See "GIRDER DETAILS NO. 6" sheet.

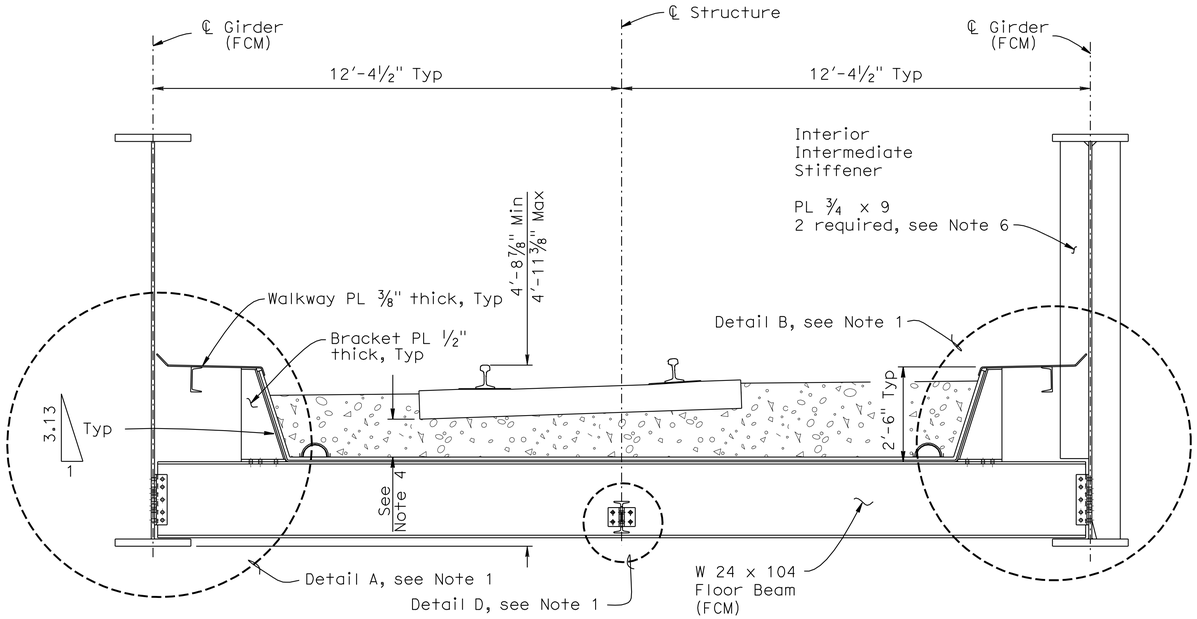

BETWEEN INTERMEDIATE STIFFENERS

AT INTERMEDIATE STIFFENERS (NO KNEE BRACE)

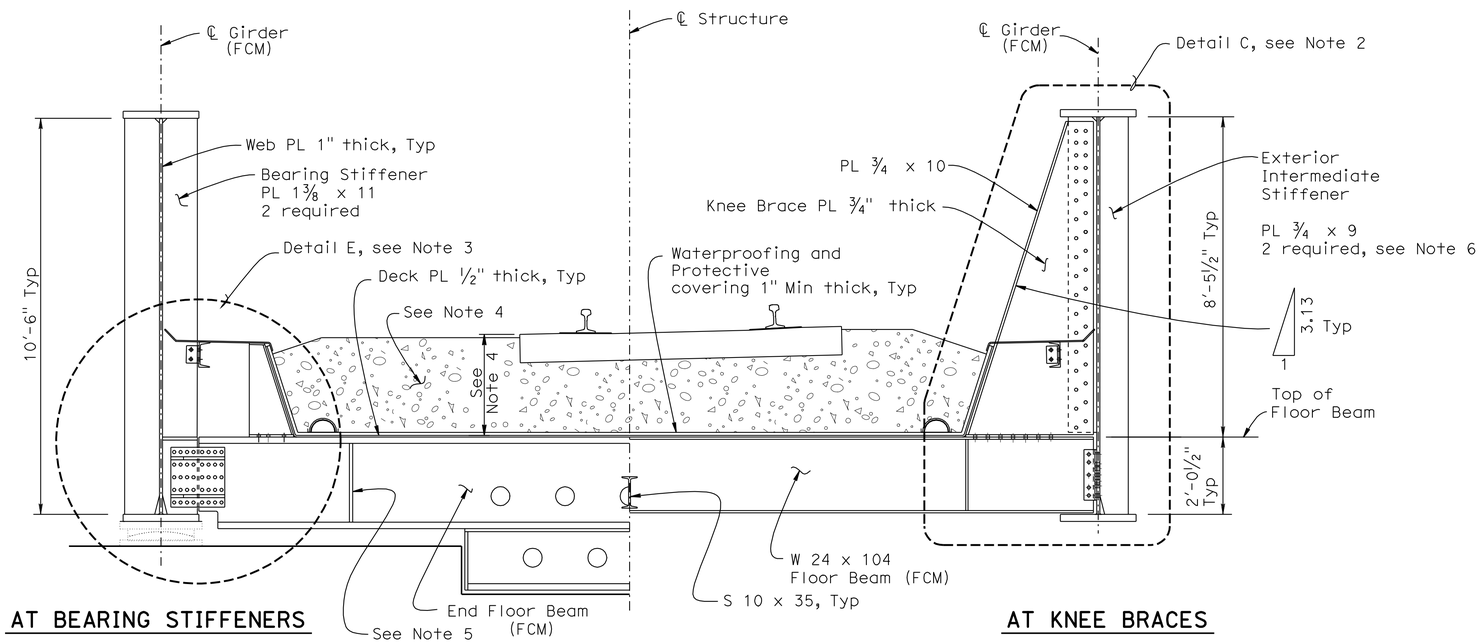

AT BEARING STIFFENERS

AT KNEE BRACES

TYPICAL SECTION

½" = 1"-0"

NOTE:
THE CONTRACTOR SHALL VERIFY ALL CONTROLLING FIELD DIMENSIONS BEFORE ORDERING OR FABRICATING ANY MATERIAL.

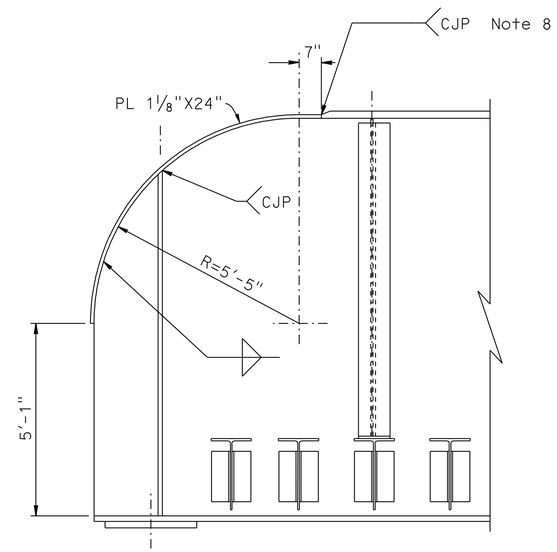

GIRDER NOSE AT ABUTMENT

½" = 1"-0"

NOTE: Interior Elevation of Abutment 1 shown, Abutment 3 similar.

DESIGN	BY B. Addlespurger	CHECKED G. Slocum	
DETAILS	BY E. Montevirgen	CHECKED G. Slocum	
QUANTITIES	BY T. Sanderson	CHECKED R. Anderson	

STATE OF CALIFORNIA
DEPARTMENT OF TRANSPORTATION

DIVISION OF ENGINEERING SERVICES
STRUCTURE DESIGN
DESIGN BRANCH 10

BRIDGE NO. 56-0848
POST MILE 19.39

PACHAPPA UP (SHOOFLY)
TYPICAL SECTION

STRUCTURES DESIGN DETAIL SHEET (ENGLISH) (REV. 10/25/05)

ORIGINAL SCALE IN INCHES FOR REDUCED PLANS 0 1 2 3

CU 08
EA 448401

DISREGARD PRINTS BEARING EARLIER REVISION DATES

REVISION DATES: 10-29-09, 11-18-09, 5-25-10, 6-03-10, 7-14-10, 9-28-10

SHEET 17 OF 39

FILE => 560848kts17.dgn

USERNAME => trcarol DATE PLOTTED => 30-APR-2011 TIME PLOTTED => 14:33

DIST	COUNTY	ROUTE	POST MILES TOTAL PROJECT	SHEET No	TOTAL SHEETS
08	Riv	91	15.6/21.6	1999	2028

REGISTERED CIVIL ENGINEER 11-30-10 DATE

4-25-11
PLANS APPROVAL DATE

REGISTERED PROFESSIONAL ENGINEER HUAN D. VU No. C60696 Exp. 12/31/10 CIVIL STATE OF CALIFORNIA

The State of California or its officers or agents shall not be responsible for the accuracy or completeness of electronic copies of this plan sheet.

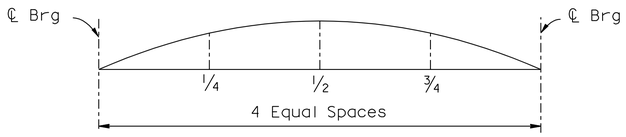

DEAD LOAD CAMBER DIAGRAM

Camber Components \ Ordinates	1/4	1/2	3/4
PL Girder & Stiffeners	0.15	0.20	0.15
Added Steel Components	0.18	0.26	0.18
Ballast,Track & Ties (Min)	0.32	0.45	0.32
Ballast,Track & Ties (Max)	0.48	0.66	0.47
Total Camber (inch)	0.81	1.13	0.80

NOTES:
1. Welds for stiffeners and girder splices and transitions are shown on "GIRDER DETAILS NO. 6" sheet.
2. Single sided intermediate stiffener region. Single Exterior stiffeners to be centered on ℄ Floorbeams as shown.
3. FCM and compression zones extend to the middle depth of the web.
4. Left and Right Girder stiffener placements are identical by rotation. The terminus beyond the ℄ Brg and the nose at the Abutment are specific to the individual girder. See "TYPICAL SECTION" sheet.
5. Camber Diagram View is an Interior Elevation of each Girder.
6. Optional bolted splices shall be designed per AREMA. Contractor to submit calculations and details to the Engineer for approval.

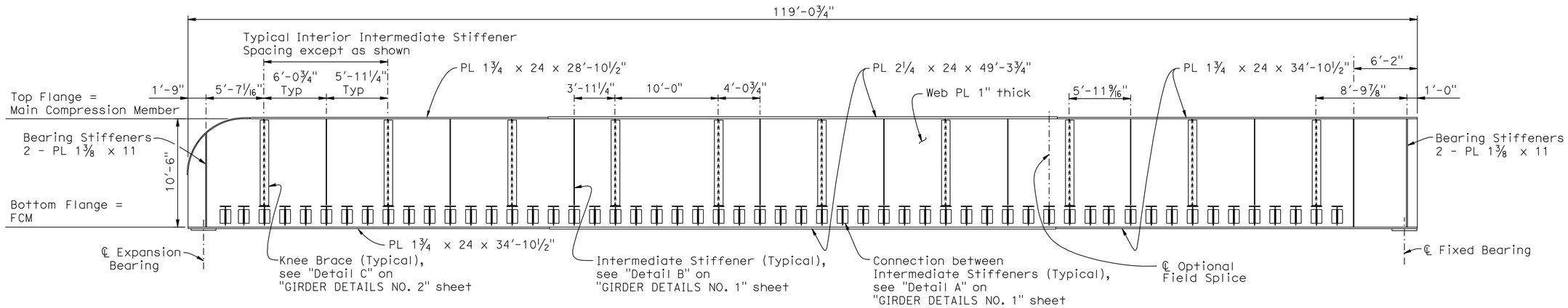

ELEVATION A-A See Note 4

3/16" = 1'-0"

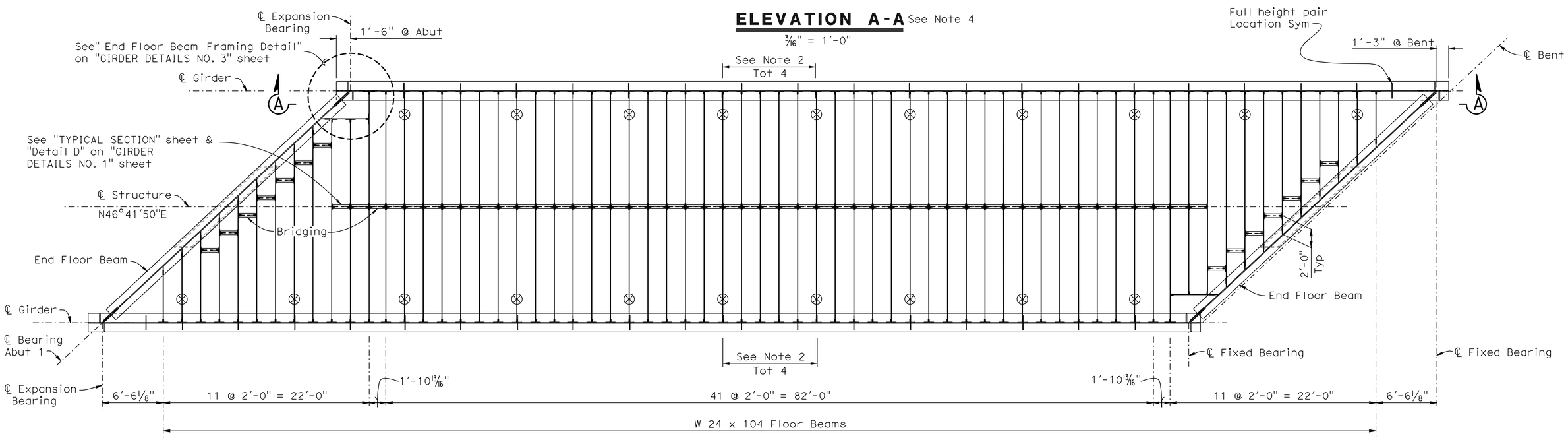

SPAN 1

3/16" = 1'-0"

NOTE:
THE CONTRACTOR SHALL VERIFY ALL CONTROLLING FIELD DIMENSIONS BEFORE ORDERING OR FABRICATING ANY MATERIAL.

LEGEND:

⊗ = Indicates location of Knee Braces.

	BY	CHECKED
DESIGN	B. Addlespurger	G. Slocum
DETAILS	E. Montevirgen	G. Slocum
QUANTITIES	T. Sanderson	R. Anderson

STATE OF CALIFORNIA DEPARTMENT OF TRANSPORTATION

DIVISION OF ENGINEERING SERVICES STRUCTURE DESIGN DESIGN BRANCH 10

BRIDGE NO. 56-0848
POST MILE 19.39

PACHAPPA UP (SHOOFLY)
GIRDER LAYOUT NO. 1

STRUCTURES DESIGN DETAIL SHEET (ENGLISH) (REV. 10/25/05)

ORIGINAL SCALE IN INCHES FOR REDUCED PLANS 0 1 2 3

CU 08
EA 448401

DISREGARD PRINTS BEARING EARLIER REVISION DATES

REVISION DATES: 10-22-09, 1-28-10, 6-03-10, 7-14-10, 9-07-10, 9-29-10, 10-20-10, 11-02-10

SHEET 18 OF 39

FILE => 5608481g_lo18.dgn

USERNAME => trcarol DATE PLOTTED => 30-APR-2011 TIME PLOTTED => 14:34

DIST	COUNTY	ROUTE	POST MILES TOTAL PROJECT	SHEET No	TOTAL SHEETS
08	Riv	91	15.6/21.6	2000	2028

REGISTERED CIVIL ENGINEER 11-30-10 DATE

4-25-11
PLANS APPROVAL DATE

REGISTERED PROFESSIONAL ENGINEER HUAN D. VU No. C60696 Exp. 12/31/10 CIVIL STATE OF CALIFORNIA

The State of California or its officers or agents shall not be responsible for the accuracy or completeness of electronic copies of this plan sheet.

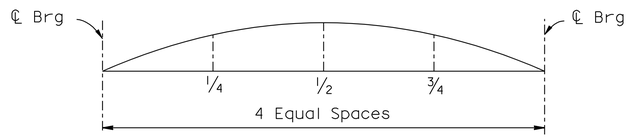

DEAD LOAD CAMBER DIAGRAM

Camber Components \ Ordinates	1/4	1/2	3/4
PL Girder & Stiffeners	0.18	0.25	0.18
Added Steel Components	0.21	0.29	0.21
Ballast,Track & Ties (Min)	0.36	0.51	0.36
Ballast,Track & Ties (Max)	0.54	0.75	0.53
Total Camber (inch)	0.93	1.29	0.92

NOTES:
1. Welds for stiffeners and girder splices and transitions are shown on "GIRDER DETAILS NO. 6" sheet.
2. Single sided intermediate stiffener region. Single Exterior stiffeners to be centered on ℄ Floorbeams as shown.
3. FCM and compression zones extend to the middle depth of the web.
4. Left and Right Girder stiffener placements are identical by rotation. The terminus beyond the ℄ Brg and the nose at the Abutment are specific to the individual girder. See "TYPICAL SECTION" sheet.
5. Camber Diagram View is an Interior Elevation of each Girder.
6. Optional bolted splices shall be designed per AREMA. Contractor to submit calculations and details to the Engineer for approval.

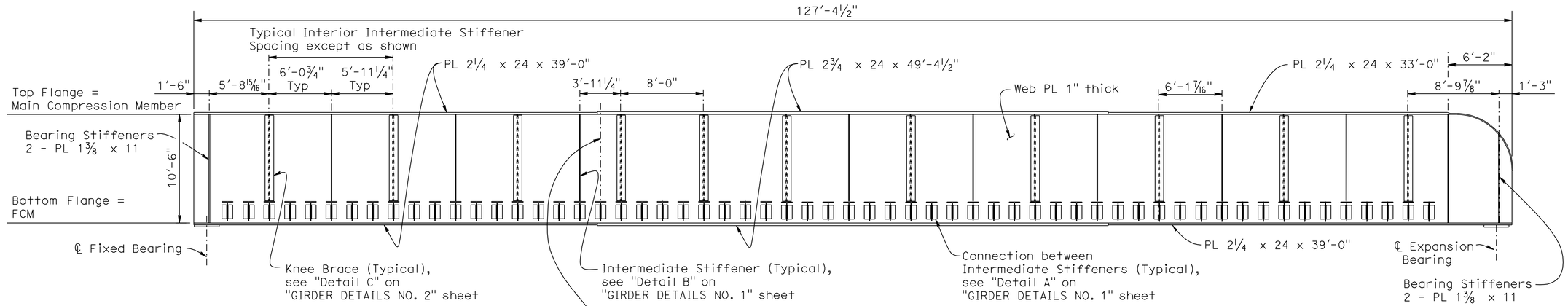

ELEVATION B-B See Note 4

3/16" = 1'-0"

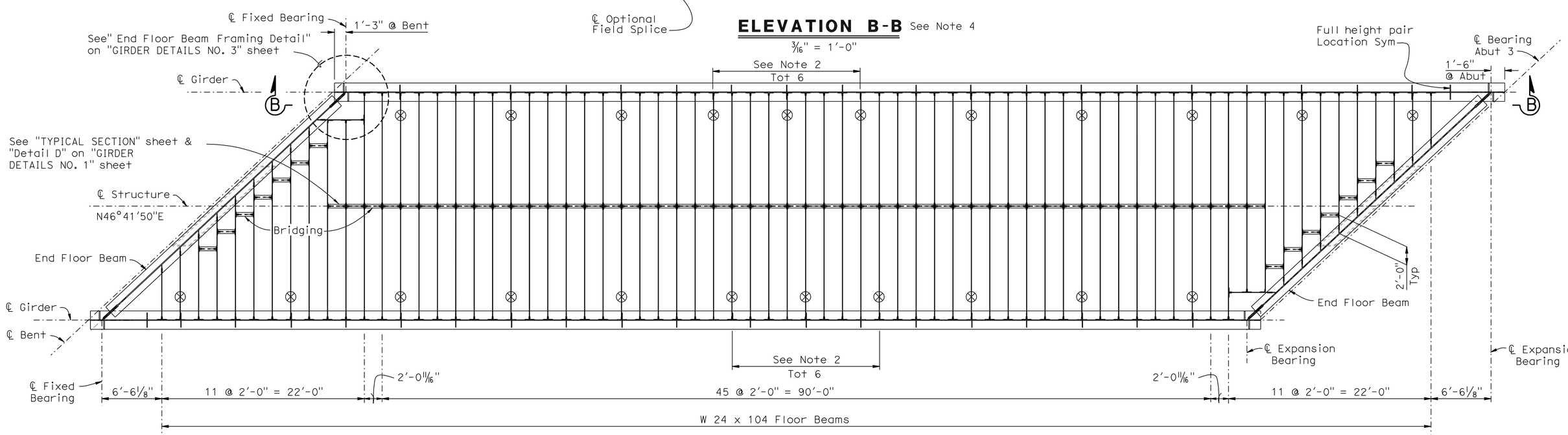

SPAN 2

3/16" = 1'-0"

NOTE:
THE CONTRACTOR SHALL VERIFY ALL CONTROLLING FIELD DIMENSIONS BEFORE ORDERING OR FABRICATING ANY MATERIAL.

LEGEND:

⊗ = Indicates location of Knee Braces.

	BY	CHECKED
DESIGN	B. Addlespurger	G. Slocum
DETAILS	E. Montevirgen	G. Slocum
QUANTITIES	T. Sanderson	R. Anderson

STATE OF CALIFORNIA
DEPARTMENT OF TRANSPORTATION

DIVISION OF ENGINEERING SERVICES
STRUCTURE DESIGN
DESIGN BRANCH 10

BRIDGE NO. 56-0848
POST MILE 19.39

PACHAPPA UP (SHOOFLY)
GIRDER LAYOUT NO. 2

STRUCTURES DESIGN DETAIL SHEET (ENGLISH) (REV. 10/25/05)

ORIGINAL SCALE IN INCHES FOR REDUCED PLANS 0 1 2 3

CU 08
EA 448401

DISREGARD PRINTS BEARING EARLIER REVISION DATES

REVISION DATES: 10-27-09 1-29-10 6-03-10 7-14-10 9-07-10 9-29-10 11-02-10

SHEET 19 OF 39

FILE => 5608481g_lo19.dgn

USERNAME => trrlcmf DATE PLOTTED => 30-APR-2011 TIME PLOTTED => 14:37