DIST	COUNTY	ROUTE	POST MILES TOTAL PROJECT	SHEET NO.	TOTAL SHEETS
08	Riv	91	15.6/21.6	1401	2028

REGISTERED CIVIL ENGINEER

October 5, 2007
PLANS APPROVAL DATE

REGISTERED PROFESSIONAL ENGINEER
Douglas J. Dunrud
No. C47240
Exp. 12-31-07
CIVIL
STATE OF CALIFORNIA

The State of California or its officers or agents shall not be responsible for the accuracy or completeness of electronic copies of this plan sheet.

To accompany plans dated 4-25-11

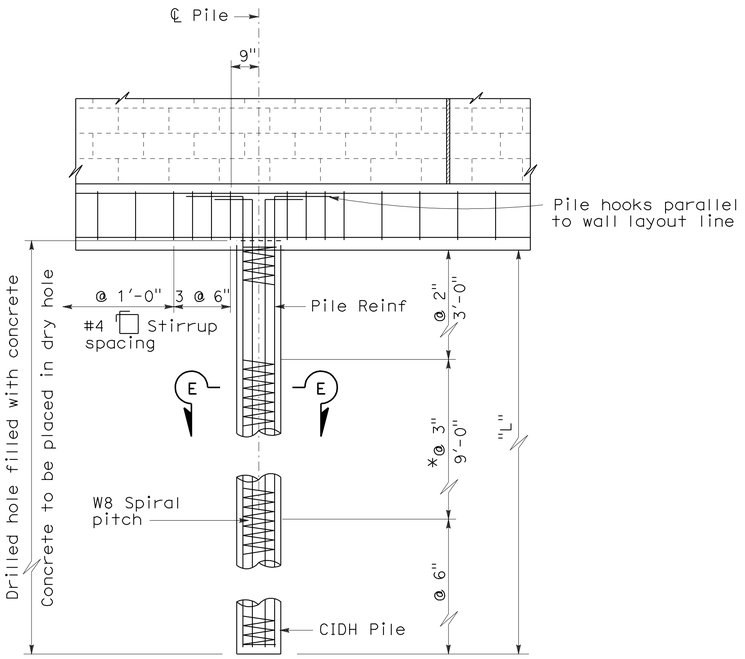

DETAIL D

* @ 2" at option of Contractor

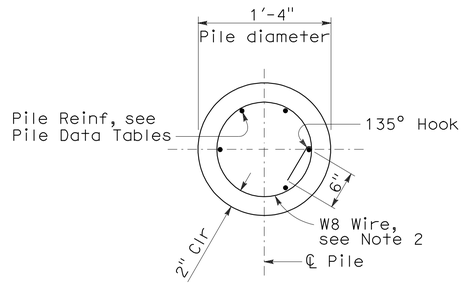

SECTION E-E

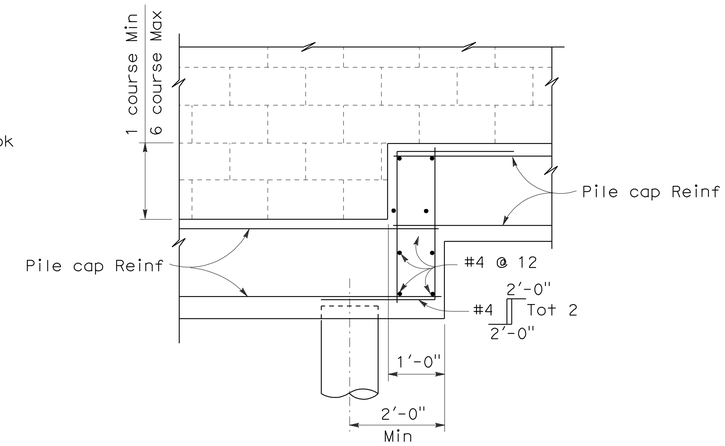

PILE CAP STEP DETAIL

NOTES:

1. For details not shown, see Standard Plan B15-3 and Revised Standard Plan RSP B15-4.
2. Lapped splices in spiral reinforcement shall be lapped at least 80 wire diameters. Spiral reinforcement at splices and at ends shall be terminated with a 135° hook with a 6" tail hooked around a longitudinal bar.

CASE 1 - PILE DATA TABLE										
Maximum H	ø = 25 Min			ø = 30 Min			ø = 35 Min			Maximum H
	S	L	Pile Reinf	S	L	Pile Reinf	S	L	Pile Reinf	
6'-0"	16'-0"	7'-0"	#6 Tot 6	16'-0"	5'-6"	#6 Tot 6	16'-0"	4'-6"	#6 Tot 6	6'-0"
8'-0"	16'-0"	8'-6"	#6 Tot 7	16'-0"	7'-0"	#6 Tot 7	16'-0"	5'-6"	#6 Tot 7	8'-0"
10'-0"	16'-0"	10'-0"	#7 Tot 6	16'-0"	8'-0"	#7 Tot 6	16'-0"	6'-6"	#7 Tot 6	10'-0"
12'-0"	15'-0"	11'-6"	#8 Tot 7	16'-0"	9'-6"	#8 Tot 7	16'-0"	7'-6"	#8 Tot 7	12'-0"
14'-0"	13'-0"	11'-6"	#8 Tot 7	14'-0"	10'-0"	#8 Tot 7	14'-0"	8'-0"	#8 Tot 7	14'-0"
16'-0"	12'-0"	12'-0"	#8 Tot 7	13'-0"	10'-6"	#8 Tot 7	13'-0"	8'-6"	#8 Tot 7	16'-0"

Case 1 - Level ground (±10%) on both sides of the sound wall.

CASE 2 - PILE DATA TABLE							
Maximum H	ø = 30 Min			ø = 35 Min			Maximum H
	S	L	Pile Reinf	S	L	Pile Reinf	
6'-0"	16'-0"	11'-6"	#8 Tot 7	16'-0"	8'-6"	#6 Tot 7	6'-0"
8'-0"	16'-0"	14'-0"	#8 Tot 7	16'-0"	10'-6"	#7 Tot 6	8'-0"
10'-0"	15'-0"	16'-0"	#8 Tot 7	16'-0"	12'-0"	#7 Tot 7	10'-0"
12'-0"	12'-0"	16'-0"	#8 Tot 7	15'-0"	13'-6"	#8 Tot 7	12'-0"
14'-0"	10'-0"	16'-0"	#8 Tot 7	12'-0"	13'-6"	#8 Tot 7	14'-0"
16'-0"	8'-0"	16'-0"	#8 Tot 7	11'-0"	14'-0"	#8 Tot 7	16'-0"

Case 2 - Level ground (±10%) on traffic side of the sound wall and sloping ground on opposite side.

STATE OF CALIFORNIA
DEPARTMENT OF TRANSPORTATION

SOUND WALL MASONRY BLOCK ON PILE CAP DETAILS (3)

NO SCALE

RSP B15-5 DATED OCTOBER 5, 2007 SUPERSEDES STANDARD PLAN B15-5
DATED MAY 1, 2006 - PAGE 295 OF THE STANDARD PLANS BOOK DATED MAY 2006.

REVISED STANDARD PLAN RSP B15-5

2006 REVISED STANDARD PLAN RSP B15-5

DIST	COUNTY	ROUTE	POST MILES TOTAL PROJECT	SHEET NO.	TOTAL SHEETS
08	Riv	91	15.6/21.6	1402	2028

REGISTERED ELECTRICAL ENGINEER

October 5, 2007
PLANS APPROVAL DATE

REGISTERED PROFESSIONAL ENGINEER
Jeffery G. McRae
No. E14512
Exp. 6-30-08
ELECTRICAL
STATE OF CALIFORNIA

The State of California or its officers or agents shall not be responsible for the accuracy or completeness of electronic copies of this plan sheet.

To accompany plans dated 4-25-11

ELECTROLIERS

STANDARD TYPES
15, 15D
15 STRUCTURE
21, 21D STRUCTURE
30
31
32
35
36-20A

High mast light pole

Double Arm lighting standard

Existing electrolier

Electrolier foundation (Future installation)

NOTES:

1. Luminaires shall be 310 W HPS when installed on Type 21, 21D, 30, 31, 32, 35 and 36-20A Standards, unless otherwise specified. Luminaires shall be 200 W HPS when installed on other type standards or poles, unless otherwise specified.
2. Luminaires shall be the cutoff type, ANSI Type Ⅲ medium cutoff lighting distribution, unless otherwise specified.
3. Variations noted adjacent to symbol on project plans.

Electrolier (see project notes or project plans)

Luminaire on wood pole

STANDARD NOTES:

- AB — Abandon. If applied to conduit, remove conductors.
- BC — Install pull box in existing conduit run.
- BP — Pedestrian barricade, type as indicated on plan.
- CB — Install conduit into existing pull box.
- CC — Connect new and existing conduit. Remove existing conductors and install conductors as indicated.
- CF — Conduit to remain for future use. Remove conductors. Install pull wire or rope.
- DH — Detector handhole.
- FA — Foundation to be abandoned.
- IS — Install sign on signal mast arm.
- NS — No slip base on standard.
- PEC — Photoelectric control.
- PEU — Photoelectric unit.
- RC — Equipment or material to be removed and become the property of the Contractor.
- RE — Remove electrolier, fuses and ballast. Tape ends of conductors.
- RL — Relocate equipment.
- RR — Remove and reuse equipment.
- RS — Remove and salvage equipment.
- SC — Splice new to existing conductors.
- SD — Service disconnect.
- SF — Standard to remain for future use. Remove luminaire, pole conductors, fuses and ballast.
- TSP — Telephone service point.

ABBREVIATIONS AND EQUIPMENT DESIGNATIONS

PROPOSED	EXISTING	
BBS	bbs	Battery backup system
BC	bc	Bolt circle
C	C	Conduit
CCTV	cctv	Closed circuit television
CKT	ckt	Circuit
CMS	cms	Changeable message sign
DLC	dlc	Loop detector lead-in cable
EMS	ems	Extinguishable message sign
EVC	evc	Emergency vehicle cable
EVD	evd	Emergency vehicle detector
FB	fb	Flashing beacon
FBCA	fbca	Flashing beacon control assembly
FBS	fbs	Flashing beacon with slip base
FO	fo	Fiber optic
G	G	Ground (Equipment Grounding Conductor)
GFCI	GFCI	Ground fault circuit interrupt
HAR	har	Highway advisory radio
HEX	hex	Hexagonal
HPS	hps	High pressure sodium
IISNS	iisns	Internally illuminated street name sign
ISL	isl	Induction sign lighting
LED	led	Light emitting diode
LMA	lma	Luminaire mast arm
LPS	lps	Low pressure sodium
LTG	ltg	Lighting
LUM	lum	Luminaire
MAT	mat	Mast arm mounting vehicle signal faces, top attachment
MAS	mas	Mast arm mounting vehicle signal faces, side attachment
MAS-4A	mas-4A	Mast arm mounting vehicle signal faces, side attachment - 4 signal section
MAS-4B	mas-4B	
MAS-4C	mas-4C	
MAS-5A	mas-5A	Mast arm mounting vehicle signal faces, side attachment - 5 signal section
MAS-5B	mas-5B	
MC	mc	Mercury contactor
M/M	m/m	Multiple to multiple transformer
MT	mt	Conduit with pull wire or rope only
MTG	mtg	Mounting
	mv	Mercury vapor lighting fixture
N	N	Neutral (Grounded Conductor)
NC	NC	Normally closed
NO	NO	Normally open
PB	pb	Pull box
PEC	pec	Photoelectric control (Type Ⅰ, Ⅱ, Ⅲ, Ⅳ or Ⅴ as shown)
PED	ped	Pedestrian
PEU	peu	Photoelectric unit
PPB	ppb	Pedestrian push button
RL		Relocated equipment
RM	rm	Ramp metering
SB	sb	Slip base
SIC	sic	Signal interconnect cable
SIG	sig	Signal
SMA	sma	Signal mast arm
SNS	sns	Street name sign
SP	sp	Service point
TDC	tdc	Telephone demarcation cabinet
TMS	tms	Traffic monitoring station
TOS	tos	Traffic Operations System
VEH	veh	Vehicle
XFMR	xfmr	Transformer
COMM	comm	Communication
RWIS	rwis	Roadway weather information system

SOFFIT AND WALL MOUNTED LUMINAIRES

Pendant, 70 W HPS unless otherwise specified.

Flush, 70 W HPS unless otherwise specified.

Wall surface, 70 W HPS unless otherwise specified.

Existing soffit or wall luminaire to remain unmodified.

Existing soffit or wall luminaire to be modified as specified.

NOTE:

Arrow indicates "street side" of luminaire.

STATE OF CALIFORNIA
DEPARTMENT OF TRANSPORTATION

ELECTRICAL SYSTEMS (SYMBOLS AND ABBREVIATIONS)

NO SCALE

RSP ES-1A DATED OCTOBER 5, 2007 SUPERSEDES STANDARD PLAN ES-1A
DATED MAY 1, 2006 - PAGE 400 OF THE STANDARD PLANS BOOK DATED MAY 2006.

REVISED STANDARD PLAN RSP ES-1A

2006 REVISED STANDARD PLAN RSP ES-1A

DIST	COUNTY	ROUTE	POST MILES TOTAL PROJECT	SHEET NO.	TOTAL SHEETS
08	Riv	91	15.6/21.6	1403	2028

REGISTERED ELECTRICAL ENGINEER

October 5, 2007
PLANS APPROVAL DATE

REGISTERED PROFESSIONAL ENGINEER Jeffery G. McRae No. E14512 Exp. 6-30-08 ELECTRICAL STATE OF CALIFORNIA

The State of California or its officers or agents shall not be responsible for the accuracy or completeness of electronic copies of this plan sheet.

To accompany plans dated 4-25-11

CONDUIT

PROPOSED	EXISTING	
		Lighting Conduit, unless otherwise indicated or noted
		Traffic signal conduit
C	c	Communication conduit
T	t	Telephone conduit
F	f	Fire alarm conduit
FO	fo	Fiber optic conduit
		Conduit termination (RSP ES-9A C)
R	r	Conduit riser in/on structure or service pole

SERVICE EQUIPMENT

PROPOSED	EXISTING	
OH	oh	Overhead lines
U	U	Wood pole "U" indicates utility owned
		Pole guy with anchor
		Utility transformer - ground mounted
III		Service equipment enclosure type
		Service equipment enclosure door indicates front of enclosure
T	t	Telephone demarcation cabinet

POLE-MOUNTED SERVICE DESIGNATION

Type of installation

TYPE H SERVICE - 28'-10" ← Pole height above grade

ILLUMINATED OVERHEAD SIGN

PROPOSED	EXISTING	
		Overhead sign - Single post
		Overhead sign - Two post
		Overhead sign - Mounted on structure
		Overhead sign with electrolier

SIGNAL EQUIPMENT

PROPOSED	EXISTING	
		Pedestrian signal face
		Pedestrian push button post
		Pedestrian barricade
		Vehicle signal face (with backplate, 3-Section: red, yellow and green)
		Vehicle signal face with angle visors
PV	PV	Modifications of basic symbols: "L" indicates all non-arrow sections louvered "LG" indicates louvered green section only "PV" indicates 12" programmed visibility sections "8" indicates all 8" sections (only when specified)
		Type 15TS and Vehicle signal face
		Vehicle signal face with red, yellow and green left arrow sections
		Vehicle signal face with red and yellow sections and up green arrow
		Vehicle signal face (5 Section) with red, yellow and green sections and yellow and green right arrows
		Type 1 Standard and attached vehicle signal faces
		Standard with signal mast arm only and attached vehicle signal faces and internally illuminated street name sign
		Type 33 Standard, Left-turn vehicle signal face and sign
		Standard with luminaire and signal mast arms and attached vehicle signal faces
		Cantilever flashing beacon Type 9 Frame, with a sign unless otherwise specified or indicated
		Type 15-FBS Standard with two vehicle signal face sections with lens, backplate and visor with a sign
R	Y	Flashing beacon. One vehicle signal face section with lens, backplate and visor. "R" indicates red indication, "Y" indicates yellow indication
		Controller assembly. Door indicates front of cabinet

SIGNAL EQUIPMENT Cont

PROPOSED	EXISTING	
		Guard post
		Type 1 Standard with "Meter On" sign
		Emergency Vehicle detector

NOTES:

1. All signal sections shall be 12" unless shown otherwise.
2. Signal heads shall be provided with backplates unless shown otherwise.
3. Signal indication shall be LED.

STATE OF CALIFORNIA
DEPARTMENT OF TRANSPORTATION

ELECTRICAL SYSTEMS (SYMBOLS AND ABBREVIATIONS)

NO SCALE

RSP ES-1B DATED OCTOBER 5, 2007 SUPERCEDES STANDARD PLAN ES-1B DATED MAY 1, 2006 - PAGE 401 OF THE STANDARD PLANS BOOK DATED MAY 2006.

REVISED STANDARD PLAN RSP ES-1B

2006 REVISED STANDARD PLAN RSP ES-1B

DIST	COUNTY	ROUTE	POST MILES TOTAL PROJECT	SHEET NO.	TOTAL SHEETS
08	Riv	91	15.6/21.6	1404	2028

REGISTERED ELECTRICAL ENGINEER

October 5, 2007
PLANS APPROVAL DATE

REGISTERED PROFESSIONAL ENGINEER Jeffery G. McRae No. E14512 Exp. 6-30-08 ELECTRICAL STATE OF CALIFORNIA

The State of California or its officers or agents shall not be responsible for the accuracy or completeness of electronic copies of this plan sheet.

To accompany plans dated 4-25-11

EQUIPMENT IDENTIFICATION

ILLUMINATED SIGN IDENTIFICATION NUMBER:

Sign No. 12345 — Sign number - Place on post or structure

10 ISL SCI 1.0

- 1.0 — Transformer rating (kVA)
- SCI — Lighting control type
- ISL — Number and type of fixtures

Do NOT place on standard or structure

ELECTROLIER OR EQUIPMENT IDENTIFICATION NUMBER:

12345 - 15'-0"

- 15'-0" — Mast arm length, if shown. Do not place on standard or structure.
- 12345 — Equipment number - Place on standard or structure. Existing equipment numbers are shown in parenthesis

CONDUIT AND CONDUCTOR IDENTIFICATION:

1½"C, 2#10, 15#14, 2 DLC

- 2#10, 15#14, 2 DLC — Number and size of conductors and cables
- 1½"C — Size of conduit in inches

Ø1, Ø2, Ø2P, etc.	Traffic phase identification for signal faces, detectors and phase diagrams
1 2 3	Project note numbers
A B C	Equipment description, installation or item numbers
1 2 3	Conduit run numbers

SIGNAL AND LIGHTING STANDARD (TYPICAL DESIGNATION):

19A - 3 - 100

- 100 — Wind velocity = 100 mph
- 3 — Case 3 arm loading
- 19A — Standard type
- Standard Plan sheet number
- Detail number or letter

MISCELLANEOUS EQUIPMENT

PROPOSED	EXISTING	
CMS	cms	Changeable message sign
		Closed circuit television camera
		Highway advisory radio pole and antenna
EMS	ems	Extinguishable message sign
M V	m v	Detection device M = Microwave sensor V = Video image sensor

WIRING DIAGRAM LEGEND

P	Pole
CB	Circuit breaker
A	Ampere
V	Volt
M	Metered
UM	Unmetered
NB	Neutral bus
GB	Ground bus
G	Equipment grounding conductor
N	Grounded conductor (Neutral)

- External conductor
- Conductor or bus
- Tie point
- Contactor coil
- Contactor, Contact NO
- Terminal blocks
- Contactor, Contact NC
- Enclosure bond
- Grounding electrode
- Circuit breaker
- Receptacle

PULL BOXES

PROPOSED	EXISTING	
		Pull box-No. 5 unless otherwise indicated or noted.
3	9A(21)	Pull box-Additional designations or descriptions

3 = No. 3½ pull box
5 = No. 5 pull box
6 = No. 6 pull box
7 = No. 7 (Ceiling pull box)
8 = No. 8 (Pendant soffit pull box)
9 = No. 9 pull box
9A = No. 9A pull box

(C) = Communications pull box
(E) = Pull box with extension
(S) = Sprinkler control pull box
(21) = Anchor bolts and conduit for future installation of Type 21 Standard
(T) = Traffic pull box

VEHICLE DETECTORS

5 J 9 U

- U — Vehicle detector designation
- U = Upper, L = Lower
- 9 — Slot number in input file
- J — Input file (I or J)
- 5 — Phase

PROPOSED	EXISTING	
		Type A detector loop. Outline of sawcut shown.
		Type B detector loop. Outline of sawcut shown.
		Type C detector loop. Outline of sawcut shown.
		Type D detector loop. Outline of sawcut shown.
		Type E detector loop. Outline of sawcut shown.
		Type Q detector loop. Outline of sawcut shown.
		Magnetic detector
DH	dh	Detector handhole
		Microwave or video detection zone

STATE OF CALIFORNIA
DEPARTMENT OF TRANSPORTATION

ELECTRICAL SYSTEMS (SYMBOLS AND ABBREVIATIONS)

NO SCALE

RSP ES-1C DATED OCTOBER 5, 2007 SUPERCEDES STANDARD PLAN ES-1C DATED MAY 1, 2006 - PAGE 402 OF THE STANDARD PLANS BOOK DATED MAY 2006.

REVISED STANDARD PLAN RSP ES-1C

2006 REVISED STANDARD PLAN RSP ES-1C

DIST	COUNTY	ROUTE	POST MILES TOTAL PROJECT	SHEET NO.	TOTAL SHEETS
08	Riv	91	15.6/21.6	1405	2028

REGISTERED ELECTRICAL ENGINEER

October 5, 2007
PLANS APPROVAL DATE

REGISTERED PROFESSIONAL ENGINEER
Jeffery G. McRae
No. E14512
Exp. 6-30-08
ELECTRICAL
STATE OF CALIFORNIA

The State of California or its officers or agents shall not be responsible for the accuracy or completeness of electronic copies of this plan sheet.

To accompany plans dated 4-25-11

2006 REVISED STANDARD PLAN RSP ES-2C

NOTES-TYPE III SERVICE EQUIPMENT ENCLOSURES:

1. Service equipment enclosure and metering equipment shall meet the requirements of the service utility. The meter area shall have a sealable, lockable, weathertight cover that can be removed without the use of tools.

2. Service equipment enclosures shall be factory wired and conform to NEMA standards.

3. Dimensions of service equipment enclosures shall meet the requirements of the service utility.

4. The dead front panels on Type III service equipment enclosures shall have a continuous stainless steel or aluminum piano hinge. The panel in front of the breakers shall be secured with a latch or captive screws. No live parts shall be mounted on the dead front panel.

5. The exterior door shall have provisions for padlocking. The padlock hole shall be a minimum diameter of 7/16".

6. Enclosures housing transformers of more than one kVA shall have effective screened ventilation louver of not less than 50 square inches. Screen shall be stainless steel No. 304, with a No. 10 size mesh. Framed screen shall be secured with at least four bolts.

7. Fasteners on the exterior of the enclosure shall be vandal-resistant and shall not be removable from the exterior. Exterior screws, nuts, bolts and washers shall be stainless steel.

8. Landing lugs for incoming service conductors shall be compatible with either copper or aluminum conductors sized to suit the conductors shown on the plan. Landing lugs shall be copper or tin-plated aluminum. Neutral bus shall be rated for 125 A and be suitable for copper or aluminum conductors unless otherwise specified. The terminal shall include but not be limited to:

   a) Incoming terminals (landing lugs)
   b) Neutral lugs
   c) Solid neutral terminal strip

9. At least 6 standard single pole circuit breaker spaces, 3/4" nominal, shall be provided for branch circuits. Circuit breaker interiors shall be copper. Interiors of enclosure shall accept plug-in or cable-in/cable-out circuit breakers.

10. Control wiring shall be 600 V, 14 stranded machine tool wire. Where subject to flexing, 19 strand wire shall be used.

11. Main bus shall be rated for 125 A and shall be tin-plated copper.

12. A plastic laminated wiring diagram shall be provided with brass mounting eyelets and attached to the inside of the enclosure and the wiring diagram shall be affixed to the interior with a UL or ETL approved method.

13. An engraved phenolic nameplate on the dead front panel indicating the function of each circuit or device shall be installed with stainless steel rivets or stainless steel screws:

    a) Adjacent to the breaker or device with character size a minimum of 1/8".

    b) At the top of the exterior door panel indicating State system number, voltage level and number of phases with character size a minimum of 3/16".

14. The plan shows the approximate location of devices within the enclosure. Components may be rearranged, however, the "working" clearances within the service equipment enclosure shall be maintained.

15. In unpaved areas a raised portland cement concrete pad 2'-0" x 4" x width of foundation shall be constructed in front of new service equipment enclosure installation. Pad shall be set to elevation of foundation.

16. Foundation shall extend 2" minimum beyond edge of service equipment enclosure.

17. Internal bus, where shown, is typical only. Alternative design of proposed service equipment enclosure shall be submitted to the Engineer for approval.

18. Plug-in circuit breakers may be mounted in the vertical or horizontal position. Cable-in/cable-out circuit breakers shall be mounted in the vertical position.

19. Type III-AF and Type III-BF service equipment enclosures shall have the meter viewing windows located on the front side of the service equipment enclosures.

20. Type III-AR and Type III-BR service equipment enclosures shall be similarly constructed as Type III-AF and Type III-BF respectively, except the meter viewing windows shall be located on the back side of the service equipment enclosures.

21. Minimum clearance shall be required for front and back of service equipment enclosure per National Electrical Code, Article 110.26, "Spaces About Electric Equipment (600 Volts, Nominal, or Less)."

STATE OF CALIFORNIA
DEPARTMENT OF TRANSPORTATION

ELECTRICAL SYSTEMS (SERVICE EQUIPMENT NOTES TYPE III SERIES)

NO SCALE

RSP ES-2C DATED OCTOBER 5, 2007 SUPERCEDES STANDARD PLAN ES-2C DATED MAY 1, 2006 - PAGE 405 OF THE STANDARD PLANS BOOK DATED MAY 2006.

REVISED STANDARD PLAN RSP ES-2C

DIST	COUNTY	ROUTE	POST MILES TOTAL PROJECT	SHEET NO.	TOTAL SHEETS
08	Riv	91	15.6/21.6	1406	2028

REGISTERED ELECTRICAL ENGINEER

October 5, 2007
PLANS APPROVAL DATE

REGISTERED PROFESSIONAL ENGINEER Jeffery G. McRae No. E14512 Exp. 6-30-08 ELECTRICAL STATE OF CALIFORNIA

The State of California or its officers or agents shall not be responsible for the accuracy or completeness of electronic copies of this plan sheet.

To accompany plans dated 4-25-11

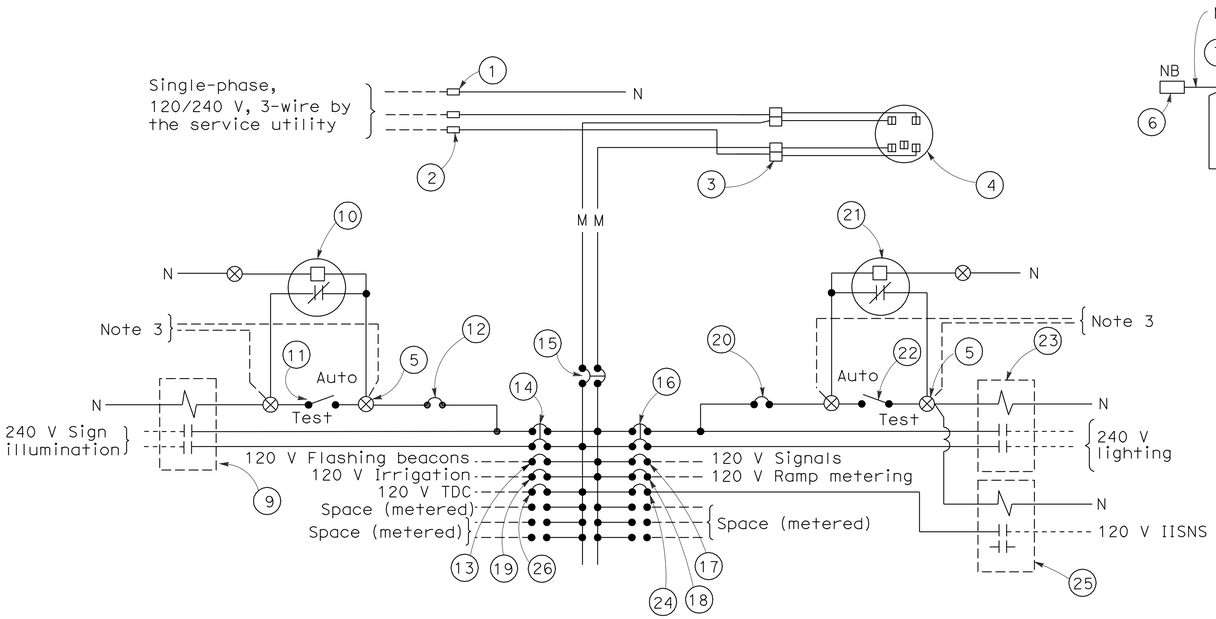

120/240 V SERVICE WIRING DIAGRAM (TYPICAL)

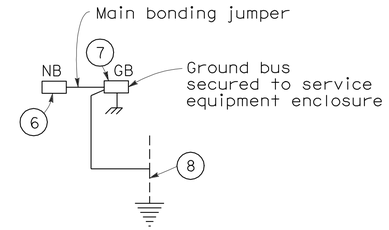

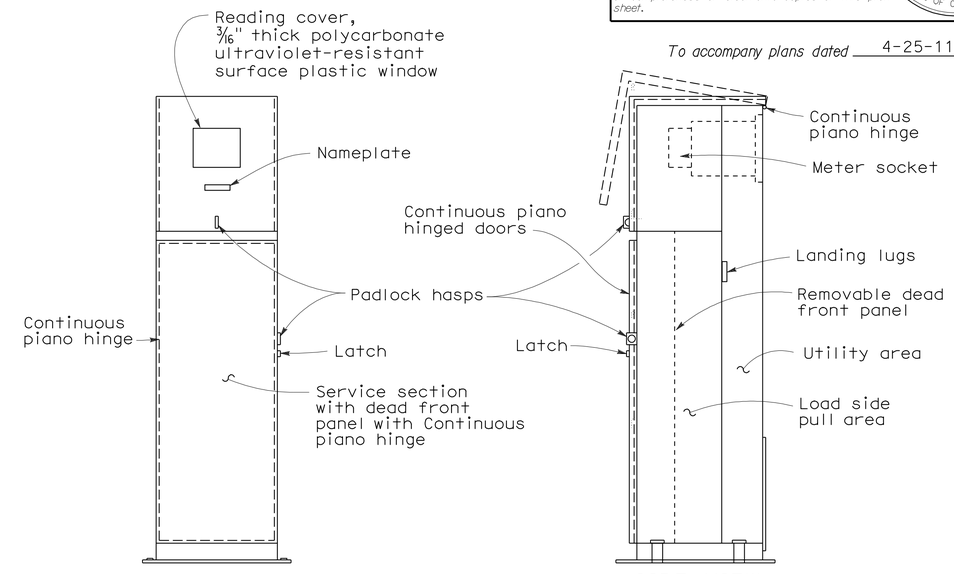

FRONT VIEW

SIDE VIEW

TYPE III-BF SERVICE EQUIPMENT ENCLOSURE WITH PROVISIONS FOR ONE 100 A METER (TYPICAL)

TYPE III-B SERVICE (120/240 V) EQUIPMENT LEGEND		
ITEM No.	COMPONENT	NAME PLATE DESCRIPTION
1	Neutral lug	
2	Landing lug (Note 6)	
3	Test bypass facility	
4	Meter socket and support	
5	Terminal blocks	
6	Neutral bus	
7	Ground bus	
8	Grounding electrode	
9	30 A, 2PNO Contactor	Sign Illumination
10	Photoelectric unit (Note 7)	
11	15 A, 1P, Test switch	Sign Illumination Test Switch
12	15 A, 120 V, 1P, CB	Sign Illumination Control
13	15 A, 120 V, 1P, CB	Flashing Beacon
14	30 A, 240 V, 2P, CB	Sign Illumination
15	100 A, 240 V, 2P, CB	Main Breaker
16	30 A, 240 V, 2P, CB	Lighting
17	50 A, 120 V, 1P, CB	Signals
18	30 A, 120 V, 1P, CB	Ramp Metering
19	20 A, 120 V, 1P, CB	Irrigation
20	15 A, 120 V, 1P, CB	Lighting Control
21	Photoelectric unit (Note 7)	
22	15 A, 1P, Test switch	Lighting Test Switch
23	60 A, 2PNO Contactor	Lighting
24	15 A, 120 V, 1P, CB	IISNS
25	30 A, 2PNO Contactor	IISNS
26	20 A, 120 V, IP, CB	Telephone Demarcation Cabinet

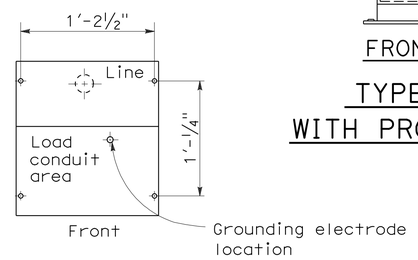

BASE FOR TYPE III-B SERVICE EQUIPMENT ENCLOSURE

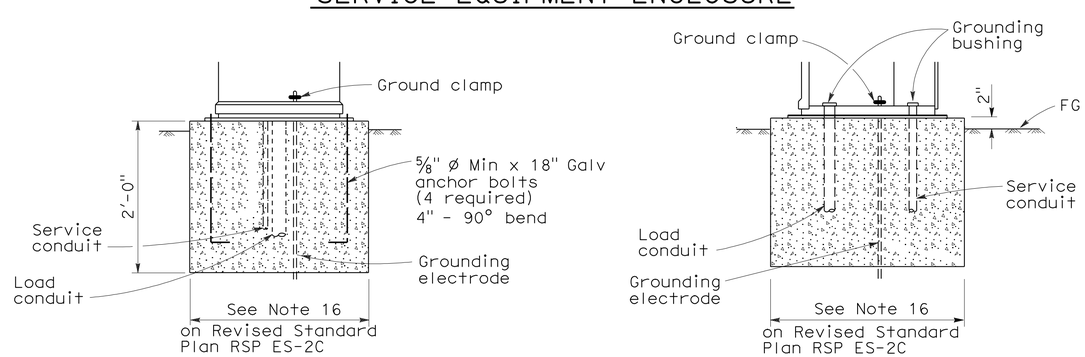

FRONT VIEW

SIDE VIEW

TYPE III-B SERVICE EQUIPMENT ENCLOSURE FOUNDATION DETAILS

NOTES: (FOR SERVICE EQUIPMENT ENCLOSURE)

1. Voltage ratings of service equipment shall conform to the service voltages indicated on the plans.
2. Unless otherwise indicated on the plans, service equipment items shall be provided for each service equipment enclosure as shown.
3. Connect to remote test switch mounted on lighting standards, sign post or structure when required.
4. Items No. 1 and 6 shall be isolated from the service equipment enclosure.
5. Meter sockets shall be 5 clip type.
6. The landing lug shall be suitable for multiple conductors.
7. Type V photoelectric control shall be used unless otherwise indicated on the plans.

STATE OF CALIFORNIA
DEPARTMENT OF TRANSPORTATION

ELECTRICAL SYSTEMS (SERVICE EQUIPMENT AND TYPICAL WIRING DIAGRAM, TYPE III-B SERIES)

NO SCALE

RSP ES-2E DATED OCTOBER 5, 2007 SUPERCEDES STANDARD PLAN ES-2E DATED MAY 1, 2006 - PAGE 407 OF THE STANDARD PLANS BOOK DATED MAY 2006.

REVISED STANDARD PLAN RSP ES-2E

2006 REVISED STANDARD PLAN RSP ES-2E

7-10-07

DIST	COUNTY	ROUTE	POST MILES TOTAL PROJECT	SHEET NO.	TOTAL SHEETS
08	Riv	91	15.6/21.6	1407	2028

REGISTERED ELECTRICAL ENGINEER

October 5, 2007
PLANS APPROVAL DATE

REGISTERED PROFESSIONAL ENGINEER Jeffery G. McRae No. E14512 Exp. 6-30-08 ELECTRICAL STATE OF CALIFORNIA

The State of California or its officers or agents shall not be responsible for the accuracy or completeness of electronic copies of this plan sheet.

To accompany plans dated 4-25-11

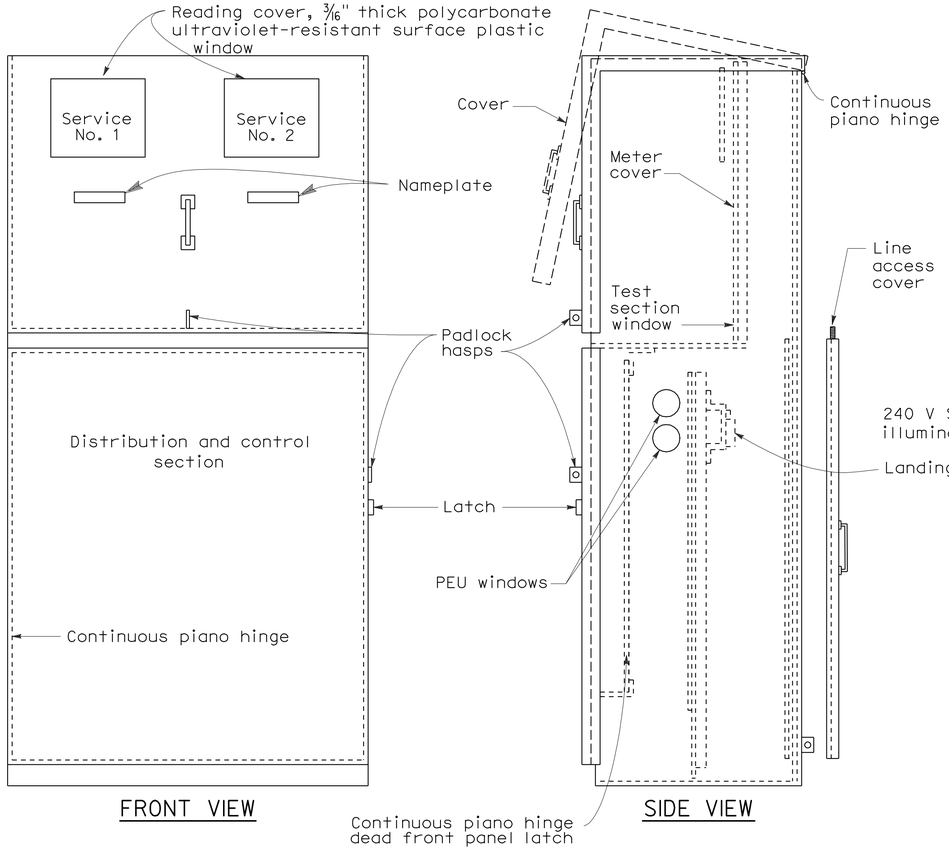

FRONT VIEW

SIDE VIEW

TYPE III-CF SERVICE EQUIPMENT ENCLOSURE WITH PROVISIONS FOR TWO 100 A METERS (TYPICAL)

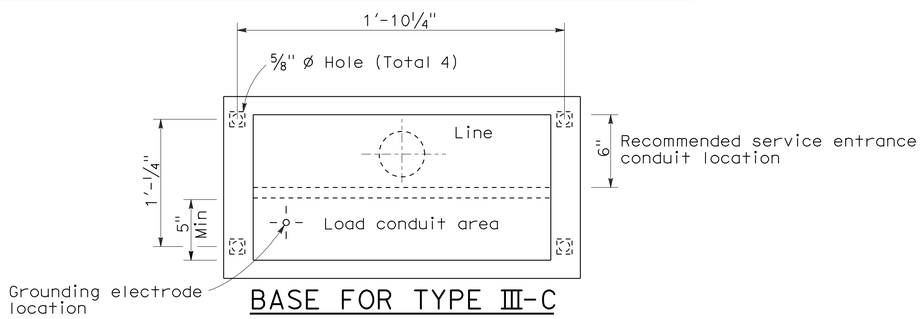

BASE FOR TYPE III-C SERVICE EQUIPMENT ENCLOSURE

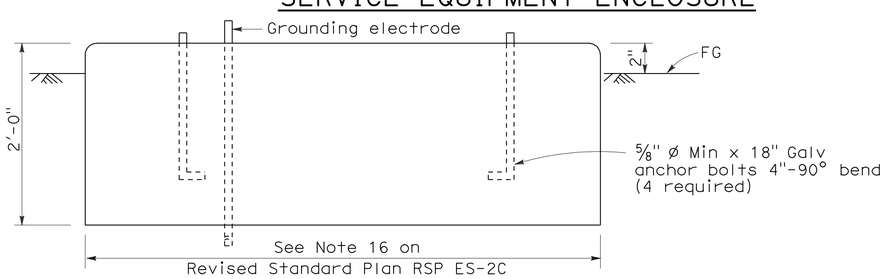

FOUNDATION DETAIL

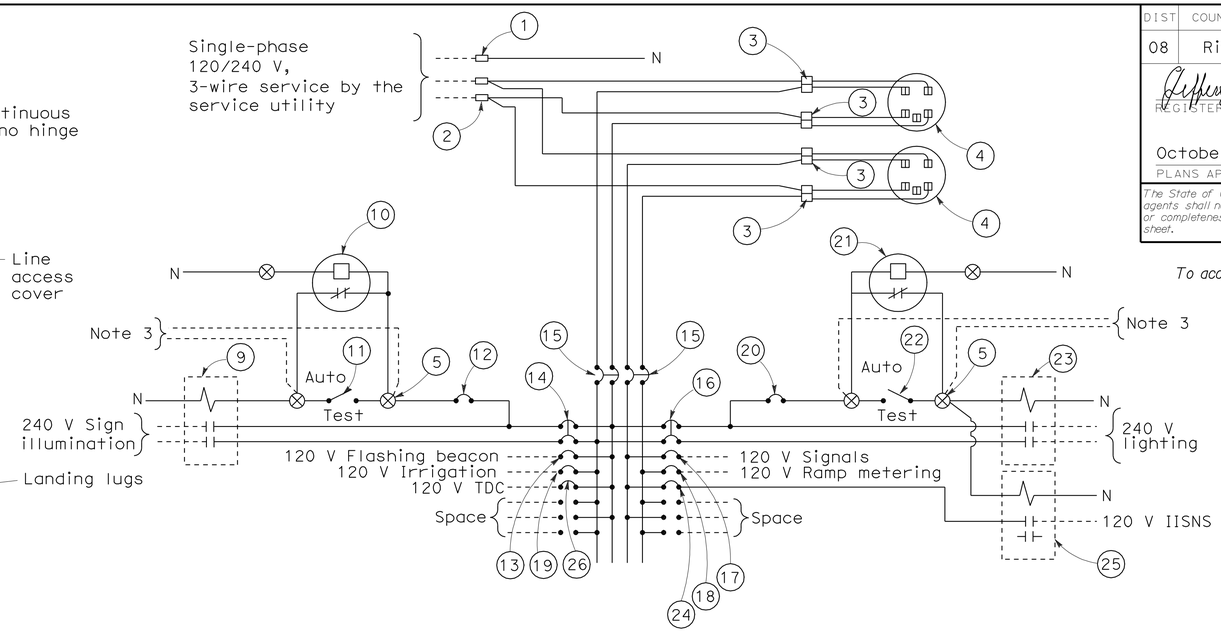

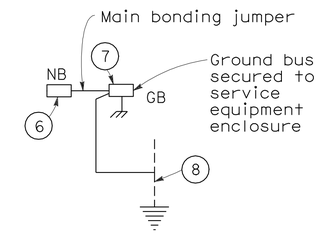

120/240 V SERVICE WIRING DIAGRAM (TYPICAL)

TYPE III-C SERVICE (120/240 V) EQUIPMENT LEGEND

ITEM No.	COMPONENT	NAME PLATE DESCRIPTION	ITEM No.	COMPONENT	NAME PLATE DESCRIPTION
1	Neutral lug		14	30 A, 240 V, 2P, CB	Sign Illumination
2	Landing lug (Note 6)		15	100 A, 240 V, 2P, CB	Main Breaker
3	Test bypass facility		16	30 A, 240 V, 2P, CB	Lighting
4	Meter socket and support		17	50 A, 120 V, 1P, CB	Signals
5	Terminal blocks		18	30 A, 120 V, 1P, CB	Ramp Metering
6	Neutral bus		19	20 A, 120 V, 1P, CB	Irrigation
7	Ground bus		20	15 A, 120 V, 1P, CB	Lighting Control
8	Grounding electrode		21	Photoelectric unit (Note 7)	
9	30 A, 2PNO, Contactor	Sign Illumination	22	15 A, 1P, Test switch	Lighting Control
10	Photoelectric unit (Note 7)		23	60 A, 2PNO Contactor	Lighting
11	15 A, 1P, Test switch	Sign Illumination Test Switch	24	15 A, 120 V, 1P, CB	IISNS
12	15 A, 120 V, 1P, CB	Sign Illumination Control	25	30 A, 2PNO Contactor	IISNS
13	15 A, 120 V, 1P, CB	Flashing Beacon	26	20 A, 120 V, 1P, CB	Telephone Demarcation Cabinet

NOTES: (FOR SERVICE EQUIPMENT ENCLOSURE)

1. Voltage ratings of service equipment shall conform to the service voltages indicated on the plans.
2. Unless otherwise indicated on the plans, service equipment items shall be provided for each service equipment enclosure as shown.
3. Connect to remote test switch mounted on lighting standards, sign post or structure when required.
4. Items No. 1 and 6 shall be isolated from the service equipment enclosure.
5. Meter sockets shall be 5 clip type.
6. The landing lug shall be suitable for multiple conductors.
7. Type V photoelectric control shall be used unless otherwise indicated on the plans.

STATE OF CALIFORNIA
DEPARTMENT OF TRANSPORTATION

ELECTRICAL SYSTEMS (SERVICE EQUIPMENT AND TYPICAL WIRING DIAGRAM TYPE III-C SERIES)

NO SCALE

RSP ES-2F DATED OCTOBER 5, 2007 SUPERCEDES STANDARD PLAN ES-2F DATED MAY 1, 2006 - PAGE 408 OF THE STANDARD PLANS BOOK DATED MAY 2006.

REVISED STANDARD PLAN RSP ES-2F

2006 REVISED STANDARD PLAN RSP ES-2F

8-17-07

DIST	COUNTY	ROUTE	POST MILES TOTAL PROJECT	SHEET NO.	TOTAL SHEETS
08	Riv	91	15.6/21.6	1408	2028

REGISTERED ELECTRICAL ENGINEER

June 6, 2008
PLANS APPROVAL DATE

REGISTERED PROFESSIONAL ENGINEER
Jeffery G. McRae
No. E14512
Exp. 6-30-10
ELECTRICAL
STATE OF CALIFORNIA

The State of California or its officers or agents shall not be responsible for the accuracy or completeness of electronic copies of this plan sheet.

To accompany plans dated 4-25-11

VISORS

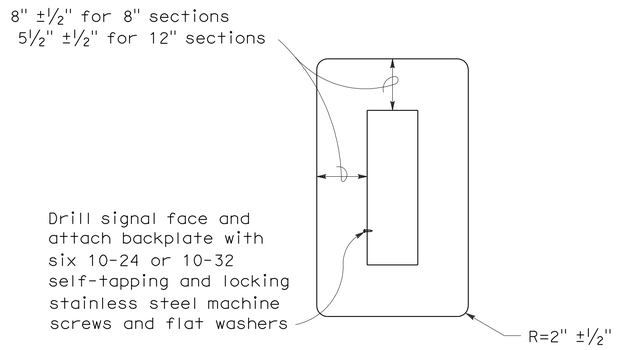

8" AND 12" SECTIONS

BACKPLATE

1/16" minimum thickness
3001-14 aluminum, or plastic when specified

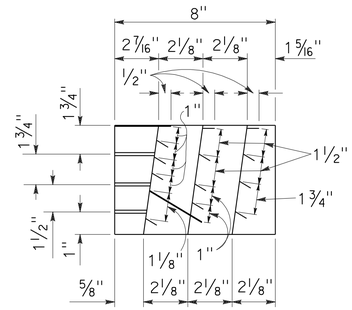

SECTION A-A

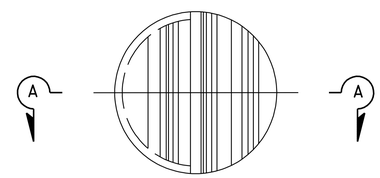

FRONT VIEW

DIRECTIONAL LOUVER

Directional louvers shall be oriented as directed by the Engineer and secured in place with one plated brass machine screw and nut.

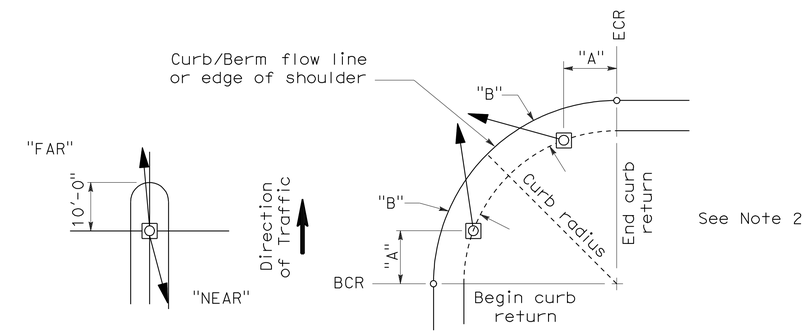

NOTES:

1. Typical signal pole placement unless dimensioned on plans.
2. For "A" and "B" dimensions, see Pole Schedule, or as directed by the Engineer.

SIGNAL STANDARD PLACEMENT DIMENSIONS AND EQUIPMENT LOCATIONS

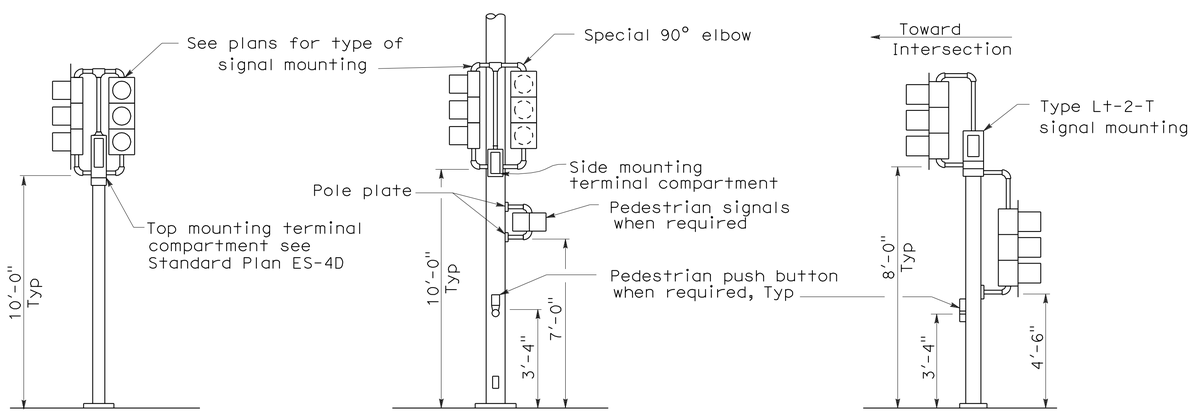

TOP MOUNTED SIGNALS (TV)

Type 1-A, 1-B, 1-C and 1-D standard as indicated on the plans

SIDE MOUNTED SIGNALS (SV AND SP)

Normally used on standards with luminaire or signal mast arm

LEFT TURN LANE SIGNAL

Type 1-A, 1-B, 1-C and 1-D standard as indicated on plans

TYPICAL SIGNAL INSTALLATIONS

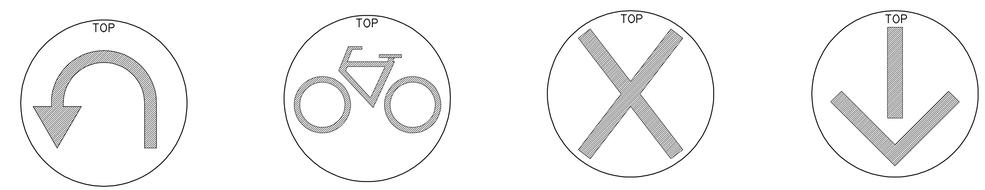

U-TURN SIGNAL FACE | BICYCLE SIGNAL FACE | LANE CONTROL SIGNAL FACE | LANE CONTROL SIGNAL FACE

STATE OF CALIFORNIA
DEPARTMENT OF TRANSPORTATION

ELECTRICAL SYSTEMS (SIGNAL HEADS AND MOUNTINGS)

NO SCALE

RSP ES-4C DATED JUNE 6, 2008 SUPERSEDES STANDARD PLAN ES-4C DATED MAY 1, 2006 - PAGE 420 OF THE STANDARD PLANS BOOK DATED MAY 2006.

REVISED STANDARD PLAN RSP ES-4C

2006 REVISED STANDARD PLAN RSP ES-4C

5-19-08

DIST	COUNTY	ROUTE	POST MILES TOTAL PROJECT	SHEET NO.	TOTAL SHEETS
08	Riv	91	15.6/21.6	1409	2028

REGISTERED ELECTRICAL ENGINEER

June 6, 2008
PLANS APPROVAL DATE

REGISTERED PROFESSIONAL ENGINEER Jeffery G. McRae No. E14512 Exp. 6-30-10 ELECTRICAL STATE OF CALIFORNIA

The State of California or its officers or agents shall not be responsible for the accuracy or completeness of electronic copies of this plan sheet.

To accompany plans dated 4-25-11

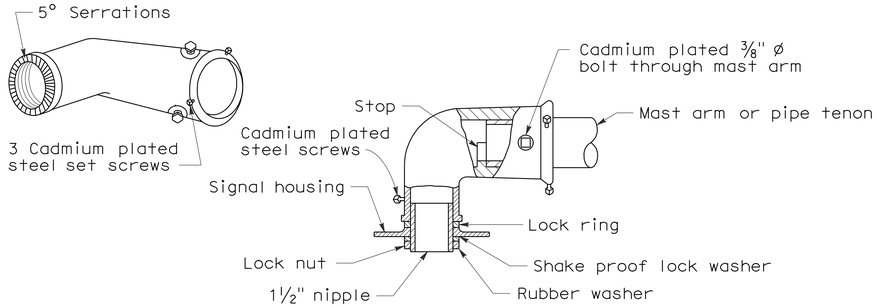

MAST ARM MOUNTING - TYPE "MAT"

For 2 NPS pipe, see Note 1.

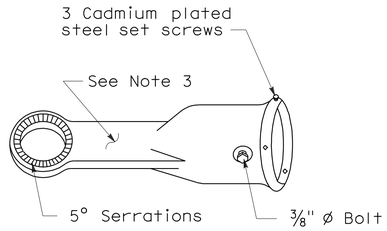

MAST ARM MOUNTING - TYPE "MAS"

For 2 NPS pipe. See Note 1.

SIGNAL SLIP FITTERS

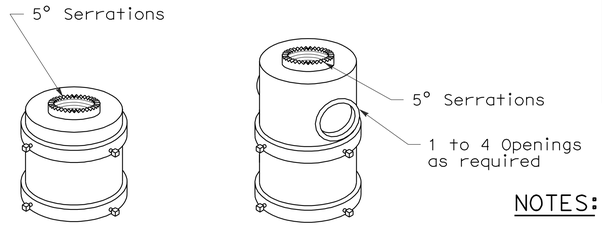

For one mounting For mulitiple mountings

TOP MOUNTINGS

For 4 NPS pipe, see Note 2.

NOTES:

1. After mast arm signal has been plumbed and secured, drill 7/16" hole through mast arm tenon in line with slip fitter hole. Place a cadmium plated 3/8" ø galvanized bolt with washer under bolt head through hole and secure with washer, nut, and locknut. Seal openings between mast arm mountings and mast arm with mastic.
2. (a) Threaded top mounted slip fitter openings shall be 1½ NPS.
   (b) Serrations in fittings shall match those on bottom of signal heads or in lock ring.
   (c) Top opening shall be offset when backplate is used.
3. Wireway shall have a cross section area of 0.95 square inch minimum. Minimum width of ½".

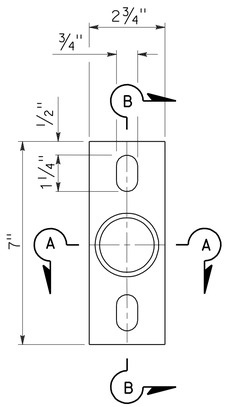

POLE PLATE

For side mountings

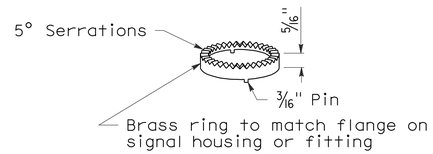

LOCK RING

Use where locking ring is not integral with signal housing or fitting.

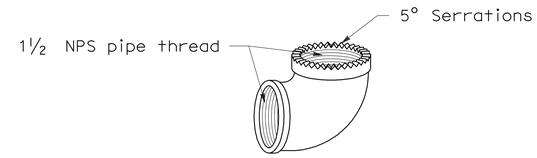

SPECIAL 90° ELBOW

One for each signal head, except those with special slip fitter mounting

MISCELLANEOUS MOUNTING HARDWARE

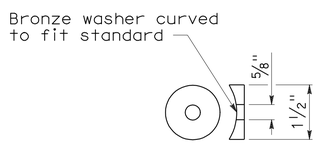

DETAIL "C"

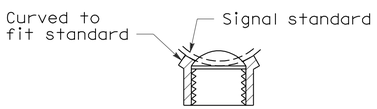

SECTION A-A

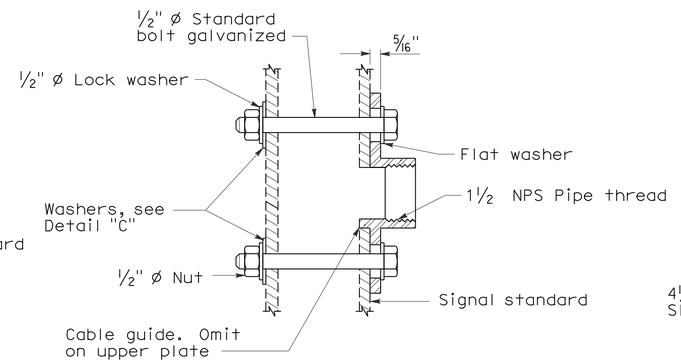

SECTION B-B

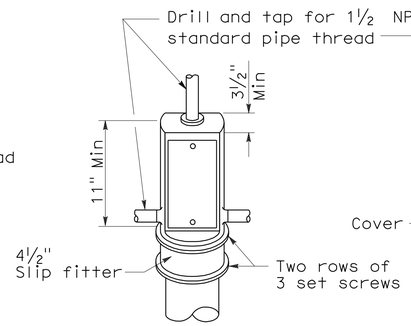

TOP MOUNTING

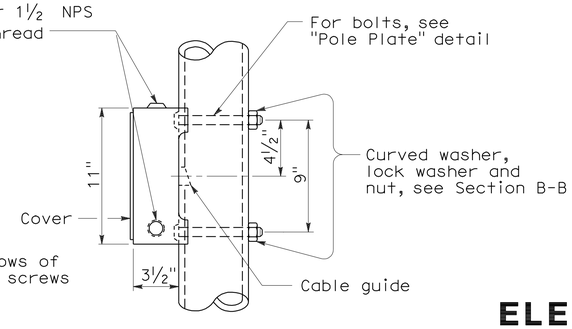

SIDE MOUNTING

TERMINAL COMPARTMENTS

STATE OF CALIFORNIA
DEPARTMENT OF TRANSPORTATION

ELECTRICAL SYSTEMS (SIGNAL HEADS AND MOUNTINGS)

NO SCALE

RSP ES-4D DATED June 6, 2008 SUPERSEDES STANDARD PLAN ES-4D
DATED MAY 1, 2006 - PAGE 421 OF THE STANDARD PLANS BOOK DATED MAY 2006.

REVISED STANDARD PLAN RSP ES-4D

2006 REVISED STANDARD PLAN RSP ES-4D

5-19-08

DIST	COUNTY	ROUTE	POST MILES TOTAL PROJECT	SHEET NO.	TOTAL SHEETS
08	Riv	91	15.6/21.6	1410	2028

REGISTERED ELECTRICAL ENGINEER

October 5, 2007
PLANS APPROVAL DATE

REGISTERED PROFESSIONAL ENGINEER Jeffery G. McRae No. E14512 Exp. 6-30-08 ELECTRICAL STATE OF CALIFORNIA

The State of California or its officers or agents shall not be responsible for the accuracy or completeness of electronic copies of this plan sheet.

To accompany plans dated 4-25-11

LOOP INSTALLATION PROCEDURE

1. Loops shall be centered in lanes.
2. Saw slots in pavement for loop conductors as shown in details.
3. Distance between side of loop and a lead-in saw cut from adjacent detectors shall be 2'-0" minimum. Distance between lead-in saw cuts shall be 6" minimum.
4. Bottom of saw slot shall be smooth with no sharp edges.
5. Slots shall be washed until clean, blown out and thoroughly dried before installing loop conductors.
6. Adjacent loops on the same sensor unit channel shall be wound in opposite directions.
7. Identify and tag loop circuit pairs in the pull box with loop number, start (S) and finish (F) of conductor. Identify and tag lead-in-cable with sensor number and phase.
8. Install loop conductor in slot using a 3/16" to 1/4" thick wood paddle. Hold loop conductors with wood paddles (at the bottom of the sawed slot) during sealant placement.
9. No more than 2 twisted pairs shall be installed in one sawed slot.
10. Allow additional 5'-0" of slack length of conductor for the lead-in run to pull box.
11. The additional length of each conductor for each loop shall be twisted together into a pair (6 turns per 3'-4" minimum) before being placed in the slot and conduit leading to pull box.
12. Test each loop circuit for continuity, circuit resistance and insulation resistance at the pull box before filling slots.
13. Fill slots as shown in details.
14. Splice loop conductors to lead-in-cable. Splices shall be soldered.
15. End of lead-in-cable and Type 2 loop conductor shall be waterproofed prior to installing in conduit to prevent moisture from entering the cable.
16. Lead-in-cable shall not be spliced between the pull box and the controller cabinet terminals.
17. Test each loop circuit for continuity, circuit resistance and insulation resistance at the controller cabinet location.
18. Where loop conductors are not to be spliced to a lead-in-cable, the ends of the conductors shall be taped and waterproofed with electrical insulating coating.

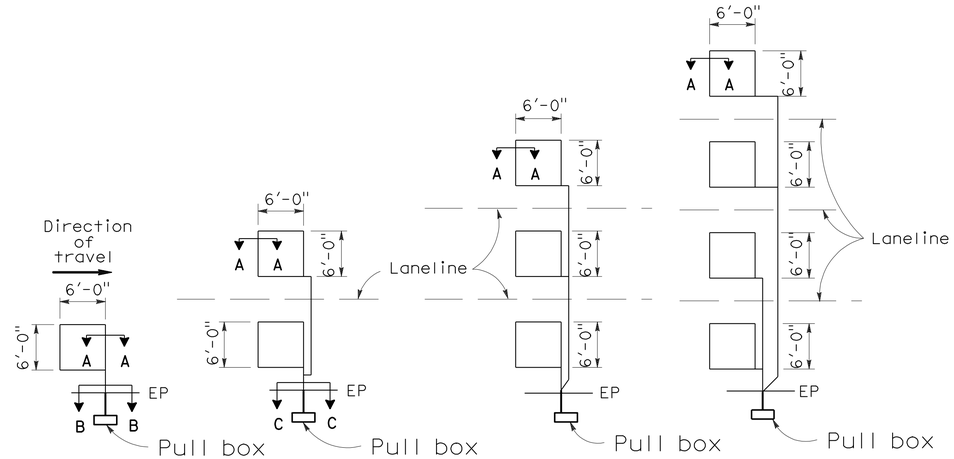

TYPE 1A INSTALLATION | TYPE 2A INSTALLATION | TYPE 3A INSTALLATION | TYPE 4A INSTALLATION

SAWCUT DETAILS

(Type A loop detector configurations illustrated)

1. 1A thru 4A = 1 Type A loop configuration in each lane.
2. 1B thru 4B = 1 Type B loop configuration in each lane.
3. 1C = 1 Type C loop configuration entering lanes as required.
4. 1D thru 4D = 1 Type D loop configuration in each lane.
5. 1E thru 4E = 1 Type E loop configuration in each lane.
6. 1Q thru 4Q = 1 Type Q loop configuration in each lane. (Use Type A, B, C, D, E or Q loop detector configurations only when specified or shown on plans)

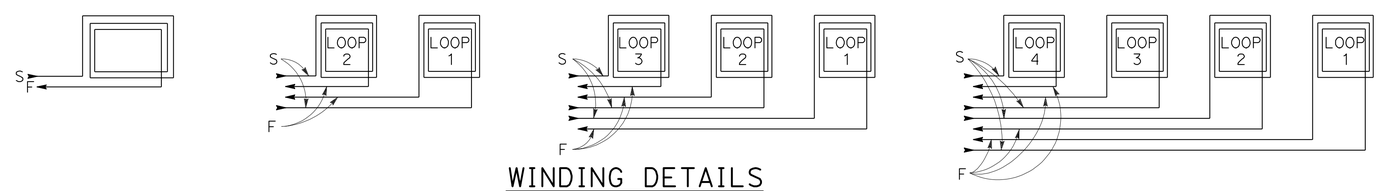

WINDING DETAILS

See Notes 6 and 7

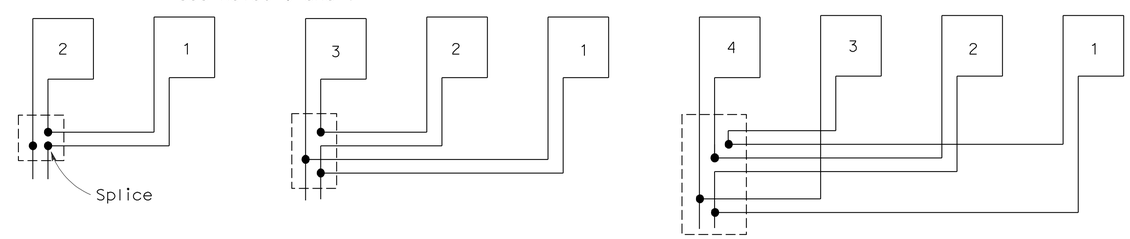

TYPICAL LOOP CONNECTIONS

(Dashed lines represent the pull box)

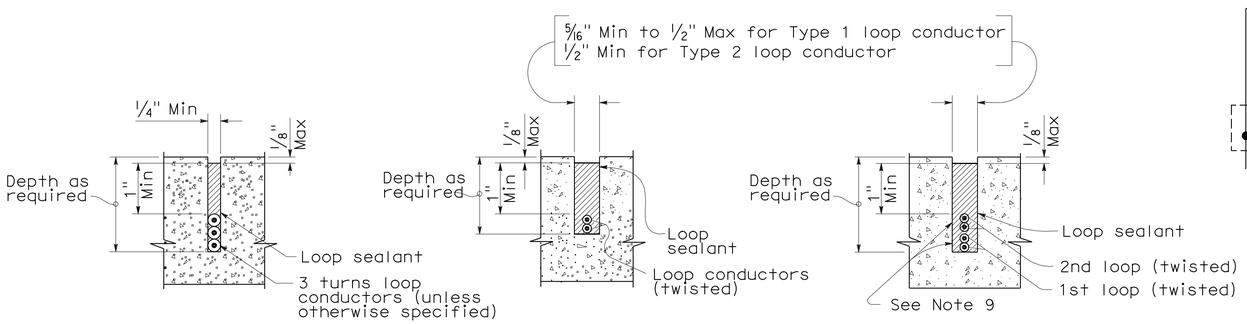

SECTION A-A | SECTION B-B | SECTION C-C

SLOT DETAILS - TYPE 1 AND TYPE 2 LOOP CONDUCTOR

STATE OF CALIFORNIA
DEPARTMENT OF TRANSPORTATION

ELECTRICAL SYSTEMS (DETECTORS)

NO SCALE

RSP ES-5A DATED OCTOBER 5, 2007 SUPERCEDES STANDARD PLAN ES-5A DATED MAY 1, 2006 - PAGE 423 OF THE STANDARD PLANS BOOK DATED MAY 2006.

REVISED STANDARD PLAN RSP ES-5A

2006 REVISED STANDARD PLAN RSP ES-5A

DIST	COUNTY	ROUTE	POST MILES TOTAL PROJECT	SHEET NO.	TOTAL SHEETS
08	Riv	91	15.6/21.6	1411	2028

REGISTERED CIVIL ENGINEER

October 5, 2007
PLANS APPROVAL DATE

REGISTERED PROFESSIONAL ENGINEER
Stanley P. Johnson
No. C57793
Exp. 3-31-08
CIVIL
STATE OF CALIFORNIA

The State of California or its officers or agents shall not be responsible for the accuracy or completeness of electronic copies of this plan sheet.

To accompany plans dated 4-25-11

2006 REVISED STANDARD PLAN RSP ES-6A

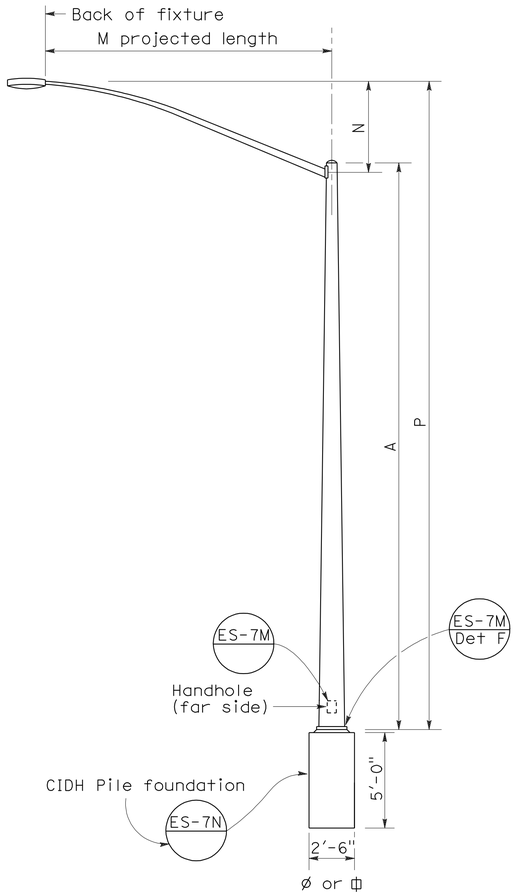

ELEVATION
TYPE 15 AND TYPE 21

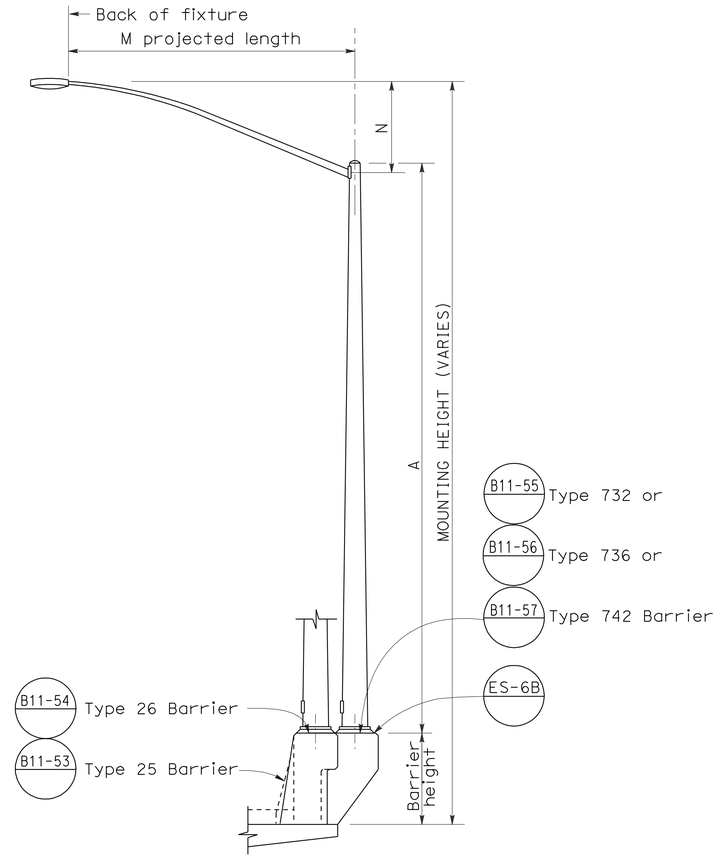

ELEVATION
TYPE 15 AND TYPE 21 BARRIER RAIL MOUNTED

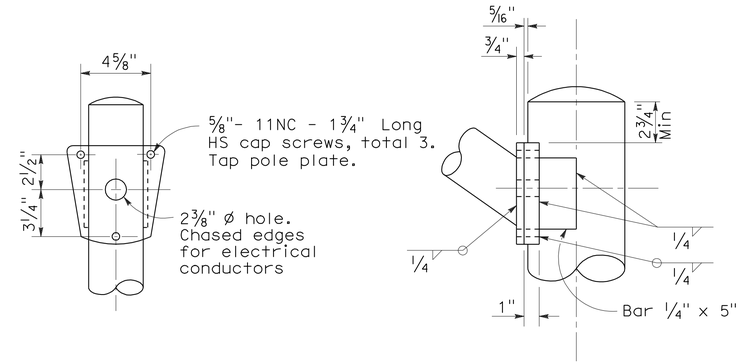

DETAIL R
LUMINAIRE ARM CONNECTION

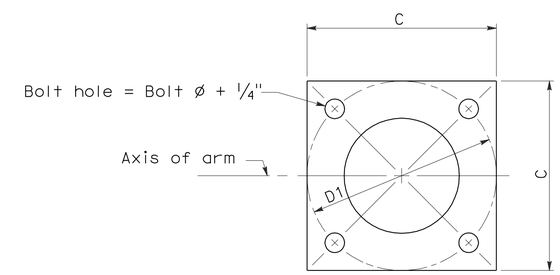

BASE PLATE

POLE TYPE	POLE DATA				BASE PLATE DATA				LUMINAIRE ARM
	A Height	Min OD Base	Min OD Top	Wall Thickness	C	D1 Bolt Circle	Thick-ness	Anchor Bolts Size	
15	30'	8"	3 7/8"	0.1196"	1'-0"	1'-0"	1"	1" ø x 3'-0" x 4"*	6' - 15' [12']
21	35'	8 5/8"	3 7/8"	0.1196"	1'-0"	1'-0"	1"	1 1/4"ø x 3'-0" x 4"*	6' - 15' [12']

* For barrier rail bolts, see Standard Plan ES-6B.

LUMINAIRE ARM DATA					
M Projected Length	N Rise	Min OD At Pole	Nominal Thickness	P Type 15	P Type 21
6'-0"	2'-0"±	3 1/4"	0.1196"	31'-6"±	36'-6"±
8'-0"	2'-6"±	3 1/2"	0.1196"	32'-0"±	37'-0"±
10'-0"	3'-3"±	3 7/8"	0.1196"	32'-9"±	37'-9"±
12'-0"	4'-3"±	3 7/8"	0.1196"	33'-9"±	38'-9"±
15'-0"	4'-9"±	4 1/4"	0.1196"	34'-3"±	39'-3"±

NOTES:

1. ☐ Indicates arm length to be used unless otherwise noted on the plans.
2. For Type 15-SB, use Type 15 standard with Type 30 slip base plate details, see Standard Plan ES-6F.
3. For additional notes, see Standard Plan ES-7M and ES-7N.

STATE OF CALIFORNIA
DEPARTMENT OF TRANSPORTATION

ELECTRICAL SYSTEMS (LIGHTING STANDARD TYPES 15 AND 21)

NO SCALE

RSP ES-6A DATED OCTOBER 5, 2007 SUPERCEDES STANDARD PLAN ES-6A DATED MAY 1, 2006 - PAGE 427 OF THE STANDARD PLANS BOOK DATED MAY 2006.

REVISED STANDARD PLAN RSP ES-6A

DIST	COUNTY	ROUTE	POST MILES TOTAL PROJECT	SHEET NO.	TOTAL SHEETS
08	Riv	91	15.6/21.6	1412	2028

REGISTERED CIVIL ENGINEER

January 18, 2008
PLANS APPROVAL DATE

REGISTERED PROFESSIONAL ENGINEER Stanley P. Johnson No. C57793 Exp. 03-31-08 CIVIL STATE OF CALIFORNIA

The State of California or its officers or agents shall not be responsible for the accuracy or completeness of electronic copies of this plan sheet.

To accompany plans dated 4-25-11

LUMINAIRE ARM DATA

PROJECTED LENGTH	THICKNESS	MINIMUM OD @ POLE	MOUNTING HEIGHT
* 6'-0"	0.1196"	3¼"	36'-9"±
8'-0"		3½"	37'-3"±
10'-0"		3¾"	38'-0"±
12'-0"		3¾"	39'-0"±
15'-0"		4¼"	39'-6"±
** 20'-0"	0.1793"	5"	37'-0"±

* Type 30 - arm length 6'-0" - 15'-0" maximum
** Type 31 - arm lengths 20'-0"

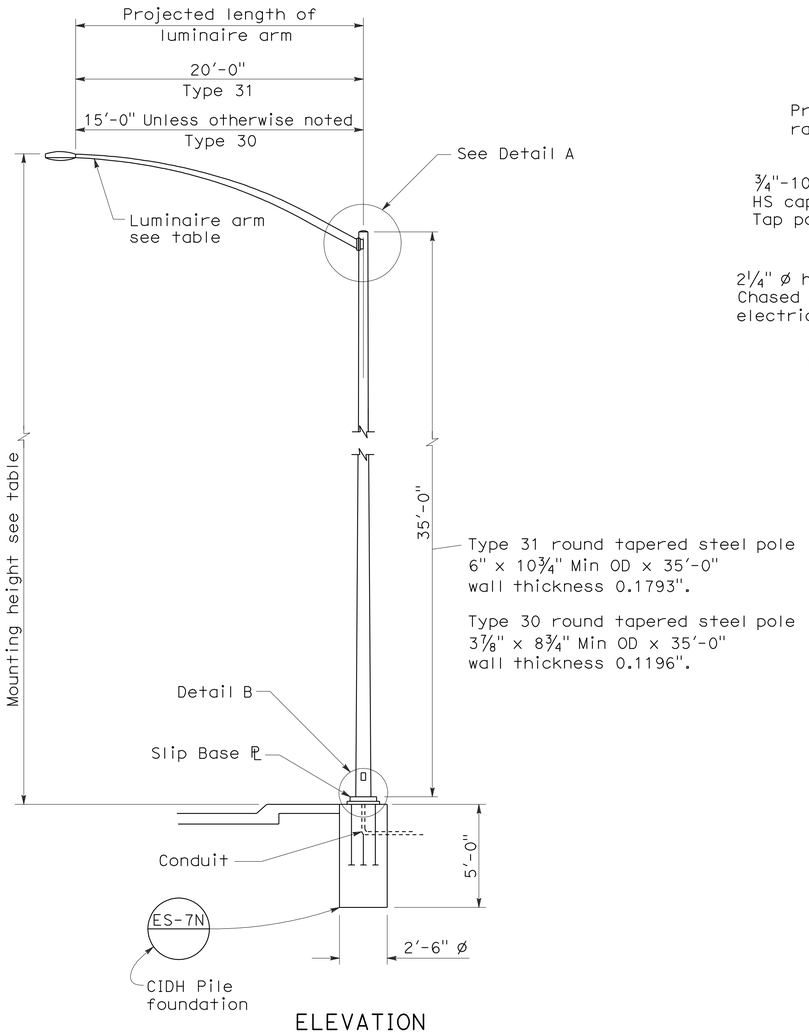

ELEVATION

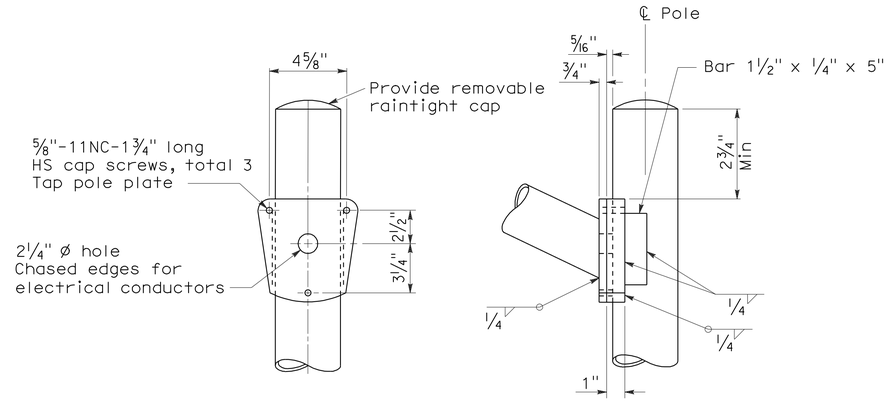

DETAIL A - TYPE 30

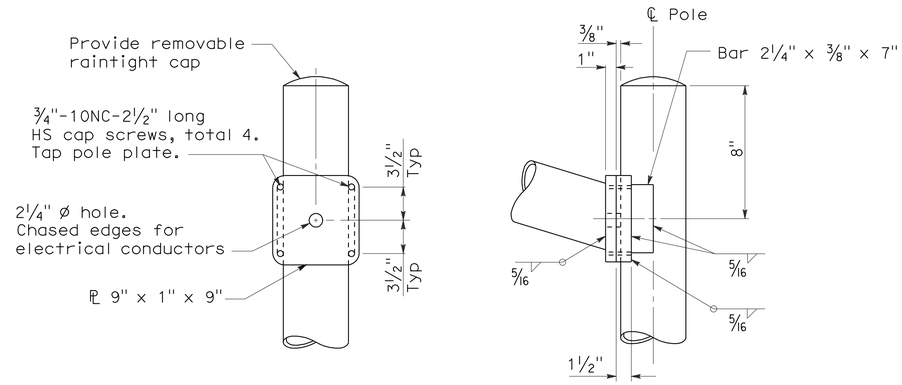

DETAIL A - TYPE 31

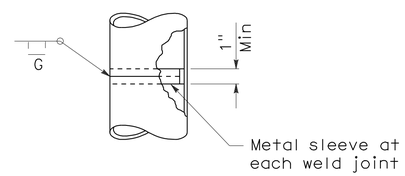

POLE SPLICE

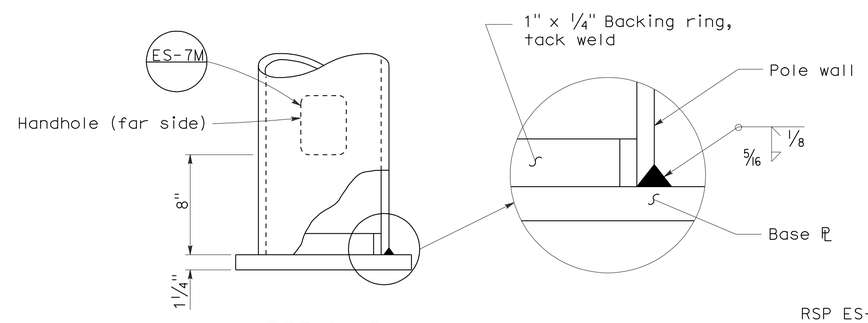

DETAIL B

NOTES:

1. Sheet steel shall have a minimum yield of 48,000 psi.
2. For slip base details see Standard Plan ES-6F.
3. For Type 30 fixed base use Type 15 base plate, and foundation shown on Revised Standard Plan RSP ES-6A. Use 1¼" Dia x 3'-6" x 4" anchor bolts.
4. For Type 31 fixed base use Type 32 base plate, anchor bolts and foundation on Standard Plan ES-6G.
5. Handhole shall be located on downstream side of traffic unless noted otherwise on plans.
6. For additional general notes refer to Standard Plan ES-7M.

STATE OF CALIFORNIA
DEPARTMENT OF TRANSPORTATION

ELECTRICAL SYSTEMS (LIGHTING STANDARD TYPES 30 AND 31)

NO SCALE

RSP ES-6E DATED JANUARY 18, 2008 SUPERCEDES STANDARD PLAN ES-6E DATED MAY 1, 2006 - PAGE 430 OF THE STANDARD PLANS BOOK DATED MAY 2006.

REVISED STANDARD PLAN RSP ES-6E

2006 REVISED STANDARD PLAN RSP ES-6E

11-19-07

DIST	COUNTY	ROUTE	POST MILES TOTAL PROJECT	SHEET NO.	TOTAL SHEETS
08	Riv	91	15.6/21.6	1413	2028

REGISTERED CIVIL ENGINEER

October 5, 2007
PLANS APPROVAL DATE

REGISTERED PROFESSIONAL ENGINEER
Stanley P. Johnson
No. C57793
Exp. 3-31-08
CIVIL
STATE OF CALIFORNIA

The State of California or its officers or agents shall not be responsible for the accuracy or completeness of electronic copies of this plan sheet.

To accompany plans dated 4-25-11

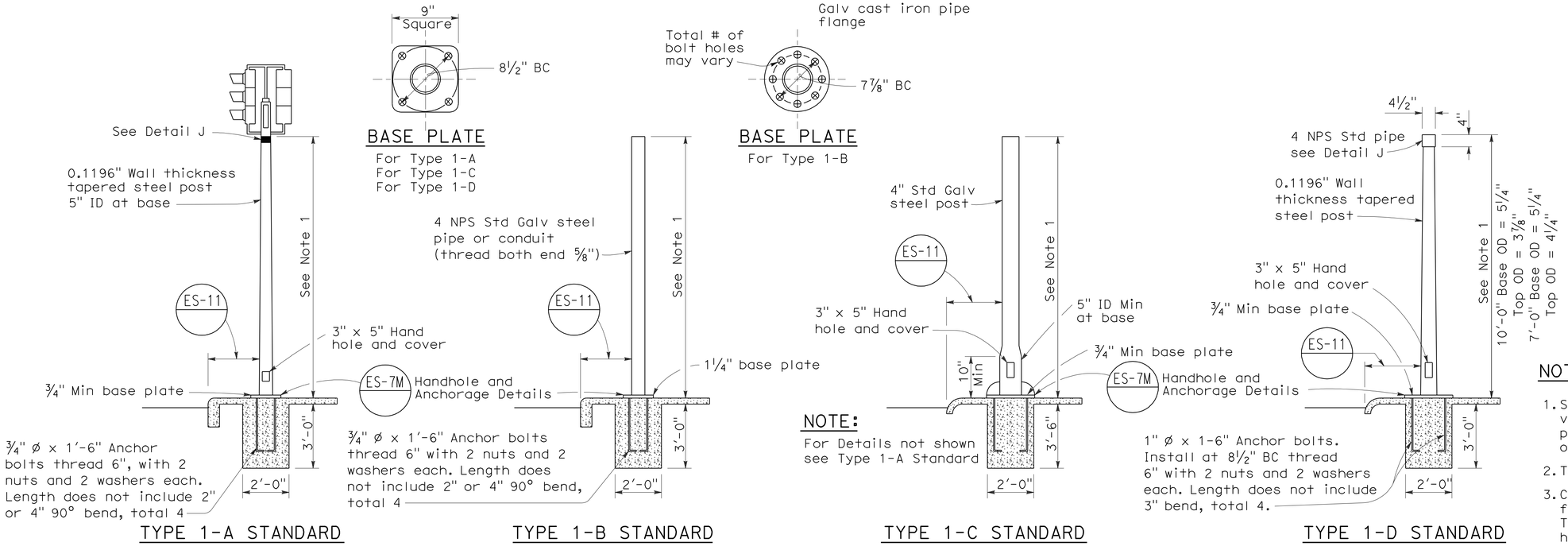

TYPE 1 SIGNAL STANDARDS

NOTES:

1. Standards shall be 10'-0" ± 2" for vehicle signals and 7'-0" ± 2" for pedestrian signals unless otherwise noted on plans.
2. Top of standards shall be 4½" OD.
3. Conduits shall extend 2" maximum above finished surface of foundation and for Types 1-A, 1-C and 1-D shall be sloped toward handhole.
4. Anchor bolts shall be bonded to conduit or grounding conductor.
5. Conduit between standard and adjacent pull box shall be 2" minimum.
6. Paint numbers on roadway side facing traffic when electrolier or post is left of direction of traffic.

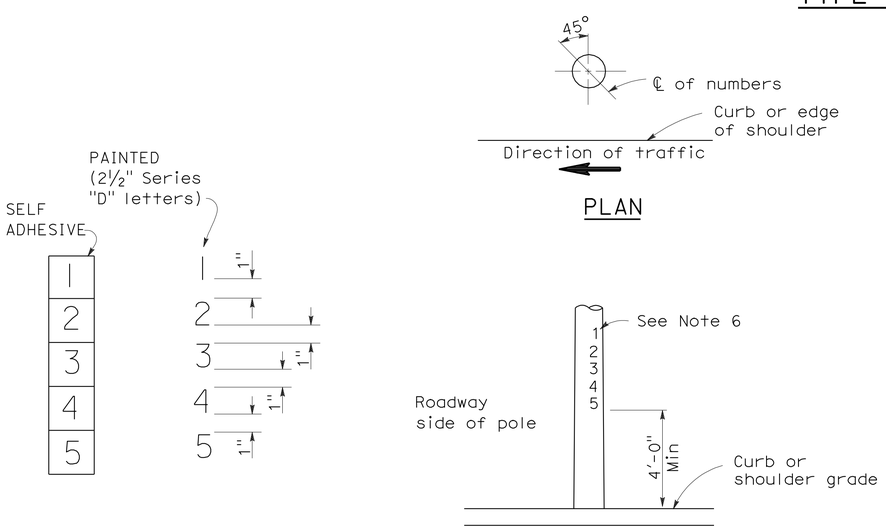

LOCATION OF EQUIPMENT NUMBERS ON STANDARDS AND POSTS

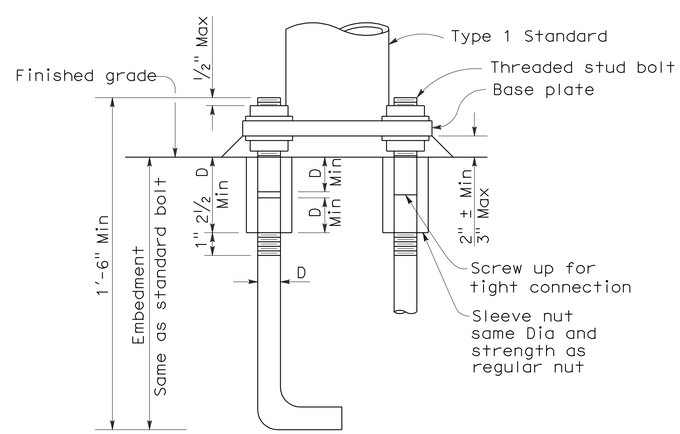

ANCHOR BOLTS WITH SLEEVE NUTS

Sleeve nuts to be used only when shown or specified on Project Plans

D = Diameter of anchor bolt

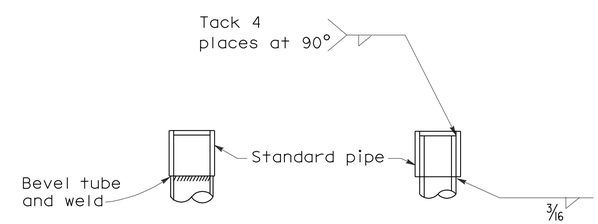

DETAIL J

Tube may be inserted into pipe or butted as required

STATE OF CALIFORNIA
DEPARTMENT OF TRANSPORTATION

ELECTRICAL SYSTEMS (SIGNAL AND LIGHTING STANDARD TYPE 1 STANDARD AND EQUIPMENT NUMBERING)

NO SCALE

RSP ES-7B DATED OCTOBER 5, 2007 SUPERCEDES STANDARD PLAN ES-7B DATED MAY 1, 2006 - PAGE 438 OF THE STANDARD PLANS BOOK DATED MAY 2006.

REVISED STANDARD PLAN RSP ES-7B

2006 REVISED STANDARD PLAN RSP ES-7B

7-10-07

DIST	COUNTY	ROUTE	POST MILES TOTAL PROJECT	SHEET NO.	TOTAL SHEETS
08	Riv	91	15.6/21.6	1414	2028

REGISTERED CIVIL ENGINEER

June 15, 2007
PLANS APPROVAL DATE

REGISTERED PROFESSIONAL ENGINEER
Stanley P. Johnson
No. C57793
Exp. 3-31-08
CIVIL
STATE OF CALIFORNIA

The State of California or its officers or agents shall not be responsible for the accuracy or completeness of electronic copies of this plan sheet.

To accompany plans dated 4-25-11

2006 REVISED STANDARD PLAN RSP ES-7C

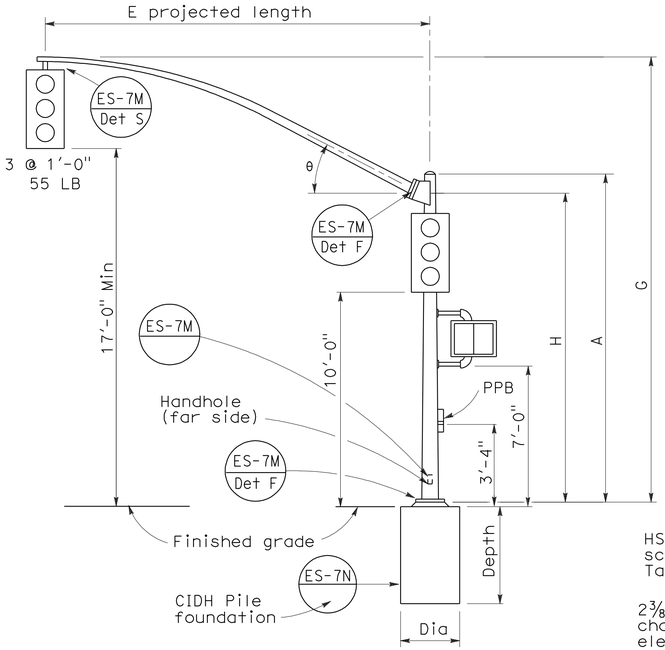

ELEVATION

TYPE 16-1-100, 18-1-100

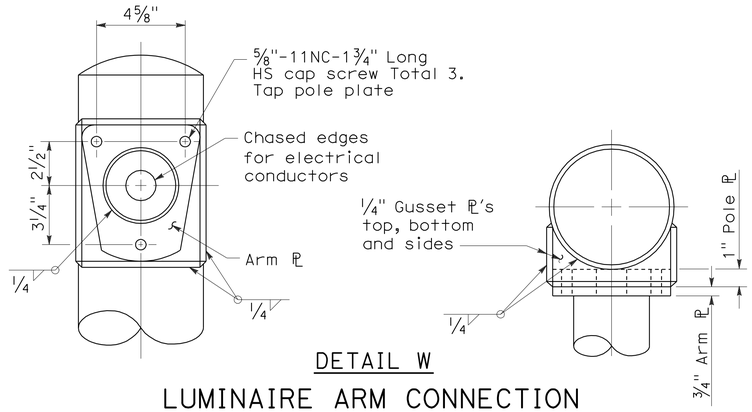

DETAIL W

LUMINAIRE ARM CONNECTION

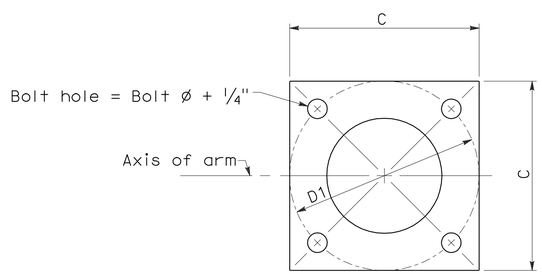

BASE PLATE

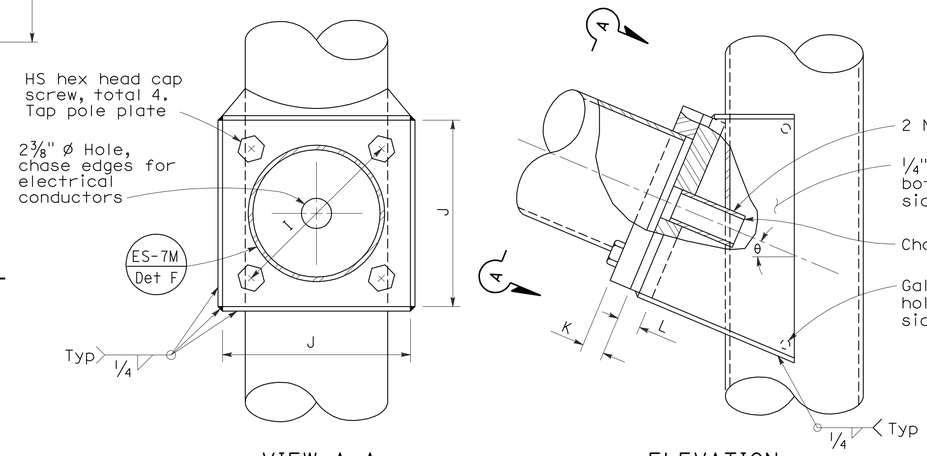

VIEW A-A

ELEVATION

SIGNAL ARM CONNECTION DETAILS

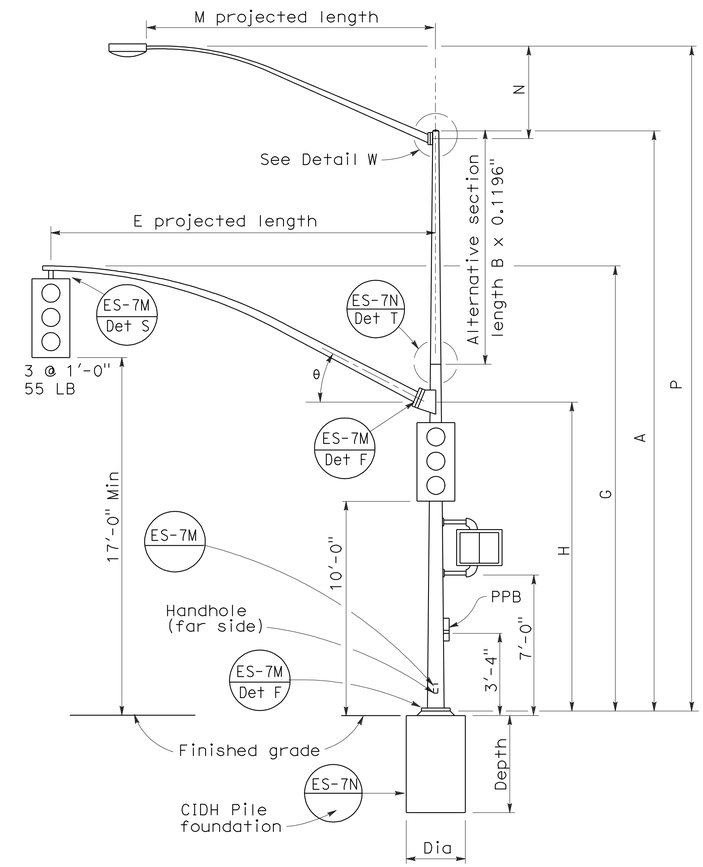

ELEVATION

TYPE 19-1-100, 19A-1-100

SIGNAL ARM DATA										
E Projected Length	G Mounting Height	H	Min OD At Pole	Thickness	I Bolt Circle	HS Cap Screws	J Plate size	K Arm ℙ Thickness	L Pole ℙ Thickness	θ
15'-0"	21'-8"±	17'-6"	7"	0.1196"	12"	1¼"-7NC-3"	1'-0"	1¼"	1½"	23°
20'-0"	21'-8"±		7⅛"							
25'-0"	22'-8"±	16'-0"	7 5/16"							
30'-0"	23'-0"±		8"							

LUMINAIRE ARM DATA					
M Projected Length	N Rise	Min OD at Pole	Thickness	P Mounting Height	
				30'-0" Pole	35'-0" Pole
6'-0"	2'-0"±	3¼"	0.1196"	31'-6"±	36'-6"±
8'-0"	2'-6"±	3½"		32'-0"±	37'-0"±
10'-0"	3'-3"±	3⅞"		32'-9"±	37'-9"±
12'-0"	4'-3"±			33'-9"±	38'-9"±
15'-0"	4'-9"±	4¼"		34'-3"±	39'-3"±

Pole Type	Load Case	Wind Velocity mph	POLE DATA							BASE PLATE DATA				Luminaire Arm	Signal Arm	CIDH PILE FOUNDATION		
			A Height	Min OD		Thickness	Alternative Section			C	D1 Bolt Circle	Thickness	Anchor Bolts			Diameter	Depth	Reinforced
				Base	Top		B Length	Bottom	Top				Size					
16-1-100	1	100	18'-6"	10¾"	8¼"	0.1793"	None			1'-6"	1'-5½"	1¼"	1½" ø x 42" x 6"	None	15'-0", 20'-0"	2'-6"	7'-2"	Yes
18-1-100			17'-0"		8 7/16"		None							None				
19-1-100			30'-0"		6⅝"		10'-0"	8"	6⅝"					6'-15' [12'-0"]	25'-0", 30'-0"			
19A-1-100			35'-0"		5 15/16"		15'-0"		5 15/16"					6'-15' [15'-0"]				

☐ Indicates arm length to be used unless otherwise noted on plans.

STATE OF CALIFORNIA
DEPARTMENT OF TRANSPORTATION

ELECTRICAL SYSTEMS (SIGNAL AND LIGHTING STANDARD CASE 1 ARM LOADING WIND VELOCITY = 100 MPH ARM LENGTHS 15' TO 30')

NO SCALE

RSP ES-7C DATED JUNE 15, 2007 SUPERSEDES STANDARD PLAN ES-7C DATED MAY 1, 2006 - PAGE 439 OF THE STANDARD PLANS BOOK DATED MAY 2006.

REVISED STANDARD PLAN RSP ES-7C

1-26-07

DIST	COUNTY	ROUTE	POST MILES TOTAL PROJECT	SHEET NO.	TOTAL SHEETS
08	Riv	91	15.6/21.6	1415	2028

REGISTERED CIVIL ENGINEER

October 5, 2007
PLANS APPROVAL DATE

REGISTERED PROFESSIONAL ENGINEER Stanley P. Johnson No. C57793 Exp. 3-31-08 CIVIL STATE OF CALIFORNIA

The State of California or its officers or agents shall not be responsible for the accuracy or completeness of electronic copies of this plan sheet.

To accompany plans dated 4-25-11

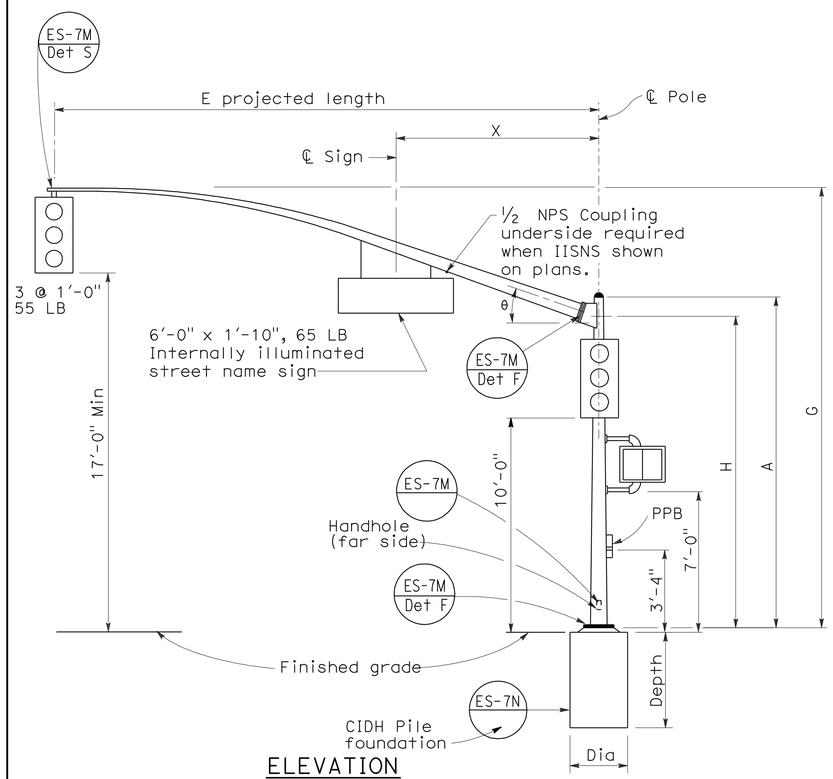

ELEVATION

TYPE 16-2-100, 18-2-100

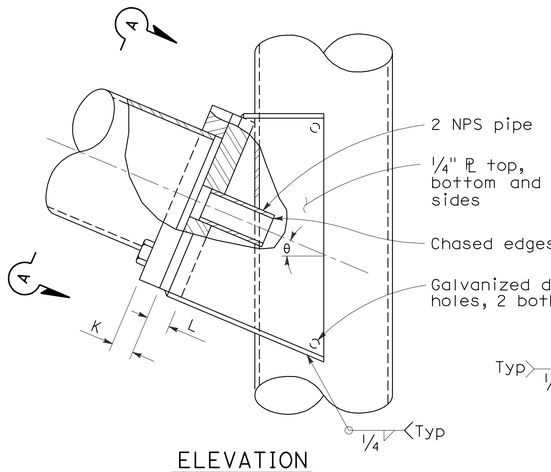

ELEVATION

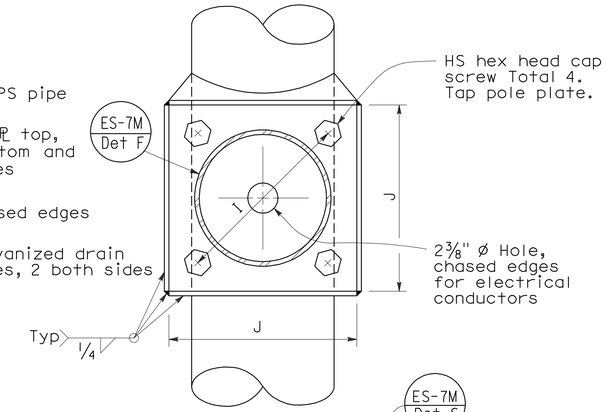

VIEW A-A

SIGNAL ARM CONNECTION DETAILS

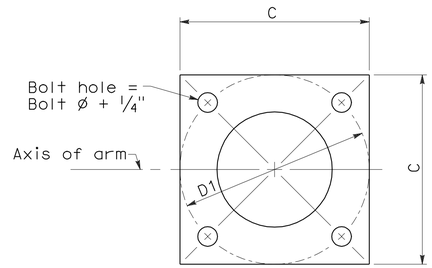

BASE PLATE

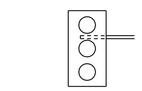

Required for
Type 17-2-100
Type 17A-2-100

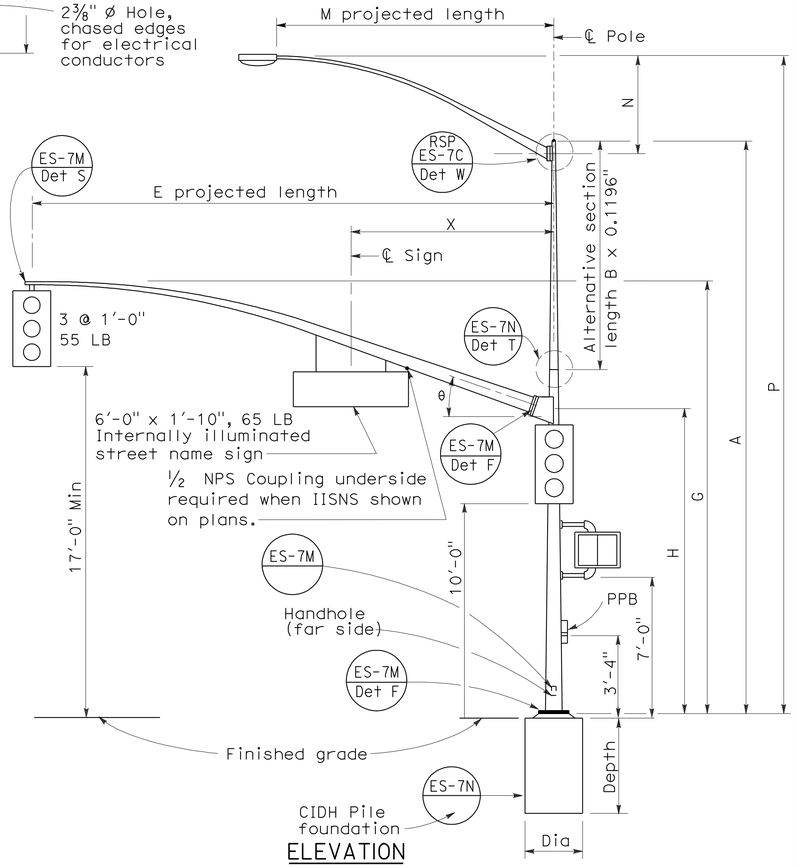

ELEVATION

TYPE 17-2-100, 17A-2-100, 19-2-100, 19A-2-100

SIGNAL ARM DATA											
E Projected Length	G Mounting Height	H	Min OD At Pole	Thickness	I Bolt Circle	HS Cap Screws	J Plate Size	K Arm ℙ Thickness	L Pole ℙ Thickness	θ	X Max
15'-0"	21'-8"±	17'-6"	6⅝"	0.1793"	12"	1¼"-7NC-3"	1'-0"	1¼"	1½"	23°	10'-6"
20'-0"	21'-8"±		6⅝"								
25'-0"	22'-8"±	16'-0"	7 5/16"								
30'-0"	23'-0"±		8"								

LUMINAIRE ARM DATA					
M Projected Length	N Rise	Min OD at Pole	Thickness	P Mounting Height 30'-0" Pole	P Mounting Height 35'-0" Pole
6'-0"	2'-0"±	3¼"	0.1196"	31'-6"±	36'-6"±
8'-0"	2'-6"±	3½"		32'-0"±	37'-0"±
10'-0"	3'-3"±	3⅞"		32'-9"±	37'-9"±
12'-0"	4'-3"±			33'-9"±	38'-9"±
15'-0"	4'-9"±	4¼"		34'-3"±	39'-3"±

Pole Type	Load Case	Wind Velocity mph	POLE DATA: A Height	Min OD Base	Min OD Top	Thickness	Alternative Section B Length	Alternative Section Bottom	Alternative Section Top	BASE PLATE DATA: C	D1 Bolt Circle	Thickness	Anchor Bolts Size	Luminaire Arm	Signal Arm	CIDH PILE FOUNDATION: Diameter	Depth	Reinforced
16-2-100	2	100	18'-6"	10¾"	8¼"	0.1793"	None			1'-6"	1'-5½"	1½"	2"Ø x 42" x 6"	None	15'-0", 20'-0"	2'-6"	7'-2"	Yes
17-2-100			30'-0"		6⅝"		10'-0"	8"	6⅝"					6'-15' [12'-0"]				
17A-2-100			35'-0"		5 15/16"		15'-0"		5 15/16"					6'-15' [15'-0"]				
18-2-100			17'-0"		8 7/16"		None							None	25'-0", 30'-0"			
19-2-100			30'-0"		6⅝"	0.2391"	10'-0"	8"	6⅝"					6'-15' [12'-0"]				
19A-2-100			35'-0"		5 15/16"		15'-0"		5 5/16"					6'-15' [15'-0"]				

☐ Indicates arm length to be used unless otherwise noted on plans.

STATE OF CALIFORNIA
DEPARTMENT OF TRANSPORTATION

ELECTRICAL SYSTEMS (SIGNAL AND LIGHTING STANDARD CASE 2 ARM LOADING WIND VELOCITY=100 MPH ARM LENGTHS 15' TO 30')

NO SCALE

RSP ES-7D DATED OCTOBER 5, 2007 SUPERCEDES STANDARD PLAN ES-7D DATED MAY 1, 2006 - PAGE 440 OF THE STANDARD PLANS BOOK DATED MAY 2006.

REVISED STANDARD PLAN RSP ES-7D

2006 REVISED STANDARD PLAN RSP ES-7D

DIST	COUNTY	ROUTE	POST MILES TOTAL PROJECT	SHEET NO.	TOTAL SHEETS
08	Riv	91	15.6/21.6	1416	2028

REGISTERED CIVIL ENGINEER

June 30, 2006
PLANS APPROVAL DATE

REGISTERED PROFESSIONAL ENGINEER — Jeffrey B. Woody — No. C41260 — Exp. 3-31-07 — CIVIL — STATE OF CALIFORNIA

The State of California or its officers or agents shall not be responsible for the accuracy or completeness of electronic copies of this plan sheet.

To accompany plans dated 4-25-11

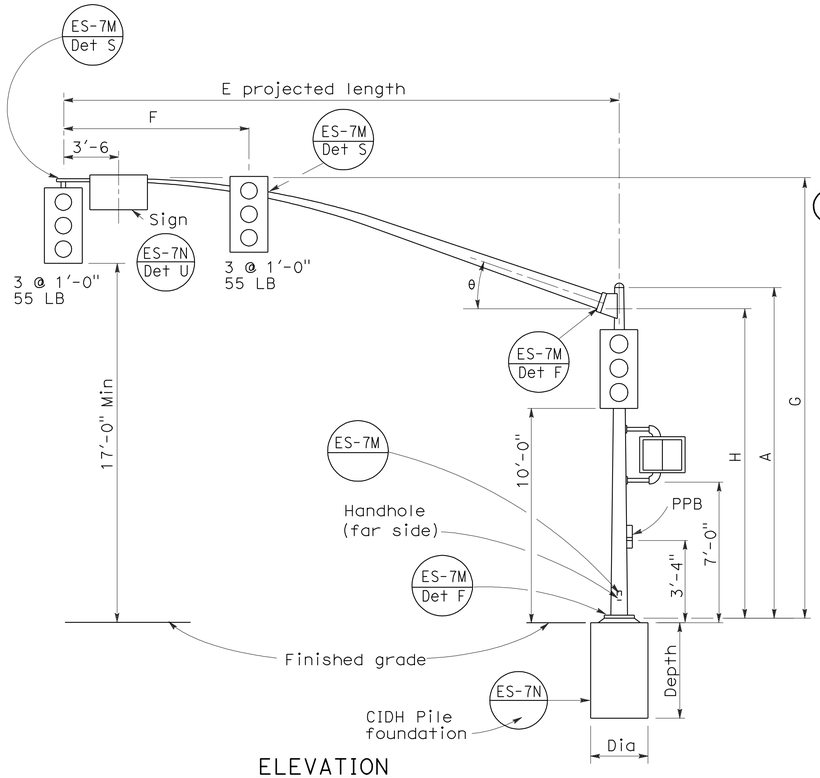

ELEVATION

TYPE 16-3-100, 18-3-100, 23-3-100, 27-3-100

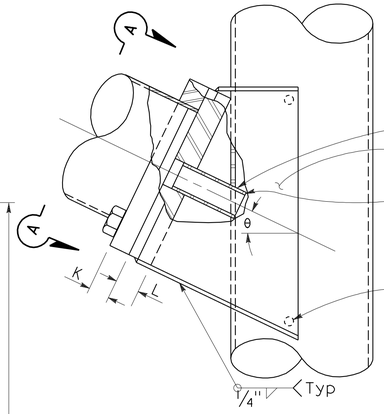

ELEVATION

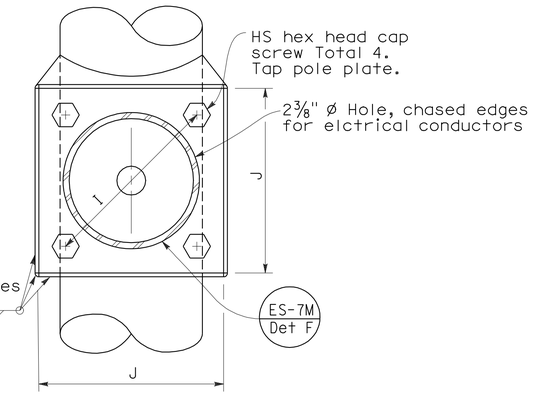

VIEW A-A

SIGNAL ARM CONNECTION DETAILS

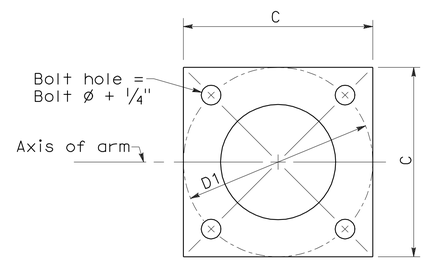

BASE PLATE

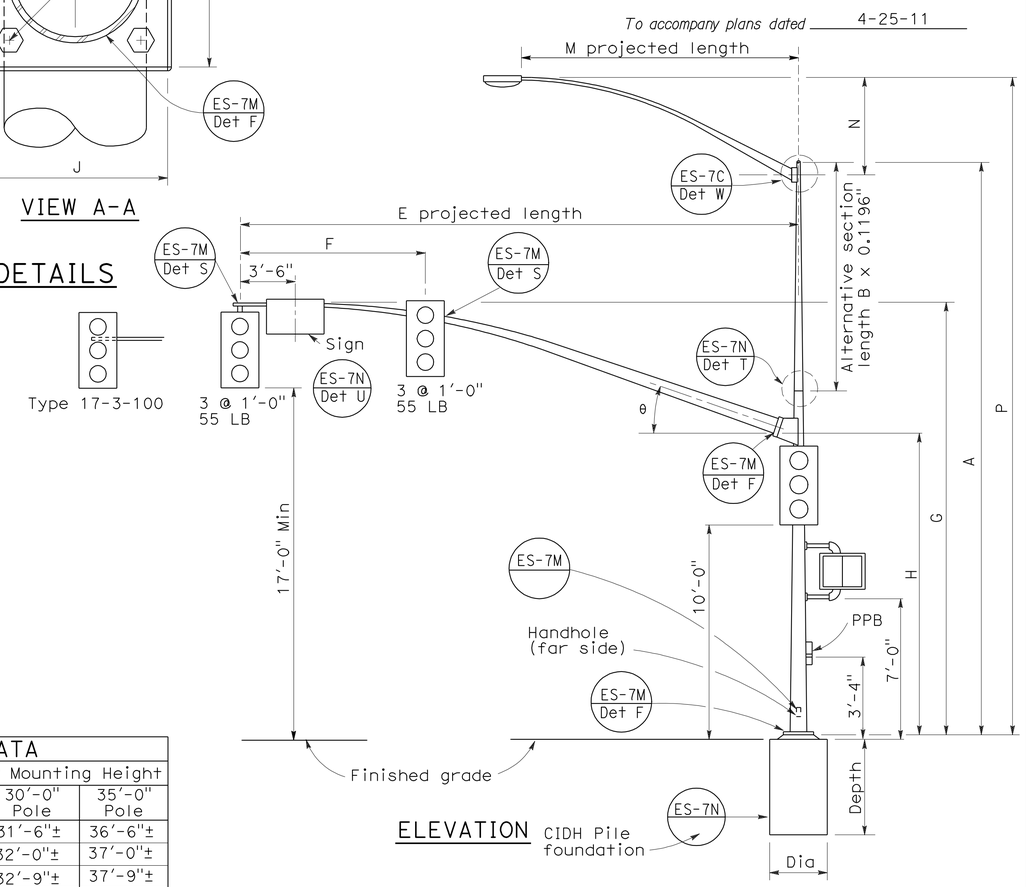

ELEVATION

TYPE 17-3-100, 24A-3-100, 19-3-100, 26-3-100, 19A-3-100, 26A-3-100, 24-3-100

SIGNAL ARM DATA

E Projected Length	F Min Spacing	G Mounting Height	H	Min OD At Pole	Thickness	I Bolt Circle	HS Cap Screws	J Plate Size	K Arm PL Thickness	L Pole PL Thickness	θ
15'-0"	8'-0"	21'-8"±	17'-6"	6 5/8"	0.1793"	12"	1 1/4"-7NC-3"	1'-0"	1 1/4"	1 1/2"	23°
20'-0"		21'-8"±		7"							
25'-0"	12'-0"	22'-8"±	16'-0"	7 5/16"	0.2391"						
30'-0"				8"							
35'-0"	14'-0"	23'-0"±		8 3/4"		13"		1'-1"	1 1/2"	1 3/4"	21°
40'-0"	15'-0"			9 3/8"							15°
45'-0"		23'-8"±		10 1/16"							

LUMINAIRE ARM DATA

M Projected Length	N Rise	Min OD at Pole	Thickness	P Mounting Height 30'-0" Pole	P Mounting Height 35'-0" Pole
6'-0"	2'-0"±	3 1/4"	0.1196"	31'-6"±	36'-6"±
8'-0"	2'-6"±	3 1/2"		32'-0"±	37'-0"±
10'-0"	3'-3"±	3 7/8"		32'-9"±	37'-9"±
12'-0"	4'-3"±			33'-9"±	38'-9"±
15'-0"	4'-9"±	4 1/4"		34'-3"±	39'-3"±

POLE DATA / BASE PLATE DATA / CIDH PILE FOUNDATION

Pole Type	Load Case	Wind Velocity mph	A Height	Min OD Base	Min OD Top	Thickness	Alternative Section B Length	Alternative Section Bottom	Alternative Section Top	C	D1 Bolt Circle	Thickness	Anchor Bolts Size	Luminaire Arm	Signal Arm	CIDH Diameter	CIDH Depth	CIDH Reinforced
16-3-100	3	100	18'-6"	10 3/4"	8 1/4"	0.1793"	None			1'-6"	1'-5 1/2"	1 1/2"	2"Ø x 42" x 6"	None	15'-0", 20'-0"	3'-0"	9'-0"	Yes
17-3-100			30'-0"		6 5/8"		10'-0"	8"	7 5/16"					6'-15' [12'-0"]				
18-3-100			17'-0"		8 7/16"	0.2391"	None							None	25'-0", [30'-0"]			
19-3-100			30'-0"	1'-0"	7 7/8"		10'-0"	9 1/4"	7 7/8"					6'-15' [12'-0"]				
19A-3-100			35'-0"		7 3/16"		15'-0"		7 3/16"					6'-15' [15'-0"]				
23-3-100			17'-0"		9 5/8"		None							None	35'-0"			
24-3-100			30'-0"		7 7/8"		10'-0"	9 1/4"	7 7/8"					6'-15' [12'-0"]				
24A-3-100			35'-0"		7 3/16"		15'-0"		7 3/16"					6'-15' [15'-0"]				
26-3-100			30'-0"	1'-1/8"	8"	0.3125"	10'-0"	9 3/8"	8"					6'-15' [12'-0"]	40'-0", [45'-0"]			
26A-3-100			35'-0"		7 5/16"		15'-0"		7 5/16"					6'-15' [15'-0"]				
27-3-100			17'-0"		9 3/4"		None							None				

☐ Indicates arm length to be used unless otherwise noted on plans.

STATE OF CALIFORNIA
DEPARTMENT OF TRANSPORTATION

ELECTRICAL SYSTEMS (SIGNAL AND LIGHTING STANDARD CASE 3 ARM LOADING WIND VELOCITY=100 MPH ARM LENGTHS 15' TO 45')

NO SCALE

RSP ES-7E DATED JUNE 30, 2006 SUPERSEDES STANDARD PLAN DATED MAY 1, 2006 - PAGE 441 OF THE STANDARD PLANS BOOK DATED MAY 2006.

REVISED STANDARD PLAN RSP ES-7E

2006 REVISED STANDARD PLAN RSP ES-7E

5-9-06

DIST	COUNTY	ROUTE	POST MILES TOTAL PROJECT	SHEET NO.	TOTAL SHEETS
08	Riv	91	15.6/21.6	1417	2028

REGISTERED CIVIL ENGINEER

October 5, 2007
PLANS APPROVAL DATE

REGISTERED PROFESSIONAL ENGINEER Stanley P. Johnson No. C57793 Exp. 3-31-08 CIVIL STATE OF CALIFORNIA

The State of California or its officers or agents shall not be responsible for the accuracy or completeness of electronic copies of this plan sheet.

To accompany plans dated 4-25-11

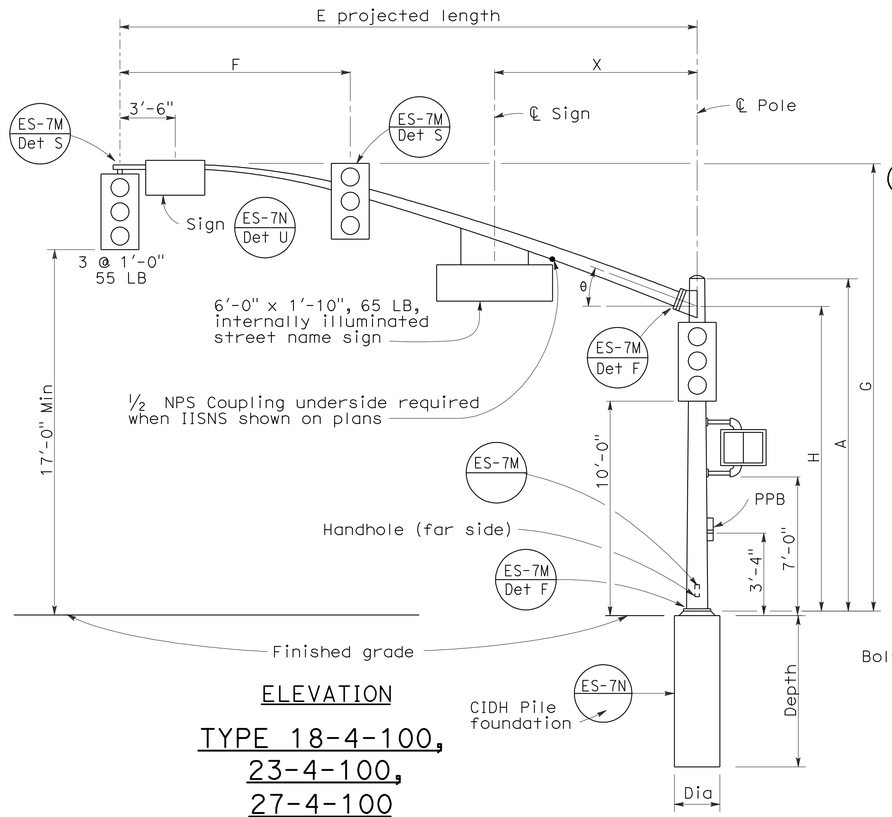

ELEVATION

TYPE 18-4-100, 23-4-100, 27-4-100

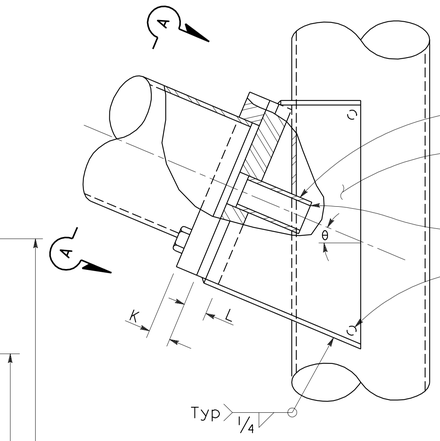

ELEVATION

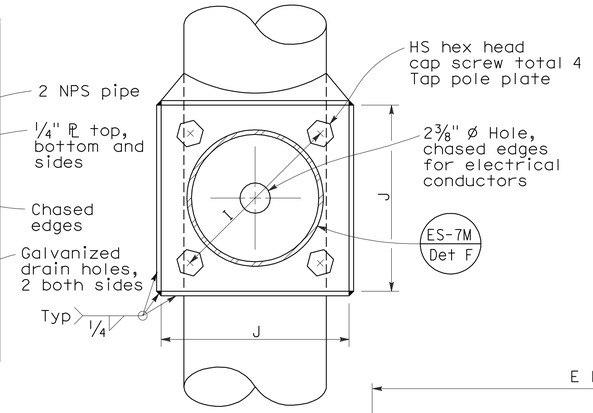

VIEW A-A

SIGNAL ARM CONNECTION DETAILS

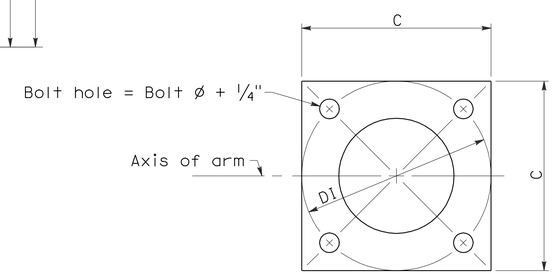

BASE PLATE

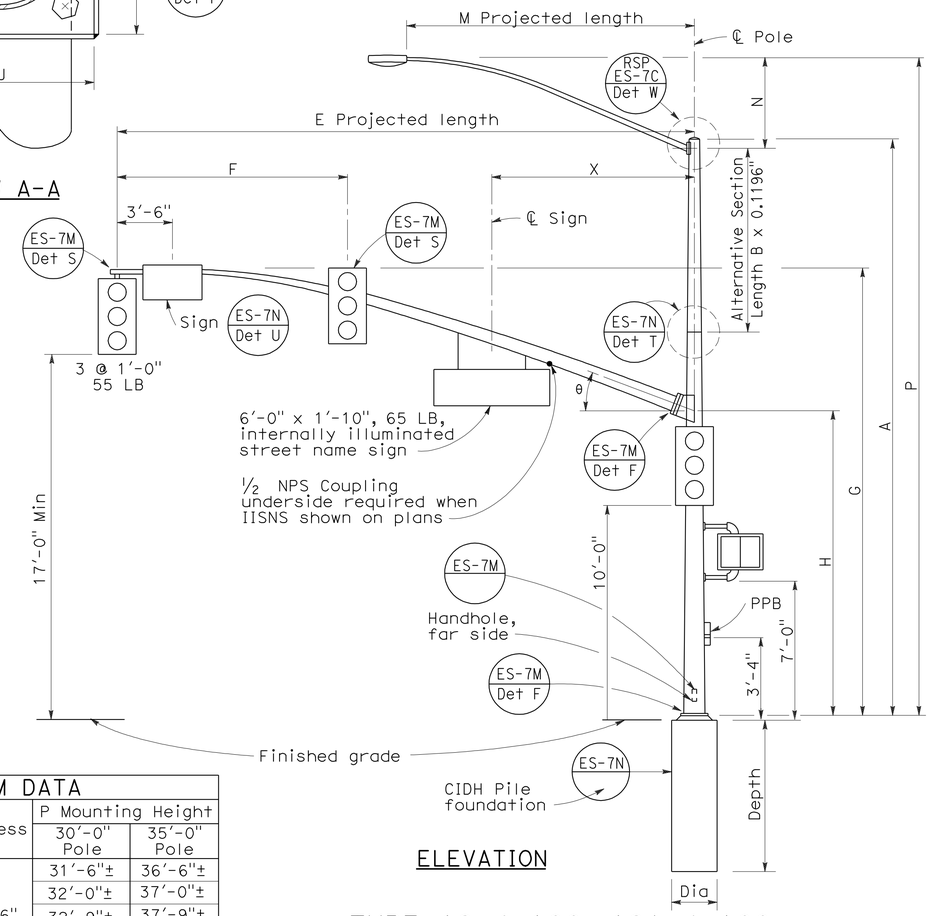

ELEVATION

TYPE 19-4-100, 19A-4-100, 24-4-100, 24A-4-100, 26-4-100, 26A-4-100

SIGNAL ARM DATA												
E Projected Length	F Min Spacing	G Mounting Height	H	Min OD at Pole	Thickness	I Bolt Circle	HS Cap Screws	J Plate Size	K Arm PL Thickness	L Pole PL Thickness	θ	X Max
25'-0"	10'-0"	22'-8"±	16'-0"	7 5/16"	0.2391"	12"	1¼"-7NC-3"	1'-0"	1¼"	1½"	23°	10'-6"
30'-0"	12'-0"	23'-0"±		8"								
35'-0"	14'-0"			8 11/16"		13½"		1'-1½"	1½"	1¾"	21°	13'-0"
40'-0"	15'-0"			9⅜"							15°	
45'-0"		23'-8"±		10¼"								

LUMINAIRE ARM DATA					
M Projected Length	N Rise	Min OD at Pole	Thickness	P Mounting Height 30'-0" Pole	P Mounting Height 35'-0" Pole
6'-0"	2'-0"±	3¼"	0.1196"	31'-6"±	36'-6"±
8'-0"	2'-6"±	3½"		32'-0"±	37'-0"±
10'-0"	3'-3"±	3⅞"		32'-9"±	37'-9"±
12'-0"	4'-3"±			33'-9"±	38'-9"±
15'-0"	4'-9"±	4¼"		34'-3"±	39'-3"±

POLE DATA									BASE PLATE DATA						CIDH PILE FOUNDATION		
Pole Type	Load Case	Wind Velocity mph	A Height	Min OD Base	Min OD Top	Thickness	Alternative Section B Length	Alternative Section Bottom	Alternative Section Top	C	DI Bolt Circle	Thickness	Anchor Bolts Size	Luminaire Arm	Signal Arm	Dia	Depth	Reinforced
18-4-100	4	100	17'-0"	12"	9"	0.2391"	None	9⅜"		1'-6"	1'-6"	1½"	2" Ø x 42" x 6"	None	25'-0", 30'-0"	3'-0"	9'-0"	Yes
19-4-100			30'-0"		8"		10'-0"		8"					6'-15' 12'-0"				
19A-4-100			35'-0"		7 5/16"		15'-0'		7 5/16"					6'-15' 15'-0"				
23-4-100			17'-0"		9"		None							None	35'-0"			
24-4-100			30'-0"		8"		10'-0"	9⅜"	8"					6'-15' 12'-0"				
24A-4-100			35'-0"		7 5/16"		15'-0"		7 5/16"					6'-15' 15'-0"				
26-4-100			30'-0"	12½"	8"	0.3125"	10'-0"	9¾"	8⅜"					6'-15' 12'-0"	40'-0", 45'-0"			
26A-4-100			35'-0"		7 5/16"		15'-0"		7 11/16"					6'-15' 15'-0"				
27-4-100			17'-0"		9¾"		None							None				

☐ Indicates arm length to be used unless otherwise noted on plans.

STATE OF CALIFORNIA
DEPARTMENT OF TRANSPORTATION

ELECTRICAL SYSTEMS (SIGNAL AND LIGHTING STANDARD CASE 4 ARM LOADING WIND VELOCITY=100 MPH ARM LENGTHS 25' TO 45')

NO SCALE

RSP ES-7F DATED OCTOBER 5, 2007 SUPERCEDES RSP ES-7F DATED NOVEMBER 17, 2006 AND STANDARD PLAN ES-7F DATED MAY 1, 2006 - PAGE 442 OF THE STANDARD PLANS BOOK DATED MAY 2006.

REVISED STANDARD PLAN RSP ES-7F

2006 REVISED STANDARD PLAN RSP ES-7F

7-10-07

DIST	COUNTY	ROUTE	POST MILES TOTAL PROJECT	SHEET NO.	TOTAL SHEETS
08	Riv	91	15.6/21.6	1418	2028

REGISTERED CIVIL ENGINEER

November 17, 2006
PLANS APPROVAL DATE

REGISTERED PROFESSIONAL ENGINEER Stanley P. Johnson No. C57793 Exp. 03-31-08 CIVIL STATE OF CALIFORNIA

The State of California or its officers or agents shall not be responsible for the accuracy or completeness of electronic copies of this plan sheet.

To accompany plans dated 4-25-11

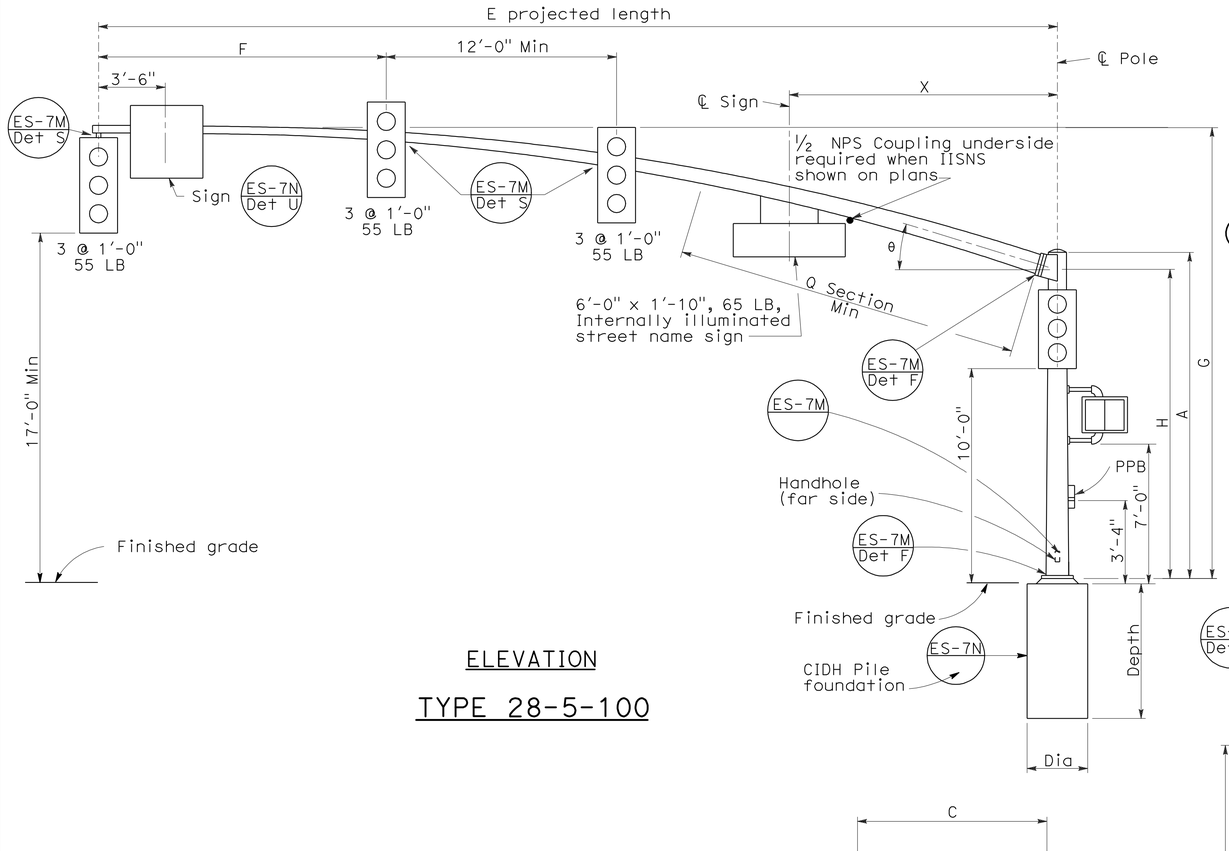

ELEVATION

TYPE 28-5-100

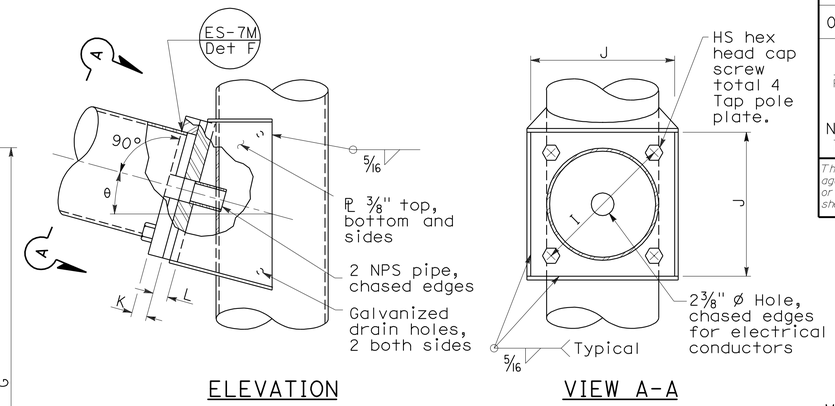

ELEVATION

VIEW A-A

SIGNAL ARM CONNECTION DETAILS

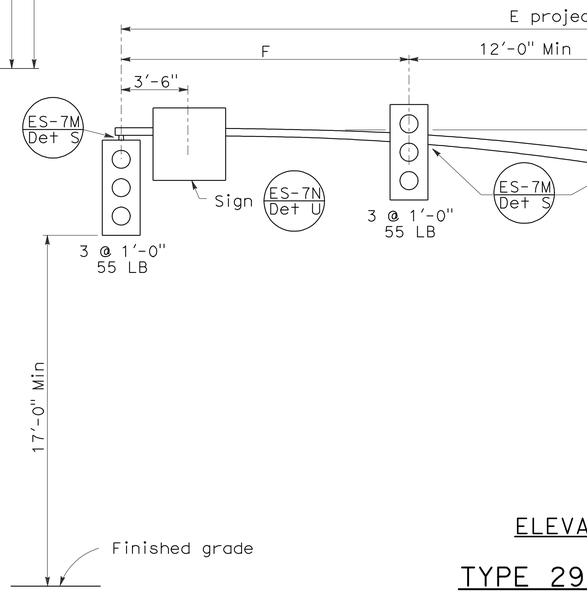

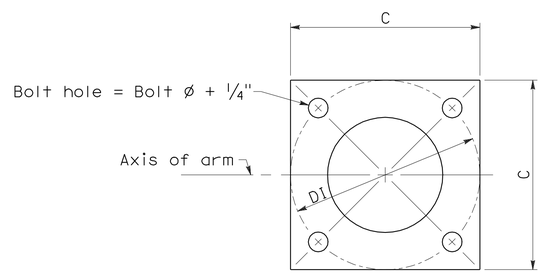

BASE PLATE

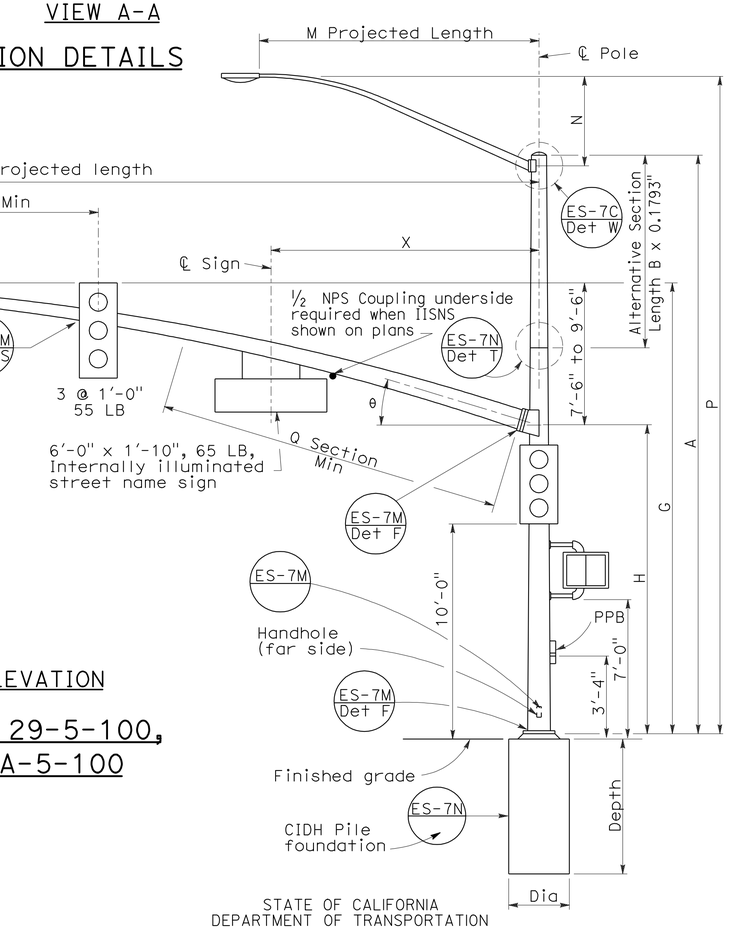

ELEVATION

TYPE 29-5-100, 29A-5-100

LUMINAIRE ARM DATA					
M Projected Length	N Rise	Min OD at Pole	Thickness	P Mounting Height 30'-0" Pole	P Mounting Height 35'-0" Pole
6'-0"	2'-0"±	3 1/4"	0.1196"	31'-6"±	36'-6"±
8'-0"	2'-6"±	3 1/2"		32'-0"±	37'-0"±
10'-0"	3'-3"±	3 7/8"		32'-9"±	37'-9"±
12'-0"	4'-3"±			33'-9"±	38'-9"±
15'-0"	4'-9"±	4 1/4"		34'-3"±	39'-3"±

SIGNAL ARM DATA														
E Projected Length	F Min Spacing	G Mounting Height	H	Min OD at Pole	Thickness	I Bolt Circle	HS Cap Screws	J Plate Size	K Arm ℙ Thickness	L Pole ℙ Thickness	θ	Q Section Length	Q Section Thickness	X Max
50'-0"	15'-0"	23'-7"± to 25'-7"±	16'-0"	11 7/16"	0.1793"	16"	1 1/2"-6NC-3 1/4"	1'-4"	1 3/4"	1 3/4"	15°	18'-0"	0.2391"	14'-0"
55'-0"				1'-1/4"								23'-0"		

POLE DATA									BASE PLATE DATA						CIDH PILE FOUNDATION		
Pole Type	Load Case	Wind Velocity mph	A Height	Min OD Base	Min OD Top	Thickness	Alternative Section B Length	Alternative Section Bottom	Alternative Section Top	C	DI Bolt Circle	Thickness	Anchor Bolts Size	Luminaire Arm	Signal Arm	Dia	Depth	Reinforced
28-5-100	5	100	17'-0"	14"	11 11/16"	0.3125"	None	11 1/4"	9 7/8"	21"	21"	1 3/4"	2" ø x 42" x 6"	None	50'-0", 55'-0"	3'-0"	9'-2"	Yes
29-5-100			30'-0"		9 7/8"		10'-0"							6'-15' [15'-0"]				
29A-5-100			35'-0"		9 3/16"		15'-0"		9 3/16"	23"	23"							

[ ] Indicates arm length to be used unless otherwise noted on plans.

STATE OF CALIFORNIA
DEPARTMENT OF TRANSPORTATION

ELECTRICAL SYSTEMS (SIGNAL AND LIGHTING STANDARD CASE 5 ARM LOADING WIND VELOCITY=100 MPH ARM LENGTHS 50' TO 55')

NO SCALE

RSP ES-7G DATED NOVEMBER 17, 2006 SUPERSEDES STANDARD PLAN ES-7G DATED MAY 1, 2006 - PAGE 443 OF THE STANDARD PLANS BOOK DATED MAY 2006.

REVISED STANDARD PLAN RSP ES-7G

2006 REVISED STANDARD PLAN RSP ES-7G

5-15-06

DIST	COUNTY	ROUTE	POST MILES TOTAL PROJECT	SHEET NO.	TOTAL SHEETS
08	Riv	91	15.6/21.6	1419	2028

REGISTERED ELECTRICAL ENGINEER

October 5, 2007
PLANS APPROVAL DATE

REGISTERED PROFESSIONAL ENGINEER
Jeffery G. McRae
No. E14512
Exp. 6-30-08
ELECTRICAL
STATE OF CALIFORNIA

The State of California or its officers or agents shall not be responsible for the accuracy or completeness of electronic copies of this plan sheet.

To accompany plans dated 4-25-11

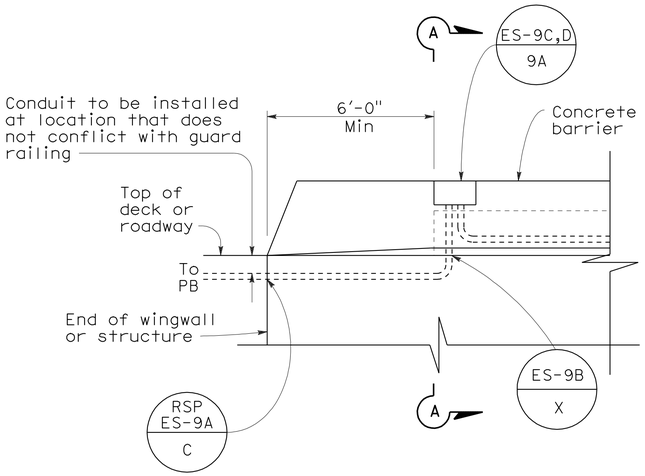

SIDEVIEW

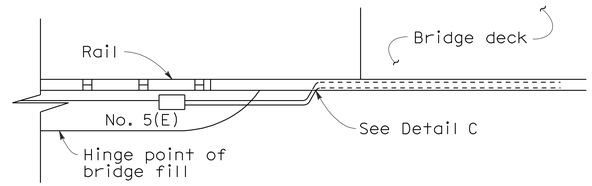

TOP VIEW

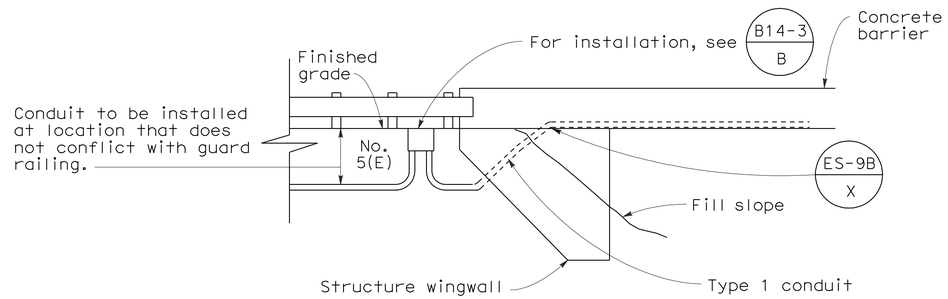

SIDE VIEW
DETAIL I
CONDUIT TERMINATION

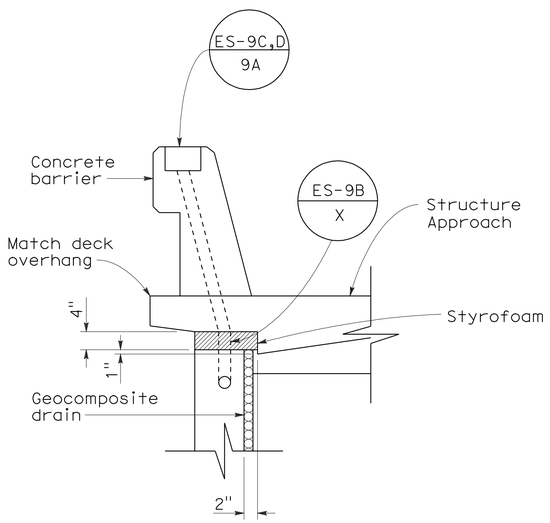

SECTION A-A

DETAIL A
CONDUIT TERMINATION

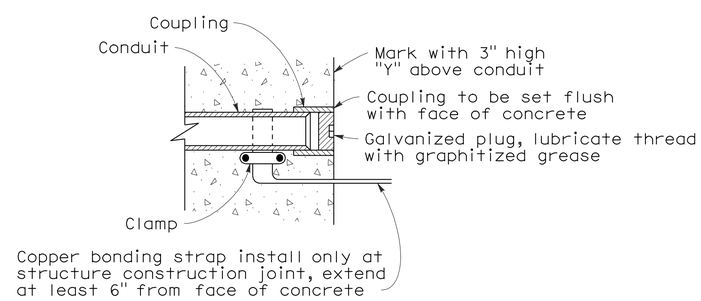

DETAIL C
CONDUIT TERMINATION

STATE OF CALIFORNIA
DEPARTMENT OF TRANSPORTATION

ELECTRICAL SYSTEMS (ELECTRICAL DETAILS STRUCTURE INSTALLATIONS)

NO SCALE

RSP ES-9A DATED OCTOBER 5, 2007 SUPERCEDES STANDARD PLAN ES-9A DATED MAY 1, 2006 - PAGE 454 OF THE STANDARD PLANS BOOK DATED MAY 2006.

REVISED STANDARD PLAN RSP ES-9A

2006 REVISED STANDARD PLAN RSP ES-9A

DIST	COUNTY	ROUTE	POST MILES TOTAL PROJECT	SHEET NO.	TOTAL SHEETS
08	Riv	91	15.6/21.6	1420	2028

REGISTERED ELECTRICAL ENGINEER

October 5, 2007
PLANS APPROVAL DATE

REGISTERED PROFESSIONAL ENGINEER Jeffery G. McRae No. E14512 Exp. 6-30-08 ELECTRICAL STATE OF CALIFORNIA

The State of California or its officers or agents shall not be responsible for the accuracy or completeness of electronic copies of this plan sheet.

To accompany plans dated 4-25-11

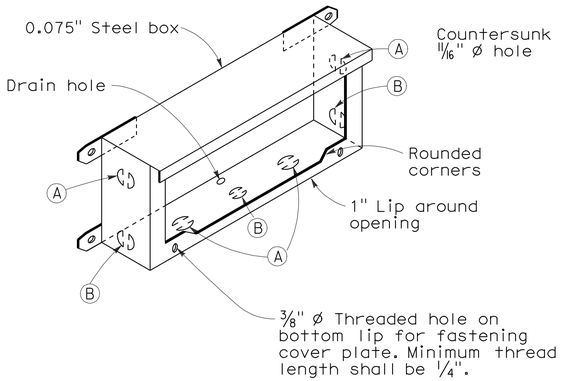

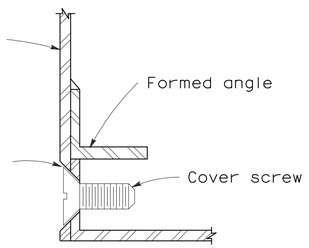

DETAIL J

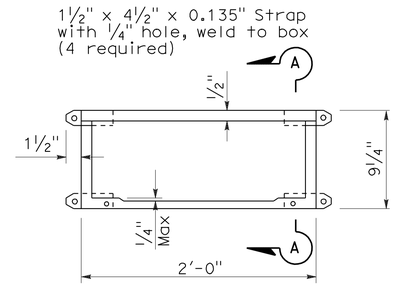

PLAN

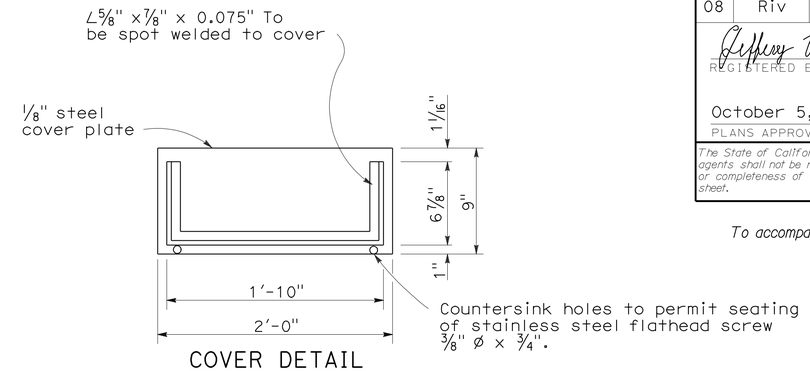

COVER DETAIL

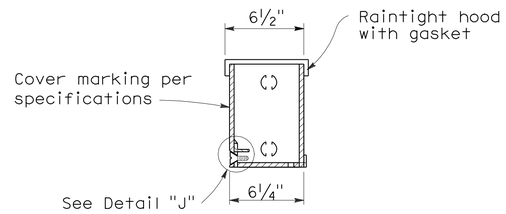

SECTION A-A

INSTALLATION NOTE:

Box shall be parallel to top of railing. Close cover box during pouring with 1/4" plywood of sufficient size to provide 1:1 chamfer on 3 sides of cover. Upper edge of plywood shall fit against lower edge of raintight hood.

No. 9 STRUCTURE PULL BOX

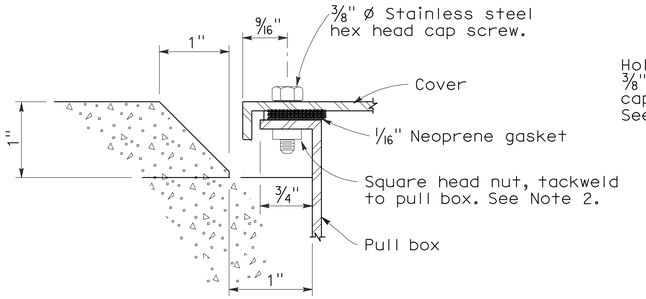

SECTION C-C

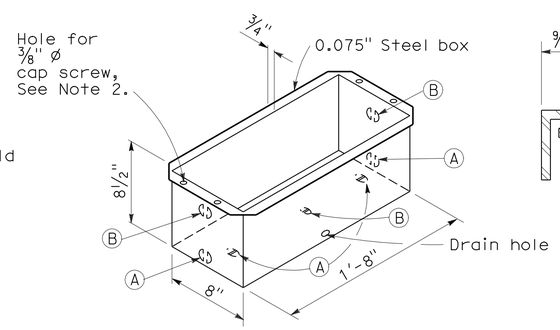

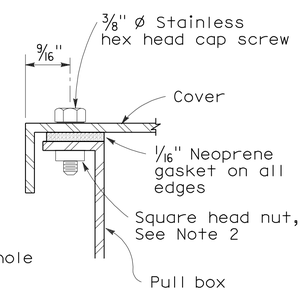

DETAIL A

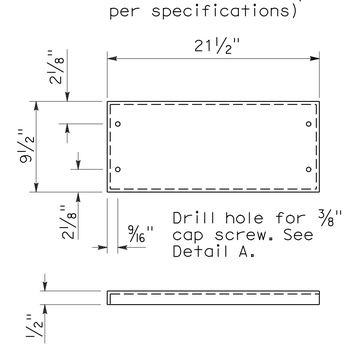

COVER DETAIL

NOTES: No. 9 and 9A Pull Box

1. Corner joints shall be lapped and secured by spot welding or riveting.
2. Where cap screws are used to attach cover to box, either of the following methods of providing adequate threading may be used:
   a. Tack weld square nut to bottom of flange (Total 4), or
   b. Tack weld a 1/4" x 5/8" x 8" bar beneath flange (Total 2).
3. Pound knockouts flat after punching.
4. Multiple size knockouts shall not be permitted.
5. Pull box covers shall be marked as shown on Standard Plan ES-8.

No. 9A STRUCTURE PULL BOX

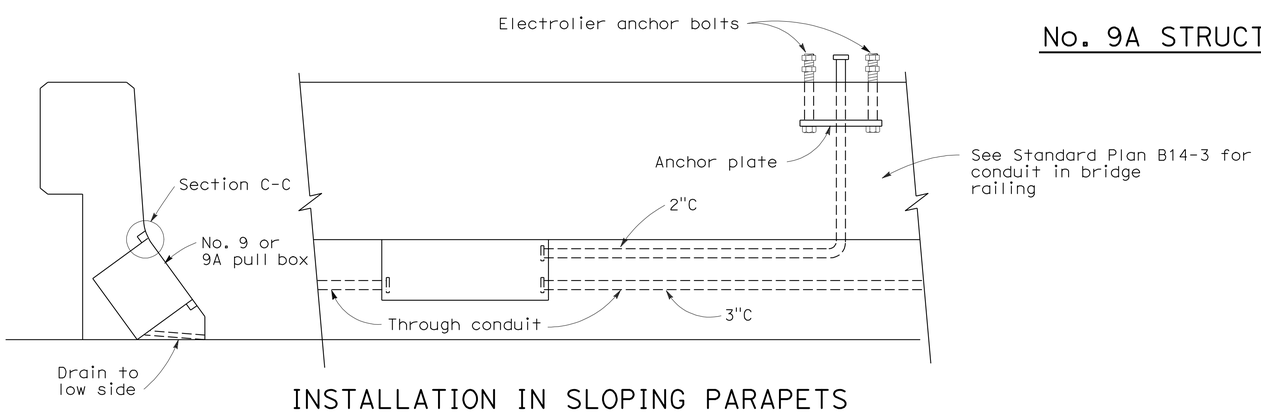

INSTALLATION IN SLOPING PARAPETS

For reinforcement in area of electrolier, see railing sheets. For electrolier anchor bolts, see Standard Plan ES-6B.

KNOCKOUT SCHEDULE
No. 9 AND 9A PULL BOX

(A) 2"C, 1 each end, 2 on bottom.

(B) 3"C, 1 each end, 1 on bottom.

STATE OF CALIFORNIA
DEPARTMENT OF TRANSPORTATION

ELECTRICAL SYSTEMS (ELECTRICAL DETAILS STRUCTURE INSTALLATIONS)

NO SCALE

RSP ES-9C DATED OCTOBER 5, 2007 SUPERCEDES STANDARD PLAN ES-9C DATED MAY 1, 2006 - PAGE 456 OF THE STANDARD PLANS BOOK DATED MAY 2006.

REVISED STANDARD PLAN RSP ES-9C

2006 REVISED STANDARD PLAN RSP ES-9C

7-26-07

DIST	COUNTY	ROUTE	POST MILES TOTAL PROJECT	SHEET NO.	TOTAL SHEETS
08	Riv	91	15.6/21.6	1421	2028

REGISTERED ELECTRICAL ENGINEER

October 5, 2007
PLANS APPROVAL DATE

REGISTERED PROFESSIONAL ENGINEER
Jeffery G. McRae
No. E14512
Exp. 6-30-08
ELECTRICAL
STATE OF CALIFORNIA

The State of California or its officers or agents shall not be responsible for the accuracy or completeness of electronic copies of this plan sheet.

To accompany plans dated 4-25-11

2006 REVISED STANDARD PLAN RSP ES-15D

NOTES: (FOR LIGHTING AND SIGN ILLUMINATION CONTROL)

1. The ballast voltages of lighting fixtures and luminaires shall match line service voltages.
2. Voltage rating of photoelectric controls shall conform to the service voltage indicated on the plans.
3. Terminal strip shall be provided for wiring to fixtures.
4. Type SC1A, SC2A, SC3A controls are similar to Types SC1, SC2 and SC3 controls respectively except test switch and wiring are not required.

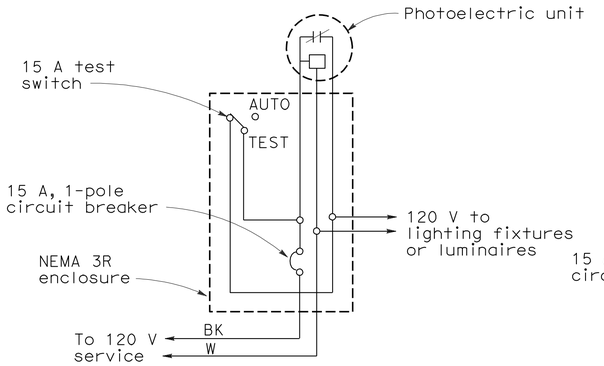

TYPE LC1 CONTROL

For 120 V unswitched circuit with no more than 800 W load.

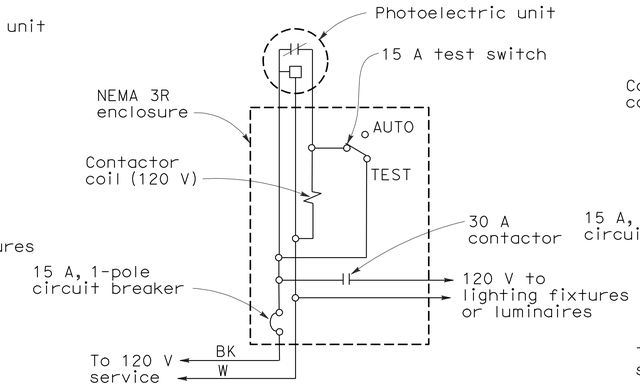

TYPE LC2 CONTROL

For 120 V unswitched circuit

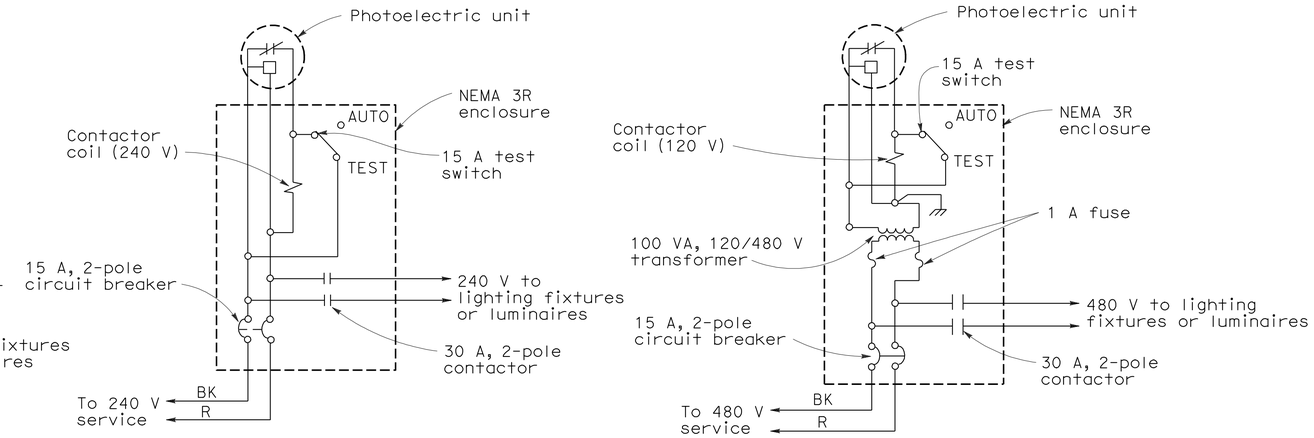

TYPE LC3 CONTROL

For 240 V and 480 V unswitched circuits

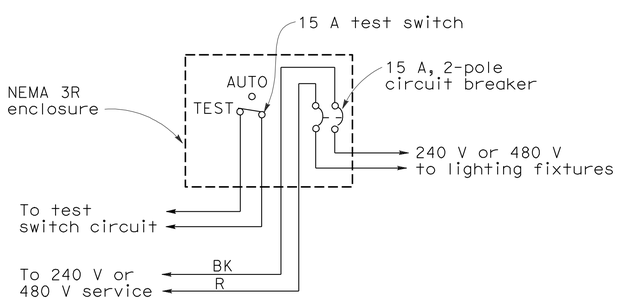

TYPE SC1 CONTROL

For 240 V or 480 V switched circuit, see Note 4 for Type SC1A

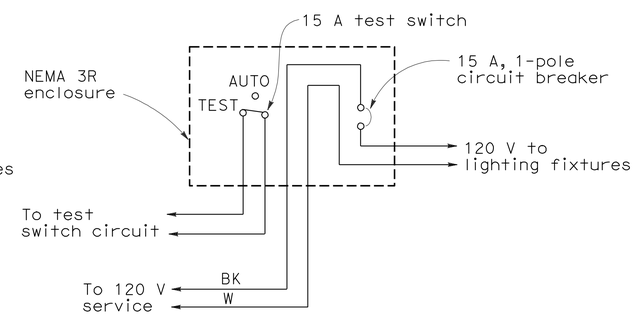

TYPE SC2 CONTROL

For 120 V switched circuit, see Note 4 for Type SC2A

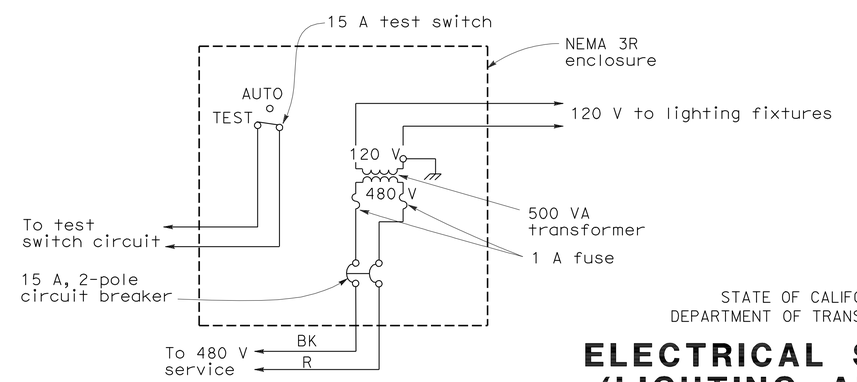

TYPE SC3 CONTROL

For 480 V switched sign circuit, see Note 4 for Type SC3A

STATE OF CALIFORNIA
DEPARTMENT OF TRANSPORTATION

ELECTRICAL SYSTEMS (LIGHTING AND SIGN ILLUMINATION CONTROL)

NO SCALE

RSP ES-15D DATED OCTOBER 5, 2007 SUPERCEDES STANDARD PLAN ES-15D DATED MAY 1, 2006 - PAGE 472 OF THE STANDARD PLANS BOOK DATED MAY 2006.

REVISED STANDARD PLAN RSP ES-15D

DIST	COUNTY	ROUTE	POST MILES TOTAL PROJECT	SHEET No	TOTAL SHEETS
08	Riv	91	15.6/21.6	1422	2028

REGISTERED CIVIL ENGINEER 11/12/10 DATE

4-25-11
PLANS APPROVAL DATE

REGISTERED PROFESSIONAL ENGINEER MINH THUONG VO No. C59297 Exp. 06-30-11 CIVIL STATE OF CALIFORNIA

The State of California or its officers or agents shall not be responsible for the accuracy or completeness of electronic copies of this plan sheet.

Notes:

1 For Top of Wall and Leveling Pad Elevations see "STRUCTURE PLAN NO. 1 and 2" sheets.

2 For General Notes see "MECHANICALLY STABILIZED EMBANKMENT DETAILS NO. 2" sheet.

3 For Details see "MECHANICALLY STABILIZED EMBANKMENT DETAILS NO. 1 and 2" sheets.

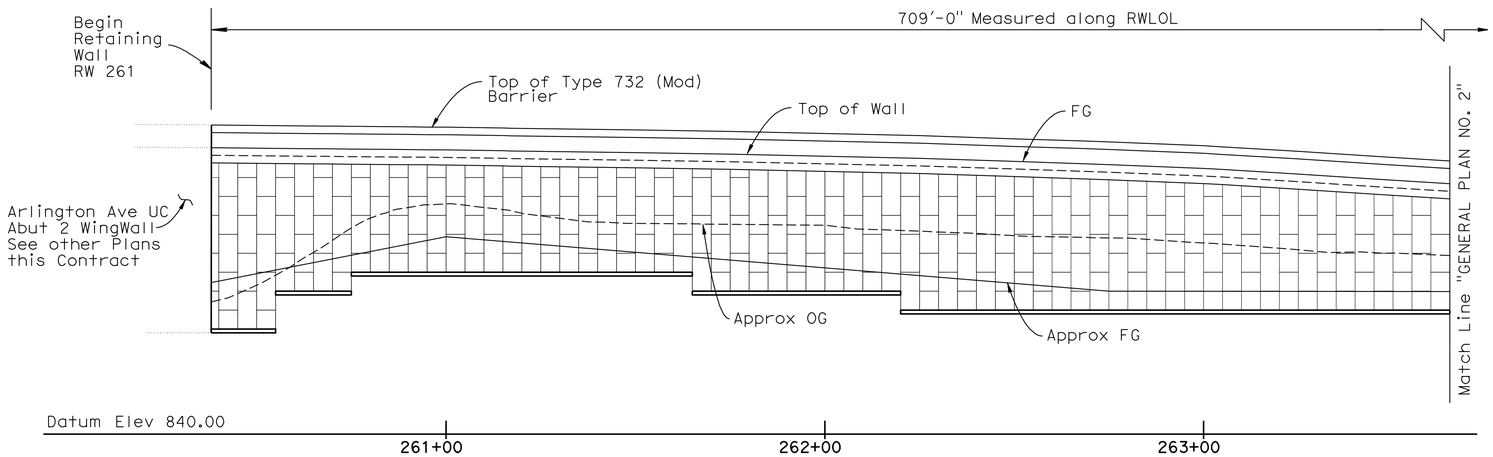

DEVELOPED MIRROR ELEVATION

Horiz. 1" = 20'
Vert. 1" = 10'

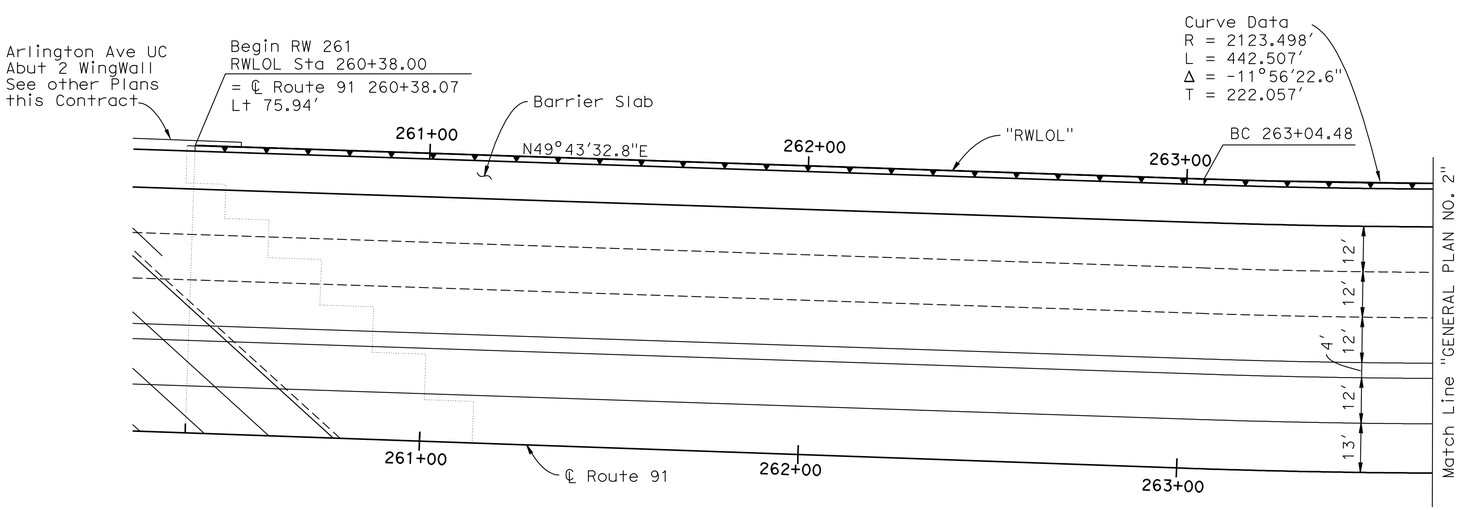

PLAN

1" = 20'

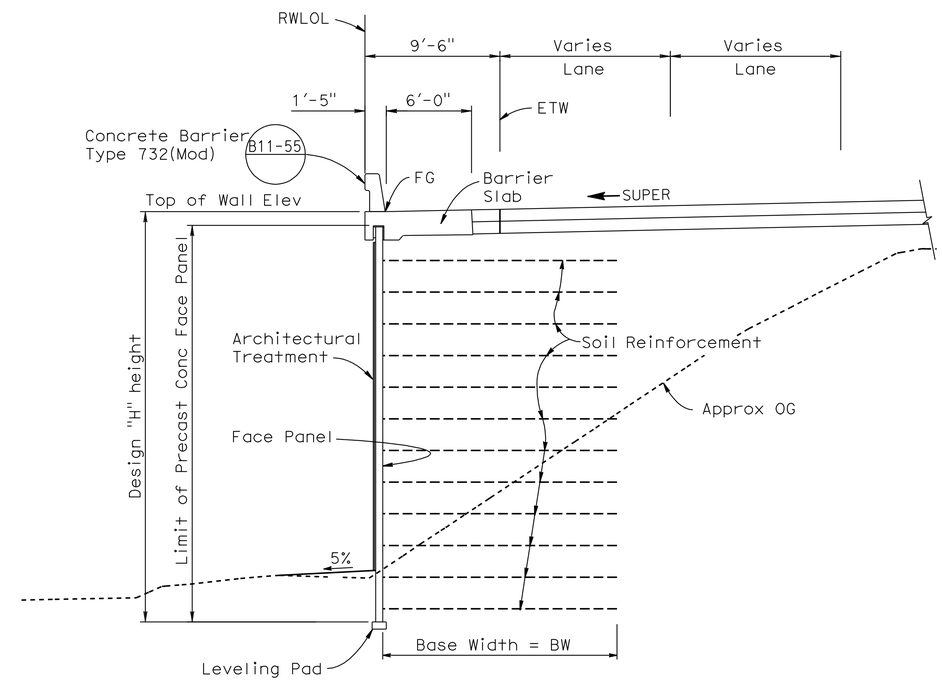

TYPICAL SECTION

3/16" = 1'-0"

INDEX TO PLANS

Sheet No.	Title
1	GENERAL PLAN NO. 1
2	GENERAL PLAN NO. 2
3	STRUCTURE PLAN NO. 1
4	STRUCTURE PLAN NO. 2
5	PILE CAP DETAILS NO. 1
6	MECHANICALLY STABILIZED EMBANKMENT DETAILS NO. 1
7	MECHANICALLY STABILIZED EMBANKMENT DETAILS NO. 2
8	MECHANICALLY STABILIZED EMBANKMENT DETAILS NO. 3
9	MECHANICALLY STABILIZED EMBANKMENT DETAILS NO. 4
10	MECHANICALLY STABILIZED EMBANKMENT DETAILS NO. 5
11	MECHANICALLY STABILIZED EMBANKMENT DETAILS NO. 6
12	ARCHITECTURAL SURFACE
13	ARCHITECTURAL DETAILS
14	LOG OF TEST BORINGS 1 OF 4
15	LOG OF TEST BORINGS 2 OF 4
16	LOG OF TEST BORINGS 3 OF 4
17	LOG OF TEST BORINGS 4 OF 4

NOTE:
THE CONTRACTOR SHALL VERIFY ALL CONTROLLING FIELD DIMENSIONS BEFORE ORDERING OR FABRICATING ANY MATERIAL.

X Daniel T Adams
DESIGN ENGINEER

	BY	CHECKED
DESIGN	M. Vo	A. McPhee
DETAILS	Y. Tang	A. McPhee
QUANTITIES	A. McPhee	M. Vo

LOAD & RESISTANCE FACTOR DESIGN — LIVE LOADING: HL93 W/"LOW-BOY"; PERMIT DESIGN VEHICLE
LAYOUT: M. Vo — CHECKED: A. McPhee
SPECIFICATIONS: BY Dave Klein — PLANS AND SPECS COMPARED: Dave Klein

ORIGINAL SCALE IN INCHES FOR REDUCED PLANS 0 1 2 3

STATE OF CALIFORNIA
DEPARTMENT OF TRANSPORTATION

DIVISION OF ENGINEERING SERVICES
STRUCTURE DESIGN
DESIGN BRANCH 10

CU 08
EA 448401

BRIDGE NO. 56E0064
POST MILE 17.85

RETAINING WALL NO. 261
GENERAL PLAN NO. 1

DISREGARD PRINTS BEARING EARLIER REVISION DATES
REVISION DATES: 2-09-10 2-24-10 4-23-10 7-01-10 8-17-10
SHEET 1 OF 17

STRUCTURES DESIGN GENERAL PLAN SHEET (ENGLISH) (REV.07-24-06)

FILE => 56e0064agp01.dgn

USERNAME => ttstrk DATE PLOTTED => 30-APR-2011 TIME PLOTTED => 10:48

DIST	COUNTY	ROUTE	POST MILES TOTAL PROJECT	SHEET No	TOTAL SHEETS
08	Riv	91	15.6/21.6	1423	2028

REGISTERED CIVIL ENGINEER 11/12/10 DATE

4-25-11
PLANS APPROVAL DATE

REGISTERED PROFESSIONAL ENGINEER MINH THUONG VO No. C59297 Exp. 06-30-11 CIVIL STATE OF CALIFORNIA

The State of California or its officers or agents shall not be responsible for the accuracy or completeness of electronic copies of this plan sheet.

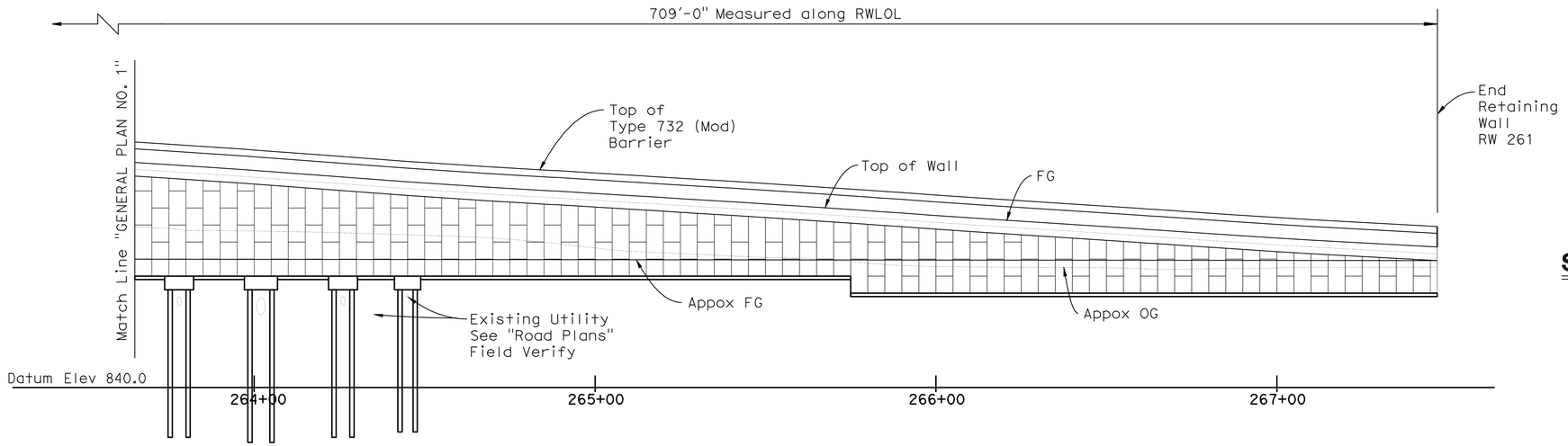

DEVELOPED MIRROR ELEVATION

Horiz. 1" = 20'
Vert. 1" = 10'

STANDARD PLANS DATED MAY 2006

A10A	ACRONYMS AND ABBREVIATIONS (SHEET 1 OF 2)
A10B	ACRONYMS AND ABBREVIATIONS (SHEET 2 OF 2)
A10C	SYMBOLS (SHEET 1 OF 2)
A10D	SYMBOLS (SHEET 2 OF 2)
B2-5	PILE DETAILS CLASS 90 AND CLASS 140
B11-55	CONCRETE BARRIER TYPE 732
D102	UNDERDRAINS

STANDARD PLAN SHEET NO.
DETAIL NO.

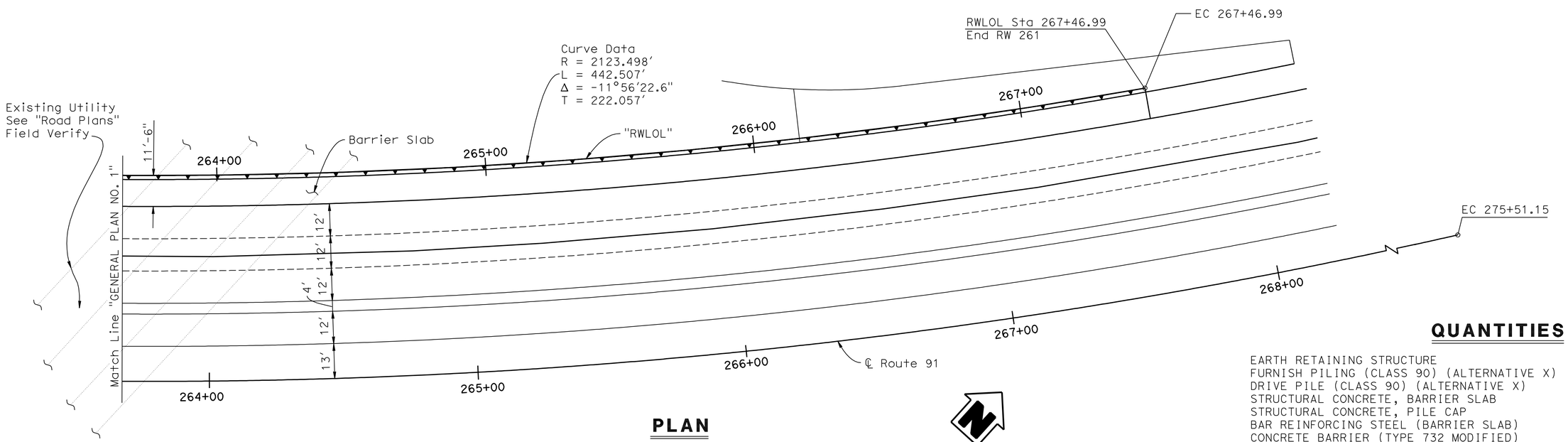

PLAN

1" = 20'

QUANTITIES

EARTH RETAINING STRUCTURE	10,353	SQFT
FURNISH PILING (CLASS 90) (ALTERNATIVE X)	454	LF
DRIVE PILE (CLASS 90) (ALTERNATIVE X)	16	EA
STRUCTURAL CONCRETE, BARRIER SLAB	341	CY
STRUCTURAL CONCRETE, PILE CAP	27	CY
BAR REINFORCING STEEL (BARRIER SLAB)	33,880	LB
CONCRETE BARRIER (TYPE 732 MODIFIED)	710	LF

NOTE:
THE CONTRACTOR SHALL VERIFY ALL CONTROLLING FIELD DIMENSIONS BEFORE ORDERING OR FABRICATING ANY MATERIAL.

X Daniel T Adams
DESIGN ENGINEER

	BY	CHECKED
DESIGN	M. Vo	A. McPhee
DETAILS	Y. Tang	A. McPhee
QUANTITIES	A. McPhee	M. Vo

LOAD & RESISTANCE FACTOR DESIGN — LIVE LOADING: HL93 W/"LOW-BOY"; PERMIT DESIGN VEHICLE

	BY	CHECKED
LAYOUT	M. Vo	A. McPhee
SPECIFICATIONS	Dave Klein	PLANS AND SPECS COMPARED Dave Klein

ORIGINAL SCALE IN INCHES FOR REDUCED PLANS 0 1 2 3

STATE OF CALIFORNIA
DEPARTMENT OF TRANSPORTATION

DIVISION OF ENGINEERING SERVICES
STRUCTURE DESIGN
DESIGN BRANCH 10

CU 08
EA 448401

BRIDGE NO. 56E0064
POST MILE 17.85

RETAINING WALL NO. 261
GENERAL PLAN NO. 2

DISREGARD PRINTS BEARING EARLIER REVISION DATES

REVISION DATES: 2-15-10 2-26-10 4-27-10 6-29-10 11-03-10

SHEET 2 OF 17

STRUCTURES DESIGN GENERAL PLAN SHEET (ENGLISH) (REV.07-24-06)

FILE => 56e0064agp02.dgn

USERNAME => trstrk DATE PLOTTED => 30-APR-2011 TIME PLOTTED => 10:48

DIST	COUNTY	ROUTE	POST MILES TOTAL PROJECT	SHEET No	TOTAL SHEETS
08	Riv	91	15.6/21.6	1424	2028

REGISTERED CIVIL ENGINEER 11/12/10 DATE

4-25-11
PLANS APPROVAL DATE

REGISTERED PROFESSIONAL ENGINEER MINH THUONG VO No. C59297 Exp. 06-30-11 CIVIL STATE OF CALIFORNIA

The State of California or its officers or agents shall not be responsible for the accuracy or completeness of electronic copies of this plan sheet.

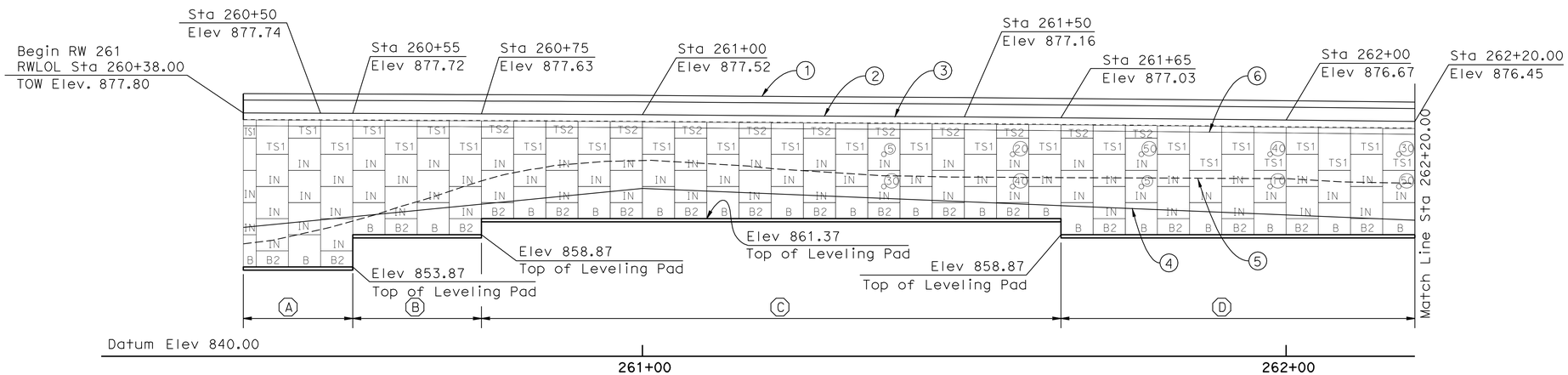

DEVELOPED MIRROR ELEVATION

1" = 10'

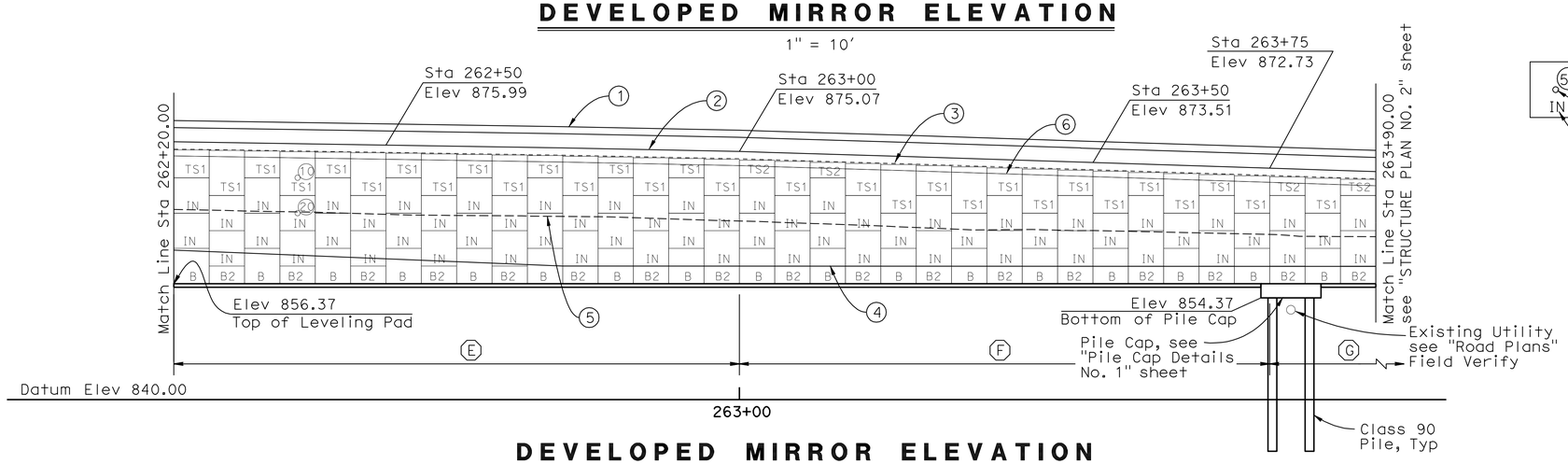

DEVELOPED MIRROR ELEVATION

1" = 10'

LEGEND:

1. Top of Concrete Barrier Type 732(Mod)
2. Top of Wall
3. Top of Precast Concrete Panel
4. Approximate FG
5. Approximate OG
6. Bottom of Barrier Slab

50 — Indicates interval in years from time of construction to time of removal of inspection wire

IN — Indicates location of inspection wire replacement, see "MECHANICALLY STABILIZED EMBANKMENT DETAILS NO. 3" sheet

B2 — Panel type designation, see "MECHANICALLY STABILIZED EMBANKMENT DETAILS NO. 1" sheet

NOTES:

1. Contractor to field verify all utility locations prior to retaining wall construction.
2. For Typical Sections, see "General Plan No. 1" sheet.
3. For Architectural Treatment, see "Architectural Treatment Details" sheet
4. For utility information, see "Utility Plans".

SOIL REINFORCEMENT TABLE

	A	B	C	D	E	F	G
Design "H"	H=23.93' Max	H=18.85' Max	H=16.26' Max	H=18.16' Max	H=20.08' Max	H=18.71' Max	H=16.36 Max
Base Width (BW)	BW = 18' Min	BW = 14' Min	BW = 11' Min	BW = 12' Min	BW = 14' Min	BW = 12' Min	BW = 11' Min
Top level of Mesh: Levels Below:	5 @ W11 x W11 + 6" x 18" 5 @ W11 x W11 + 6" x 24"	2 @ W11 x W11 + 6" x 9" 3 @ W11 x W11 + 6" x 18" 3 @ W11 x W11 + 6" x 24"	2 @ W11 x W11 + 6" x 9" 2 @ W11 x W11 + 6" x 12" 1 @ W11 x W11 + 6" x 18" 1 @ W11 x W11 + 6" x 24"	2 @ W11 x W11 + 6" x 9" 2 @ W11 x W11 + 6" x 12" 1 @ W11 x W11 + 6" x 18" 2 @ W11 x W11 + 6" x 24"	2 @ W11 x W11 + 6" x 9" 3 @ W11 x W11 + 6" x 18" 3 @ W11 x W11 + 6" x 24"	2 @ W11 x W11 + 6" x 9" 2 @ W11 x W11 + 6" x 12" 1 @ W11 x W11 + 6" x 18" 2 @ W11 x W11 + 6" x 24"	2 @ W11 x W11 + 6" x 9" 2 @ W11 x W11 + 6" x 12" 2 @ W11 x W11 + 6" x 18"

MSE NOTES:

1. Mesh is indicated sequentially from top level of mesh to bottom level of mesh.
2. For limits of excavation & backfill, see "Mechanically Stabilized Embankment Details No. 6" sheet.
3. For Barrier Slab details, see "Mechanically Stabilized Embankment Details No. 4" sheet.
4. For panel details, see "Mechanically Stabilized Embankment Details No. 1" sheet.
5. For General Notes and wire mat details, see "Mechanically Stabilized Embankment Details No. 2" sheet.
6. For inspection wire details, see "Mechanically Stabilized Embankment Details No. 3" sheet.

LEGEND:

2 @ W11 x W11 + 6" x 9"

- Longitudinal wire spacing x Transverse wire spacing
- Longitudinal wire size x Transverse wire size
- Number of welded wire mats.

NOTE:
THE CONTRACTOR SHALL VERIFY ALL CONTROLLING FIELD DIMENSIONS BEFORE ORDERING OR FABRICATING ANY MATERIAL.

	BY	CHECKED
DESIGN	M. Vo	A. McPhee
DETAILS	Y. Tang	A. McPhee
QUANTITIES	A. McPhee	M. Vo

STATE OF CALIFORNIA
DEPARTMENT OF TRANSPORTATION

DIVISION OF ENGINEERING SERVICES
STRUCTURE DESIGN
DESIGN BRANCH 10

BRIDGE NO. 56E0064
POST MILE 17.85

RETAINING WALL NO. 261
STRUCTURE PLAN NO. 1

STRUCTURES DESIGN DETAIL SHEET (ENGLISH) (REV. 10/25/05)

ORIGINAL SCALE IN INCHES FOR REDUCED PLANS 0 1 2 3

CU 08
EA 448401

DISREGARD PRINTS BEARING EARLIER REVISION DATES

REVISION DATES: 2-11-10 2-23-10 4-29-10 6-29-10

SHEET 3 OF 17

FILE => 56e0064csp03.dgn

USERNAME => trstrk DATE PLOTTED => 30-APR-2011 TIME PLOTTED => 10:48

DIST	COUNTY	ROUTE	POST MILES TOTAL PROJECT	SHEET No	TOTAL SHEETS
08	Riv	91	15.6/21.6	1425	2028

REGISTERED CIVIL ENGINEER 11/12/10 DATE

4-25-11
PLANS APPROVAL DATE

REGISTERED PROFESSIONAL ENGINEER MINH THUONG VO No. C59297 Exp. 06-30-11 CIVIL STATE OF CALIFORNIA

The State of California or its officers or agents shall not be responsible for the accuracy or completeness of electronic copies of this plan sheet.

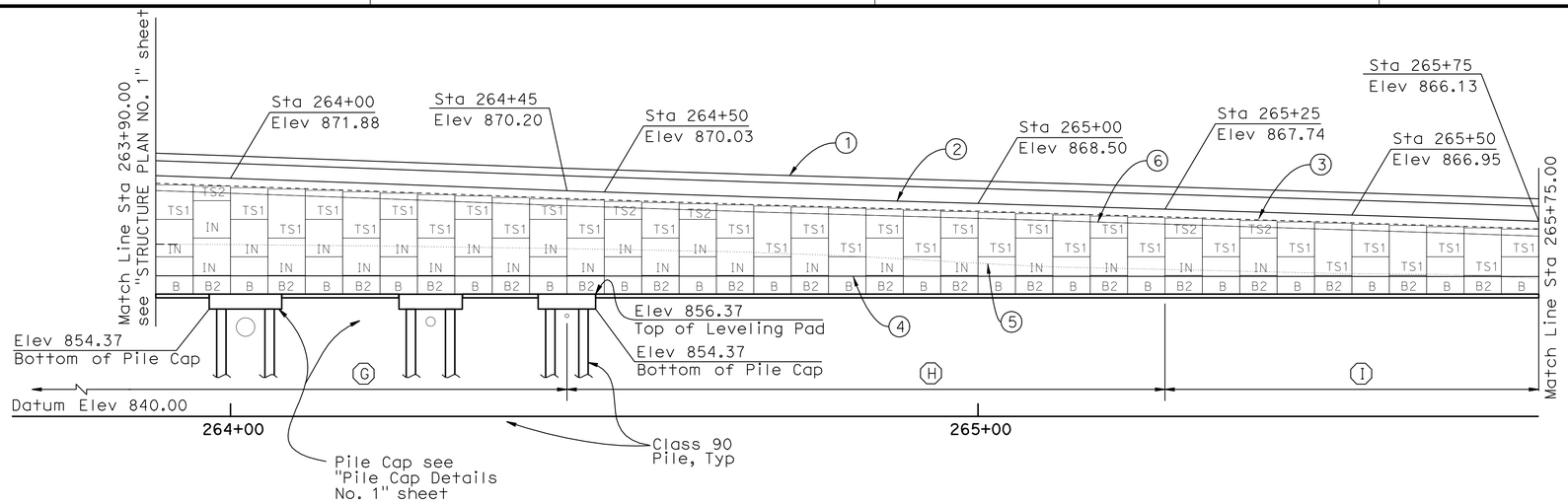

DEVELOPED MIRROR ELEVATION

1" = 10'

LEGEND:

1. Top of Concrete Barrier Type 732(Mod)
2. Top of Wall
3. Top of Precast Concrete Panel
4. Approximate FG
5. Approximate OG
6. Bottom of Barrier Slab

50 — Indicates interval in years from time of construction to time of removal of inspection wire

IN — Indicates location of inspection wire replacement, see "MECHANICALLY STABILIZED EMBANKMENT DETAILS NO. 3" sheet

Panel type designation, see "MECHANICALLY STABILIZED EMBANKMENT DETAILS NO. 1" sheet

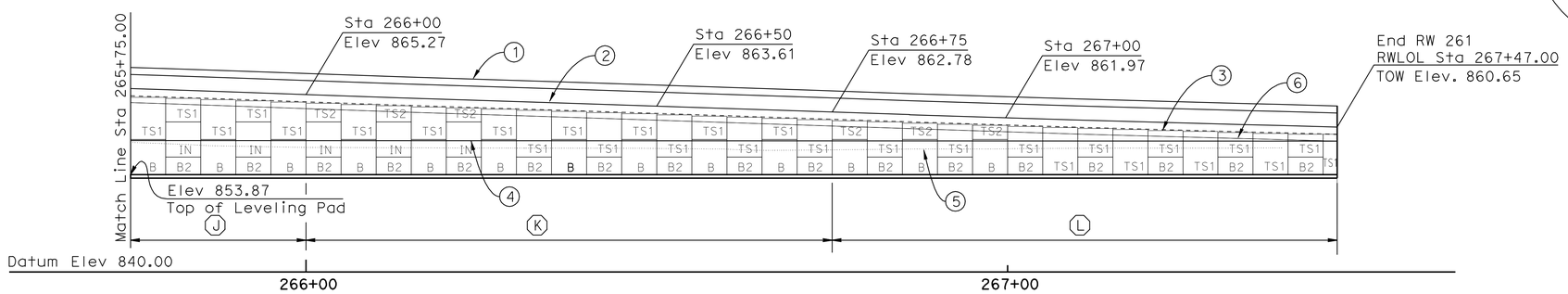

DEVELOPED MIRROR ELEVATION

1" = 10'

NOTES:

1. Contractor to field verify all utility locations prior to retaining wall construction.
2. For Typical Sections, see "General Plan No. 1" sheet.
3. For Architectural Treatment, see "Architectural Treatment Details" sheet
4. For utility information, see "Utility Plans".

SOIL REINFORCEMENT TABLE

	G	H	I	J	K	L
Design "H"	H=16.36 Max	H=13.83' Max	H=11.37' Max	H=12.26' Max	H=11.40' Max	H=8.91' Max
Base Width (BW)	BW = 11' Min	BW = 9' Min	BW = 8' Min	BW = 9' Min	BW = 8' Min	BW = 6' Min
Top level of Mesh: Levels Below:	2 @ W11 x W11 + 6" x 9" 2 @ W11 x W11 + 6" x 12" 2 @ W11 x W11 + 6" x 18"	2 @ W11 x W11 + 6" x 9" 2 @ W11 x W11 + 6" x 12" 1 @ W11 x W11 + 6" x 18"	2 @ W11 x W11 + 6" x 9" 2 @ W11 x W11 + 6" x 12"	2 @ W11 x W11 + 6" x 9" 2 @ W11 x W11 + 6" x 12" 1 @ W11 x W11 + 6" x 18"	2 @ W11 x W11 + 6" x 9" 2 @ W11 x W11 + 6" x 12"	3 @ W11 x W11 + 6" x 9"

MSE NOTES:

1. Mesh is indicated sequentially from top level of mesh to bottom level of mesh.
2. For limits of excavation & backfill, see "Mechanically Stabilized Embankment Details No. 6" sheet.
3. For Barrier Slab details, see "Mechanically Stabilized Embankment Details No. 4" sheet.
4. For panel details, see "Mechanically Stabilized Embankment Details No. 1" sheet.
5. For General Notes and wire mat details, see "Mechanically Stabilized Embankment Details No. 2" sheet.
6. For inspection wire details, see "Mechanically Stabilized Embankment Details No. 3" sheet.

LEGEND:

2 @ W11 x W11 + 6" x 9"

- Longitudinal wire spacing x Transverse wire spacing
- Longitudinal wire size x Transverse wire size
- Number of welded wire mats.

NOTE:
THE CONTRACTOR SHALL VERIFY ALL CONTROLLING FIELD DIMENSIONS BEFORE ORDERING OR FABRICATING ANY MATERIAL.

	BY	CHECKED
DESIGN	M. Vo	A. McPhee
DETAILS	Y. Tang	A. McPhee
QUANTITIES	A. McPhee	M. Vo

STATE OF CALIFORNIA
DEPARTMENT OF TRANSPORTATION

DIVISION OF ENGINEERING SERVICES
STRUCTURE DESIGN
DESIGN BRANCH 10

BRIDGE NO. 56E0064
POST MILE 17.85

RETAINING WALL NO. 261
STRUCTURE PLAN NO. 2

STRUCTURES DESIGN DETAIL SHEET (ENGLISH) (REV. 10/25/05)

ORIGINAL SCALE IN INCHES FOR REDUCED PLANS 0 1 2 3

CU 08
EA 448401

DISREGARD PRINTS BEARING EARLIER REVISION DATES

REVISION DATES: 2-11-10 2-24-10 4-27-10

SHEET 4 OF 17

FILE => 56e0064csp04.dgn

USERNAME => trstrk DATE PLOTTED => 30-APR-2011 TIME PLOTTED => 10:48

DIST	COUNTY	ROUTE	POST MILES TOTAL PROJECT	SHEET No	TOTAL SHEETS
08	Riv	91	15.6/21.6	1426	2028

REGISTERED CIVIL ENGINEER 11/12/10 DATE

4-25-11
PLANS APPROVAL DATE

REGISTERED PROFESSIONAL ENGINEER MINH THUONG VO No. C59297 Exp. 06-30-11 CIVIL STATE OF CALIFORNIA

The State of California or its officers or agents shall not be responsible for the accuracy or completeness of electronic copies of this plan sheet.

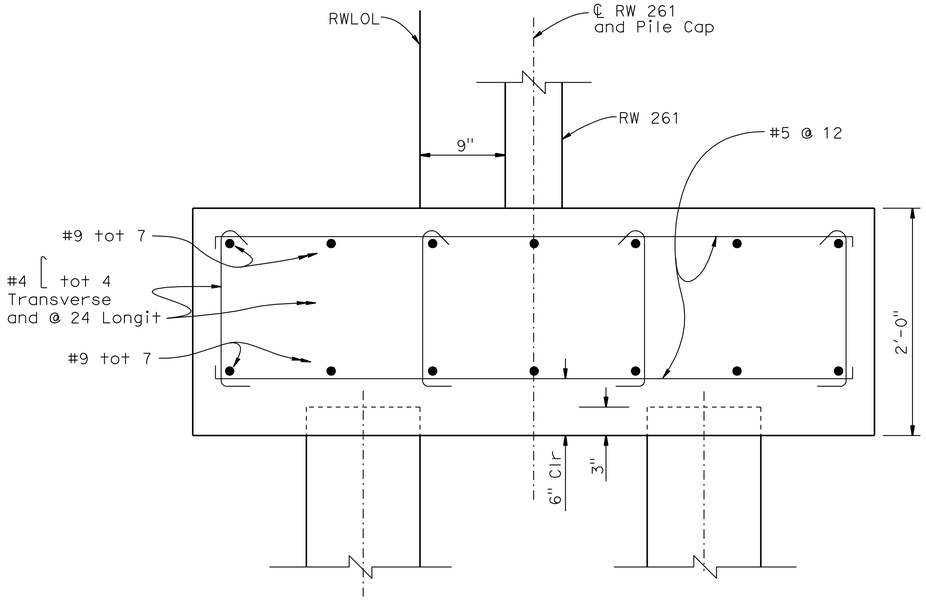

SECTION A-A

1½" = 1'-0"

PILE DATA TABLE

B2-5

Pile Type	Nominal Resistance		Design Tip Elevations (Ft)	Specified Tip Elevations (Ft)	Nominal Driving Resistance Req'd
	Compression	Tension			
Class 90 Alternative "X"	180 kips	0	826 (1)	826	180 kips

Note: Design tip elevation controlled by (1) compression.

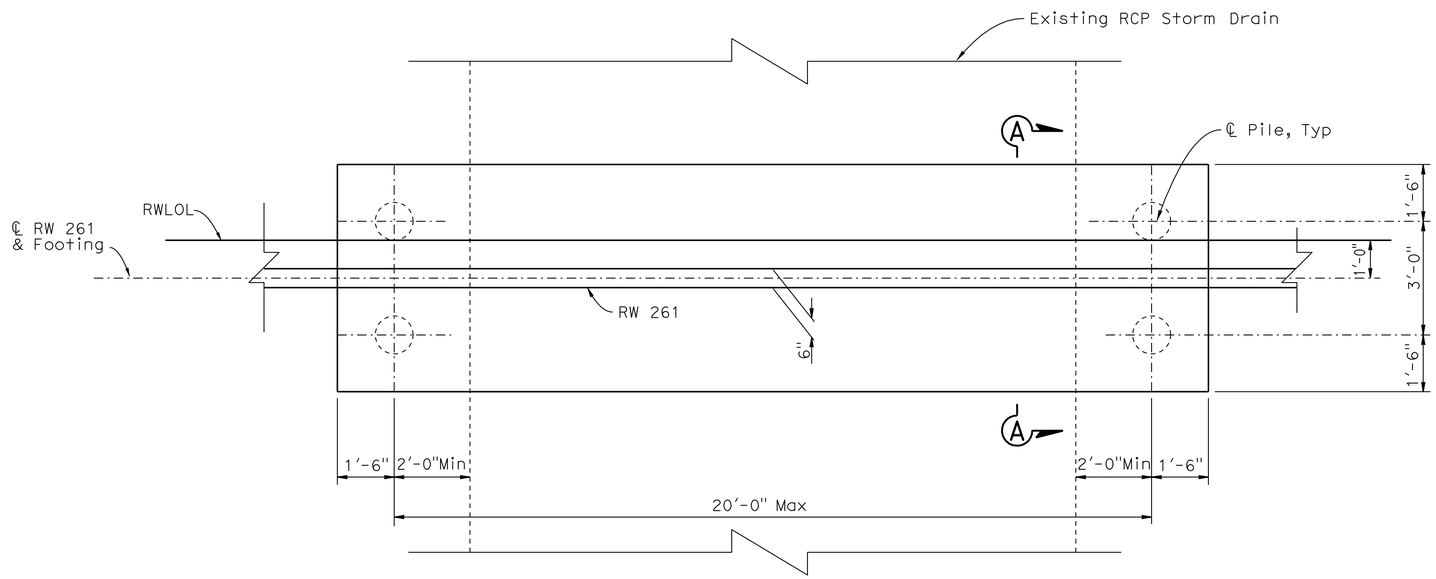

PILE CAP PLAN

½" = 1'-0"

NOTE:
THE CONTRACTOR SHALL VERIFY ALL CONTROLLING FIELD DIMENSIONS BEFORE ORDERING OR FABRICATING ANY MATERIAL.

	BY	CHECKED
DESIGN	M. Vo	A. McPhee
DETAILS	Y. Tang	A. McPhee
QUANTITIES	A. McPhee	M. Vo

STATE OF CALIFORNIA
DEPARTMENT OF TRANSPORTATION

DIVISION OF ENGINEERING SERVICES
STRUCTURE DESIGN
DESIGN BRANCH 10

BRIDGE NO. 56E0064
POST MILE 17.85

RETAINING WALL NO. 261
PILE CAP DETAILS NO. 1

STRUCTURES DESIGN DETAIL SHEET (ENGLISH) (REV. 10/25/05)

ORIGINAL SCALE IN INCHES FOR REDUCED PLANS 0 1 2 3

CU 08
EA 448401

DISREGARD PRINTS BEARING EARLIER REVISION DATES

REVISION DATES: 2-09-10 2-24-10 4-23-10 6-30-10

SHEET 5 OF 17

FILE => 56e0064ppdt05.dgn

USERNAME => trstrk DATE PLOTTED => 30-APR-2011 TIME PLOTTED => 10:49

DIST	COUNTY	ROUTE	POST MILES TOTAL PROJECT	SHEET No	TOTAL SHEETS
08	Riv	91	15.6/21.6	1427	2028

REGISTERED CIVIL ENGINEER 11/12/10 DATE

4-25-11
PLANS APPROVAL DATE

REGISTERED PROFESSIONAL ENGINEER MINH THUONG VO No. C59297 Exp. 06-30-11 CIVIL STATE OF CALIFORNIA

The State of California or its officers or agents shall not be responsible for the accuracy or completeness of electronic copies of this plan sheet.

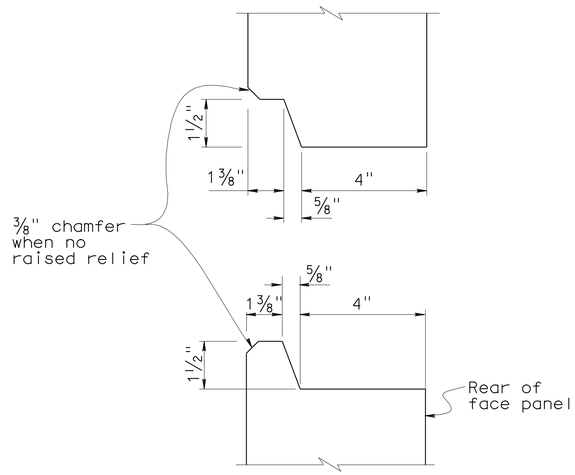

HORIZONTAL JOINT DETAIL
No Scale

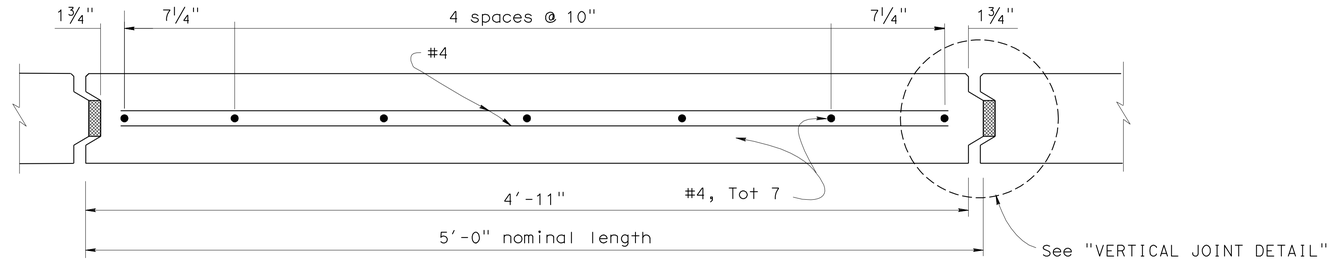

PLAN - FACE PANEL
No Scale

NOTES:

1. Architectural treatment not shown. Architectural surface extends beyond face of panel. See "Architectural Treatment Details" sheet.
2. Place reinforced elastomeric bearing pads in all of the panel joints between the panels. Place one in each vertical joint where the horizontal joint intersects it. Place two per panel in each horizontal joint.
   3/4" x 2 3/8" x 6" for vertical joints
   3/4" x 4" x 6" for horizontal joints.
3. Bond a strip of filter fabric, 1' - 0" wide, over the full length of all panel joints.

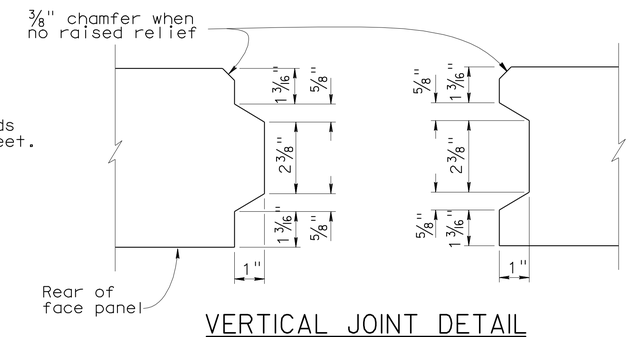

VERTICAL JOINT DETAIL
No Scale

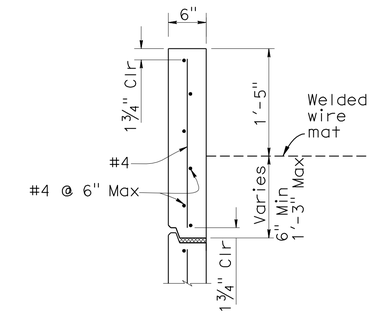

TOP PANEL (TYPE "TS2")
1" =1'-0"

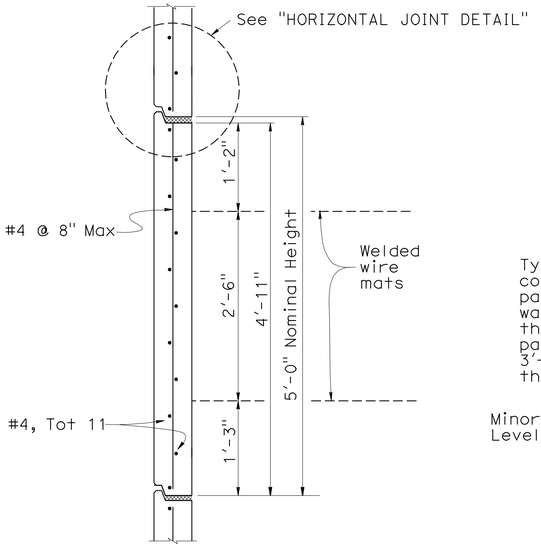

INTERMEDIATE PANEL (TYPE "IN")
1" = 1'-0"

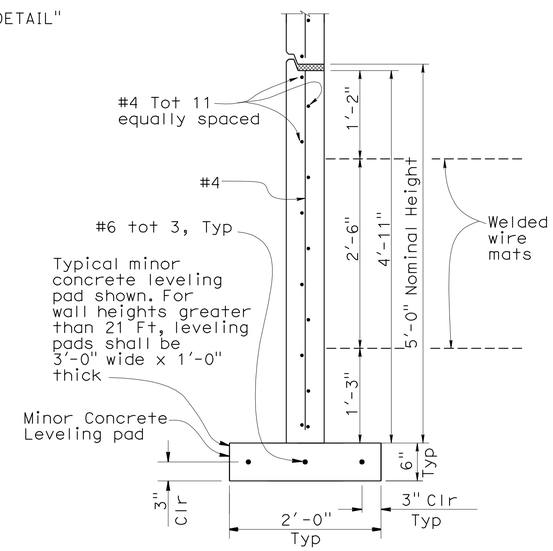

BOTTOM PANEL (TYPE "B")
1" = 1'-0"

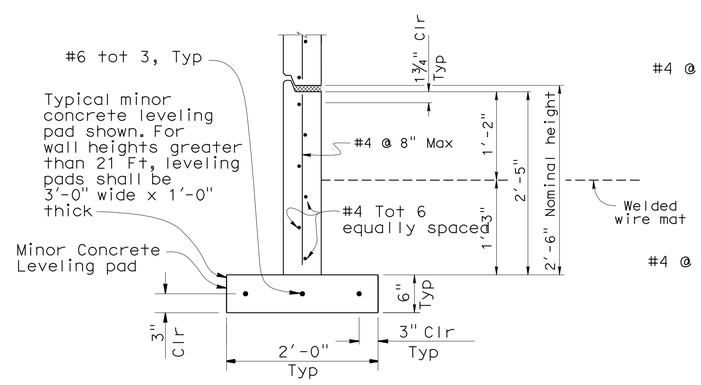

BOTTOM HALF PANEL (TYPE "B2")
1" = 1'-0"

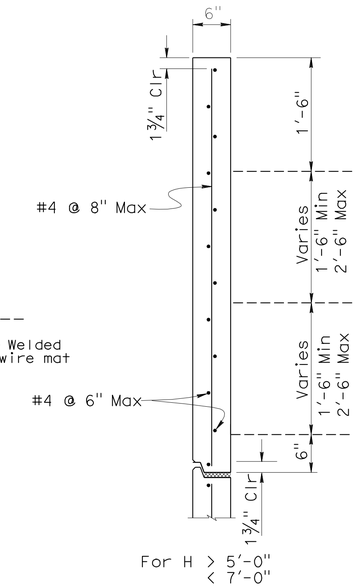

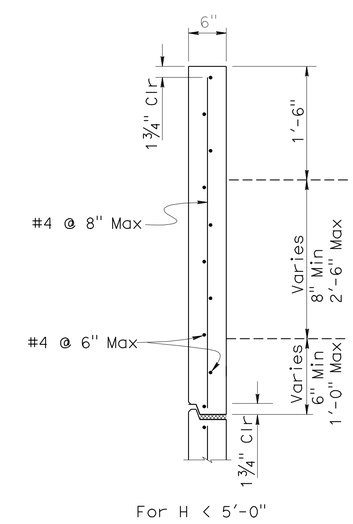

TOP PANEL (TYPE "TSI")
1" = 1'-0"

DESIGN	BY M. Vo	CHECKED A. McPhee	
DETAILS	BY Y. Tang	CHECKED A. McPhee	
QUANTITIES	BY A. McPhee	CHECKED M. Vo	

STATE OF CALIFORNIA
DEPARTMENT OF TRANSPORTATION

DIVISION OF ENGINEERING SERVICES
STRUCTURE DESIGN
DESIGN BRANCH 10

BRIDGE NO. 56E0064
POST MILE 17.85

RETAINING WALL NO. 261
MECHANICALLY STABILIZED EMBANKMENT
DETAILS NO. 1

STRUCTURES DESIGN DETAIL SHEET (ENGLISH) (REV. 10/25/05)

ORIGINAL SCALE IN INCHES FOR REDUCED PLANS 0 1 2 3

CU 08
EA 448401

DISREGARD PRINTS BEARING EARLIER REVISION DATES 2-09-10 T-16-10

REVISION DATES

SHEET 6 OF 17

FILE => 56e0064s_msedt06.dgn

USERNAME => trstrk DATE PLOTTED => 30-APR-2011 TIME PLOTTED => 10:49

DIST.	COUNTY	ROUTE	POST MILES TOTAL PROJECT	SHEET NO.	TOTAL SHEETS
08	Riv	91	15.6/21.6	1428	2028

REGISTERED ENGINEER - CIVIL

4-25-11

PLANS APPROVAL DATE

REGISTERED PROFESSIONAL ENGINEER MINH THUONG VO No. C59297 Exp. 06-30-11 CIVIL STATE OF CALIFORNIA

The State of California or its officers or agents shall not be responsible for the accuracy or completeness of electronic copies of this plan sheet.

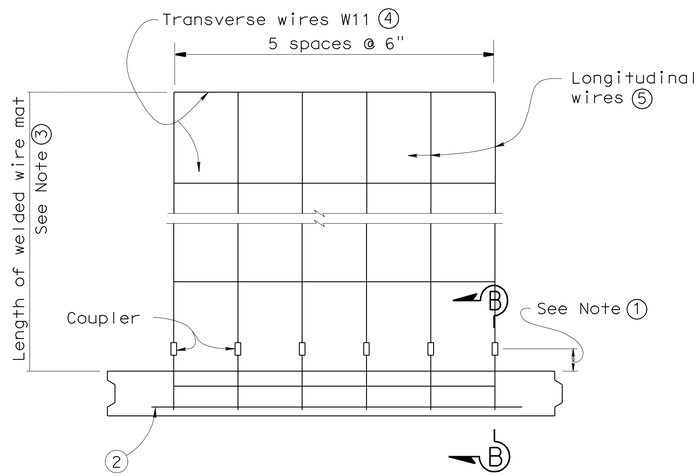

PLAN OF PANEL WITH WELDED WIRE MAT

No scale

GENERAL NOTES (MSE WALLS)

Live loading: Surcharge = 240 lb/ft^2

Soil parameters:

Internal design ϕ = 34°, γ = 120 lb/ft^3

External design ϕ(Backfill) = 34°, γ = 120 lb/ft^3

ϕ(Foundation) = 30°

Precast concrete panels:

f′c = 4,000 psi (Concrete compressive strength at 28 days)

fy = 60,000 psi (Yield strength of reinforcement)

Soil reinforcement:

Welded wire mats: fy = 65,000 psi (Yield strength)

Coupler: fy = 36,000 psi (Yield strength)

Corrosion rate = 1.1 mils/year

Reinforced concrete:

f′c = 3,600 psi, except as noted

(Concrete compressive strength at 28 days)

fy = 60,000 psi (Yield strength of reinforcement)

MSE = Mechanically stabilized embankment

Notes:

① Distance as required to permit coupler to be swaged.

② Place #4 bar, 3′ - 2" long, centered on connector mat, but not welded to it.

③ Length equals "Base width" of wall, except it shall not be less than 16′ for the top 2 levels of mats at the top of the wall.

④ All Transverse Wires size W11 at various spacings as shown elsewhere in plans.

⑤ All Longitudinal Wires at 6" spacing, of various sizes, as shown elsewhere in plans.

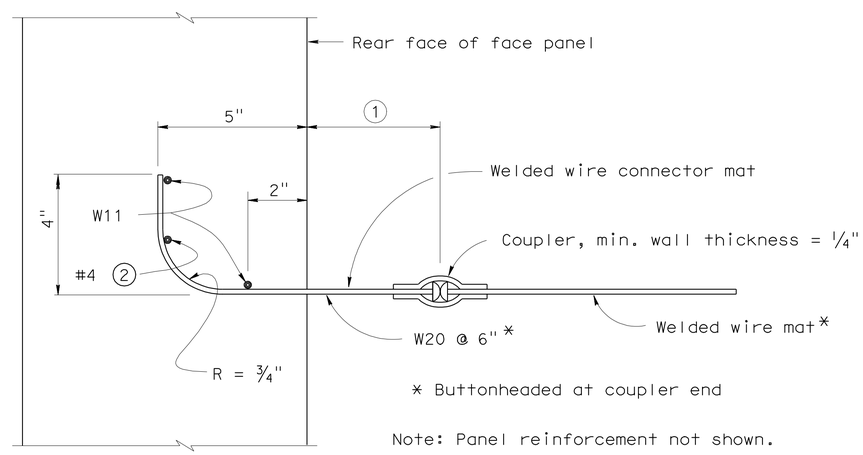

SECTION B-B

No scale

STANDARD DRAWING

FILE NO. xs13-020-2e

APPROVED BY K. GRISWELL RESPONSIBLE TECHNICAL SPECIALIST

APPROVAL DATE 5-6-08

RELEASED BY ROBERTO LACALLE RESPONSIBLE OFFICE CHIEF

RELEASE DATE 5-6-08

STATE OF CALIFORNIA DEPARTMENT OF TRANSPORTATION

DIVISION OF ENGINEERING SERVICES

BRIDGE NO. 56E0064

POST MILE 17.85

RETAINING WALL NO. 261

MECHANICALLY STABILIZED EMBANKMENT DETAILS NO. 2

DS OSD 2147A (ENGLISH STANDARD DRAWING "XS" BORDER REV. 01/11/08)

ORIGINAL SCALE IN INCHES FOR REDUCED PLANS 0 1 2 3

CU 08

EA 448401

DISREGARD PRINTS BEARING EARLIER REVISION DATES

REVISION DATES (PRELIMINARY STAGE ONLY) 2-09-10

SHEET 7 OF 17

USERNAME => trstrk

56e0064s_msedt07.dgn

DATE PLOTTED => 30-APR-2011 TIME PLOTTED => 10:49

DIST.	COUNTY	ROUTE	POST MILES TOTAL PROJECT	SHEET NO.	TOTAL SHEETS
08	Riv	91	15.6/21.6	1429	2028

REGISTERED ENGINEER - CIVIL

4-25-11

PLANS APPROVAL DATE

REGISTERED PROFESSIONAL ENGINEER MINH THUONG VO No. C59297 Exp. 06-30-11 CIVIL STATE OF CALIFORNIA

The State of California or its officers or agents shall not be responsible for the accuracy or completeness of electronic copies of this plan sheet.

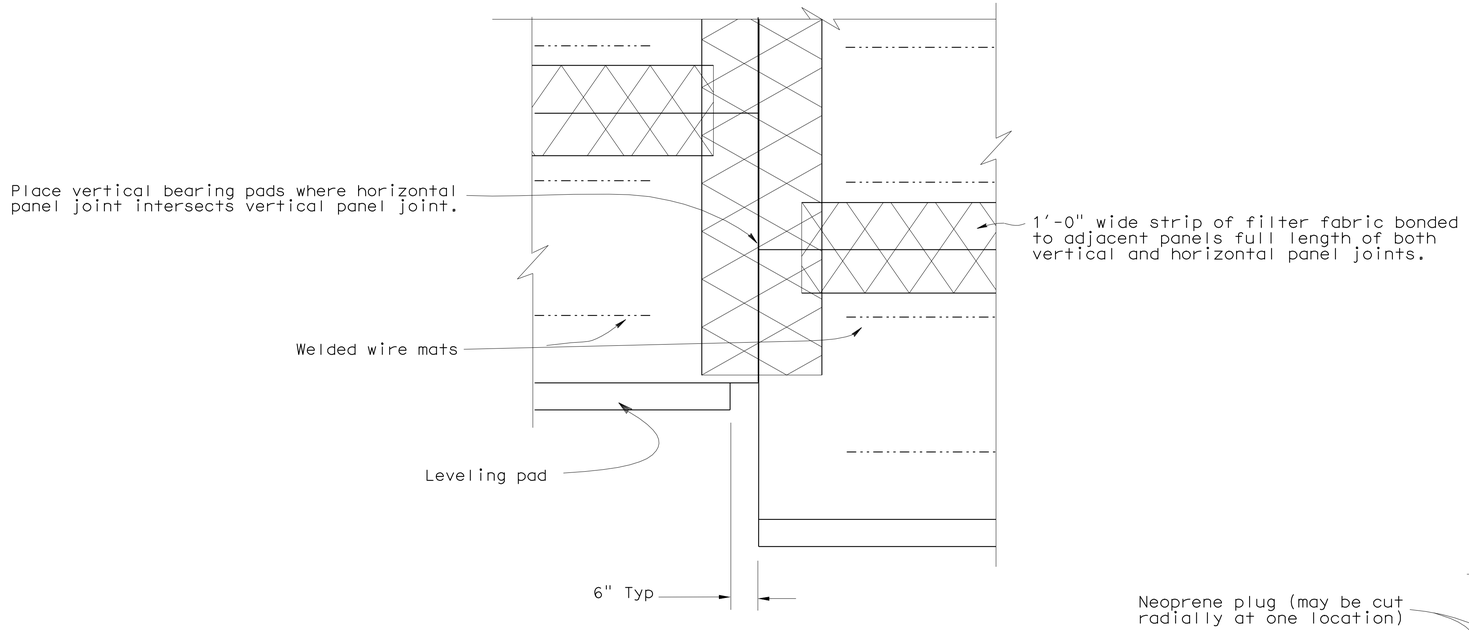

REAR ELEVATION

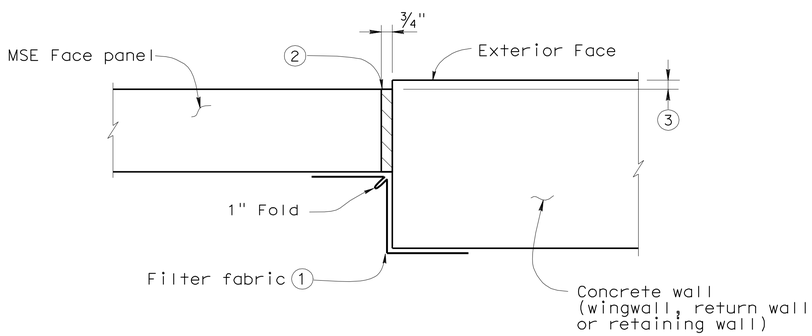

MSE FACE PANEL-TO-CONCRETE WALL JOINT DETAIL

LEGEND:

1. Bond a strip of filter fabric, 1'-6" wide, to back of MSE panels and the adjacent concrete wall for entire length of vertical joint.
2. Bond expansion joint material to the concrete wall.
3. Offset between face of MSE face panel and face of the concrete wall as dictated by location of layout lines shown elsewhere in Project Plans.

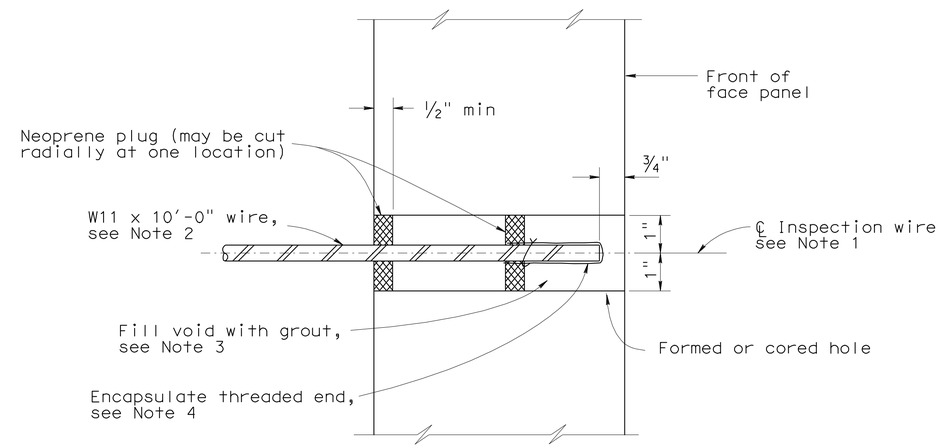

SECTION THRU INSPECTION WIRE

NOTES:

1. Center inspection wire in face panel.
2. Fabricate inspection wires from W11 wire representative of the welded wire mats, with 3/8" dia - 16 UNC threads for at least 1 1/2" of one end.
3. Place inspection wire horizontal and perpendicular to the wall panel prior to backfilling. After backfill placement to a level at least 2'-0" above the inspection wire, dry pack opening with 1000 to 1500 psi mortar. Trowel mortar smooth and flush with face of panel.
4. Encapsulate threaded end with corrosion inhibiting mastic, and secure round vinyl cover with nylon tie.

UNC = Unified coarse threads

STANDARD DRAWING

FILE NO. xs13-020-3e

APPROVED BY K. GRISWELL — RESPONSIBLE TECHNICAL SPECIALIST

APPROVAL DATE 5-6-08

RELEASED BY ROBERTO LACALLE — RESPONSIBLE OFFICE CHIEF

RELEASE DATE 5-6-08

STATE OF CALIFORNIA DEPARTMENT OF TRANSPORTATION

DIVISION OF ENGINEERING SERVICES

BRIDGE NO. 56E0064

POST MILE 17.85

RETAINING WALL NO. 261

MECHANICALLY STABILIZED EMBANKMENT

DETAILS NO. 3

DS OSD 2147A (ENGLISH STANDARD DRAWING "XS" BORDER REV. 01/11/08)

ORIGINAL SCALE IN INCHES FOR REDUCED PLANS 0 1 2 3

CU 08
EA 448401

DISREGARD PRINTS BEARING EARLIER REVISION DATES 2-09-10

REVISION DATES (PRELIMINARY STAGE ONLY)

SHEET 8 OF 17

USERNAME => trstrk

56e0064s_msedt08.dgn

DATE PLOTTED => 30-APR-2011 TIME PLOTTED => 10:49

DIST.	COUNTY	ROUTE	POST MILES TOTAL PROJECT	SHEET NO.	TOTAL SHEETS
08	Riv	91	15.6/21.6	1430	2028

REGISTERED ENGINEER - CIVIL

4-25-11

PLANS APPROVAL DATE

REGISTERED PROFESSIONAL ENGINEER MINH THUONG VO No. C59297 Exp. 06-30-11 CIVIL STATE OF CALIFORNIA

The State of California or its officers or agents shall not be responsible for the accuracy or completeness of electronic copies of this plan sheet.

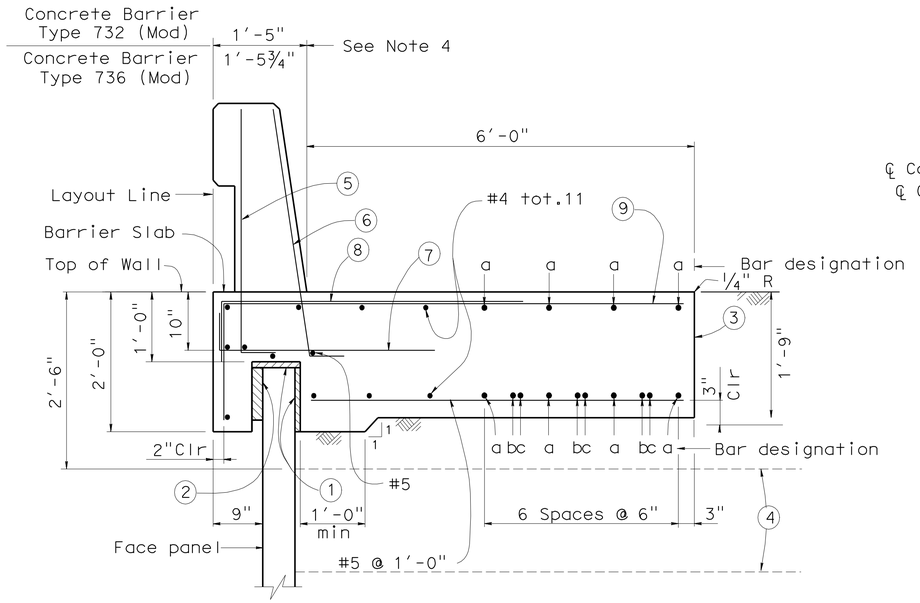

SECTION AT TOP OF WALL WITH BARRIER SLAB AND CONCRETE BARRIER

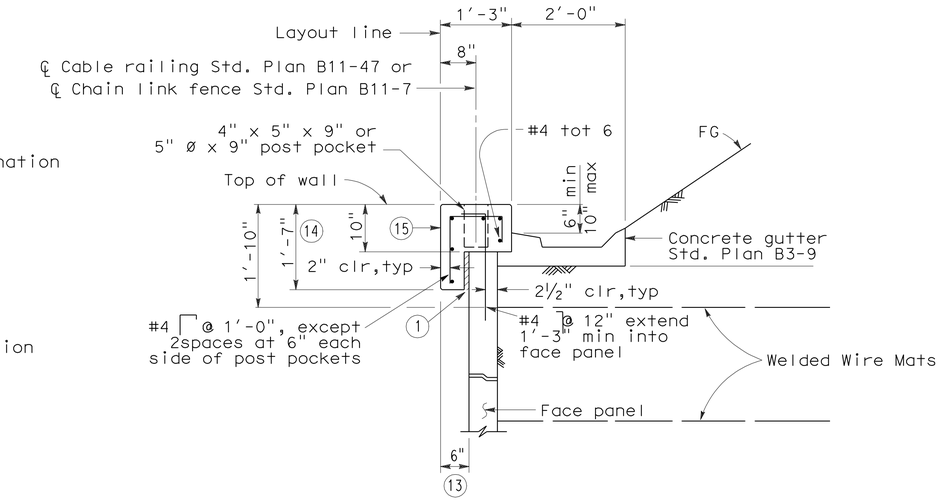

SECTION AT TOP OF WALL WITH COPING AND GUTTER

NOTES:

1. Clearance to reinforcing steel in concrete barrier to be 1".
2. Not all barrier reinforcement shown.
3. No expansion joints in concrete barrier or barrier slab within MSE wall limits.
4. Specific concrete barrier to be utilized as shown on typical section elsewhere in Project Plans.
5. Install cable railing or chain link fence when indicated in Project Plans.

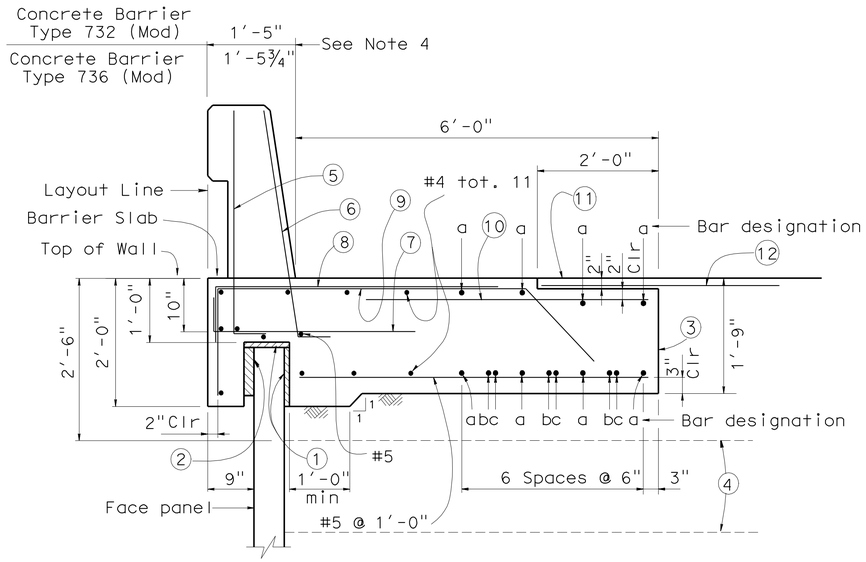

SECTION AT TOP OF WALL WITH BARRIER SLAB WITH PAVING NOTCH AND CONCRETE BARRIER

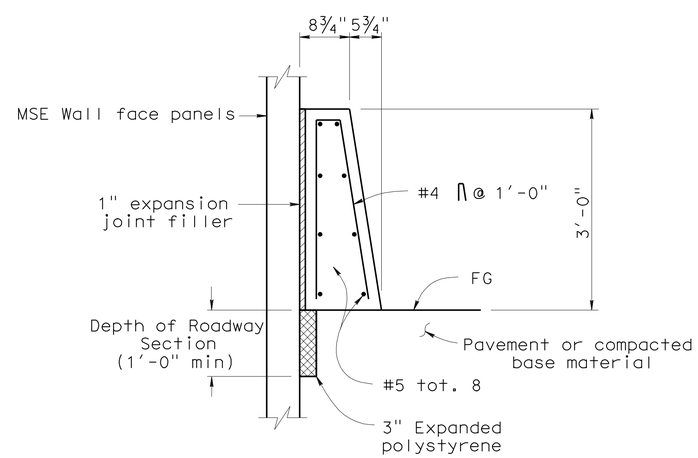

CONCRETE BARRIER TYPE 60D (MOD) AT FACE OF MSE WALL

LEGEND:

1. 1" Expanded polystyrene.
2. 2" Expanded polystyrene. Recess expanded polystyrene 2" into barrier slab.
3. Contact joint.
4. Welded Wire Mat Soil reinforcement.
5. #5 6¼" @ 1'-4" (To be in place prior to barrier slab concrete).
6. #5 6¼" @ 8" (To be in place prior to barrier slab concrete).
7. #5 6¼" 3'-4" @ 1'-0"
8. #5 4'-7" @ 1'-0" bundled with 9 bars.
9. #5 5'-0" 1'-3¾" @ 1'-0"
10. #5 X 1400 @ 1'-0"

    "a" bar = #6 continuous.
    "b" bar = #6 X 59'-0"
    "c" bar = #6 X 49'-2"
    Place "b" and "c" bars at beginning and ending ends of barrier slab.
11. AC Overlay on barrier slab (see Road Plans).
12. 4'-0" wide pavement reinforcing fabric.
13. Except 9" when coping and barrier slab occur along the top of the same wall.
14. Except 2'-0" when coping and barrier slab occur along the top of the same wall.
15. ½" expansion joints in coping at every fourth panel joint.

RETAINING WALL NO. 261

MECHANICALLY STABILIZED EMBANKMENT

DETAILS NO. 4

STANDARD DRAWING

FILE NO. xs13-020-4e

APPROVED BY K. GRISWELL, RESPONSIBLE TECHNICAL SPECIALIST — APPROVAL DATE 5-6-08

RELEASED BY ROBERTO LACALLE, RESPONSIBLE OFFICE CHIEF — RELEASE DATE 5-6-08

STATE OF CALIFORNIA DEPARTMENT OF TRANSPORTATION

DIVISION OF ENGINEERING SERVICES

BRIDGE NO. 56E0064

POST MILE 17.85

CU 08
EA 448401

DISREGARD PRINTS BEARING EARLIER REVISION DATES — REVISION DATES (PRELIMINARY STAGE ONLY) 2-09-10 4-28-10 7-16-10

SHEET 9 OF 17

DS OSD 2147A (ENGLISH STANDARD DRAWING "XS" BORDER REV. 01/11/08)

ORIGINAL SCALE IN INCHES FOR REDUCED PLANS 0 1 2 3

USERNAME => trstrk

56e0064s_msedt09.dgn

DATE PLOTTED => 30-APR-2011 TIME PLOTTED => 10:49

DIST.	COUNTY	ROUTE	POST MILES TOTAL PROJECT	SHEET NO.	TOTAL SHEETS
08	Riv	91	15.6/21.6	1431	2028

11/12/10
REGISTERED ENGINEER - CIVIL

4-25-11
PLANS APPROVAL DATE

REGISTERED PROFESSIONAL ENGINEER MINH THUONG VO No. C59297 Exp. 06-30-11 CIVIL STATE OF CALIFORNIA

The State of California or its officers or agents shall not be responsible for the accuracy or completeness of electronic copies of this plan sheet.

NOTES:

1. Low end of subgrade drain shown, at high end install cap at end of ¾" slotted pipe. Subgrade drain located at end of structure approach slab, see "Subgrade Drain Detail".
2. Not all barrier reinforcement shown.
3. Outlet details shown elsewhere in Project Plans.
4. At acute corners of approach slab, bend reinforcement as required to clear expansion joint.
5. Specific concrete barrier to be utilized as shown on typical section elsewhere in Project Plans.

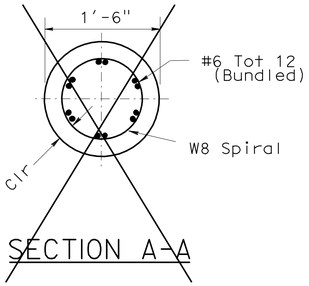

1 SECTION A-A

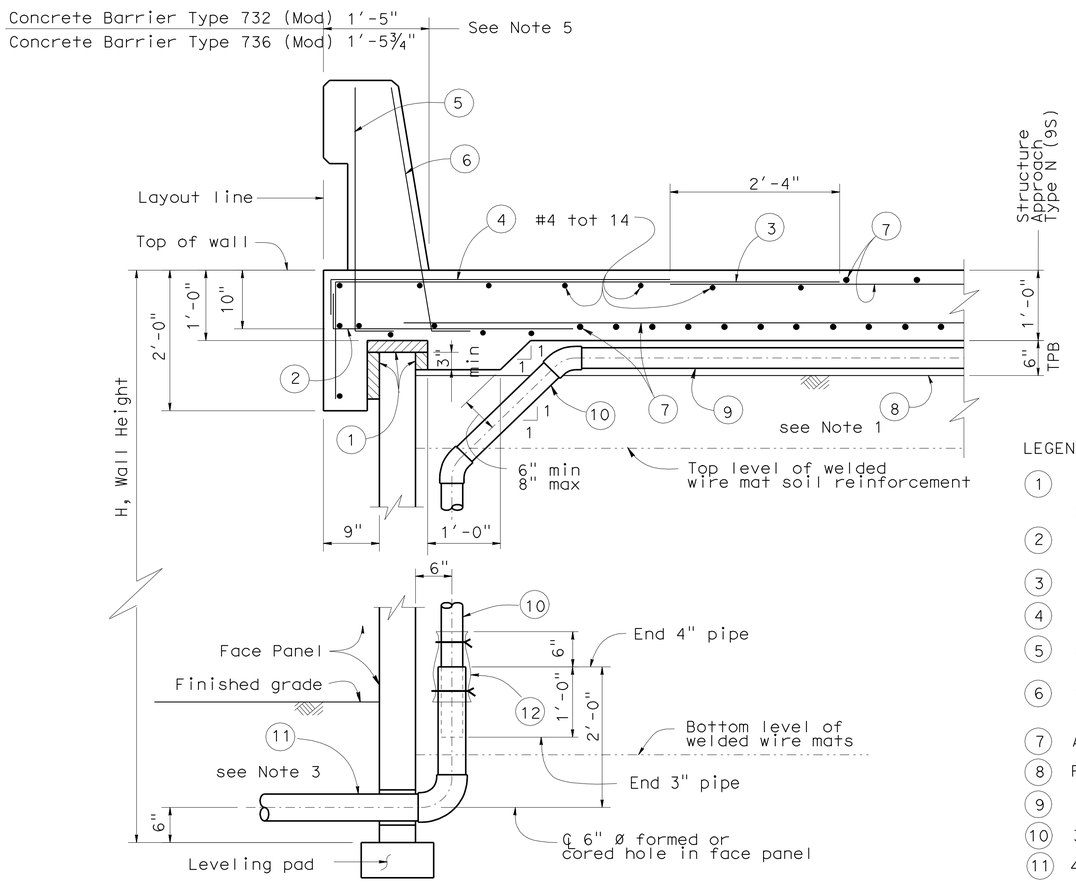

SECTION AT TOP OF WALL WITH STRUCTURE APPROACH SLAB AND CONCRETE BARRIER

2

LEGEND:

1. 2" Expanded polystyrene recessed 2" into barrier slab at front of MSE face panel.
2. #5 6¼" 3'-4" @ 1'-0"
3. #5 6'-10⅝" @ 1'-0"
4. #5 4'-7" @ 1'-0" bundle with 3 bars.
5. #5 L @ 1'-4" (To be in place prior to 6¼" approach slab concrete).
6. #5 L @ 8" (To be in place prior to 6¼" approach slab concrete).
7. Approach slab reinforcement.
8. Filter fabric.
9. 3" Plastic pipe (slotted).
10. 3" Plastic pipe and fittings (unslotted).
11. 4" Sch 80 PVC outlet pipe and fittings (unslotted).
12. 1'-0" wide x 2'-0" filter fabric wrapped around pipe and secured with nylon ties.
13. 1" Expanded polystyrene.
14. Five elastomeric bearing pads ¾" x 4" x 6" bonded to top of MSE face panel.
15. 0.5" Expanded polystyrene.

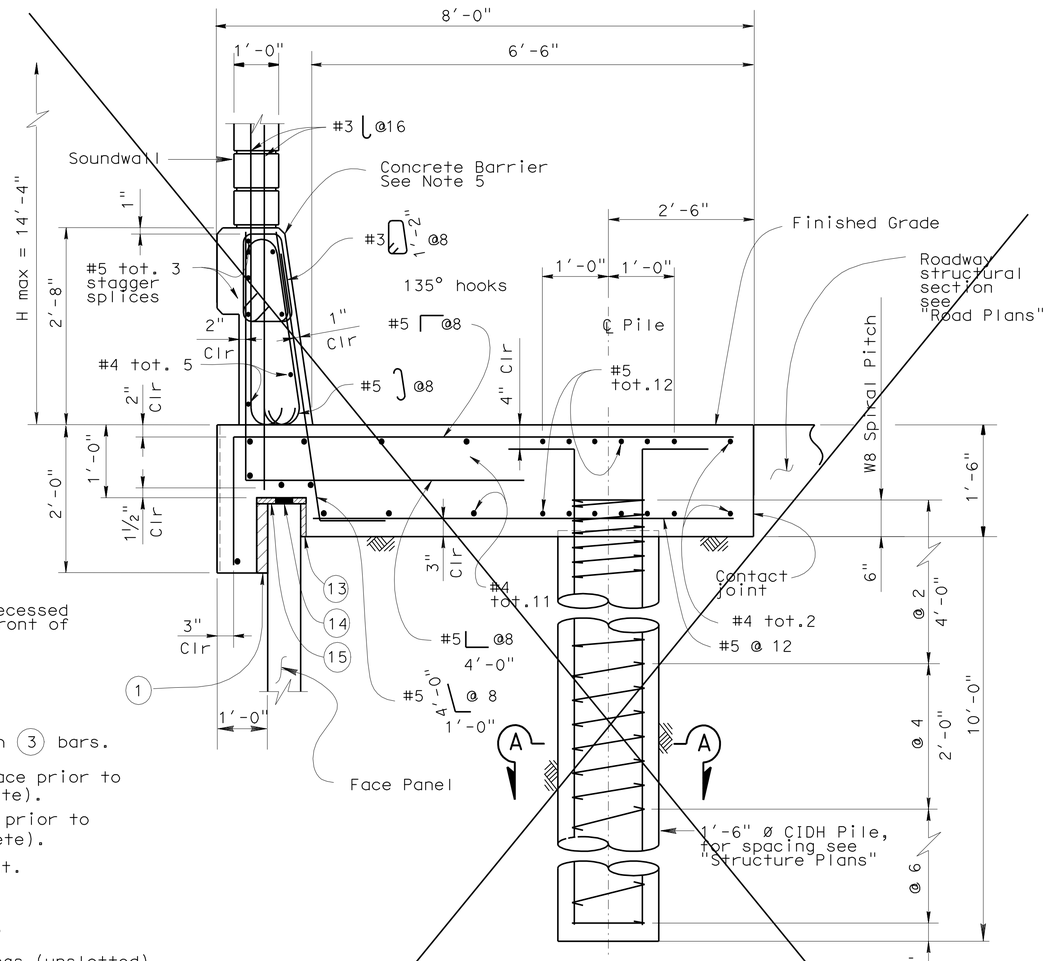

1 SECTION AT TOP OF WALL WITH SOUNDWALL AND CONCRETE BARRIER

STANDARD DRAWING

FILE NO. xs13-020-5e

APPROVED BY K. GRISWELL — RESPONSIBLE TECHNICAL SPECIALIST
APPROVAL DATE 5-6-08

RELEASED BY ROBERTO LACALLE — RESPONSIBLE OFFICE CHIEF
RELEASE DATE 5-6-08

1 Detail not used
2 Notes not used

STATE OF CALIFORNIA DEPARTMENT OF TRANSPORTATION

DIVISION OF ENGINEERING SERVICES

BRIDGE NO. 56E0064
POST MILE 17.85

RETAINING WALL NO. 261
MECHANICALLY STABILIZED EMBANKMENT
DETAIL NO. 5

DS OSD 2147A (ENGLISH STANDARD DRAWING "XS" BORDER REV. 01/11/08)

ORIGINAL SCALE IN INCHES FOR REDUCED PLANS 0 1 2 3

CU 08
EA 448401

DISREGARD PRINTS BEARING EARLIER REVISION DATES

REVISION DATES (PRELIMINARY STAGE ONLY): 2-09-10 2-24-10 4-28-10 7-01-10

SHEET 10 OF 17

USERNAME => trstrk

56e0064s_msedt10.dgn

DATE PLOTTED => 30-APR-2011 TIME PLOTTED => 10:50

DIST.	COUNTY	ROUTE	POST MILES TOTAL PROJECT	SHEET NO.	TOTAL SHEETS
08	Riv	91	15.6/21.6	1432	2028

REGISTERED ENGINEER - CIVIL

4-25-11
PLANS APPROVAL DATE

REGISTERED PROFESSIONAL ENGINEER MINH THUONG VO No. C59297 Exp. 06-30-11 CIVIL STATE OF CALIFORNIA

The State of California or its officers or agents shall not be responsible for the accuracy or completeness of electronic copies of this plan sheet.

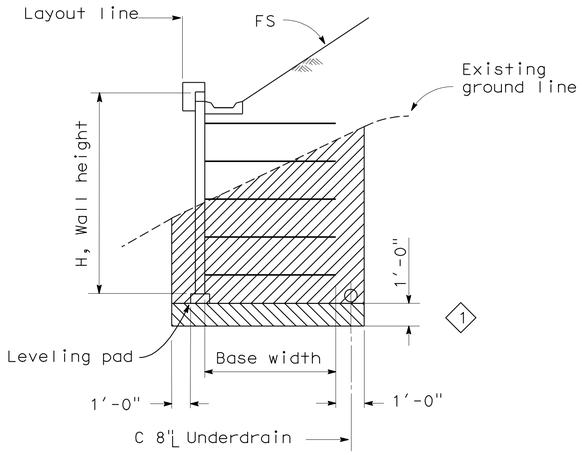

LIMITS OF EXCAVATION
No Scale

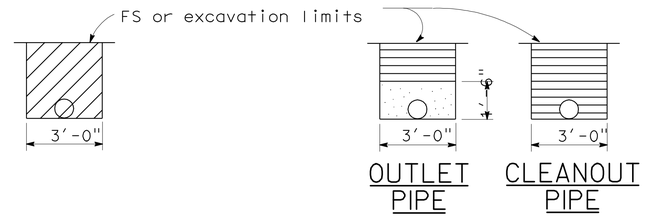

EXCAVATION BACKFILL

OUTLET OR CLEANOUT PIPE FOR UNDERDRAIN
No Scale

ABBREVIATIONS

OG	Original ground
FS	Planned finished surface
GP	Planned grading plane

LEGEND

	Limits of structure excavation
	Limits of structure backfill
	Limits of permeable material
1	Limits of structure overexcavation

NOTES:

1. Limits to FS except to GP when in roadway section.
2. Locate 8" perforated underdrain below bottom level of welded wire mats.
3. Maximum spacing of outlet pipes is 200 ft.
4. At sags in profile of underdrain, install outlet pipe for each direction of flow.

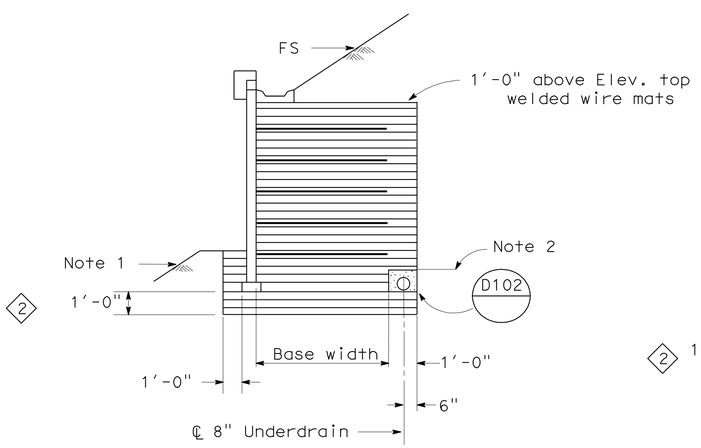

SLOPING FINISHED SURFACE

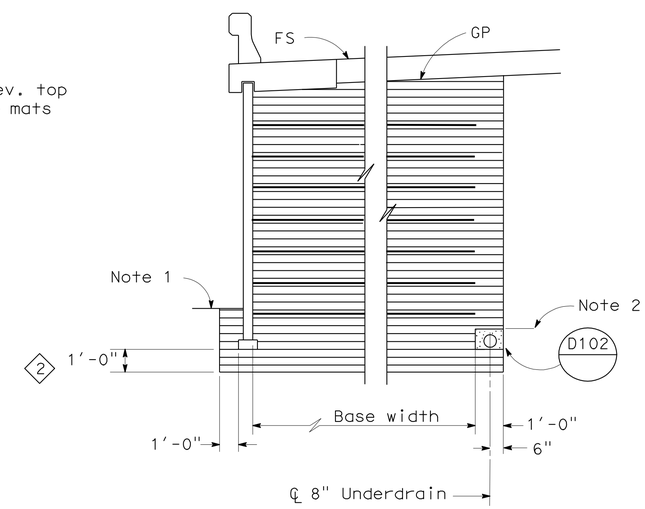

ROADWAY SECTION WITH BASE WIDTH 16' OR GREATER

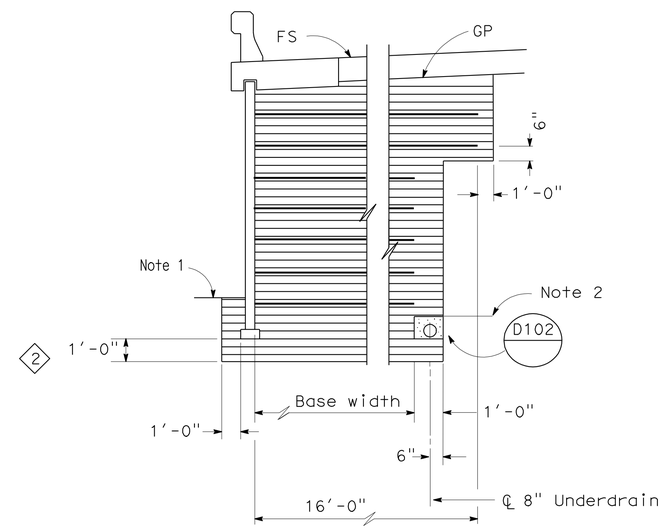

ROADWAY SECTION WITH BASE WIDTH LESS THAN 16'

LIMITS OF BACKFILL
No Scale

STANDARD DRAWING

FILE NO. xs13-020-6e

APPROVED BY K. GRISWELL
RESPONSIBLE TECHNICAL SPECIALIST
APPROVAL DATE 5-6-08

RELEASED BY ROBERTO LACALLE
RESPONSIBLE OFFICE CHIEF
RELEASE DATE 5-6-08

1 Add Limits of Overexcavation
2 Add Limits of Backfill

STATE OF CALIFORNIA
DEPARTMENT OF TRANSPORTATION

DIVISION OF ENGINEERING SERVICES

BRIDGE NO. 56E0064
POST MILE 17.85

RETAINING WALL NO. 261
MECHANICALLY STABILIZED EMBANKMENT
DETAILS NO. 6

DS OSD 2147A (ENGLISH STANDARD DRAWING "XS" BORDER REV. 01/11/08)

ORIGINAL SCALE IN INCHES FOR REDUCED PLANS 0 1 2 3

CU 08
EA 448401

DISREGARD PRINTS BEARING EARLIER REVISION DATES

REVISION DATES (PRELIMINARY STAGE ONLY) 2-09-10 7-08-10 11-03-10

SHEET 11 OF 17

USERNAME => trstrk

56e0064s_msedt11.dgn

DATE PLOTTED => 30-APR-2011 TIME PLOTTED => 10:50

Dist	COUNTY	ROUTE	POST MILES TOTAL PROJECT	SHEET No.	TOTAL SHEETS
08	Riv	91	15.6/21.6	1433	2028

LICENSED LANDSCAPE ARCHITECT

4-25-11
PLANS APPROVAL DATE

LICENSED LANDSCAPE ARCHITECT
Matthew Perry Hall No. 4393
Signature
10/31/2011
Renewal Date
11/12/2010
Date
STATE OF CALIFORNIA

THE STATE OF CALIFORNIA OR ITS OFFICERS OR AGENTS SHALL NOT BE RESPONSIBLE FOR THE ACCURACY OR COMPLETENESS OF SCANNED COPIES OF THIS PLAN SHEET.

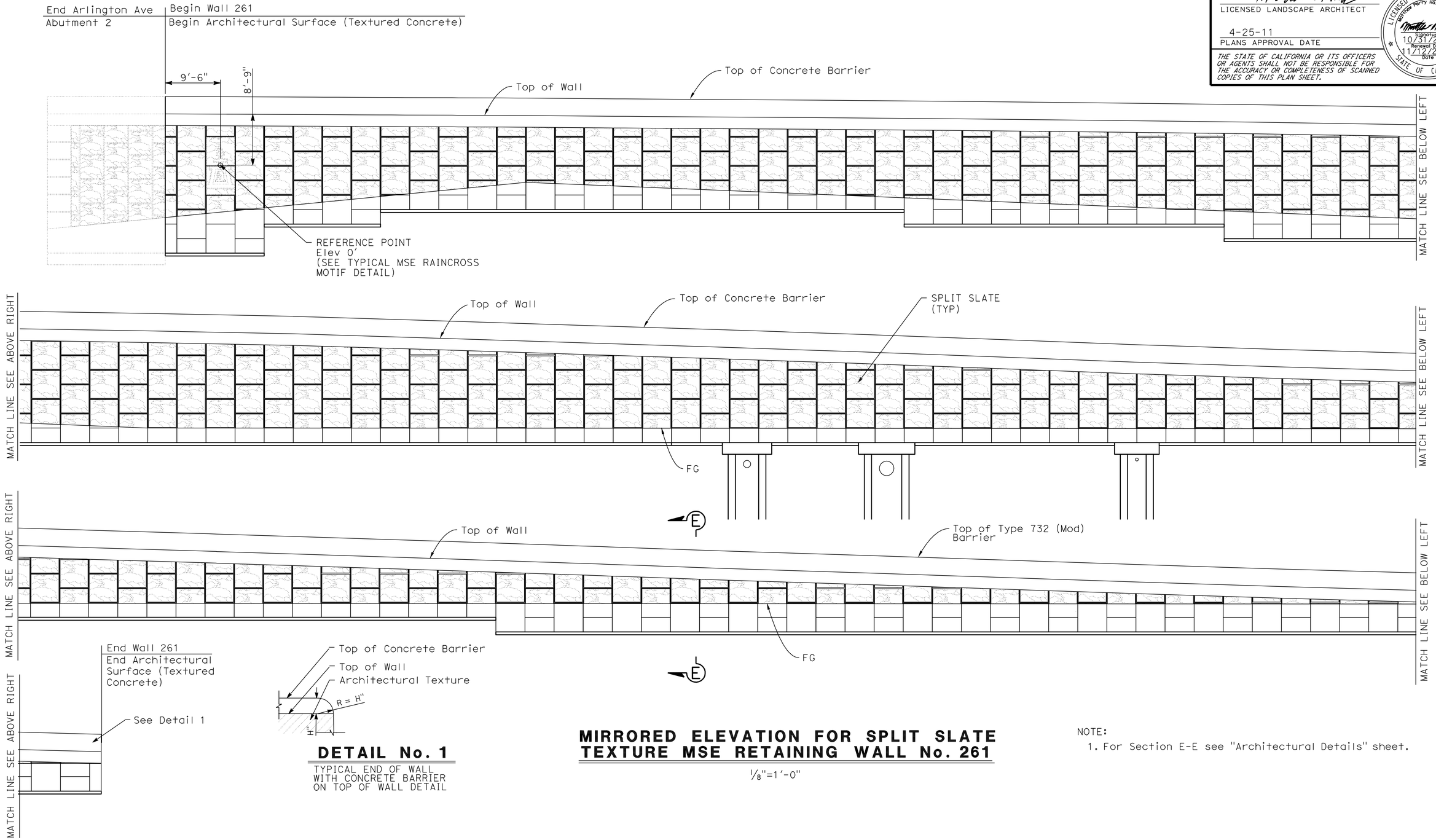

DETAIL No. 1

TYPICAL END OF WALL WITH CONCRETE BARRIER ON TOP OF WALL DETAIL

MIRRORED ELEVATION FOR SPLIT SLATE TEXTURE MSE RETAINING WALL No. 261

1/8"=1'-0"

NOTE:

1. For Section E-E see "Architectural Details" sheet.

DESIGN	BY MATTHEW HALL	CHECKED MIRIAM BISHOP	
DETAILS	BY Y. Tang	CHECKED MIRIAM BISHOP	
QUANTITIES	BY A. McPhee	CHECKED M. Vo	

STATE OF CALIFORNIA
DEPARTMENT OF TRANSPORTATION

DIVISION OF ENGINEERING SERVICES
STRUCTURE DESIGN
DESIGN BRANCH 10

BRIDGE NO. 56E0064
POST MILE 17.85

RETAINING WALL NO. 261
ARCHITECTURAL SURFACE

STRUCTURES DESIGN DETAIL SHEET (ENGLISH) (REV. 10/25/05)

ORIGINAL SCALE IN INCHES FOR REDUCED PLANS 0 1 2 3

CU 08
EA 448401

DISREGARD PRINTS BEARING EARLIER REVISION DATES 8-11-10

REVISION DATES

SHEET 12 OF 17

FILE => 56e0064sars12.dgn

USERNAME => trstrk DATE PLOTTED => 30-APR-2011 TIME PLOTTED => 10:50

Dist	COUNTY	ROUTE	POST MILES TOTAL PROJECT	SHEET No.	TOTAL SHEETS
08	Riv	91	15.6/21.6	1434	2028

LICENSED LANDSCAPE ARCHITECT

4-25-11
PLANS APPROVAL DATE

LICENSED LANDSCAPE ARCHITECT Matthew Perry Hall No. 4562 Signature 10/31/2011 Renewal Date 11/12/2010 Date STATE OF CALIFORNIA

THE STATE OF CALIFORNIA OR ITS OFFICERS OR AGENTS SHALL NOT BE RESPONSIBLE FOR THE ACCURACY OR COMPLETENESS OF SCANNED COPIES OF THIS PLAN SHEET.

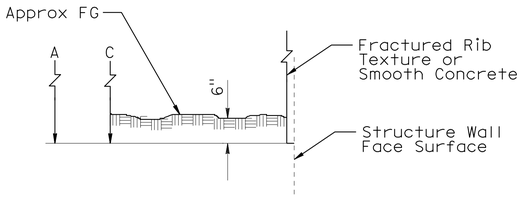

FINISH GROUND DETAIL
TYPICAL DETAIL AT FINISH GRADE

No Scale

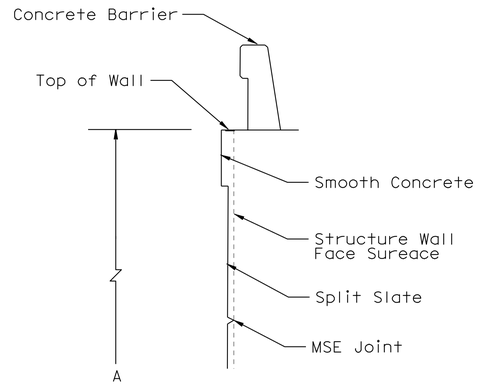

TOP OF WALL DETAIL
TYPICAL WITH CONCRETE BARRIER

No Scale

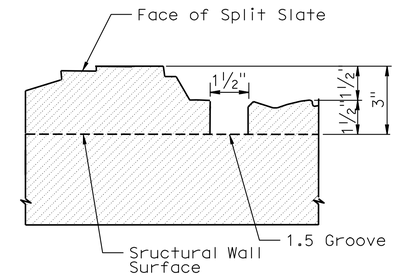

TYPICAL SPLIT SLATE TEXTURE

NO SCALE

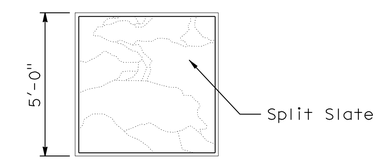

PANEL 2

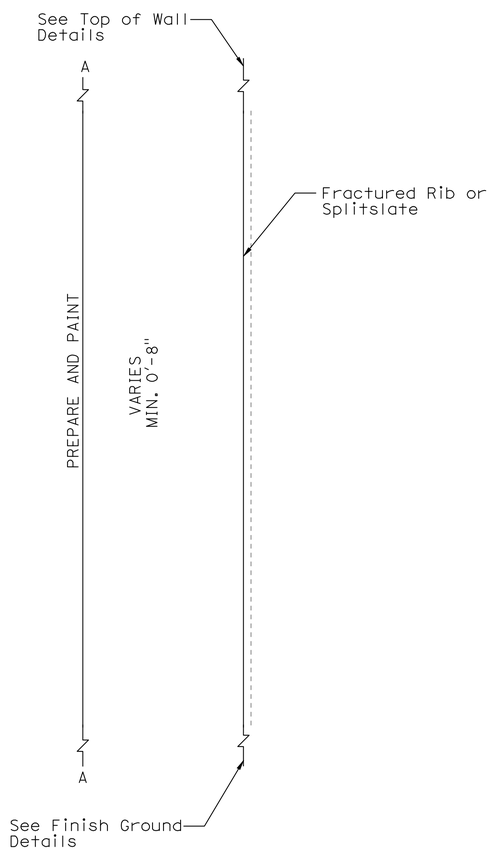

SECTION E-E

No Scale

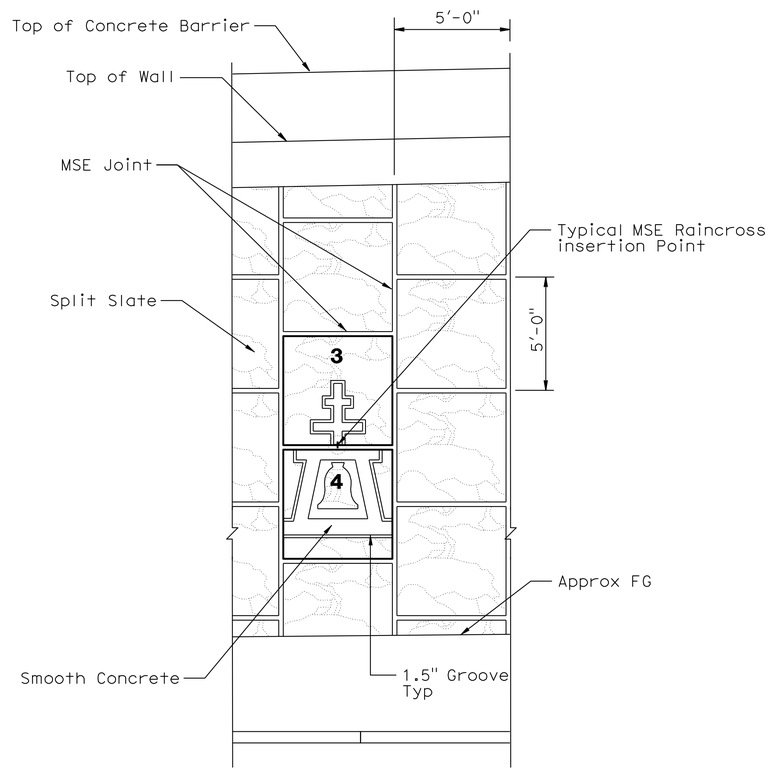

TYPICAL ARCHITECTURAL SURFACE ELEVATION FOR MECHANICALLY STABILIZED EMBANKMENT (MSE) WALLS

No Scale

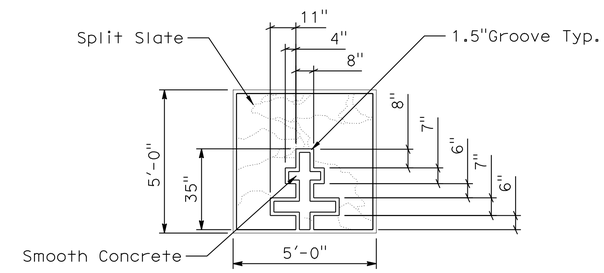

PANEL 3

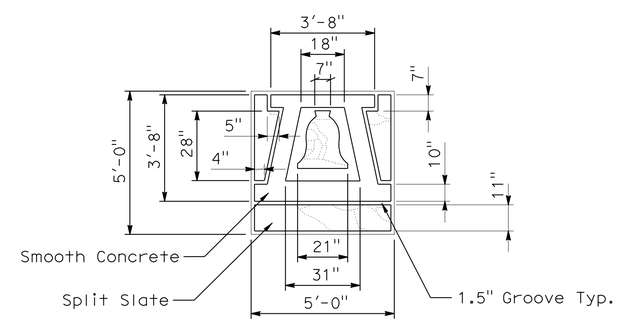

PANEL 4

ARCHITECTURAL SURFACE FOR TYPICAL MECHANICALLY STABILIZED EMBANKMENT (MSE) PANELS

No Scale

DESIGN	BY MATTHEW HALL	CHECKED MIRIAM BISHOP	
DETAILS	BY Y. Tang	CHECKED MIRIAM BISHOP	
QUANTITIES	BY A. McPhee	CHECKED M. Vo	

STATE OF CALIFORNIA
DEPARTMENT OF TRANSPORTATION

DIVISION OF ENGINEERING SERVICES
STRUCTURE DESIGN
DESIGN BRANCH 10

BRIDGE NO. 56E0064
POST MILE 17.85

RETAINING WALL NO. 261
ARCHITECTURAL DETAILS

STRUCTURES DESIGN DETAIL SHEET (ENGLISH) (REV. 10/25/05)

ORIGINAL SCALE IN INCHES FOR REDUCED PLANS 0 1 2 3

CU 08
EA 448401

DISREGARD PRINTS BEARING EARLIER REVISION DATES

REVISION DATES: 8-16-10 9-08-10

SHEET 13 OF 17

FILE => 56e0064sarsdt13.dgn

USERNAME => trstrk DATE PLOTTED => 30-APR-2011 TIME PLOTTED => 10:50

DIST	COUNTY	ROUTE	POST MILES TOTAL PROJECT	SHEET No	TOTAL SHEETS
08	Riv	91	15.6/21.6	1435	2028

GEOTECHNICAL PROFESSIONAL — DATE 11/3/10

4-25-11
PLANS APPROVAL DATE

REGISTERED PROFESSIONAL ENGINEER — FARID MOTAMED — No. 2738 — Exp. 6-30-11 — GEOTECHNICAL — STATE OF CALIFORNIA

The State of California or its officers or agents shall not be responsible for the accuracy or completeness of electronic copies of this plan sheet.

California Department of Transportation
5900 Folsom Boulevard
Sacramento, CA 95819

URS Corporation
2020 East First Street, Suite 400
Santa Ana, CA 92705

GROUP SYMBOLS AND NAMES

Graphic / Symbol	Group Names	Graphic / Symbol	Group Names
GW	Well-graded GRAVEL Well-graded GRAVEL with SAND	CL	Lean CLAY Lean CLAY with SAND Lean CLAY with GRAVEL SANDY lean CLAY SANDY lean CLAY with GRAVEL GRAVELLY lean CLAY GRAVELLY lean CLAY with SAND
GP	Poorly graded GRAVEL Poorly graded GRAVEL with SAND		
GW-GM	Well-graded GRAVEL with SILT Well-graded GRAVEL with SILT and SAND	CL-ML	SILTY CLAY SILTY CLAY with SAND SILTY CLAY with GRAVEL SANDY SILTY CLAY SANDY SILTY CLAY with GRAVEL GRAVELLY SILTY CLAY GRAVELLY SILTY CLAY with SAND
GW-GC	Well-graded GRAVEL with CLAY (or SILTY CLAY) Well-graded GRAVEL with CLAY and SAND (or SILTY CLAY and SAND)		
GP-GM	Poorly graded GRAVEL with SILT Poorly graded GRAVEL with SILT and SAND	ML	SILT SILT with SAND SILT with GRAVEL SANDY SILT SANDY SILT with GRAVEL GRAVELLY SILT GRAVELLY SILT with SAND
GP-GC	Poorly graded GRAVEL with CLAY (or SILTY CLAY) Poorly graded GRAVEL with CLAY and SAND (or SILTY CLAY and SAND)		
GM	SILTY GRAVEL SILTY GRAVEL with SAND	OL	ORGANIC lean CLAY ORGANIC lean CLAY with SAND ORGANIC lean CLAY with GRAVEL SANDY ORGANIC lean CLAY SANDY ORGANIC lean CLAY with GRAVEL GRAVELLY ORGANIC lean CLAY GRAVELLY ORGANIC lean CLAY with SAND
GC	CLAYEY GRAVEL CLAYEY GRAVEL with SAND		
GC-GM	SILTY, CLAYEY GRAVEL SILTY, CLAYEY GRAVEL with SAND	OL	ORGANIC SILT ORGANIC SILT with SAND ORGANIC SILT with GRAVEL SANDY ORGANIC SILT SANDY ORGANIC SILT with GRAVEL GRAVELLY ORGANIC SILT GRAVELLY ORGANIC SILT with SAND
SW	Well-graded SAND Well-graded SAND with GRAVEL		
SP	Poorly graded SAND Poorly graded SAND with GRAVEL	CH	Fat CLAY Fat CLAY with SAND Fat CLAY with GRAVEL SANDY fat CLAY SANDY fat CLAY with GRAVEL GRAVELLY fat CLAY GRAVELLY fat CLAY with SAND
SW-SM	Well-graded SAND with SILT Well-graded SAND with SILT and GRAVEL		
SW-SC	Well-graded SAND with CLAY (or SILTY CLAY) Well-graded SAND with CLAY and GRAVEL (or SILTY CLAY and GRAVEL)	MH	Elastic SILT Elastic SILT with SAND Elastic SILT with GRAVEL SANDY elastic SILT SANDY elastic SILT with GRAVEL GRAVELLY elastic SILT GRAVELLY elastic SILT with SAND
SP-SM	Poorly graded SAND with SILT Poorly graded SAND with SILT and GRAVEL		
SP-SC	Poorly graded SAND with CLAY (or SILTY CLAY) Poorly graded SAND with CLAY and GRAVEL (or SILTY CLAY and GRAVEL)	OH	ORGANIC fat CLAY ORGANIC fat CLAY with SAND ORGANIC fat CLAY with GRAVEL SANDY ORGANIC fat CLAY SANDY ORGANIC fat CLAY with GRAVEL GRAVELLY ORGANIC fat CLAY GRAVELLY ORGANIC fat CLAY with SAND
SM	SILTY SAND SILTY SAND with GRAVEL		
SC	CLAYEY SAND CLAYEY SAND with GRAVEL	OH	ORGANIC elastic SILT ORGANIC elastic SILT with SAND ORGANIC elastic SILT with GRAVEL SANDY elastic ELASTIC SILT SANDY ORGANIC elastic SILT with GRAVEL GRAVELLY ORGANIC elastic SILT GRAVELLY ORGANIC elastic SILT with SAND
SC-SM	SILTY, CLAYEY SAND SILTY, CLAYEY SAND with GRAVEL		
PT	PEAT	OL/OH	ORGANIC SOIL ORGANIC SOIL with SAND ORGANIC SOIL with GRAVEL SANDY ORGANIC SOIL SANDY ORGANIC SOIL with GRAVEL GRAVELLY ORGANIC SOIL GRAVELLY ORGANIC SOIL with SAND
	COBBLES COBBLES and BOULDERS BOULDERS		

FIELD AND LABORATORY TESTS

C	Consolidation (ASTM D 2435-04)
CL	Collapse Potential (ASTM D 5333-03)
CP	Compaction Curve (CTM 216 - 06)
CR	Corrosion, Sulfates, Chlorides (CTM 643 - 99; CTM 417 - 06; CTM 422 - 06)
CU	Consolidated Undrained Triaxial (ASTM D 4767-02)
DS	Direct Shear (ASTM D 3080-04)
EI	Expansion Index (ASTM D 4829-03)
M	Moisture Content (ASTM D 2216-05)
OC	Organic Content (ASTM D 2974-07)
P	Permeability (CTM 220 - 05)
PA	Particle Size Analysis (ASTM D 422-63 [2002])
PI	Liquid Limit, Plastic Limit, Plasticity Index (AASHTO T 89-02, AASHTO T 90-00)
PL	Point Load Index (ASTM D 5731-05)
PM	Pressure Meter
PP	Pocket Penetrometer
R	R-Value (CTM 301 - 00)
SE	Sand Equivalent (CTM 217 - 99)
SG	Specific Gravity (AASHTO T 100-06)
SL	Shrinkage Limit (ASTM D 427-04)
SW	Swell Potential (ASTM D 4546-03)
TV	Pocket Torvane
UC	Unconfined Compression - Soil (ASTM D 2166-06) Unconfined Compression - Rock (ASTM D 2938-95)
UU	Unconsolidated Undrained Triaxial (ASTM D 2850-03)
UW	Unit Weight (ASTM D 4767-04)
VS	Vane Shear (AASHTO T 223-96 [2004])

CONSISTENCY OF COHESIVE SOILS

Descriptor	Unconfined Compressive Strength (tsf)	Pocket Penetrometer (tsf)	Torvane (tsf)	Field Approximation
Very Soft	< 0.25	< 0.25	< 0.12	Easily penetrated several inches by fist
Soft	0.25 - 0.50	0.25 - 0.50	0.12 - 0.25	Easily penetrated several inches by thumb
Medium Stiff	0.50 - 1.0	0.50 - 1.0	0.25 - 0.50	Can be penetrated several inches by thumb with moderate effort
Stiff	1.0 - 2.0	1.0 - 2.0	0.50 - 1.0	Readily indented by thumb but penetrated only with great effort
Very Stiff	2.0 - 4.0	2.0 - 4.0	1.0 - 2.0	Readily indented by thumbnail
Hard	> 4.0	> 4.0	> 2.0	Indented by thumbnail with difficulty

APPARENT DENSITY OF COHESIONLESS SOILS

Descriptor	SPT N60 - Value (blows / foot)
Very Loose	0 - 4
Loose	5 - 10
Medium Dense	11 - 30
Dense	31 - 50
Very Dense	> 50

MOISTURE

Descriptor	Criteria
Dry	Absence of moisture, dusty, dry to the touch
Moist	Damp but no visible water
Wet	Visible free water, usually soil is below water table

PERCENT OR PROPORTION OF SOILS

Descriptor	Criteria
Trace	Particles are present but estimated to be less than 5%
Few	5 to 10%
Little	15 to 25%
Some	30 to 45%
Mostly	50 to 100%

SOIL PARTICLE SIZE

Descriptor		Size
Boulder		> 12 inches
Cobble		3 to 12 inches
Gravel	Coarse	3/4 inch to 3 inches
	Fine	No. 4 Sieve to 3/4 inch
Sand	Coarse	No. 10 Sieve to No. 4 Sieve
	Medium	No. 40 Sieve to No. 10 Sieve
	Fine	No. 200 Sieve to No. 40 Sieve
Silt and Clay		Passing No. 200 Sieve

PLASTICITY OF FINE-GRAINED SOILS

Descriptor	Criteria
Nonplastic	A 1/8-inch thread cannot be rolled at any water content.
Low	The thread can barely be rolled, and the lump cannot be formed when drier than the plastic limit.
Medium	The thread is easy to roll, and not much time is required to reach the plastic limit; it cannot be rerolled after reaching the plastic limit. The lump crumbles when drier than the plastic limit.
High	It takes considerable time rolling and kneading to reach the plastic limit. The thread can be rerolled several times after reaching the plastic limit. The lump can be formed without crumbling when drier than the plastic limit.

CEMENTATION

Descriptor	Criteria
Weak	Crumbles or breaks with handling or little finger pressure.
Moderate	Crumbles or breaks with considerable finger pressure.
Strong	Will not crumble or break with finger pressure.

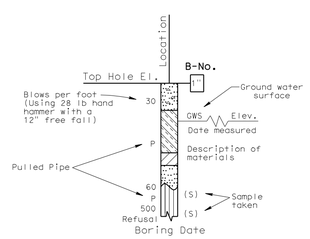

SAMPLE BORING (DRY)

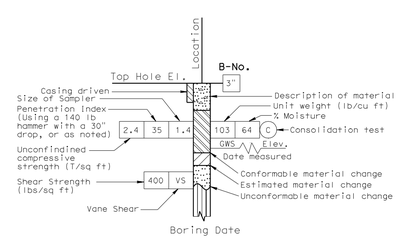

ROTARY SAMPLE BORING (WET)

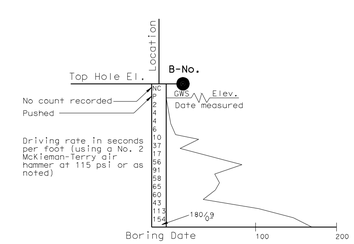

2 1/4" CONE PENETRATION BORING

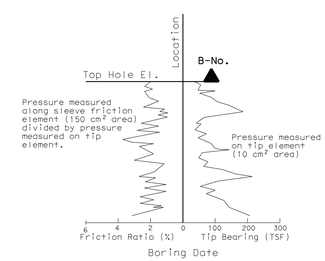

ELECTRONIC CONE PENETROMETER TEST

Cone Penetrometer dimensions and testing procedures are in accordance with ASTM standard D 3441-79, or as noted.

GINA PURSELL DESIGN OVERSIGHT	SHAWN WEI FUNCTIONAL SUPERVISOR	DRAWN BY	P. QUACH	P.CHAU/D.WADER/C.CARBINO FIELD INVESTIGATION BY:	PREPARED FOR THE STATE OF CALIFORNIA DEPARTMENT OF TRANSPORTATION	A. LEE PROJECT ENGINEER	BRIDGE NO. 56E0064 POST MILE 17.85
11/12/10 SIGN OFF DATE		CHECKED BY	S. PIRATHIVIRAJ	DATE: Nov 6 2007 to March 7 2008			

RETAINING WALL NO. 261

LOG OF TEST BORINGS 1 OF 4

OSF GEOTECHNICAL LOG OF TEST BORINGS SHEET (ENGLISH) (REV. 2/25/05)

ORIGINAL SCALE IN INCHES FOR REDUCED PLANS 0 1 2 3

CU 59A0590
EA 08-448400

DISREGARD PRINTS BEARING EARLIER REVISION DATES

REVISION DATES (PRELIMINARY STAGE ONLY) X

SHEET 14 OF 17

FILE => 56e0064zltb14.dgn

USERNAME => trastrk DATE PLOTTED => 30-APR-2011 TIME PLOTTED =>

DIST	COUNTY	ROUTE	POST MILES TOTAL PROJECT	SHEET No	TOTAL SHEETS
08	Riv	91	15.6/21.6	1436	2028

GEOTECHNICAL PROFESSIONAL — DATE 11/3/10

4-25-11
PLANS APPROVAL DATE

REGISTERED PROFESSIONAL ENGINEER — FARID MOTAMED — No. 2738 — Exp. 6-30-11 — GEOTECHNICAL — STATE OF CALIFORNIA

The State of California or its officers or agents shall not be responsible for the accuracy or completeness of electronic copies of this plan sheet.

California Department of Transportation
5900 Folsom Boulevard
Sacramento, CA 95819

URS Corporation
2020 East First Street, Suite 400
Santa Ana, CA 92705

FOR PLAN VIEW, SEE
"LOG OF TEST BORINGS" 4 OF 4

NOTE: 1. This LOTB sheet was prepared in accordance with the Caltrans Soil & Rock Logging, Classification, and Presentation Manual (June 2007).

2. For legend, see "Log of Test Borings" 1 of 4

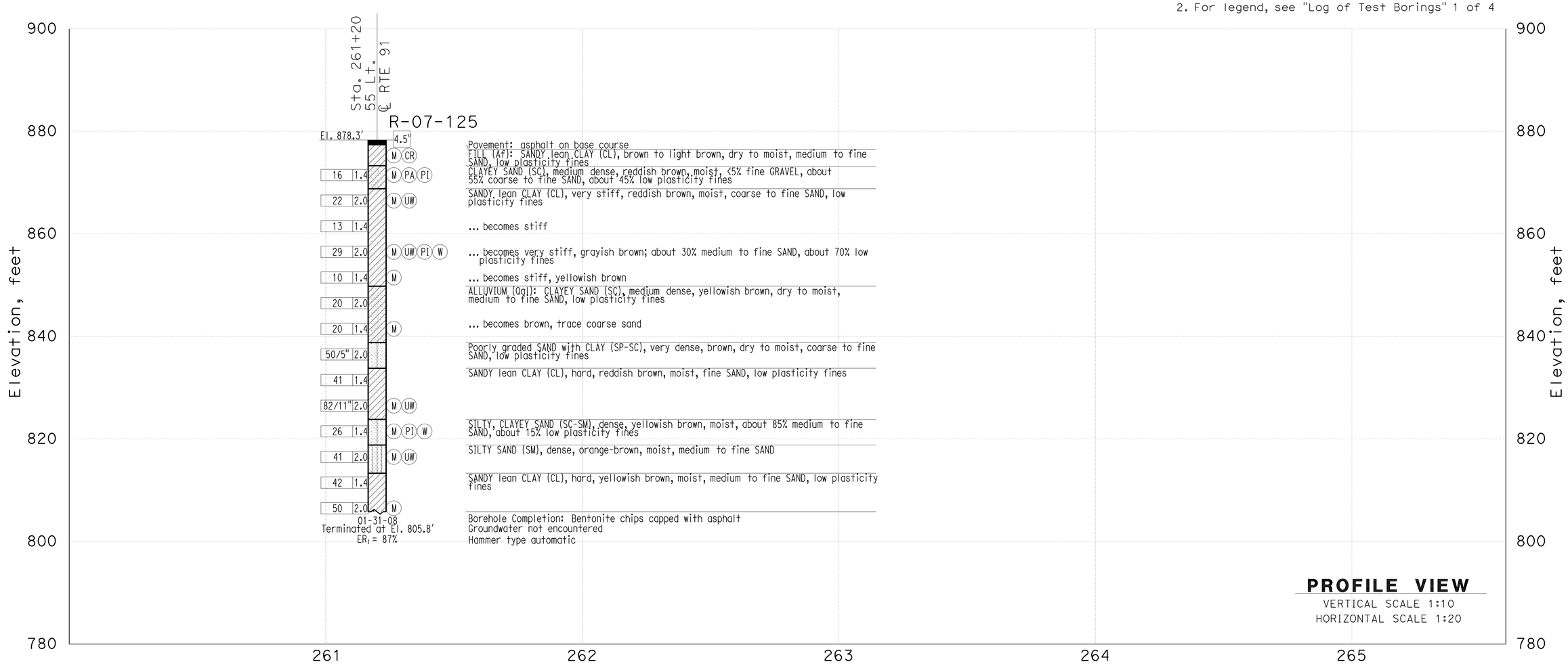

THIS PLAN ACCURATE FOR SOUND WALL AND RETAINING WALL WORK ONLY

GINA PURSELL DESIGN OVERSIGHT	SHAWN WEI FUNCTIONAL SUPERVISOR	DRAWN BY	P. QUACH	P.CHAU/D.WADER/C.CARBINO FIELD INVESTIGATION BY:	PREPARED FOR THE STATE OF CALIFORNIA DEPARTMENT OF TRANSPORTATION	A. LEE PROJECT ENGINEER	BRIDGE NO. 56E0064 POST MILE 17.85
11/12/10 SIGN OFF DATE		CHECKED BY	S. PIRATHIVIRAJ	DATE: Nov 6 2007 to March 7 2008			

Retaining Wall 261

LOG OF TEST BORINGS SHEET 2 OF 4

OSF GEOTECHNICAL LOG OF TEST BORINGS SHEET (ENGLISH) (REV. 2/25/05)

ORIGINAL SCALE IN INCHES FOR REDUCED PLANS 0 1 2 3

CU 59A0590
EA 08-448400

DISREGARD PRINTS BEARING EARLIER REVISION DATES 8-13-10

REVISION DATES (PRELIMINARY STAGE ONLY) — SHEET 15 OF 17

FILE => 56e0064zltb15.dgn

USERNAME => ttstrk — DATE PLOTTED => 30-APR-2011 — TIME PLOTTED =>

DIST	COUNTY	ROUTE	POST MILES TOTAL PROJECT	SHEET No	TOTAL SHEETS
08	Riv	91	15.6/21.6	1437	2028

GEOTECHNICAL PROFESSIONAL — DATE 11/3/10

4-25-11
PLANS APPROVAL DATE

REGISTERED PROFESSIONAL ENGINEER — FARID MOTAMED — No. 2738 — Exp. 6-30-11 — GEOTECHNICAL — STATE OF CALIFORNIA

The State of California or its officers or agents shall not be responsible for the accuracy or completeness of electronic copies of this plan sheet.

California Department of Transportation
5900 Folsom Boulevard
Sacramento, CA 95819

URS Corporation
2020 East First Street, Suite 400
Santa Ana, CA 92705

FOR PLAN VIEW, SEE
"LOG OF TEST BORINGS" 4 OF 4

NOTE: 1. This LOTB sheet was prepared in accordance with the Caltrans Soil & Rock Logging, Classification, and Presentation Manual (June 2007).

2. For legend, see "Log of Test Borings" 1 of 4

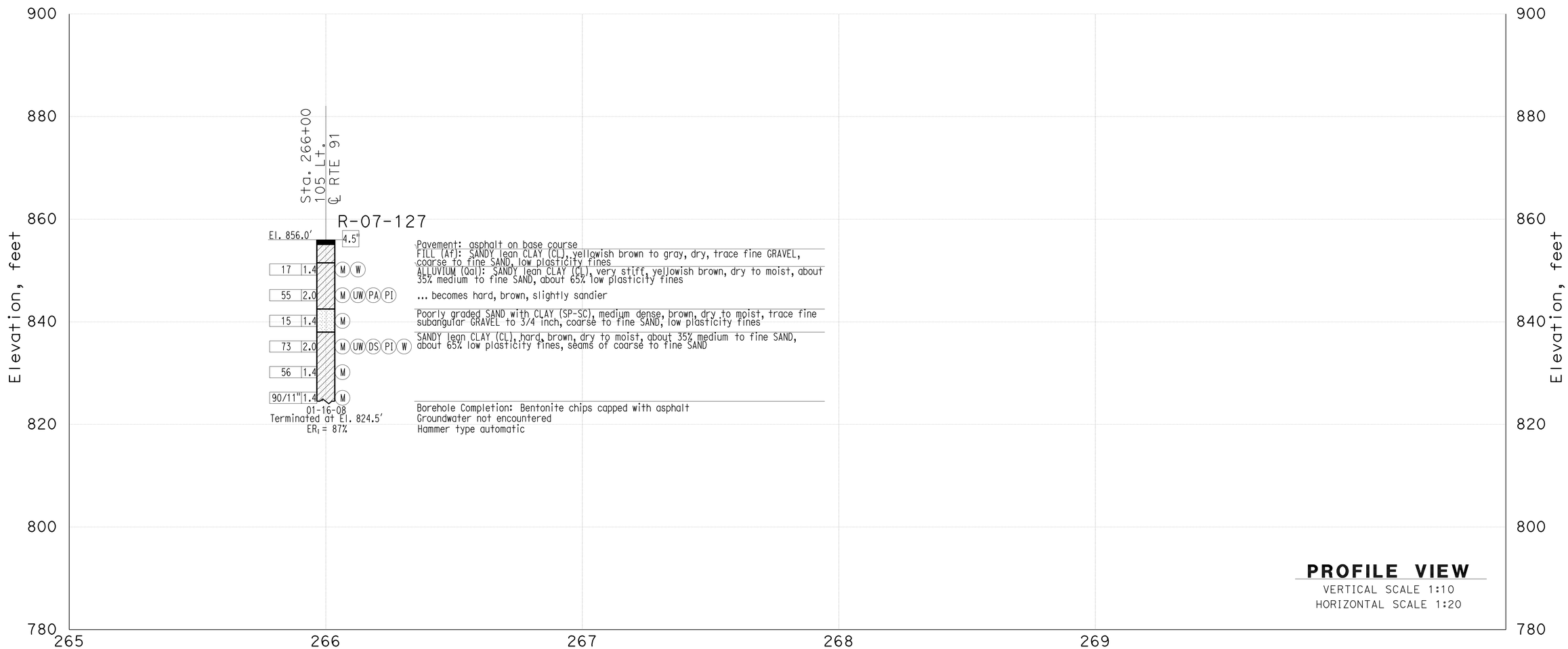

THIS PLAN ACCURATE FOR SOUND WALL AND RETAINING WALL WORK ONLY

GINA PURSELL DESIGN OVERSIGHT 11/12/10 SIGN OFF DATE	SHAWN WEI FUNCTIONAL SUPERVISOR	DRAWN BY CHECKED BY	P. QUACH S. PIRATHIVIRAJ	P.CHAU/D.WADER/C.CARBINO FIELD INVESTIGATION BY: DATE: Nov 6 2007 to March 7 2008	PREPARED FOR THE STATE OF CALIFORNIA DEPARTMENT OF TRANSPORTATION	A. LEE PROJECT ENGINEER	BRIDGE NO. 56E0064 POST MILE 17.85

Retaining Wall 261

LOG OF TEST BORINGS SHEET 3 OF 4

OSF GEOTECHNICAL LOG OF TEST BORINGS SHEET (ENGLISH) (REV. 2/25/05)

ORIGINAL SCALE IN INCHES FOR REDUCED PLANS 0 1 2 3

CU 59A0590
EA 08-448400

DISREGARD PRINTS BEARING EARLIER REVISION DATES 8-13-10

REVISION DATES (PRELIMINARY STAGE ONLY)

SHEET 16 OF 17

FILE => 56e0064zltb16.dgn

USERNAME => trstrk DATE PLOTTED => 30-APR-2011 TIME PLOTTED =>

DIST	COUNTY	ROUTE	POST MILES TOTAL PROJECT	SHEET No	TOTAL SHEETS
08	Riv	91	15.6/21.6	1438	2028

GEOTECHNICAL PROFESSIONAL — DATE 11/3/10

4-25-11
PLANS APPROVAL DATE

REGISTERED PROFESSIONAL ENGINEER — FARID MOTAMED — No. 2738 — Exp. 6-30-11 — GEOTECHNICAL — STATE OF CALIFORNIA

The State of California or its officers or agents shall not be responsible for the accuracy or completeness of electronic copies of this plan sheet.

California Department of Transportation
5900 Folsom Boulevard
Sacramento, CA 95819

URS Corporation
2020 East First Street, Suite 400
Santa Ana, CA 92705

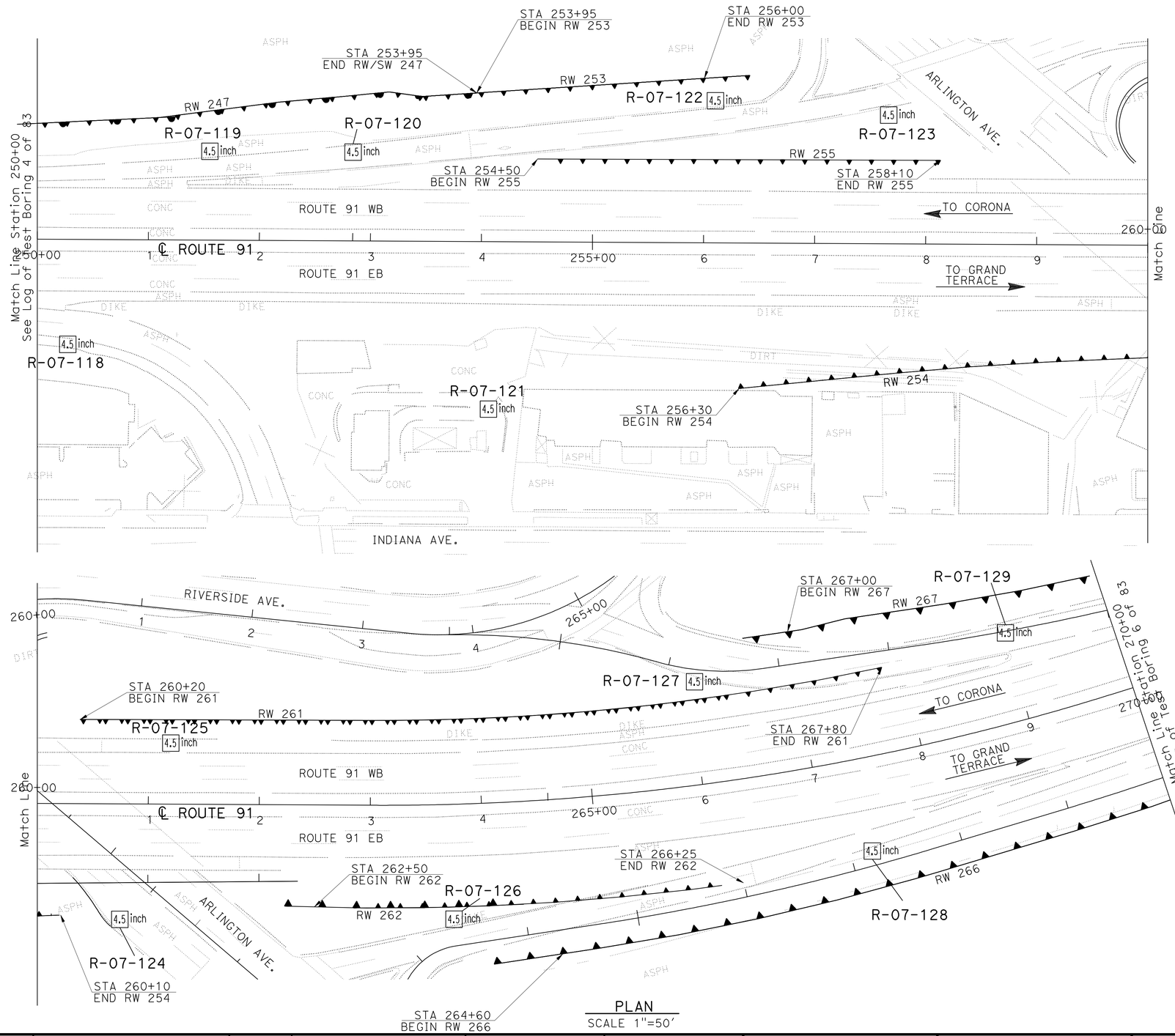

PLAN
SCALE 1"=50'

Borehole Number	Drill Rig	Hammer Type	Avg. Hammer Efficiency, ETR (%)
R-07-118	CS-2000	Automatic	84
R-07-119	CS-2000	Automatic	84
R-07-120	Mobile B-47	Manual trip	60*
R-07-121	CS-2000	Automatic	84
R-07-122	CS-2000	Automatic	84
R-07-123	CS-2000	Automatic	84
R-07-124	CS-2000	Automatic	84
R-07-125	CME 85	Automatic	87
R-07-126	CS-2000	Automatic	84
R-07-127	CME 85	Automatic	87
R-07-128	CS-2000	Automatic	84
R-07-129	CME 85	Automatic	87

Sampler Type	Inside Diameter (Inches)	Borehole Numbers
SPT	1.375	R-07-118, R-07-119, R-07-120 R-07-121, R-07-122, R-07-123 R-07-124, R-07-125, R-07-126 R-07-127, R-07-128, R-07-129
Modified California 1	1.94	R-07-119, R-07-120, R-07-121 R-07-124, R-07-125, R-07-127 R-07-129
Modified California 2	2.40	-

*Estimated Hammer Efficiency Rating.

GINA PURSELL DESIGN OVERSIGHT 11/12/10 SIGN OFF DATE	SHAWN WEI FUNCTIONAL SUPERVISOR	DRAWN BY	P. QUACH	P.CHAU/D.WADER/C.CARBINO FIELD INVESTIGATION BY: DATE: Nov 6 2007 to March 7 2008	PREPARED FOR THE STATE OF CALIFORNIA DEPARTMENT OF TRANSPORTATION	A. LEE PROJECT ENGINEER	BRIDGE NO. 56E0064 POST MILE 17.85
		CHECKED BY	S. PIRATHIVIRAJ				

RETAINING WALL NO. 261
LOG OF TEST BORINGS 4 OF 4

OSF GEOTECHNICAL LOG OF TEST BORINGS SHEET (ENGLISH) (REV. 2/25/05)

ORIGINAL SCALE IN INCHES FOR REDUCED PLANS 0 1 2 3

CU 59A0590
EA 08-448400

DISREGARD PRINTS BEARING EARLIER REVISION DATES 8-17-10

REVISION DATES (PRELIMINARY STAGE ONLY)

SHEET 17 OF 17

FILE => 56e0064zltb17.dgn

USERNAME => trstrk DATE PLOTTED => 30-APR-2011 TIME PLOTTED =>

DIST	COUNTY	ROUTE	POST MILES TOTAL PROJECT	SHEET No	TOTAL SHEETS
08	Riv	91	15.6/21.6	1439	2028

REGISTERED CIVIL ENGINEER 11/12/10 DATE

4-25-11
PLANS APPROVAL DATE

The State of California or its officers or agents shall not be responsible for the accuracy or completeness of electronic copies of this plan sheet.

REGISTERED PROFESSIONAL ENGINEER MINH THUONG VO No. C59297 Exp. 06-30-11 CIVIL STATE OF CALIFORNIA

Notes:

1 For Top of Wall and Leveling Pad Elevations see "STRUCTURE PLAN NO. 1 and 2" sheets.

2 For General Notes see "MECHANICALLY STABILIZED EMBANKMENT DETAILS NO. 2" sheet.

3 For Details see "MECHANICALLY STABILIZED EMBANKMENT DETAILS NO. 1 and 2" sheets.

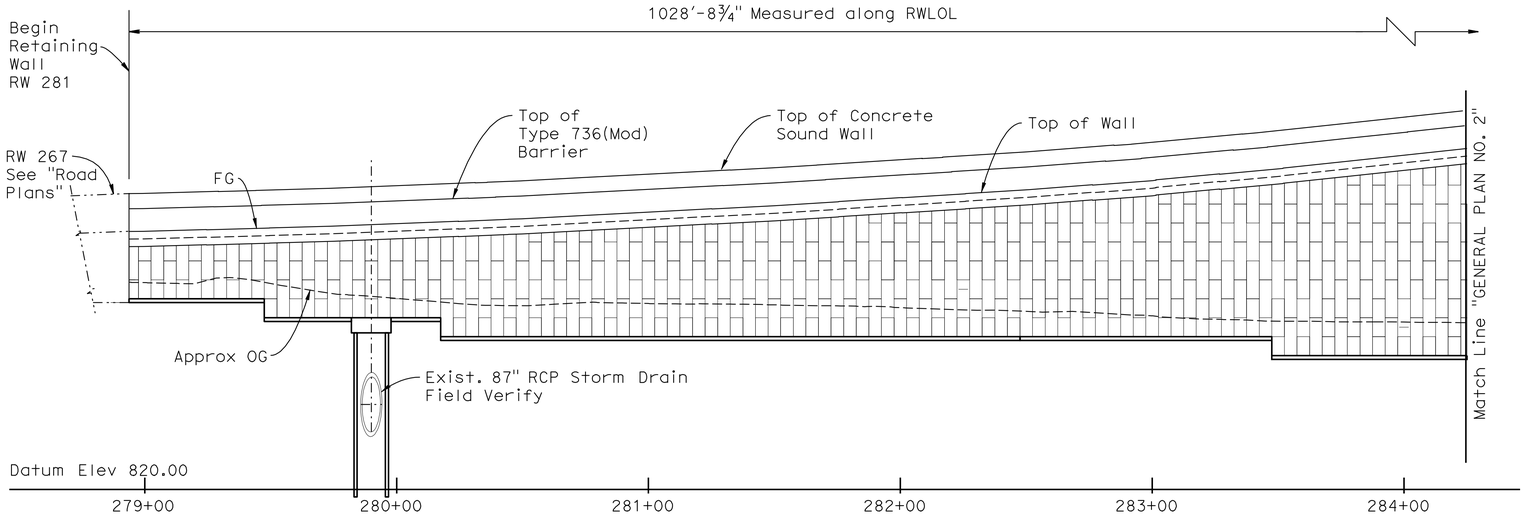

DEVELOPED MIRROR ELEVATION

Horiz. 1" = 30'
Vert. 1" = 10'

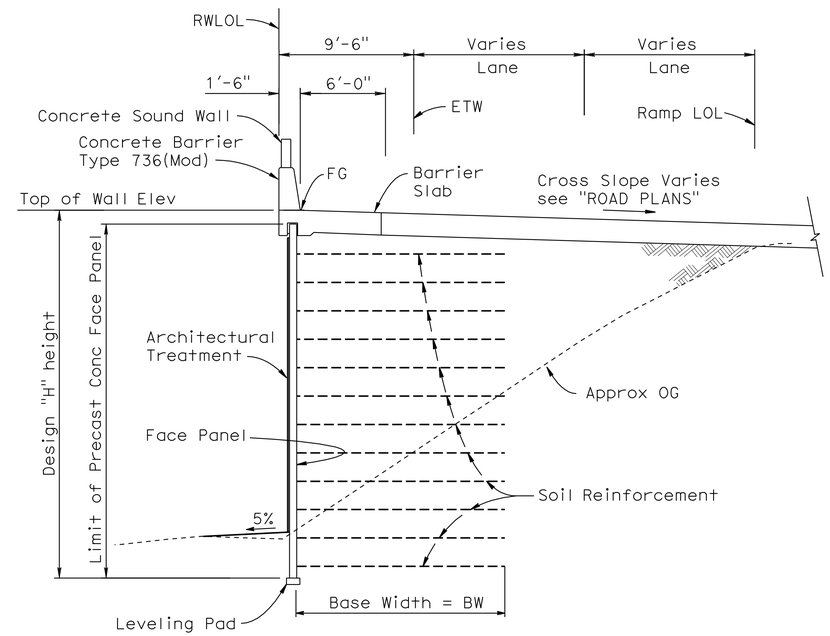

TYPICAL SECTION

3/16" = 1'-0"

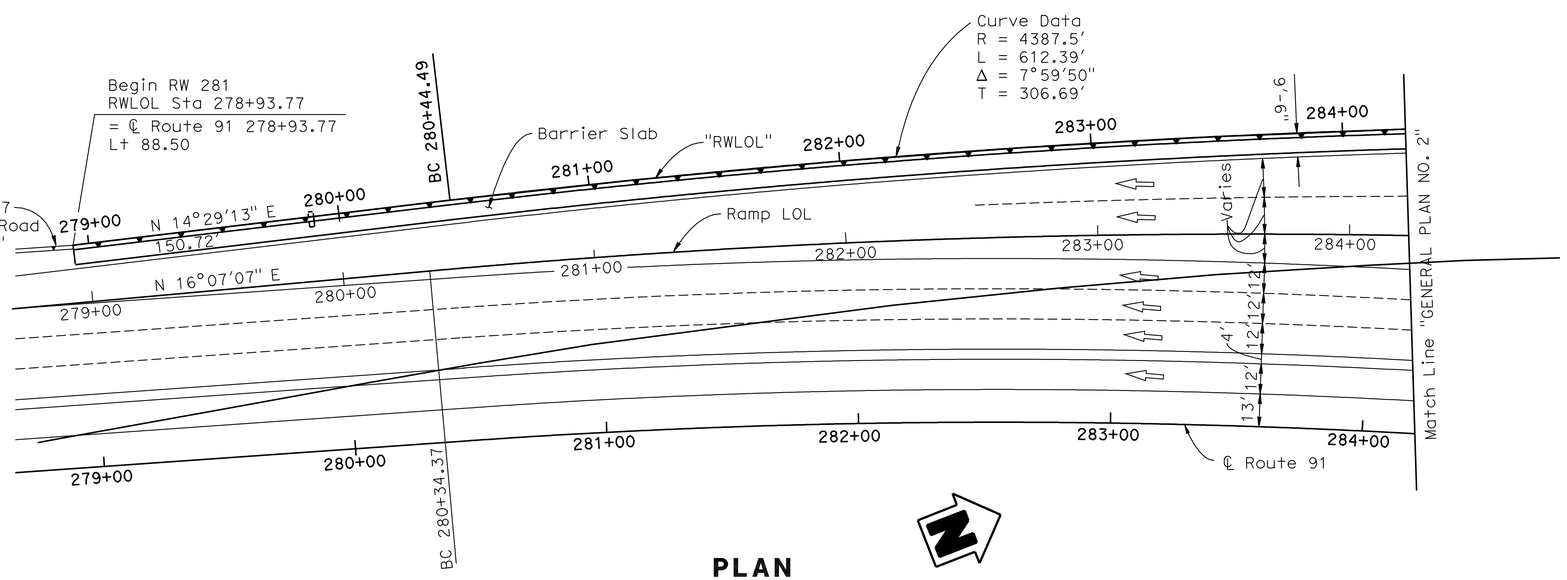

PLAN

1" = 30'

INDEX TO PLANS

Sheet No.	Title
1	GENERAL PLAN NO. 1
2	GENERAL PLAN NO. 2
3	STRUCTURE PLAN NO. 1
4	STRUCTURE PLAN NO. 2
5	PILE CAP DETAILS NO. 1
6	MECHANICALLY STABILIZED EMBANKMENT DETAILS NO. 1
7	MECHANICALLY STABILIZED EMBANKMENT DETAILS NO. 2
8	MECHANICALLY STABILIZED EMBANKMENT DETAILS NO. 3
9	MECHANICALLY STABILIZED EMBANKMENT DETAILS NO. 4
10	MECHANICALLY STABILIZED EMBANKMENT DETAILS NO. 5
11	ARCHITECTURAL SURFACE NO. 1
12	ARCHITECTURAL SURFACE NO. 2
13	ARCHITECTURAL DETAILS NO. 1
14	ARCHITECTURAL DETAILS NO. 2
15	ARCHITECTURAL DETAILS NO. 3
16	LOG OF TEST BORINGS 1 OF 3
17	LOG OF TEST BORINGS 2 OF 3
18	LOG OF TEST BORINGS 3 OF 3

NOTE:
THE CONTRACTOR SHALL VERIFY ALL CONTROLLING FIELD DIMENSIONS BEFORE ORDERING OR FABRICATING ANY MATERIAL.

X Daniel T Adams
DESIGN ENGINEER

	BY	CHECKED
DESIGN	M. Vo	A. McPhee
DETAILS	R. Kirkland/Y. Tang	A. McPhee
QUANTITIES	A. McPhee	M. Vo

LOAD & RESISTANCE FACTOR DESIGN — LIVE LOADING: HL93 W/"LOW-BOY"; PERMIT DESIGN VEHICLE

	BY	CHECKED
LAYOUT	M. Vo	A. McPhee
SPECIFICATIONS	Dave Klein	PLANS AND SPECS COMPARED Dave Klein

ORIGINAL SCALE IN INCHES FOR REDUCED PLANS 0 1 2 3

STATE OF CALIFORNIA
DEPARTMENT OF TRANSPORTATION

DIVISION OF ENGINEERING SERVICES
STRUCTURE DESIGN
DESIGN BRANCH 10

CU 08
EA 448401

BRIDGE NO. 56E0065
POST MILE 18.2

RETAINING WALL NO. 281
GENERAL PLAN NO. 1

DISREGARD PRINTS BEARING EARLIER REVISION DATES

REVISION DATES: 10-16-09, 2-22-10, 4-28-10, 5-04-10, 7-16-10, 10-20-10

SHEET 1 OF 18

STRUCTURES DESIGN GENERAL PLAN SHEET (ENGLISH) (REV.07-24-06)

FILE => 56e0065agp01.dgn

USERNAME => frsttk DATE PLOTTED => 30-APR-2011 TIME PLOTTED => 10:51

DIST	COUNTY	ROUTE	POST MILES TOTAL PROJECT	SHEET No	TOTAL SHEETS
08	Riv	91	15.6/21.6	1440	2028

REGISTERED CIVIL ENGINEER 11/12/10 DATE

4-25-11
PLANS APPROVAL DATE

The State of California or its officers or agents shall not be responsible for the accuracy or completeness of electronic copies of this plan sheet.

REGISTERED PROFESSIONAL ENGINEER
MINH THUONG VO
No. C59297
Exp. 06-30-11
CIVIL
STATE OF CALIFORNIA

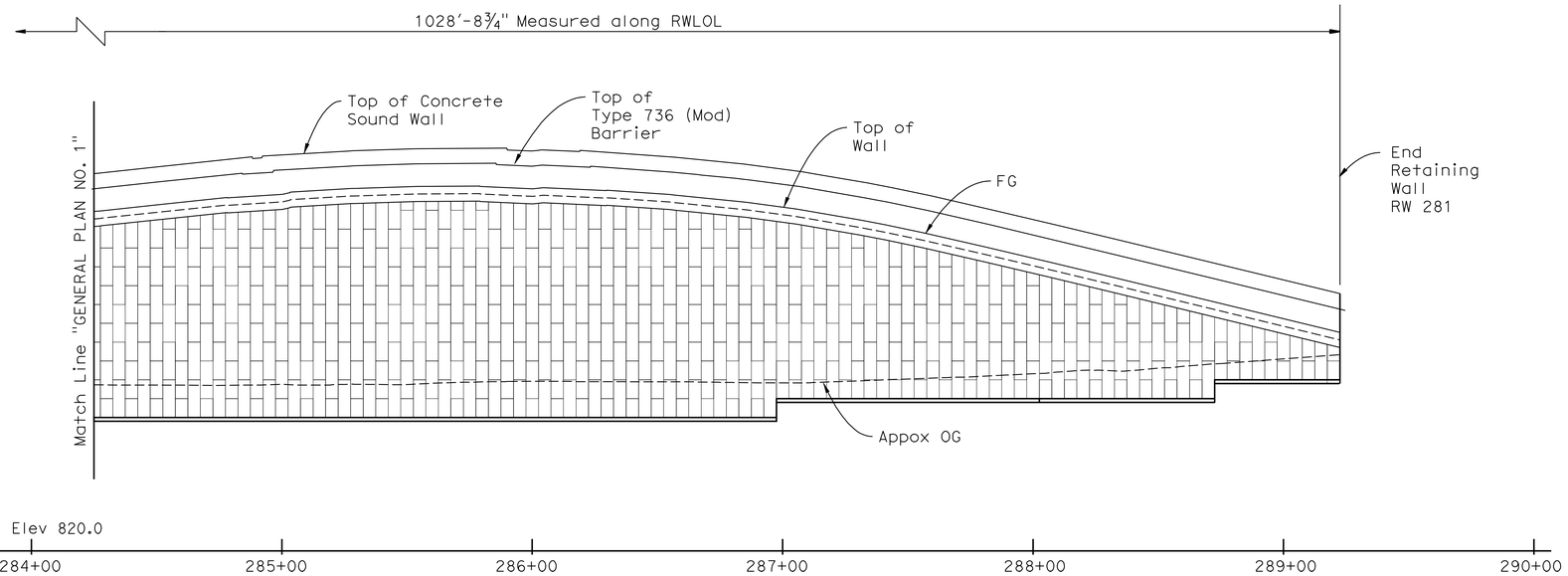

DEVELOPED MIRROR ELEVATION

Horiz. 1" = 30'
Vert. 1" = 10'

STANDARD PLANS DATED MAY 2006

A10A	ACRONYMS AND ABBREVIATIONS (SHEET 1 OF 2)
A10B	ACRONYMS AND ABBREVIATIONS (SHEET 2 OF 2)
A10C	SYMBOLS (SHEET 1 OF 2)
A10D	SYMBOLS (SHEET 2 OF 2)
B2-5	PILE DETAILS CLASS 90 AND CLASS 140
D-102	UNDERDRAINS
B11-56	CONCRETE BARRIER TYPE 736

STANDARD PLAN SHEET NO.
DETAIL NO.

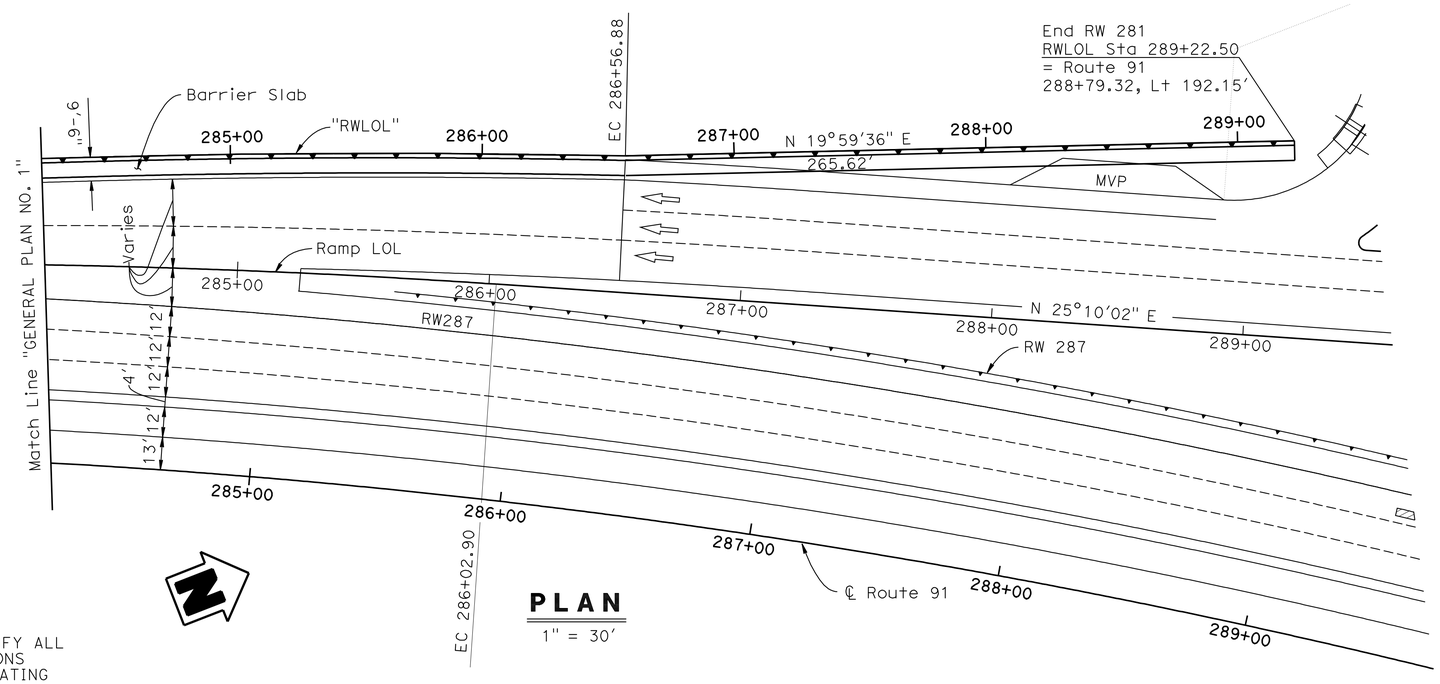

PLAN

1" = 30'

QUANTITIES

EARTH RETAINING STRUCTURE	21,259	SQFT
FURNISH PILING (CLASS 90) (ALTERNATIVE X)	123	LF
DRIVE PILE (CLASS 90) (ALTERNATIVE X)	4	EA
STRUCTURAL CONCRETE, SOUND WALL	51	CY
STRUCTURAL CONCRETE, BARRIER SLAB	495	CY
STRUCTURAL CONCRETE, PILE CAP	9	CY
BAR REINFORCING STEEL (BARRIER SLAB)	48,699	LB
CONCRETE BARRIER (TYPE 736 MODIFIED)	1,030	LF

NOTE:
THE CONTRACTOR SHALL VERIFY ALL CONTROLLING FIELD DIMENSIONS BEFORE ORDERING OR FABRICATING ANY MATERIAL.

X Daniel T Adams
DESIGN ENGINEER

	BY	CHECKED
DESIGN	M. Vo	A. McPhee
DETAILS	R. Kirkland/ Y. Tang	A. McPhee
QUANTITIES	A. McPhee	M. Vo

LOAD & RESISTANCE FACTOR DESIGN — LIVE LOADING: HL93 W/"LOW-BOY"; PERMIT DESIGN VEHICLE
LAYOUT: M. Vo — CHECKED: A. McPhee
SPECIFICATIONS: BY Dave Klein — PLANS AND SPECS COMPARED: Dave Klein

ORIGINAL SCALE IN INCHES FOR REDUCED PLANS 0 1 2 3

STATE OF CALIFORNIA
DEPARTMENT OF TRANSPORTATION

DIVISION OF ENGINEERING SERVICES
STRUCTURE DESIGN
DESIGN BRANCH 10

CU 08
EA 448401

BRIDGE NO. 56E0065
POST MILE 18.2

RETAINING WALL NO. 281
GENERAL PLAN NO. 2

DISREGARD PRINTS BEARING EARLIER REVISION DATES
REVISION DATES: 10-16-09 2-22-10 4-28-10 5-04-10 10-20-10

SHEET 2 OF 18

STRUCTURES DESIGN GENERAL PLAN SHEET (ENGLISH) (REV.07-24-06)

FILE => 56e0065agp02.dgn

USERNAME => trstrk DATE PLOTTED => 30-APR-2011 TIME PLOTTED => 10:52

DIST	COUNTY	ROUTE	POST MILES TOTAL PROJECT	SHEET No	TOTAL SHEETS
08	Riv	91	15.6/21.6	1441	2028

REGISTERED CIVIL ENGINEER 11/12/10 DATE

4-25-11
PLANS APPROVAL DATE

REGISTERED PROFESSIONAL ENGINEER MINH THUONG VO No. C59297 Exp. 06-30-11 CIVIL STATE OF CALIFORNIA

The State of California or its officers or agents shall not be responsible for the accuracy or completeness of electronic copies of this plan sheet.

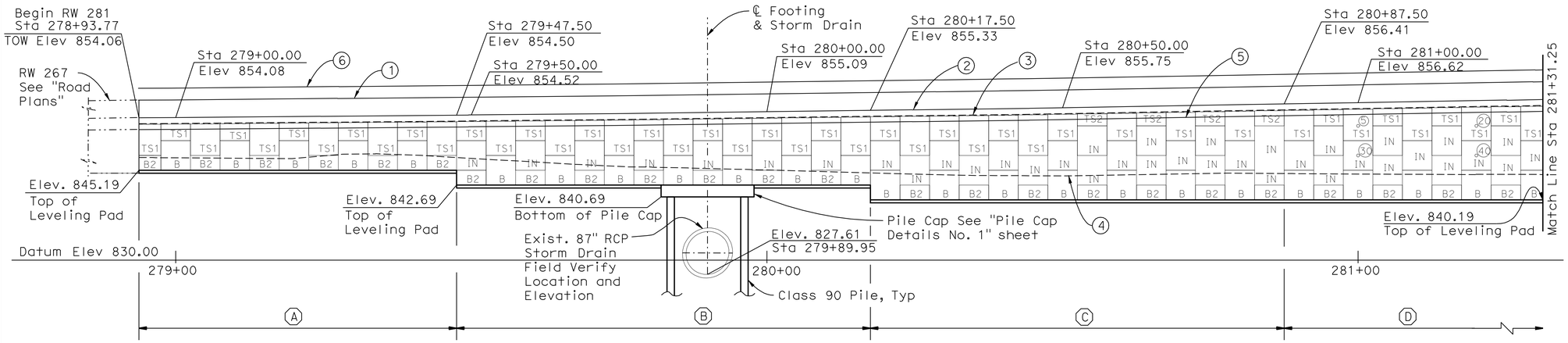

DEVELOPED MIRROR ELEVATION

1" = 10'

NOTES:

1. Contractor to field verify all utility locations prior to retaining wall construction.
2. For Typical Sections, see "General Plan No. 1" sheet.
3. For Architectural Treatment, see "Architectural Treatment Details" sheet
4. For utility information, see "Utility Plans".

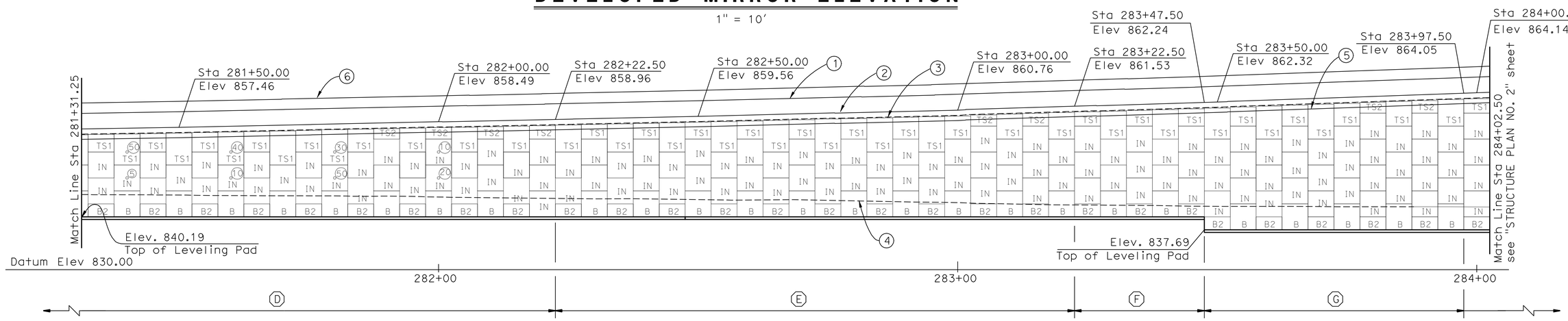

DEVELOPED MIRROR ELEVATION

1" = 10'

SOIL REINFORCEMENT TABLE

	A	B	C	D	E	F	G
Design "H"	H = 9.31' Max	H=12.64' Max	H=16.22' Max	H= 18.77' Max	H=21.34' Max	H= 22.02' Max	H= 26.36' Max
Base Width (BW)	BW = 8' Min	BW = 9' Min	BW = 11' Min	BW = 12' Min	BW = 14' Min	BW = 16' Min	BW = 18' Min
Top level of Mesh: Levels Below:	2 @ W11 x W11 + 6" x 9" 2 @ W11 x W11 + 6" x 12"	2 @ W11 x W11 + 6" x 9" 2 @ W11 x W11 + 6" x 12" 1 @ W11 x W11 + 6" x 18"	2 @ W11 x W11 + 6" x 9" 2 @ W11 x W11 + 6" x 12" 1 @ W11 x W11 + 6" x 18" 1 @ W11 x W11 + 6" x 24"	2 @ W11 x W11 + 6" x 9" 2 @ W11 x W11 + 6" x 12" 1 @ W11 x W11 + 6" x 18" 2 @ W11 x W11 + 6" x 24"	2 @ W11 x W11 + 6" x 9" 3 @ W11 x W11 + 6" x 18" 3 @ W11 x W11 + 6" x 24"	5 @ W11x W11+ 6"x 18" 4 @ W11x W11+ 6"x 24"	5 @ W11x W11+ 6"x 18" 5 @ W11x W11+ 6"x 24"

LEGEND:

1. Top of Concrete Barrier Type 736(Mod)
2. Top of Wall
3. Top of Precast Concrete Panel
4. Approximate Finished Grade
5. Bottom of Barrier Slab
6. Top of Concrete Sound Wall

50 — Indicates interval in years from time of construction to time of removal of inspection wire

8 IN — Indicates location of inspection wire replacement, see "MECHANICALLY STABILIZED EMBANKMENT DETAILS NO. 3" sheet

Panel type designation, see "MECHANICALLY STABILIZED EMBANKMENT DETAILS NO. 1" sheet

MSE NOTES:

1. Mesh is indicated sequentially from top level of mesh to bottom level of mesh.
2. For limits of excavation & backfill, see "Mechanically Stabilized Embankment Details No. 6" sheet.
3. For Barrier Slab details, see "Mechanically Stabilized Embankment Details No. 4" sheet.
4. For panel details, see "Mechanically Stabilized Embankment Details No. 1" sheet.
5. For General Notes and wire mat details, see "Mechanically Stabilized Embankment Details No. 2" sheet.
6. For inspection wire details, see "Mechanically Stabilized Embankment Details No. 3" sheet.

LEGEND:

2 @ W11 x W11 + 6" x 9"

- Longitudinal wire spacing x Transverse wire spacing
- Longitudinal wire size x Transverse wire size
- Number of welded wire mats.

NOTE:
THE CONTRACTOR SHALL VERIFY ALL CONTROLLING FIELD DIMENSIONS BEFORE ORDERING OR FABRICATING ANY MATERIAL.

	BY	CHECKED
DESIGN	M. Vo	A. McPhee
DETAILS	Y. Tang	A. McPhee
QUANTITIES	A. McPhee	M. Vo

STATE OF CALIFORNIA
DEPARTMENT OF TRANSPORTATION

DIVISION OF ENGINEERING SERVICES
STRUCTURE DESIGN
DESIGN BRANCH 10

BRIDGE NO. 56E0065
POST MILE 18.20

RETAINING WALL NO. 281
STRUCTURE PLAN NO. 1

STRUCTURES DESIGN DETAIL SHEET (ENGLISH) (REV. 10/25/05)

ORIGINAL SCALE IN INCHES FOR REDUCED PLANS 0 1 2 3

CU 08
EA 448401

DISREGARD PRINTS BEARING EARLIER REVISION DATES

REVISION DATES: 10-22-09, 4-28-10, 7-06-10, 10-20-10

SHEET 3 OF 18

FILE => 56e0065csp03.dgn

USERNAME => trcarol DATE PLOTTED => 30-APR-2011 TIME PLOTTED => 10:18

DIST	COUNTY	ROUTE	POST MILES TOTAL PROJECT	SHEET No	TOTAL SHEETS
08	Riv	91	15.6/21.6	1442	2028

REGISTERED CIVIL ENGINEER 11/12/10 DATE

4-25-11
PLANS APPROVAL DATE

REGISTERED PROFESSIONAL ENGINEER MINH THUONG VO No. C59297 Exp. 06-30-11 CIVIL STATE OF CALIFORNIA

The State of California or its officers or agents shall not be responsible for the accuracy or completeness of electronic copies of this plan sheet.

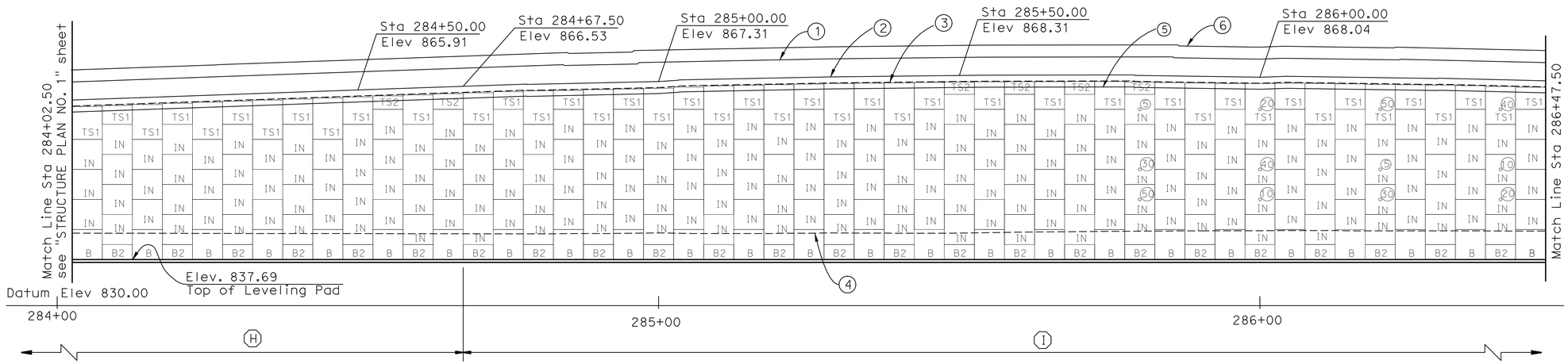

DEVELOPED MIRROR ELEVATION

1" = 10'

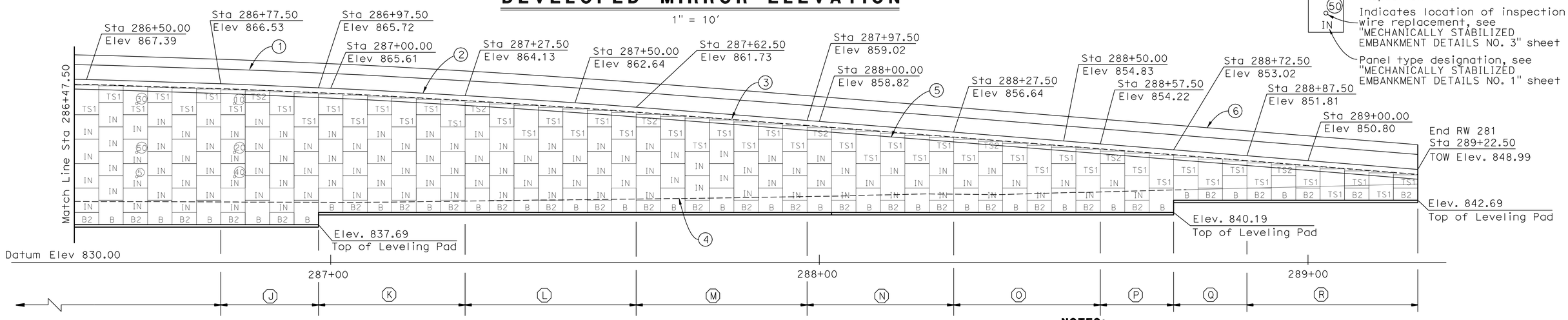

DEVELOPED MIRROR ELEVATION

1" = 10'

LEGEND:

1. Top of Concrete Barrier Type 736(Mod)
2. Top of Wall
3. Top of Precast Concrete Panel
4. Approximate Finished Grade
5. Bottom of Barrier Slab
6. Top of Concrete Sound Wall

50 — Indicates interval in years from time of construction to time of removal of inspection wire

IN — Indicates location of inspection wire replacement, see "MECHANICALLY STABILIZED EMBANKMENT DETAILS NO. 3" sheet

Panel type designation, see "MECHANICALLY STABILIZED EMBANKMENT DETAILS NO. 1" sheet

NOTES:

1. Contractor to field verify all utility locations prior to retaining wall construction.
2. For Typical Sections, see "General Plan No. 1" sheet.
3. For Architectural Treatment, see "Architectural Treatment Details" sheet
4. For utility information, see "Utility Plans".

SOIL REINFORCEMENT TABLE

	H	I	J	K	L	M	N	O	P	Q	R
Design "H"	H= 28.84 Max	H = 30.70 Max	H = 28.84' Max	H= 25.53' Max	H = 23.91' Max	H = 21.54' Max	H = 18.83' Max	H = 16.45' Max	H=14.03'Max	H=10.33'Max	H=9.12' Max
Base Width (BW)	BW = 19' Min	BW = 21' Min	BW = 19' Min	BW = 18' Min	BW = 16' Min	BW = 14' Min	BW = 12' Min	BW = 11' Min	BW =9' Min	BW =8' Min	BW = 6' Min
Top level of Mesh: Levels Below:	5 @ W11x W11+ 6"x 18" 5 @ W11x W11+ 6"x 24" 1 @ W15x W11+ 6"x 30"	10 @ W11x W11+ 6"x 24" 2 @ W15x W11+ 6"x 30"	5 @ W11x W11+ 6" x 18" 5 @ W11x W11+ 6" x 24" 1 @ W15x W11+ 6" x 30"	5 @ W11x W11+ 6" x 18" 5 @ W11x W11+ 6" x 24"	5 @ W11x W11+ 6" x 18" 4 @ W11x W11+ 6" x 24"	2 @ W11x W11+ 6" x 9" 3 @ W11x W11+ 6" x 18" 3 @ W11x W11+ 6" x 24"	2 @ W11x W11+ 6" x 9" 2 @ W11x W11+ 6" x 12" 1 @ W11x W11+ 6" x 18" 2 @ W11x W11+ 6" x 24"	2 @ W11x W11+ 6" x 9" 2 @ W11x W11+ 6" x 12" 1 @ W11x W11+ 6" x 18" 1 @ W11x W11+ 6" x 24"	2 @ W11x W11+ 6" x 9" 2 @ W11x W11+ 6" x 12" 1 @ W15x W11+ 6" x 18"	2 @ W11x W11+ 6" x 9" 2 @ W11x W11+ 6" x 12"	3 @ W11x W11+ 6" x 9"

MSE NOTES:

1. Mesh is indicated sequentially from top level of mesh to bottom level of mesh.
2. For limits of excavation & backfill, see "Mechanically Stabilized Embankment Details No. 6" sheet.
3. For Barrier Slab details, see "Mechanically Stabilized Embankment Details No. 4" sheet.
4. For panel details, see "Mechanically Stabilized Embankment Details No. 1" sheet.
5. For General Notes and wire mat details, see "Mechanically Stabilized Embankment Details No. 2" sheet.
6. For inspection wire details, see "Mechanically Stabilized Embankment Details No. 3" sheet.

NOTE:
THE CONTRACTOR SHALL VERIFY ALL CONTROLLING FIELD DIMENSIONS BEFORE ORDERING OR FABRICATING ANY MATERIAL.

LEGEND:

2 @ W11 x W11 + 6" x 9"

- Longitudinal wire spacing x Transverse wire spacing
- Longitudinal wire size x Transverse wire size
- Number of welded wire mats.

	BY	CHECKED
DESIGN	M. Vo	A. McPhee
DETAILS	Y. Tang	A. McPhee
QUANTITIES	A. McPhee	M. Vo

STATE OF CALIFORNIA
DEPARTMENT OF TRANSPORTATION

DIVISION OF ENGINEERING SERVICES
STRUCTURE DESIGN
DESIGN BRANCH 10

BRIDGE NO. 56E0065
POST MILE 18.20

RETAINING WALL NO. 281
STRUCTURE PLAN NO. 2

STRUCTURES DESIGN DETAIL SHEET (ENGLISH) (REV. 10/25/05)

ORIGINAL SCALE IN INCHES FOR REDUCED PLANS 0 1 2 3

CU 08
EA 448401

DISREGARD PRINTS BEARING EARLIER REVISION DATES

REVISION DATES: 10-22-09, 2-25-10, 4-28-10, 7-04-10, 10-20-10

SHEET 4 OF 18

FILE => 56e0065csp04.dgn

USERNAME => trcarol DATE PLOTTED => 30-APR-2011 TIME PLOTTED => 10:18

DIST	COUNTY	ROUTE	POST MILES TOTAL PROJECT	SHEET No	TOTAL SHEETS
08	Riv	91	15.6/21.6	1443	2028

REGISTERED CIVIL ENGINEER 11/12/10 DATE

4-25-11
PLANS APPROVAL DATE

REGISTERED PROFESSIONAL ENGINEER MINH THUONG VO No. C59297 Exp. 06-30-11 CIVIL STATE OF CALIFORNIA

The State of California or its officers or agents shall not be responsible for the accuracy or completeness of electronic copies of this plan sheet.

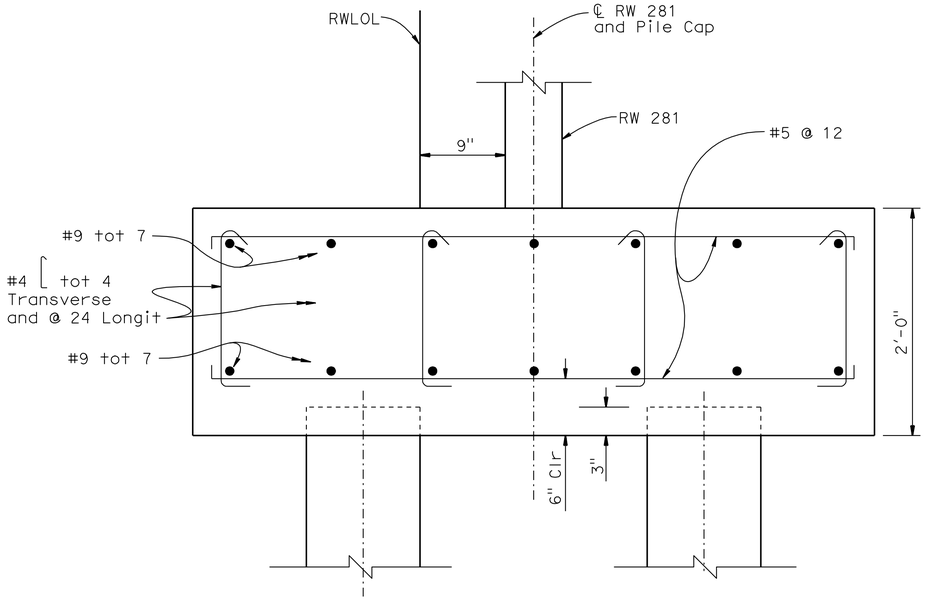

SECTION A-A

1½" = 1'-0"

PILE DATA TABLE

B2-5

Pile Type	Nominal Resistance		Design Tip Elevations (Ft)	Specified Tip Elevations (Ft)	Nominal Driving Resistance Req'd
	Compression	Tension			
Class 90 Alternative "X"	180 kips	0	810 (1)	810	180 kips

Note: Design tip elevation controlled by (1) compression.

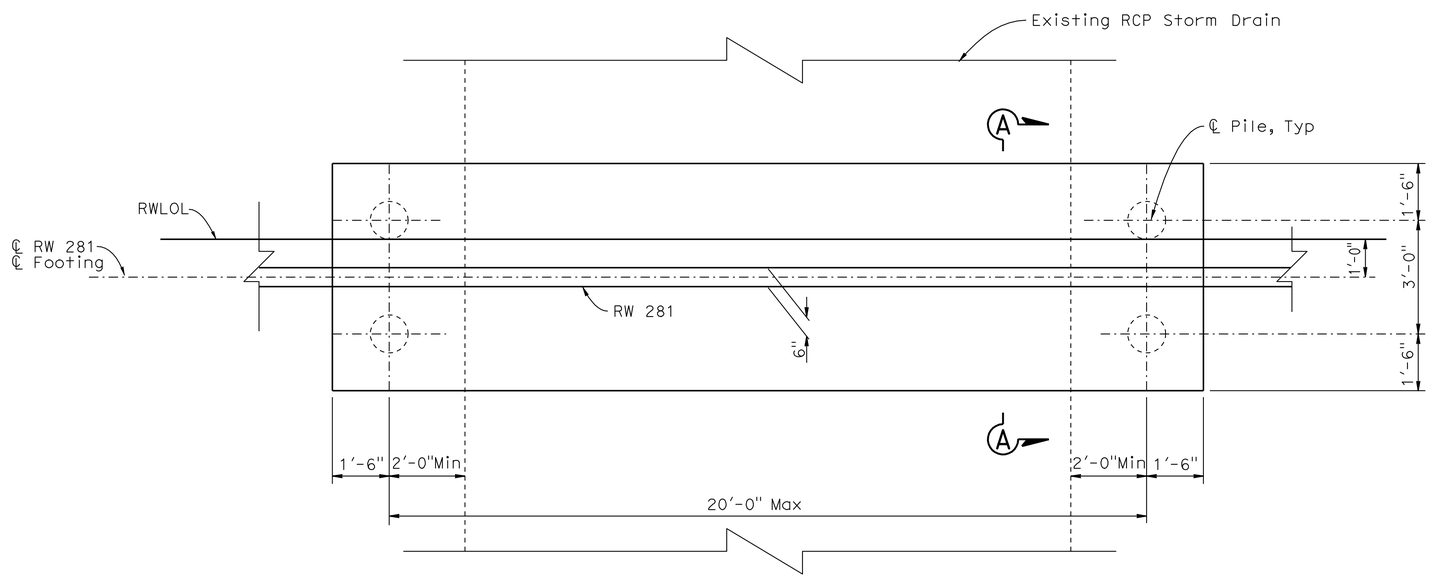

PILE CAP PLAN

½"= 1'-0"

NOTE:
THE CONTRACTOR SHALL VERIFY ALL CONTROLLING FIELD DIMENSIONS BEFORE ORDERING OR FABRICATING ANY MATERIAL.

	BY	CHECKED
DESIGN	M. Vo	A. McPhee
DETAILS	Y. Tang	A. McPhee
QUANTITIES	A. McPhee	M. Vo

STATE OF CALIFORNIA
DEPARTMENT OF TRANSPORTATION

DIVISION OF ENGINEERING SERVICES
STRUCTURE DESIGN
DESIGN BRANCH 10

BRIDGE NO. 56E0065
POST MILE 18.20

RETAINING WALL NO. 281
PILE CAP DETAILS NO. 1

STRUCTURES DESIGN DETAIL SHEET (ENGLISH) (REV. 10/25/05)

ORIGINAL SCALE IN INCHES FOR REDUCED PLANS 0 1 2 3

CU 08
EA 448401

DISREGARD PRINTS BEARING EARLIER REVISION DATES

REVISION DATES: 11-9-09 2-23-10 4-28-10 7-07-10

SHEET 5 OF 18

FILE => 56e0065ppdt05.dgn

USERNAME => trcarol DATE PLOTTED => 30-APR-2011 TIME PLOTTED => 10:18

DIST	COUNTY	ROUTE	POST MILES TOTAL PROJECT	SHEET No	TOTAL SHEETS
08	Riv	91	15.6/21.6	1444	2028

REGISTERED CIVIL ENGINEER 11/12/10 DATE

4-25-11
PLANS APPROVAL DATE

REGISTERED PROFESSIONAL ENGINEER MINH THUONG VO No. C59297 Exp. 06-30-11 CIVIL STATE OF CALIFORNIA

The State of California or its officers or agents shall not be responsible for the accuracy or completeness of electronic copies of this plan sheet.

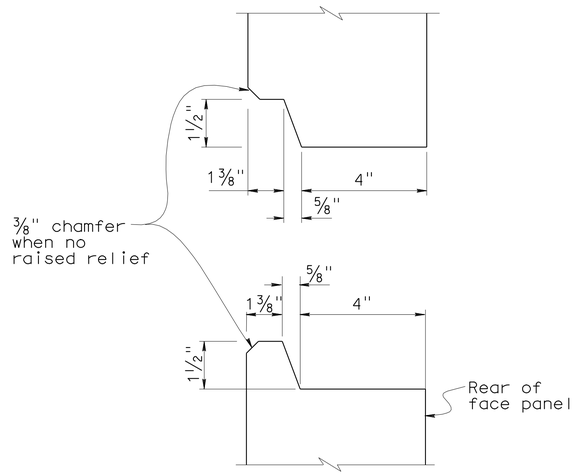

HORIZONTAL JOINT DETAIL
No Scale

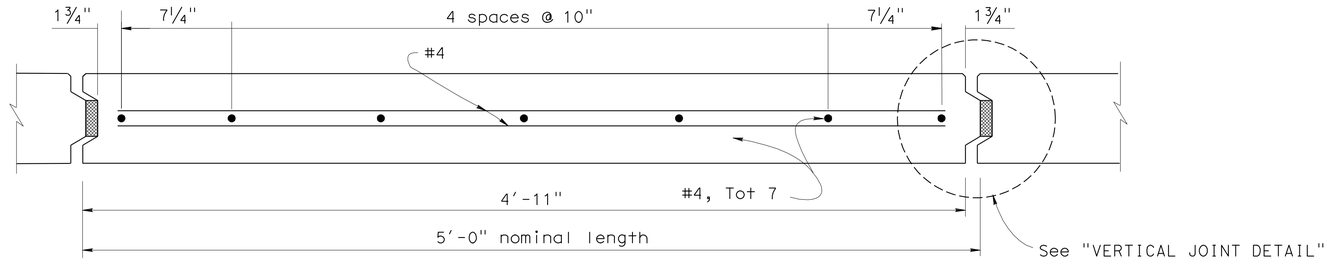

PLAN - FACE PANEL
No Scale

NOTES:

1. Architectural treatment not shown. Architectural surface extends beyond face of panel. See "Architectural Treatment Details" sheet.
2. Place reinforced elastomeric bearing pads in all of the panel joints between the panels. Place one in each vertical joint where the horizontal joint intersects it. Place two per panel in each horizontal joint.
   3/4" x 2 3/8" x 6" for vertical joints
   3/4" x 4" x 6" for horizontal joints.
3. Bond a strip of filter fabric, 1' - 0" wide, over the full length of all panel joints.

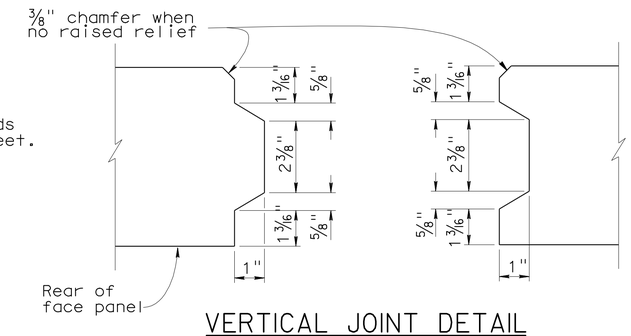

VERTICAL JOINT DETAIL
No Scale

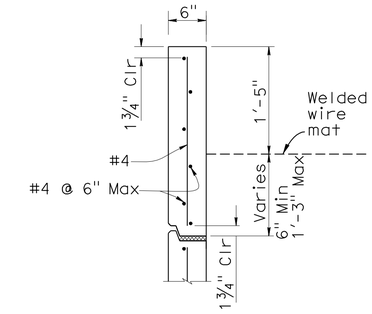

TOP PANEL (TYPE "TS2")
1" =1'-0"

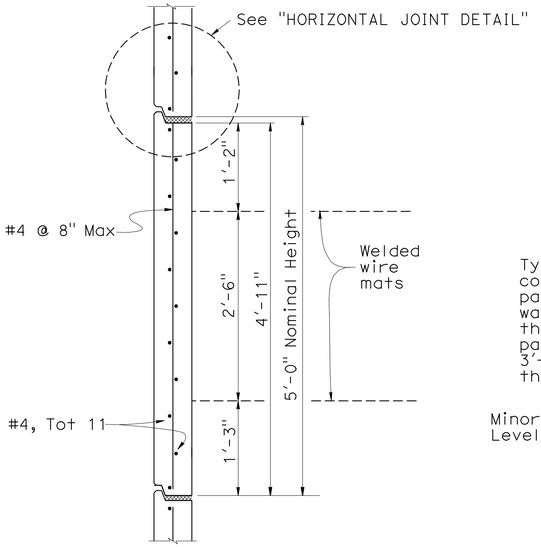

INTERMEDIATE PANEL (TYPE "IN")
1" = 1'-0"

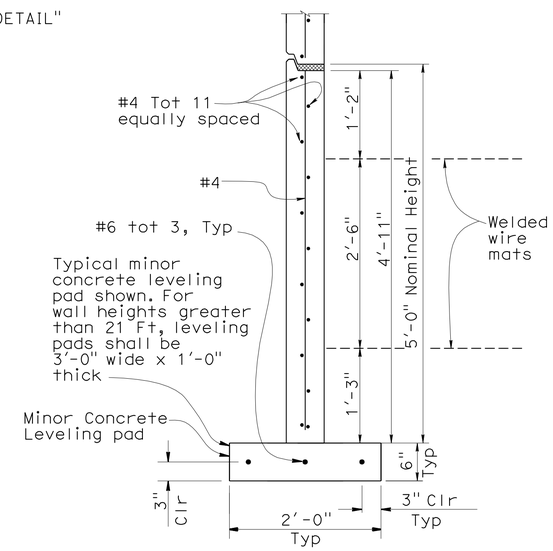

BOTTOM PANEL (TYPE "B")
1" = 1'-0"

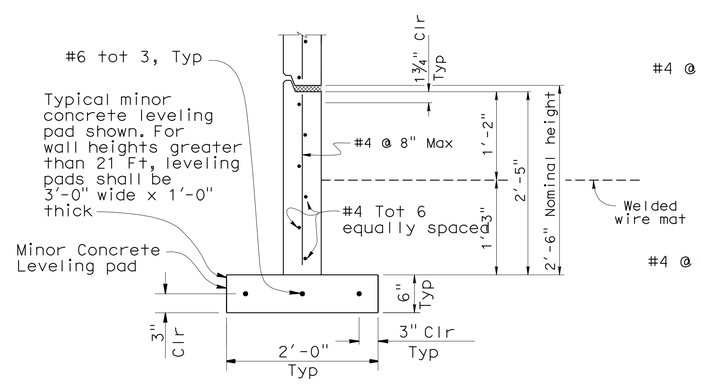

BOTTOM HALF PANEL (TYPE "B2")
1" = 1'-0"

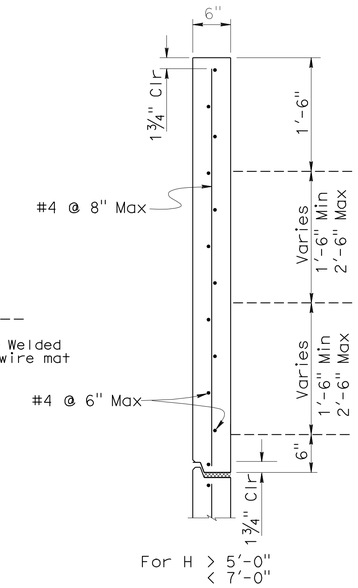

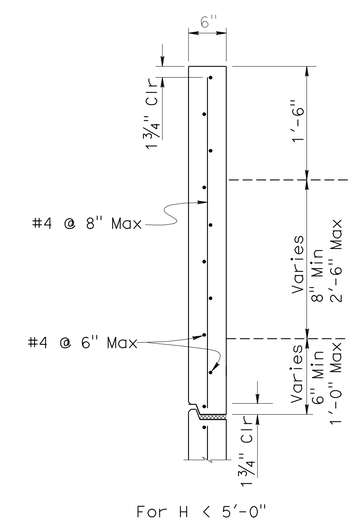

TOP PANEL (TYPE "TSI")
1" = 1'-0"

DESIGN	BY M. Vo	CHECKED A. McPhee	
DETAILS	BY Y. Tang	CHECKED A. McPhee	
QUANTITIES	BY A. McPhee	CHECKED M. Vo	

STATE OF CALIFORNIA
DEPARTMENT OF TRANSPORTATION

DIVISION OF ENGINEERING SERVICES
STRUCTURE DESIGN
DESIGN BRANCH 10

BRIDGE NO. 56E0064
POST MILE 17.85

RETAINING WALL NO. 281
MECHANICALLY STABILIZED EMBANKMENT
DETAILS NO. 1

STRUCTURES DESIGN DETAIL SHEET (ENGLISH) (REV. 10/25/05)

ORIGINAL SCALE IN INCHES FOR REDUCED PLANS 0 1 2 3

CU 08
EA 448401

DISREGARD PRINTS BEARING EARLIER REVISION DATES 10-26-09 2-24-10 7-07-10

REVISION DATES

SHEET 6 OF 18

FILE => 56e0065s_msedt06.dgn

USERNAME => trcarol DATE PLOTTED => 30-APR-2011 TIME PLOTTED => 10:19

DIST.	COUNTY	ROUTE	POST MILES TOTAL PROJECT	SHEET NO.	TOTAL SHEETS
08	Riv	91	15.6/21.6	1445	2028

REGISTERED ENGINEER - CIVIL

4-25-11
PLANS APPROVAL DATE

REGISTERED PROFESSIONAL ENGINEER
MINH THUONG VO
No. C59297
Exp. 06-30-11
CIVIL
STATE OF CALIFORNIA

The State of California or its officers or agents shall not be responsible for the accuracy or completeness of electronic copies of this plan sheet.

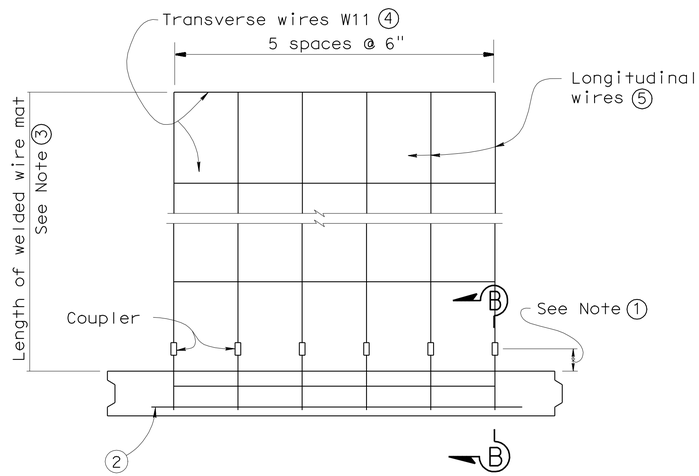

PLAN OF PANEL WITH WELDED WIRE MAT
No scale

GENERAL NOTES (MSE WALLS)

Live loading: Surcharge = 240 lb/ft^2

Soil parameters:

Internal design ϕ = 34°, γ = 120 lb/ft^3
External design ϕ(Backfill) = 34°, γ = 120 lb/ft^3
ϕ(Foundation) = 30°

Precast concrete panels:

f′c = 4,000 psi (Concrete compressive strength at 28 days)
fy = 60,000 psi (Yield strength of reinforcement)

Soil reinforcement:

Welded wire mats: fy = 65,000 psi (Yield strength)
Coupler: fy = 36,000 psi (Yield strength)
Corrosion rate = 1.1 mils/year

Reinforced concrete:

f′c = 3,600 psi, except as noted
(Concrete compressive strength at 28 days)

fy = 60,000 psi (Yield strength of reinforcement)

MSE = Mechanically stabilized embankment

Notes:

① Distance as required to permit coupler to be swaged.

② Place #4 bar, 3′ - 2" long, centered on connector mat, but not welded to it.

③ Length equals "Base width" of wall, except it shall not be less than 16′ for the top 2 levels of mats at the top of the wall.

④ All Transverse Wires size W11 at various spacings as shown elsewhere in plans.

⑤ All Longitudinal Wires at 6" spacing, of various sizes, as shown elsewhere in plans.

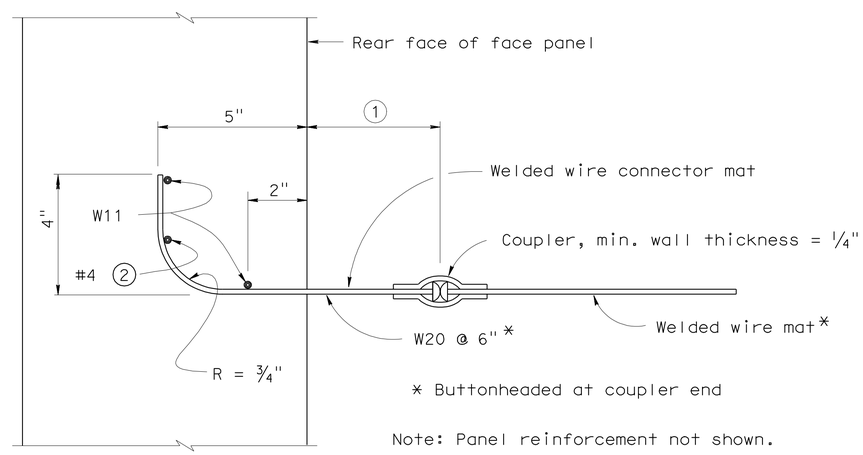

SECTION B-B
No scale

STANDARD DRAWING

FILE NO. xs13-020-2e

APPROVED BY K. GRISWELL
RESPONSIBLE TECHNICAL SPECIALIST
APPROVAL DATE 5-6-08

RELEASED BY ROBERTO LACALLE
RESPONSIBLE OFFICE CHIEF
RELEASE DATE 5-6-08

STATE OF CALIFORNIA
DEPARTMENT OF TRANSPORTATION

DIVISION OF ENGINEERING SERVICES

BRIDGE NO. 56E0065
POST MILE 17.85

RETAINING WALL NO. 281
MECHANICALLY STABILIZED EMBANKMENT
DETAILS NO. 2

DS OSD 2147A (ENGLISH STANDARD DRAWING "XS" BORDER REV. 01/11/08)

ORIGINAL SCALE IN INCHES FOR REDUCED PLANS 0 1 2 3

CU 08
EA 448401

DISREGARD PRINTS BEARING EARLIER REVISION DATES 4-28-10

REVISION DATES (PRELIMINARY STAGE ONLY)

SHEET 7 OF 18

USERNAME => trcarol

56e0065s_msedt07.dgn

DATE PLOTTED => 30-APR-2011 TIME PLOTTED => 10:19

DIST.	COUNTY	ROUTE	POST MILES TOTAL PROJECT	SHEET NO.	TOTAL SHEETS
08	Riv	91	15.6/21.6	1446	2028

REGISTERED ENGINEER - CIVIL

4-25-11
PLANS APPROVAL DATE

REGISTERED PROFESSIONAL ENGINEER
MINH THUONG VO
No. C59297
Exp. 06-30-11
CIVIL
STATE OF CALIFORNIA

The State of California or its officers or agents shall not be responsible for the accuracy or completeness of electronic copies of this plan sheet.

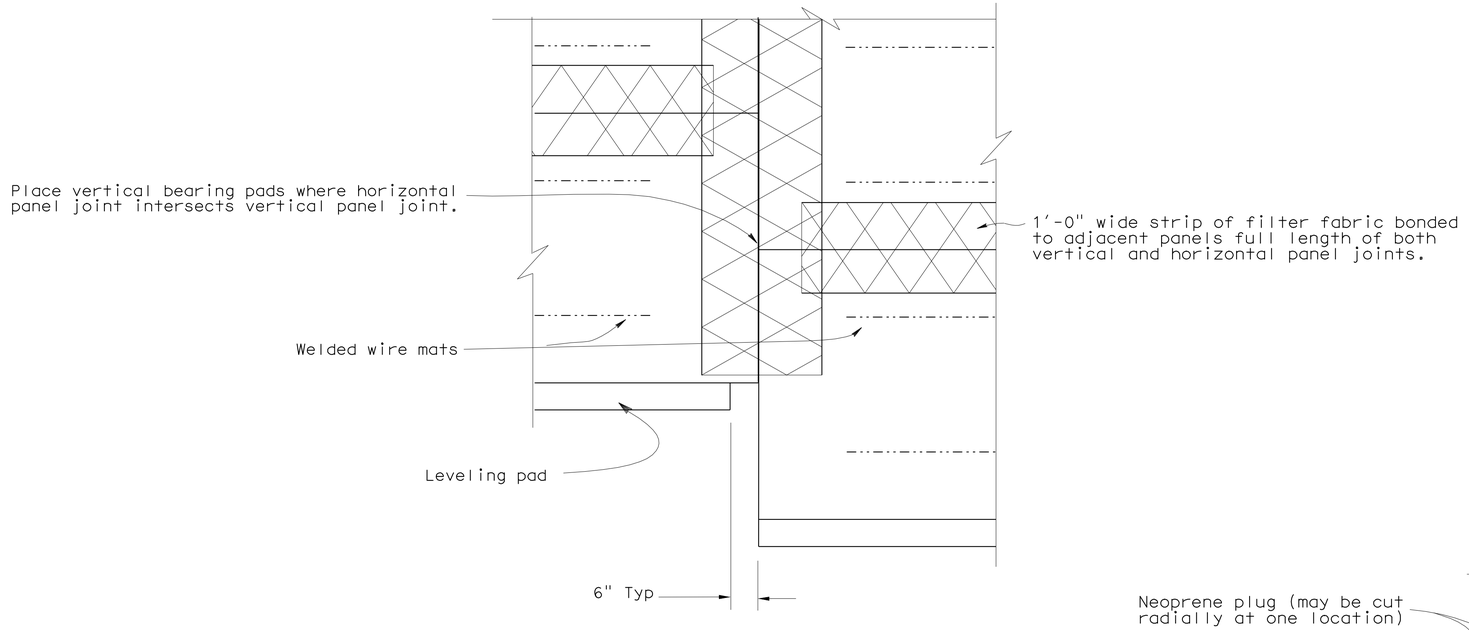

REAR ELEVATION

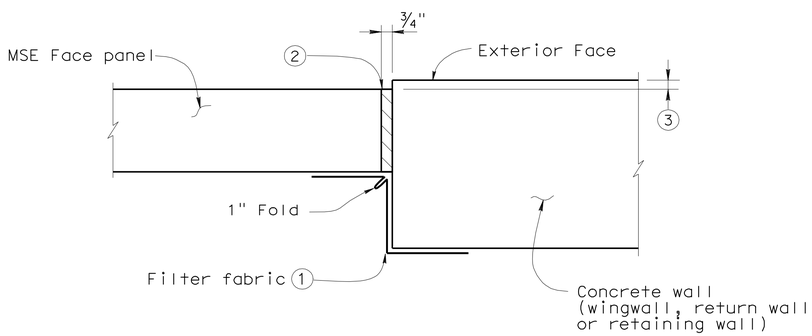

MSE FACE PANEL-TO-CONCRETE WALL JOINT DETAIL

LEGEND:

1. Bond a strip of filter fabric, 1'-6" wide, to back of MSE panels and the adjacent concrete wall for entire length of vertical joint.
2. Bond expansion joint material to the concrete wall.
3. Offset between face of MSE face panel and face of the concrete wall as dictated by location of layout lines shown elsewhere in Project Plans.

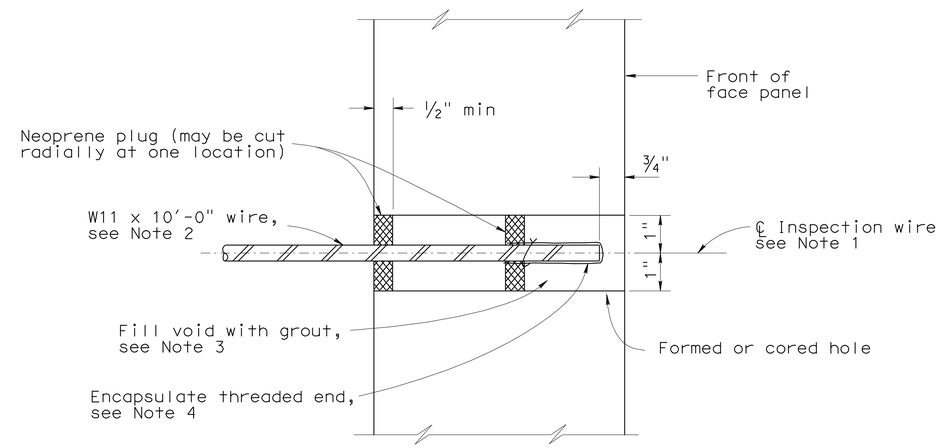

SECTION THRU INSPECTION WIRE

NOTES:

1. Center inspection wire in face panel.
2. Fabricate inspection wires from W11 wire representative of the welded wire mats, with 3/8" dia - 16 UNC threads for at least 1 1/2" of one end.
3. Place inspection wire horizontal and perpendicular to the wall panel prior to backfilling. After backfill placement to a level at least 2'-0" above the inspection wire, dry pack opening with 1000 to 1500 psi mortar. Trowel mortar smooth and flush with face of panel.
4. Encapsulate threaded end with corrosion inhibiting mastic, and secure round vinyl cover with nylon tie.

UNC = Unified coarse threads

STANDARD DRAWING

FILE NO. xs13-020-3e

APPROVED BY K. GRISWELL
RESPONSIBLE TECHNICAL SPECIALIST
APPROVAL DATE 5-6-08

RELEASED BY ROBERTO LACALLE
RESPONSIBLE OFFICE CHIEF
RELEASE DATE 5-6-08

STATE OF CALIFORNIA
DEPARTMENT OF TRANSPORTATION

DIVISION OF ENGINEERING SERVICES

BRIDGE NO. 56E0065
POST MILE 17.85

RETAINING WALL NO. 281
MECHANICALLY STABILIZED EMBANKMENT
DETAILS NO. 3

DS OSD 2147A (ENGLISH STANDARD DRAWING "XS" BORDER REV. 01/11/08)

ORIGINAL SCALE IN INCHES FOR REDUCED PLANS 0 1 2 3

CU 08
EA 448401

DISREGARD PRINTS BEARING EARLIER REVISION DATES 4-28-10

REVISION DATES (PRELIMINARY STAGE ONLY)

SHEET 8 OF 18

USERNAME => trcarol

56e0065s_msedt08.dgn

DATE PLOTTED => 30-APR-2011 TIME PLOTTED => 10:19

DIST.	COUNTY	ROUTE	POST MILES TOTAL PROJECT	SHEET NO.	TOTAL SHEETS
08	Riv	91	15.6/21.6	1447	2028

REGISTERED ENGINEER - CIVIL

4-25-11

PLANS APPROVAL DATE

REGISTERED PROFESSIONAL ENGINEER MINH THUONG VO No. C59297 Exp. 06-30-11 CIVIL STATE OF CALIFORNIA

The State of California or its officers or agents shall not be responsible for the accuracy or completeness of electronic copies of this plan sheet.

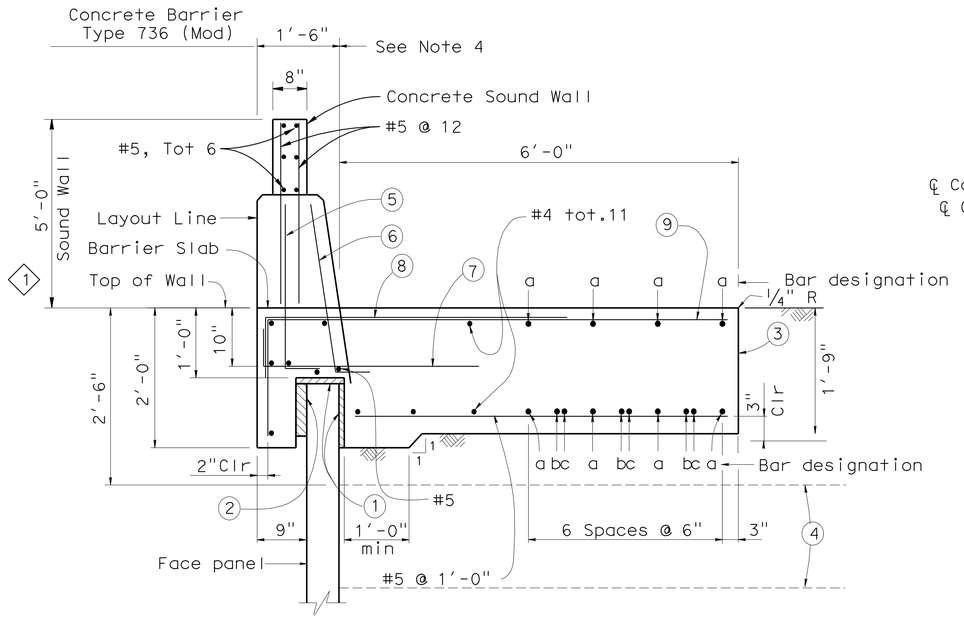

SECTION AT TOP OF WALL WITH BARRIER SLAB AND CONCRETE BARRIER

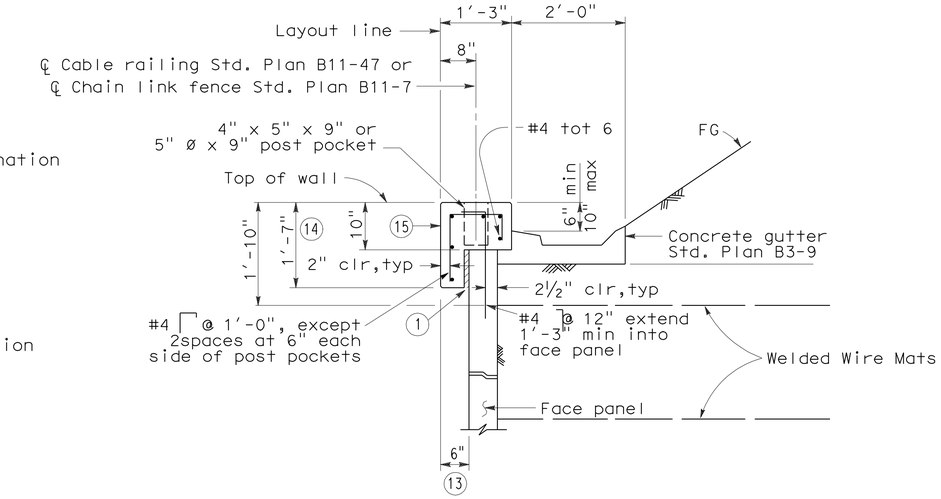

SECTION AT TOP OF WALL WITH COPING AND GUTTER

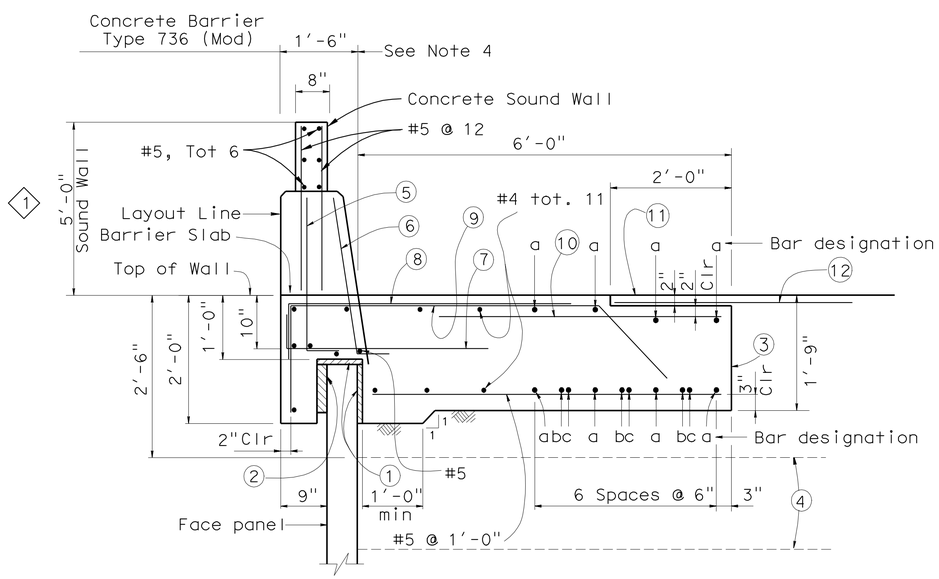

SECTION AT TOP OF WALL WITH BARRIER SLAB WITH PAVING NOTCH AND CONCRETE BARRIER

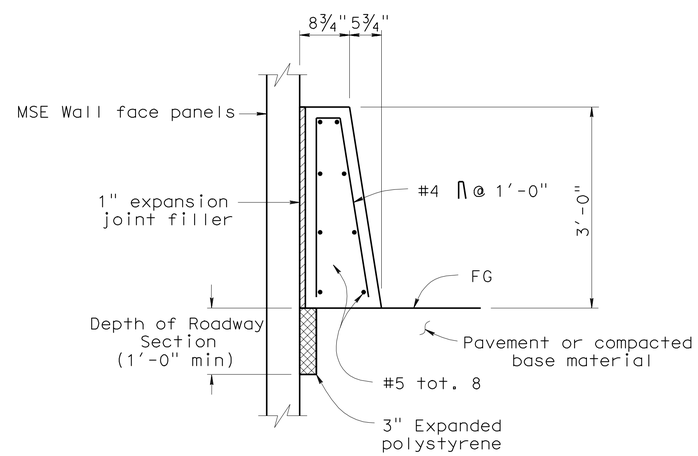

CONCRETE BARRIER TYPE 60D (MOD) AT FACE OF MSE WALL

NOTES:

1. Clearance to reinforcing steel in concrete barrier to be 1".
2. Not all barrier reinforcement shown.
3. No expansion joints in concrete barrier or barrier slab within MSE wall limits.
4. Specific concrete barrier to be utilized as shown on typical section elsewhere in Project Plans.
5. Install cable railing or chain link fence when indicated in Project Plans.

LEGEND:

(1) 1" Expanded polystyrene.

(2) 2" Expanded polystyrene. Recess expanded polystyrene 2" into barrier slab.

(3) Contact joint.

(4) Welded Wire Mat Soil reinforcement.

(5) #5 6¼" @ 1'-4" (To be in place prior to barrier slab concrete).

(6) #5 6¼" @ 8" (To be in place prior to barrier slab concrete).

(7) #5 6¼" 3'-4" @ 1'-0"

(8) #5 4'-7" @ 1'-0" bundled with (9) bars.

(9) #5 5'-0" 1'-3¾" @ 1'-0"

(10) #5 X 1400 @ 1'-0"

"a" bar = #6 continuous.
"b" bar = #6 X 59'-0"
"c" bar = #6 X 49'-2"
Place "b" and "c" bars at beginning and ending ends of barrier slab.

(11) AC Overlay on barrier slab (See "Road Plans").

(12) 4'-0" wide pavement reinforcing fabric.

(13) Except 9" when coping and barrier slab occur along the top of the same wall.

(14) Except 2'-0" when coping and barrier slab occur along the top of the same wall.

(15) ½" expansion joints in coping at every fourth panel joint.

STANDARD DRAWING

FILE NO. xs13-020-4e

APPROVED BY K. GRISWELL — RESPONSIBLE TECHNICAL SPECIALIST
APPROVAL DATE 5-6-08

RELEASED BY ROBERTO LACALLE — RESPONSIBLE OFFICE CHIEF
RELEASE DATE 5-6-08

(1) Changed Details

STATE OF CALIFORNIA DEPARTMENT OF TRANSPORTATION

DIVISION OF ENGINEERING SERVICES

BRIDGE NO. 56E0065

POST MILE 18.20

RETAINING WALL NO. 281

MECHANICALLY STABILIZED EMBANKMENT

DETAILS NO. 4

DS OSD 2147A (ENGLISH STANDARD DRAWING "XS" BORDER REV. 01/11/08)

ORIGINAL SCALE IN INCHES FOR REDUCED PLANS 0 1 2 3

CU 08
EA 448401

DISREGARD PRINTS BEARING EARLIER REVISION DATES

REVISION DATES (PRELIMINARY STAGE ONLY) 4-28-10 5-04-10 7-09-10 10-21-10

SHEET 9 OF 18

USERNAME => trcarol

56e0065s_msedt09.dgn

DATE PLOTTED => 30-APR-2011 TIME PLOTTED => 10:19

DIST.	COUNTY	ROUTE	POST MILES TOTAL PROJECT	SHEET NO.	TOTAL SHEETS
08	Riv	91	15.6/21.6	1448	2028

REGISTERED ENGINEER - CIVIL

4-25-11
PLANS APPROVAL DATE

REGISTERED PROFESSIONAL ENGINEER MINH THUONG VO No. C59297 Exp. 06-30-11 CIVIL STATE OF CALIFORNIA

The State of California or its officers or agents shall not be responsible for the accuracy or completeness of electronic copies of this plan sheet.

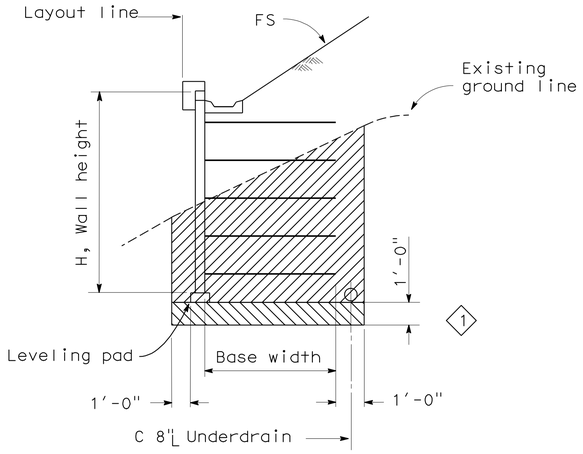

LIMITS OF EXCAVATION
No Scale

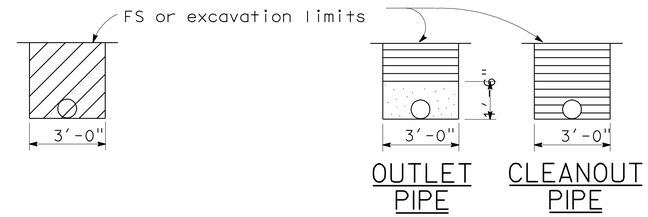

EXCAVATION BACKFILL

OUTLET OR CLEANOUT PIPE FOR UNDERDRAIN
No Scale

ABBREVIATIONS

OG	Original ground
FS	Planned finished surface
GP	Planned grading plane

LEGEND

	Limits of structure excavation
	Limits of structure backfill
	Limits of permeable material
1	Limits of structure overexcavation

NOTES:

1. Limits to FS except to GP when in roadway section.
2. Locate 8" perforated underdrain below bottom level of welded wire mats.
3. Maximum spacing of outlet pipes is 200 ft.
4. At sags in profile of underdrain, install outlet pipe for each direction of flow.

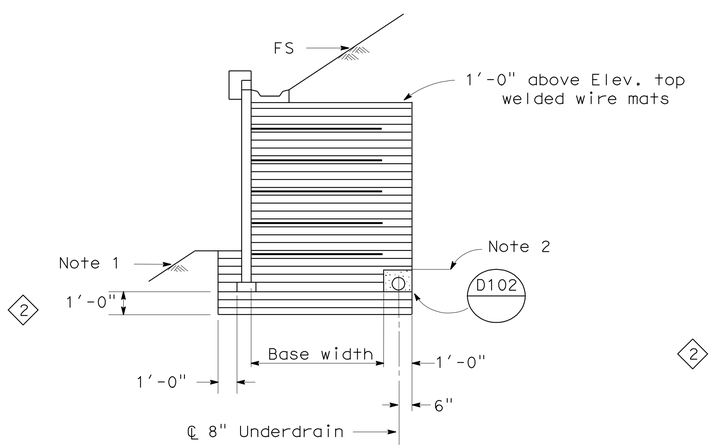

SLOPING FINISHED SURFACE

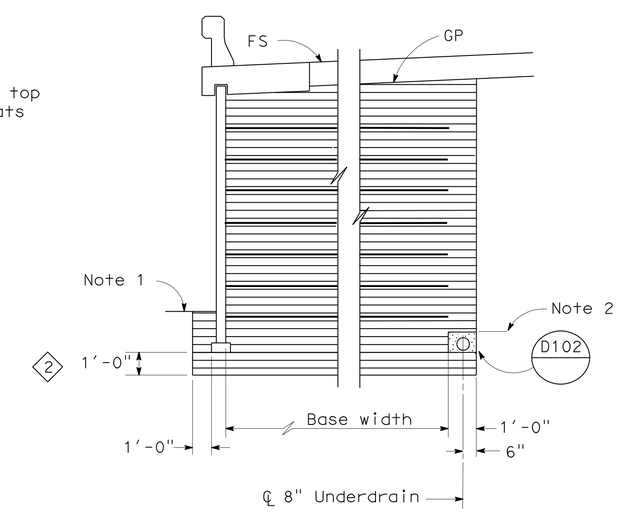

ROADWAY SECTION WITH BASE WIDTH 16' OR GREATER

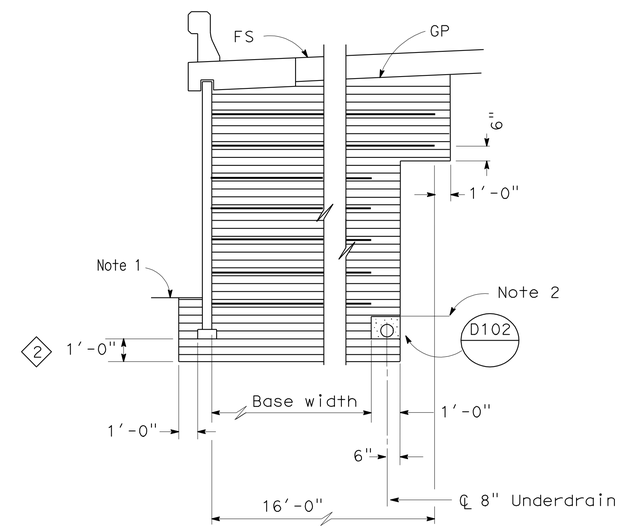

ROADWAY SECTION WITH BASE WIDTH LESS THAN 16'

LIMITS OF BACKFILL
No Scale

STANDARD DRAWING

FILE NO. xs13-020-6e

APPROVED BY K. GRISWELL
RESPONSIBLE TECHNICAL SPECIALIST
APPROVAL DATE 5-6-08

RELEASED BY ROBERTO LACALLE
RESPONSIBLE OFFICE CHIEF
RELEASE DATE 5-6-08

1 Add Limits of Overexcavation
2 Add Limits of Backfill

STATE OF CALIFORNIA
DEPARTMENT OF TRANSPORTATION

DIVISION OF ENGINEERING SERVICES

BRIDGE NO. 56E0065
POST MILE 18.20

RETAINING WALL NO. 281
MECHANICALLY STABILIZED EMBANKMENT
DETAIL NO. 5

DS OSD 2147A (ENGLISH STANDARD DRAWING "XS" BORDER REV. 01/11/08)

ORIGINAL SCALE IN INCHES FOR REDUCED PLANS 0 1 2 3

CU 08
EA 448401

DISREGARD PRINTS BEARING EARLIER REVISION DATES

REVISION DATES (PRELIMINARY STAGE ONLY) 7-01-10 9-13-10 10-21-10

SHEET 10 OF 18

USERNAME => trcarol

56e0065s_msedt10.dgn

DATE PLOTTED => 30-APR-2011 TIME PLOTTED => 10:19

Dist	COUNTY	ROUTE	POST MILES TOTAL PROJECT	SHEET No.	TOTAL SHEETS
08	Riv	91	15.6/21.6	1449	2028

LICENSED LANDSCAPE ARCHITECT

4-25-11
PLANS APPROVAL DATE

LICENSED LANDSCAPE ARCHITECT
Matthew Perry Hall No. 4799
Signature
10/31/2011
Renewal Date
11/12/2010
Date
STATE OF CALIFORNIA

THE STATE OF CALIFORNIA OR ITS OFFICERS OR AGENTS SHALL NOT BE RESPONSIBLE FOR THE ACCURACY OR COMPLETENESS OF SCANNED COPIES OF THIS PLAN SHEET.

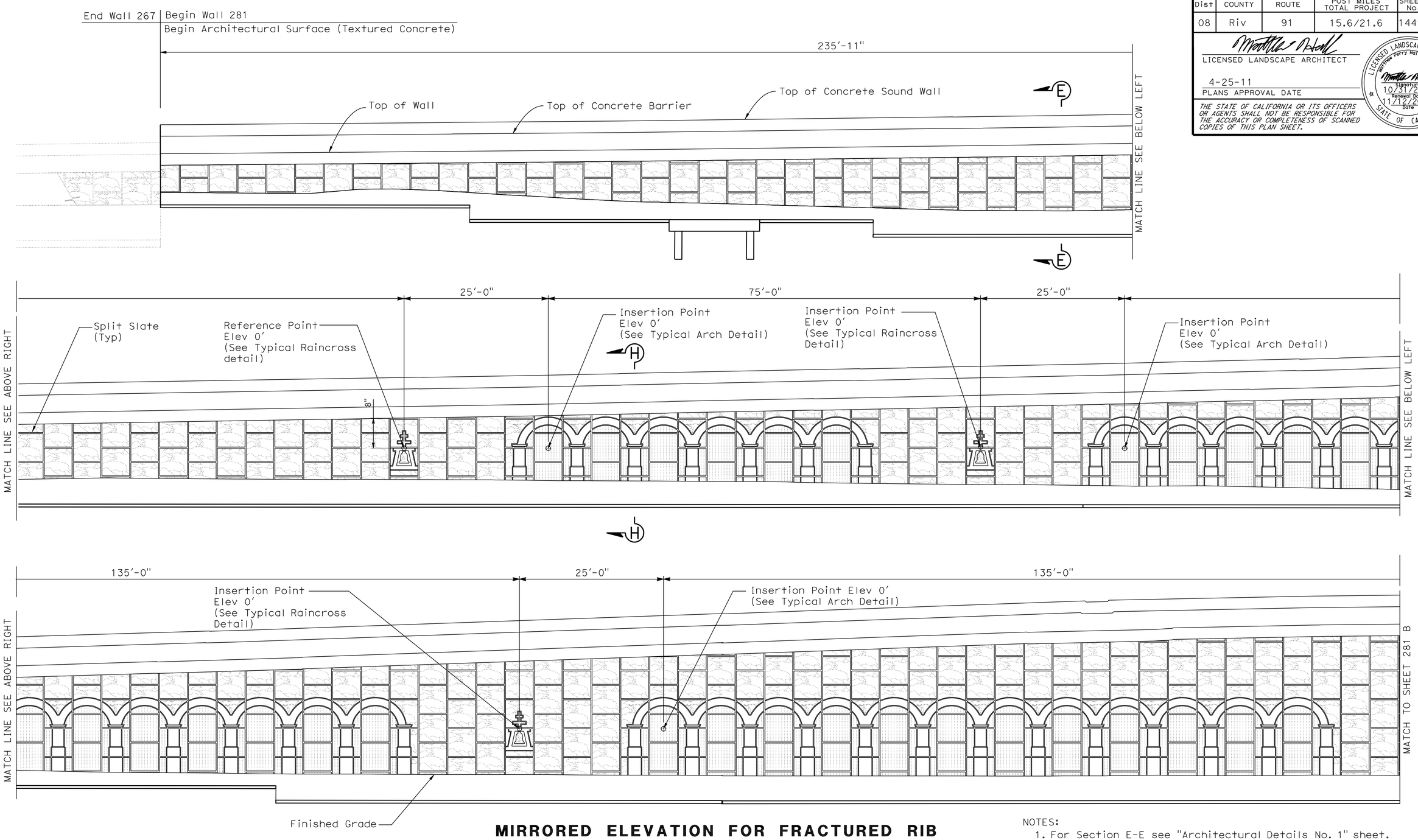

MIRRORED ELEVATION FOR FRACTURED RIB SPLIT FACE TEXTURE MSE RETAINING WALL No. 281 A

1/8"=1'-0"

NOTES:
1. For Section E-E see "Architectural Details No. 1" sheet.
2. For Section H-H see "Architectural Details No. 2" sheet.

	BY	CHECKED
DESIGN	MATTHEW HALL	MIRIAM BISHOP
DETAILS	Y. Tang	MIRIAM BISHOP
QUANTITIES	A. McPhee	M. Vo

STATE OF CALIFORNIA
DEPARTMENT OF TRANSPORTATION

DIVISION OF ENGINEERING SERVICES
STRUCTURE DESIGN
DESIGN BRANCH 10

BRIDGE NO. 56E0065
POST MILE 18.20

RETAINING WALL NO. 281
ARCHITECTURAL SURFACE NO. 1

STRUCTURES DESIGN DETAIL SHEET (ENGLISH) (REV. 10/25/05)

ORIGINAL SCALE IN INCHES FOR REDUCED PLANS 0 1 2 3

CU 08
EA 448401

DISREGARD PRINTS BEARING EARLIER REVISION DATES

REVISION DATES: 8-13-10

SHEET 11 OF 18

FILE => 56e0065sars11.dgn

USERNAME => trcarol DATE PLOTTED => 30-APR-2011 TIME PLOTTED => 10:19

Dist	COUNTY	ROUTE	POST MILES TOTAL PROJECT	SHEET No.	TOTAL SHEETS
08	Riv	91	15.6/21.6	1450	2028

LICENSED LANDSCAPE ARCHITECT

4-25-11
PLANS APPROVAL DATE

LICENSED LANDSCAPE ARCHITECT
Matthew Perry Hall No. 4293
Signature
10/31/2011
Renewal Date
11/12/2010
Date
STATE OF CALIFORNIA

THE STATE OF CALIFORNIA OR ITS OFFICERS OR AGENTS SHALL NOT BE RESPONSIBLE FOR THE ACCURACY OR COMPLETENESS OF SCANNED COPIES OF THIS PLAN SHEET.

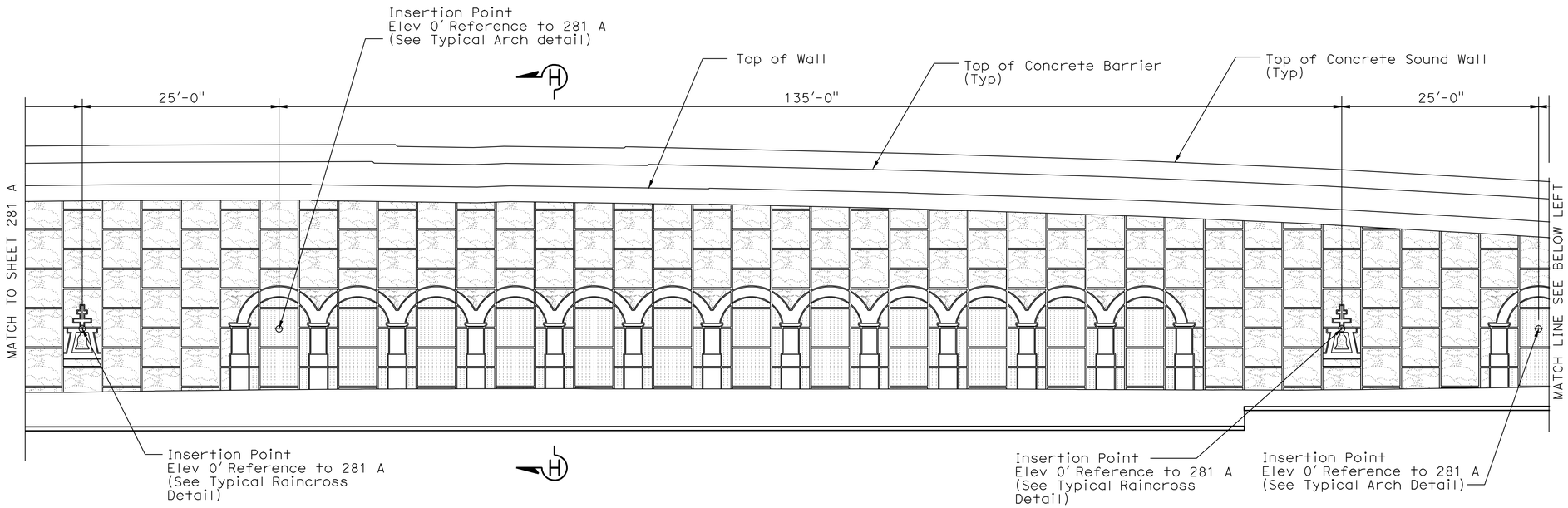

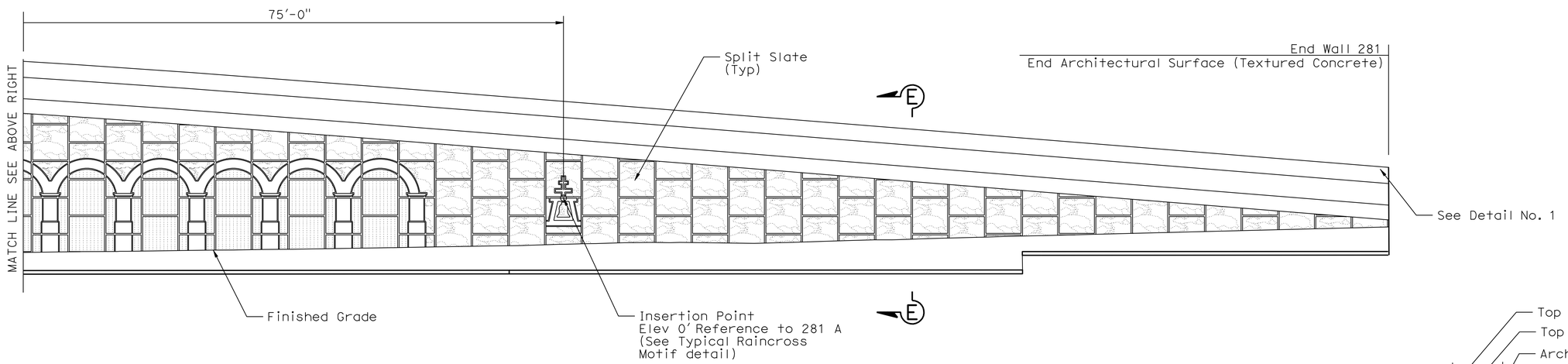

MIRRORED ELEVATION FOR FRACTURED RIB SPLIT FACE TEXTURE MSE RETAINING WALL No. 281 B

1/8"=1'-0"

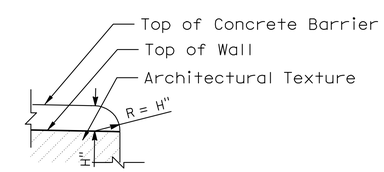

DETAIL No. 1

TYPICAL END OF WALL
WITH CONCRETE BARRIER
ON TOP OF WALL DETAIL

NOTES:

1. For Section E-E see "Architectural Details No. 1" sheet.
2. For Section H-H see "Architectural Details No. 2" sheet.

	BY	CHECKED
DESIGN	MATTHEW HALL	MIRIAM BISHOP
DETAILS	X. Tang	MIRIAM BISHOP
QUANTITIES	X. McPhee	M. Vo

STATE OF CALIFORNIA
DEPARTMENT OF TRANSPORTATION

DIVISION OF ENGINEERING SERVICES
STRUCTURE DESIGN
DESIGN BRANCH 10

BRIDGE NO. 56E0065
POST MILE 18.20

RETAINING WALL NO. 281
ARCHITECTURAL SURFACE NO. 2

STRUCTURES DESIGN DETAIL SHEET (ENGLISH) (REV. 10/25/05)

ORIGINAL SCALE IN INCHES FOR REDUCED PLANS 0 1 2 3

CU 08
EA 448401

DISREGARD PRINTS BEARING EARLIER REVISION DATES

REVISION DATES: 8-13-10 10-21-10

SHEET 12 OF 18

FILE => 56e0065sars12.dgn

USERNAME => trcarol DATE PLOTTED => 30-APR-2011 TIME PLOTTED => 10:20

Dist	COUNTY	ROUTE	POST MILES TOTAL PROJECT	SHEET No.	TOTAL SHEETS
08	Riv	91	15.6/21.6	1451	2028

LICENSED LANDSCAPE ARCHITECT

4-25-11
PLANS APPROVAL DATE

LICENSED LANDSCAPE ARCHITECT
Matthew Perry Hall No. 4262
Signature
10/31/2011
Renewal Date
11/12/2010
Date
STATE OF CALIFORNIA

THE STATE OF CALIFORNIA OR ITS OFFICERS OR AGENTS SHALL NOT BE RESPONSIBLE FOR THE ACCURACY OR COMPLETENESS OF SCANNED COPIES OF THIS PLAN SHEET.

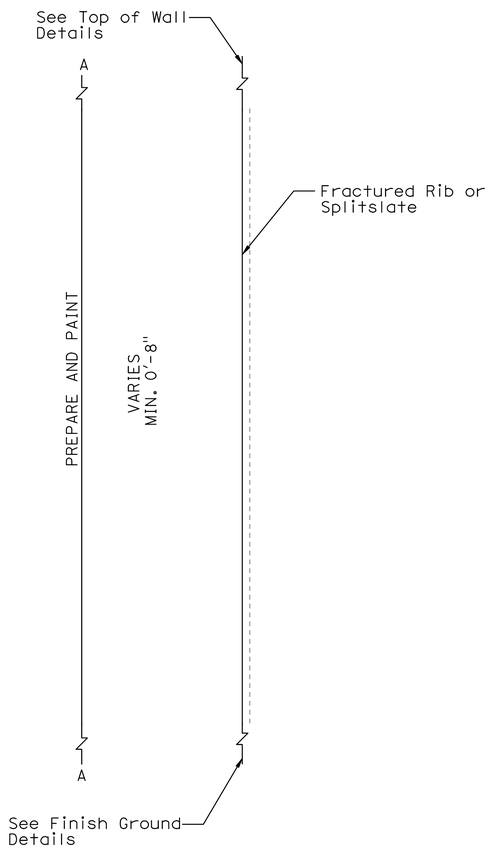

SECTION E-E

No Scale

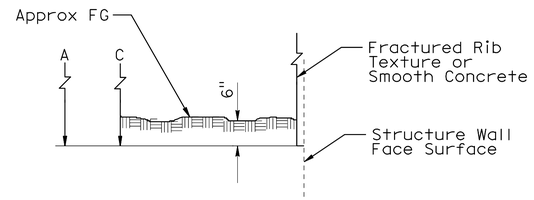

FINISH GROUND DETAIL
TYPICAL DETAIL AT FINISH GRADE

No Scale

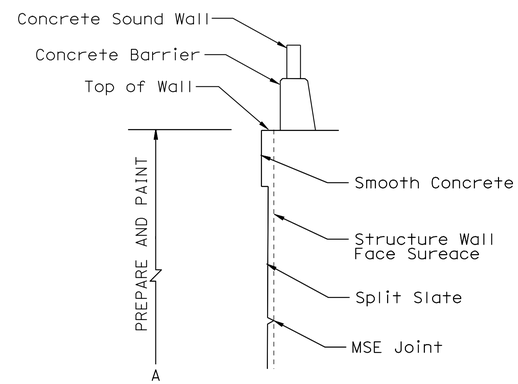

TOP OF WALL DETAIL
TYPICAL WITH CONCRETE BARRIER

No Scale

DESIGN	BY MATTHEW HALL	CHECKED MIRIAM BISHOP	
DETAILS	BY Y. Tang	CHECKED MIRIAM BISHOP	
QUANTITIES	BY A. McPhee	CHECKED M. Vo	

STATE OF CALIFORNIA
DEPARTMENT OF TRANSPORTATION

DIVISION OF ENGINEERING SERVICES
STRUCTURE DESIGN
DESIGN BRANCH 10

BRIDGE NO. 56E0065
POST MILE 18.2

RETAINING WALL NO. 281
ARCHITECTURAL DETAILS NO. 1

STRUCTURES DESIGN DETAIL SHEET (ENGLISH) (REV. 10/25/05)

ORIGINAL SCALE IN INCHES FOR REDUCED PLANS 0 1 2 3

CU 08
EA 448401

DISREGARD PRINTS BEARING EARLIER REVISION DATES

REVISION DATES: 8-16-10 10-21-10

SHEET 13 OF 18

FILE => 56e0065sarsdt13.dgn

USERNAME => trcarol DATE PLOTTED => 30-APR-2011 TIME PLOTTED => 10:20

Dist	COUNTY	ROUTE	POST MILES TOTAL PROJECT	SHEET No.	TOTAL SHEETS
08	Riv	91	15.6/21.6	1452	2028

LICENSED LANDSCAPE ARCHITECT

4-25-11
PLANS APPROVAL DATE

LICENSED LANDSCAPE ARCHITECT Matthew Perry Hall No. 4562 Signature 10/31/2011 Renewal Date 11/12/2010 Date STATE OF CALIFORNIA

THE STATE OF CALIFORNIA OR ITS OFFICERS OR AGENTS SHALL NOT BE RESPONSIBLE FOR THE ACCURACY OR COMPLETENESS OF SCANNED COPIES OF THIS PLAN SHEET.

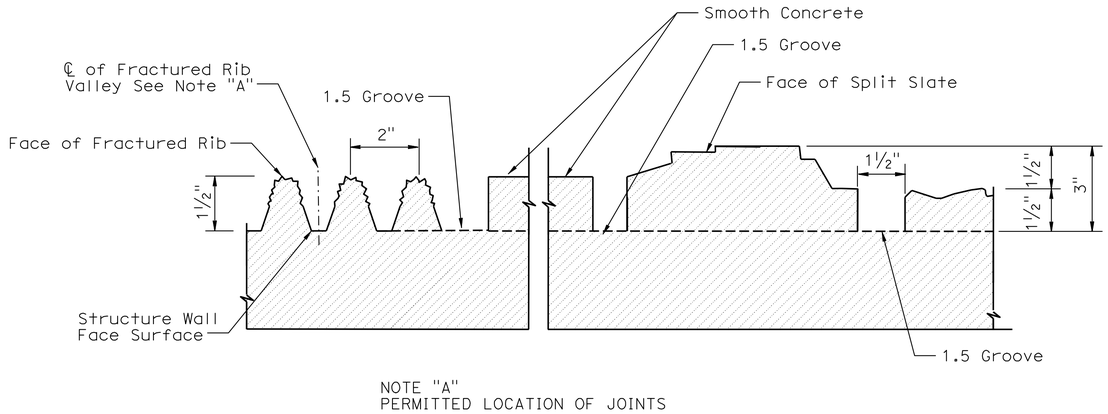

NOTE "A"
PERMITTED LOCATION OF JOINTS

TYPICAL FRACTURED RIB WITH SPLIT SLATE TEXTURE

NO SCALE

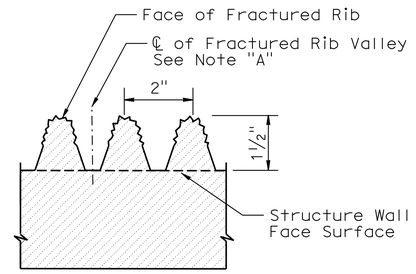

TYPICAL FRACTURED RIB TEXTURE

NO SCALE

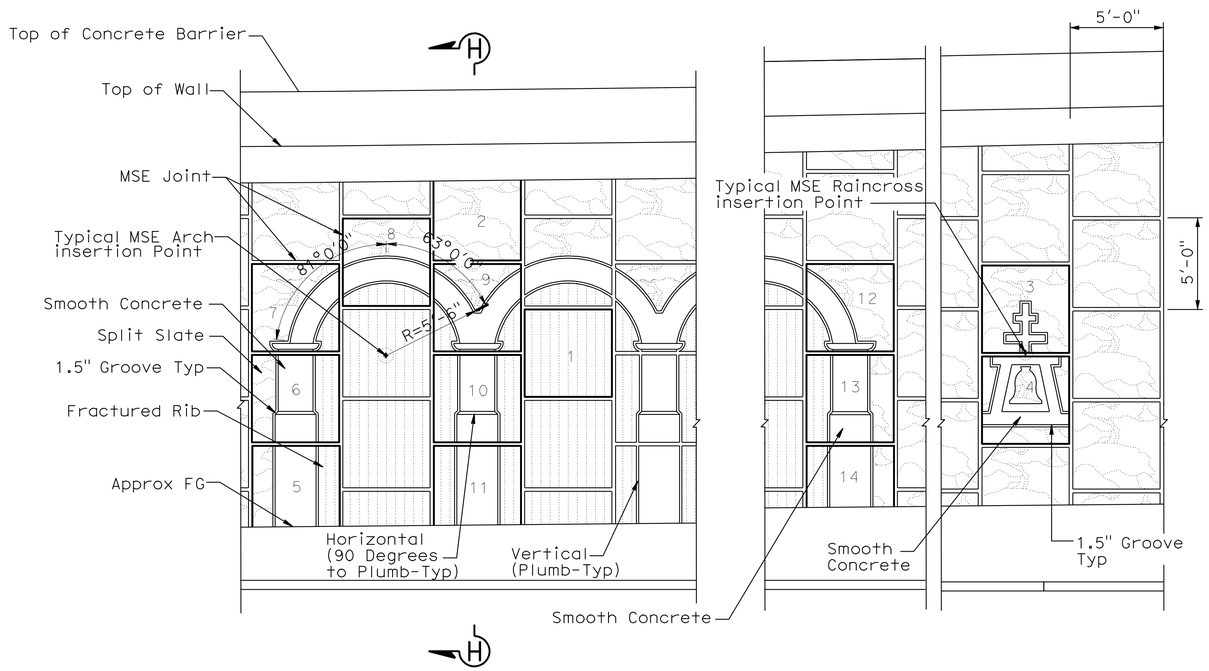

TYPICAL ARCHITECTURAL SURFACE ELEVATION FOR MECHANICALLY STABILIZED EMBANKMENT (MSE) WALLS

NO SCALE

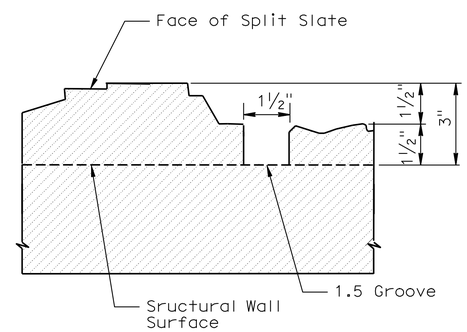

TYPICAL SPLIT SLATE TEXTURE

NO SCALE

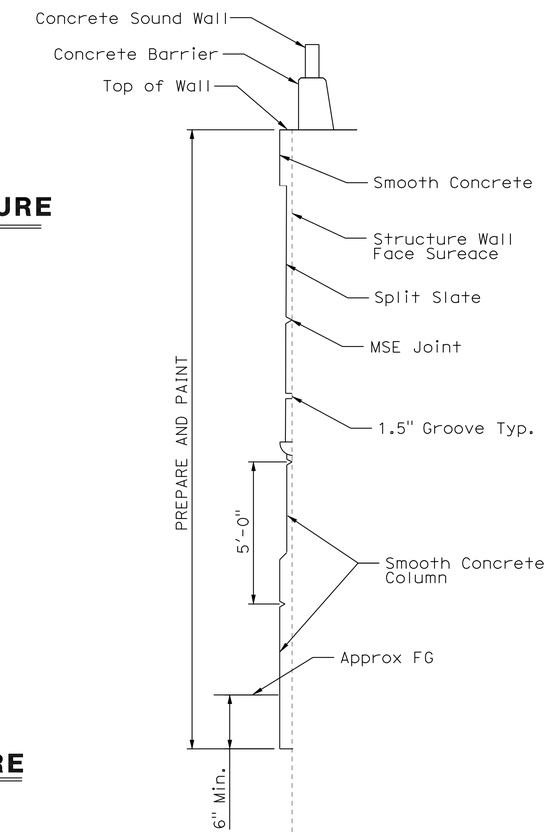

SECTION H-H

NO SCALE

DESIGN	BY MATTHEW HALL	CHECKED MIRIAM BISHOP	
DETAILS	BY Y. Tang	CHECKED MIRIAM BISHOP	
QUANTITIES	BY A. McPhee	CHECKED M. Vo	

STATE OF CALIFORNIA
DEPARTMENT OF TRANSPORTATION

DIVISION OF ENGINEERING SERVICES
STRUCTURE DESIGN
DESIGN BRANCH 10

BRIDGE NO. 56E0065
POST MILE 18.2

RETAINING WALL NO. 281
ARCHITECTURAL DETAILS NO. 2

STRUCTURES DESIGN DETAIL SHEET (ENGLISH) (REV. 10/25/05)

ORIGINAL SCALE IN INCHES FOR REDUCED PLANS 0 1 2 3

CU 08
EA 448401

DISREGARD PRINTS BEARING EARLIER REVISION DATES 8-16-10 9-09-10 10-21-10

REVISION DATES

SHEET 14 OF 18

FILE => 56e0065sarsdt14.dgn

USERNAME => ttcarol DATE PLOTTED => 30-APR-2011 TIME PLOTTED => 10:20

Dist	COUNTY	ROUTE	POST MILES TOTAL PROJECT	SHEET No.	TOTAL SHEETS
08	Riv	91	15.6/21.6	1453	2028

LICENSED LANDSCAPE ARCHITECT

4-25-11
PLANS APPROVAL DATE

LICENSED LANDSCAPE ARCHITECT Matthew Perry Hall No. 4401 Signature 10/31/2011 Renewal Date 11/12/2010 Date STATE OF CALIFORNIA

THE STATE OF CALIFORNIA OR ITS OFFICERS OR AGENTS SHALL NOT BE RESPONSIBLE FOR THE ACCURACY OR COMPLETENESS OF SCANNED COPIES OF THIS PLAN SHEET.

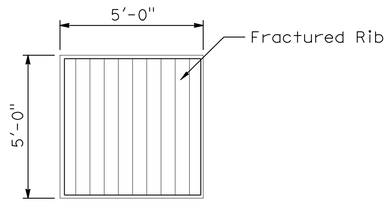

PANEL 1

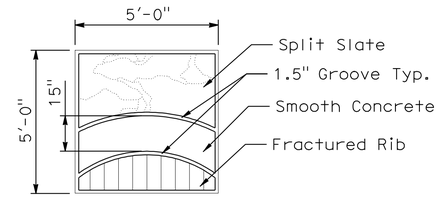

PANEL 8

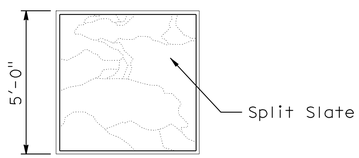

PANEL 2

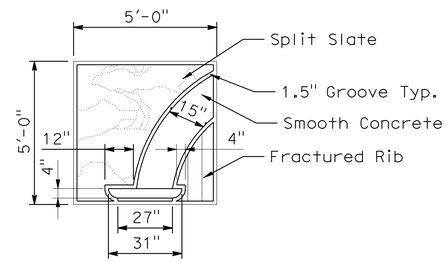

PANEL 7

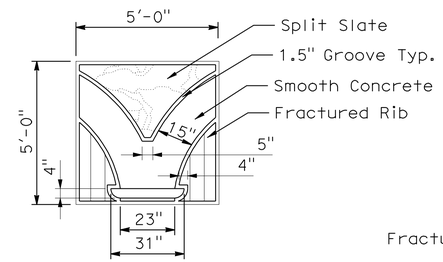

PANEL 9

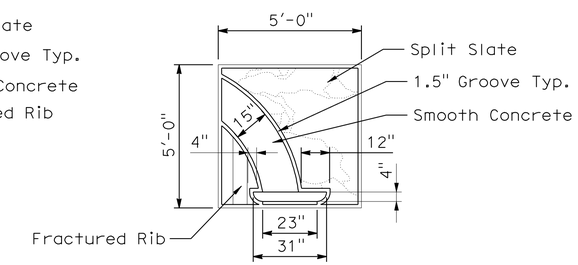

PANEL 12

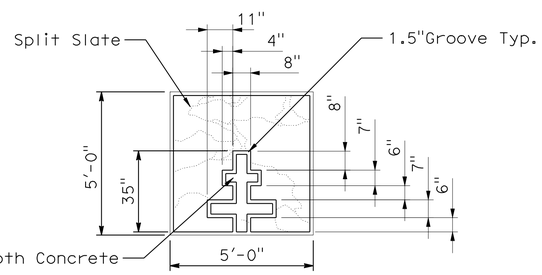

PANEL 3

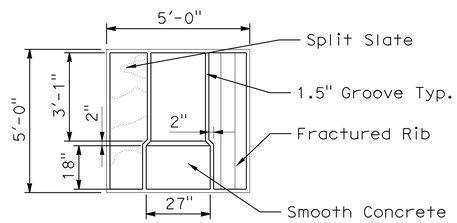

PANEL 6

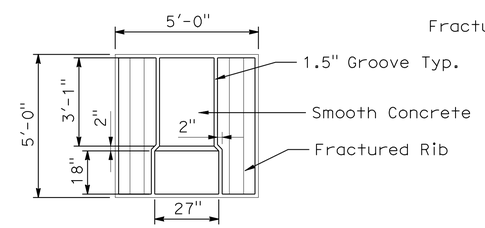

PANEL 10

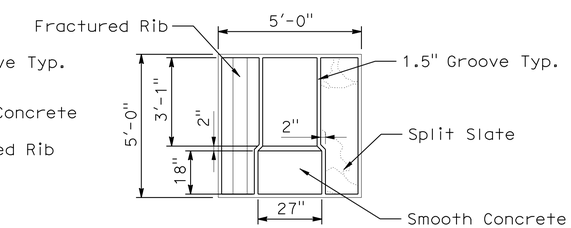

PANEL 13

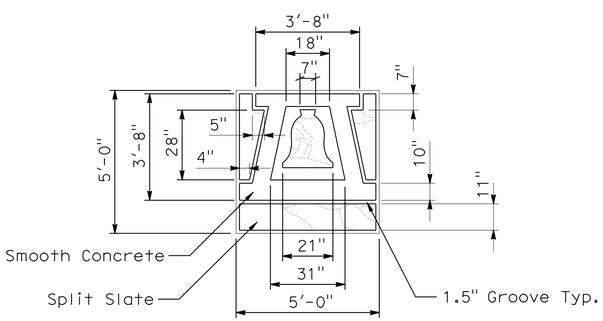

PANEL 4

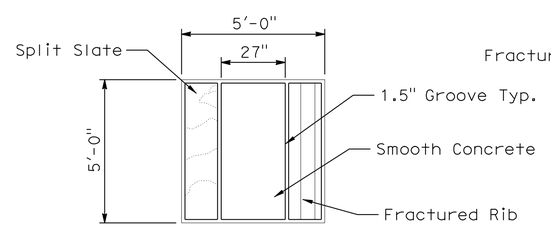

PANEL 5

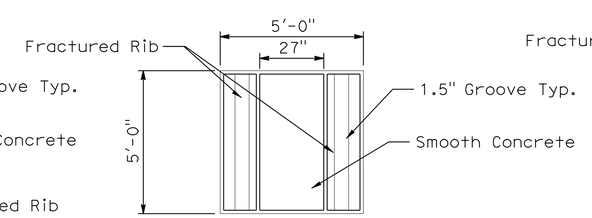

PANEL 11

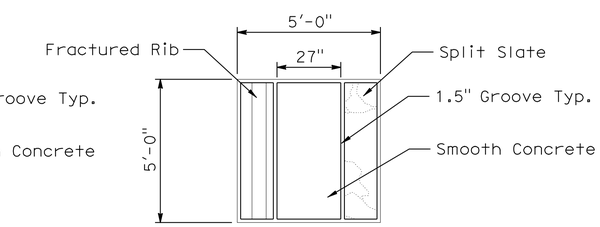

PANEL 14

ARCHITECTURAL SURFACE FOR TYPICAL MECHANICALLY STABILIZED EMBANKMENT (MSE) PANELS

No Scale

DESIGN	BY MATTHEW HALL	CHECKED MIRIAM BISHOP	
DETAILS	BY Y. Tang	CHECKED MIRIAM BISHOP	
QUANTITIES	BY A. McPhee	CHECKED M. Vo	

STATE OF CALIFORNIA DEPARTMENT OF TRANSPORTATION

DIVISION OF ENGINEERING SERVICES STRUCTURE DESIGN
DESIGN BRANCH 10

BRIDGE NO. 56E0065
POST MILE 18.2

RETAINING WALL NO. 281
ARCHITECTURAL DETAILS NO. 3

STRUCTURES DESIGN DETAIL SHEET (ENGLISH) (REV. 10/25/05)

ORIGINAL SCALE IN INCHES FOR REDUCED PLANS 0 1 2 3

CU 08
EA 448401

DISREGARD PRINTS BEARING EARLIER REVISION DATES

REVISION DATES 8-18-10

SHEET 15 OF 18

FILE => 56e0065sarsdt15.dgn

USERNAME => rrcarol DATE PLOTTED => 30-APR-2011 TIME PLOTTED => 10:20

DIST	COUNTY	ROUTE	POST MILES TOTAL PROJECT	SHEET No	TOTAL SHEETS
08	Riv	91	15.6/21.6	1454	2028

GEOTECHNICAL PROFESSIONAL — DATE 11/03/10

4-25-11
PLANS APPROVAL DATE

REGISTERED PROFESSIONAL ENGINEER — Farid Motamed — No. 2738 — Exp. 6-30-11 — GEOTECHNICAL — STATE OF CALIFORNIA

The State of California or its officers or agents shall not be responsible for the accuracy or completeness of electronic copies of this plan sheet.

California Department of Transportation
5900 Folsom Boulevard
Sacramento, CA 95819

URS Corporation
2020 East First Street, Suite 400
Santa Ana, CA 92705

GROUP SYMBOLS AND NAMES

Graphic / Symbol	Group Names	Graphic / Symbol	Group Names
GW	Well-graded GRAVEL Well-graded GRAVEL with SAND	CL	Lean CLAY Lean CLAY with SAND Lean CLAY with GRAVEL SANDY lean CLAY SANDY lean CLAY with GRAVEL GRAVELLY lean CLAY GRAVELLY lean CLAY with SAND
GP	Poorly graded GRAVEL Poorly graded GRAVEL with SAND		
GW-GM	Well-graded GRAVEL with SILT Well-graded GRAVEL with SILT and SAND	CL-ML	SILTY CLAY SILTY CLAY with SAND SILTY CLAY with GRAVEL SANDY SILTY CLAY SANDY SILTY CLAY with GRAVEL GRAVELLY SILTY CLAY GRAVELLY SILTY CLAY with SAND
GW-GC	Well-graded GRAVEL with CLAY (or SILTY CLAY) Well-graded GRAVEL with CLAY and SAND (or SILTY CLAY and SAND)		
GP-GM	Poorly graded GRAVEL with SILT Poorly graded GRAVEL with SILT and SAND	ML	SILT SILT with SAND SILT with GRAVEL SANDY SILT SANDY SILT with GRAVEL GRAVELLY SILT GRAVELLY SILT with SAND
GP-GC	Poorly graded GRAVEL with CLAY (or SILTY CLAY) Poorly graded GRAVEL with CLAY and SAND (or SILTY CLAY and SAND)		
GM	SILTY GRAVEL SILTY GRAVEL with SAND	OL	ORGANIC lean CLAY ORGANIC lean CLAY with SAND ORGANIC lean CLAY with GRAVEL SANDY ORGANIC lean CLAY SANDY ORGANIC lean CLAY with GRAVEL GRAVELLY ORGANIC lean CLAY GRAVELLY ORGANIC lean CLAY with SAND
GC	CLAYEY GRAVEL CLAYEY GRAVEL with SAND		
GC-GM	SILTY, CLAYEY GRAVEL SILTY, CLAYEY GRAVEL with SAND	OL	ORGANIC SILT ORGANIC SILT with SAND ORGANIC SILT with GRAVEL SANDY ORGANIC SILT SANDY ORGANIC SILT with GRAVEL GRAVELLY ORGANIC SILT GRAVELLY ORGANIC SILT with SAND
SW	Well-graded SAND Well-graded SAND with GRAVEL		
SP	Poorly graded SAND Poorly graded SAND with GRAVEL	CH	Fat CLAY Fat CLAY with SAND Fat CLAY with GRAVEL SANDY fat CLAY SANDY fat CLAY with GRAVEL GRAVELLY fat CLAY GRAVELLY fat CLAY with SAND
SW-SM	Well-graded SAND with SILT Well-graded SAND with SILT and GRAVEL		
SW-SC	Well-graded SAND with CLAY (or SILTY CLAY) Well-graded SAND with CLAY and GRAVEL (or SILTY CLAY and GRAVEL)	MH	Elastic SILT Elastic SILT with SAND Elastic SILT with GRAVEL SANDY elastic SILT SANDY elastic SILT with GRAVEL GRAVELLY elastic SILT GRAVELLY elastic SILT with SAND
SP-SM	Poorly graded SAND with SILT Poorly graded SAND with SILT and GRAVEL		
SP-SC	Poorly graded SAND with CLAY (or SILTY CLAY) Poorly graded SAND with CLAY and GRAVEL (or SILTY CLAY and GRAVEL)	OH	ORGANIC fat CLAY ORGANIC fat CLAY with SAND ORGANIC fat CLAY with GRAVEL SANDY ORGANIC fat CLAY SANDY ORGANIC fat CLAY with GRAVEL GRAVELLY ORGANIC fat CLAY GRAVELLY ORGANIC fat CLAY with SAND
SM	SILTY SAND SILTY SAND with GRAVEL		
SC	CLAYEY SAND CLAYEY SAND with GRAVEL	OH	ORGANIC elastic SILT ORGANIC elastic SILT with SAND ORGANIC elastic SILT with GRAVEL SANDY elastic ELASTIC SILT SANDY ORGANIC elastic SILT with GRAVEL GRAVELLY ORGANIC elastic SILT GRAVELLY ORGANIC elastic SILT with SAND
SC-SM	SILTY, CLAYEY SAND SILTY, CLAYEY SAND with GRAVEL		
PT	PEAT	OL/OH	ORGANIC SOIL ORGANIC SOIL with SAND ORGANIC SOIL with GRAVEL SANDY ORGANIC SOIL SANDY ORGANIC SOIL with GRAVEL GRAVELLY ORGANIC SOIL GRAVELLY ORGANIC SOIL with SAND
	COBBLES COBBLES and BOULDERS BOULDERS		

FIELD AND LABORATORY TESTS

C	Consolidation (ASTM D 2435-04)
CL	Collapse Potential (ASTM D 5333-03)
CP	Compaction Curve (CTM 216 - 06)
CR	Corrosion, Sulfates, Chlorides (CTM 643 - 99; CTM 417 - 06; CTM 422 - 06)
CU	Consolidated Undrained Triaxial (ASTM D 4767-02)
DS	Direct Shear (ASTM D 3080-04)
EI	Expansion Index (ASTM D 4829-03)
M	Moisture Content (ASTM D 2216-05)
OC	Organic Content (ASTM D 2974-07)
P	Permeability (CTM 220 - 05)
PA	Particle Size Analysis (ASTM D 422-63 [2002])
PI	Liquid Limit, Plastic Limit, Plasticity Index (AASHTO T 89-02, AASHTO T 90-00)
PL	Point Load Index (ASTM D 5731-05)
PM	Pressure Meter
PP	Pocket Penetrometer
R	R-Value (CTM 301 - 00)
SE	Sand Equivalent (CTM 217 - 99)
SG	Specific Gravity (AASHTO T 100-06)
SL	Shrinkage Limit (ASTM D 427-04)
SW	Swell Potential (ASTM D 4546-03)
TV	Pocket Torvane
UC	Unconfined Compression - Soil (ASTM D 2166-06) Unconfined Compression - Rock (ASTM D 2938-95)
UU	Unconsolidated Undrained Triaxial (ASTM D 2850-03)
UW	Unit Weight (ASTM D 4767-04)
VS	Vane Shear (AASHTO T 223-96 [2004])

CONSISTENCY OF COHESIVE SOILS

Descriptor	Unconfined Compressive Strength (tsf)	Pocket Penetrometer (tsf)	Torvane (tsf)	Field Approximation
Very Soft	< 0.25	< 0.25	< 0.12	Easily penetrated several inches by fist
Soft	0.25 - 0.50	0.25 - 0.50	0.12 - 0.25	Easily penetrated several inches by thumb
Medium Stiff	0.50 - 1.0	0.50 - 1.0	0.25 - 0.50	Can be penetrated several inches by thumb with moderate effort
Stiff	1.0 - 2.0	1.0 - 2.0	0.50 - 1.0	Readily indented by thumb but penetrated only with great effort
Very Stiff	2.0 - 4.0	2.0 - 4.0	1.0 - 2.0	Readily indented by thumbnail
Hard	> 4.0	> 4.0	> 2.0	Indented by thumbnail with difficulty

APPARENT DENSITY OF COHESIONLESS SOILS

Descriptor	SPT N60 - Value (blows / foot)
Very Loose	0 - 4
Loose	5 - 10
Medium Dense	11 - 30
Dense	31 - 50
Very Dense	> 50

MOISTURE

Descriptor	Criteria
Dry	Absence of moisture, dusty, dry to the touch
Moist	Damp but no visible water
Wet	Visible free water, usually soil is below water table

PERCENT OR PROPORTION OF SOILS

Descriptor	Criteria
Trace	Particles are present but estimated to be less than 5%
Few	5 to 10%
Little	15 to 25%
Some	30 to 45%
Mostly	50 to 100%

SOIL PARTICLE SIZE

Descriptor		Size
Boulder		> 12 inches
Cobble		3 to 12 inches
Gravel	Coarse	3/4 inch to 3 inches
	Fine	No. 4 Sieve to 3/4 inch
Sand	Coarse	No. 10 Sieve to No. 4 Sieve
	Medium	No. 40 Sieve to No. 10 Sieve
	Fine	No. 200 Sieve to No. 40 Sieve
Silt and Clay		Passing No. 200 Sieve

PLASTICITY OF FINE-GRAINED SOILS

Descriptor	Criteria
Nonplastic	A 1/8-inch thread cannot be rolled at any water content.
Low	The thread can barely be rolled, and the lump cannot be formed when drier than the plastic limit.
Medium	The thread is easy to roll, and not much time is required to reach the plastic limit; it cannot be rerolled after reaching the plastic limit. The lump crumbles when drier than the plastic limit.
High	It takes considerable time rolling and kneading to reach the plastic limit. The thread can be rerolled several times after reaching the plastic limit. The lump can be formed without crumbling when drier than the plastic limit.

CEMENTATION

Descriptor	Criteria
Weak	Crumbles or breaks with handling or little finger pressure.
Moderate	Crumbles or breaks with considerable finger pressure.
Strong	Will not crumble or break with finger pressure.

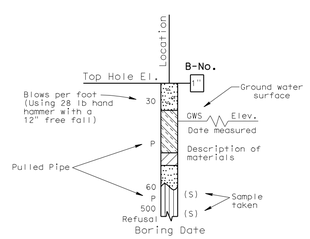

SAMPLE BORING (DRY)

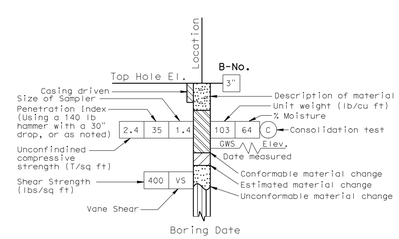

ROTARY SAMPLE BORING (WET)

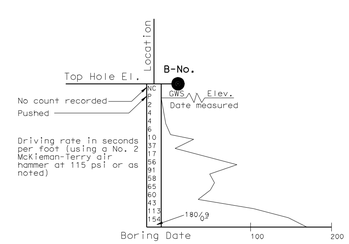

2 1/4" CONE PENETRATION BORING

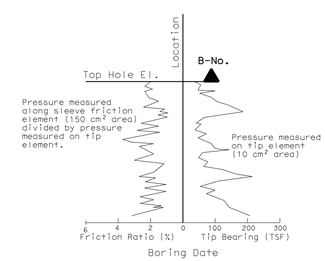

ELECTRONIC CONE PENETROMETER TEST

Cone Penetrometer dimensions and testing procedures are in accordance with ASTM standard D 3441-79, or as noted.

GINA PURSELL DESIGN OVERSIGHT	SHAWN WEI FUNCTIONAL SUPERVISOR	DRAWN BY	P. QUACH	P.CHAU/D.WADER/C.CARBINO FIELD INVESTIGATION BY:	PREPARED FOR THE STATE OF CALIFORNIA DEPARTMENT OF TRANSPORTATION	A. LEE PROJECT ENGINEER	BRIDGE NO. 56E0065
11/12/10 SIGN OFF DATE		CHECKED BY	S. PIRATHIVIRAJ	DATE: Nov 6 2007 to March 7 2008			POST MILE 18.2

RETAINING WALL NO. 281

LOG OF TEST BORINGS 1 OF 3

OSF GEOTECHNICAL LOG OF TEST BORINGS SHEET (ENGLISH) (REV. 2/25/05)

ORIGINAL SCALE IN INCHES FOR REDUCED PLANS 0 1 2 3

CU 59A0590
EA 08-448400

DISREGARD PRINTS BEARING EARLIER REVISION DATES 8-17-10

REVISION DATES (PRELIMINARY STAGE ONLY)

SHEET 16 OF 18

FILE => 56e0065zltb16.dgn

USERNAME => trcarol DATE PLOTTED => 30-APR-2011 TIME PLOTTED =>

DIST	COUNTY	ROUTE	POST MILES TOTAL PROJECT	SHEET No	TOTAL SHEETS
08	Riv	91	15.6/21.6	1455	2028

GEOTECHNICAL PROFESSIONAL — DATE 11/03/10

4-25-11
PLANS APPROVAL DATE

REGISTERED PROFESSIONAL ENGINEER — Farid Motamed — No. 2738 — Exp. 6-30-11 — GEOTECHNICAL — STATE OF CALIFORNIA

The State of California or its officers or agents shall not be responsible for the accuracy or completeness of electronic copies of this plan sheet.

California Department of Transportation
5900 Folsom Boulevard
Sacramento, CA 95819

URS Corporation
2020 East First Street, Suite 400
Santa Ana, CA 92705

FOR PLAN VIEW, SEE
"LOG OF TEST BORINGS" 3 OF 3

NOTE: 1. This LOTB sheet was prepared in accordance with the Caltrans Soil & Rock Logging, Classification, and Presentation Manual (June 2007).

2. For legend, see "Log of Test Borings" 1 of 3

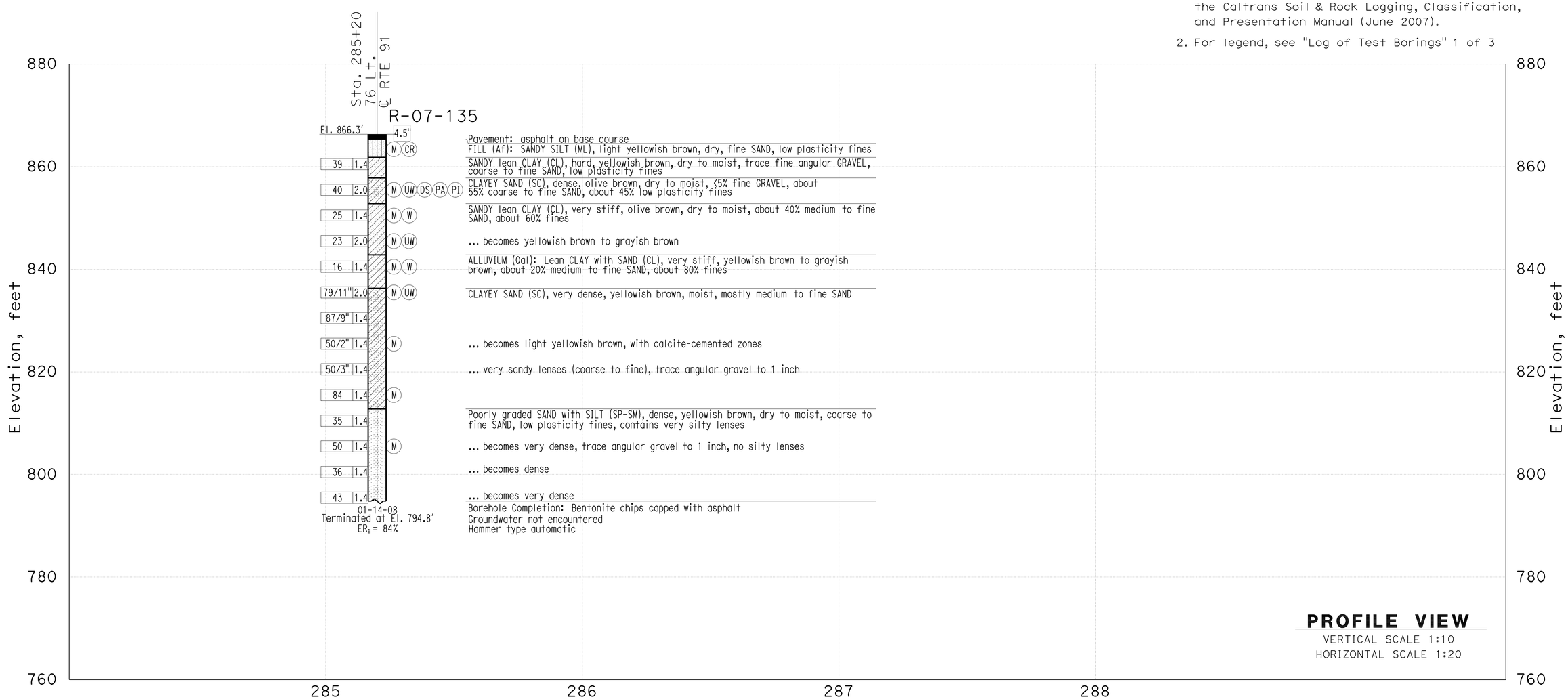

THIS PLAN ACCURATE FOR SOUND WALL AND RETAINING WALL WORK ONLY

GINA PURSELL DESIGN OVERSIGHT 11/12/10 SIGN OFF DATE	SHAWN WEI FUNCTIONAL SUPERVISOR	DRAWN BY	P. QUACH	P.CHAU/D.WADER/C.CARBINO FIELD INVESTIGATION BY: DATE: Nov 6 2007 to March 7 2008	PREPARED FOR THE STATE OF CALIFORNIA DEPARTMENT OF TRANSPORTATION	A. LEE PROJECT ENGINEER	BRIDGE NO. 56E0065 POST MILE 18.2	Retaining Wall 281 LOG OF TEST BORINGS 2 OF 3
		CHECKED BY	S. PIRATHIVIRAJ					

OSF GEOTECHNICAL LOG OF TEST BORINGS SHEET (ENGLISH) (REV. 2/25/05)

ORIGINAL SCALE IN INCHES FOR REDUCED PLANS 0 1 2 3

CU 59A0590
EA 08-448400

DISREGARD PRINTS BEARING EARLIER REVISION DATES

REVISION DATES (PRELIMINARY STAGE ONLY): 8-13-10

SHEET 17 OF 18

FILE => 56e0065zltb17.dgn

USERNAME => trcarol DATE PLOTTED => 30-APR-2011 TIME PLOTTED =>

DIST	COUNTY	ROUTE	POST MILES TOTAL PROJECT	SHEET No	TOTAL SHEETS
08	Riv	91	15.6/21.6	1456	2028

GEOTECHNICAL PROFESSIONAL — DATE 11/03/10

4-25-11
PLANS APPROVAL DATE

REGISTERED PROFESSIONAL ENGINEER — Farid Motamed — No. 2738 — Exp. 6-30-11 — GEOTECHNICAL — STATE OF CALIFORNIA

The State of California or its officers or agents shall not be responsible for the accuracy or completeness of electronic copies of this plan sheet.

California Department of Transportation
5900 Folsom Boulevard
Sacramento, CA 95819

URS Corporation
2020 East First Street, Suite 400
Santa Ana, CA 92705

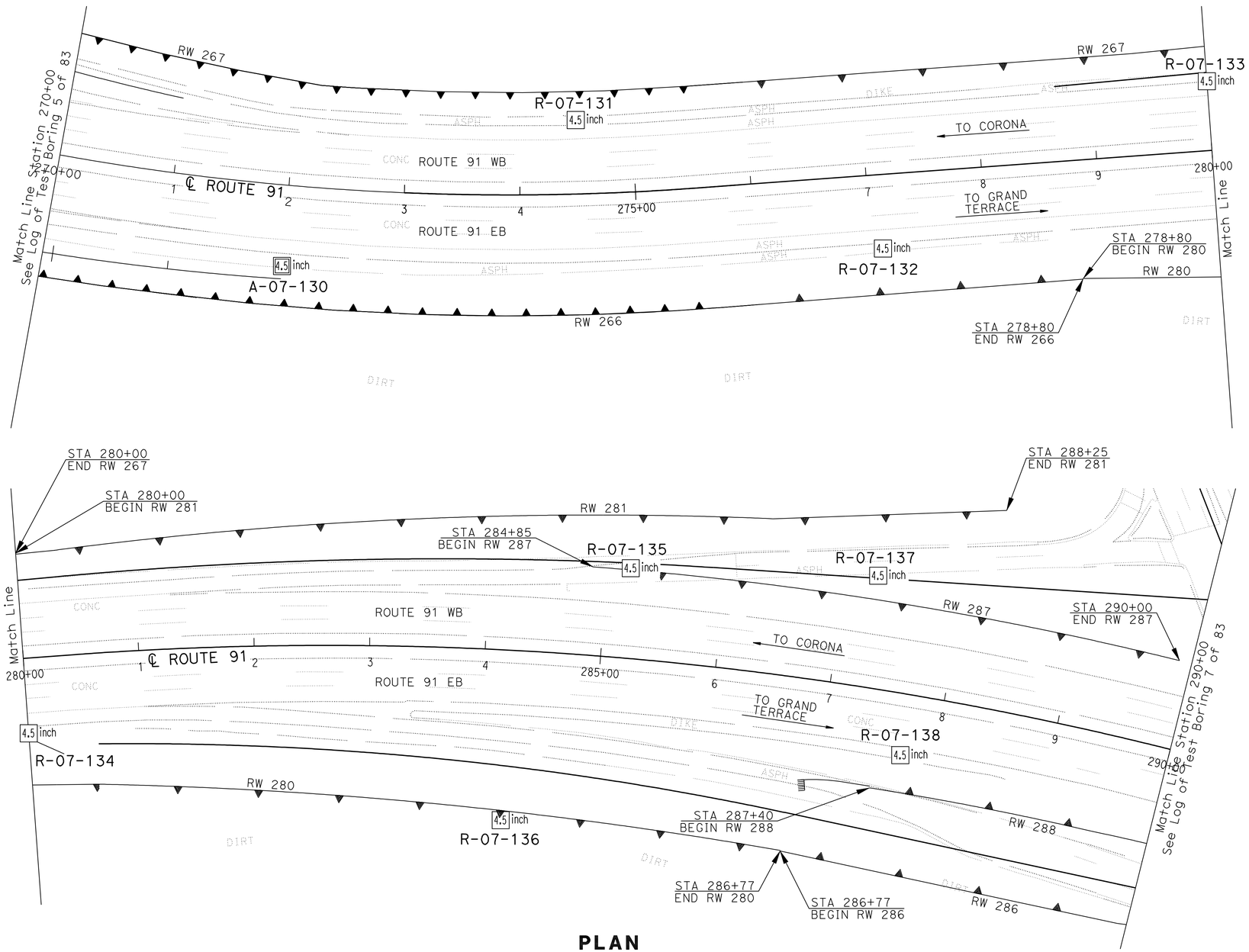

PLAN
SCALE 1"=50'

Borehole Number	Drill Rig	Hammer Type	Avg. Hammer Efficiency, ETR (%)
A-07-130	CS-2000	Automatic	84
R-07-131	CS-2000	Automatic	84
R-07-132	CS-2000	Automatic	84
R-07-133	CME 85	Automatic	87
R-07-134	CS-2000	Automatic	84
R-07-135	CS-2000	Automatic	84
R-07-136	CS-2000	Automatic	84
R-07-137	CS-2000	Automatic	84
R-07-138	CS-2000	Automatic	84

Sampler Type	Inside Diameter (Inches)	Borehole Numbers
SPT	1.375	A-07-130, R-07-131, R-07-132 R-07-133, R-07-134, R-07-135 R-07-136, R-07-137
Modified California 1	1.94	R-07-131, R-07-133 R-07-135, R-07-136
Modified California 2	2.40	-

GINA PURSELL — DESIGN OVERSIGHT
SHAWN WEI — FUNCTIONAL SUPERVISOR
11/12/10 — SIGN OFF DATE

DRAWN BY: P. QUACH
CHECKED BY: S. PIRATHIVIRAJ

P.CHAU/D.WADER/C.CARBINO
FIELD INVESTIGATION BY:
DATE: Nov 6 2007 to March 7 2008

PREPARED FOR THE STATE OF CALIFORNIA DEPARTMENT OF TRANSPORTATION

A. LEE — PROJECT ENGINEER

BRIDGE NO. 56E0065
POST MILE 18.2

RETAINING WALL NO. 281
LOG OF TEST BORINGS 3 OF 3

OSF GEOTECHNICAL LOG OF TEST BORINGS SHEET (ENGLISH) (REV. 2/25/05)

ORIGINAL SCALE IN INCHES FOR REDUCED PLANS 0 1 2 3

CU 59A0590
EA 08-448400

DISREGARD PRINTS BEARING EARLIER REVISION DATES
REVISION DATES (PRELIMINARY STAGE ONLY) 8-17-10

SHEET 18 OF 18

FILE => 56e0065zltb18.dgn

USERNAME => trcarol DATE PLOTTED => 30-APR-2011 TIME PLOTTED =>

DIST	COUNTY	ROUTE	POST MILES TOTAL PROJECT	SHEET No	TOTAL SHEETS
08	Riv	91	15.6/21.6	1457	2028

REGISTERED CIVIL ENGINEER 11/12/10 DATE

4-25-11
PLANS APPROVAL DATE

REGISTERED PROFESSIONAL ENGINEER Minh Thuong Vo No. C59297 Exp. 6/30/2011 CIVIL STATE OF CALIFORNIA

The State of California or its officers or agents shall not be responsible for the accuracy or completeness of electronic copies of this plan sheet.

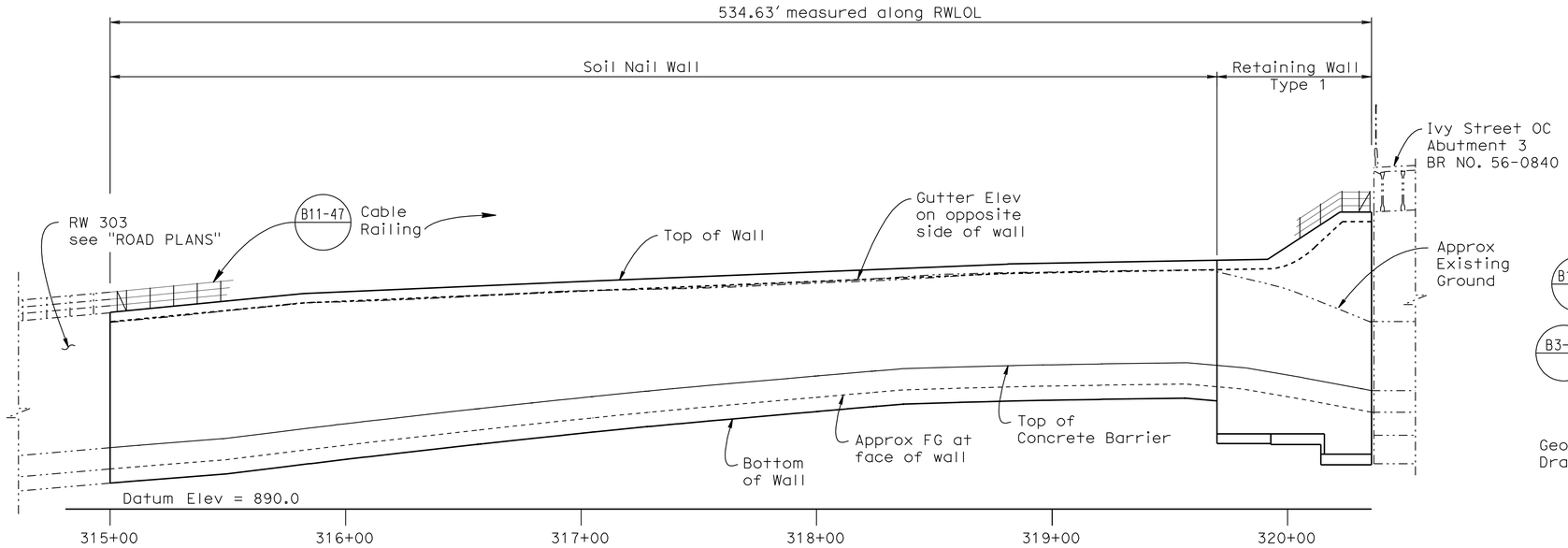

DEVELOPED ELEVATION

Horiz. 1" = 30'
Vert. 1" = 10'

Notes:

1. For top of wall and bottom of wall elevations see "STRUCTURE PLAN NO. 1" thru "STRUCTURE PLAN NO. 3" sheets.
2. For Quantities see "INDEX TO PLANS" sheet.

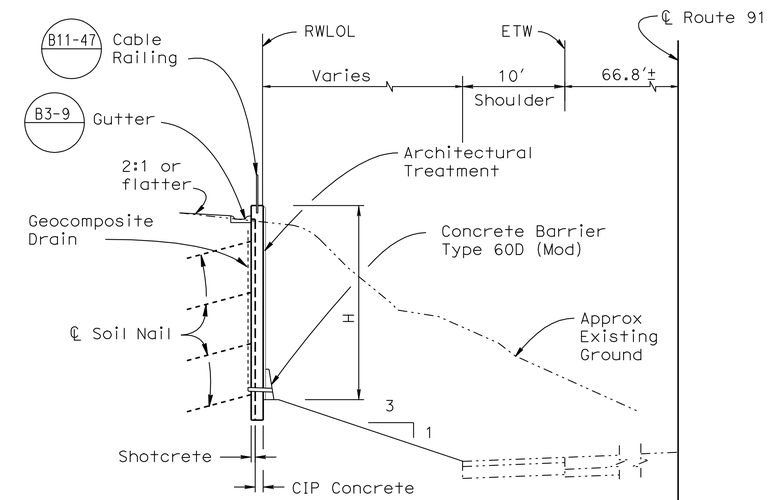

TYPICAL SECTION

1/8" = 1'-0"
Sta 315+00.00 to Sta 319+66.91

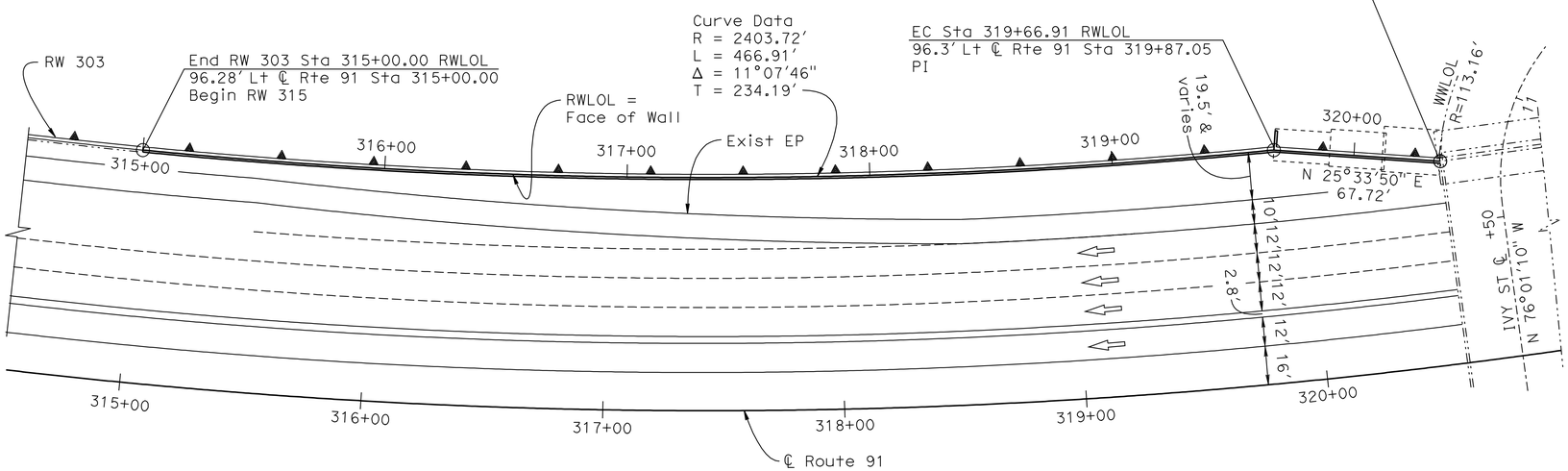

PLAN

1" = 30'

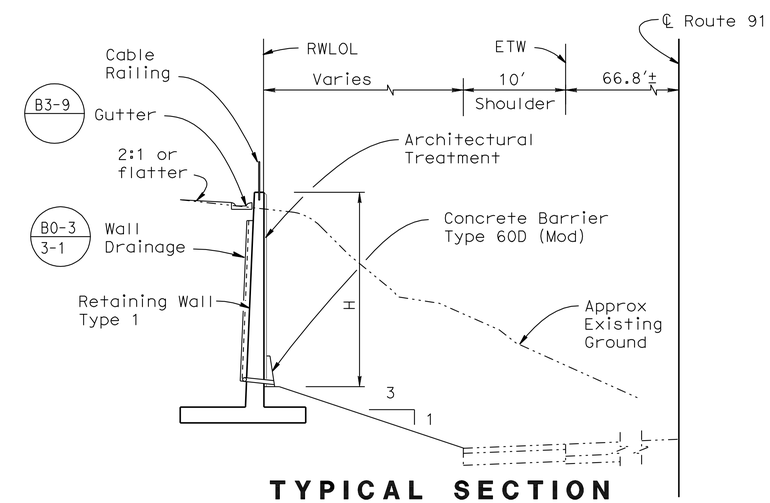

TYPICAL SECTION

1/8" = 1'-0"
Sta 319+66.91 to Sta 320+35.65

NOTE:
THE CONTRACTOR SHALL VERIFY ALL CONTROLLING FIELD DIMENSIONS BEFORE ORDERING OR FABRICATING ANY MATERIAL.

Daniel T. Adams
DESIGN ENGINEER

	BY	CHECKED
DESIGN	M. Vo	J. Szabo
DETAILS	R. Kirkland	J. Szabo
QUANTITIES	J. Szabo	M. Vo

LOAD & RESISTANCE FACTOR DESIGN — LIVE LOADING: HL93 W/"LOW-BOY"; PERMIT DESIGN VEHICLE
LAYOUT — BY M. Vo — CHECKED J. Szabo
SPECIFICATIONS — BY Dave Klein — PLANS AND SPECS COMPARED Dave Klein

ORIGINAL SCALE IN INCHES FOR REDUCED PLANS 0 1 2 3

STATE OF CALIFORNIA
DEPARTMENT OF TRANSPORTATION

DIVISION OF ENGINEERING SERVICES
STRUCTURE DESIGN
DESIGN BRANCH 10

CU 08
EA 448401

BRIDGE NO. 56 E0066
POST MILE 18.88

RETAINING WALL NO. 315
GENERAL PLAN

DISREGARD PRINTS BEARING EARLIER REVISION DATES → 3/15/10 7/15/10

SHEET 1 OF 16

STRUCTURES DESIGN GENERAL PLAN SHEET (ENGLISH) (REV.07-24-06)

FILE => 56e0066agp01.dgn

USERNAME => trcarol DATE PLOTTED => 30-APR-2011 TIME PLOTTED => 10:21

DIST	COUNTY	ROUTE	POST MILES TOTAL PROJECT	SHEET No	TOTAL SHEETS
08	Riv	91	15.6/21.6	1458	2028

REGISTERED CIVIL ENGINEER — DATE 11/12/10

4-25-11
PLANS APPROVAL DATE

REGISTERED PROFESSIONAL ENGINEER — Minh Thuong Vo — No. C59297 — Exp. 6/30/2011 — CIVIL — STATE OF CALIFORNIA

The State of California or its officers or agents shall not be responsible for the accuracy or completeness of electronic copies of this plan sheet.

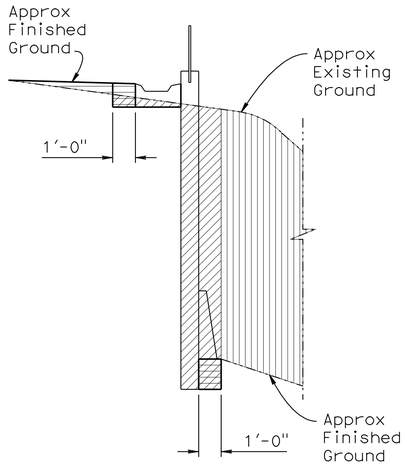

SOIL NAIL WALL EXCAVATION & BACKFILL

NO SCALE

Sta 315+00 to Sta 319+66.91

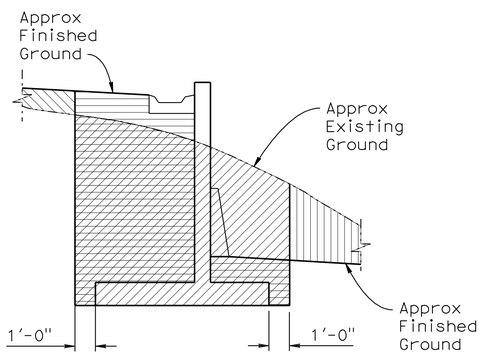

TYPE 1 WALL EXCAVATION & BACKFILL

NO SCALE

Sta 319+66.91 to Sta 320+35.65

LEGEND:

- Structure Excavation
- Structure Backfill
- Roadway Excavation (see Roadway Plan)
- Roadway Backfill (see Roadway Plan)

DESIGN DATA

DESIGN: Service Load Design Method per FHWA Geotechnical Engineering Circular No. 7 (FHWA O-IF-03-017) & Manual for Design and Construction Monitoring of Soil Nail Wall (FHWA-SA-96-069R)

REINFORCED CONCRETE: f_c = 3.6 KSI, f_y = 60 KSI

SHOTCRETE: f_c = 3.6 KSI, f_y = 60 KSI

STRUCTURAL STEEL: ASTM Designation: A 709, Grade 36, f_y = 36 KSI

SOIL NAILS: ASTM Designation: A615, Grade 60, f_y = 60 KSI

SOIL PARAMETERS: ϕ = 33°, c = 350 lb/ft^2, γ = 125 lb/ft^3, Q_d = 2.18 k/ft (Design Pullout Resistance)

QUANTITIES

RETAINING WALL 315 — BRIDGE NO 56E0066

STRUCTURE EXCAVATION (RETAINING WALL)	926	CY
STRUCTURE EXCAVATION (SOIL NAIL WALL)	758	CY
STRUCTURE BACKFILL (RETAINING WALL)	663	CY
STRUCTURE BACKFILL (SOIL NAIL WALL)	49	CY
PERVIOUS BACKFILL MATERIAL (RETAINING WALL)	45	CY
SOIL NAIL ASSEMBLY	8,420	LF
STRUCTURAL CONCRETE, RETAINING WALL	520	CY
ARCHITECTURAL SURFACE (TEXTURED CONCRETE)	9,149	SQFT
FRACTURED RIB SPLIT SLATE TEXTURE		
BAR REINFORCING STEEL (RETAINING WALL)	79,618	LB
SHOTCRETE	146	CY
MINOR CONCRETE (GUTTER)	536	LF
CABLE RAILING	536	LF
CONCRETE BARRIER (TYPE 60D MODIFIED)	536	LF

INDEX TO PLANS

Sheet No.	Title
1	GENERAL PLAN
2	INDEX TO PLANS
3	STRUCTURE PLAN NO. 1
4	STRUCTURE PLAN NO. 2
5	STRUCTURE PLAN NO. 3
6	SOIL NAIL WALL DETAILS NO. 1
7	SOIL NAIL WALL DETAILS NO. 2
8	SOIL NAIL WALL DETAILS NO. 3
9	ARCHITECTURAL SURFACE
10	ARCHITECTURAL SURFACE DETAILS NO. 1
11	ARCHITECTURAL SURFACE DETAILS NO. 2
12	ARCHITECTURAL SURFACE DETAILS NO. 3
13	ARCHITECTURAL SURFACE DETAILS NO. 4
14	LOG OF TEST BORINGS 1 OF 3
15	LOG OF TEST BORINGS 2 OF 3
16	LOG OF TEST BORINGS 3 OF 3

STANDARD PLANS DATED MAY 2006

A10A	ACRONYMS AND ABBREVIATIONS (SHEET 1 OF 2)
A10B	ACRONYMS AND ABBREVIATIONS (SHEET 2 OF 2)
A10C	SYMBOLS (SHEET 1 OF 2)
A10D	SYMBOLS (SHEET 2 OF 2)
B0-1	BRIDGE DETAILS
B0-3	BRIDGE DETAILS
B3-1	RETAINING WALL TYPE 1 H=4' THROUGH 30'
B3-2	RETAINING WALL TYPE 1 H=32' THROUGH 36'
B3-8	RETAINING WALL DETAILS NO. 1
B3-9	RETAINING WALL DETAILS NO. 2
B11-47	CABLE RAILING

STANDARD PLAN SHEET NO.

DETAIL NO.

	BY	CHECKED
DESIGN	M. Vo	J. Szabo
DETAILS	R. Kirkland	J. Szabo
QUANTITIES	J. Szabo	M. Vo

STATE OF CALIFORNIA
DEPARTMENT OF TRANSPORTATION

DIVISION OF ENGINEERING SERVICES
STRUCTURE DESIGN
DESIGN BRANCH 10

BRIDGE NO. 56 E0066
POST MILE 18.88

RETAINING WALL NO. 315
INDEX TO PLANS

STRUCTURES DESIGN DETAIL SHEET (ENGLISH) (REV. 10/25/05)

ORIGINAL SCALE IN INCHES FOR REDUCED PLANS 0 1 2 3

CU 08
EA 448401

DISREGARD PRINTS BEARING EARLIER REVISION DATES — REVISION DATES ~~3/15/10~~ 7/15/10

SHEET 2 OF 16

FILE => 56e0066aittp02.dgn

USERNAME => ttcarol DATE PLOTTED => 30-APR-2011 TIME PLOTTED => 10:21

DIST	COUNTY	ROUTE	POST MILES TOTAL PROJECT	SHEET No	TOTAL SHEETS
08	Riv	91	15.6/21.6	1459	2028

REGISTERED CIVIL ENGINEER 11/12/10 DATE

4-25-11
PLANS APPROVAL DATE

REGISTERED PROFESSIONAL ENGINEER Minh Thuong Vo No. C59297 Exp. 6/30/2011 CIVIL STATE OF CALIFORNIA

The State of California or its officers or agents shall not be responsible for the accuracy or completeness of electronic copies of this plan sheet.

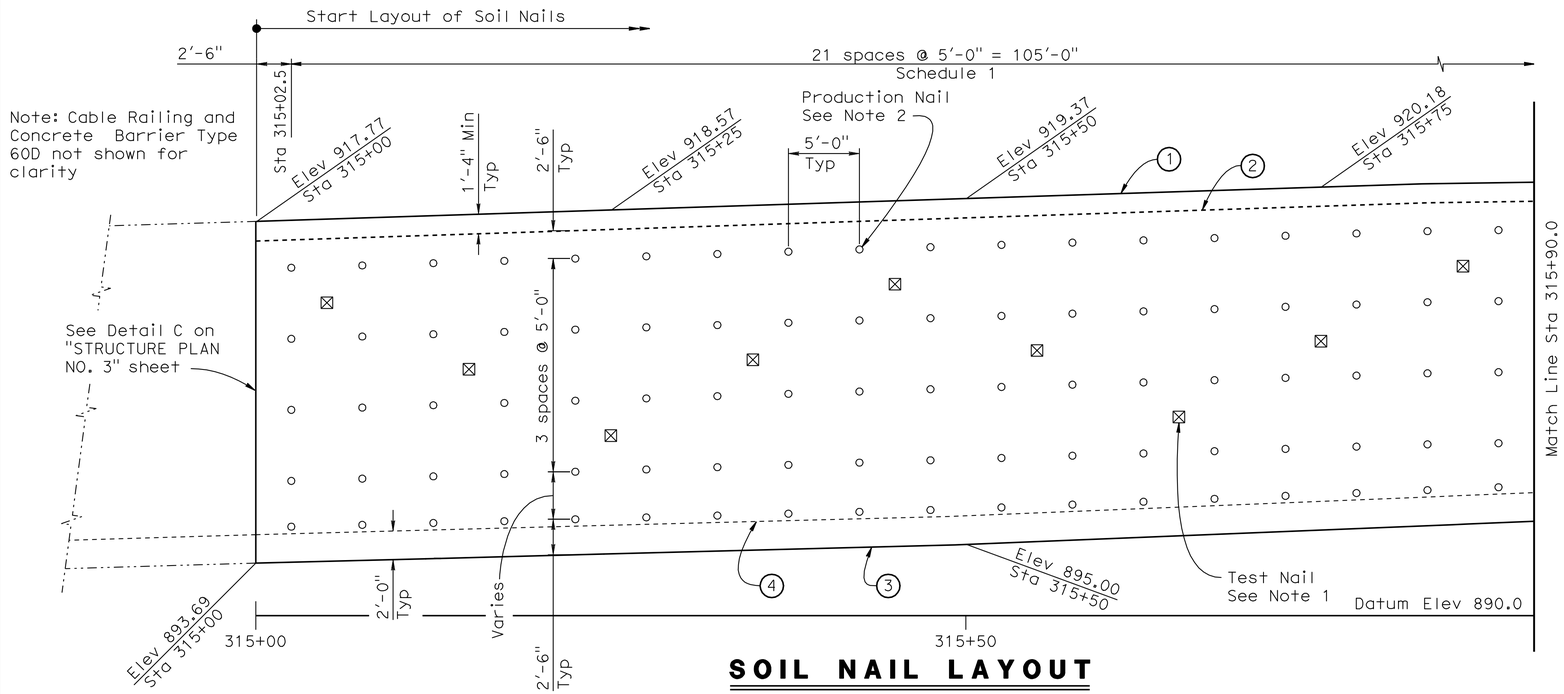

SOIL NAIL LAYOUT

3/16" = 1'-0"

SOIL NAIL SCHEDULE	
Location	Soil Nail Embedment Length Le
Schedule 1	All Soil Nails: Le = 20'-0"

NOTES:

1. Test nail locations are at midway between production nails. The exact location of the proof test nails to be determined in the field by the Engineer.
2. The maximum vertical and horizontal spacing of production nails shall be 5'-0".
3. Contractor shall adjust the concrete gutter to meet the gutter flow line.

(1) Top of Soil Nail Wall

(2) Gutter Elevation at back of wall

(3) Bottom of Soil Nail Wall

(4) Approximate Finished Grade at face of wall.

LEGEND:

○ Indicates location of Production Nail assembly.

⊠ Indicates location of Test Nail assembly. Located in the middle of Production nails.

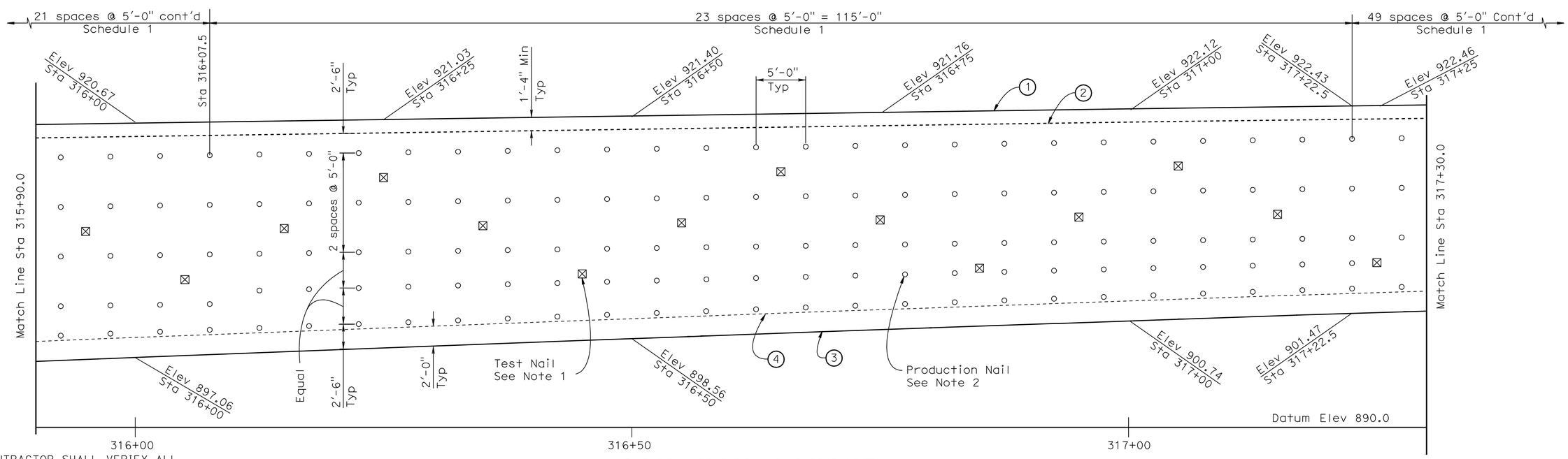

NOTE:
THE CONTRACTOR SHALL VERIFY ALL CONTROLLING FIELD DIMENSIONS BEFORE ORDERING OR FABRICATING ANY MATERIAL.

SOIL NAIL LAYOUT

3/16" = 1'-0"

	BY	CHECKED
DESIGN	M. Vo	J. Szabo
DETAILS	R. Kirkland	J. Szabo
QUANTITIES	J. Szabo	M. Vo

STATE OF CALIFORNIA
DEPARTMENT OF TRANSPORTATION

DIVISION OF ENGINEERING SERVICES
STRUCTURE DESIGN
DESIGN BRANCH 10

BRIDGE NO. 56 E0066
POST MILE 18.88

RETAINING WALL NO. 315
STRUCTURE PLAN NO. 1

STRUCTURES DESIGN DETAIL SHEET (ENGLISH) (REV. 10/25/05)

ORIGINAL SCALE IN INCHES FOR REDUCED PLANS 0 1 2 3

CU 08
EA 448401

DISREGARD PRINTS BEARING EARLIER REVISION DATES 3/18/10 7/15/10

REVISION DATES

SHEET 3 OF 16

FILE => 56e0066csp03.dgn

USERNAME => trcarol DATE PLOTTED => 30-APR-2011 TIME PLOTTED => 10:21

DIST	COUNTY	ROUTE	POST MILES TOTAL PROJECT	SHEET No	TOTAL SHEETS
08	Riv	91	15.6/21.6	1460	2028

REGISTERED CIVIL ENGINEER 11/12/10 DATE

4-25-11
PLANS APPROVAL DATE

REGISTERED PROFESSIONAL ENGINEER Minh Thuong Vo No. C59297 Exp. 6/30/2011 CIVIL STATE OF CALIFORNIA

The State of California or its officers or agents shall not be responsible for the accuracy or completeness of electronic copies of this plan sheet.

Note:
Cable Railing and Concrete Barrier Type 60D not shown for clarity

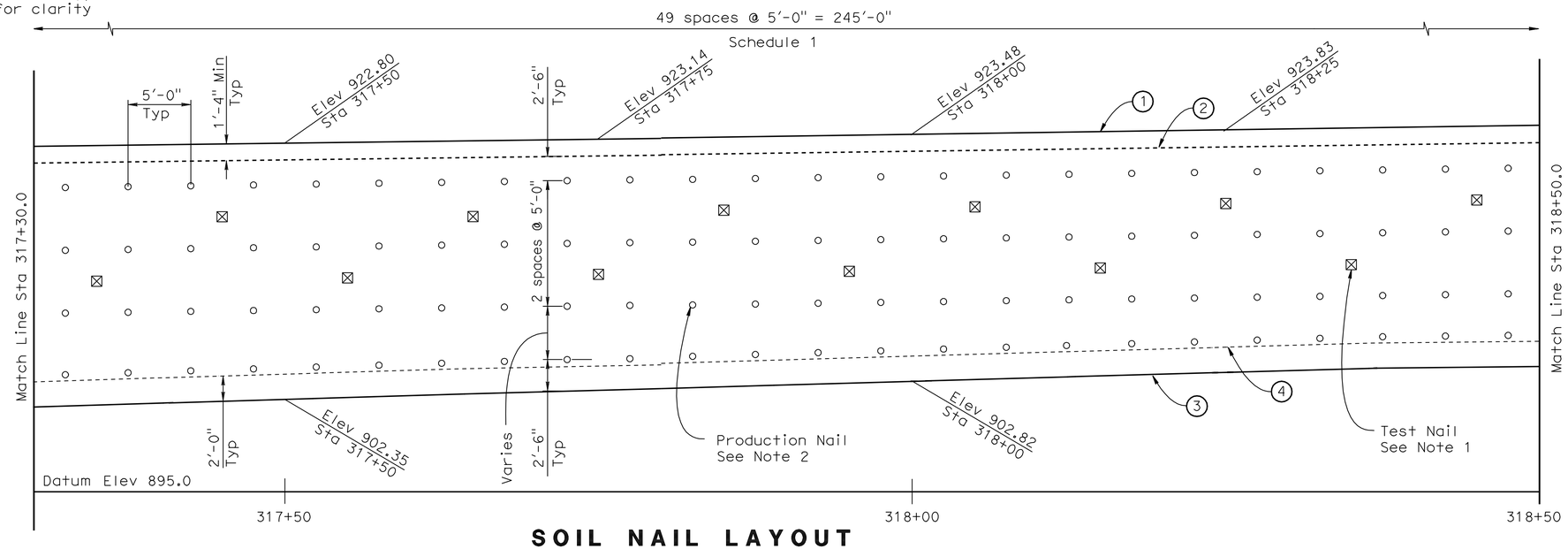

SOIL NAIL LAYOUT

3/16" = 1'-0"

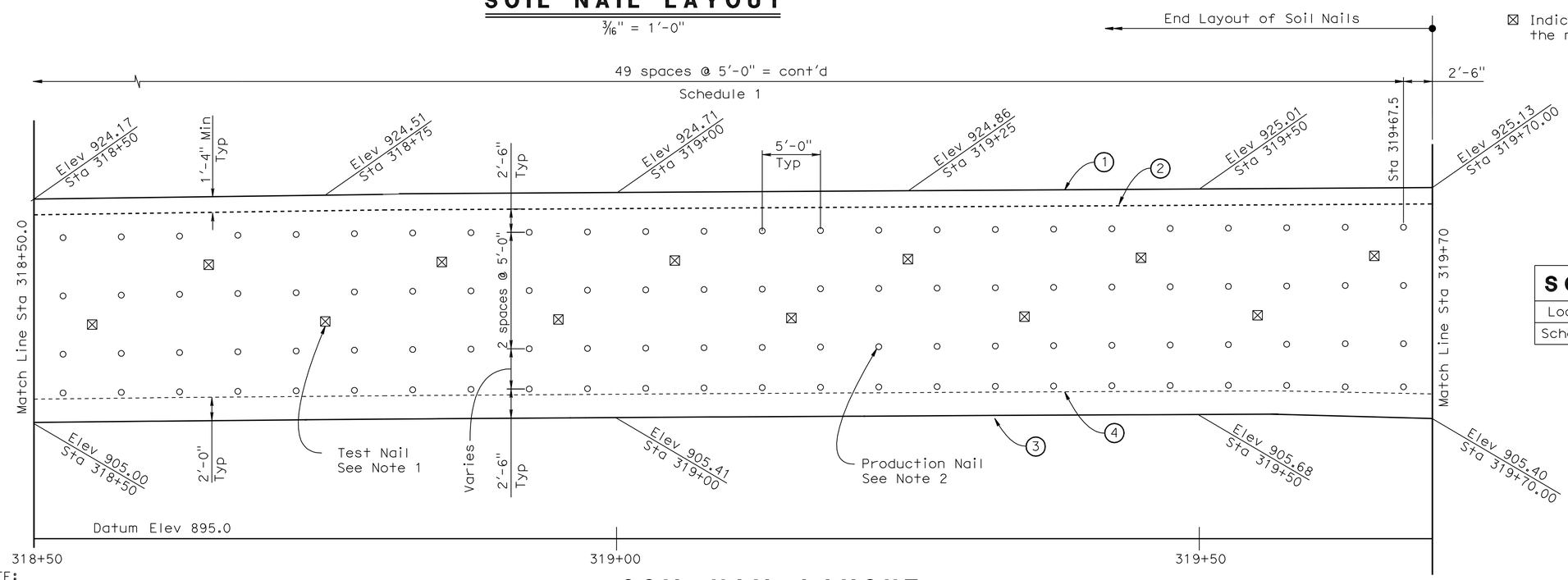

SOIL NAIL LAYOUT

3/16" = 1'-0"

NOTES:

1. Test nail locations are at midway between production nails. The exact location of the proof test nails to be determined in the field by the Engineer.
2. The maximum vertical and horizontal spacing of production nails shall be 5'-0".
3. Contractor shall adjust the concrete gutter to meet the gutter flow line.

(1) Top of Soil Nail Wall
(2) Gutter Elevation at back of wall
(3) Bottom of Soil Nail Wall
(4) Approximate Finished Grade at face of wall.

LEGEND:

○ Indicates location of Production Nail assembly.
⊠ Indicates location of Test Nail assembly. Located in the middle of Production nails.

SOIL NAIL SCHEDULE

Location	Soil Nail Embedment Length Le
Schedule 1	All Soil Nails: Le = 20'-0"

NOTE:
THE CONTRACTOR SHALL VERIFY ALL CONTROLLING FIELD DIMENSIONS BEFORE ORDERING OR FABRICATING ANY MATERIAL.

	BY	CHECKED
DESIGN	M. Vo	J. Szabo
DETAILS	R. Kirkland	J. Szabo
QUANTITIES	J. Szabo	M. Vo

STATE OF CALIFORNIA
DEPARTMENT OF TRANSPORTATION

DIVISION OF ENGINEERING SERVICES
STRUCTURE DESIGN
DESIGN BRANCH 10

BRIDGE NO. 56 E0066
POST MILE 18.88

RETAINING WALL NO. 315
STRUCTURE PLAN NO. 2

STRUCTURES DESIGN DETAIL SHEET (ENGLISH) (REV. 10/25/05)

ORIGINAL SCALE IN INCHES FOR REDUCED PLANS 0 1 2 3

CU 08
EA 448401

DISREGARD PRINTS BEARING EARLIER REVISION DATES

REVISION DATES: ~~3/15/10~~ 7/15/10

SHEET 4 OF 16

FILE => 56e0066csp04.dgn

USERNAME => trcarol DATE PLOTTED => 30-APR-2011 TIME PLOTTED => 10:22

DIST	COUNTY	ROUTE	POST MILES TOTAL PROJECT	SHEET No	TOTAL SHEETS
08	Riv	91	15.6/21.6	1461	2028

REGISTERED CIVIL ENGINEER 11/12/10 DATE

4-25-11
PLANS APPROVAL DATE

REGISTERED PROFESSIONAL ENGINEER Minh Thuong Vo No. C59297 Exp. 6/30/2011 CIVIL STATE OF CALIFORNIA

The State of California or its officers or agents shall not be responsible for the accuracy or completeness of electronic copies of this plan sheet.

Note:
Cable Railing and Concrete Barrier Type 60D not shown for clarity

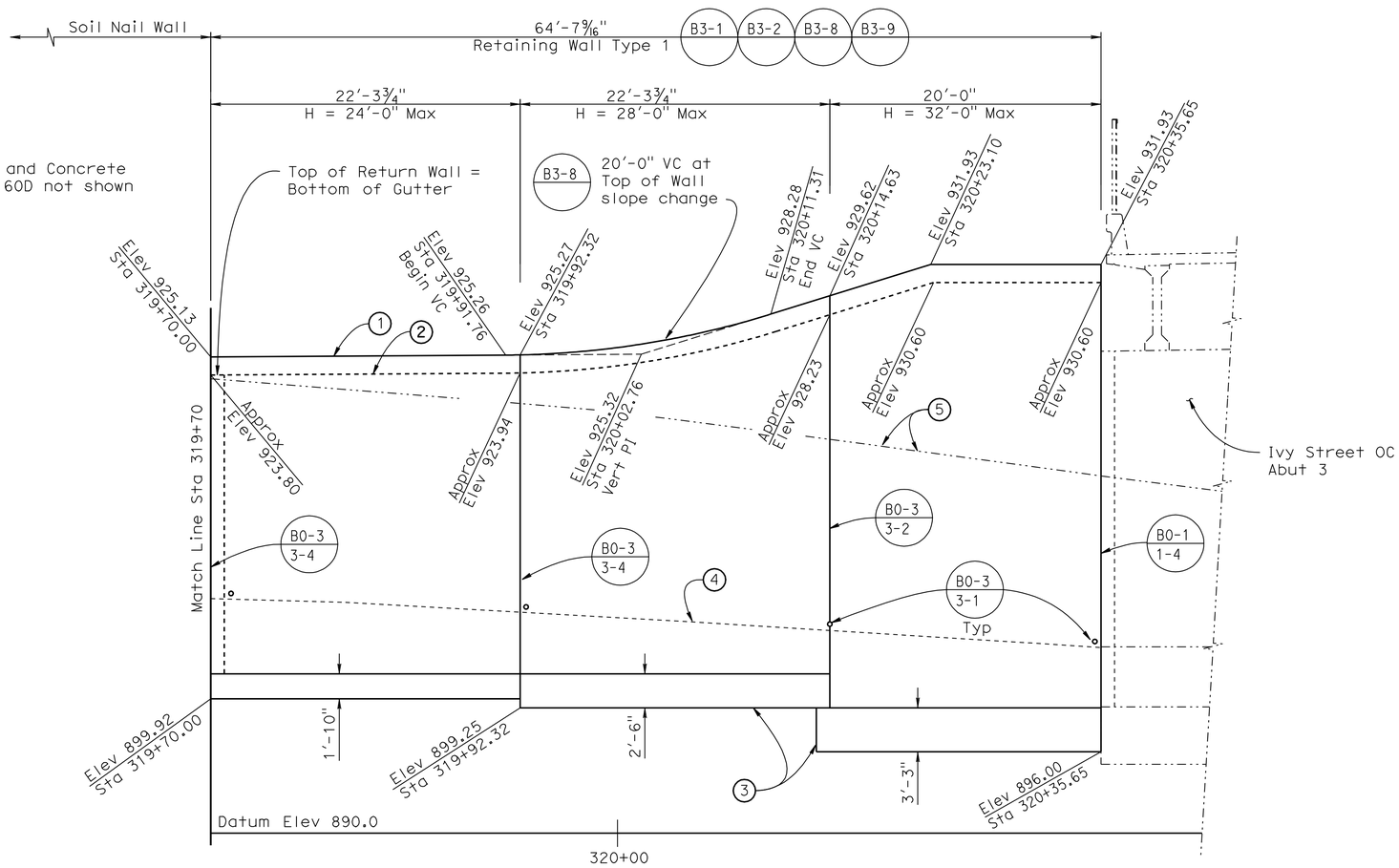

ELEVATION

3/16" = 1'-0"

NOTES:

1. Top of Retaining Wall
2. Gutter Elevation at back of wall
3. Bottom of Footing
4. Approximate Finished Grade at face of wall.
5. Approximate Original Ground

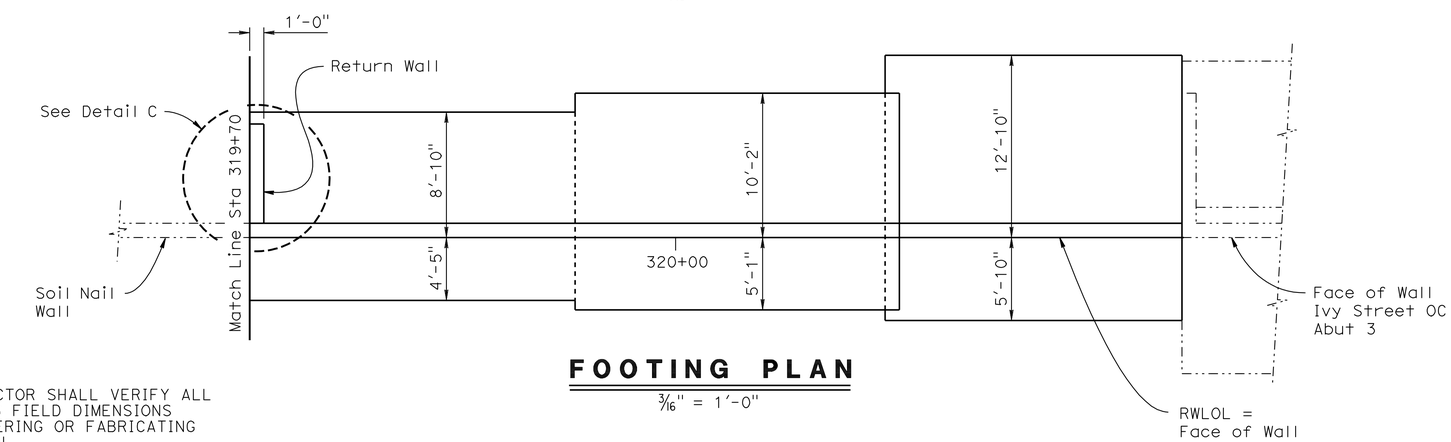

FOOTING PLAN

3/16" = 1'-0"

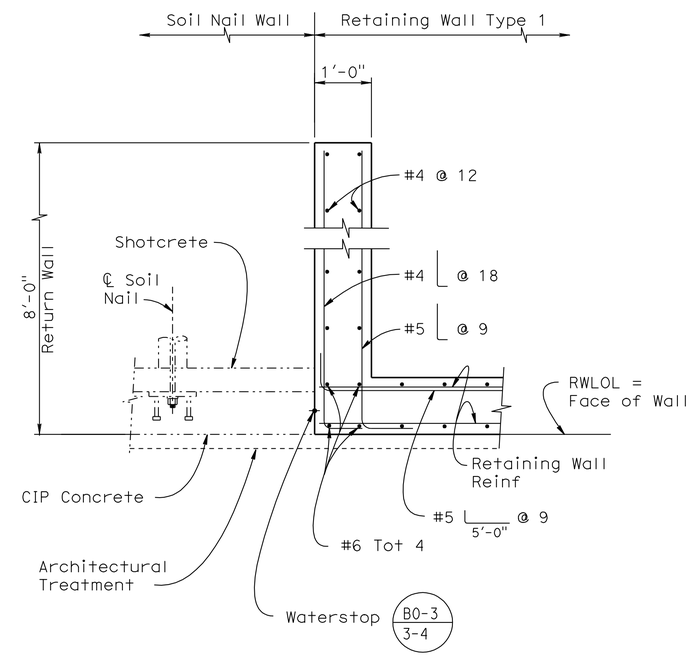

DETAIL C

3/4 " = 1'-0"

NOTE:
THE CONTRACTOR SHALL VERIFY ALL CONTROLLING FIELD DIMENSIONS BEFORE ORDERING OR FABRICATING ANY MATERIAL.

	BY	CHECKED
DESIGN	M. Vo	J. Szabo
DETAILS	R. Kirkland	J. Szabo
QUANTITIES	J.Szabo	M. Vo

STATE OF CALIFORNIA
DEPARTMENT OF TRANSPORTATION

DIVISION OF ENGINEERING SERVICES
STRUCTURE DESIGN
DESIGN BRANCH 10

BRIDGE NO. 56 E0066
POST MILE 18.88

RETAINING WALL NO. 315
STRUCTURE PLAN NO. 3

STRUCTURES DESIGN DETAIL SHEET (ENGLISH) (REV. 10/25/05)

ORIGINAL SCALE IN INCHES FOR REDUCED PLANS 0 1 2 3

CU 08
EA 448401

DISREGARD PRINTS BEARING EARLIER REVISION DATES

REVISION DATES 3/15/10 7/15/10

SHEET 5 OF 16

FILE => 56e0066csp05.dgn

USERNAME => trlenard DATE PLOTTED => 30-APR-2011 TIME PLOTTED => 10:32

DIST	COUNTY	ROUTE	POST MILES TOTAL PROJECT	SHEET No	TOTAL SHEETS
08	Riv	91	15.6/21.6	1462	2028

REGISTERED CIVIL ENGINEER 11/12/10 DATE

4-25-11
PLANS APPROVAL DATE

REGISTERED PROFESSIONAL ENGINEER Minh Thuong Vo No. C59297 Exp. 6/30/2011 CIVIL STATE OF CALIFORNIA

The State of California or its officers or agents shall not be responsible for the accuracy or completeness of electronic copies of this plan sheet.

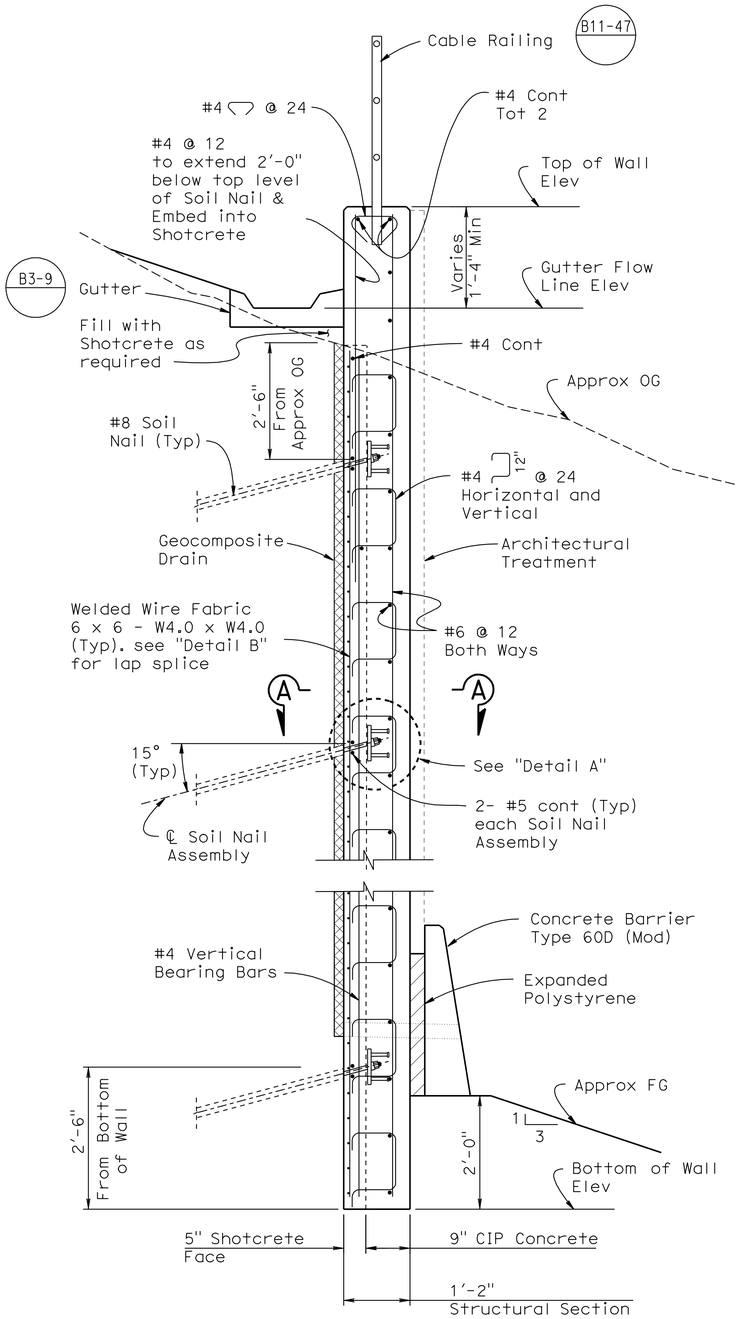

TYPICAL SECTION

3/4" = 1'-0"

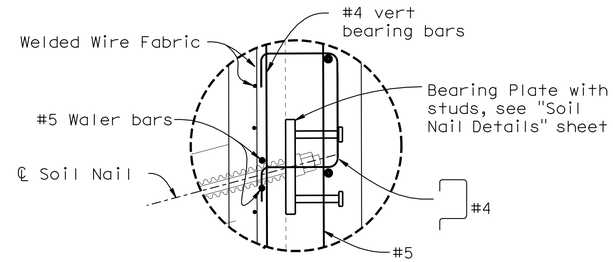

DETAIL A

1 1/2" = 1'-0"

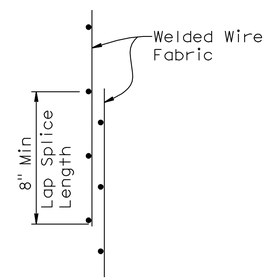

LAP SPLICE

DETAIL B

NO SCALE

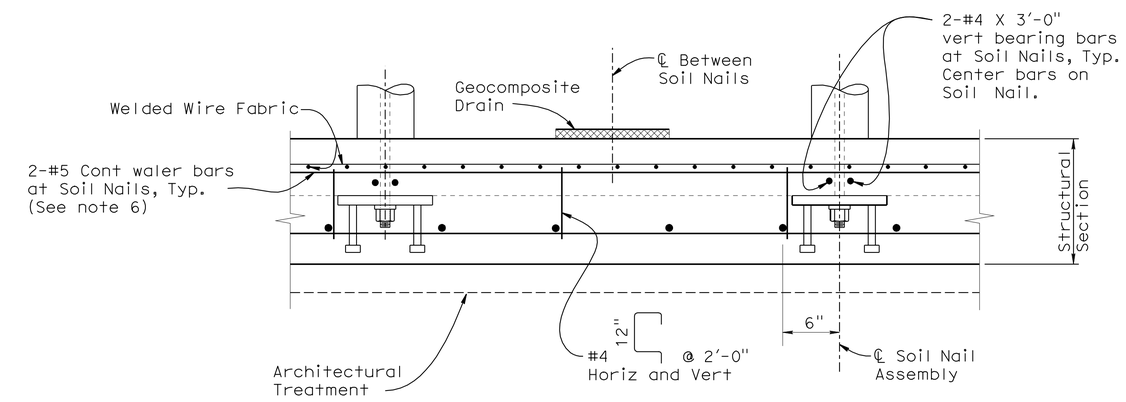

SECTION A-A

1 1/2" = 1'-0"

Notes:

1. Bottom of wall to be placed against undisturbed material.
2. For Horizontal and Vertical Soil Nail spacing see "Structure Plan No. 1" and "Structure Plan No. 2" sheets.
3. For Soil Nail Details & Assemblies, see "Soil Nail Details No. 1 and Soil Nail Details No. 2" sheets.
4. For Geocomposite Drain Details see "Soil Nail Details No. 3" sheet.
5. For Architectural Treatment (Textured Shotcrete and textured Concrete), see "Architectural Treatment Details" sheet.
6. For soil nail rows that are discontinuous, extend waler bars a minimum of 5' beyond last soil nail.

	BY	CHECKED
DESIGN	M. Vo	J. Szabo
DETAILS	R. Kirkland	J. Szabo
QUANTITIES	J. Szabo	M. Vo

STATE OF CALIFORNIA DEPARTMENT OF TRANSPORTATION

DIVISION OF ENGINEERING SERVICES STRUCTURE DESIGN DESIGN BRANCH 10

BRIDGE NO. 56 E0066
POST MILE 18.88

RETAINING WALL NO. 315
SOIL NAIL WALL DETAILS NO. 1

STRUCTURES DESIGN DETAIL SHEET (ENGLISH) (REV. 10/25/05)

ORIGINAL SCALE IN INCHES FOR REDUCED PLANS 0 1 2 3

CU 08
EA 448401

DISREGARD PRINTS BEARING EARLIER REVISION DATES 3/15/10 7/15/10

REVISION DATES

SHEET 6 OF 16

FILE => 56e0066grwdt06.dgn

USERNAME => trlenard DATE PLOTTED => 30-APR-2011 TIME PLOTTED => 10:32

DIST	COUNTY	ROUTE	POST MILES TOTAL PROJECT	SHEET No	TOTAL SHEETS
08	Riv	91	15.6/21.6	1463	2028

REGISTERED CIVIL ENGINEER 11/12/10 DATE

4-25-11
PLANS APPROVAL DATE

REGISTERED PROFESSIONAL ENGINEER Minh Thuong Vo No. C59297 Exp. 6/30/2011 CIVIL STATE OF CALIFORNIA

The State of California or its officers or agents shall not be responsible for the accuracy or completeness of electronic copies of this plan sheet.

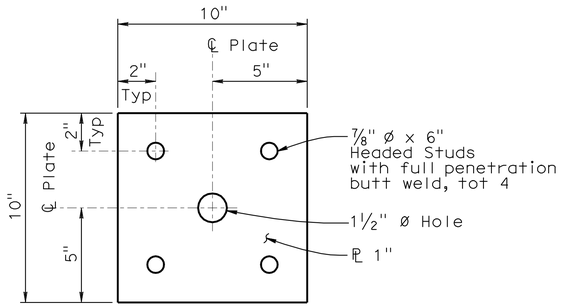

BEARING PLATE

3" = 1'-0"

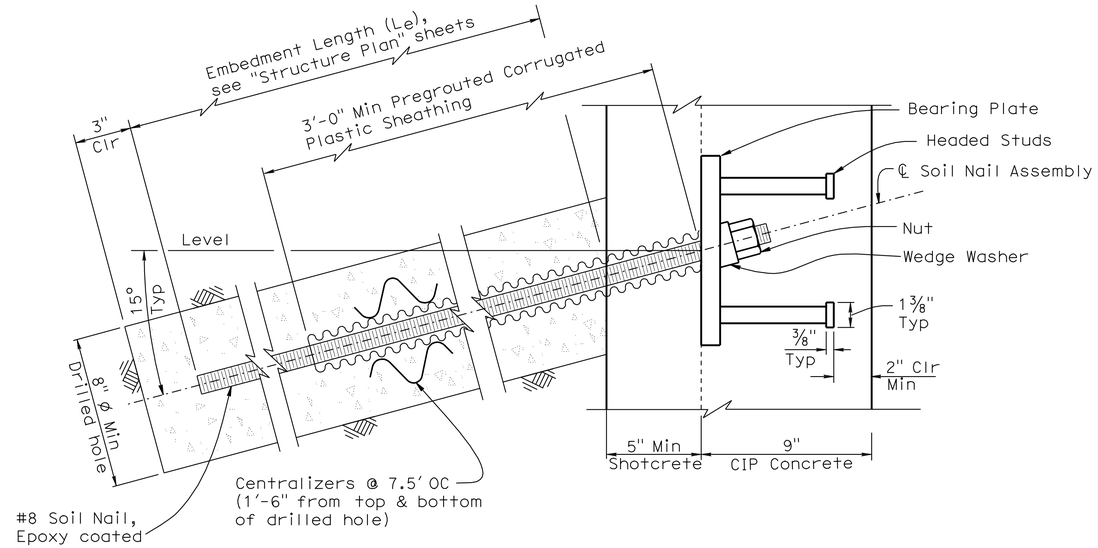

SOIL NAIL ASSEMBLY

3" = 1'-0"

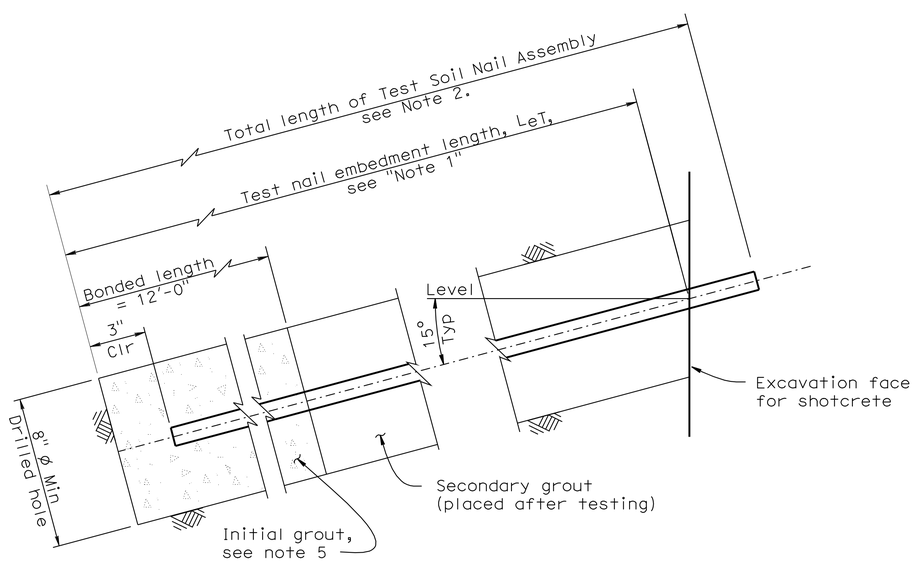

TEST SOIL NAIL ASSEMBLY

3" = 1'-0"

Notes:

1. Embedment length L_{eT} of test nails equals two thirds of the embedment length L_e of adjacent soil nail assemblies, but not less than 12'-0".
2. Total length of test soil nail equals embedment length plus the length required for jacking equipment.
3. For embedment length of production nails see 'Schedule' on "Structure Plan" sheets.
4. Finished grout surface to be perpendicular to bar.
5. For location of test nail, see "Structure Plan" sheets. Additional test nails will be installed and tested per special provisions.

	BY	CHECKED
DESIGN	M. Vo	J. Szabo
DETAILS	R. Kirkland	J. Szabo
QUANTITIES	J. Szabo	M. Vo

STATE OF CALIFORNIA
DEPARTMENT OF TRANSPORTATION

DIVISION OF ENGINEERING SERVICES
STRUCTURE DESIGN
DESIGN BRANCH 10

BRIDGE NO. 56 E0066
POST MILE 18.88

RETAINING WALL NO. 315
SOIL NAIL WALL DETAILS NO. 2

STRUCTURES DESIGN DETAIL SHEET (ENGLISH) (REV. 10/25/05)

ORIGINAL SCALE IN INCHES FOR REDUCED PLANS 0 1 2 3

CU 08
EA 448401

DISREGARD PRINTS BEARING EARLIER REVISION DATES 7/15/10 7/15/10

REVISION DATES

SHEET 7 OF 16

FILE => 56e0066grwdt07.dgn

USERNAME => trlenard DATE PLOTTED => 30-APR-2011 TIME PLOTTED => 10:32

DIST	COUNTY	ROUTE	POST MILES TOTAL PROJECT	SHEET No	TOTAL SHEETS
08	Riv	91	15.6/21.6	1464	2028

REGISTERED CIVIL ENGINEER 11/12/10 DATE

4-25-11
PLANS APPROVAL DATE

REGISTERED PROFESSIONAL ENGINEER Minh Thuong Vo No. C59297 Exp. 6/30/2011 CIVIL STATE OF CALIFORNIA

The State of California or its officers or agents shall not be responsible for the accuracy or completeness of electronic copies of this plan sheet.

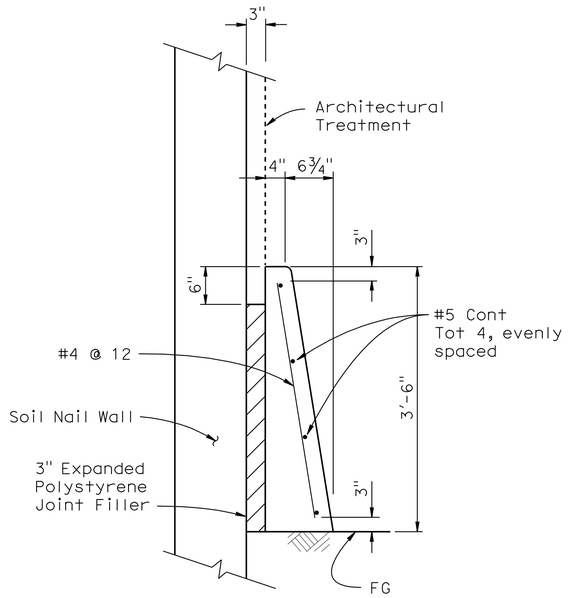

CONCRETE BARRIER (TYPE 60D MOD)

No scale

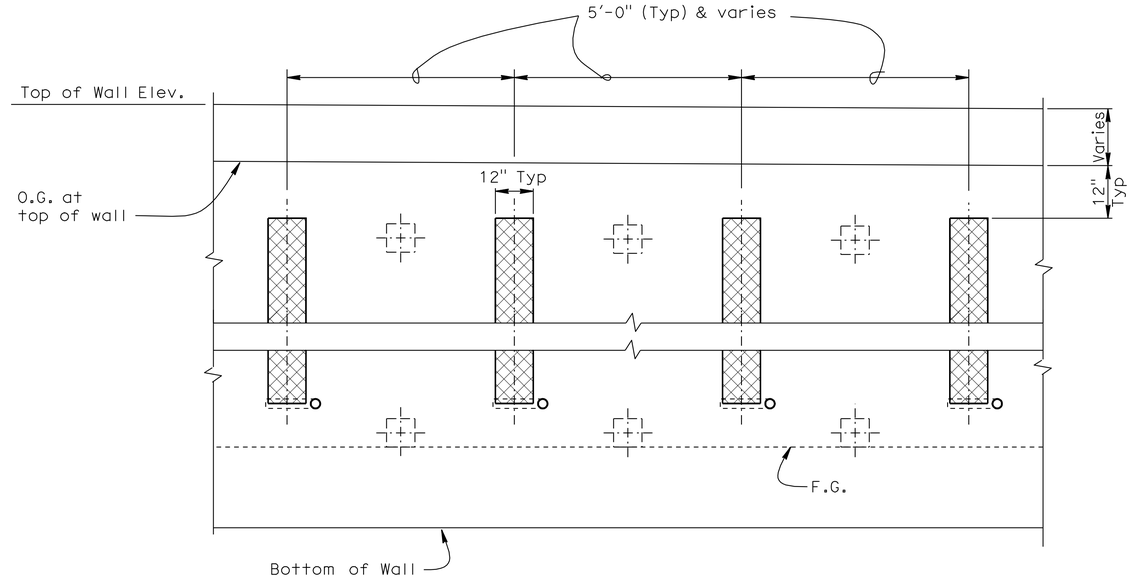

PART ELEVATION - GEOCOMPOSITE DRAIN

No scale

NOTES:

1. Center Geocomposite drain between Soil Nail assemblies.
2. - Indicates Soil Nail Assembly.
3. 2" dia drain pipe to be placed 3" above finished grade at face of barrier (Typ).
4. Adjust Geocomposite Drain to clear Test Soil Nails.

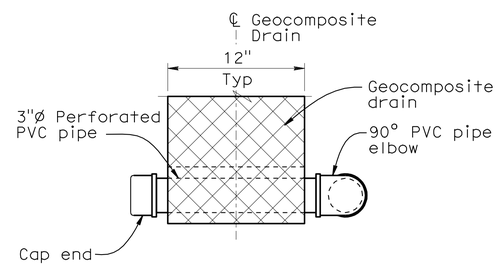

VIEW A-A

No scale

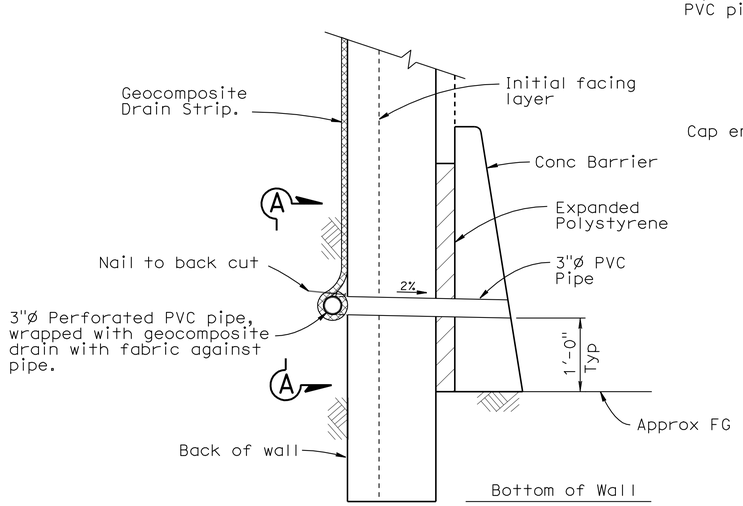

WALL DRAIN DETAIL AT WEEPHOLE OPTION A

No scale

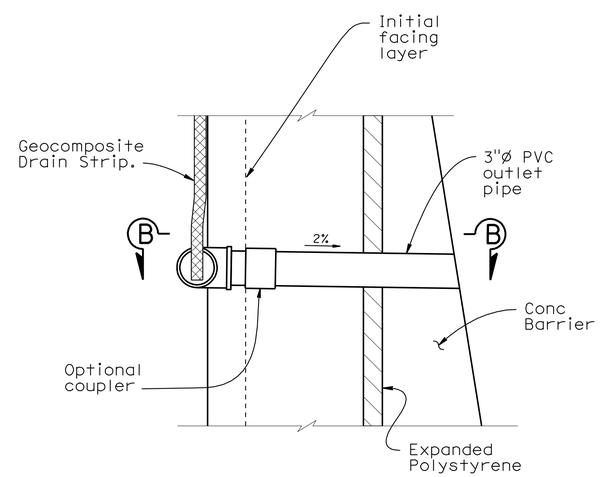

WALL DRAIN DETAIL AT WEEPHOLE OPTION B

No scale

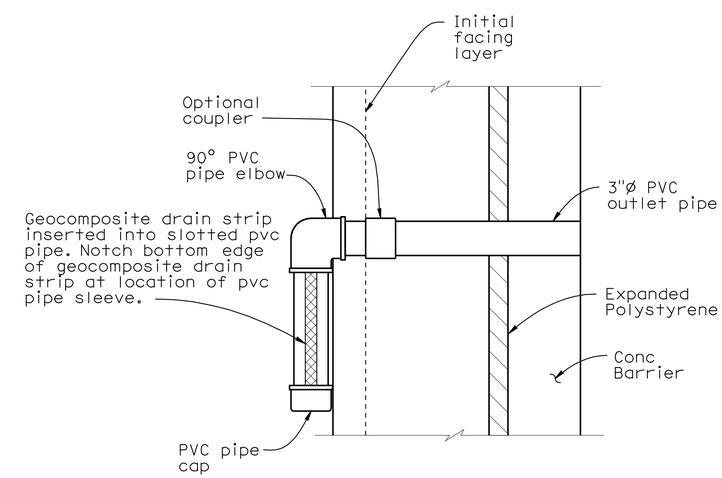

VIEW B-B

No Scale

DESIGN	BY M. Vo	CHECKED J. Szabo	
DETAILS	BY R. Kirkland	CHECKED J. Szabo	
QUANTITIES	BY J. Szabo	CHECKED M. Vo	

STATE OF CALIFORNIA DEPARTMENT OF TRANSPORTATION

DIVISION OF ENGINEERING SERVICES STRUCTURE DESIGN DESIGN BRANCH 10

BRIDGE NO. 56 E0066
POST MILE 18.88

RETAINING WALL NO. 315
SOIL NAIL WALL DETAILS NO. 3

STRUCTURES DESIGN DETAIL SHEET (ENGLISH) (REV. 10/25/05)

ORIGINAL SCALE IN INCHES FOR REDUCED PLANS 0 1 2 3

CU 08
EA 448401

DISREGARD PRINTS BEARING EARLIER REVISION DATES 7/15/10 7/15/10

REVISION DATES

SHEET 8 OF 16

FILE => 56e0066grwdt08.dgn

USERNAME => trlenard DATE PLOTTED => 30-APR-2011 TIME PLOTTED => 10:32

Dist	COUNTY	ROUTE	POST MILES TOTAL PROJECT	SHEET No.	TOTAL SHEETS
08	Riv	91	15.6/21.6	1465	2028

LICENSED LANDSCAPE ARCHITECT

4-25-11
PLANS APPROVAL DATE

LICENSED LANDSCAPE ARCHITECT
Matthew Harry Hall
No. 2504
Expiration Date
10/31/2011
Renewal Date
11/12/2010
Date
STATE OF CALIFORNIA

THE STATE OF CALIFORNIA OR ITS OFFICERS OR AGENTS SHALL NOT BE RESPONSIBLE FOR THE ACCURACY OR COMPLETENESS OF SCANNED COPIES OF THIS PLAN SHEET.

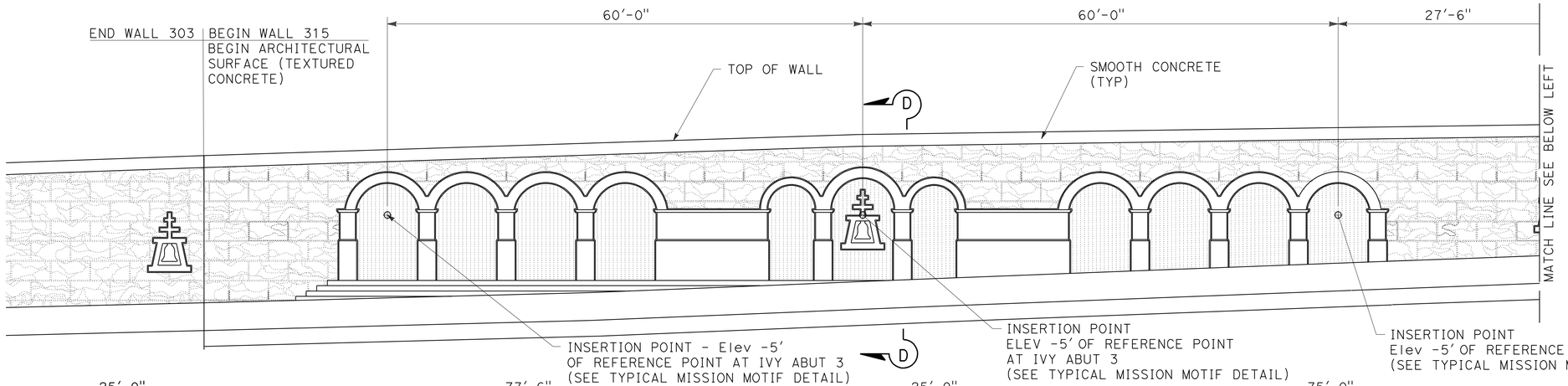

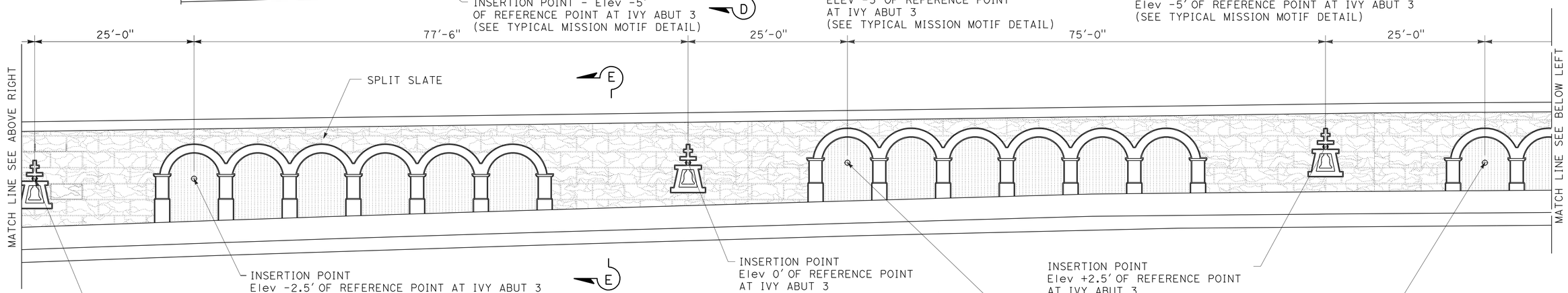

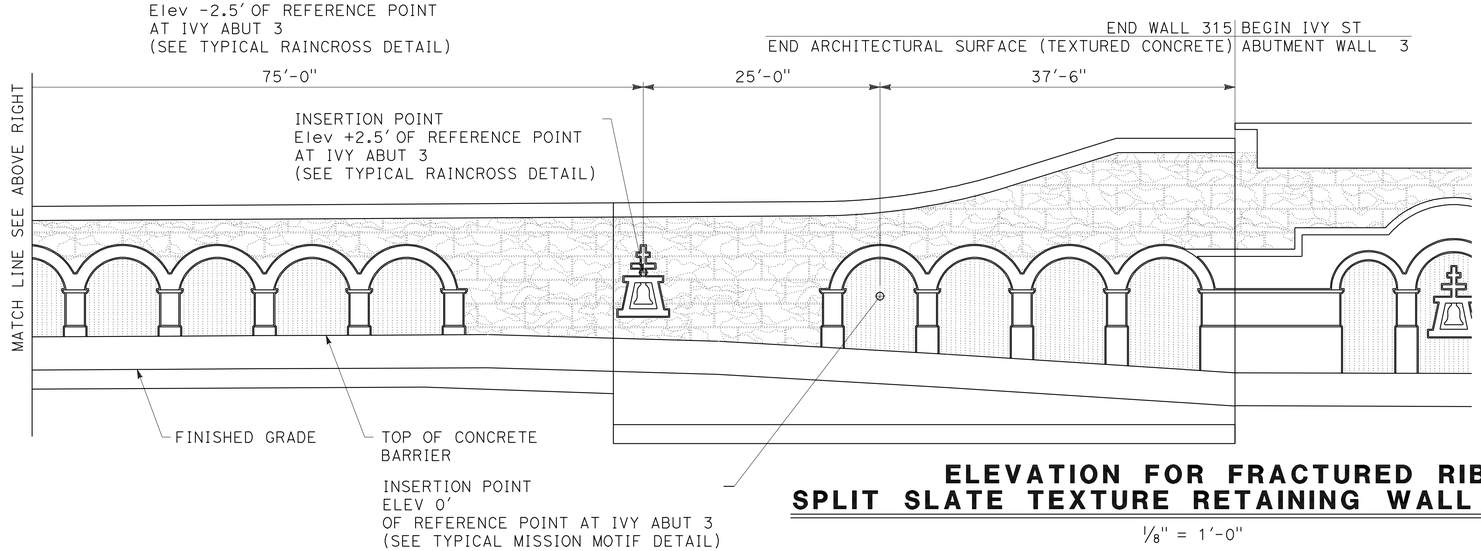

ELEVATION FOR FRACTURED RIB SPLIT SLATE TEXTURE RETAINING WALL NO. 315

1/8" = 1'-0"

NOTES:

1. For Section D-D and Section E-E see "Architectural Surface Detail Sheet No. 4".

THIS PLAN IS ACCURATE FOR ARCHITECTUAL TREATMENT WORK ONLY.

	BY	CHECKED
DESIGN	M. Hall	M. Bishop
DETAILS	R. Kirkland	M. Bishop
QUANTITIES	J. Szabo	M. Vo

STATE OF CALIFORNIA
DEPARTMENT OF TRANSPORTATION

DIVISION OF ENGINEERING SERVICES
STRUCTURE DESIGN
DESIGN BRANCH 10

BRIDGE NO. 56 E0066
POST MILE 18.88

RETAINING WALL NO. 315
ARCHITECTURAL SURFACE

STRUCTURES DESIGN DETAIL SHEET (ENGLISH) (REV. 10/25/05)

ORIGINAL SCALE IN INCHES FOR REDUCED PLANS 0 1 2 3

CU 08
EA 448401

DISREGARD PRINTS BEARING EARLIER REVISION DATES → 8/10/10

REVISION DATES

SHEET 9 OF 16

FILE => 56e0066umiscdt09.dgn

USERNAME => trlemard DATE PLOTTED => 30-APR-2011 TIME PLOTTED => 10:32

Dist	COUNTY	ROUTE	POST MILES TOTAL PROJECT	SHEET No.	TOTAL SHEETS
08	Riv	91	15.6/21.6	1466	2028

LICENSED LANDSCAPE ARCHITECT

4-25-11
PLANS APPROVAL DATE

LICENSED LANDSCAPE ARCHITECT
Matthew Harry Hall
No. 2500
Signature
10/31/2011
Renewal Date
11/12/2010
Date
STATE OF CALIFORNIA

THE STATE OF CALIFORNIA OR ITS OFFICERS OR AGENTS SHALL NOT BE RESPONSIBLE FOR THE ACCURACY OR COMPLETENESS OF SCANNED COPIES OF THIS PLAN SHEET.

NOTES:

1. Verify top of Wall elevation with engineers plans. All insertion points elevations reference with the top of Wall elevations.

2. For Section F-F, Section G-G and Section H-H see "Architectural Surface Detail Sheet No. 3.

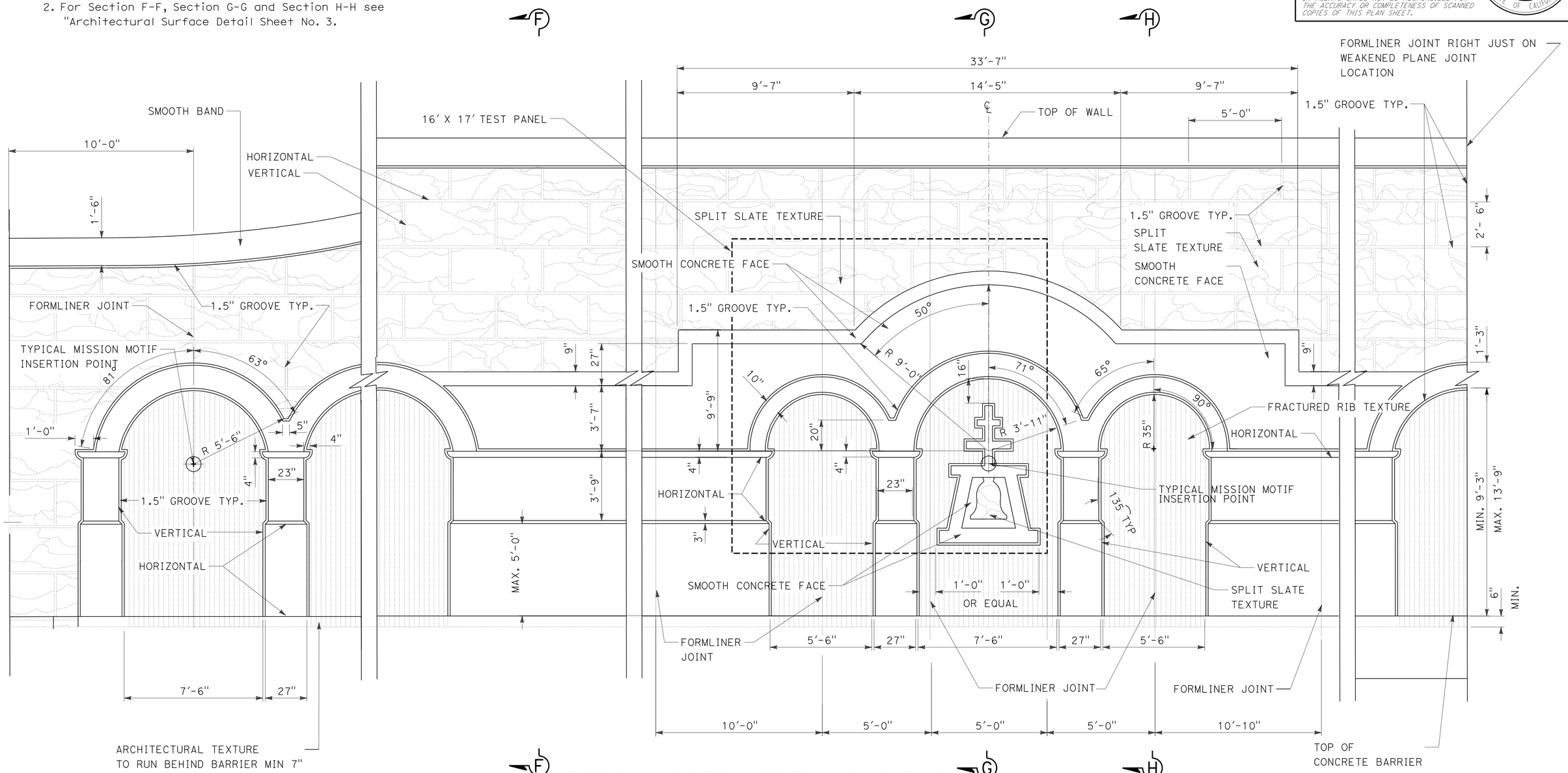

TYPICAL MISSION MOTIF ELEVATION

3/8"=1'-0"

THIS PLAN IS ACCURATE FOR ARCHITECTUAL TREATMENT WORK ONLY.

	BY	CHECKED
DESIGN	M. Hall	M. Bishop
DETAILS	R. Kirkland	M. Bishop
QUANTITIES	J. Szabo	M. Vo

STATE OF CALIFORNIA
DEPARTMENT OF TRANSPORTATION

DIVISION OF ENGINEERING SERVICES
STRUCTURE DESIGN
DESIGN BRANCH 10

BRIDGE NO. 56 E0066
POST MILE 18.88

RETAINING WALL NO. 315
ARCHITECTURAL SURFACE DETAIL SHEET NO. 1

STRUCTURES DESIGN DETAIL SHEET (ENGLISH) (REV. 10/25/05)

ORIGINAL SCALE IN INCHES FOR REDUCED PLANS 0 1 2 3

CU 08
EA 448401

DISREGARD PRINTS BEARING EARLIER REVISION DATES → 8/10/10

REVISION DATES

SHEET 10 OF 16

FILE => 56e0066umiscdt10.dgn

USERNAME => trlenard DATE PLOTTED => 30-APR-2011 TIME PLOTTED => 10:32

NOTES:
1. For Section D-D see "Architectural Surface Detail Sheet No. 2"

Dist	COUNTY	ROUTE	POST MILES TOTAL PROJECT	SHEET No.	TOTAL SHEETS
08	Riv	91	15.6/21.6	1467	2028

LICENSED LANDSCAPE ARCHITECT

4-25-11
PLANS APPROVAL DATE

LICENSED LANDSCAPE ARCHITECT Matthew Perry Hall No. 2010 Signature 10/31/2011 Renewal Date 11/12/2010 Date STATE OF CALIFORNIA

THE STATE OF CALIFORNIA OR ITS OFFICERS OR AGENTS SHALL NOT BE RESPONSIBLE FOR THE ACCURACY OR COMPLETENESS OF SCANNED COPIES OF THIS PLAN SHEET.

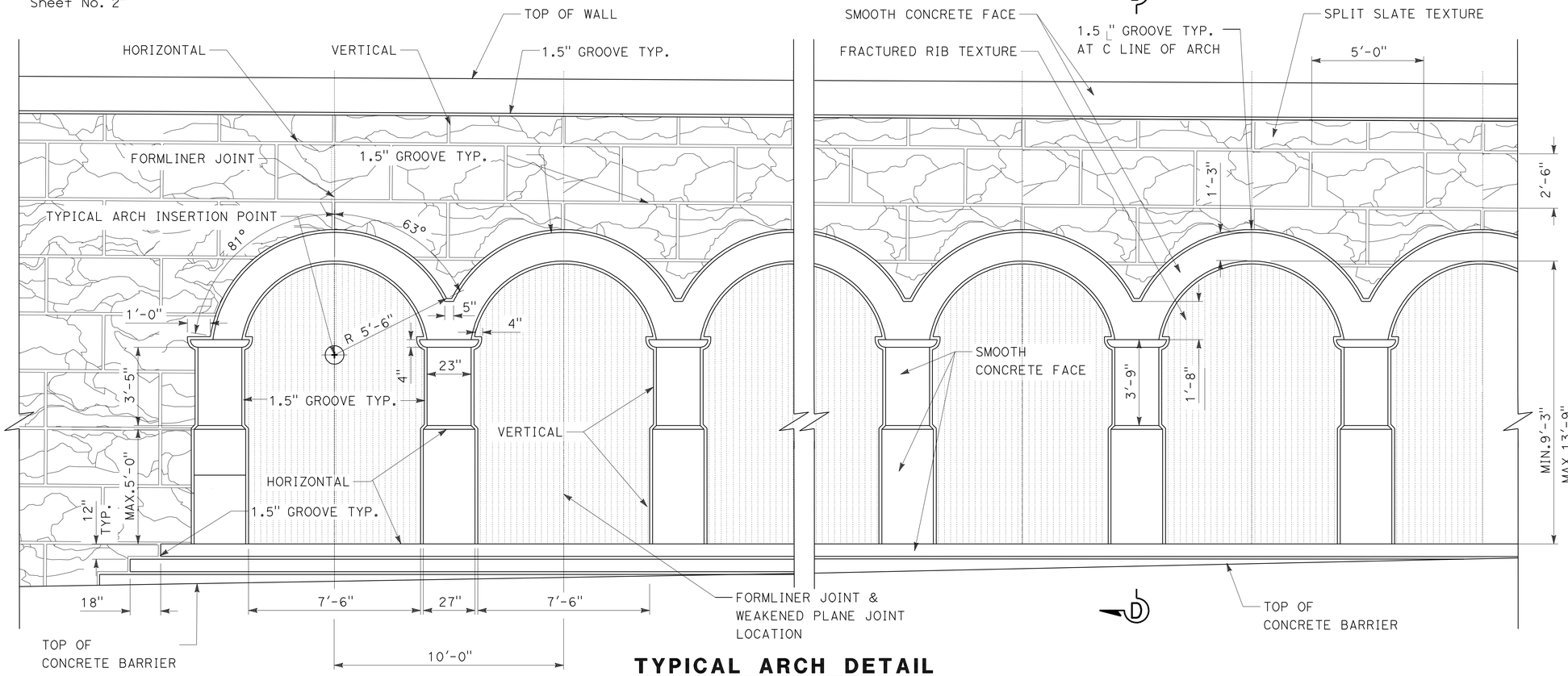

TYPICAL ARCH DETAIL

3/8" = 1'-0"

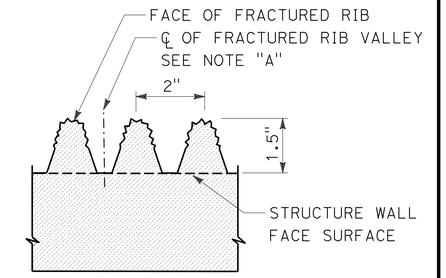

TYPICAL FRACTURED RIB TEXTURE

No Scale

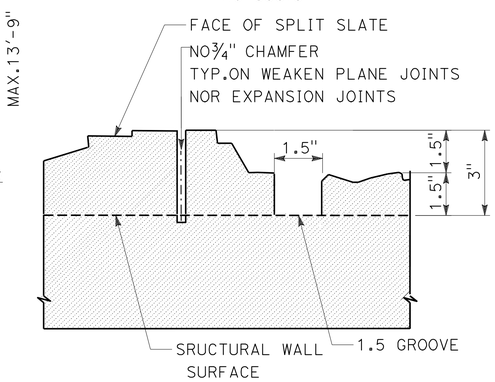

TYPICAL SPLIT SLATE TEXTURE

No Scale

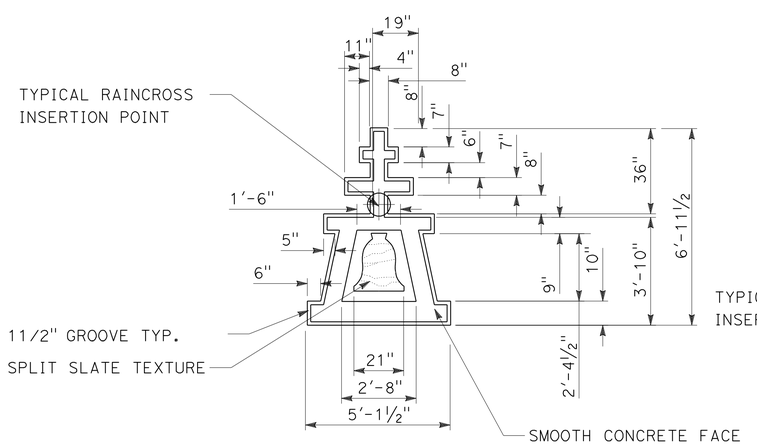

TYPICAL RAINCROSS DETAIL

3/8" = 1'-0"

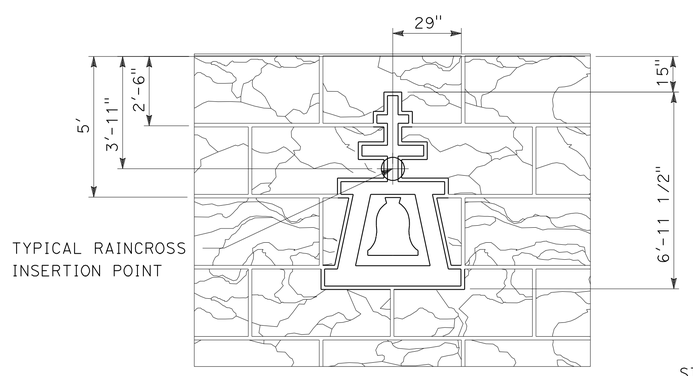

TYPICAL RAINCROSS DETAIL/ SPLIT SLATE TEXTURE

3/8" = 1'-0"

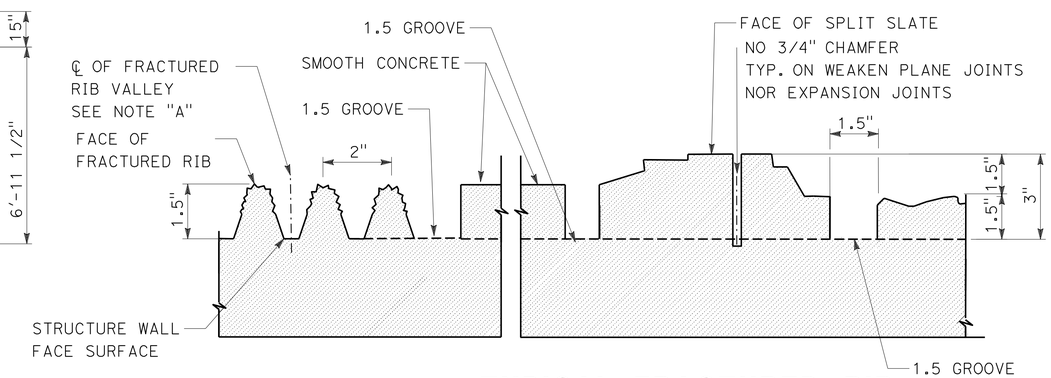

NOTE "A"
PERMITTED LOCATION OF WEAKEN PLANE AND EXPANSION JOINTS

TYPICAL FRACTURED RIB WITH SPLIT SLATE TEXTURE

No Scale

THIS PLAN IS ACCURATE FOR ARCHITECTUAL TREATMENT WORK ONLY.

	BY	CHECKED
DESIGN	M. Hall	M. Bishop
DETAILS	R. Kirkland	M. Bishop
QUANTITIES	J. Szabo	M. Vo

STATE OF CALIFORNIA
DEPARTMENT OF TRANSPORTATION

DIVISION OF ENGINEERING SERVICES
STRUCTURE DESIGN
DESIGN BRANCH 10

BRIDGE NO. 56 E0066
POST MILE 18.88

RETAINING WALL NO. 315
ARCHITECTURAL SURFACE DETAIL SHEET NO. 2

STRUCTURES DESIGN DETAIL SHEET (ENGLISH) (REV. 10/25/05)

ORIGINAL SCALE IN INCHES FOR REDUCED PLANS 0 1 2 3

CU 08
EA 448401

DISREGARD PRINTS BEARING EARLIER REVISION DATES 8/10/10

REVISION DATES

SHEET 11 OF 16

FILE => 56e0066umiscdt11.dgn

USERNAME => trlenard DATE PLOTTED => 30-APR-2011 TIME PLOTTED => 10:32

Dist	COUNTY	ROUTE	POST MILES TOTAL PROJECT	SHEET No.	TOTAL SHEETS
08	Riv	91	15.6/21.6	1468	2028

LICENSED LANDSCAPE ARCHITECT

4-25-11
PLANS APPROVAL DATE

LICENSED LANDSCAPE ARCHITECT
Matthew Harry Hall
Signature
10/31/2011
Renewal Date
11/12/2010
Date
STATE OF CALIFORNIA

THE STATE OF CALIFORNIA OR ITS OFFICERS OR AGENTS SHALL NOT BE RESPONSIBLE FOR THE ACCURACY OR COMPLETENESS OF SCANNED COPIES OF THIS PLAN SHEET.

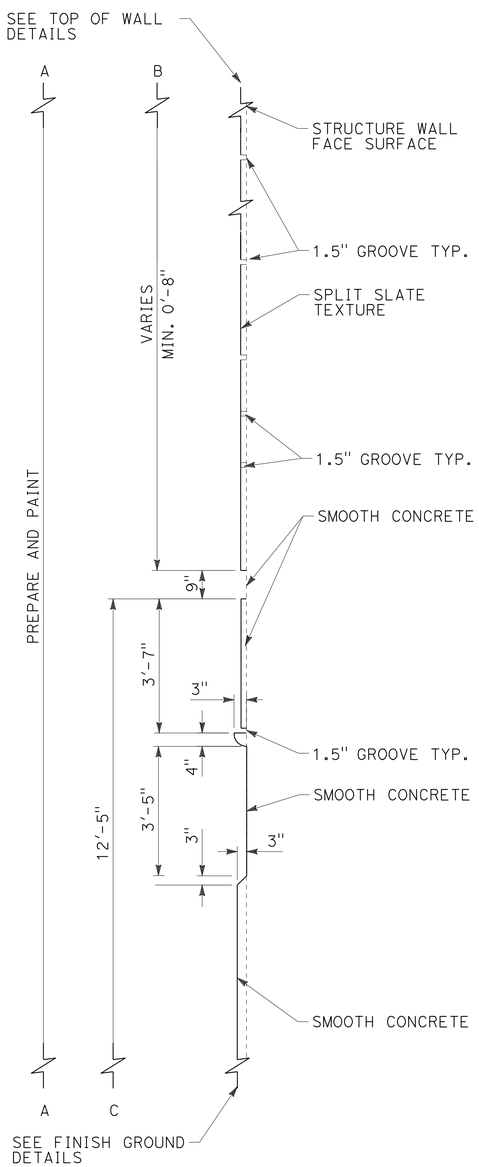

SECTION F-F

No Scale

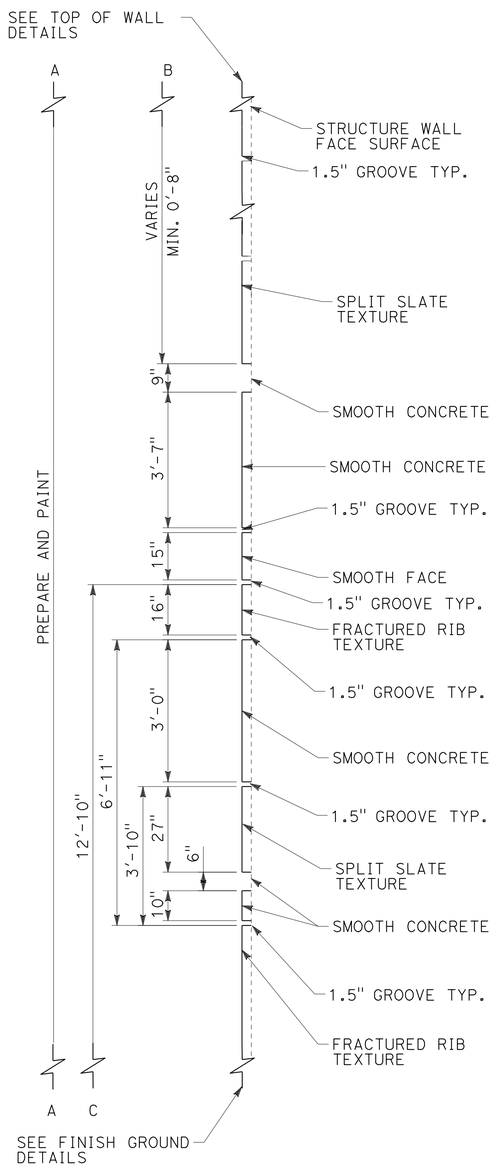

SECTION G-G

No Scale

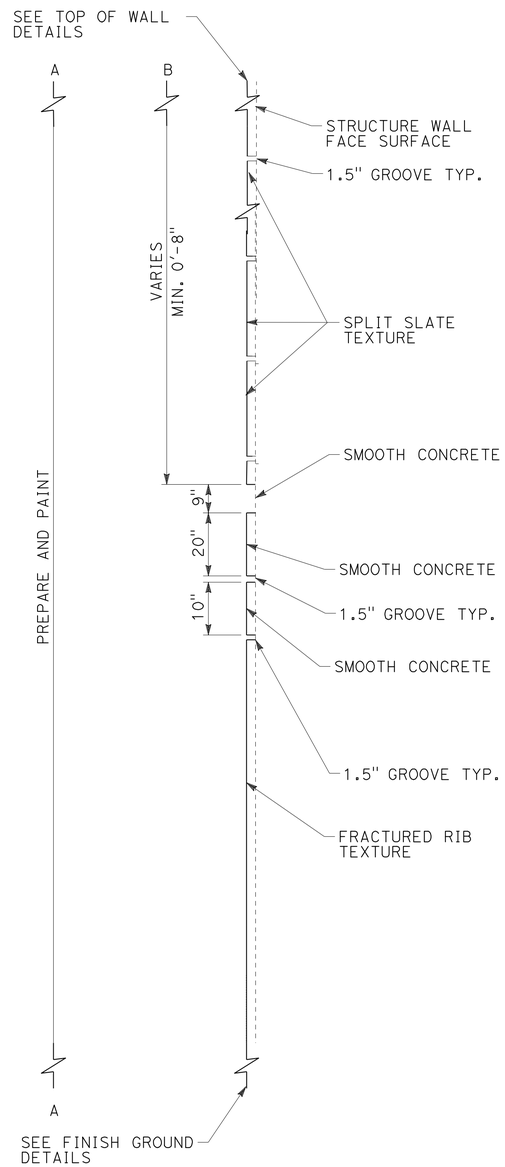

SECTION H-H

No Scale

THIS PLAN IS ACCURATE FOR ARCHITECTUAL TREATMENT WORK ONLY.

	BY	CHECKED
DESIGN	M. Hall	M. Bishop
DETAILS	R. Kirkland	M. Bishop
QUANTITIES	J. Szabo	M. Vo

STATE OF CALIFORNIA
DEPARTMENT OF TRANSPORTATION

DIVISION OF ENGINEERING SERVICES
STRUCTURE DESIGN
DESIGN BRANCH 10

BRIDGE NO. 56 E0066
POST MILE 18.88

RETAINING WALL NO. 315
ARCHITECTURAL SURFACE DETAIL SHEET NO. 3

STRUCTURES DESIGN DETAIL SHEET (ENGLISH) (REV. 10/25/05)

ORIGINAL SCALE IN INCHES FOR REDUCED PLANS 0 1 2 3

CU 08
EA 448401

DISREGARD PRINTS BEARING EARLIER REVISION DATES

REVISION DATES: 8/10/10

SHEET 12 OF 16

FILE => 56e0066umiscdt12.dgn

USERNAME => trlenard DATE PLOTTED => 30-APR-2011 TIME PLOTTED => 10:32

Dist	COUNTY	ROUTE	POST MILES TOTAL PROJECT	SHEET No.	TOTAL SHEETS
08	Riv	91	15.6/21.6	1469	2028

LICENSED LANDSCAPE ARCHITECT

4-25-11
PLANS APPROVAL DATE

LICENSED LANDSCAPE ARCHITECT Matthew Harry Hall No. 2500 Signature 10/31/2011 Renewal Date 11/12/2010 Date STATE OF CALIFORNIA

THE STATE OF CALIFORNIA OR ITS OFFICERS OR AGENTS SHALL NOT BE RESPONSIBLE FOR THE ACCURACY OR COMPLETENESS OF SCANNED COPIES OF THIS PLAN SHEET.

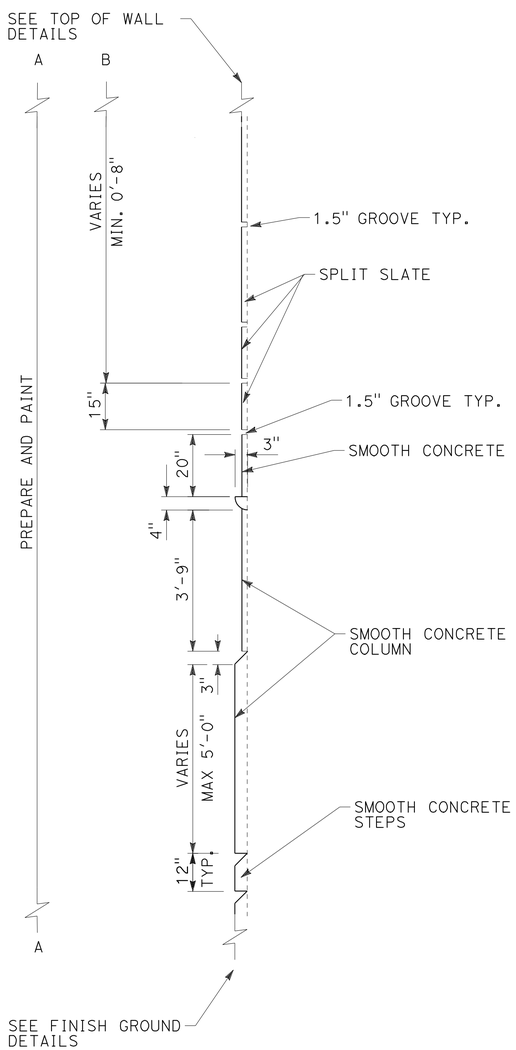

SECTION D-D

No Scale

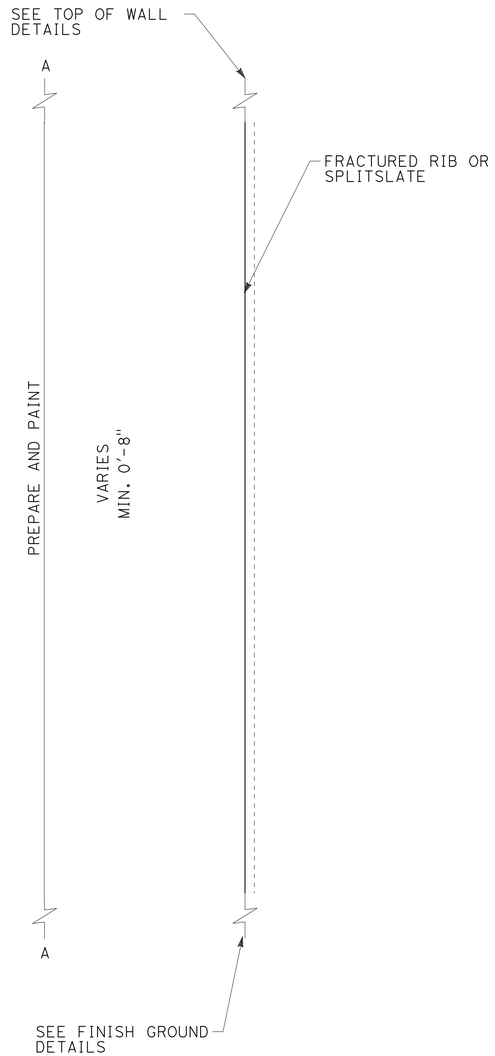

SECTION E-E

No Scale

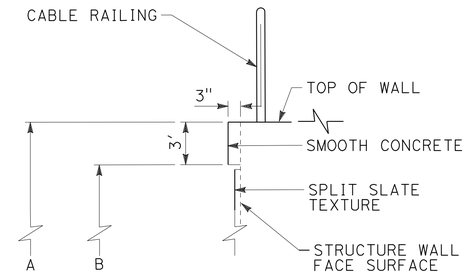

TOP OF WALL DETAIL TYPICAL WITH CABLE RAIL

No Scale

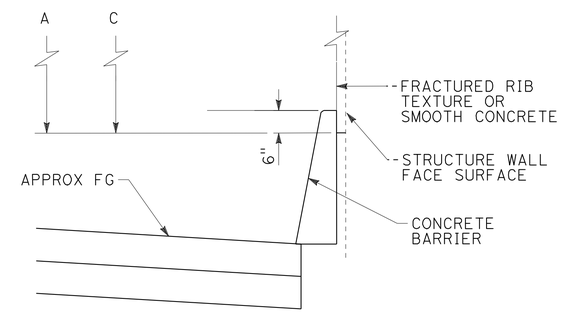

FINISH GROUND DETAIL TYPICAL WITH CONCRETE BARRIER

No Scale

THIS PLAN IS ACCURATE FOR ARCHITECTUAL TREATMENT WORK ONLY.

	BY	CHECKED
DESIGN	M. Hall	M. Bishop
DETAILS	R. Kirkland	M. Bishop
QUANTITIES	J. Szabo	M. Vo

STATE OF CALIFORNIA
DEPARTMENT OF TRANSPORTATION

DIVISION OF ENGINEERING SERVICES
STRUCTURE DESIGN
DESIGN BRANCH 10

BRIDGE NO. 56 E0066
POST MILE 18.88

RETAINING WALL NO. 315
ARCHITECTURAL SURFACE DETAIL SHEET NO. 4

STRUCTURES DESIGN DETAIL SHEET (ENGLISH) (REV. 10/25/05)

ORIGINAL SCALE IN INCHES FOR REDUCED PLANS 0 1 2 3

CU 08
EA 448401

DISREGARD PRINTS BEARING EARLIER REVISION DATES → 8/10/10

REVISION DATES

SHEET 13 OF 16

FILE => 56e0066umiscdt13.dgn

USERNAME => friehard DATE PLOTTED => 30-APR-2011 TIME PLOTTED => 10:32

DIST	COUNTY	ROUTE	POST MILES TOTAL PROJECT	SHEET No	TOTAL SHEETS
08	Riv	91	15.6/21.6	1470	2028

GEOTECHNICAL PROFESSIONAL — DATE 11/03/2010

4-25-11
PLANS APPROVAL DATE

REGISTERED PROFESSIONAL ENGINEER — FARID MOTAMED No. 2738 Exp. 6-30-11 GEOTECHNICAL STATE OF CALIFORNIA

The State of California or its officers or agents shall not be responsible for the accuracy or completeness of electronic copies of this plan sheet.

California Department of Transportation
5900 Folsom Boulevard
Sacramento, CA 95819

URS Corporation
2020 East First Street, Suite 400
Santa Ana, CA 92705

GROUP SYMBOLS AND NAMES

Graphic / Symbol	Group Names	Graphic / Symbol	Group Names
GW	Well-graded GRAVEL Well-graded GRAVEL with SAND	CL	Lean CLAY Lean CLAY with SAND Lean CLAY with GRAVEL SANDY lean CLAY SANDY lean CLAY with GRAVEL GRAVELLY lean CLAY GRAVELLY lean CLAY with SAND
GP	Poorly graded GRAVEL Poorly graded GRAVEL with SAND		
GW-GM	Well-graded GRAVEL with SILT Well-graded GRAVEL with SILT and SAND	CL-ML	SILTY CLAY SILTY CLAY with SAND SILTY CLAY with GRAVEL SANDY SILTY CLAY SANDY SILTY CLAY with GRAVEL GRAVELLY SILTY CLAY GRAVELLY SILTY CLAY with SAND
GW-GC	Well-graded GRAVEL with CLAY (or SILTY CLAY) Well-graded GRAVEL with CLAY and SAND (or SILTY CLAY and SAND)		
GP-GM	Poorly graded GRAVEL with SILT Poorly graded GRAVEL with SILT and SAND	ML	SILT SILT with SAND SILT with GRAVEL SANDY SILT SANDY SILT with GRAVEL GRAVELLY SILT GRAVELLY SILT with SAND
GP-GC	Poorly graded GRAVEL with CLAY (or SILTY CLAY) Poorly graded GRAVEL with CLAY and SAND (or SILTY CLAY and SAND)		
GM	SILTY GRAVEL SILTY GRAVEL with SAND	OL	ORGANIC lean CLAY ORGANIC lean CLAY with SAND ORGANIC lean CLAY with GRAVEL SANDY ORGANIC lean CLAY SANDY ORGANIC lean CLAY with GRAVEL GRAVELLY ORGANIC lean CLAY GRAVELLY ORGANIC lean CLAY with SAND
GC	CLAYEY GRAVEL CLAYEY GRAVEL with SAND		
GC-GM	SILTY, CLAYEY GRAVEL SILTY, CLAYEY GRAVEL with SAND	OL	ORGANIC SILT ORGANIC SILT with SAND ORGANIC SILT with GRAVEL SANDY ORGANIC SILT SANDY ORGANIC SILT with GRAVEL GRAVELLY ORGANIC SILT GRAVELLY ORGANIC SILT with SAND
SW	Well-graded SAND Well-graded SAND with GRAVEL		
SP	Poorly graded SAND Poorly graded SAND with GRAVEL	CH	Fat CLAY Fat CLAY with SAND Fat CLAY with GRAVEL SANDY fat CLAY SANDY fat CLAY with GRAVEL GRAVELLY fat CLAY GRAVELLY fat CLAY with SAND
SW-SM	Well-graded SAND with SILT Well-graded SAND with SILT and GRAVEL		
SW-SC	Well-graded SAND with CLAY (or SILTY CLAY) Well-graded SAND with CLAY and GRAVEL (or SILTY CLAY and GRAVEL)	MH	Elastic SILT Elastic SILT with SAND Elastic SILT with GRAVEL SANDY elastic SILT SANDY elastic SILT with GRAVEL GRAVELLY elastic SILT GRAVELLY elastic SILT with SAND
SP-SM	Poorly graded SAND with SILT Poorly graded SAND with SILT and GRAVEL		
SP-SC	Poorly graded SAND with CLAY (or SILTY CLAY) Poorly graded SAND with CLAY and GRAVEL (or SILTY CLAY and GRAVEL)	OH	ORGANIC fat CLAY ORGANIC fat CLAY with SAND ORGANIC fat CLAY with GRAVEL SANDY ORGANIC fat CLAY SANDY ORGANIC fat CLAY with GRAVEL GRAVELLY ORGANIC fat CLAY GRAVELLY ORGANIC fat CLAY with SAND
SM	SILTY SAND SILTY SAND with GRAVEL		
SC	CLAYEY SAND CLAYEY SAND with GRAVEL	OH	ORGANIC elastic SILT ORGANIC elastic SILT with SAND ORGANIC elastic SILT with GRAVEL SANDY elastic ELASTIC SILT SANDY ORGANIC elastic SILT with GRAVEL GRAVELLY ORGANIC elastic SILT GRAVELLY ORGANIC elastic SILT with SAND
SC-SM	SILTY, CLAYEY SAND SILTY, CLAYEY SAND with GRAVEL		
PT	PEAT	OL/OH	ORGANIC SOIL ORGANIC SOIL with SAND ORGANIC SOIL with GRAVEL SANDY ORGANIC SOIL SANDY ORGANIC SOIL with GRAVEL GRAVELLY ORGANIC SOIL GRAVELLY ORGANIC SOIL with SAND
	COBBLES COBBLES and BOULDERS BOULDERS		

FIELD AND LABORATORY TESTS

C	Consolidation (ASTM D 2435-04)
CL	Collapse Potential (ASTM D 5333-03)
CP	Compaction Curve (CTM 216 - 06)
CR	Corrosion, Sulfates, Chlorides (CTM 643 - 99; CTM 417 - 06; CTM 422 - 06)
CU	Consolidated Undrained Triaxial (ASTM D 4767-02)
DS	Direct Shear (ASTM D 3080-04)
EI	Expansion Index (ASTM D 4829-03)
M	Moisture Content (ASTM D 2216-05)
OC	Organic Content (ASTM D 2974-07)
P	Permeability (CTM 220 - 05)
PA	Particle Size Analysis (ASTM D 422-63 [2002])
PI	Liquid Limit, Plastic Limit, Plasticity Index (AASHTO T 89-02, AASHTO T 90-00)
PL	Point Load Index (ASTM D 5731-05)
PM	Pressure Meter
PP	Pocket Penetrometer
R	R-Value (CTM 301 - 00)
SE	Sand Equivalent (CTM 217 - 99)
SG	Specific Gravity (AASHTO T 100-06)
SL	Shrinkage Limit (ASTM D 427-04)
SW	Swell Potential (ASTM D 4546-03)
TV	Pocket Torvane
UC	Unconfined Compression - Soil (ASTM D 2166-06) Unconfined Compression - Rock (ASTM D 2938-95)
UU	Unconsolidated Undrained Triaxial (ASTM D 2850-03)
UW	Unit Weight (ASTM D 4767-04)
VS	Vane Shear (AASHTO T 223-96 [2004])

CONSISTENCY OF COHESIVE SOILS

Descriptor	Unconfined Compressive Strength (tsf)	Pocket Penetrometer (tsf)	Torvane (tsf)	Field Approximation
Very Soft	< 0.25	< 0.25	< 0.12	Easily penetrated several inches by fist
Soft	0.25 - 0.50	0.25 - 0.50	0.12 - 0.25	Easily penetrated several inches by thumb
Medium Stiff	0.50 - 1.0	0.50 - 1.0	0.25 - 0.50	Can be penetrated several inches by thumb with moderate effort
Stiff	1.0 - 2.0	1.0 - 2.0	0.50 - 1.0	Readily indented by thumb but penetrated only with great effort
Very Stiff	2.0 - 4.0	2.0 - 4.0	1.0 - 2.0	Readily indented by thumbnail
Hard	> 4.0	> 4.0	> 2.0	Indented by thumbnail with difficulty

APPARENT DENSITY OF COHESIONLESS SOILS

Descriptor	SPT N60 - Value (blows / foot)
Very Loose	0 - 4
Loose	5 - 10
Medium Dense	11 - 30
Dense	31 - 50
Very Dense	> 50

MOISTURE

Descriptor	Criteria
Dry	Absence of moisture, dusty, dry to the touch
Moist	Damp but no visible water
Wet	Visible free water, usually soil is below water table

PERCENT OR PROPORTION OF SOILS

Descriptor	Criteria
Trace	Particles are present but estimated to be less than 5%
Few	5 to 10%
Little	15 to 25%
Some	30 to 45%
Mostly	50 to 100%

SOIL PARTICLE SIZE

Descriptor		Size
Boulder		> 12 inches
Cobble		3 to 12 inches
Gravel	Coarse	3/4 inch to 3 inches
	Fine	No. 4 Sieve to 3/4 inch
Sand	Coarse	No. 10 Sieve to No. 4 Sieve
	Medium	No. 40 Sieve to No. 10 Sieve
	Fine	No. 200 Sieve to No. 40 Sieve
Silt and Clay		Passing No. 200 Sieve

PLASTICITY OF FINE-GRAINED SOILS

Descriptor	Criteria
Nonplastic	A 1/8-inch thread cannot be rolled at any water content.
Low	The thread can barely be rolled, and the lump cannot be formed when drier than the plastic limit.
Medium	The thread is easy to roll, and not much time is required to reach the plastic limit; it cannot be rerolled after reaching the plastic limit. The lump crumbles when drier than the plastic limit.
High	It takes considerable time rolling and kneading to reach the plastic limit. The thread can be rerolled several times after reaching the plastic limit. The lump can be formed without crumbling when drier than the plastic limit.

CEMENTATION

Descriptor	Criteria
Weak	Crumbles or breaks with handling or little finger pressure.
Moderate	Crumbles or breaks with considerable finger pressure.
Strong	Will not crumble or break with finger pressure.

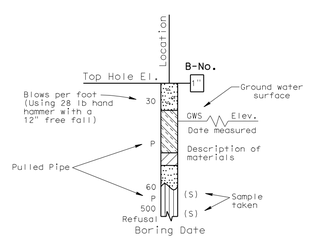

SAMPLE BORING (DRY)

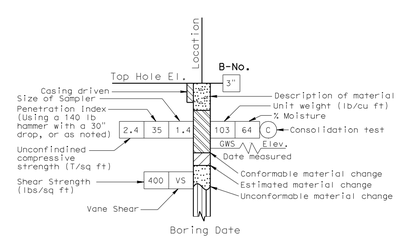

ROTARY SAMPLE BORING (WET)

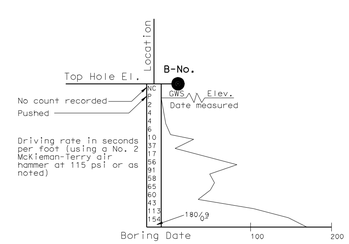

2 1/4" CONE PENETRATION BORING

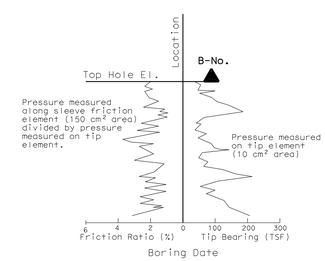

ELECTRONIC CONE PENETROMETER TEST

Cone Penetrometer dimensions and testing procedures are in accordance with ASTM standard D 3441-79, or as noted.

GINA PURSELL DESIGN OVERSIGHT	SHAWN WEI FUNCTIONAL SUPERVISOR	DRAWN BY	P. QUACH	P.CHAU/D.WADER/C.CARBINO FIELD INVESTIGATION BY:	PREPARED FOR THE STATE OF CALIFORNIA DEPARTMENT OF TRANSPORTATION
11/12/10 SIGN OFF DATE		CHECKED BY	S. PIRATHIVIRAJ	DATE: Nov 6 2007 to March 7 2008	A. LEE PROJECT ENGINEER

BRIDGE NO. 56 E0066
POST MILE 18.88

SOIL LEGEND
LOG OF TEST BORINGS 1 of 3

OSF GEOTECHNICAL LOG OF TEST BORINGS SHEET (ENGLISH) (REV. 2/25/05)

ORIGINAL SCALE IN INCHES FOR REDUCED PLANS 0 1 2 3

CU 08
EA 448401

DISREGARD PRINTS BEARING EARLIER REVISION DATES 8/18/10

REVISION DATES (PRELIMINARY STAGE ONLY)

SHEET 14 OF 16

FILE => 56e0066z1otb14.dgn

USERNAME => trienard DATE PLOTTED => 30-APR-2011 TIME PLOTTED =>

DIST	COUNTY	ROUTE	POST MILES TOTAL PROJECT	SHEET No	TOTAL SHEETS
08	Riv	91	15.6/21.6	1471	2028

GEOTECHNICAL PROFESSIONAL — DATE 11/03/2010

4-25-11
PLANS APPROVAL DATE

REGISTERED PROFESSIONAL ENGINEER — FARID MOTAMED No. 2738 Exp. 6-30-11 GEOTECHNICAL — STATE OF CALIFORNIA

The State of California or its officers or agents shall not be responsible for the accuracy or completeness of electronic copies of this plan sheet.

California Department of Transportation
5900 Folsom Boulevard
Sacramento, CA 95819

URS Corporation
2020 East First Street, Suite 400
Santa Ana, CA 92705

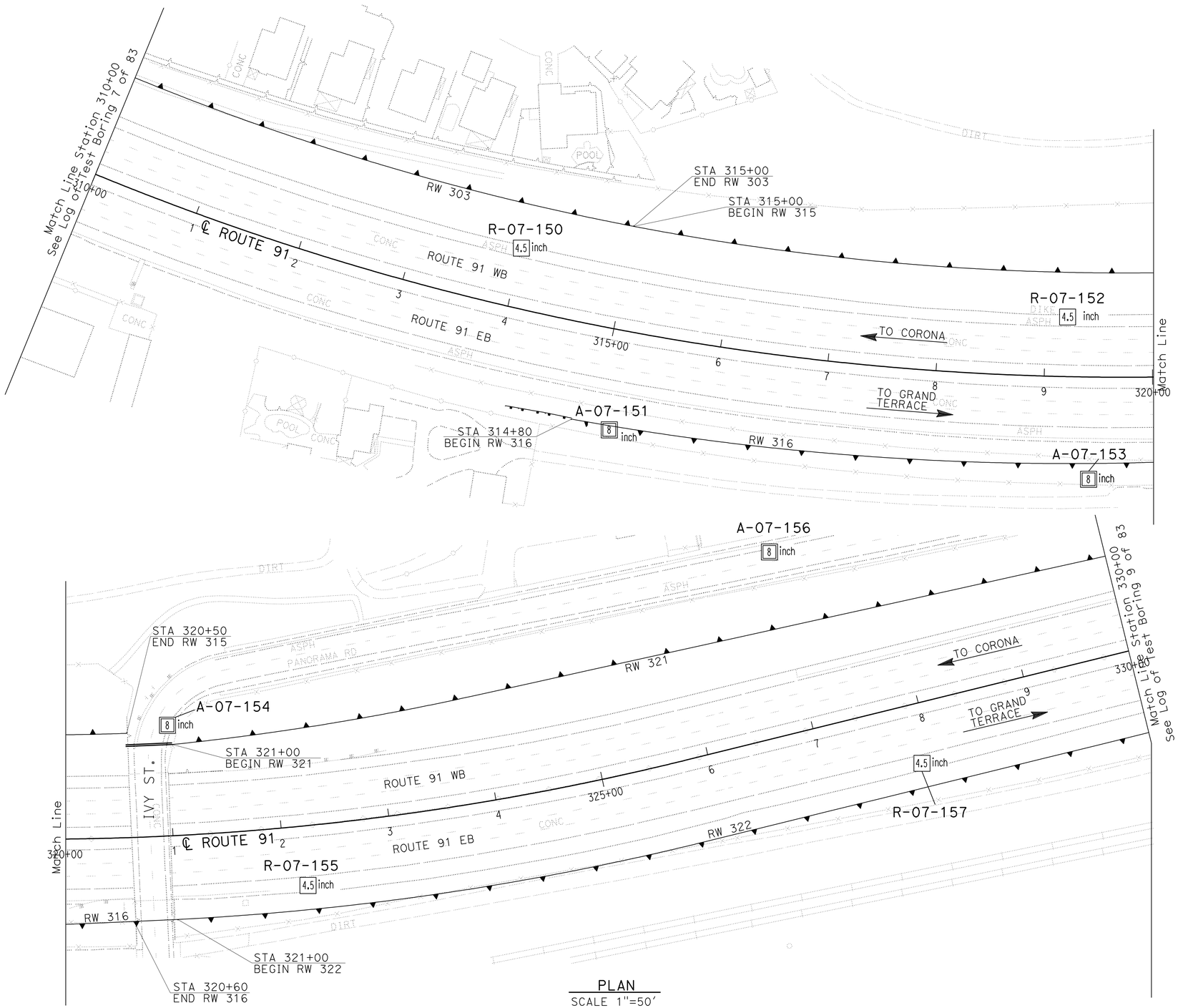

PLAN
SCALE 1"=50'

Borehole Number	Drill Rig	Hammer Type	Avg. Hammer Efficiency, ETR (%)
R-07-150	CME 85	Automatic	87
A-07-151	Diedrich D-120	Automatic	75*
R-07-152	CS-2000	Automatic	84
A-07-153	Diedrich D-120	Automatic	75*
A-07-154	Diedrich D-120	Automatic	75*
R-07-155	Acker Rig	Automatic	74
A-07-156	Diedrich D-120	Automatic	75*
R-07-157	CME 85	Automatic	87

Sampler Type	Inside Diameter (Inches)	Borehole Numbers
SPT	1.375	R-07-150, A-07-151 A-07-153, A-07-154 R-07-155, A-07-156 R-07-157
Modified California 1	1.94	R-07-155, R-07-157
Modified California 2	2.40	A-07-151, A-07-153 A-07-154, A-07-156

*Estimated Hammer Efficiency Rating.

GINA PURSELL — DESIGN OVERSIGHT
SHAWN WEI — FUNCTIONAL SUPERVISOR
11/12/10 — SIGN OFF DATE

DRAWN BY: P. QUACH
CHECKED BY: S. PIRATHIVIRAJ

P.CHAU/D.WADER/C.CARBINO
FIELD INVESTIGATION BY:
DATE: Nov 6 2007 to March 7 2008

PREPARED FOR THE STATE OF CALIFORNIA DEPARTMENT OF TRANSPORTATION

A. LEE — PROJECT ENGINEER

BRIDGE NO. 56 E0066
POST MILE 18.88

WALL LAYOUT & EXPLORATORY LOCATION MAP
LOG OF TEST BORINGS 2 OF 3

OSF GEOTECHNICAL LOG OF TEST BORINGS SHEET (ENGLISH) (REV. 2/25/05)

ORIGINAL SCALE IN INCHES FOR REDUCED PLANS 0 1 2 3

CU 08
EA 448401

DISREGARD PRINTS BEARING EARLIER REVISION DATES

REVISION DATES (PRELIMINARY STAGE ONLY): 8/18/10

SHEET 15 OF 16

FILE => 56e0066zlotb15.dgn

USERNAME => trienard DATE PLOTTED => 30-APR-2011 TIME PLOTTED =>

DIST	COUNTY	ROUTE	POST MILES TOTAL PROJECT	SHEET No	TOTAL SHEETS
08	Riv	91	15.6/21.6	1472	2028

GEOTECHNICAL PROFESSIONAL — DATE 11/03/2010

4-25-11
PLANS APPROVAL DATE

REGISTERED PROFESSIONAL ENGINEER — FARID MOTAMED — No. 2616 — Exp. 6-30-11 — GEOTECHNICAL — STATE OF CALIFORNIA

The State of California or its officers or agents shall not be responsible for the accuracy or completeness of electronic copies of this plan sheet.

California Department of Transportation
5900 Folsom Boulevard
Sacramento, CA 95819

URS Corporation
2020 East First Street, Suite 400
Santa Ana, CA 92705

FOR PLAN VIEW, SEE
"LOG OF TEST BORINGS 2 OF 3"

NOTE: 1. This LOTB sheet was prepared in accordance with the Caltrans Soil & Rock Logging, Classification, and Presentation Manual (June 2007).

2. For legend, see "Log of Test Borings 1 of 3"

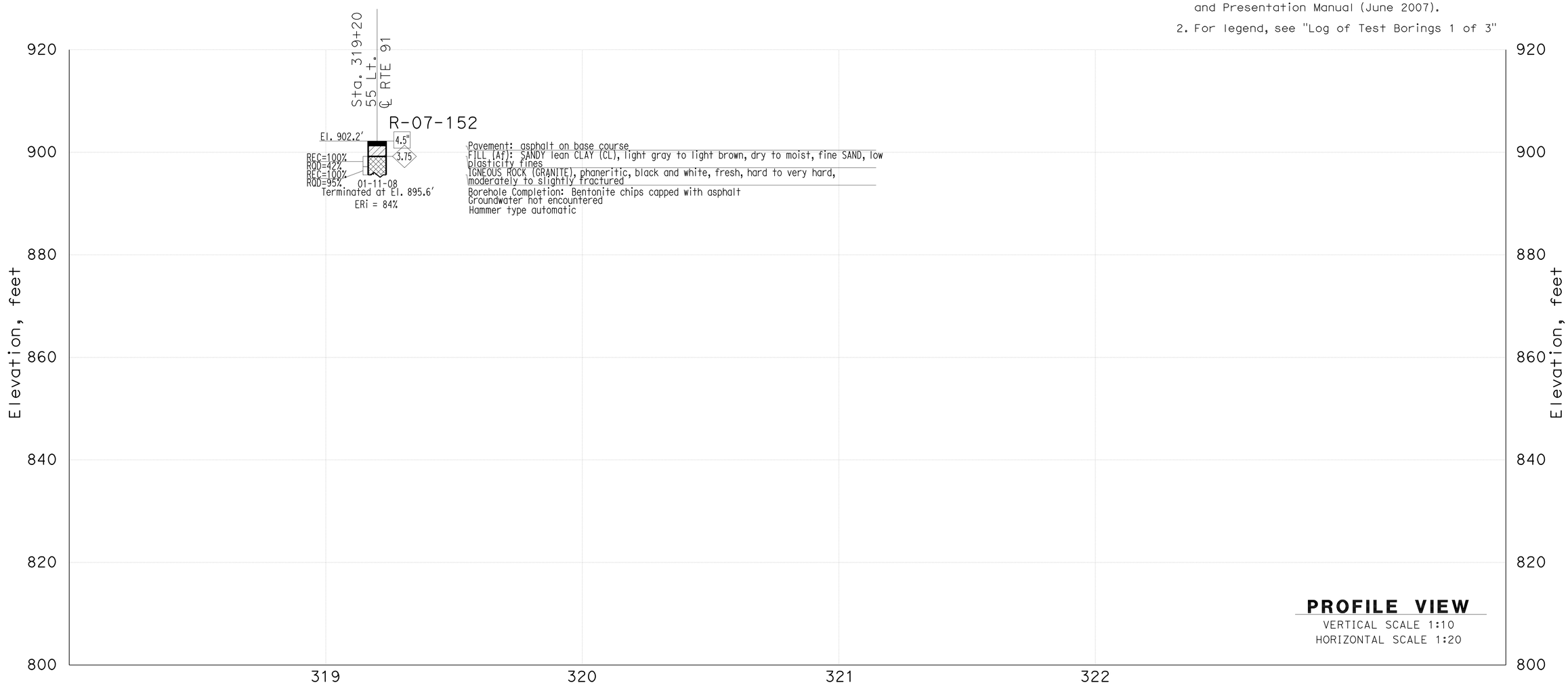

THIS PLAN ACCURATE FOR SOUND WALL AND RETAINING WALL WORK ONLY

GINA PURSELL DESIGN OVERSIGHT	SHAWN WEI FUNCTIONAL SUPERVISOR	DRAWN BY	P. QUACH	P.CHAU/D.WADER/C.CARBINO FIELD INVESTIGATION BY:	PREPARED FOR THE STATE OF CALIFORNIA DEPARTMENT OF TRANSPORTATION	A. LEE PROJECT ENGINEER	BRIDGE NO. 56 E0066 POST MILE 18.88
11/12/10 SIGN OFF DATE		CHECKED BY	S. PIRATHIVIRAJ	DATE: Nov 6 2007 to March 7 2008			

RETAINING WALL 315

LOG OF TEST BORINGS 3 OF 3

OSF GEOTECHNICAL LOG OF TEST BORINGS SHEET (ENGLISH) (REV. 2/25/05)

ORIGINAL SCALE IN INCHES FOR REDUCED PLANS 0 1 2 3

CU 08
EA 448401

DISREGARD PRINTS BEARING EARLIER REVISION DATES

REVISION DATES (PRELIMINARY STAGE ONLY) 8/10/10

SHEET 16 OF 16

FILE => 56e0066zlotb16.dgn

USERNAME => frlenard DATE PLOTTED => 30-APR-2011 TIME PLOTTED =>

DIST	COUNTY	ROUTE	POST MILES TOTAL PROJECT	SHEET No	TOTAL SHEETS
08	Riv	91	15.6/21.6	1473	2028

REGISTERED CIVIL ENGINEER 11/12/10 DATE

4-25-11
PLANS APPROVAL DATE

The State of California or its officers or agents shall not be responsible for the accuracy or completeness of electronic copies of this plan sheet.

REGISTERED PROFESSIONAL ENGINEER Minh Thuong Vo No. C59297 Exp. 6/30/2011 CIVIL STATE OF CALIFORNIA

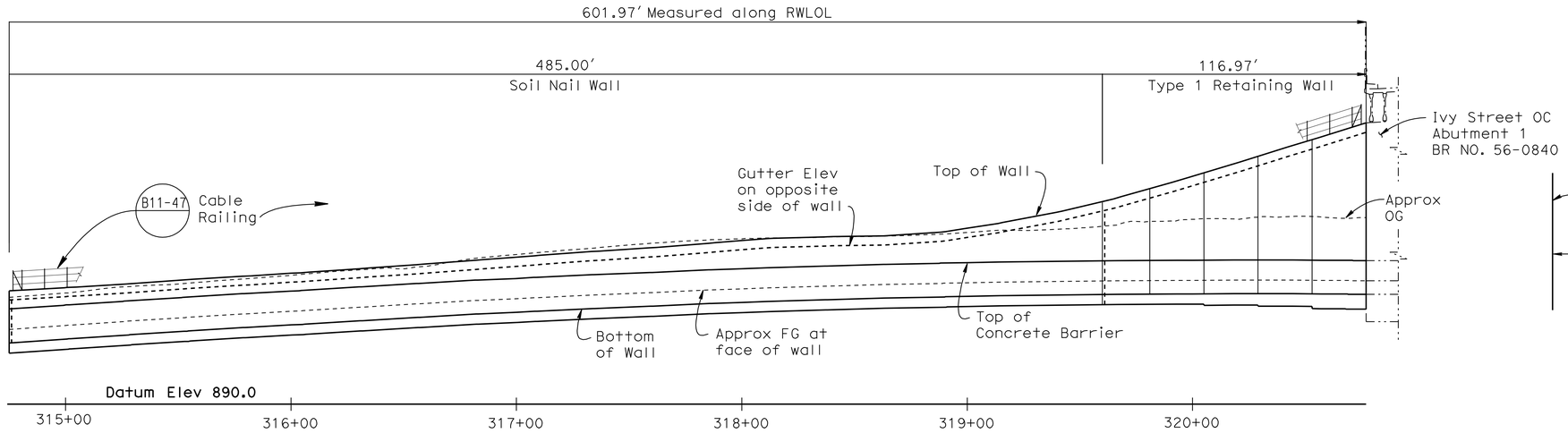

Notes:

1. For top of wall and bottom of wall elevations see "STRUCTURE PLAN NO. 1 and "STRUCTURE PLAN NO. 2" sheets.
2. For Quantities see "INDEX TO PLANS" sheet.

DEVELOPED MIRROR ELEVATION

Horiz. 1" = 30′
Vert. 1" = 10′

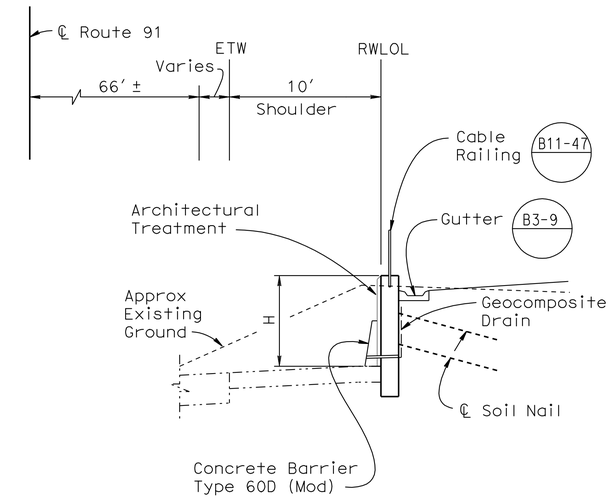

TYPICAL SECTION

No Scale
Sta 314+75.0 to Sta 319+60.0

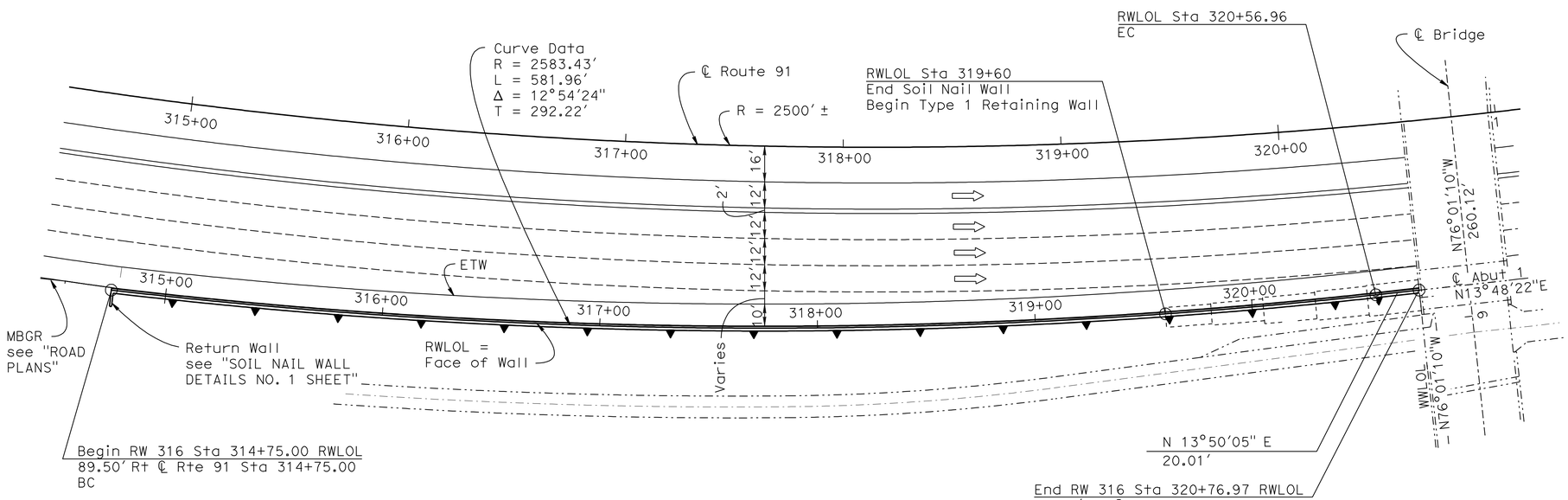

PLAN

1" = 30′

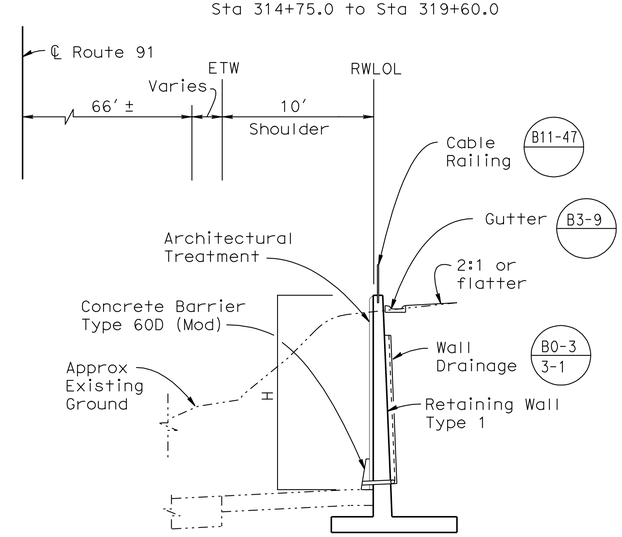

TYPICAL SECTION

No Scale
Sta 319+60.0 to Sta 320+76.97

NOTE:
THE CONTRACTOR SHALL VERIFY ALL CONTROLLING FIELD DIMENSIONS BEFORE ORDERING OR FABRICATING ANY MATERIAL.

Daniel T. Adams
DESIGN ENGINEER

	BY	CHECKED
DESIGN	M. Vo	J. Szabo
DETAILS	R. Kirkland	J. Szabo
QUANTITIES	J. Szabo	M.Vo

LOAD & RESISTANCE FACTOR DESIGN — LIVE LOADING: HL93 W/"LOW-BOY"; PERMIT DESIGN VEHICLE

	BY	CHECKED
LAYOUT	M. Vo	J. Szabo
SPECIFICATIONS	Dave Klein	PLANS AND SPECS COMPARED Dave Klein

ORIGINAL SCALE IN INCHES FOR REDUCED PLANS 0 1 2 3

STATE OF CALIFORNIA
DEPARTMENT OF TRANSPORTATION

DIVISION OF ENGINEERING SERVICES
STRUCTURE DESIGN
DESIGN BRANCH 10

CU 08
EA 448401

BRIDGE NO. 56 E0067
POST MILE 18.87

RETAINING WALL NO. 316
GENERAL PLAN

DISREGARD PRINTS BEARING EARLIER REVISION DATES → 3/15/10 7/15/10

REVISION DATES

SHEET 1 OF 14

STRUCTURES DESIGN GENERAL PLAN SHEET (ENGLISH) (REV.07-24-06)

FILE => 56e0067agp01.dgn

USERNAME => trlehard DATE PLOTTED => 30-APR-2011 TIME PLOTTED => 10:33

DIST	COUNTY	ROUTE	POST MILES TOTAL PROJECT	SHEET No	TOTAL SHEETS
08	Riv	91	15.6/21.6	1474	2028

REGISTERED CIVIL ENGINEER 11/12/10 DATE

4-25-11
PLANS APPROVAL DATE

REGISTERED PROFESSIONAL ENGINEER Minh Thuong Vo No. C59297 Exp. 6/30/2011 CIVIL STATE OF CALIFORNIA

The State of California or its officers or agents shall not be responsible for the accuracy or completeness of electronic copies of this plan sheet.

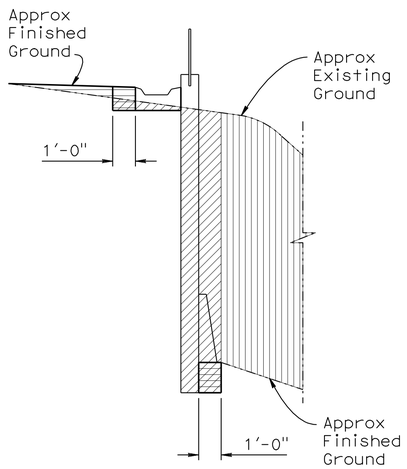

Structure Excavation (Soil Nail Wall)

Structure Backfill (Soil Nail Wall)

Roadway Excavation (see Roadway Plan)

SOIL NAIL WALL EXCAVATION & BACKFILL

NO SCALE

DESIGN DATA

DESIGN: Service Load Design Method per FHWA Geotechnical Engineering Circular No. 7 (FHWA O-IF-03-017) & Manual for Design and Construction Monitoring of Soil Nail Wall (FHWA-SA-96-069R)

REINFORCED CONCRETE: f_c = 3.6 KSI, f_y = 60 KSI

SHOTCRETE: f_c = 3.6 KSI, f_y = 60 KSI

STRUCTURAL STEEL: ASTM Designation: A 709, Grade 36, f_y = 36 KSI

SOIL NAILS: ASTM Designation: A615, Grade 60, f_y = 60 KSI

SOIL PARAMETERS: ϕ = 33°, c = 350 lb/ft^2, γ = 125 lb/ft^3, Q_d = 2.18 k/ft (Design Pullout Resistance)

QUANTITIES

RETAINING WALL 316 BRIDGE NO 56E0067

STRUCTURE EXCAVATION (RETAINING WALL)	810	CY
STRUCTURE EXCAVATION (SOIL NAIL WALL)	289	CY
STRUCTURE BACKFILL (RETAINING WALL)	654	CY
STRUCTURE BACKFILL (SOIL NAIL WALL)	54	CY
PERVIOUS BACKFILL MATERIAL (RETAINING WALL)	56	CY
SOIL NAIL ASSEMBLY	1,544	LF
STRUCTURAL CONCRETE, RETAINING WALL	352	CY
ARCHITECTURAL SURFACE (TEXTURED CONCRETE)	3,490	SQFT
FRACTURED RIB SPLIT SLATE TEXTURE		
BAR REINFORCING STEEL (RETAINING WALL)	53,157	LB
SHOTCRETE	54	CY
MINOR CONCRETE (GUTTER)	603	LF
CABLE RAILING	603	LF
CONCRETE BARRIER (TYPE 60D MODIFIED)	602	LF

INDEX TO PLANS

Sheet No.	Title
1	GENERAL PLAN
2	INDEX TO PLANS
3	STRUCTURE PLAN NO. 1
4	STRUCTURE PLAN NO. 2
5	STRUCTURE PLAN NO. 3
6	SOIL NAIL WALL DETAILS NO. 1
7	SOIL NAIL WALL DETAILS NO. 2
8	SOIL NAIL WALL DETAILS NO. 3
9	ARCHITECTURAL SURFACE
10	ARCHITECTURAL SURFACE DETAIL SHEET NO. 1
11	ARCHITECTURAL SURFACE DETAIL SHEET NO. 2
12	LOG OF TEST BORINGS 1 OF 3
13	LOG OF TEST BORINGS 2 OF 3
14	LOG OF TEST BORINGS 3 OF 3

STANDARD PLANS DATED MAY 2006

A10A	ACRONYMS AND ABBREVIATIONS (SHEET 1 OF 2)
A10B	ACRONYMS AND ABBREVIATIONS (SHEET 2 OF 2)
A10C	SYMBOLS (SHEET 1 OF 2)
A10D	SYMBOLS (SHEET 2 OF 2)
B0-1	BRIDGE DETAILS
B0-3	BRIDGE DETAILS
B3-1	RETAINING WALL TYPE 1 H=4' THROUGH 30'
B3-2	RETAINING WALL TYPE 1 H=32' THROUGH 36'
B3-8	RETAINING WALL DETAILS NO. 1
B3-9	RETAINING WALL DETAILS NO. 2
B11-47	CABLE RAILING

STANDARD PLAN SHEET NO.

DETAIL NO.

	BY	CHECKED
DESIGN	M. Vo	J. Szabo
DETAILS	R. Kirkland	J. Szabo
QUANTITIES	J. Szabo	M. Vo

STATE OF CALIFORNIA DEPARTMENT OF TRANSPORTATION

DIVISION OF ENGINEERING SERVICES STRUCTURE DESIGN DESIGN BRANCH 10

BRIDGE NO. 56 E0067
POST MILE 18.87

RETAINING WALL NO. 316
INDEX TO PLANS

STRUCTURES DESIGN DETAIL SHEET (ENGLISH) (REV. 10/25/05)

ORIGINAL SCALE IN INCHES FOR REDUCED PLANS 0 1 2 3

CU 08
EA 448401

DISREGARD PRINTS BEARING EARLIER REVISION DATES 7/15/10 7/15/10

REVISION DATES

SHEET 2 OF 14

FILE => 56e0067aitp02.dgn

USERNAME => trlenord DATE PLOTTED => 30-APR-2011 TIME PLOTTED => 10:33

DIST	COUNTY	ROUTE	POST MILES TOTAL PROJECT	SHEET No	TOTAL SHEETS
08	Riv	91	15.6/21.6	1475	2028

REGISTERED CIVIL ENGINEER 11/12/10 DATE

4-25-11
PLANS APPROVAL DATE

The State of California or its officers or agents shall not be responsible for the accuracy or completeness of electronic copies of this plan sheet.

REGISTERED PROFESSIONAL ENGINEER Minh Thuong Vo No. C59297 Exp. 6/30/2011 CIVIL STATE OF CALIFORNIA

Note:
Cable Railing and Concrete Barrier Type 60D not shown for clarity

SOIL NAIL SCHEDULE

Location	Soil Nail Embedment Length Le
Schedule 1	All Soil Nails: Le = 15'-0"

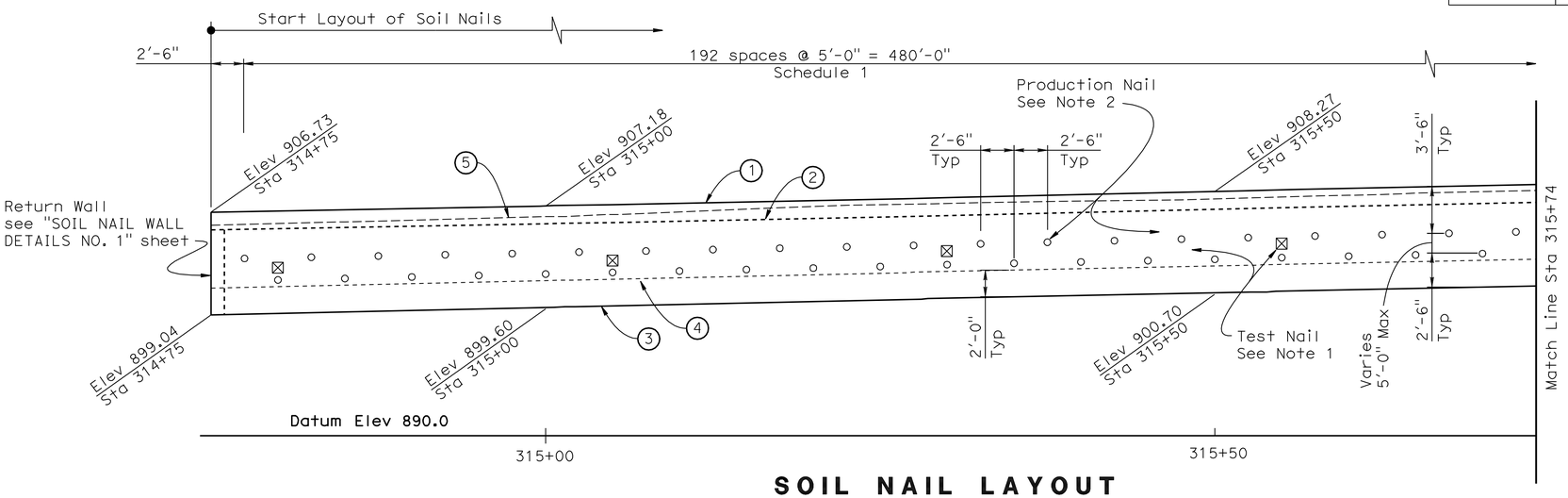

SOIL NAIL LAYOUT

3/16" = 1'-0"

NOTES:

1. Test nail locations are at midway between production nails. The exact location of the proof test nails to be determined in the field by the Engineer.
2. The maximum vertical spacing of production nails shall be staggered at 2'-6". Horizontal spacing as shown.
3. Contractor shall adjust the concrete gutter to meet the gutter flow line.

(1) Top of Soil Nail Wall
(2) Gutter Elevation at back of wall
(3) Bottom of Soil Nail Wall
(4) Approximate Finished Grade at face of wall.
(5) Approximate Original Ground

LEGEND:

○ Indicates location of Production Nail assembly.

⊠ Indicates location of Test Nail assembly. Located in the middle of Production nails.

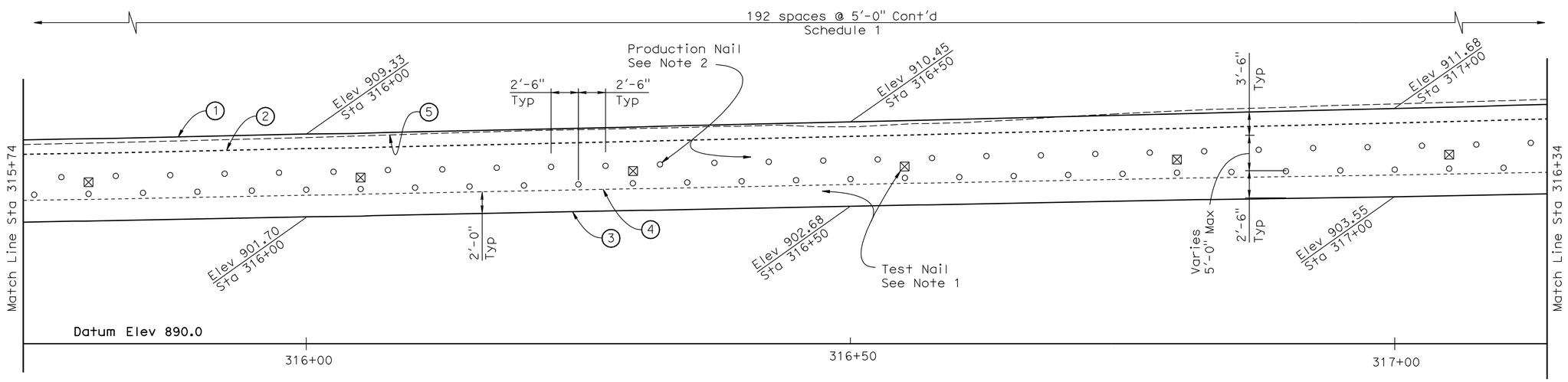

SOIL NAIL LAYOUT

3/16" = 1'-0"

NOTE:
THE CONTRACTOR SHALL VERIFY ALL CONTROLLING FIELD DIMENSIONS BEFORE ORDERING OR FABRICATING ANY MATERIAL.

	BY	CHECKED
DESIGN	M. Vo	J. Szabo
DETAILS	R. Kirkland	J. Szabo
QUANTITIES	J. Szabo	M. Vo

STATE OF CALIFORNIA
DEPARTMENT OF TRANSPORTATION

DIVISION OF ENGINEERING SERVICES
STRUCTURE DESIGN
DESIGN BRANCH 10

BRIDGE NO. 56 E0067
POST MILE 18.87

RETAINING WALL NO. 316
STRUCTURE PLAN NO. 1

STRUCTURES DESIGN DETAIL SHEET (ENGLISH) (REV. 10/25/05)

ORIGINAL SCALE IN INCHES FOR REDUCED PLANS 0 1 2 3

CU 08
EA 448401

DISREGARD PRINTS BEARING EARLIER REVISION DATES

REVISION DATES 3/15/10 7/15/10

SHEET 3 OF 14

FILE => 56e0067csp03.dgn

USERNAME => trlehard DATE PLOTTED => 30-APR-2011 TIME PLOTTED => 10:33

Note:
Cable Railing and Concrete Barrier Type 60D not shown for clarity

SOIL NAIL SCHEDULE	
Location	Soil Nail Embedment Length Le
Schedule 1	All Soil Nails: Le = 15'-0"

DIST	COUNTY	ROUTE	POST MILES TOTAL PROJECT	SHEET No	TOTAL SHEETS
08	Riv	91	15.6/21.6	1476	2028

REGISTERED CIVIL ENGINEER 11/12/10 DATE

4-25-11
PLANS APPROVAL DATE

REGISTERED PROFESSIONAL ENGINEER Minh Thuong Vo No. C59297 Exp. 6/30/2011 CIVIL STATE OF CALIFORNIA

The State of California or its officers or agents shall not be responsible for the accuracy or completeness of electronic copies of this plan sheet.

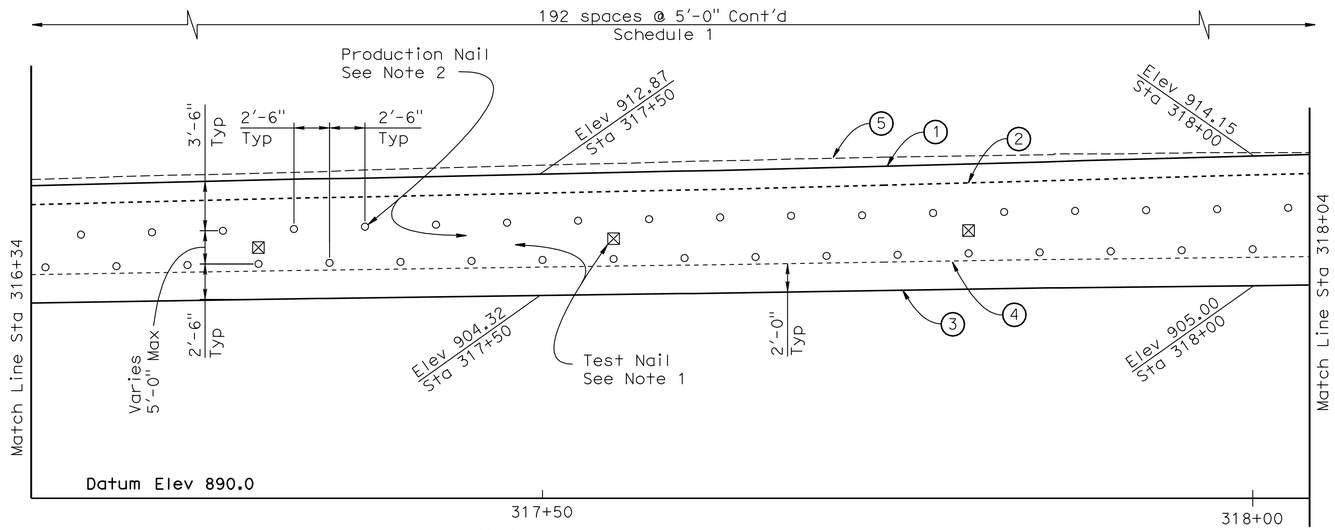

SOIL NAIL LAYOUT

3/16" = 1'-0"

NOTES:

1. Test nail locations are at midway between production nails. The exact location of the proof test nails to be determined in the field by the Engineer.
2. The maximum vertical spacing of production nails shall be staggered at 2'-6". Horizontal spacing as shown.
3. Contractor shall adjust the concrete gutter to meet the gutter flow line.

(1) Top of Soil Nail Wall
(2) Gutter Elevation at back of wall
(3) Bottom of Soil Nail Wall
(4) Approximate Finished Grade at face of wall.
(5) Approximate Original Ground

LEGEND:

○ Indicates location of Production Nail assembly.
⊠ Indicates location of Test Nail assembly. Located in the middle of Production nails.

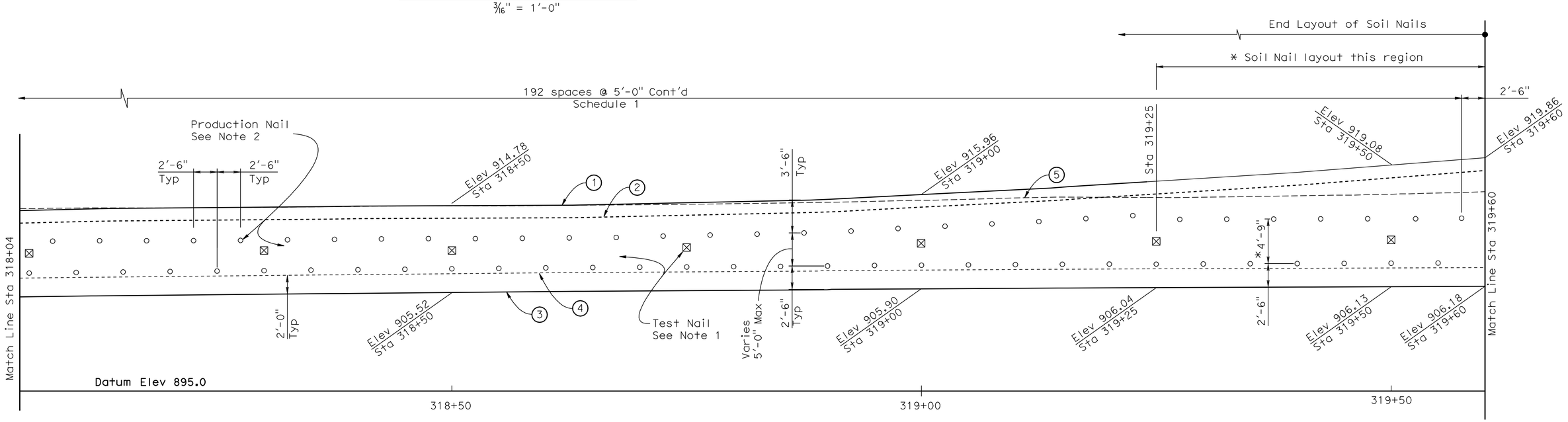

NOTE:
THE CONTRACTOR SHALL VERIFY ALL CONTROLLING FIELD DIMENSIONS BEFORE ORDERING OR FABRICATING ANY MATERIAL.

SOIL NAIL LAYOUT

3/16" = 1'-0"

	BY	CHECKED
DESIGN	M. Vo	J. Szabo
DETAILS	R. Kirkland	J. Szabo
QUANTITIES	J. Szabo	M. Vo

STATE OF CALIFORNIA
DEPARTMENT OF TRANSPORTATION

DIVISION OF ENGINEERING SERVICES
STRUCTURE DESIGN
DESIGN BRANCH 10

BRIDGE NO. 56 E0067
POST MILE 18.87

RETAINING WALL NO. 316
STRUCTURE PLAN NO. 2

STRUCTURES DESIGN DETAIL SHEET (ENGLISH) (REV. 10/25/05)

ORIGINAL SCALE IN INCHES FOR REDUCED PLANS 0 1 2 3

CU 08
EA 448401

DISREGARD PRINTS BEARING EARLIER REVISION DATES

REVISION DATES 3/15/10 7/15/10

SHEET 4 OF 14

FILE => 56e0067csp04.dgn

USERNAME => friehard DATE PLOTTED => 30-APR-2011 TIME PLOTTED => 10:33

DIST	COUNTY	ROUTE	POST MILES TOTAL PROJECT	SHEET No	TOTAL SHEETS
08	Riv	91	15.6/21.6	1477	2028

REGISTERED CIVIL ENGINEER 11/12/10 DATE

4-25-11
PLANS APPROVAL DATE

REGISTERED PROFESSIONAL ENGINEER Minh Thuong Vo No. C59297 Exp. 6/30/2011 CIVIL STATE OF CALIFORNIA

The State of California or its officers or agents shall not be responsible for the accuracy or completeness of electronic copies of this plan sheet.

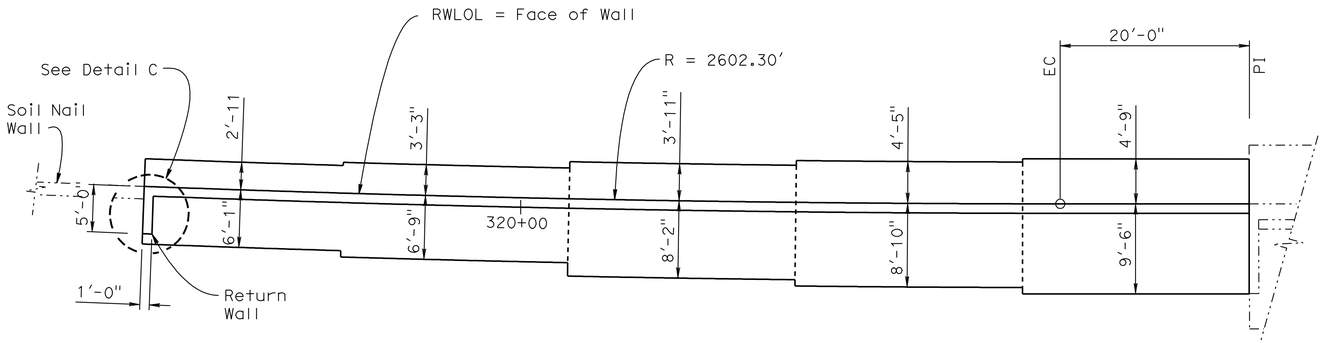

FOOTING PLAN

1/8" = 1'-0"

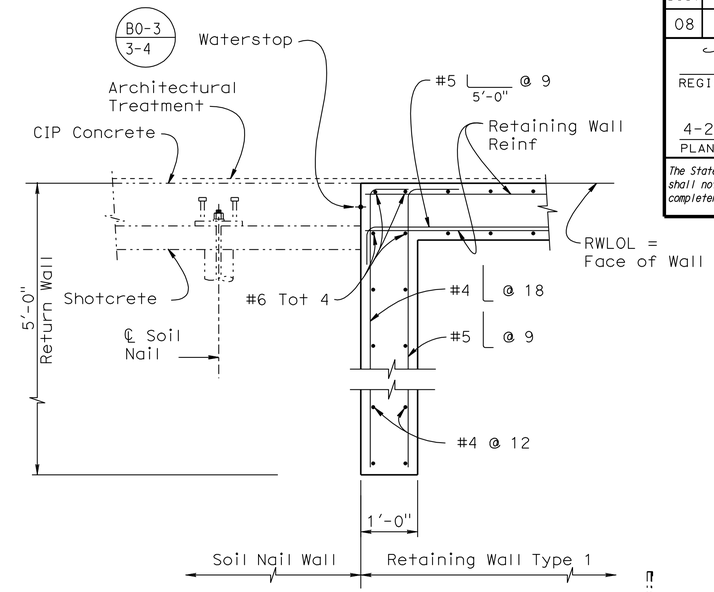

DETAIL C

3/4 " = 1'-0"

Note:
Cable Railing and Concrete Barrier Type 60D not shown for clarity

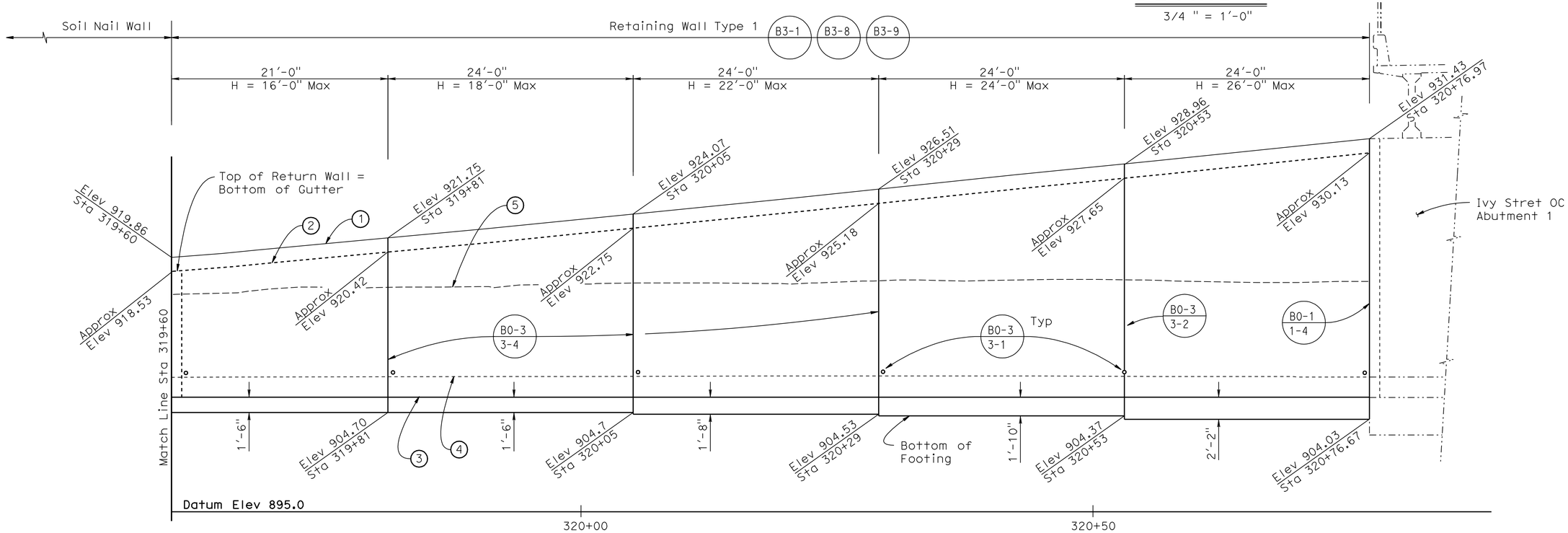

DEVELOPED MIRROR ELEVATION

3/16" = 1'-0"

NOTE:
THE CONTRACTOR SHALL VERIFY ALL CONTROLLING FIELD DIMENSIONS BEFORE ORDERING OR FABRICATING ANY MATERIAL.

	BY	CHECKED
DESIGN	M. Vo	J. Szabo
DETAILS	R. Kirkland	J. Szabo
QUANTITIES	j. Szabo	M. Vo

STATE OF CALIFORNIA
DEPARTMENT OF TRANSPORTATION

DIVISION OF ENGINEERING SERVICES
STRUCTURE DESIGN
DESIGN BRANCH 10

BRIDGE NO. 56 E0067
POST MILE 18.87

RETAINING WALL NO. 316
STRUCTURE PLAN NO. 3

STRUCTURES DESIGN DETAIL SHEET (ENGLISH) (REV. 10/25/05)

ORIGINAL SCALE IN INCHES FOR REDUCED PLANS 0 1 2 3

CU 08
EA 448401

DISREGARD PRINTS BEARING EARLIER REVISION DATES

REVISION DATES: 3/15/10 7/15/10

SHEET 5 OF 14

FILE => 56e0067csp05.dgn

USERNAME => trlenard DATE PLOTTED => 30-APR-2011 TIME PLOTTED => 10:33

DIST	COUNTY	ROUTE	POST MILES TOTAL PROJECT	SHEET No	TOTAL SHEETS
08	Riv	91	15.6/21.6	1478	2028

REGISTERED CIVIL ENGINEER 11/12/10 DATE

4-25-11
PLANS APPROVAL DATE

REGISTERED PROFESSIONAL ENGINEER Minh Thuong Vo No. C59297 Exp. 6/30/2011 CIVIL STATE OF CALIFORNIA

The State of California or its officers or agents shall not be responsible for the accuracy or completeness of electronic copies of this plan sheet.

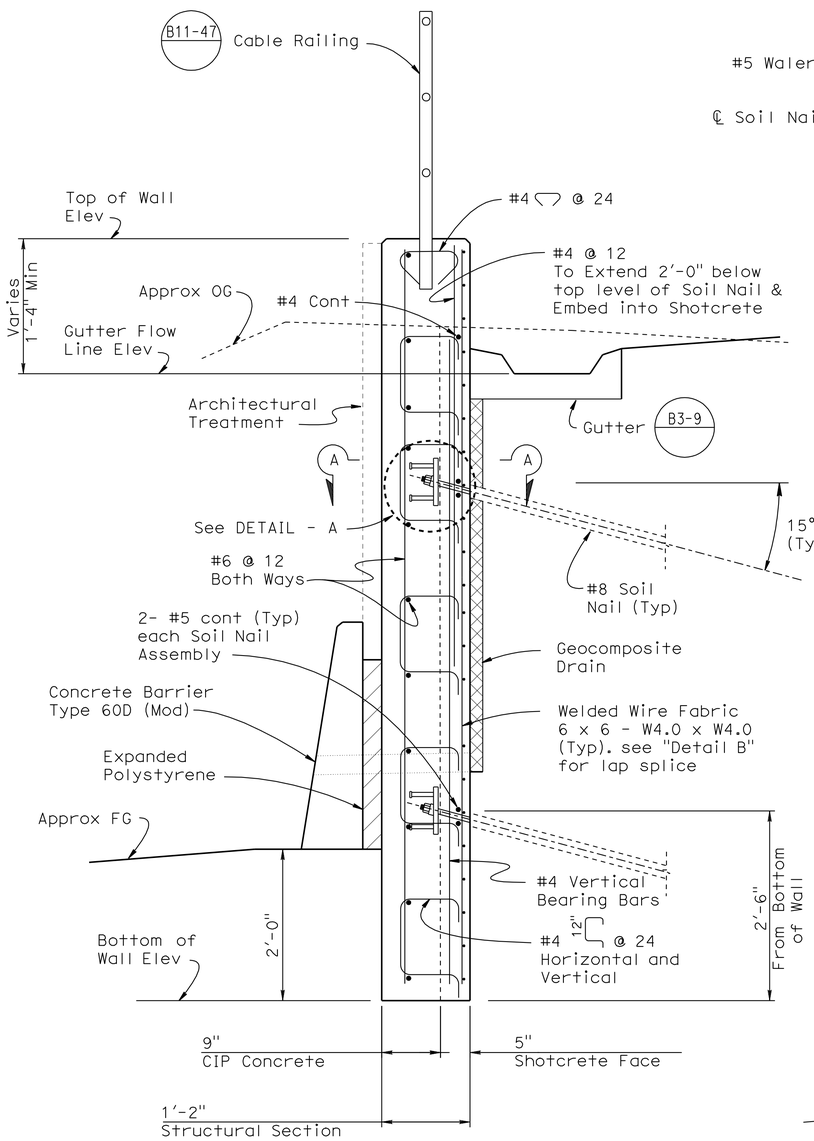

TYPICAL SECTION

1" = 1'-0"

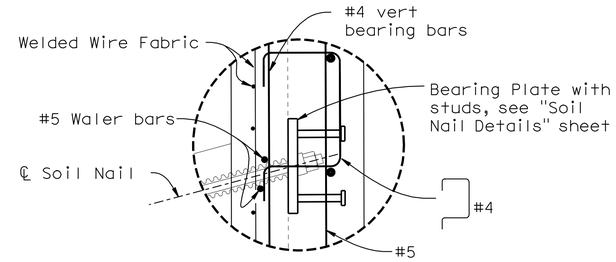

DETAIL A

1½" = 1'-0"

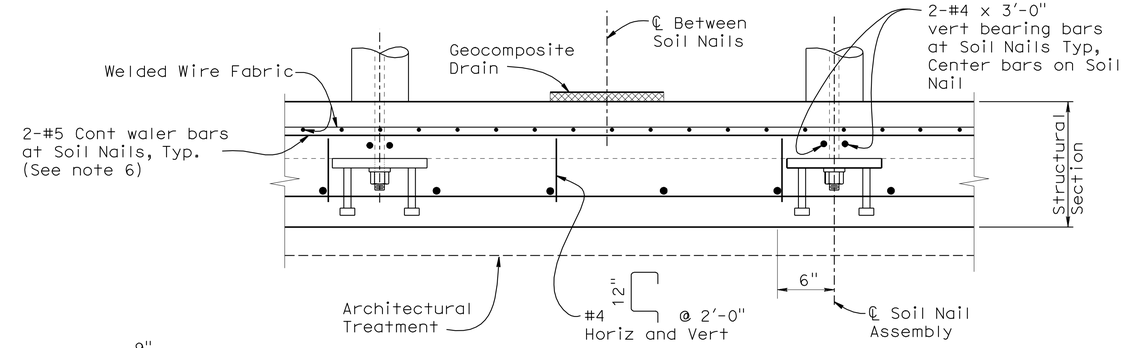

SECTION A-A

1½" = 1'-0"

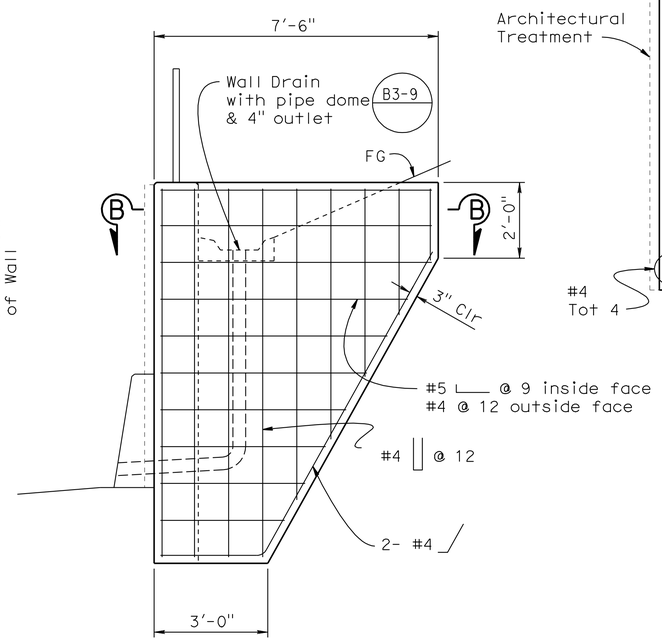

RETURN WALL ELEVATION

1/2" = 1'-0"

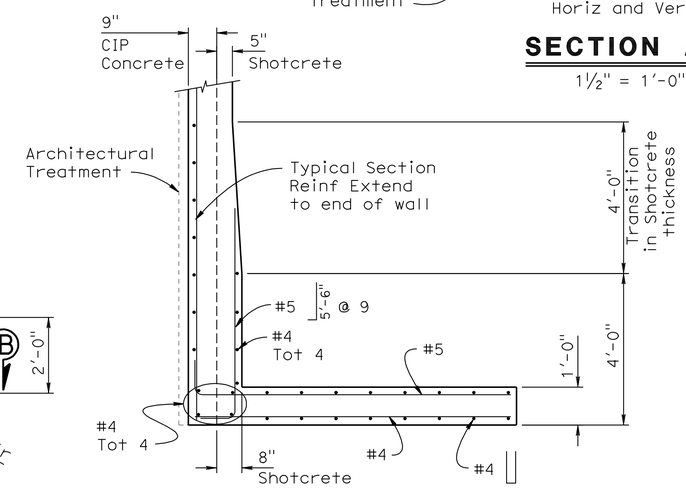

SECTION B-B

1/2" = 1'-0"

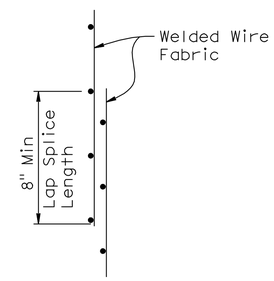

LAP SPLICE

DETAIL B

NO SCALE

Notes:

1. Bottom of wall to be placed against undisturbed material.
2. For Horizontal and Vertical Soil Nail spacing see "Structure Plan No. 1" and "Structure Plan No. 2" sheets.
3. For Soil Nail Details & Assemblies, see "Soil Nail Details No. 1 and Soil Nail Details No. 2" sheets.
4. For Geocomposite Drain Details see "Soil Nail Details No. 3" sheet.
5. For Architectural Treatment (Textured Shotcrete and textured Concrete), see "Architectural Treatment Details" sheet.
6. For soil nail rows that are discontinuous, extend waler bars a minimum of 5' beyond last soil nail.

	BY	CHECKED
DESIGN	M. Vo	J. Szabo
DETAILS	R. Kirkland	J. Szabo
QUANTITIES	J. Szabo	M. Vo

STATE OF CALIFORNIA DEPARTMENT OF TRANSPORTATION

DIVISION OF ENGINEERING SERVICES STRUCTURE DESIGN DESIGN BRANCH 10

BRIDGE NO. 56 E0067
POST MILE 18.87

RETAINING WALL NO. 316
SOIL NAIL WALL DETAILS NO. 1

STRUCTURES DESIGN DETAIL SHEET (ENGLISH) (REV. 10/25/05)

ORIGINAL SCALE IN INCHES FOR REDUCED PLANS 0 1 2 3

CU 08
EA 448401

DISREGARD PRINTS BEARING EARLIER REVISION DATES

REVISION DATES: 3/15/10 7/15/10

SHEET 6 OF 14

FILE => 56e0067grwdt06.dgn

USERNAME => trlenord DATE PLOTTED => 30-APR-2011 TIME PLOTTED => 10:33

DIST	COUNTY	ROUTE	POST MILES TOTAL PROJECT	SHEET No	TOTAL SHEETS
08	Riv	91	15.6/21.6	1479	2028

REGISTERED CIVIL ENGINEER 11/12/10 DATE

4-25-11
PLANS APPROVAL DATE

REGISTERED PROFESSIONAL ENGINEER Minh Thuong Vo No. C59297 Exp. 6/30/2011 CIVIL STATE OF CALIFORNIA

The State of California or its officers or agents shall not be responsible for the accuracy or completeness of electronic copies of this plan sheet.

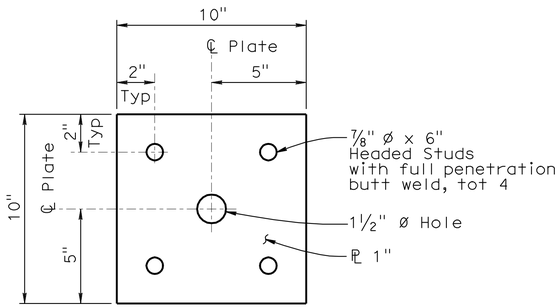

BEARING PLATE

DETAIL G

3" = 1'-0"

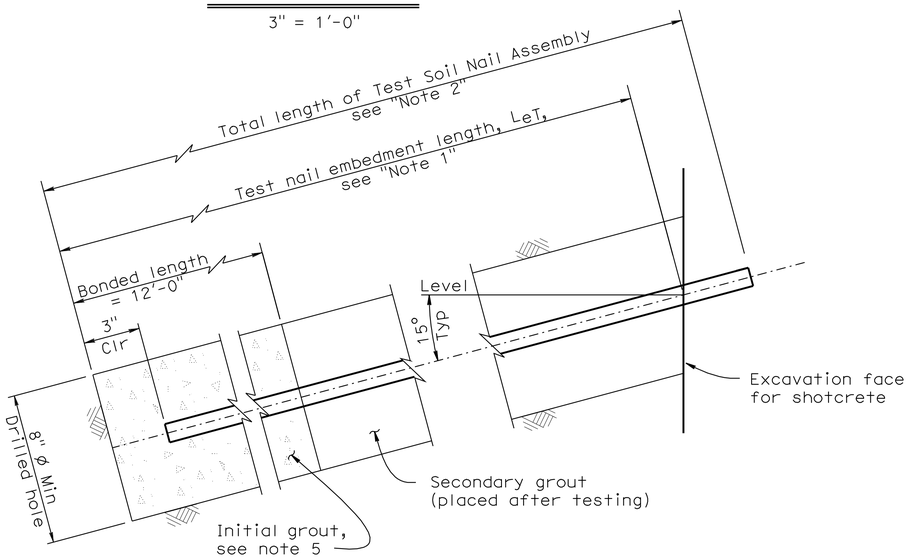

TEST SOIL NAIL ASSEMBLY

DETAIL H

3" = 1'-0"

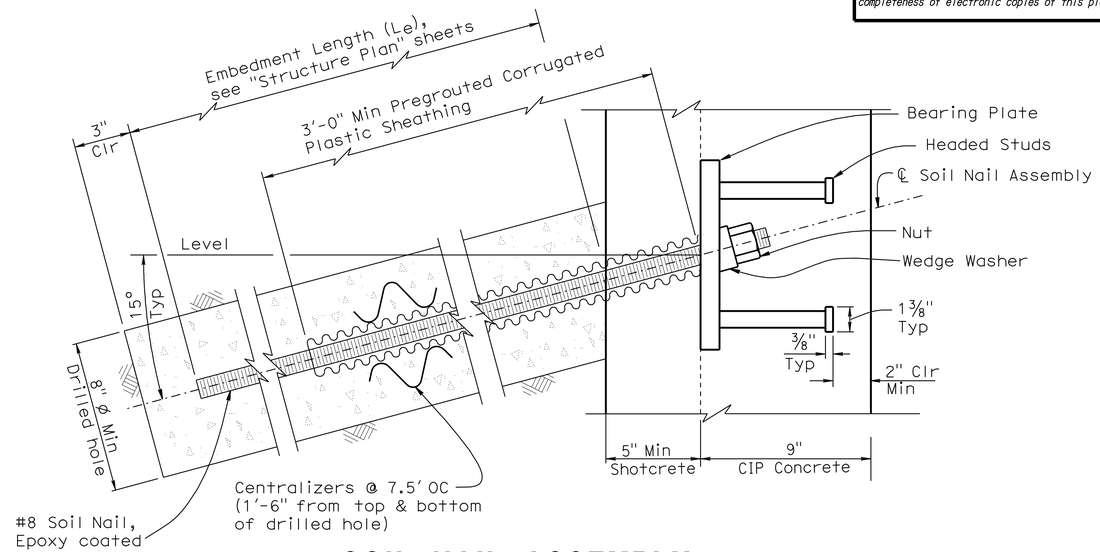

SOIL NAIL ASSEMBLY

DETAIL J

3" = 1'-0"

Notes:

1. Embedment length L_{eT} of test nails equals two thirds of the embedment length L_e of adjacent soil nail assemblies, but not less than 12'-0".
2. Total length of test soil nail equals embedment length plus the length required for jacking equipment.
3. For embedment length of production nails see 'Schedule' on "Structure Plan" sheets.
4. Finished grout surface to be perpendicular to bar.
5. For location of test nail, see "Structure Plan" sheets. Additional test nails will be installed and tested per special provisions.

	BY	CHECKED
DESIGN	M. Vo	J. Szabo
DETAILS	R. Kirkland	J. Szabo
QUANTITIES	J. Szabo	M. Vo

STATE OF CALIFORNIA
DEPARTMENT OF TRANSPORTATION

DIVISION OF ENGINEERING SERVICES
STRUCTURE DESIGN
DESIGN BRANCH 10

BRIDGE NO. 56 E0067
POST MILE 18.87

RETAINING WALL NO. 316

SOIL NAIL WALL DETAILS NO. 2

STRUCTURES DESIGN DETAIL SHEET (ENGLISH) (REV. 10/25/05)

ORIGINAL SCALE IN INCHES FOR REDUCED PLANS 0 1 2 3

CU 08
EA 448401

DISREGARD PRINTS BEARING EARLIER REVISION DATES

REVISION DATES 3/15/10 7/15/10

SHEET 7 OF 14

FILE => 56e0067grwdt07.dgn

USERNAME => trlenard DATE PLOTTED => 30-APR-2011 TIME PLOTTED => 10:33

DIST	COUNTY	ROUTE	POST MILES TOTAL PROJECT	SHEET No	TOTAL SHEETS
08	Riv	91	15.6/21.6	1480	2028

REGISTERED CIVIL ENGINEER 11/12/10 DATE

4-25-11
PLANS APPROVAL DATE

The State of California or its officers or agents shall not be responsible for the accuracy or completeness of electronic copies of this plan sheet.

REGISTERED PROFESSIONAL ENGINEER Minh Thuong Vo No. C59297 Exp. 6/30/2011 CIVIL STATE OF CALIFORNIA

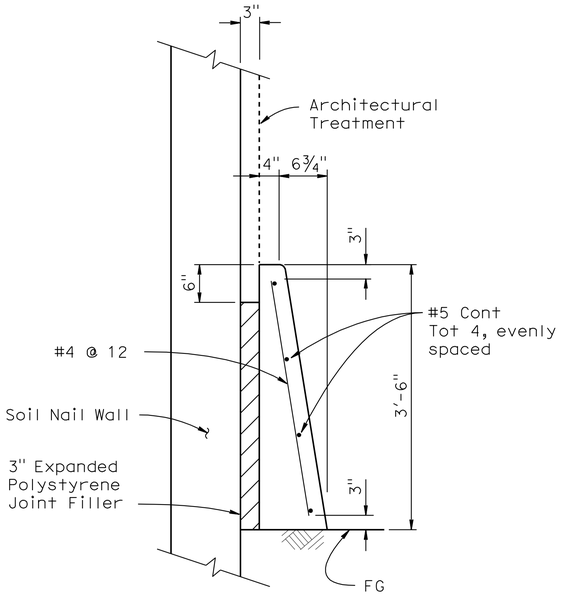

CONCRETE BARRIER (TYPE 60D MOD)

No scale

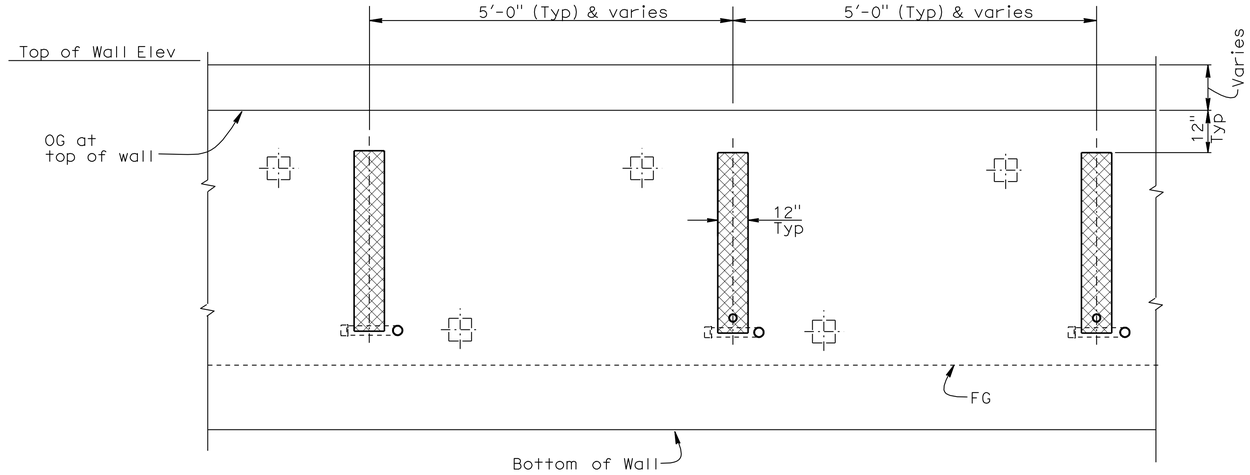

PART ELEVATION - GEOCOMPOSITE DRAIN

No scale

NOTES:

1. Center Geocomposite drain between Soil Nail assemblies.
2. - Indicates Soil Nail Assembly.
3. 2" dia drain pipe to be placed 3" above finished grade at face of barrier (Typ).
4. Adjust Geocomposite Drain to clear Test Soil Nails.

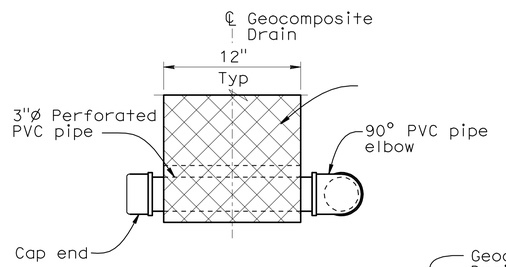

VIEW A-A

No scale

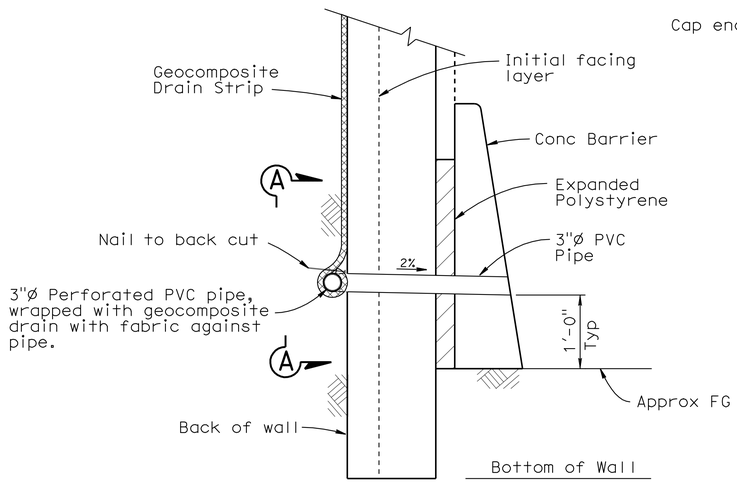

WALL DRAIN DETAIL AT WEEPHOLE OPTION A

No scale

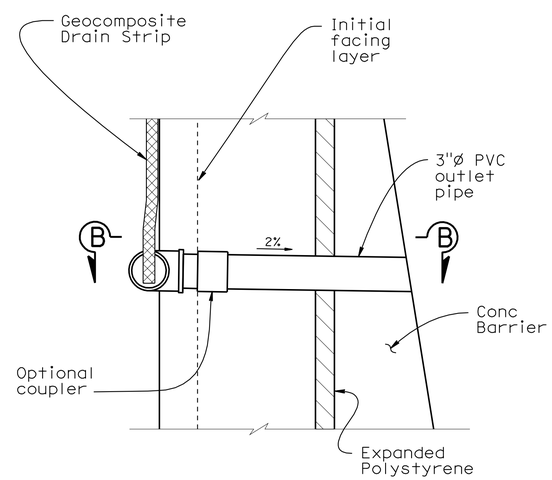

WALL DRAIN DETAIL AT WEEPHOLE OPTION B

No scale

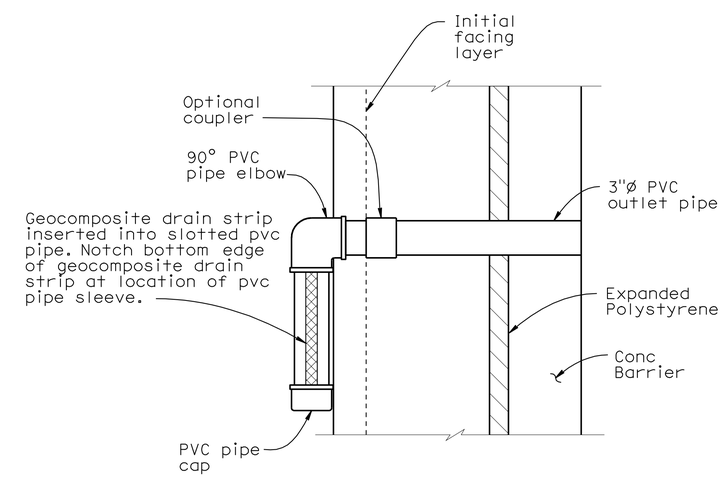

VIEW B-B

No Scale

DESIGN	BY M. Vo	CHECKED J. Szabo	
DETAILS	BY R. Kirkland	CHECKED J. Szabo	
QUANTITIES	BY J. Szabo	CHECKED M. Vo	

STATE OF CALIFORNIA DEPARTMENT OF TRANSPORTATION

DIVISION OF ENGINEERING SERVICES STRUCTURE DESIGN DESIGN BRANCH 10

BRIDGE NO. 56 E0067
POST MILE 18.87

RETAINING WALL NO. 316
SOIL NAIL WALL DETAILS NO. 3

STRUCTURES DESIGN DETAIL SHEET (ENGLISH) (REV. 10/25/05)

ORIGINAL SCALE IN INCHES FOR REDUCED PLANS 0 1 2 3

CU 08
EA 448401

DISREGARD PRINTS BEARING EARLIER REVISION DATES 7/15/10 7/15/10

REVISION DATES

SHEET 8 OF 14

FILE => 56e0067grwdt08.dgn

USERNAME => trlenard DATE PLOTTED => 30-APR-2011 TIME PLOTTED => 10:34

Dist	COUNTY	ROUTE	POST MILES TOTAL PROJECT	SHEET No.	TOTAL SHEETS
08	Riv	91	15.6/21.6	1481	2028

LICENSED LANDSCAPE ARCHITECT

4-25-11
PLANS APPROVAL DATE

LICENSED LANDSCAPE ARCHITECT
Matthew Harry Hall
No. 2504
Signature
10/31/2011
Renewal Date
11/12/10
Date
STATE OF CALIFORNIA

THE STATE OF CALIFORNIA OR ITS OFFICERS OR AGENTS SHALL NOT BE RESPONSIBLE FOR THE ACCURACY OR COMPLETENESS OF SCANNED COPIES OF THIS PLAN SHEET.

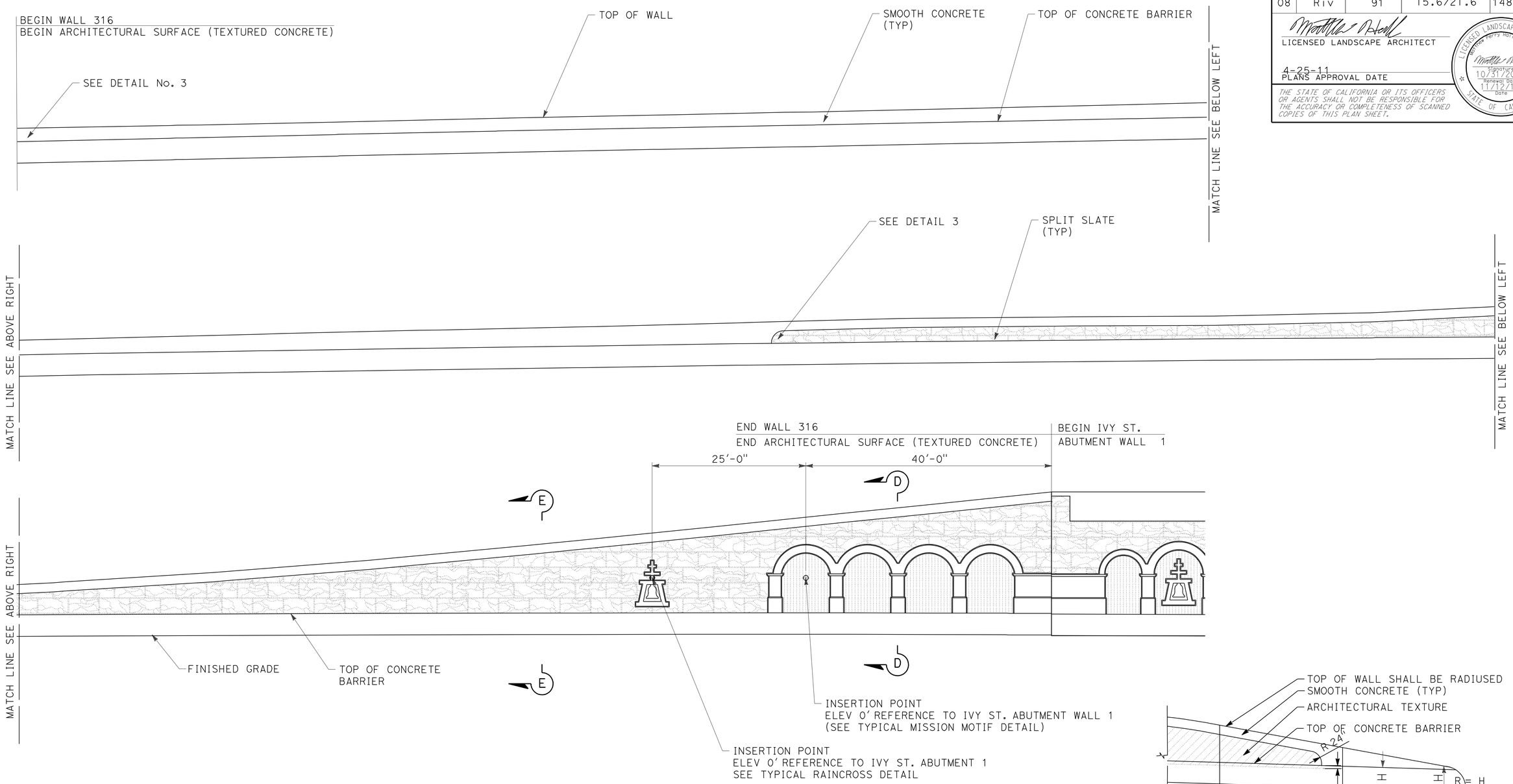

MIRRORED ELEVATION FOR FRACTURED RIB SPLIT SLATE TEXTURE RETAINING WALL No. 316

1/8" = 1'-0"

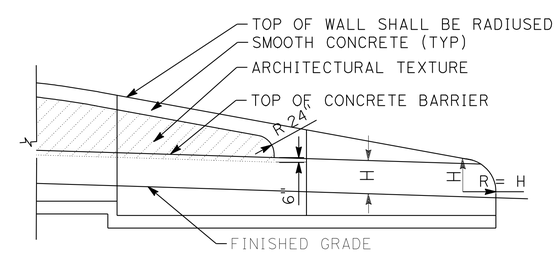

DETAIL No. 3 TYPICAL END OF WALL WITH TYPE 60D MOD. CONCRETE BARRIER

No Scale

NOTES:

1. For Section D-D and Section E-E see "Architectural Surface Details Sheet No. 2".

	BY	CHECKED
DESIGN	M. Hall	M. Bishop
DETAILS	R. Kirkland	M. Bishop
QUANTITIES	J. Szabo	M. Vo

STATE OF CALIFORNIA
DEPARTMENT OF TRANSPORTATION

DIVISION OF ENGINEERING SERVICES
STRUCTURE DESIGN
DESIGN BRANCH 10

BRIDGE NO. 56 E0067
POST MILE 18.87

RETAINING WALL NO. 316
ARCHITECTURAL SURFACE

STRUCTURES DESIGN DETAIL SHEET (ENGLISH) (REV. 10/25/05)

ORIGINAL SCALE IN INCHES FOR REDUCED PLANS 0 1 2 3

CU 08
EA 448401

DISREGARD PRINTS BEARING EARLIER REVISION DATES

REVISION DATES: 8/10/10

SHEET 9 OF 14

FILE => 56e0067umiscdt09.dgn

USERNAME => trlenard DATE PLOTTED => 30-APR-2011 TIME PLOTTED => 10:34

NOTES:
1. For Section D-D see "Architectural Surface Detail Sheet No. 2"

Dist	COUNTY	ROUTE	POST MILES TOTAL PROJECT	SHEET No.	TOTAL SHEETS
08	Riv	91	15.6/21.6	1482	2028

LICENSED LANDSCAPE ARCHITECT

4-25-11
PLANS APPROVAL DATE

LICENSED LANDSCAPE ARCHITECT Matthew Barry Hall No. 2011 Signature 10/31/2011 Renewal Date 11/12/10 Date STATE OF CALIFORNIA

THE STATE OF CALIFORNIA OR ITS OFFICERS OR AGENTS SHALL NOT BE RESPONSIBLE FOR THE ACCURACY OR COMPLETENESS OF SCANNED COPIES OF THIS PLAN SHEET.

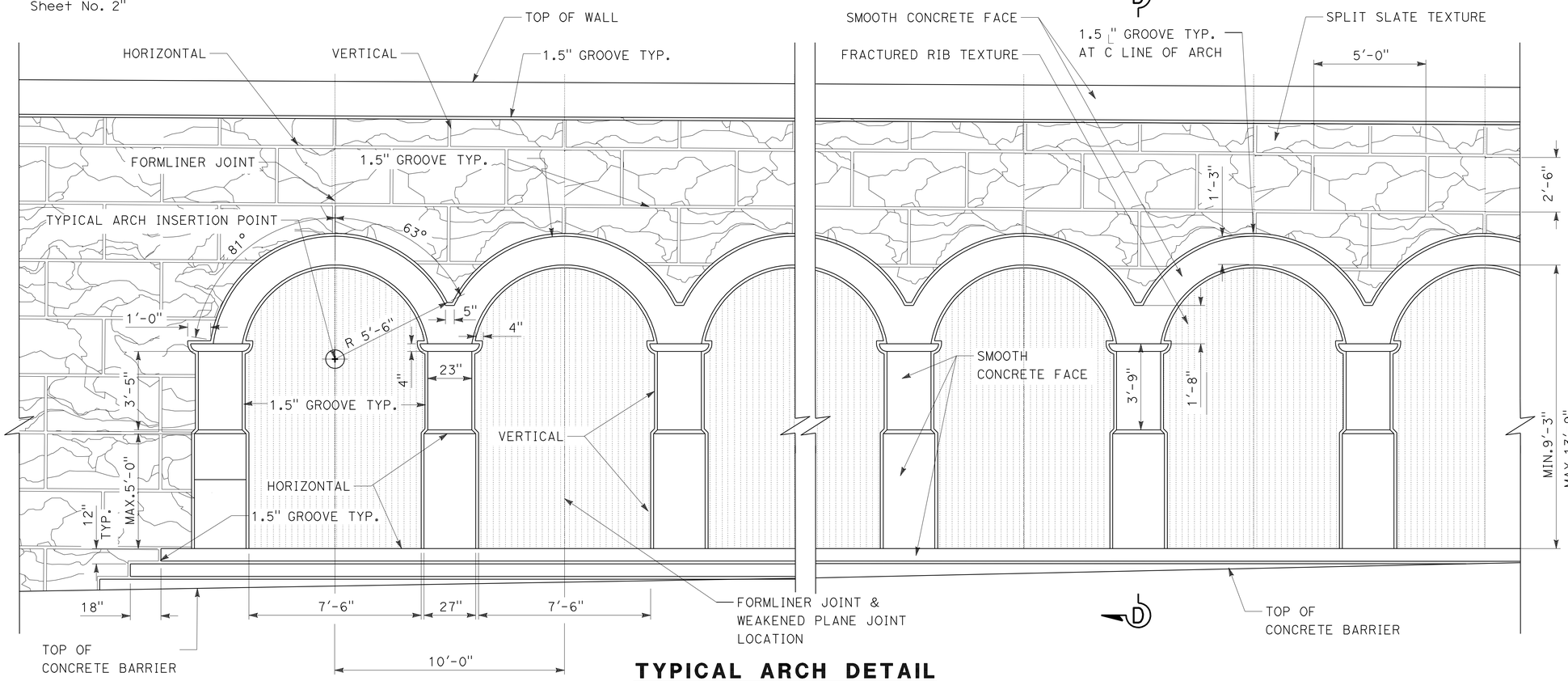

TYPICAL ARCH DETAIL

3/8" = 1'-0"

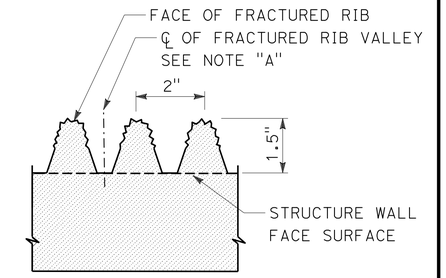

TYPICAL FRACTURED RIB TEXTURE

No Scale

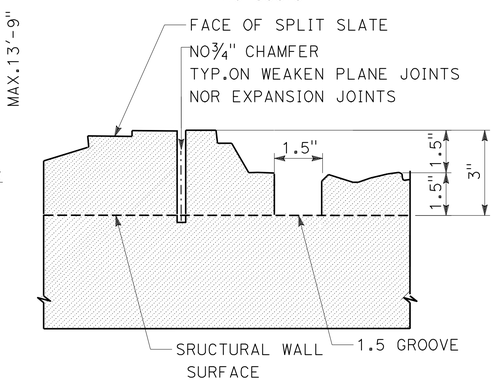

TYPICAL SPLIT SLATE TEXTURE

No Scale

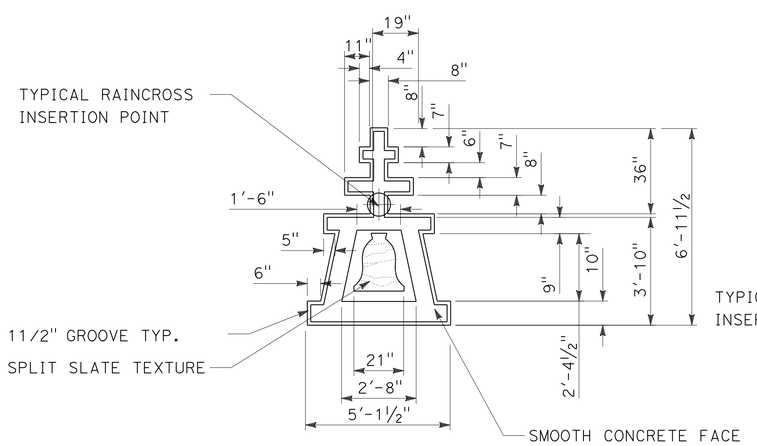

TYPICAL RAINCROSS DETAIL

3/8" = 1'-0"

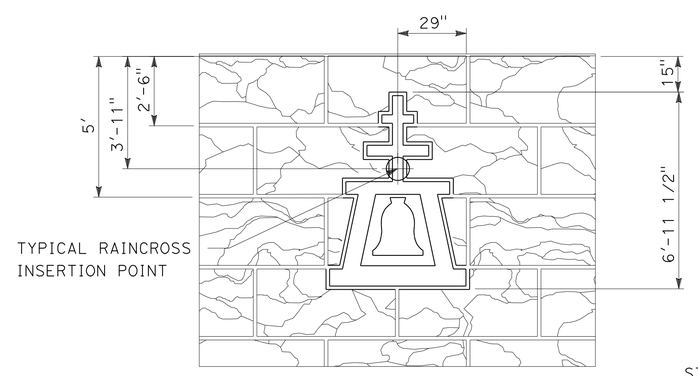

TYPICAL RAINCROSS DETAIL/ SPLIT SLATE TEXTURE

3/8" = 1'-0"

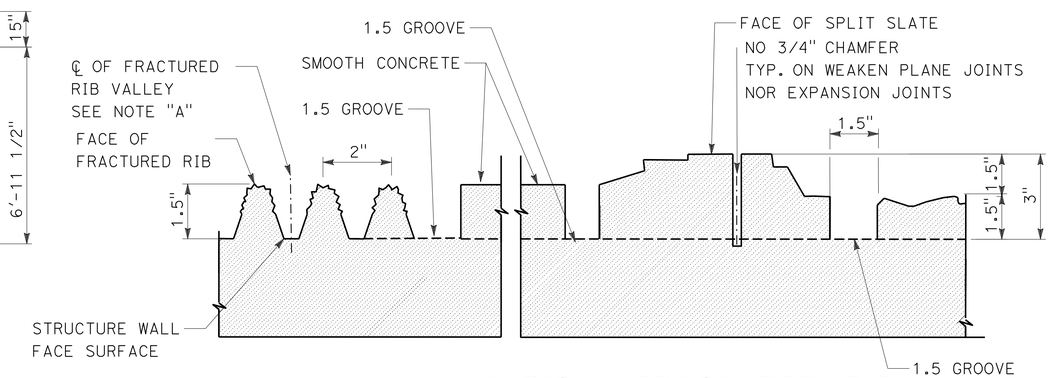

NOTE "A"
PERMITTED LOCATION OF WEAKEN PLANE AND EXPANSION JOINTS

TYPICAL FRACTURED RIB WITH SPLIT SLATE TEXTURE

No Scale

THIS PLAN IS ACCURATE FOR ARCHITECTUAL TREATMENT WORK ONLY.

	BY	CHECKED
DESIGN	M. Hall	M. Bishop
DETAILS	R. Kirkland	M. Bishop
QUANTITIES	J. Szabo	M. Vo

STATE OF CALIFORNIA
DEPARTMENT OF TRANSPORTATION

DIVISION OF ENGINEERING SERVICES
STRUCTURE DESIGN
DESIGN BRANCH 10

BRIDGE NO. 56 E0067
POST MILE 18.87

RETAINING WALL NO. 316
ARCHITECTURAL SURFACE DETAIL SHEET NO. 1

STRUCTURES DESIGN DETAIL SHEET (ENGLISH) (REV. 10/25/05)

ORIGINAL SCALE IN INCHES FOR REDUCED PLANS 0 1 2 3

CU 08
EA 448401

DISREGARD PRINTS BEARING EARLIER REVISION DATES 8/10/10

REVISION DATES

SHEET 10 OF 14

FILE => 56e0067umiscdt10.dgn

USERNAME => rtrenord DATE PLOTTED => 30-APR-2011 TIME PLOTTED => 10:34

Dist	COUNTY	ROUTE	POST MILES TOTAL PROJECT	SHEET No.	TOTAL SHEETS
08	Riv	91	15.6/21.6	1483	2028

LICENSED LANDSCAPE ARCHITECT

4-25-11
PLANS APPROVAL DATE

LICENSED LANDSCAPE ARCHITECT
Matthew Harry Hall
No. 5000
Signature
10/31/2011
Renewal Date
11/12/10
Date
STATE OF CALIFORNIA

THE STATE OF CALIFORNIA OR ITS OFFICERS OR AGENTS SHALL NOT BE RESPONSIBLE FOR THE ACCURACY OR COMPLETENESS OF SCANNED COPIES OF THIS PLAN SHEET.

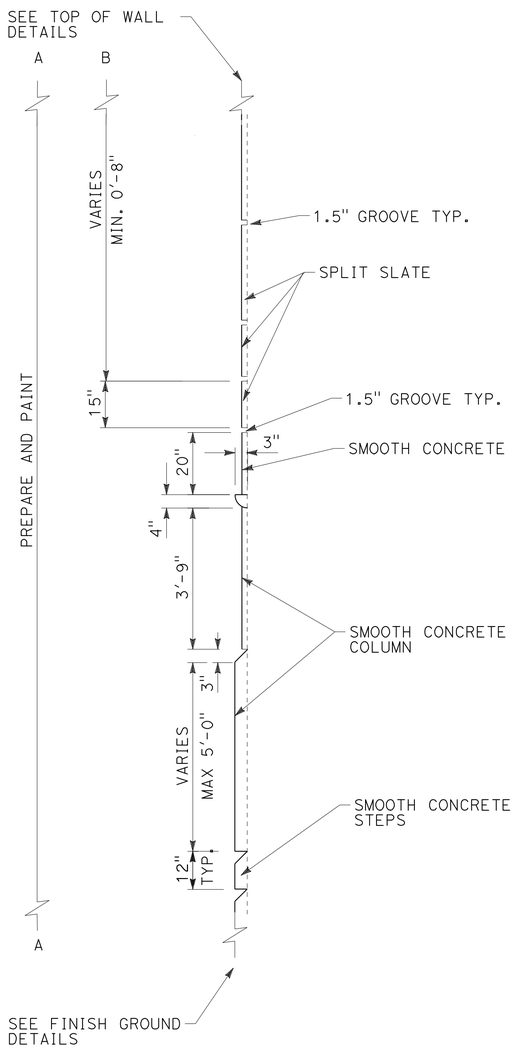

SECTION D-D

No Scale

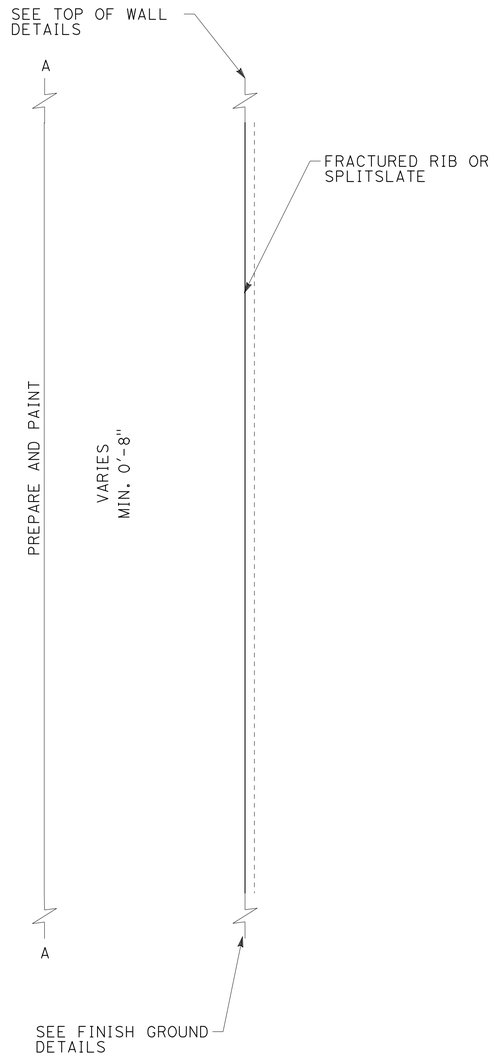

SECTION E-E

No Scale

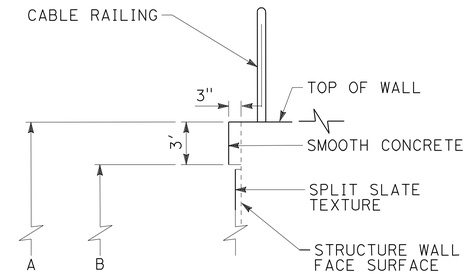

TOP OF WALL DETAIL TYPICAL WITH CABLE RAIL

No Scale

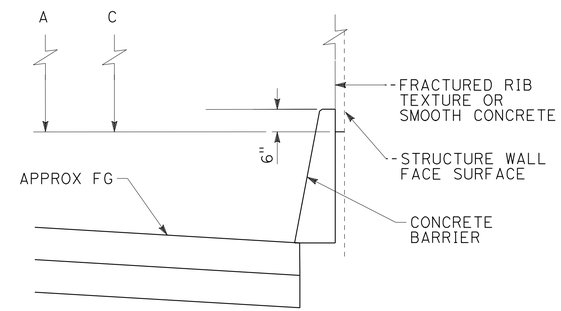

FINISH GROUND DETAIL TYPICAL WITH CONCRETE BARRIER

No Scale

THIS PLAN IS ACCURATE FOR ARCHITECTUAL TREATMENT WORK ONLY.

	BY	CHECKED
DESIGN	M. Hall	M. Bishop
DETAILS	R. Kirkland	M. Bishop
QUANTITIES	J. Szabo	M. Vo

STATE OF CALIFORNIA
DEPARTMENT OF TRANSPORTATION

DIVISION OF ENGINEERING SERVICES
STRUCTURE DESIGN
DESIGN BRANCH 10

BRIDGE NO. 56 E0067
POST MILE 18.87

RETAINING WALL NO. 316
ARCHITECTURAL SURFACE DETAIL SHEET NO. 2

STRUCTURES DESIGN DETAIL SHEET (ENGLISH) (REV. 10/25/05)

ORIGINAL SCALE IN INCHES FOR REDUCED PLANS 0 1 2 3

CU 08
EA 448401

DISREGARD PRINTS BEARING EARLIER REVISION DATES

REVISION DATES: 8/10/10

SHEET 11 OF 14

FILE => 56e0067umiscdt11.dgn

USERNAME => trlenard DATE PLOTTED => 30-APR-2011 TIME PLOTTED => 10:34

DIST	COUNTY	ROUTE	POST MILES TOTAL PROJECT	SHEET No	TOTAL SHEETS
08	Riv	91	15.6/21.6	1484	2028

GEOTECHNICAL PROFESSIONAL DATE 11/03/2010

4-25-11
PLANS APPROVAL DATE

REGISTERED PROFESSIONAL ENGINEER FARID MOTAMED No. 2738 Exp. 6-30-11 GEOTECHNICAL STATE OF CALIFORNIA

The State of California or its officers or agents shall not be responsible for the accuracy or completeness of electronic copies of this plan sheet.

California Department of Transportation
5900 Folsom Boulervard
Sacramento, CA 95819

URS Corporation
2020 East First Street, Suite 400
Santa Ana, CA 92705

GROUP SYMBOLS AND NAMES

Graphic / Symbol	Group Names	Graphic / Symbol	Group Names
GW	Well-graded GRAVEL Well-graded GRAVEL with SAND	CL	Lean CLAY Lean CLAY with SAND Lean CLAY with GRAVEL SANDY lean CLAY SANDY lean CLAY with GRAVEL GRAVELLY lean CLAY GRAVELLY lean CLAY with SAND
GP	Poorly graded GRAVEL Poorly graded GRAVEL with SAND		
GW-GM	Well-graded GRAVEL with SILT Well-graded GRAVEL with SILT and SAND	CL-ML	SILTY CLAY SILTY CLAY with SAND SILTY CLAY with GRAVEL SANDY SILTY CLAY SANDY SILTY CLAY with GRAVEL GRAVELLY SILTY CLAY GRAVELLY SILTY CLAY with SAND
GW-GC	Well-graded GRAVEL with CLAY (or SILTY CLAY) Well-graded GRAVEL with CLAY and SAND (or SILTY CLAY and SAND)		
GP-GM	Poorly graded GRAVEL with SILT Poorly graded GRAVEL with SILT and SAND	ML	SILT SILT with SAND SILT with GRAVEL SANDY SILT SANDY SILT with GRAVEL GRAVELLY SILT GRAVELLY SILT with SAND
GP-GC	Poorly graded GRAVEL with CLAY (or SILTY CLAY) Poorly graded GRAVEL with CLAY and SAND (or SILTY CLAY and SAND)		
GM	SILTY GRAVEL SILTY GRAVEL with SAND	OL	ORGANIC lean CLAY ORGANIC lean CLAY with SAND ORGANIC lean CLAY with GRAVEL SANDY ORGANIC lean CLAY SANDY ORGANIC lean CLAY with GRAVEL GRAVELLY ORGANIC lean CLAY GRAVELLY ORGANIC lean CLAY with SAND
GC	CLAYEY GRAVEL CLAYEY GRAVEL with SAND		
GC-GM	SILTY, CLAYEY GRAVEL SILTY, CLAYEY GRAVEL with SAND	OL	ORGANIC SILT ORGANIC SILT with SAND ORGANIC SILT with GRAVEL SANDY ORGANIC SILT SANDY ORGANIC SILT with GRAVEL GRAVELLY ORGANIC SILT GRAVELLY ORGANIC SILT with SAND
SW	Well-graded SAND Well-graded SAND with GRAVEL		
SP	Poorly graded SAND Poorly graded SAND with GRAVEL	CH	Fat CLAY Fat CLAY with SAND Fat CLAY with GRAVEL SANDY fat CLAY SANDY fat CLAY with GRAVEL GRAVELLY fat CLAY GRAVELLY fat CLAY with SAND
SW-SM	Well-graded SAND with SILT Well-graded SAND with SILT and GRAVEL		
SW-SC	Well-graded SAND with CLAY (or SILTY CLAY) Well-graded SAND with CLAY and GRAVEL (or SILTY CLAY and GRAVEL)	MH	Elastic SILT Elastic SILT with SAND Elastic SILT with GRAVEL SANDY elastic SILT SANDY elastic SILT with GRAVEL GRAVELLY elastic SILT GRAVELLY elastic SILT with SAND
SP-SM	Poorly graded SAND with SILT Poorly graded SAND with SILT and GRAVEL		
SP-SC	Poorly graded SAND with CLAY (or SILTY CLAY) Poorly graded SAND with CLAY and GRAVEL (or SILTY CLAY and GRAVEL)	OH	ORGANIC fat CLAY ORGANIC fat CLAY with SAND ORGANIC fat CLAY with GRAVEL SANDY ORGANIC fat CLAY SANDY ORGANIC fat CLAY with GRAVEL GRAVELLY ORGANIC fat CLAY GRAVELLY ORGANIC fat CLAY with SAND
SM	SILTY SAND SILTY SAND with GRAVEL		
SC	CLAYEY SAND CLAYEY SAND with GRAVEL	OH	ORGANIC elastic SILT ORGANIC elastic SILT with SAND ORGANIC elastic SILT with GRAVEL SANDY elastic ELASTIC SILT SANDY ORGANIC elastic SILT with GRAVEL GRAVELLY ORGANIC elastic SILT GRAVELLY ORGANIC elastic SILT with SAND
SC-SM	SILTY, CLAYEY SAND SILTY, CLAYEY SAND with GRAVEL		
PT	PEAT	OL/OH	ORGANIC SOIL ORGANIC SOIL with SAND ORGANIC SOIL with GRAVEL SANDY ORGANIC SOIL SANDY ORGANIC SOIL with GRAVEL GRAVELLY ORGANIC SOIL GRAVELLY ORGANIC SOIL with SAND
	COBBLES COBBLES and BOULDERS BOULDERS		

FIELD AND LABORATORY TESTS

C	Consolidation (ASTM D 2435-04)
CL	Collapse Potential (ASTM D 5333-03)
CP	Compaction Curve (CTM 216 - 06)
CR	Corrosion, Sulfates, Chlorides (CTM 643 - 99; CTM 417 - 06; CTM 422 - 06)
CU	Consolidated Undrained Triaxial (ASTM D 4767-02)
DS	Direct Shear (ASTM D 3080-04)
EI	Expansion Index (ASTM D 4829-03)
M	Moisture Content (ASTM D 2216-05)
OC	Organic Content (ASTM D 2974-07)
P	Permeability (CTM 220 - 05)
PA	Particle Size Analysis (ASTM D 422-63 [2002])
PI	Liquid Limit, Plastic Limit, Plasticity Index (AASHTO T 89-02, AASHTO T 90-00)
PL	Point Load Index (ASTM D 5731-05)
PM	Pressure Meter
PP	Pocket Penetrometer
R	R-Value (CTM 301 - 00)
SE	Sand Equivalent (CTM 217 - 99)
SG	Specific Gravity (AASHTO T 100-06)
SL	Shrinkage Limit (ASTM D 427-04)
SW	Swell Potential (ASTM D 4546-03)
TV	Pocket Torvane
UC	Unconfined Compression - Soil (ASTM D 2166-06) Unconfined Compression - Rock (ASTM D 2938-95)
UU	Unconsolidated Undrained Triaxial (ASTM D 2850-03)
UW	Unit Weight (ASTM D 4767-04)
VS	Vane Shear (AASHTO T 223-96 [2004])

CONSISTENCY OF COHESIVE SOILS

Descriptor	Unconfined Compressive Strength (tsf)	Pocket Penetrometer (tsf)	Torvane (tsf)	Field Approximation
Very Soft	< 0.25	< 0.25	< 0.12	Easily penetrated several inches by fist
Soft	0.25 - 0.50	0.25 - 0.50	0.12 - 0.25	Easily penetrated several inches by thumb
Medium Stiff	0.50 - 1.0	0.50 - 1.0	0.25 - 0.50	Can be penetrated several inches by thumb with moderate effort
Stiff	1.0 - 2.0	1.0 - 2.0	0.50 - 1.0	Readily indented by thumb but penetrated only with great effort
Very Stiff	2.0 - 4.0	2.0 - 4.0	1.0 - 2.0	Readily indented by thumbnail
Hard	> 4.0	> 4.0	> 2.0	Indented by thumbnail with difficulty

APPARENT DENSITY OF COHESIONLESS SOILS

Descriptor	SPT N60 - Value (blows / foot)
Very Loose	0 - 4
Loose	5 - 10
Medium Dense	11 - 30
Dense	31 - 50
Very Dense	> 50

MOISTURE

Descriptor	Criteria
Dry	Absence of moisture, dusty, dry to the touch
Moist	Damp but no visible water
Wet	Visible free water, usually soil is below water table

PERCENT OR PROPORTION OF SOILS

Descriptor	Criteria
Trace	Particles are present but estimated to be less than 5%
Few	5 to 10%
Little	15 to 25%
Some	30 to 45%
Mostly	50 to 100%

SOIL PARTICLE SIZE

Descriptor		Size
Boulder		> 12 inches
Cobble		3 to 12 inches
Gravel	Coarse	3/4 inch to 3 inches
	Fine	No. 4 Sieve to 3/4 inch
Sand	Coarse	No. 10 Sieve to No. 4 Sieve
	Medium	No. 40 Sieve to No. 10 Sieve
	Fine	No. 200 Sieve to No. 40 Sieve
Silt and Clay		Passing No. 200 Sieve

PLASTICITY OF FINE-GRAINED SOILS

Descriptor	Criteria
Nonplastic	A 1/8-inch thread cannot be rolled at any water content.
Low	The thread can barely be rolled, and the lump cannot be formed when drier than the plastic limit.
Medium	The thread is easy to roll, and not much time is required to reach the plastic limit; it cannot be rerolled after reaching the plastic limit. The lump crumbles when drier than the plastic limit.
High	It takes considerable time rolling and kneading to reach the plastic limit. The thread can be rerolled several times after reaching the plastic limit. The lump can be formed without crumbling when drier than the plastic limit.

CEMENTATION

Descriptor	Criteria
Weak	Crumbles or breaks with handling or little finger pressure.
Moderate	Crumbles or breaks with considerable finger pressure.
Strong	Will not crumble or break with finger pressure.

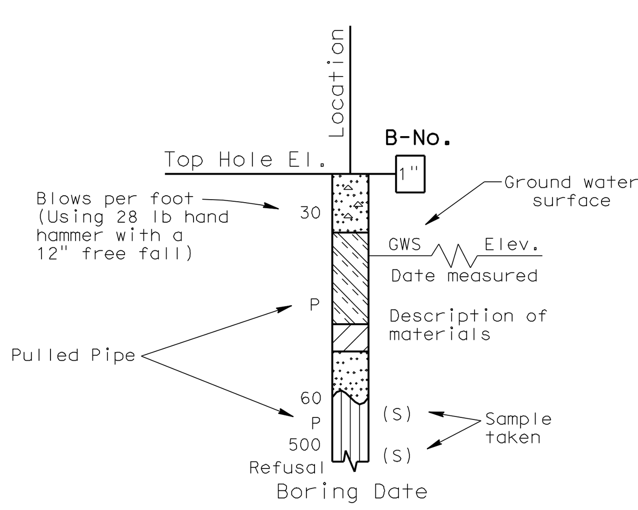

SAMPLE BORING (DRY)

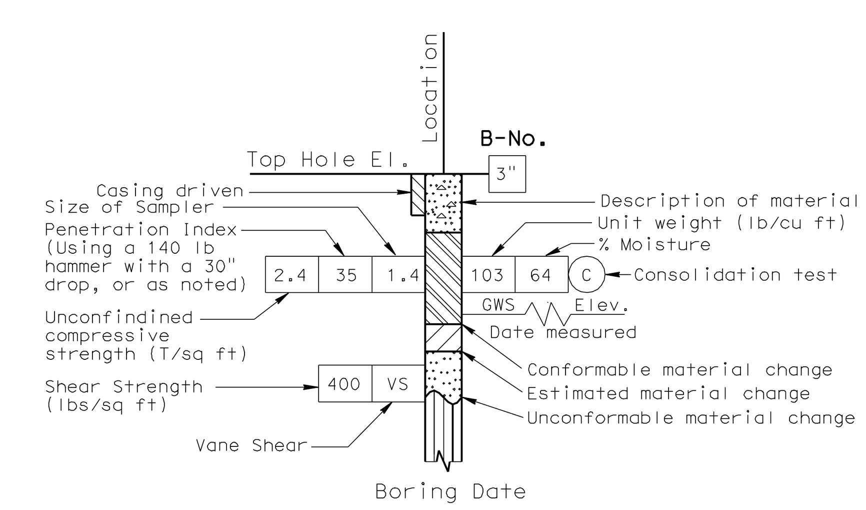

ROTARY SAMPLE BORING (WET)

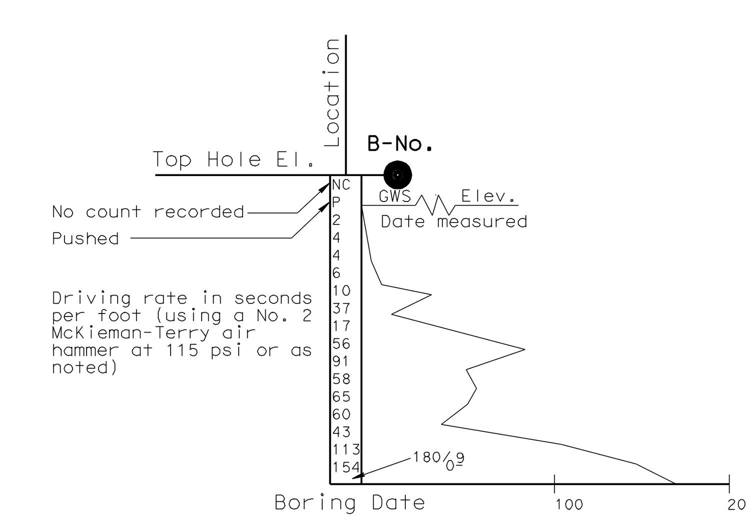

2 1/4" CONE PENETRATION BORING

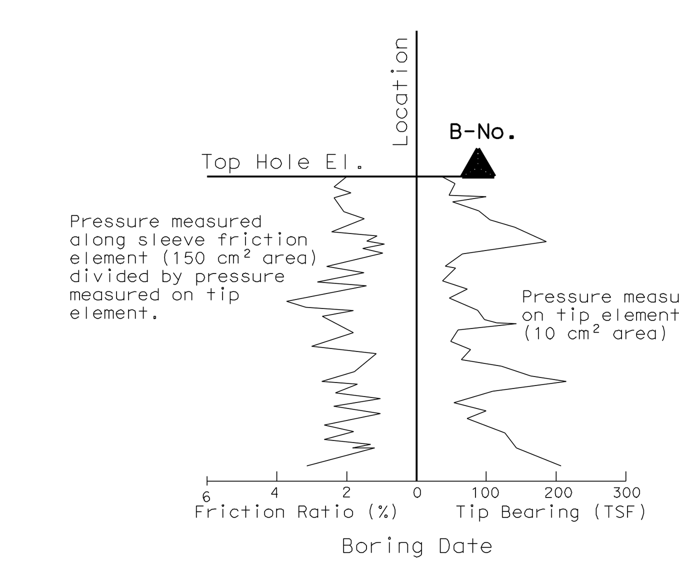

ELECTRONIC CONE PENETROMETER TEST

Cone Penetrometer dimensions and testing procedures are in accordance with ASTM standard D 3441-79, or as noted.

GINA PURSELL DESIGN OVERSIGHT 11/12/10 SIGN OFF DATE	SHAWN WEI FUNCTIONAL SUPERVISOR	DRAWN BY: P. QUACH CHECKED BY: S. PIRATHIVIRAJ	P.CHAU/D.WADER/C.CARBINO FIELD INVESTIGATION BY: DATE: Nov 6 2007 to March 7 2008

PREPARED FOR THE STATE OF CALIFORNIA DEPARTMENT OF TRANSPORTATION

A. LEE
PROJECT ENGINEER

BRIDGE NO. 56 E0067
POST MILE 18.87

SOIL LEGEND

LOG OF TEST BORINGS 1 OF 3

OSF GEOTECHNICAL LOG OF TEST BORINGS SHEET (ENGLISH) (REV. 2/25/05)

ORIGINAL SCALE IN INCHES FOR REDUCED PLANS 0 1 2 3

CU 08
EA 448401

DISREGARD PRINTS BEARING EARLIER REVISION DATES

REVISION DATES (PRELIMINARY STAGE ONLY) 8/18/10

SHEET 12 OF 14

FILE => 56e0067zlotb12.dgn

USERNAME => trlenard DATE PLOTTED => 30-APR-2011 TIME PLOTTED =>

DIST	COUNTY	ROUTE	POST MILES TOTAL PROJECT	SHEET No	TOTAL SHEETS
08	Riv	91	15.6/21.6	1485	2028

GEOTECHNICAL PROFESSIONAL — DATE 11/03/2010

4-25-11
PLANS APPROVAL DATE

REGISTERED PROFESSIONAL ENGINEER — FARID MOTAMED — No. 2738 — Exp. 6-30-11 — GEOTECHNICAL — STATE OF CALIFORNIA

The State of California or its officers or agents shall not be responsible for the accuracy or completeness of electronic copies of this plan sheet.

California Department of Transportation
5900 Folsom Boulevard
Sacramento, CA 95819

URS Corporation
2020 East First Street, Suite 400
Santa Ana, CA 92705

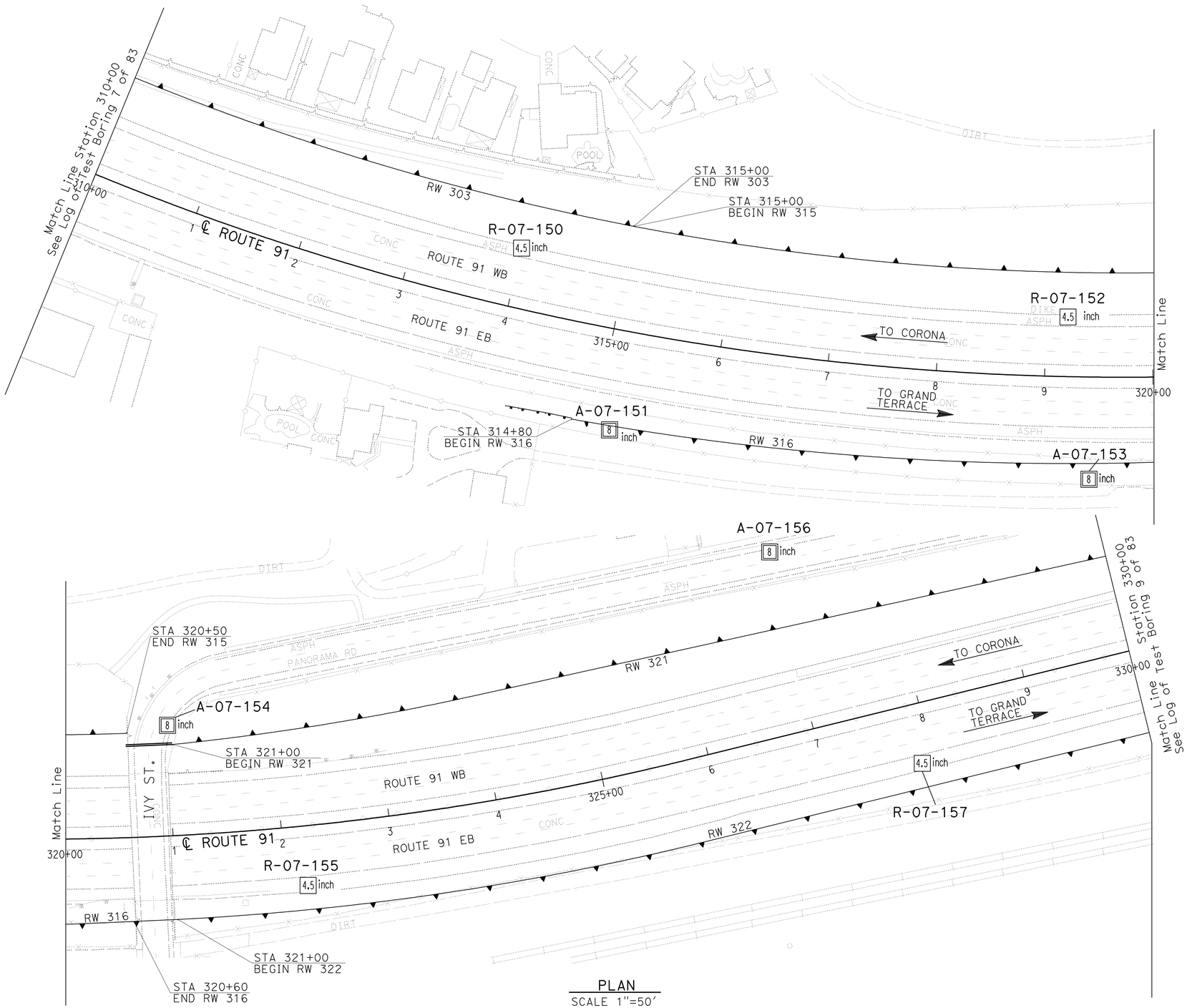

PLAN
SCALE 1"=50'

Borehole Number	Drill Rig	Hammer Type	Avg. Hammer Efficiency, ETR (%)
R-07-150	CME 85	Automatic	87
A-07-151	Diedrich D-120	Automatic	75*
R-07-152	CS-2000	Automatic	84
A-07-153	Diedrich D-120	Automatic	75*
A-07-154	Diedrich D-120	Automatic	75*
R-07-155	Acker Rig	Automatic	74
A-07-156	Diedrich D-120	Automatic	75*
R-07-157	CME 85	Automatic	87

Sampler Type	Inside Diameter (Inches)	Borehole Numbers
SPT	1.375	R-07-150, A-07-151 A-07-153, A-07-154 R-07-155, A-07-156 R-07-157
Modified California 1	1.94	R-07-155, R-07-157
Modified California 2	2.40	A-07-151, A-07-153 A-07-154, A-07-156

*Estimated Hammer Efficiency Rating.

GINA PURSELL — DESIGN OVERSIGHT
SHAWN WEI — FUNCTIONAL SUPERVISOR
11/12/10 — SIGN OFF DATE

DRAWN BY: P. QUACH
CHECKED BY: S. PIRATHIVIRAJ

P.CHAU/D.WADER/C.CARBINO
FIELD INVESTIGATION BY:
DATE: Nov 6 2007 to March 7 2008

PREPARED FOR THE STATE OF CALIFORNIA DEPARTMENT OF TRANSPORTATION

A. LEE — PROJECT ENGINEER

BRIDGE NO. 56 E0067
POST MILE 18.87

WALL LAYOUT & EXPLORATORY LOCATION MAP
LOG OF TEST BORINGS 2 OF 3

OSF GEOTECHNICAL LOG OF TEST BORINGS SHEET (ENGLISH) (REV. 2/25/05)

ORIGINAL SCALE IN INCHES FOR REDUCED PLANS 0 1 2 3

CU 08
EA 448401

DISREGARD PRINTS BEARING EARLIER REVISION DATES 8/18/10

REVISION DATES (PRELIMINARY STAGE ONLY)

SHEET 13 OF 14

FILE => 56e0067zlotb13.dgn

USERNAME => trfenard DATE PLOTTED => 30-APR-2011 TIME PLOTTED =>

DIST	COUNTY	ROUTE	POST MILES TOTAL PROJECT	SHEET No	TOTAL SHEETS
08	Riv	91	15.6/21.6	1486	2028

GEOTECHNICAL PROFESSIONAL — DATE 11/03/2010

4-25-11
PLANS APPROVAL DATE

REGISTERED PROFESSIONAL ENGINEER — FARID MOTAMED No. 2738 Exp. 6-30-11 GEOTECHNICAL STATE OF CALIFORNIA

The State of California or its officers or agents shall not be responsible for the accuracy or completeness of electronic copies of this plan sheet.

California Department of Transportation
5900 Folsom Boulevard
Sacramento, CA 95819

URS Corporation
2020 East First Street, Suite 400
Santa Ana, CA 92705

FOR PLAN VIEW, SEE
"LOG OF TEST BORINGS 2 OF 3"

NOTE: 1. This LOTB sheet was prepared in accordance with the Caltrans Soil & Rock Logging, Classification, and Presentation Manual (June 2007).

2. For legend, see "Log of Test Borings 1 of 3"

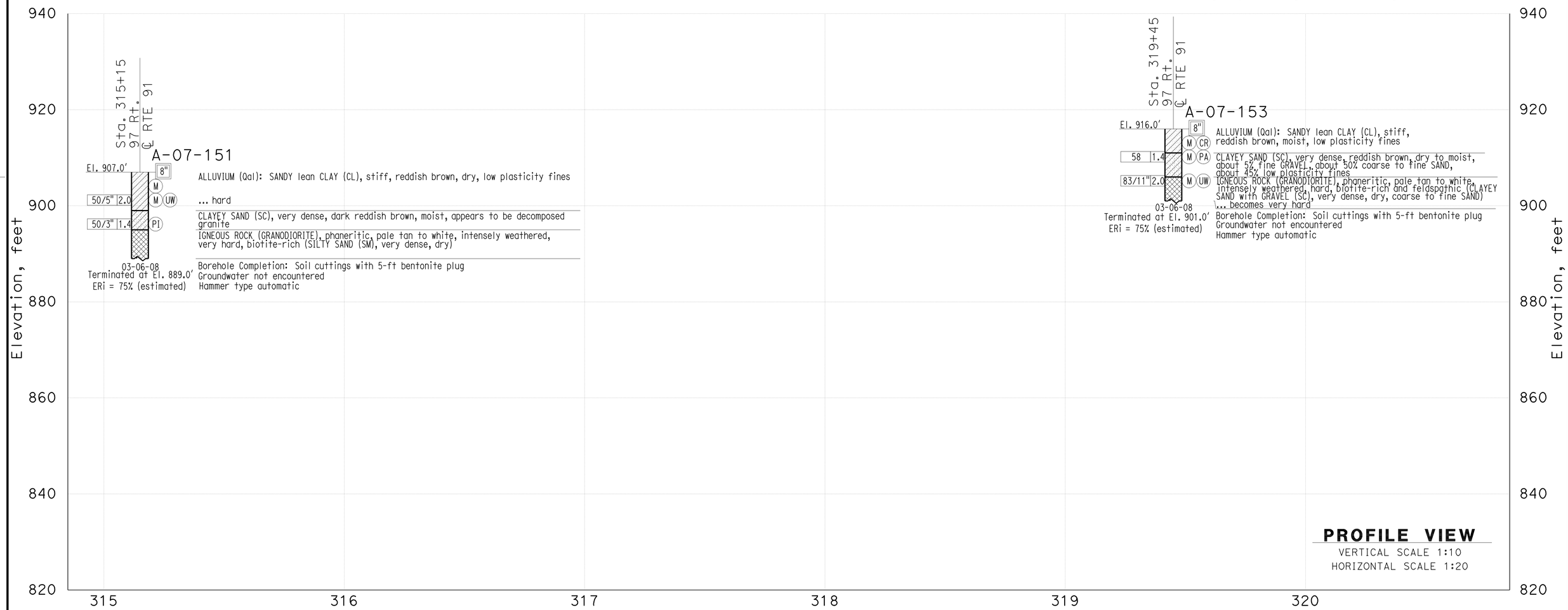

THIS PLAN ACCURATE FOR SOUND WALL AND RETAINING WALL WORK ONLY

GINA PURSELL DESIGN OVERSIGHT	SHAWN WEI FUNCTIONAL SUPERVISOR	DRAWN BY	P. QUACH	P.CHAU/D.WADER/C.CARBINO FIELD INVESTIGATION BY:	PREPARED FOR THE STATE OF CALIFORNIA DEPARTMENT OF TRANSPORTATION	A. LEE PROJECT ENGINEER	BRIDGE NO. 56 E0067 POST MILE 18.87	RETAINING WALL 316
11/12/10 SIGN OFF DATE		CHECKED BY	S. PIRATHIVIRAJ	DATE: Nov 6 2007 to March 7 2008				LOG OF TEST BORINGS 3 OF 3

OSF GEOTECHNICAL LOG OF TEST BORINGS SHEET (ENGLISH) (REV. 2/25/05)

ORIGINAL SCALE IN INCHES FOR REDUCED PLANS 0 1 2 3

CU 08
EA 448401

DISREGARD PRINTS BEARING EARLIER REVISION DATES — REVISION DATES (PRELIMINARY STAGE ONLY) 8/10/10

SHEET 14 OF 14

FILE => 56e0067zlotb14.dgn

USERNAME => trienord DATE PLOTTED => 30-APR-2011 TIME PLOTTED =>

DIST	COUNTY	ROUTE	POST MILES TOTAL PROJECT	SHEET No	TOTAL SHEETS
08	Riv	91	15.6/21.6	1487	2028

REGISTERED CIVIL ENGINEER — DATE 11/12/10

4-25-11
PLANS APPROVAL DATE

The State of California or its officers or agents shall not be responsible for the accuracy or completeness of electronic copies of this plan sheet.

REGISTERED PROFESSIONAL ENGINEER — Minh Thuong Vo — No. C59297 — Exp. 6/30/2011 — CIVIL — STATE OF CALIFORNIA

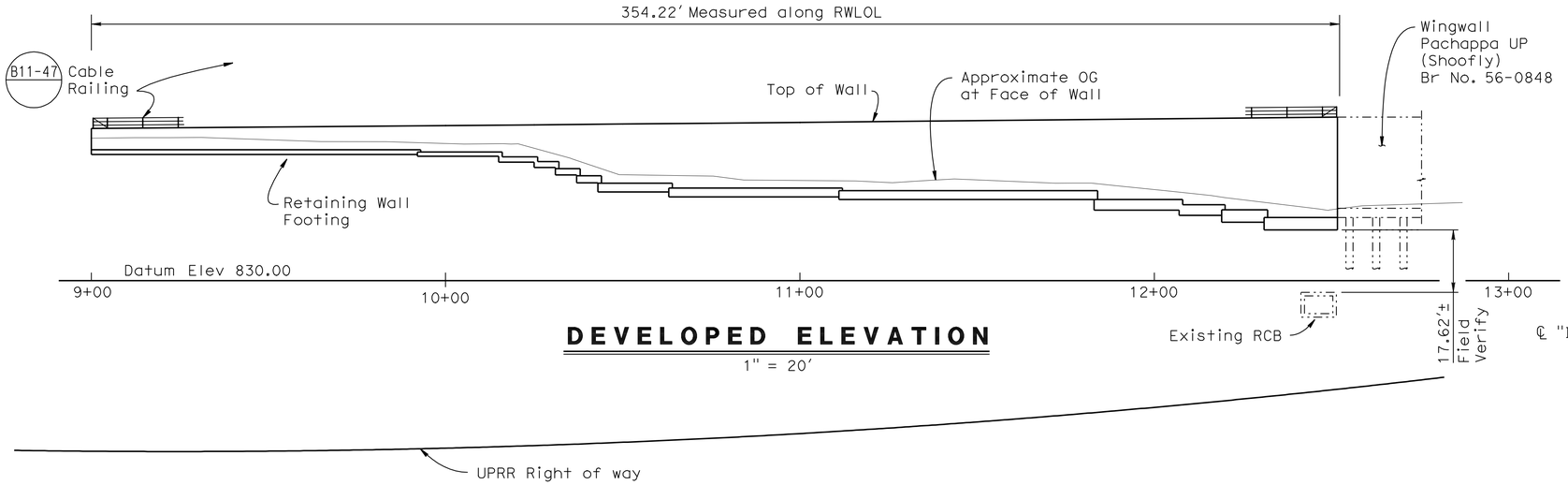

DEVELOPED ELEVATION

1" = 20'

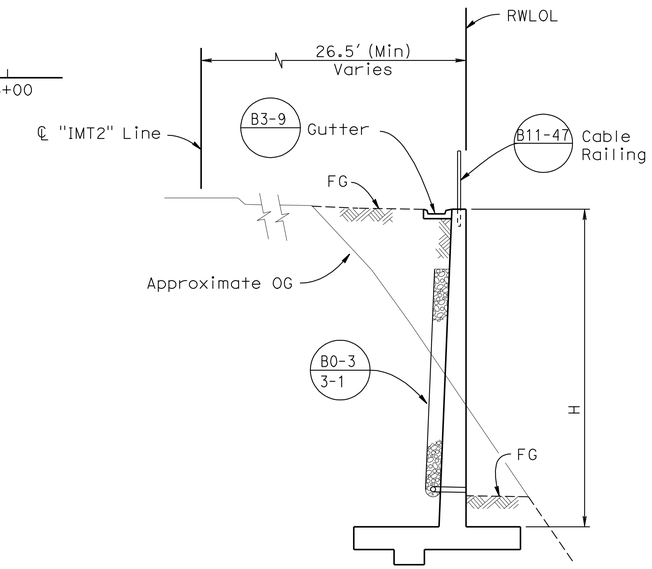

TYPICAL SECTION

No Scale

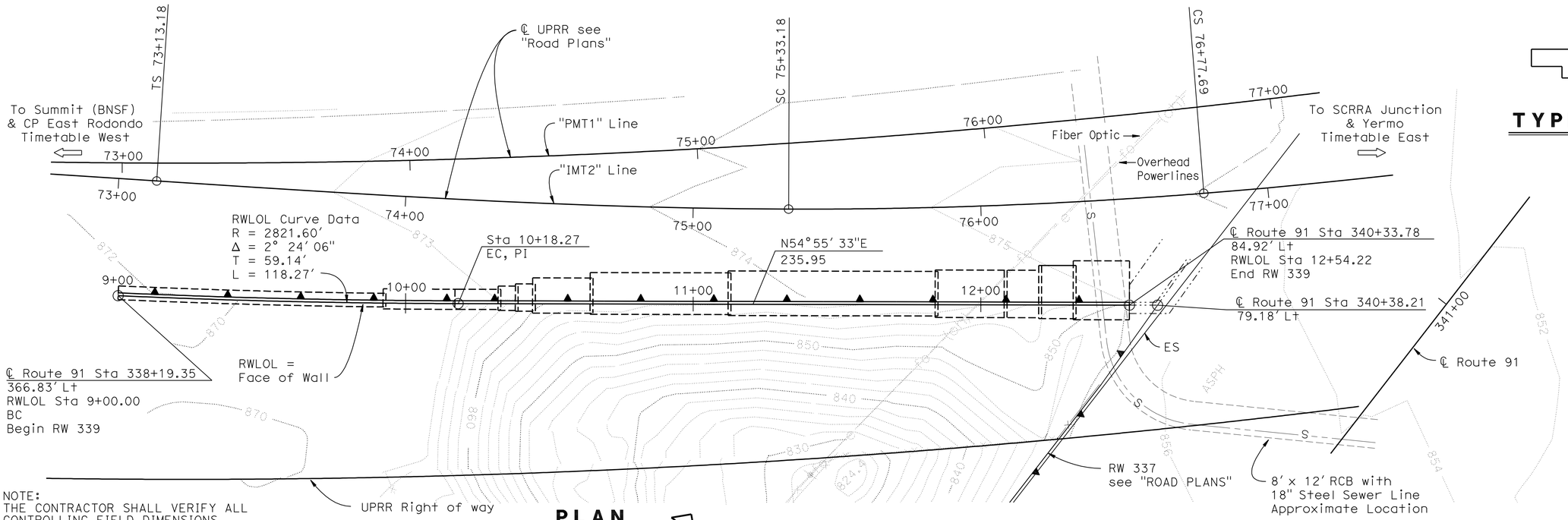

NOTE:
THE CONTRACTOR SHALL VERIFY ALL CONTROLLING FIELD DIMENSIONS BEFORE ORDERING OR FABRICATING ANY MATERIAL.

PLAN

1" = 20'

Daniel T. Adams
DESIGN ENGINEER

	BY	CHECKED			
DESIGN	M. Vo	R. Stiltz	LOAD FACTOR DESIGN	LIVE LOADING: HIGHWAY COOPER E80	
DETAILS	R. Kirkland	R. Stiltz	LAYOUT	M. Vo	R. Stiltz
QUANTITIES	R. Stiltz	M. Vo	SPECIFICATIONS	Dave Klein	PLANS AND SPECS COMPARED Dave Klein

ORIGINAL SCALE IN INCHES FOR REDUCED PLANS 0 1 2 3

STATE OF CALIFORNIA
DEPARTMENT OF TRANSPORTATION

DIVISION OF ENGINEERING SERVICES
STRUCTURE DESIGN
DESIGN BRANCH 10

CU 08
EA 448401

BRIDGE NO. 56 E0068
POST MILE 19.3

RETAINING WALL NO. 339
GENERAL PLAN

DISREGARD PRINTS BEARING EARLIER REVISION DATES → REVISION DATES 4/25/10 8/05/10 10/29/10 3/14/11

SHEET 1 OF 10

STRUCTURES DESIGN GENERAL PLAN SHEET (ENGLISH) (REV.07-24-06)

FILE => 56e0068agp01_rs.dgn

USERNAME => trlenard DATE PLOTTED => 30-APR-2011 TIME PLOTTED => 10:34

DIST	COUNTY	ROUTE	POST MILES TOTAL PROJECT	SHEET No	TOTAL SHEETS
08	Riv	91	15.6/21.6	1488	2028

REGISTERED CIVIL ENGINEER 11/12/10 DATE

4-25-11
PLANS APPROVAL DATE

REGISTERED PROFESSIONAL ENGINEER Minh Thuong Vo No. C59297 Exp. 6/30/2011 CIVIL STATE OF CALIFORNIA

The State of California or its officers or agents shall not be responsible for the accuracy or completeness of electronic copies of this plan sheet.

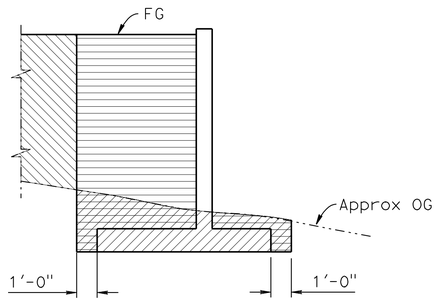

EXCAVATION & BACKFILL

NO SCALE

Sta 12+29.26 to 12+53.94

LEGEND:

- Structure Excavation
- Structure Backfill
- Roadway Backfill (see Roadway Plan)

DESIGN DATA

DESIGN: American Railroad Engineering and Maintenance-of-Way Association (2010)

LIVE LOADING: Highway; Cooper E80

CONCRETE: n = 9, f'c = 3600 psi, fc = 1440 psi

REINFORCING STEEL: fy = 60,000 psi, fs = 24,000 psi

SOIL PARAMETERS: (for determination of design lateral earth pressure)
ø = 34° γ = 120 pcf

QUANTITIES

RETAINING WALL 339 BRIDGE NO 56E0068

STRUCTURE EXCAVATION (RETAINING WALL)	1,223	CY
STRUCTURE BACKFILL (RETAINING WALL)	2,295	CY
PERVIOUS BACKFILL MATERIAL (RETAINING WALL)	106	CY
STRUCTURAL CONCRETE, RETAINING WALL	797	CY
BAR REINFORCING STEEL (RETAINING WALL)	119,149	LB
MINOR CONCRETE (GUTTER)	355	LF
CABLE RAILING	355	LF

INDEX TO PLANS

Sheet No.	Title
1	GENERAL PLAN
2	INDEX TO PLANS
3	RETAINING WALL LAYOUT NO. 1
4	RETAINING WALL LAYOUT NO. 2
5	RETAINING WALL LAYOUT NO. 3
6	RETAINING WALL DETAILS NO. 1
7	LOG OF TEST BORINGS 1 OF 4
8	LOG OF TEST BORINGS 2 OF 4
9	LOG OF TEST BORINGS 3 OF 4
10	LOG OF TEST BORINGS 4 OF 4

STANDARD PLANS DATED MAY 2006

A10A	ACRONYMS AND ABBREVIATIONS (SHEET 1 OF 2)
A10B	ACRONYMS AND ABBREVIATIONS (SHEET 2 OF 2)
A10C	SYMBOLS (SHEET 1 OF 2)
A10D	SYMBOLS (SHEET 2 OF 2)
A62B	LIMITS OF PAYMENT FOR EXCAVATION AND BACKFILL BRIDGE SURCHARGE AND WALL
B0-3	BRIDGE DETAILS
B3-8	RETAINING WALL DETAILS NO. 1
B3-9	RETAINING WALL DETAILS NO. 2
B11-47	Cable Railing

STANDARD PLAN SHEET NO.

DETAIL NO.

	BY	CHECKED
DESIGN	M. Vo	R. Stiltz
DETAILS	R. Kirkland	R. Stiltz
QUANTITIES	R. Stiltz	M. Vo

STATE OF CALIFORNIA
DEPARTMENT OF TRANSPORTATION

DIVISION OF ENGINEERING SERVICES
STRUCTURE DESIGN
DESIGN BRANCH 10

BRIDGE NO. 56 E0068
POST MILE 19.3

RETAINING WALL NO. 339
INDEX TO PLANS

STRUCTURES DESIGN DETAIL SHEET (ENGLISH) (REV. 10/25/05)

ORIGINAL SCALE IN INCHES FOR REDUCED PLANS 0 1 2 3

CU 08
EA 448401

DISREGARD PRINTS BEARING EARLIER REVISION DATES

REVISION DATES: 4/26/10 8/05/10 10/29/10 3/14/11

SHEET 2 OF 10

FILE => 56e0068aitp02.dgn

USERNAME => Trenard DATE PLOTTED => 30-APR-2011 TIME PLOTTED => 10:35

DIST	COUNTY	ROUTE	POST MILES TOTAL PROJECT	SHEET No	TOTAL SHEETS
08	Riv	91	15.6/21.6	1489	2028

REGISTERED CIVIL ENGINEER 11/12/10 DATE

4-25-11
PLANS APPROVAL DATE

REGISTERED PROFESSIONAL ENGINEER Minh Thuong Vo No. C59297 Exp. 6/30/2011 CIVIL STATE OF CALIFORNIA

The State of California or its officers or agents shall not be responsible for the accuracy or completeness of electronic copies of this plan sheet.

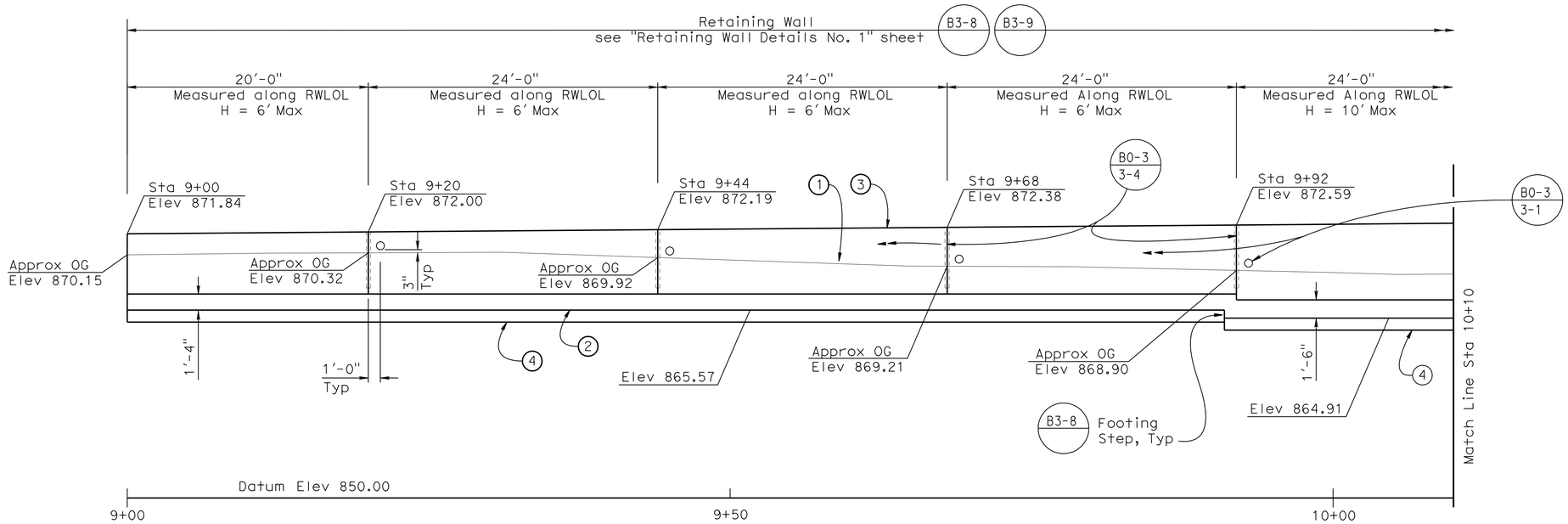

DEVELOPED ELEVATION

3/16" = 1'-0"

NOTES:

1. For Utility Information, see "Road Plans".
2. For Section A-A, see "Retaining Wall Details No. 1" sheet.

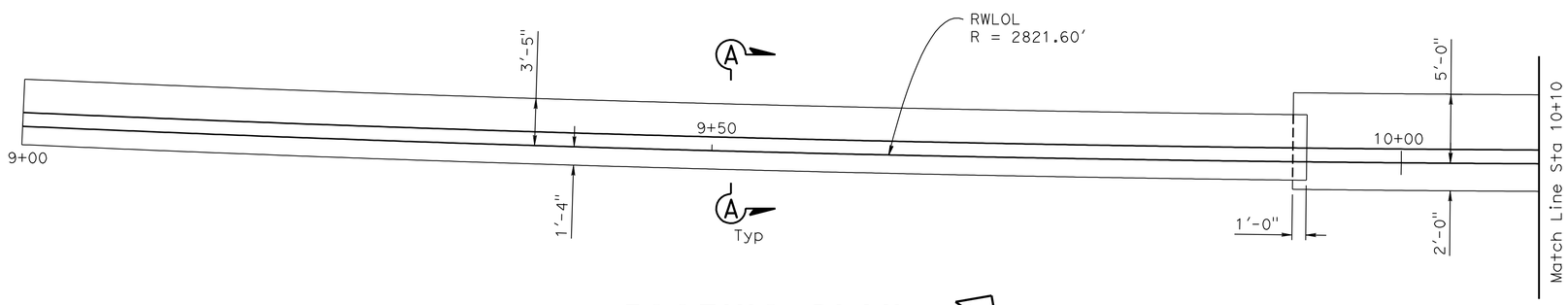

FOOTING PLAN

3/16" = 1'-0"

LEGEND:

1. Approximate OG at Face of Wall
2. Bottom of Retaining Wall Footing
3. Top of Wall
4. Key

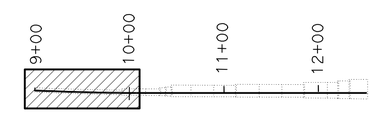

KEY PLAN

NOTE:
THE CONTRACTOR SHALL VERIFY ALL CONTROLLING FIELD DIMENSIONS BEFORE ORDERING OR FABRICATING ANY MATERIAL.

	BY	CHECKED
DESIGN	M. Vo	R. Stiltz
DETAILS	R. Kirkland	R. Stiltz
QUANTITIES	R. Stiltz	M. Vo

STATE OF CALIFORNIA
DEPARTMENT OF TRANSPORTATION

DIVISION OF ENGINEERING SERVICES
STRUCTURE DESIGN
DESIGN BRANCH 10

BRIDGE NO. 56 E0068
POST MILE 19.3

RETAINING WALL NO. 339
RETAINING WALL LAYOUT NO. 1

STRUCTURES DESIGN DETAIL SHEET (ENGLISH) (REV. 10/25/05)

ORIGINAL SCALE IN INCHES FOR REDUCED PLANS 0 1 2 3

CU 08
EA 448401

DISREGARD PRINTS BEARING EARLIER REVISION DATES

REVISION DATES: 4/25/10 8/05/10 10/28/10 3/14/11

SHEET 3 OF 10

FILE => 56e0068csp03.dgn

USERNAME => trlenard DATE PLOTTED => 30-APR-2011 TIME PLOTTED => 10:35

DIST	COUNTY	ROUTE	POST MILES TOTAL PROJECT	SHEET No	TOTAL SHEETS
08	Riv	91	15.6/21.6	1490	2028

REGISTERED CIVIL ENGINEER 11/12/10 DATE

4-25-11
PLANS APPROVAL DATE

The State of California or its officers or agents shall not be responsible for the accuracy or completeness of electronic copies of this plan sheet.

REGISTERED PROFESSIONAL ENGINEER Minh Thuong Vo No. C59297 Exp. 6/30/2011 CIVIL STATE OF CALIFORNIA

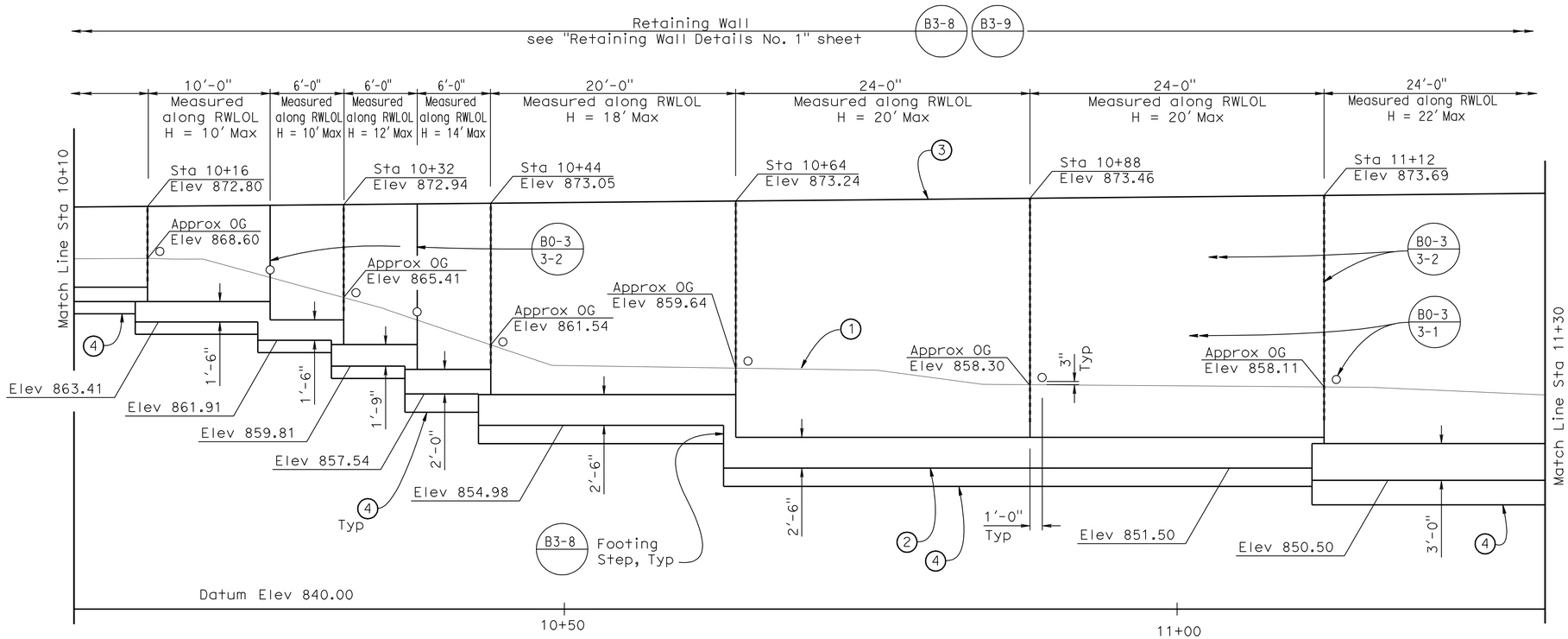

DEVELOPED ELEVATION

3/16" = 1'-0"

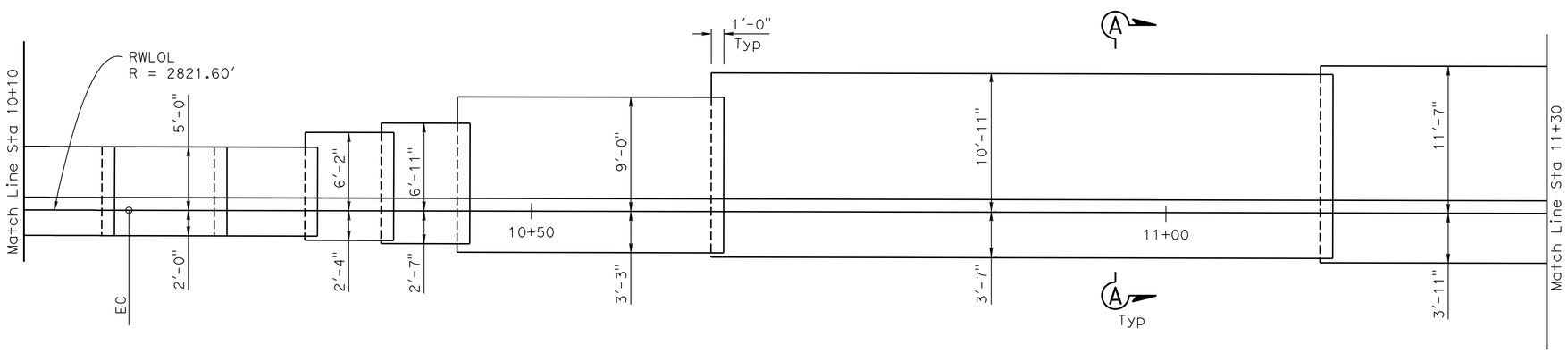

FOOTING PLAN

3/16" = 1'-0"

NOTES:

1. For Utility Information, see "Road Plans".
2. For Section A-A, see "Retaining Wall Details No. 1" sheet.

LEGEND:

1. Approximate OG at Face of Wall
2. Bottom of Retaining Wall Footing
3. Top of Wall
4. Key

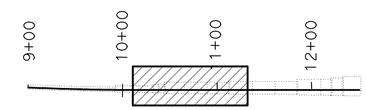

KEY PLAN

NOTE:
THE CONTRACTOR SHALL VERIFY ALL CONTROLLING FIELD DIMENSIONS BEFORE ORDERING OR FABRICATING ANY MATERIAL.

	BY	CHECKED
DESIGN	M. Vo	R. Stiltz
DETAILS	R. Kirkland	R. Stiltz
QUANTITIES	R. Stiltz	M. Vo

STATE OF CALIFORNIA
DEPARTMENT OF TRANSPORTATION

DIVISION OF ENGINEERING SERVICES
STRUCTURE DESIGN
DESIGN BRANCH 10

BRIDGE NO. 56 E0068
POST MILE 19.3

RETAINING WALL NO. 339
RETAINING WALL LAYOUT NO. 2

STRUCTURES DESIGN DETAIL SHEET (ENGLISH) (REV. 10/25/05)

ORIGINAL SCALE IN INCHES FOR REDUCED PLANS 0 1 2 3

CU 08
EA 448401

DISREGARD PRINTS BEARING EARLIER REVISION DATES

REVISION DATES: 4/26/10 8/05/10 10/28/10 3/14/11

SHEET 4 OF 10

FILE => 56e0068csp04.dgn

USERNAME => rlenard DATE PLOTTED => 30-APR-2011 TIME PLOTTED => 10:35

DIST	COUNTY	ROUTE	POST MILES TOTAL PROJECT	SHEET No	TOTAL SHEETS
08	Riv	91	15.6/21.6	1491	2028

REGISTERED CIVIL ENGINEER 11/12/10 DATE

4-25-11
PLANS APPROVAL DATE

The State of California or its officers or agents shall not be responsible for the accuracy or completeness of electronic copies of this plan sheet.

REGISTERED PROFESSIONAL ENGINEER Minh Thuong Vo No. C59297 Exp. 6/30/2011 CIVIL STATE OF CALIFORNIA

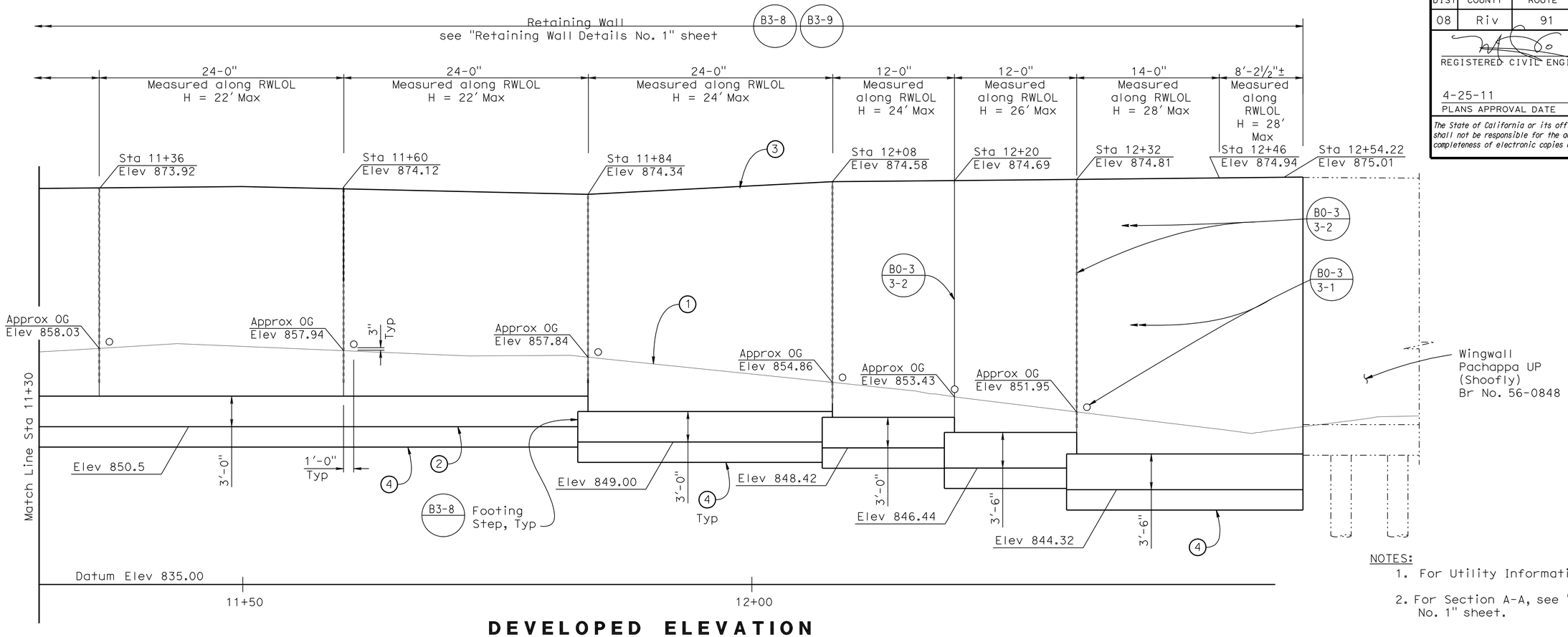

DEVELOPED ELEVATION

3/16" = 1'-0"

NOTES:

1. For Utility Information, see "Road Plans".
2. For Section A-A, see "Retaining Wall Details No. 1" sheet.

LEGEND:

1. Approximate OG at Face of Wall
2. Bottom of Retaining Wall Footing
3. Top of Wall
4. Key

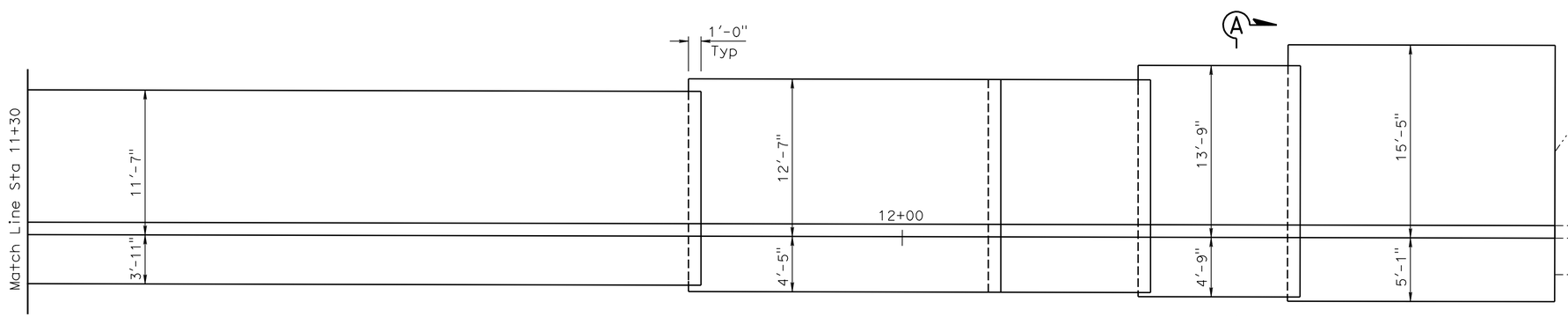

FOOTING PLAN

3/16" = 1'-0"

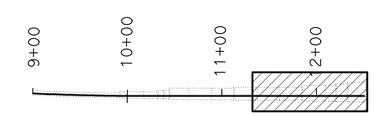

KEY PLAN

NOTE:
THE CONTRACTOR SHALL VERIFY ALL CONTROLLING FIELD DIMENSIONS BEFORE ORDERING OR FABRICATING ANY MATERIAL.

	BY	CHECKED
DESIGN	M. Vo	R. Stiltz
DETAILS	R. Kirkland	R. Stiltz
QUANTITIES	R. Stiltz	M. Vo

STATE OF CALIFORNIA
DEPARTMENT OF TRANSPORTATION

DIVISION OF ENGINEERING SERVICES
STRUCTURE DESIGN
DESIGN BRANCH 10

BRIDGE NO. 56 E0068
POST MILE 19.3

RETAINING WALL NO. 339
RETAINING WALL LAYOUT NO. 3

STRUCTURES DESIGN DETAIL SHEET (ENGLISH) (REV. 10/25/05)

ORIGINAL SCALE IN INCHES FOR REDUCED PLANS 0 1 2 3

CU 08
EA 448401

DISREGARD PRINTS BEARING EARLIER REVISION DATES

REVISION DATES: 4/25/10 8/25/10 10/29/10 3/14/11

SHEET 5 OF 10

FILE => 56e0068csp05.dgn

USERNAME => trlenard DATE PLOTTED => 30-APR-2011 TIME PLOTTED => 10:35

DIST	COUNTY	ROUTE	POST MILES TOTAL PROJECT	SHEET No	TOTAL SHEETS
08	Riv	91	15.6/21.6	1492	2028

REGISTERED CIVIL ENGINEER 11/12/10 DATE

4-25-11
PLANS APPROVAL DATE

REGISTERED PROFESSIONAL ENGINEER Minh Thuong Vo No. C59297 Exp. 6/30/2011 CIVIL STATE OF CALIFORNIA

The State of California or its officers or agents shall not be responsible for the accuracy or completeness of electronic copies of this plan sheet.

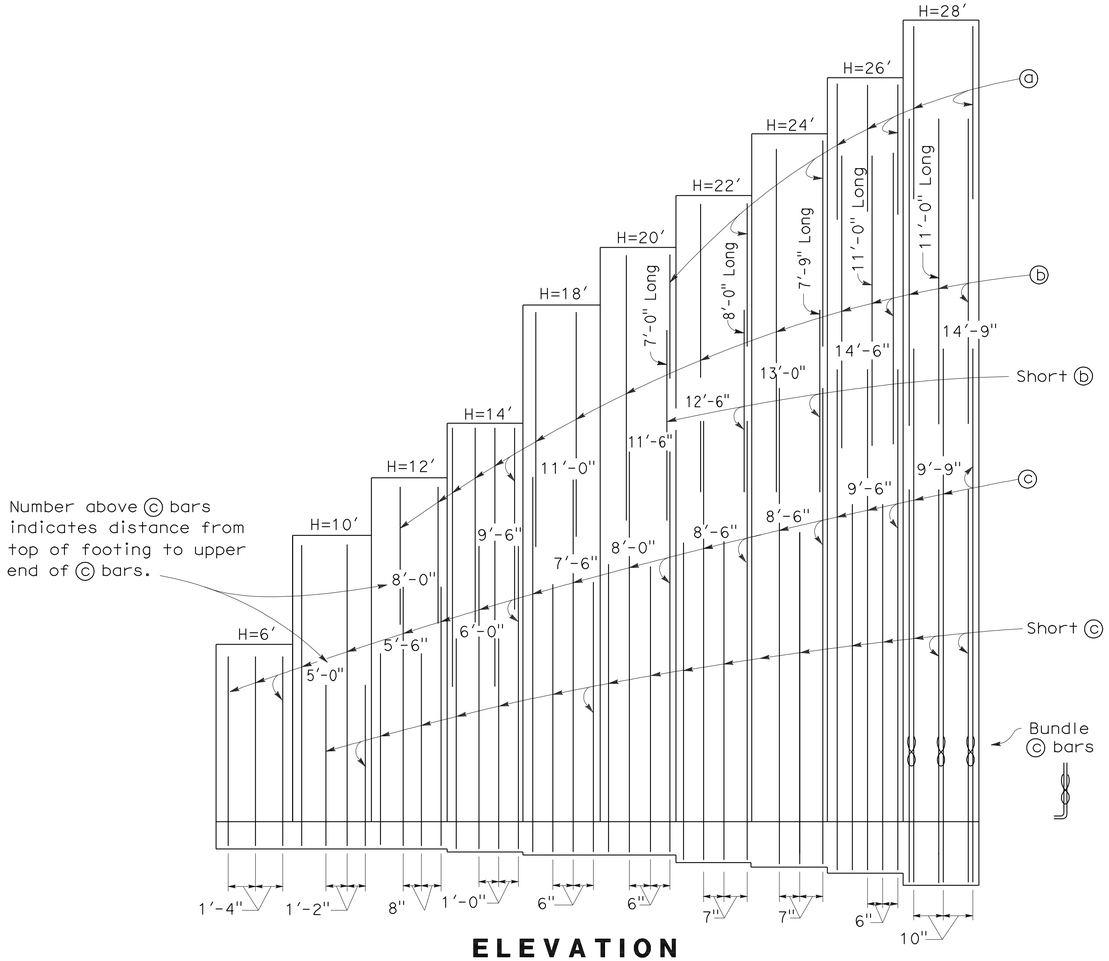

ELEVATION

TABLE OF REINFORCING STEEL DIMENSIONS AND DATA										
Design H	6′	10′	12′	14′	18′	20′	22′	24′	26′	28′
W	4′-9"	7′-0"	8′-6"	9′-6"	12′-3"	14′-6"	15′-6"	17′-0"	18′-6"	20′-6"
C	1′-4"	2′-0"	2′-4"	2′-7"	3′-3"	3′-7"	3′-11"	4′-5"	4′-9"	5′-1"
B	3′-5"	5′-0"	6′-2"	6′-11"	9′-0"	10′-11"	11′-7"	12′-7"	13′-9"	15′-5"
F	1′-4"	1′-6"	1′-9"	2′-0"	2′-6"	2′-6"	3′-0"	3′-0"	3′-6"	3′-6"
T	1′-3"	1′-5"	1′-6"	1′-7"	1′-9"	1′-10"	2′-0"	2′-5"	2′-8"	3′-0"
ⓐ bars	——	——	——	——	——	#5 @ 24	#5 @ 28	#5 @ 28	#5 @ 12	#5 @ 20
ⓑ bars	——	——	#5 @ 16	#5 @ 12	#6 @ 12	#8 @ 12	#8 @ 14	#8 @ 14	#8 @ 12	#8 @ 10
ⓒ bars	#5 @ 16	#6 @ 14	#6 @ 8	#9 @ 12	#9 @ 6	#10 @ 6	#11 @ 7	#11 @ 7	#11 @ 6	#11 @ 10 ⧖
ⓓ bars	#5 @ 16	#6 @ 14	#6 @ 8	#9 @ 12	#9 @ 6	#10 @ 6	#11 @ 7	#11 @ 7	#11 @ 6	#11 @ 10 ⧖
ⓔ bars	#5 @ 12	#5 @ 12	#5 @ 12	#5 @ 12	#5 @ 12	#5 @ 12	#5 @ 12	#5 @ 12	#5 @ 12	#5 @ 12
ⓕ bars	——	——	——	#6 @ 12	#6 @ 9	#6 @ 6	#6 @ 6	#7 @ 6	#7 @ 6	#8 @ 7
ⓖ bars	——	——	——	——	#5 @ 18 each way	#5 @ 18 each way	#5 @ 18 each way	#5 @ 18 each way	#5 @ 16 each way	#5 @ 12 each way
D Key	1′-0"	1′-6"	1′-6"	2′-0"	2′-6"	2′-6"	2′-6"	2′-6"	2′-6"	2′-6"
W Key	1′-6"	2′-6"	2′-6"	3′-0"	3′-6"	3′-6"	3′-6"	3′-6"	3′-6"	3′-6"

⧖ Denotes a bundle of 2 bars

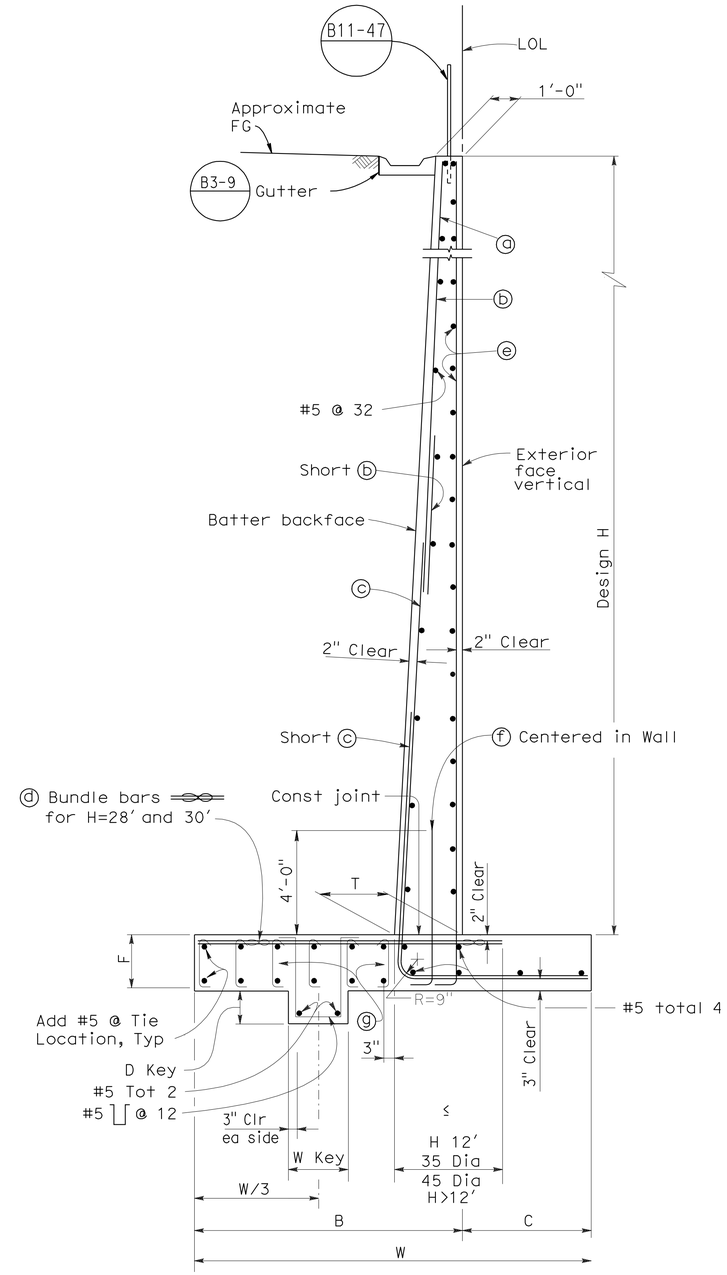

SECTION A-A

No Scale

DESIGN	BY M. Vo	CHECKED R. Stiltz	
DETAILS	BY R. Kirkland	CHECKED R. Stiltz	
QUANTITIES	BY R. Stiltz	CHECKED M. Vo	

STATE OF CALIFORNIA
DEPARTMENT OF TRANSPORTATION

DIVISION OF ENGINEERING SERVICES
STRUCTURE DESIGN
DESIGN BRANCH 10

BRIDGE NO. 56 E0068
POST MILE 19.3

RETAINING WALL NO. 339
RETAINING WALL DETAILS NO. 1

STRUCTURES DESIGN DETAIL SHEET (ENGLISH) (REV. 10/25/05)

ORIGINAL SCALE IN INCHES FOR REDUCED PLANS 0 1 2 3

CU 08
EA 448401

DISREGARD PRINTS BEARING EARLIER REVISION DATES

REVISION DATES: 4/25/10 8/05/10 10/29/10 3/14/11

SHEET 06 OF 10

FILE => 56e0068grwdt06.dgn

USERNAME => trrenard DATE PLOTTED => 30-APR-2011 TIME PLOTTED => 10:35

DIST	COUNTY	ROUTE	POST MILES TOTAL PROJECT	SHEET No	TOTAL SHEETS
08	Riv	91	15.6/21.6	1493	2028

GEOTECHNICAL PROFESSIONAL — DATE 11/03/2010

4-25-11
PLANS APPROVAL DATE

REGISTERED PROFESSIONAL ENGINEER — FAHID MOTAMED No. 2738 Exp. 6-30-11 GEOTECHNICAL STATE OF CALIFORNIA

The State of California or its officers or agents shall not be responsible for the accuracy or completeness of electronic copies of this plan sheet.

California Department of Transportation
5900 Folsom Boulevard
Sacramento, CA 95819

URS Corporation
2020 East First Street, Suite 400
Santa Ana, CA 92705

GROUP SYMBOLS AND NAMES

Graphic / Symbol	Group Names	Graphic / Symbol	Group Names
GW	Well-graded GRAVEL Well-graded GRAVEL with SAND	CL	Lean CLAY Lean CLAY with SAND Lean CLAY with GRAVEL SANDY lean CLAY SANDY lean CLAY with GRAVEL GRAVELLY lean CLAY GRAVELLY lean CLAY with SAND
GP	Poorly graded GRAVEL Poorly graded GRAVEL with SAND		
GW-GM	Well-graded GRAVEL with SILT Well-graded GRAVEL with SILT and SAND	CL-ML	SILTY CLAY SILTY CLAY with SAND SILTY CLAY with GRAVEL SANDY SILTY CLAY SANDY SILTY CLAY with GRAVEL GRAVELLY SILTY CLAY GRAVELLY SILTY CLAY with SAND
GW-GC	Well-graded GRAVEL with CLAY (or SILTY CLAY) Well-graded GRAVEL with CLAY and SAND (or SILTY CLAY and SAND)		
GP-GM	Poorly graded GRAVEL with SILT Poorly graded GRAVEL with SILT and SAND	ML	SILT SILT with SAND SILT with GRAVEL SANDY SILT SANDY SILT with GRAVEL GRAVELLY SILT GRAVELLY SILT with SAND
GP-GC	Poorly graded GRAVEL with CLAY (or SILTY CLAY) Poorly graded GRAVEL with CLAY and SAND (or SILTY CLAY and SAND)		
GM	SILTY GRAVEL SILTY GRAVEL with SAND	OL	ORGANIC lean CLAY ORGANIC lean CLAY with SAND ORGANIC lean CLAY with GRAVEL SANDY ORGANIC lean CLAY SANDY ORGANIC lean CLAY with GRAVEL GRAVELLY ORGANIC lean CLAY GRAVELLY ORGANIC lean CLAY with SAND
GC	CLAYEY GRAVEL CLAYEY GRAVEL with SAND		
GC-GM	SILTY, CLAYEY GRAVEL SILTY, CLAYEY GRAVEL with SAND	OL	ORGANIC SILT ORGANIC SILT with SAND ORGANIC SILT with GRAVEL SANDY ORGANIC SILT SANDY ORGANIC SILT with GRAVEL GRAVELLY ORGANIC SILT GRAVELLY ORGANIC SILT with SAND
SW	Well-graded SAND Well-graded SAND with GRAVEL		
SP	Poorly graded SAND Poorly graded SAND with GRAVEL	CH	Fat CLAY Fat CLAY with SAND Fat CLAY with GRAVEL SANDY fat CLAY SANDY fat CLAY with GRAVEL GRAVELLY fat CLAY GRAVELLY fat CLAY with SAND
SW-SM	Well-graded SAND with SILT Well-graded SAND with SILT and GRAVEL		
SW-SC	Well-graded SAND with CLAY (or SILTY CLAY) Well-graded SAND with CLAY and GRAVEL (or SILTY CLAY and GRAVEL)	MH	Elastic SILT Elastic SILT with SAND Elastic SILT with GRAVEL SANDY elastic SILT SANDY elastic SILT with GRAVEL GRAVELLY elastic SILT GRAVELLY elastic SILT with SAND
SP-SM	Poorly graded SAND with SILT Poorly graded SAND with SILT and GRAVEL		
SP-SC	Poorly graded SAND with CLAY (or SILTY CLAY) Poorly graded SAND with CLAY and GRAVEL (or SILTY CLAY and GRAVEL)	OH	ORGANIC fat CLAY ORGANIC fat CLAY with SAND ORGANIC fat CLAY with GRAVEL SANDY ORGANIC fat CLAY SANDY ORGANIC fat CLAY with GRAVEL GRAVELLY ORGANIC fat CLAY GRAVELLY ORGANIC fat CLAY with SAND
SM	SILTY SAND SILTY SAND with GRAVEL		
SC	CLAYEY SAND CLAYEY SAND with GRAVEL	OH	ORGANIC elastic SILT ORGANIC elastic SILT with SAND ORGANIC elastic SILT with GRAVEL SANDY elastic ELASTIC SILT SANDY ORGANIC elastic SILT with GRAVEL GRAVELLY ORGANIC elastic SILT GRAVELLY ORGANIC elastic SILT with SAND
SC-SM	SILTY, CLAYEY SAND SILTY, CLAYEY SAND with GRAVEL		
PT	PEAT	OL/OH	ORGANIC SOIL ORGANIC SOIL with SAND ORGANIC SOIL with GRAVEL SANDY ORGANIC SOIL SANDY ORGANIC SOIL with GRAVEL GRAVELLY ORGANIC SOIL GRAVELLY ORGANIC SOIL with SAND
	COBBLES COBBLES and BOULDERS BOULDERS		

FIELD AND LABORATORY TESTS

C	Consolidation (ASTM D 2435-04)
CL	Collapse Potential (ASTM D 5333-03)
CP	Compaction Curve (CTM 216 - 06)
CR	Corrosion, Sulfates, Chlorides (CTM 643 - 99; CTM 417 - 06; CTM 422 - 06)
CU	Consolidated Undrained Triaxial (ASTM D 4767-02)
DS	Direct Shear (ASTM D 3080-04)
EI	Expansion Index (ASTM D 4829-03)
M	Moisture Content (ASTM D 2216-05)
OC	Organic Content (ASTM D 2974-07)
P	Permeability (CTM 220 - 05)
PA	Particle Size Analysis (ASTM D 422-63 [2002])
PI	Liquid Limit, Plastic Limit, Plasticity Index (AASHTO T 89-02, AASHTO T 90-00)
PL	Point Load Index (ASTM D 5731-05)
PM	Pressure Meter
PP	Pocket Penetrometer
R	R-Value (CTM 301 - 00)
SE	Sand Equivalent (CTM 217 - 99)
SG	Specific Gravity (AASHTO T 100-06)
SL	Shrinkage Limit (ASTM D 427-04)
SW	Swell Potential (ASTM D 4546-03)
TV	Pocket Torvane
UC	Unconfined Compression - Soil (ASTM D 2166-06) Unconfined Compression - Rock (ASTM D 2938-95)
UU	Unconsolidated Undrained Triaxial (ASTM D 2850-03)
UW	Unit Weight (ASTM D 4767-04)
VS	Vane Shear (AASHTO T 223-96 [2004])

CONSISTENCY OF COHESIVE SOILS

Descriptor	Unconfined Compressive Strength (tsf)	Pocket Penetrometer (tsf)	Torvane (tsf)	Field Approximation
Very Soft	< 0.25	< 0.25	< 0.12	Easily penetrated several inches by fist
Soft	0.25 - 0.50	0.25 - 0.50	0.12 - 0.25	Easily penetrated several inches by thumb
Medium Stiff	0.50 - 1.0	0.50 - 1.0	0.25 - 0.50	Can be penetrated several inches by thumb with moderate effort
Stiff	1.0 - 2.0	1.0 - 2.0	0.50 - 1.0	Readily indented by thumb but penetrated only with great effort
Very Stiff	2.0 - 4.0	2.0 - 4.0	1.0 - 2.0	Readily indented by thumbnail
Hard	> 4.0	> 4.0	> 2.0	Indented by thumbnail with difficulty

APPARENT DENSITY OF COHESIONLESS SOILS

Descriptor	SPT N60 - Value (blows / foot)
Very Loose	0 - 4
Loose	5 - 10
Medium Dense	11 - 30
Dense	31 - 50
Very Dense	> 50

MOISTURE

Descriptor	Criteria
Dry	Absence of moisture, dusty, dry to the touch
Moist	Damp but no visible water
Wet	Visible free water, usually soil is below water table

PERCENT OR PROPORTION OF SOILS

Descriptor	Criteria
Trace	Particles are present but estimated to be less than 5%
Few	5 to 10%
Little	15 to 25%
Some	30 to 45%
Mostly	50 to 100%

SOIL PARTICLE SIZE

Descriptor		Size
Boulder		> 12 inches
Cobble		3 to 12 inches
Gravel	Coarse	3/4 inch to 3 inches
	Fine	No. 4 Sieve to 3/4 inch
Sand	Coarse	No. 10 Sieve to No. 4 Sieve
	Medium	No. 40 Sieve to No. 10 Sieve
	Fine	No. 200 Sieve to No. 40 Sieve
Silt and Clay		Passing No. 200 Sieve

PLASTICITY OF FINE-GRAINED SOILS

Descriptor	Criteria
Nonplastic	A 1/8-inch thread cannot be rolled at any water content.
Low	The thread can barely be rolled, and the lump cannot be formed when drier than the plastic limit.
Medium	The thread is easy to roll, and not much time is required to reach the plastic limit; it cannot be rerolled after reaching the plastic limit. The lump crumbles when drier than the plastic limit.
High	It takes considerable time rolling and kneading to reach the plastic limit. The thread can be rerolled several times after reaching the plastic limit. The lump can be formed without crumbling when drier than the plastic limit.

CEMENTATION

Descriptor	Criteria
Weak	Crumbles or breaks with handling or little finger pressure.
Moderate	Crumbles or breaks with considerable finger pressure.
Strong	Will not crumble or break with finger pressure.

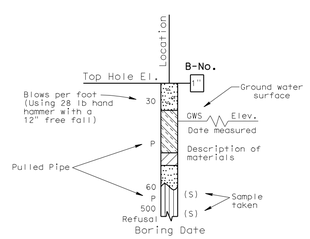

SAMPLE BORING (DRY)

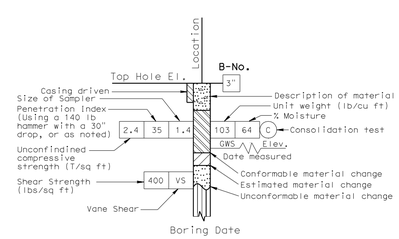

ROTARY SAMPLE BORING (WET)

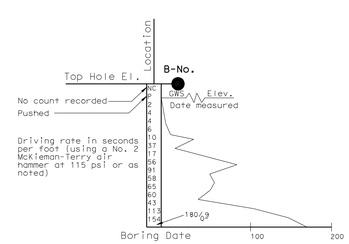

2 1/4" CONE PENETRATION BORING

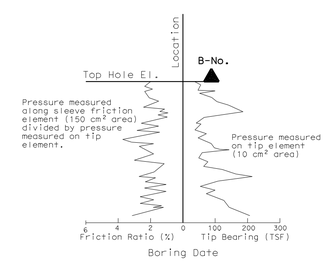

ELECTRONIC CONE PENETROMETER TEST

Cone Penetrometer dimensions and testing procedures are in accordance with ASTM standard D 3441-79, or as noted.

GINA PURSELL DESIGN OVERSIGHT	SHAWN WEI FUNCTIONAL SUPERVISOR	DRAWN BY	P. QUACH	P.CHAU/D.WADER/C.CARBINO FIELD INVESTIGATION BY:	PREPARED FOR THE STATE OF CALIFORNIA DEPARTMENT OF TRANSPORTATION	A. LEE PROJECT ENGINEER	BRIDGE NO. 56 E0068
11/12/10 SIGN OFF DATE		CHECKED BY	S. PIRATHIVIRAJ	DATE: Nov 6 2007 to March 7 2008			POST MILE 19.3

SOIL LEGEND

LOG OF TEST BORINGS 1 OF 4

OSF GEOTECHNICAL LOG OF TEST BORINGS SHEET (ENGLISH) (REV. 2/25/05)

ORIGINAL SCALE IN INCHES FOR REDUCED PLANS 0 1 2 3

CU 08
EA 448401

DISREGARD PRINTS BEARING EARLIER REVISION DATES 8/18/10

REVISION DATES (PRELIMINARY STAGE ONLY)

SHEET 7 OF 10

FILE => 56e0068z1otb07.dgn

USERNAME => trienard DATE PLOTTED => 30-APR-2011 TIME PLOTTED =>

DIST	COUNTY	ROUTE	POST MILES TOTAL PROJECT	SHEET No	TOTAL SHEETS
08	Riv	91	15.6/21.6	1494	2028

GEOTECHNICAL PROFESSIONAL — DATE 11/03/2010

4-25-11
PLANS APPROVAL DATE

REGISTERED PROFESSIONAL ENGINEER — FAHID MOTAMED No. 2738 Exp. 6-30-11 GEOTECHNICAL — STATE OF CALIFORNIA

The State of California or its officers or agents shall not be responsible for the accuracy or completeness of electronic copies of this plan sheet.

California Department of Transportation
5900 Folsom Boulevard
Sacramento, CA 95819

URS Corporation
2020 East First Street, Suite 400
Santa Ana, CA 92705

FOR PLAN VIEW, SEE
"LOG OF TEST BORINGS 4 OF 4"

NOTE: 1. This LOTB sheet was prepared in accordance with the Caltrans Soil & Rock Logging, Classification, and Presentation Manual (June 2007).

2. For legend, see "Log of Test Borings 1 of 4"

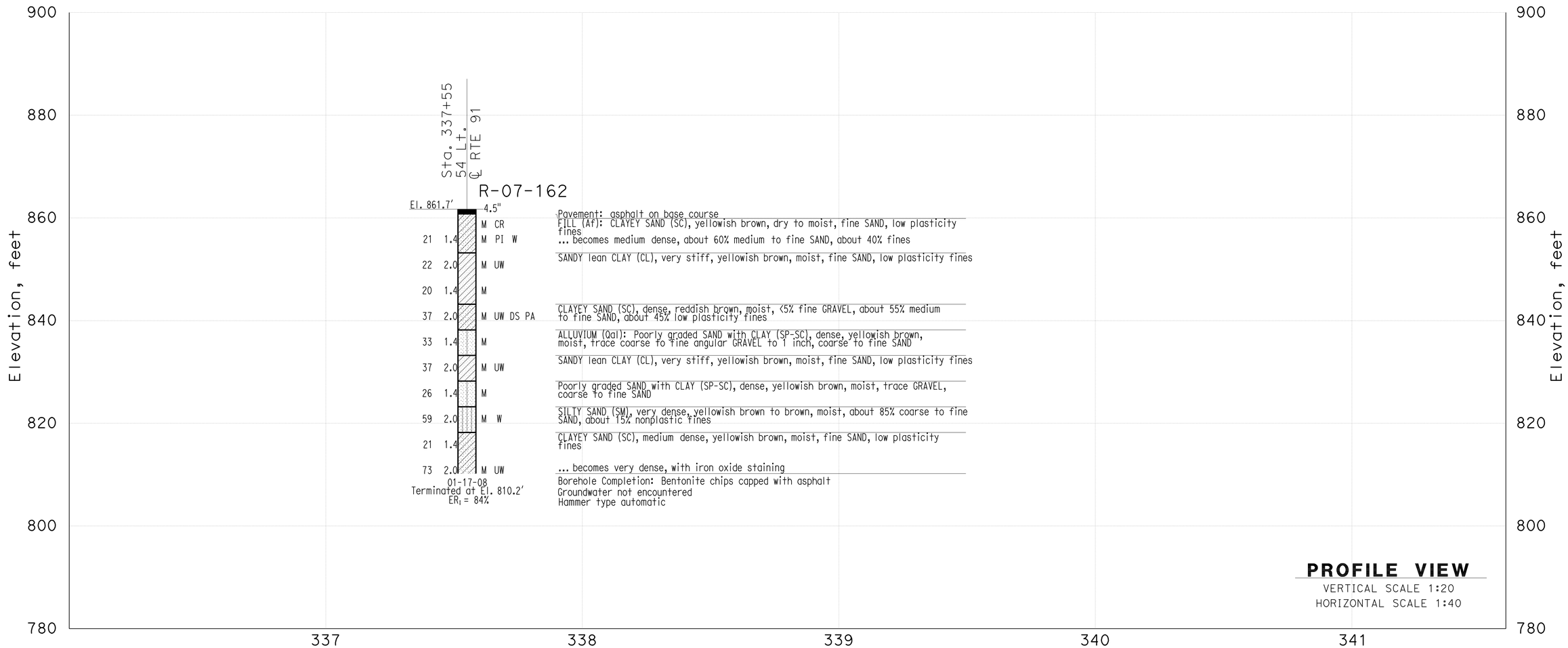

THIS PLAN ACCURATE FOR SOUND WALL AND RETAINING WALL WORK ONLY

GINA PURSELL DESIGN OVERSIGHT	SHAWN WEI FUNCTIONAL SUPERVISOR	DRAWN BY	P. QUACH	P.CHAU/D.WADER/C.CARBINO FIELD INVESTIGATION BY:	PREPARED FOR THE STATE OF CALIFORNIA DEPARTMENT OF TRANSPORTATION	A. LEE PROJECT ENGINEER	BRIDGE NO. 56 E0068 POST MILE 19.3
11/12/10 SIGN OFF DATE		CHECKED BY	S. PIRATHIVIRAJ	DATE: Nov 6 2007 to March 7 2008			RETAINING WALL 339 LOG OF TEST BORINGS SHEET 2 OF 4

OSF GEOTECHNICAL LOG OF TEST BORINGS SHEET (ENGLISH) (REV. 2/25/05)

ORIGINAL SCALE IN INCHES FOR REDUCED PLANS 0 1 2 3

CU 08
EA 448401

DISREGARD PRINTS BEARING EARLIER REVISION DATES — REVISION DATES (PRELIMINARY STAGE ONLY) 8/23/10

SHEET 8 OF 10

FILE => 56e0068z1otb08.dgn

USERNAME => trienord DATE PLOTTED => 30-APR-2011 TIME PLOTTED =>

DIST	COUNTY	ROUTE	POST MILES TOTAL PROJECT	SHEET No	TOTAL SHEETS
08	Riv	91	15.6/21.6	1495	2028

GEOTECHNICAL PROFESSIONAL — DATE 11/03/2010

4-25-11
PLANS APPROVAL DATE

REGISTERED PROFESSIONAL ENGINEER — FAHID MOTAMED — No. 2738 — Exp. 6-30-11 — GEOTECHNICAL — STATE OF CALIFORNIA

The State of California or its officers or agents shall not be responsible for the accuracy or completeness of electronic copies of this plan sheet.

California Department of Transportation
5900 Folsom Boulevard
Sacramento, CA 95819

URS Corporation
2020 East First Street, Suite 400
Santa Ana, CA 92705

FOR PLAN VIEW, SEE
"LOG OF TEST BORINGS 4 OF 4"

NOTE: 1. This LOTB sheet was prepared in accordance with the Caltrans Soil & Rock Logging, Classification, and Presentation Manual (June 2007).

2. For legend, see "Log of Test Borings 1 OF 4"

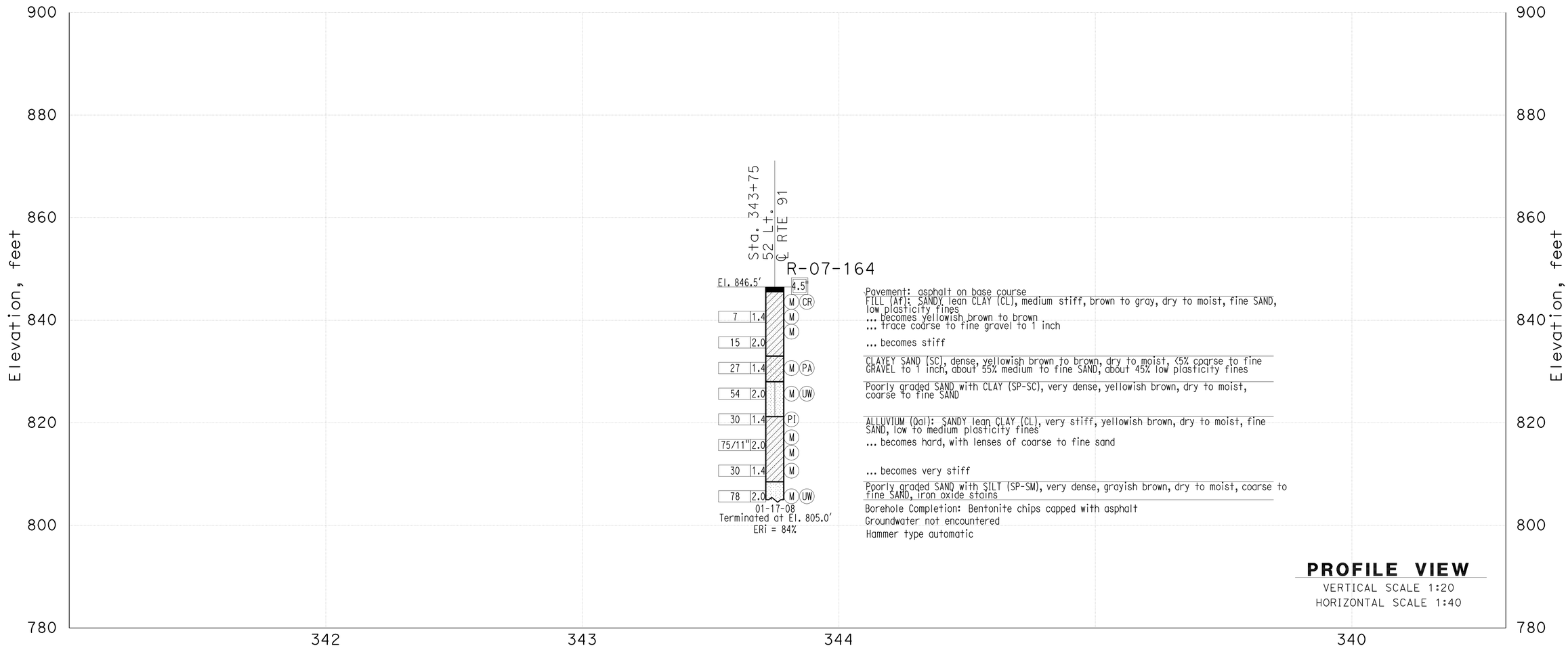

PROFILE VIEW
VERTICAL SCALE 1:20
HORIZONTAL SCALE 1:40

THIS PLAN ACCURATE FOR SOUND WALL AND RETAINING WALL WORK ONLY

GINA PURSELL DESIGN OVERSIGHT	SHAWN WEI FUNCTIONAL SUPERVISOR	DRAWN BY	P. QUACH	P.CHAU/D.WADER/C.CARBINO FIELD INVESTIGATION BY:	PREPARED FOR THE STATE OF CALIFORNIA DEPARTMENT OF TRANSPORTATION	A. LEE PROJECT ENGINEER	BRIDGE NO. 56 E068 POST MILE 19.3
11/12/10 SIGN OFF DATE		CHECKED BY	S. PIRATHIVIRAJ	DATE: Nov 6 2007 to March 7 2008			

RETAINING WALL 339
LOG OF TEST BORINGS SHEET 3 OF 4

OSF GEOTECHNICAL LOG OF TEST BORINGS SHEET (ENGLISH) (REV. 2/25/05)

ORIGINAL SCALE IN INCHES FOR REDUCED PLANS 0 1 2 3

CU 08
EA 448401

DISREGARD PRINTS BEARING EARLIER REVISION DATES

REVISION DATES (PRELIMINARY STAGE ONLY) 8/23/10

SHEET 9 OF 10

FILE => 56e0068zlotb09.dgn

DATE PLOTTED => 30-APR-2011 TIME PLOTTED =>
USERNAME => friehard

DIST	COUNTY	ROUTE	POST MILES TOTAL PROJECT	SHEET No	TOTAL SHEETS
08	Riv	91	15.6/21.6	1496	2028

GEOTECHNICAL PROFESSIONAL — DATE 11/03/2010

4-25-11
PLANS APPROVAL DATE

REGISTERED PROFESSIONAL ENGINEER — FAHID MOTAMED No. 2738 Exp. 6-30-11 GEOTECHNICAL — STATE OF CALIFORNIA

The State of California or its officers or agents shall not be responsible for the accuracy or completeness of electronic copies of this plan sheet.

California Department of Transportation
5900 Folsom Boulevard
Sacramento, CA 95819

URS Corporation
2020 East First Street, Suite 400
Santa Ana, CA 92705

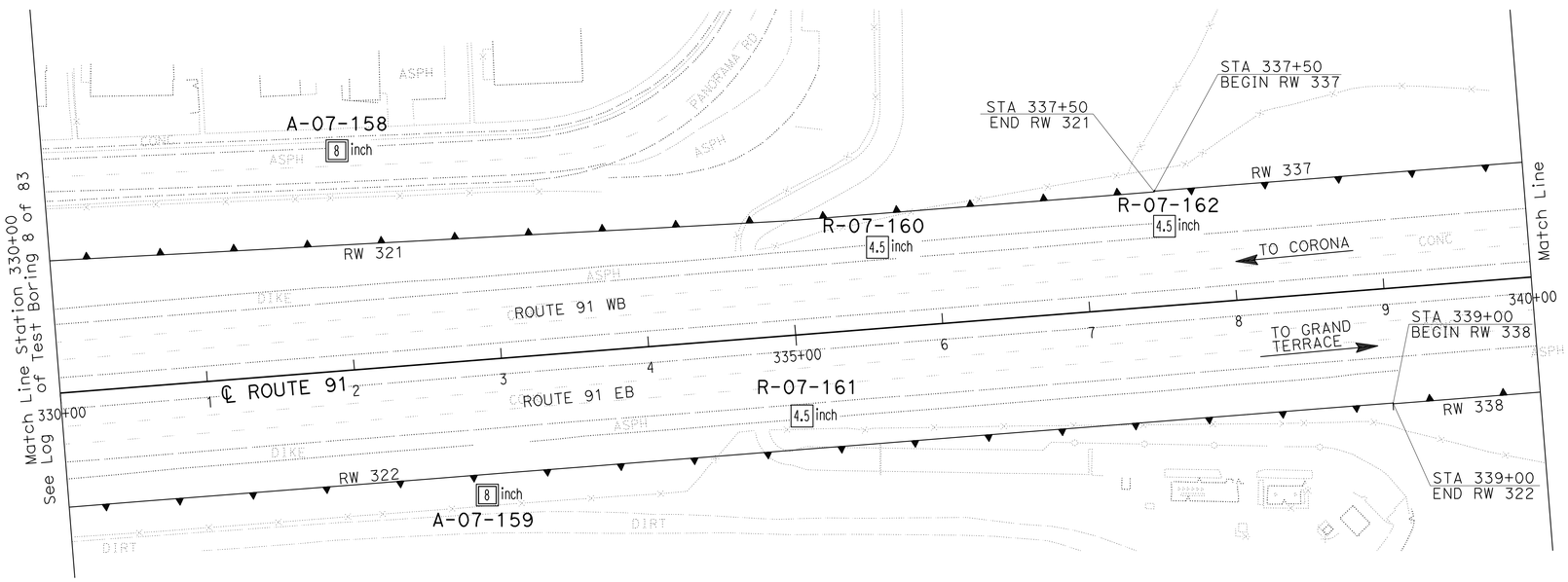

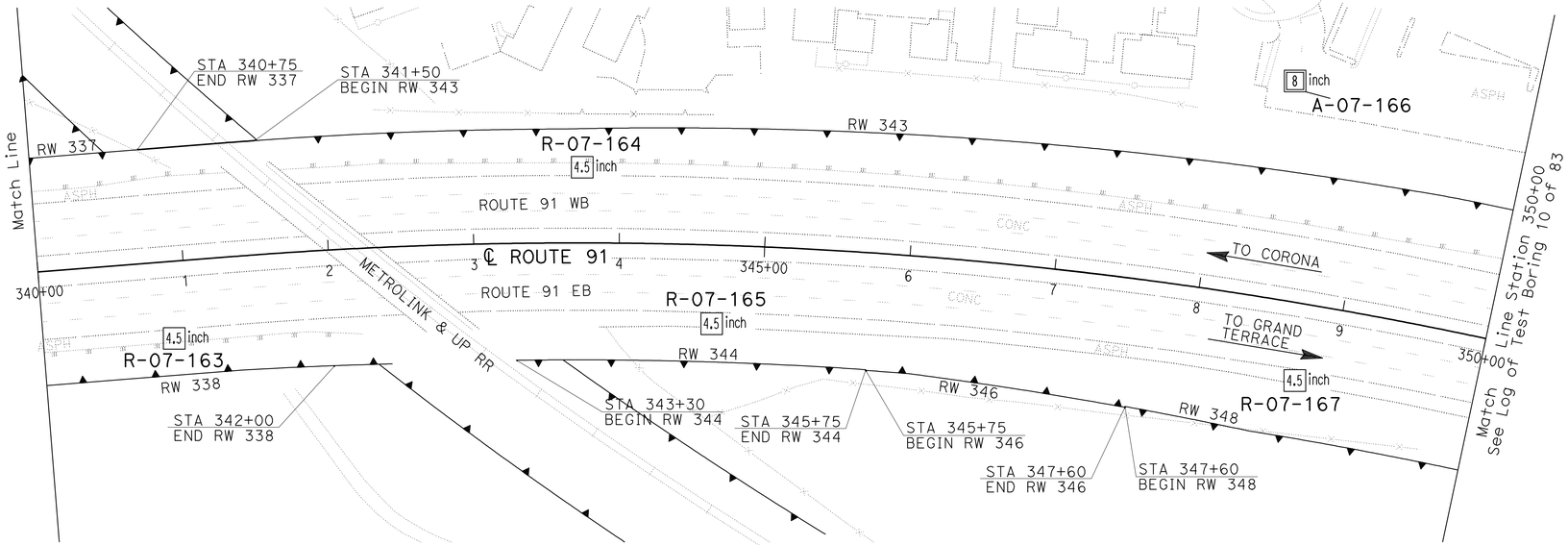

PLAN
SCALE 1"=50'

Borehole Number	Drill Rig	Hammer Type	Avg. Hammer Efficiency, ETR (%)
A-07-158	Diedrich D-120	Automatic	75*
A-07-159	Diedrich D-120	Automatic	75*
R-07-160	CME 85	Automatic	87
R-07-161	CS-2000	Automatic	84
R-07-162	CS-2000	Automatic	84
R-07-163	CME 85	Automatic	87
R-07-164	CS-2000	Automatic	84
R-07-165	CS-2000	Automatic	84
A-07-166	Diedrich D-120	Automatic	75*
R-07-167	Acker Rig	Automatic	74

Sampler Type	Inside Diameter (Inches)	Borehole Numbers
SPT	1.375	A-07-158, A-07-159, R-07-60 R-07-161, R-07-162, R-07-163 R-07-164, R-07-165, A-07-166 R-07-177
Modified California 1	1.94	R-07-160, R-07-162, R-07-163 R-07-164, R-07-165, R-07-167
Modified California 2	2.40	A-07-158, A-07-159, A-07-166

*Estimated Hammer Efficiency Rating.

GINA PURSELL — DESIGN OVERSIGHT
SHAWN WEI — FUNCTIONAL SUPERVISOR
11/12/10 — SIGN OFF DATE

DRAWN BY: P. QUACH
CHECKED BY: S. PIRATHIVIRAJ

P.CHAU/D.WADER/C.CARBINO
FIELD INVESTIGATION BY:
DATE: Nov 6 2007 to March 7 2008

PREPARED FOR THE STATE OF CALIFORNIA DEPARTMENT OF TRANSPORTATION

A. LEE — PROJECT ENGINEER

BRIDGE NO. 56 E0068
POST MILE 19.3

WALL LAYOUT & EXPLORATORY LOCATION MAP
LOG OF TEST BORINGS 4 OF 4

OSF GEOTECHNICAL LOG OF TEST BORINGS SHEET (ENGLISH) (REV. 2/25/05)

ORIGINAL SCALE IN INCHES FOR REDUCED PLANS 0 1 2 3

CU 08
EA 448401

DISREGARD PRINTS BEARING EARLIER REVISION DATES
REVISION DATES (PRELIMINARY STAGE ONLY) 8/23/10

SHEET 10 OF 10

FILE => 56e0068zlotb10.dgn

USERNAME => trlehard DATE PLOTTED => 30-APR-2011 TIME PLOTTED =>

DIST	COUNTY	ROUTE	POST MILES TOTAL PROJECT	SHEET No	TOTAL SHEETS
08	Riv	91	15.6/21.6	1497	2028

REGISTERED CIVIL ENGINEER 11/12/10 DATE

4-25-11
PLANS APPROVAL DATE

REGISTERED PROFESSIONAL ENGINEER HUAN VU No. 60696 Exp. 12-31-10 CIVIL STATE OF CALIFORNIA

The State of California or its officers or agents shall not be responsible for the accuracy or completeness of electronic copies of this plan sheet.

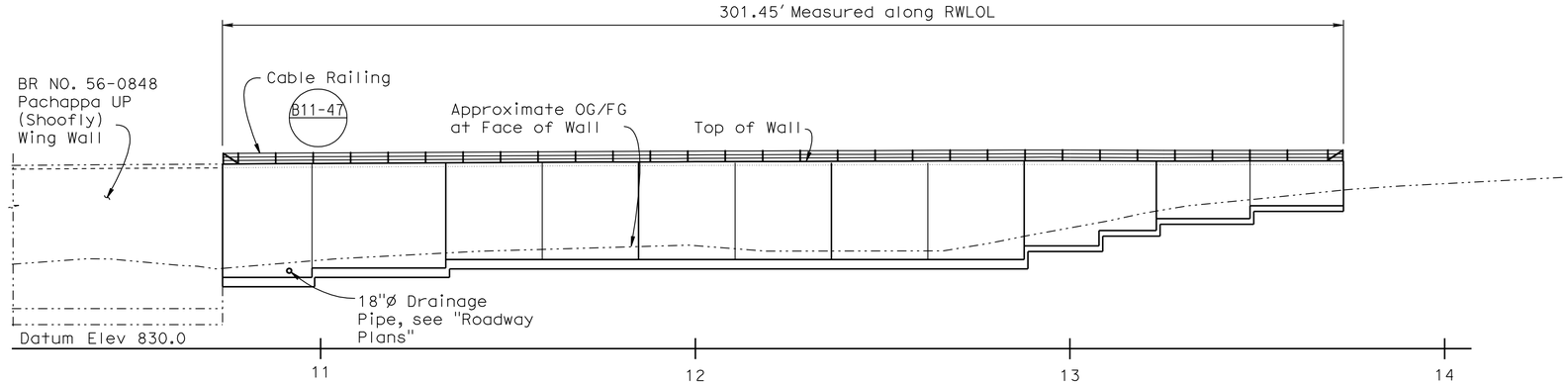

DEVELOPED ELEVATION

1" = 20'

QUANTITIES

STRUCTURE EXCAVATION (RETAINING WALL)	1,748	CY
STRUCTURE BACKFILL (RETAINING WALL)	4,075	CY
PERVIOUS BACKFILL MATERIAL (RETAINING WALL)	193	CY
STRUCTURAL CONCRETE, RETAINING WALL	1,129	CY
BAR REINFORCING STEEL (RETAINING WALL)	125,346	LB
MINOR CONCRETE (GUTTER)	302	LF
CABLE RAILING	302	LF

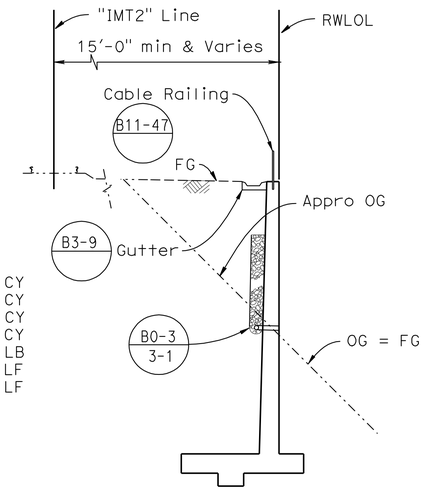

TYPICAL SECTION

No Scale

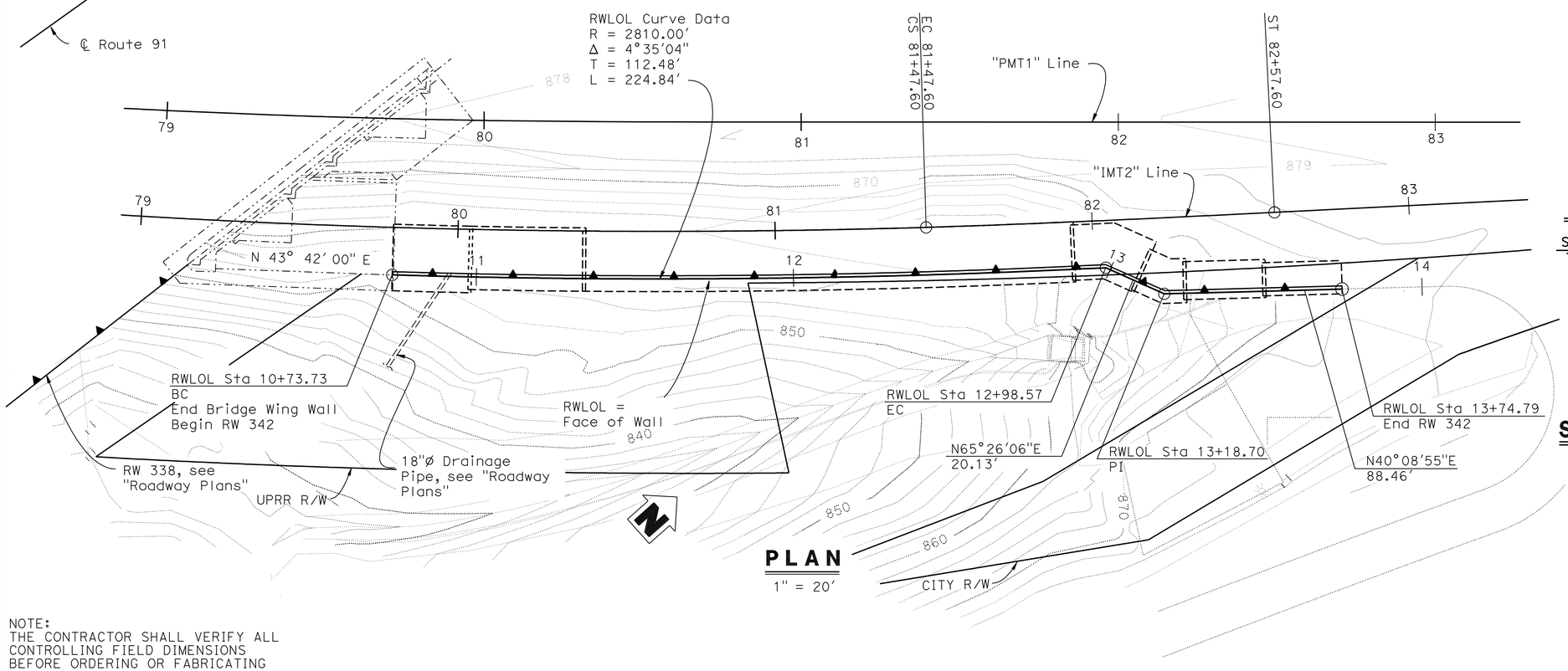

PLAN

1" = 20'

INDEX TO PLANS

Sheet No.	Title
1	GENERAL PLAN
2	RETAINING WALL LAYOUT NO. 1
3	RETAINING WALL LAYOUT NO. 2
4	RETAINING WALL LAYOUT NO. 3
5	RETAINING WALL DETAILS
6	LOG OF TEST BORINGS 1 OF 3
7	LOG OF TEST BORINGS 2 OF 3
8	LOG OF TEST BORINGS 3 OF 3

STANDARD PLANS DATED MAY 2006

A10A	ACRONYMS AND ABBREVIATIONS (SHEET 1 OF 2)
A10B	ACRONYMS AND ABBREVIATIONS (SHEET 2 OF 2)
A10C	SYMBOLS (SHEET 1 OF 2)
A10D	SYMBOLS (SHEET 2 OF 2)
A62B	LIMITS OF PAYMENT FOR EXCAVATION AND BACKFILL BRIDGE SURCHARGE AND WALL
B0-3	BRIDGE DETAILS
B3-8	RETAINING WALL DETAILS NO. 1
B3-9	RETAINING WALL DETAILS NO. 2
B11-47	CABLE RAILING

STANDARD PLAN SHEET NO.

DETAIL NO.

NOTE:
THE CONTRACTOR SHALL VERIFY ALL CONTROLLING FIELD DIMENSIONS BEFORE ORDERING OR FABRICATING ANY MATERIAL.

DANIEL T. ADAMS
DESIGN ENGINEER

	BY	CHECKED
DESIGN	H. Vu	R. Stiltz
DETAILS	R. Kirkland/D.Wooten	R. Stiltz
QUANTITIES	H. Vu	J. Szabo

LOAD & RESISTANCE FACTOR DESIGN — LIVE LOADING: HL93 W/"LOW-BOY"; PERMIT DESIGN VEHICLE

	BY	CHECKED
LAYOUT	H. Vu	R. Stiltz
SPECIFICATIONS	D. Klein	PLANS AND SPECS COMPARED D. Klein

STATE OF CALIFORNIA
DEPARTMENT OF TRANSPORTATION

DIVISION OF ENGINEERING SERVICES
STRUCTURE DESIGN
DESIGN BRANCH 10

BRIDGE NO. 56E0069
POST MILE 19.40

RETAINING WALL NO. 342
GENERAL PLAN

ORIGINAL SCALE IN INCHES FOR REDUCED PLANS 0 1 2 3

CU 08
EA 448401

DISREGARD PRINTS BEARING EARLIER REVISION DATES

REVISION DATES: 2-18-10 5-05-10 8-19-10 10-04-10 11-04-10

SHEET 1 OF 8

STRUCTURES DESIGN GENERAL PLAN SHEET (ENGLISH) (REV.07-24-06)

FILE => 56e0069agp01.dgn

USERNAME => Trlenard DATE PLOTTED => 30-APR-2011 TIME PLOTTED => 10:35

DIST	COUNTY	ROUTE	POST MILES TOTAL PROJECT	SHEET No	TOTAL SHEETS
08	Riv	91	15.6/21.6	1498	2028

REGISTERED CIVIL ENGINEER 11/12/10 DATE

4-25-11
PLANS APPROVAL DATE

The State of California or its officers or agents shall not be responsible for the accuracy or completeness of electronic copies of this plan sheet.

REGISTERED PROFESSIONAL ENGINEER HUAN VU No. 60696 Exp. 12-31-10 CIVIL STATE OF CALIFORNIA

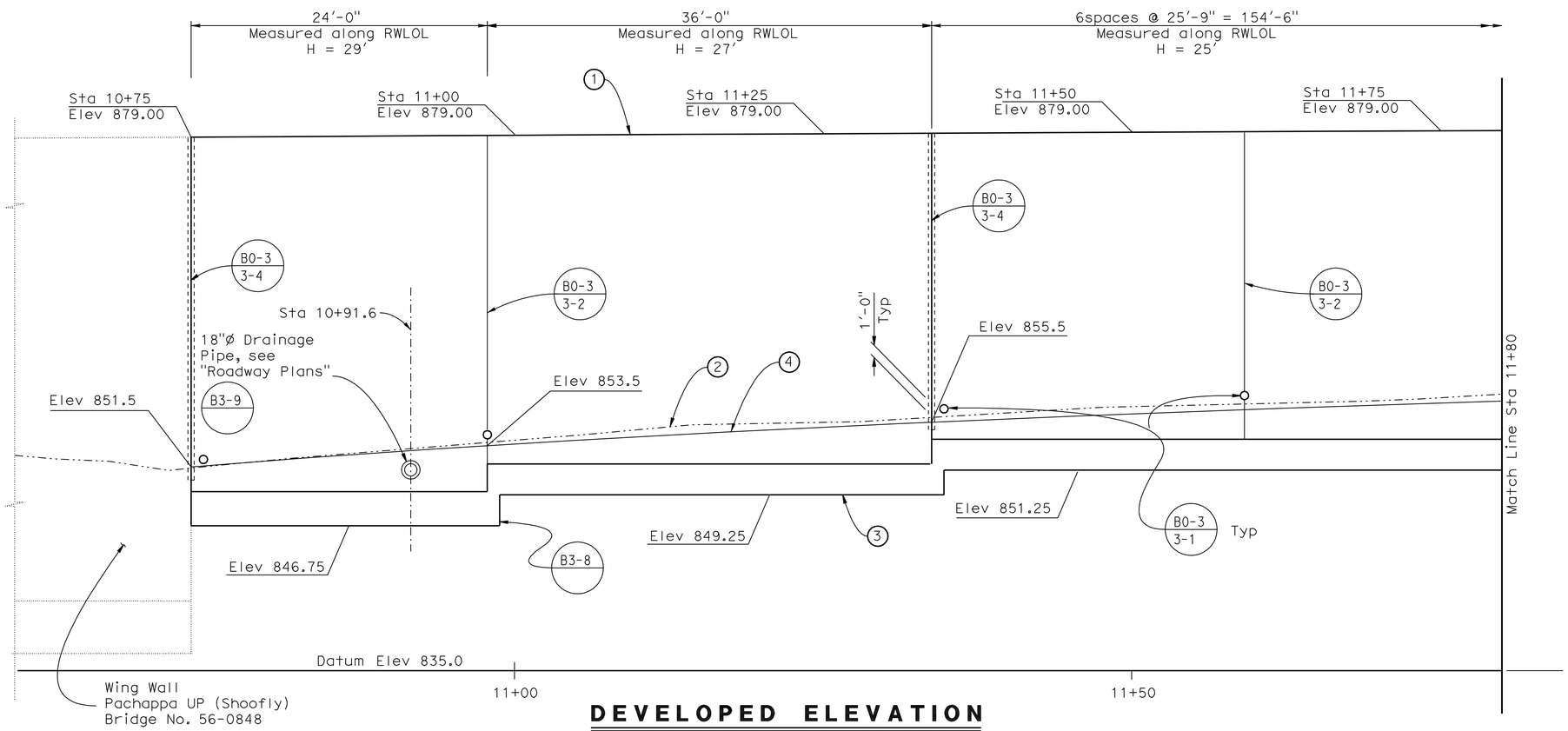

DEVELOPED ELEVATION

3/16" = 1'-0"

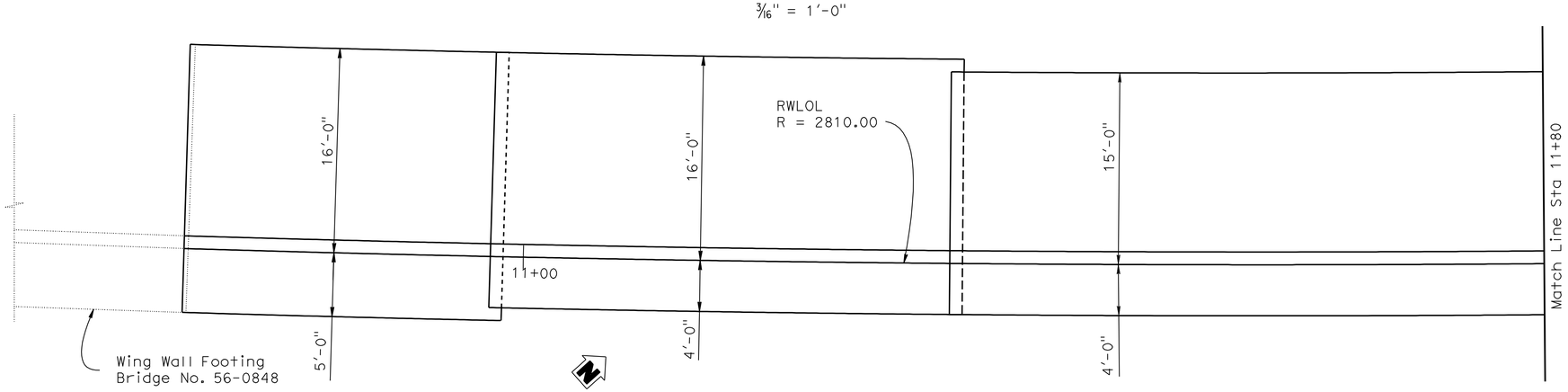

NOTE:
THE CONTRACTOR SHALL VERIFY ALL CONTROLLING FIELD DIMENSIONS BEFORE ORDERING OR FABRICATING ANY MATERIAL.

FOOTING PLAN

3/16" = 1'-0"

NOTES:

1. For Section see "RETAINING WALL DETAILS" sheet.
2. Cable Railing & Shear Key not shown for clarity.

LEGEND:

1. Top of Wall
2. Approximate OG at Face of Wall
3. Bottom of Retaining Wall Footing
4. FG

	BY	CHECKED
DESIGN	H. Vu	R. Stiltz
DETAILS	R. Kirkland/D. Wooten	R. Stiltz
QUANTITIES	H. Vu	J. Szabo

STATE OF CALIFORNIA
DEPARTMENT OF TRANSPORTATION

DIVISION OF ENGINEERING SERVICES
STRUCTURE DESIGN
DESIGN BRANCH 10

BRIDGE NO. 56E0069
POST MILE 19.40

RETAINING WALL NO. 342
RETAINING WALL LAYOUT NO. 1

STRUCTURES DESIGN DETAIL SHEET (ENGLISH) (REV. 10/25/05)

ORIGINAL SCALE IN INCHES FOR REDUCED PLANS 0 1 2 3

CU 08
EA 448401

DISREGARD PRINTS BEARING EARLIER REVISION DATES → 7-15-10 7-23-10 8-16-10

REVISION DATES

SHEET 2 OF 8

FILE => 56e0069csp02.dgn

USERNAME => trlenard DATE PLOTTED => 30-APR-2011 TIME PLOTTED => 10:35

DIST	COUNTY	ROUTE	POST MILES TOTAL PROJECT	SHEET No	TOTAL SHEETS
08	Riv	91	15.6/21.6	1499	2028

REGISTERED CIVIL ENGINEER 11/12/10 DATE

4-25-11
PLANS APPROVAL DATE

REGISTERED PROFESSIONAL ENGINEER Huan Vu No. 60696 Exp. 12/31/10 CIVIL STATE OF CALIFORNIA

The State of California or its officers or agents shall not be responsible for the accuracy or completeness of electronic copies of this plan sheet.

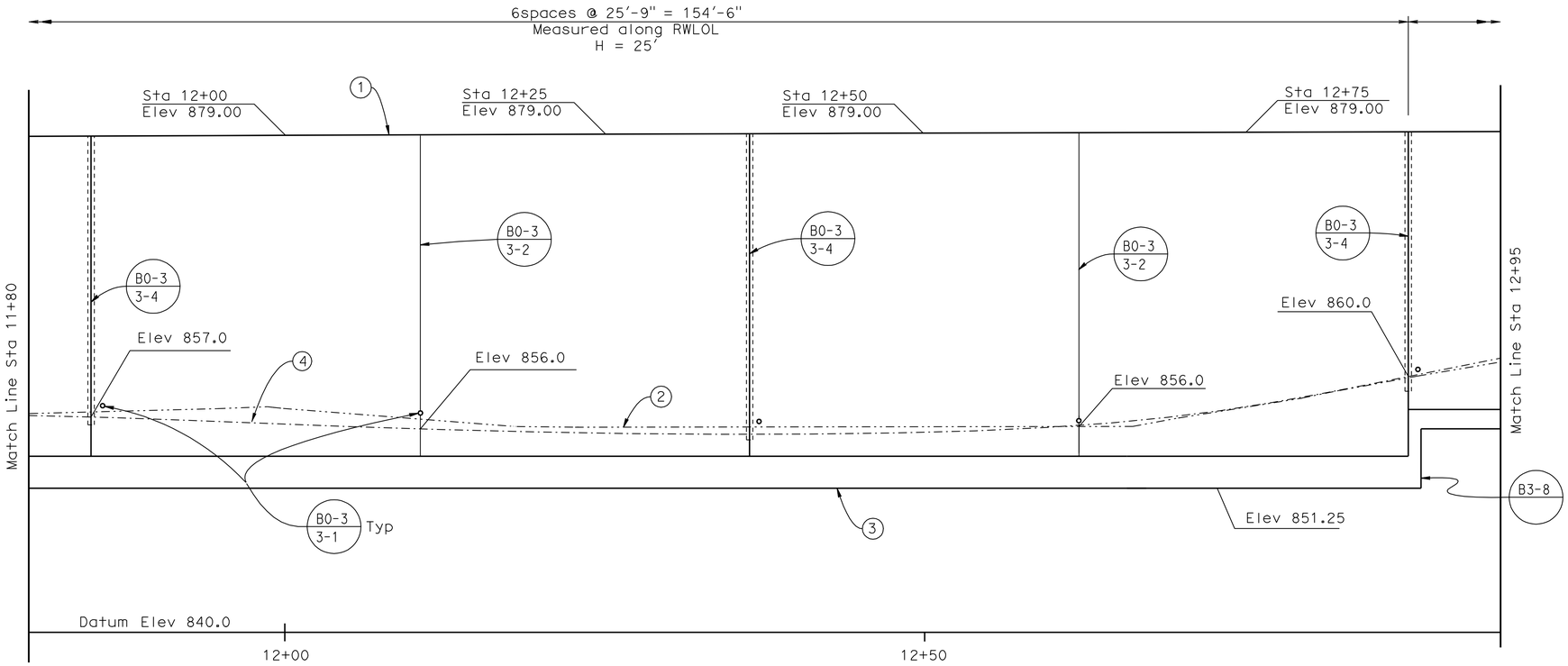

DEVELOPED ELEVATION

3/16" = 1'-0"

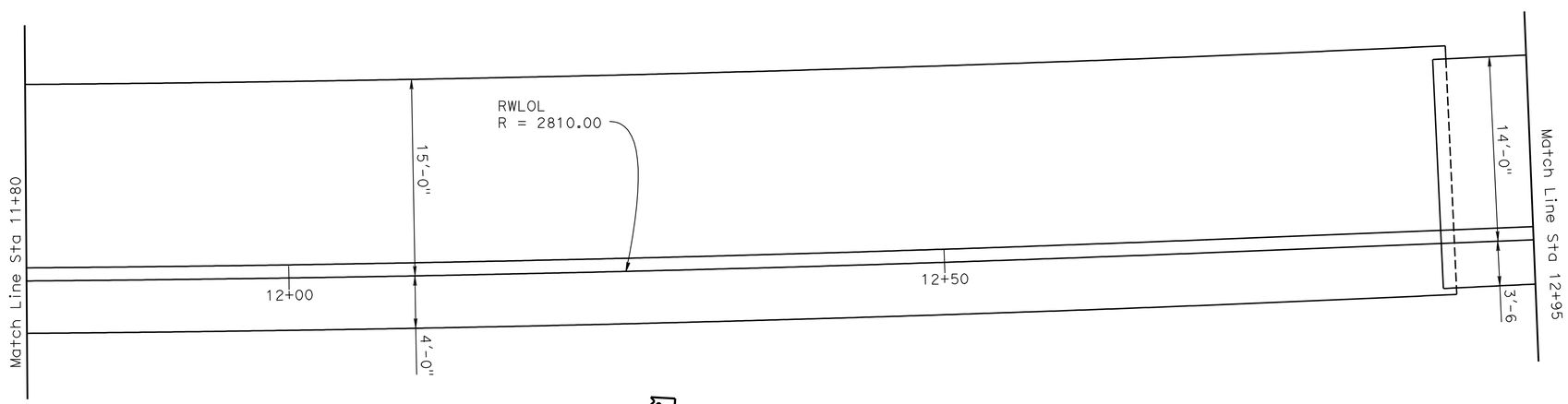

FOOTING PLAN

3/16" = 1'-0"

NOTES:

1. For Section see "RETAINING WALL DETAILS" sheet.
2. Barrier & Shear Key not shown for clarity.

LEGEND:

1. Top of Wall
2. Approximate OG at Face of Wall
3. Bottom of Retaining Wall Footing
4. FG

NOTE:
THE CONTRACTOR SHALL VERIFY ALL CONTROLLING FIELD DIMENSIONS BEFORE ORDERING OR FABRICATING ANY MATERIAL.

	BY	CHECKED
DESIGN	H. Vu	R. Stiltz
DETAILS	R. Kirkland/D. Wooten	R. Stiltz
QUANTITIES	H. Vu	J. Szabo

STATE OF CALIFORNIA
DEPARTMENT OF TRANSPORTATION

DIVISION OF ENGINEERING SERVICES
STRUCTURE DESIGN
DESIGN BRANCH 10

BRIDGE NO. 56E0069
POST MILE 19.40

RETAINING WALL NO. 342
RETAINING WALL LAYOUT NO. 2

STRUCTURES DESIGN DETAIL SHEET (ENGLISH) (REV. 10/25/05)

ORIGINAL SCALE IN INCHES FOR REDUCED PLANS 0 1 2 3

CU 08
EA 448401

DISREGARD PRINTS BEARING EARLIER REVISION DATES

REVISION DATES: 2-18-10 5-03-10 8-17-10

SHEET 3 OF 8

FILE => 56e0069csp03.dgn

USERNAME => rlenord DATE PLOTTED => 30-APR-2011 TIME PLOTTED => 10:36

DIST	COUNTY	ROUTE	POST MILES TOTAL PROJECT	SHEET No	TOTAL SHEETS
08	Riv	91	15.6/21.6	1500	2028

REGISTERED CIVIL ENGINEER 11/12/10 DATE

4-25-11
PLANS APPROVAL DATE

REGISTERED PROFESSIONAL ENGINEER HUAN VU No. 60696 Exp. 12/31/10 CIVIL STATE OF CALIFORNIA

The State of California or its officers or agents shall not be responsible for the accuracy or completeness of electronic copies of this plan sheet.

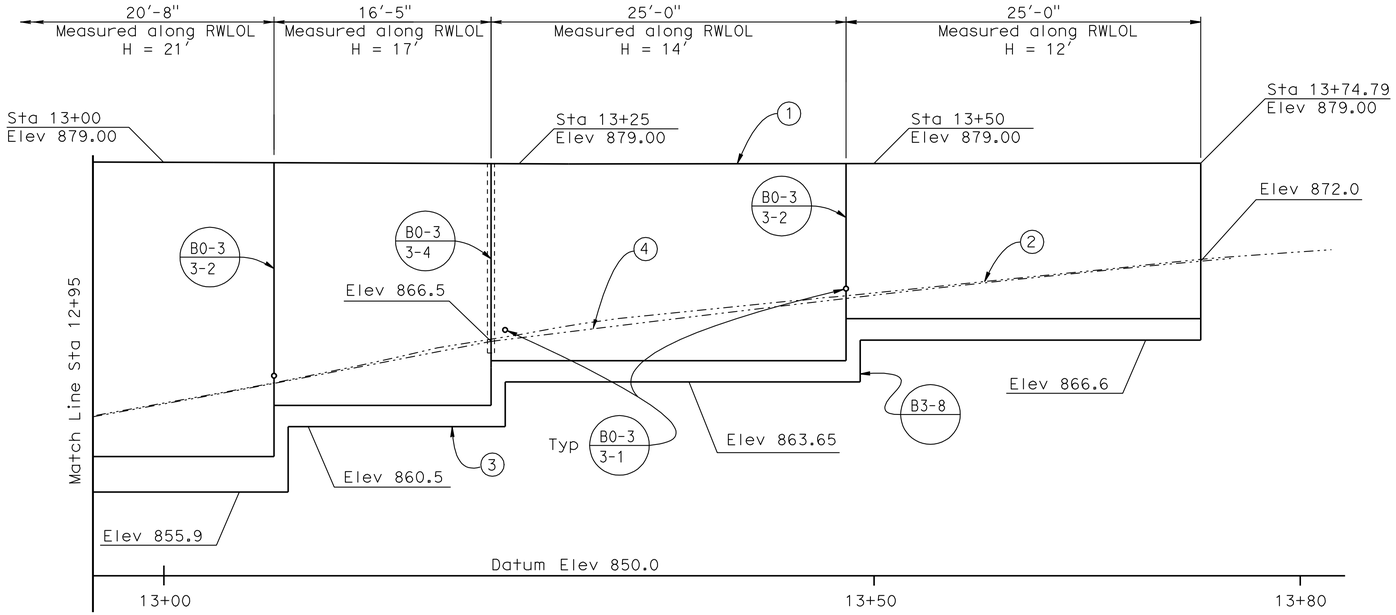

DEVELOPED ELEVATION

3/16" = 1'-0"

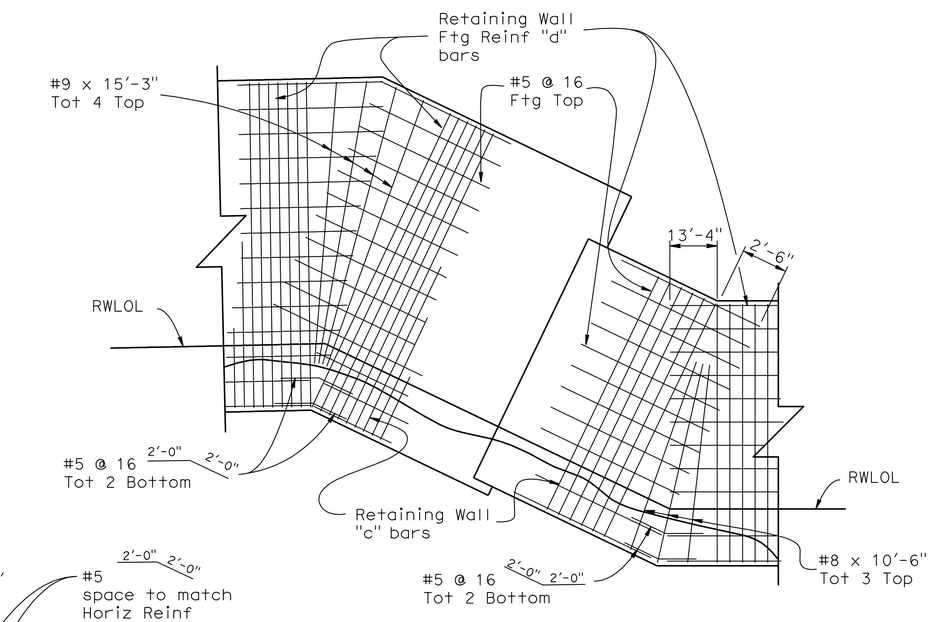

FOOTING REINFORCEMENT

1/4" = 1'-0"

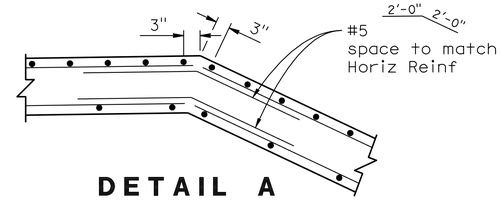

DETAIL A

3/4" = 1'-0"

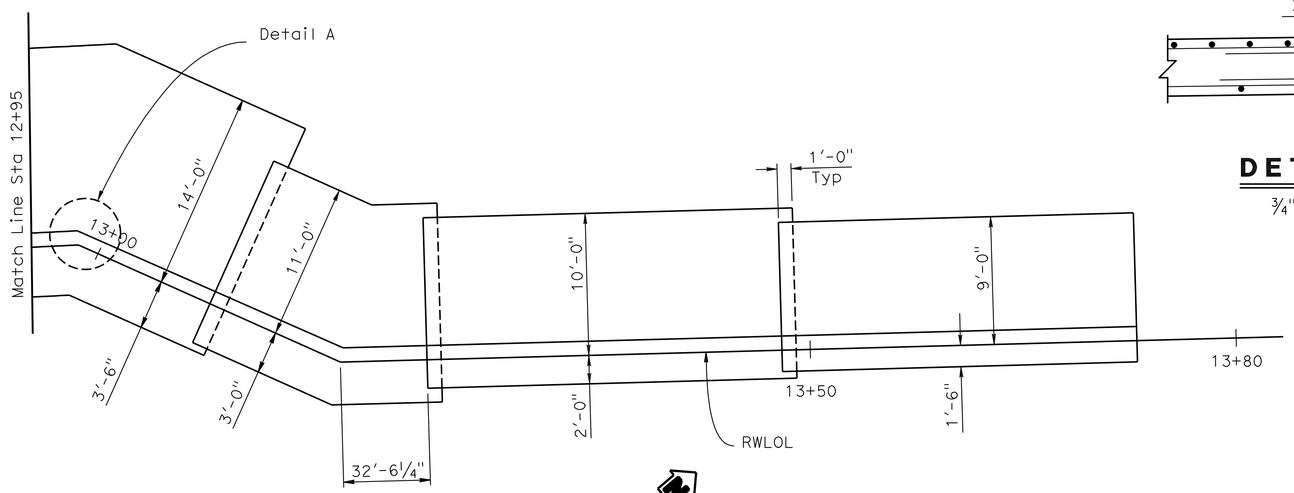

FOOTING PLAN

3/16" = 1'-0"

NOTES:

1. For Section see "RETAINING WALL DETAILS" sheet.
2. Barrier and Shear Key not shown for clarity.

LEGEND:

1. Top of Wall
2. Approximate OG at Face of Wall
3. Bottom of Retaining Wall Footing
4. FG

NOTE:
THE CONTRACTOR SHALL VERIFY ALL CONTROLLING FIELD DIMENSIONS BEFORE ORDERING OR FABRICATING ANY MATERIAL.

	BY	CHECKED
DESIGN	H. Vu	R. Stiltz
DETAILS	R. Kirkland/D. Wooten	R. Stiltz
QUANTITIES	H. Vu	J. Szabo

STATE OF CALIFORNIA
DEPARTMENT OF TRANSPORTATION

DIVISION OF ENGINEERING SERVICES
STRUCTURE DESIGN
DESIGN BRANCH 10

BRIDGE NO. 56E0069
POST MILE 19.40

RETAINING WALL NO. 342
RETAINING WALL LAYOUT NO. 3

STRUCTURES DESIGN DETAIL SHEET (ENGLISH) (REV. 10/25/05)

ORIGINAL SCALE IN INCHES FOR REDUCED PLANS 0 1 2 3

CU 08
EA 448401

DISREGARD PRINTS BEARING EARLIER REVISION DATES 2-18-10 5-03-10 8-17-10 10-04-10

REVISION DATES

SHEET 4 OF 8

FILE => 56e0069csp04.dgn

USERNAME => trphtis DATE PLOTTED => 30-APR-2011 TIME PLOTTED => 11:28