Dist	COUNTY	ROUTE	POST MILES TOTAL PROJECT	SHEET No.	TOTAL SHEETS
08	Riv	91	15.6/21.6	104	2028

REGISTERED CIVIL ENGINEER — DATE 12-1-10

4-25-11
PLANS APPROVAL DATE

REGISTERED PROFESSIONAL ENGINEER — CUONG LE TRAN — No. C60436 — Exp 6/30/12 — CIVIL — STATE OF CALIFORNIA

THE STATE OF CALIFORNIA OR ITS OFFICERS OR AGENTS SHALL NOT BE RESPONSIBLE FOR THE ACCURACY OR COMPLETENESS OF SCANNED COPIES OF THIS PLAN SHEET.

NOTE:

FOR ACCURATE RIGHT OF WAY AND ACCESS DATA,
CONTACT RIGHT OF WAY ENGINEERING AT THE DISTRICT OFFICE.

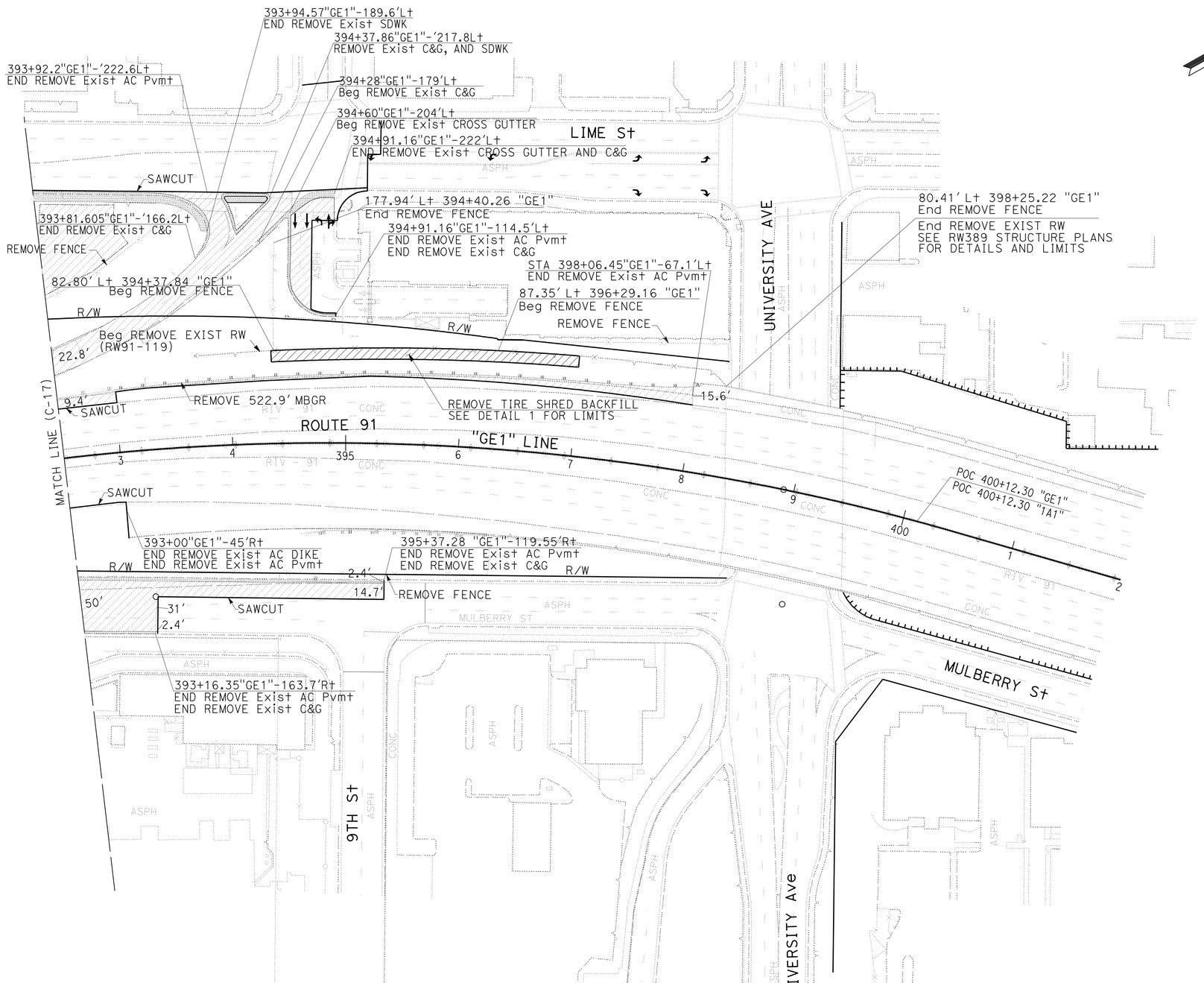

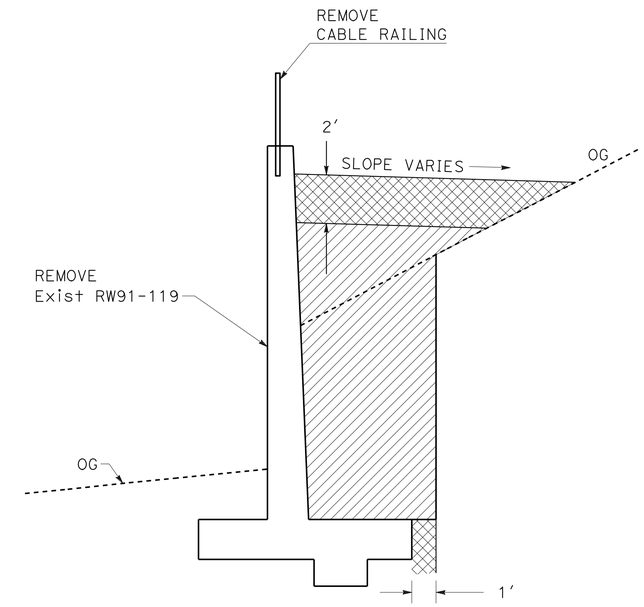

DETAIL 1

NO SCALE

LIMITS OF STRUCTURE BACKFILL
FROM STA 394+35 TO 396+98

LIMITS OF TIRE SHRED BACKFILL
FROM STA 394+35 TO 396+98

4 **REVISED PER ADDENDUM No. 4 DATED DECEMBER 2, 2011**

CONSTRUCTION DETAILS
(REMOVALS)

SCALE: 1"=50'

C-18

REVISED BY	DATE REVISED

CUONG LE TRAN — ANNABELL WANG — CALCULATED-DESIGNED BY — CHECKED BY

FUNCTIONAL SUPERVISOR: MARK PERTILE

STATE OF CALIFORNIA - DEPARTMENT OF TRANSPORTATION — Caltrans — DESIGN

LAST REVISION 11-15-11 — DATE PLOTTED => 02-DEC-2011 — TIME PLOTTED => 13:03

Dist	COUNTY	ROUTE	POST MILES TOTAL PROJECT	SHEET No.	TOTAL SHEETS
08	Riv	91	15.6/21.6	235	2028

REGISTERED CIVIL ENGINEER 3-29-10 DATE

4-25-11
PLANS APPROVAL DATE

REGISTERED PROFESSIONAL ENGINEER ALAN R. BISI No. C62808 Exp. 6-30-12 CIVIL STATE OF CALIFORNIA

THE STATE OF CALIFORNIA OR ITS OFFICERS OR AGENTS SHALL NOT BE RESPONSIBLE FOR THE ACCURACY OR COMPLETENESS OF SCANNED COPIES OF THIS PLAN SHEET.

NOTE:

FOR ACCURATE RIGHT OF WAY AND ACCESS DATA, CONTACT RIGHT OF WAY ENGINEERING AT THE DISTRICT OFFICE.

Ω - SEE DRAINAGE DETAIL (DD SHEET).

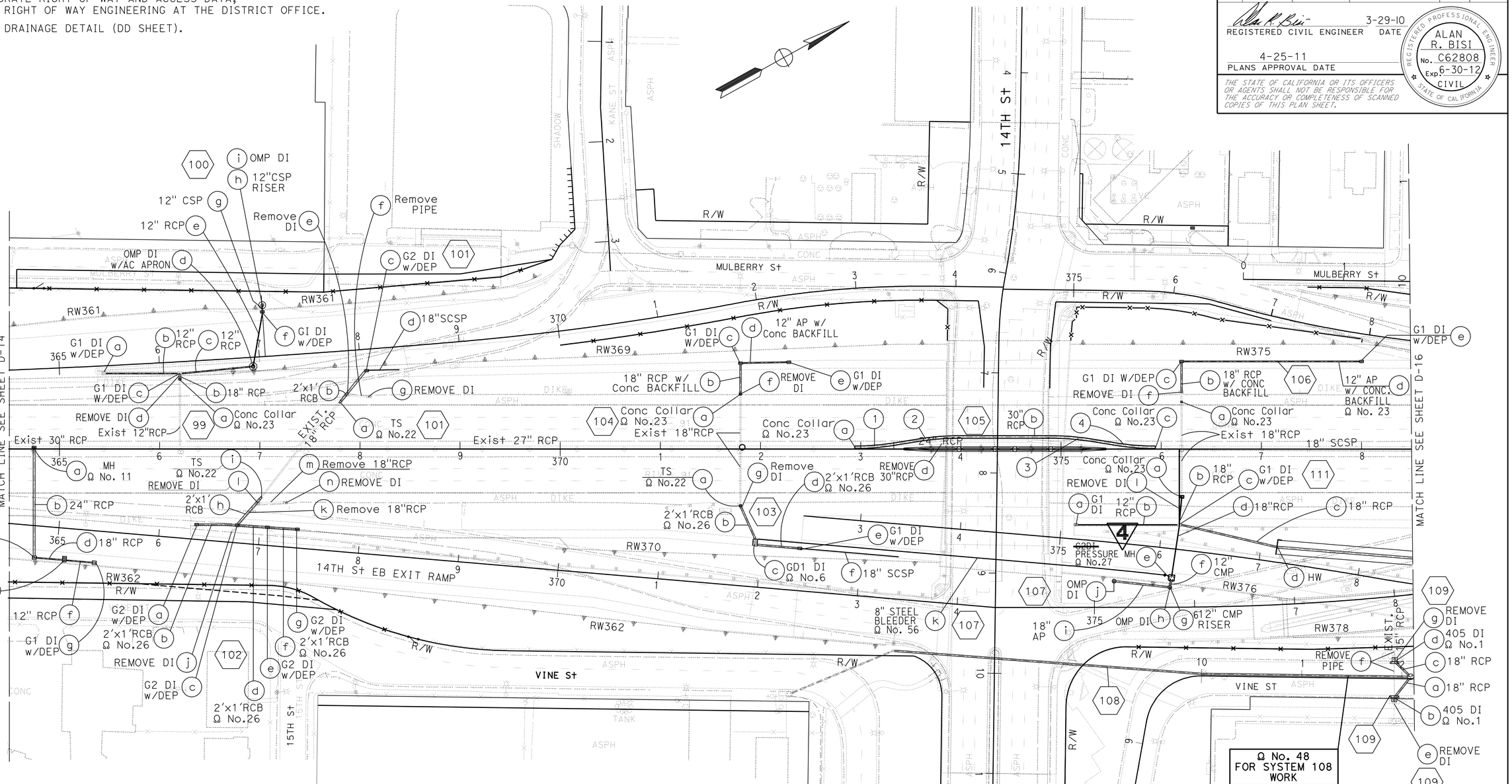

CURVE DATA

No.	R	Δ	T	L
1	246.08′	09°07′59″	19.65′	39.23′
2	253.58′	09°07′36″	20.24′	40.39′
3	253.58′	09°07′59″	20.25′	40.42′
4	246.08′	09°07′59″	19.65′	39.23′

4 REVISED PER ADDENDUM No. 4 DATED DECEMBER 2, 2011

THIS PLAN ACCURATE FOR DRAINAGE WORK ONLY.

DRAINAGE PLAN

SCALE: 1" = 50′

D-15

STATE OF CALIFORNIA - DEPARTMENT OF TRANSPORTATION

Caltrans DESIGN

FUNCTIONAL SUPERVISOR: MARK PERTILE

CALCULATED-DESIGNED BY: MOHAMMAD ABDRABOH

CHECKED BY: ALAN R. BISI

REVISED BY / DATE REVISED

LAST REVISION 03-29-11 DATE PLOTTED => 02-DEC-2011 TIME PLOTTED => 07:26

BORDER LAST REVISED 4/11/2008 | RELATIVE BORDER SCALE IS IN INCHES 0 1 2 3 | USERNAME => s124496 DGN FILE => 844840ia015.add | CU 08227 | EA 448401

Dist	COUNTY	ROUTE	POST MILES TOTAL PROJECT	SHEET No.	TOTAL SHEETS
08	Riv	91	15.6/21.6	244	2028

REGISTERED CIVIL ENGINEER 3-29-10 DATE

4-25-11
PLANS APPROVAL DATE

REGISTERED PROFESSIONAL ENGINEER ALAN R. BISI No. C62808 Exp. 6-30-12 CIVIL STATE OF CALIFORNIA

THE STATE OF CALIFORNIA OR ITS OFFICERS OR AGENTS SHALL NOT BE RESPONSIBLE FOR THE ACCURACY OR COMPLETENESS OF SCANNED COPIES OF THIS PLAN SHEET.

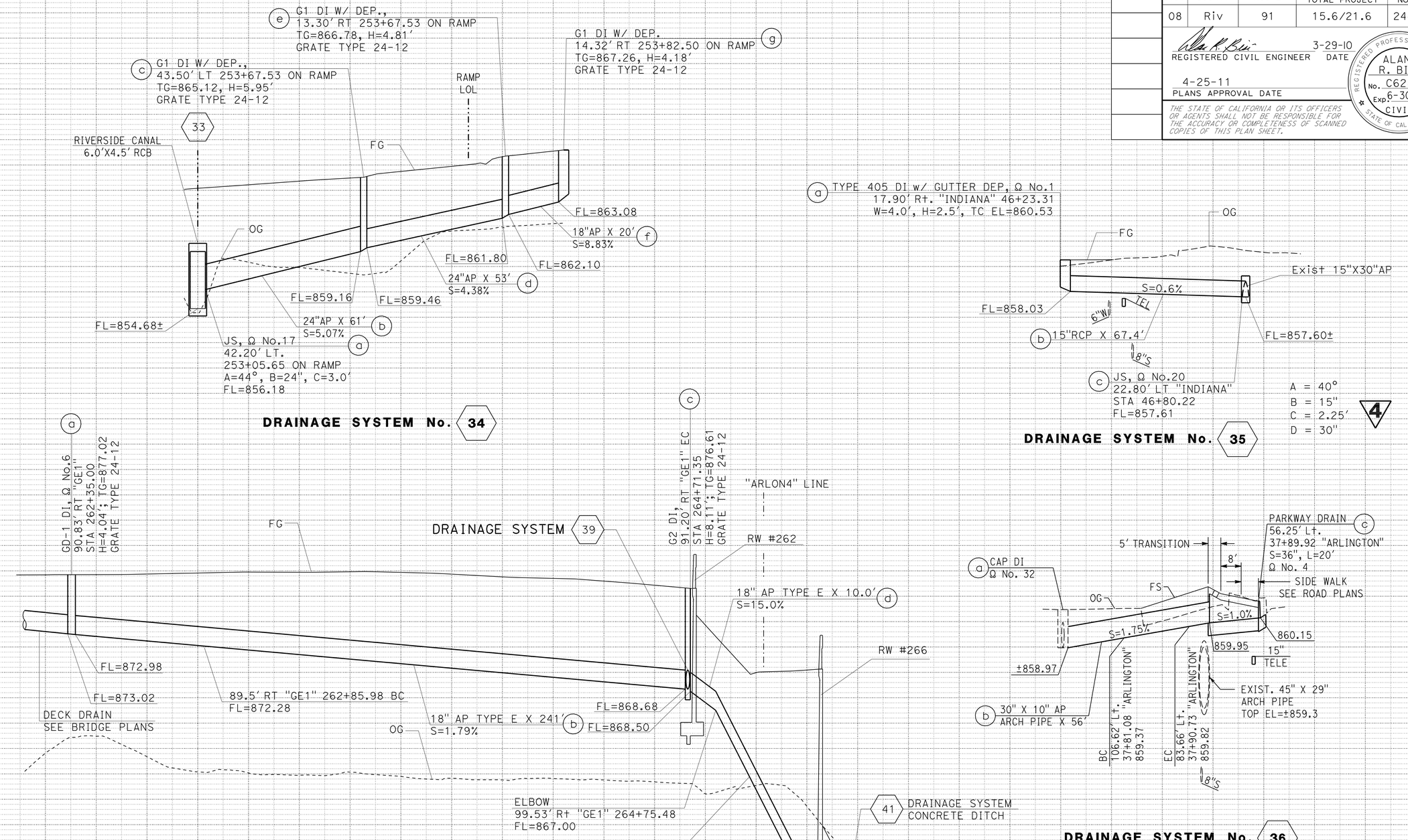

THIS PLAN ACCURATE FOR DRAINAGE WORK ONLY.

STATION		TOTAL
CY	Exc	
	Emb	

4 REVISED PER ADDENDUM No. 4 DATED DECEMBER 2, 2011

REVISED BY | DATE REVISED
MOHAMMAD ABDRABOH | ALAN R. BISI
CALCULATED-DESIGNED BY | CHECKED BY
FUNCTIONAL SUPERVISOR | MARK PERTILE
STATE OF CALIFORNIA - DEPARTMENT OF TRANSPORTATION
Caltrans DESIGN

LAST REVISION 03-29-11 | DATE PLOTTED => 02-DEC-2011 TIME PLOTTED => 07:27

Dist	COUNTY	ROUTE	POST MILES TOTAL PROJECT	SHEET No.	TOTAL SHEETS
08	Riv	91	15.6/21.6	251	2028

REGISTERED CIVIL ENGINEER 12-1-10 DATE

4-25-11
PLANS APPROVAL DATE

REGISTERED PROFESSIONAL ENGINEER ALAN R. BISI No. C62808 Exp. 6-30-12 CIVIL STATE OF CALIFORNIA

THE STATE OF CALIFORNIA OR ITS OFFICERS OR AGENTS SHALL NOT BE RESPONSIBLE FOR THE ACCURACY OR COMPLETENESS OF SCANNED COPIES OF THIS PLAN SHEET.

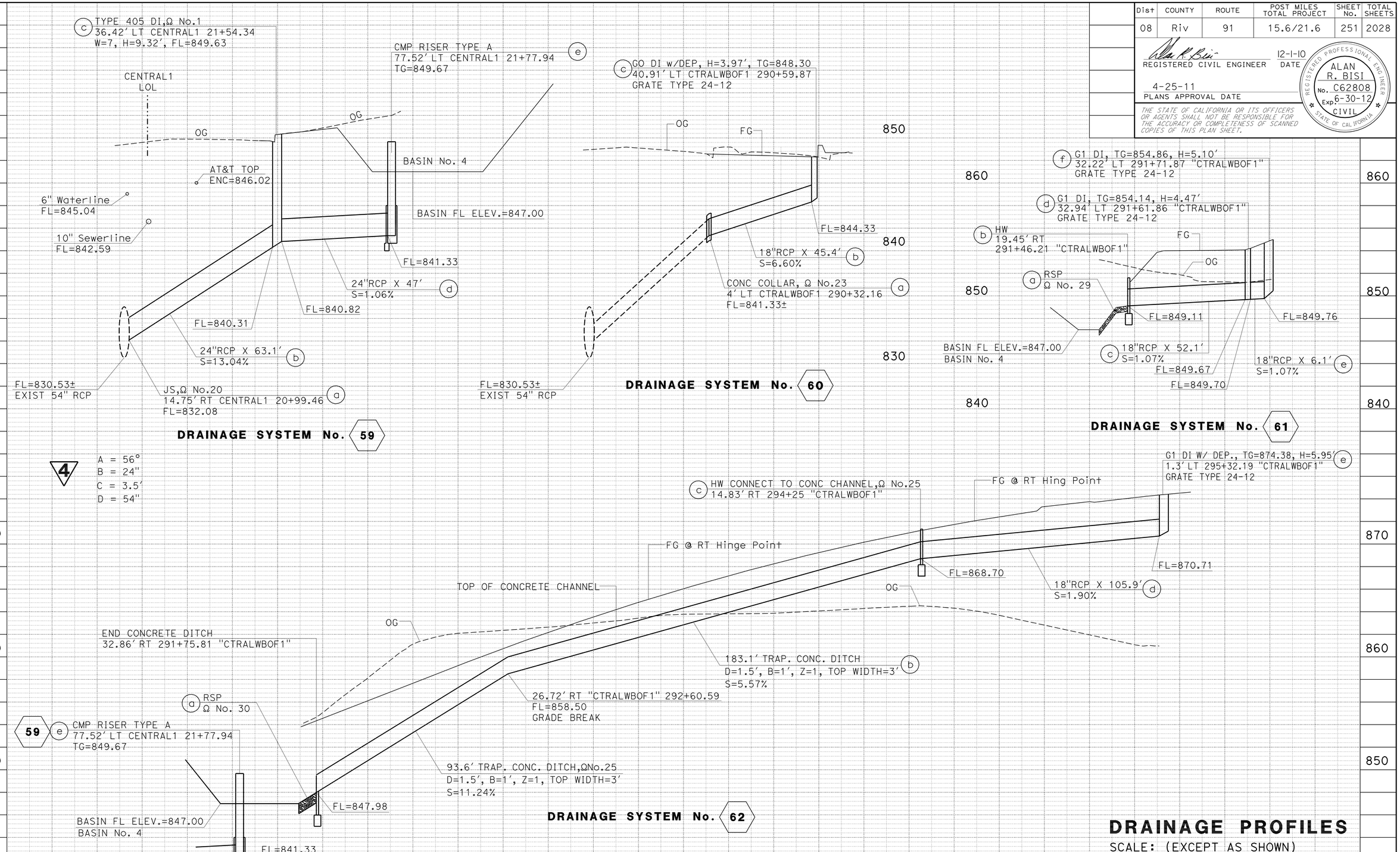

DRAINAGE PROFILES

SCALE: (EXCEPT AS SHOWN)
H - 1"=20'
V - 1"=4'

DP-13

THIS PLAN ACCURATE FOR DRAINAGE WORK ONLY.

STATION | TOTAL
CY Exc | Emb

4 **REVISED PER ADDENDUM No. 4 DATED DECEMBER 2, 2011**

STATE OF CALIFORNIA - DEPARTMENT OF TRANSPORTATION
Caltrans® DESIGN

FUNCTIONAL SUPERVISOR: MARK PERTILE
CALCULATED-DESIGNED BY: MOHAMMAD ABDRABOH
CHECKED BY: ALAN R. BISI
REVISED BY | DATE REVISED

LAST REVISION DATE PLOTTED => 02-DEC-2011
TIME PLOTTED => 07:27
12-01-10

Dist	COUNTY	ROUTE	POST MILES TOTAL PROJECT	SHEET No.	TOTAL SHEETS
08	Riv	91	15.6/21.6	252	2028

REGISTERED CIVIL ENGINEER 12-1-10 DATE

4-25-11
PLANS APPROVAL DATE

REGISTERED PROFESSIONAL ENGINEER ALAN R. BISI No. C62808 Exp. 6-30-12 CIVIL STATE OF CALIFORNIA

THE STATE OF CALIFORNIA OR ITS OFFICERS OR AGENTS SHALL NOT BE RESPONSIBLE FOR THE ACCURACY OR COMPLETENESS OF SCANNED COPIES OF THIS PLAN SHEET.

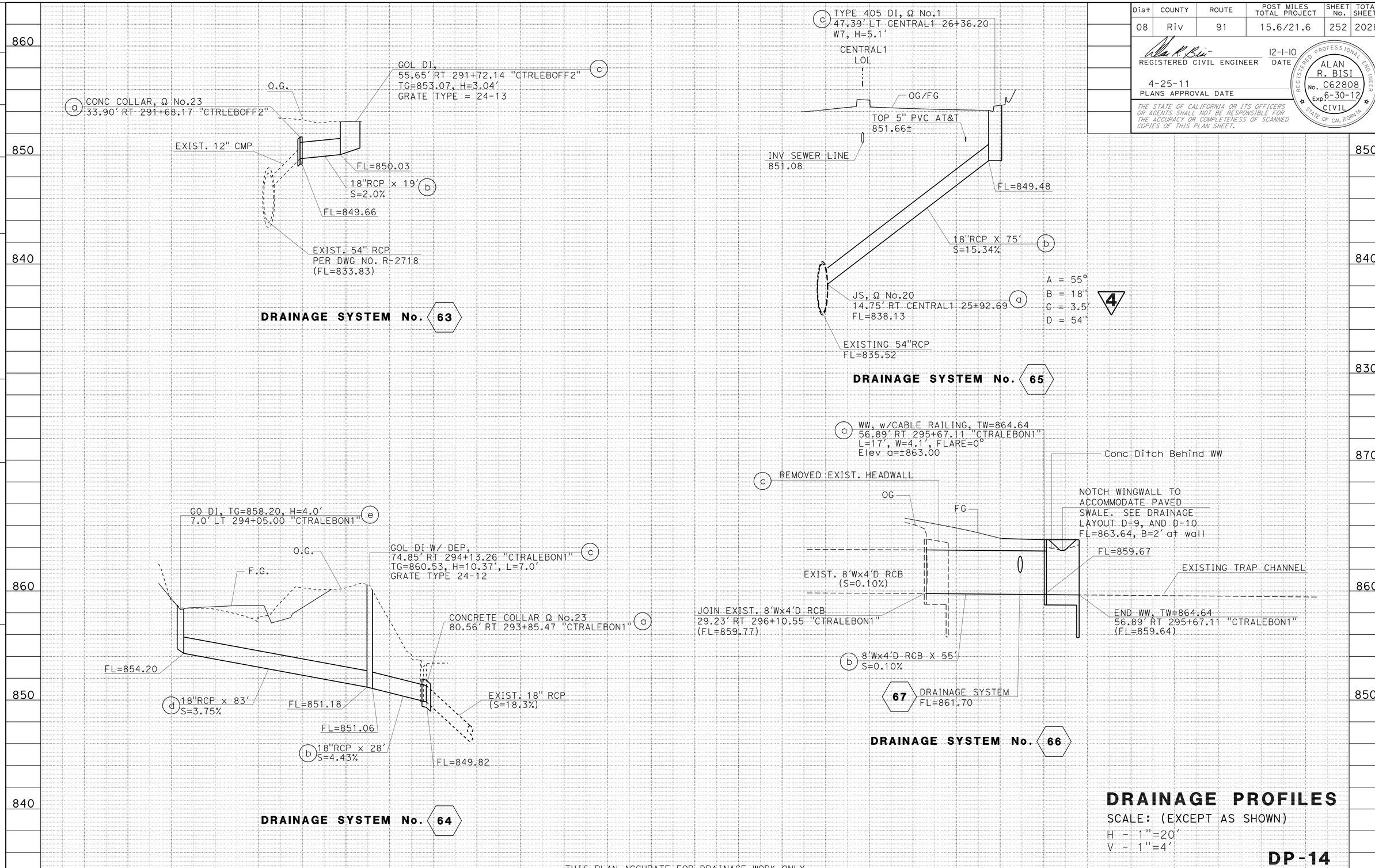

DRAINAGE PROFILES

SCALE: (EXCEPT AS SHOWN)
H - 1"=20'
V - 1"=4'

DP-14

THIS PLAN ACCURATE FOR DRAINAGE WORK ONLY.

STATION | CY Exc | Emb | 0+00 | TOTAL

4 **REVISED PER ADDENDUM No. 4 DATED DECEMBER 2, 2011**

REVISED BY | DATE REVISED
MOHAMMAD ABDRABOH | ALAN R. BISI
CALCULATED-DESIGNED BY | CHECKED BY
FUNCTIONAL SUPERVISOR | MARK PERTILE
STATE OF CALIFORNIA - DEPARTMENT OF TRANSPORTATION
Caltrans
DESIGN

LAST REVISION 12-01-10 | DATE PLOTTED => 02-DEC-2011 | TIME PLOTTED => 07:27

Dist	COUNTY	ROUTE	POST MILES TOTAL PROJECT	SHEET No.	TOTAL SHEETS
08	Riv	91	15.6/21.6	266	2028

REGISTERED CIVIL ENGINEER 3-29-10 DATE

4-25-11
PLANS APPROVAL DATE

REGISTERED PROFESSIONAL ENGINEER ALAN R. BISI No. C62808 Exp. 6-30-12 CIVIL STATE OF CALIFORNIA

THE STATE OF CALIFORNIA OR ITS OFFICERS OR AGENTS SHALL NOT BE RESPONSIBLE FOR THE ACCURACY OR COMPLETENESS OF SCANNED COPIES OF THIS PLAN SHEET.

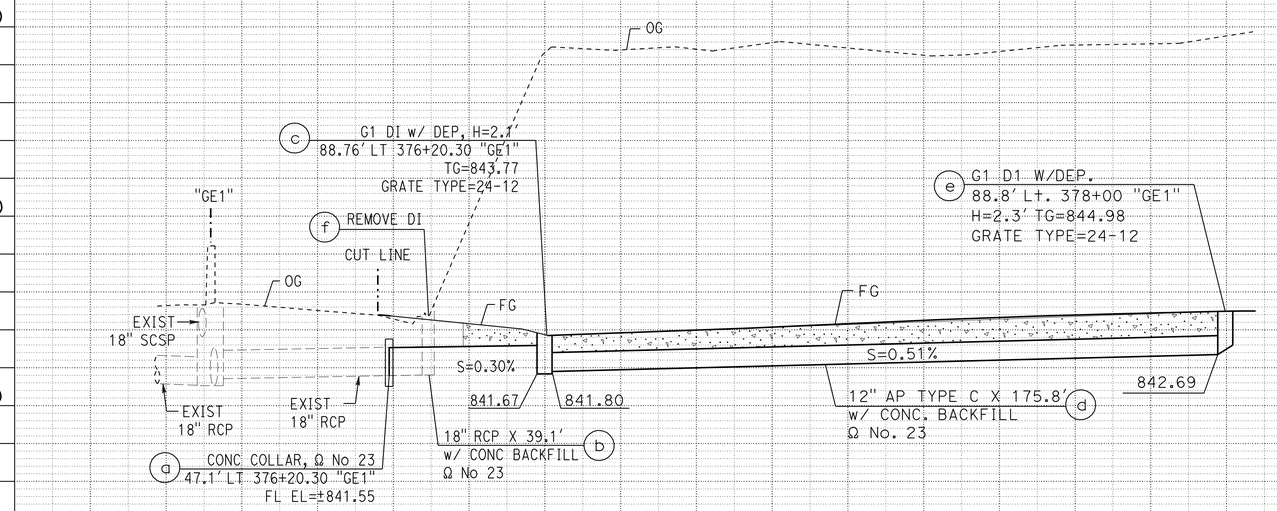

DRAINAGE SYSTEM No. 106

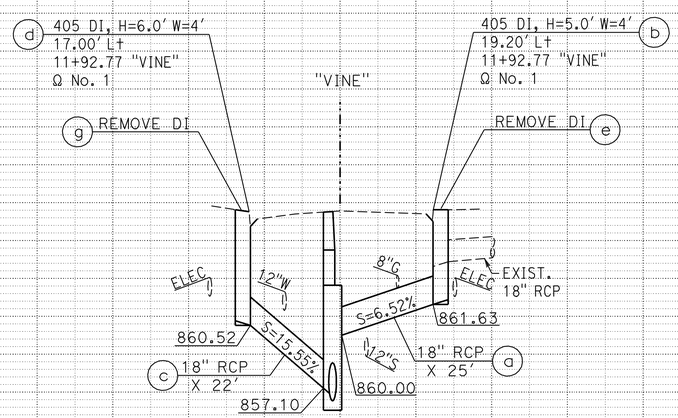

DRAINAGE SYSTEM No. 109

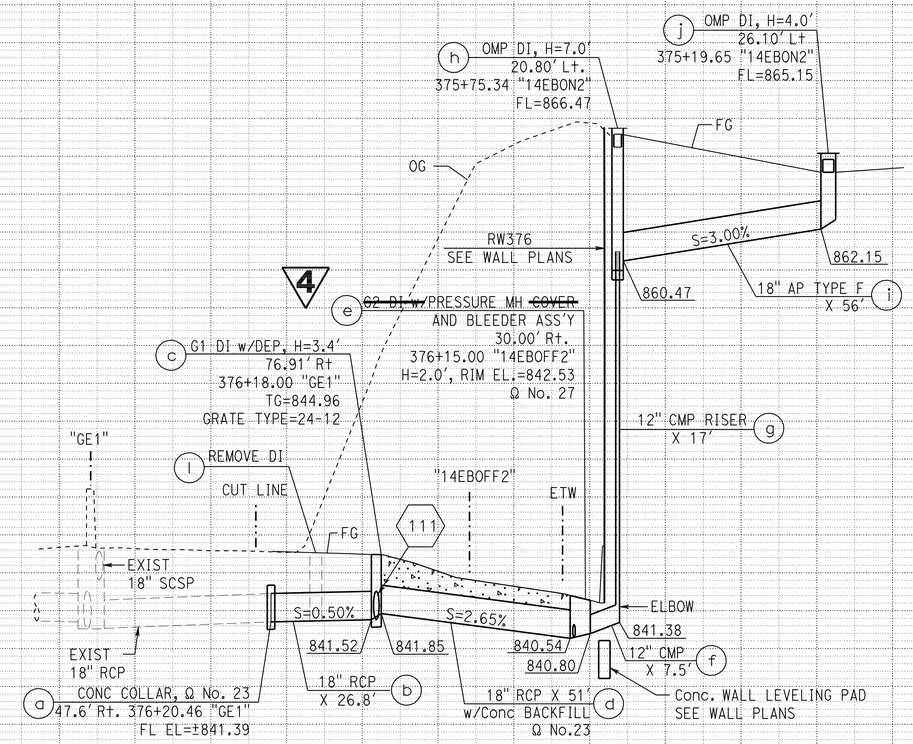

DRAINAGE SYSTEM No. 107

THIS PLAN ACCURATE FOR DRAINAGE WORK ONLY.

DRAINAGE PROFILES

SCALE: (EXCEPT AS SHOWN)
H - 1"=20'
V - 1"=4'

DP-28

4 **REVISED PER ADDENDUM No. 4 DATED DECEMBER 2, 2011**

STATE OF CALIFORNIA - DEPARTMENT OF TRANSPORTATION
Caltrans® DESIGN
FUNCTIONAL SUPERVISOR: MARK PERTILE
CALCULATED-DESIGNED BY: MOHAMMAD ABDRABOH
CHECKED BY: ALAN R. BISI
REVISED BY / DATE REVISED

STATION | CY Exc | Emb | TOTAL

LAST REVISION 03-29-11 | DATE PLOTTED => 02-DEC-2011 | TIME PLOTTED => 07:27

Dist	COUNTY	ROUTE	POST MILES TOTAL PROJECT	SHEET No.	TOTAL SHEETS
08	Riv	91	15.6/21.6	336	2028

REGISTERED CIVIL ENGINEER 3-29-10 DATE

4-25-11
PLANS APPROVAL DATE

REGISTERED PROFESSIONAL ENGINEER ALAN R. BISI No. C62808 Exp. 6-30-12 CIVIL STATE OF CALIFORNIA

THE STATE OF CALIFORNIA OR ITS OFFICERS OR AGENTS SHALL NOT BE RESPONSIBLE FOR THE ACCURACY OR COMPLETENESS OF SCANNED COPIES OF THIS PLAN SHEET.

ALTERNATIVE PIPE
ALLOWABLE PIPE MATERIAL AND PROTECTION

DESIGNATION	RCP	CSP (2-2/3"x½")			SSRP (3/4"x1" @ 11-1/2" PITCH)			PPC(C)	PPC(D,S)
	SIZE (INCH)	SIZE (INCH)	BITUM. COAT. THICKNESS	PA/PS THICKNESS	SIZE (INCH)	BITUM. COAT. THICKNESS	PA/PS THICKNESS	SIZE (INCH)	SIZE (INCH)
6" APC									6
12" APC TYPE A		12	0.064"	0.052"				12	
12" APC TYPE B					12	0.064"	0.052"		12
12" APC TYPE C	12				12	0.064"	0.052"		12
18" APC TYPE A	18	18	0.064"	0.052"	18	0.064"	0.052"		
18" APC TYPE B	18	18	0.064"	0.052"				18	
18" APC TYPE C		18	0.064"	0.052"				18	
18" APC TYPE D	18				18	0.064"	0.052"		
18" APC TYPE E	18	18	0.064"	0.052"				18	18
18" APC TYPE F	18								18
24" APC		24	0.079"	0.064"				24	
30" APC	30				30	0.079"	0.064"		30
30"x10" ARCH		30x10	0.079"	0.064"	30x10	0.079"	0.064"		
48" APC		48	0.079"	0.064"					

LEGENDS AND ABBREVIATIONS

S - STANDARD JOINT TYPE
P - POSITIVE JOINT TYPE
D - DOWNDRAIN JOINT TYPE
RCP - REINFORCED CONCRETE PIPE
PPC(C) - PASTIC PIPE CULVERT, TYPE C (CORRUGATED INTERIOR WALL)
PPC(D,S) - PLASTIC PIPE CULVERT, TYPE D OR S (SMOOTH INTERIOR WALL)
CSP - CORRUGATED STEEL PIPE
SSRP - STEEL SPIRAL RIBBED PIPE
GA. - GAUGE
BITUM. - BITUMINOUS
PA - POLYMERIZED ASPHALT
PS - POLYMERIC SHEET
w/ - WITH
Ω - SEE DRAINAGE DETAIL

Notes:

1. SUFFICIENT SPACE WAS NOT AVALABLE TO LIST ALL DRAINAGE ITEMS WITHIN A SINGLE TABLE ON A SHEET BORDER, THEREFORE THE LISTING OF THE FIRST GROUPING OF DRAINAGE ITEMS ARE REPEATED ON THE ODD NUMBERED ID CODE SHEETS (DQ-1, DQ-3, ETC.) AND THE LISTINGS OF THE REMAINING GROUP OF DRAINAGE ITEMS ARE REPEATED ON THE EVEN NUMBERED ID CODE SHEETS (DQ-2, DQ-4, ETC.).
2. THE PRECISE DETERMINATION OF THE FOLLOWING ITEMS WILL BE MADE BY THE ENGINEER IN THE FIELD: STATION, SKEW, LENGTH, FL ELEVATION, AND DEPTH OF STRUCTURE.
3. (N) - NOT A SEPARATE PAY ITEM; FOR INFORMATION ONLY.
4. * - SEE ROADWAY QUANTITIES FOR DRAINAGE ITEM TOTAL

DITCH EXCAVATION	CONCRETE (CHANNEL LINING)	STRUCTURAL CONCRETE, BOX CULVERT	MINOR CONCRETE (MINOR STRUCTURE)	MINOR CONCRETE (MISC. CONSTRUCTION)	CL. IV CONCRETE (BACKFILL) *	HMA-A *	PLACE AC (MISC. AREA) *	MISC. IRON AND STEEL	BAR REINFORCING STEEL	RSP: ¼-TON, METHOD B	RSP: FACING, METHOD B	RSP: NO. 2 BACKING, METHOD B	RSP: RSP FABRIC	FRAMES, GRATES AND COVERS: 24-12 (N)	24-13 (N)	¼" SOLID STEEL COVER (N)	12" X 12" PRECAST INLET	12" X 12" STEEL GRATE (TRAFFIC RATED)	DEBRIS RACK (N)	MANHOLE COVER (N)	MANHOLE COVER-PRESSURE LOCKING (N)	36" PRECAST MANHOLE SHAFT		MANHOLE SHAFT PIPE REDUCER	HEIGHT OF MANHOLE (N)	HEIGHT OF INLET, "H" (N)	DRAINAGE INLET MARKER *	CONCRETE COLLAR (N)	RCP: 12" RCP	15" RCP	18" RCP	24" RCP	30" RCP	36" RCP	48" RCP	54" RCP	60" RCP (CL. V SPECIAL)	DESCRIPTION	STATION	DRAINAGE PLAN SHEET NO.	DRAINAGE SYSTEM NO. ⬡	DRAINAGE UNIT ◯
CY	CY	CY	CY	CY	CY	ton	yd²	lb	lb	CY	CY	CY	yd²	EA	EA	EA	EA	EA	EA	EA	EA	LF		EA	FT	FT	EA	EA	LF	LF	LF	LF	LF	LF	LF	LF	LF					
																																6.0						24" RCP		D-5	20	g
			1.61					326						1												6.0												TYPE G1 DI	83' RT "GE1" 242+99.6			h
																																						12" AP TYPE A RISER				i
																													12.0									12" RCP				j
			1.17					326						1												4.0												TYPE G1 DI	82.45' RT "GE1" 242+84.6			k
			~~1.20~~																																			REMOVE HEADWALL				l
																																						REMOVE 24" RCP				m
			~~1.20~~																																			REMOVE HEADWALL				n
																																						REMOVE 12" CMP		D-6	21	a
											2.5	9.9																										RSP		D-6	22	a
			0.91																																			HEADWALL	133' RT "GE1" 245+74			b
																																						18" AP TYPE C				c
			1.61					326						1												6.0												TYPE G1 DI	89.7' LT "GE1" 245+74			d
																																						System Not Used		D-6	23	
																																						System Not Used		D-6	24	
											4.5	16.9																										RSP		D-6	25	a
			1.20																																			HEADWALL	139.83" RT "GE1" 249+98.00			b
																																						24" AP				c
			1.10					326						1												3.7												TYPE G1 DI	102.86' LT "GE1" 249+99.45			d
		4	~~10.00~~ 7.60					1304			7.0	26.8	4															12.0			6.0							SHEET TOTALS				

4 REVISED PER ADDENDUM No. 4 DATED DECEMBER 2, 2011
THIS PLAN ACCURATE FOR DRAINAGE WORK ONLY.

DRAINAGE QUANTITIES
DQ-7

MOHAMMAD ABDRABOH — CALCULATED-DESIGNED BY
ALAN R. BISI — CHECKED BY
MARK PERTILE — FUNCTIONAL SUPERVISOR
REVISED BY — DATE REVISED

STATE OF CALIFORNIA - DEPARTMENT OF TRANSPORTATION
Caltrans DESIGN

LAST REVISION 03-29-11 | DATE PLOTTED => 02-DEC-2011 | TIME PLOTTED => 07:27

ALTERNATIVE PIPE
ALLOWABLE PIPE MATERIAL AND PROTECTION

DESIGNATION	RCP	CSP (2-2/3"x1/2")			SSRP (3/4"x1" @ 11-1/2" PITCH)			PPC(C)	PPC(D,S)
	SIZE (INCH)	SIZE (INCH)	BITUM. COAT. THICKNESS	PA/PS THICKNESS	SIZE (INCH)	BITUM. COAT. THICKNESS	PA/PS THICKNESS	SIZE (INCH)	SIZE (INCH)
6" APC									6
12" APC TYPE A		12	0.064"	0.052"				12	
12" APC TYPE B					12	0.064"	0.052"		12
12" APC TYPE C	12				12	0.064"	0.052"		12
18" APC TYPE A	18	18	0.064"	0.052"	18	0.064"	0.052"		
18" APC TYPE B	18	18	0.064"	0.052"				18	
18" APC TYPE C		18	0.064"	0.052"				18	
18" APC TYPE D	18				18	0.064"	0.052"		
18" APC TYPE E	18	18	0.064"	0.052"				18	18
18" APC TYPE F	18								18
24" APC		24	0.079"	0.064"				24	
30" APC	30				30	0.079"	0.064"		30
30"x10" ARCH		30x10	0.079"	0.064"	30x10	0.079"	0.064"		
48" APC		48	0.079"	0.064"					

LEGENDS AND ABBREVIATIONS

S - STANDARD JOINT TYPE
P - POSITIVE JOINT TYPE
D - DOWNDRAIN JOINT TYPE
RCP - REINFORCED CONCRETE PIPE
PPC(C) - PASTIC PIPE CULVERT, TYPE C (CORRUGATED INTERIOR WALL)
PPC(D,S) - PLASTIC PIPE CULVERT, TYPE D OR S (SMOOTH INTERIOR WALL)
CSP - CORRUGATED STEEL PIPE
SSRP - STEEL SPIRAL RIBBED PIPE
GA. - GAUGE
BITUM. - BITUMINOUS
PA - POLYMERIZED ASPHALT
PS - POLYMERIC SHEET
w/ - WITH
Ω - SEE DRAINAGE DETAIL

Notes:

1. SUFFICIENT SPACE WAS NOT AVALABLE TO LIST ALL DRAINAGE ITEMS WITHIN A SINGLE TABLE ON A SHEET BORDER, THEREFORE THE LISTING OF THE FIRST GROUPING OF DRAINAGE ITEMS ARE REPEATED ON THE ODD NUMBERED ID CODE SHEETS (DQ-1, DQ-3, ETC.) AND THE LISTINGS OF THE REMAINING GROUP OF DRAINAGE ITEMS ARE REPEATED ON THE EVEN NUMBERED ID CODE SHEETS (DQ-2, DQ-4, ETC.).
2. THE PRECISE DETERMINATION OF THE FOLLOWING ITEMS WILL BE MADE BY THE ENGINEER IN THE FIELD: STATION, SKEW, LENGTH, FL ELEVATION, AND DEPTH OF STRUCTURE.
3. (N) - NOT A SEPARATE PAY ITEM; FOR INFORMATION ONLY.
4. * - SEE ROADWAY QUANTITIES FOR DRAINAGE ITEM TOTAL

Dist	COUNTY	ROUTE	POST MILES TOTAL PROJECT	SHEET No.	TOTAL SHEETS
08	Riv	91	15.6/21.6	338	2028

REGISTERED CIVIL ENGINEER 3-29-10 DATE
4-25-11
PLANS APPROVAL DATE

REGISTERED PROFESSIONAL ENGINEER ALAN R. BISI No. C62808 Exp. 6-30-12 CIVIL STATE OF CALIFORNIA

THE STATE OF CALIFORNIA OR ITS OFFICERS OR AGENTS SHALL NOT BE RESPONSIBLE FOR THE ACCURACY OR COMPLETENESS OF SCANNED COPIES OF THIS PLAN SHEET.

DITCH EXCAVATION	CONCRETE (CHANNEL LINING)	STRUCTURAL CONCRETE, BOX CULVERT	MINOR CONCRETE (MINOR STRUCTURE)	MINOR CONCRETE (MISC. CONSTRUCTION)	CL. IV CONCRETE (BACKFILL) *	HMA-A *	PLACE AC (MISC. AREA) *	MISC. IRON AND STEEL	BAR REINFORCING STEEL	RSP 1/4-TON, METHOD B	RSP FACING, METHOD B	RSP NO. 2 BACKING, METHOD B	RSP FABRIC	FRAMES, GRATES AND COVERS 24-12 (N)	24-13 (N)	1/4" SOLID STEEL COVER (N)	12" X 12" PRECAST INLET	12" X 12" STEEL GRATE (TRAFFIC RATED)	DEBRIS RACK (N)	MANHOLE COVER (N)	MANHOLE COVER-PRESSURE LOCKING (N)	36" PRECAST MANHOLE SHAFT		MANHOLE SHAFT PIPE REDUCER	HEIGHT OF MANHOLE (N)	HEIGHT OF INLET "H" (N)	DRAINAGE INLET MARKER *	CONCRETE COLLAR (N)	RCP 12" RCP	15" RCP	18" RCP	24" RCP	30" RCP	36" RCP	48" RCP	54" RCP	60" RCP (CL. V SPECIAL)	DESCRIPTION	STATION	DRAINAGE PLAN SHEET NO.	DRAINAGE SYSTEM NO. ⬡	DRAINAGE UNIT ◯
CY	CY	CY	CY	CY	CY	ton	yd²	lb	lb	CY	CY	CY	yd²	EA	EA	EA	EA	EA	EA	EA	EA	LF		EA	FT	FT	EA	EA	LF	LF	LF	LF	LF	LF	LF	LF	LF					
																																						24" AP		D-6	25	e
																												1										CONCRETE COLLAR	83.41' LT "GE1" 250			f
																																						CAP DI				g
																																						CAP DI				h
																																						ABANDON PIPE				i
																																						ABANDON DI				j
																															64.5							18" RCP		D-6	26	a
			1.10				326							1												3.5												TYPE G1 DI	71.61' RT "GE1" 251+03.5			b
																															11.1							18" RCP				c
			1.10				326							1												3.3												TYPE G1 DI	71.7' RT "GE1" 251+03.5			d
																																						REMOVE HW		D-6	27	a
																																						REMOVE 12" RCP				b
																																						REMOVE DI				c
																																22.4						24" RCP		D-6	28	a
			1.15				634							2												3.3												TYPE GD-1 DI	104.23' LT "GE1" 250+25.75			b
																															22.4							18" RCP				c
			0.98				326							1												3.1												TYPE G1 DI	105.56' LT "GE1" 250+50.71			d
																															215.0							18" RCP				e
			1.15				326							2												3.1												TYPE G3 DI	73.0' LT "GE1" 252+67.00			f
																												1										CONCRETE COLLAR	49.1' RT 250+24.9	D-6	29	a
																															20.0							18" RCP				b
			1.31				326							1												3.0												TYPE G2 DI	71.60' RT "GE1" 250+24.94			c
		14.80	~~14.80~~					2230.8																														2'X1' RCB				d
			0.92				326																			1.7												TYPE GO DI w/DEPRESSION	113.92' RT "GE1" 249+72.87			e
		14.80	~~22.51~~ 7.71				2590	2230.8						8														2			333.0	22.4						SHEET TOTALS				

4 **REVISED PER ADDENDUM No. 4 DATED DECEMBER 2, 2011**
THIS PLAN ACCURATE FOR DRAINAGE WORK ONLY.

DRAINAGE QUANTITIES
DQ-9

REVISED BY | DATE REVISED
CALCULATED-DESIGNED BY: MOHAMMAD ABDRABOH
CHECKED BY: ALAN R. BISI
FUNCTIONAL SUPERVISOR: MARK PERTILE

STATE OF CALIFORNIA - DEPARTMENT OF TRANSPORTATION
Caltrans
DESIGN

LAST REVISION 03-29-11 | DATE PLOTTED => 02-DEC-2011 | TIME PLOTTED => 07:27

Dist	COUNTY	ROUTE	POST MILES TOTAL PROJECT	SHEET No.	TOTAL SHEETS
08	Riv	91	15.6/21.6	340	2028

REGISTERED CIVIL ENGINEER 3-29-10 DATE

4-25-11
PLANS APPROVAL DATE

REGISTERED PROFESSIONAL ENGINEER ALAN R. BISI No. C62808 Exp. 6-30-12 CIVIL STATE OF CALIFORNIA

THE STATE OF CALIFORNIA OR ITS OFFICERS OR AGENTS SHALL NOT BE RESPONSIBLE FOR THE ACCURACY OR COMPLETENESS OF SCANNED COPIES OF THIS PLAN SHEET.

ALTERNATIVE PIPE
ALLOWABLE PIPE MATERIAL AND PROTECTION

DESIGNATION	RCP	CSP (2-2/3"x½")			SSRP (3/4"x1" @ 11-1/2" PITCH)			PPC(C)	PPC(D,S)
	SIZE (INCH)	SIZE (INCH)	BITUM. COAT. THICKNESS	PA/PS THICKNESS	SIZE (INCH)	BITUM. COAT. THICKNESS	PA/PS THICKNESS	SIZE (INCH)	SIZE (INCH)
6" APC									6
12" APC TYPE A		12	0.064"	0.052"				12	
12" APC TYPE B					12	0.064"	0.052"		12
12" APC TYPE C	12				12	0.064"	0.052"		12
18" APC TYPE A	18	18	0.064"	0.052"	18	0.064"	0.052"		
18" APC TYPE B	18	18	0.064"	0.052"				18	
18" APC TYPE C		18	0.064"	0.052"				18	
18" APC TYPE D	18				18	0.064"	0.052"		
18" APC TYPE E	18	18	0.064"	0.052"				18	18
18" APC TYPE F	18								18
24" APC		24	0.079"	0.064"				24	
30" APC	30				30	0.079"	0.064"		30
30"x10" ARCH		30x10	0.079"	0.064"	30x10	0.079"	0.064"		
48" APC		48	0.079"	0.064"					

LEGENDS AND ABBREVIATIONS

S - STANDARD JOINT TYPE
P - POSITIVE JOINT TYPE
D - DOWNDRAIN JOINT TYPE
RCP - REINFORCED CONCRETE PIPE
PPC(C) - PASTIC PIPE CULVERT, TYPE C (CORRUGATED INTERIOR WALL)
PPC(D,S) - PLASTIC PIPE CULVERT, TYPE D OR S (SMOOTH INTERIOR WALL)
CSP - CORRUGATED STEEL PIPE
SSRP - STEEL SPIRAL RIBBED PIPE
GA. - GAUGE
BITUM. - BITUMINOUS
PA - POLYMERIZED ASPHALT
PS - POLYMERIC SHEET
w/ - WITH
Ω - SEE DRAINAGE DETAIL

Notes:

1. SUFFICIENT SPACE WAS NOT AVALABLE TO LIST ALL DRAINAGE ITEMS WITHIN A SINGLE TABLE ON A SHEET BORDER, THEREFORE THE LISTING OF THE FIRST GROUPING OF DRAINAGE ITEMS ARE REPEATED ON THE ODD NUMBERED ID CODE SHEETS (DQ-1, DQ-3, ETC.) AND THE LISTINGS OF THE REMAINING GROUP OF DRAINAGE ITEMS ARE REPEATED ON THE EVEN NUMBERED ID CODE SHEETS (DQ-2, DQ-4, ETC.).
2. THE PRECISE DETERMINATION OF THE FOLLOWING ITEMS WILL BE MADE BY THE ENGINEER IN THE FIELD: STATION, SKEW, LENGTH, FL ELEVATION, AND DEPTH OF STRUCTURE.
3. (N) - NOT A SEPARATE PAY ITEM; FOR INFORMATION ONLY.
4. * - SEE ROADWAY QUANTITIES FOR DRAINAGE ITEM TOTAL

DITCH EXCAVATION	CONCRETE (CHANNEL LINING)	STRUCTURAL CONCRETE, BOX CULVERT	MINOR CONCRETE (MINOR STRUCTURE)	MINOR CONCRETE (MISC. CONSTRUCTION)	CL. IV CONCRETE (BACKFILL) *	HMA-A *	PLACE AC (MISC. AREA) *	MISC. IRON AND STEEL	BAR REINFORCING STEEL	RSP: ¼-TON, METHOD B	RSP: FACING, METHOD B	RSP: NO. 2 BACKING, METHOD B	RSP: RSP FABRIC	FRAMES, GRATES AND COVERS: 24-12 (N)	24-13 (N)	¼" SOLID STEEL COVER (N)	12" X 12" PRECAST INLET	12" X 12" STEEL GRATE (TRAFFIC RATED)	DEBRIS RACK (N)	MANHOLE COVER (N)	MANHOLE COVER-PRESSURE LOCKING (N)	36" PRECAST MANHOLE SHAFT		MANHOLE SHAFT PIPE REDUCER	HEIGHT OF MANHOLE (N)	HEIGHT OF INLET "H" (N)	DRAINAGE INLET MARKER *	CONCRETE COLLAR (N)	RCP: 12" RCP	15" RCP	18" RCP	24" RCP	30" RCP	36" RCP	48" RCP	54" RCP	60" RCP (CL. V SPECIAL)	DESCRIPTION	STATION	DRAINAGE PLAN SHEET NO.	DRAINAGE SYSTEM NO. ⬡	DRAINAGE UNIT ◯
CY	CY	CY	CY	CY	CY	ton	yd²	lb	lb	CY	CY	CY	yd²	EA	EA	EA	EA	EA	EA	EA	EA	LF		EA	FT	FT	EA	EA	LF	LF	LF	LF	LF	LF	LF	LF	LF					
												7.4	28.9																									RSP	150' LT "GE1" 244+60	D-6	30	a
		0.45							47.0																													JUNCTION STRUCTURE	88' RT "GE1" 254+26.04	D-6	31	a
																																						18" AP TYPE A				b
			5.1					362																														OUTLET RISER	79.16' RT "INDION1" 253+93.2			c
										2.3		5.7																										RSP		D-5	32	a
			0.91																																			HEADWALL	74.50' RT 254+15.20 ON RAMP			b
																																						18"AP TYPE B				c
			1.73	1.71				652						2												2.5												TYPE GT3 DI w/ DEPRESSION	53.79' RT 254+30.16 ON RAMP			d
		5.20							426.0																													WINGWALL, TYPE D	143.23' LT 252 "GE1"	D-6,7	33	a
4		60.30	~~60.30~~						11124.0																													RCB - 6' W X 4.5' H				b
			~~0.82~~					435												1		7.00		1	7.0													MANHOLE	164.73' RT 255+06.68 "GE1"			c
		297.80	~~297.80~~						54922.0																													RCB - 6' W X 4.5' H				d
			~~0.34~~					435												1		3.00		1	3.0													MANHOLE	126.94' RT 258+19.03 "GE1"			e
																																						REMOVE CONCRETE CHANNEL				f
																																						REMOVE CONCRETE HEADWALL				g
																																						REMOVE CONCRETE HEADWALL/COVER				h
																																						REMOVE CONCRETE CHANNEL				i
																																						REMOVE CONCRETE HEADWALL/COVER				j
4		~~5.65~~ 363.75	~~367~~ 8.90	1.71				1884	66519.0		2.3	7.4	34.6	2						2		10.00		2														SHEET TOTALS				

4 **REVISED PER ADDENDUM No. 4 DATED DECEMBER 2, 2011**
THIS PLAN ACCURATE FOR DRAINAGE WORK ONLY.

DRAINAGE QUANTITIES
DQ-11

REVISED BY | DATE REVISED
CALCULATED-DESIGNED BY: MOHAMMAD ABDRABOH | CHECKED BY: ALAN R. BISI
FUNCTIONAL SUPERVISOR: MARK PERTILE
STATE OF CALIFORNIA - DEPARTMENT OF TRANSPORTATION
Caltrans DESIGN

LAST REVISION 03-29-11 | DATE PLOTTED => 02-DEC-2011 | TIME PLOTTED => 07:27

Dist	COUNTY	ROUTE	POST MILES TOTAL PROJECT	SHEET No.	TOTAL SHEETS
08	Riv	91	15.6/21.6	357	2028

REGISTERED CIVIL ENGINEER 3-29-10 DATE

4-25-11
PLANS APPROVAL DATE

REGISTERED PROFESSIONAL ENGINEER ALAN R. BISI No. C62808 Exp. 6-30-12 CIVIL STATE OF CALIFORNIA

THE STATE OF CALIFORNIA OR ITS OFFICERS OR AGENTS SHALL NOT BE RESPONSIBLE FOR THE ACCURACY OR COMPLETENESS OF SCANNED COPIES OF THIS PLAN SHEET.

ALTERNATIVE PIPE ALLOWABLE PIPE MATERIAL AND PROTECTION

DESIGNATION	RCP	CSP (2-2/3"x½")			SSRP (3/4"x1" @ 11-1/2" PITCH)			PPC(C)	PPC(D,S)
	SIZE (INCH)	SIZE (INCH)	BITUM. COAT. THICKNESS	PA/PS THICKNESS	SIZE (INCH)	BITUM. COAT. THICKNESS	PA/PS THICKNESS	SIZE (INCH)	SIZE (INCH)
6" APC									6
12" APC TYPE A		12	0.064"	0.052"				12	
12" APC TYPE B					12	0.064"	0.052"		12
12" APC TYPE C	12				12	0.064"	0.052"		12
18" APC TYPE A	18	18	0.064"	0.052"	18	0.064"	0.052"		
18" APC TYPE B	18	18	0.064"	0.052"				18	
18" APC TYPE C		18	0.064"	0.052"				18	
18" APC TYPE D	18				18	0.064"	0.052"		
18" APC TYPE E	18	18	0.064"	0.052"				18	18
18" APC TYPE F	18								18
24" APC		24	0.079"	0.064"				24	
30" APC	30				30	0.079"	0.064"		30
30"x10" ARCH		30x10	0.079"	0.064"	30x10	0.079"	0.064"		
48" APC		48	0.079"	0.064"					

LEGENDS AND ABBREVIATIONS

S - STANDARD JOINT TYPE
P - POSITIVE JOINT TYPE
D - DOWNDRAIN JOINT TYPE
RCP - REINFORCED CONCRETE PIPE
PPC(C) - PASTIC PIPE CULVERT, TYPE C (CORRUGATED INTERIOR WALL)
PPC(D,S) - PLASTIC PIPE CULVERT, TYPE D OR S (SMOOTH INTERIOR WALL)
CSP - CORRUGATED STEEL PIPE
CAP - CORRUGATED ALUMINUM PIPE
SSRP - STEEL SPIRAL RIBBED PIPE
GA. - GAUGE
BITUM. - BITUMINOUS
PA - POLYMERIZED ASPHALT
PS - POLYMERIC SHEET
w/ - WITH
Ω - SEE DRAINAGE DETAIL

Notes:

1. SUFFICIENT SPACE WAS NOT AVALABLE TO LIST ALL DRAINAGE ITEMS WITHIN A SINGLE TABLE ON A SHEET BORDER, THEREFORE THE LISTING OF THE FIRST GROUPING OF DRAINAGE ITEMS ARE REPEATED ON THE ODD NUMBERED ID CODE SHEETS (DQ-1, DQ-3, ETC.) AND THE LISTINGS OF THE REMAINING GROUP OF DRAINAGE ITEMS ARE REPEATED ON THE EVEN NUMBERED ID CODE SHEETS (DQ-2, DQ-4, ETC.).
2. THE PRECISE DETERMINATION OF THE FOLLOWING ITEMS WILL BE MADE BY THE ENGINEER IN THE FIELD: STATION, SKEW, LENGTH, FL ELEVATION, AND DEPTH OF STRUCTURE.
3. (N) - NOT A SEPARATE PAY ITEM; FOR INFORMATION ONLY.
4. * - SEE ROADWAY QUANTITIES FOR DRAINAGE ITEM TOTAL

CSP								ALTERNATIVE PIPE																																	
12" (14 GA.)	18" (14 GA.)	36" (10 GA.)	12" RISER (14 GA.)	48" RISER (10 GA.)	18" SLOTTED PIPE (14 GA.)	21" SLOTTED PIPE (14 GA.)	24" SLOTTED PIPE (14 GA.)	6" AP (TYPE __)	12" AP (TYPE __)	18" AP (TYPE __)	24" AP (TYPE __)	30" AP (TYPE __)	48" AP (TYPE __)	30" X 10" AP ARCH PIPE (TYPE __)	MAXIMUM COVER (N)	ELBOW (N)	PIPE JOINT CLASSIFICATION	8" GALVANIZED STEEL PIPE	8" GATE VALVE w/ SLEEVE & COVER	AFES 12" AFES	PIPE RISER 8" AP SLIPJOINT (N)	PIPE RISER 12" AP SLIPJOINT (N)	CABLE RAILING	ADJUST INLET	MODIFY INLET	REMOVAL/ABANDON PAY ITEMS REMOVE CONCRETE	REMOVE PIPE	REMOVE INLET	ABANDON INLET	ABANDON PIPE	SAND BACKFILL	CAP RISER	CAP INLET	DESCRIPTION	STATION	DRAINAGE PLAN SHEET NO.	DRAINAGE SYSTEM NO. ⬡	DRAINAGE UNIT ◯
LF	LF	LF	LF	LF	LF	LF	LF	LF	LF	LF	LF	LF	LF	LF	FT	EA		LF	EA	EA	EA	EA	LF	EA	EA	CY	LF	EA	EA	LF	CY	EA	EA					
															10.0		S																	24" RCP		D-9	57	a
																																		TYPE G1 DI w/Depression	85.57' RT 283+99.2 "GE1"			b
															4.0		S																	18" RCP				c
																																		TYPE G1 DI w/Depression	82.2' RT 284+52.1 "GE1"			d
																														50.94				ABANDON 12" RCP				e
																												1						REMOVE DI				f
																														23.07				ABANDON 12" RCP				g
																												1						REMOVE DI				h
																																		CONCRETE COLLAR	14.85' RT "CTRALWBON1" 290+17.60	D-9	58	a
															6.5		S																	18" RCP				b
																																		TYPE OL DI	52.88' RT "CENTRAL" 19+01.39			c
									110.8						7.0		S																	12" AP TYPE B				d
		5.5																																TYPE OMP DI w/Apron	70.04' LT "CTRALWBON1" 288+53.52			e
									157.0						5.0		S																	12" AP TYPE B				f
	4	3.9																																TYPE OMP DI w/Apron	56.40' LT "CTRALWBON1" 286+97.60			g
									180.3						4.0		S																	12" AP TYPE B				h
		2.1																																TYPE OMP DI w/Apron	45.50' LT "CTRALWBON1" 285+13.27			i
																												1						REMOVE DI				j
																										19.6								REMOVE 18" RCP				k
																																		JUNCTION STRUCTURE	14.75' RT "CENTRAL1" 20+99.46	D-9	59	a
															14.0		S																	24" RCP				b
																																		TYPE 405 DI	36.42' LT "CENTRAL1" 21+54.34			c
															8.0		S																	24" RCP				d
				8.0																														CMP RISER, TYPE A				e
																																		CONCRETE COLLAR	4' LT "CTRALWBOF1" 290+32.16	D-9	60	a
															6.0		S																	18" RCP				b
																																		TYPE GO DI w/Depression	40.91' LT "CTRALWBOF1" 290+59.87			c
																												1						REMOVE DI				d
	4	11.5		8.0					448.1																	19.6	4			74.01				SHEET TOTALS				

4 **REVISED PER ADDENDUM No. 4 DATED DECEMBER 2, 2011**

THIS PLAN ACCURATE FOR DRAINAGE WORK ONLY.

DRAINAGE QUANTITIES DQ-28

REVISED BY | DATE REVISED

CALCULATED-DESIGNED BY: MOHAMMAD ABDRABOH
CHECKED BY: ALAN R. BISI
FUNCTIONAL SUPERVISOR: MARK PERTILE

STATE OF CALIFORNIA - DEPARTMENT OF TRANSPORTATION
Caltrans® DESIGN

LAST REVISION 03-29-11 | DATE PLOTTED => 02-DEC-2011 | TIME PLOTTED => 07:27

Dist	COUNTY	ROUTE	POST MILES TOTAL PROJECT	SHEET No.	TOTAL SHEETS
08	Riv	91	15.6/21.6	371	2028

REGISTERED CIVIL ENGINEER 3-29-10 DATE

4-25-11
PLANS APPROVAL DATE

REGISTERED PROFESSIONAL ENGINEER ALAN R. BISI No. C62808 Exp. 6-30-12 CIVIL STATE OF CALIFORNIA

THE STATE OF CALIFORNIA OR ITS OFFICERS OR AGENTS SHALL NOT BE RESPONSIBLE FOR THE ACCURACY OR COMPLETENESS OF SCANNED COPIES OF THIS PLAN SHEET.

ALTERNATIVE PIPE ALLOWABLE PIPE MATERIAL AND PROTECTION

DESIGNATION	RCP	CSP (2-2/3"x½")			SSRP (3/4"x1" @ 11-1/2" PITCH)			PPC(C)	PPC(D,S)
	SIZE (INCH)	SIZE (INCH)	BITUM. COAT. THICKNESS	PA/PS THICKNESS	SIZE (INCH)	BITUM. COAT. THICKNESS	PA/PS THICKNESS	SIZE (INCH)	SIZE (INCH)
6" APC									6
12" APC TYPE A		12	0.064"	0.052"				12	
12" APC TYPE B					12	0.064"	0.052"		12
12" APC TYPE C	12				12	0.064"	0.052"		12
18" APC TYPE A	18	18	0.064"	0.052"	18	0.064"	0.052"		
18" APC TYPE B	18	18	0.064"	0.052"				18	
18" APC TYPE C		18	0.064"	0.052"				18	
18" APC TYPE D	18				18	0.064"	0.052"		
18" APC TYPE E	18	18	0.064"	0.052"				18	18
18" APC TYPE F	18								18
24" APC		24	0.079"	0.064"				24	
30" APC	30				30	0.079"	0.064"		30
30"x10" ARCH		30x10	0.079"	0.064"	30x10	0.079"	0.064"		
48" APC		48	0.079"	0.064"					

LEGENDS AND ABBREVIATIONS

S - STANDARD JOINT TYPE
P - POSITIVE JOINT TYPE
D - DOWNDRAIN JOINT TYPE
RCP - REINFORCED CONCRETE PIPE
PPC(C) - PASTIC PIPE CULVERT, TYPE C (CORRUGATED INTERIOR WALL)
PPC(D,S) - PLASTIC PIPE CULVERT, TYPE D OR S (SMOOTH INTERIOR WALL)
CSP - CORRUGATED STEEL PIPE
CAP - CORRUGATED ALUMINUM PIPE
SSRP - STEEL SPIRAL RIBBED PIPE
GA. - GAUGE
BITUM. - BITUMINOUS
PA - POLYMERIZED ASPHALT
PS - POLYMERIC SHEET
w/ - WITH
Ω - SEE DRAINAGE DETAIL

Notes:

1. SUFFICIENT SPACE WAS NOT AVALABLE TO LIST ALL DRAINAGE ITEMS WITHIN A SINGLE TABLE ON A SHEET BORDER, THEREFORE THE LISTING OF THE FIRST GROUPING OF DRAINAGE ITEMS ARE REPEATED ON THE ODD NUMBERED ID CODE SHEETS (DQ-1, DQ-3, ETC.) AND THE LISTINGS OF THE REMAINING GROUP OF DRAINAGE ITEMS ARE REPEATED ON THE EVEN NUMBERED ID CODE SHEETS (DQ-2, DQ-4, ETC.).
2. THE PRECISE DETERMINATION OF THE FOLLOWING ITEMS WILL BE MADE BY THE ENGINEER IN THE FIELD: STATION, SKEW, LENGTH, FL ELEVATION, AND DEPTH OF STRUCTURE.
3. (N) - NOT A SEPARATE PAY ITEM; FOR INFORMATION ONLY.
4. * - SEE ROADWAY QUANTITIES FOR DRAINAGE ITEM TOTAL

CSP								ALTERNATIVE PIPE																																
12" (14 GA.)	18" (14 GA.)	36" (10 GA.)	12" RISER (14 GA.)	48" RISER (10 GA.)	18" SLOTTED PIPE (14 GA.)	21" SLOTTED PIPE (14 GA.)	24" SLOTTED PIPE (14 GA.)	6" AP (TYPE __)	12" AP (TYPE __)	18" AP (TYPE __)	24" AP (TYPE __)	30" AP (TYPE __)	48" AP (TYPE __)	30" X 10" AP ARCH PIPE (TYPE __)	MAXIMUM COVER (N)	ELBOW (N)	PIPE JOINT CLASSIFICATION	8" GALVANIZED STEEL PIPE	8" GATE VALVE w/ SLEEVE & COVER	AFES 12" AFES	PIPE RISER 8" AP SLIPJOINT (N)	PIPE RISER 12" AP SLIPJOINT (N)	CABLE RAILING	ADJUST INLET	MODIFY INLET	REMOVAL/ABANDON PAY ITEMS REMOVE CONCRETE	REMOVE PIPE	REMOVE INLET	ABANDON INLET	ABANDON PIPE	SAND BACKFILL	CAP RISER	CAP INLET	DESCRIPTION	STATION	DRAINAGE PLAN SHEET NO.	DRAINAGE SYSTEM NO. ⬡	DRAINAGE UNIT ◯
LF	LF	LF	LF	LF	LF	LF	LF	LF	LF	LF	LF	LF	LF	LF	FT	EA		LF	EA	EA	EA	EA	LF	EA	EA	CY	LF	EA	EA	LF	CY	EA	EA					
																																		G1-DI w/ DEPRESSION	76.76′ RT "GE1" 341+49.24	D-13	86	a
			7.8													1	DD					1												12" CSP RISER				b
24.7															18.5	1	S																	12" CSP				c
																																		HEADWALL	97′ RT "GE1" 341+49.24			d
																																		RSP				e
																											24.7							REMOVE 12" CSP				f
																													1					Remove DI				g
																														62.5	1.82			ABN 12" RCP				h
																																		CONCRETE COLLAR	51.85′ RT "GE1" 347+21.00	D-13	87	a
															11.6		S																	24" RCP				b
	4	5.0																																CMP RISER TYPE A				c
																											28.0							REMOVE 24" RCP				d
																										1.2								REMOVE HW				e
																													1					ABANDON DI		D-13	88	a
																														52.0	3.40			ABANDON 18" RCP				b
																																	1	CAP DI		D-13	89	a
																														53.0	3.41			ABANDON 18" RCP				b
																													1					ABANDON DI				c
	4																																					
24.7		5.0	7.8													2						1				1.2	52.7		3	167.5	8.63		1	SHEET TOTALS				

4 REVISED PER ADDENDUM No. 4 DATED DECEMBER 2, 2011

THIS PLAN ACCURATE FOR DRAINAGE WORK ONLY.

DRAINAGE QUANTITIES
DQ-42

REVISED BY | DATE REVISED

CALCULATED-DESIGNED BY: MOHAMMAD ABDRABOH
CHECKED BY: ALAN R. BISI
FUNCTIONAL SUPERVISOR: MARK PERTILE

STATE OF CALIFORNIA - DEPARTMENT OF TRANSPORTATION
Caltrans DESIGN

LAST REVISION 03-29-11 | DATE PLOTTED => 02-DEC-2011 | TIME PLOTTED => 07:27

ALTERNATIVE PIPE
ALLOWABLE PIPE MATERIAL AND PROTECTION

DESIGNATION	RCP	CSP (2-2/3"x½")			SSRP (3/4"x1" @ 11-1/2" PITCH)			PPC(C)	PPC(D,S)
	SIZE (INCH)	SIZE (INCH)	BITUM. COAT. THICKNESS	PA/PS THICKNESS	SIZE (INCH)	BITUM. COAT. THICKNESS	PA/PS THICKNESS	SIZE (INCH)	SIZE (INCH)
6" APC									6
12" APC TYPE A		12	0.064"	0.052"				12	
12" APC TYPE B					12	0.064"	0.052"		12
12" APC TYPE C	12				12	0.064"	0.052"		12
18" APC TYPE A	18	18	0.064"	0.052"	18	0.064"	0.052"		
18" APC TYPE B	18	18	0.064"	0.052"				18	
18" APC TYPE C		18	0.064"	0.052"				18	
18" APC TYPE D	18				18	0.064"	0.052"		
18" APC TYPE E	18	18	0.064"	0.052"				18	18
18" APC TYPE F	18								18
24" APC		24	0.079"	0.064"				24	
30" APC	30				30	0.079"	0.064"		30
30"x10" ARCH		30x10	0.079"	0.064"	30x10	0.079"	0.064"		
48" APC		48	0.079"	0.064"					

LEGENDS AND ABBREVIATIONS

S - STANDARD JOINT TYPE
P - POSITIVE JOINT TYPE
D - DOWNDRAIN JOINT TYPE
RCP - REINFORCED CONCRETE PIPE
PPC(C) - PLASTIC PIPE CULVERT, TYPE C (CORRUGATED INTERIOR WALL)
PPC(D,S) - PLASTIC PIPE CULVERT, TYPE D OR S (SMOOTH INTERIOR WALL)
CSP - CORRUGATED STEEL PIPE
SSRP - STEEL SPIRAL RIBBED PIPE
GA. - GAUGE
BITUM. - BITUMINOUS
PA - POLYMERIZED ASPHALT
PS - POLYMERIC SHEET
w/ - WITH
Ω - SEE DRAINAGE DETAIL

1

Notes:

1. SUFFICIENT SPACE WAS NOT AVAILABLE TO LIST ALL DRAINAGE ITEMS WITHIN A SINGLE TABLE ON A SHEET BORDER, THEREFORE THE LISTING OF THE FIRST GROUPING OF DRAINAGE ITEMS ARE REPEATED ON THE ODD NUMBERED ID CODE SHEETS (DQ-1, DQ-3, ETC.) AND THE LISTINGS OF THE REMAINING GROUP OF DRAINAGE ITEMS ARE REPEATED ON THE EVEN NUMBERED ID CODE SHEETS (DQ-2, DQ-4, ETC.).
2. THE PRECISE DETERMINATION OF THE FOLLOWING ITEMS WILL BE MADE BY THE ENGINEER IN THE FIELD: STATION, SKEW, LENGTH, FL ELEVATION, AND DEPTH OF STRUCTURE.
3. (N) - NOT A SEPARATE PAY ITEM; FOR INFORMATION ONLY.
4. * - SEE ROADWAY QUANTITIES FOR DRAINAGE ITEM TOTAL

Dist	COUNTY	ROUTE	POST MILES TOTAL PROJECT	SHEET No.	TOTAL SHEETS
08	Riv	91	15.6/21.6	400	2028

REGISTERED CIVIL ENGINEER — DATE 10-28-11
4-25-11
PLANS APPROVAL DATE

REGISTERED PROFESSIONAL ENGINEER ALAN R. BISI No. C62808 Exp. 6-30-12 CIVIL STATE OF CALIFORNIA

THE STATE OF CALIFORNIA OR ITS OFFICERS OR AGENTS SHALL NOT BE RESPONSIBLE FOR THE ACCURACY OR COMPLETENESS OF SCANNED COPIES OF THIS PLAN SHEET.

REVISED BY | DATE REVISED
CALCULATED-DESIGNED BY: MOHAMMAD ABDRABOH | CHECKED BY: ALAN R. BISI
FUNCTIONAL SUPERVISOR: MARK PERTILE

DITCH EXCAVATION	CONCRETE (CHANNEL LINING)	STRUCTURAL CONCRETE, BOX CULVERT	MINOR CONCRETE (MINOR STRUCTURE)	MINOR CONCRETE (MISC. CONSTRUCTION)	CL. IV CONCRETE (BACKFILL) *	HMA-A *	PLACE AC (MISC. AREA) *	MISC. IRON AND STEEL	BAR REINFORCING STEEL	RSP: ¼-TON, METHOD B	RSP: FACING, METHOD B	RSP: NO. 2 BACKING, METHOD B	RSP: RSP FABRIC	FRAMES, GRATES AND COVERS: 24-12 (N)	24-13 (N)	¼" SOLID STEEL COVER (N)	12" X 12" PRECAST INLET	12" X 12" STEEL GRATE (TRAFFIC RATED)	DEBRIS RACK (N)	MANHOLE COVER (N)	MANHOLE COVER-PRESSURE LOCKING (N)	36" PRECAST MANHOLE SHAFT		MANHOLE SHAFT PIPE REDUCER	HEIGHT OF MANHOLE (N)	HEIGHT OF INLET "H" (N)	DRAINAGE INLET MARKER *	CONCRETE COLLAR (N)	RCP: 12" RCP	15" RCP	18" RCP	24" RCP	30" RCP	36" RCP	48" RCP	54" RCP	60" RCP (CL. V SPECIAL)	DESCRIPTION	STATION	DRAINAGE PLAN SHEET NO.	DRAINAGE SYSTEM NO. ⬡	DRAINAGE UNIT ◯
CY	CY	CY	CY	CY	CY	ton	yd²	lb	lb	CY	CY	CY	yd²	EA	EA	EA	EA	EA	EA	EA	EA	LF		EA	FT	FT	EA	EA	LF	LF	LF	LF	LF	LF	LF	LF	LF					
			1.00					235												1																		Parkway Drain	30' RT LIME ST. 21+75	D-16	133	a
			1.00					235												1																		Parkway Drain	53.3' RT. LIME ST. 26+35	D-17	134	a
			0.90					600								1																						Parkway Drain	40.13' RT UNIVERSITY AVE 3+98.4	D-17	135	a
																																						12" CSP		D-3	136	a
																																						MAIN VALVE	167' Lt 201+73.00 "GE1"			b
			5.10					342											1																			CSP RISER	164' Lt. 202+02.00 "GE1"			c
			16.70																																			Conc SPILLWAY	210' Lt 202+00.00 "GE1"			d
			1.70																																			Junction Structure	202' Lt 191+75.74 "GE1"	D-2	137	a
																																						MAIN VALVE				b
																																						12" CSP	206' Lt 192+60.00 "GE1"			c
			5.10					342											1																			CSP RISER				d
											22.2		33.3																									RSP	112' Lt 192+65.00 "GE1"			e
			40.30																																			Conc SPILLWAY	122' Lt 192+65.00 "GE1"			f
																																						ABANDON INLET				g
			71.80					1754			22.2		33.3			1			2	2																		SHEET TOTALS				
5729.65	687.47	~~1365.96~~ 2284.5	~~730.71~~ 1738.86	102.97	60.73	11.81	69.71	59924	308837.2	144.4	193.4	54.5	862.6	127	2	11	2	2	8	29	3	90		13			16	43	566.5	67.4	3387.5	~~2566.5~~ 363.39	~~237.1~~ 539.10	530.0	115.0	566.3	118.2	GRAND TOTALS				

4 REVISED PER ADDENDUM No. 4 DATED DECEMBER 2, 2011

4

1 REVISED PER ADDENDUM No. 1 DATED NOVEMBER 8, 2011

THIS PLAN ACCURATE FOR DRAINAGE WORK ONLY.

STATE OF CALIFORNIA - DEPARTMENT OF TRANSPORTATION
Caltrans DESIGN

DRAINAGE QUANTITIES
DQ-71

LAST REVISION 10-20-11 | DATE PLOTTED => 02-DEC-2011 | TIME PLOTTED => 07:27

Dist	COUNTY	ROUTE	POST MILES TOTAL PROJECT	SHEET No.	TOTAL SHEETS
08	Riv	91	15.6/21.6	401	2028

REGISTERED CIVIL ENGINEER 10-28-11 DATE

4-25-11
PLANS APPROVAL DATE

REGISTERED PROFESSIONAL ENGINEER ALAN R. BISI No. C62808 Exp. 6-30-12 CIVIL STATE OF CALIFORNIA

THE STATE OF CALIFORNIA OR ITS OFFICERS OR AGENTS SHALL NOT BE RESPONSIBLE FOR THE ACCURACY OR COMPLETENESS OF SCANNED COPIES OF THIS PLAN SHEET.

ALTERNATIVE PIPE ALLOWABLE PIPE MATERIAL AND PROTECTION

DESIGNATION	RCP	CSP (2-2/3"x½")			SSRP (3/4"x1" @ 11-1/2" PITCH)			PPC(C)	PPC(D,S)
	SIZE (INCH)	SIZE (INCH)	BITUM. COAT. THICKNESS	PA/PS THICKNESS	SIZE (INCH)	BITUM. COAT. THICKNESS	PA/PS THICKNESS	SIZE (INCH)	SIZE (INCH)
6" APC									6
12" APC TYPE A		12	0.064"	0.052"				12	
12" APC TYPE B					12	0.064"	0.052"		12
12" APC TYPE C	12				12	0.064"	0.052"		12
18" APC TYPE A	18	18	0.064"	0.052"	18	0.064"	0.052"		
18" APC TYPE B	18	18	0.064"	0.052"				18	
18" APC TYPE C		18	0.064"	0.052"				18	
18" APC TYPE D	18				18	0.064"	0.052"		
18" APC TYPE E	18	18	0.064"	0.052"				18	18
18" APC TYPE F	18								18
24" APC		24	0.079"	0.064"				24	
30" APC	30				30	0.079"	0.064"		30
30"x10" ARCH		30x10	0.079"	0.064"	30x10	0.079"	0.064"		
48" APC		48	0.079"	0.064"					

LEGENDS AND ABBREVIATIONS

S - STANDARD JOINT TYPE
P - POSITIVE JOINT TYPE
D - DOWNDRAIN JOINT TYPE
RCP - REINFORCED CONCRETE PIPE
PPC(C) - PLASTIC PIPE CULVERT, TYPE C (CORRUGATED INTERIOR WALL)
PPC(D,S) - PLASTIC PIPE CULVERT, TYPE D OR S (SMOOTH INTERIOR WALL)
CSP - CORRUGATED STEEL PIPE
CAP - CORRUGATED ALUMINUM PIPE
SSRP - STEEL SPIRAL RIBBED PIPE
GA. - GAUGE
BITUM. - BITUMINOUS
PA - POLYMERIZED ASPHALT
PS - POLYMERIC SHEET
w/ - WITH
Ω - SEE DRAINAGE DETAIL

1

Notes:

1. SUFFICIENT SPACE WAS NOT AVAILABLE TO LIST ALL DRAINAGE ITEMS WITHIN A SINGLE TABLE ON A SHEET BORDER, THEREFORE THE LISTING OF THE FIRST GROUPING OF DRAINAGE ITEMS ARE REPEATED ON THE ODD NUMBERED ID CODE SHEETS (DQ-1, DQ-3, ETC.) AND THE LISTINGS OF THE REMAINING GROUP OF DRAINAGE ITEMS ARE REPEATED ON THE EVEN NUMBERED ID CODE SHEETS (DQ-2, DQ-4, ETC.).
2. THE PRECISE DETERMINATION OF THE FOLLOWING ITEMS WILL BE MADE BY THE ENGINEER IN THE FIELD: STATION, SKEW, LENGTH, FL ELEVATION, AND DEPTH OF STRUCTURE.
3. (N) - NOT A SEPARATE PAY ITEM; FOR INFORMATION ONLY.
4. * - SEE ROADWAY QUANTITIES FOR DRAINAGE ITEM TOTAL

CSP 12" (14 GA.) LF	CSP 18" (14 GA.) LF	CSP 36" (10 GA.) LF	CSP 12" RISER (14 GA.) LF	CSP 48" RISER (10 GA.) LF	CSP 18" SLOTTED PIPE (14 GA.) LF	CSP 21" SLOTTED PIPE (14 GA.) LF	CSP 24" SLOTTED PIPE (14 GA.) LF	ALTERNATIVE PIPE 6" AP (TYPE __) LF	ALTERNATIVE PIPE 12" AP (TYPE __) LF	ALTERNATIVE PIPE 18" AP (TYPE __) LF	ALTERNATIVE PIPE 24" AP (TYPE __) LF	ALTERNATIVE PIPE 30" AP (TYPE __) LF	ALTERNATIVE PIPE 48" AP (TYPE __) LF	ALTERNATIVE PIPE 30" X 10" AP ARCH PIPE (TYPE __) LF	MAXIMUM COVER (N) FT	ELBOW (N) EA	PIPE JOINT CLASSIFICATION	8" GALVANIZED STEEL PIPE LF	8" GATE VALVE w/ SLEEVE & COVER EA	AFES 12" AFES EA	PIPE RISER 8" AP SLIPJOINT (N) EA	PIPE RISER 12" AP SLIPJOINT (N) EA	CABLE RAILING LF	ADJUST INLET EA	MODIFY INLET EA	REMOVAL/ABANDON PAY ITEMS REMOVE CONCRETE CY	REMOVE PIPE LF	REMOVE INLET EA	ABANDON INLET EA	ABANDON PIPE LF	SAND BACKFILL CY	CAP RISER EA	CAP INLET EA	DESCRIPTION	STATION	DRAINAGE PLAN SHEET NO.	DRAINAGE SYSTEM NO. ⬡	DRAINAGE UNIT ◯
																																	Parkway Drain	30' RT LIME ST. 21+75	D-16	133	a
																																	Parkway Drain	53.3' RT. LIME ST. 26+35	D-17	134	a
																																	Parkway Drain	40.13' RT UNIVERSITY AVE 3+98.4	D-17	135	a
57.0															5.0		S																12" CSP		D-3	136	a
																			1														MAIN VALVE	167' Lt 201+73.00 "GE1"			b
				3.0																													CSP RISER	164' Lt. 202+02.00 "GE1"			c
																																	Conc SPILLWAY	210' Lt 202+00.00 "GE1"			d
																																	Junction Structure	202' Lt 191+75.74 "GE1"	D-2	137	a
																			1														MAIN VALVE				b
82.4															5.0		S																12" CSP	206' Lt 192+60.00 "GE1"			c
				3.0																													CSP RISER				d
																																	RSP	112' Lt 192+65.00 "GE1"			e
																																	Conc SPILLWAY	122' Lt 192+65.00 "GE1"			f
																												1					ABANDON INLET				g
133.4				6.0															2									1					SHEET TOTALS				
274.8	116.6	~~36.0~~	93.7	23.0	360.0	465.0	234	22.2	726.1	1743.6	167.5	758.7	67.1	56.0		17		460.00	4	3	2	10	697.0	1		454.95	1931.8	48	12	3773.9	365.77		8	GRAND TOTALS				

4 52.5

4 REVISED PER ADDENDUM No. 4 DATED DECEMBER 2, 2011

1 REVISED PER ADDENDUM No. 1 DATED NOVEMBER 8, 2011

THIS PLAN ACCURATE FOR DRAINAGE WORK ONLY.

DRAINAGE QUANTITIES
DQ-72

REVISED BY | DATE REVISED

CALCULATED-DESIGNED BY: MOHAMMAD ABDRABOH
CHECKED BY: ALAN R. BISI
FUNCTIONAL SUPERVISOR: MARK PERTILE

STATE OF CALIFORNIA - DEPARTMENT OF TRANSPORTATION
Caltrans DESIGN

LAST REVISION 10-20-11
DATE PLOTTED => 02-DEC-2011
TIME PLOTTED => 07:27

Dist	COUNTY	ROUTE	POST MILES TOTAL PROJECT	SHEET No.	TOTAL SHEETS
08	Riv	91	15.6/21.6	791	2028

REGISTERED CIVIL ENGINEER 10-28-11 DATE

4-25-11
PLANS APPROVAL DATE

REGISTERED PROFESSIONAL ENGINEER CUONG LE TRAN No. C60436 Exp 6/30/12 CIVIL STATE OF CALIFORNIA

THE STATE OF CALIFORNIA OR ITS OFFICERS OR AGENTS SHALL NOT BE RESPONSIBLE FOR THE ACCURACY OR COMPLETENESS OF SCANNED COPIES OF THIS PLAN SHEET.

4 1

REMOVE CONCRETE

SHEET NO.	STATION TO STATION	LOCATION	REMOVE CONCRETE GUTTER	REMOVE CONCRETE CURB	REMOVE CONCRETE CURB & GUTTER	REMOVE CONCRETE CURB & SIDEWALK	REMOVE CONCRETE CURB & GUTTER AND SIDEWALK	REMOVE RETAINING WALL
			YD^3	YD^3	YD^3	YD^3	YD^3	YD^3
C-16	374+88.07 96.9′ R+ TO 374+02.21 154.1′ R+ "GE 1"	R+				4.89		
C-16	374+02.21 154.1′ R+ TO 376+68.21 126.8′ R+ "GE 1"	R+			10.22			
C-16	374+88.99 89.4′ L+ TO 375+05.56 61.8′ L+ "GE 1"	L+			4.73	4.18		
C-16	375+05.56 61.8′ L+ TO 376+41.69 152.8′ L+ "GE 1"	L+			8.17			
C-16	377+43.85 147.8′ L+ TO 375+22.78 61.8′ L+ "GE 1"	L+			10.65			
C-16	375+08.05 229.3′ L+ TO 375+22.78 61.8′ L+ "GE 1"	L+			20.84	9.86		
C-16	375+08.05 229.3′ L+ TO 375+22.78 61.8′ L+ "GE 1"	L+				2.95		
C-16	375+08.05 229.3′ L+ TO 375+22.78 61.8′ L+ "GE 1"	L+				7.52		
C-16	375+08.05 229.3′ L+ TO 375+22.78 61.8′ L+ "GE 1"	L+				4.82		
C-16	375+08.05 229.3′ L+ TO 375+22.78 61.8′ L+ "GE 1"	L+				0.45		
C-16	372+83.22 159.6′ L+ TO 373+86.19 88.8′ L+ "GE 1"	L+			10.66	8.45		
C-16	372+68.59 93.6′ L+ TO 374+17.43 260.5′ L+ "GE 1"	L+				24.45		
C-16	372+68.59 93.6′ L+ TO 374+17.43 260.5′ L+ "GE 1"	L+				3.37		
C-16	372+68.59 93.6′ L+ TO 374+17.43 260.5′ L+ "GE 1"	L+				3.65		
C-17	385+13.80 66′ L+ TO 389+84.11 63.5′ L+ "GE 1"	L+			28.22	37.16		
C-17	379+49.84 50′ R+ TO 380+05.01 44.7′ R+ "GE 1"	R+			3.31			
C-17	389+63.74 81.8′ R+ TO 392+49.89 131.2′ R+ "GE 1"	R+			17.17			
C-17	366+56.10 392.4′ L+ TO 386+87.23 77.9′ L+ "GE 1"	L+			17.94	55.75		
C-17	387+43.34 363.3′ L+ TO 387+33.97 231.05′ L+ GE 1"	L+			40.09	109.72		
C-17	387+43.34 363.3′ L+ TO 387+33.97 231.05′ L+ GE 1"	L+			13.44	33.19		
C-18	392+49.89 234′ L+ TO 393+94.57 189.6′ L+ "GE 1"	L+			11.72	14.42		
C-18	349+28.0 179′ L+ TO 394+91.16 110.7′ L+ "GE 1"	L+			8.84			
C-18	394+60 204′ L+ TO 394+91.16 222′ L+ "GE 1"	L+				3.63		
C-18	394+37.86 217.8′ L+ TO394+37.86 217.8′ L+ "GE 1"	L+			7.62	4.56		
C-18	392+49.89 66.39′ R+ TO 394+89.4 129.6′ R+ "GE1"	R+			12.38	1.35		
C-18	392+49.89 127.3′ R+ TO 393+16.35 163.7′ R+ "GE1"	R+			3.76			
C-6	241+00 76′ R+ TO 246.50 76′ R+ "GE1"	R+						170
C-8	266+25 221′ L+ TO 269+80 120′ L+ "GE1"	L+						137
C-15	355+14 54′ R+ TO 364+10 66′ R+ "GE1"	R+						400
G-15 & G-16	72+98.92 46.21′ R+ TO 76+53.64 67.04′ R+ "PMT1"	R+						797
G-15 & G-17	79+72.56 49.32′ R+ TO 83+03 51.79′ R+ "PMT1"	R+						~~1129~~ 1265
C-18	393+75 80.6′ L+ TO 398+30 91.6′ L+ "GE1"	L+						530
	SUBTOTAL				229.76	334.37		~~2633~~ 3299
	TOTAL (Q-12 TO Q-13)		1401.77	477.97	815.93	352.37	7.80	
	GRAND TOTAL		6919 ~~6253~~					

4 REVISED PER ADDENDUM No. 4 DATED DECEMBER 2, 2011

1 REVISED PER ADDENDUM No. 1 DATED NOVEMBER 8, 2011

SUMMARY OF QUANTITIES

Q-14

STATE OF CALIFORNIA - DEPARTMENT OF TRANSPORTATION
Caltrans DESIGN

FUNCTIONAL SUPERVISOR: MARK PERTILE
CALCULATED-DESIGNED BY: CUONG LE TRAN
CHECKED BY: ANNABELL WANG
REVISED BY / DATE REVISED

LAST REVISION 10-13-11
DATE PLOTTED => 02-DEC-2011
TIME PLOTTED => 07:27

Dist	COUNTY	ROUTE	POST MILES TOTAL PROJECT	SHEET No.	TOTAL SHEETS
08	Riv	91	15.6/21.6	1081A	2028

REGISTERED CIVIL ENGINEER — DATE 11-28-11

4-25-11
PLANS APPROVAL DATE

REGISTERED PROFESSIONAL ENGINEER — THOMAS HIEN NGO — No. 68383 — Exp. 9/30/13 — CIVIL — STATE OF CALIFORNIA

THE STATE OF CALIFORNIA OR ITS OFFICERS OR AGENTS SHALL NOT BE RESPONSIBLE FOR THE ACCURACY OR COMPLETENESS OF SCANNED COPIES OF THIS PLAN SHEET.

4

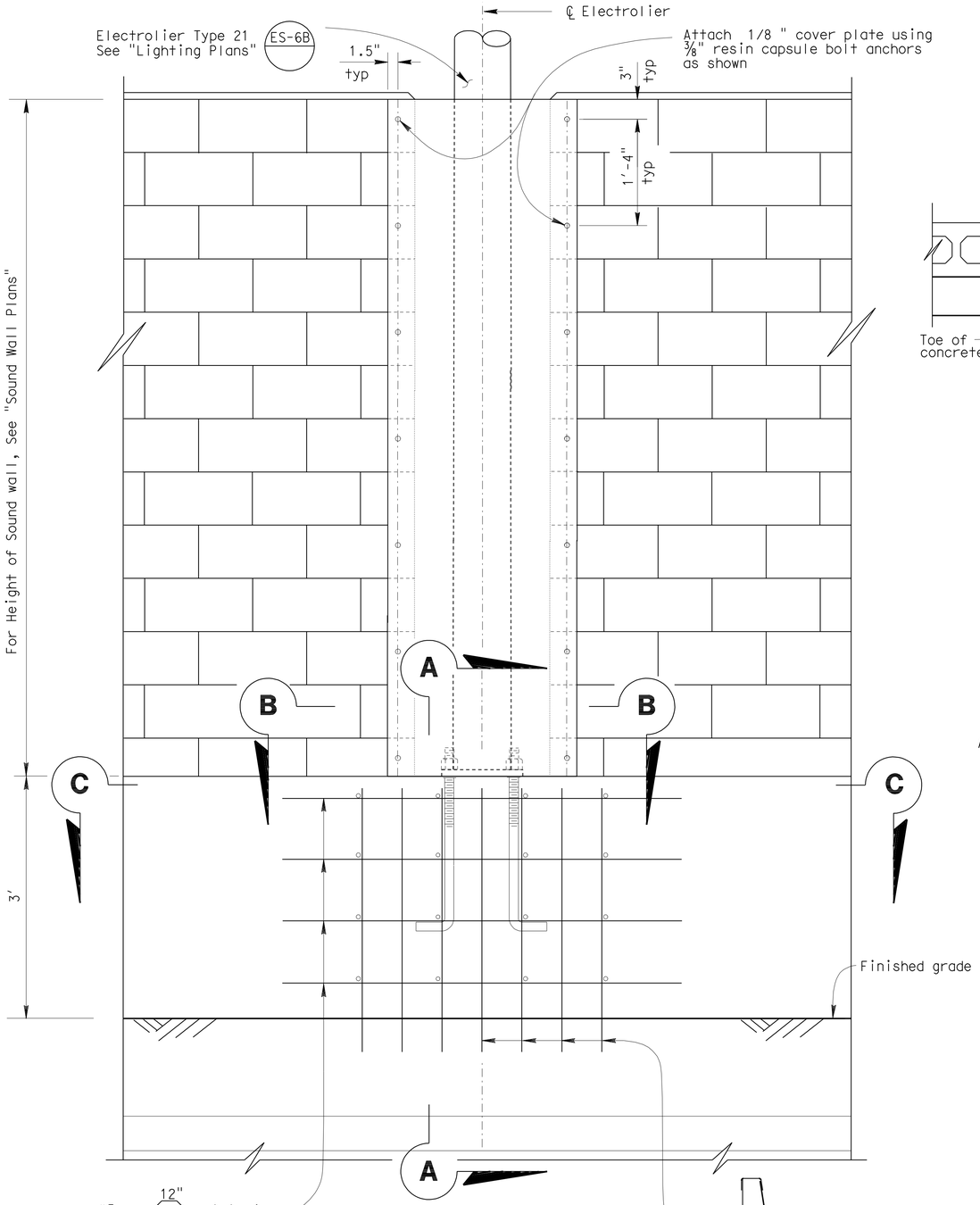

ELEVATION
Scale 1:10

For locations of the electrolier, see "Lighting Plans".

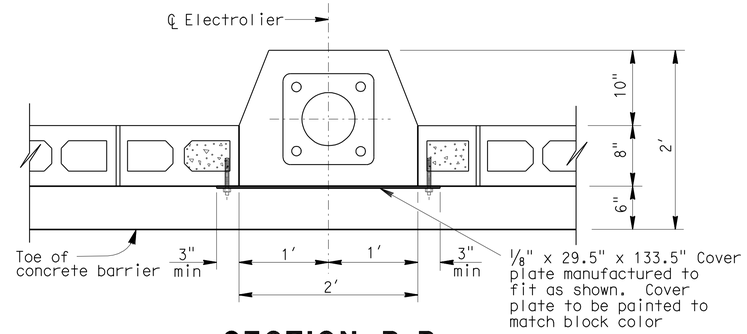

SECTION B-B
Scale 1:10

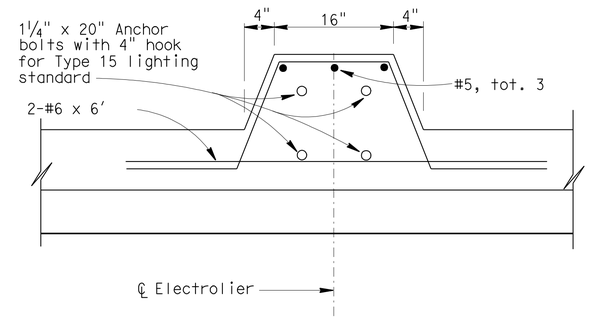

SECTION C-C
Scale 1:10

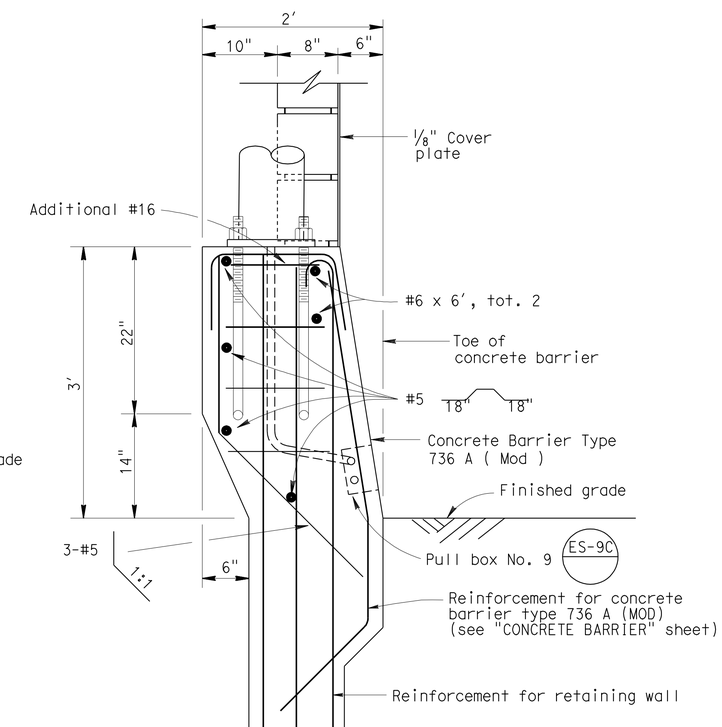

SECTION A-A
Scale 1:10

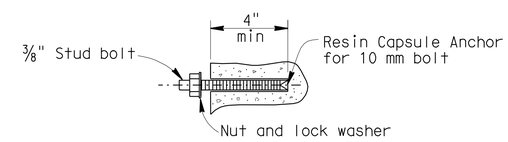

RESIN CAPSULE BOLT ANCHORAGE
No Scale

Note: Resin capsule anchorage is subject to approval of Engineer. Installation procedures shall comply with manufacturer's instructions.

SOUND WALL DETAILS
SOUNDWALL ON 736 A MODIFIED TYPE 21 ELECTROLIER DETAILS

NO SCALE

SW1-12A

4 ADDED PER ADDENDUM No. 4 DATED DECEMBER 2, 2011

THIS PLAN ACCURATE FOR SOUND WALL WORK ONLY

STATE OF CALIFORNIA - DEPARTMENT OF TRANSPORTATION — DESIGN

FUNCTIONAL SUPERVISOR: MARK PERTILE

CALCULATED-DESIGNED BY: THAI VAN HGUYEN

CHECKED BY: THOMAS HIEN NGO

REVISED BY / DATE REVISED

LAST REVISION 11-28-11 — DATE PLOTTED => 02-DEC-2011 — TIME PLOTTED => 07:28

Dist	COUNTY	ROUTE	POST MILES TOTAL PROJECT	SHEET No.	TOTAL SHEETS
08	Riv	91	15.6/21.6	1081B	2028

REGISTERED CIVIL ENGINEER — DATE 11-28-11

4-25-11
PLANS APPROVAL DATE

REGISTERED PROFESSIONAL ENGINEER — THOMAS HIEN NGO No. 68383 Exp. 9/30/13 CIVIL — STATE OF CALIFORNIA

THE STATE OF CALIFORNIA OR ITS OFFICERS OR AGENTS SHALL NOT BE RESPONSIBLE FOR THE ACCURACY OR COMPLETENESS OF SCANNED COPIES OF THIS PLAN SHEET.

4

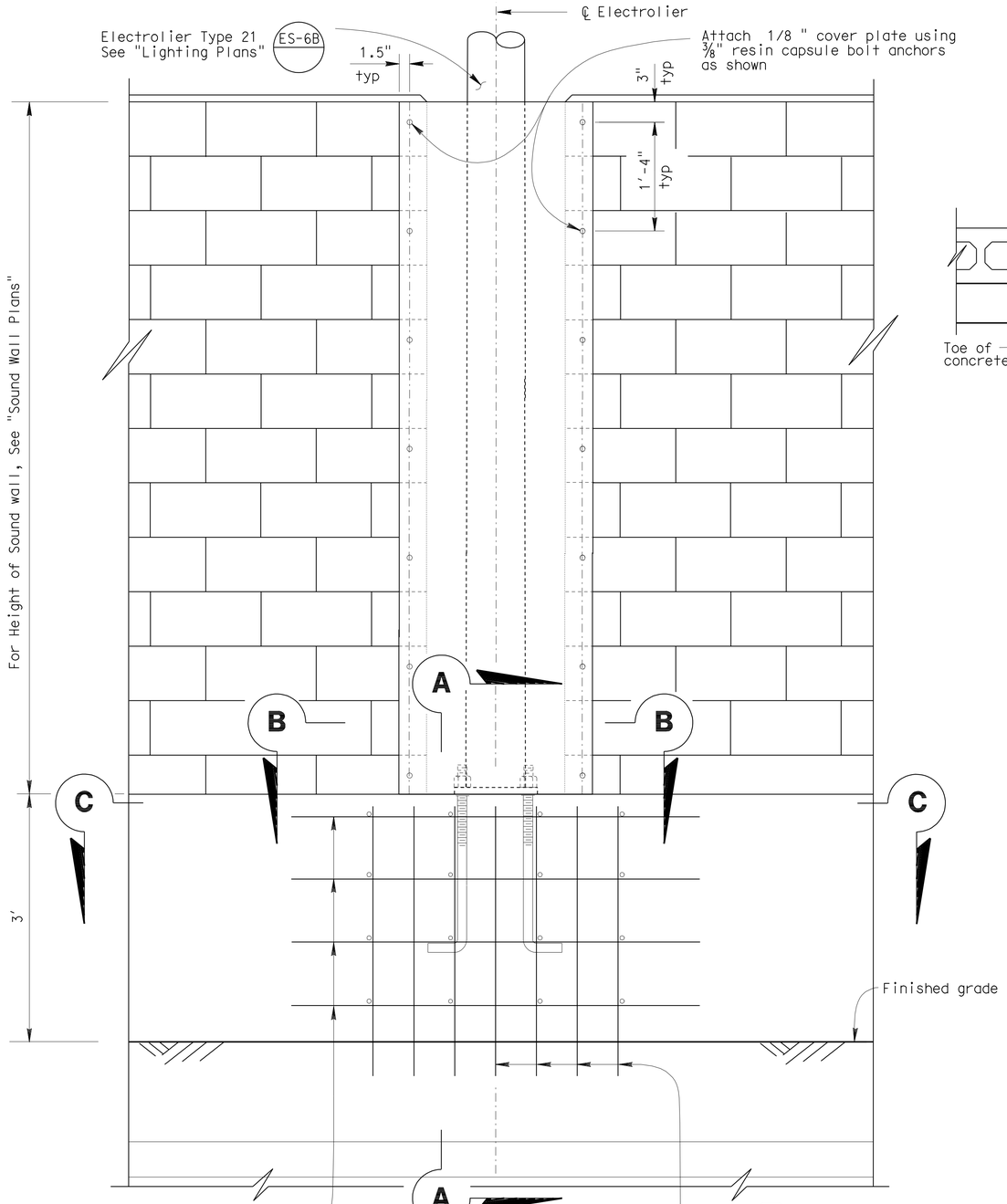

ELEVATION
Scale 1:10

For locations of the electrolier, see "Lighting Plans".

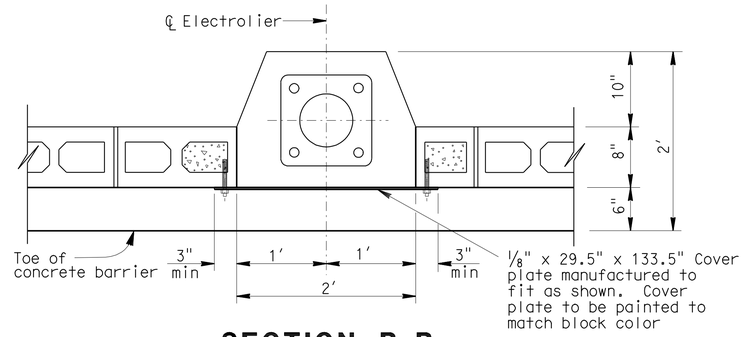

SECTION B-B
Scale 1:10

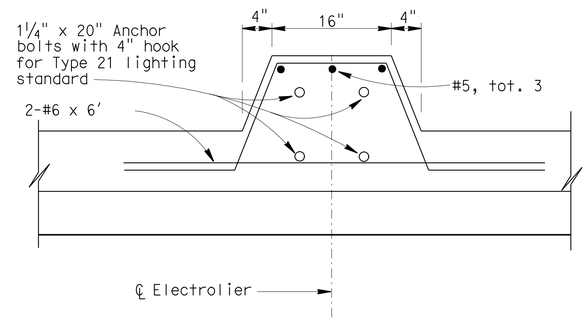

SECTION C-C
Scale 1:10

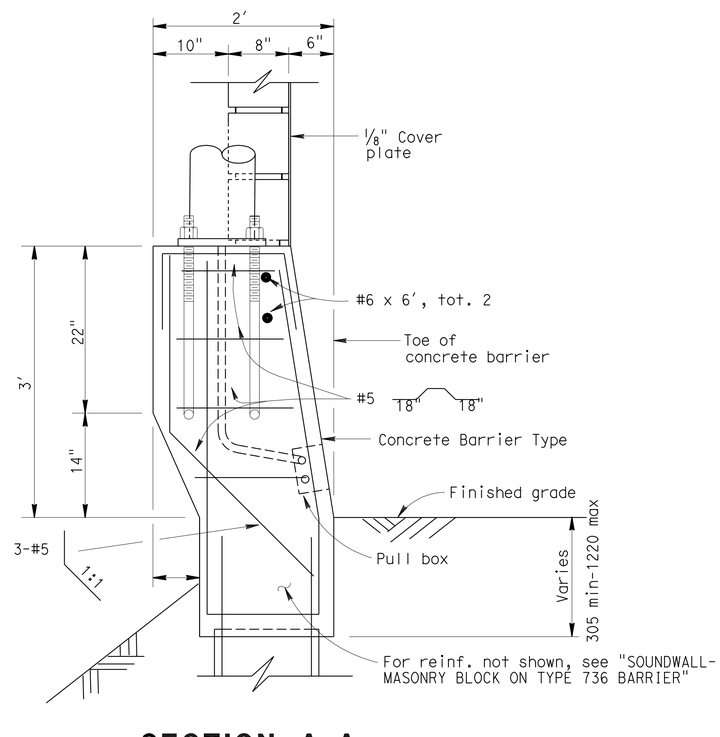

SECTION A-A
Scale 1:10

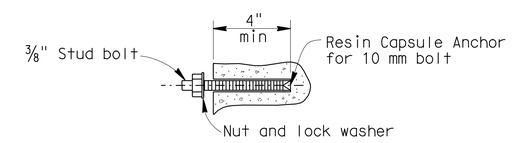

RESIN CAPSULE BOLT ANCHORAGE
No Scale

Note: Resin capsule anchorage is subject to approval of Engineer. Installation procedures shall comply with manufacturer's instructions.

SOUND WALL DETAILS
SOUNDWALL ON 736SV MODIFIED TYPE 21 ELECTROLIER DETAILS

NO SCALE

SW1-12B

4 **ADDED PER ADDENDUM No. 4 DATED DECEMBER 2, 2011**

THIS PLAN ACCURATE FOR SOUND WALL WORK ONLY

STATE OF CALIFORNIA - DEPARTMENT OF TRANSPORTATION — DESIGN

FUNCTIONAL SUPERVISOR: MARK PERTILE

CALCULATED-DESIGNED BY: THAI VAN HGUYEN

CHECKED BY: THOMAS HIEN NGO

REVISED BY / DATE REVISED

LAST REVISION 11-28-11 — DATE PLOTTED => 02-DEC-2011 — TIME PLOTTED => 07:28

DIST	COUNTY	ROUTE	POST MILES TOTAL PROJECT	SHEET No	TOTAL SHEETS
08	Riv	91	15.6/21.6	1721	2028

REGISTERED CIVIL ENGINEER 11-30-10 DATE

4-25-11
PLANS APPROVAL DATE

REGISTERED PROFESSIONAL ENGINEER HUAN VU No. 60696 Exp. 12-31-10 CIVIL STATE OF CALIFORNIA

The State of California or its officers or agents shall not be responsible for the accuracy or completeness of electronic copies of this plan sheet.

4

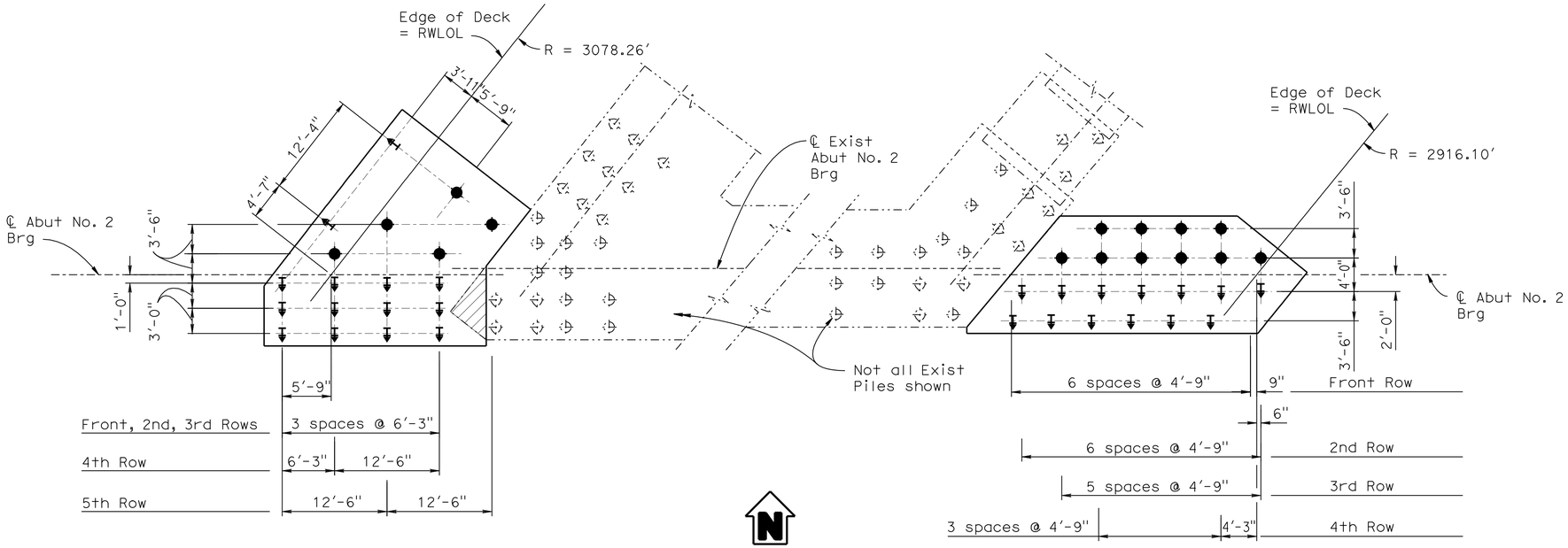

ABUTMENT NO. 2 PILE LAYOUT

1/8" = 1'-0"

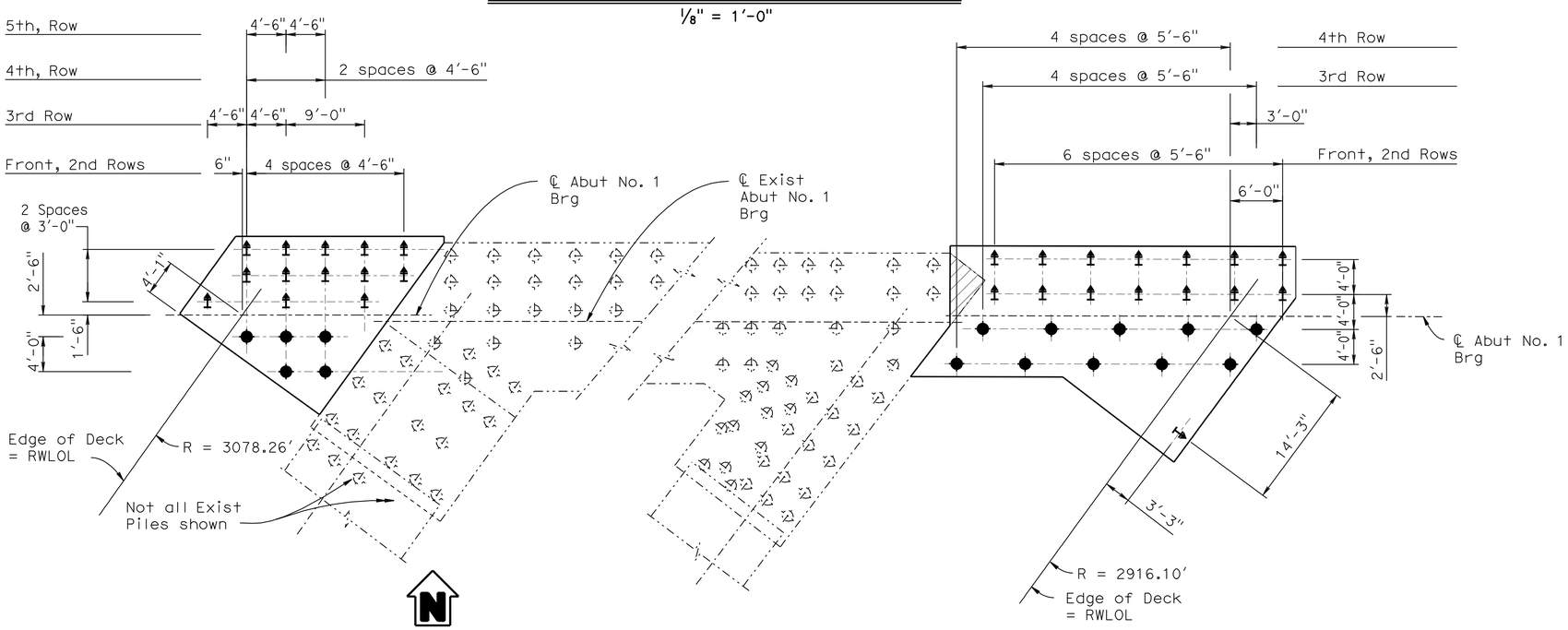

ABUTMENT NO. 1 PILE LAYOUT

1/8" = 1'-0"

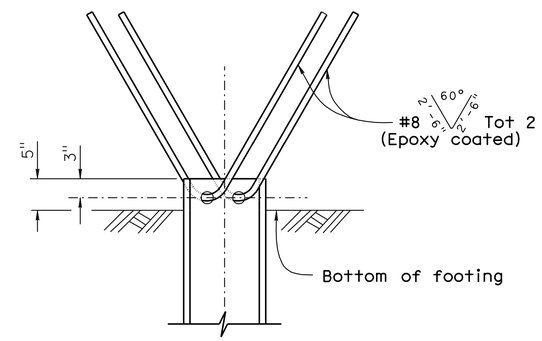

ELEVATION

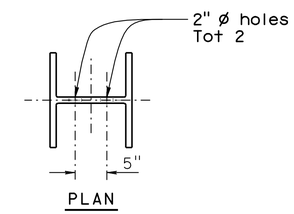

PLAN

STEEL PILE ANCHOR

LEGEND:

- Denotes Existing Piles
- Denotes New Battered Pile 3:1
- Denotes New Vertical Pile
- Denotes Existing Structure
- Denotes New Construction
- Denotes limits of concrete removal

NOTE:
THE CONTRACTOR SHALL VERIFY ALL CONTROLLING FIELD DIMENSIONS BEFORE ORDERING OR FABRICATING ANY MATERIAL.

4 **REVISED PER ADDENDUM No. 4 DATED DECEMBER 2, 2011**

DESIGN	BY F. Chen	CHECKED M. Crete	
DETAILS	BY R. Kirkland	CHECKED M. Crete	
QUANTITIES	BY F. Chen	CHECKED M. Crete	

STATE OF CALIFORNIA DEPARTMENT OF TRANSPORTATION

DIVISION OF ENGINEERING SERVICES STRUCTURE DESIGN DESIGN BRANCH 10

BRIDGE NO. 56-0356
POST MILE 18.40

CENTRAL AVENUE UC (WIDEN)
ABUTMENT FOOTING PILES LAYOUT

STRUCTURES DESIGN DETAIL SHEET (ENGLISH) (REV. 10/25/05)

ORIGINAL SCALE IN INCHES FOR REDUCED PLANS 0 1 2 3

CU 08
EA 448401

DISREGARD PRINTS BEARING EARLIER REVISION DATES → 2/05/09 8/11/09 12-01-11

REVISION DATES

SHEET 14 OF 26

FILE => 560356fafp_lo14.add

USERNAME => s121614 DATE PLOTTED => 02-DEC-2011 TIME PLOTTED => 07:49

DIST	COUNTY	ROUTE	POST MILES TOTAL PROJECT	SHEET No	TOTAL SHEETS
08	Riv	91	15.6/21.6	1919	2028

REGISTERED CIVIL ENGINEER — DATE 11-30-10

4-25-11
PLANS APPROVAL DATE

REGISTERED PROFESSIONAL ENGINEER — HUAN D. VU — No. C60696 — Exp. 12/31/10 — CIVIL — STATE OF CALIFORNIA

The State of California or its officers or agents shall not be responsible for the accuracy or completeness of electronic copies of this plan sheet.

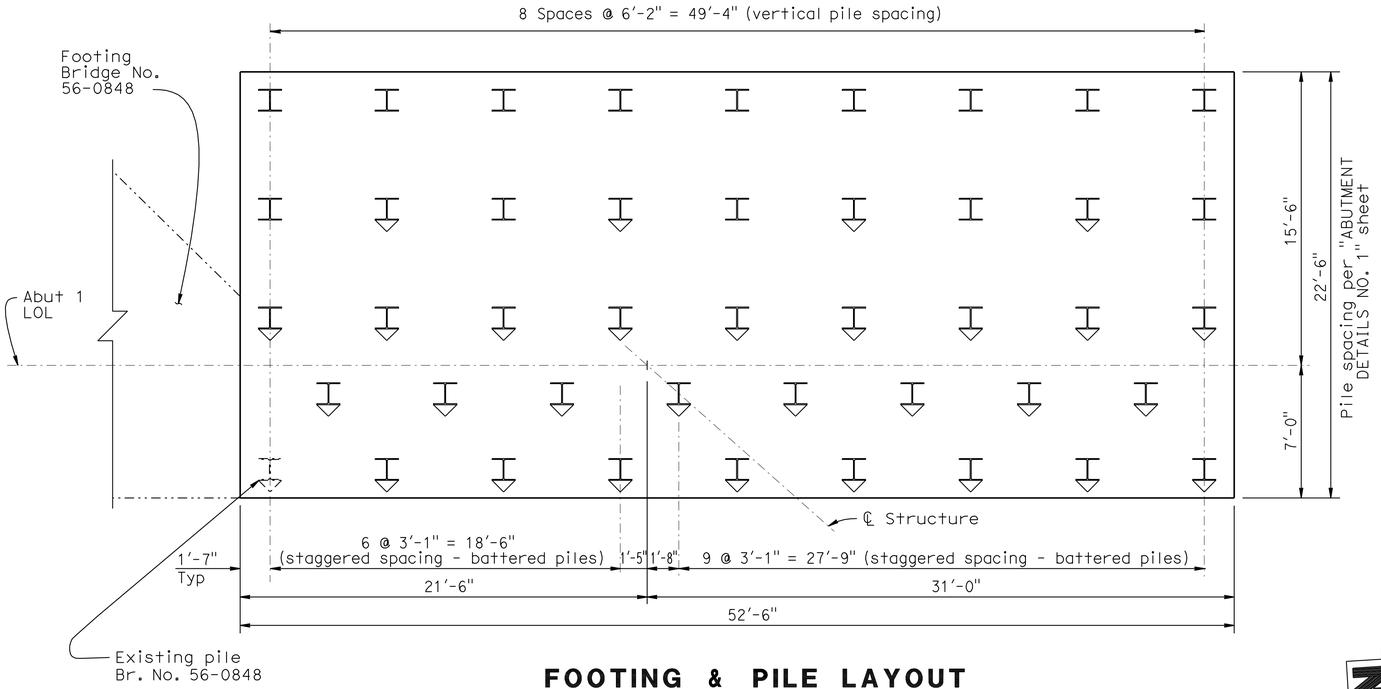

FOOTING & PILE LAYOUT

1/4" = 1'-0'

I Indicates vertical steel pile

I Indicates battered steel pile at 1:3

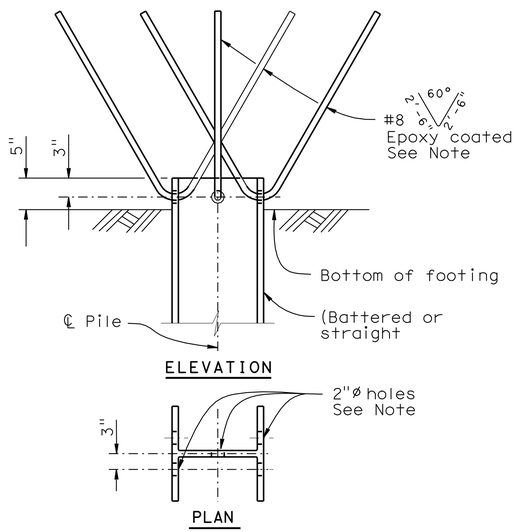

STEEL PILE ANCHOR

NO SCALE

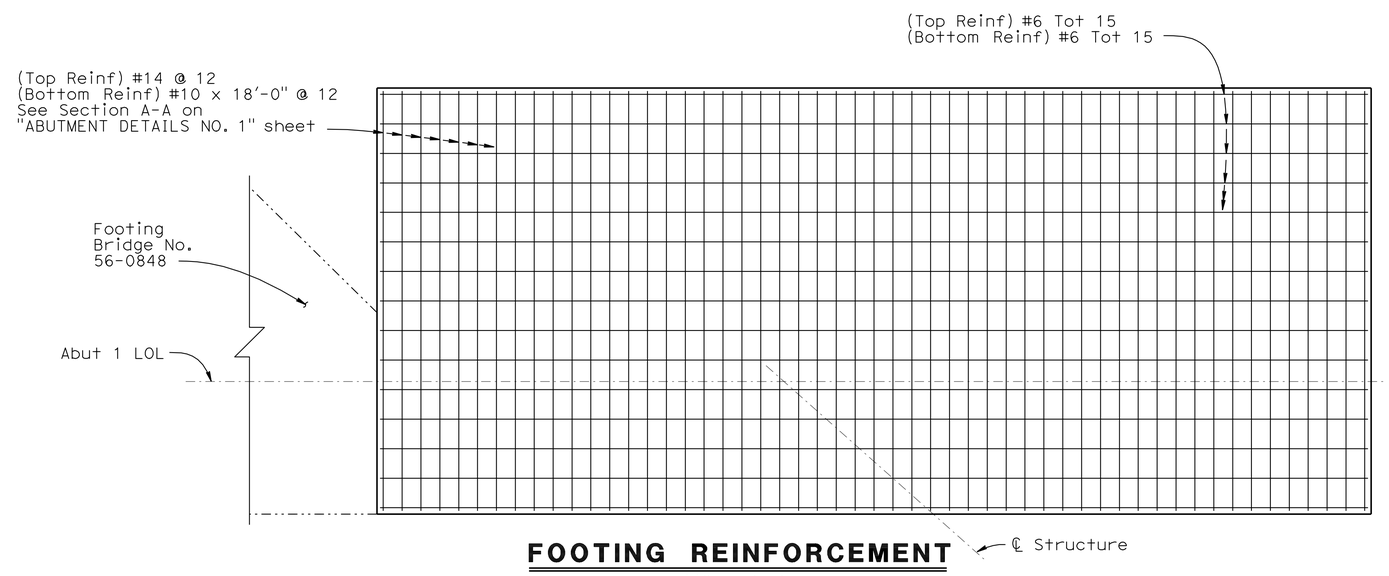

FOOTING REINFORCEMENT

1/4" = 1'-0'

NOTE:
THE CONTRACTOR SHALL VERIFY ALL CONTROLLING FIELD DIMENSIONS BEFORE ORDERING OR FABRICATING ANY MATERIAL.

4 NOTE:
1. For both Abut 1 & Abut 3, Steel pile anchor ~~required for rear row of piles only,~~ with 3 bars.
2. For Bent 2, Steel pile anchor ~~required at all piles,~~ with 5 bars.

4 **REVISED PER ADDENDUM No. 4 DATED DECEMBER 2, 2011**

	BY	CHECKED
DESIGN	B. Addlespurger	G. Slocum
DETAILS	J. Yang	G. Slocum
QUANTITIES	T. Sanderson	R. Anderson

STATE OF CALIFORNIA
DEPARTMENT OF TRANSPORTATION

DIVISION OF ENGINEERING SERVICES
STRUCTURE DESIGN
DESIGN BRANCH 10

BRIDGE NO. 56-0839
POST MILE 19.39

PACHAPPA UP (REPLACE)
ABUTMENT 1 FOOTING DETAILS

STRUCTURES DESIGN DETAIL SHEET (ENGLISH) (REV. 10/25/05)

ORIGINAL SCALE IN INCHES FOR REDUCED PLANS 0 1 2 3

CU 08
EA 448401

DISREGARD PRINTS BEARING EARLIER REVISION DATES

REVISION DATES: 01-14-10 | 02-12-10 | 6-14-10 | 9-06-10 | 9-23-10

SHEET 9 OF 44

FILE => 560839fafdt09.add

USERNAME => s121614 DATE PLOTTED => 02-DEC-2011 TIME PLOTTED => 07:46

DIST.	COUNTY	ROUTE	POST MILES TOTAL PROJECT	SHEET NO.	TOTAL SHEETS
08	Riv	91	15.6/21.6	1968	2028

REGISTERED ENGINEER - CIVIL 11-30-10

4-25-11
PLANS APPROVAL DATE

REGISTERED PROFESSIONAL ENGINEER HUAN VU No. 60696 Exp. 12-31-10 CIVIL STATE OF CALIFORNIA

The State of California or its officers or agents shall not be responsible for the accuracy or completeness of electronic copies of this plan sheet.

The State of California or its officers or agents shall not be responsible for the accuracy or completeness of electronic copies of this plan sheet.

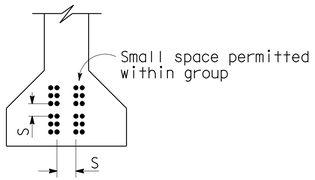

CLEARANCES FOR PRETENSIONED STRANDS

1. Strands may be bundled in groups consisting of 3 vertically 2 horizontally, and separated at the ends.
2. The min distance "S" between groups or individual strands is 1½" for ⅜" strands, 1¾" for 7/16" strands and ½" strands, 2" for 0.6" strands.
3. "S" is measured between centers of adjacent strands.
4. Approval of Engineer is required for deviation.

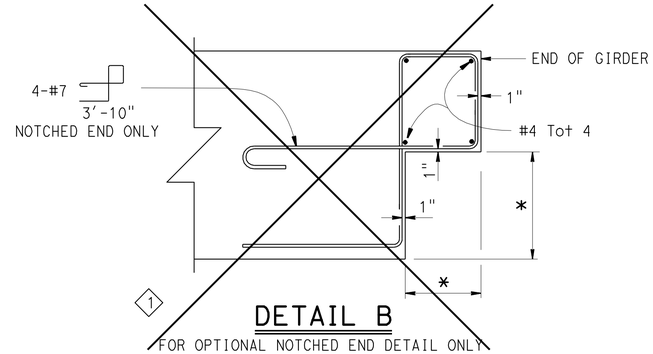

1 DETAIL B
FOR OPTIONAL NOTCHED END DETAIL ONLY

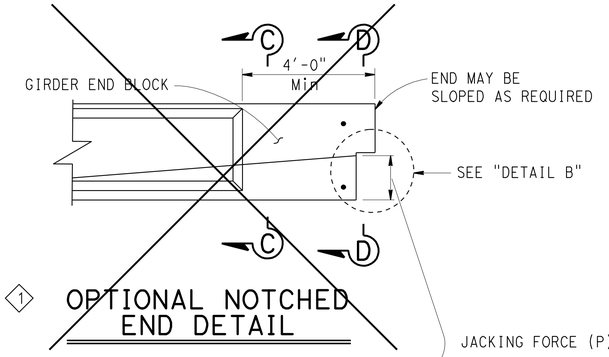

1 OPTIONAL NOTCHED END DETAIL

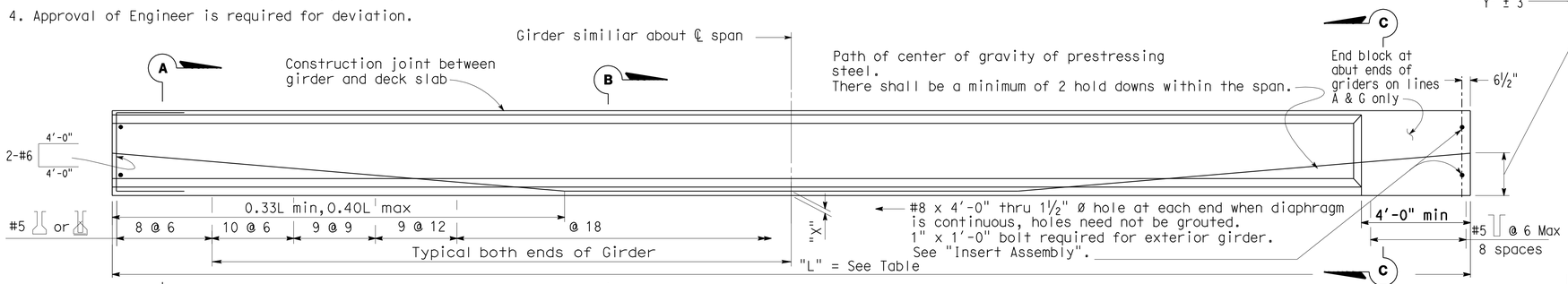

ELEVATION

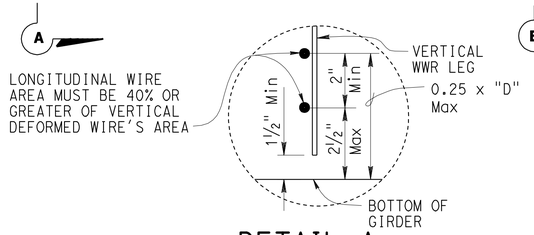

DETAIL A

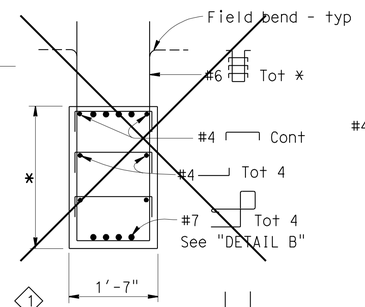

1 SECTION D-D

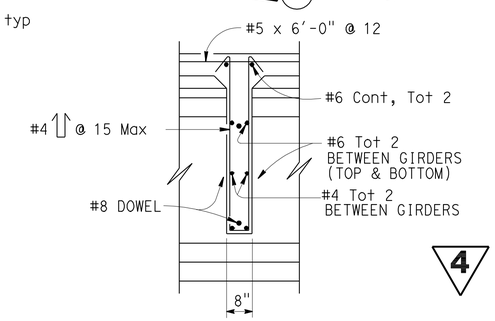

SECTION E-E

4 REVISED PER ADDENDUM No. 4 DATED DECEMBER 2, 2011

PRESTRESSING NOTES

JACKING FORCE (P): The manufacture jacking force required at point of control along the span. The jacking force does not include any fabrication specific losses.

The maximum tensile stress in the prestressing steel upon release shall not exceed 75 percent of the specified minimum ultimate tensile strength of the prestressing steel.

The maximum temporary tensile stress (jacking stress) in the prestressing steel shall not exceed 80 percent of the specified minimum ultimate tensile strength of the prestressing steel.

CONCRETE STRENGTH: f'ci (Ksi) is at time of initial stressing.
f'c (ksi) is at 28 days

DEFLECTION COMPONENTS: Informational - to be used in setting screed line elevations.

Screed line elevations for deck concrete will be determined by the Engineer.

Contractor may interpolate "P" and "X" values between limits shown, as approved by the Engineer.

Girder Location			Jacking Force (P) (Kips)		"Y" (in)	Concrete Strength (Ksi)		Deflection Components in Inches	
Span	Designator	Length Ft	"X" (in)			f'ci	f'c	1 Deck DL	2 Rail DL
1	A - F G	79.33	4	650	15	5.0	8.0	0.7	0.04
			6	680					
2	A - F G	86.25	4	750	15	5.0	8.0	1.0	0.06
			6	780					

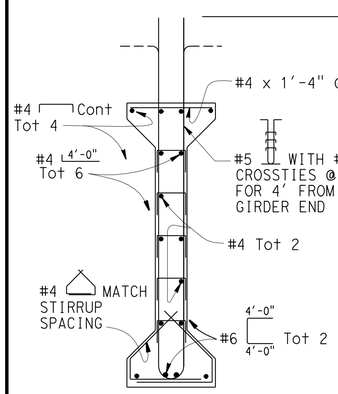

SECTION A-A

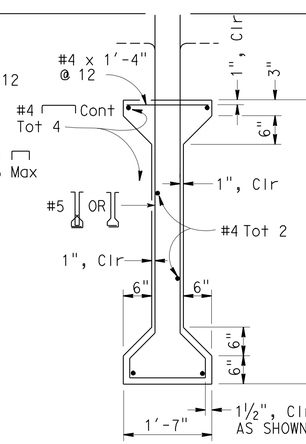

SECTION B-B

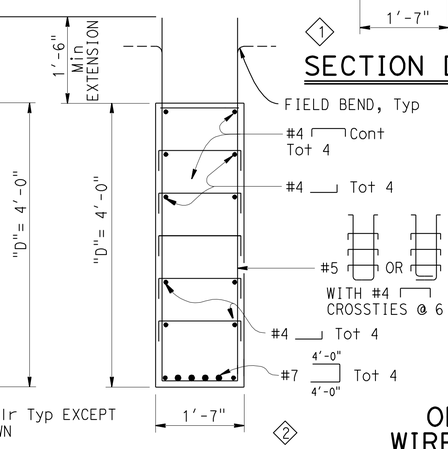

SECTION C-C

2

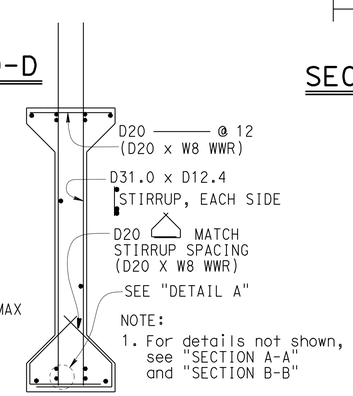

NOTE:
1. For details not shown, see "SECTION A-A" and "SECTION B-B"

OPTIONAL WELDED WIRE REINFORCEMENT (WWR) DETAIL

WWR NOTE: MANUFACTURER'S SHOP DRAWING SHALL CONFORM TO THE REINFORCEMENT SHOWN ON THIS SHEET AS NOTED AND THE SPECIAL PROVISIONS

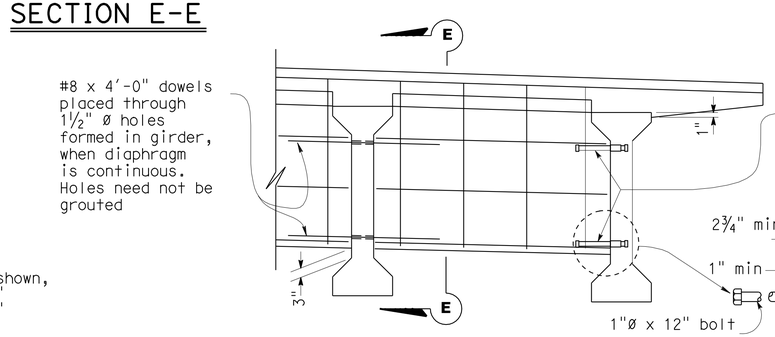

INTERMEDIATE DIAPHRAGM

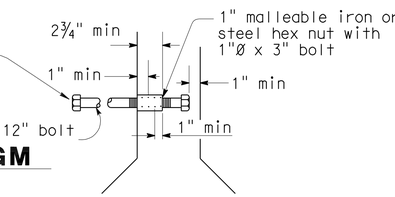

INSERT ASSEMBLY

STANDARD DRAWING

FILE NO. xs 1-120-e

APPROVED BY Jim Ma (RESPONSIBLE TECHNICAL SPECIALIST)
APPROVAL DATE 02-01-10

RELEASED BY Susan Hida (RESPONSIBLE OFFICE CHIEF)
RELEASE DATE 02-01-10

1 Detail not used
2 Revised detail

STATE OF CALIFORNIA
DEPARTMENT OF TRANSPORTATION

DIVISION OF ENGINEERING SERVICES

BRIDGE NO. 56-0840
POST MILE 19.0

IVY STREET OC (REPLACE)
PRECAST PRESTRESSED I GIRDER

DS OSD 2147A (ENGLISH STANDARD DRAWING "XS" BORDER REV. 01/11/08)

ORIGINAL SCALE IN INCHES FOR REDUCED PLANS 0 1 2 3

CU 08
EA 448401

DISREGARD PRINTS BEARING EARLIER REVISION DATES

REVISION DATES (PRELIMINARY STAGE ONLY) 6-19-09 2-24-10 4-28-10 10-29-10

SHEET 14 OF 27

USERNAME => s119571

5608401gdt14.add

DATE PLOTTED => 02-DEC-2011 TIME PLOTTED => 07:23

DIST	COUNTY	ROUTE	POST MILES TOTAL PROJECT	SHEET No	TOTAL SHEETS
08	Riv	91	15.6/21.6	1990	2028

REGISTERED CIVIL ENGINEER 11-30-10 DATE

4-25-11
PLANS APPROVAL DATE

REGISTERED PROFESSIONAL ENGINEER HUAN D. VU No. C60696 Exp. 12/31/10 CIVIL STATE OF CALIFORNIA

The State of California or its officers or agents shall not be responsible for the accuracy or completeness of electronic copies of this plan sheet.

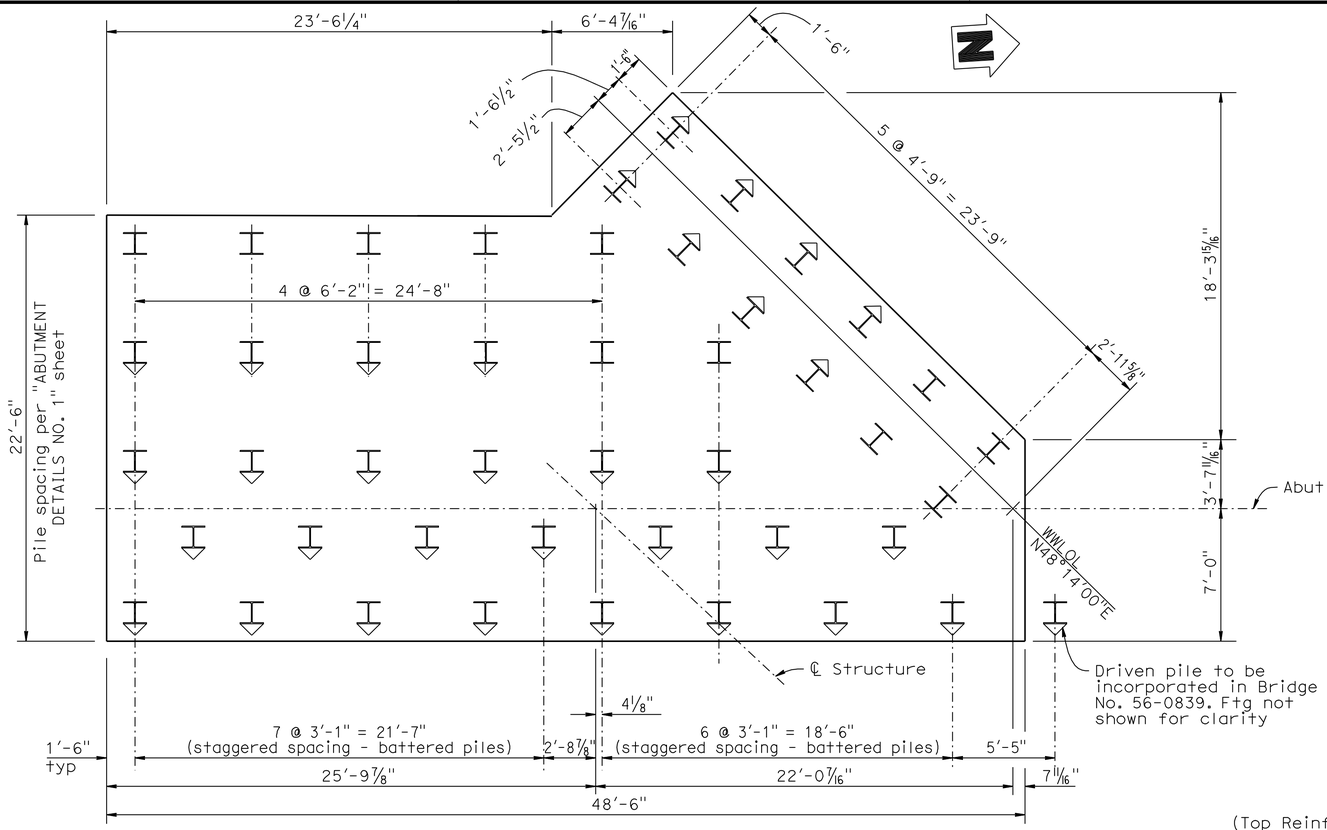

FOOTING & PILE LAYOUT

¼" = 1'-0'

I Indicates vertical steel pile

I Indicates battered steel pile at 1:3

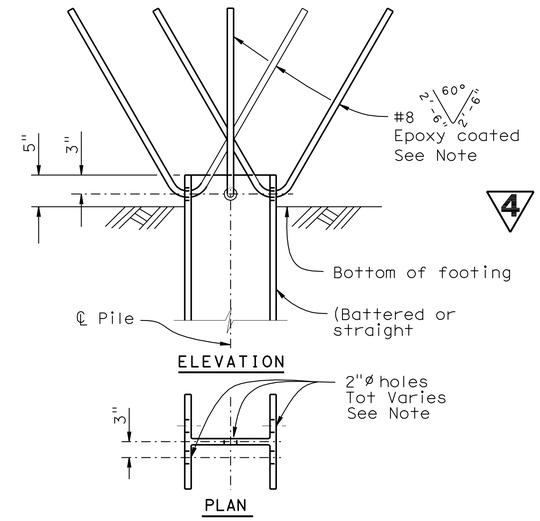

STEEL PILE ANCHOR

NO SCALE

NOTES: For Abut 1 and Abut 3 - Steel pile anchor with 3 bars.
For Bent 2 - Steel pile anchor with 5 bars,

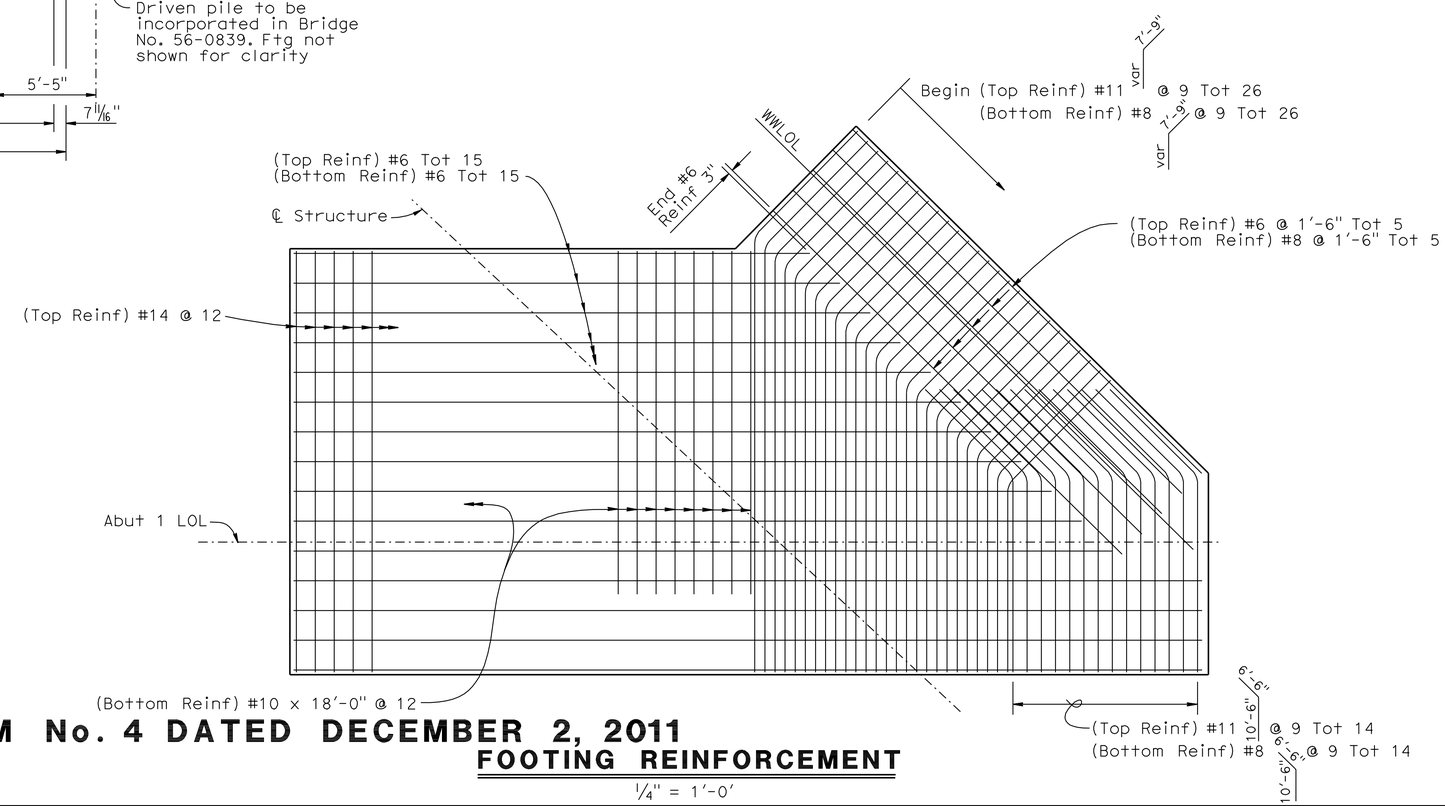

NOTE:
THE CONTRACTOR SHALL VERIFY ALL CONTROLLING FIELD DIMENSIONS BEFORE ORDERING OR FABRICATING ANY MATERIAL.

4 **REVISED PER ADDENDUM No. 4 DATED DECEMBER 2, 2011**

FOOTING REINFORCEMENT

¼" = 1'-0'

	BY	CHECKED
DESIGN	B. Addlespurger	G. Slocum
DETAILS	J. Yang	G. Slocum
QUANTITIES	T. Sanderson	R. Anderson

STATE OF CALIFORNIA
DEPARTMENT OF TRANSPORTATION

DIVISION OF ENGINEERING SERVICES
STRUCTURE DESIGN
DESIGN BRANCH 10

BRIDGE NO. 56-0848
POST MILE 19.39

PACHAPPA UP (SHOOFLY)
ABUTMENT 1 FOOTING DETAILS

STRUCTURES DESIGN DETAIL SHEET (ENGLISH) (REV. 10/25/05)

ORIGINAL SCALE IN INCHES FOR REDUCED PLANS 0 1 2 3

CU 08
EA 448401

DISREGARD PRINTS BEARING EARLIER REVISION DATES

REVISION DATES: 11-16-09 11-19-09 12-21-09 02-09-10 02-26-10 05-11-10 7-06-10 8-18-10 9-02-10

SHEET 9 OF 39

FILE => 560848fafdt09.add

USERNAME => s12161 4 DATE PLOTTED => 02-DEC-2011 TIME PLOTTED => 07:46

DIST	COUNTY	ROUTE	POST MILES TOTAL PROJECT	SHEET No	TOTAL SHEETS
08	Riv	91	15.6/21.6	1991	2028

REGISTERED CIVIL ENGINEER — DATE 11-30-10

4-25-11
PLANS APPROVAL DATE

REGISTERED PROFESSIONAL ENGINEER — HUAN D. VU — No. C60696 — Exp. 12/31/10 — CIVIL — STATE OF CALIFORNIA

The State of California or its officers or agents shall not be responsible for the accuracy or completeness of electronic copies of this plan sheet.

4

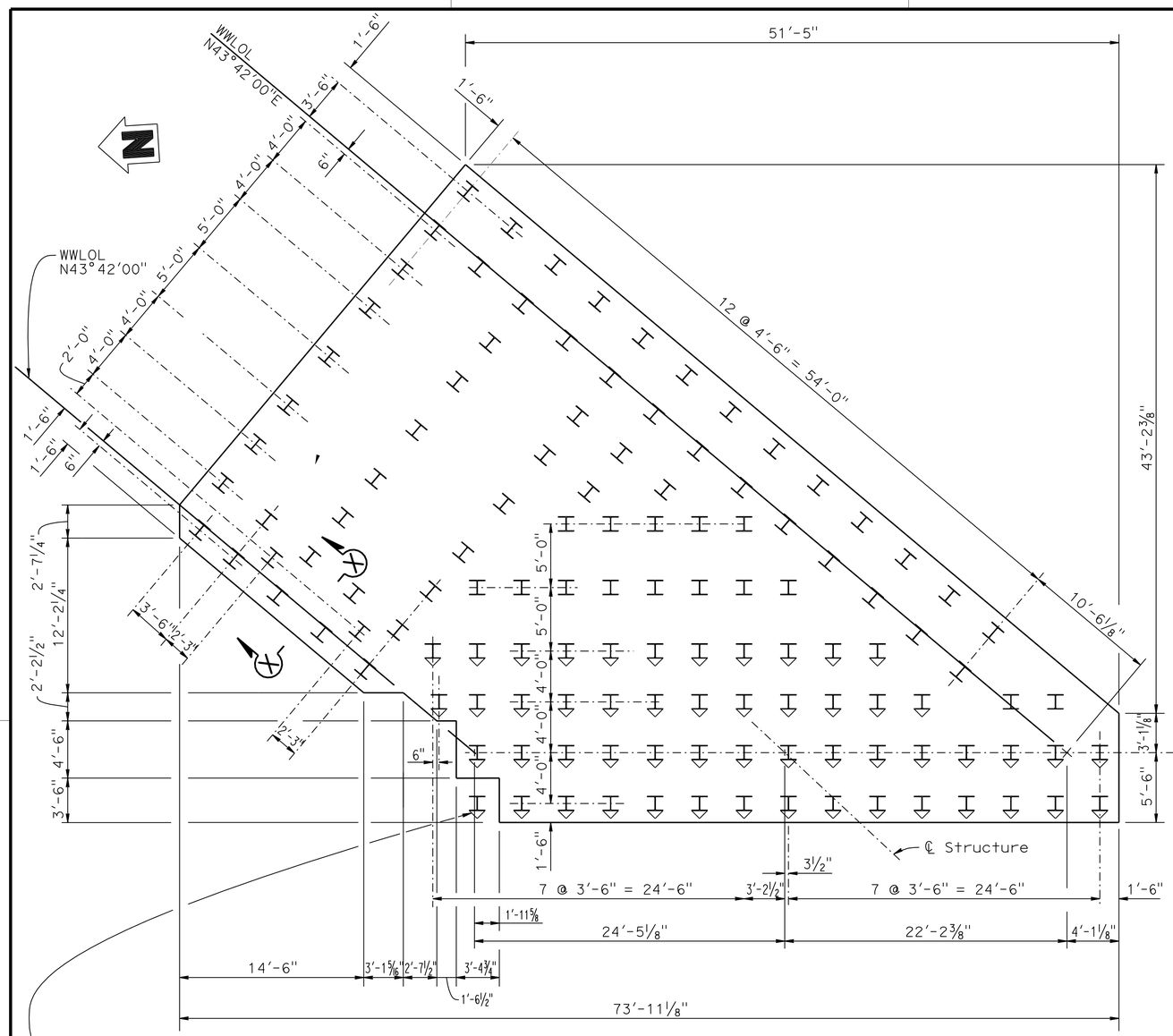

Driven pile to be incorporated into bridge No. 56-0839. Ftg not shown for clarity.

FOOTING AND PILE LAYOUT

3/16" = 1'-0'

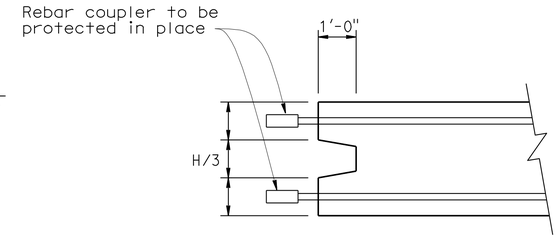

SECTION X-X

NO SCALE

Ftg key schematic through wingwall toe

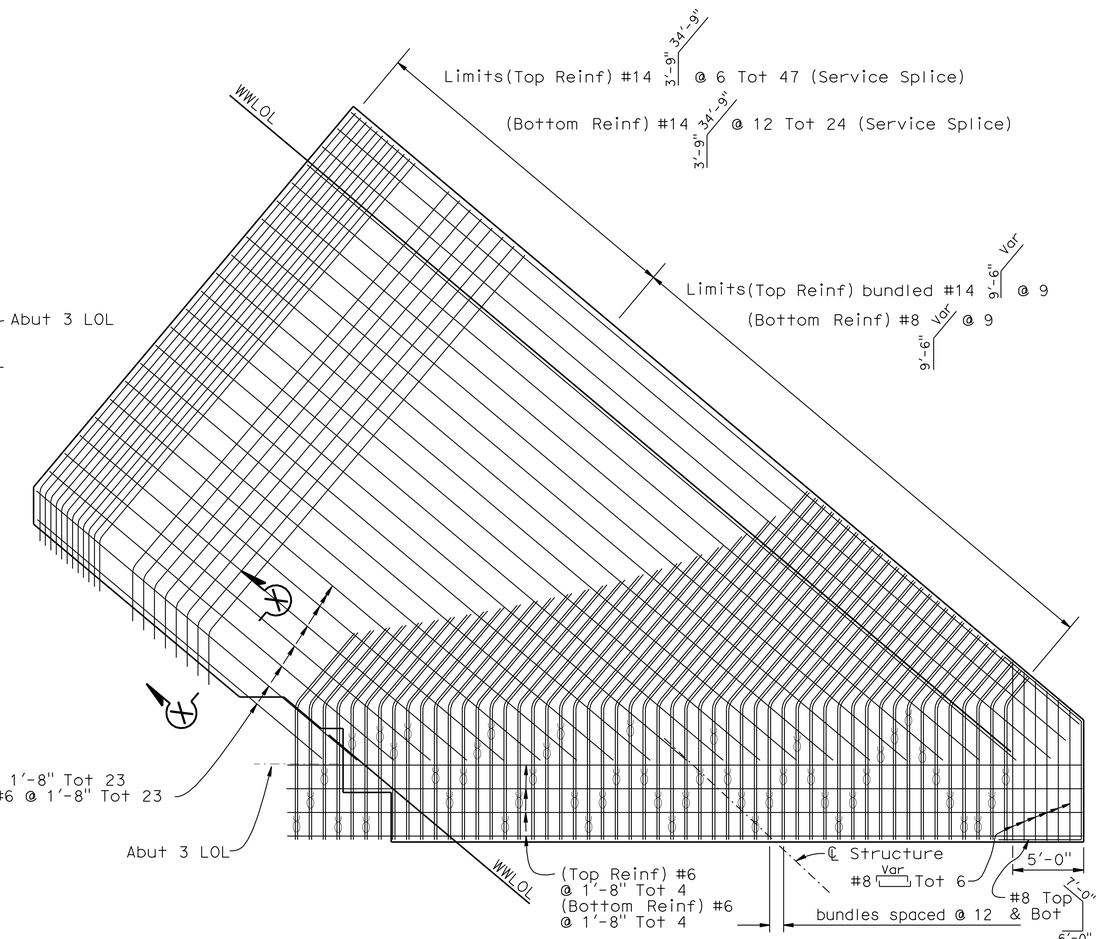

FOOTING REINFORCEMENT

3/16" = 1'-0'

LEGEND:

I Indicates vertical steel pile

I Indicates battered steel pile at 1:3

NOTE:
THE CONTRACTOR SHALL VERIFY ALL CONTROLLING FIELD DIMENSIONS BEFORE ORDERING OR FABRICATING ANY MATERIAL.

4 **REVISED PER ADDENDUM No. 4 DATED DECEMBER 2, 2011**

	BY	CHECKED
DESIGN	B. Addlespurger	G. Slocum
DETAILS	J. Yang	G. Slocum
QUANTITIES	T. Sanderson	R. Anderson

STATE OF CALIFORNIA
DEPARTMENT OF TRANSPORTATION

DIVISION OF ENGINEERING SERVICES
STRUCTURE DESIGN
DESIGN BRANCH 10

BRIDGE NO. 56-0848
POST MILE 19.39

PACHAPPA UP (SHOOFLY)
ABUTMENT 3 FOOTING DETAILS

STRUCTURES DESIGN DETAIL SHEET (ENGLISH) (REV. 10/25/05)

ORIGINAL SCALE IN INCHES FOR REDUCED PLANS 0 1 2 3

CU 08
EA 448401

DISREGARD PRINTS BEARING EARLIER REVISION DATES

REVISION DATES: 11-12-09 11-19-09 02-12-10 02-26-10 05-12-10 6-04-10 9-02-10

SHEET 10 OF 39

FILE => 560848fafdt10.add

USERNAME => s121614 DATE PLOTTED => 02-DEC-2011 TIME PLOTTED => 07:46