Dist	COUNTY	ROUTE	POST MILES TOTAL PROJECT	SHEET No.	TOTAL SHEETS
08	Riv	15	33.4/38.4	1	82

ACIM-015-5(157)E

STATE OF CALIFORNIA
DEPARTMENT OF TRANSPORTATION

PROJECT PLANS FOR CONSTRUCTION ON
STATE HIGHWAY
IN RIVERSIDE COUNTY
NEAR CORONA
FROM 0.2 MILE NORTH OF TEMESCAL CANYON ROAD UNDERCROSSING
TO 0.3 MILE SOUTH OF ONTARIO AVENUE UNDERCROSSING

TO BE SUPPLEMENTED BY STANDARD PLANS DATED MAY 2006

INDEX OF PLANS

SHEET No.	DESCRIPTION
1	TITLE AND LOCATION MAP
2-3	TYPICAL CROSS SECTIONS
4-22	LAYOUTS
23-29	CONSTRUCTION DETAILS
30	TEMPORARY WATER POLLUTION CONTROL QUANTITIES
31-32	CONSTRUCTION AREA SIGNS
33-51	TRAFFIC HANDLING PLANS AND QUANTITIES
52-55	MOTORIST INFORMATION PLANS
56	PAVEMENT DELINEATION QUANTITIES
57-59	SUMMARY OF QUANTITIES
60-65	SIGNAL, LIGHTING AND ELECTRICAL PLANS AND DETAILS
66-80	REVISED AND NEW STANDARD PLANS

STRUCTURE PLANS

81-82	DECK REHABILITATION- BROWN CANYON WASH, Br No. 56-0559 R/L; WEIRICK ROAD UNDERCROSSING, Br No. 56-0541 R/L; BEDFORD WASH, Br No. 56-0540 R/L; EL CERRITO ROAD UNDERCROSSING Br No. 56-0558 R/L

THE STANDARD PLANS LIST APPLICABLE TO THIS CONTRACT IS INCLUDED IN THE NOTICE TO BIDDERS AND SPECIAL PROVISIONS BOOK.

LOCATION MAP

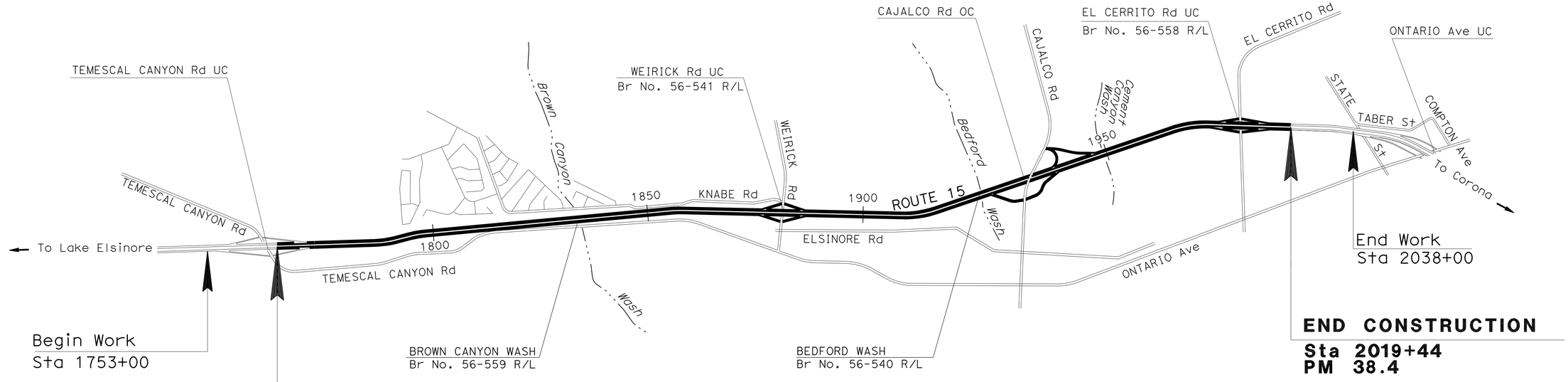

NO SCALE

THE CONTRACTOR SHALL POSSESS THE CLASS (OR CLASSES) OF LICENSE AS SPECIFIED IN THE "NOTICE TO BIDDERS."

PROJECT MANAGER: DANIEL CIACCHELLA

DESIGN ENGINEER: DUNG HUY PHAN

PROJECT ENGINEER — DATE: 01-10-12
REGISTERED CIVIL ENGINEER

REGISTERED PROFESSIONAL ENGINEER — DUNG HUY PHAN — No. C 73061 — Exp. 12/31/12 — CIVIL — STATE OF CALIFORNIA

April 23, 2012
PLANS APPROVAL DATE

THE STATE OF CALIFORNIA OR ITS OFFICERS OR AGENTS SHALL NOT BE RESPONSIBLE FOR THE ACCURACY OR COMPLETENESS OF SCANNED COPIES OF THIS PLAN SHEET.

CONTRACT No.	08-448304
PROJECT ID	0800000711

LAST REVISION 01-09-12 — DATE PLOTTED => 15-AUG-2012 — TIME PLOTTED => 06:12

Dist	COUNTY	ROUTE	POST MILES TOTAL PROJECT	SHEET No.	TOTAL SHEETS
08	Riv	15	33.4/38.4	2	82

REGISTERED CIVIL ENGINEER 01-10-12 DATE

4-23-12
PLANS APPROVAL DATE

REGISTERED PROFESSIONAL ENGINEER DUNG HUY PHAN No. C 73061 Exp. 12/31/12 CIVIL STATE OF CALIFORNIA

THE STATE OF CALIFORNIA OR ITS OFFICERS OR AGENTS SHALL NOT BE RESPONSIBLE FOR THE ACCURACY OR COMPLETENESS OF SCANNED COPIES OF THIS PLAN SHEET.

NOTES:

1. DIMENSIONS OF THE STRUCTURAL SECTIONS ARE SUBJECT TO TOLERANCES SPECIFIED IN THE STANDARD SPECIFICATIONS.
2. SUPERELEVATION AS SHOWN OR AS DIRECTED BY THE ENGINEER.
3. NO RUMBLE STRIP ON BRIDGE DECK. SEE STD PLAN A40B FOR SHOULDER RUMBLE STRIP (GROUND-IN INDENTATION) DETAILS.
4. FOR LOCATIONS AND CONSTRUCTION DETAILS OF METAL BEAM GUARD RAILING CONNECTION TO BRIDGE, SEE LAYOUT AND CONSTRUCTION DETAIL SHEETS.
5. FOR BRIDGE WORK AT BROWN CANYON WASH, WEIRICK RD UC, BEDFORD WASH, AND EL CERRITO RD UC, SEE STRUCTURAL PLANS.
6. FOR UNDERDRAIN, SEE CONSTRUCTION DETAILS.
7. NO CONSTRUCTION WORK, 1-0′ NEXT TO Exist AC DIKE.

STRUCTURAL SECTION

1	0.45′ COLD PLANE 0.30′ HMA (TYPE C) 0.15′ RHMA-G	A	Exist Pvmt 0.08′ RAC 0.20′ OGAC 0.72′ DGAC 1.20′ AB (CLASS 2) 1.20′ AS (CLASS 2)
2	0.60′ COLD PLANE 0.45′ HMA (TYPE C) 0.15′ RHMA-G		
3	0.15′ COLD PLANE 0.15′ RHMA-G	B	Exist Pvmt 0.30′ AC 1.05′ AB (CLASS 2) 1.20′ AS (CLASS 2)

DESIGN DESIGNATION (ROUTE 15)

ADT (2010)	= 153,800	D	= 54% SB
ADT (2033)	= 239,400	T	= 4%
DHV	= 10,933	V	= 65 MPH
ESAL	= 44,597,703	T_{20}	= 14.0

LEGEND:

RAC: RUBBERIZED ASPHALT CONCRETE
RHMA-G: RUBBERIZED HOT MIX ASPHALT (GAP GRADED)
DGAC: DENSE GRADED ASPHALT CONCRETE

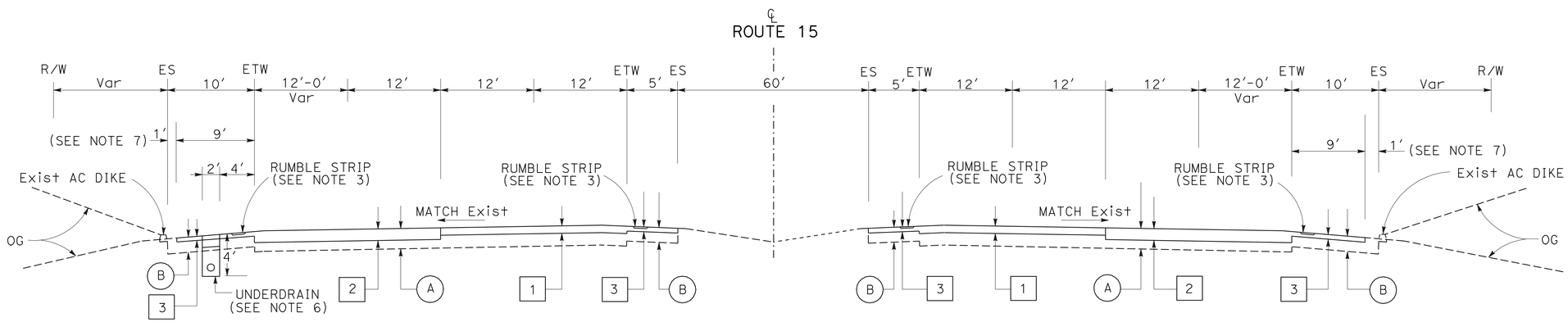

Sta 1900+80 TO Sta 1980+00

SOUTHBOUND **NORTHBOUND**

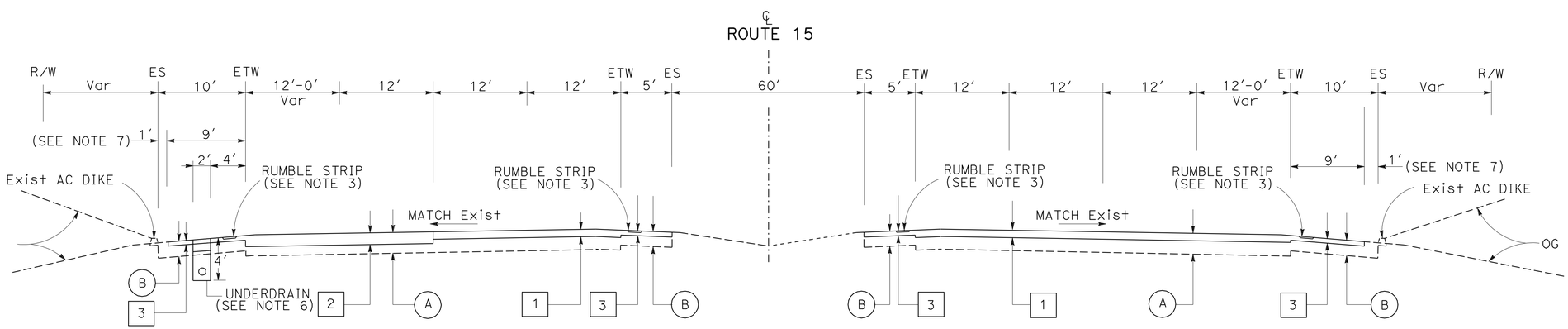

Sta 1756+30 TO Sta 1900+80
Sta 1980+00 TO Sta 2019+44

SOUTHBOUND **NORTHBOUND**

ROUTE 15

TYPICAL CROSS SECTIONS

NO SCALE **X-1**

STATE OF CALIFORNIA - DEPARTMENT OF TRANSPORTATION
Caltrans®
DESIGN

FUNCTIONAL SUPERVISOR: RENEE SASSE
CALCULATED-DESIGNED BY: DUNG HUY PHAN
CHECKED BY: ANH PHAN & ZIAD SAWALHA
REVISED BY
DATE REVISED

LAST REVISION 01-09-12
DATE PLOTTED => 26-APR-2012
TIME PLOTTED => 11:09

Dist	COUNTY	ROUTE	POST MILES TOTAL PROJECT	SHEET No.	TOTAL SHEETS
08	Riv	15	33.4/38.4	3	82

REGISTERED CIVIL ENGINEER 01-10-12 DATE

4-23-12
PLANS APPROVAL DATE

REGISTERED PROFESSIONAL ENGINEER DUNG HUY PHAN No. C 73061 Exp. 12/31/12 CIVIL STATE OF CALIFORNIA

THE STATE OF CALIFORNIA OR ITS OFFICERS OR AGENTS SHALL NOT BE RESPONSIBLE FOR THE ACCURACY OR COMPLETENESS OF SCANNED COPIES OF THIS PLAN SHEET.

NOTE:

FOR RAMPS LOCATIONS, SEE CONSTRUCTION DETAILS.

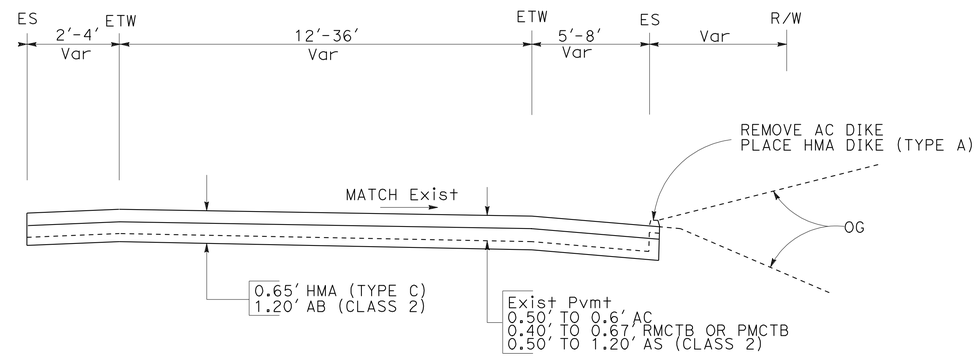

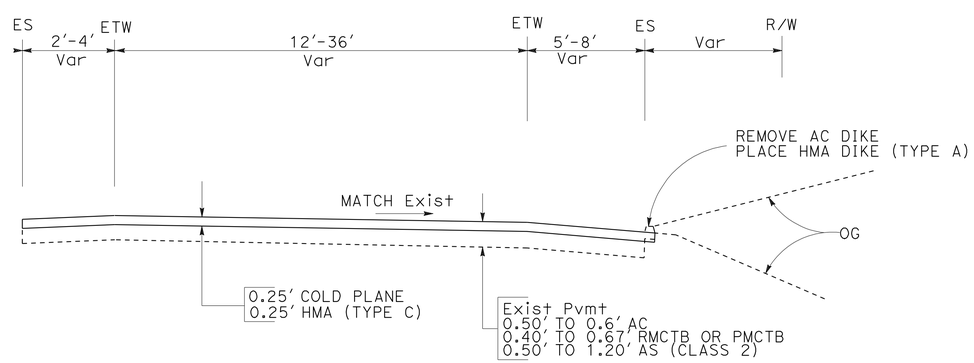

TYPICAL ENTRANCE AND EXIT RAMP

ROUTE 15

TYPICAL CROSS SECTIONS

NO SCALE

X-2

STATE OF CALIFORNIA - DEPARTMENT OF TRANSPORTATION

Caltrans®

DESIGN

FUNCTIONAL SUPERVISOR: RENEE SASSE

CALCULATED-DESIGNED BY: DUNG HUY PHAN

CHECKED BY: ANH PHAN & ZIAD SAWALHA

REVISED BY

DATE REVISED

LAST REVISION 01-09-12

DATE PLOTTED => 26-APR-2012
TIME PLOTTED => 11:09

Dist	COUNTY	ROUTE	POST MILES TOTAL PROJECT	SHEET No.	TOTAL SHEETS
08	Riv	15	33.4/38.4	4	82

REGISTERED CIVIL ENGINEER — DATE 01-10-12

4-23-12
PLANS APPROVAL DATE

REGISTERED PROFESSIONAL ENGINEER — DUNG HUY PHAN — No. C 73061 — Exp. 12/31/12 — CIVIL — STATE OF CALIFORNIA

THE STATE OF CALIFORNIA OR ITS OFFICERS OR AGENTS SHALL NOT BE RESPONSIBLE FOR THE ACCURACY OR COMPLETENESS OF SCANNED COPIES OF THIS PLAN SHEET.

NOTES:

1. LOCATIONS OF UTILITY FACILITIES SHOWN ON THESE PLANS ARE APPROXIMATE AND SHALL BE VERIFIED BY THE CONTRACTOR PRIOR TO CONSTRUCTION.
2. FOR ACCURATE RIGHT OF WAY DATA, CONTACT RIGHT OF WAY ENGINEERING AT THE DISTRICT OFFICE
3. ALL DRAINAGE SHOWN IS EXISTING AND SHALL BE VERIFIED PRIOR TO CONSTRUCTION.

ABBREVIATIONS:

gs = GAS
FO = FIBER OPTIC
W = WATER
e --(OH) = ELECTRICAL OVERHEAD
e --(UG) = ELECTRICAL UNDERGROUND
TV = TELEVISION CABLE
sd = STORM DRAIN
UD= UNDERDRAIN
PPP UD= PERFORATED PLASTIC PIPE UNDERDRAIN

CURVE DATA

No.	R	Δ	T	L
1	9999.44′	6°5′11"	531.61′	1062.23′
2	7499.60′	4°0′01"	261.91′	523.60′
3	7999.60′	5°30′39"	385.01′	769.44′
4	5999.71′	22°19′36"	1183.99′	2337.93′
5	4999.76′	19°36′33"	864.02′	1711.13′
6	5000.00′	32°5′26"	1438.00′	2800.43′

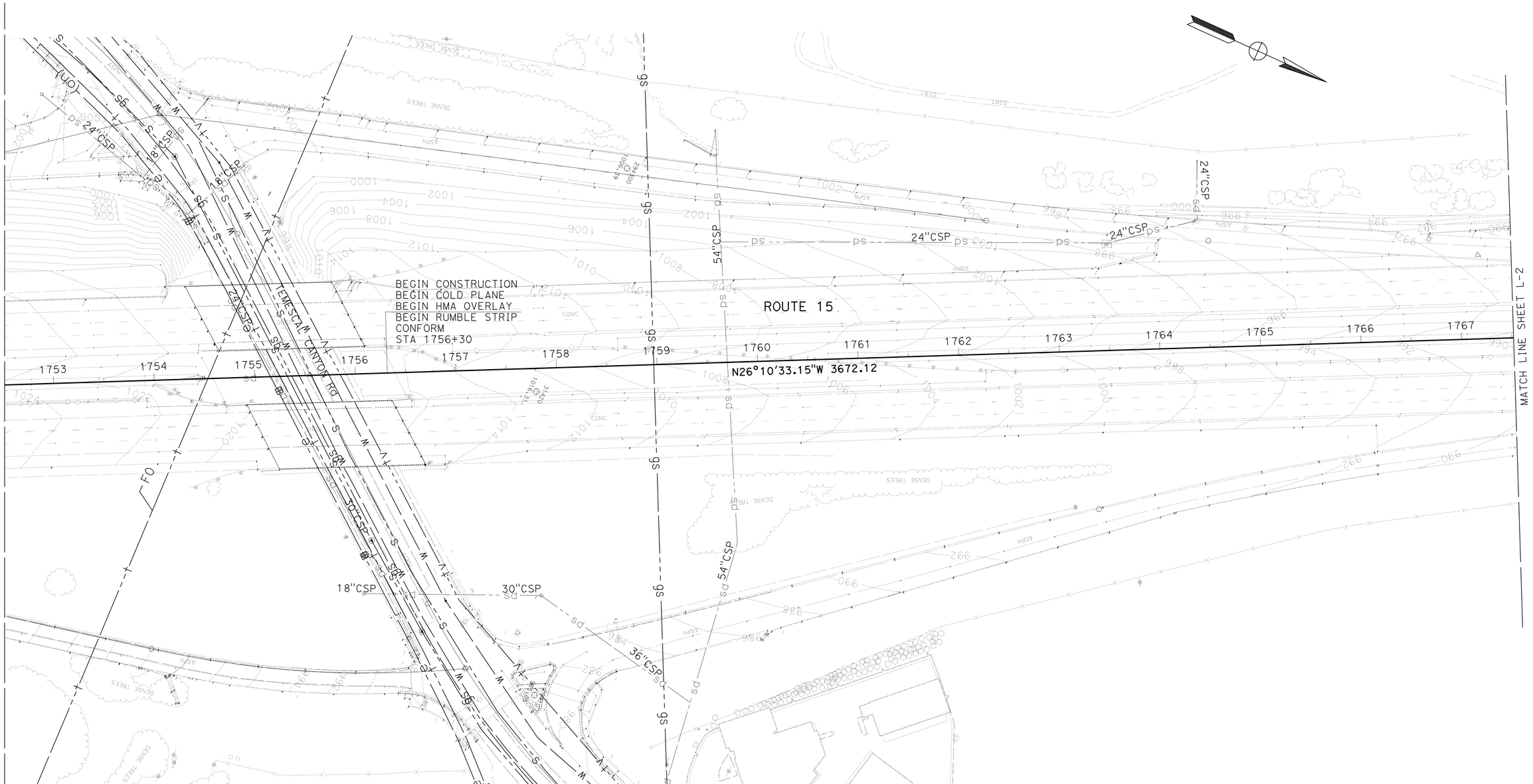

LAYOUT

SCALE: 1" = 50′ **L-1**

STATE OF CALIFORNIA - DEPARTMENT OF TRANSPORTATION
Caltrans
DESIGN

FUNCTIONAL SUPERVISOR: RENEE SASSE
CALCULATED-DESIGNED BY: DUNG HUY PHAN
CHECKED BY: ANH PHAN & ZIAD SAWALHA
REVISED BY
DATE REVISED

LAST REVISION 01-09-12
DATE PLOTTED => 26-APR-2012
TIME PLOTTED => 11:10

Dist	COUNTY	ROUTE	POST MILES TOTAL PROJECT	SHEET No.	TOTAL SHEETS
08	Riv	15	33.4/38.4	5	82

REGISTERED CIVIL ENGINEER 01-10-12 DATE

4-23-12
PLANS APPROVAL DATE

REGISTERED PROFESSIONAL ENGINEER DUNG HUY PHAN No. C 73061 Exp. 12/31/12 CIVIL STATE OF CALIFORNIA

THE STATE OF CALIFORNIA OR ITS OFFICERS OR AGENTS SHALL NOT BE RESPONSIBLE FOR THE ACCURACY OR COMPLETENESS OF SCANNED COPIES OF THIS PLAN SHEET.

NOTE:

FOR ACCURATE RIGHT OF WAY DATA, CONTACT RIGHT OF WAY ENGINEERING AT THE DISTRICT OFFICE

LAYOUT

SCALE: 1" = 50' **L-2**

STATE OF CALIFORNIA - DEPARTMENT OF TRANSPORTATION
Caltrans
DESIGN

FUNCTIONAL SUPERVISOR: RENEE SASSE

CALCULATED-DESIGNED BY: DUNG HUY PHAN
CHECKED BY: ANH PHAN & ZIAD SAWALHA

REVISED BY
DATE REVISED

LAST REVISION 01-09-11
DATE PLOTTED => 24-APR-2012
TIME PLOTTED => 13:38

Dist	COUNTY	ROUTE	POST MILES TOTAL PROJECT	SHEET No.	TOTAL SHEETS
08	Riv	15	33.4/38.4	6	82

REGISTERED CIVIL ENGINEER 01-10-12 DATE

4-23-12
PLANS APPROVAL DATE

REGISTERED PROFESSIONAL ENGINEER
DUNG HUY PHAN
No. C 73061
Exp. 12/31/12
CIVIL
STATE OF CALIFORNIA

THE STATE OF CALIFORNIA OR ITS OFFICERS OR AGENTS SHALL NOT BE RESPONSIBLE FOR THE ACCURACY OR COMPLETENESS OF SCANNED COPIES OF THIS PLAN SHEET.

NOTE:

FOR ACCURATE RIGHT OF WAY DATA, CONTACT RIGHT OF WAY ENGINEERING AT THE DISTRICT OFFICE

LAYOUT

SCALE: 1" = 50' **L-3**

STATE OF CALIFORNIA - DEPARTMENT OF TRANSPORTATION
Caltrans
DESIGN

FUNCTIONAL SUPERVISOR: RENE SASSE

CALCULATED-DESIGNED BY: DUNG HUY PHAN
CHECKED BY: ANH PHAN & ZIAD SAWALHA

REVISED BY
DATE REVISED

LAST REVISION 01-09-12
DATE PLOTTED => 24-APR-2012
TIME PLOTTED => 13:38

Dist	COUNTY	ROUTE	POST MILES TOTAL PROJECT	SHEET No.	TOTAL SHEETS
08	Riv	15	33.4/38.4	7	82

REGISTERED CIVIL ENGINEER 01-10-12 DATE

4-23-12
PLANS APPROVAL DATE

REGISTERED PROFESSIONAL ENGINEER DUNG HUY PHAN No. C 73061 Exp. 12/31/12 CIVIL STATE OF CALIFORNIA

THE STATE OF CALIFORNIA OR ITS OFFICERS OR AGENTS SHALL NOT BE RESPONSIBLE FOR THE ACCURACY OR COMPLETENESS OF SCANNED COPIES OF THIS PLAN SHEET.

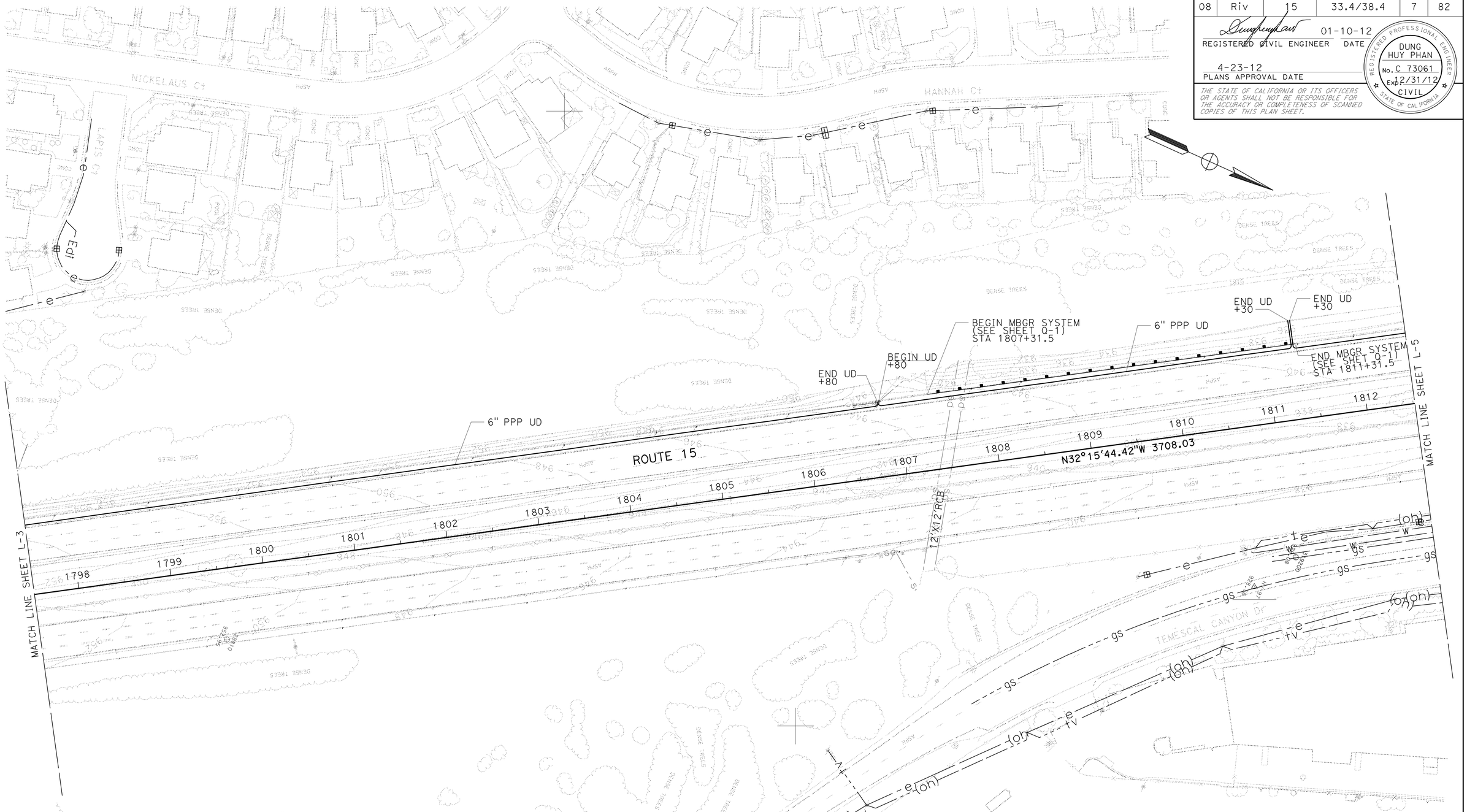

NOTE:

FOR ACCURATE RIGHT OF WAY DATA, CONTACT RIGHT OF WAY ENGINEERING AT THE DISTRICT OFFICE

LAYOUT

SCALE: 1" = 50' **L-4**

STATE OF CALIFORNIA - DEPARTMENT OF TRANSPORTATION
Caltrans
DESIGN

FUNCTIONAL SUPERVISOR: RENEE SASSE
CALCULATED-DESIGNED BY: DUNG HUY PHAN
CHECKED BY: ANH PHAN & ZIAD SAWALHA
REVISED BY
DATE REVISED

LAST REVISION 01-09-12
DATE PLOTTED => 24-APR-2012
TIME PLOTTED => 13:38

Dist	COUNTY	ROUTE	POST MILES TOTAL PROJECT	SHEET No.	TOTAL SHEETS
08	Riv	15	33.4/38.4	8	82

REGISTERED CIVIL ENGINEER 01-10-12 DATE

4-23-12
PLANS APPROVAL DATE

REGISTERED PROFESSIONAL ENGINEER DUNG HUY PHAN No. C 73061 Exp. 12/31/12 CIVIL STATE OF CALIFORNIA

THE STATE OF CALIFORNIA OR ITS OFFICERS OR AGENTS SHALL NOT BE RESPONSIBLE FOR THE ACCURACY OR COMPLETENESS OF SCANNED COPIES OF THIS PLAN SHEET.

NOTE:

FOR ACCURATE RIGHT OF WAY DATA, CONTACT RIGHT OF WAY ENGINEERING AT THE DISTRICT OFFICE

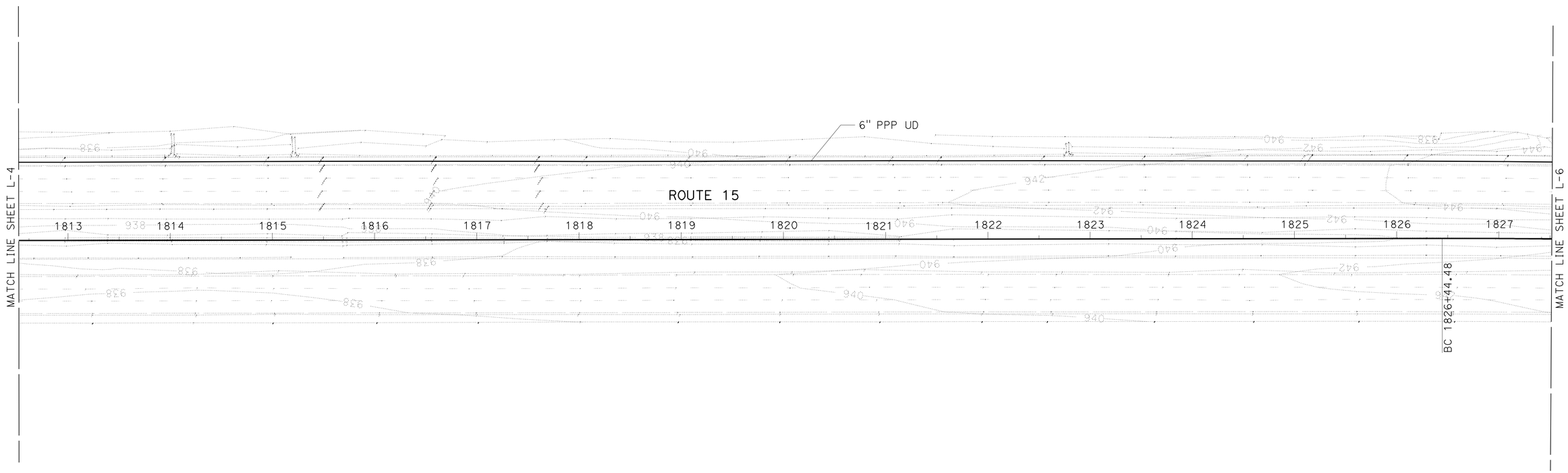

LAYOUT

SCALE: 1" = 50' **L-5**

REVISED BY	DATE REVISED

DUNG HUY PHAN — CALCULATED-DESIGNED BY
ANH PHAN & ZIAD SAWALHA — CHECKED BY
RENEE SASSE — FUNCTIONAL SUPERVISOR

STATE OF CALIFORNIA - DEPARTMENT OF TRANSPORTATION
Caltrans
DESIGN

LAST REVISION 01-09-12
DATE PLOTTED => 24-APR-2012
TIME PLOTTED => 13:38

Dist	COUNTY	ROUTE	POST MILES TOTAL PROJECT	SHEET No.	TOTAL SHEETS
08	Riv	15	33.4/38.4	9	82

REGISTERED CIVIL ENGINEER 01-10-12 DATE

4-23-12
PLANS APPROVAL DATE

REGISTERED PROFESSIONAL ENGINEER DUNG HUY PHAN No. C 73061 Exp. 12/31/12 CIVIL STATE OF CALIFORNIA

THE STATE OF CALIFORNIA OR ITS OFFICERS OR AGENTS SHALL NOT BE RESPONSIBLE FOR THE ACCURACY OR COMPLETENESS OF SCANNED COPIES OF THIS PLAN SHEET.

NOTE:
FOR ACCURATE RIGHT OF WAY DATA, CONTACT RIGHT OF WAY ENGINEERING AT THE DISTRICT OFFICE

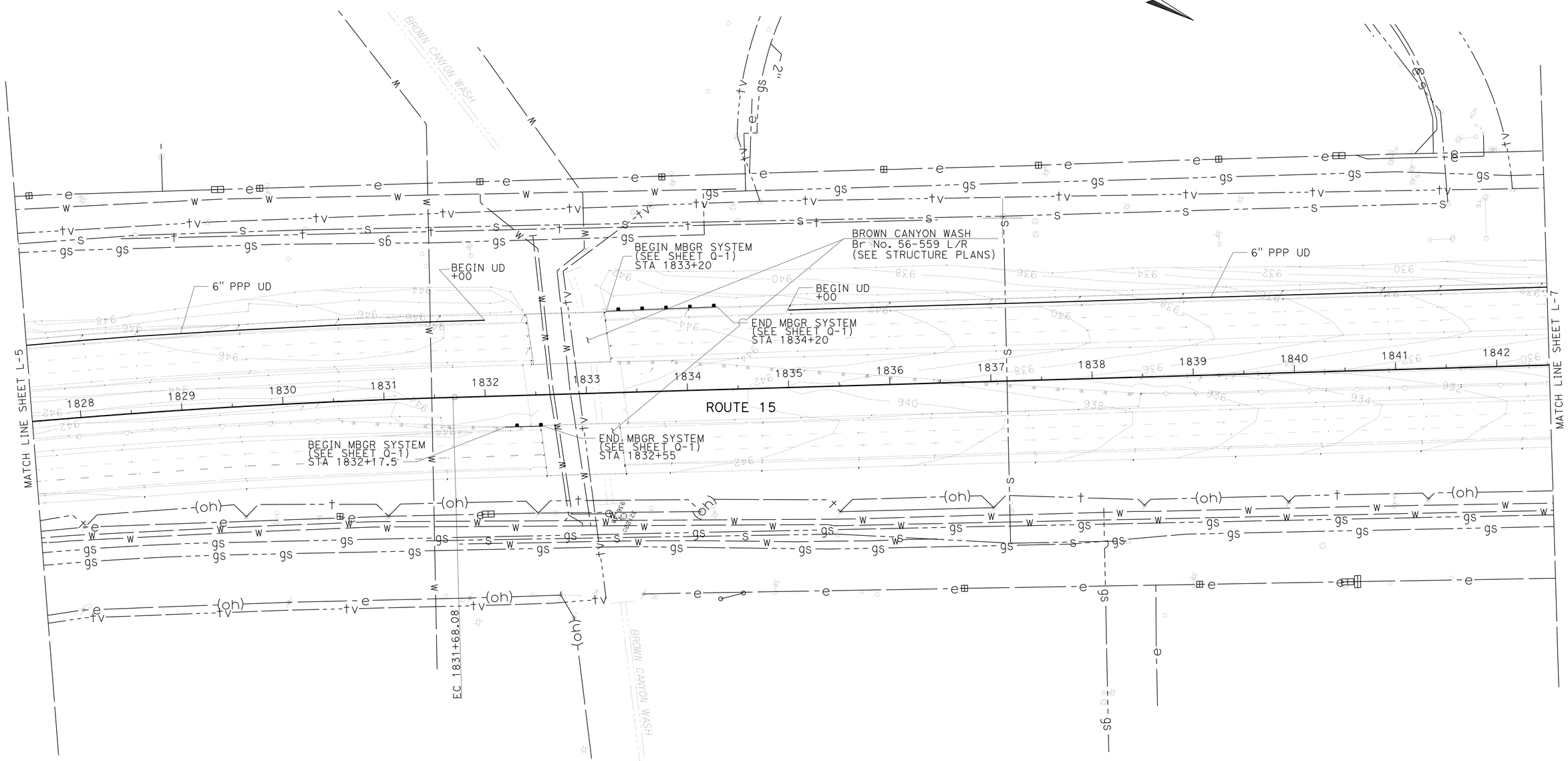

LAYOUT

SCALE: 1" = 50' **L-6**

STATE OF CALIFORNIA - DEPARTMENT OF TRANSPORTATION
Caltrans
DESIGN

FUNCTIONAL SUPERVISOR: RENEE SASSE
CALCULATED-DESIGNED BY: ANH PHAN & ZIAD SAWALHA
CHECKED BY: DUNG HUY PHAN
REVISED BY
DATE REVISED

LAST REVISION 01-09-12
DATE PLOTTED => 24-APR-2012
TIME PLOTTED => 13:38

Dist	COUNTY	ROUTE	POST MILES TOTAL PROJECT	SHEET No.	TOTAL SHEETS
08	Riv	15	33.4/38.4	10	82

REGISTERED CIVIL ENGINEER 12-30-11 DATE

4-23-12
PLANS APPROVAL DATE

REGISTERED PROFESSIONAL ENGINEER DUNG HUY PHAN No. C 73061 Exp. 12/31/12 CIVIL STATE OF CALIFORNIA

THE STATE OF CALIFORNIA OR ITS OFFICERS OR AGENTS SHALL NOT BE RESPONSIBLE FOR THE ACCURACY OR COMPLETENESS OF SCANNED COPIES OF THIS PLAN SHEET.

NOTE:
FOR ACCURATE RIGHT OF WAY DATA, CONTACT RIGHT OF WAY ENGINEERING AT THE DISTRICT OFFICE

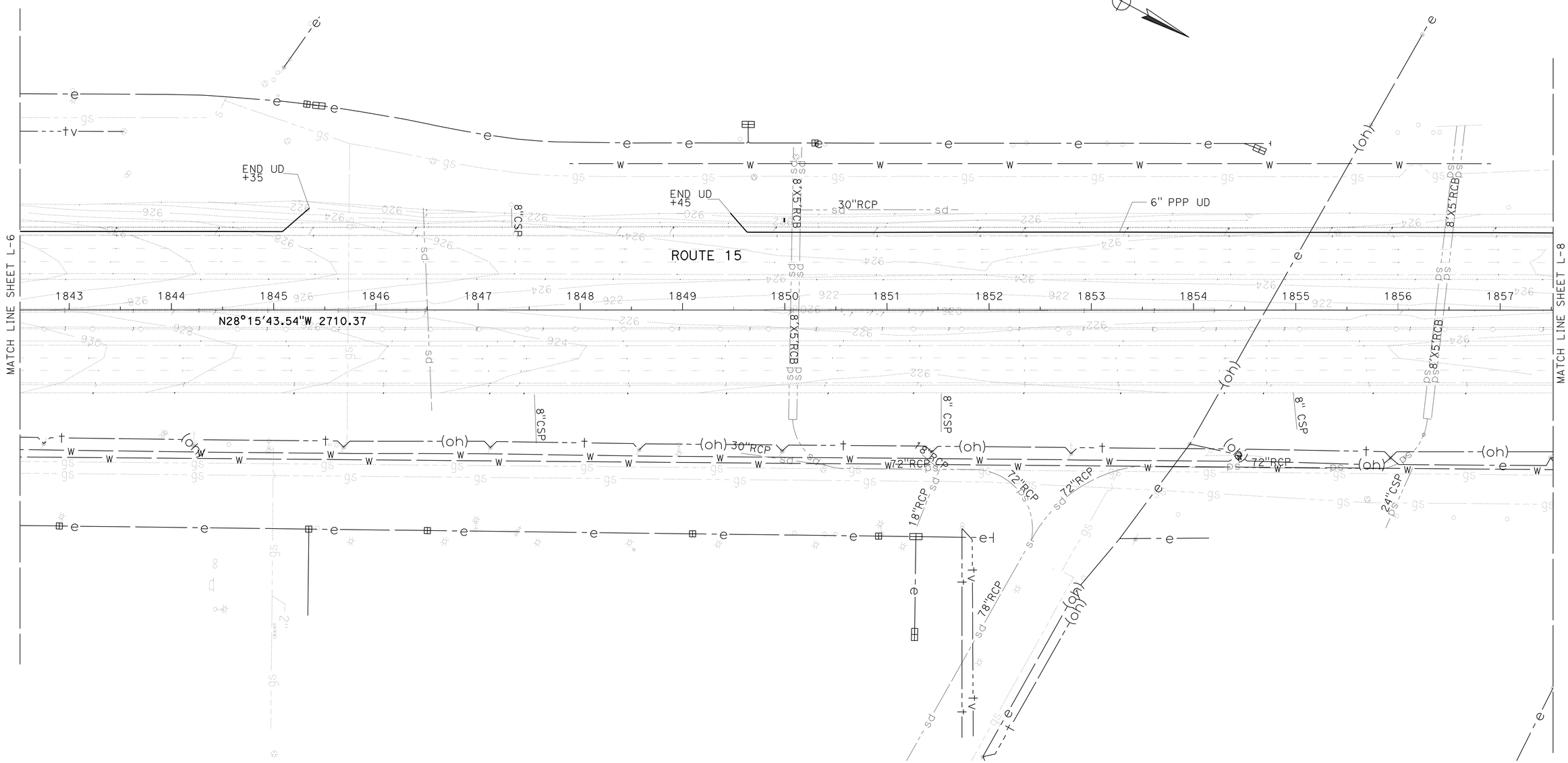

LAYOUT

SCALE: 1" = 50' **L-7**

REVISED BY	DATE REVISED
DUNG HUY PHAN	ANH PHAN & ZIAD SAWALHA

CALCULATED-DESIGNED BY
CHECKED BY

FUNCTIONAL SUPERVISOR: RENEE SASSE

STATE OF CALIFORNIA - DEPARTMENT OF TRANSPORTATION
Caltrans
DESIGN

LAST REVISION 12-28-11
DATE PLOTTED => 24-APR-2012
TIME PLOTTED => 13:38

Dist	COUNTY	ROUTE	POST MILES TOTAL PROJECT	SHEET No.	TOTAL SHEETS
08	Riv	15	33.4/38.4	11	82

REGISTERED CIVIL ENGINEER 01-10-12 DATE

4-23-12
PLANS APPROVAL DATE

REGISTERED PROFESSIONAL ENGINEER
DUNG HUY PHAN
No. C 73061
Exp. 12/31/12
CIVIL
STATE OF CALIFORNIA

THE STATE OF CALIFORNIA OR ITS OFFICERS OR AGENTS SHALL NOT BE RESPONSIBLE FOR THE ACCURACY OR COMPLETENESS OF SCANNED COPIES OF THIS PLAN SHEET.

NOTE:
FOR ACCURATE RIGHT OF WAY DATA, CONTACT RIGHT OF WAY ENGINEERING AT THE DISTRICT OFFICE

LAYOUT

SCALE: 1" = 50′ **L-8**

REVISED BY	DATE REVISED

DUNG HUY PHAN
ANH PHAN & ZIAD SAWALHA

CALCULATED-DESIGNED BY
CHECKED BY

FUNCTIONAL SUPERVISOR
RENEE SASSE

STATE OF CALIFORNIA - DEPARTMENT OF TRANSPORTATION
Caltrans
DESIGN

LAST REVISION 01-09-12
DATE PLOTTED => 24-APR-2012
TIME PLOTTED => 13:39

Dist	COUNTY	ROUTE	POST MILES TOTAL PROJECT	SHEET No.	TOTAL SHEETS
08	Riv	15	33.4/38.4	12	82

REGISTERED CIVIL ENGINEER 01-10-12 DATE

4-23-12
PLANS APPROVAL DATE

REGISTERED PROFESSIONAL ENGINEER DUNG HUY PHAN No. C 73061 Exp. 12/31/12 CIVIL STATE OF CALIFORNIA

THE STATE OF CALIFORNIA OR ITS OFFICERS OR AGENTS SHALL NOT BE RESPONSIBLE FOR THE ACCURACY OR COMPLETENESS OF SCANNED COPIES OF THIS PLAN SHEET.

NOTE:

FOR ACCURATE RIGHT OF WAY DATA, CONTACT RIGHT OF WAY ENGINEERING AT THE DISTRICT OFFICE

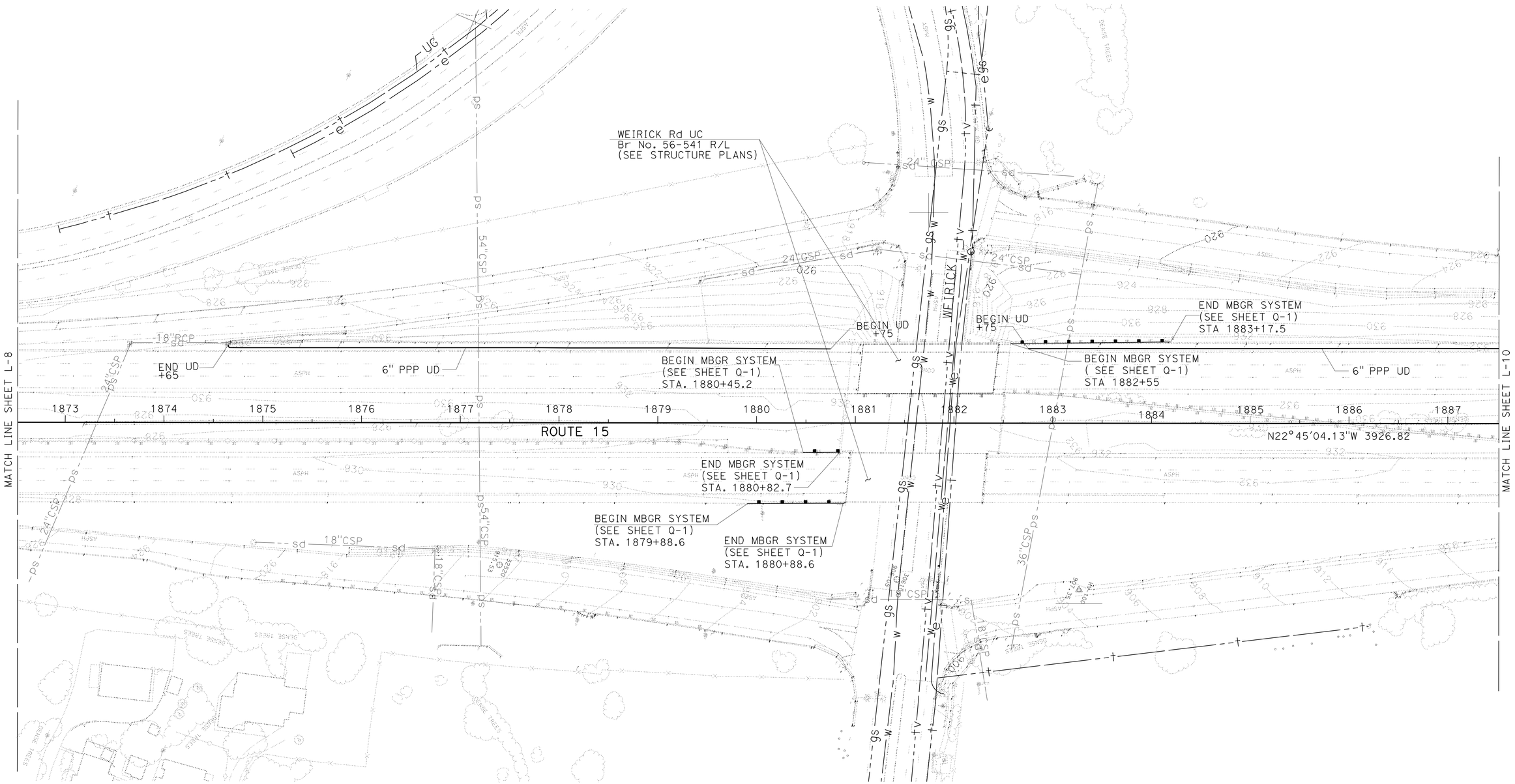

LAYOUT

SCALE: 1" = 50' **L-9**

STATE OF CALIFORNIA - DEPARTMENT OF TRANSPORTATION
Caltrans® **DESIGN**

FUNCTIONAL SUPERVISOR: RENEE SASSE

CALCULATED-DESIGNED BY: DUNG HUY PHAN
CHECKED BY: ANH PHAN & ZIAD SAWALHA

REVISED BY
DATE REVISED

LAST REVISION 01-09-12
DATE PLOTTED => 24-APR-2012
TIME PLOTTED => 13:39

Dist	COUNTY	ROUTE	POST MILES TOTAL PROJECT	SHEET No.	TOTAL SHEETS
08	Riv	15	33.4/38.4	13	82

REGISTERED CIVIL ENGINEER 01-10-12 DATE

4-23-12
PLANS APPROVAL DATE

REGISTERED PROFESSIONAL ENGINEER
DUNG HUY PHAN
No. C 73061
Exp. 12/31/12
CIVIL
STATE OF CALIFORNIA

THE STATE OF CALIFORNIA OR ITS OFFICERS OR AGENTS SHALL NOT BE RESPONSIBLE FOR THE ACCURACY OR COMPLETENESS OF SCANNED COPIES OF THIS PLAN SHEET.

NOTE:
FOR ACCURATE RIGHT OF WAY DATA, CONTACT RIGHT OF WAY ENGINEERING AT THE DISTRICT OFFICE

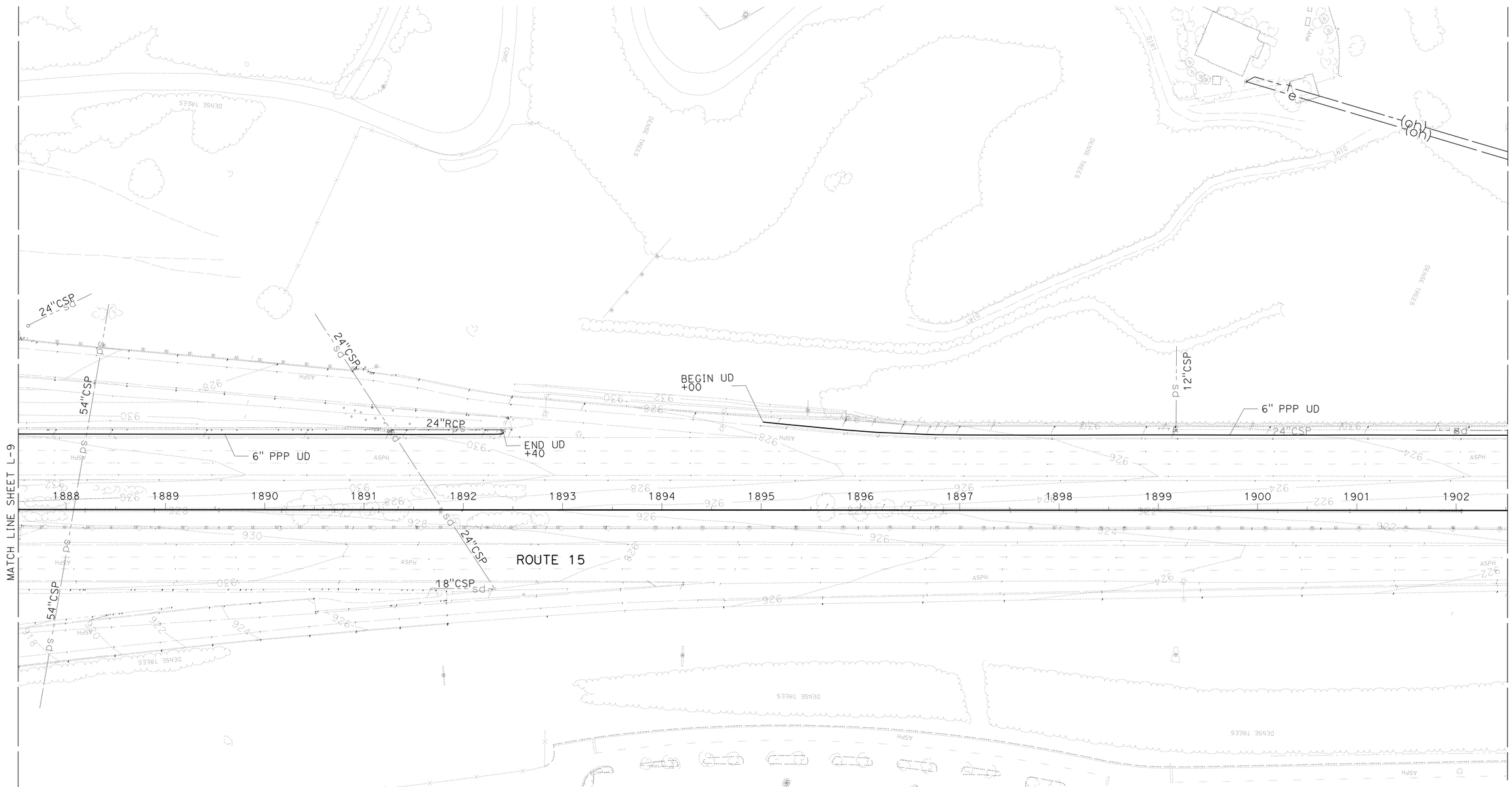

LAYOUT

SCALE: 1" = 50' **L-10**

STATE OF CALIFORNIA - DEPARTMENT OF TRANSPORTATION
Caltrans
DESIGN

FUNCTIONAL SUPERVISOR: RENEE SASSE

DUNG HUY PHAN
ANH PHAN & ZIAD SAWALHA

CALCULATED-DESIGNED BY
CHECKED BY

REVISED BY
DATE REVISED

LAST REVISION 01-09-12
DATE PLOTTED => 24-APR-2012
TIME PLOTTED => 13:39

Dist	COUNTY	ROUTE	POST MILES TOTAL PROJECT	SHEET No.	TOTAL SHEETS
08	Riv	15	33.4/38.4	14	82

REGISTERED CIVIL ENGINEER 01-10-12 DATE

4-23-12
PLANS APPROVAL DATE

REGISTERED PROFESSIONAL ENGINEER DUNG HUY PHAN No. C 73061 Exp. 12/31/12 CIVIL STATE OF CALIFORNIA

THE STATE OF CALIFORNIA OR ITS OFFICERS OR AGENTS SHALL NOT BE RESPONSIBLE FOR THE ACCURACY OR COMPLETENESS OF SCANNED COPIES OF THIS PLAN SHEET.

NOTE:
FOR ACCURATE RIGHT OF WAY DATA, CONTACT RIGHT OF WAY ENGINEERING AT THE DISTRICT OFFICE

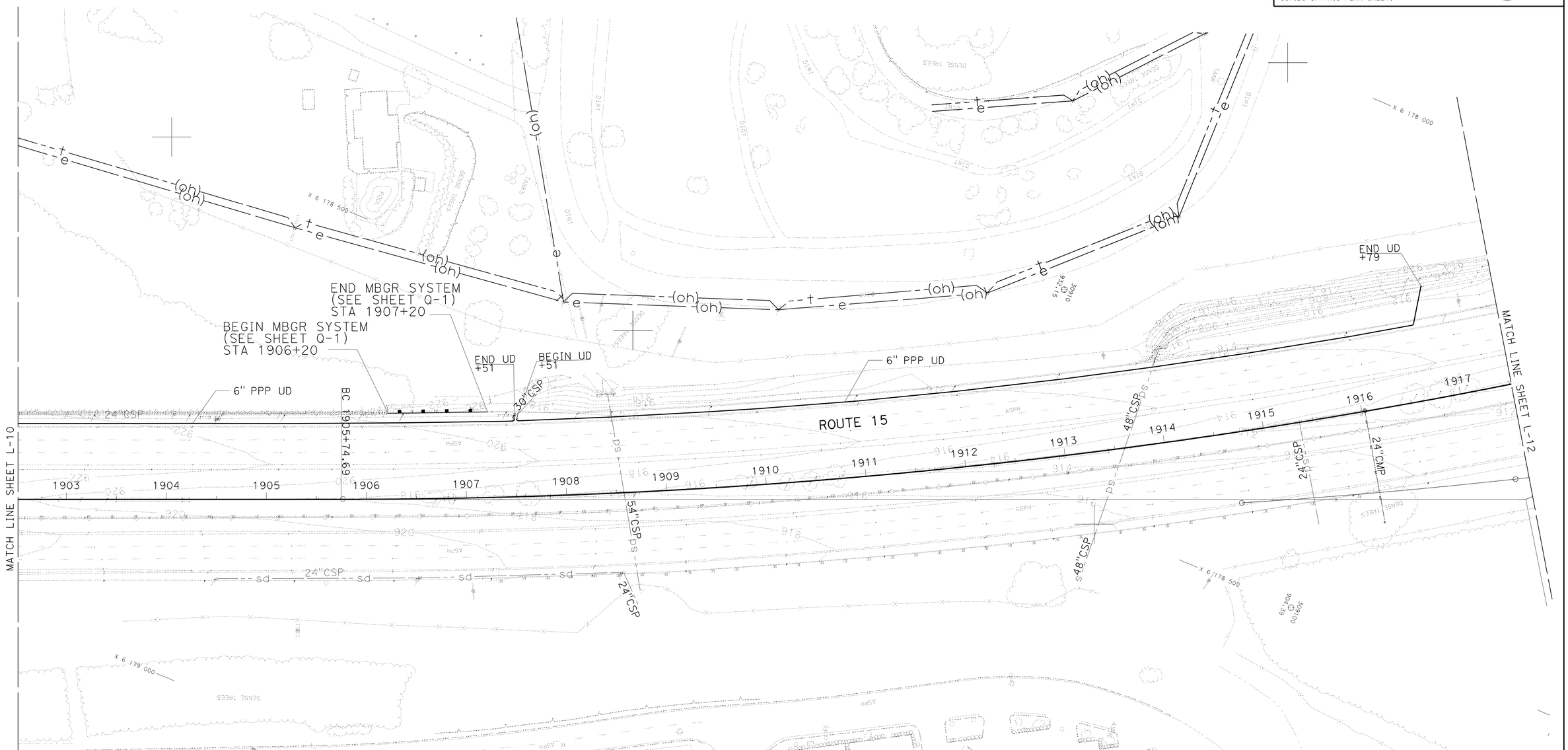

LAYOUT

SCALE: 1" = 50' **L-11**

STATE OF CALIFORNIA - DEPARTMENT OF TRANSPORTATION
Caltrans
DESIGN

FUNCTIONAL SUPERVISOR: RENEE SASSE
CALCULATED-DESIGNED BY: DUNG HUY PHAN
CHECKED BY: ANH PHAN & ZIAD SAWALHA
REVISED BY
DATE REVISED

LAST REVISION 01-09-12
DATE PLOTTED => 26-APR-2012
TIME PLOTTED => 11:10

Dist	COUNTY	ROUTE	POST MILES TOTAL PROJECT	SHEET No.	TOTAL SHEETS
08	Riv	15	33.4/38.4	15	82

REGISTERED CIVIL ENGINEER 01-10-12 DATE

4-23-12
PLANS APPROVAL DATE

REGISTERED PROFESSIONAL ENGINEER DUNG HUY PHAN No. C 73061 Exp. 12/31/12 CIVIL STATE OF CALIFORNIA

THE STATE OF CALIFORNIA OR ITS OFFICERS OR AGENTS SHALL NOT BE RESPONSIBLE FOR THE ACCURACY OR COMPLETENESS OF SCANNED COPIES OF THIS PLAN SHEET.

NOTE:
FOR ACCURATE RIGHT OF WAY DATA, CONTACT RIGHT OF WAY ENGINEERING AT THE DISTRICT OFFICE

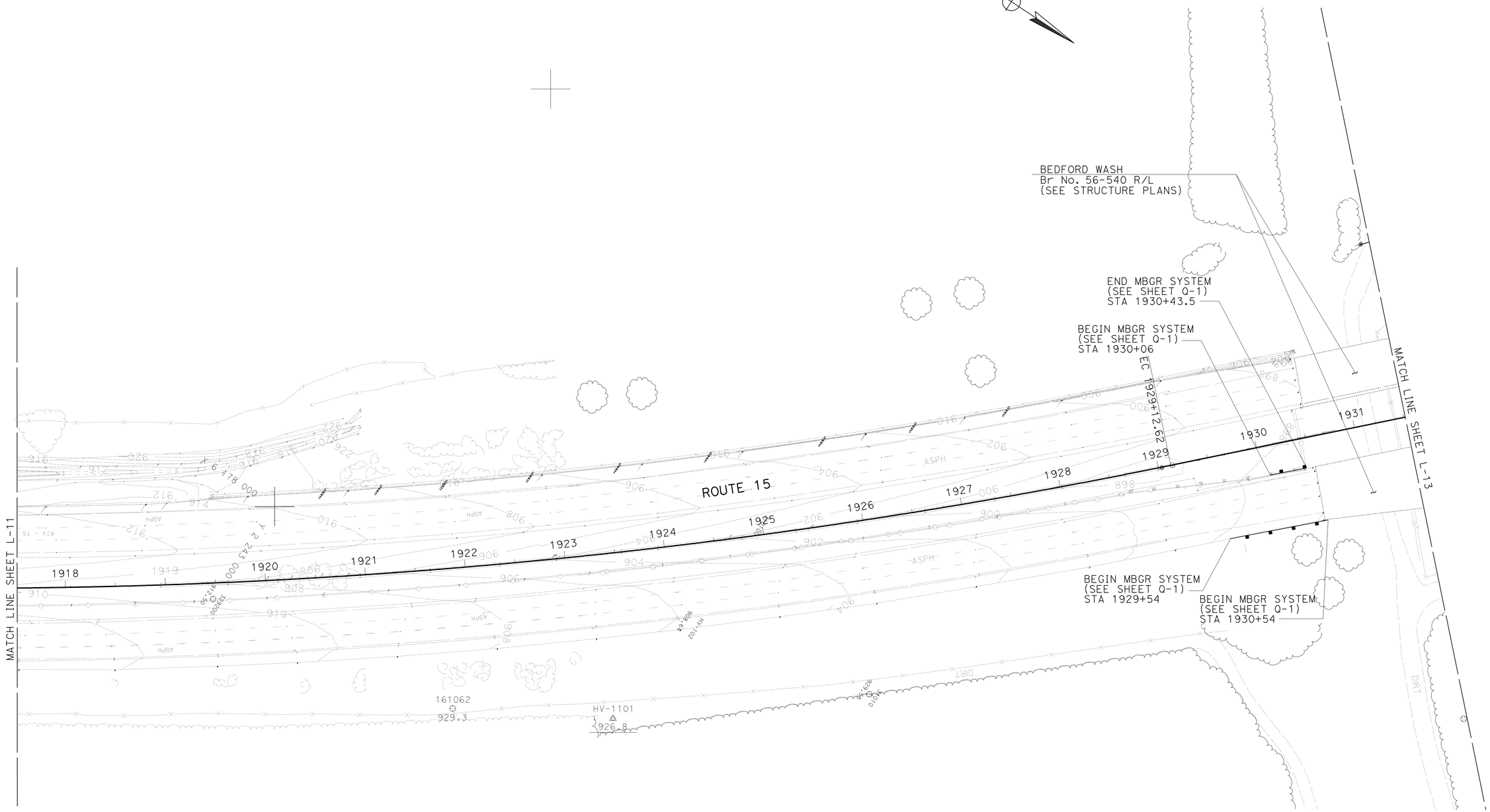

LAYOUT

SCALE: 1" = 50' **L-12**

STATE OF CALIFORNIA - DEPARTMENT OF TRANSPORTATION
Caltrans
DESIGN

FUNCTIONAL SUPERVISOR: RENEE SASSE
CALCULATED-DESIGNED BY: DUNG HUY PHAN
CHECKED BY: ANH PHAN & ZIAD SAWALHA
REVISED BY
DATE REVISED

LAST REVISION 01-09-1
DATE PLOTTED => 26-APR-2012
TIME PLOTTED => 11:10

Dist	COUNTY	ROUTE	POST MILES TOTAL PROJECT	SHEET No.	TOTAL SHEETS
08	Riv	15	33.4/38.4	16	82

REGISTERED CIVIL ENGINEER 01-10-12 DATE

4-23-12
PLANS APPROVAL DATE

REGISTERED PROFESSIONAL ENGINEER DUNG HUY PHAN No. C 73061 Exp. 12/31/12 CIVIL STATE OF CALIFORNIA

THE STATE OF CALIFORNIA OR ITS OFFICERS OR AGENTS SHALL NOT BE RESPONSIBLE FOR THE ACCURACY OR COMPLETENESS OF SCANNED COPIES OF THIS PLAN SHEET.

NOTE:
FOR ACCURATE RIGHT OF WAY DATA, CONTACT RIGHT OF WAY ENGINEERING AT THE DISTRICT OFFICE

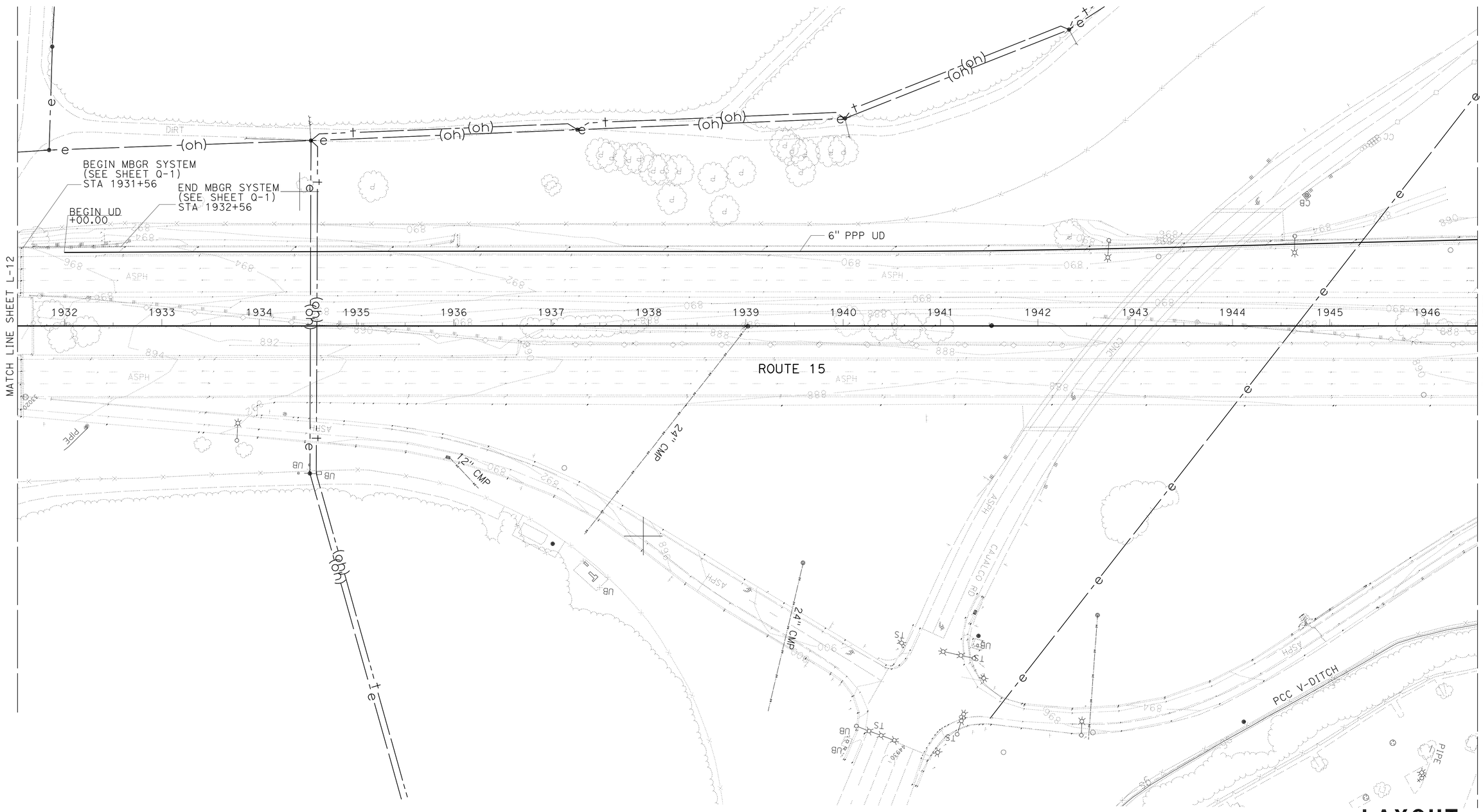

LAYOUT

SCALE: 1" = 50' **L-13**

STATE OF CALIFORNIA - DEPARTMENT OF TRANSPORTATION
Caltrans®
DESIGN

FUNCTIONAL SUPERVISOR: RENEE SASSE

CALCULATED-DESIGNED BY: DUNG HUY PHAN
CHECKED BY: ANH PHAN & ZIAD SAWALHA

REVISED BY
DATE REVISED

LAST REVISION 01-09-12
DATE PLOTTED => 24-APR-2012
TIME PLOTTED => 13:39

Dist	COUNTY	ROUTE	POST MILES TOTAL PROJECT	SHEET No.	TOTAL SHEETS
08	Riv	15	33.4/38.4	17	82

REGISTERED CIVIL ENGINEER 01-10-12 DATE

4-23-12
PLANS APPROVAL DATE

REGISTERED PROFESSIONAL ENGINEER DUNG HUY PHAN No. C 73061 Exp. 12/31/12 CIVIL STATE OF CALIFORNIA

THE STATE OF CALIFORNIA OR ITS OFFICERS OR AGENTS SHALL NOT BE RESPONSIBLE FOR THE ACCURACY OR COMPLETENESS OF SCANNED COPIES OF THIS PLAN SHEET.

NOTE:
FOR ACCURATE RIGHT OF WAY DATA, CONTACT RIGHT OF WAY ENGINEERING AT THE DISTRICT OFFICE

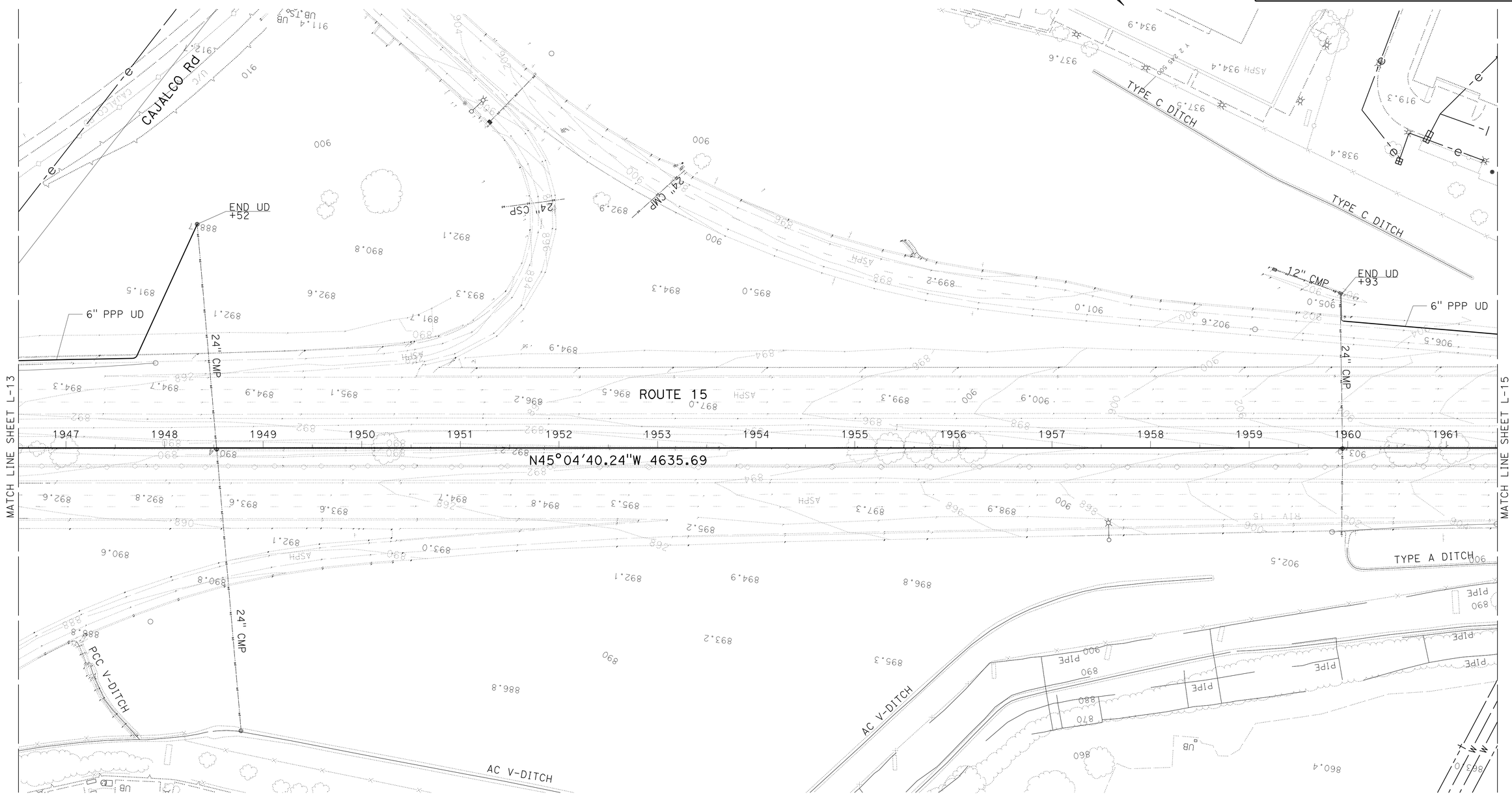

LAYOUT

SCALE: 1" = 50' **L-14**

STATE OF CALIFORNIA - DEPARTMENT OF TRANSPORTATION
Caltrans
DESIGN

FUNCTIONAL SUPERVISOR: RENEE SASSE

CALCULATED-DESIGNED BY: DUNG HUY PHAN
CHECKED BY: ANH PHAN & ZIAD SAWALHA

REVISED BY
DATE REVISED

LAST REVISION 01-09-12
DATE PLOTTED => 24-APR-2012
TIME PLOTTED => 13:40

Dist	COUNTY	ROUTE	POST MILES TOTAL PROJECT	SHEET No.	TOTAL SHEETS
08	Riv	15	33.4/38.4	18	82

REGISTERED CIVIL ENGINEER 01-10-12 DATE

4-23-12
PLANS APPROVAL DATE

REGISTERED PROFESSIONAL ENGINEER DUNG HUY PHAN No. C 73061 Exp. 12/31/12 CIVIL STATE OF CALIFORNIA

THE STATE OF CALIFORNIA OR ITS OFFICERS OR AGENTS SHALL NOT BE RESPONSIBLE FOR THE ACCURACY OR COMPLETENESS OF SCANNED COPIES OF THIS PLAN SHEET.

NOTE:
FOR ACCURATE RIGHT OF WAY DATA, CONTACT RIGHT OF WAY ENGINEERING AT THE DISTRICT OFFICE

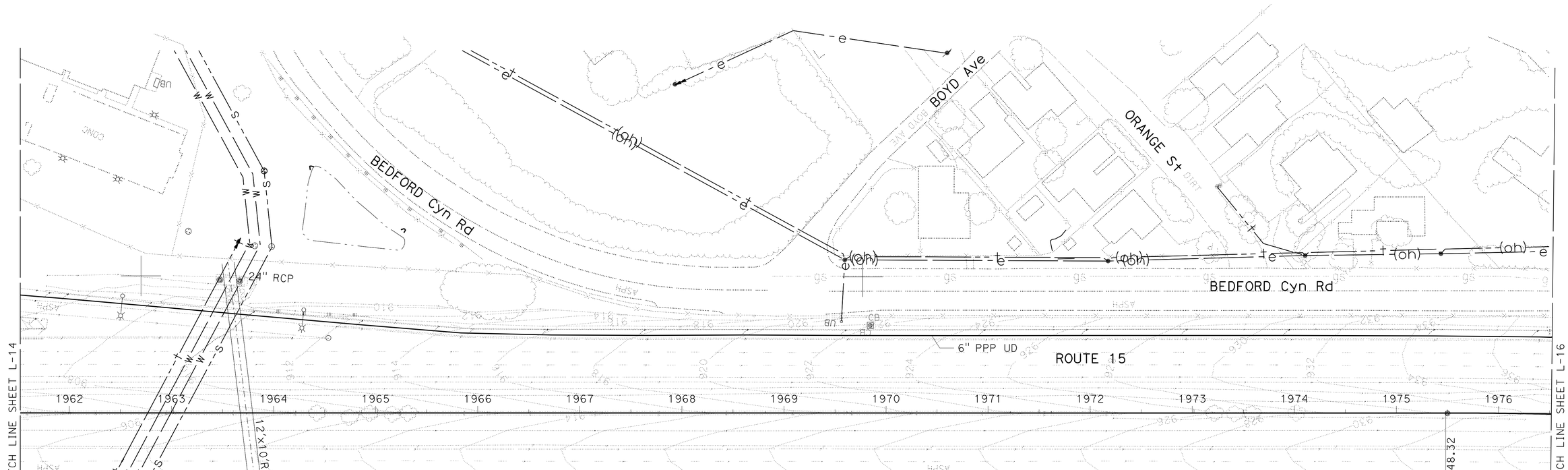

LAYOUT

SCALE: 1" = 50' **L-15**

STATE OF CALIFORNIA - DEPARTMENT OF TRANSPORTATION
Caltrans
DESIGN

FUNCTIONAL SUPERVISOR: RENEE SASSE

CALCULATED-DESIGNED BY: DUNG HUY PHAN
CHECKED BY: ANH PHAN & ZIAD SAWALHA

REVISED BY
DATE REVISED

LAST REVISION 01-09-12
DATE PLOTTED => 24-APR-2012
TIME PLOTTED => 13:40

Dist	COUNTY	ROUTE	POST MILES TOTAL PROJECT	SHEET No.	TOTAL SHEETS
08	Riv	15	33.4/38.4	19	82

REGISTERED CIVIL ENGINEER 01-10-12 DATE

4-23-12
PLANS APPROVAL DATE

REGISTERED PROFESSIONAL ENGINEER DUNG HUY PHAN No. C 73061 Exp. 12/31/12 CIVIL STATE OF CALIFORNIA

THE STATE OF CALIFORNIA OR ITS OFFICERS OR AGENTS SHALL NOT BE RESPONSIBLE FOR THE ACCURACY OR COMPLETENESS OF SCANNED COPIES OF THIS PLAN SHEET.

NOTE:
FOR ACCURATE RIGHT OF WAY DATA, CONTACT RIGHT OF WAY ENGINEERING AT THE DISTRICT OFFICE

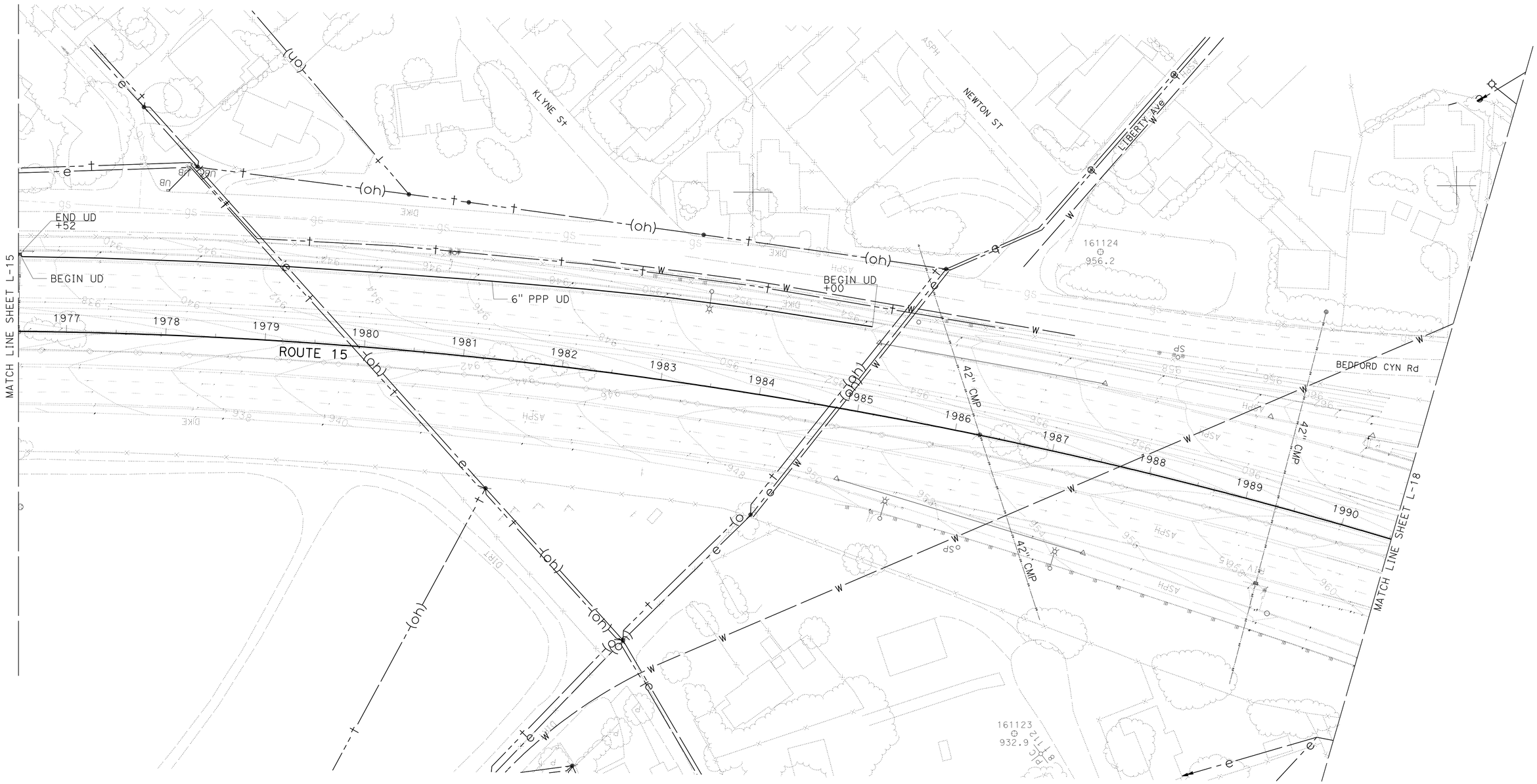

LAYOUT

SCALE: 1" = 50′ **L-16**

STATE OF CALIFORNIA - DEPARTMENT OF TRANSPORTATION
Caltrans
DESIGN

FUNCTIONAL SUPERVISOR: RENEE SASSE
CALCULATED-DESIGNED BY: DUNG HUY PHAN
CHECKED BY: ANH PHAN & ZIAD SAWALHA
REVISED BY
DATE REVISED

LAST REVISION 01-09-12
DATE PLOTTED => 24-APR-2012
TIME PLOTTED => 13:40

Dist	COUNTY	ROUTE	POST MILES TOTAL PROJECT	SHEET No.	TOTAL SHEETS
08	Riv	15	33.4/38.4	20	82

REGISTERED CIVIL ENGINEER — DATE: 01-10-12

4-23-12
PLANS APPROVAL DATE

REGISTERED PROFESSIONAL ENGINEER — DUNG HUY PHAN — No. C 73061 — Exp. 12/31/12 — CIVIL — STATE OF CALIFORNIA

THE STATE OF CALIFORNIA OR ITS OFFICERS OR AGENTS SHALL NOT BE RESPONSIBLE FOR THE ACCURACY OR COMPLETENESS OF SCANNED COPIES OF THIS PLAN SHEET.

NOTE:
FOR ACCURATE RIGHT OF WAY DATA, CONTACT RIGHT OF WAY ENGINEERING AT THE DISTRICT OFFICE

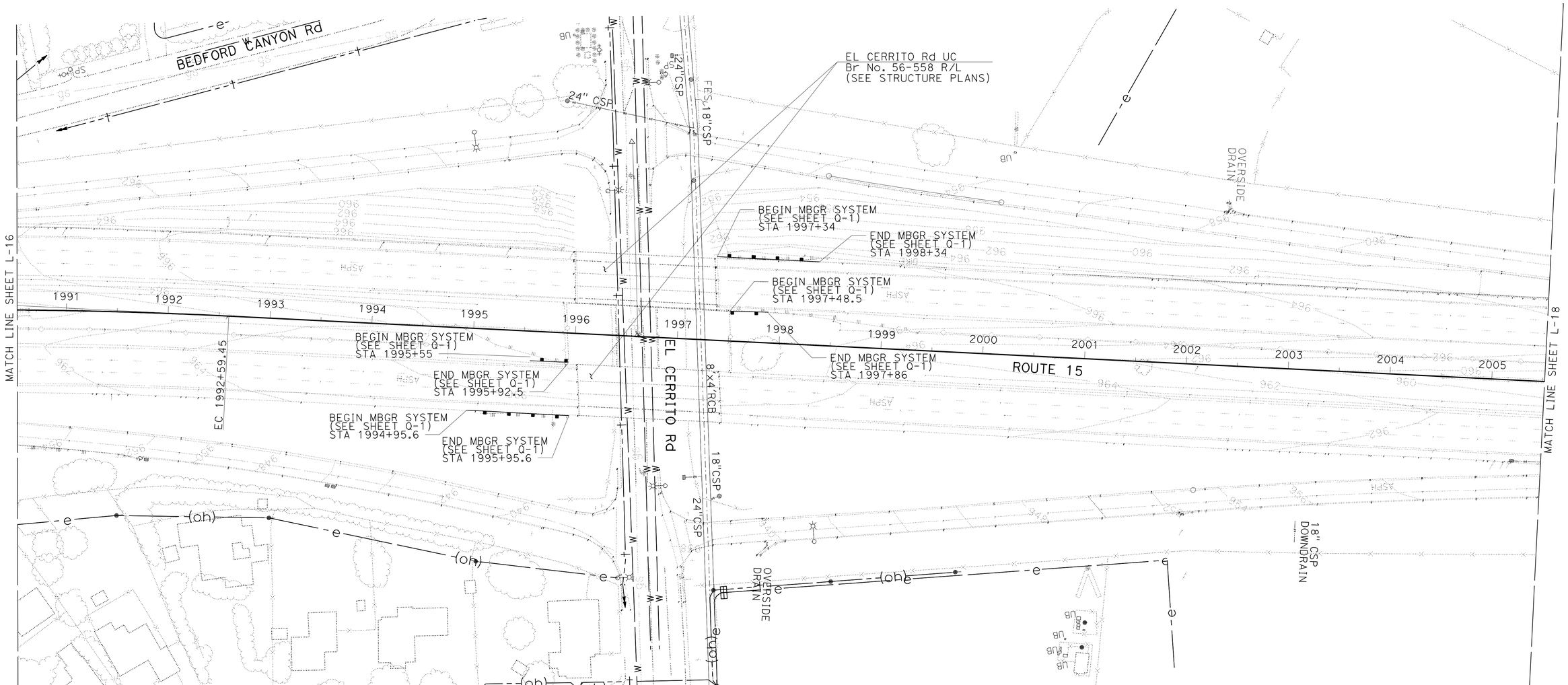

LAYOUT

SCALE: 1" = 50' **L-17**

REVISED BY	DATE REVISED
DUNG HUY PHAN	
CALCULATED-DESIGNED BY	CHECKED BY
ANH PHAN & ZIAD SAWALHA	
FUNCTIONAL SUPERVISOR	
RENEE SASSE	

STATE OF CALIFORNIA - DEPARTMENT OF TRANSPORTATION
Caltrans®
DESIGN

LAST REVISION 01-09-12 | DATE PLOTTED => 26-APR-2012 | TIME PLOTTED => 11:10

Dist	COUNTY	ROUTE	POST MILES TOTAL PROJECT	SHEET No.	TOTAL SHEETS
08	Riv	15	33.4/38.4	21	82

REGISTERED CIVIL ENGINEER 01-10-12 DATE

4-23-12
PLANS APPROVAL DATE

REGISTERED PROFESSIONAL ENGINEER
DUNG HUY PHAN
No. C 73061
Exp. 12/31/12
CIVIL
STATE OF CALIFORNIA

THE STATE OF CALIFORNIA OR ITS OFFICERS OR AGENTS SHALL NOT BE RESPONSIBLE FOR THE ACCURACY OR COMPLETENESS OF SCANNED COPIES OF THIS PLAN SHEET.

NOTE:
FOR ACCURATE RIGHT OF WAY DATA, CONTACT RIGHT OF WAY ENGINEERING AT THE DISTRICT OFFICE

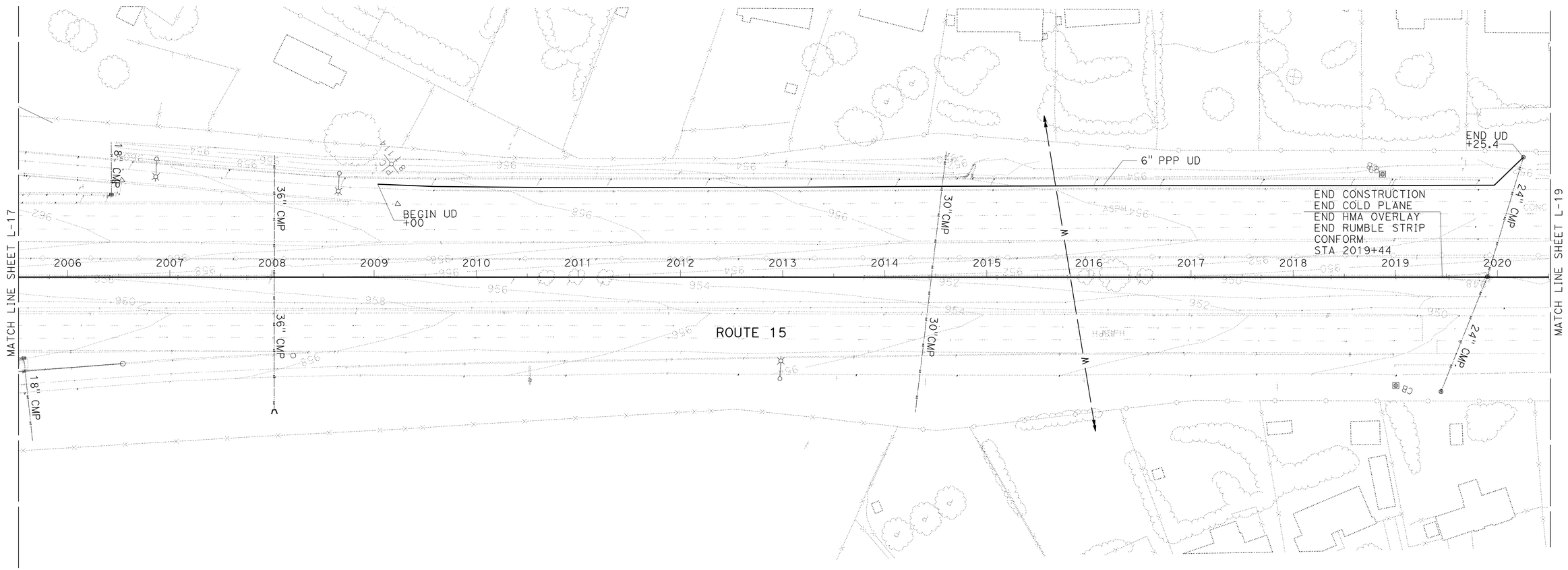

LAYOUT

SCALE: 1" = 50' **L-18**

STATE OF CALIFORNIA - DEPARTMENT OF TRANSPORTATION
Caltrans
DESIGN

FUNCTIONAL SUPERVISOR: RENEE SASSE
CALCULATED-DESIGNED BY: ANH PHAN & ZIAD SAWALHA
CHECKED BY: DUNG HUY PHAN
REVISED BY
DATE REVISED

LAST REVISION 01-09-12
DATE PLOTTED => 24-APR-2012
TIME PLOTTED => 13:40

Dist	COUNTY	ROUTE	POST MILES TOTAL PROJECT	SHEET No.	TOTAL SHEETS
08	Riv	15	33.4/38.4	22	82

REGISTERED CIVIL ENGINEER 01-10-12 DATE

4-23-12
PLANS APPROVAL DATE

REGISTERED PROFESSIONAL ENGINEER DUNG HUY PHAN No. C 73061 Exp. 12/31/12 CIVIL STATE OF CALIFORNIA

THE STATE OF CALIFORNIA OR ITS OFFICERS OR AGENTS SHALL NOT BE RESPONSIBLE FOR THE ACCURACY OR COMPLETENESS OF SCANNED COPIES OF THIS PLAN SHEET.

NOTE:

FOR ACCURATE RIGHT OF WAY DATA,CONTACT RIGHT OF WAY ENGINEERING AT THE DISTRICT OFFICE

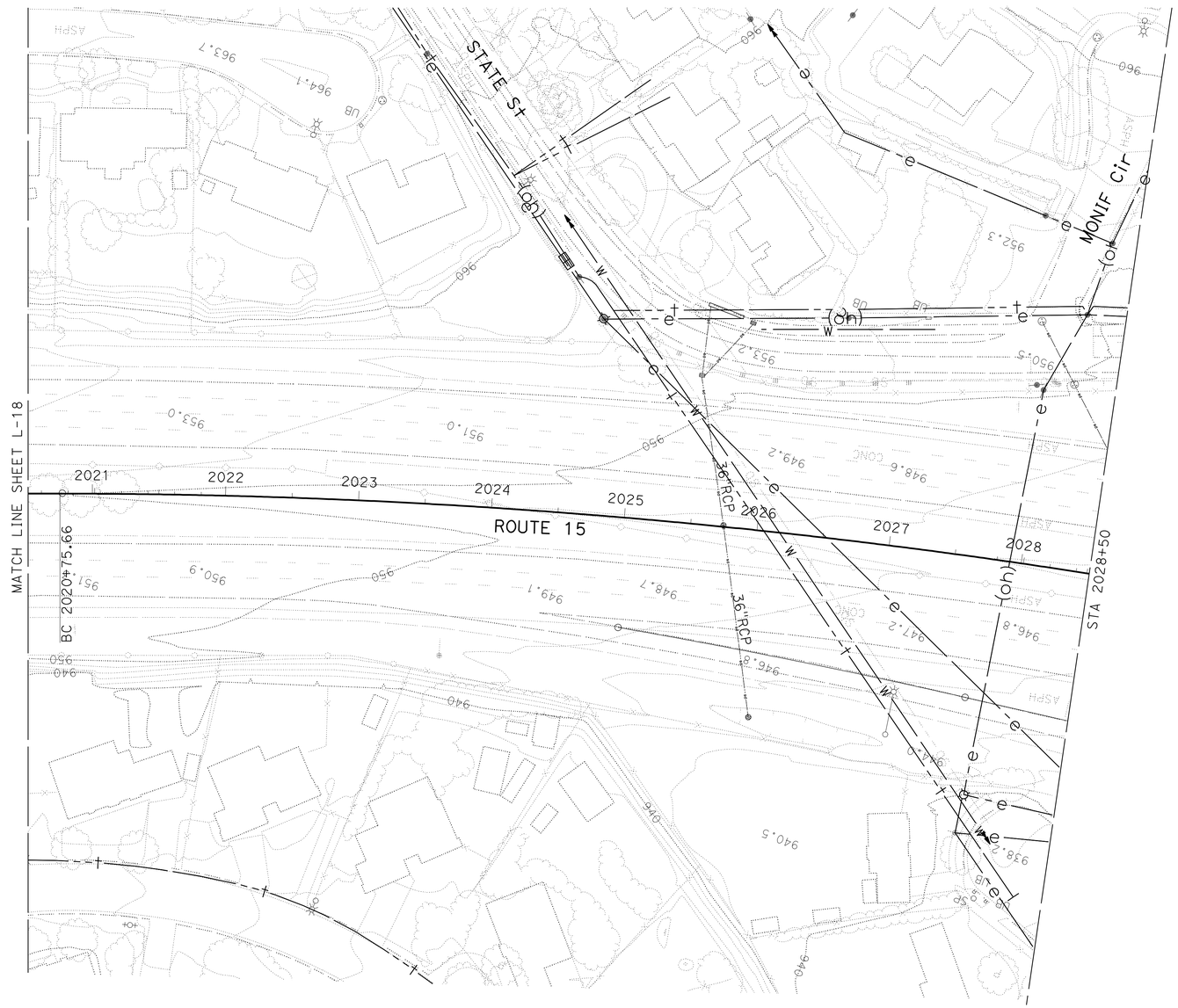

LAYOUT

SCALE: 1" = 50' **L-19**

STATE OF CALIFORNIA - DEPARTMENT OF TRANSPORTATION
Caltrans
DESIGN

FUNCTIONAL SUPERVISOR: RENEE SASSE

DUNG HUY PHAN
ANH PHAN & ZIAD SAWALHA

CALCULATED-DESIGNED BY
CHECKED BY

REVISED BY
DATE REVISED

LAST REVISION 01-09-12 | DATE PLOTTED => 24-APR-2012 TIME PLOTTED => 13:41

Dist	COUNTY	ROUTE	POST MILES TOTAL PROJECT	SHEET No.	TOTAL SHEETS
08	Riv	15	33.4/38.4	23	82

REGISTERED CIVIL ENGINEER 01-10-12 DATE

4-23-12
PLANS APPROVAL DATE

REGISTERED PROFESSIONAL ENGINEER DUNG HUY PHAN No. C 73061 Exp. 12/31/12 CIVIL STATE OF CALIFORNIA

THE STATE OF CALIFORNIA OR ITS OFFICERS OR AGENTS SHALL NOT BE RESPONSIBLE FOR THE ACCURACY OR COMPLETENESS OF SCANNED COPIES OF THIS PLAN SHEET.

NOTES:

1. FOR PCC ANCHOR BLOCK AND TRANSITION RAILING (TYPE WB) DETAILS SEE SHEET C-2, C-3 AND C-4.
2. FOR TRANSITION RAILING (TYPE WB) DETAILS, SEE Std PLAN RSP A77J4.

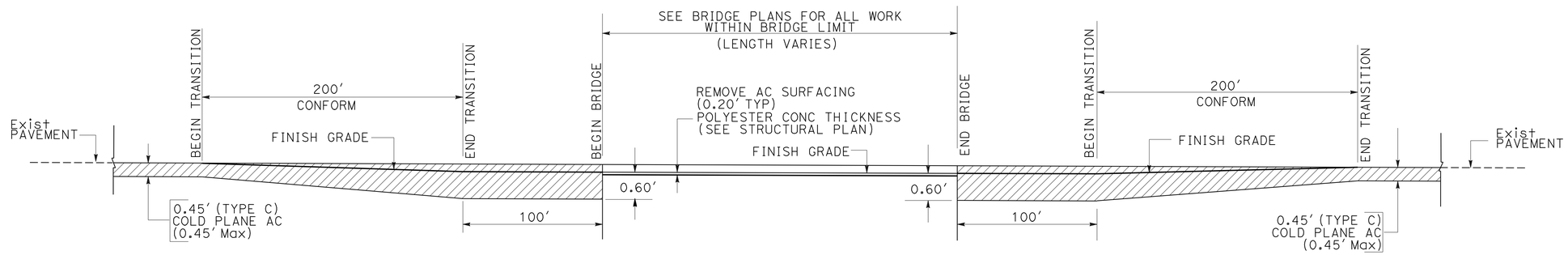

TYPICAL PAVEMENT CONFORM DETAIL AT BRIDGE DECK

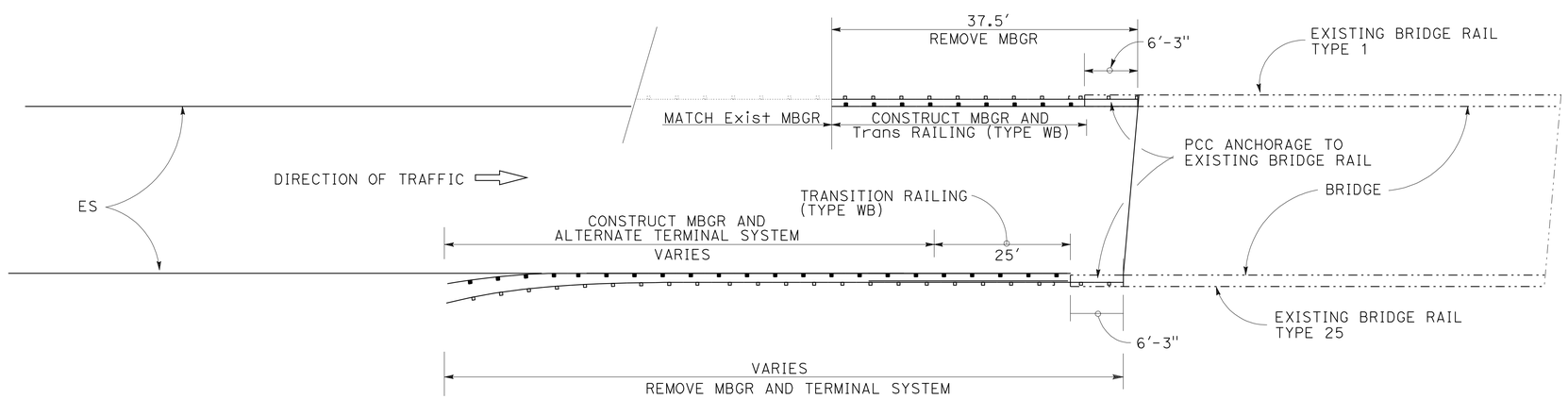

TYPICAL MBGR-BRIDGE RAILING CONNECTION

ROUTE 15

CONSTRUCTION DETAILS

NO SCALE

C-1

STATE OF CALIFORNIA - DEPARTMENT OF TRANSPORTATION
Caltrans®
DESIGN
FUNCTIONAL SUPERVISOR: RENEE SASSE
CALCULATED-DESIGNED BY: DUNG HUY PHAN
CHECKED BY: ANH PHAN & ZIAD SAWALHA
REVISED BY
DATE REVISED

LAST REVISION 01-09-12
DATE PLOTTED => 26-APR-2012
TIME PLOTTED => 11:10

Dist	COUNTY	ROUTE	POST MILES TOTAL PROJECT	SHEET No.	TOTAL SHEETS
08	Riv	15	33.4/38.4	24	82

REGISTERED CIVIL ENGINEER 01-10-12 DATE

4-23-12
PLANS APPROVAL DATE

REGISTERED PROFESSIONAL ENGINEER DUNG HUY PHAN No. C 73061 Exp. 12/31/12 CIVIL STATE OF CALIFORNIA

THE STATE OF CALIFORNIA OR ITS OFFICERS OR AGENTS SHALL NOT BE RESPONSIBLE FOR THE ACCURACY OR COMPLETENESS OF SCANNED COPIES OF THIS PLAN SHEET.

NOTES:

1. ALL PLATES AND BOLTS ARE GALVANIZED.
2. FOR TRANSITION RAILING (TYPE WB) DETAILS, SEE STD PLAN SHEET A77J4.
3. EXTERIOR SPLICE BOLT HOLES SHALL BE THE STANDARD 7/8 " X 1 1/8 "SLOT SIZE FOR RAIL SPLICES AT POST #T4 AND THE CONNECTION TO THE CONCRETE BARRIER OR RAILING. INTERIOR SPLICE BOLT HOLES MAY BE INCREASED UP TO 1 1/4" DIA. WASHERS SHALL BE USED WITH SPLICE BOLTS ON BACK SIDE OF RAIL ELEMENT AT POST #T4 AND CONNECTION TO THE CONCRETE BARRIER OR RAILING.
4. FOR BRIDGE LOCATIONS, SEE SUMMARY OF QUANTITIES.

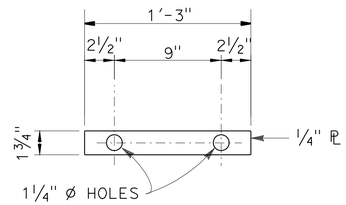

DETAIL G

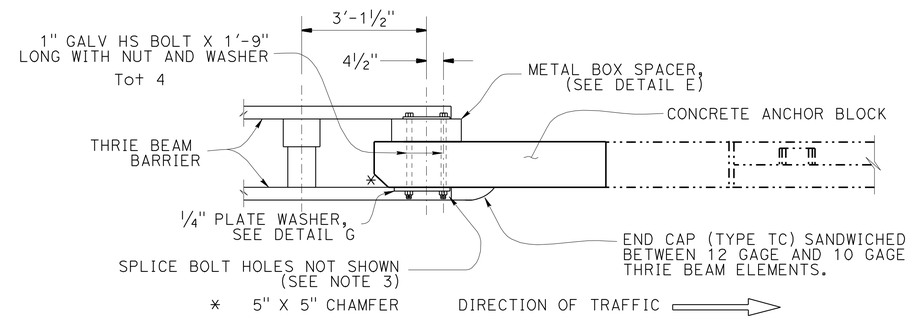

PLAN

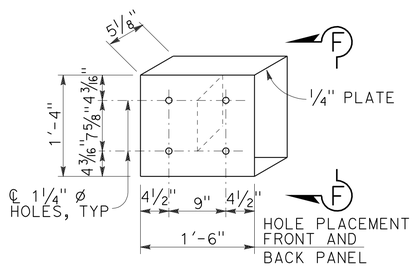

DETAIL E

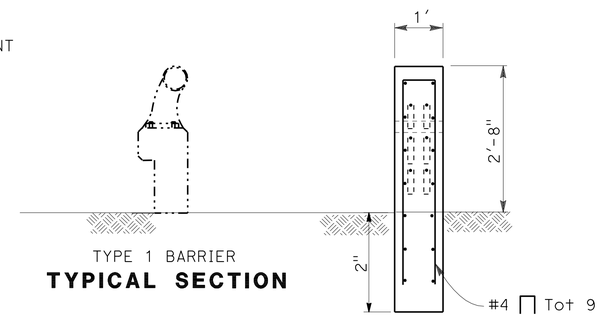

TYPICAL SECTION

SECTION A-A
CONCRETE ANCHOR BLOCK

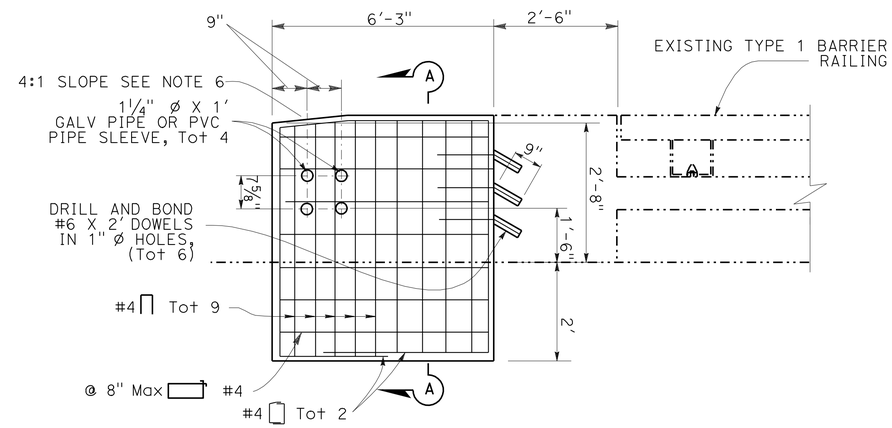

ELEVATION
CONCRETE ANCHOR BLOCK
MINOR CONCRETE (MINOR STRUCTURE)

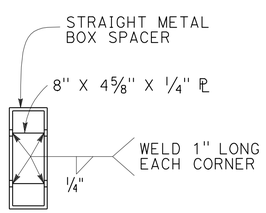

VIEW F-F

CONCRETE ANCHORAGE BLOCK DETAILS
FOR TRANSITION RAILING TO EXISTING BRIDGE RAILING TYPE 1

ROUTE 15

CONSTRUCTION DETAILS

NO SCALE

C-2

STATE OF CALIFORNIA - DEPARTMENT OF TRANSPORTATION
Caltrans
DESIGN
FUNCTIONAL SUPERVISOR: RENEE SASSE
CALCULATED-DESIGNED BY: DUNG HUY PHAN
CHECKED BY: ANH PHAN & ZIAD SAWALHA
REVISED BY
DATE REVISED

LAST REVISION 01-09-12
DATE PLOTTED => 26-APR-2012
TIME PLOTTED => 11:11

Dist	COUNTY	ROUTE	POST MILES TOTAL PROJECT	SHEET No.	TOTAL SHEETS
08	Riv	15	33.4/38.4	25	82

REGISTERED CIVIL ENGINEER DATE 01-10-12

PLANS APPROVAL DATE 4-23-12

REGISTERED PROFESSIONAL ENGINEER DUNG HUY PHAN No. C 73061 Exp. 12/31/12 CIVIL STATE OF CALIFORNIA

THE STATE OF CALIFORNIA OR ITS OFFICERS OR AGENTS SHALL NOT BE RESPONSIBLE FOR THE ACCURACY OR COMPLETENESS OF ELECTRONIC COPIES OF THIS PLAN SHEET.

NOTES:

1. ALL PLATES AND BOLTS ARE GALVANIZED.
2. FOR TRANSITION RAILING (TYPE WB) DETAILS, SEE STD PLAN SHEET A77J4.
3. EXTERIOR SPLICE BOLT HOLES SHALL BE THE STANDARD 7/8 " X 1 1/8 "SLOT SIZE FOR RAIL SPLICES AT POST #T4 AND THE CONNECTION TO THE CONCRETE BARRIER OR RAILING. INTERIOR SPLICE BOLT HOLES MAY BE INCREASED UP TO 1 1/4 " DIA. WASHERS SHALL BE USED WITH SPLICE BOLTS ON BACK SIDE OF RAIL ELEMENT AT POST #T4 AND CONNECTION TO THE CONCRETE BARRIER OR RAILING.
4. FOR BRIDGE LOCATIONS, SEE SUMMARY OF QUANTITIES.

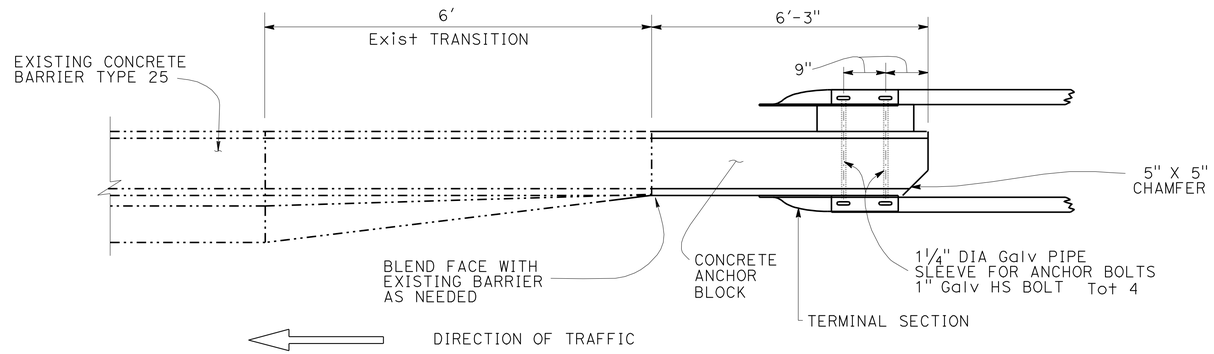

PLAN

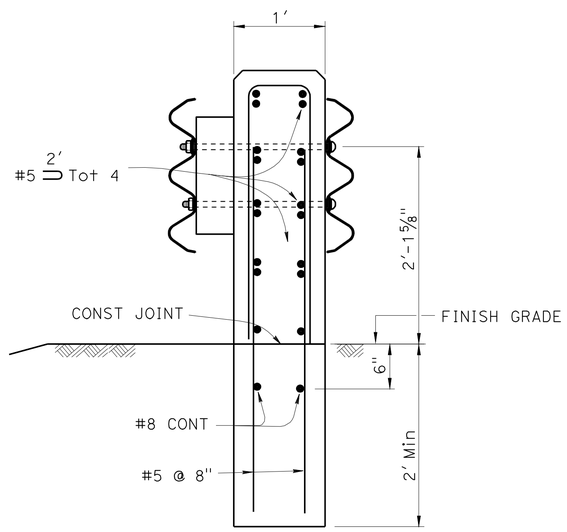

SECTION A-A
CONCRETE ANCHOR BLOCK

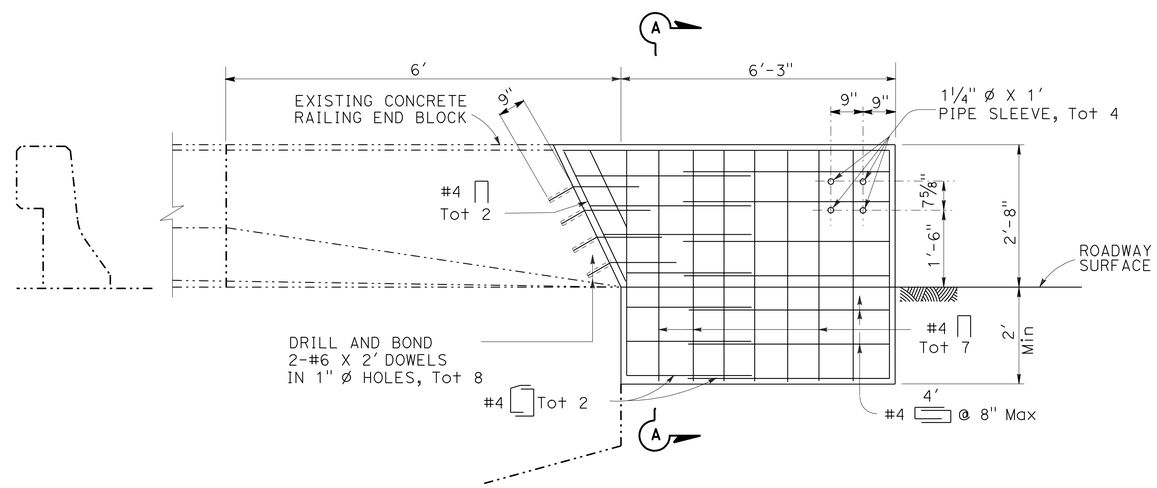

ELEVATION
CONCRETE ANCHOR BLOCK
MINOR CONCRETE (MINOR STRUCTURE)

CONCRETE ANCHORAGE BLOCK DETAILS
FOR TRANSITION RAILING TO EXISTING BRIDGE RAILING TYPE 25

ROUTE 15

CONSTRUCTION DETAILS

NO SCALE

C-3

STATE OF CALIFORNIA - DEPARTMENT OF TRANSPORTATION
Caltrans
DESIGN
FUNCTIONAL SUPERVISOR: RENEE SASSE
CALCULATED-DESIGNED BY: DUNG HUY PHAN
CHECKED BY: ANH PHAN & ZIAD SAWALHA
REVISED BY
DATE REVISED

LAST REVISION 01-09-12
DATE PLOTTED => 26-APR-2012
TIME PLOTTED => 11:11

Dist	COUNTY	ROUTE	POST MILES TOTAL PROJECT	SHEET No.	TOTAL SHEETS
08	Riv	15	33.4/38.4	26	82

REGISTERED CIVIL ENGINEER 01-10-12 DATE

4-23-12
PLANS APPROVAL DATE

REGISTERED PROFESSIONAL ENGINEER DUNG HUY PHAN No. C 73061 Exp. 12/31/12 CIVIL STATE OF CALIFORNIA

THE STATE OF CALIFORNIA OR ITS OFFICERS OR AGENTS SHALL NOT BE RESPONSIBLE FOR THE ACCURACY OR COMPLETENESS OF SCANNED COPIES OF THIS PLAN SHEET.

NOTE:

FOR TRANSITION RAILING (TYPE WB) DETAILS, SEE Std PLAN RSP A77J4.

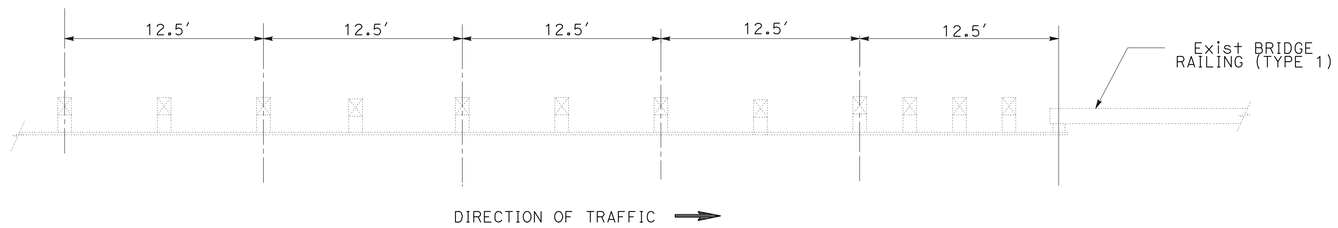

Exist METAL BEAM GUARD RAILING CONNECTION

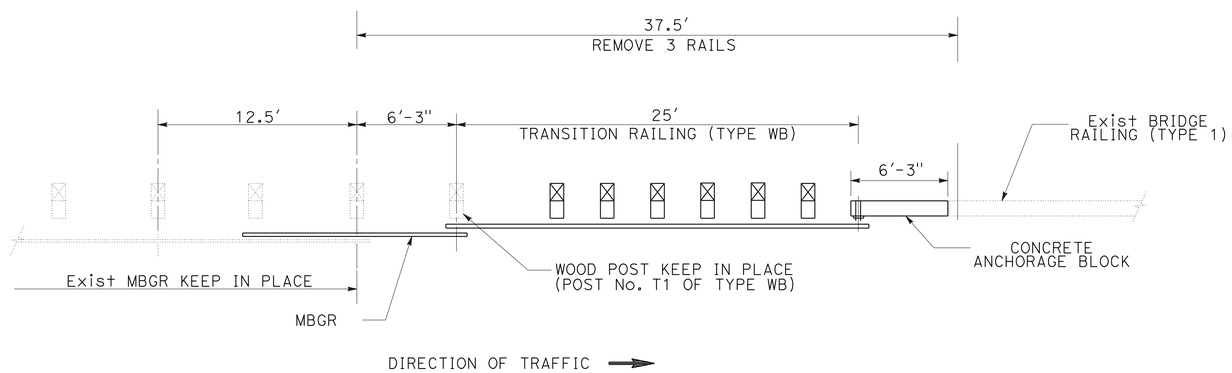

TRANSITION RAILING (TYPE WB) CONNECTION

METAL BEAM GUARD RAILING CONNECTION TO BRIDGE (LEFT SHOULDER)

ROUTE 15

CONSTRUCTION DETAILS

NO SCALE

C-4

STATE OF CALIFORNIA - DEPARTMENT OF TRANSPORTATION

Caltrans®

DESIGN

FUNCTIONAL SUPERVISOR: RENEE SASSE

CALCULATED-DESIGNED BY: DUNG HUY PHAN

CHECKED BY: ANH PHAN & ZIAD SAWALHA

REVISED BY

DATE REVISED

LAST REVISION 01-09-12

DATE PLOTTED => 26-APR-2012
TIME PLOTTED => 11:11

Dist	COUNTY	ROUTE	POST MILES TOTAL PROJECT	SHEET No.	TOTAL SHEETS
08	Riv	15	33.4/38.4	27	82

REGISTERED CIVIL ENGINEER 01-10-12 DATE

4-23-12
PLANS APPROVAL DATE

REGISTERED PROFESSIONAL ENGINEER DUNG HUY PHAN No. C 73061 Exp. 12/31/12 CIVIL STATE OF CALIFORNIA

THE STATE OF CALIFORNIA OR ITS OFFICERS OR AGENTS SHALL NOT BE RESPONSIBLE FOR THE ACCURACY OR COMPLETENESS OF SCANNED COPIES OF THIS PLAN SHEET.

NOTE:

1. SEE SHEETS X-1 AND X-2 FOR STRUCTURAL SECTION DEPTH.

LEGEND:

- COLD PLANE 0.25' AND PLACE 0.25' HMA(TYPE C)
- COLD PLANE 0.15' AND PLACE 0.15' RHMA-G
- RUMBLE STRIP

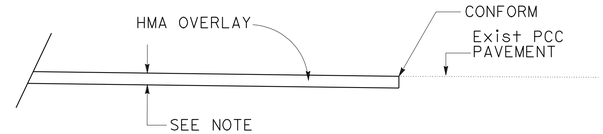

PAVEMENT CONFORM

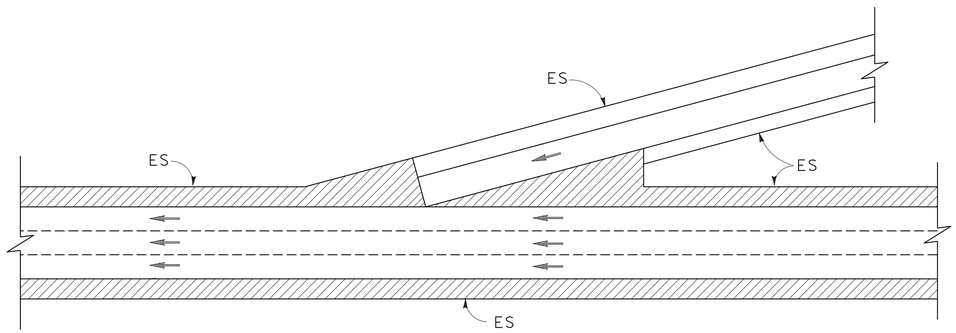

TYPICAL COLD PLANE AC LIMITS AT TEMESCAL RAMPS AND SHOULDERS

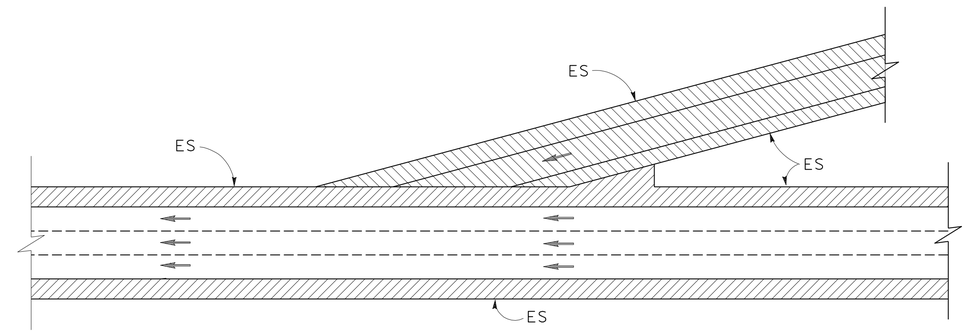

TYPICAL COLD PLANE AC LIMITS AT RAMPS AND SHOULDERS

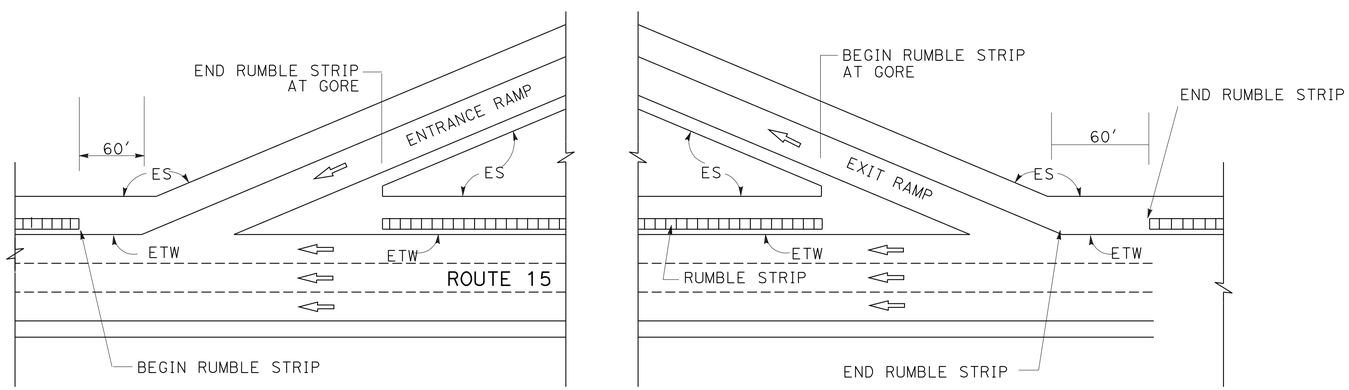

TYPICAL LIMIT OF RUMBLE STRIP AT RAMPS

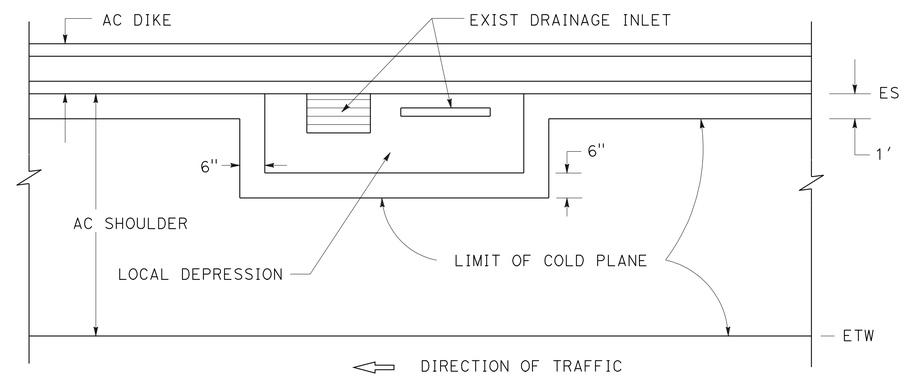

TYPICAL LIMIT OF COLD PLANE AT DRAINAGE INLET

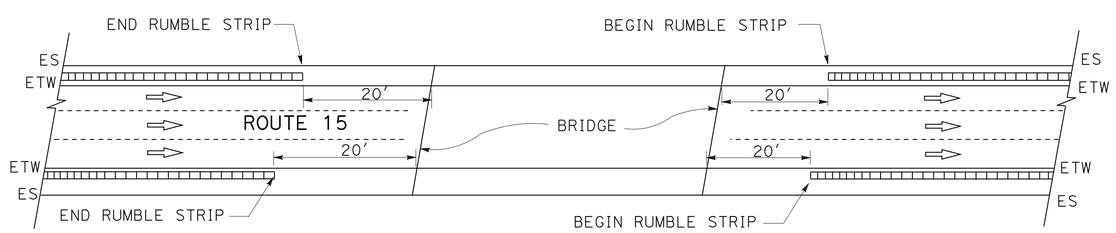

TYPICAL LIMIT OF RUMBLE STRIP AT BRIDGE

ROUTE 15

CONSTRUCTION DETAILS

NO SCALE

C-5

REVISED BY	DATE REVISED
DUNG HUY PHAN	ANH PHAN & ZIAD SAWALHA

CALCULATED-DESIGNED BY / CHECKED BY

FUNCTIONAL SUPERVISOR: RENE SASSE

STATE OF CALIFORNIA - DEPARTMENT OF TRANSPORTATION

Caltrans DESIGN

LAST REVISION 01-09-12 | DATE PLOTTED => 26-APR-2012 | TIME PLOTTED => 11:11

Dist	COUNTY	ROUTE	POST MILES TOTAL PROJECT	SHEET No.	TOTAL SHEETS
08	Riv	15	33.4/38.4	28	82

REGISTERED CIVIL ENGINEER 01-10-12 DATE

4-23-12
PLANS APPROVAL DATE

REGISTERED PROFESSIONAL ENGINEER DUNG HUY PHAN No. C 73061 Exp. 12/31/12 CIVIL STATE OF CALIFORNIA

THE STATE OF CALIFORNIA OR ITS OFFICERS OR AGENTS SHALL NOT BE RESPONSIBLE FOR THE ACCURACY OR COMPLETENESS OF SCANNED COPIES OF THIS PLAN SHEET.

NOTES:

1. FOR SINGLE CONNECTION, REDUCE HALF OF AREA.
2. FOR RISER DETAILS, SEE STD PLAN SHEET D102.

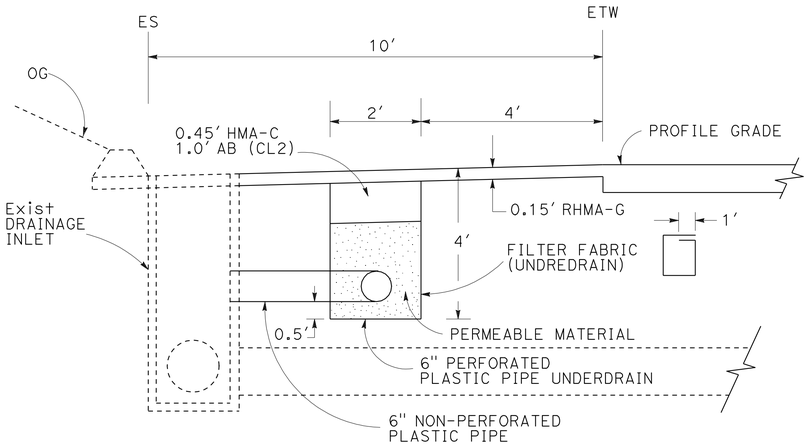

TYPICAL SECTION

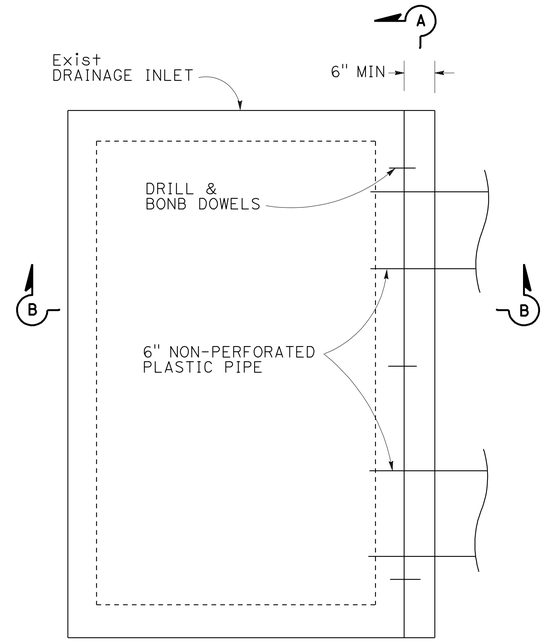

PLAN VIEW

A

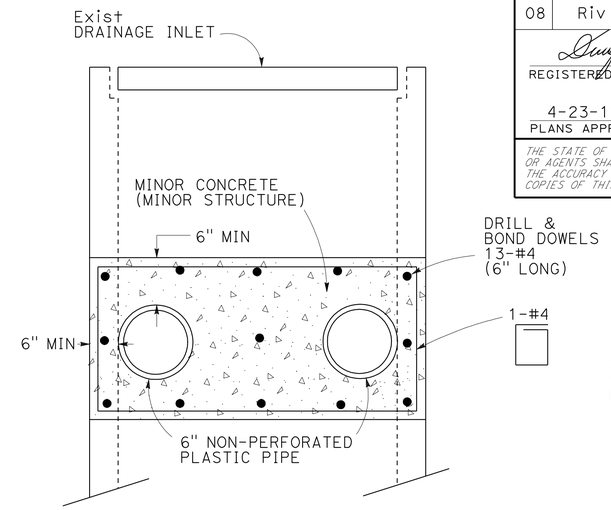

SECTION A-A

DOUBLE CONNECTION (SEE NOTE 1)

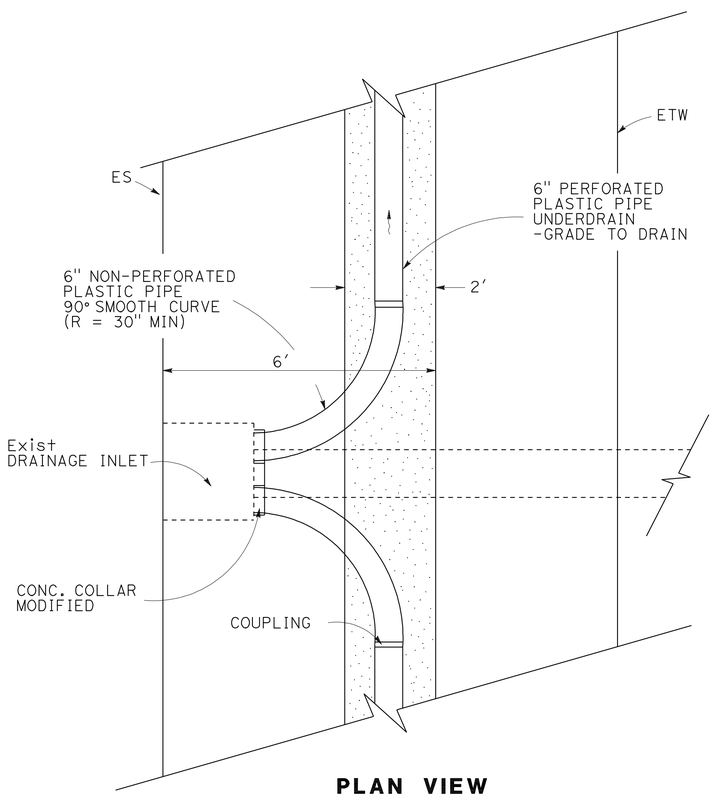

PLAN VIEW

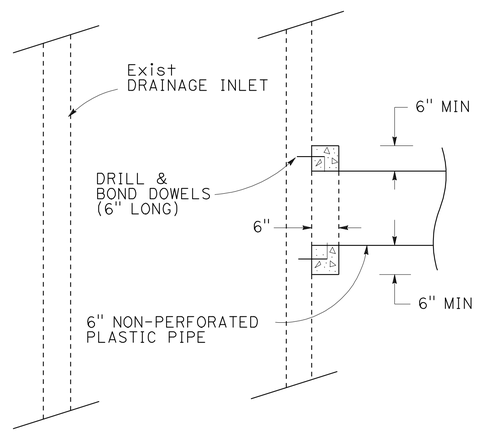

SECTION B-B

CONCRETE COLLAR MODIFIED

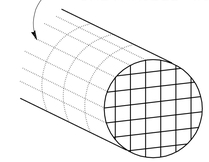

DETAIL OF RODENT SCREEN

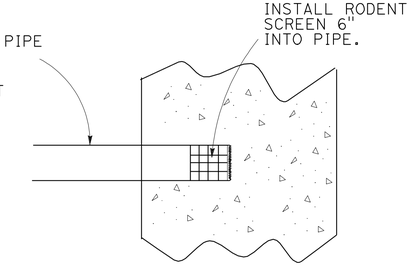

DETAIL AT END OF 6" PLASTIC PIPE UNDERDRAIN

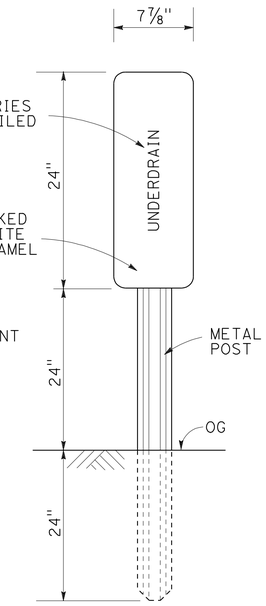

UNDERDRAIN MARKER

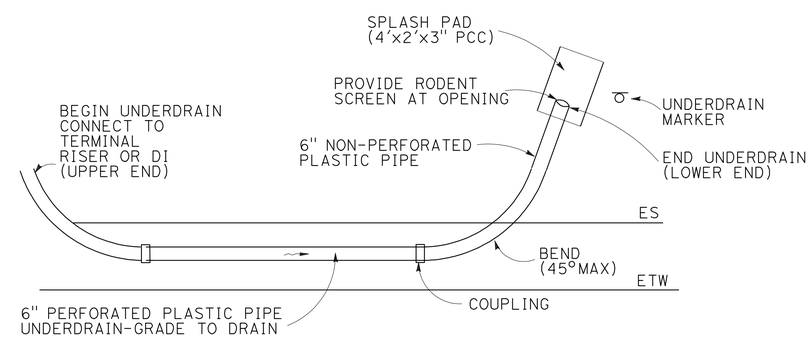

PLAN
UNDERDRAIN OUTLET TO FILL SLOPE

UNDERDRAIN OUTLET TO DRAINAGE INLET OR FILL SLOPE

ROUTE 15

CONSTRUCTION DETAILS

NO SCALE

C-6

STATE OF CALIFORNIA - DEPARTMENT OF TRANSPORTATION
Caltrans
DESIGN
FUNCTIONAL SUPERVISOR: RENEE SASSE
CALCULATED-DESIGNED BY: DUNG HUY PHAN
CHECKED BY: ANH PHAN & ZIAD SAWALHA
REVISED BY
DATE REVISED

LAST REVISION 01-09-12
DATE PLOTTED => 26-APR-2012
TIME PLOTTED => 11:11

Dist	COUNTY	ROUTE	POST MILES TOTAL PROJECT	SHEET No.	TOTAL SHEETS
08	Riv	15	33.4/38.4	29	82

REGISTERED CIVIL ENGINEER 01-10-12 DATE

4-23-12
PLANS APPROVAL DATE

REGISTERED PROFESSIONAL ENGINEER DUNG HUY PHAN No. C 73061 Exp. 12/31/12 CIVIL STATE OF CALIFORNIA

THE STATE OF CALIFORNIA OR ITS EXITICERS OR AGENTS SHALL NOT BE RESPONSIBLE FOR THE ACCURACY OR COMPLETENESS OF SCANNED COPIES OF THIS PLAN SHEET.

LEGEND:

0.65′ HMA (TYPE C)
1.20′ CL2 AB

0.25′ COLD PLANE
0.25′ HMA (TYPE C)

NOTE:

FOR RAMP STRUCTURAL SECTION, SEE TYPICAL SECTION.

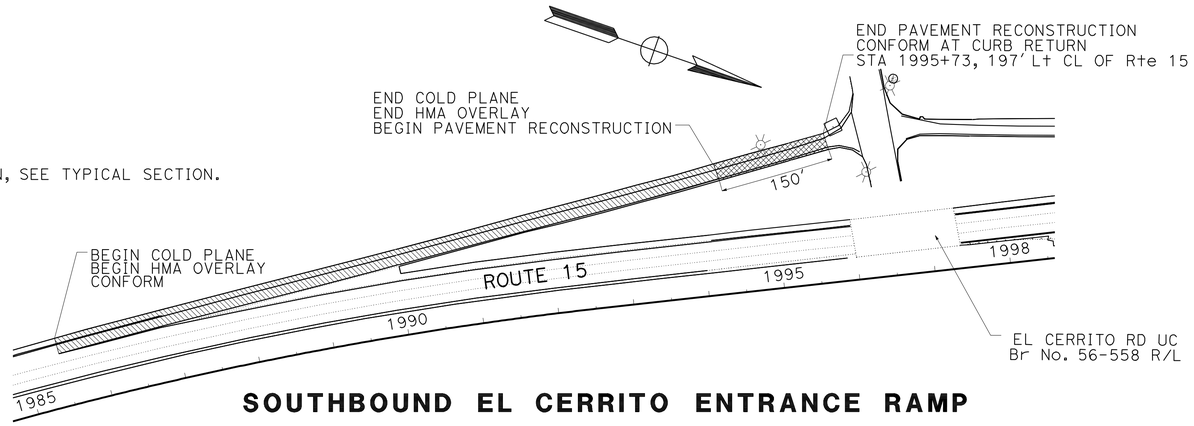

SOUTHBOUND EL CERRITO ENTRANCE RAMP

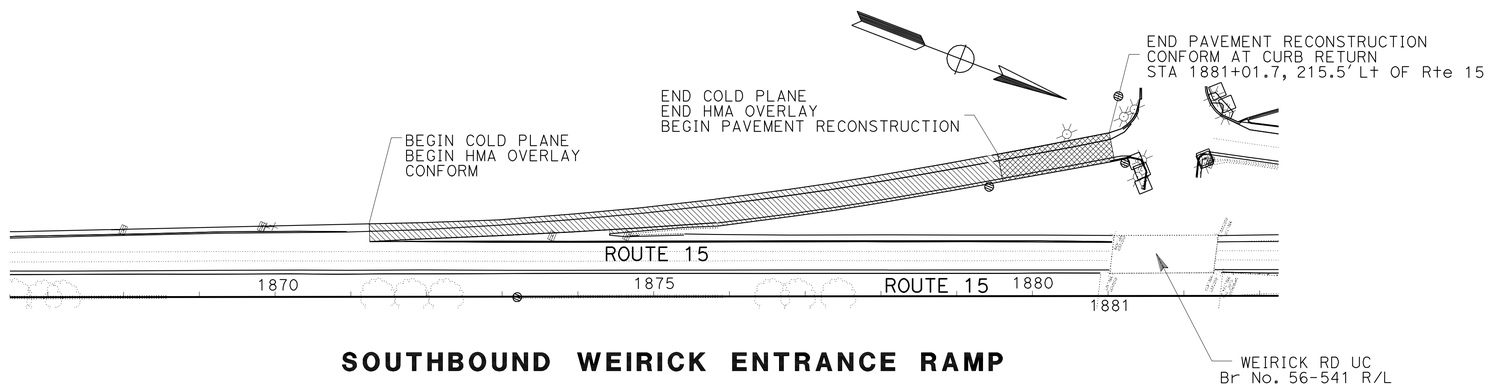

SOUTHBOUND WEIRICK ENTRANCE RAMP

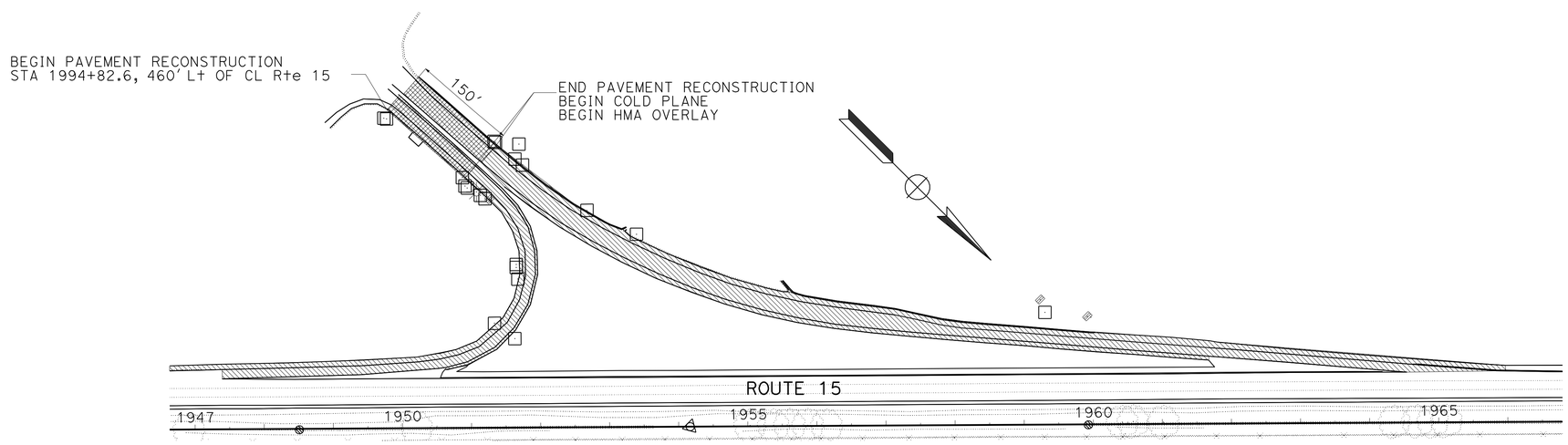

SOUTHBOUND CAJALCO ENTRANCE AND EXIT RAMP

CONSTRUCTION DETAILS

NO SCALE

C-7

STATE OF CALIFORNIA - DEPARTMENT OF TRANSPORTATION
Caltrans®
DESIGN

FUNCTIONAL SUPERVISOR: RENEE SASSE

CALCULATED-DESIGNED BY: DUNG HUY PHAN
CHECKED BY: ANH PHAN & ZIAD SAWALHA

REVISED BY
DATE REVISED

LAST REVISION 01-09-12
DATE PLOTTED => 26-APR-2012
TIME PLOTTED => 11:12

Dist	COUNTY	ROUTE	POST MILES TOTAL PROJECT	SHEET No.	TOTAL SHEETS
08	Riv	15	33.4/38.4	30	82

N T Nguyen 01-10-12
REGISTERED CIVIL ENGINEER DATE

4-23-12
PLANS APPROVAL DATE

REGISTERED PROFESSIONAL ENGINEER
NHUAN NGUYEN
No. 42692
Exp. 03-31-12
CIVIL
STATE OF CALIFORNIA

THE STATE OF CALIFORNIA OR ITS OFFICERS OR AGENTS SHALL NOT BE RESPONSIBLE FOR THE ACCURACY OR COMPLETENESS OF SCANNED COPIES OF THIS PLAN SHEET.

TEMPORARY DRAINAGE INLET PROTECTION

DESCRIPTION	UNIT	QUANTITIES	REMARKS
TEMPORARY DRAINAGE INLET PROTECTION	EA	60	LOCATION TO BE DETERMINED BY THE ENGINEER

TEMPORARY WATER POLLUTION CONTROL QUANTITIES

WPCQ- 1

STATE OF CALIFORNIA - DEPARTMENT OF TRANSPORTATION
Caltrans®
DESIGN

FUNCTIONAL SUPERVISOR: RENEE SASSE

CALCULATED-DESIGNED BY: NHUAN NGUYEN
CHECKED BY: NHUAN NGUYEN

REVISED BY
DATE REVISED

LAST REVISION 01-09-12
DATE PLOTTED => 26-APR-2012
TIME PLOTTED => 11:12

Dist	COUNTY	ROUTE	POST MILES TOTAL PROJECT	SHEET No.	TOTAL SHEETS
08	Riv	15	33.4/38.4	31	82

Thanh Trinh 01-10-12
REGISTERED CIVIL ENGINEER DATE

4-23-12
PLANS APPROVAL DATE

REGISTERED PROFESSIONAL ENGINEER
T. TRINH
No. C41189
Exp. 3-31-13
CIVIL
STATE OF CALIFORNIA

THE STATE OF CALIFORNIA OR ITS OFFICERS OR AGENTS SHALL NOT BE RESPONSIBLE FOR THE ACCURACY OR COMPLETENESS OF SCANNED COPIES OF THIS PLAN SHEET.

NOTE:

1. ALL LOCATION OF CONSTRUCTION AREA SIGNS ARE APPROXIMATE. EXACT LOCATIONS WILL BE DETERMINED BY THE ENGINEER

LEGEND:

- WORK AREA
- CONSTRUCTION AREA SIGN (ONE POST)
- CONSTRUCTION AREA SIGN (TWO POST)
- (X) CONSTRUCTION AREA SIGN NUMBER

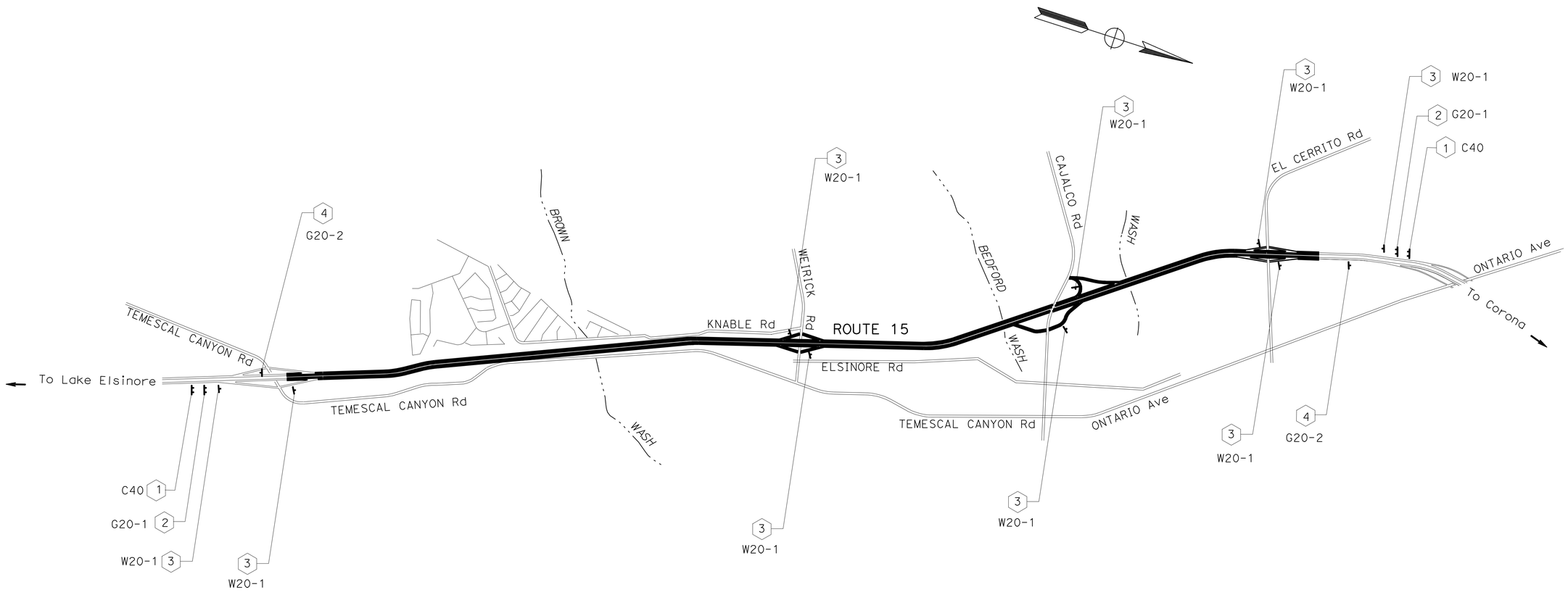

CONSTRUCTION AREA SIGNS

NO SCALE

CS-1

APPROVED FOR CONSTRUCTION AREA SIGNS WORK ONLY

STATE OF CALIFORNIA - DEPARTMENT OF TRANSPORTATION
Caltrans® TRAFFIC DESIGN

FUNCTIONAL SUPERVISOR: BILL WASSER
CALCULATED-DESIGNED BY: KEVIN NGUYEN
CHECKED BY: THANH TRINH
REVISED BY
DATE REVISED

LAST REVISION 01-09-12
DATE PLOTTED => 24-APR-2012
TIME PLOTTED => 13:14

Dist	COUNTY	ROUTE	POST MILES TOTAL PROJECT	SHEET No.	TOTAL SHEETS
08	Riv	15	33.4/38.4	32	82

Thanh Trinh 01-10-12
REGISTERED CIVIL ENGINEER DATE

4-23-12
PLANS APPROVAL DATE

REGISTERED PROFESSIONAL ENGINEER
T. TRINH
No. C41189
Exp. 3-31-13
CIVIL
STATE OF CALIFORNIA

THE STATE OF CALIFORNIA OR ITS OFFICERS OR AGENTS SHALL NOT BE RESPONSIBLE FOR THE ACCURACY OR COMPLETENESS OF SCANNED COPIES OF THIS PLAN SHEET.

STATIONARY MOUNTED CONSTRUCTION AREA SIGNS

SHEET	SIGN No.	SIGN CODE FEDERAL	SIGN CODE CALIFORNIA	PANEL SIZE	No. OF POST AND SIZE	No. OF SIGN EA	SIGN MESSAGE
SHEET CS-1	1		C40	108X42	2-6"X6"	2	DOUBLE FINE
	2	G20-1		36X18	1-4"X4"	2	Rd WORK NEXT 5 MILES
	3	W20-1		48X48	1-6"X6"	9	Rd WORK AHEAD
	4	G20-2		36X18	1-4"X4"	2	END Rd WORK
SHEET MI-1 TO MI-4	5	W20-2		36X36	1-4"X6"	8	DETOUR AHEAD
	6		SC3	48X18	1-4"X4"	15	DETOUR STRAIGHT
	7	M4-10(L)		48X18	1-4"X4"	27	DETOUR LEFT
	8	M4-8A		24X18	1-4"X4"	14	END DETOUR
	9	M4-10(R)		48X18	1-4"X4"	22	DETOUR RIGHT
	10	M1-1(15)		24X24	1-4"X6"	3	ROUTE 15
		M3-1		24X12			NORTH
		M4-10(L)		48X18			DETOUR LEFT
	11	M1-1(15)		24X24	1-4"X6"	2	ROUTE 15
		M3-1		24X12			NORTH
		M4-10(R)		48X18			DETOUR RIGHT
	12	M1-1(15)		24X24	1-4"X6"	2	ROUTE 15
		M3-3		24X12			SOUTH
		M4-10(R)		48X18			DETOUR RIGHT
	13	M1-1(15)		24X24	1-4"X6"	2	ROUTE 15
		M3-3		24X12			SOUTH
		M4-10(L)		48X18			DETOUR LEFT
SHEET TH-7 TO TH-17	14		C30A	48X48	1-6"X6"	6	SHOULDER CLOSED
	15	W21-5bR		60X60	2-6"X6"	1	RIGHT SHOULDER CLOSED 1500'
	16	W21-5		48X48	1-6"X6"	1	SHOULDER WORK
	17		C30A	48X48	1-6"X6"	1	SHOULDER CLOSED
		W7-3a		24X18			NEXT 5 MILES

CONSTRUCTION AREA SIGNS

CS-2

STATE OF CALIFORNIA - DEPARTMENT OF TRANSPORTATION
Caltrans TRAFFIC DESIGN

FUNCTIONAL SUPERVISOR: BILL WASSER
CALCULATED-DESIGNED BY: KEVIN NGUYEN
CHECKED BY: THANH TRINH
REVISED BY
DATE REVISED

LAST REVISION 01-09-12
DATE PLOTTED => 24-APR-2012
TIME PLOTTED => 13:14

Dist	COUNTY	ROUTE	POST MILES TOTAL PROJECT	SHEET No.	TOTAL SHEETS
08	Riv	15	33.4/38.4	33	82

Thanh Trinh 01-10-12
REGISTERED CIVIL ENGINEER DATE

4-23-12
PLANS APPROVAL DATE

REGISTERED PROFESSIONAL ENGINEER T. TRINH No. C 41189 Exp. 03/31/13 CIVIL STATE OF CALIFORNIA

THE STATE OF CALIFORNIA OR ITS OFFICERS OR AGENTS SHALL NOT BE RESPONSIBLE FOR THE ACCURACY OR COMPLETENESS OF SCANNED COPIES OF THIS PLAN SHEET.

LEGEND:

- TRAFFIC HANDLING SIGN (XX)
- TEMPORARY RAILING (TYPE K)
- TEMPORARY CRASH CUSHION "TS14"
- CHANNELIZER (SURFACE MOUNTED)
- DIRECTION OF TRAFFIC

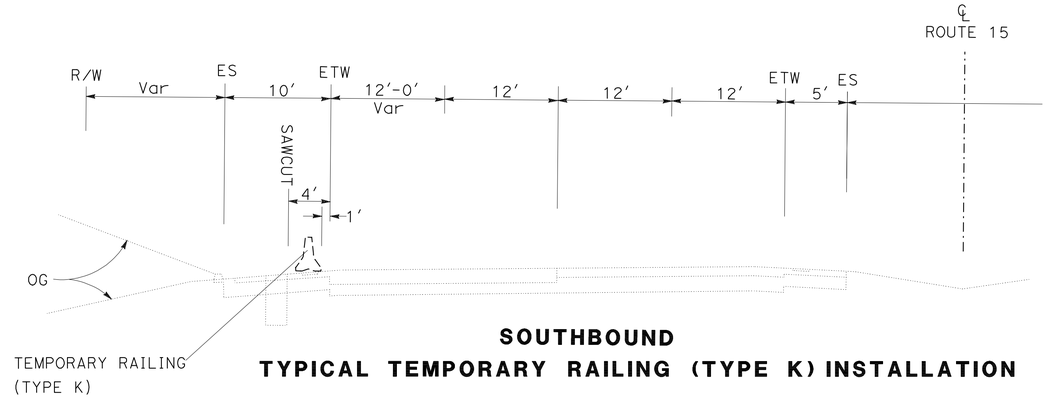

SOUTHBOUND
TYPICAL TEMPORARY RAILING (TYPE K) INSTALLATION

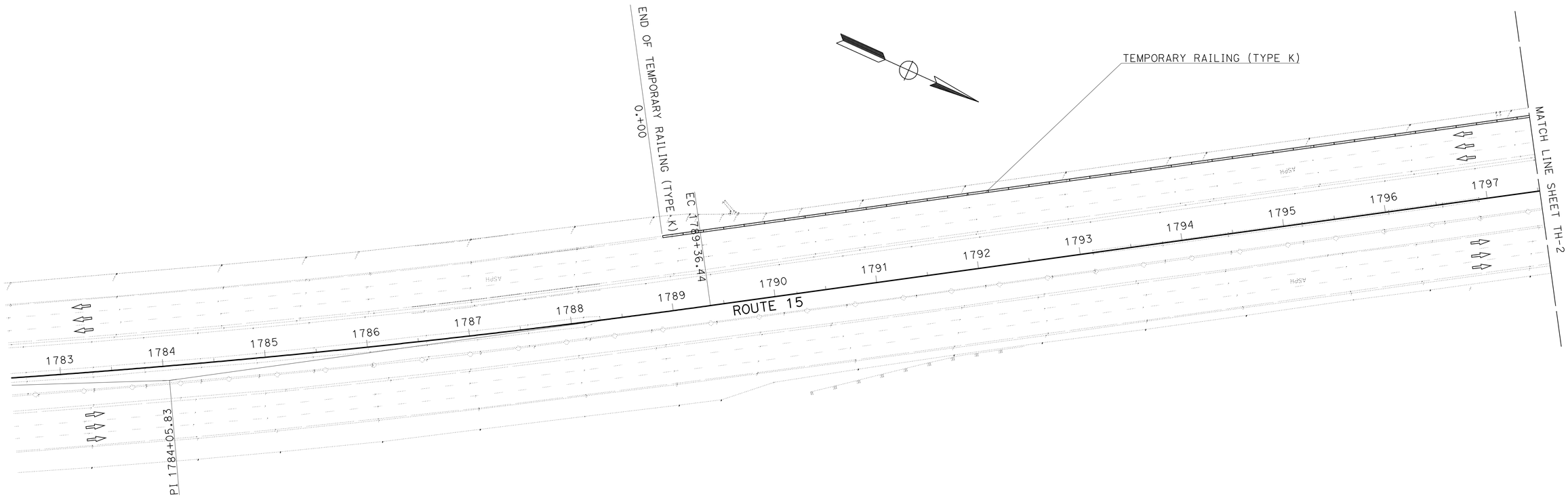

TRAFFIC HANDLING PLAN

APPROVED FOR TRAFFIC HANDLING WORK ONLY

SCALE: 1" = 50'

TH-1

STATE OF CALIFORNIA - DEPARTMENT OF TRANSPORTATION
Caltrans
TRAFFIC DESIGN

FUNCTIONAL SUPERVISOR: BILL WASSER
CALCULATED-DESIGNED BY: KEVIN NGUYEN
CHECKED BY: THANH TRINH
REVISED BY
DATE REVISED

LAST REVISION 01-09-12
DATE PLOTTED => 24-APR-2012
TIME PLOTTED => 13:14

Dist	COUNTY	ROUTE	POST MILES TOTAL PROJECT	SHEET No.	TOTAL SHEETS
08	Riv	15	33.4/38.4	34	82

Thanh Trinh 01-10-12
REGISTERED CIVIL ENGINEER DATE

4-23-12
PLANS APPROVAL DATE

REGISTERED PROFESSIONAL ENGINEER
T. TRINH
No. C 41189
Exp. 03/31/13
CIVIL
STATE OF CALIFORNIA

THE STATE OF CALIFORNIA OR ITS OFFICERS OR AGENTS SHALL NOT BE RESPONSIBLE FOR THE ACCURACY OR COMPLETENESS OF SCANNED COPIES OF THIS PLAN SHEET.

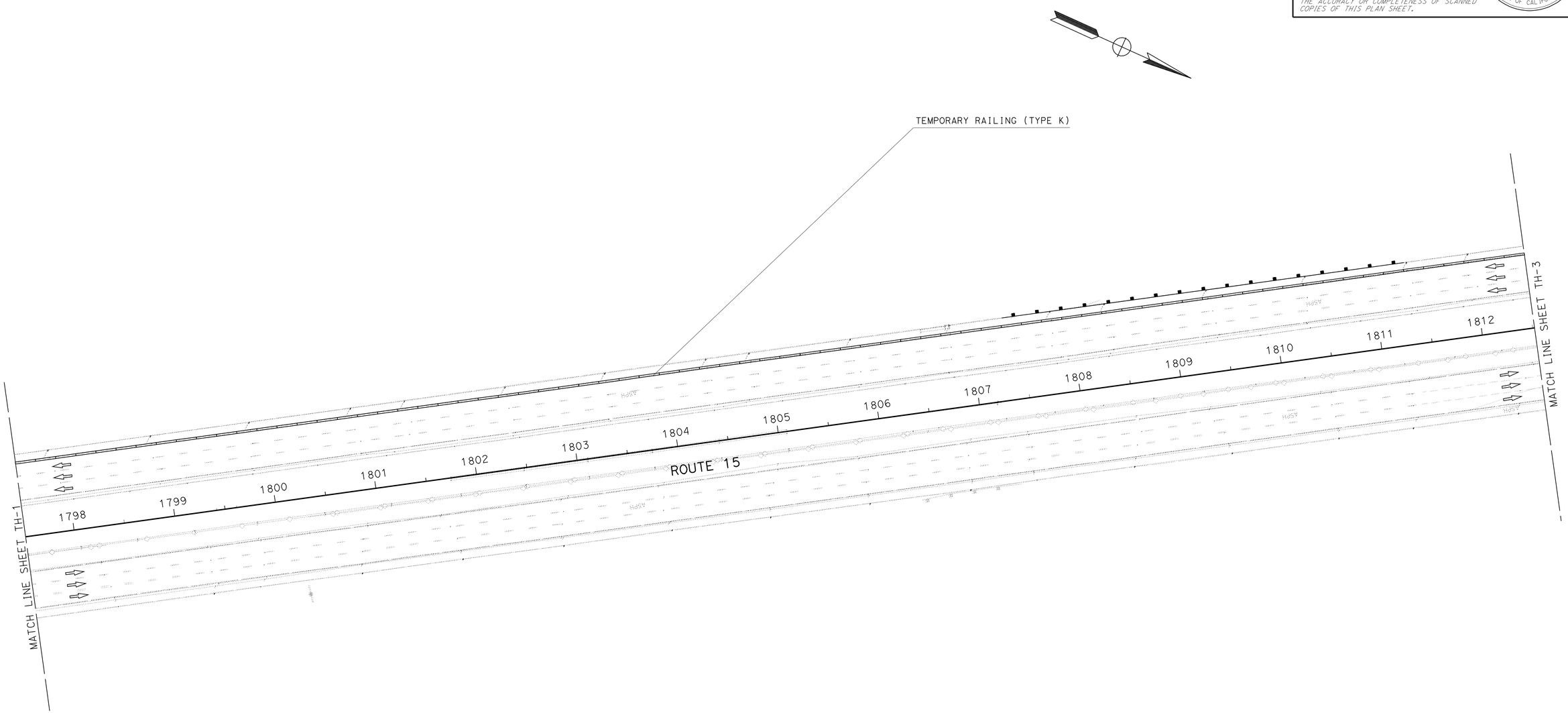

TRAFFIC HANDLING PLAN

APPROVED FOR TRAFFIC HANDLING WORK ONLY

SCALE: 1" = 50'

TH-2

STATE OF CALIFORNIA - DEPARTMENT OF TRANSPORTATION
Caltrans®
TRAFFIC DESIGN

FUNCTIONAL SUPERVISOR: BILL WASSER
CALCULATED-DESIGNED BY: THANH TRINH
CHECKED BY: KEVIN NGUYEN
REVISED BY
DATE REVISED

LAST REVISION 01-09-12
DATE PLOTTED => 24-APR-2012
TIME PLOTTED => 13:14

Dist	COUNTY	ROUTE	POST MILES TOTAL PROJECT	SHEET No.	TOTAL SHEETS
08	Riv	15	33.4/38.4	35	82

Thanh Trinh 01-10-12
REGISTERED CIVIL ENGINEER DATE

4-23-12
PLANS APPROVAL DATE

REGISTERED PROFESSIONAL ENGINEER
T. TRINH
No. C 41189
Exp. 03/31/13
CIVIL
STATE OF CALIFORNIA

THE STATE OF CALIFORNIA OR ITS OFFICERS OR AGENTS SHALL NOT BE RESPONSIBLE FOR THE ACCURACY OR COMPLETENESS OF SCANNED COPIES OF THIS PLAN SHEET.

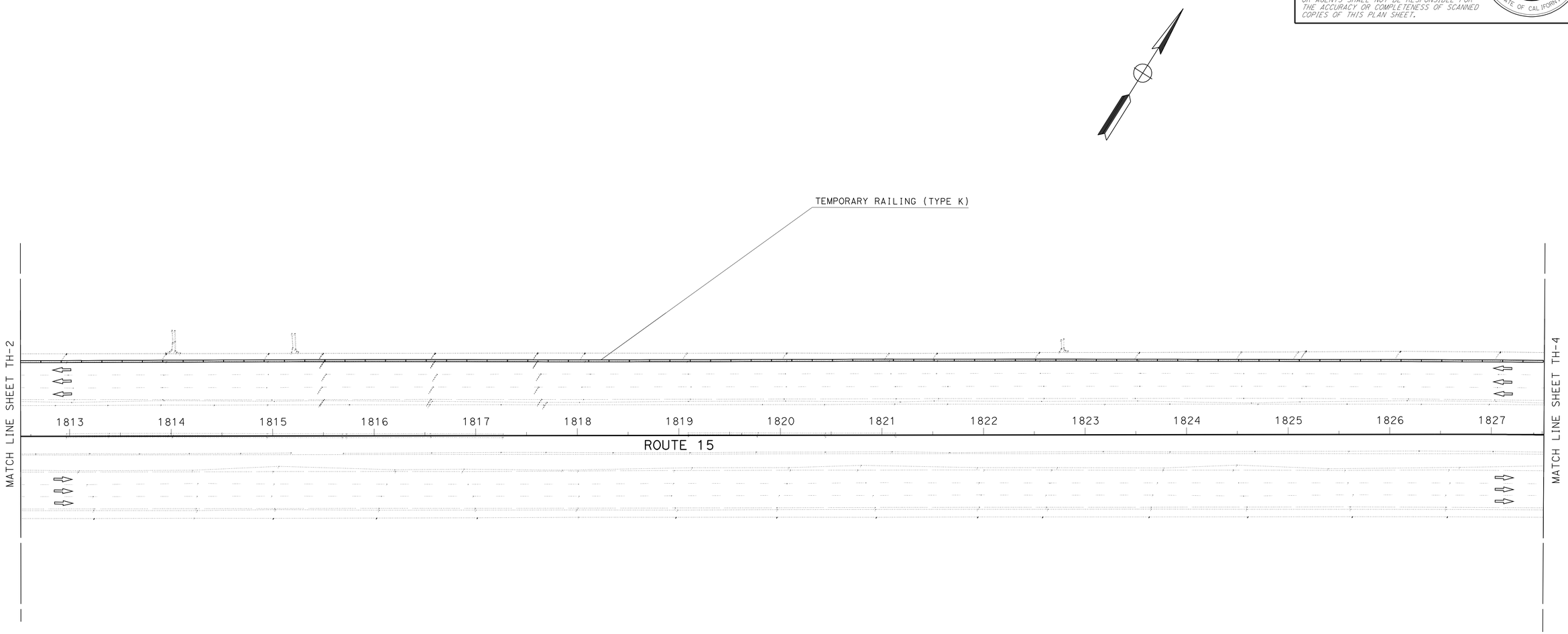

TRAFFIC HANDLING PLAN

SCALE: 1" = 50'

TH-3

APPROVED FOR TRAFFIC HANDLING WORK ONLY

STATE OF CALIFORNIA - DEPARTMENT OF TRANSPORTATION
Caltrans
TRAFFIC DESIGN

FUNCTIONAL SUPERVISOR: BILL WASSER

CALCULATED-DESIGNED BY: KEVIN NGUYEN
CHECKED BY: THANH TRINH

REVISED BY
DATE REVISED

LAST REVISION 01-09-12
DATE PLOTTED => 24-APR-2012
TIME PLOTTED => 13:14

Dist	COUNTY	ROUTE	POST MILES TOTAL PROJECT	SHEET No.	TOTAL SHEETS
08	Riv	15	33.4/38.4	36	82

Thanh Trinh 01-10-12
REGISTERED CIVIL ENGINEER DATE

4-23-12
PLANS APPROVAL DATE

REGISTERED PROFESSIONAL ENGINEER
T. TRINH
No. C 41189
Exp 03/31/13
CIVIL
STATE OF CALIFORNIA

THE STATE OF CALIFORNIA OR ITS OFFICERS OR AGENTS SHALL NOT BE RESPONSIBLE FOR THE ACCURACY OR COMPLETENESS OF SCANNED COPIES OF THIS PLAN SHEET.

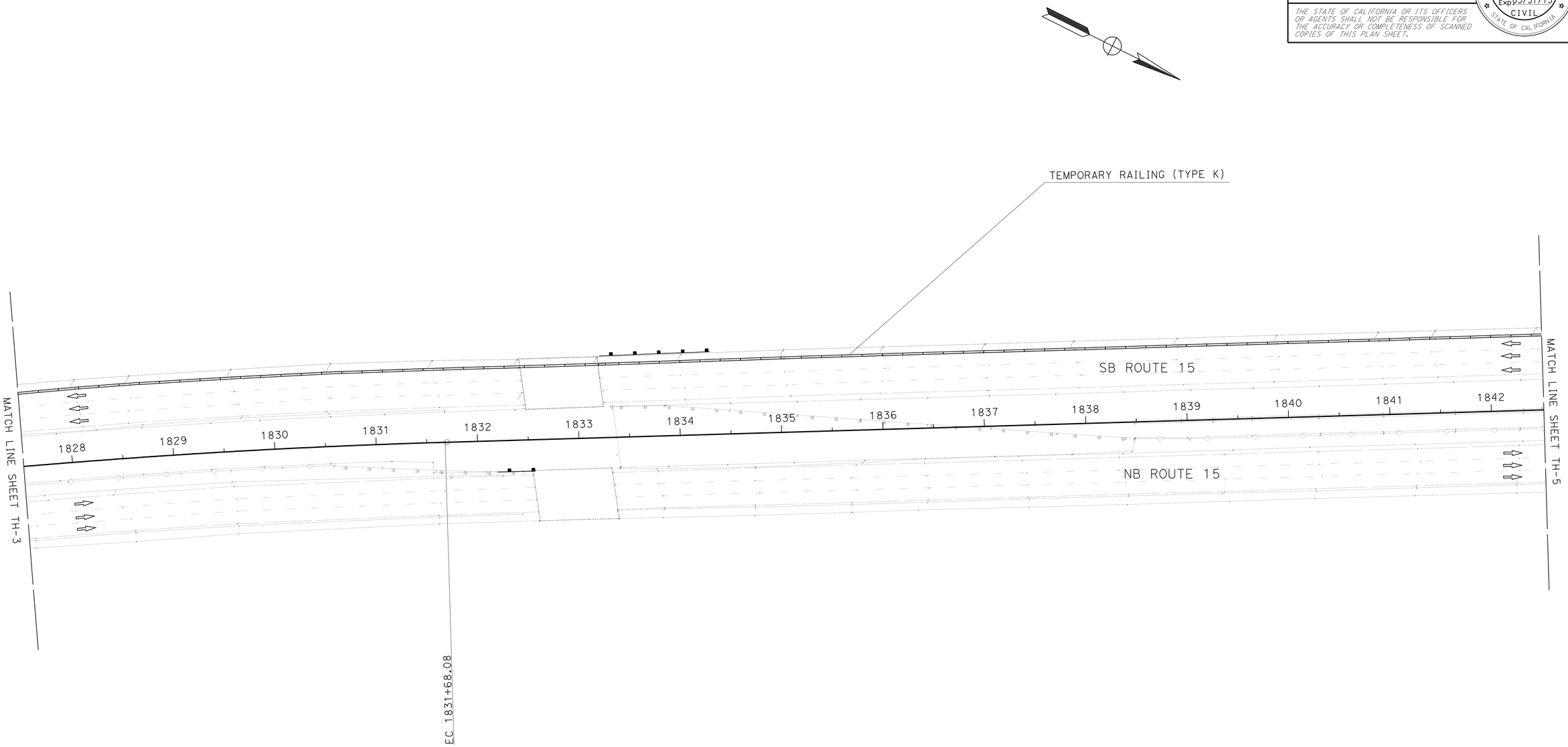

TRAFFIC HANDLING PLAN

APPROVED FOR TRAFFIC HANDLING WORK ONLY

SCALE: 1" = 50'

TH-4

STATE OF CALIFORNIA - DEPARTMENT OF TRANSPORTATION
Caltrans
TRAFFIC DESIGN

FUNCTIONAL SUPERVISOR: BILL WASSER
CALCULATED-DESIGNED BY: KEVIN NGUYEN
CHECKED BY: THANH TRINH
REVISED BY
DATE REVISED

LAST REVISION 01-09-12
DATE PLOTTED => 24-APR-2012
TIME PLOTTED => 12:55

Dist	COUNTY	ROUTE	POST MILES TOTAL PROJECT	SHEET No.	TOTAL SHEETS
08	Riv	15	33.4/38.4	37	82

Thanh Trinh 01-10-12
REGISTERED CIVIL ENGINEER DATE

4-23-12
PLANS APPROVAL DATE

REGISTERED PROFESSIONAL ENGINEER
T. TRINH
No. C 41189
Exp 03/31/13
CIVIL
STATE OF CALIFORNIA

THE STATE OF CALIFORNIA OR ITS OFFICERS OR AGENTS SHALL NOT BE RESPONSIBLE FOR THE ACCURACY OR COMPLETENESS OF SCANNED COPIES OF THIS PLAN SHEET.

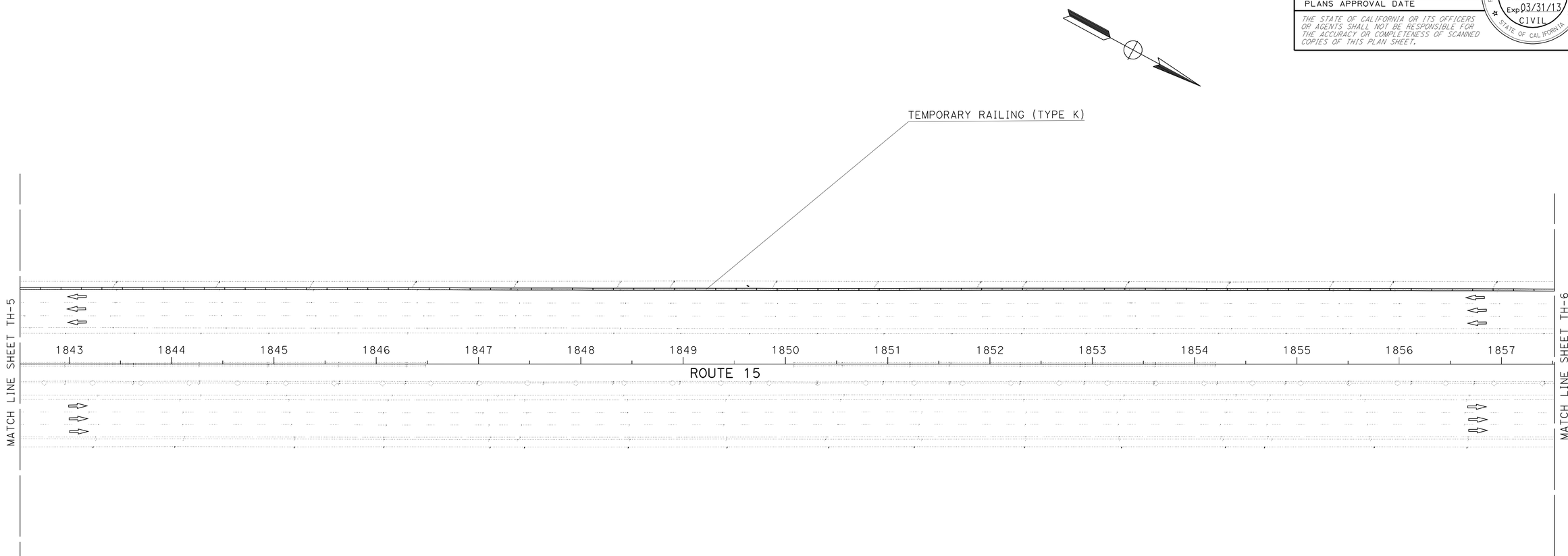

APPROVED FOR TRAFFIC HANDLING WORK ONLY

TRAFFIC HANDLING PLAN

SCALE: 1" = 50'

TH-5

STATE OF CALIFORNIA - DEPARTMENT OF TRANSPORTATION
Caltrans
TRAFFIC DESIGN

FUNCTIONAL SUPERVISOR: BILL WASSER

CALCULATED-DESIGNED BY: KEVIN NGUYEN
CHECKED BY: THANH TRINH

REVISED BY
DATE REVISED

LAST REVISION 01-09-12
DATE PLOTTED => 24-APR-2012
TIME PLOTTED => 12:55

Dist	COUNTY	ROUTE	POST MILES TOTAL PROJECT	SHEET No.	TOTAL SHEETS
08	Riv	15	33.4/38.4	38	82

Thanh Trinh 01-10-12
REGISTERED CIVIL ENGINEER DATE

4-23-12
PLANS APPROVAL DATE

REGISTERED PROFESSIONAL ENGINEER
T. TRINH
No. C 41189
Exp 03/31/13
CIVIL
STATE OF CALIFORNIA

THE STATE OF CALIFORNIA OR ITS OFFICERS OR AGENTS SHALL NOT BE RESPONSIBLE FOR THE ACCURACY OR COMPLETENESS OF SCANNED COPIES OF THIS PLAN SHEET.

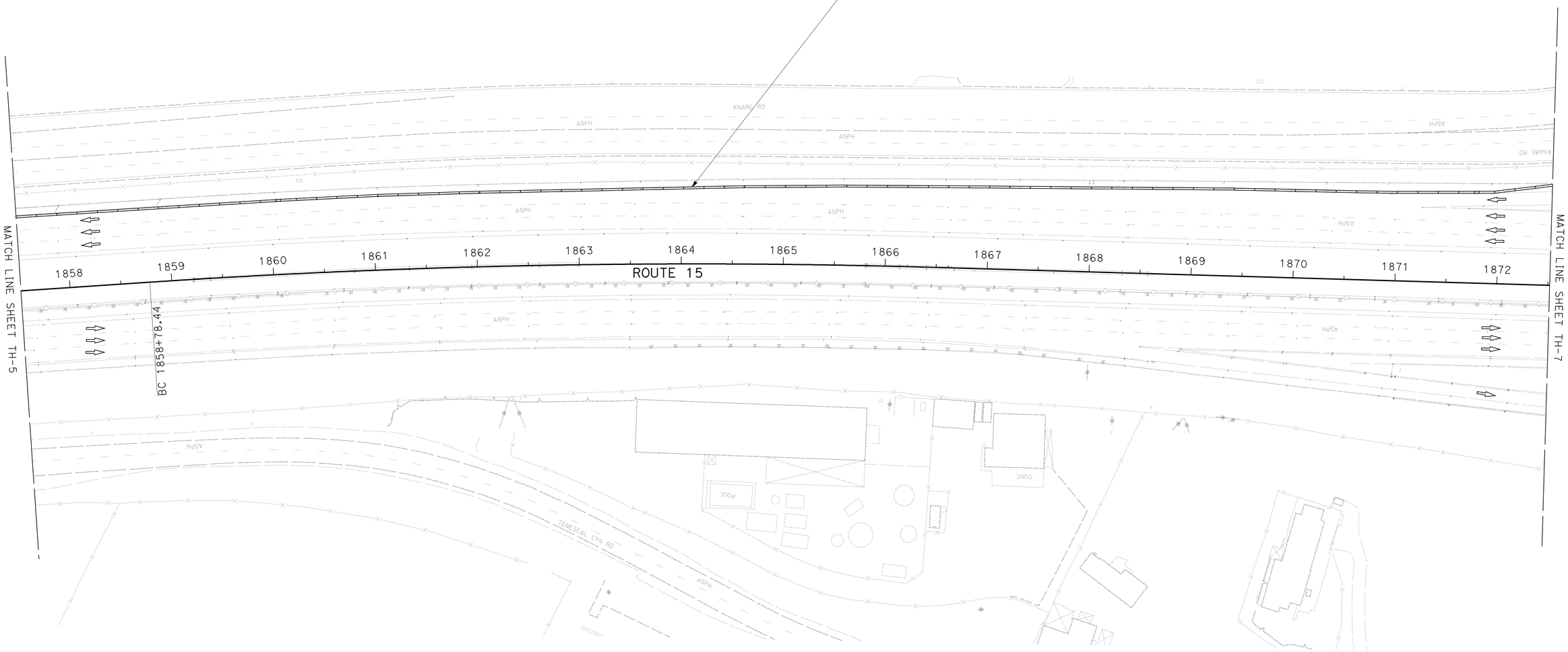

TRAFFIC HANDLING PLAN

APPROVED FOR TRAFFIC HANDLING WORK ONLY

SCALE: 1" = 50'

TH-6

STATE OF CALIFORNIA - DEPARTMENT OF TRANSPORTATION
Caltrans
TRAFFIC DESIGN

FUNCTIONAL SUPERVISOR: BILL WASSER
CALCULATED-DESIGNED BY: KEVIN NGUYEN
CHECKED BY: THANH TRINH
REVISED BY
DATE REVISED

LAST REVISION 01-09-12
DATE PLOTTED => 24-APR-2012
TIME PLOTTED => 12:55

Dist	COUNTY	ROUTE	POST MILES TOTAL PROJECT	SHEET No.	TOTAL SHEETS
08	Riv	15	33.4/38.4	39	82

Thanh Trinh 01-10-12
REGISTERED CIVIL ENGINEER DATE

4-23-12
PLANS APPROVAL DATE

REGISTERED PROFESSIONAL ENGINEER
T. TRINH
No. C 41189
Exp. 03/31/13
CIVIL
STATE OF CALIFORNIA

THE STATE OF CALIFORNIA OR ITS OFFICERS OR AGENTS SHALL NOT BE RESPONSIBLE FOR THE ACCURACY OR COMPLETENESS OF SCANNED COPIES OF THIS PLAN SHEET.

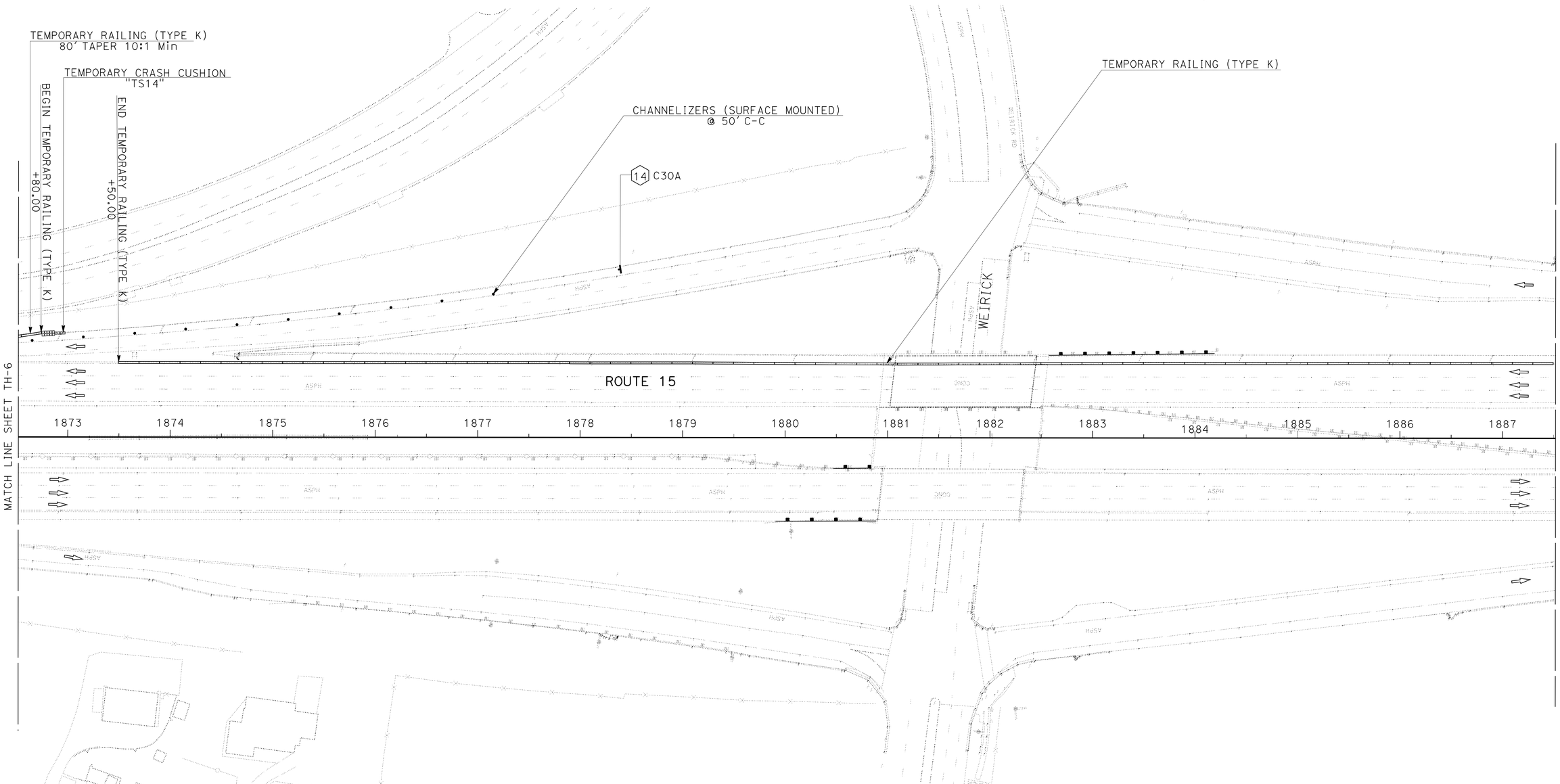

TRAFFIC HANDLING PLAN

APPROVED FOR TRAFFIC HANDLING WORK ONLY

SCALE: 1" = 50'

TH-7

STATE OF CALIFORNIA - DEPARTMENT OF TRANSPORTATION
Caltrans
TRAFFIC DESIGN

FUNCTIONAL SUPERVISOR: BILL WASSER
CALCULATED-DESIGNED BY: KEVIN NGUYEN
CHECKED BY: THANH TRINH
REVISED BY
DATE REVISED

LAST REVISION 01-09-12
DATE PLOTTED => 24-APR-2012
TIME PLOTTED => 12:55

Dist	COUNTY	ROUTE	POST MILES TOTAL PROJECT	SHEET No.	TOTAL SHEETS
08	Riv	15	33.4/38.4	40	82

Thanh Trinh 01-10-12
REGISTERED CIVIL ENGINEER DATE

4-23-12
PLANS APPROVAL DATE

REGISTERED PROFESSIONAL ENGINEER
T. TRINH
No. C 41189
Exp 03/31/13
CIVIL
STATE OF CALIFORNIA

THE STATE OF CALIFORNIA OR ITS OFFICERS OR AGENTS SHALL NOT BE RESPONSIBLE FOR THE ACCURACY OR COMPLETENESS OF SCANNED COPIES OF THIS PLAN SHEET.

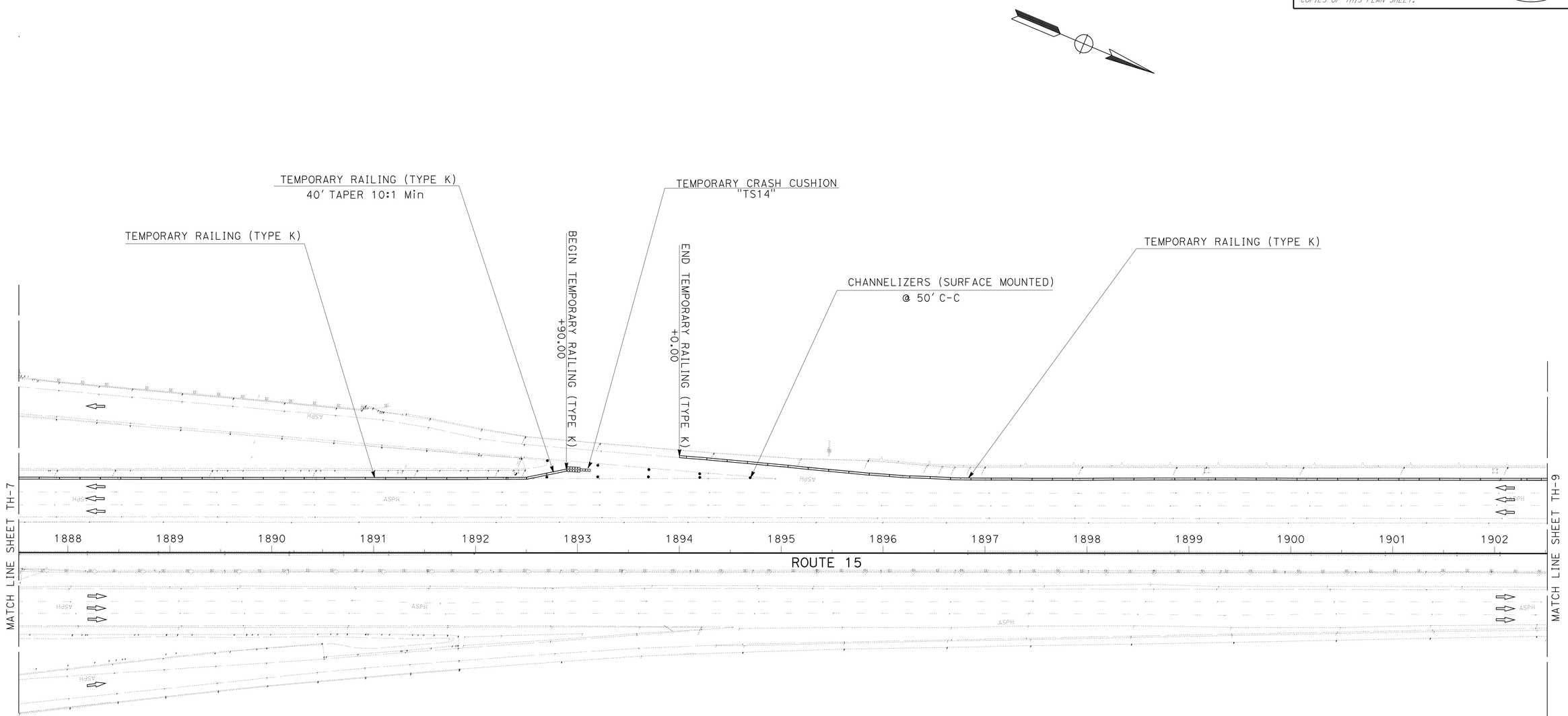

TRAFFIC HANDLING PLAN

SCALE: 1" = 50'

TH-8

APPROVED FOR TRAFFIC HANDLING WORK ONLY

STATE OF CALIFORNIA - DEPARTMENT OF TRANSPORTATION
Caltrans
TRAFFIC DESIGN

FUNCTIONAL SUPERVISOR: BILL WASSER
CALCULATED-DESIGNED BY: KEVIN NGUYEN
CHECKED BY: THANH TRINH
REVISED BY
DATE REVISED

LAST REVISION 01-09-12
DATE PLOTTED => 26-APR-2012
TIME PLOTTED => 11:12

Dist	COUNTY	ROUTE	POST MILES TOTAL PROJECT	SHEET No.	TOTAL SHEETS
08	Riv	15	33.4/38.4	41	82

Thanh Trinh 01-10-12
REGISTERED CIVIL ENGINEER DATE

4-23-12
PLANS APPROVAL DATE

REGISTERED PROFESSIONAL ENGINEER
T. TRINH
No. C 41189
Exp. 03/31/13
CIVIL
STATE OF CALIFORNIA

THE STATE OF CALIFORNIA OR ITS OFFICERS OR AGENTS SHALL NOT BE RESPONSIBLE FOR THE ACCURACY OR COMPLETENESS OF SCANNED COPIES OF THIS PLAN SHEET.

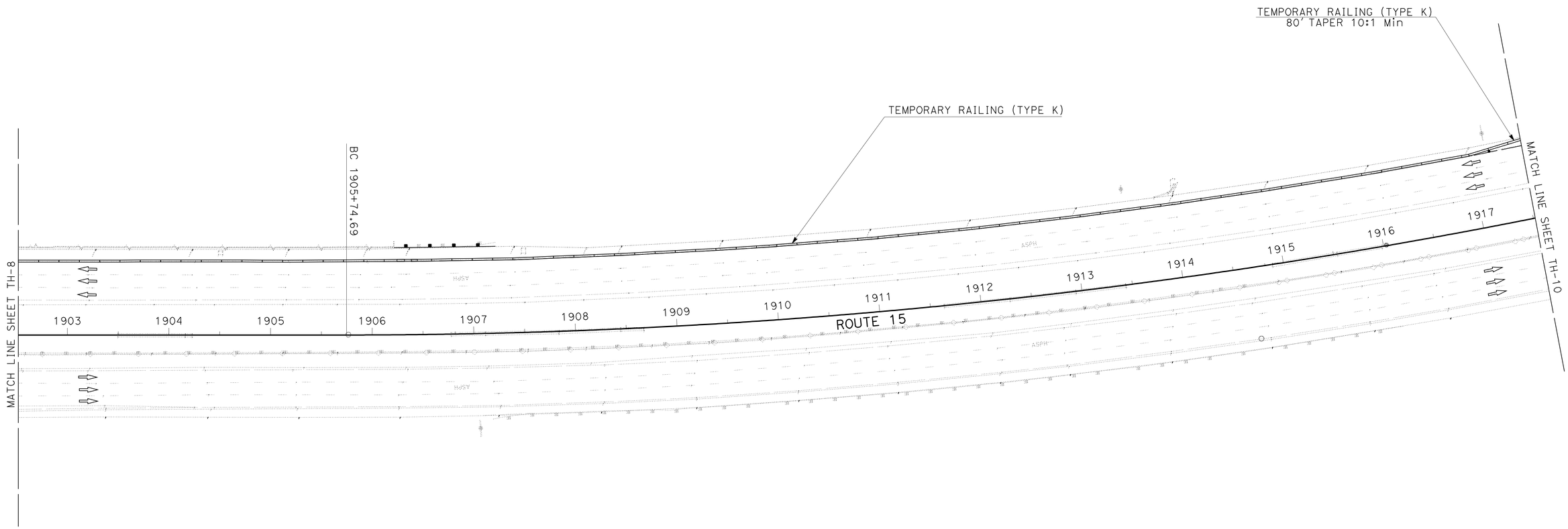

TRAFFIC HANDLING PLAN

SCALE: 1" = 50'

TH-9

APPROVED FOR TRAFFIC HANDLING WORK ONLY

STATE OF CALIFORNIA - DEPARTMENT OF TRANSPORTATION
Caltrans
TRAFFIC DESIGN

FUNCTIONAL SUPERVISOR: BILL WASSER
CALCULATED-DESIGNED BY: KEVIN NGUYEN
CHECKED BY: THANH TRINH
REVISED BY
DATE REVISED

LAST REVISION 01-09-12 | DATE PLOTTED => 26-APR-2012 | TIME PLOTTED => 11:12

Dist	COUNTY	ROUTE	POST MILES TOTAL PROJECT	SHEET No.	TOTAL SHEETS
08	Riv	15	33.4/38.4	42	82

Thanh Trinh 01-10-12
REGISTERED CIVIL ENGINEER DATE

4-23-12
PLANS APPROVAL DATE

REGISTERED PROFESSIONAL ENGINEER
T. TRINH
No. C 41189
Exp. 03/31/13
CIVIL
STATE OF CALIFORNIA

THE STATE OF CALIFORNIA OR ITS OFFICERS OR AGENTS SHALL NOT BE RESPONSIBLE FOR THE ACCURACY OR COMPLETENESS OF SCANNED COPIES OF THIS PLAN SHEET.

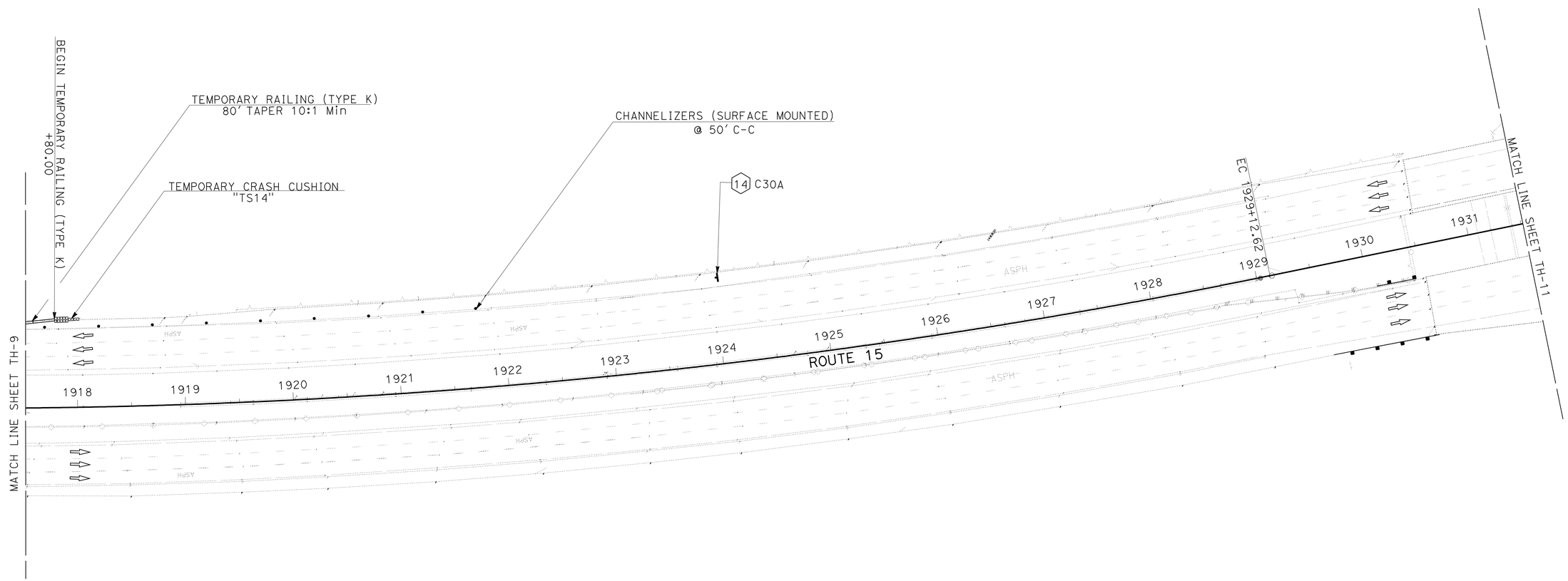

TRAFFIC HANDLING PLAN

SCALE: 1" = 50'

TH-10

APPROVED FOR TRAFFIC HANDLING WORK ONLY

STATE OF CALIFORNIA - DEPARTMENT OF TRANSPORTATION
Caltrans
TRAFFIC DESIGN

FUNCTIONAL SUPERVISOR: BILL WASSER
CALCULATED-DESIGNED BY: KEVIN NGUYEN
CHECKED BY: THANH TRINH
REVISED BY
DATE REVISED

LAST REVISION 01-09-12
DATE PLOTTED => 26-APR-2012
TIME PLOTTED => 11:12

Dist	COUNTY	ROUTE	POST MILES TOTAL PROJECT	SHEET No.	TOTAL SHEETS
08	Riv	15	33.4/38.4	43	82

Thanh Trinh 01-10-12
REGISTERED CIVIL ENGINEER DATE

4-23-12
PLANS APPROVAL DATE

REGISTERED PROFESSIONAL ENGINEER
T. TRINH
No. C 41189
Exp. 03/31/13
CIVIL
STATE OF CALIFORNIA

THE STATE OF CALIFORNIA OR ITS OFFICERS OR AGENTS SHALL NOT BE RESPONSIBLE FOR THE ACCURACY OR COMPLETENESS OF SCANNED COPIES OF THIS PLAN SHEET.

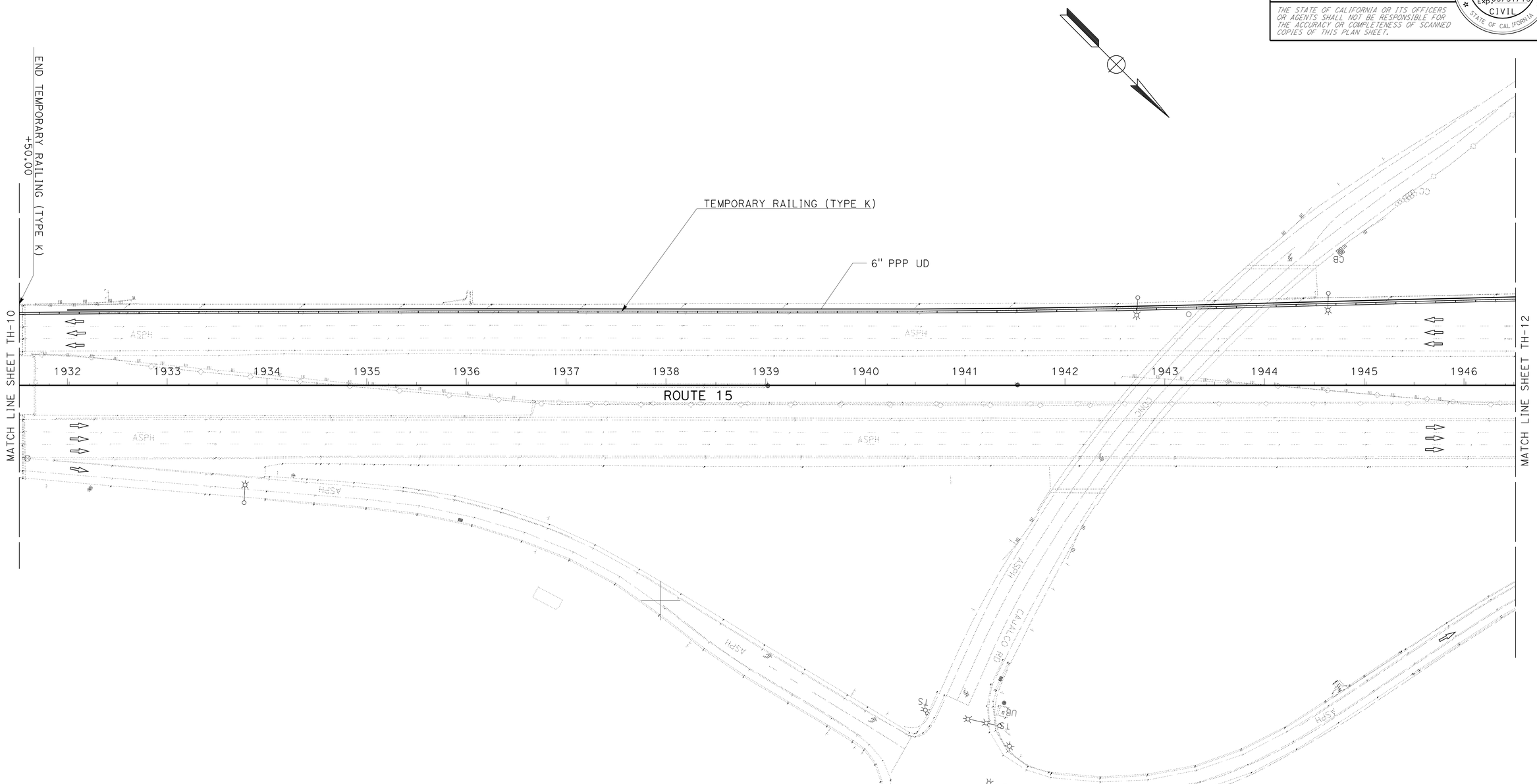

TRAFFIC HANDLING PLAN

SCALE: 1" = 50'

TH-11

APPROVED FOR TRAFFIC HANDLING WORK ONLY

STATE OF CALIFORNIA - DEPARTMENT OF TRANSPORTATION
Caltrans
TRAFFIC DESIGN

FUNCTIONAL SUPERVISOR: BILL WASSER
CALCULATED-DESIGNED BY: KEVIN NGUYEN
CHECKED BY: THANH TRINH
REVISED BY
DATE REVISED

LAST REVISION 01-09-12
DATE PLOTTED => 26-APR-2012
TIME PLOTTED => 11:12

Dist	COUNTY	ROUTE	POST MILES TOTAL PROJECT	SHEET No.	TOTAL SHEETS
08	Riv	15	33.4/38.4	44	82

Thanh Trinh 01-10-12
REGISTERED CIVIL ENGINEER DATE

4-23-12
PLANS APPROVAL DATE

REGISTERED PROFESSIONAL ENGINEER
T. TRINH
No. C 41189
Exp. 03/31/13
CIVIL
STATE OF CALIFORNIA

THE STATE OF CALIFORNIA OR ITS OFFICERS OR AGENTS SHALL NOT BE RESPONSIBLE FOR THE ACCURACY OR COMPLETENESS OF SCANNED COPIES OF THIS PLAN SHEET.

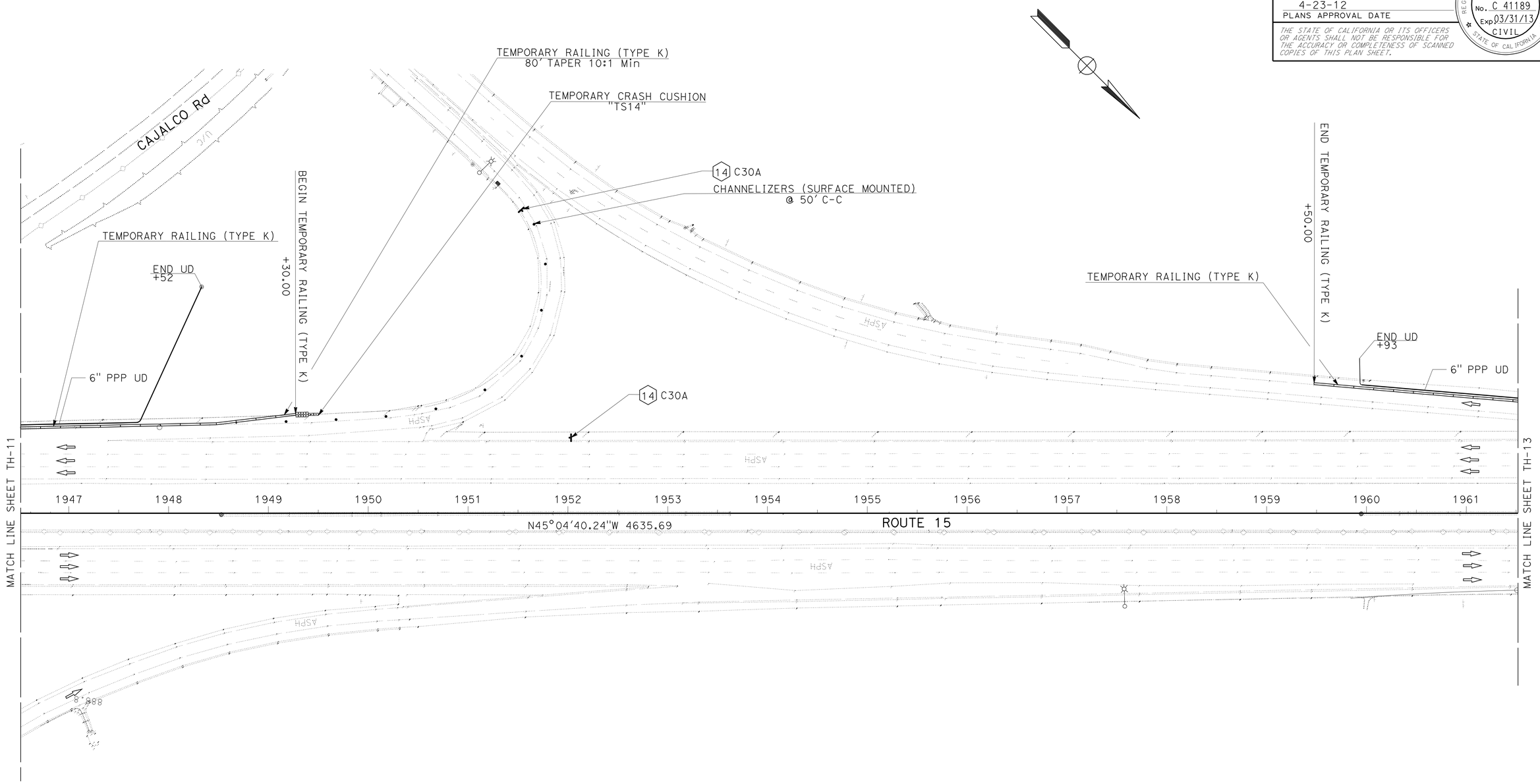

TRAFFIC HANDLING PLAN

SCALE: 1" = 50'

TH-12

APPROVED FOR TRAFFIC HANDLING WORK ONLY

STATE OF CALIFORNIA - DEPARTMENT OF TRANSPORTATION
Caltrans
TRAFFIC DESIGN

FUNCTIONAL SUPERVISOR: BILL WASSER
CALCULATED-DESIGNED BY: KEVIN NGUYEN
CHECKED BY: THANH TRINH
REVISED BY
DATE REVISED

LAST REVISION 01-09-12
DATE PLOTTED => 26-APR-2012
TIME PLOTTED => 11:12

Dist	COUNTY	ROUTE	POST MILES TOTAL PROJECT	SHEET No.	TOTAL SHEETS
08	Riv	15	33.4/38.4	45	82

Thanh Trinh 01-10-12
REGISTERED CIVIL ENGINEER DATE

4-23-12
PLANS APPROVAL DATE

REGISTERED PROFESSIONAL ENGINEER
T. TRINH
No. C 41189
Exp. 03/31/13
CIVIL
STATE OF CALIFORNIA

THE STATE OF CALIFORNIA OR ITS OFFICERS OR AGENTS SHALL NOT BE RESPONSIBLE FOR THE ACCURACY OR COMPLETENESS OF SCANNED COPIES OF THIS PLAN SHEET.

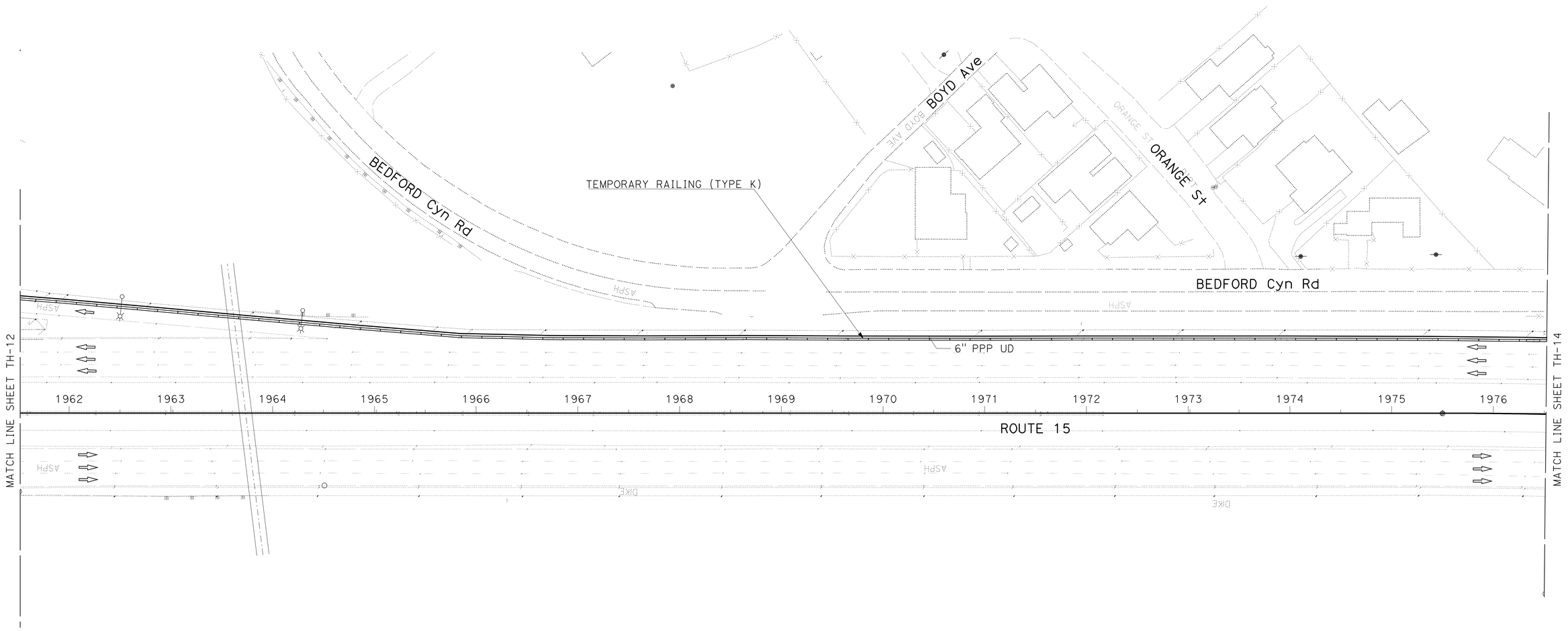

TRAFFIC HANDLING PLAN

SCALE: 1" = 50'

TH-13

APPROVED FOR TRAFFIC HANDLING WORK ONLY

STATE OF CALIFORNIA - DEPARTMENT OF TRANSPORTATION
Caltrans
TRAFFIC DESIGN

FUNCTIONAL SUPERVISOR: BILL WASSER
CALCULATED-DESIGNED BY: KEVIN NGUYEN
CHECKED BY: THANH TRINH
REVISED BY
DATE REVISED

LAST REVISION 01-09-12
DATE PLOTTED => 26-APR-2012
TIME PLOTTED => 11:12

Dist	COUNTY	ROUTE	POST MILES TOTAL PROJECT	SHEET No.	TOTAL SHEETS
08	Riv	15	33.4/38.4	46	82

Thanh Trinh 01-10-12
REGISTERED CIVIL ENGINEER DATE

4-23-12
PLANS APPROVAL DATE

REGISTERED PROFESSIONAL ENGINEER
T. TRINH
No. C 41189
Exp. 03/31/13
CIVIL
STATE OF CALIFORNIA

THE STATE OF CALIFORNIA OR ITS OFFICERS OR AGENTS SHALL NOT BE RESPONSIBLE FOR THE ACCURACY OR COMPLETENESS OF SCANNED COPIES OF THIS PLAN SHEET.

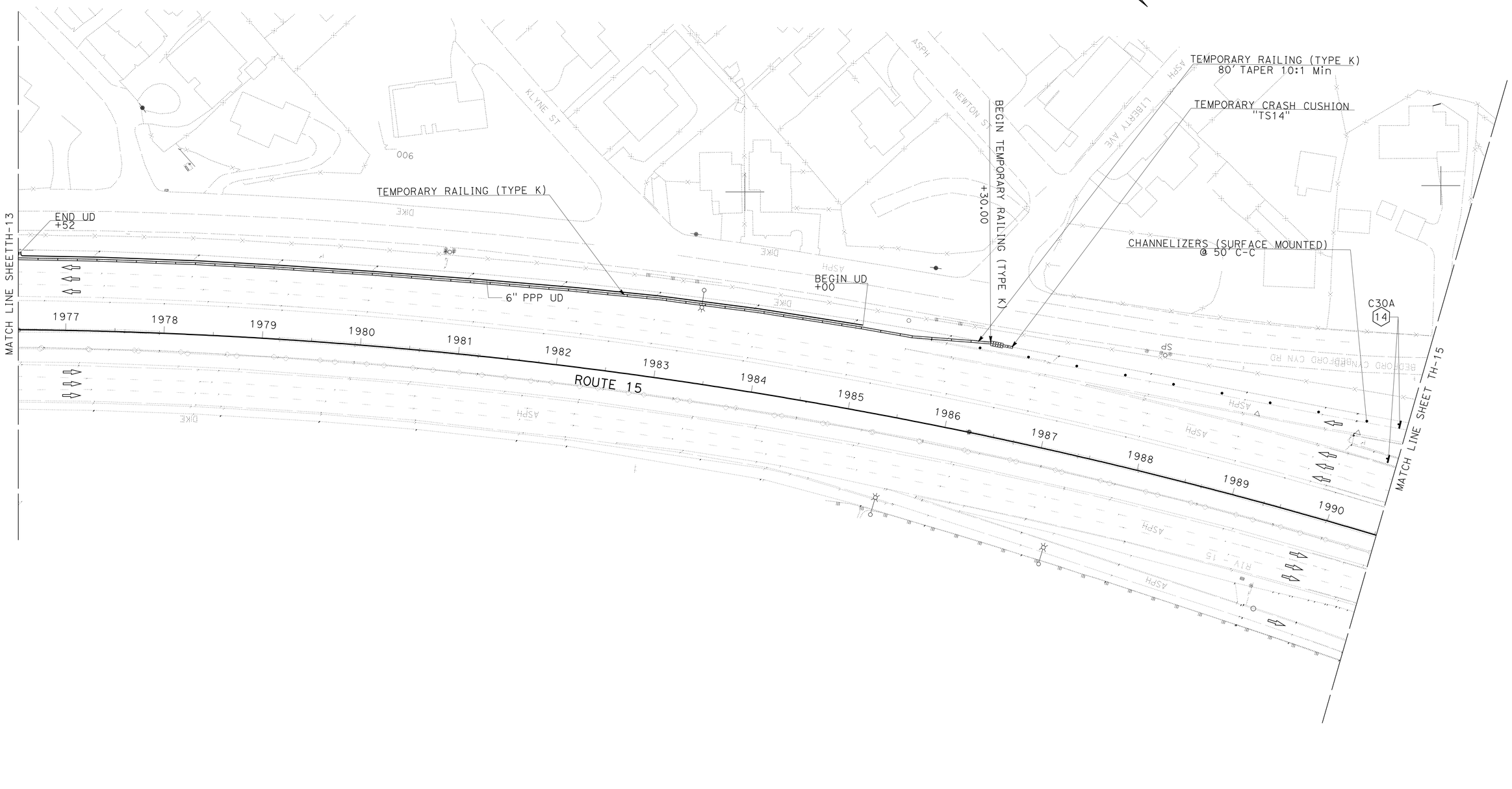

TRAFFIC HANDLING PLAN

SCALE: 1" = 50'

TH-14

APPROVED FOR TRAFFIC HANDLING WORK ONLY

REVISED BY	DATE REVISED

CALCULATED-DESIGNED BY	KEVIN NGUYEN
CHECKED BY	THANH TRINH
FUNCTIONAL SUPERVISOR	BILL WASSER

STATE OF CALIFORNIA - DEPARTMENT OF TRANSPORTATION
Caltrans
TRAFFIC DESIGN

LAST REVISION 01-09-12 | DATE PLOTTED => 26-APR-2012 | TIME PLOTTED => 11:13

Dist	COUNTY	ROUTE	POST MILES TOTAL PROJECT	SHEET No.	TOTAL SHEETS
08	Riv	15	33.4/38.4	47	82

Thanh Trinh 01-10-12
REGISTERED CIVIL ENGINEER DATE

4-23-12
PLANS APPROVAL DATE

REGISTERED PROFESSIONAL ENGINEER
T. TRINH
No. C 41189
Exp. 03/31/13
CIVIL
STATE OF CALIFORNIA

THE STATE OF CALIFORNIA OR ITS OFFICERS OR AGENTS SHALL NOT BE RESPONSIBLE FOR THE ACCURACY OR COMPLETENESS OF SCANNED COPIES OF THIS PLAN SHEET.

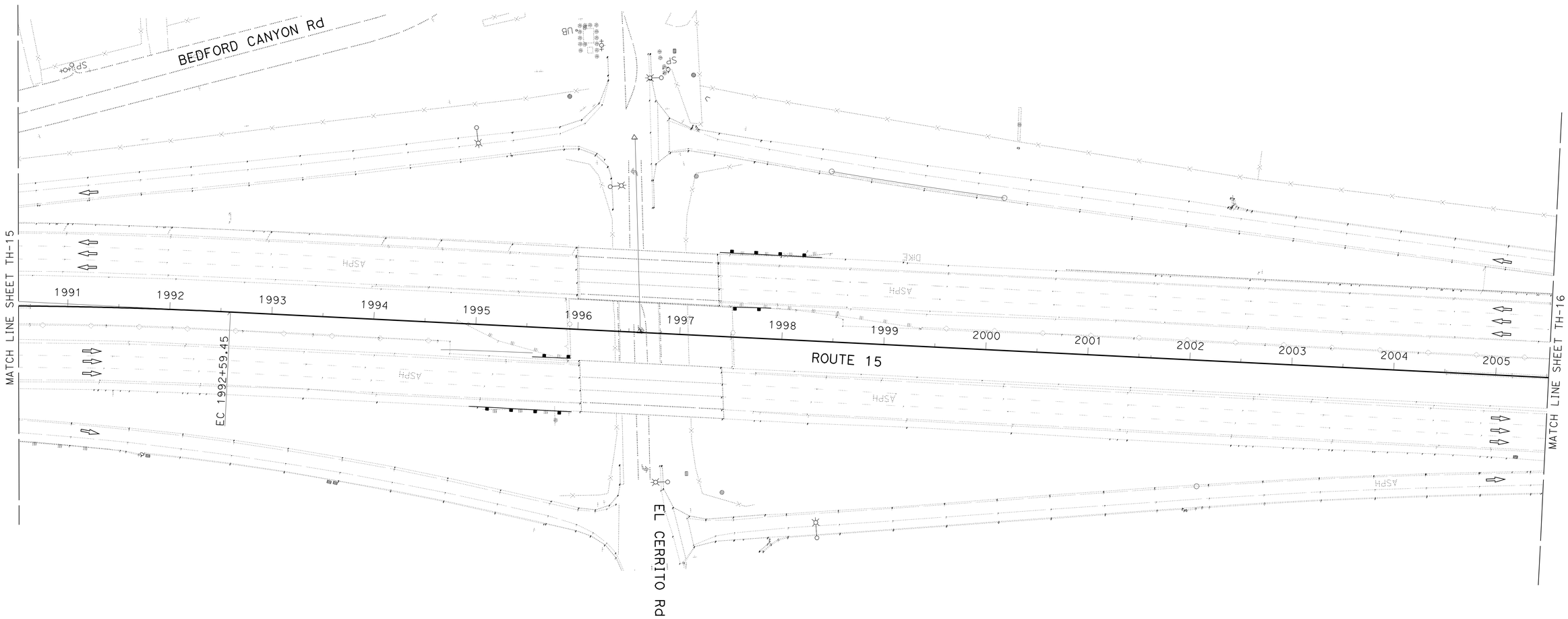

TRAFFIC HANDLING PLAN

SCALE: 1" = 50'

TH-15

APPROVED FOR TRAFFIC HANDLING WORK ONLY

STATE OF CALIFORNIA - DEPARTMENT OF TRANSPORTATION
Caltrans
TRAFFIC DESIGN

FUNCTIONAL SUPERVISOR: BILL WASSER
CALCULATED-DESIGNED BY: KEVIN NGUYEN
CHECKED BY: THANH TRINH
REVISED BY
DATE REVISED

LAST REVISION 01-09-12
DATE PLOTTED => 26-APR-2012
TIME PLOTTED => 11:13

Dist	COUNTY	ROUTE	POST MILES TOTAL PROJECT	SHEET No.	TOTAL SHEETS
08	Riv	15	33.4/38.4	48	82

Thanh Trinh 01-10-12
REGISTERED CIVIL ENGINEER DATE

4-23-12
PLANS APPROVAL DATE

REGISTERED PROFESSIONAL ENGINEER
T. TRINH
No. C 41189
Exp. 03/31/13
CIVIL
STATE OF CALIFORNIA

THE STATE OF CALIFORNIA OR ITS OFFICERS OR AGENTS SHALL NOT BE RESPONSIBLE FOR THE ACCURACY OR COMPLETENESS OF SCANNED COPIES OF THIS PLAN SHEET.

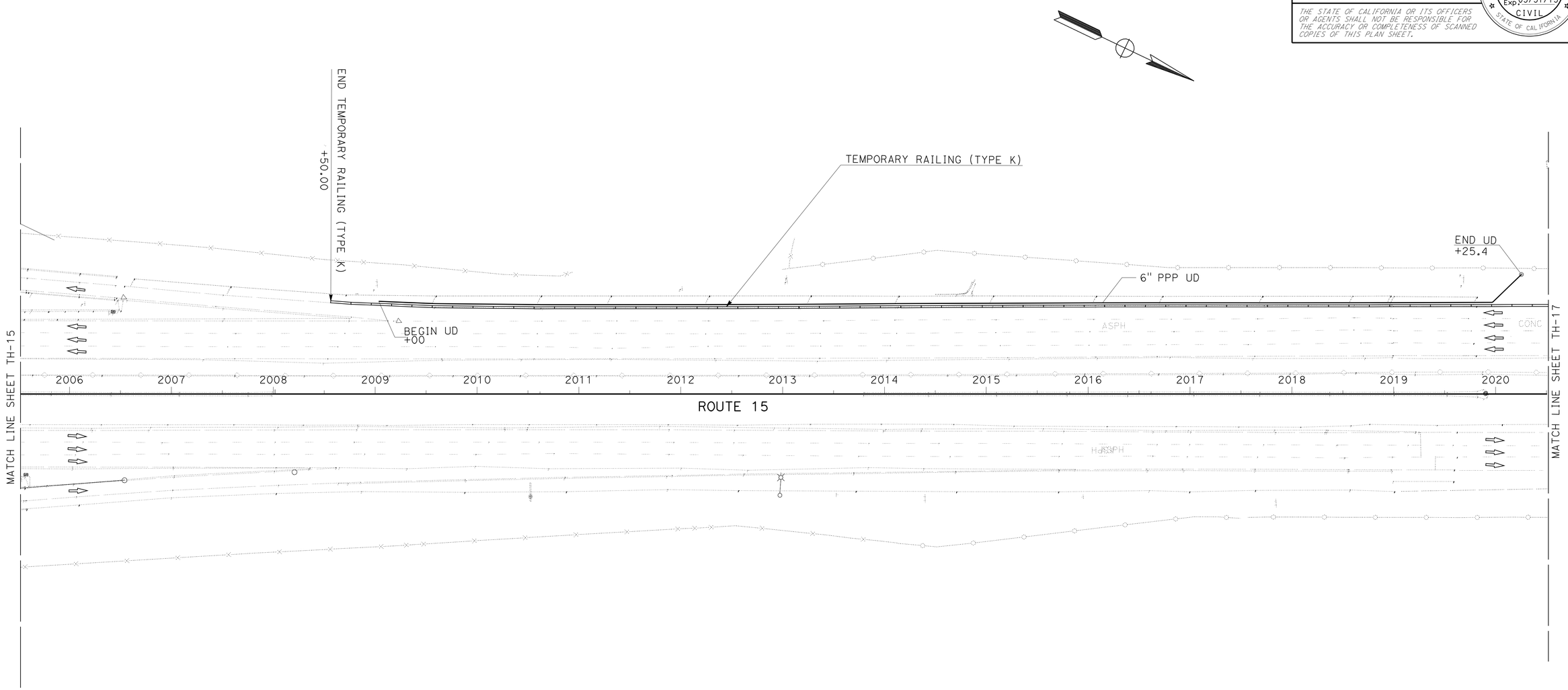

TRAFFIC HANDLING PLAN

SCALE: 1" = 50'

TH-16

APPROVED FOR TRAFFIC HANDLING WORK ONLY

STATE OF CALIFORNIA - DEPARTMENT OF TRANSPORTATION
Caltrans®
TRAFFIC DESIGN

FUNCTIONAL SUPERVISOR: BILL WASSER
CALCULATED-DESIGNED BY: KEVIN NGUYEN
CHECKED BY: THANH TRINH
REVISED BY
DATE REVISED

LAST REVISION 01-09-12
DATE PLOTTED => 26-APR-2012
TIME PLOTTED => 11:13

Dist	COUNTY	ROUTE	POST MILES TOTAL PROJECT	SHEET No.	TOTAL SHEETS
08	Riv	15	33.4/38.4	49	82

Thanh Trinh 01-10-12
REGISTERED CIVIL ENGINEER DATE

4-23-12
PLANS APPROVAL DATE

REGISTERED PROFESSIONAL ENGINEER
T. TRINH
No. C 41189
Exp 03/31/13
CIVIL
STATE OF CALIFORNIA

THE STATE OF CALIFORNIA OR ITS OFFICERS OR AGENTS SHALL NOT BE RESPONSIBLE FOR THE ACCURACY OR COMPLETENESS OF SCANNED COPIES OF THIS PLAN SHEET.

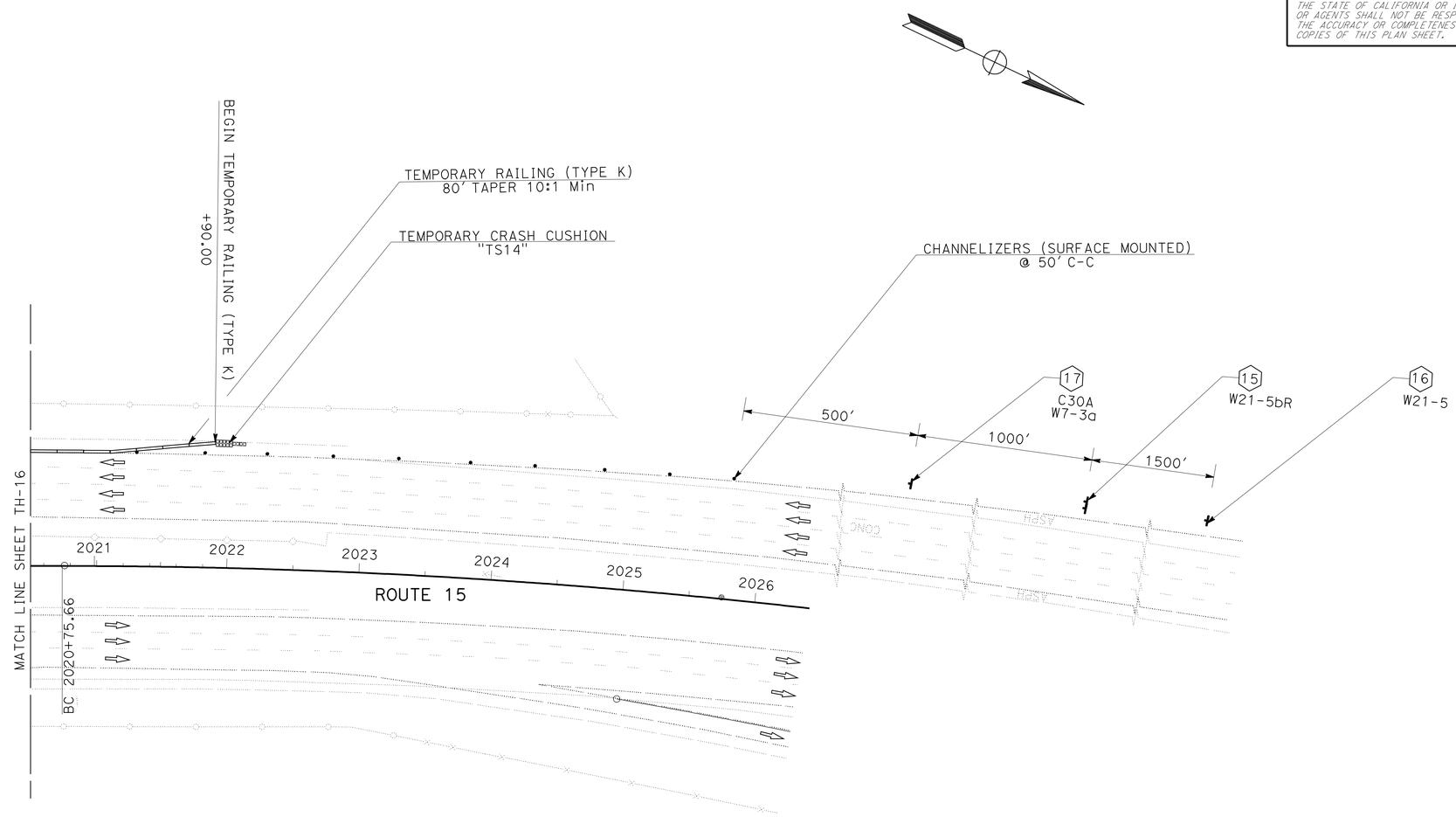

APPROVED FOR TRAFFIC HANDLING WORK ONLY

TRAFFIC HANDLING PLAN

SCALE: 1" = 50'

TH-17

STATE OF CALIFORNIA - DEPARTMENT OF TRANSPORTATION
Caltrans
TRAFFIC DESIGN

FUNCTIONAL SUPERVISOR: BILL WASSER
CALCULATED-DESIGNED BY: KEVIN NGUYEN
CHECKED BY: THANH TRINH
REVISED BY
DATE REVISED

LAST REVISION 01-09-12
DATE PLOTTED => 26-APR-2012
TIME PLOTTED => 11:13

Dist	COUNTY	ROUTE	POST MILES TOTAL PROJECT	SHEET No.	TOTAL SHEETS
08	Riv	15	33.4/38.4	50	82

Thanh Trinh 04-24-12
REGISTERED CIVIL ENGINEER DATE

4-23-12
PLANS APPROVAL DATE

REGISTERED PROFESSIONAL ENGINEER
THANH TRINH
No. C41189
Exp. 3-31-13
CIVIL
STATE OF CALIFORNIA

THE STATE OF CALIFORNIA OR ITS OFFICERS OR AGENTS SHALL NOT BE RESPONSIBLE FOR THE ACCURACY OR COMPLETENESS OF SCANNED COPIES OF THIS PLAN SHEET.

TEMPORARY PAVEMENT DELINEATION QUANTITIES

LOCATION	DIRECTION	DETAIL No. OR PAVEMENT MARKING	TEMPORARY PAVEMENT MARKER				TEMPORARY TRAFFIC STRIPE (PAINT)			TEMPORARY PAVEMENT MARKING (PAINT)	
			NONREFLECTIVE	RETROREFLECTIVE							
			TYPE A	TYPE C	TYPE G	TYPE H	4in YELLOW	4in WHITE	8in WHITE	YELLOW	WHITE
			EA	EA			LF			SQFT	
MAIN LINE PM 33.4/38.4	NB & SB	8						2100			
WEIRICK Rd & EL CERRITO Rd ENTRANCE RAMPS, & CAJALCO Rd EXIT RAMP	NB & SB	9			52			2430			
MAIN LINE PM 33.4/38.4	NB & SB	13	8488		2124						
MAIN LINE PM 33.4/38.4	NB & SB	14	312	79							
WEIRICK Rd CAJALCO Rd & EL CERRITO Rd ENTRANCE AND EXIT RAMPS	NB & SB	25A				432	10350				
MAIN LINE PM 33.4/38.4	NB & SB	25				1102	52800				
MAIN LINE PM 33.4/38.4 & ENTRANCE/EXIT RAMPS AT WEIRICK Rd CAJALCO Rd & EL CERRITO Rd	NB & SB	27B						62700			
WEIRICK Rd CAJALCO Rd & EL CERRITO Rd EXIT RAMPS	NB & SB	36			134				3170		
MAIN LINE PM 33.4/38.4	SB	37		50	2				700		
WEIRICK Rd CAJALCO Rd & EL CERRITO Rd EXIT RAMPS	NB & SB	38B			162				1915		
WEIRICK Rd ENTRANCE & EXIT RAMPS, CAJALCO Rd & EL CERRITO Rd ENTRANCE RAMPS	NB & SB	38			94				2230		
WEIRICK Rd.,&EL CERRITO Rd ENTRANCE & EXIT RAMPS,& CAJALCO Rd EXIT RAMPS	NB & SB	LIMIT LINE/CROSSWALK (1'-0" WHITE LINE)									425
EL CERRITO Rd ENTRANCE RAMP & EXIT RAMP	NB & SB	LIMIT LINE/CROSSWALK (1'-0" YELLOW LINE)								215	
WEIRICK Rd EXIT RAMPS	NB & SB	CHEVRONS									70
WEIRICK Rd CAJALCO Rd & EL CERRITO Rd EXIT RAMPS	NB & SB	"SIGNAL"									288
WEIRICK Rd CAJALCO Rd & EL CERRITO Rd EXIT RAMPS	NB & SB	"AHEAD"									279
WEIRICK Rd CAJALCO Rd & EL CERRITO Rd ENTRANCE RAMPS	NB & SB	TYPE I (24'-0") ARROW									279
WEIRICK Rd CAJALCO Rd & EL CERRITO Rd EXIT RAMPS	NB & SB	TYPE II (L) ARROW									360
EL CERRITO Rd EXIT RAMP	NB	TYPE II (B) ARROW									59
CAJALCO Rd EXIT RAMP	SB	TYPE III (L) ARROW									84
WEIRICK Rd CAJALCO Rd & EL CERRITO Rd EXIT RAMPS	NB & SB	TYPE III (R) ARROW									588
WEIRICK Rd CAJALCO Rd & EL CERRITO Rd EXIT RAMPS	NB & SB	TYPE V ARROW									264
SUBTOTAL			8800	129	2568	1534	63150	67230	8015	215	2696
TOTAL			13031				138395			2911	

TRAFFIC HANDLING QUANTITIES

THQ-1

REVISED BY | DATE REVISED
KEVIN NGUYEN | THANH TRINH
CALCULATED-DESIGNED BY | CHECKED BY
FUNCTIONAL SUPERVISOR
BILL WASSER

STATE OF CALIFORNIA - DEPARTMENT OF TRANSPORTATION
Caltrans® TRAFFIC DESIGN A

LAST REVISION 04-24-12 | DATE PLOTTED => 24-APR-2012 | TIME PLOTTED => 13:57

Dist	COUNTY	ROUTE	POST MILES TOTAL PROJECT	SHEET No.	TOTAL SHEETS
08	Riv	15	33.4/38.4	51	82

Thanh Trinh 04-24-12
REGISTERED CIVIL ENGINEER DATE

4-23-12
PLANS APPROVAL DATE

REGISTERED PROFESSIONAL ENGINEER
THANH TRINH
No. C41189
Exp. 3-31-13
CIVIL
STATE OF CALIFORNIA

THE STATE OF CALIFORNIA OR ITS OFFICERS OR AGENTS SHALL NOT BE RESPONSIBLE FOR THE ACCURACY OR COMPLETENESS OF SCANNED COPIES OF THIS PLAN SHEET.

TEMPORARY RAILING (TYPE K)

SHEET No.	STATION	SIDE	LF
TH-1	CL 1789+0.00 TO 1797+50.00	L+	850
TH-2	CL 1797+50.00 TO 1812+50.00	L+	1500
TH-3	CL 1812+50.00 TO 1827+50.00	L+	1500
TH-4	CL 1827+50.00 TO 1842+50.00	L+	1500
TH-5	CL 1842+50.00 TO 1857+50.00	L+	1500
TH-6	CL 1857+50.00 TO 1872+50.00	L+	1500
TH-7	CL 1872+50.00 TO 1872+80.00	L+	30
TH-7	CL 1873+50.00 TO 1887+50.00	L+	1400
TH-8	CL 1887+50.00 TO 1892+90.00	L+	540
TH-8	CL 1894+0.00 TO 1902+50.00	L+	850
TH-9	CL 1902+50.00 TO 1917+50	L+	1500
TH-10	CL 1917+50 TO 1917+80.00	L+	30
TH-11	CL 1931+50 TO 1946+50.00	L+	1500
TH-12	CL 1946+50.00 TO 1949+30.00	L+	280
TH-12	CL 1959+50.00 TO 1961+50.00	L+	200
TH-13	CL 1961+50.00 TO 1976+50.00	L+	1500
TH-14	CL 1976+50.00 TO 1986+30.00	L+	980
TH-16	CL 2008+50.00 TO 2020+50.00	L+	1200
TH-17	CL 2020+50.00 TO 2021+90.00		140
TOTAL			18500

TEMPORARY CRASH CUSHION MODULE

SHEET No.	STATION	SIDE	EA
TH-7	CL 1772+80.00	L+	14
TH-8	CL 1892+90.00	L+	14
TH-10	CL 1917+80.00	L+	14
TH-12	CL 1949+30.00	L+	14
TH-14	CL 1986+30.00	L+	14
TH-17	CL 2021+90.00	L+	14
TOTAL			84

CHANNELIZER (SURFACE MOUNTED)

SHEET No.	STATION	SIDE	EA
TH-7	CL 1772+80.00	L+	10
TH-8	CL 1892+90.00	L+	10
TH-10	CL 1917+80.00	L+	10
TH-12	CL 1949+30.00	L+	10
TH-14	CL 1986+30.00	L+	10
TH-17	CL 2021+90.00	L+	10
TOTAL			60

TRAFFIC HANDLING QUANTITIES
THQ-2

REVISED BY | DATE REVISED
KEVIN NGUYEN | THANH TRINH
CALCULATED-DESIGNED BY | CHECKED BY
FUNCTIONAL SUPERVISOR: BILL WASSER
STATE OF CALIFORNIA - DEPARTMENT OF TRANSPORTATION
Caltrans TRAFFIC DESIGN A

LAST REVISION 04-24-12 | DATE PLOTTED => 24-APR-2012 | TIME PLOTTED => 13:58

Dist	COUNTY	ROUTE	POST MILES TOTAL PROJECT	SHEET No.	TOTAL SHEETS
08	Riv	15	33.4/38.4	52	82

Thanh Trinh 01-10-12
REGISTERED CIVIL ENGINEER DATE

4-23-12
PLANS APPROVAL DATE

REGISTERED PROFESSIONAL ENGINEER
T. TRINH
No. C41189
Exp. 3-31-13
CIVIL
STATE OF CALIFORNIA

THE STATE OF CALIFORNIA OR ITS OFFICERS OR AGENTS SHALL NOT BE RESPONSIBLE FOR THE ACCURACY OR COMPLETENESS OF SCANNED COPIES OF THIS PLAN SHEET.

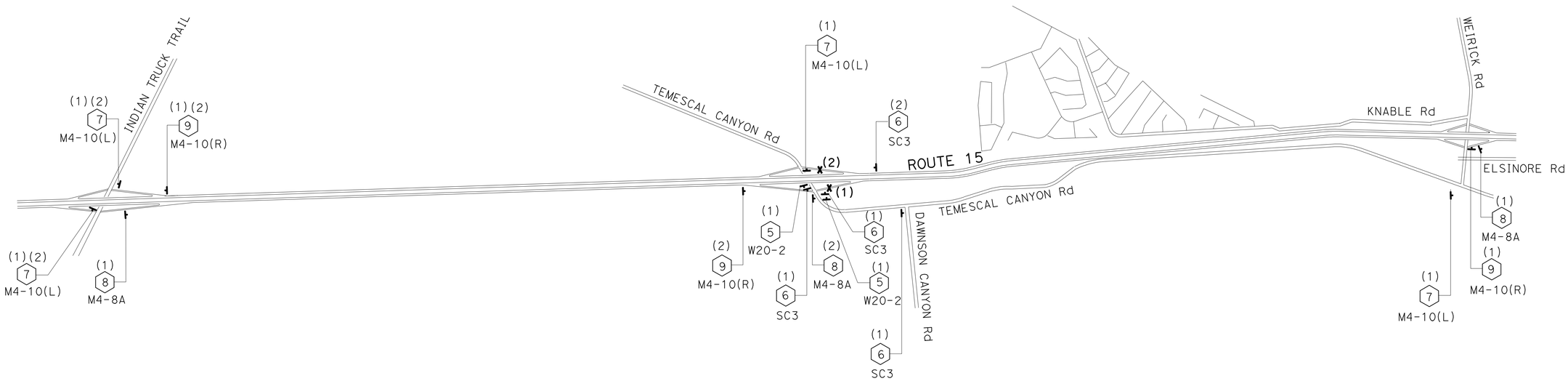

DETOUR FOR RAMP CLOSURES AT TEMESCAL CANYON Rd

(1): NORTHBOUND ENTRANCE RAMP CLOSURE

(2): SOUTHBOUND EXIT RAMP CLOSURE

APPROVED FOR MOTORIST INFORMATION WORK ONLY

MOTORIST INFORMATION PLAN

NO SCALE

MI-1

STATE OF CALIFORNIA - DEPARTMENT OF TRANSPORTATION
Caltrans® TRAFFIC DESIGN

FUNCTIONAL SUPERVISOR: BILL WASSER

CALCULATED-DESIGNED BY: KEVIN NGUYEN
CHECKED BY: THANH TRINH

REVISED BY
DATE REVISED

LAST REVISION 01-19-12 | DATE PLOTTED => 24-APR-2012 | TIME PLOTTED => 13:58

Dist	COUNTY	ROUTE	POST MILES TOTAL PROJECT	SHEET No.	TOTAL SHEETS
08	Riv	15	33.4/38.4	53	82

Thanh Trinh 01-10-12
REGISTERED CIVIL ENGINEER DATE

4-23-12
PLANS APPROVAL DATE

REGISTERED PROFESSIONAL ENGINEER
T. TRINH
No. C41189
Exp. 3-31-13
CIVIL
STATE OF CALIFORNIA

THE STATE OF CALIFORNIA OR ITS OFFICERS OR AGENTS SHALL NOT BE RESPONSIBLE FOR THE ACCURACY OR COMPLETENESS OF SCANNED COPIES OF THIS PLAN SHEET.

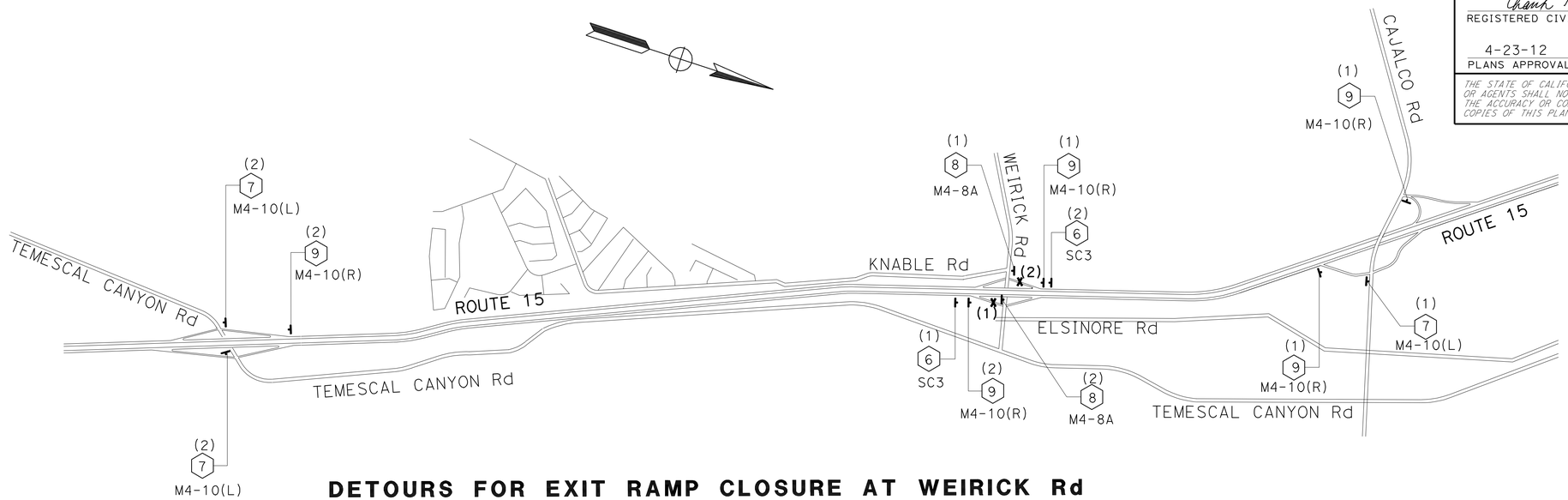

DETOURS FOR EXIT RAMP CLOSURE AT WEIRICK Rd

(1): NORTHBOUND EXIT RAMP CLOSURE

(2): SOUTHBOUND EXIT RAMP CLOSURE

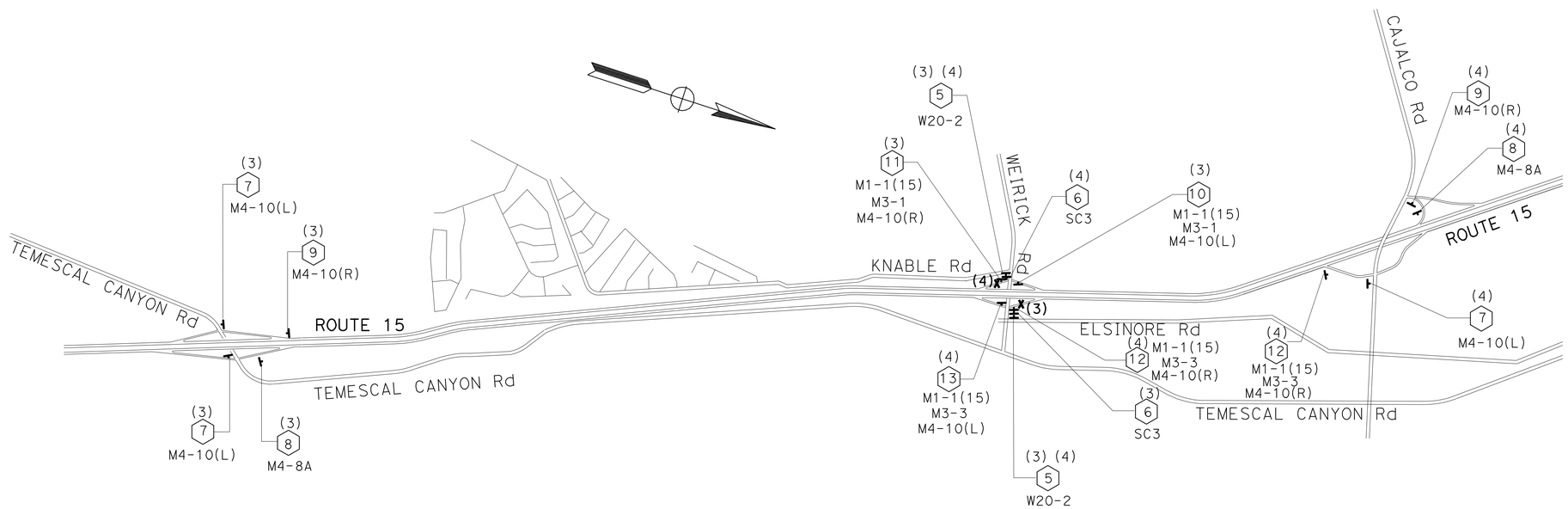

DETOURS FOR ENTRANCE RAMP CLOSURE AT WEIRICK Rd

(3): NORTHBOUND ENTRANCE RAMP CLOSURE

(4): SOUTHBOUND ENTRANCE RAMP CLOSURE

MOTORIST INFORMATION PLAN

NO SCALE

MI-2

APPROVED FOR MOTORIST INFORMATION WORK ONLY

STATE OF CALIFORNIA - DEPARTMENT OF TRANSPORTATION
Caltrans®
TRAFFIC DESIGN
FUNCTIONAL SUPERVISOR: BILL WASSER
CALCULATED-DESIGNED BY: KEVIN NGUYEN
CHECKED BY: THANH TRINH
REVISED BY
DATE REVISED

LAST REVISION 01-09-12
DATE PLOTTED => 24-APR-2012
TIME PLOTTED => 13:58

Dist	COUNTY	ROUTE	POST MILES TOTAL PROJECT	SHEET No.	TOTAL SHEETS
08	Riv	15	33.4/38.4	54	82

Thanh Trinh 01-10-12
REGISTERED CIVIL ENGINEER DATE

4-23-12
PLANS APPROVAL DATE

REGISTERED PROFESSIONAL ENGINEER
T. TRINH
No. C41189
Exp. 3-31-13
CIVIL
STATE OF CALIFORNIA

THE STATE OF CALIFORNIA OR ITS OFFICERS OR AGENTS SHALL NOT BE RESPONSIBLE FOR THE ACCURACY OR COMPLETENESS OF SCANNED COPIES OF THIS PLAN SHEET.

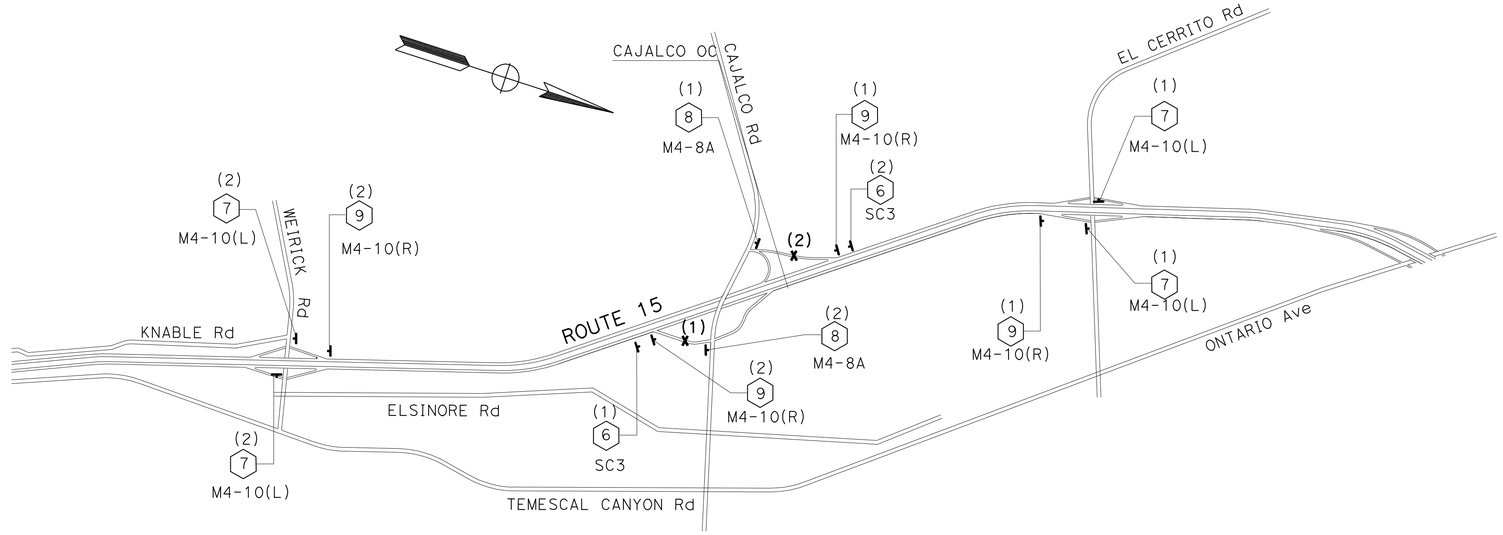

DETOURS FOR EXIT RAMP CLOSURE AT CAJALCO Rd

(1): NORTHBOUND EXIT RAMP CLOSURE

(2): SOUTHBOUND EXIT RAMP CLOSURE

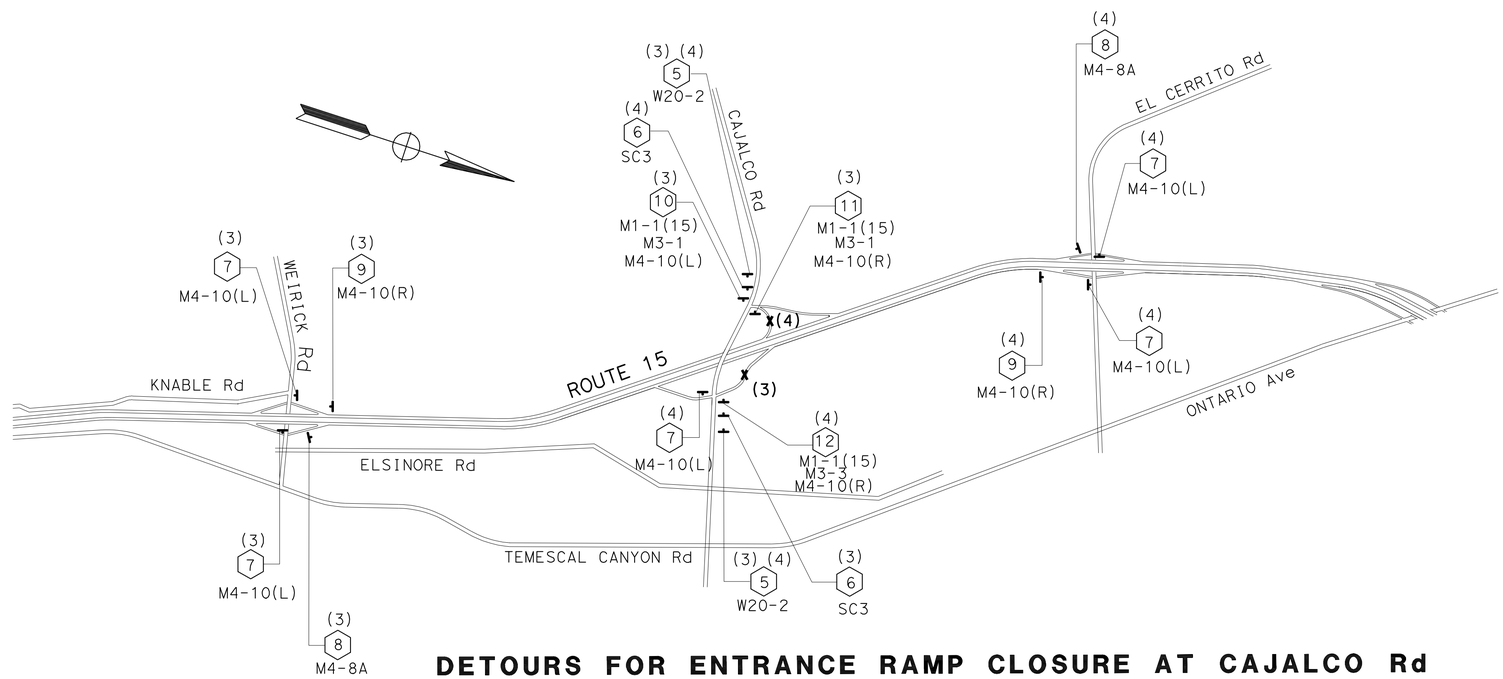

DETOURS FOR ENTRANCE RAMP CLOSURE AT CAJALCO Rd

(3): NORTHBOUND ENTRANCE RAMP CLOSURE

(4): SOUTHBOUND ENTRANCE RAMP CLOSURE

MOTORIST INFORMATION PLAN

NO SCALE

MI-3

APPROVED FOR MOTORIST INFORMATION WORK ONLY

STATE OF CALIFORNIA - DEPARTMENT OF TRANSPORTATION
Caltrans® TRAFFIC DESIGN
FUNCTIONAL SUPERVISOR BILL WASSER
CALCULATED-DESIGNED BY KEVIN NGUYEN
CHECKED BY THANH TRINH
REVISED BY
DATE REVISED

LAST REVISION 01-09-12
DATE PLOTTED => 24-APR-2012
TIME PLOTTED => 13:58

Dist	COUNTY	ROUTE	POST MILES TOTAL PROJECT	SHEET No.	TOTAL SHEETS
08	Riv	15	33.4/38.4	55	82

Thanh Trinh 01-10-12
REGISTERED CIVIL ENGINEER DATE

4-23-12
PLANS APPROVAL DATE

REGISTERED PROFESSIONAL ENGINEER
T. TRINH
No. C41189
Exp. 3-31-13
CIVIL
STATE OF CALIFORNIA

THE STATE OF CALIFORNIA OR ITS OFFICERS OR AGENTS SHALL NOT BE RESPONSIBLE FOR THE ACCURACY OR COMPLETENESS OF SCANNED COPIES OF THIS PLAN SHEET.

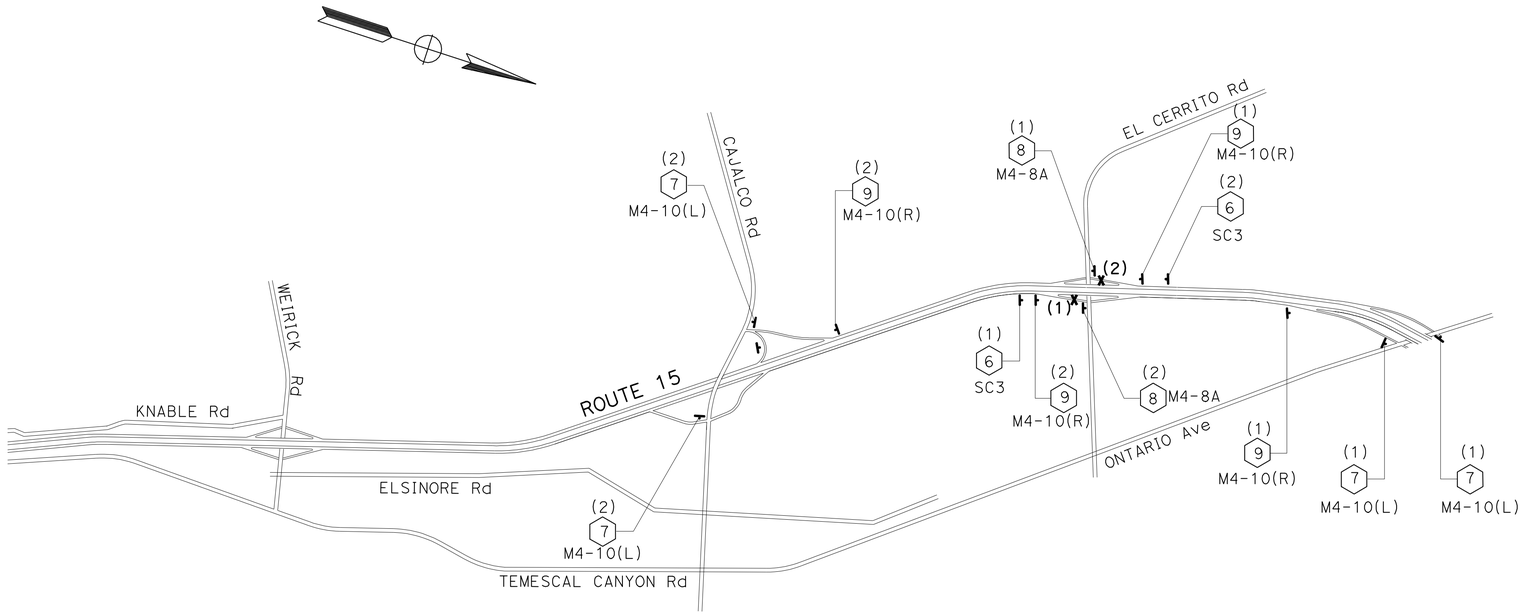

DETOURS FOR EXIT RAMP CLOSURE AT EL CERRITO Rd

(1): NORTHBOUND EXIT RAMP CLOSURE

(2): SOUTHBOUND EXIT RAMP CLOSURE

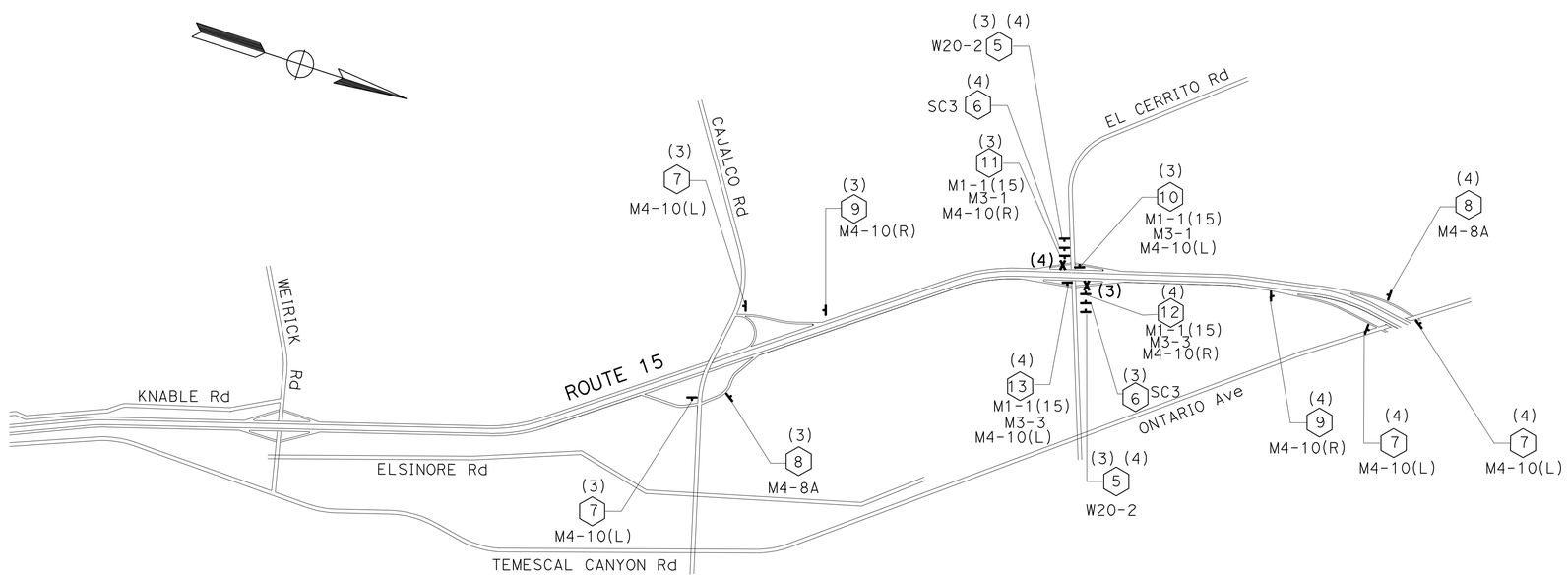

DETOURS FOR ENTRANCE RAMP CLOSURE AT EL CERRITO Rd

(3): NORTHBOUND ENTRANCE RAMP CLOSURE

(4): SOUTHBOUND ENTRANCE RAMP CLOSURE

APPROVED FOR MOTORIST INFORMATION WORK ONLY

MOTORIST INFORMATION PLAN

NO SCALE

MI-4

STATE OF CALIFORNIA - DEPARTMENT OF TRANSPORTATION
Caltrans® TRAFFIC DESIGN
FUNCTIONAL SUPERVISOR: BILL WASSER
CALCULATED-DESIGNED BY: KEVIN NGUYEN
CHECKED BY: THANH TRINH
REVISED BY
DATE REVISED

LAST REVISION 01-09-12
DATE PLOTTED => 24-APR-2012
TIME PLOTTED => 13:58

Dist	COUNTY	ROUTE	POST MILES TOTAL PROJECT	SHEET No.	TOTAL SHEETS
08	Riv	15	33.4/38.4	56	82

Thanh Trinh 12-30-11
REGISTERED CIVIL ENGINEER DATE

4-23-12
PLANS APPROVAL DATE

REGISTERED PROFESSIONAL ENGINEER T. TRINH No. C41189 Exp. 3-31-13 CIVIL STATE OF CALIFORNIA

THE STATE OF CALIFORNIA OR ITS EXITICERS OR AGENTS SHALL NOT BE RESPENTRANCESIBLE FOR THE ACCURACY OR COMPLETENESS OF SCANNED COPIES OF THIS PLAN SHEET.

DETAIL 13M

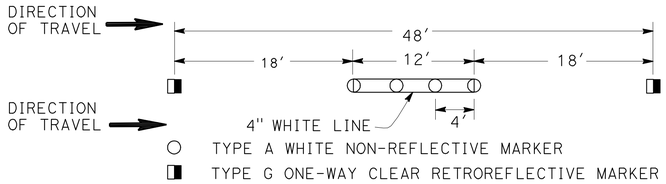

DETAIL 14M

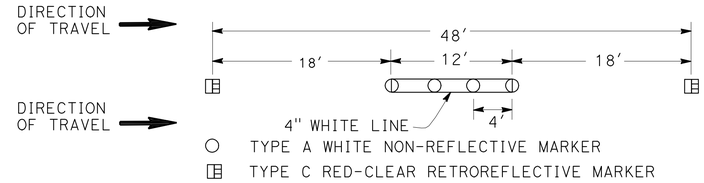

PAVEMENT DELINEATION QUANTITIES

LOCATION	DIRECTION	DETAIL No. OR PAVEMENT MARKING	(N) REMOVE PAVEMENT MARKERS	PAVEMENT MARKER (NON-REFLECTIVE)	PAVEMENT MARKER (RETROREFLECTIVE) TYPE			THERMOPLASTIC TRAFFIC STRIPE (SPRAYABLE)			THERMOPLASTIC PAVEMENT MARKING		CHANNELIZER (SURFACE MOUNTED) (LEFT IN PLACE)
				A	C	G	H	4" YELLOW	4" WHITE	8" WHITE	YELLOW	WHITE	
			EA	EA	EA			LF			SQFT		EA
MAIN LINE PM 33.4/38.4	NB & SB	8							2100				
WEIRICK Rd, & EL CERRITO Rd ENTRANCE RAMPS, & CAJALCO Rd EXIT RAMP	NB & SB	9	52			52			2430				
MAIN LINE PM 33.4/38.4	NB & SB	13M	10612	8488		2124			101856				
MAIN LINE PM 33.4/38.4	NB & SB	14M	391	312	79				3744				
WEIRICK Rd, CAJALCO Rd, & EL CERRITO Rd ENTRANCE AND EXIT RAMPS	NB & SB	25A	432				432	10350					
MAIN LINE PM 33.4/38.4	NB & SB	25	1102				1102	52800					
MAIN LINE PM 33.4/38.4 & ENTRANCE/EXIT RAMPS AT WEIRICK Rd, CAJALCO Rd, & EL CERRITO Rd	NB & SB	27B							62700				
WEIRICK Rd, CAJALCO Rd, & EL CERRITO Rd EXIT RAMPS	NB & SB	36	134			134				3170			
MAIN LINE PM 33.4/38.4	SB	37	52		50	2				700			
WEIRICK Rd, CAJALCO Rd, & EL CERRITO Rd EXIT RAMPS	NB & SB	38B	162			162				1915			
WEIRICK Rd ENTRANCE & EXIT RAMPS, CAJALCO Rd, & EL CERRITO Rd ENTRANCE RAMPS	NB & SB	38	94			94				2230			
WEIRICK Rd,& EL CERRITO Rd ENTRANCE & EXIT RAMPS,& CAJALCO Rd EXIT RAMPS	NB & SB	LIMIT LINE/CROSSWALK (1'-0" WHITE LINE)										425	
EL CERRITO Rd ENTRANCE RAMP & EXIT RAMP	NB & SB	LIMIT LINE/CROSSWALK (1'-0" YELLOW LINE)									215		
WEIRICK Rd EXIT RAMPS	NB & SB	CHEVRON										70	
WEIRICK Rd, CAJALCO Rd, & EL CERRITO Rd EXIT RAMPS	NB & SB	"SIGNAL"										288	
WEIRICK Rd, CAJALCO Rd, & EL CERRITO Rd EXIT RAMPS	NB & SB	"AHEAD"										279	
WEIRICK Rd, CAJALCO Rd, & EL CERRITO Rd ENTRANCE RAMPS	NB & SB	TYPE I (24'-0") ARROW										279	
WEIRICK Rd, CAJALCO Rd, & EL CERRITO Rd EXIT RAMPS	NB & SB	TYPE II (L) ARROW										360	
EL CERRITO Rd EXIT RAMP	NB	TYPE II (B) ARROW										59	
CAJALCO Rd EXIT RAMP	SB	TYPE III (L) ARROW										84	15
WEIRICK Rd, CAJALCO Rd, & EL CERRITO Rd EXIT RAMPS	NB & SB	TYPE III (R) ARROW										588	
WEIRICK Rd, CAJALCO Rd, & EL CERRITO Rd EXIT RAMPS	NB & SB	TYPE V ARROW										264	
SUBTOTAL			13031	8800	129	2568	1534	63150	172830	8015	215	2696	15
TOTAL			13031	8800			4231		243995		2911		15

(N) NOT A SEPARATE PAY ITEM, FOR INFORMATON ONLY.

PAVEMENT DELINEATION QUANTITIES

PDQ-1

STATE OF CALIFORNIA - DEPARTMENT OF TRANSPORTATIONTRANCE
Caltrans® TRAFFIC DESIGN
FUNCTIONTRANCEAL SUPERVISOR BILL WASSER
CALCULATED-DESIGNED BY KEVIN NGUYEN
CHECKED BY THANH TRINH
REVISED BY
DATE REVISED

LAST REVISION=> DATE PLOTTED => 24-APR-2012
00-00-00 TIME PLOTTED => 13:58

Dist	COUNTY	ROUTE	POST MILES TOTAL PROJECT	SHEET No.	TOTAL SHEETS
08	Riv	15	33.4/38.4	57	82

REGISTERED CIVIL ENGINEER 01-10-12 DATE

4-23-12
PLANS APPROVAL DATE

REGISTERED PROFESSIONAL ENGINEER
DUNG HUY PHAN
No. C 73061
Exp. 12/31/12
CIVIL
STATE OF CALIFORNIA

THE STATE OF CALIFORNIA OR ITS OFFICERS OR AGENTS SHALL NOT BE RESPONSIBLE FOR THE ACCURACY OR COMPLETENESS OF SCANNED COPIES OF THIS PLAN SHEET.

METAL BEAM GUARD RAILING NORTHBOUND

LOCATION	METAL BEAM GUARD RAILING (WOOD POST) REMOVE	METAL BEAM GUARD RAILING (WOOD POST) CONSTRUCT	MINOR CONCRETE (MINOR STRUCTURE)	TRANSITION RAILING (TYPE WB)	ALTERNATIVE TERMINAL SYSTEM FLARED	ALTERNATIVE TERMINAL SYSTEM IN-LINE	END ANCHOR ASSEMBLY (TYPE SFT)	NOTE
	LF		CY	EA	EA		EA	
BROWN CANYON WASH Br No. 56-0559 Sta 1831+59 - 1832+59 Rt	100	37.5	1.08	1	1			BRIDGE RAIL (TYPE 25)
BROWN CANYON WASH Br No. 56-0559 Sta 1832+17.5 - 1832+55 Lt	37.5	12.5	1.08	1				BRIDGE RAIL (TYPE 1)
WEIRICK Rd UC Br No. 56-0541 Sta 1879+88.6 - 1880+88.6 Rt	100	25.0	1.08	1		1		BRIDGE RAIL (TYPE 25)
WEIRICK Rd UC, Br No. 56-0541 Sta 1880+45.2 - 1880+82.7 Lt	37.5	12.5	1.08	1				BRIDGE RAIL (TYPE 1)
WEIRICK Rd UC ON-RAMP Sta 1882+30.6 TO Sta 1883+17.0 Rt		37.5				1	1	
BEDFORD WASH Br No. 56-0540 Sta 1929+54 - 1930+54 Rt	100	25.0	1.08	1		1		BRIDGE RAIL (TYPE 25)
BEDFORD WASH Br No. 56-0540 Sta 1930+06 - 1930+43.5 Lt	37.5	12.5	1.08	1				BRIDGE RAIL (TYPE 1)
EL CERRITO RD UC Br No. 56-0558 Sta 1994+95.6 - 1995+95.6 Rt	100	25.0	1.08	1		1		BRIDGE RAIL (TYPE 25)
EL CERRITO RD UC Br No. 56-0558 Sta 1995+55 - 1995+92.5 Lt	37.5	12.5	1.08	1				BRIDGE RAIL (TYPE 1)
SUBTOTAL (NORTHBOUND)	550	200	8.64	8	1	4	1	

METAL BEAM GUARD RAILING SOUTHBOUND

LOCATION	METAL BEAM GUARD RAILING (WOOD POST) REMOVE	METAL BEAM GUARD RAILING (WOOD POST) CONSTRUCT	MINOR CONCRETE (MINOR STRUCTURE)	TRANSITION RAILING (TYPE WB)	ALTERNATIVE TERMINAL SYSTEM FLARED	ALTERNATIVE TERMINAL SYSTEM IN-LINE	END ANCHOR ASSEMBLY (TYPE SFT)	NOTE
	LF		CY	EA	EA		EA	
EL CERRITO RD UC Br No. 56-0558 Sta 1997+34 - 1998+34 Rt	100	37.5	1.08	1	1			BRIDGE RAIL (TYPE 25)
EL CERRITO Rd UC Br No. 56-0558 Sta 1997+48.5 - 1997+86 Lt	37.5	12.5	1.08	1				BRIDGE RAIL (TYPE 1)
BEDFORD WASH Br No. 56-0540 Sta 1931+56-1932+56 Rt	100	25.0	1.08	1	1			BRIDGE RAIL (TYPE 25)
RETAINING WALL Sta 1906+20 - 1907+20 Rt	100	37.5	1.08	1	1			END AT CALL BOX
WEIRICK Rd UC Br No. 56-0541 Sta 1882+55 - 1883+17.5 Rt	162.5	100	1.08	1	1			BRIDGE RAIL (TYPE 25)
BROWN CANYON WASH Br No. 56-0559 Sta 1833+20 - 1834+20 Rt	100	37.5	1.08	1	1			BRIDGE RAIL (TYPE 25)
Sta 1807+31.5 -1811+31.5	100	362.5			1		1	AT CULVERT
SUBTOTAL (SOUTHBOUND)	700	612.5	6.48	6	6	0	1	
SUBTOTAL (NORTHBOUND)	550	200	8.64	8	1	4	1	
TOTAL	1,250	812.5	15.12	14	7	4	2	

SUMMARY OF QUANTITIES

Q-1

STATE OF CALIFORNIA - DEPARTMENT OF TRANSPORTATION
Caltrans
DESIGN
FUNCTIONAL SUPERVISOR: RENEE SASSE
CALCULATED-DESIGNED BY: DUNG HUY PHAN
CHECKED BY: ANH PHAN & ZIAD SAWALHA
REVISED BY
DATE REVISED

LAST REVISION 01-09-12
DATE PLOTTED => 24-APR-2012
TIME PLOTTED => 13:58

Dist	COUNTY	ROUTE	POST MILES TOTAL PROJECT	SHEET No.	TOTAL SHEETS
08	Riv	15	33.4/38.4	58	82

REGISTERED CIVIL ENGINEER 01-10-12 DATE

4-23-12
PLANS APPROVAL DATE

REGISTERED PROFESSIONAL ENGINEER DUNG HUY PHAN No. C 73061 Exp. 12/31/12 CIVIL STATE OF CALIFORNIA

THE STATE OF CALIFORNIA OR ITS OFFICERS OR AGENTS SHALL NOT BE RESPONSIBLE FOR THE ACCURACY OR COMPLETENESS OF SCANNED COPIES OF THIS PLAN SHEET.

NOTE:

1. SEE LAYOUT AND CONSTRUCTION DETAIL PLANS FOR UNDREDRAIN LOCATIONS AND DETAILS.

QUANTITIES OF UNDERDRAIN

STATION	6" PERFORATED PLASTIC PIPE UNDERDRAIN	NON-PERFORATED 6" PLASTIC PIPE	MINOR CONCRETE (MISCELLANEOUS CONSTRUCTION)	CONCRETE PAD (N)	UNDERDRAIN MARKER	DESCRIPTION	REFERENCE
	LF		CY	EA			
1790+00 TO 1797+20	720	20				BEGIN AT RISER, END AT DI	SHEET L-3
1797+20 TO 1806+80	960	20				BEGIN AT DI, END AT DI	SHEET L-4
1806+80 TO 1811+30	450	20	2.2	1	1	BEGIN AT DI OUTLET AT SLOPE	SHEET L-4
1811+30 TO 1832+00	2070	20	2.2	1	1	BEGIN AT RISER OUTLET AT SLOPE	SHEET L-4, L-5, L-6
1835+00 TO 1845+35	1035	40	2.2	1	1	BEGIN AT RISER OUTLET AT SLOPE	SHEET L-6, L-7
1849+65 TO 1871+00	2135	50	2.2	1	1	BEGIN AT RISER OUTLET AT SLOPE	SHEET L-7, L-8
1874+68 TO 1880+75	607	20				BEGIN AT RISER, END AT DI	SHEET L-9
1882+75 TO 1892+40	965	20				BEGIN AT RISER, END AT DI	SHEET L-9, L-10
1895+00 TO 1907+51	1251	20				BEGIN AT RISER, END AT DI	SHEET L-10, L-11
1907+51 TO 1916+63	912	65	2.2	1	1	BEGIN AT DI OUTLET AT SLOPE	SHEET L-11
1932+00 TO 1947+66	1566	150				BEGIN AT RISER END AT STORM DRAIN MH	SHEET L-13, L-14
1959+97 TO 1976+52	1655	50				BEGIN AT DI END AT DI	SHEET L-14, L-15, L-16
1976+52 TO 1985+00	848	20				BEGIN AT RISER, END AT DI	SHEET L-16
2009+00 TO 2019+96	1096	40				BEGIN AT RISER END AT STORM DRAIN MH	SHEET L-18
TOTAL	16270	555	11	5	5		

(N) NOT A SEPARATE PAY ITEM, FOR INFORMATION ONLY.

SUMMARY OF QUANTITIES

Q-2

STATE OF CALIFORNIA - DEPARTMENT OF TRANSPORTATION
Caltrans DESIGN
FUNCTIONAL SUPERVISOR RENEE SASSE
CALCULATED-DESIGNED BY DUNG HUY PHAN
CHECKED BY ANH PHAN & ZIAD SAWALHA
REVISED BY
DATE REVISED

LAST REVISION 01-09-12 DATE PLOTTED => 24-APR-2012 TIME PLOTTED => 13:58

Dist	COUNTY	ROUTE	POST MILES TOTAL PROJECT	SHEET No.	TOTAL SHEETS
08	Riv	15	33.4/38.4	59	82

REGISTERED CIVIL ENGINEER 01-10-12 DATE

4-23-12
PLANS APPROVAL DATE

REGISTERED PROFESSIONAL ENGINEER DUNG H PHAN No. 73061 Exp. 12-31-12 CIVIL STATE OF CALIFORNIA

THE STATE OF CALIFORNIA OR ITS OFFICERS OR AGENTS SHALL NOT BE RESPONSIBLE FOR THE ACCURACY OR COMPLETENESS OF SCANNED COPIES OF THIS PLAN SHEET.

ROADWAY QUANTITIES

LOCATION		STATION	COLD PLANE AC DEPTH 0.60′	COLD PLANE AC DEPTH 0.45′	COLD PLANE AC DEPTH 0.25′	COLD PLANE AC DEPTH 0.15′	COLD PLANE AC TOTAL	HMA (TYPE C) DEPTH 0.65′	HMA (TYPE C) DEPTH 0.45′	HMA (TYPE C) DEPTH 0.30′	HMA (TYPE C) DEPTH 0.25′	HMA (TYPE C) TOTAL	RHMA-G DEPTH 0.15′	TACK COAT	DATA CORES (N)	ROADWAY EXCAVATION	AGGREGATE BASE (CLASS 2)	SHOULDER RUMBLE STRIP
			SQYD					TON					TON	TON	EA	CY	CY	STA
NORTHBOUND	LANES 1 & 2	1756+30 TO 2019+44		68,534			68,534			13,878		13,878	6,939	95				
	LANE 3	1900+80 TO 1980+00	10,560				10,560		3,208			3,208	1,069	15	22			
		1756+30 TO 1900+80 1980+00 TO 2019+44		23,707			23,707			4,801		4,801	2,400	33				
	INSIDE SHOULDER	1756+30 TO 2019+44				14,278	14,278						1,446	7				264
	OUTSIDE SHOULDER	1756+30 TO 2019+44				28,556	28,556						2,892	14				264
SOUTHBOUND	LANES 1 & 2	1756+30 TO 2019+44		68,534			68,534			13,878		13,878	6,939	95				
	LANE 3	1756+30 TO 2019+44	34,267				34,267		10,408			10,408	3,469	48	22			
	INSIDE SHOULDER	1756+30 TO 2019+44				14,278	14,278						1,446	7				264
	OUTSIDE SHOULDER	1756+30 TO 2019+44				28,556	28,556						2,892	14				264
	UNDERDRAIN	1756+30 TO 2019+44							1,738			1,738		6			1,904	
RAMPS	RECONSTRUCT							921				921		3		1,295	840	
	OVERLAY				53,900		53,900				9,096	9,096		25				
TOTAL							345,170					57,928	29,492	362	44	1,295	2,744	1,056

(N) NOT A SEPARATE PAY ITEM, FOR INFORMATION ONLY.

HOT MIX ASPHALT DIKE

LOCATION	REMOVE AC DIKE	PLACE HMA DIKE (TYPE E)	MINOR HMA
	LF	LF	TON
SB ON-RAMP AT EL CERRIRO Rd & CAJALCO Rd	300	300	8
TOTAL	300	300	8

SUMMARY OF QUANTITIES

Q-3

STATE OF CALIFORNIA - DEPARTMENT OF TRANSPORTATION
Caltrans DESIGN

FUNCTIONAL SUPERVISOR: RENEE SASSE
CALCULATED-DESIGNED BY: DUNG HUY PHAN
CHECKED BY: ANH PHAN & ZIAD SAWALHA
REVISED BY
DATE REVISED

LAST REVISION 01-09-12
DATE PLOTTED => 26-APR-2012
TIME PLOTTED => 11:13

Dist	COUNTY	ROUTE	POST MILES TOTAL PROJECT	SHEET No.	TOTAL SHEETS
08	Riv	15	33.4/38.4	60	82

Dilara Zaman. 01-10-12
REGISTERED ELECTRICAL ENGINEER DATE

4-23-12
PLANS APPROVAL DATE

REGISTERED PROFESSIONAL ENGINEER
DILARA H. ZAMAN
No. E 18356
Exp. 06/30/2012
ELECTRICAL
STATE OF CALIFORNIA

THE STATE OF CALIFORNIA OR ITS OFFICERS OR AGENTS SHALL NOT BE RESPONSIBLE FOR THE ACCURACY OR COMPLETENESS OF SCANNED COPIES OF THIS PLAN SHEET.

GENERAL NOTE: (SHEET E-1 TO E-4)

EXISTING LOOPS THAT ARE TO BE REPLACED SHALL BE AB.

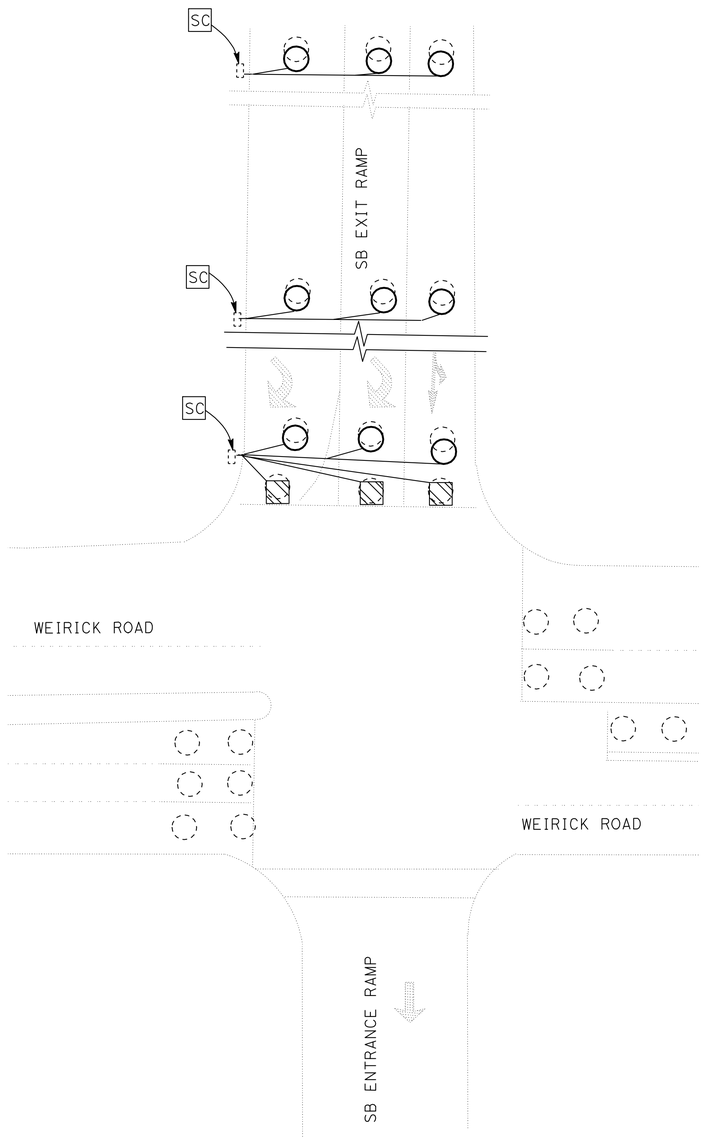

LOCATION 1

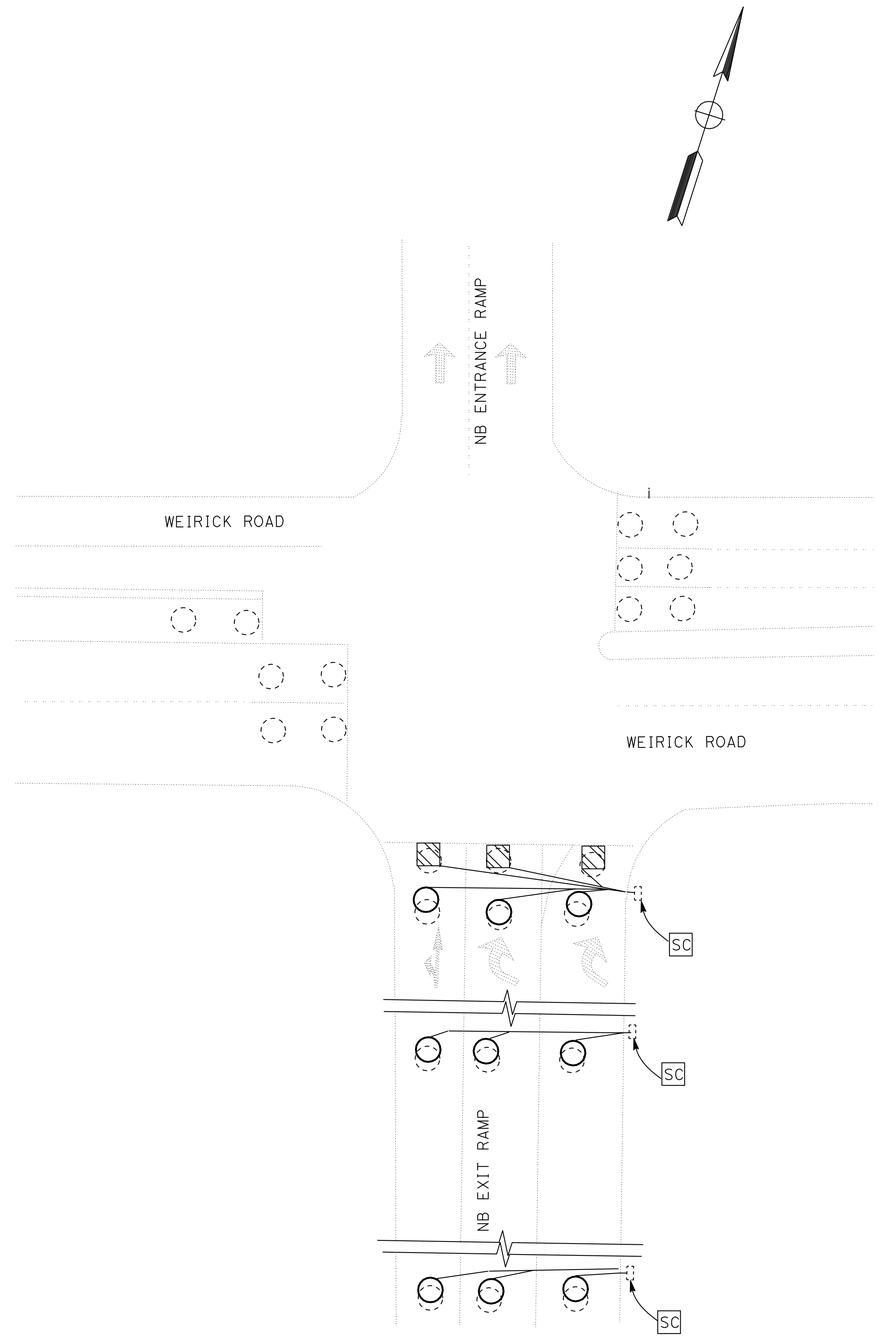

LOCATION 2

INDUCTIVE LOOP DETECTOR
(LOCATIONS 1 & 2)

NO SCALE

E-1

APPROVED FOR ELECTRICAL WORK ONLY

STATE OF CALIFORNIA - DEPARTMENT OF TRANSPORTATION
Caltrans® ELECTRICAL DESIGN A

FUNCTIONAL SUPERVISOR: DAVID A GONZALEZ
CALCULATED-DESIGNED BY: DILARA ZAMAN
CHECKED BY: BRUCE LUTTON
REVISED BY
DATE REVISED

LAST REVISION 01-09-12 | DATE PLOTTED => 24-APR-2012 | TIME PLOTTED => 13:59

Dist	COUNTY	ROUTE	POST MILES TOTAL PROJECT	SHEET No.	TOTAL SHEETS
08	Riv	15	33.4/38.4	61	82

Dilarazaman. 01-10-12
REGISTERED ELECTRICAL ENGINEER DATE

4-23-12
PLANS APPROVAL DATE

REGISTERED PROFESSIONAL ENGINEER
DILARA H. ZAMAN
No. E 18356
Exp. 06/30/2012
ELECTRICAL
STATE OF CALIFORNIA

THE STATE OF CALIFORNIA OR ITS OFFICERS OR AGENTS SHALL NOT BE RESPONSIBLE FOR THE ACCURACY OR COMPLETENESS OF SCANNED COPIES OF THIS PLAN SHEET.

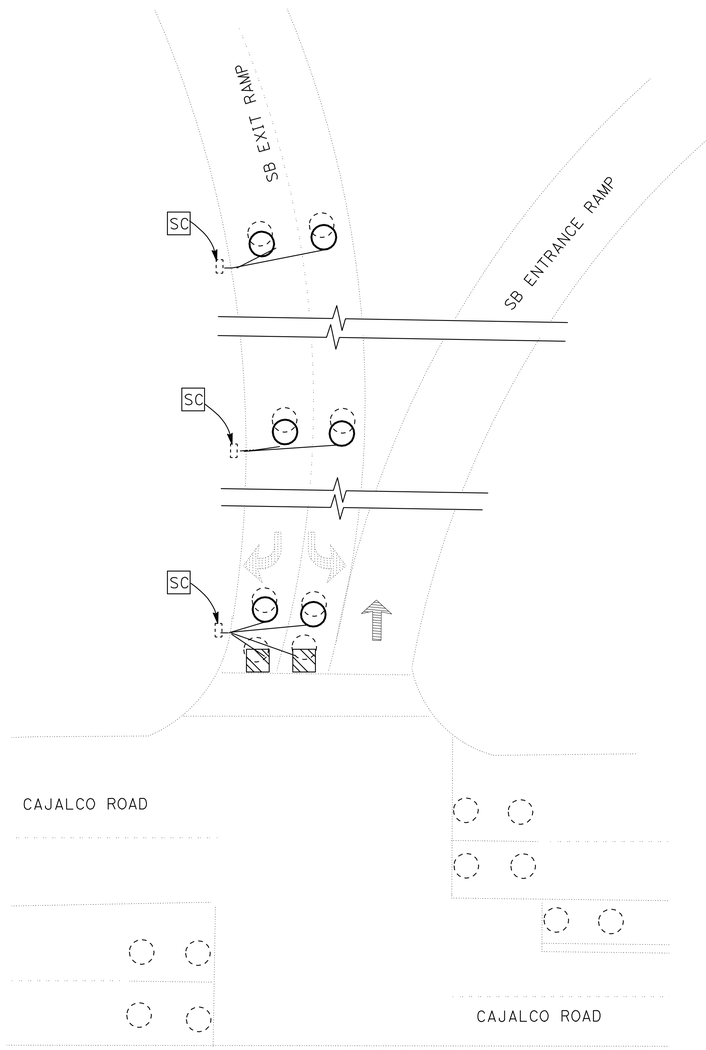

LOCATION 3

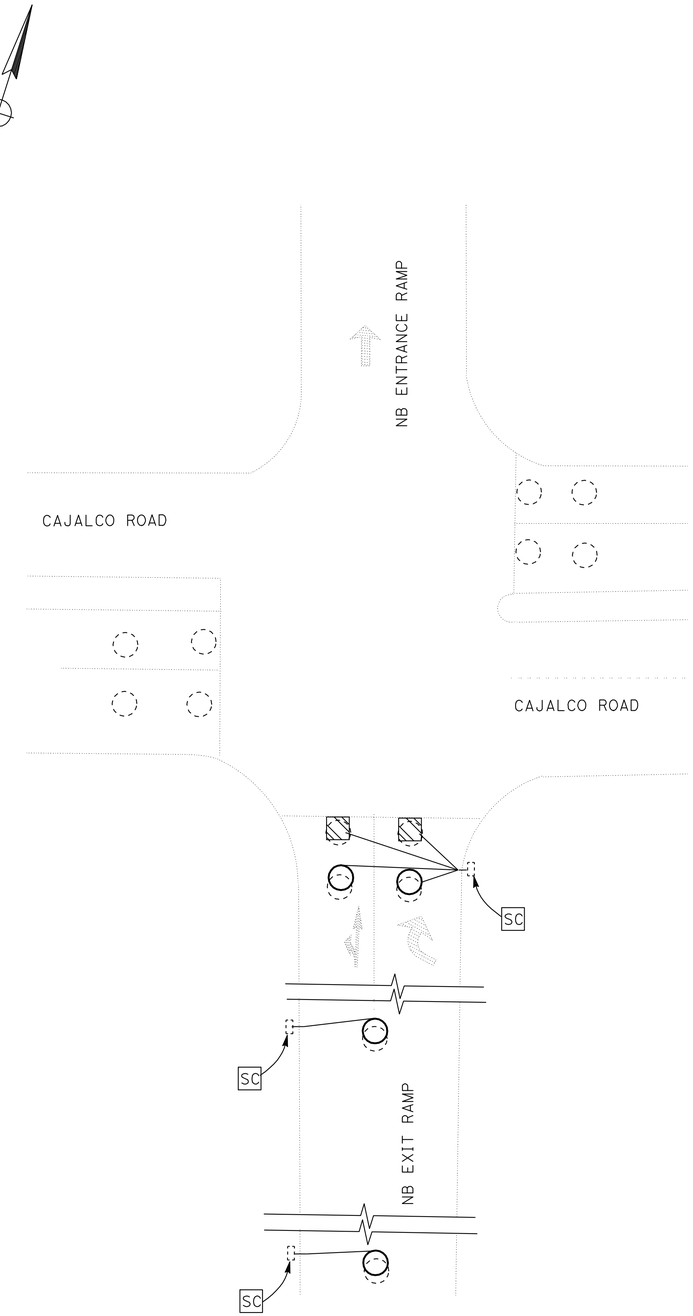

LOCATION 4

INDUCTIVE LOOP DETECTOR
(LOCATIONS 3 & 4)

NO SCALE

E-2

APPROVED FOR ELECTRICAL WORK ONLY

STATE OF CALIFORNIA - DEPARTMENT OF TRANSPORTATION
Caltrans® ELECTRICAL DESIGN A

FUNCTIONAL SUPERVISOR: DAVID A GONZALEZ
CALCULATED-DESIGNED BY: DILARA ZAMAN
CHECKED BY: BRUCE LUTTON
REVISED BY
DATE REVISED

LAST REVISION 01-09-12
DATE PLOTTED => 24-APR-2012
TIME PLOTTED => 13:19

Dist	COUNTY	ROUTE	POST MILES TOTAL PROJECT	SHEET No.	TOTAL SHEETS
08	Riv	15	33.4/38.4	62	82

Dilarazaman. 01-10-12
REGISTERED ELECTRICAL ENGINEER DATE

4-23-12
PLANS APPROVAL DATE

REGISTERED PROFESSIONAL ENGINEER
DILARA H. ZAMAN
No. E 18356
Exp. 06/30/2012
ELECTRICAL
STATE OF CALIFORNIA

THE STATE OF CALIFORNIA OR ITS OFFICERS OR AGENTS SHALL NOT BE RESPONSIBLE FOR THE ACCURACY OR COMPLETENESS OF SCANNED COPIES OF THIS PLAN SHEET.

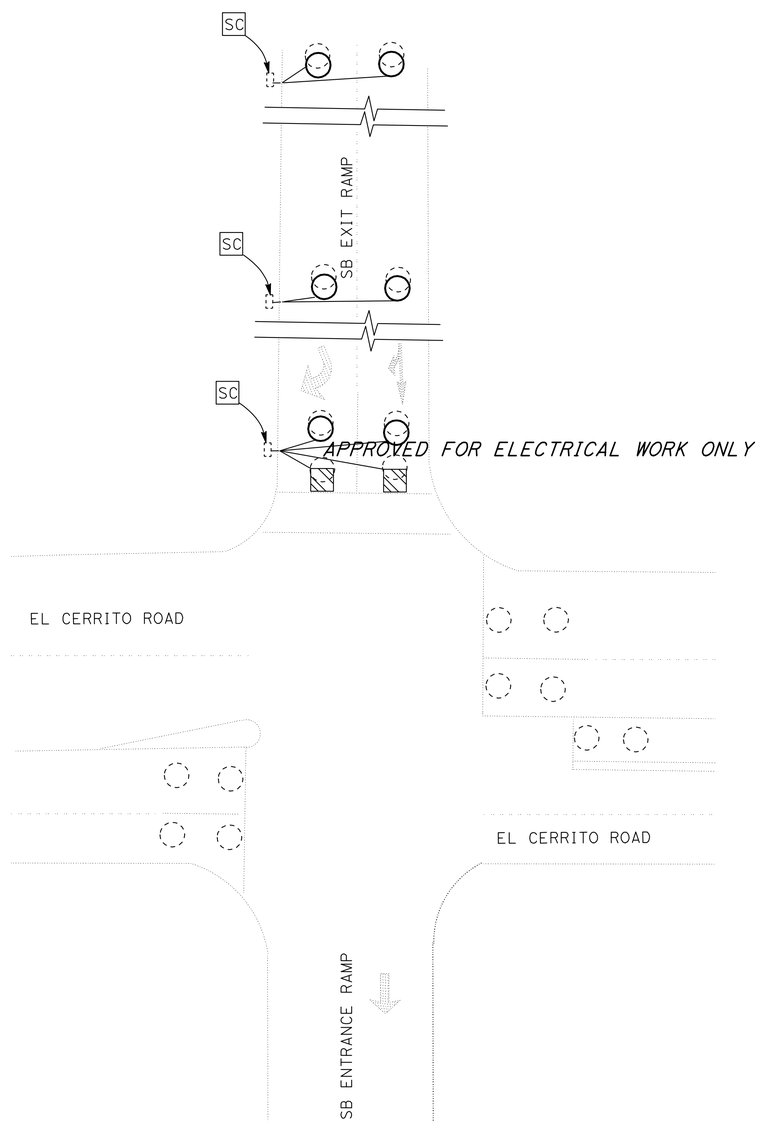

LOCATION 5

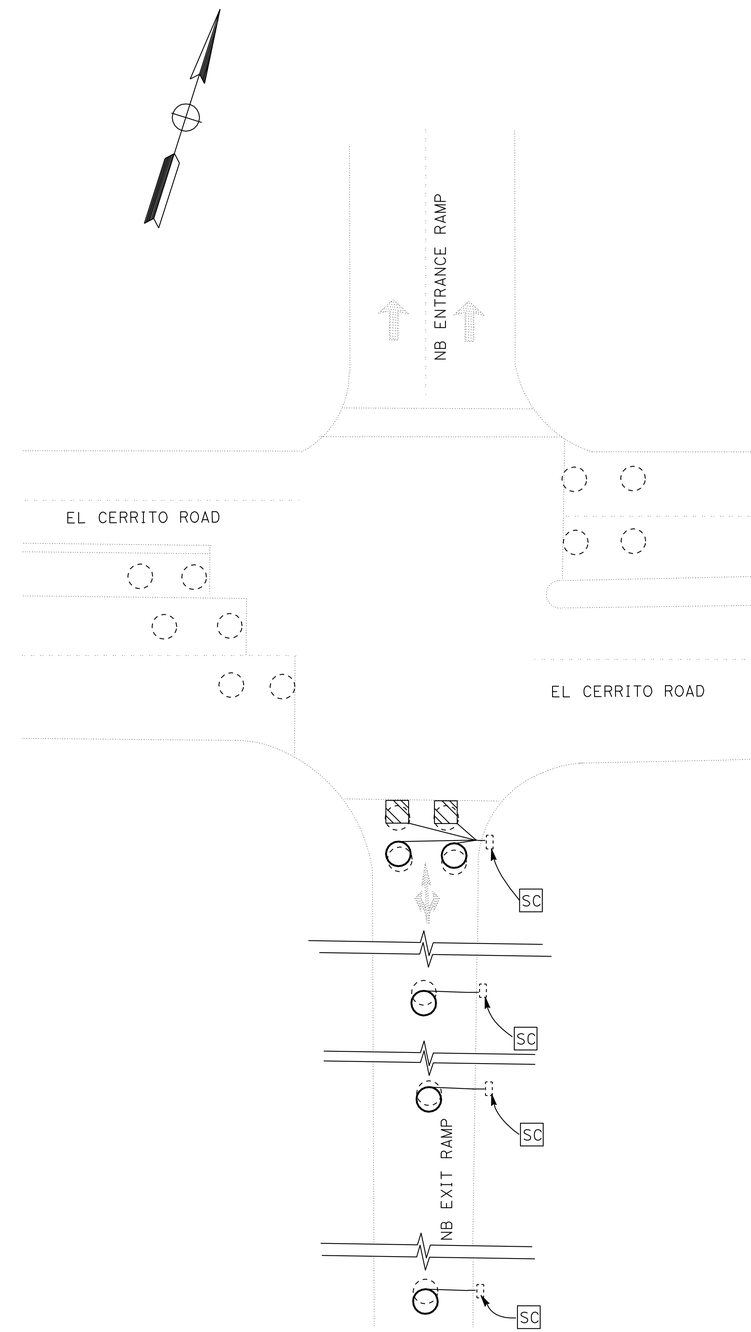

LOCATION 6

INDUCTIVE LOOP DETECTOR
(LOCATIONS 5 & 6)

NO SCALE

E-3

APPROVED FOR ELECTRICAL WORK ONLY

STATE OF CALIFORNIA - DEPARTMENT OF TRANSPORTATION
Caltrans® ELECTRICAL DESIGN A

FUNCTIONAL SUPERVISOR: DAVID A GONZALEZ
CALCULATED-DESIGNED BY: DILARA ZAMAN
CHECKED BY: BRUCE LUTTON
REVISED BY
DATE REVISED

LAST REVISION 01-09-12
DATE PLOTTED => 24-APR-2012
TIME PLOTTED => 13:20

Dist	COUNTY	ROUTE	POST MILES TOTAL PROJECT	SHEET No.	TOTAL SHEETS
08	Riv	15	33.4/38.4	63	82

Dilara Zaman. 01-10-12
REGISTERED ELECTRICAL ENGINEER DATE

4-23-12
PLANS APPROVAL DATE

REGISTERED PROFESSIONAL ENGINEER
DILARA H. ZAMAN
No. E 18356
Exp. 06/30/2012
ELECTRICAL
STATE OF CALIFORNIA

THE STATE OF CALIFORNIA OR ITS OFFICERS OR AGENTS SHALL NOT BE RESPONSIBLE FOR THE ACCURACY OR COMPLETENESS OF SCANNED COPIES OF THIS PLAN SHEET.

LEGEND: (THIS SHEET ONLY)

EXISTING RAMP METERING SIGNAL

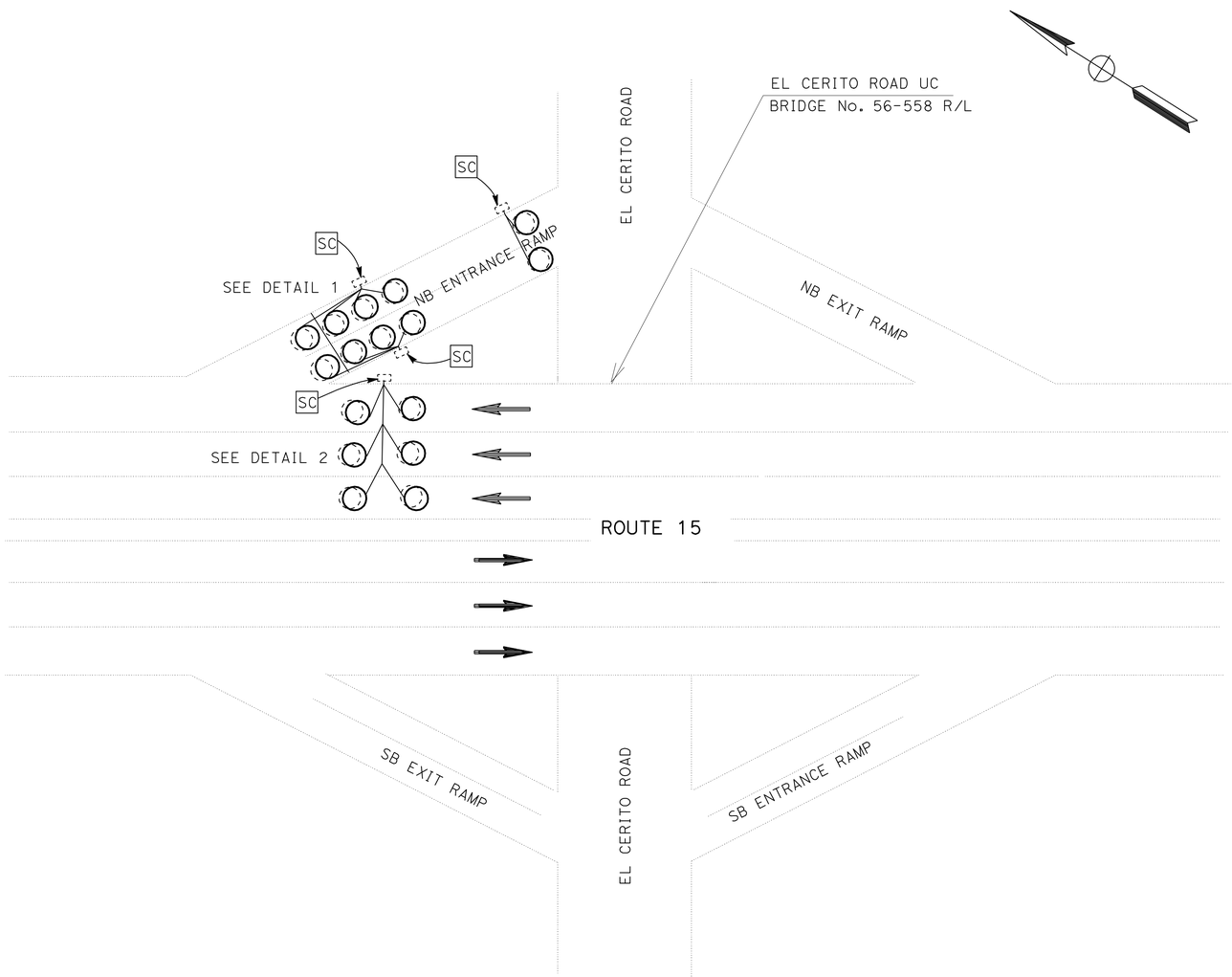

LOCATION 7

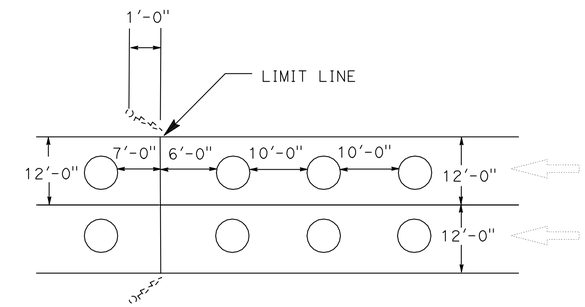

DETAIL 1

2-LANE ENTRANCE RAMP LOOP INSTALLATION

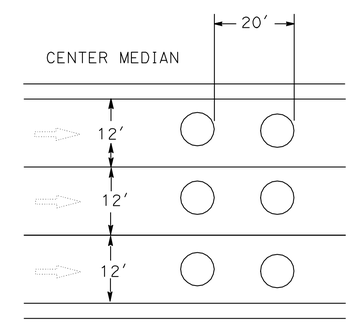

DETAIL 2

MAINLINE LOOP INSTALLATION

INDUCTIVE LOOP DETECTOR
(LOCATION 7)

NO SCALE

E-4

APPROVED FOR ELECTRICAL WORK ONLY

STATE OF CALIFORNIA - DEPARTMENT OF TRANSPORTATION
Caltrans® ELECTRICAL DESIGN A

FUNCTIONAL SUPERVISOR: DAVID A GONZALEZ
CALCULATED-DESIGNED BY: DILARA ZAMAN
CHECKED BY: BRUCE LUTTON
REVISED BY
DATE REVISED

LAST REVISION 01-09-12
DATE PLOTTED => 24-APR-2012
TIME PLOTTED => 13:20

Dist	COUNTY	ROUTE	POST MILES TOTAL PROJECT	SHEET No.	TOTAL SHEETS
08	Riv	15	33.4/38.4	64	82

Dilarazaman. 01-10-12
REGISTERED ELECTRICAL ENGINEER DATE

4-23-12
PLANS APPROVAL DATE

REGISTERED PROFESSIONAL ENGINEER DILARA H. ZAMAN No. E 18356 Exp. 06/30/2012 ELECTRICAL STATE OF CALIFORNIA

THE STATE OF CALIFORNIA OR ITS OFFICERS OR AGENTS SHALL NOT BE RESPONSIBLE FOR THE ACCURACY OR COMPLETENESS OF SCANNED COPIES OF THIS PLAN SHEET.

NOTES: (THIS SHEET ONLY)

1. THE POST MILE LOCATIONS ARE APPROXIMATE. PRIOR TO CONSTRUCTION, THE CONTRACTOR SHALL VERIFY ALL VEHICLE SENSOR NODE LOCATIONS.
2. RC ALL EXISTING SENSYS VSN.
3. AFTER ROADWAY REHABILITATION, INSTALL THE NEW VEHICLE SENSOR NODES AT THE EXISTING LOCATIONS PER MANUFACTURER'S INSTRUCTION. SEE SHEET E-6 FOR INSTALLATION DETAILS.

LEGEND (THIS SHEET ONLY):

○ EXISTING VEHICLE SENSOR NODE
● NEW VEHICLE SENSOR NODE

ABBREVIATIONS (THIS SHEET ONLY):

VSN VEHICLE SENSOR NODE
VDS VEHICLE DETECTION SYSTEM

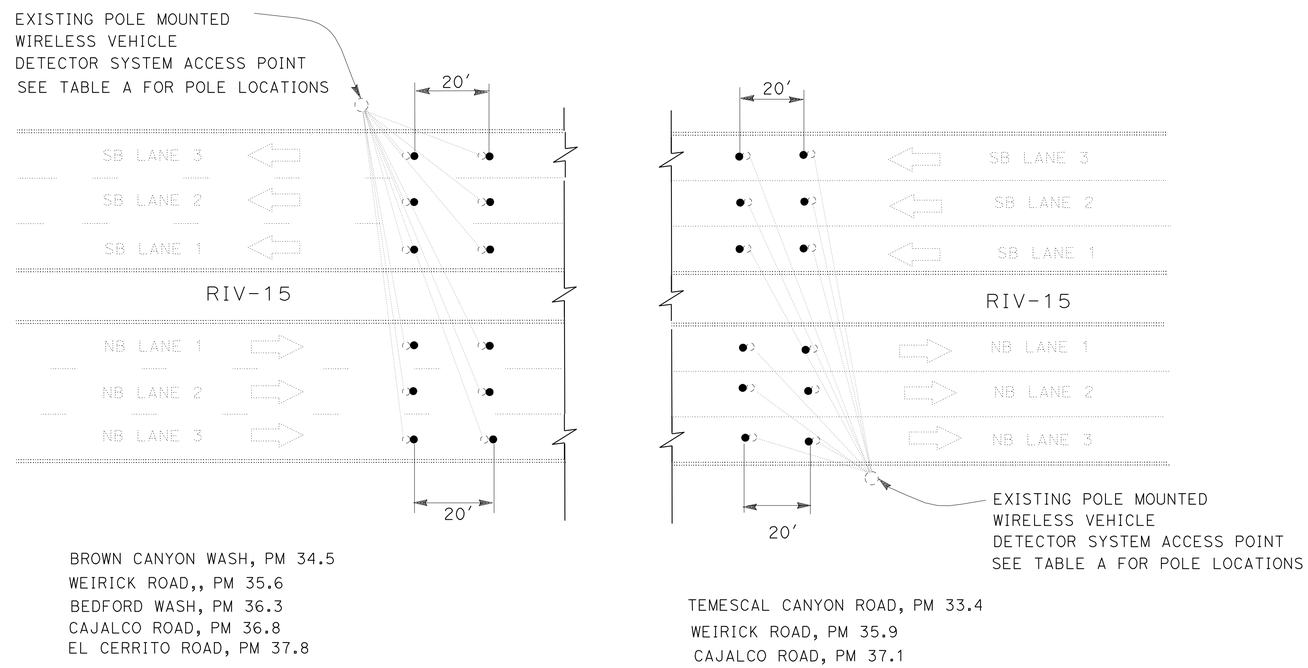

VSN QUANTITIES TABLE A

LOCATION OF INSTALLATIONS

No.	LOCATIONS	POST MILE	VDS POLE LOCATIONS	GPS COORDINATE OF VDS POLE		VSN QUANTITY
				LATITUDE	LONGITUDE	
1	TEMESCAL CANYON ROAD	33.4	NB	N 33° 46' 43.9"	W 117° 29' 17.5"	12
2	WEIRICK ROAD	35.9	NB	N 33° 48' 44.5"	W 117° 30' 35.5"	12
3	CAJALCO ROAD	37.1	NB	N 33° 49' 19.6"	W 117° 31' 09.0"	12
4	BROWN CANYON WASH	34.5	SB	N 33° 47' 37.5"	W 117° 29' 58.6"	12
5	WEIRICK ROAD	35.6	SB	N 33° 48' 21.2"	W 117° 30' 25.9"	12
6	BEDFORD WASH	36.3	SB	N 33° 48' 58.3"	W 117° 30' 46.9"	12
7	CAJALCO ROAD	36.8	SB	N 33° 49' 16.7"	W 117° 31' 09.0"	12
8	EL CERRITO ROAD	37.8	SB	N 33° 49' 51.0"	W 117° 31' 45.9"	12
					TOTAL	96

MODIFY WIRELESS VEHICLE DETECTOR SYSTEM

APPROVED FOR ELECTRICAL WORK ONLY

NO SCALE

E-5

STATE OF CALIFORNIA - DEPARTMENT OF TRANSPORTATION
Caltrans ELECTRICAL DESIGN A

FUNCTIONAL SUPERVISOR: DAVID A GONZALEZ
CALCULATED-DESIGNED BY: DILARA ZAMAN
CHECKED BY: BRUCE LUTTON
REVISED BY / DATE REVISED

LAST REVISION 01-09-12 | DATE PLOTTED => 24-APR-2012 | TIME PLOTTED => 13:20

Dist	COUNTY	ROUTE	POST MILES TOTAL PROJECT	SHEET No.	TOTAL SHEETS
08	Riv	15	33.4/38.4	65	82

Dilara Zaman. 01-10-12
REGISTERED ELECTRICAL ENGINEER DATE

4-23-12
PLANS APPROVAL DATE

REGISTERED PROFESSIONAL ENGINEER
DILARA H. ZAMAN
No. E 18356
Exp. 06/30/2012
ELECTRICAL
STATE OF CALIFORNIA

THE STATE OF CALIFORNIA OR ITS OFFICERS OR AGENTS SHALL NOT BE RESPONSIBLE FOR THE ACCURACY OR COMPLETENESS OF SCANNED COPIES OF THIS PLAN SHEET.

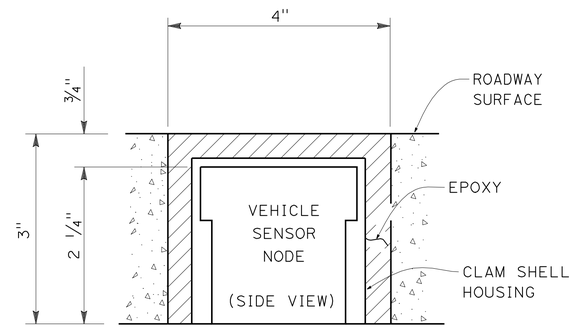

DETAIL B

VEHICLE SENSOR NODE
INSTALLED IN ROADWAY

VEHICLE SENSOR NODE INSTALLATION PROCEDURE

1. INSTALL PER MANUFACTURER'S INSTRUCTIONS.
2. RECORD THE DISTANCES BETWEEN EACH SENSOR PAIR.

MODIFY WIRELESS VEHICLE DETECTOR SYSTEM

NO SCALE

E-6

APPROVED FOR ELECTRICAL WORK ONLY

STATE OF CALIFORNIA - DEPARTMENT OF TRANSPORTATION
Caltrans® ELECTRICAL DESIGN A

FUNCTIONAL SUPERVISOR: DAVID A GONZALEZ
CALCULATED-DESIGNED BY: DILARA ZAMAN
CHECKED BY: BRUCE LUTTON
REVISED BY
DATE REVISED

LAST REVISION 01-09-12
DATE PLOTTED => 24-APR-2012
TIME PLOTTED => 13:20

Dist	COUNTY	ROUTE	POST MILES TOTAL PROJECT	SHEET No.	TOTAL SHEETS
08	Riv	15	33.4/38.4	66	82

Randell D. Hiatt
REGISTERED CIVIL ENGINEER

May 20, 2011
PLANS APPROVAL DATE

REGISTERED PROFESSIONAL ENGINEER
Randell D. Hiatt
No. C50200
Exp. 6-30-11
CIVIL
STATE OF CALIFORNIA

The State of California or its officers or agents shall not be responsible for the accuracy or completeness of electronic copies of this plan sheet.

To accompany plans dated 4-23-12

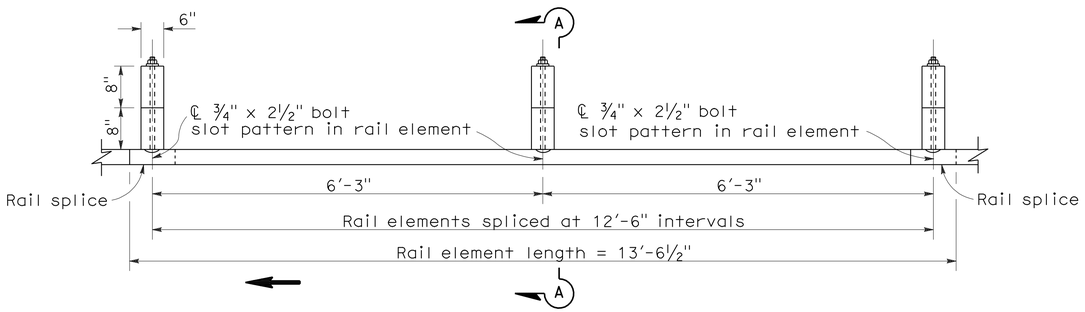

PLAN

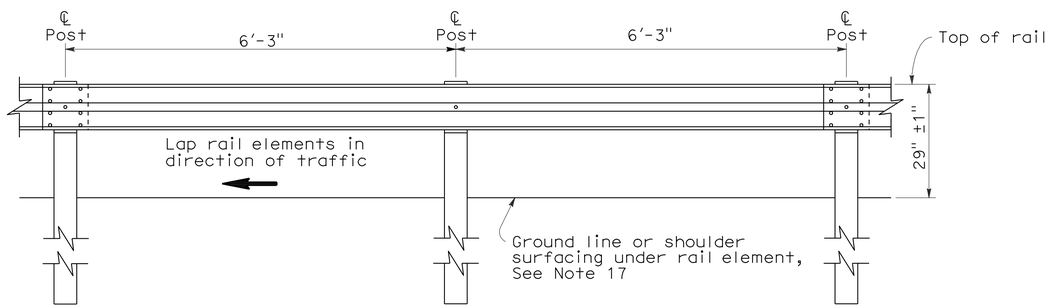

ELEVATION

METAL BEAM GUARD RAILING WITH WOOD POST AND BLOCKS

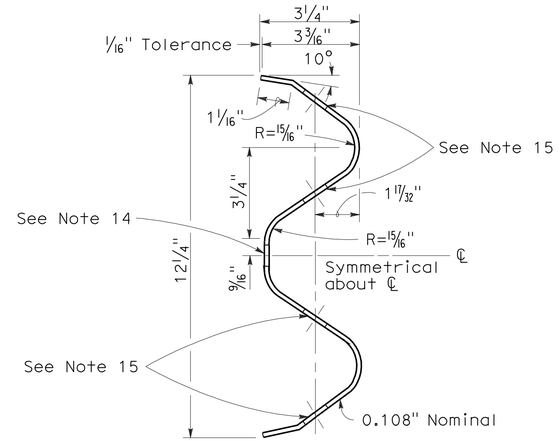

SECTION THRU RAIL ELEMENT

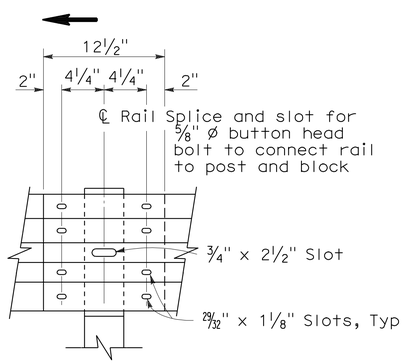

ELEVATION

RAIL ELEMENT SPLICE DETAIL

a) Connect the over lapped end of the rail elements with ⅝" ø x 1⅜" button head oval shoulder splice bolts inserted into the 29⁄32" x 1⅛" slots and bolted together with ⅝" ø recessed hex nuts. Recess of hex nut points toward rail element. A total of 8 bolts and nuts are to be used at each rail splice connection.

b) The ends of the rail elements are to be overlapped in the direction of traffic (see details).

c) Where end cap is to be attached to the end of a rail element, a total of 4 of the above described splice bolts and nuts are to be used.

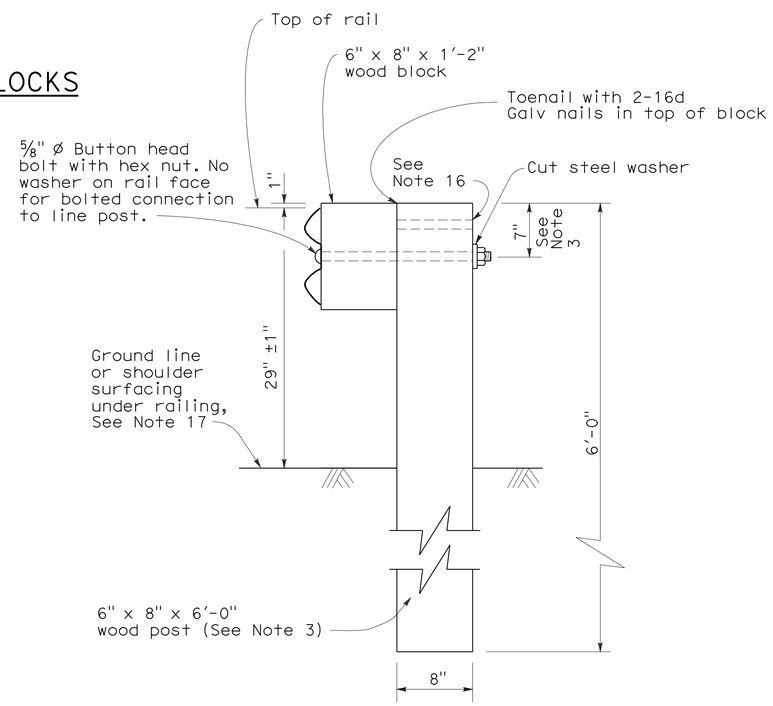

SECTION A-A

TYPICAL WOOD LINE POST INSTALLATION

See Note 4

NOTES:

1. For details of steel post installations, see Standard Plan A77A2.
2. For details of standard hardware used to construct guard railing, see Standard Plan A77B1.
3. For details of wood posts and wood blocks used to construct guard railing, see Standard Plan A77C1.
4. For additional installation details, see Standard Plan A77C3.
5. Guard railing post spacing to be 6'-3" center to center, except as otherwise noted.
6. For guard railing typical layouts, see the A77E, A77F and A77G Series of Standard Plans.
7. For terminal system end treatment details, see the A77L Series of Standard Plans. To connect railing to terminal system end treatment, transition the top of railing height at a ratio of 120:1 to terminal system end treatment height plus one 12'-6" standard railing section at the transitioned height for a horizontal connection to the end treatment.
8. For guard railing end anchor details, see Standard Plans A77H1 and A77I2.
9. For details of guard railing transition to bridge railing, see Standard Plan A77J4.
10. For additional details of guard railing connection to bridge railings, see Standard Plans A77J1, A77J2 and A77K1.
11. For guard railing connection details to abutments and walls, see Standard Plan A77J3.
12. Direction of adjacent traffic indicated by ➡.
13. For typical guard railing delineation and dike positioning details, see Standard Plan A77C4.
14. Slotted hole for bolted connection of rail element to block and post. See "Section Thru Rail Element".
15. Slotted holes for splice bolts to overlap ends of rail element. See "Section Thru Rail Element".
16. Additional hole in uppermost portion of line post is for potential future adjustments of railing height. See Standard Plan A77C1.
17. Install posts in soil.

STATE OF CALIFORNIA
DEPARTMENT OF TRANSPORTATION

METAL BEAM GUARD RAILING STANDARD RAILING SECTION (WOOD POST WITH WOOD BLOCK)

NO SCALE

RSP A77A1 DATED MAY 20, 2011 SUPERSEDES STANDARD PLAN A77A1 DATED MAY 1, 2006 - PAGE 41 OF THE STANDARD PLANS BOOK DATED MAY 2006.

REVISED STANDARD PLAN RSP A77A1

2006 REVISED STANDARD PLAN RSP A77A1

3-10-11

Dist	COUNTY	ROUTE	POST MILES TOTAL PROJECT	SHEET No.	TOTAL SHEETS
08	Riv	15	33.4/38.4	67	82

Randell D. Hiatt
REGISTERED CIVIL ENGINEER

May 20, 2011
PLANS APPROVAL DATE

To accompany plans dated 4-23-12

REGISTERED PROFESSIONAL ENGINEER Randell D. Hiatt No. C50200 Exp. 6-30-11 CIVIL STATE OF CALIFORNIA

The State of California or its officers or agents shall not be responsible for the accuracy or completeness of electronic copies of this plan sheet.

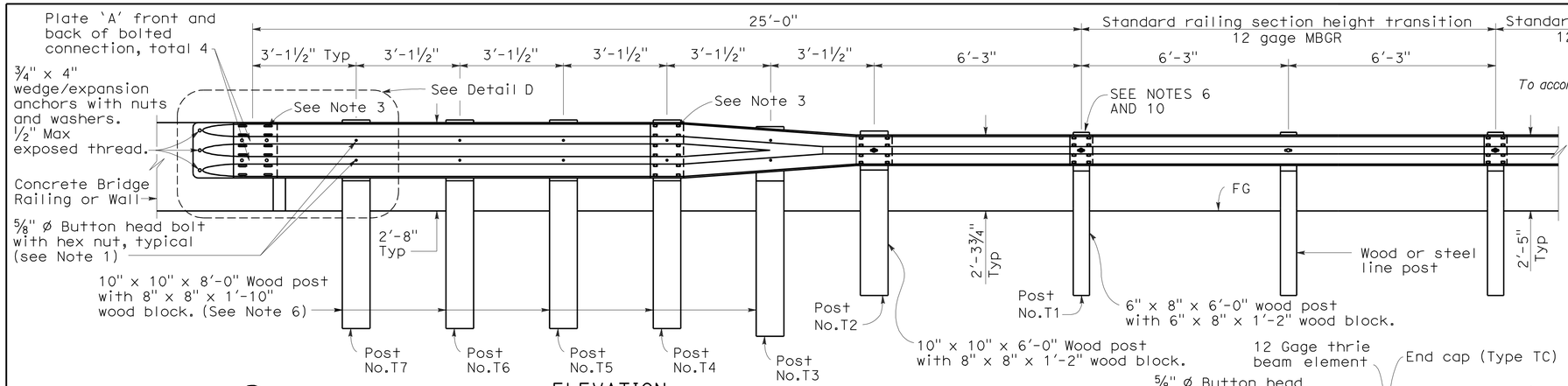

ELEVATION

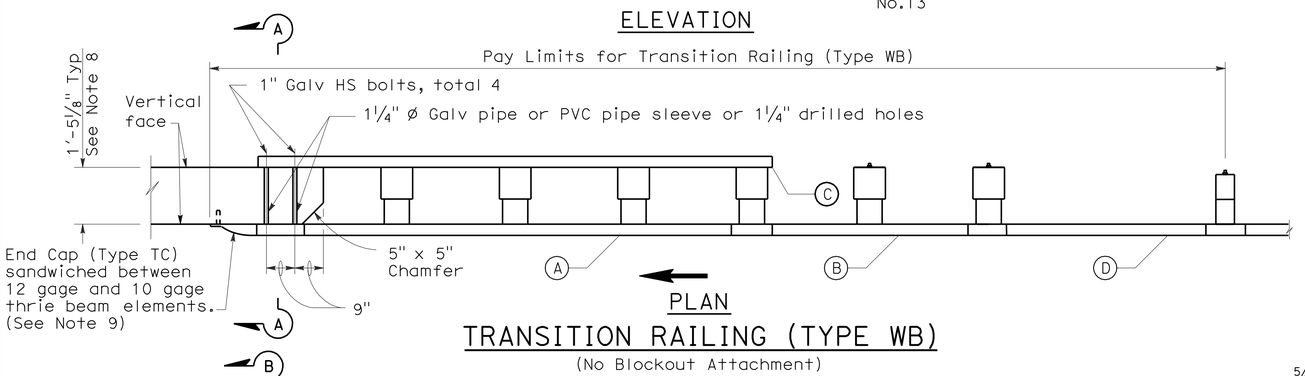

PLAN

TRANSITION RAILING (TYPE WB)

(No Blockout Attachment)

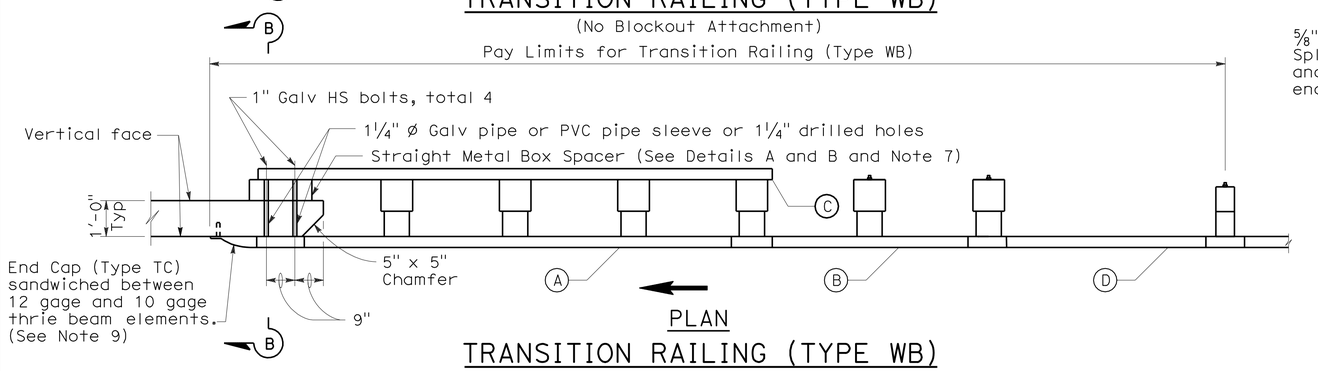

PLAN

TRANSITION RAILING (TYPE WB)

(Blockout Attachment)

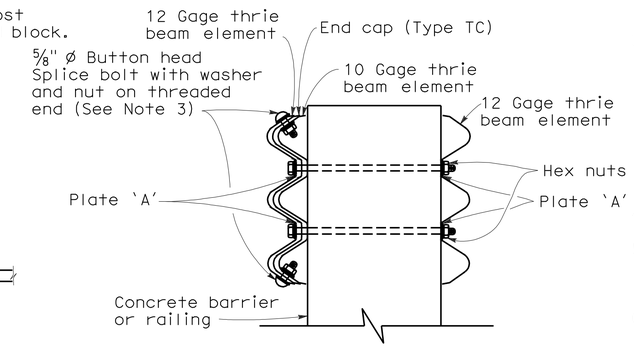

SECTION A-A

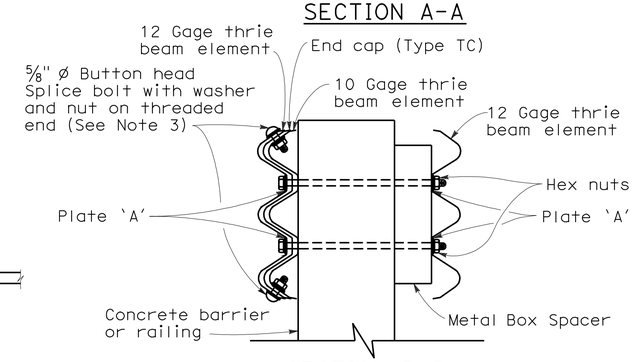

SECTION B-B

NOTES:

1. Use ⅝" ø Button head bolts and hex nuts for connections to posts. No washer on rail face for bolted connections to post.
2. The nested rail elements, end cap, and 'W' beam to thrie beam element may be spliced together prior to bolting the elements to the wood post and concrete barrier or railing.
3. Exterior splice bolt holes for rail element splices at Post No. T4 and the connection to the concrete barrier or railing shall be the standard 29/32" x 1⅛" slot size. Interior splice bolt holes at these locations may be increased up to 1¼" ø. Only the top 2 and the bottom 2 splice bolts with washers and nuts are required for rail splices at Post No. T4 and the connection to the concrete barrier or railing.
4. Direction of adjacent traffic indicated by →.
5. The top elevation of Posts No. T2 through No. T7 shall not project more than 1" above the top elevation of the rail element.
6. Typically, the railing connected to Transition Railing (Type WB) will be either standard railing section of metal beam guard railing with height transition ratio of 120:1 or an approved Caltrans end treatment attached to Post No. T1.
7. The depth of the metal box spacer varies from the 5⅛" to 1½" and is dependent on the width of the concrete railing or wall. The combined dimension for the depth of the metal box spacer plus the width of railing or wall is typically 17⅛". Where the space between the backside of the concrete railing or wall and the rear thrie beam element is less than 1½", metal plates similar to Plate 'A' are to be used as spacers.
8. Where the width of the concrete railing or wall is greater than 17⅛", wood blocks are to be used to fill the space created between the backside of Posts No. T4 through No. T7 and the rear thrie beam element. These wood blocks shall be 8" in width and 1'-2" in length. The dimension between the front thrie beam element and the rear thrie beam element is to match the width of the concrete railing or wall.
9. End cap may be installed over 12 gage and 10 gage thrie beam elements where transition railing is installed on the departure end of bridge railing.
10. Conform standard railing section height to 2'-3¾" at Post No. T1 using height transition ratio of 120:1.

LEGEND

(A) Nested thrie beam elements (one 12 gage element nested over one 10 gage element).

(B) One 10 gage "W" beam to thrie beam element.

(C) One 12 gage thrie beam element.

(D) One 10 gage "W" beam rail element (7'-3½" length)

10 gage = 0.135" thick

12 gage = 0.108" thick

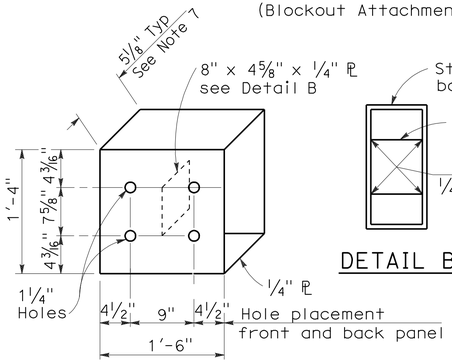

DETAIL A

STRAIGHT METAL BOX SPACER

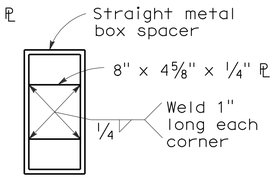

DETAIL B

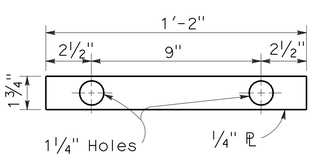

DETAIL C

PLATE 'A'

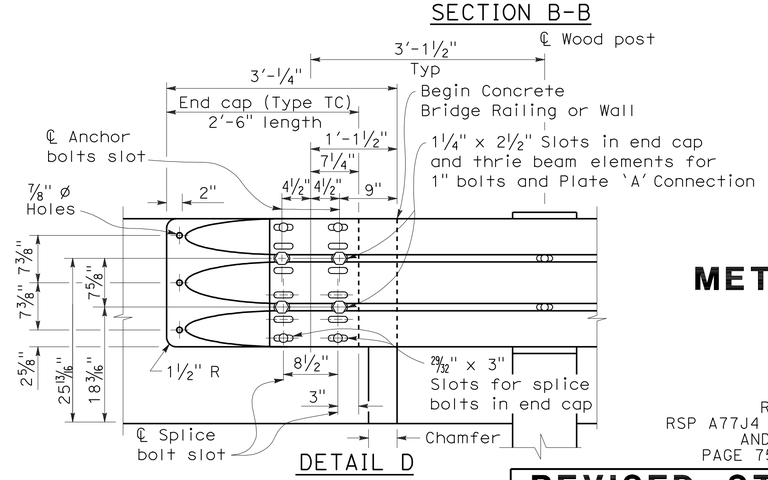

DETAIL D

STATE OF CALIFORNIA
DEPARTMENT OF TRANSPORTATION

METAL BEAM GUARD RAILING TRANSITION RAILING (TYPE WB)

NO SCALE

RSP A77J4 DATED MAY 20, 2011 SUPERSEDES
RSP A77J4 DATED JUNE 5, 2009, RSP A77J4 DATED JUNE 6, 2008
AND STANDARD PLAN A77J4 DATED MAY 1, 2006 -
PAGE 75 OF THE STANDARD PLANS BOOK DATED MAY 2006.

REVISED STANDARD PLAN RSP A77J4

2006 REVISED STANDARD PLAN RSP A77J4

5-14-09

DIST	COUNTY	ROUTE	POST MILES TOTAL PROJECT	SHEET NO.	TOTAL SHEETS
08	Riv	15	33.4/38.4	68	82

Randell D. Hiatt
REGISTERED CIVIL ENGINEER

June 6, 2008
PLANS APPROVAL DATE

REGISTERED PROFESSIONAL ENGINEER
Randell D. Hiatt
No. C50200
Exp. 6-30-09
CIVIL
STATE OF CALIFORNIA

The State of California or its officers or agents shall not be responsible for the accuracy or completeness of electronic copies of this plan sheet.

To accompany plans dated 4-23-12

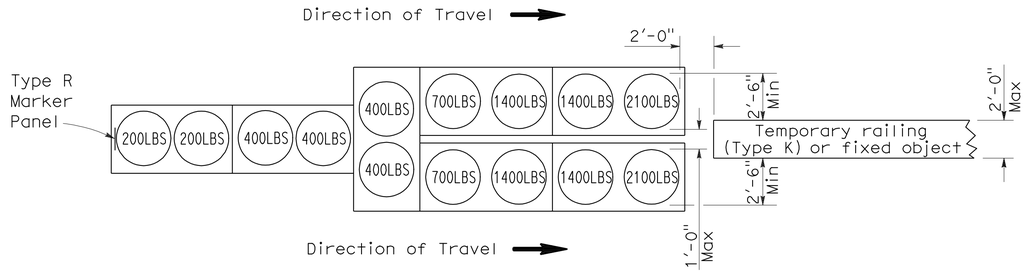

ARRAY `TU14'

Approach speed 45 mph or more

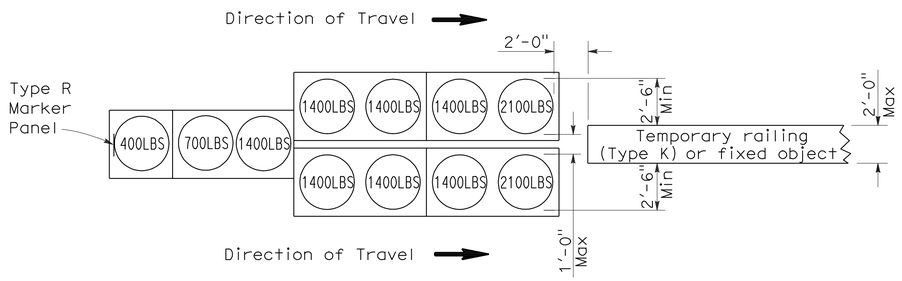

ARRAY `TU11'

Approach speed less than 45 mph

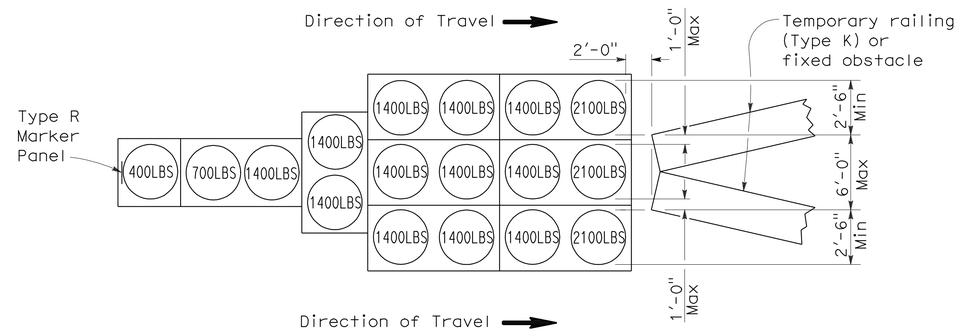

ARRAY `TU17'

Approach speed less than 45 mph

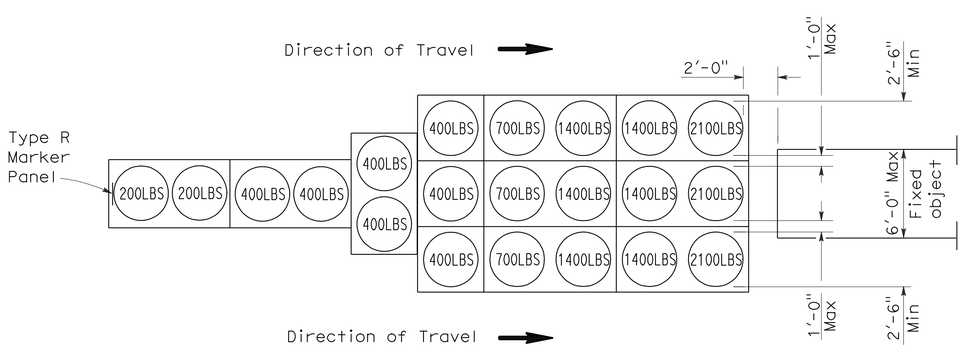

ARRAY `TU21'

Approach speed 45 mph or more

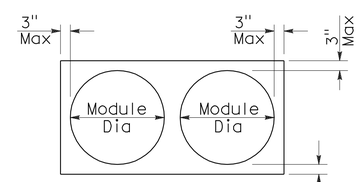

PLAN

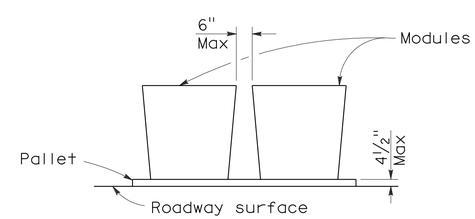

ELEVATION

CRASH CUSHION PALLET DETAIL

See Note 7

NOTES:

1. (XXX) Indicates sand filled module location and weight of sand in pounds for each module. Module spacing is based on the greater diameter of the module.
2. All sand weights are nominal.
3. Temporary crash cushion arrays shall not encroach on the traveled way.
4. Place the top of Type R marker panel 1" below the module lid.
5. Refer to Standard Plan A73B for marker details.
6. Approach speeds indicated conform to NCHRP 350 Report criteria.
7. Use of pallets is optional.

STATE OF CALIFORNIA
DEPARTMENT OF TRANSPORTATION

TEMPORARY CRASH CUSHION, SAND FILLED (UNIDIRECTIONAL)

NO SCALE

RSP T1A DATED JUNE 6, 2008 SUPERSEDES STANDARD PLAN T1A
DATED MAY 1, 2006 - PAGE 211 OF THE STANDARD PLANS BOOK DATED MAY 2006.

REVISED STANDARD PLAN RSP T1A

2006 REVISED STANDARD PLAN RSP T1A

DIST	COUNTY	ROUTE	POST MILES TOTAL PROJECT	SHEET NO.	TOTAL SHEETS
08	Riv	15	33.4/38.4	69	82

Randell D. Hiatt
REGISTERED CIVIL ENGINEER

June 6, 2008
PLANS APPROVAL DATE

REGISTERED PROFESSIONAL ENGINEER
Randell D. Hiatt
No. C50200
Exp. 6-30-09
CIVIL
STATE OF CALIFORNIA

The State of California or its officers or agents shall not be responsible for the accuracy or completeness of electronic copies of this plan sheet.

To accompany plans dated 4-23-12

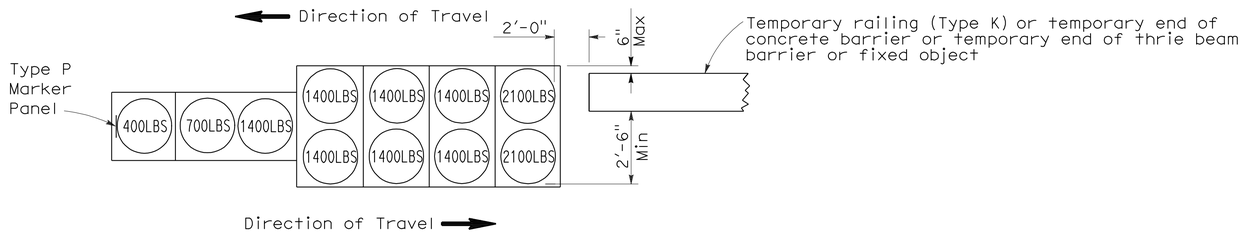

ARRAY 'TB11'

Approach speed less than 45 mph

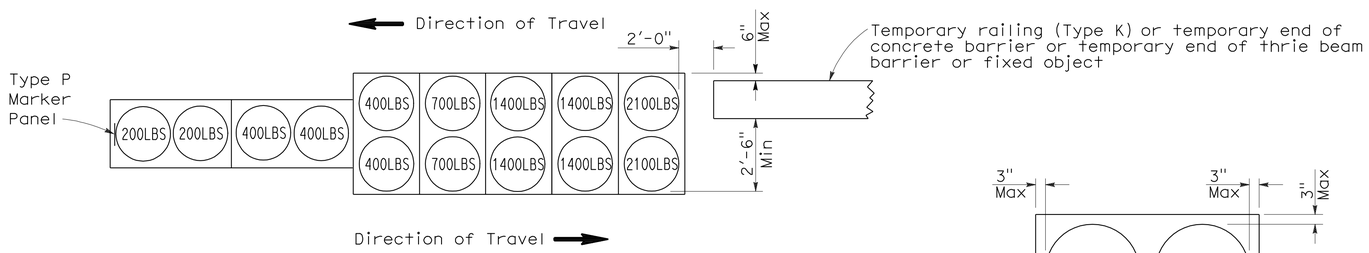

ARRAY 'TB14'

Approach speed 45 mph or more

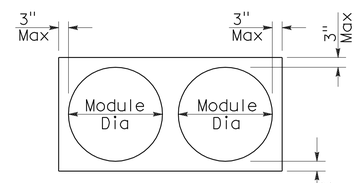

PLAN

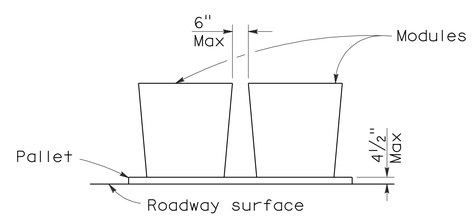

ELEVATION

CRASH CUSHION PALLET DETAIL

See Note 7

NOTES:

1. (XXX) Indicates sand filled module location and weight of sand in pounds for each module. Module spacing is based on the greater diameter of the module.
2. All sand weights are nominal.
3. Temporary crash cushion arrays shall not encroach on the traveled way.
4. Place the Type P marker panel so that the bottom of the panel rests upon the pallet.
5. Refer to Standard Plan A73B for marker details.
6. Approach speeds indicated conform to NCHRP 350 Report criteria.
7. Use of pallets is optional.

STATE OF CALIFORNIA
DEPARTMENT OF TRANSPORTATION

TEMPORARY CRASH CUSHION, SAND FILLED (BIDIRECTIONAL)

NO SCALE

RSP T1B DATED JUNE 6, 2008 SUPERSEDES STANDARD PLAN T1B
DATED MAY 1, 2006 - PAGE 212 OF THE STANDARD PLANS BOOK DATED MAY 2006.

REVISED STANDARD PLAN RSP T1B

2006 REVISED STANDARD PLAN RSP T1B

DIST	COUNTY	ROUTE	POST MILES TOTAL PROJECT	SHEET NO.	TOTAL SHEETS
08	Riv	15	33.4/38.4	70	82

Randell D. Hiatt
REGISTERED CIVIL ENGINEER

June 6, 2008
PLANS APPROVAL DATE

REGISTERED PROFESSIONAL ENGINEER
Randell D. Hiatt
No. C50200
Exp. 6-30-09
CIVIL
STATE OF CALIFORNIA

The State of California or its officers or agents shall not be responsible for the accuracy or completeness of electronic copies of this plan sheet.

To accompany plans dated 4-23-12

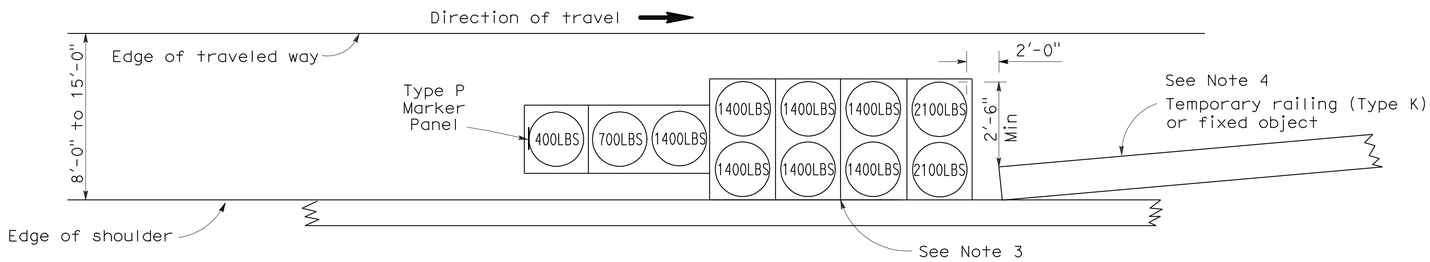

ARRAY 'TS11'

Approach speed less than 45 mph
See Note 9

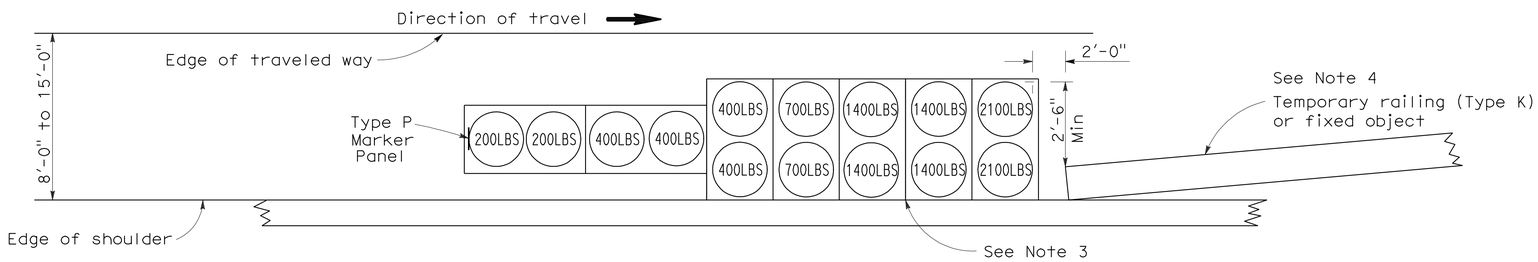

ARRAY 'TS14'

Approach speed 45 mph or more
See Note 9

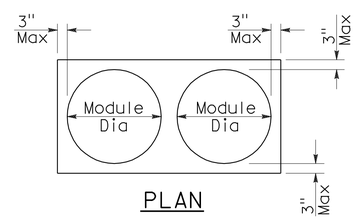

PLAN

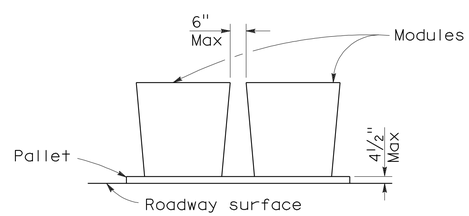

ELEVATION

CRASH CUSHION PALLET DETAIL

See Note 11

NOTES:

1. (XXX) Indicates sand filled module location and weight of sand in pounds for each module. Module spacing is based on the greater diameter of the module.
2. All sand weights are nominal.
3. The temporary crash cushion arrays shown on this plan shall be used only in locations where there will be traffic on one side of the temporary crash cushion array.
4. If the fixed object or approach end of the temporary railing is less than 15'-0" from the edge of traveled way, a temporary crash cushion is required in a construction or work zone.
5. Temporary crash cushion arrays shall not encroach on the traveled way.
6. Arrays for median shoulders shall conform to details shown on this plan for outside shoulders.
7. Place the Type P marker panel so that the bottom of the panel rests upon the pallet and faces traffic.
8. Refer to Standard Plan A73B for marker details.
9. For shoulder widths less than 8'-0", appropriate approved crash cushion protection, other than sand filled modules, shall be provided at fixed objects and at approach ends of temporary railing. The specific type of crash cushion shall be as shown on the project plans or as specified in the Special Provisions, or if not shown on the project plans or specified in the Special Provisions, shall be as approved by the Engineer.
10. Approach speeds indicated conform to NCHRP 350 Report criteria.
11. Use of pallets is optional.

STATE OF CALIFORNIA
DEPARTMENT OF TRANSPORTATION

TEMPORARY CRASH CUSHION, SAND FILLED (SHOULDER INSTALLATIONS)

NO SCALE

RSP T2 DATED JUNE 6, 2008 SUPERSEDES STANDARD PLAN T2
DATED MAY 1, 2006 - PAGE 213 OF THE STANDARD PLANS BOOK DATED MAY 2006.

REVISED STANDARD PLAN RSP T2

2006 REVISED STANDARD PLAN RSP T2

5-15-08

Dist	COUNTY	ROUTE	POST MILES TOTAL PROJECT	SHEET No.	TOTAL SHEETS
08	Riv	15	33.4/38.4	71	82

Randell D. Hiatt
REGISTERED CIVIL ENGINEER

May 20, 2011
PLANS APPROVAL DATE

REGISTERED PROFESSIONAL ENGINEER
Randell D. Hiatt
No. C50200
Exp. 6-30-11
CIVIL
STATE OF CALIFORNIA

The State of California or its officers or agents shall not be responsible for the accuracy or completeness of electronic copies of this plan sheet.

To accompany plans dated 4-23-12

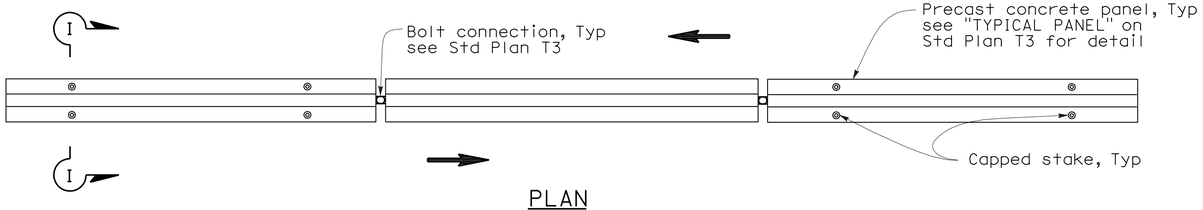

PLAN

RAILING STAKING CONFIGURATION FOR TWO-WAY TRAFFIC

See Note 1

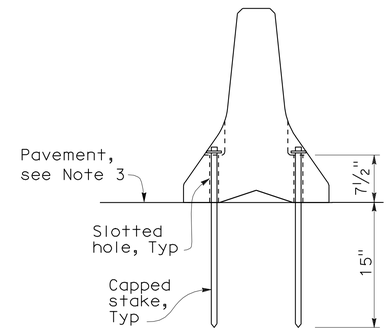

SECTION I-I

NOTES:

1. Where Type K Temporary Railing is placed as a temporary or long term barrier in two-way traffic on highways with less than 24" from the edge of traveled way, use four capped stakes per every other panel with end panels staked.
2. Where Type K Temporary Railing is placed 3" to 24" from the edge of an excavation on highways, use two capped stakes per panel along the traffic side.
3. Staked Type K Temporary Railing must be supported by at least 4" thick concrete, hot mix asphalt or existing asphalt concrete pavement.
4. The minimum yield strength for the washer must be 60,000 psi.
5. Direction of adjacent traffic indicated by ⟹.

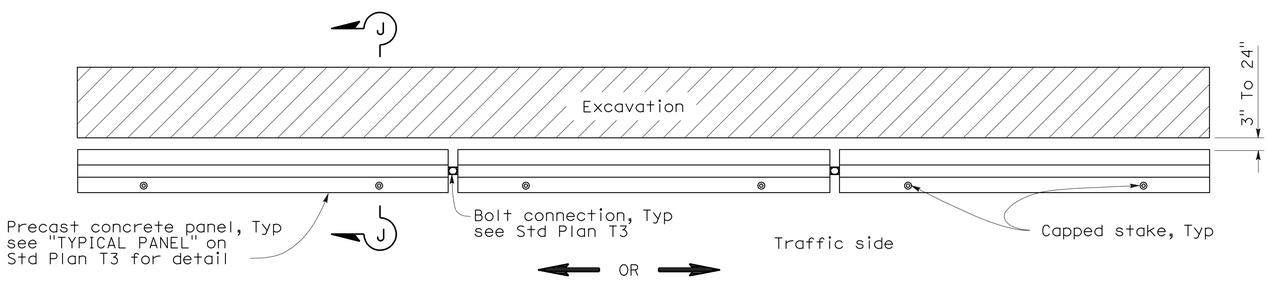

PLAN

RAILING STAKING CONFIGURATION ADJACENT TO AN EXCAVATION

See Note 2

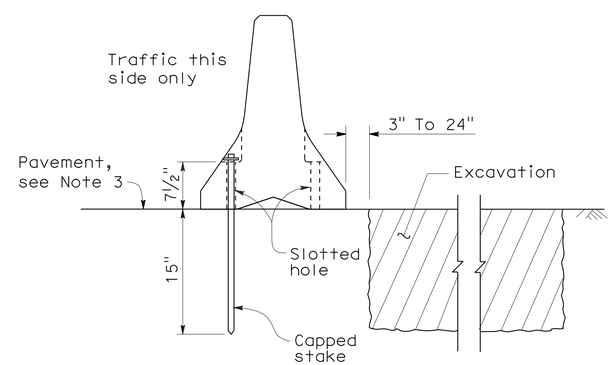

SECTION J-J

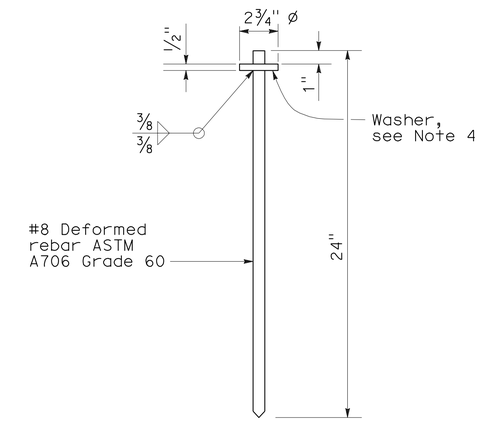

CAPPED STAKE DETAIL

STATE OF CALIFORNIA
DEPARTMENT OF TRANSPORTATION

TEMPORARY RAILING (TYPE K)

NO SCALE

NSP T3A DATED MAY 20, 2011 SUPPLEMENTS THE STANDARD PLANS BOOK DATED MAY 2006.

NEW STANDARD PLAN NSP T3A

2006 NEW STANDARD PLAN NSP T3A

DIST	COUNTY	ROUTE	POST MILES TOTAL PROJECT	SHEET NO.	TOTAL SHEETS
08	Riv	15	33.4/38.4	72	82

REGISTERED CIVIL ENGINEER

November 17, 2006
PLANS APPROVAL DATE

REGISTERED PROFESSIONAL ENGINEER
Greg W. Edwards
No. C36386
Exp. 6-30-08
CIVIL
STATE OF CALIFORNIA

The State of California or its officers or agents shall not be responsible for the accuracy or completeness of electronic copies of this plan sheet.

To accompany plans dated 4-23-12

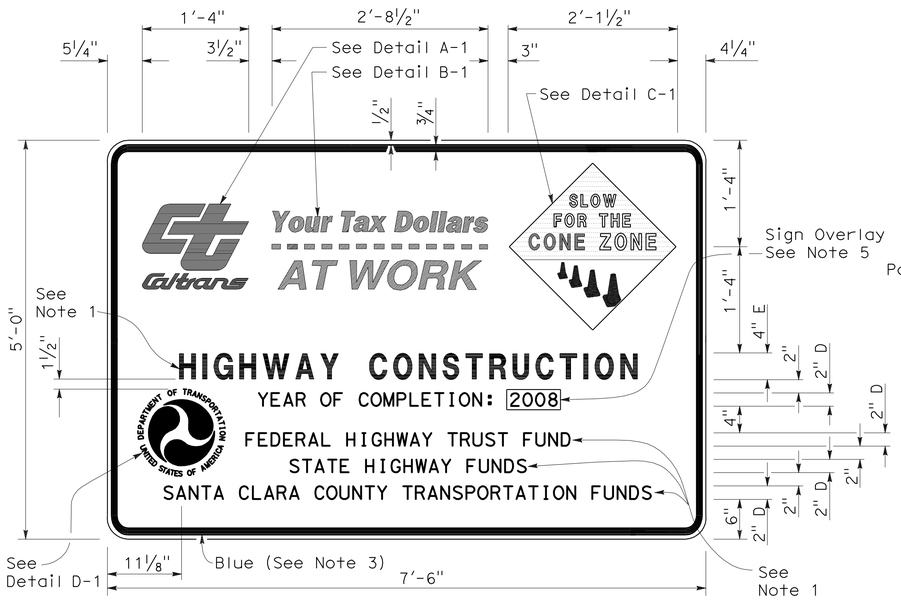

TYPE 1

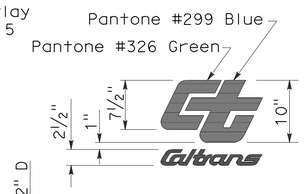

DETAIL A-1

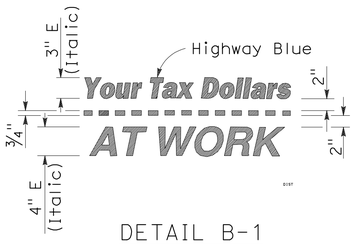

DETAIL B-1
(See Note 3)

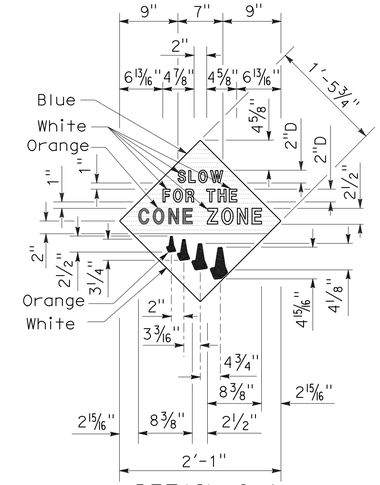

DETAIL C-1
(See Note 4)

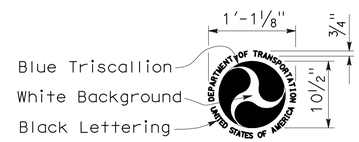

DETAIL D-1
(See Note 6)

NOTES:

1. The sign messages shown for type of project and fund types are examples only. See the Special Provisions for the applicable type of project and fund type messages to be used.
2. Except as otherwise shown, the legend of sign shall be black on a white background (non-reflective).
3. The border of the signs and details "B-1" and "B-2" shall be blue (non-reflective).
4. The diamond in details "C-1" and "C-2" shall be blue for the background of message, " SLOW FOR THE CONE ZONE", and white background for the orange cones. The color and type of font for the "SLOW FOR THE CONE ZONE" message shall be: "SLOW" white D; "FOR THE" white D; "CONE" orange Arial font; "ZONE" white Arial font.
5. Year of completion of project construction shown on the overlay is an example only. See the Special Provisions.
6. Use when the Project involves Federal Highway Trust Fund.

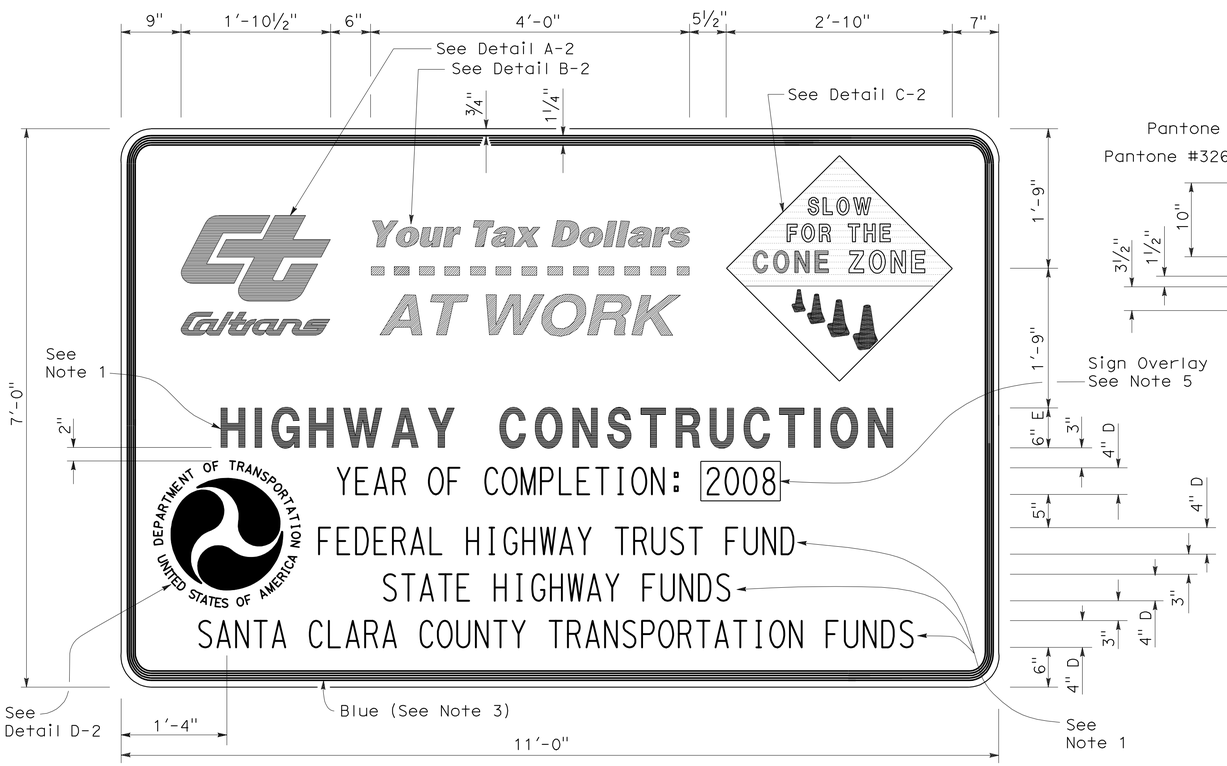

TYPE 2

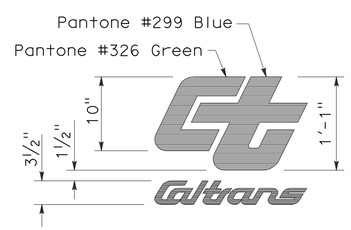

DETAIL A-2

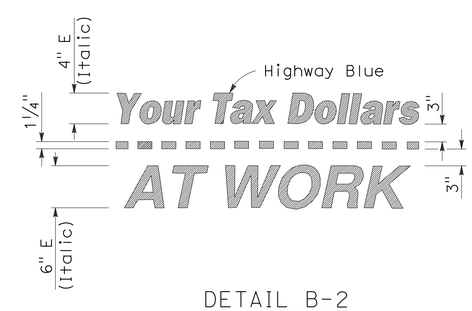

DETAIL B-2
(See Note 3)

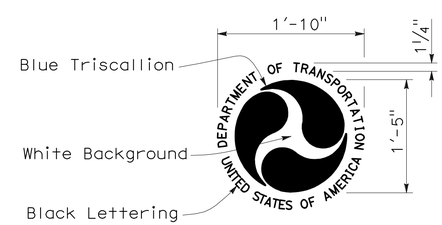

DETAIL D-2
(See Note 6)

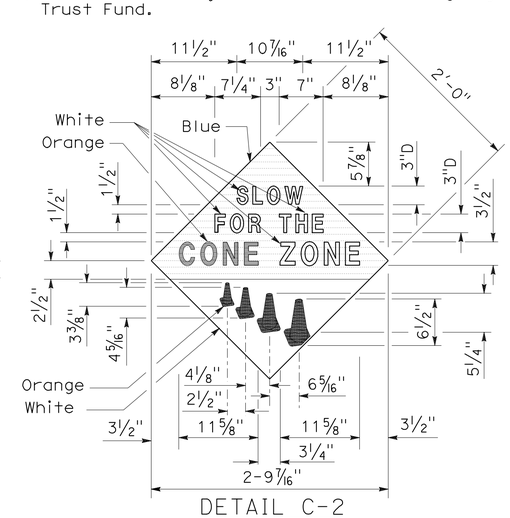

DETAIL C-2
(See Note 4)

STATE OF CALIFORNIA
DEPARTMENT OF TRANSPORTATION

CONSTRUCTION PROJECT FUNDING IDENTIFICATION SIGNS

NO SCALE

RSP T7 DATED NOVEMBER 17, 2006 SUPERSEDES STANDARD PLAN T7
DATED MAY 1, 2006 - PAGE 217 OF THE STANDARD PLANS BOOK DATED MAY 2006.

REVISED STANDARD PLAN RSP T7

2006 REVISED STANDARD PLAN RSP T7

9-7-06

DIST	COUNTY	ROUTE	POST MILES TOTAL PROJECT	SHEET NO.	TOTAL SHEETS
08	Riv	15	33.4/38.4	73	82

Robert B Schott
LICENSED LANDSCAPE ARCHITECT

August 15, 2008
PLANS Approval DATE

LICENSED LANDSCAPE ARCHITECT
Robert B. Schott 3025
Robert B Schott
Signature
11-04-08
Renewal Date
08-11-08
Date
STATE OF CALIFORNIA

The State of California or its officers or agents shall not be responsible for the accuracy or completeness of electronic copies of this plan sheet.

To accompany plans dated 4-23-12

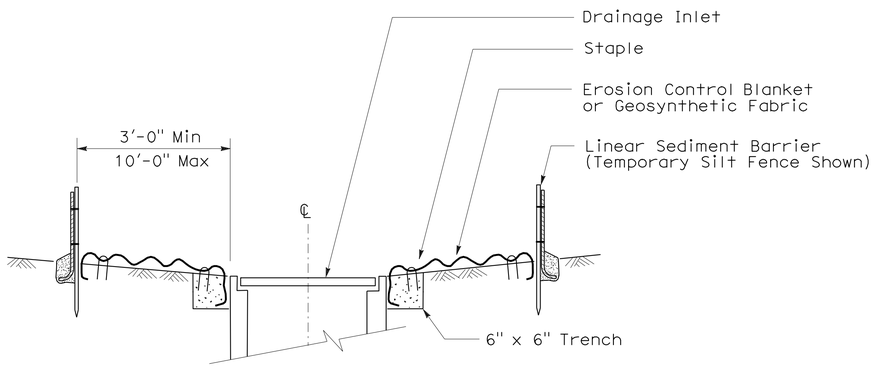

SECTION A-A

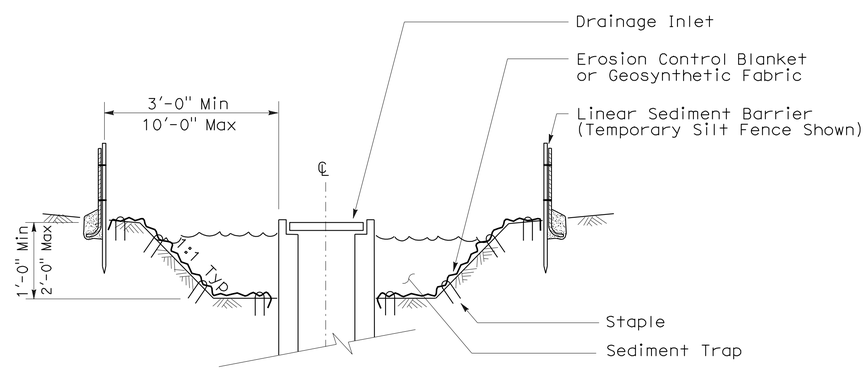

SECTION B-B

NOTES:

1. See Standard Plan T51 for Temporary Silt Fence.
2. Dimensions may vary to fit field conditions.

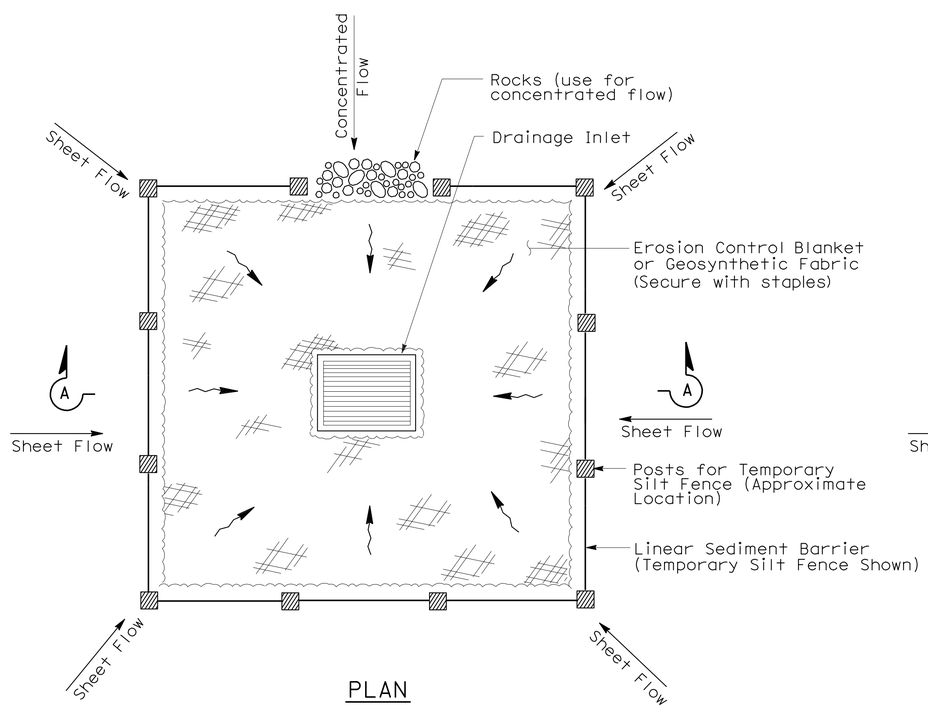

PLAN

TEMPORARY DRAINAGE
INLET PROTECTION (TYPE 1)

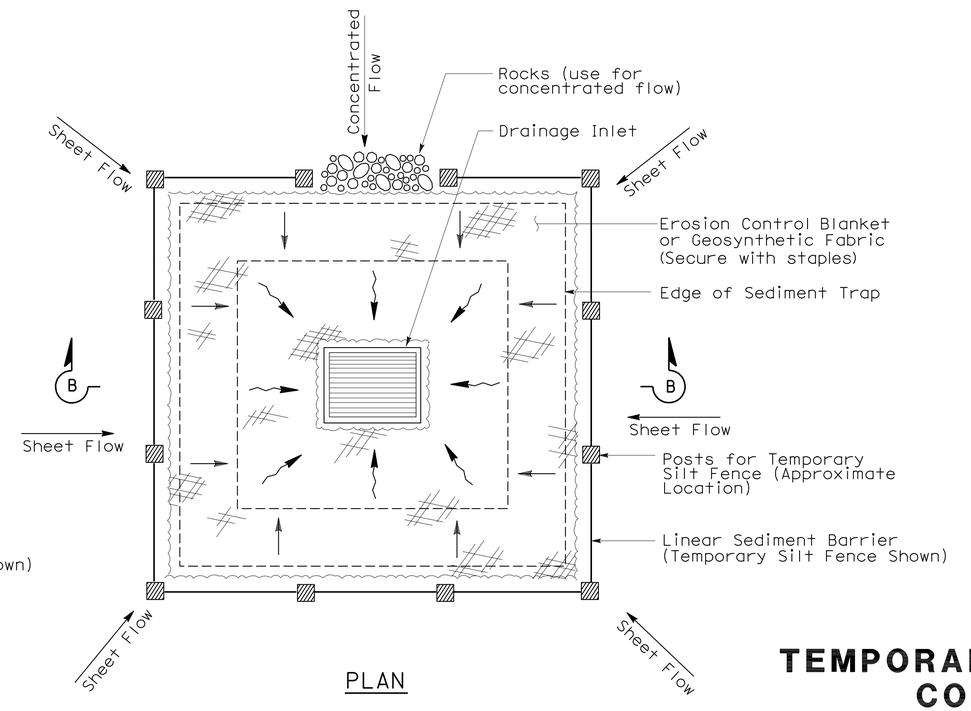

PLAN

TEMPORARY DRAINAGE
INLET PROTECTION (TYPE 2)
(EXCAVATED SEDIMENT TRAP)

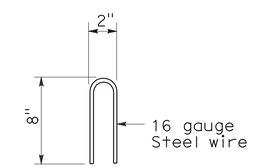

STAPLE DETAIL

STATE OF CALIFORNIA
DEPARTMENT OF TRANSPORTATION

TEMPORARY WATER POLLUTION CONTROL DETAILS (TEMPORARY DRAINAGE INLET PROTECTION)

NO SCALE

NSP T61 DATED AUGUST 15, 2008 SUPPLEMENTS
THE STANDARD PLANS BOOK DATED MAY 2006.

NEW STANDARD PLAN NSP T61

2006 NEW STANDARD PLAN NSP T61

7-11-08

DIST	COUNTY	ROUTE	POST MILES TOTAL PROJECT	SHEET NO.	TOTAL SHEETS
08	Riv	15	33.4/38.4	74	82

LICENSED LANDSCAPE ARCHITECT

August 15, 2008
PLANS APPROVAL DATE

The State of California or its officers or agents shall not be responsible for the accuracy or completeness of electronic copies of this plan sheet.

LICENSED LANDSCAPE ARCHITECT — Robert B. Schott — Signature — 11-04-08 Renewal Date — 08-11-08 Date — STATE OF CALIFORNIA

To accompany plans dated 4-23-12

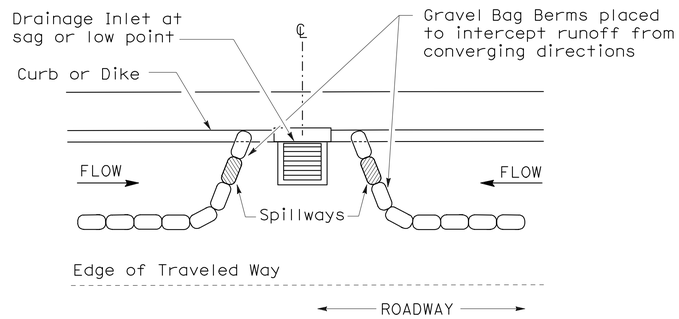

PLAN

CONFIGURATION FOR SAG POINT INLET (GRAVEL BAG BERM)

GRAVEL BAG BERM (TYPE 3A) SPACING TABLE

SLOPE OF ROADWAY (PERCENT)	1 to 3.9	4 to 5.9	6 to 7.9	8 to 10	10+
INTERVAL BETWEEN BERM	100′	75′	50′	25′	12′

For slope of less than 1%, install barriers only if erosion/sediment is prevalent

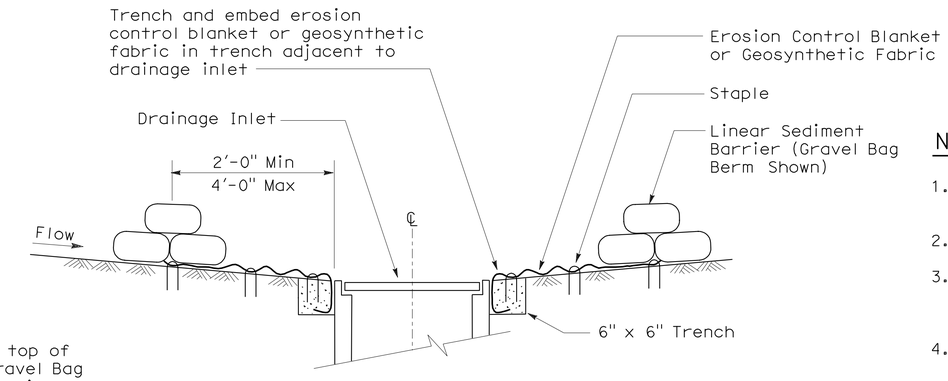

SECTION A-A

NOTES:

1. Place safety cones adjacent to drainage inlet protection.
2. Dimensions may vary to fit field conditions.
3. Install a minimum of 3 gravel bag berms upstream of each drainage inlet to be protected.
4. Position erosion control blanket or geosynthetic fabric at edge of concrete apron and secure in trench.
5. Erosion control blanket or geosynthetic fabric is not required if the area adjacent to the drainage inlet is vegetated or paved.

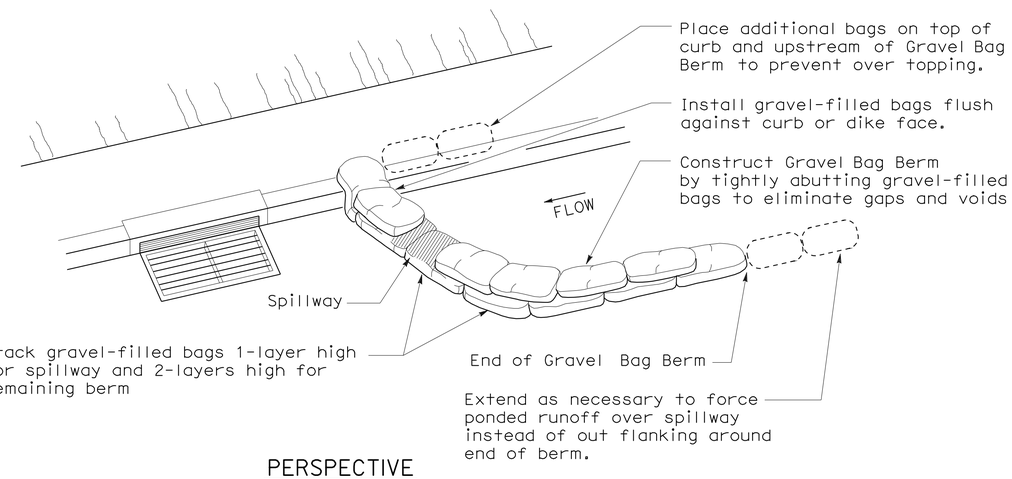

PERSPECTIVE

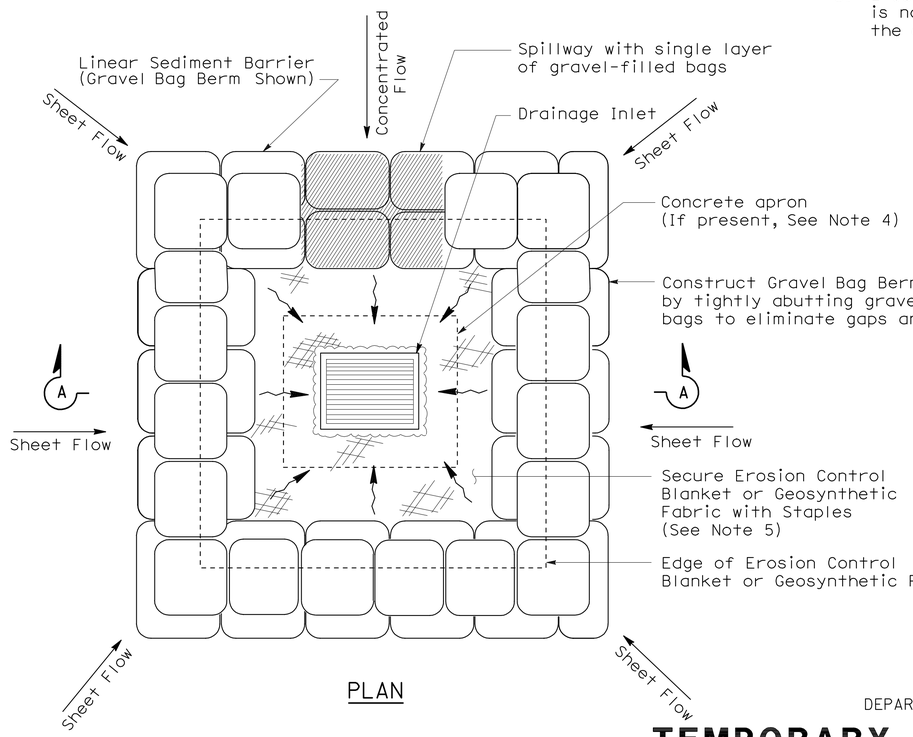

PLAN

TEMPORARY DRAINAGE INLET PROTECTION (TYPE 3B)

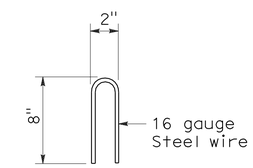

STAPLE DETAIL

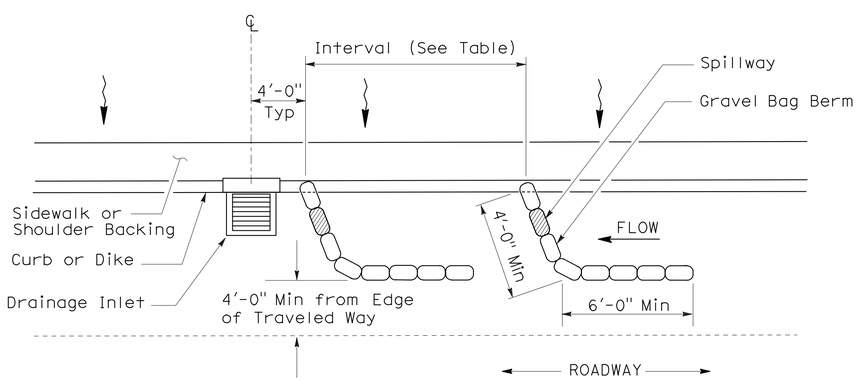

PLAN

TEMPORARY DRAINAGE INLET PROTECTION (TYPE 3A) (GRAVEL BAG BERM)

STATE OF CALIFORNIA
DEPARTMENT OF TRANSPORTATION

TEMPORARY WATER POLLUTION CONTROL DETAILS (TEMPORARY DRAINAGE INLET PROTECTION)

NO SCALE

NSP T62 DATED AUGUST 15, 2008 SUPPLEMENTS THE STANDARD PLANS BOOK DATED MAY 2006.

NEW STANDARD PLAN NSP T62

2006 NEW STANDARD PLAN NSP T62

7-11-08

DIST	COUNTY	ROUTE	POST MILES TOTAL PROJECT	SHEET NO.	TOTAL SHEETS
08	Riv	15	33.4/38.4	75	82

LICENSED LANDSCAPE ARCHITECT

August 15, 2008
PLANS APPROVAL DATE

The State of California or its officers or agents shall not be responsible for the accuracy or completeness of electronic copies of this plan sheet.

LICENSED LANDSCAPE ARCHITECT Robert B. Schott 3025 Signature 11-04-08 Renewal Date 08-11-08 Date STATE OF CALIFORNIA

To accompany plans dated 4-23-12

FLEXIBLE SEDIMENT BARRIER SPACING TABLE

SLOPE OF ROADWAY (PERCENT)	0 to 0.9	1 to 1.9	2 to 2.9	3 to 4	5+
INTERVAL BETWEEN BARRIERS	50′	35′	30′	25′	20′
ANGLE FROM FACE OF CURB	70°	70°	70°	45°	45°
SUGGESTED BARRIER LENGTH	6′	6′	6′	6′	6′

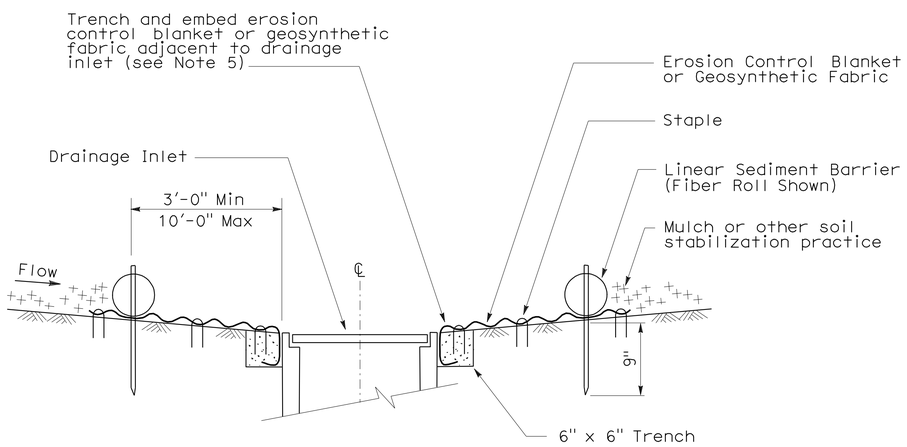

SECTION A-A

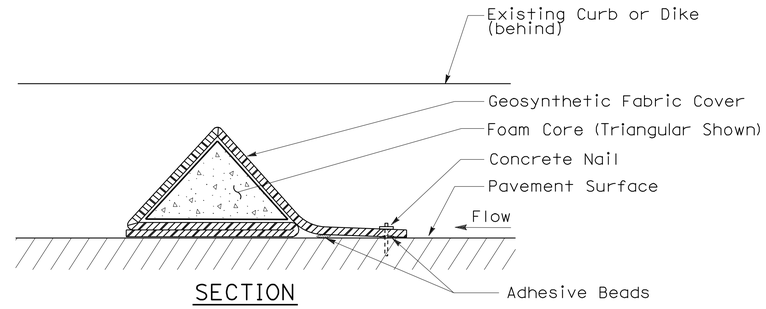

SECTION

FLEXIBLE SEDIMENT BARRIER DETAIL (FOAM BARRIER SHOWN)

NOTES:

1. See Standard Plan T51 for Temporary Silt Fence.
2. Dimensions may vary to fit field conditions.
3. Install a minimum of 3 flexible sediment barriers upstream of each drainage inlet to be protected.
4. Position erosion control blanket or geosynthetic fabric at edge of concrete apron and secure in trench.
5. Erosion control blanket or geosynthetic fabric is not required if the area adjacent to the drainage inlet is vegetated.

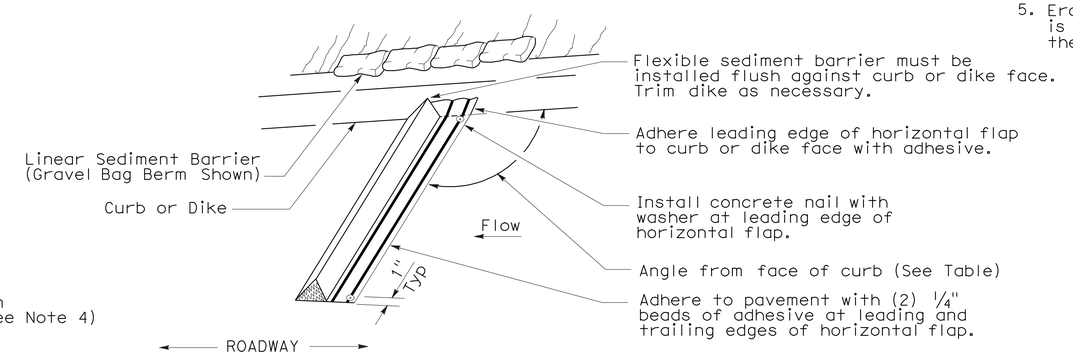

PERSPECTIVE

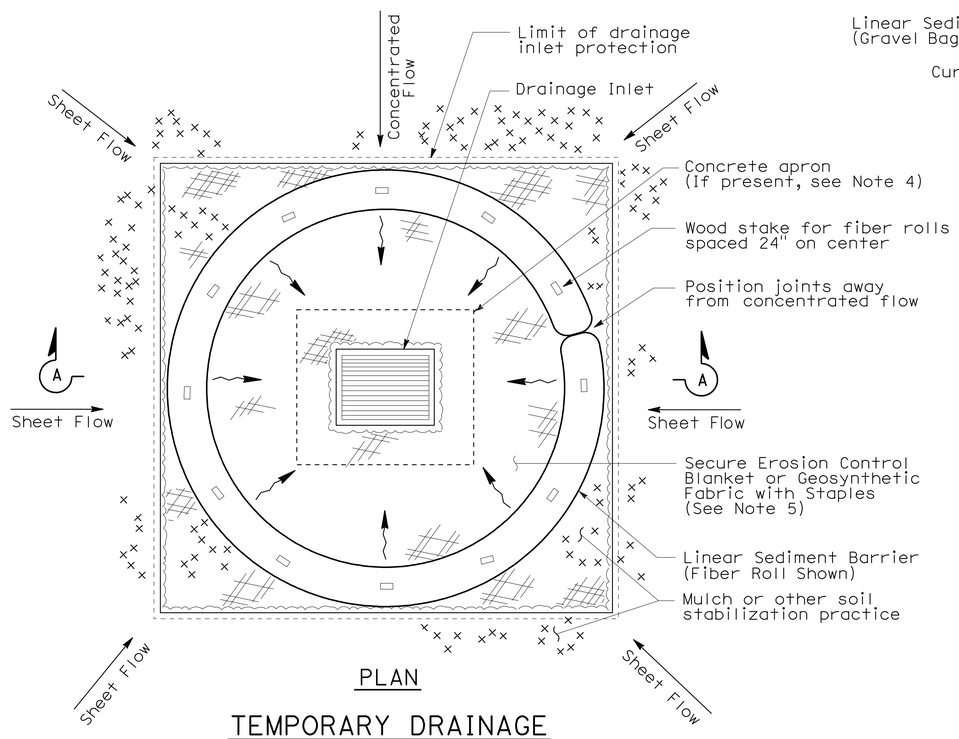

PLAN

TEMPORARY DRAINAGE INLET PROTECTION (TYPE 4A)

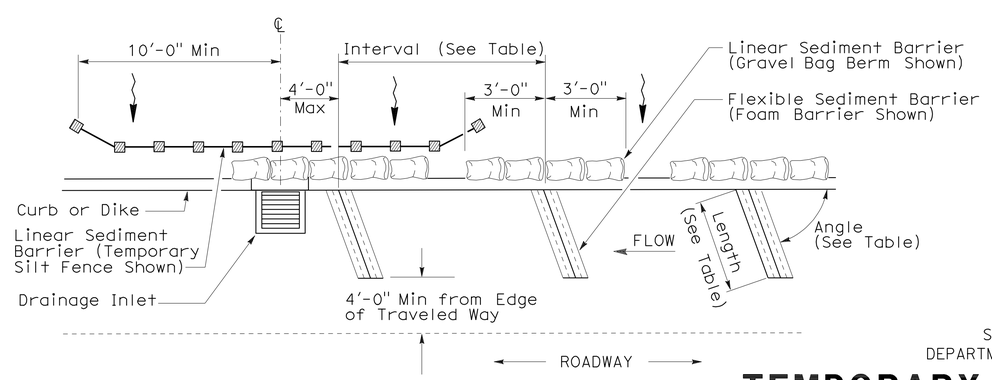

PLAN

TEMPORARY DRAINAGE INLET PROTECTION (TYPE 4B) FLEXIBLE SEDIMENT BARRIER

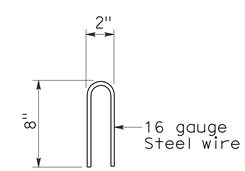

STAPLE DETAIL

STATE OF CALIFORNIA
DEPARTMENT OF TRANSPORTATION

TEMPORARY WATER POLLUTION CONTROL DETAILS (TEMPORARY DRAINAGE INLET PROTECTION)

NO SCALE

NSP T63 DATED AUGUST 15, 2008 SUPPLEMENTS THE STANDARD PLANS BOOK DATED MAY 2006.

NEW STANDARD PLAN NSP T63

2006 NEW STANDARD PLAN NSP T63

7-11-08

DIST	COUNTY	ROUTE	POST MILES TOTAL PROJECT	SHEET NO.	TOTAL SHEETS
08	Riv	15	33.4/38.4	76	82

LICENSED LANDSCAPE ARCHITECT

August 15, 2008
PLANS APPROVAL DATE

LICENSED LANDSCAPE ARCHITECT
Robert B. Schott 3625
Signature 11-04-08
Renewal Date 08-11-08
Date
STATE OF CALIFORNIA

The State of California or its officers or agents shall not be responsible for the accuracy or completeness of electronic copies of this plan sheet.

To accompany plans dated 4-23-12

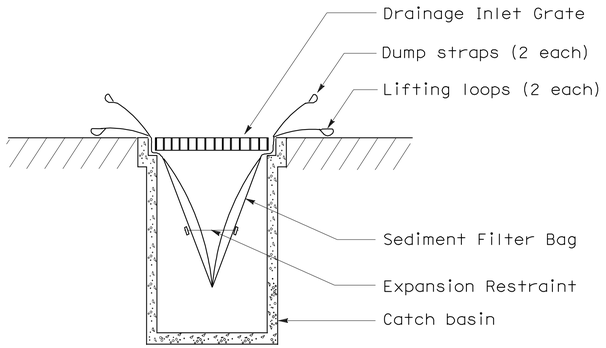

SECTION B-B

SEDIMENT FILTER BAG DETAIL

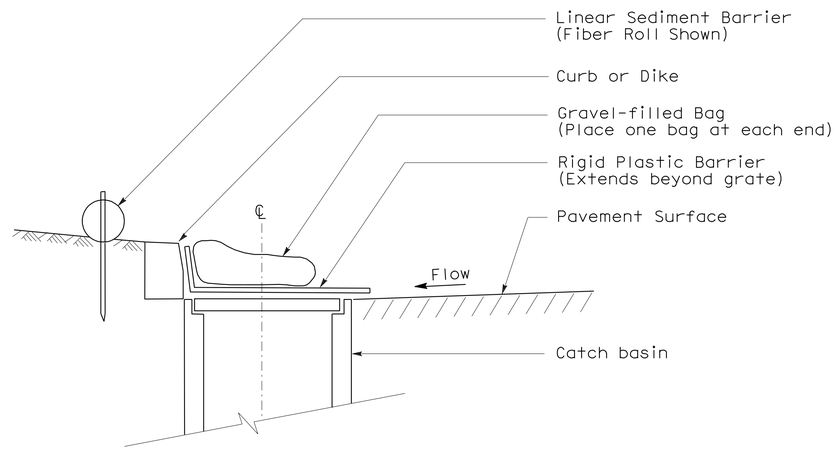

SECTION

TEMPORARY DRAINAGE INLET PROTECTION (TYPE 6A) (CATCH BASIN WITH GRATE)

NOTES:

1. See Standard Plan T51 for Temporary Silt Fence.
2. Dimensions may vary to fit field conditions.

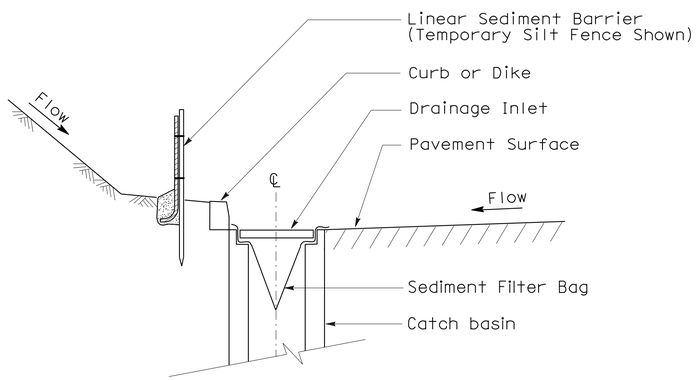

SECTION A-A

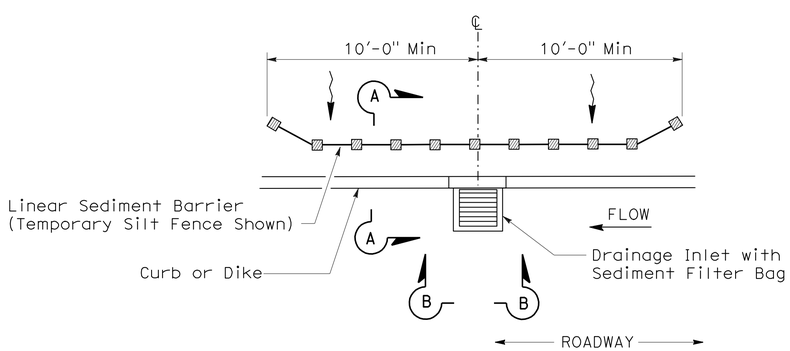

PLAN

TEMPORARY DRAINAGE INLET PROTECTION (TYPE 5) (SEDIMENT FILTER BAG)

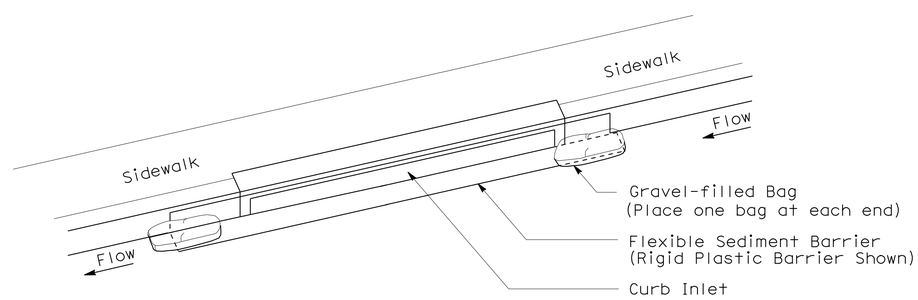

PERSPECTIVE

TEMPORARY DRAINAGE INLET PROTECTION (TYPE 6B) (CURB INLET WITHOUT GRATE)

STATE OF CALIFORNIA
DEPARTMENT OF TRANSPORTATION

TEMPORARY WATER POLLUTION CONTROL DETAILS (TEMPORARY DRAINAGE INLET PROTECTION)

NO SCALE

NSP T64 DATED AUGUST 15, 2008 SUPPLEMENTS
THE STANDARD PLANS BOOK DATED MAY 2006.

NEW STANDARD PLAN NSP T64

2006 NEW STANDARD PLAN NSP T64

7-11-08

DIST	COUNTY	ROUTE	POST MILES TOTAL PROJECT	SHEET NO.	TOTAL SHEETS
08	Riv	15	33.4/38.4	77	82

REGISTERED ELECTRICAL ENGINEER

REGISTERED PROFESSIONAL ENGINEER Jeffery G. McRae No. E14512 Exp. 6-30-08 ELECTRICAL STATE OF CALIFORNIA

October 5, 2007
PLANS APPROVAL DATE

The State of California or its officers or agents shall not be responsible for the accuracy or completeness of electronic copies of this plan sheet.

To accompany plans dated 4-23-12

ELECTROLIERS

STANDARD TYPES
15, 15D
15 STRUCTURE
21, 21D STRUCTURE
30
31
32
35
36-20A

High mast light pole

Double Arm lighting standard

Existing electrolier

Electrolier foundation (Future installation)

NOTES:

1. Luminaires shall be 310 W HPS when installed on Type 21, 21D, 30, 31, 32, 35 and 36-20A Standards, unless otherwise specified. Luminaires shall be 200 W HPS when installed on other type standards or poles, unless otherwise specified.
2. Luminaires shall be the cutoff type, ANSI Type Ⅲ medium cutoff lighting distribution, unless otherwise specified.
3. Variations noted adjacent to symbol on project plans.

Electrolier (see project notes or project plans)

Luminaire on wood pole

STANDARD NOTES:

- AB — Abandon. If applied to conduit, remove conductors.
- BC — Install pull box in existing conduit run.
- BP — Pedestrian barricade, type as indicated on plan.
- CB — Install conduit into existing pull box.
- CC — Connect new and existing conduit. Remove existing conductors and install conductors as indicated.
- CF — Conduit to remain for future use. Remove conductors. Install pull wire or rope.
- DH — Detector handhole.
- FA — Foundation to be abandoned.
- IS — Install sign on signal mast arm.
- NS — No slip base on standard.
- PEC — Photoelectric control.
- PEU — Photoelectric unit.
- RC — Equipment or material to be removed and become the property of the Contractor.
- RE — Remove electrolier, fuses and ballast. Tape ends of conductors.
- RL — Relocate equipment.
- RR — Remove and reuse equipment.
- RS — Remove and salvage equipment.
- SC — Splice new to existing conductors.
- SD — Service disconnect.
- SF — Standard to remain for future use. Remove luminaire, pole conductors, fuses and ballast.
- TSP — Telephone service point.

ABBREVIATIONS AND EQUIPMENT DESIGNATIONS

PROPOSED	EXISTING	
BBS	bbs	Battery backup system
BC	bc	Bolt circle
C	C	Conduit
CCTV	cctv	Closed circuit television
CKT	ckt	Circuit
CMS	cms	Changeable message sign
DLC	dlc	Loop detector lead-in cable
EMS	ems	Extinguishable message sign
EVC	evc	Emergency vehicle cable
EVD	evd	Emergency vehicle detector
FB	fb	Flashing beacon
FBCA	fbca	Flashing beacon control assembly
FBS	fbs	Flashing beacon with slip base
FO	fo	Fiber optic
G	G	Ground (Equipment Grounding Conductor)
GFCI	GFCI	Ground fault circuit interrupt
HAR	har	Highway advisory radio
HEX	hex	Hexagonal
HPS	hps	High pressure sodium
IISNS	iisns	Internally illuminated street name sign
ISL	isl	Induction sign lighting
LED	led	Light emitting diode
LMA	lma	Luminaire mast arm
LPS	lps	Low pressure sodium
LTG	ltg	Lighting
LUM	lum	Luminaire
MAT	mat	Mast arm mounting vehicle signal faces, top attachment
MAS	mas	Mast arm mounting vehicle signal faces, side attachment
MAS-4A	mas-4A	Mast arm mounting vehicle signal faces, side attachment - 4 signal section
MAS-4B	mas-4B	
MAS-4C	mas-4C	
MAS-5A	mas-5A	Mast arm mounting vehicle signal faces, side attachment - 5 signal section
MAS-5B	mas-5B	
MC	mc	Mercury contactor
M/M	m/m	Multiple to multiple transformer
MT	mt	Conduit with pull wire or rope only
MTG	mtg	Mounting
	mv	Mercury vapor lighting fixture
N	N	Neutral (Grounded Conductor)
NC	NC	Normally closed
NO	NO	Normally open
PB	pb	Pull box
PEC	pec	Photoelectric control (Type Ⅰ, Ⅱ, Ⅲ, Ⅳ or Ⅴ as shown)
PED	ped	Pedestrian
PEU	peu	Photoelectric unit
PPB	ppb	Pedestrian push button
RL		Relocated equipment
RM	rm	Ramp metering
SB	sb	Slip base
SIC	sic	Signal interconnect cable
SIG	sig	Signal
SMA	sma	Signal mast arm
SNS	sns	Street name sign
SP	sp	Service point
TDC	tdc	Telephone demarcation cabinet
TMS	tms	Traffic monitoring station
TOS	tos	Traffic Operations System
VEH	veh	Vehicle
XFMR	xfmr	Transformer
COMM	comm	Communication
RWIS	rwis	Roadway weather information system

SOFFIT AND WALL MOUNTED LUMINAIRES

Pendant, 70 W HPS unless otherwise specified.

Flush, 70 W HPS unless otherwise specified.

Wall surface, 70 W HPS unless otherwise specified.

Existing soffit or wall luminaire to remain unmodified.

Existing soffit or wall luminaire to be modified as specified.

NOTE:

Arrow indicates "street side" of luminaire.

STATE OF CALIFORNIA
DEPARTMENT OF TRANSPORTATION

ELECTRICAL SYSTEMS (SYMBOLS AND ABBREVIATIONS)

NO SCALE

RSP ES-1A DATED OCTOBER 5, 2007 SUPERSEDES STANDARD PLAN ES-1A DATED MAY 1, 2006 - PAGE 400 OF THE STANDARD PLANS BOOK DATED MAY 2006.

REVISED STANDARD PLAN RSP ES-1A

2006 REVISED STANDARD PLAN RSP ES-1A

DIST	COUNTY	ROUTE	POST MILES TOTAL PROJECT	SHEET NO.	TOTAL SHEETS
08	Riv	15	33.4/38.4	78	82

REGISTERED ELECTRICAL ENGINEER

October 5, 2007
PLANS APPROVAL DATE

REGISTERED PROFESSIONAL ENGINEER Jeffery G. McRae No. E14512 Exp. 6-30-08 ELECTRICAL STATE OF CALIFORNIA

The State of California or its officers or agents shall not be responsible for the accuracy or completeness of electronic copies of this plan sheet.

To accompany plans dated 4-23-12

CONDUIT

PROPOSED	EXISTING	
		Lighting Conduit, unless otherwise indicated or noted
		Traffic signal conduit
C	c	Communication conduit
T	t	Telephone conduit
F	f	Fire alarm conduit
FO	fo	Fiber optic conduit
		Conduit termination (RSP ES-9A C)
R	r	Conduit riser in/on structure or service pole

SERVICE EQUIPMENT

PROPOSED	EXISTING	
OH	oh	Overhead lines
U	U	Wood pole "U" indicates utility owned
		Pole guy with anchor
		Utility transformer - ground mounted
III		Service equipment enclosure type
		Service equipment enclosure door indicates front of enclosure
T	t	Telephone demarcation cabinet

POLE-MOUNTED SERVICE DESIGNATION

Type of installation

TYPE H SERVICE - 28'-10" ← Pole height above grade

ILLUMINATED OVERHEAD SIGN

PROPOSED	EXISTING	
		Overhead sign - Single post
		Overhead sign - Two post
		Overhead sign - Mounted on structure
		Overhead sign with electrolier

SIGNAL EQUIPMENT

PROPOSED	EXISTING	
		Pedestrian signal face
		Pedestrian push button post
		Pedestrian barricade
		Vehicle signal face (with backplate, 3-Section: red, yellow and green)
		Vehicle signal face with angle visors
PV	PV	Modifications of basic symbols: "L" indicates all non-arrow sections louvered "LG" indicates louvered green section only "PV" indicates 12" programmed visibility sections "8" indicates all 8" sections (only when specified)
		Type 15TS and Vehicle signal face
		Vehicle signal face with red, yellow and green left arrow sections
		Vehicle signal face with red and yellow sections and up green arrow
		Vehicle signal face (5 Section) with red, yellow and green sections and yellow and green right arrows
		Type 1 Standard and attached vehicle signal faces
		Standard with signal mast arm only and attached vehicle signal faces and internally illuminated street name sign
		Type 33 Standard, Left-turn vehicle signal face and sign
		Standard with luminaire and signal mast arms and attached vehicle signal faces
		Cantilever flashing beacon Type 9 Frame, with a sign unless otherwise specified or indicated
		Type 15-FBS Standard with two vehicle signal face sections with lens, backplate and visor with a sign
R	Y	Flashing beacon. One vehicle signal face section with lens, backplate and visor. "R" indicates red indication, "Y" indicates yellow indication
		Controller assembly. Door indicates front of cabinet

SIGNAL EQUIPMENT Cont

PROPOSED	EXISTING	
		Guard post
		Type 1 Standard with "Meter On" sign
		Emergency Vehicle detector

NOTES:

1. All signal sections shall be 12" unless shown otherwise.
2. Signal heads shall be provided with backplates unless shown otherwise.
3. Signal indication shall be LED.

STATE OF CALIFORNIA
DEPARTMENT OF TRANSPORTATION

ELECTRICAL SYSTEMS (SYMBOLS AND ABBREVIATIONS)

NO SCALE

RSP ES-1B DATED OCTOBER 5, 2007 SUPERCEDES STANDARD PLAN ES-1B DATED MAY 1, 2006 - PAGE 401 OF THE STANDARD PLANS BOOK DATED MAY 2006.

REVISED STANDARD PLAN RSP ES-1B

2006 REVISED STANDARD PLAN RSP ES-1B

DIST	COUNTY	ROUTE	POST MILES TOTAL PROJECT	SHEET NO.	TOTAL SHEETS
08	Riv	15	33.4/38.4	79	82

REGISTERED ELECTRICAL ENGINEER

October 5, 2007
PLANS APPROVAL DATE

REGISTERED PROFESSIONAL ENGINEER
Jeffery G. McRae
No. E14512
Exp. 6-30-08
ELECTRICAL
STATE OF CALIFORNIA

The State of California or its officers or agents shall not be responsible for the accuracy or completeness of electronic copies of this plan sheet.

To accompany plans dated 4-23-12

EQUIPMENT IDENTIFICATION

ILLUMINATED SIGN IDENTIFICATION NUMBER:

Sign No. 12345 — Sign number - Place on post or structure

10 ISL SCI 1.0

- 1.0 — Transformer rating (kVA)
- SCI — Lighting control type
- ISL — Number and type of fixtures

Do NOT place on standard or structure

ELECTROLIER OR EQUIPMENT IDENTIFICATION NUMBER:

12345 - 15'-0"

- 15'-0" — Mast arm length, if shown. Do not place on standard or structure.
- 12345 — Equipment number - Place on standard or structure. Existing equipment numbers are shown in parenthesis

CONDUIT AND CONDUCTOR IDENTIFICATION:

1½"C, 2#10, 15#14, 2 DLC

- 2#10, 15#14, 2 DLC — Number and size of conductors and cables
- 1½"C — Size of conduit in inches

Ø1, Ø2, Ø2P, etc.	Traffic phase identification for signal faces, detectors and phase diagrams
1 2 3	Project note numbers
A B C	Equipment description, installation or item numbers
1 2 3	Conduit run numbers

SIGNAL AND LIGHTING STANDARD (TYPICAL DESIGNATION):

19A - 3 - 100

- 100 — Wind velocity = 100 mph
- 3 — Case 3 arm loading
- 19A — Standard type
- Standard Plan sheet number
- Detail number or letter

MISCELLANEOUS EQUIPMENT

PROPOSED	EXISTING	
CMS	cms	Changeable message sign
		Closed circuit television camera
		Highway advisory radio pole and antenna
EMS	ems	Extinguishable message sign
M V	m v	Detection device M = Microwave sensor V = Video image sensor

WIRING DIAGRAM LEGEND

P	Pole
CB	Circuit breaker
A	Ampere
V	Volt
M	Metered
UM	Unmetered
NB	Neutral bus
GB	Ground bus
G	Equipment grounding conductor
N	Grounded conductor (Neutral)

- External conductor
- Conductor or bus
- Tie point
- Contactor coil
- Contactor, Contact NO
- Terminal blocks
- Contactor, Contact NC
- Enclosure bond
- Grounding electrode
- Circuit breaker
- Receptacle

PULL BOXES

PROPOSED	EXISTING	
		Pull box-No. 5 unless otherwise indicated or noted.
3	9A(21)	Pull box-Additional designations or descriptions

3 = No. 3½ pull box
5 = No. 5 pull box
6 = No. 6 pull box
7 = No. 7 (Ceiling pull box)
8 = No. 8 (Pendant soffit pull box)
9 = No. 9 pull box
9A = No. 9A pull box

(C) = Communications pull box
(E) = Pull box with extension
(S) = Sprinkler control pull box
(21) = Anchor bolts and conduit for future installation of Type 21 Standard
(T) = Traffic pull box

VEHICLE DETECTORS

5 J 9 U

- U = Upper
- L = Lower
- Slot number in input file
- Input file (I or J)
- Phase

PROPOSED	EXISTING	
		Type A detector loop. Outline of sawcut shown.
		Type B detector loop. Outline of sawcut shown.
		Type C detector loop. Outline of sawcut shown.
		Type D detector loop. Outline of sawcut shown.
		Type E detector loop. Outline of sawcut shown.
		Type Q detector loop. Outline of sawcut shown.
		Magnetic detector
DH	dh	Detector handhole
		Microwave or video detection zone

STATE OF CALIFORNIA
DEPARTMENT OF TRANSPORTATION

ELECTRICAL SYSTEMS (SYMBOLS AND ABBREVIATIONS)

NO SCALE

RSP ES-1C DATED OCTOBER 5, 2007 SUPERCEDES STANDARD PLAN ES-1C DATED MAY 1, 2006 - PAGE 402 OF THE STANDARD PLANS BOOK DATED MAY 2006.

REVISED STANDARD PLAN RSP ES-1C

2006 REVISED STANDARD PLAN RSP ES-1C

DIST	COUNTY	ROUTE	POST MILES TOTAL PROJECT	SHEET NO.	TOTAL SHEETS
08	Riv	15	33.4/38.4	80	82

REGISTERED ELECTRICAL ENGINEER

October 5, 2007
PLANS APPROVAL DATE

REGISTERED PROFESSIONAL ENGINEER Jeffery G. McRae No. E14512 Exp. 6-30-08 ELECTRICAL STATE OF CALIFORNIA

The State of California or its officers or agents shall not be responsible for the accuracy or completeness of electronic copies of this plan sheet.

To accompany plans dated 4-23-12

LOOP INSTALLATION PROCEDURE

1. Loops shall be centered in lanes.
2. Saw slots in pavement for loop conductors as shown in details.
3. Distance between side of loop and a lead-in saw cut from adjacent detectors shall be 2'-0" minimum. Distance between lead-in saw cuts shall be 6" minimum.
4. Bottom of saw slot shall be smooth with no sharp edges.
5. Slots shall be washed until clean, blown out and thoroughly dried before installing loop conductors.
6. Adjacent loops on the same sensor unit channel shall be wound in opposite directions.
7. Identify and tag loop circuit pairs in the pull box with loop number, start (S) and finish (F) of conductor. Identify and tag lead-in-cable with sensor number and phase.
8. Install loop conductor in slot using a 3/16" to 1/4" thick wood paddle. Hold loop conductors with wood paddles (at the bottom of the sawed slot) during sealant placement.
9. No more than 2 twisted pairs shall be installed in one sawed slot.
10. Allow additional 5'-0" of slack length of conductor for the lead-in run to pull box.
11. The additional length of each conductor for each loop shall be twisted together into a pair (6 turns per 3'-4" minimum) before being placed in the slot and conduit leading to pull box.
12. Test each loop circuit for continuity, circuit resistance and insulation resistance at the pull box before filling slots.
13. Fill slots as shown in details.
14. Splice loop conductors to lead-in-cable. Splices shall be soldered.
15. End of lead-in-cable and Type 2 loop conductor shall be waterproofed prior to installing in conduit to prevent moisture from entering the cable.
16. Lead-in-cable shall not be spliced between the pull box and the controller cabinet terminals.
17. Test each loop circuit for continuity, circuit resistance and insulation resistance at the controller cabinet location.
18. Where loop conductors are not to be spliced to a lead-in-cable, the ends of the conductors shall be taped and waterproofed with electrical insulating coating.

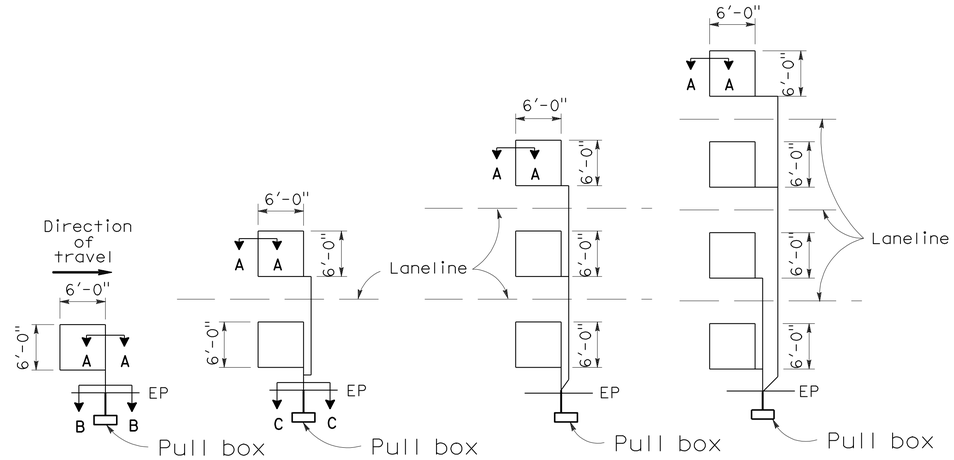

TYPE 1A INSTALLATION | TYPE 2A INSTALLATION | TYPE 3A INSTALLATION | TYPE 4A INSTALLATION

SAWCUT DETAILS

(Type A loop detector configurations illustrated)

1. 1A thru 4A = 1 Type A loop configuration in each lane.
2. 1B thru 4B = 1 Type B loop configuration in each lane.
3. 1C = 1 Type C loop configuration entering lanes as required.
4. 1D thru 4D = 1 Type D loop configuration in each lane.
5. 1E thru 4E = 1 Type E loop configuration in each lane.
6. 1Q thru 4Q = 1 Type Q loop configuration in each lane. (Use Type A, B, C, D, E or Q loop detector configurations only when specified or shown on plans)

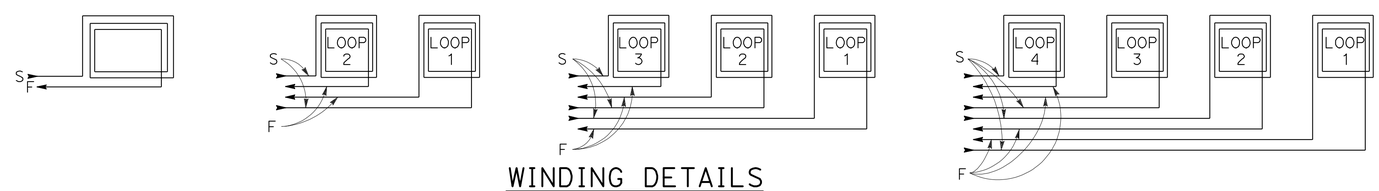

WINDING DETAILS

See Notes 6 and 7

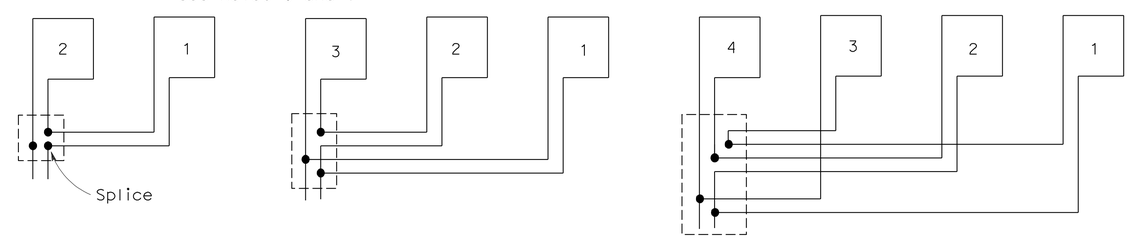

TYPICAL LOOP CONNECTIONS

(Dashed lines represent the pull box)

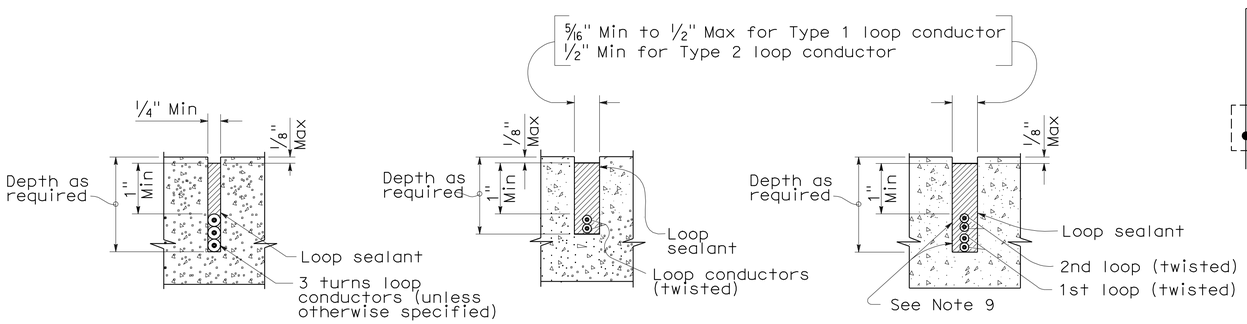

SECTION A-A | SECTION B-B | SECTION C-C

SLOT DETAILS - TYPE 1 AND TYPE 2 LOOP CONDUCTOR

STATE OF CALIFORNIA
DEPARTMENT OF TRANSPORTATION

ELECTRICAL SYSTEMS (DETECTORS)

NO SCALE

RSP ES-5A DATED OCTOBER 5, 2007 SUPERCEDES STANDARD PLAN ES-5A DATED MAY 1, 2006 - PAGE 423 OF THE STANDARD PLANS BOOK DATED MAY 2006.

REVISED STANDARD PLAN RSP ES-5A

2006 REVISED STANDARD PLAN RSP ES-5A

DIST	COUNTY	ROUTE	POST MILES TOTAL PROJECT	SHEET No.	TOTAL SHEETS
08	Riv	15	33.4/38.4	81	82

Renee M. Anderson 11-30-11
REGISTERED CIVIL ENGINEER DATE

4-23-12
PLANS APPROVAL DATE

REGISTERED PROFESSIONAL ENGINEER Renee Anderson No. C61040 Exp. 12-31-12 CIVIL STATE OF CALIFORNIA

The State of California or its officers or agents shall not be responsible for the accuracy or completeness of electronic copies of this plan sheet.

STANDARD PLANS DATED MAY 2006

A10A	ACRONYMS AND ABBREVIATIONS (SHEET 1 OF 2)
A10B	ACRONYMS AND ABBREVIATIONS (SHEET 2 OF 2)
A10C	SYMBOLS (SHEET 1 OF 2)
A10D	SYMBOLS (SHEET 2 OF 2)

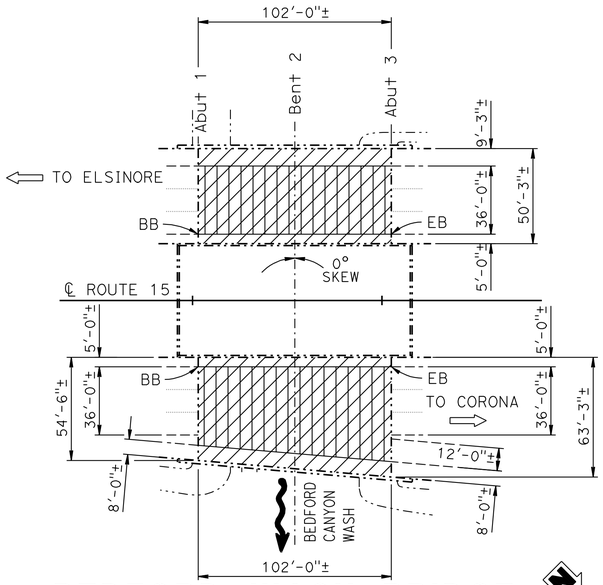

BEDFORD WASH BRIDGE

Bridge No. 56-0540R/L Post Mile 36.58
1"=40'-0"

QUANTITIES

BRIDGE NO. 56-0540R/L

REMOVE ASPHALT CONCRETE SURFACING	8,355	SQFT
REMOVE UNSOUND CONCRETE	278	CF
PREPARE CONCRETE BRIDGE DECK SURFACE	11,130	SQFT
RAPID SETTING CONCRETE (PATCH)	278	CF
FURNISH POLYESTER CONCRETE OVERLAY	5,565	CF
PLACE POLYESTER CONCRETE OVERLAY	11,130	SQFT

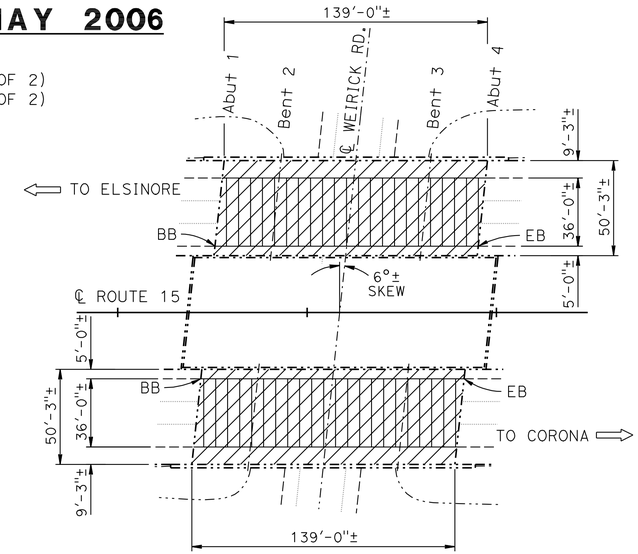

WEIRICK ROAD UC

Bridge No. 56-0541R/L Post Mile 35.6
1"=40'-0"

QUANTITIES

BRIDGE NO. 56-0541R/L

REMOVE ASPHALT CONCRETE SURFACING	10,010	SQFT
REMOVE UNSOUND CONCRETE	350	CF
PREPARE CONCRETE BRIDGE DECK SURFACE	13,970	SQFT
RAPID SETTING CONCRETE (PATCH)	350	CF
FURNISH POLYESTER CONCRETE OVERLAY	6,985	CF
PLACE POLYESTER CONCRETE OVERLAY	13,970	SQFT

INDEX TO PLANS

Sheet No.	Title
1.	GENERAL PLAN
2.	DECK REPAIR DETAILS

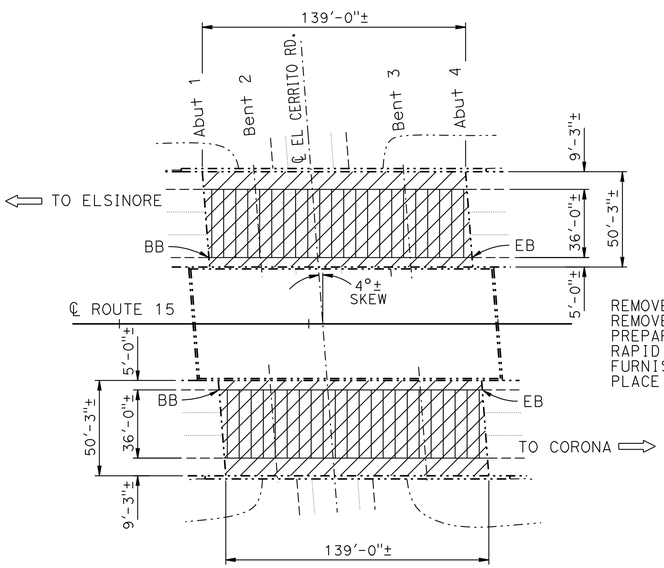

EL CERRITO ROAD UC

Bridge No. 56-0558R/L Post Mile 37.8
1"=40'-0"

QUANTITIES

BRIDGE NO. 56-0558R/L

REMOVE ASPHALT CONCRETE SURFACING	10,010	SQFT
REMOVE UNSOUND CONCRETE	350	CF
PREPARE CONCRETE BRIDGE DECK SURFACE	13,970	SQFT
RAPID SETTING CONCRETE (PATCH)	350	CF
FURNISH POLYESTER CONCRETE OVERLAY	6,985	CF
PLACE POLYESTER CONCRETE OVERLAY	13,970	SQFT

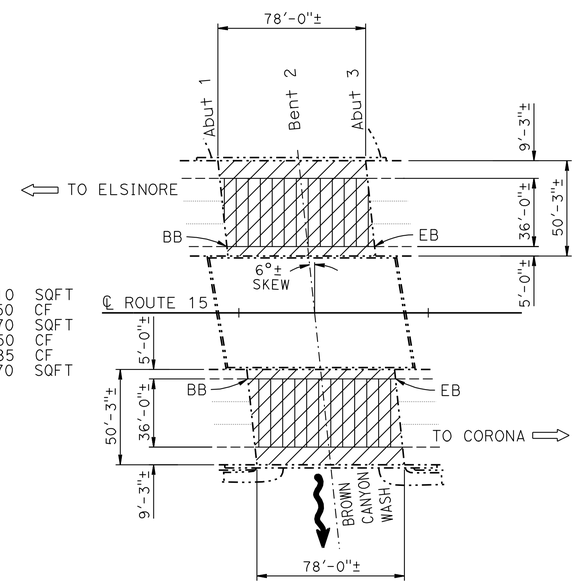

BROWN CANYON WASH BRIDGE

Bridge No. 56-0559R/L Post Mile 34.72
1"=40'-0"

QUANTITIES

BRIDGE NO. 56-0559R/L

REMOVE ASPHALT CONCRETE SURFACING	5,620	SQFT
REMOVE UNSOUND CONCRETE	196	CF
PREPARE CONCRETE BRIDGE DECK SURFACE	7,839	SQFT
RAPID SETTING CONCRETE (PATCH)	196	CF
FURNISH POLYESTER CONCRETE OVERLAY	3,920	CF
PLACE POLYESTER CONCRETE OVERLAY	7,839	SQFT

LEGEND

Indicates existing structure.

Indicates prepare concrete bridge deck surface, furnish and place new 5" thick and varies polyester concrete overlay. Prior to placing new polyester concrete overlay, remove unsound concrete and patch with rapid setting concrete or polyester concrete. Polyester concrete shall be placed in one lift.

Indicates limits of removal of existing 5"± thick Asphalt Concrete Overlay.

NOTE:
THE CONTRACTOR SHALL VERIFY ALL CONTROLLING FIELD DIMENSIONS BEFORE ORDERING OR FABRICATING ANY MATERIAL.

DANIEL T. ADAMS
DESIGN ENGINEER

	BY	CHECKED
DESIGN	R. Anderson	D. Azzam
DETAILS	G. Hallstrom	R. Anderson
QUANTITIES	R. Anderson	D. Azzam

LOAD & RESISTANCE FACTOR DESIGN — LIVE LOADING: HL93 W/"LOW-BOY"; PERMIT DESIGN VEHICLE

	BY	CHECKED
LAYOUT	R. Anderson	D. Azzam
SPECIFICATIONS	D. Klein	PLANS AND SPECS COMPARED: D. Klein

ORIGINAL SCALE IN INCHES FOR REDUCED PLANS 0 1 2 3

STATE OF CALIFORNIA
DEPARTMENT OF TRANSPORTATION

DIVISION OF ENGINEERING SERVICES
STRUCTURE DESIGN
DESIGN BRANCH 10

UNIT: 3589
PROJECT NUMBER & PHASE: 0800000711
CONTRACT NO.: 08-448301

BRIDGE NO. VARIOUS
POST MILE VARIES

DECK REHABILITATION
GENERAL PLAN

DISREGARD PRINTS BEARING EARLIER REVISION DATES

REVISION DATES: 6-20-11 8-08-11 9-26-11 10-27-11

SHEET 1 OF 2

USERNAME => s124496 DATE PLOTTED => 24-APR-2012 TIME PLOTTED => 12:33

STRUCTURES DESIGN GENERAL PLAN SHEET (ENGLISH) (REV.09-01-10)

FILE => 560540rlagp_multi01.dgn

DIST	COUNTY	ROUTE	POST MILES TOTAL PROJECT	SHEET No.	TOTAL SHEETS
08	Riv	15	3.4/38.4	82	82

Renee M. Anderson 11-30-11
REGISTERED CIVIL ENGINEER DATE

4-23-12
PLANS APPROVAL DATE

REGISTERED PROFESSIONAL ENGINEER
Renee Anderson
No. C61040
Exp. 12-31-12
CIVIL
STATE OF CALIFORNIA

The State of California or its officers or agents shall not be responsible for the accuracy or completeness of electronic copies of this plan sheet.

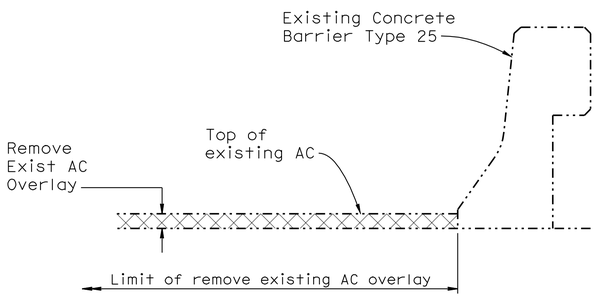

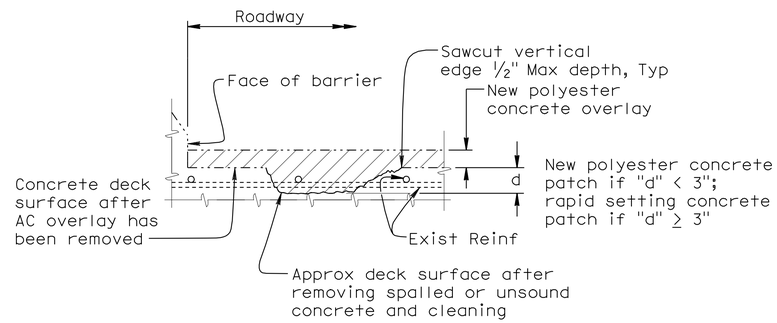

DECK OVERLAY DETAIL

Note: Location will be determined by the Engineer. Reinforcement may be encountered during deck concrete removal and is to remain undamaged.

NO SCALE

DECK REPAIR TABLE

BRIDGE NUMBER	APPROXIMATE AREA DAMAGED (PERCENT)	APPROXIMATE DEPTH (INCHES)
56-0540R	10	3
56-0540L	10	3
56-0558R	10	3
56-0558L	10	3
56-0541R	10	3
56-0541L	10	3
56-0559R	10	3
56-0559L	10	3

Locations to be determined by the Engineer.
For details see "DECK OVERLAY DETAIL".

DECK REPAIR NOTES:

1. Existing reinforcement shall be protected in place during unsound concrete removal and patching operations.
2. It is the responsibility of the Contractor to repair any reinforcement that is accidently cut by saw cutting operations.
3. When existing transverse reinforcement is exposed in the deck surface, saw cutting may be waived with the approval of the Engineer.
4. The saw cut depth shall not exceed 1/2 inch or the concrete cover over the top steel reinforcing bars, whichever is less.
5. Remove unsound concrete to expose sound, hard concrete substrate. Replace with rapid setting concrete patch if depth of patch is greater than or equal to 3 inches. If depth of patch is less than 3 inches, then replace with polyester concrete.
6. Repair deck prior to placing polyester overlay.

NOTE:
THE CONTRACTOR SHALL VERIFY ALL CONTROLLING FIELD DIMENSIONS BEFORE ORDERING OR FABRICATING ANY MATERIAL.

	BY	CHECKED
DESIGN	R. Anderson	D. Azzam
DETAILS	G. Hallstrom	R. Anderson
QUANTITIES	R. Anderson	D. Azzam

STATE OF CALIFORNIA
DEPARTMENT OF TRANSPORTATION

DIVISION OF ENGINEERING SERVICES
STRUCTURE DESIGN
DESIGN BRANCH 10

BRIDGE NO. VARIOUS
POST MILE VARIES

DECK REHABILITATION
DECK REPAIR DETAILS

STRUCTURES DESIGN DETAIL SHEET (ENGLISH) (REV. 09-01-10)

ORIGINAL SCALE IN INCHES FOR REDUCED PLANS 0 1 2 3

UNIT: X3589
PROJECT NUMBER & PHASE: 0800000711
CONTRACT NO.: 08-448301

DISREGARD PRINTS BEARING EARLIER REVISION DATES

REVISION DATES: 6-24-11 8-08-11

SHEET 2 OF 2

FILE => 560540riumlscdt02.dgn

USERNAME => s124496 DATE PLOTTED => 24-APR-2012 TIME PLOTTED => 12:33