ACSTP-S178(061)E

Dist	COUNTY	ROUTE	POST MILES TOTAL PROJECT	SHEET No.	TOTAL SHEETS
08	SBd	178	5.0/14.3	1	22

STATE OF CALIFORNIA
DEPARTMENT OF TRANSPORTATION

PROJECT PLANS FOR CONSTRUCTION ON
STATE HIGHWAY
IN SAN BERNARDINO COUNTY
EAST OF RIDGECREST FROM 5.0 MILES EAST TO 14.3 MILES EAST OF KERN COUNTY LINE

TO BE SUPPLEMENTED BY STANDARD PLANS DATED MAY 2006

INDEX OF PLANS

SHEET No.	DESCRIPTION
1	TITLE AND LOCATION MAP
2	CONSTRUCTION DETAILS
3	EROSION CONTROL PLAN AND QUANTITIES
4-15	DRAINAGE PLANS, PROFILES, DETAILS AND QUANTITIES
16	CONSTRUCTION AREA SIGNS
17	PAVEMENT DELINEATION QUANTITIES
18	SUMMARY OF QUANTITIES
19-22	REVISED STANDARD PLANS

THE STANDARD PLANS LIST APPLICABLE TO THIS CONTRACT IS INCLUDED IN THE NOTICE TO BIDDERS AND SPECIAL PROVISIONS BOOK.

LOCATION MAP

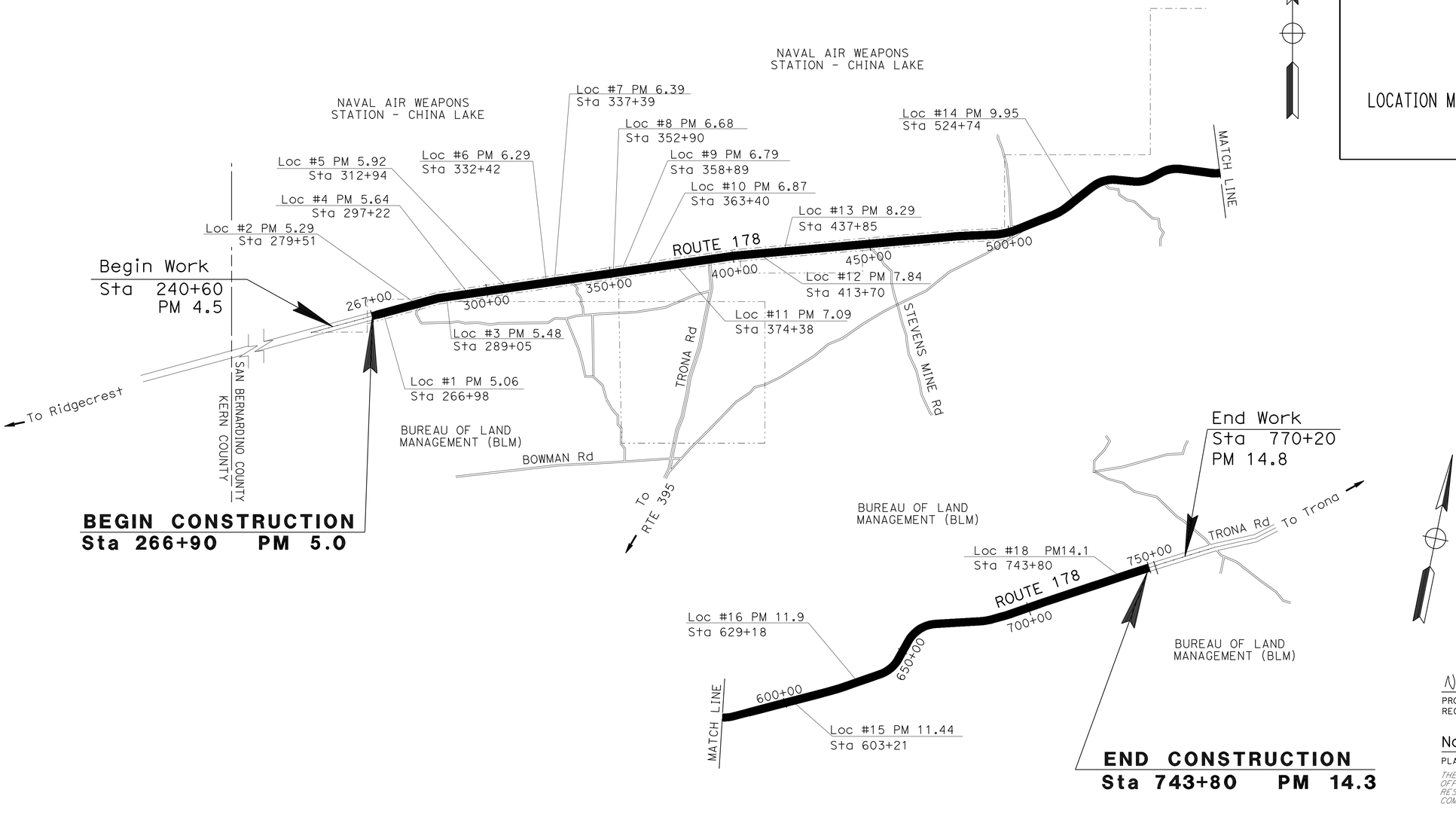

PROJECT MANAGER: RAFIH ACHY

DESIGN ENGINEER: GEORGE MORHIG

THE CONTRACTOR SHALL POSSESS THE CLASS (OR CLASSES) OF LICENSE AS SPECIFIED IN THE "NOTICE TO BIDDERS."

NO SCALE

9-19-11
PROJECT ENGINEER DATE
REGISTERED CIVIL ENGINEER

November 28, 2011
PLANS APPROVAL DATE

REGISTERED PROFESSIONAL ENGINEER NHUAN NGUYEN No. 42692 Exp. 3/31/12 CIVIL STATE OF CALIFORNIA

THE STATE OF CALIFORNIA OR ITS OFFICERS OR AGENTS SHALL NOT BE RESPONSIBLE FOR THE ACCURACY OR COMPLETENESS OF SCANNED COPIES OF THIS PLAN SHEET.

CONTRACT No.	08-438904
PROJECT ID	0800000676

LAST REVISION 09-19-11
DATE PLOTTED => 14-MAR-2012
TIME PLOTTED => 06:44

Dist	COUNTY	ROUTE	POST MILES TOTAL PROJECT	SHEET No.	TOTAL SHEETS
08	SBd	178	5.0/14.3	2	22

REGISTERED CIVIL ENGINEER 9-19-11 DATE

11-28-11
PLANS APPROVAL DATE

REGISTERED PROFESSIONAL ENGINEER NHUAN NGUYEN No. 42692 Exp. 3/31/12 CIVIL STATE OF CALIFORNIA

THE STATE OF CALIFORNIA OR ITS OFFICERS OR AGENTS SHALL NOT BE RESPONSIBLE FOR THE ACCURACY OR COMPLETENESS OF SCANNED COPIES OF THIS PLAN SHEET.

NOTES:

1. FOR METAL BEAM GUARD RAILING SEE STANDARD PLAN A77A1.
2. FOR ALTERNATIVE FLARED TERMINAL SYSTEM SEE STANDARD PLAN A77L1 AND A77L5.

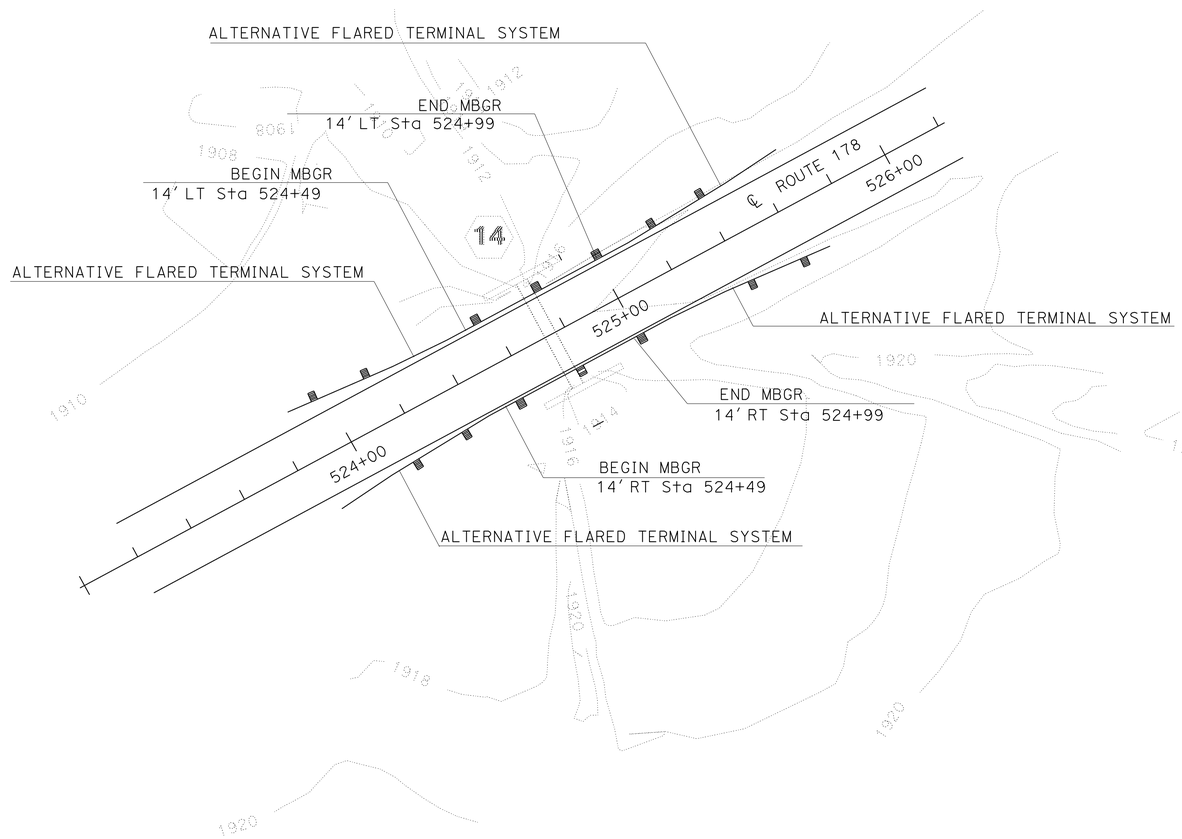

CONSTRUCTION DETAILS

NO SCALE

C-1

STATE OF CALIFORNIA - DEPARTMENT OF TRANSPORTATION
Caltrans PROJECT DEVELOPMENT

FUNCTIONAL SUPERVISOR: GEORGE MORHIG

CALCULATED-DESIGNED BY: HUNG PHAM
CHECKED BY: NHUAN NGUYEN

REVISED BY
DATE REVISED

LAST REVISION 09-19-11
DATE PLOTTED => 28-NOV-2011
TIME PLOTTED => 10:14

Dist	COUNTY	ROUTE	POST MILES TOTAL PROJECT	SHEET No.	TOTAL SHEETS
08	SBd	178	5.0/14.3	3	22

REGISTERED LANDSCAPE ARCHITECT

11-28-11
PLANS APPROVAL DATE

LICENSED LANDSCAPE ARCHITECT BYRON STROUT STATE OF CALIFORNIA
07/30/13
10/20/11

THE STATE OF CALIFORNIA OR ITS OFFICERS OR AGENTS SHALL NOT BE RESPONSIBLE FOR THE ACCURACY OR COMPLETENESS OF SCANNED COPIES OF THIS PLAN SHEET.

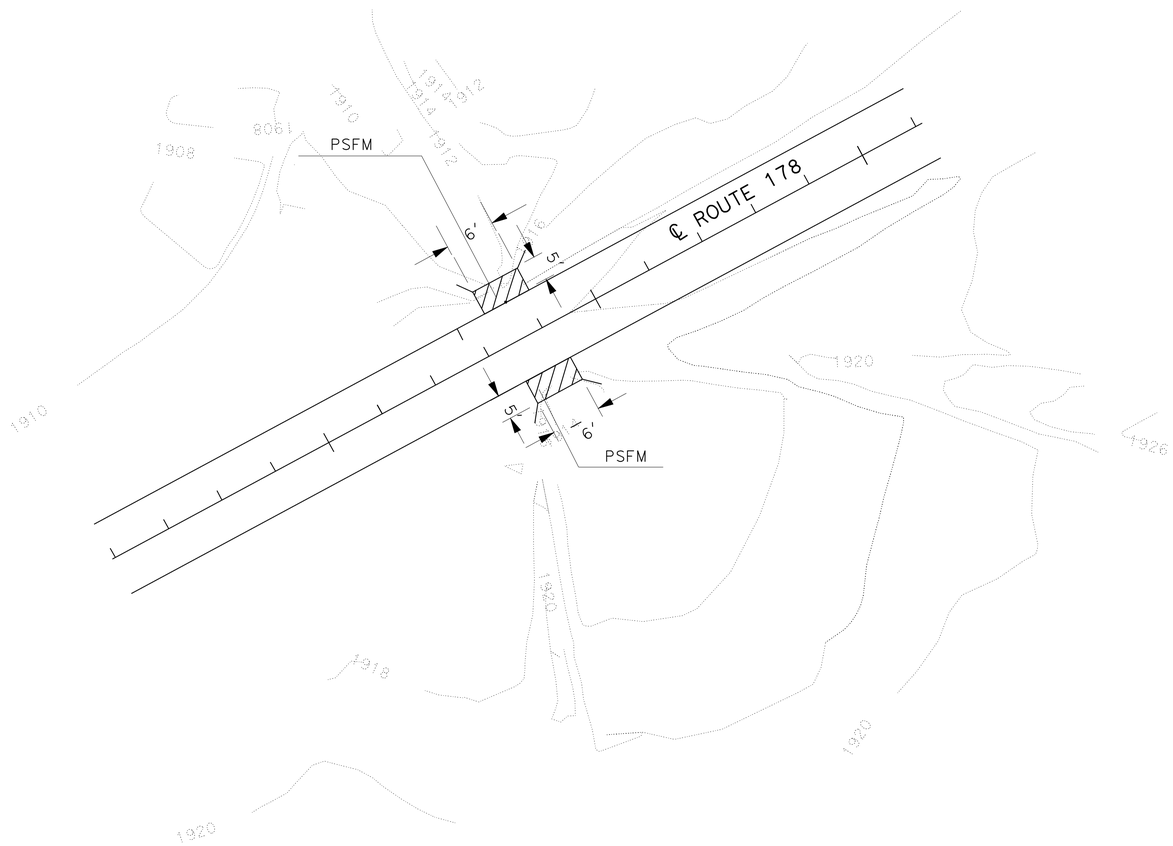

PLAN
TYPICAL APPLICATION

EROSION CONTROL ESTIMATE

LOC	STATION	POLYMER STABILIZED FIBER MATRIX (PSFM)	DUFF	*COLLECTION & PLACEMENT OF LOCAL TOPSOIL
		SQFT	SQYD	CY
1	266+94.584	60	6.7	0.55
2	279+49.20	60	6.7	0.55
3	289+03.057	60	6.7	0.55
4	297+19.80	60	6.7	0.55
5	312+92.398	60	6.7	0.55
6	332+41.673	60	6.7	0.55
7	337+41.658	60	6.7	0.55
8	352+90.372	60	6.7	0.55
9	358+89.935	60	6.7	0.55
10	363+39.977	60	6.7	0.55
11	374+38.976	60	6.7	0.55
12	413+70.041	60	6.7	0.55
13	437+86.417	60	6.7	0.55
14	524+74.138	60	6.7	0.55
15	603.20.808	60	6.7	0.55
16	629+18.422	60	6.7	0.55
18	743+79.21	60	6.7	0.55
TOTAL		1020	113.9	9.35

* PAID AS TOPSOIL

THIS PLAN ACCURATE FOR EROSION CONTROL ONLY

EROSION CONTROL
NO SCALE
EC-1

STATE OF CALIFORNIA - DEPARTMENT OF TRANSPORTATION
Caltrans LANDSCAPE ARCHITECTURE

FUNCTIONAL SUPERVISOR: BYRON STROUT
CALCULATED-DESIGNED BY: TONY CALVILLO
CHECKED BY: MIKE STIVERS
REVISED BY
DATE REVISED

LAST REVISION 10-20-11
DATE PLOTTED => 28-NOV-2011
TIME PLOTTED => 10:33

Dist	COUNTY	ROUTE	POST MILES TOTAL PROJECT	SHEET No.	TOTAL SHEETS
08	SBd	178	5.0/14.3	4	22

REGISTERED CIVIL ENGINEER 10-20-11 DATE

11-28-11
PLANS APPROVAL DATE

REGISTERED PROFESSIONAL ENGINEER NHUAN NGUYEN No. 42692 Exp. 3/31/12 CIVIL STATE OF CALIFORNIA

THE STATE OF CALIFORNIA OR ITS OFFICERS OR AGENTS SHALL NOT BE RESPONSIBLE FOR THE ACCURACY OR COMPLETENESS OF SCANNED COPIES OF THIS PLAN SHEET.

NOTES:

1. FOR ACCURATE RIGHT OF WAY DATA, CONTACT RIGHT OF WAY ENGINEERING AT THE DISTRICT OFFICE.
2. FOR DRAINAGE DETAILS SEE DRAINAGE DETAIL SHEETS.

LEGEND:

DRAINAGE SYSTEM

DRAINAGE UNIT

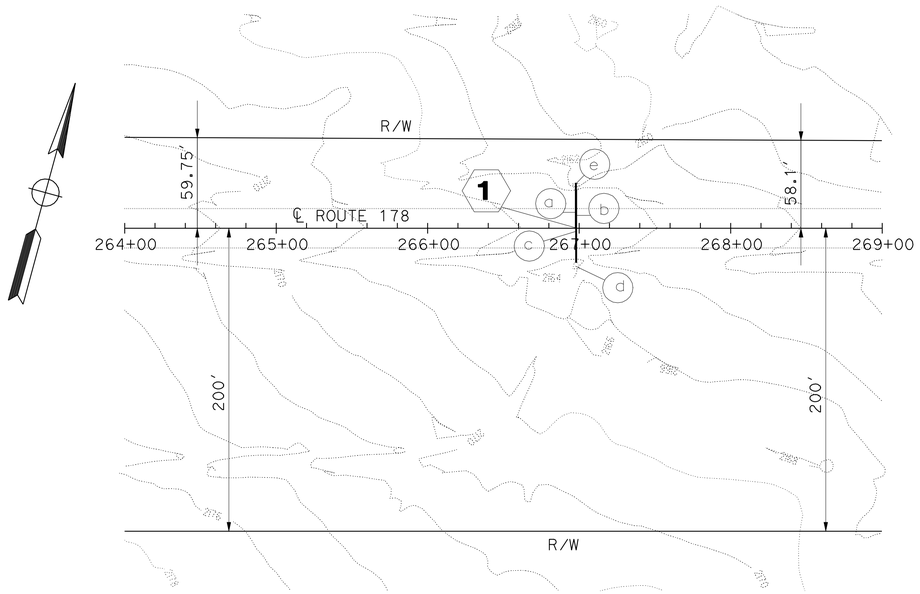

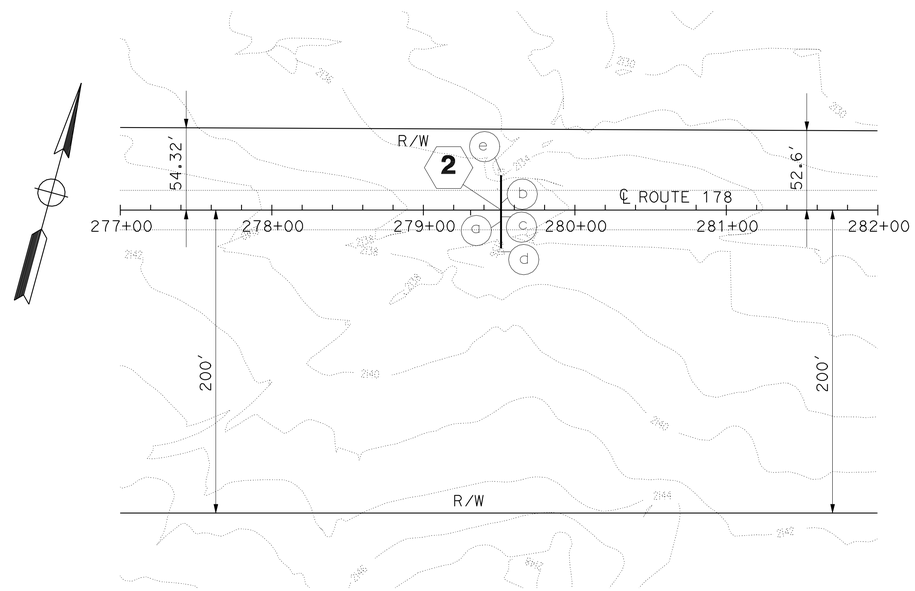

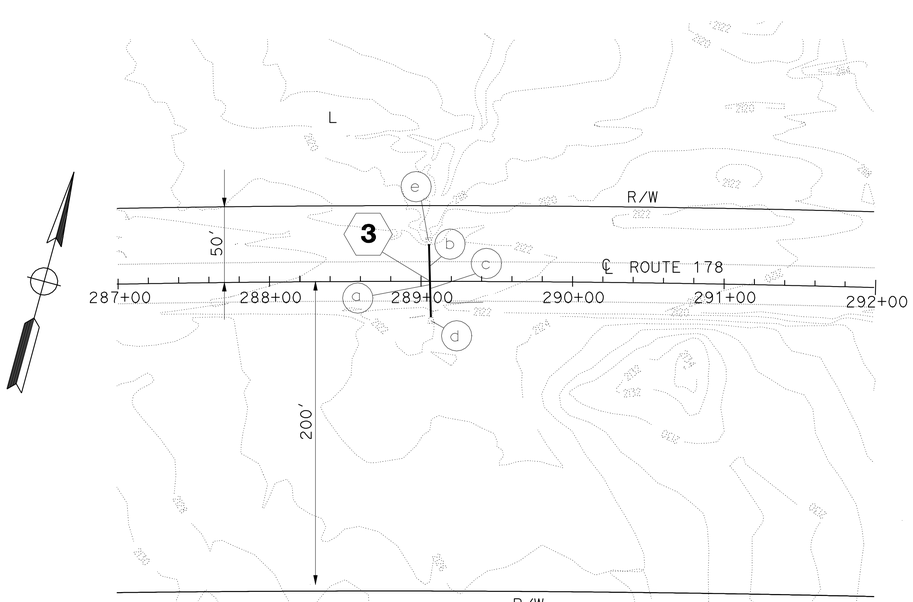

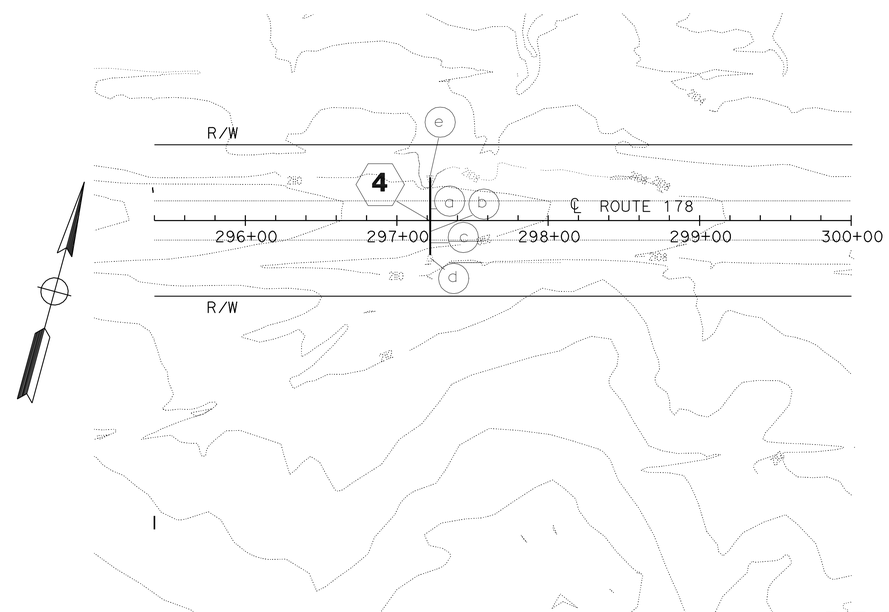

DRAINAGE PLAN

SCALE: 1" = 50'

D-1

STATE OF CALIFORNIA - DEPARTMENT OF TRANSPORTATION
Caltrans PROJECT DEVELOPMENT

FUNCTIONAL SUPERVISOR: GEORGE MORHIG

CALCULATED-DESIGNED BY: HUNG PHAM
CHECKED BY: NHUAN NGUYEN

REVISED BY
DATE REVISED

LAST REVISION 10-20-11
DATE PLOTTED => 28-NOV-2011
TIME PLOTTED => 10:19

Dist	COUNTY	ROUTE	POST MILES TOTAL PROJECT	SHEET No.	TOTAL SHEETS
08	SBd	178	5.0/14.3	5	22

REGISTERED CIVIL ENGINEER 10-20-11 DATE

11-28-11
PLANS APPROVAL DATE

REGISTERED PROFESSIONAL ENGINEER NHUAN NGUYEN No. 42692 Exp. 3/31/12 CIVIL STATE OF CALIFORNIA

THE STATE OF CALIFORNIA OR ITS OFFICERS OR AGENTS SHALL NOT BE RESPONSIBLE FOR THE ACCURACY OR COMPLETENESS OF SCANNED COPIES OF THIS PLAN SHEET.

NOTE:

FOR ACCURATE RIGHT OF WAY DATA, CONTACT RIGHT OF WAY ENGINEERING AT THE DISTRICT OFFICE.

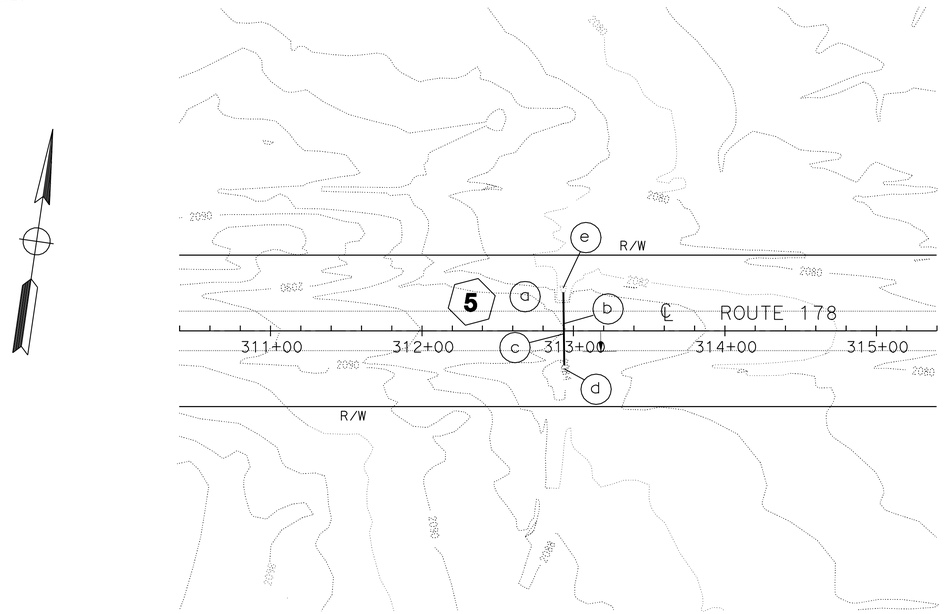

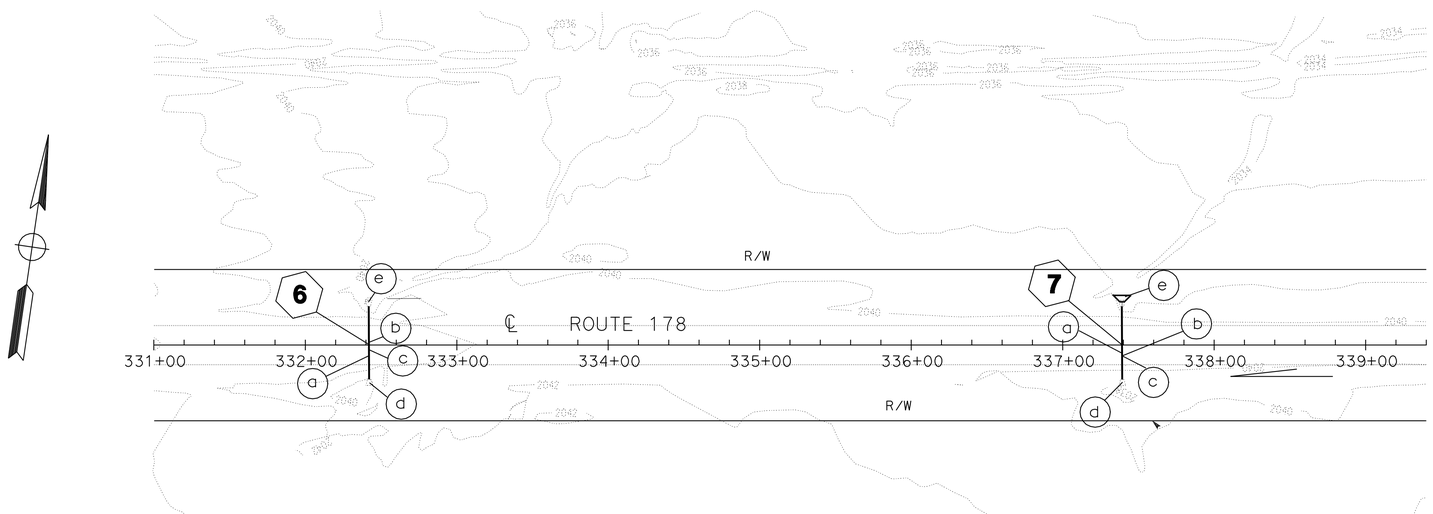

DRAINAGE PLAN

SCALE: 1" = 50'

D-2

STATE OF CALIFORNIA - DEPARTMENT OF TRANSPORTATION
Caltrans PROJECT DEVELOPMENT

FUNCTIONAL SUPERVISOR: GEORGE MORHIG

CALCULATED-DESIGNED BY: HUNG PHAM
CHECKED BY: NHUAN NGUYEN

REVISED BY
DATE REVISED

LAST REVISION 10-20-11
DATE PLOTTED => 28-NOV-2011
TIME PLOTTED => 10:14

Dist	COUNTY	ROUTE	POST MILES TOTAL PROJECT	SHEET No.	TOTAL SHEETS
08	SBd	178	5.0/14.3	6	22

N. T. Nguyen 9-19-11
REGISTERED CIVIL ENGINEER DATE

11-28-11
PLANS APPROVAL DATE

REGISTERED PROFESSIONAL ENGINEER
NHUAN NGUYEN
No. 42692
Exp. 3/31/12
CIVIL
STATE OF CALIFORNIA

THE STATE OF CALIFORNIA OR ITS OFFICERS OR AGENTS SHALL NOT BE RESPONSIBLE FOR THE ACCURACY OR COMPLETENESS OF SCANNED COPIES OF THIS PLAN SHEET.

NOTE:

FOR ACCURATE RIGHT OF WAY DATA, CONTACT RIGHT OF WAY ENGINEERING AT THE DISTRICT OFFICE.

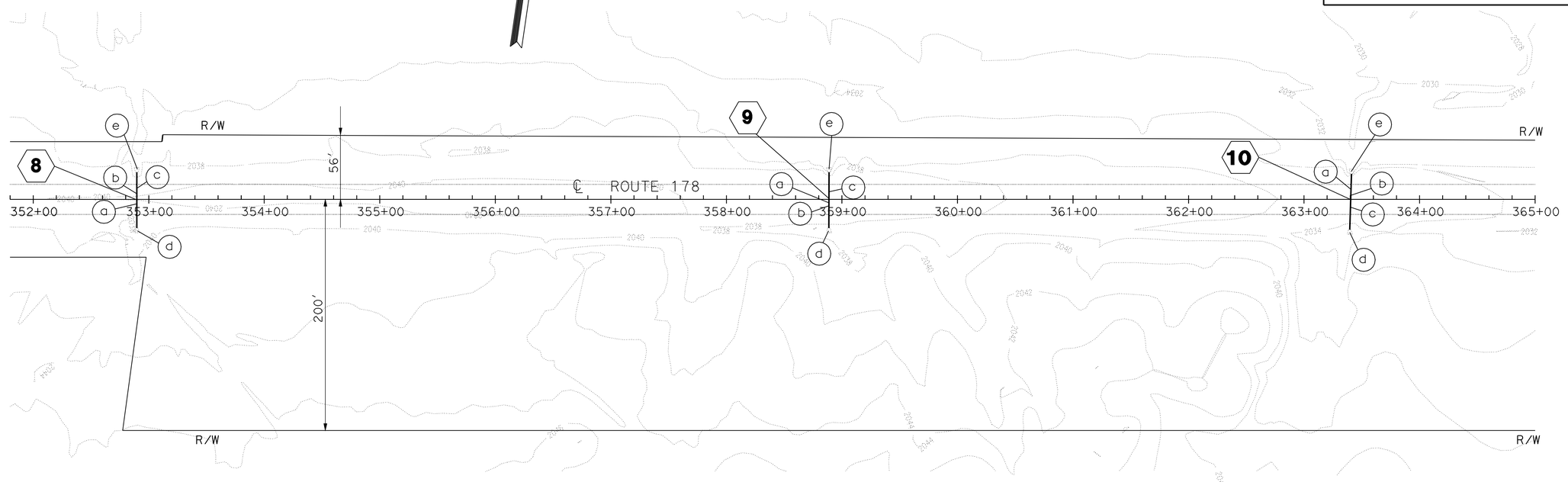

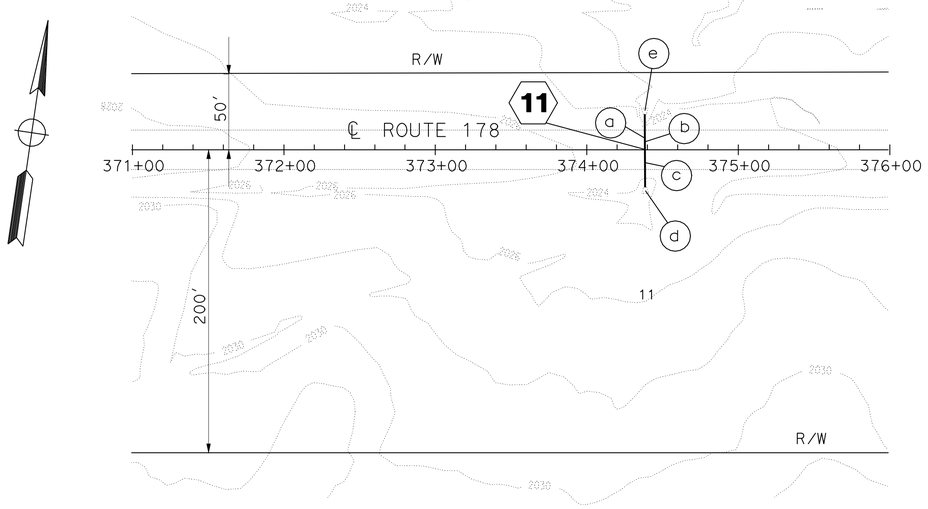

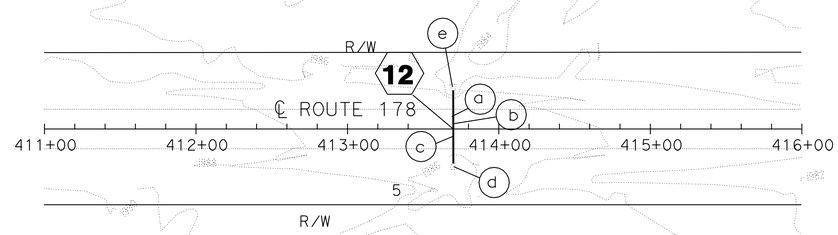

DRAINAGE PLAN

SCALE: 1" = 50'

D-3

STATE OF CALIFORNIA - DEPARTMENT OF TRANSPORTATION
Caltrans PROJECT DEVELOPMENT

FUNCTIONAL SUPERVISOR: GEORGE MORHIG
CALCULATED-DESIGNED BY: HUNG PHAM
CHECKED BY: NHUAN NGUYEN
REVISED BY
DATE REVISED

LAST REVISION 09-19-11
DATE PLOTTED => 28-NOV-2011
TIME PLOTTED => 10:14

Dist	COUNTY	ROUTE	POST MILES TOTAL PROJECT	SHEET No.	TOTAL SHEETS
08	SBd	178	5.0/14.3	7	22

REGISTERED CIVIL ENGINEER 9-19-11 DATE

11-28-11
PLANS APPROVAL DATE

REGISTERED PROFESSIONAL ENGINEER NHUAN NGUYEN No. 42692 Exp. 3/31/12 CIVIL STATE OF CALIFORNIA

THE STATE OF CALIFORNIA OR ITS OFFICERS OR AGENTS SHALL NOT BE RESPONSIBLE FOR THE ACCURACY OR COMPLETENESS OF SCANNED COPIES OF THIS PLAN SHEET.

NOTE:

FOR ACCURATE RIGHT OF WAY DATA, CONTACT RIGHT OF WAY ENGINEERING AT THE DISTRICT OFFICE.

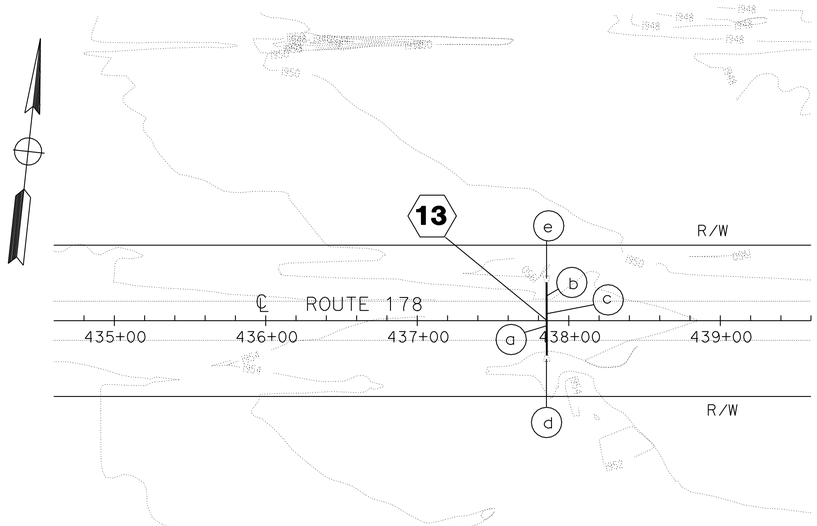

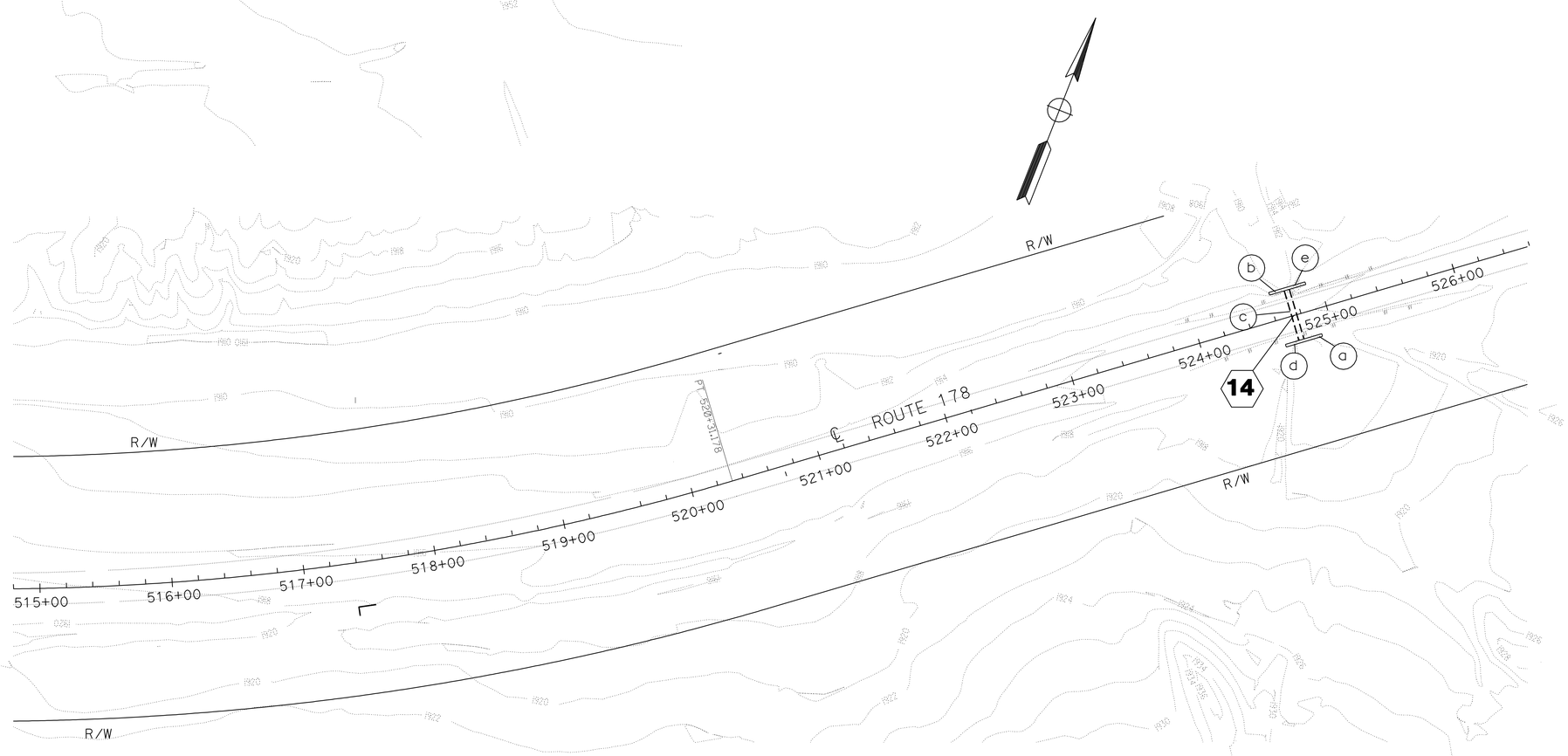

DRAINAGE PLAN

SCALE: 1" = 50'

D-4

STATE OF CALIFORNIA - DEPARTMENT OF TRANSPORTATION
Caltrans PROJECT DEVELOPMENT

FUNCTIONAL SUPERVISOR: GEORGE MORHIG
CALCULATED-DESIGNED BY: HUNG PHAM
CHECKED BY: NHUAN NGUYEN
REVISED BY
DATE REVISED

LAST REVISION 09-19-11
DATE PLOTTED => 28-NOV-2011
TIME PLOTTED => 10:14

Dist	COUNTY	ROUTE	POST MILES TOTAL PROJECT	SHEET No.	TOTAL SHEETS
08	SBd	178	5.0/14.3	8	22

N. J. Nguyen 9-19-11
REGISTERED CIVIL ENGINEER DATE

11-28-11
PLANS APPROVAL DATE

REGISTERED PROFESSIONAL ENGINEER
NHUAN NGUYEN
No. 42692
Exp. 3/31/12
CIVIL
STATE OF CALIFORNIA

THE STATE OF CALIFORNIA OR ITS OFFICERS OR AGENTS SHALL NOT BE RESPONSIBLE FOR THE ACCURACY OR COMPLETENESS OF SCANNED COPIES OF THIS PLAN SHEET.

NOTE:

FOR ACCURATE RIGHT OF WAY DATA, CONTACT
RIGHT OF WAY ENGINEERING AT THE DISTRICT OFFICE.

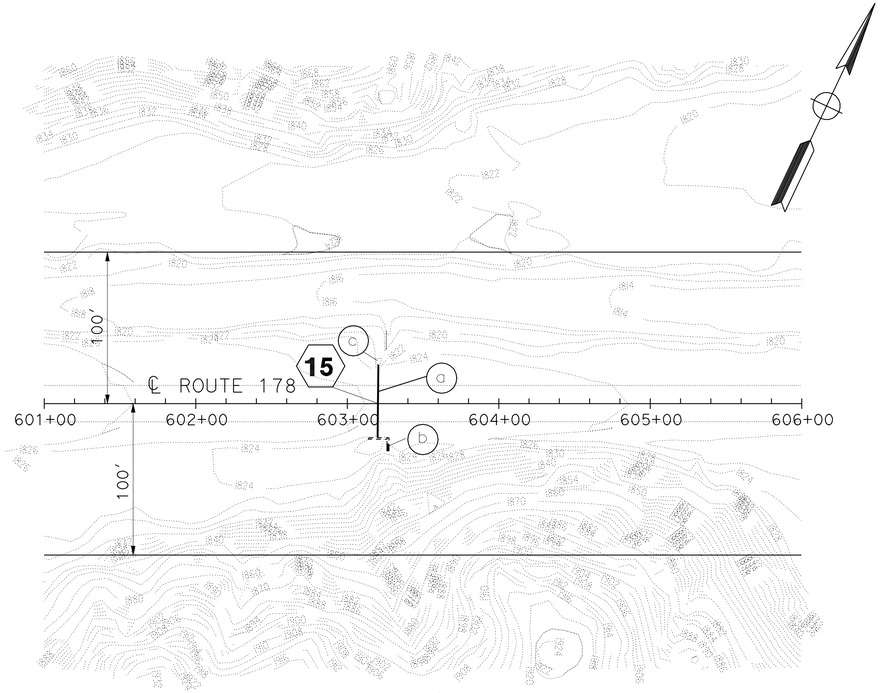

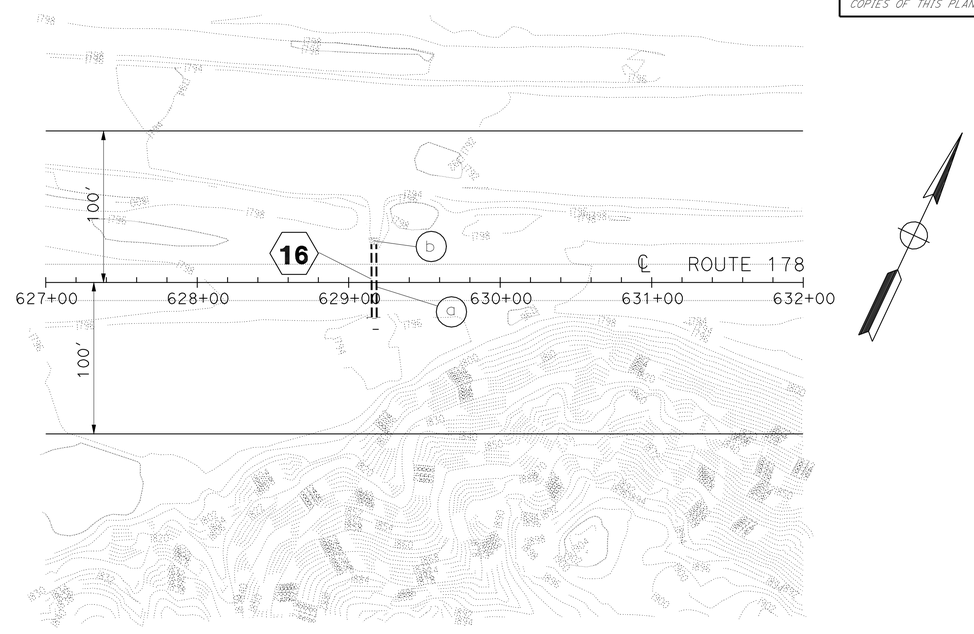

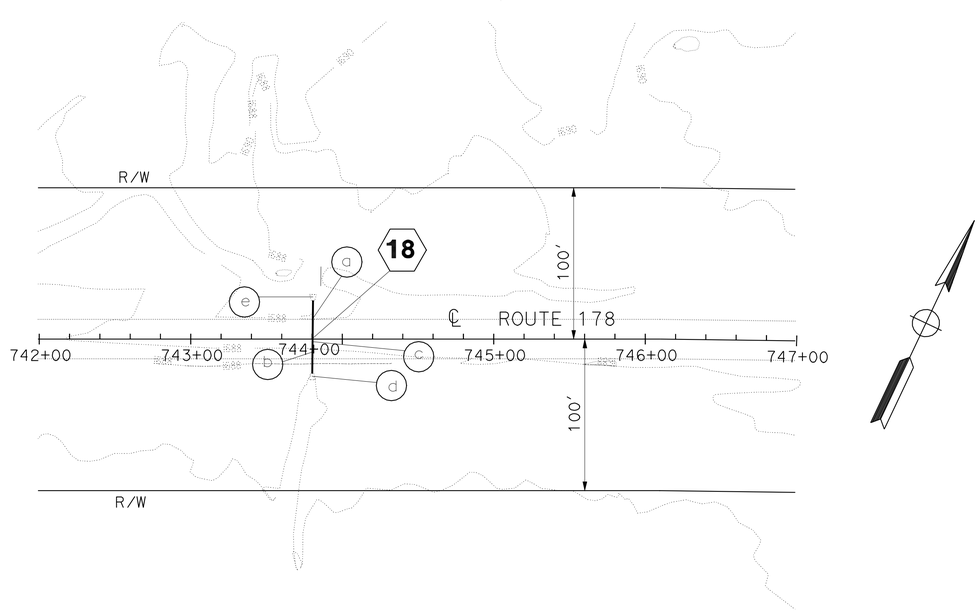

DRAINAGE PLAN

SCALE: 1" = 50'

D-5

STATE OF CALIFORNIA - DEPARTMENT OF TRANSPORTATION
Caltrans PROJECT DEVELOPMENT

FUNCTIONAL SUPERVISOR: GEORGE MORHIG
CALCULATED-DESIGNED BY: HUNG PHAM
CHECKED BY: NHUAN NGUYEN
REVISED BY
DATE REVISED

LAST REVISION 09-19-11
DATE PLOTTED => 28-NOV-2011
TIME PLOTTED => 10:15

Dist	COUNTY	ROUTE	POST MILES TOTAL PROJECT	SHEET No.	TOTAL SHEETS
08	SBd	178	5.0/14.3	9	22

N. J. Nguyen 10-7-11
REGISTERED CIVIL ENGINEER DATE

11-28-11
PLANS APPROVAL DATE

REGISTERED PROFESSIONAL ENGINEER NHUAN NGUYEN No. 42692 Exp. 3/31/12 CIVIL STATE OF CALIFORNIA

THE STATE OF CALIFORNIA OR ITS OFFICERS OR AGENTS SHALL NOT BE RESPONSIBLE FOR THE ACCURACY OR COMPLETENESS OF SCANNED COPIES OF THIS PLAN SHEET.

LEGEND:

Minor Concrete (Backfill)

Hot Mix Asphalt (Type A)

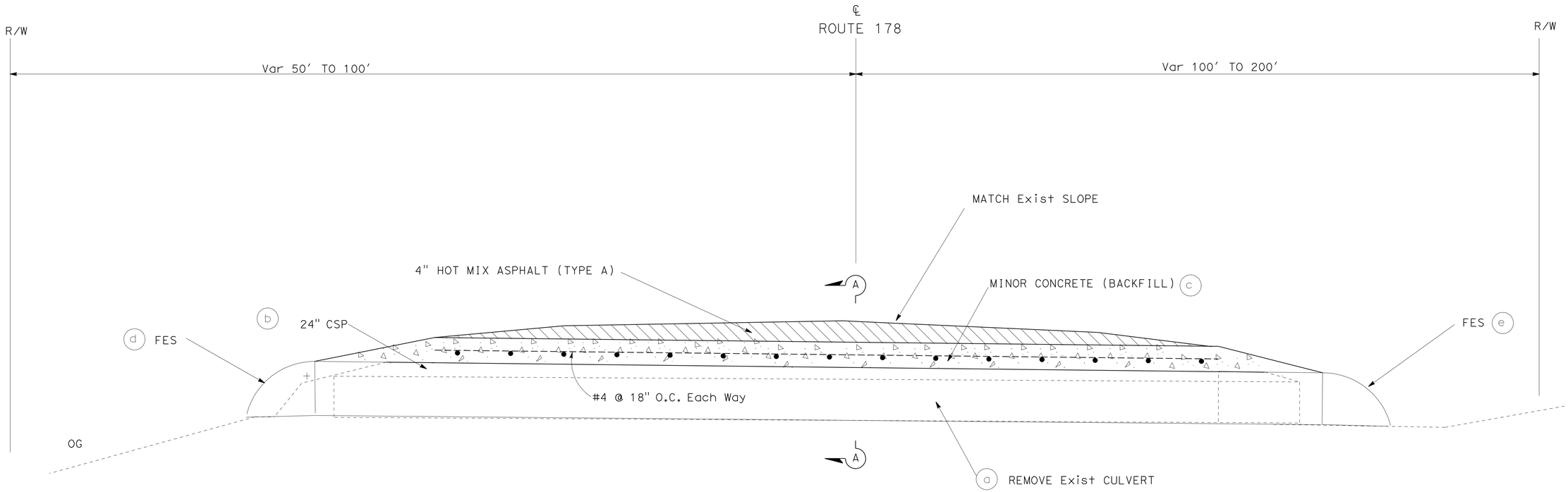

DRAINAGE SYSTEM No. 1 2 3 4 5 6 7 8 9 10 11 12 13 18

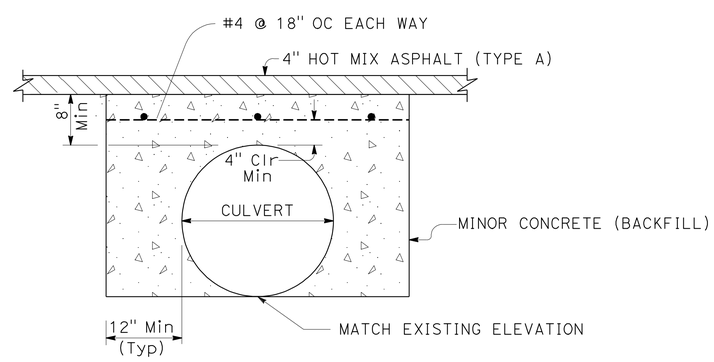

SECTION A-A

MINOR CONCRETE (BACKFILL) SHALL BE RAPID STRENGTH CONCRETE.

DRAINAGE DETAILS

NO SCALE

DD-1

STATE OF CALIFORNIA - DEPARTMENT OF TRANSPORTATION
Caltrans PROJECT DEVELOPMENT

FUNCTIONAL SUPERVISOR: GEORGE MORHIG

CALCULATED-DESIGNED BY: HUNG PHAM
CHECKED BY: NHUAN NGUYEN

REVISED BY | DATE REVISED

LAST REVISION 10-07-11 | DATE PLOTTED => 28-NOV-2011 | TIME PLOTTED => 10:18

Dist	COUNTY	ROUTE	POST MILES TOTAL PROJECT	SHEET No.	TOTAL SHEETS
08	SBd	178	5.0/14.3	10	22

N. T. Nguyen 9-19-11
REGISTERED CIVIL ENGINEER DATE

11-28-11
PLANS APPROVAL DATE

REGISTERED PROFESSIONAL ENGINEER
NHUAN NGUYEN
No. 42692
Exp. 3/31/12
CIVIL
STATE OF CALIFORNIA

THE STATE OF CALIFORNIA OR ITS OFFICERS OR AGENTS SHALL NOT BE RESPONSIBLE FOR THE ACCURACY OR COMPLETENESS OF SCANNED COPIES OF THIS PLAN SHEET.

NOTE:
NEW STRAIGHT DOUBLE HEADWALL PER STD PLAN D-89 IS INSTALLED AT THE SAME LOCATION
SEE DRAINAGE DETAIL DD-4 FOR ADDITIONAL DETAILS.

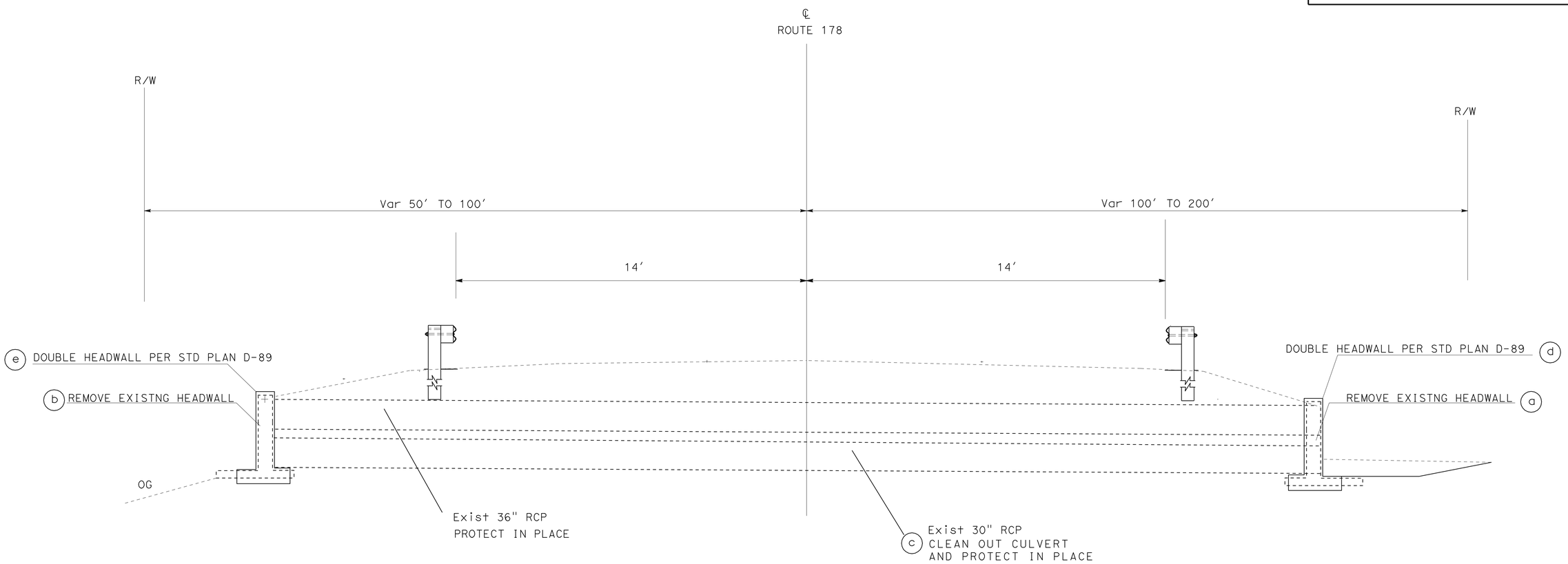

DRAINAGE SYSTEM No. 14

DRAINAGE DETAILS
NO SCALE

DD-2

REVISED BY	DATE REVISED

CALCULATED-DESIGNED BY	CHECKED BY
HUNG PHAM	NHUAN NGUYEN

FUNCTIONAL SUPERVISOR: GEORGE MORHIG

STATE OF CALIFORNIA - DEPARTMENT OF TRANSPORTATION
Caltrans PROJECT DEVELOPMENT

LAST REVISION 09-19-11 | DATE PLOTTED => 28-NOV-2011 | TIME PLOTTED => 10:10

Dist	COUNTY	ROUTE	POST MILES TOTAL PROJECT	SHEET No.	TOTAL SHEETS
08	SBd	178	5.0/14.3	11	22

N. T. Nguyen 8-1-11
REGISTERED CIVIL ENGINEER DATE

11-28-11
PLANS APPROVAL DATE

REGISTERED PROFESSIONAL ENGINEER
NHUAN NGUYEN
No. 42692
Exp. 3/31/12
CIVIL
STATE OF CALIFORNIA

THE STATE OF CALIFORNIA OR ITS OFFICERS OR AGENTS SHALL NOT BE RESPONSIBLE FOR THE ACCURACY OR COMPLETENESS OF SCANNED COPIES OF THIS PLAN SHEET.

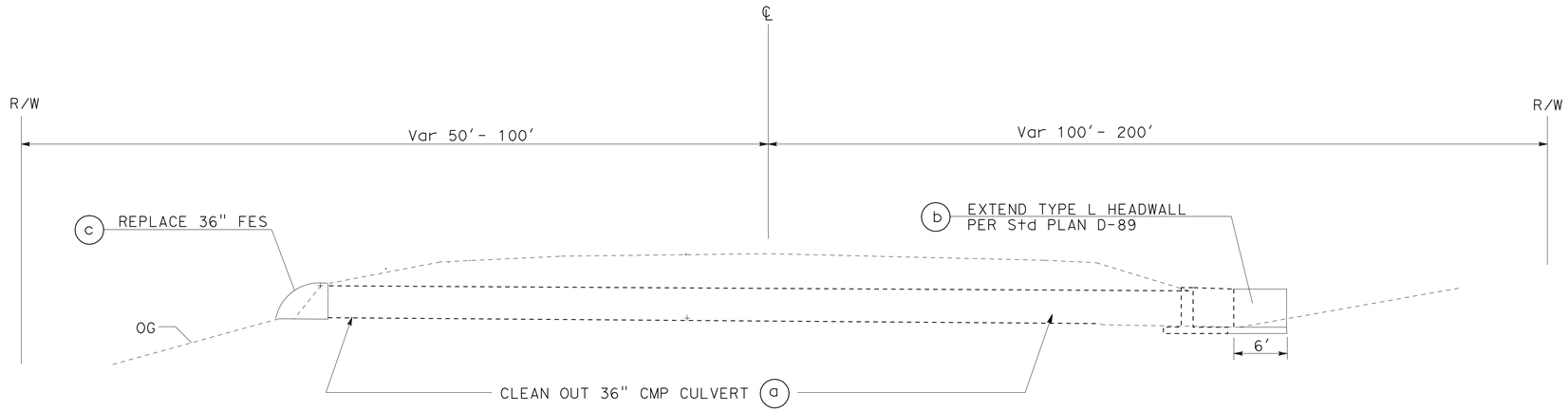

DRAINAGE SYSTEM No. 15

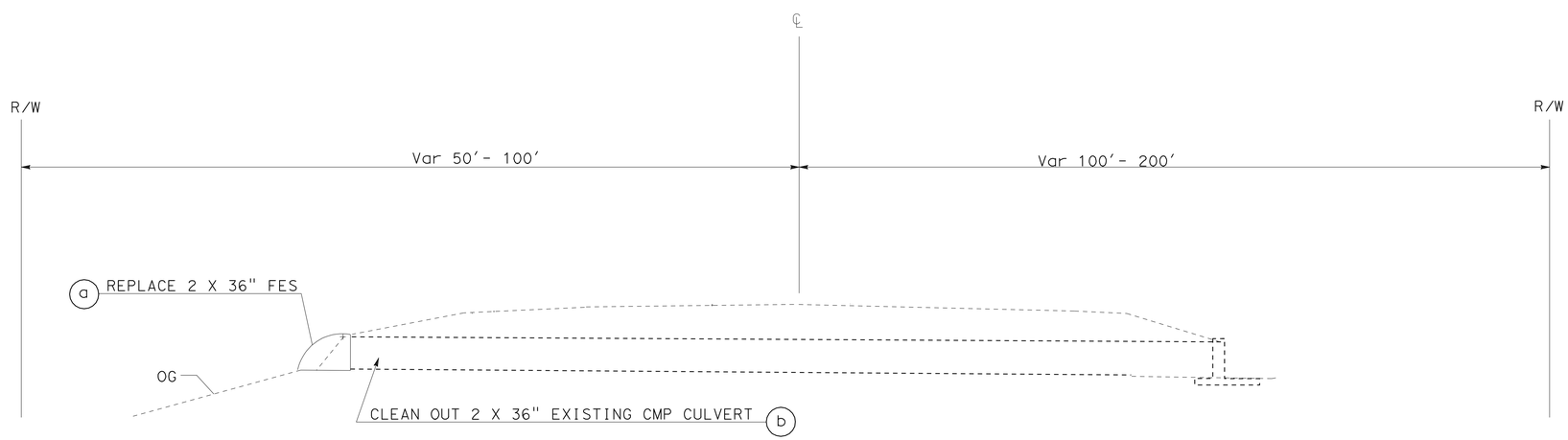

DRAINAGE SYSTEM No. 16

DRAINAGE DETAILS
NO SCALE

DD-3

STATE OF CALIFORNIA - DEPARTMENT OF TRANSPORTATION
Caltrans PROJECT DEVELOPMENT

FUNCTIONAL SUPERVISOR: GEORGE MORHIG
CALCULATED-DESIGNED BY: HUNG PHAM
CHECKED BY: NHUAN NGUYEN
REVISED BY
DATE REVISED

LAST REVISION 08-01-11
DATE PLOTTED => 28-NOV-2011
TIME PLOTTED => 10:06

Dist	COUNTY	ROUTE	POST MILES TOTAL PROJECT	SHEET No.	TOTAL SHEETS
08	SBd	178	5.0/14.3	12	22

N. J. Nguyen 9-19-11
REGISTERED CIVIL ENGINEER DATE

11-28-11
PLANS APPROVAL DATE

REGISTERED PROFESSIONAL ENGINEER
NHUAN NGUYEN
No. 42692
Exp. 3/31/12
CIVIL
STATE OF CALIFORNIA

THE STATE OF CALIFORNIA OR ITS OFFICERS OR AGENTS SHALL NOT BE RESPONSIBLE FOR THE ACCURACY OR COMPLETENESS OF SCANNED COPIES OF THIS PLAN SHEET.

NOTE:
FOR MORE DETAILS SEE STD PLAN D-89

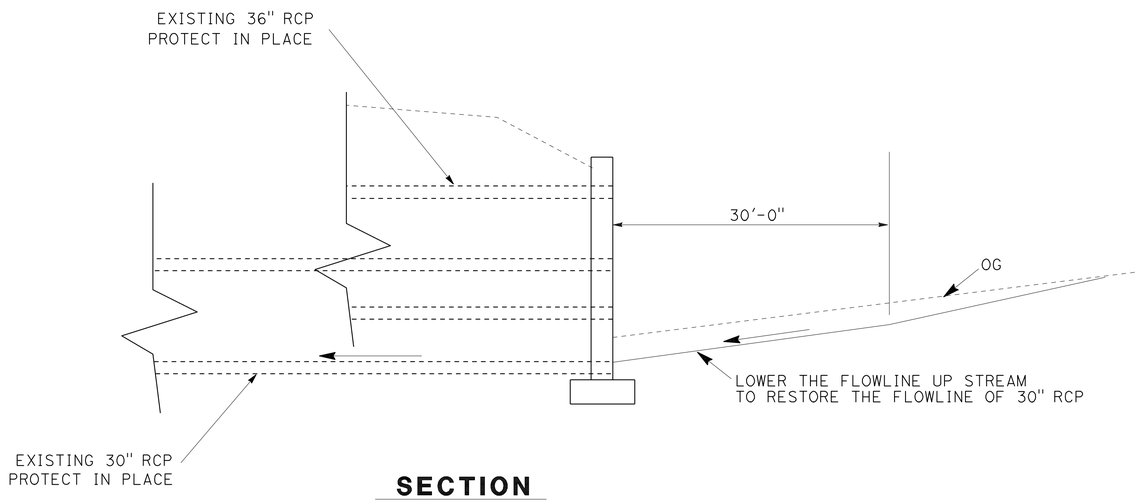

SECTION

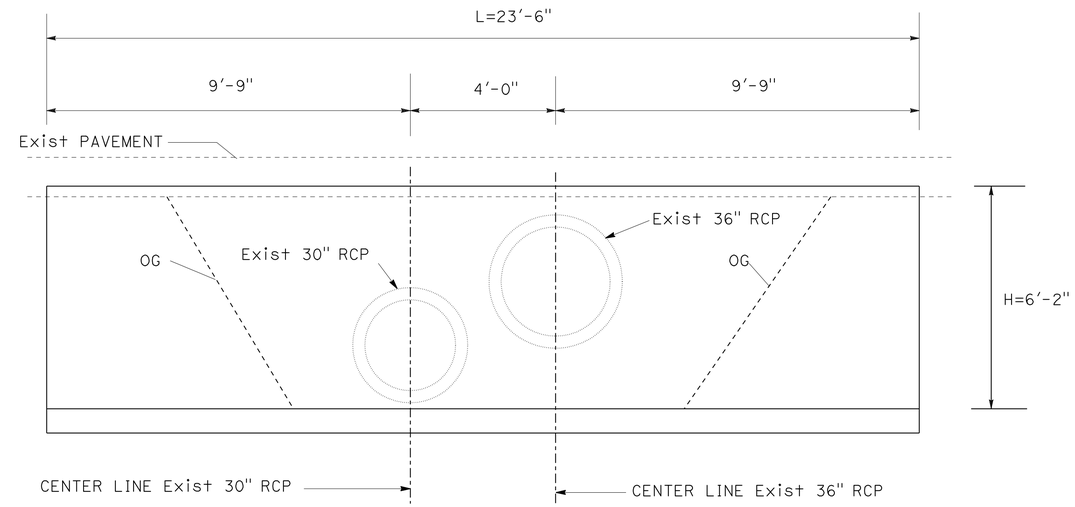

FRONT ELEVATION
UP STREAM

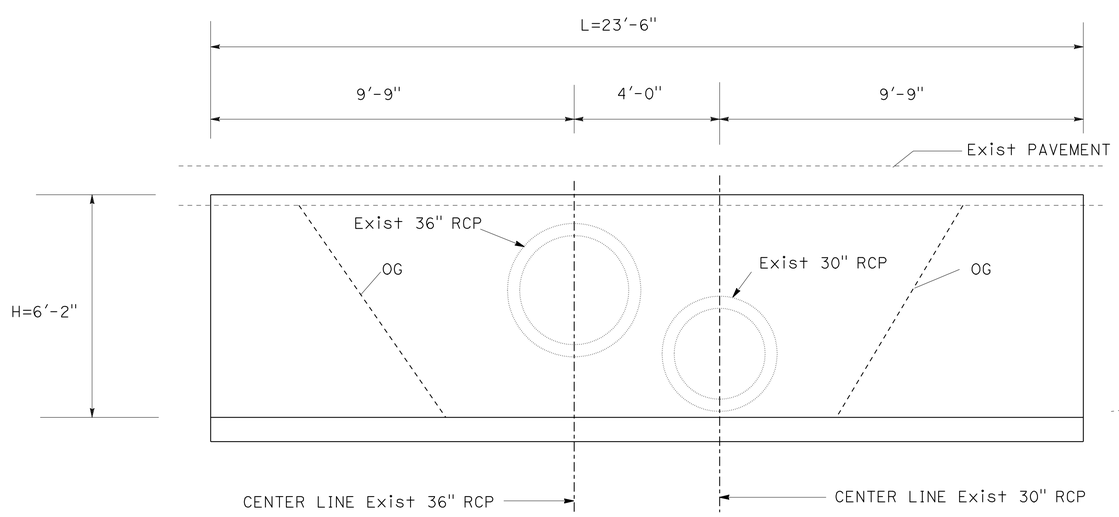

FRONT ELEVATION
DOWN STREAM

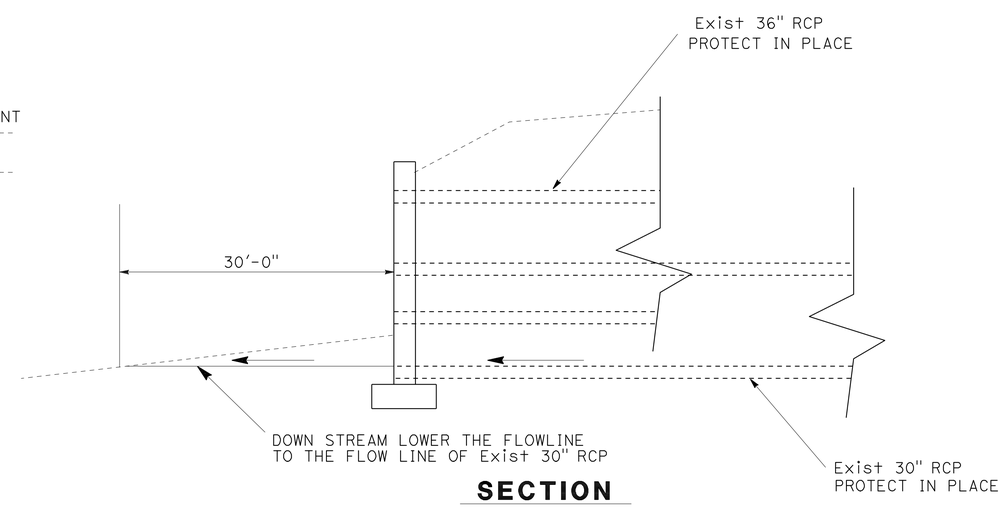

SECTION

DRAINAGE DETAILS
DRAINAGE SYSTEM 14

NO SCALE **DD-4**

STATE OF CALIFORNIA - DEPARTMENT OF TRANSPORTATION
Caltrans PROJECT DEVELOPMENT

FUNCTIONAL SUPERVISOR: GEORGE MORHIG
CALCULATED-DESIGNED BY: HUNG PHAM
CHECKED BY: NHUAN NGUYEN
REVISED BY
DATE REVISED

LAST REVISION 09-19-11
DATE PLOTTED => 28-NOV-2011
TIME PLOTTED => 10:37

Dist	COUNTY	ROUTE	POST MILES TOTAL PROJECT	SHEET No.	TOTAL SHEETS
08	SBd	178	5.0/14.3	13	22

N. T. Nguyen 9-19-11
REGISTERED CIVIL ENGINEER DATE

11-28-11
PLANS APPROVAL DATE

REGISTERED PROFESSIONAL ENGINEER NHUAN NGUYEN No. 42692 Exp. 3/31/12 CIVIL STATE OF CALIFORNIA

THE STATE OF CALIFORNIA OR ITS OFFICERS OR AGENTS SHALL NOT BE RESPONSIBLE FOR THE ACCURACY OR COMPLETENESS OF SCANNED COPIES OF THIS PLAN SHEET.

NOTES:

1. THE PRECISE DETERMINATION OF THE FOLLOWING ITEMS WILL BE MADE BY THE ENGINEER IN THE FIELD: STATION, LENGTH, FLOWLINE ELEVATION AND DEPTH OF THE STRUCTURE "H".
2. CSP SHALL BE BITUMINOUS COATED 0.138" THICK.

DRAINAGE QUANTITIES

DRAINAGE PLAN SHEET No.	DRAINAGE SYSTEM No. ⬡	DRAINAGE UNIT ○	REMOVE CULVERT LF	MINOR CONCRETE (BACKFILL) CY	24" CSP (0.138" THICK) LF	24" STEEL FES EA	36" STEEL FES EA	MINOR CONCRETE (MINOR STRUCTURE) CY	CLEAN OUT EXISTING CULVERT CY	REMOVE HEADWALL EA	DESCRIPTION	STATION	DRAINAGE PLAN SHEET No.	DRAINAGE SYSTEM No. ⬡	DRAINAGE UNIT ○
D-1	1	a	47								REMOVE 18" CULVERT	" ℄ RTE 178" 266+98	D-1	1	a
		b			50						24" CSP	" ℄ RTE 178" 266+98			b
		c		20.11							MINOR CONCRETE (BACKFILL)	" ℄ RTE 178" 266+98			c
		d				1					24" STEEL FES	24' RT " ℄ RTE 178" 266+98			d
		e				1					24" STEEL FES	24' LT " ℄ RTE 178" 266+98			e
D-1	2	a	45								REMOVE 18" CULVERT	" ℄ RTE 178" 279+51	D-1	2	a
		b			50						24" CSP	" ℄ RTE 178" 279+51			b
		c		20.11							MINOR CONCRETE (BACKFILL)	" ℄ RTE 178" 279+51			c
		d				1					24" STEEL FES	22' RT " ℄ RTE 178" 279+51			d
		e				1					24" STEEL FES	22' LT " ℄ RTE 178" 279+51			e
D-1	3	a	49								REMOVE CULVERT	" ℄ RTE 178" 289+04	D-1	3	a
		b			50						24" CSP	" ℄ RTE 178" 289+04			b
		c		20.11							MINOR CONCRETE (BACKFILL)	" ℄ RTE 178" 289+04			c
		d				1					24" STEEL FES	24' RT " ℄ RTE 178" 289+04			d
		e				1					24" STEEL FES	24' LT " ℄ RTE 178" 289+04			e
D-1	4	a	43								REMOVE 18" CULVERT	" ℄ RTE 178" 297+22	D-1	4	a
		b			44						24" CSP	" ℄ RTE 178" 297+22			b
		c		17.70							MINOR CONCRETE (BACKFILL)	" ℄ RTE 178" 297+22			c
		d				1					24" STEEL FES	22' RT " ℄ RTE 178" 297+22			d
		e				1					24" STEEL FES	22' LT " ℄ RTE 178" 297+22			e
D-2	5	a	40								REMOVE 18" CULVERT	" ℄ RTE 178" 312+94	D-2	5	a
		b			40						24" CSP	" ℄ RTE 178" 312+94			b
		c		16.09							MINOR CONCRETE (BACKFILL)	" ℄ RTE 178" 312+94			c
		d				1					24" STEEL FES	20' LT " ℄ RTE 178" 312+94			d
		e				1					24" STEEL FES	20' RT " ℄ RTE 178" 312+94			e
D-2	6	a	46								REMOVE 18" CULVERT	" ℄ RTE 178" 332+42	D-2	6	a
		b			46						24" CSP	" ℄ RTE 178" 332+42			b
		c		18.50							MINOR CONCRETE (BACKFILL)	" ℄ RTE 178" 332+42			c
		d				1					24" STEEL FES	23' RT " ℄ RTE 178" 332+42			d
		e				1					24" STEEL FES	20' RT " ℄ RTE 178" 332+42			e
SUBTOTAL			270	112.62	280	12									

REVISED BY | DATE REVISED
HUNG PHAM | NHUAN NGUYEN
CALCULATED-DESIGNED BY | CHECKED BY
FUNCTIONAL SUPERVISOR
GEORGE MORHIG

STATE OF CALIFORNIA - DEPARTMENT OF TRANSPORTATION
Caltrans PROJECT DEVELOPMENT

DRAINAGE QUANTITIES
DQ-1

LAST REVISION 09-19-11 | DATE PLOTTED => 14-MAR-2012 | TIME PLOTTED => 08:22

Dist	COUNTY	ROUTE	POST MILES TOTAL PROJECT	SHEET No.	TOTAL SHEETS
08	SBd	178	5.0/14.3	14	22

N. T. Nguyen 9-19-11
REGISTERED CIVIL ENGINEER DATE

11-28-11
PLANS APPROVAL DATE

REGISTERED PROFESSIONAL ENGINEER NHUAN NGUYEN No. 42692 Exp. 3/31/12 CIVIL STATE OF CALIFORNIA

THE STATE OF CALIFORNIA OR ITS OFFICERS OR AGENTS SHALL NOT BE RESPONSIBLE FOR THE ACCURACY OR COMPLETENESS OF SCANNED COPIES OF THIS PLAN SHEET.

DRAINAGE QUANTITIES

DRAINAGE PLAN SHEET No.	DRAINAGE SYSTEM No. ⬡	DRAINAGE UNIT ○	REMOVE CULVERT LF	MINOR CONCRETE (BACKFILL) CY	24" CSP (0.138" THICK) LF	24" STEEL FES EA	36" STEEL FES EA	MINOR CONCRETE (MINOR STRUCTURE) CY	CLEAN OUT EXISTING CULVERT CY	REMOVE HEADWALL EA	DESCRIPTION	STATION	DRAINAGE PLAN SHEET No.	DRAINAGE SYSTEM No. ⬡	DRAINAGE UNIT ○
D-2	7	a	45								REMOVE CULVERT	" ℄ RTE 178" 337+39	D-2	7	a
		b			46						24" CSP	" ℄ RTE 178" 337+39			b
		c		18.50							MINOR CONCRETE (BACKFILL)	" ℄ RTE 178" 337+39			c
		d				1					24" STEEL FES	22' RT "℄ RTE 178" 337+39			d
		e				1					24" STEEL FES	22' LT "℄ RTE 178" 337+39			e
D-3	8	a	36								REMOVE CULVERT	" ℄ RTE 178" 352+90	D-3	8	a
		b			40						24" CSP	" ℄ RTE 178" 352+90			b
		c		16.09							MINOR CONCRETE (BACKFILL)	" ℄ RTE 178" 352+90			c
		d				1					24" STEEL FES	18' RT "℄ RTE 178" 352+90			d
		e				1					24" STEEL FES	18' LT "℄ RTE 178" 352+90			e
D-3	9	a	42								REMOVE CULVERT	" ℄ RTE" 358+89	D-3	9	a
		b			44						24" CSP	" ℄ RTE" 358+89			b
		c		17.70							MINOR CONCRETE (BACKFILL)	" ℄ RTE" 358+89			c
		d				1					24" STEEL FES	21' RT "℄ RTE 178" 358+89			d
		e				1					24" STEEL FES	21' LT "℄ RTE 178" 358+89			e
D-3	10	a	45								REMOVE CULVERT	" ℄ RTE 178" 363+40	D-3	10	a
		b			46						24" CSP	" ℄ RTE 178" 363+40			b
		c		18.50							MINOR CONCRETE (BACKFILL)	" ℄ RTE 178" 363+40			c
		d				1					24" STEEL FES	22' RT "℄ RTE 178" 363+40			d
		e				1					24" STEEL FES	22' LT "℄ RTE 178" 363+40			e
D-3	11	a	33								REMOVE CULVERT	" ℄ RTE 178" 374+38	D-3	11	a
		b			36						24" CSP	" ℄ RTE 178" 374+38			b
		c		11.48							MINOR CONCRETE (BACKFILL)	" ℄ RTE 178" 374+38			c
		d				1					24" STEEL FES	16' RT "℄ RTE 178" 374+38			d
		e				1					24" STEEL FES	16' LT "℄ RTE 178" 374+38			e
D-3	12	a	41								REMOVE CULVERT	" ℄ RTE 178" 413+70	D-3	12	a
		b			42						24" CSP	" ℄ RTE 178" 413+70			b
		c		16.89							MINOR CONCRETE (BACKFILL)	" ℄ RTE 178" 413+70			c
		d				1					24" STEEL FES	21' RT "℄ RTE 178" 413+70			d
		e				1					24" STEEL FES	21' LT "℄ RTE 178" 413+70			e
SUBTOTAL			242	99.16	254	12									

DRAINAGE QUANTITIES
DQ-2

STATE OF CALIFORNIA - DEPARTMENT OF TRANSPORTATION
Caltrans PROJECT DEVELOPMENT

FUNCTIONAL SUPERVISOR: GEORGE MORHIG
CALCULATED-DESIGNED BY: HUNG PHAM
CHECKED BY: NHUAN NGUYEN
REVISED BY
DATE REVISED

LAST REVISION 09-19-11
DATE PLOTTED => 14-MAR-2012
TIME PLOTTED => 08:22

Dist	COUNTY	ROUTE	POST MILES TOTAL PROJECT	SHEET No.	TOTAL SHEETS
08	SBd	178	5.0/14.3	15	22

N. T. Nguyen 9-19-11
REGISTERED CIVIL ENGINEER DATE

11-28-11
PLANS APPROVAL DATE

REGISTERED PROFESSIONAL ENGINEER NHUAN NGUYEN No. 42692 Exp. 3/31/12 CIVIL STATE OF CALIFORNIA

THE STATE OF CALIFORNIA OR ITS OFFICERS OR AGENTS SHALL NOT BE RESPONSIBLE FOR THE ACCURACY OR COMPLETENESS OF SCANNED COPIES OF THIS PLAN SHEET.

DRAINAGE QUANTITIES

DRAINAGE PLAN SHEET No.	DRAINAGE SYSTEM No. ⬡	DRAINAGE UNIT ○	REMOVE CULVERT LF	MINOR CONCRETE (BACKFILL) CY	24" CSP (0.138" THICK) LF	24" STEEL FES EA	36" STEEL FES EA	MINOR CONCRETE (MINOR STRUCTURE) CY	CLEAN OUT EXISTING CULVERT CY	REMOVE HEADWALL EA	DESCRIPTION	STATION	DRAINAGE PLAN SHEET No.	DRAINAGE SYSTEM No. ⬡	DRAINAGE UNIT ○
D-4	13	a	54								REMOVE CULVERT	" ℄ RTE 178" 437+85	D-4	13	a
		b			54						24" CSP	" ℄ RTE 178" 437+85			b
		c		21.72							MINOR CONCRETE (BACKFILL)	" ℄ RTE 178" 437+85			c
		d				1					24" STEEL FES	27' RT "℄ RTE 178" 437+85			d
		e				1					24" STEEL FES	27' LT "℄ RTE 178" 437+85			e
D-4	14	a								1	REMOVE HEADWALL	20' RT "℄ RTE 178" 524+95	D-4	14	a
		b								1	REMOVE HEADWALL	20' LT "℄ RTE 178" 524+95			b
		c							9.0		CLEAN OUT 30" AND 36" CULVERT	" ℄ RTE 178" 524+95			c
		d						5			HEADWALL	20' RT "℄ RTE 178" 524+95			d
		e						5			HEADWALL	20' LT "℄ RTE 178" 524+95			e
D-5	15	a							5.0		CLEAN OUT 36" CULVERT	" ℄ RTE 178" 603+21	D-5	15	a
		b						1.34			EXTEND 6' HEADWALL	27' RT "℄ RTE 178" 603+21			b
		c					1				REPLACE 36" STEEL FES	22' LT "℄ RTE 178" 603+21			c
D-5	16	a							10.0		CLEAN OUT 2-36" CULVERT	" ℄ RTE 178" 629+18	D-5	16	a
		b					2				REPLACE 2-36" STEEL FES	21' LT "℄ RTE 178" 629+18			b
D-5	18	a	40								REMOVE 6" CULVERT	" ℄ RTE 178" 743+80	D-5	18	a
		b			40						24" CSP	" ℄ RTE 178" 743+80			b
		c		16.09							MINOR CONCRETE (BACKFILL)	" ℄ RTE 178" 743+80			c
		d				1					24" STEEL FES	20' RT "℄ RTE 178" 743+80			d
		e				1					24" STEEL FES	20' LT "℄ RTE 178" 743+80			e
SUBTOTAL			94	37.81	94	4	3	11.34	24.0	2					
FROM DQ-1			270	112.62	280	12									
FROM DQ-2			242	99.16	254	12									
TOTAL			606	249.59	628	28	3	11.34	24.0	2					

REVISED BY | DATE REVISED
HUNG PHAM | NHUAN NGUYEN
CALCULATED-DESIGNED BY | CHECKED BY
FUNCTIONAL SUPERVISOR
GEORGE MORHIG

STATE OF CALIFORNIA - DEPARTMENT OF TRANSPORTATION
Caltrans PROJECT DEVELOPMENT

DRAINAGE QUANTITIES
DQ-3

LAST REVISION 09-19-11 | DATE PLOTTED => 14-MAR-2012 | TIME PLOTTED => 09:45

Dist	COUNTY	ROUTE	POST MILES TOTAL PROJECT	SHEET No.	TOTAL SHEETS
08	SBd	178	5.0/14.3	16	22

REGISTERED CIVIL ENGINEER 10-20-11 DATE

11-28-11
PLANS APPROVAL DATE

REGISTERED PROFESSIONAL ENGINEER TRAN HOANG No. 54996 Exp. 6/30/12 CIVIL STATE OF CALIFORNIA

THE STATE OF CALIFORNIA OR ITS OFFICERS OR AGENTS SHALL NOT BE RESPONSIBLE FOR THE ACCURACY OR COMPLETENESS OF SCANNED COPIES OF THIS PLAN SHEET.

NOTES:

1. LOCATION OF CONSTRUCTION AREA SIGNS ARE APPROXIMATE. EXACT SIGN LOCATIONS TO BE DETERMINED BY THE ENGINEER.

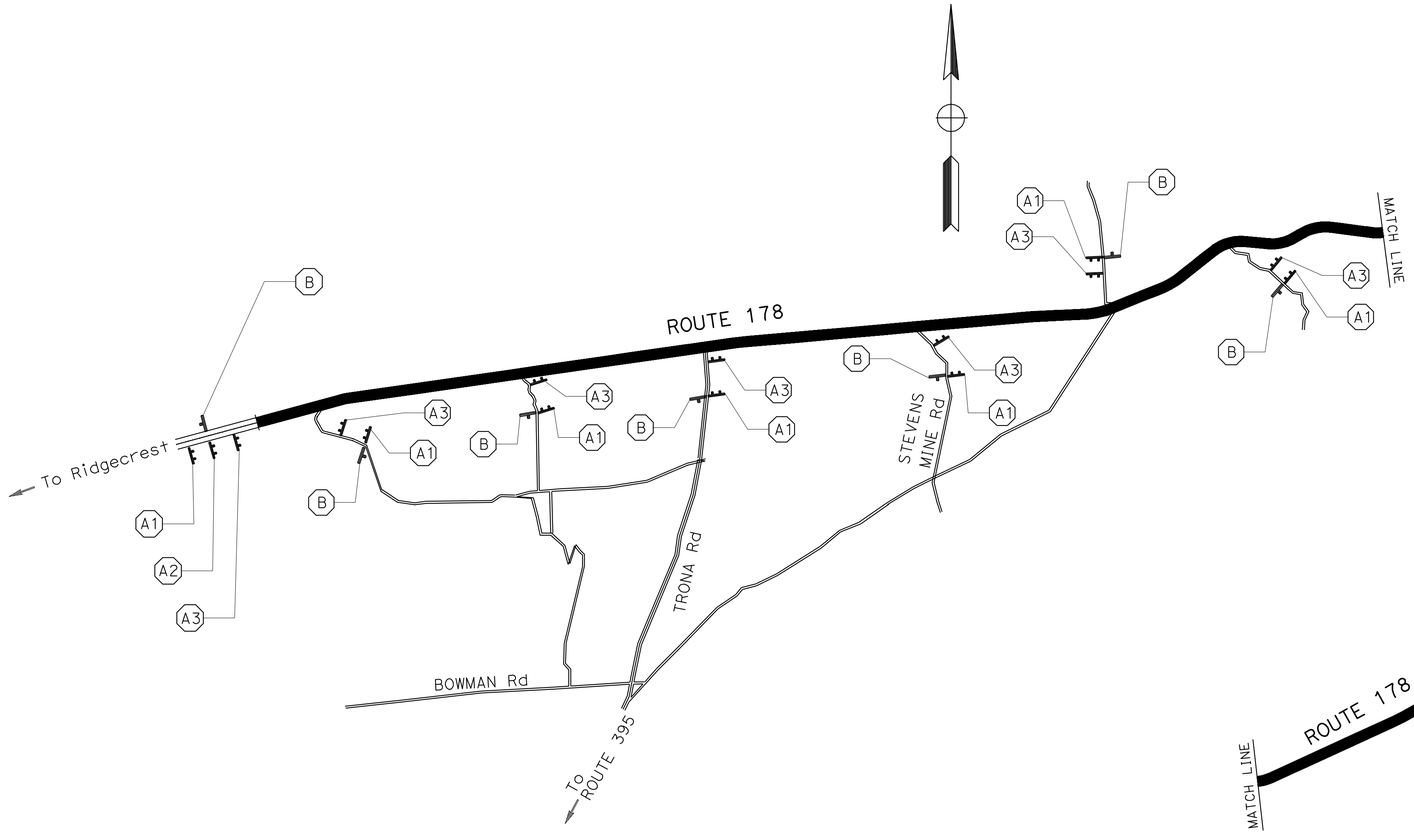

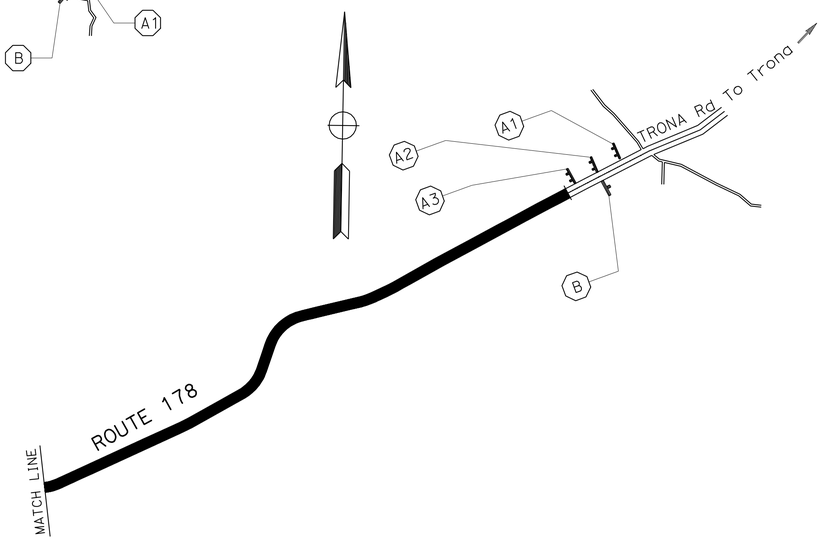

CONSTRUCTION AREA SIGNS

SIGN No.	SIGN CODE FEDERAL	SIGN CODE CALIFORNIA	PANEL SIZE	No. OF POSTS AND SIZE	SIGN MESSAGE	No. OF SIGNS
A1		C11(CA)	60" X 36"	2 - 4" X 6"	ROAD WORK NEXT 11 MILES	8
A2		C40(CA)	72" X 36"	2 - 4" X 6"	TRAFFIC FINES DOUBLED IN CONSTRUCTION ZONES	2
A3		S30-2(CA)	108" X 54"	2 - 6" X 6"	TURN ON HEADLIGHTS NEXT 11 MILES	8
B	G20-2		48" X 24"	1 - 4" X 6"	END ROAD WORK	8

CONSTRUCTION AREA SIGNS
NO SCALE

CS-1

THIS PLAN ACCURATE FOR CONSTRUCTION AREA SIGNS WORK ONLY.

STATE OF CALIFORNIA - DEPARTMENT OF TRANSPORTATION
Caltrans TRAFFIC DESIGN B

FUNCTIONAL SUPERVISOR: LARRY SARTORI
CALCULATED-DESIGNED BY: DARYUSH NAMI
CHECKED BY: TRAN HOANG
REVISED BY
DATE REVISED

LAST REVISION 10-20-11
DATE PLOTTED => 28-NOV-2011
TIME PLOTTED => 09:58

Dist	COUNTY	ROUTE	POST MILES TOTAL PROJECT	SHEET No.	TOTAL SHEETS
08	SBd	178	5.0/14.3	17	22

REGISTERED CIVIL ENGINEER 8-1-11 DATE

11-28-11
PLANS APPROVAL DATE

REGISTERED PROFESSIONAL ENGINEER TRAN HOANG No. 54996 Exp. 6/30/12 CIVIL STATE OF CALIFORNIA

THE STATE OF CALIFORNIA OR ITS OFFICERS OR AGENTS SHALL NOT BE RESPONSIBLE FOR THE ACCURACY OR COMPLETENESS OF SCANNED COPIES OF THIS PLAN SHEET.

PAVEMENT DELINEATION QUANTITIES

LOCATION	STATION	DETAIL No.			REMOVE PAVEMENT MARKERS	REMOVE TRAFFIC STRIPES		PAVEMENT MARKER RETROREFLECTIVE		THERMOPLASTIC TRAFFIC STRIPE (SPRAYABLE)	
						REMOVE YELLOW THERMOPLASTIC TRAFFIC STRIPE (Hazardous Waste)	REMOVE TRAFFIC STRIPE				
		6	19	27B		YELLOW	WHITE	TYPE D	TYPE H	4 IN YELLOW	4 IN WHITE
		LF	LF	LF	EA	LF	LF	EA	EA	LF	LF
1	PM 5.06	96		192	3	96	192	3		96	192
2	PM 5.29	96		192	3	96	192	3		96	192
3	PM 5.48		96	192	8	96	192	3	5	96	192
4	PM 5.64		96	192	8	96	192	3	5	96	192
5	PM 5.92	96		192	3	96	192	3		96	192
6	PM 6.29	96		192	3	96	192	3		96	192
7	PM 6.39	96		192	3	96	192	3		96	192
8	PM 6.68	96		192	3	96	192	3		96	192
9	PM 6.79	96		192	3	96	192	3		96	192
10	PM 6.87	96		192	3	96	192	3		96	192
11	PM 7.09	96		192	3	96	192	3		96	192
12	PM 7.84	96		192	3	96	192	3		96	192
13	PM 8.29	96		192	3	96	192	3		96	192
14	PM 9.95		96	192	8	96	192	3	5	96	192
15	PM 11.44	96		192	3	96	192	3		96	192
16	PM 11.90	96		192	3	96	192	3		96	192
18	PM 14.10	96		192	3	96	192	3		96	192
SUB TOTAL					66	1632	3264	51	15	4896	
TOTAL					66	1632	3264	66		4896	

THIS PLAN ACCURATE FOR PAVEMENT DELINEATION QUANTITIES ONLY.

PAVEMENT DELINEATION QUANTITIES

PDQ-1

STATE OF CALIFORNIA - DEPARTMENT OF TRANSPORTATION
Caltrans® TRAFFIC DESIGN B

FUNCTIONAL SUPERVISOR: LARRY SARTORI
CALCULATED-DESIGNED BY: DARYUSH NAMI
CHECKED BY: TRAN HOANG
REVISED BY
DATE REVISED

LAST REVISION 08-01-11
DATE PLOTTED => 28-NOV-2011
TIME PLOTTED => 09:58

Dist	COUNTY	ROUTE	POST MILES TOTAL PROJECT	SHEET No.	TOTAL SHEETS
08	SBd	178	5.0/14.3	18	22

N. T. Nguyen 9-19-11
REGISTERED CIVIL ENGINEER DATE

11-28-11
PLANS APPROVAL DATE

REGISTERED PROFESSIONAL ENGINEER
NHUAN NGUYEN
No. 42692
Exp. 3/31/12
CIVIL
STATE OF CALIFORNIA

THE STATE OF CALIFORNIA OR ITS OFFICERS OR AGENTS SHALL NOT BE RESPONSIBLE FOR THE ACCURACY OR COMPLETENESS OF SCANNED COPIES OF THIS PLAN SHEET.

ROADWAY QUANTITIES

LOCATION NO.	PM	ROADWAY EXCAVATION (N)	HOT MIX ASPHALT (TYPE A)
		CY	TON
1	5.06	29.6	4.8
2	5.29	29.6	4.8
3	5.48	29.6	4.8
4	5.64	26.1	4.2
5	5.92	23.7	3.8
6	6.29	27.3	4.4
7	6.39	27.3	4.4
8	6.68	23.7	3.8
9	6.79	26.1	4.2
10	6.87	27.3	4.4
11	7.09	21.3	3.4
12	7.84	24.9	4.0
13	8.29	32	5.2
14	9.95	5.7	
15	11.44	1.8	
16	11.90		
18	14.10	23.7	3.8
TOTAL		379.7	60.0

(N) NOT A SEPARATE CONTRACT PAY ITEM, FOR CONTRACTOR INFORMATION

METAL BEAM GUARD RAILING

LOCATION NO.	STATION TO STATION	SIDE	MBGR (WOOD POST)	ALTERNATIVE FLARED TERMINAL SYSTEM
			LF	EA
14	14' RT 524+49 TO 14' RT 524+99	RIGHT	50.0	2
14	14' LT 524+49 TO 14' LT 524+99	LEFT	50.0	2
TOTAL			100.0	4

SUMMARY OF QUANTITIES
Q-1

REVISED BY | DATE REVISED
HUNG PHAM | NHUAN NGUYEN
CALCULATED-DESIGNED BY | CHECKED BY
FUNCTIONAL SUPERVISOR
GEORGE MORHIG
STATE OF CALIFORNIA - DEPARTMENT OF TRANSPORTATION
Caltrans PROJECT DEVELOPMENT

LAST REVISION 09-19-11 | DATE PLOTTED => 28-NOV-2011 | TIME PLOTTED => 09:58

DIST	COUNTY	ROUTE	POST MILES TOTAL PROJECT	SHEET NO.	TOTAL SHEETS
08	SBd	178	5.0/14.3	19	22

Raymond Don Tsztoo
REGISTERED CIVIL ENGINEER

June 6, 2008
PLANS APPROVAL DATE

REGISTERED PROFESSIONAL ENGINEER Raymond Don Tsztoo No. C37332 Exp. 6-30-08 CIVIL STATE OF CALIFORNIA

The State of California or its officers or agents shall not be responsible for the accuracy or completeness of electronic copies of this plan sheet.

ANNULAR AND HELICAL PROFILE

COUPLING TYPE	PIPE CORRUGATION	PIPE SIZE	W OR A	PIPE WALL THICKNESS CSP	PIPE WALL THICKNESS CAP	BAND THICKNESS CSP	BAND THICKNESS CAP	BAR AND STRAP (CSP ONLY) STRAP THICKNESS	BOLTS Dia	BAR Dia	BAR YIELD STRENGTH	ANGLE DIMENSIONS CSP	ANGLE DIMENSIONS CAP	BOLTS (No.- Dia) CSP	BOLTS (No.- Dia) CAP	RIVETS ANGLE TO BAND CSP	RIVETS ANGLE TO BAND CAP	SPOT WELDS ANGLE TO BAND CSP
TWO PIECE INTEGRAL FLANGE	1½′ × ¼"	6"-10"	7"	0.052"-0.079"	0.048"-0.060"	0.052"	0.060"							2-⅜"	2-⅜"			
		12"-18"	7"	0.052"-0.079"		0.064"								2-½"				
	2⅔" × ½"	12"-24"	7"	0.052"-0.079"	0.060"-0.105"	0.064"	0.060"							2-½"	2-½"			
UNIVERSAL	2⅔" × ½"	THROUGH 36"	12"	0.052"-0.138"	0.060"-0.135"	0.052"	0.060"					2" × 2" × 3/16"	2" × 2" × 3/16"	3-½"	3-½"	3-⅜"	3-⅜"	3-½"
		42"-60"	12"	0.052"-0.168"	0.075"-0.164"	0.052"	0.060"					2" × 2" × 3/16"	2" × 2" × 3/16"	3-½"	3-½"	3-⅜"	3-⅜"	5-½"
		THROUGH 72"	12"	0.052"-0.168"	0.164"	0.052"	0.105"	0.079"	½"	⅞"	32 ksi	2" × 2" × 3/16"	2" × 2" × 3/16"	3-½"	3-½"	3-⅜"	3-⅜"	5-½"
		78"-84"	16¼"	0.168"		0.079"		DOUBLE 0.079"	½"	⅞"	32 ksi							
ANNULAR	2⅔" × ½"	THROUGH 36"	7"	0.064"-0.138"	0.060"-0.135"	0.052"	0.060"	0.079"	½"	⅞"	32 ksi	2" × 2" × 3/16"	2" × 2" × 3/16"	2-½"	2-½"	3-⅜"	3-⅜"	3-½"
		42"-72"	12"	0.064"-0.168"	0.075"-0.164"	0.052"	0.105"	0.079"	½"	⅞"	32 ksi	2" × 2" × 3/16"	2" × 2" × 3/16"	3-½"	3-½"	3-⅜"	3-⅜"	5-½"
		78"-84"	12"	0.168"		0.079"		0.109"	½"	⅞"	45 ksi	2" × 2" × 3/16"		3-½"		3-⅜"		5-½"
	3" × 1"	48"-90"	14"	0.064"-0.109"		0.052"		0.079"	½"	⅞"	32 ksi	2" × 2" × 3/16"		3-½"		3-⅜"		5-½"
		96"-120"	14"	0.079"-0.109"		0.052"		0.109"	½"	⅞"	45 ksi	2" × 2" × 3/16"		3-½"		4-⅜"		
		42"-108"	14"		0.060"-0.135"		0.060"						2" × 2" × 3/16"		3-½"		3-⅜"	
HELICAL	2⅔" × ½"	THROUGH 36"	12"	0.052"-0.138"	0.060"-0.135"	0.052"	0.060"	0.079"	½"	⅞"	32 ksi	2" × 2" × 3/16"	2" × 2" × 3/16"	3-½"	3-½"	3-⅜"	3-⅜"	3-½"
		42"-72"	12"	0.052"-0.168"	0.075"-0.164"	0.052"	0.060"	0.079"	½"	⅞"	32 ksi	2" × 2" × 3/16"	2" × 2" × 3/16"	3-½"	3-½"	3-⅜"	3-⅜"	5-½"
		78"-84"	12"	0.168"		0.079"		0.109"	½"	⅞"	45 ksi	2" × 2" × 3/16"		3-½"		3-⅜"		5-½"
	3" × 1"	48"-90"	14"	0.064"-0.109"		0.052"		0.079"	½"	⅞"	32 ksi	2" × 2" × 3/16"		3-½"		3-⅜"		5-½"
		96"-120"	14"	0.079"-0.109"		0.052"		0.109"	½"	⅞"	45 ksi	2" × 2" × 3/16"		3-½"		4-⅜"		
		42"-108"	14"		0.060"-0.135"		0.060"						2" × 2" × 3/16"		3-½"		3-⅜"	
HUGGER	2⅔" × ½" REROLLED END	12"-54"	4"	0.052"-0.109"		0.052"						2½" × 1½" × 3/16"	2½" × 1½" × 3/16"	1-½"				3-½"
		60"-66"	4"	0.109"		0.064"						2½" × 1½" × 3/16"	2½" × 1½" × 3/16"	1-½"				3-½"
		36"-48"	4"	0.138"		0.064"						2½" × 1½" × 3/16"	2½" × 1½" × 3/16"	1-½"				3-½"
		THROUGH 72"	10½"	0.052"-0.168"		0.052"		0.079"	½"	⅞"	32 ksi							
		78"-84"	10½"	0.168"		0.079"		0.109"	½"	⅞"	45 ksi							
	3" × 1" REROLLED END	48"-90"	10½"	0.064"-0.109"		0.052"		0.079"	½"	⅞"	32 ksi							
		96"-120"	10½"	0.079"-0.109"		0.052"		0.109"	½"	⅞"	45 ksi							
	5" × 1" REROLLED END	48"-66"	7½"	0.064"-0.109"		0.064"		0.079"	½"	⅞"	32 ksi	2½" × 1½" × 3/16"	2½" × 1½" × 3/16"	1-½"				3-½"
		72"-90"	7½"	0.064"-0.079"		0.064"		0.079"	½"	⅞"	32 ksi	2½" × 1½" × 3/16"	2½" × 1½" × 3/16"	1-½"				3-½"
		48"-90"	7½"	0.064"-0.138"		0.064"		0.079"	½"	⅞"	32 ksi							
		48"-120"	12" SEE	0.064"-0.109"		0.064"		0.079"	½"	⅞"	32 ksi							
		48"-84"	12" NOTE	0.138"		0.064"		0.079"	½"	⅞"	32 ksi							
		90"-120"	12" 11	0.138"		0.064"		DOUBLE 0.079"	½"	⅞"	32 ksi							

SPIRAL RIB PROFILE

COUPLING TYPE	PIPE CORRUGATION	PIPE SIZE	W	PIPE WALL THICKNESS SSRP	PIPE WALL THICKNESS ASRP	BAND THICKNESS SSRP	BAND THICKNESS ASRP	BAR AND STRAP (SSRP ONLY) STRAP THICKNESS	BOLTS Dia	BAR Dia	BAR YIELD STRENGTH	ANGLE DIMENSIONS SSRP	ANGLE DIMENSIONS ASRP	BOLTS (No.- Dia) SSRP	BOLTS (No.- Dia) ASRP	RIVETS ANGLE TO BAND SSRP	RIVETS ANGLE TO BAND ASRP	SPOT WELDS ANGLE TO BAND SSRP
ANNULAR	2⅔" × ½" * REROLLED END	24"-36"	12"	0.064"-0.109"	0.060"-0.105"	0.052"	0.060"	0.079"	½"	⅞"	32 ksi	2" × 2" × 3/16"	2" × 2" × 3/16"	3-½"	3-½"	3-⅜"	3-⅜"	5-½"
		42"-60"	12"	0.064"-0.109"	0.075"-0.105"	0.052"	0.105"	0.079"	½"	⅞"	32 ksi	2" × 2" × 3/16"	2" × 2" × 3/16"	3-½"	3-½"	3-⅜"	3-⅜"	5-½"
		66"-72"	12"	0.064"-0.109"		0.052"		0.079"	½"	⅞"	32 ksi	2" × 2" × 3/16"	2" × 2" × 3/16"	3-½"	3-½"	3-⅜"	3-⅜"	5-½"
		78"-114"	12"	0.079"-0.109"		0.079"		0.109"	½"	⅞"	45 ksi	2" × 2" × 3/16"	2" × 2" × 3/16"	3-½"	3-½"	3-⅜"	3-⅜"	5-½"
HUGGER	2⅔" × ½" * REROLLED END	24"-72"	10½"	0.064"-0.109"		0.052"		0.079"	½"	⅞"	32 ksi							
		78"-84"	10½"	0.109"		0.079"		0.109"	½"	⅞"	45 ksi							

* See Note 14.

14. All profiles of Spiral Rib Pipe (¾" × ¾" ribs at 7½" pitch and ¾" × 1" ribs at 11½" pitch in both steel and aluminum and ¾" × 1" ribs at 8½" pitch in steel only) shall be manufactured with rerolled ends. Corrugation profile of the rerolled ends shall be 2⅔" × ½" annual corrugations with a minimum of two full corrugations at each end.

NOTES:

To accompany plans dated 11-28-11

1. All ferrous metal coupling band connection hardware shall be galvanized or electroplated in accordance with the Standard Specifications.
2. For helically corrugated coupling bands, the connection angles may be oriented parallel to the pipe axis, provided connecting holes are slotted lengthwise sufficiently to allow adjustment for the helix angle.
3. Tension strap may be connected to band with either spot welds or fillet welds that develop minimum required strength of strap.
4. Use 1¼" gage line dimension on attached angle leg for rivets and spot welds.
5. Band thickness shall not be less than:
   a. 3 standard thicknesses lighter than the thickness of the pipe for Corrugated Steel Pipe.
   b. 2 standard thicknesses lighter than the thickness of the pipe and in no case lighter than 0.060" for Corrugated Aluminum Pipe.
6. Dimensions, thicknesses and strengths shown are minimum.
7. For pipe arches use same width band as for round pipe of equal periphery.
8. Fillet welds of equivalent strenght may be substituted for spot welds or rivets.
9. Spot welds shall develop minimum required strength of strap.
10. Pipe with rerolled ends having at least two 2⅔" × ½" annular corrugations at each end with or without an upturned flange may be connected with any of the annular coupling bands shown for pipe of the same diameter and wall thickness and having 2⅔" × ½" corrugations.
11. In the case of H-12 huggerbands, two piece bands are required for diameters through 96" and three piece bands are required for diameters 102" through 120".
12. Two piece bands are required for pipes greater than 42" diameter.
13. The 2¼" × 2" × 0.109" thick galvanized die-formed angle connector may be used in lieu of the 2" × 2" × 3/16" angle connector for standard joints only on pipes through 72" diameter.

STATE OF CALIFORNIA
DEPARTMENT OF TRANSPORTATION

CORRUGATED METAL PIPE COUPLING DETAILS No. 5 STANDARD JOINT

NO SCALE

RSP D97E DATED JUNE 6, 2008 SUPERSEDES STANDARD PLAN D97E
DATED MAY 1, 2006 - PAGE 187 OF THE STANDARD PLANS BOOK DATED MAY 2006.

REVISED STANDARD PLAN RSP D97E

2006 REVISED STANDARD PLAN RSP D97E

4-2-08

DIST	COUNTY	ROUTE	POST MILES TOTAL PROJECT	SHEET NO.	TOTAL SHEETS
08	SBd	178	5.0/14.3	20	22

Randell D. Hiatt
REGISTERED CIVIL ENGINEER

June 6, 2008
PLANS APPROVAL DATE

REGISTERED PROFESSIONAL ENGINEER
Randell D. Hiatt
No. C50200
Exp. 6-30-09
CIVIL
STATE OF CALIFORNIA

The State of California or its officers or agents shall not be responsible for the accuracy or completeness of electronic copies of this plan sheet.

To accompany plans dated 11-28-11

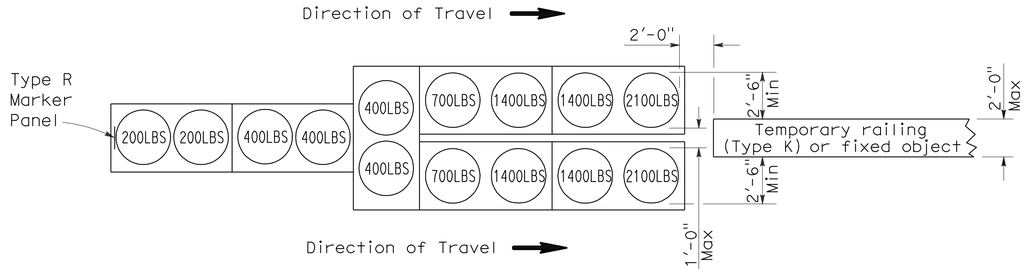

ARRAY 'TU14'

Approach speed 45 mph or more

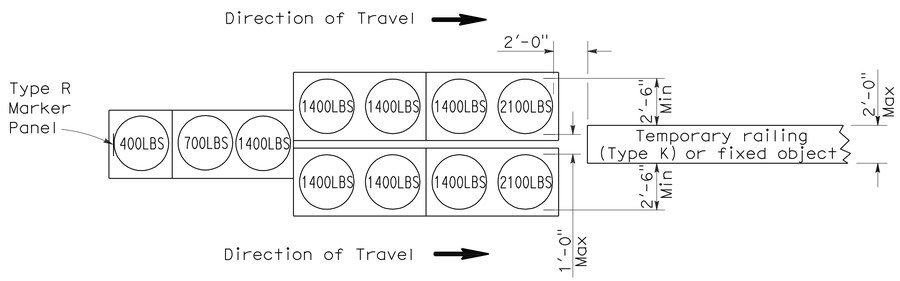

ARRAY 'TU11'

Approach speed less than 45 mph

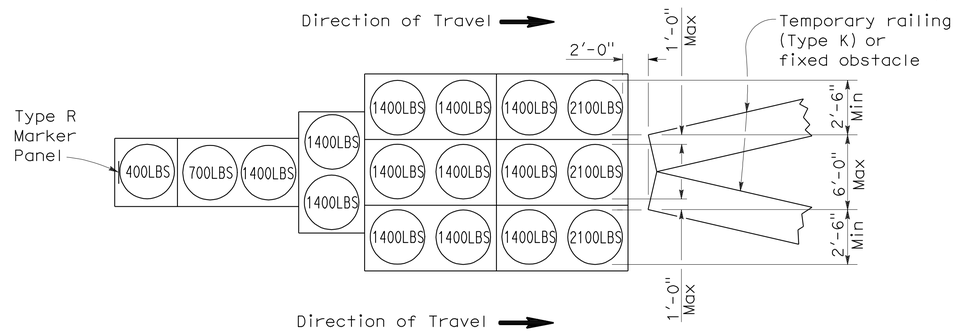

ARRAY 'TU17'

Approach speed less than 45 mph

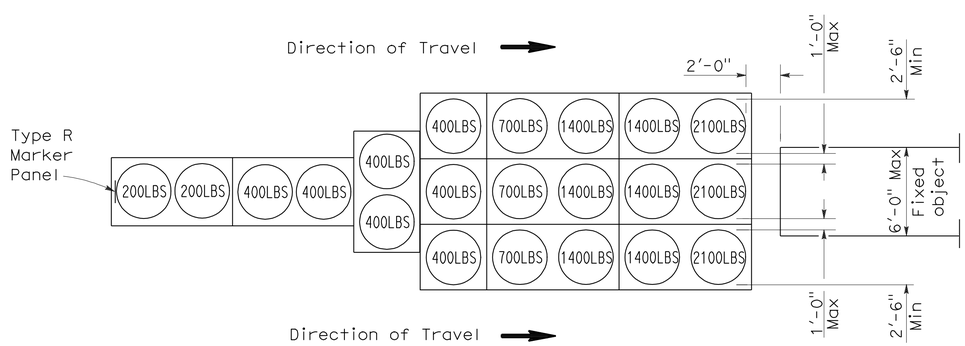

ARRAY 'TU21'

Approach speed 45 mph or more

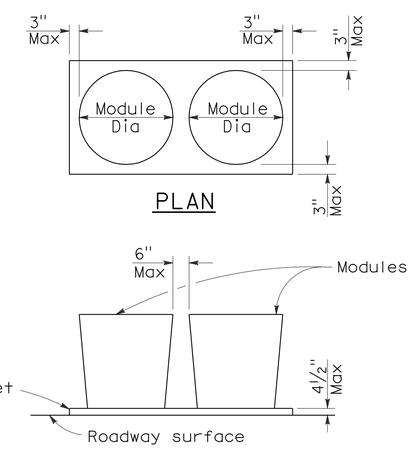

ELEVATION

CRASH CUSHION PALLET DETAIL

See Note 7

NOTES:

1. (XXX) Indicates sand filled module location and weight of sand in pounds for each module. Module spacing is based on the greater diameter of the module.
2. All sand weights are nominal.
3. Temporary crash cushion arrays shall not encroach on the traveled way.
4. Place the top of Type R marker panel 1" below the module lid.
5. Refer to Standard Plan A73B for marker details.
6. Approach speeds indicated conform to NCHRP 350 Report criteria.
7. Use of pallets is optional.

STATE OF CALIFORNIA
DEPARTMENT OF TRANSPORTATION

TEMPORARY CRASH CUSHION, SAND FILLED (UNIDIRECTIONAL)

NO SCALE

RSP T1A DATED JUNE 6, 2008 SUPERSEDES STANDARD PLAN T1A
DATED MAY 1, 2006 - PAGE 211 OF THE STANDARD PLANS BOOK DATED MAY 2006.

REVISED STANDARD PLAN RSP T1A

2006 REVISED STANDARD PLAN RSP T1A

5-15-08

DIST	COUNTY	ROUTE	POST MILES TOTAL PROJECT	SHEET NO.	TOTAL SHEETS
08	SBd	178	5.0/14.3	21	22

Randell D. Hiatt
REGISTERED CIVIL ENGINEER

June 6, 2008
PLANS APPROVAL DATE

REGISTERED PROFESSIONAL ENGINEER
Randell D. Hiatt
No. C50200
Exp. 6-30-09
CIVIL
STATE OF CALIFORNIA

The State of California or its officers or agents shall not be responsible for the accuracy or completeness of electronic copies of this plan sheet.

To accompany plans dated 11-28-11

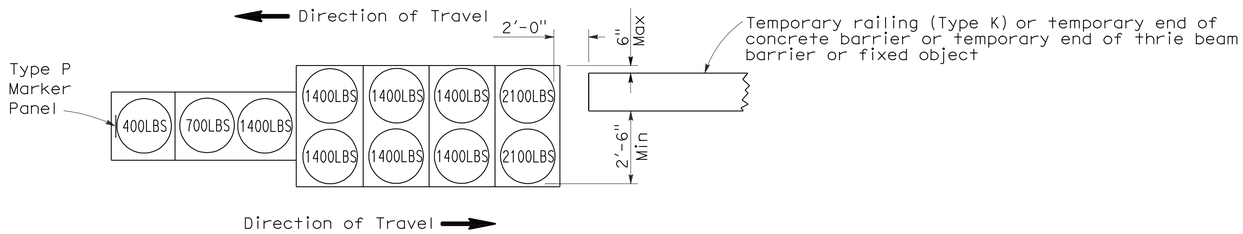

ARRAY 'TB11'

Approach speed less than 45 mph

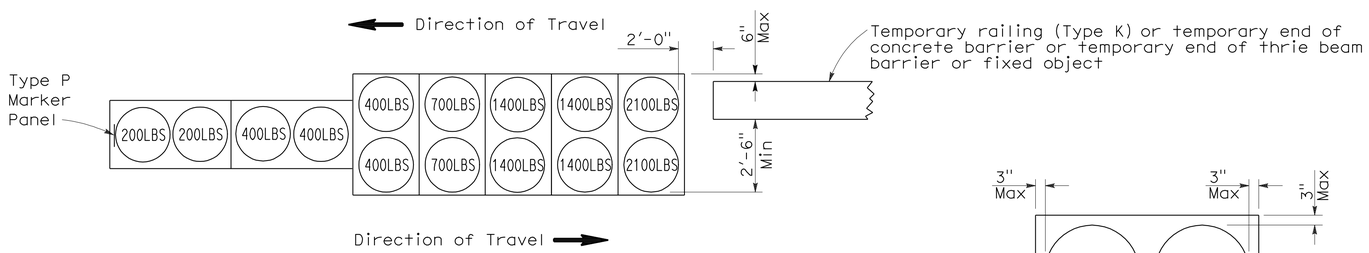

ARRAY 'TB14'

Approach speed 45 mph or more

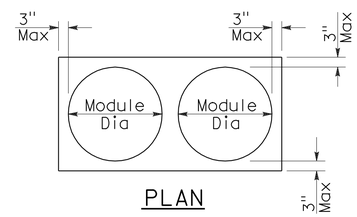

PLAN

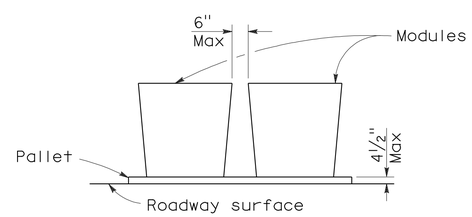

ELEVATION

CRASH CUSHION PALLET DETAIL

See Note 7

NOTES:

1. (XXX) Indicates sand filled module location and weight of sand in pounds for each module. Module spacing is based on the greater diameter of the module.
2. All sand weights are nominal.
3. Temporary crash cushion arrays shall not encroach on the traveled way.
4. Place the Type P marker panel so that the bottom of the panel rests upon the pallet.
5. Refer to Standard Plan A73B for marker details.
6. Approach speeds indicated conform to NCHRP 350 Report criteria.
7. Use of pallets is optional.

STATE OF CALIFORNIA
DEPARTMENT OF TRANSPORTATION

TEMPORARY CRASH CUSHION, SAND FILLED (BIDIRECTIONAL)

NO SCALE

RSP T1B DATED JUNE 6, 2008 SUPERSEDES STANDARD PLAN T1B
DATED MAY 1, 2006 - PAGE 212 OF THE STANDARD PLANS BOOK DATED MAY 2006.

REVISED STANDARD PLAN RSP T1B

2006 REVISED STANDARD PLAN RSP T1B

5-15-08

DIST	COUNTY	ROUTE	POST MILES TOTAL PROJECT	SHEET NO.	TOTAL SHEETS
08	SBd	178	5.0/14.3	22	22

Randell D. Hiatt
REGISTERED CIVIL ENGINEER

June 6, 2008
PLANS APPROVAL DATE

REGISTERED PROFESSIONAL ENGINEER
Randell D. Hiatt
No. C50200
Exp. 6-30-09
CIVIL
STATE OF CALIFORNIA

The State of California or its officers or agents shall not be responsible for the accuracy or completeness of electronic copies of this plan sheet.

To accompany plans dated 11-28-11

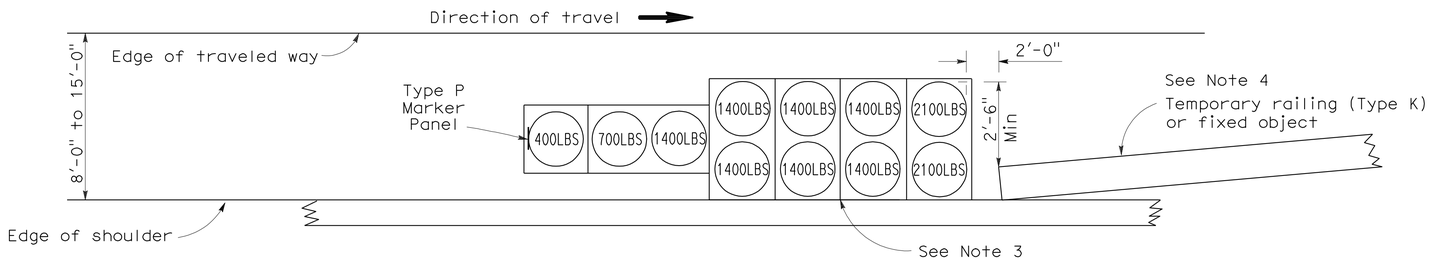

ARRAY 'TS11'

Approach speed less than 45 mph
See Note 9

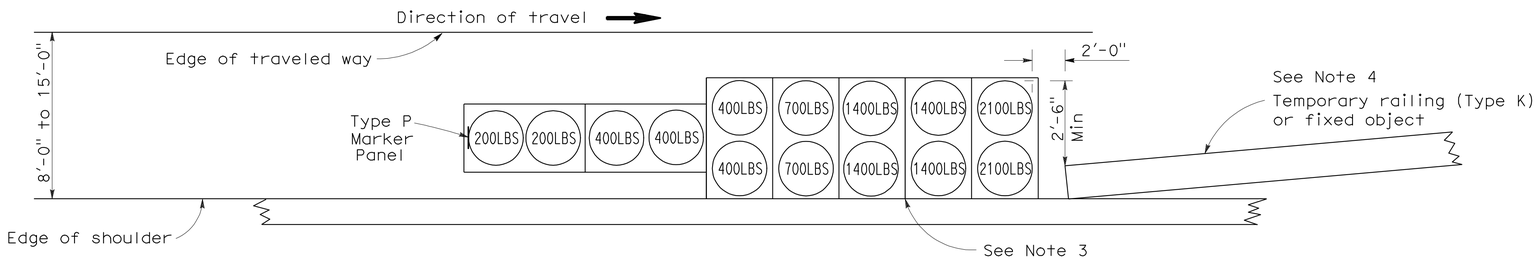

ARRAY 'TS14'

Approach speed 45 mph or more
See Note 9

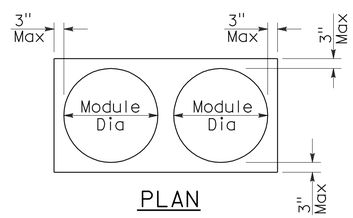

PLAN

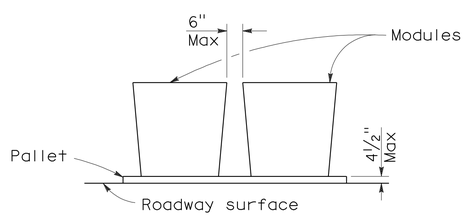

ELEVATION

CRASH CUSHION PALLET DETAIL

See Note 11

NOTES:

1. (XXX) Indicates sand filled module location and weight of sand in pounds for each module. Module spacing is based on the greater diameter of the module.
2. All sand weights are nominal.
3. The temporary crash cushion arrays shown on this plan shall be used only in locations where there will be traffic on one side of the temporary crash cushion array.
4. If the fixed object or approach end of the temporary railing is less than 15'-0" from the edge of traveled way, a temporary crash cushion is required in a construction or work zone.
5. Temporary crash cushion arrays shall not encroach on the traveled way.
6. Arrays for median shoulders shall conform to details shown on this plan for outside shoulders.
7. Place the Type P marker panel so that the bottom of the panel rests upon the pallet and faces traffic.
8. Refer to Standard Plan A73B for marker details.
9. For shoulder widths less than 8'-0", appropriate approved crash cushion protection, other than sand filled modules, shall be provided at fixed objects and at approach ends of temporary railing. The specific type of crash cushion shall be as shown on the project plans or as specified in the Special Provisions, or if not shown on the project plans or specified in the Special Provisions, shall be as approved by the Engineer.
10. Approach speeds indicated conform to NCHRP 350 Report criteria.
11. Use of pallets is optional.

STATE OF CALIFORNIA
DEPARTMENT OF TRANSPORTATION

TEMPORARY CRASH CUSHION, SAND FILLED (SHOULDER INSTALLATIONS)

NO SCALE

RSP T2 DATED JUNE 6, 2008 SUPERSEDES STANDARD PLAN T2
DATED MAY 1, 2006 - PAGE 213 OF THE STANDARD PLANS BOOK DATED MAY 2006.

REVISED STANDARD PLAN RSP T2

2006 REVISED STANDARD PLAN RSP T2