DIST	COUNTY	ROUTE	POST MILES TOTAL PROJECT	SHEET No.	TOTAL SHEETS
08	SBd	15	42.5/46.0	801	824

REGISTERED CIVIL ENGINEER 11-07-13 DATE

6-23-14
PLANS APPROVAL DATE

REGISTERED PROFESSIONAL ENGINEER RYAN STILTZ No. C65738 Exp. 9-30-15 CIVIL STATE OF CALIFORNIA

The State of California or its officers or agents shall not be responsible for the accuracy or completeness of electronic copies of this plan sheet.

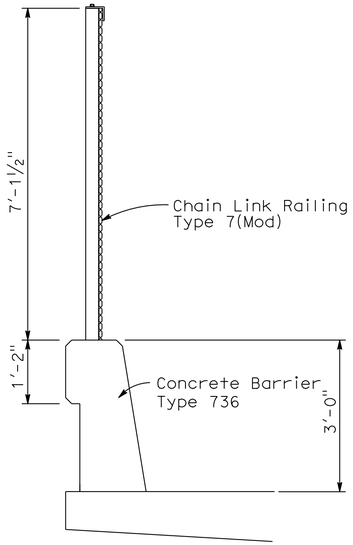

TYPICAL SECTION
No Scale

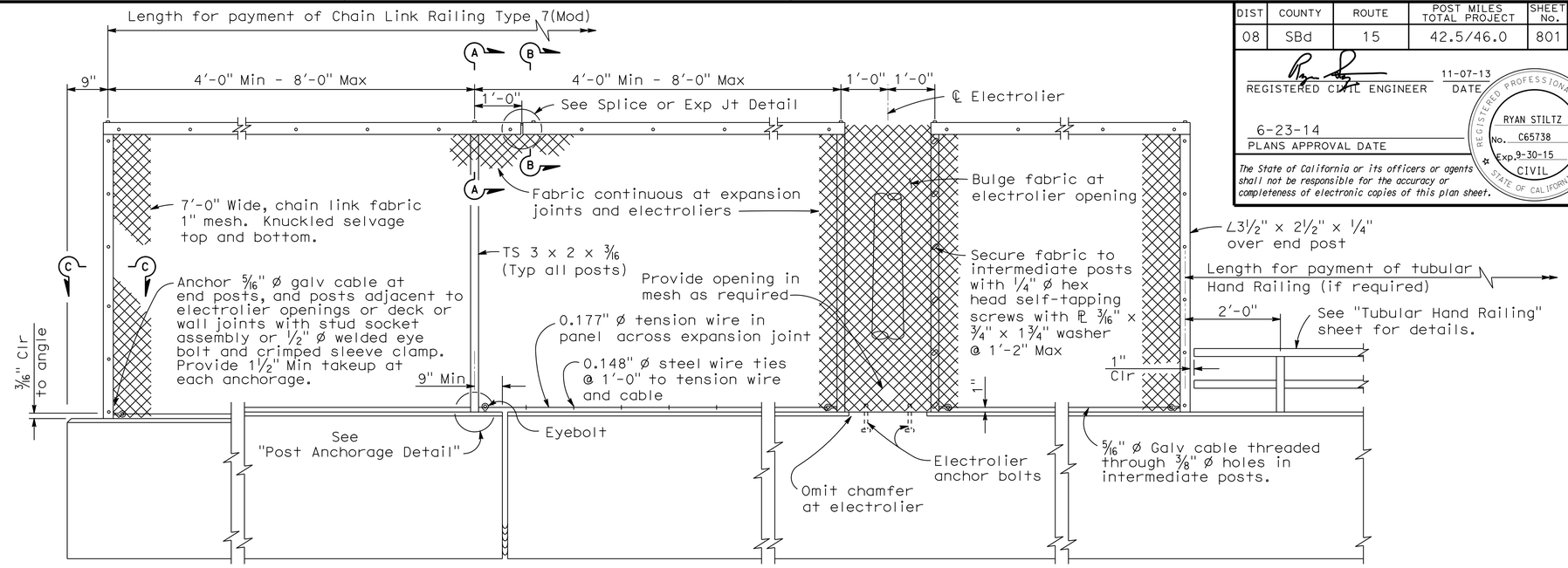

ELEVATION
No Scale

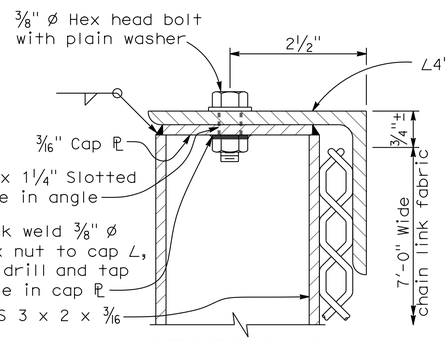

SECTION A-A
No Scale

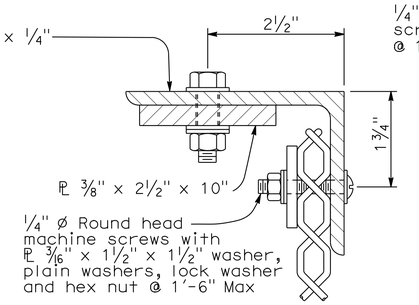

SECTION B-B
No Scale

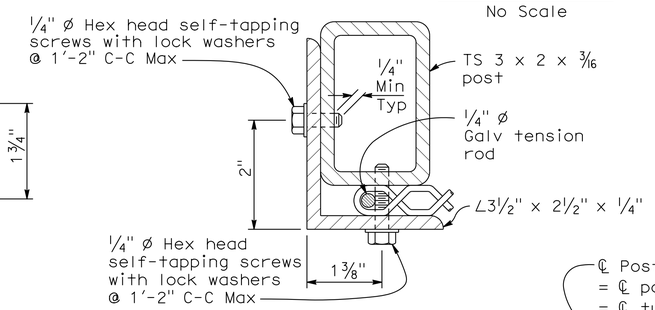

SECTION C-C
No Scale

NOTES:

1. Railing assembly except chain link fabric to be galvanized after fabrication.
2. Posts shall be vertical.
3. Railing shall conform to horizontal and vertical alignment. When railing is placed on a curved horizontal alignment with radius of 148'-0" or less, thread the 5/16" ø cable through 3/8" ø welded eye rods embedded 4" into the top of the concrete parapet and equally spaced to limit the midordinate distance between the 5/16" ø cable and the curve to 1" maximum. Horizontal angle shall be bent to conform to horizontal alignment if radius is 148'-0" or less and may be on 10'-0" chords if radius is over 148'-0"
4. Horizontal angle shall be continuous over not less than two intermediate posts, except that a shorter length is permitted at expansion joints, electroliers and other rail discontinuities.
5. When rail is on slope, place fabric parallel to slope.
6. Alternative details may be submitted by Contractor for Engineer's approval.
7. For details and reinforcement not shown see Standatd Plan B11-55.
8. See Project Plans for limits of Chain Link Railing Type 7 (Mod).
9. Provide thimbles at all cable loops.
10. Expansion joint same dimension as expansion joint in deck or wall. Increase slotted hole length and splice bar length correspondingly.

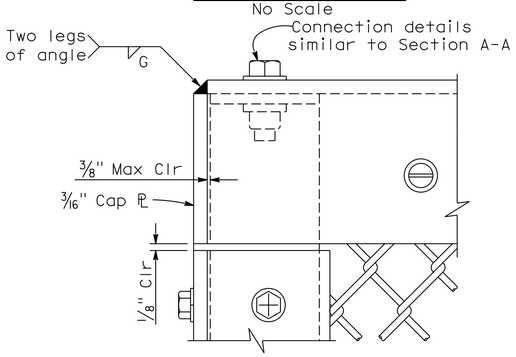

END POST ELEVATION
No Scale

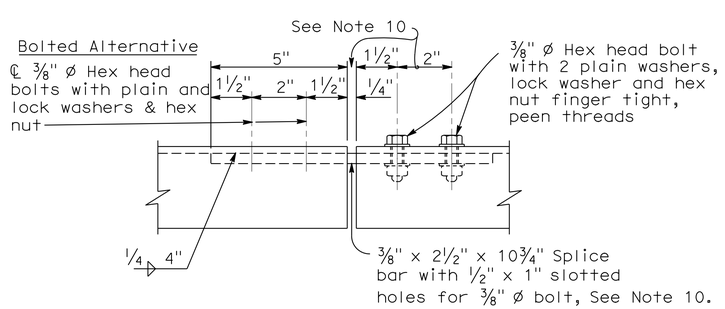

SPLICE OR EXPANSION JOINT DETAIL
No Scale

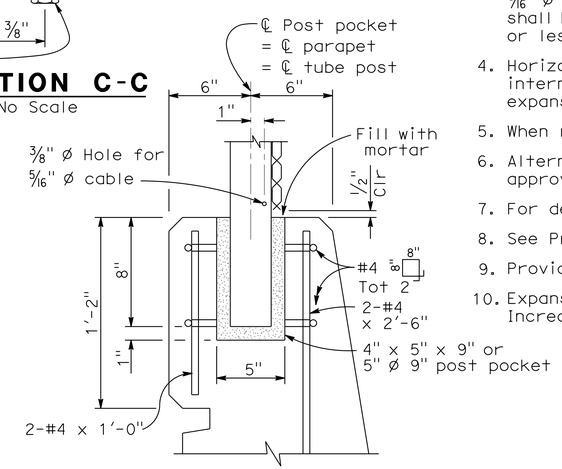

POST ANCHORAGE DETAIL
No Scale

DESIGN	BY R. Stiltz	CHECKED J. Szabo	
DETAILS	BY G. Hallstrom	CHECKED J. Szabo	
QUANTITIES	BY J. Szabo	CHECKED T. Sanderson/F. Chen	

STATE OF CALIFORNIA
DEPARTMENT OF TRANSPORTATION

DIVISION OF ENGINEERING SERVICES
STRUCTURE DESIGN
DESIGN BRANCH 10

BRIDGE NO. 54-0484
POST MILE 43.5

VICTORVILLE SEPARATION & OVERHEAD (WIDEN)
CHAIN LINK RAILING TYPE 7(MOD)

STRUCTURES DESIGN DETAIL SHEET (ENGLISH) (REV. 09-01-10)

ORIGINAL SCALE IN INCHES FOR REDUCED PLANS 0 1 2 3

UNIT: 3589
PROJECT NUMBER & PHASE: 08140000861
CONTRACT NO.: 08-3555V1

DISREGARD PRINTS BEARING EARLIER REVISION DATES 12-27-12

REVISION DATES | SHEET 36 | OF 41

FILE => 540484vchainlk36.dgn

USERNAME => s124936 DATE PLOTTED => 27-JUN-2014 TIME PLOTTED => 13:01

DIST	COUNTY	ROUTE	POST MILES TOTAL PROJECT	SHEET No	TOTAL SHEETS
08	SBd	15	42.5/46.0	802	824

K. Douglas Cook 8-14-13
CERTIFIED ENGINEERING GEOLOGIST

6-23-14
PLANS APPROVAL DATE

PROFESSIONAL GEOLOGIST K. Douglas Cook No. 1391 Exp. 12-31-13 CERTIFIED ENGINEERING GEOLOGIST STATE OF CALIFORNIA

The State of California or its officers or agents shall not be responsible for the accuracy or completeness of electronic copies of this plan sheet.

This LOTB sheet was prepared in accordance with the Caltrans Soil & Rock Logging, Classification, & Presentation Manual (2010 Edition).

See 2010 Standard Plans A10F and A10G for Soil Legend, and A10H for Rock Legend.

BENCH MARK

E 103
Fnd 1" I.P. w/Plastic Plug
130.03 Rt "A" Line, ℄ Rte 15
Sta 168+15.36
N 2,021,558.72
E 6,772,441.63
Elev 2699.26

SUHV 532
Fnd 1" I.P. w/Plastic Plug
147.83 Lt "A" Line, ℄ Rte 15
Sta 168+86.49
N 2,021,823.97
E 6,772,332.51
Elev 2698.80

NAVD 88

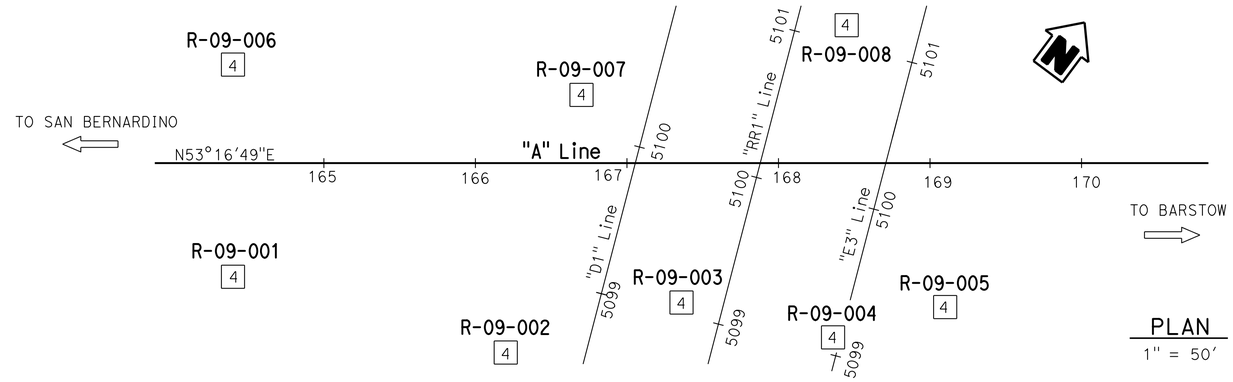

PLAN
1" = 50'

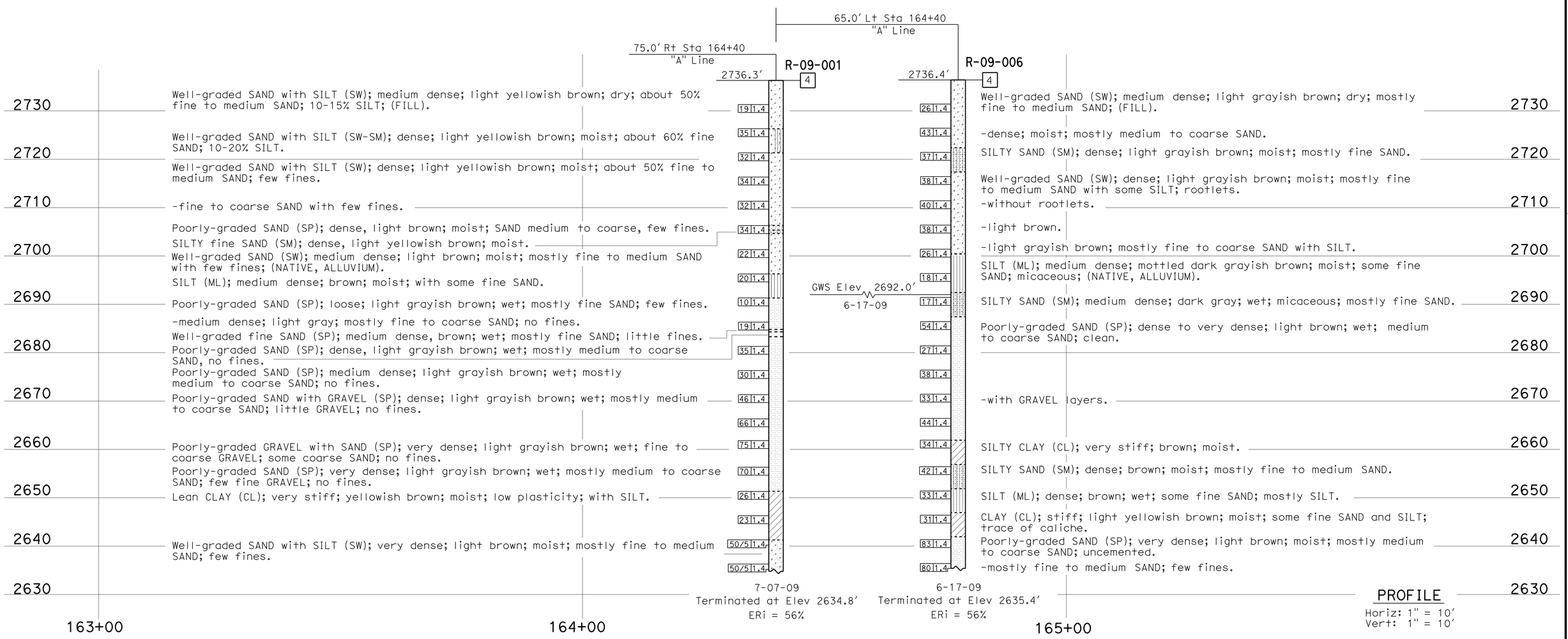

PROFILE
Horiz: 1" = 10'
Vert: 1" = 10'

ENGINEERING SERVICES	MATERIALS AND GEOTECHNICAL SERVICES	STATE OF CALIFORNIA DEPARTMENT OF TRANSPORTATION	DIVISION OF ENGINEERING SERVICES STRUCTURE DESIGN DESIGN BRANCH 10	BRIDGE NO. 54-0484 POST MILE 44.5	VICTORVILLE SEPARATION & OVERHEAD (WIDEN)
FUNCTIONAL SUPERVISOR NAME: A. Perez-Cobo	DRAWN BY: F. Nguyen 1/10, I. G-Remmen CHECKED BY: M. Wilson	FIELD INVESTIGATION BY: D. Cook			LOG OF TEST BORINGS 1 OF 5

OGS CIVIL LOG OF TEST BORINGS SHEET

ORIGINAL SCALE IN INCHES FOR REDUCED PLANS 0 1 2 3

UNIT: 3643
PROJECT NUMBER & PHASE: 08140000861 CONTRACT NO.: 08-3555V1

DISREGARD PRINTS BEARING EARLIER REVISION DATES

REVISION DATES 07-25-13 07-29-13 SHEET 37 OF 41

FILE => 540484zltb37.dgn

USERNAME => s124496 DATE PLOTTED => 27-JUN-2014 TIME PLOTTED => 13:01

DIST	COUNTY	ROUTE	POST MILES TOTAL PROJECT	SHEET No	TOTAL SHEETS
08	SBd	15	42.5/46.0	803	824

K. Douglas Cook 8-14-13
CERTIFIED ENGINEERING GEOLOGIST

6-23-14
PLANS APPROVAL DATE

PROFESSIONAL GEOLOGIST K. Douglas Cook No. 1391 Exp. 12-31-13 CERTIFIED ENGINEERING GEOLOGIST STATE OF CALIFORNIA

The State of California or its officers or agents shall not be responsible for the accuracy or completeness of electronic copies of this plan sheet.

This LOTB sheet was prepared in accordance with the Caltrans Soil & Rock Logging, Classification, & Presentation Manual (2010 Edition).

See 2010 Standard Plans A10F and A10G for Soil Legend, and A10H for Rock Legend.

FOR PLAN VIEW, SEE
"LOG OF TEST BORINGS 1 OF 5"

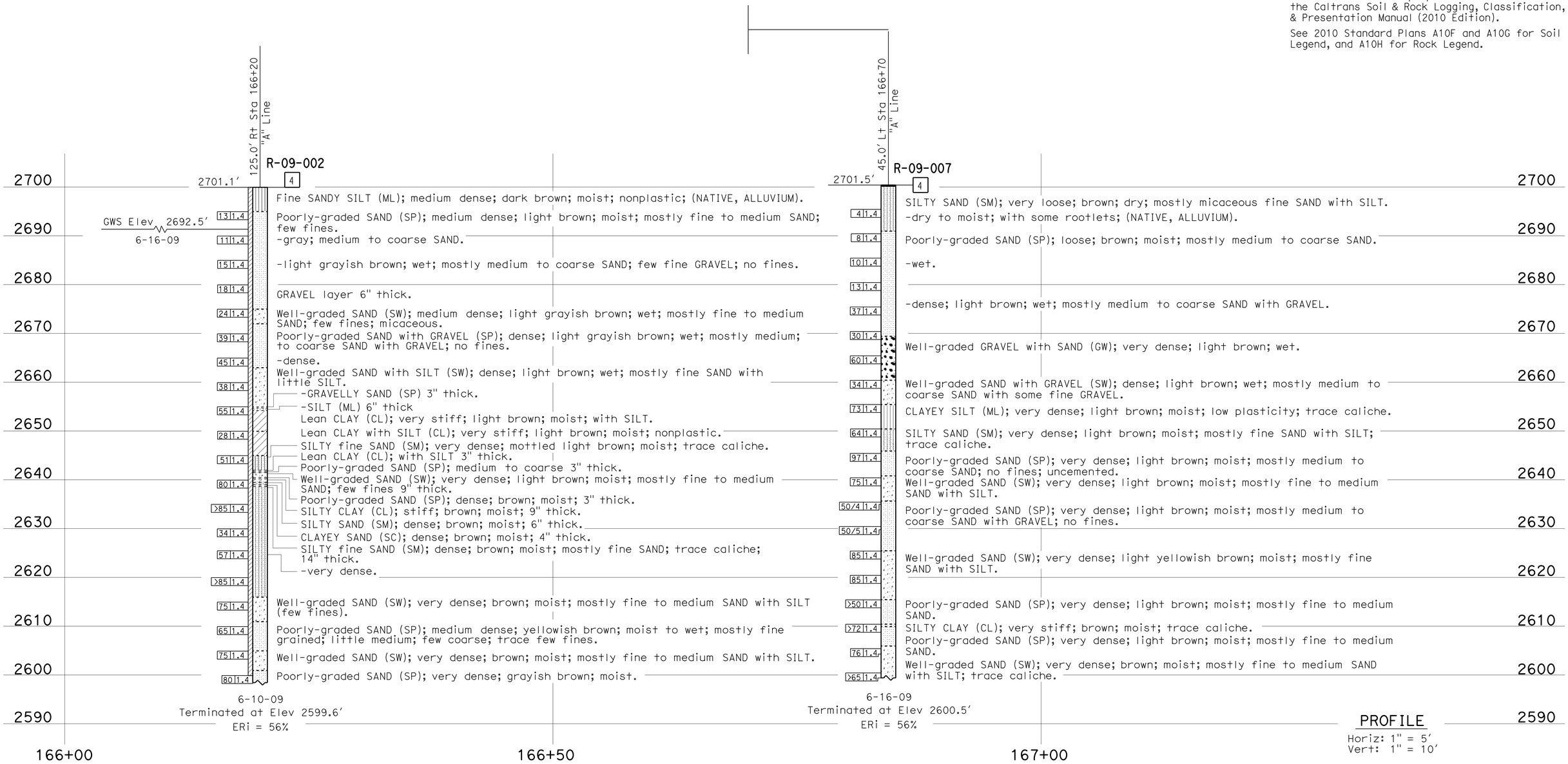

ENGINEERING SERVICES	MATERIALS AND GEOTECHNICAL SERVICES	STATE OF CALIFORNIA DEPARTMENT OF TRANSPORTATION	DIVISION OF ENGINEERING SERVICES STRUCTURE DESIGN DESIGN BRANCH 10	BRIDGE NO. 54-0484 POST MILE 44.5	VICTORVILLE SEPARATION & OVERHEAD (WIDEN)
FUNCTIONAL SUPERVISOR NAME: A. Perez-Cobo	DRAWN BY: F. Nguyen 1/10, I. G-Remmen CHECKED BY: M. Wilson	FIELD INVESTIGATION BY: D. Cook			LOG OF TEST BORINGS 2 OF 5

OGS CIVIL LOG OF TEST BORINGS SHEET

ORIGINAL SCALE IN INCHES FOR REDUCED PLANS 0 1 2 3

UNIT: 3643
PROJECT NUMBER & PHASE: 08140000861 CONTRACT NO.: 08-3555V1

DISREGARD PRINTS BEARING EARLIER REVISION DATES → 07-25-13 07-29-13

SHEET 38 OF 41

FILE => 540484zltb38.dgn

USERNAME => s124496 DATE PLOTTED => 27-JUN-2014 TIME PLOTTED => 13:02

DIST	COUNTY	ROUTE	POST MILES TOTAL PROJECT	SHEET No	TOTAL SHEETS
08	SBd	15	42.5/46.0	804	824

K. Douglas Cook 8-14-13
CERTIFIED ENGINEERING GEOLOGIST

6-23-14
PLANS APPROVAL DATE

PROFESSIONAL GEOLOGIST K. Douglas Cook No. 1391 Exp. 12-31-13 CERTIFIED ENGINEERING GEOLOGIST STATE OF CALIFORNIA

The State of California or its officers or agents shall not be responsible for the accuracy or completeness of electronic copies of this plan sheet.

This LOTB sheet was prepared in accordance with the Caltrans Soil & Rock Logging, Classification, & Presentation Manual (2010 Edition).

See 2010 Standard Plans A10F and A10G for Soil Legend, and A10H for Rock Legend.

FOR PLAN VIEW, SEE
"LOG OF TEST BORINGS 1 OF 5"

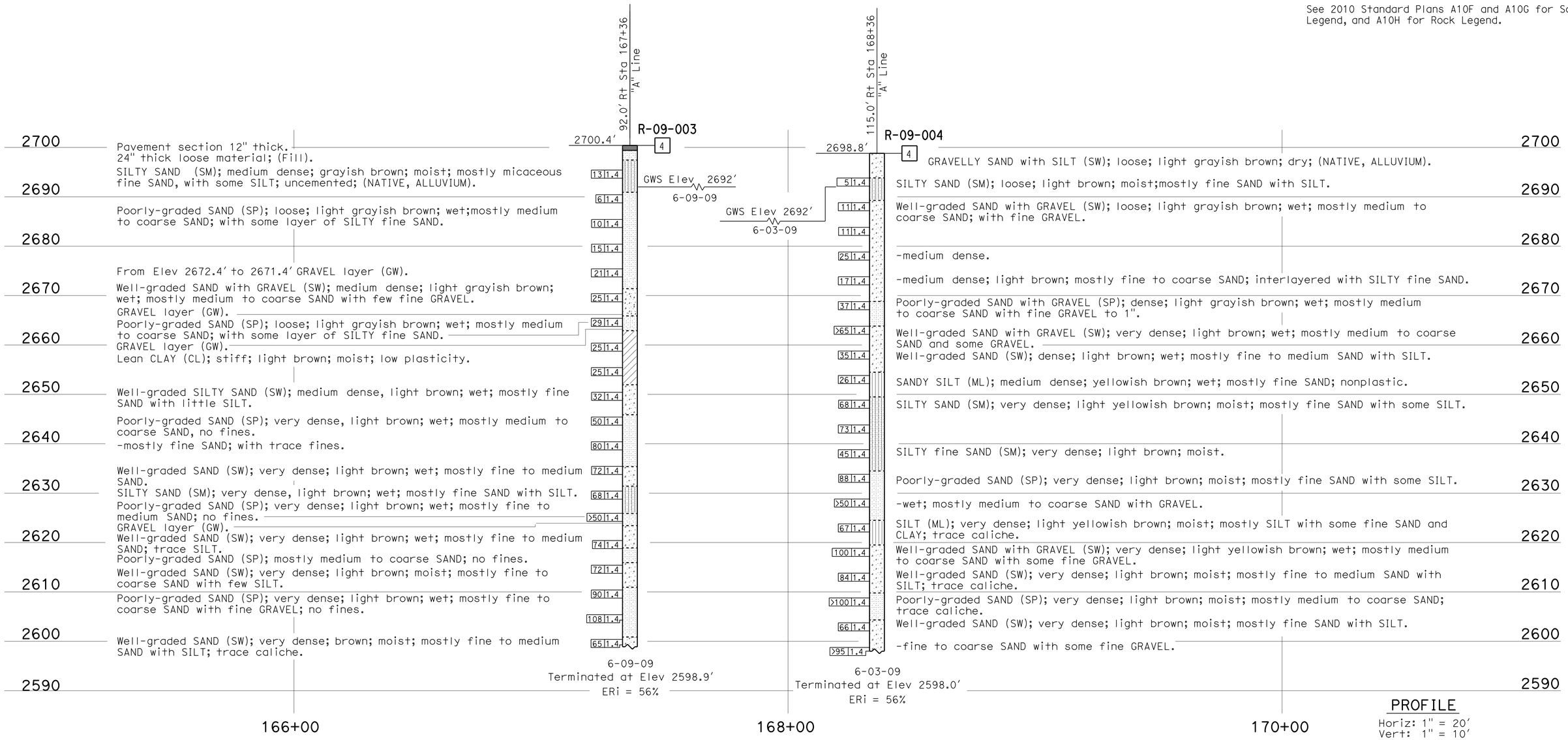

PROFILE
Horiz: 1" = 20'
Vert: 1" = 10'

ENGINEERING SERVICES	MATERIALS AND GEOTECHNICAL SERVICES	STATE OF CALIFORNIA DEPARTMENT OF TRANSPORTATION	DIVISION OF ENGINEERING SERVICES STRUCTURE DESIGN DESIGN BRANCH 10	BRIDGE NO. 54-0484 POST MILE 44.5	VICTORVILLE SEPARATION & OVERHEAD (WIDEN)
FUNCTIONAL SUPERVISOR NAME: A. Perez-Cobo	DRAWN BY: F. Nguyen 1/10, I. G-Remmen CHECKED BY: M. Wilson	FIELD INVESTIGATION BY: D. Cook			LOG OF TEST BORINGS 3 OF 5

OGS CIVIL LOG OF TEST BORINGS SHEET

ORIGINAL SCALE IN INCHES FOR REDUCED PLANS 0 1 2 3

UNIT: 3643
PROJECT NUMBER & PHASE: 08140000861 CONTRACT NO.: 08-3555V1

DISREGARD PRINTS BEARING EARLIER REVISION DATES → 07-25-13 07-29-13

REVISION DATES | SHEET 39 OF 41

FILE => 540484zltb39.dgn

USERNAME => s124436 DATE PLOTTED => 27-JUN-2014 TIME PLOTTED => 13:02

DIST	COUNTY	ROUTE	POST MILES TOTAL PROJECT	SHEET No	TOTAL SHEETS
08	SBd	15	42.5/46.0	805	824

K. Douglas Cook 8-14-13
CERTIFIED ENGINEERING GEOLOGIST

6-23-14
PLANS APPROVAL DATE

PROFESSIONAL GEOLOGIST K. Douglas Cook No. 1391 Exp. 12-31-13 CERTIFIED ENGINEERING GEOLOGIST STATE OF CALIFORNIA

The State of California or its officers or agents shall not be responsible for the accuracy or completeness of electronic copies of this plan sheet.

This LOTB sheet was prepared in accordance with the Caltrans Soil & Rock Logging, Classification, & Presentation Manual (2010 Edition).

See 2010 Standard Plans A10F and A10G for Soil Legend, and A10H for Rock Legend.

FOR PLAN VIEW, SEE
"LOG OF TEST BORINGS 1 OF 5"

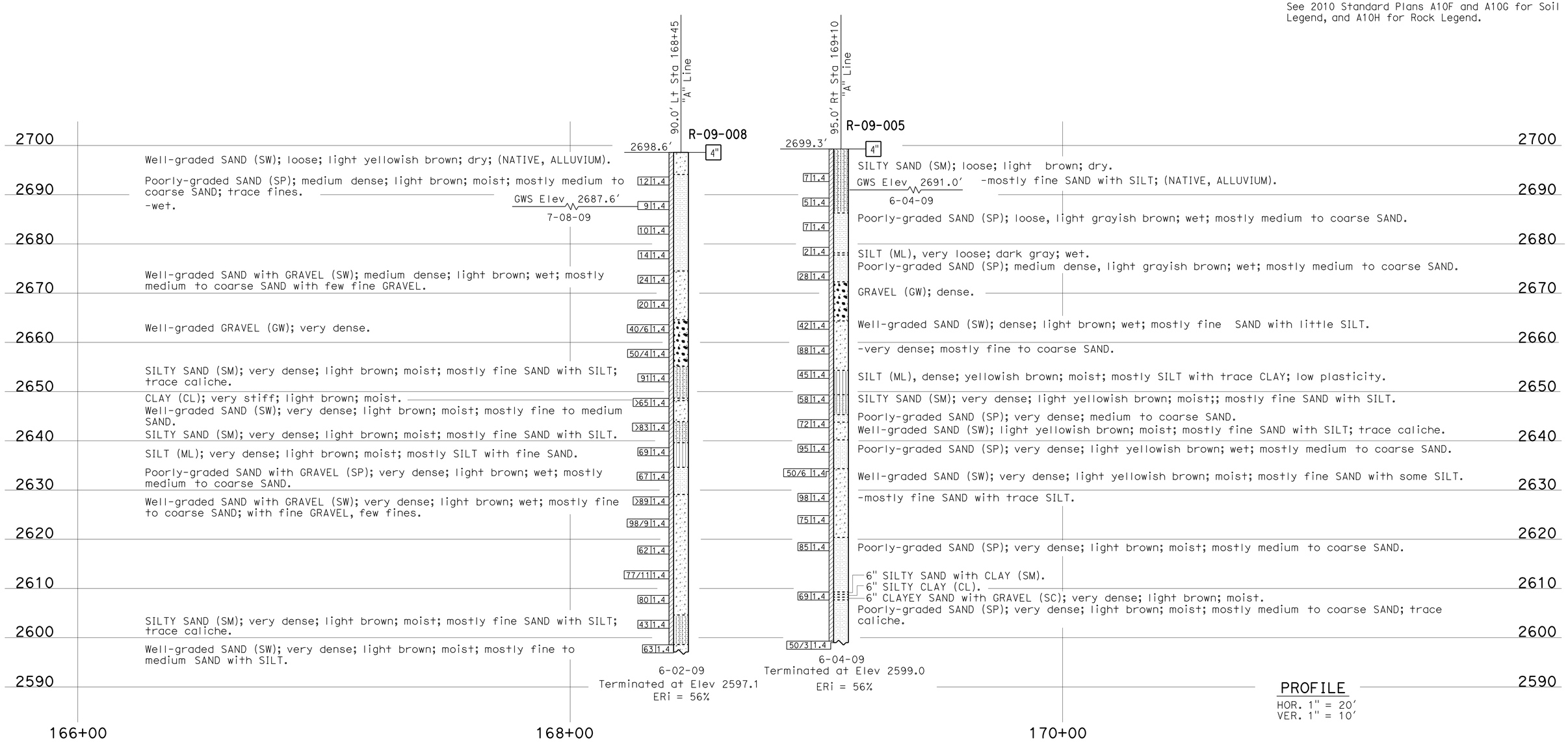

PROFILE
HOR. 1" = 20'
VER. 1" = 10'

ENGINEERING SERVICES	MATERIALS AND GEOTECHNICAL SERVICES	STATE OF CALIFORNIA DEPARTMENT OF TRANSPORTATION	DIVISION OF ENGINEERING SERVICES STRUCTURE DESIGN DESIGN BRANCH 10	BRIDGE NO. 54-0484 POST MILE 44.5	VICTORVILLE SEPARATION & OVERHEAD (WIDEN)
FUNCTIONAL SUPERVISOR NAME: A. Perez-Cobo	DRAWN BY: F. Nguyen 1/10, I. G-Remmen CHECKED BY: M. Wilson	FIELD INVESTIGATION BY: D. Cook			LOG OF TEST BORINGS 4 OF 5

OGS CIVIL LOG OF TEST BORINGS SHEET

ORIGINAL SCALE IN INCHES FOR REDUCED PLANS 0 1 2 3

UNIT: 3643
PROJECT NUMBER & PHASE: 08140000861 CONTRACT NO.: 08-3555V1

DISREGARD PRINTS BEARING EARLIER REVISION DATES

REVISION DATES: 07-25-13 07-29-13

SHEET 40 OF 41

FILE => 540484z1tb40.dgn

USERNAME => s124496 DATE PLOTTED => 27-JUN-2014 TIME PLOTTED => 13:02

FED. ROAD DIV. No.	STATE	PROJ. No.	FISCAL YEAR	SHEET No.	TOTAL SHEETS
7	CAL.	F-1085(2)		35	44

DIST.	COUNTY	ROUTE	SECTION	SHEET No.	TOTAL SHEETS
VIII	SBd	91	D	43	43

15

DATE APPROVED February 27, 1956

BRIDGE DEPARTMENT

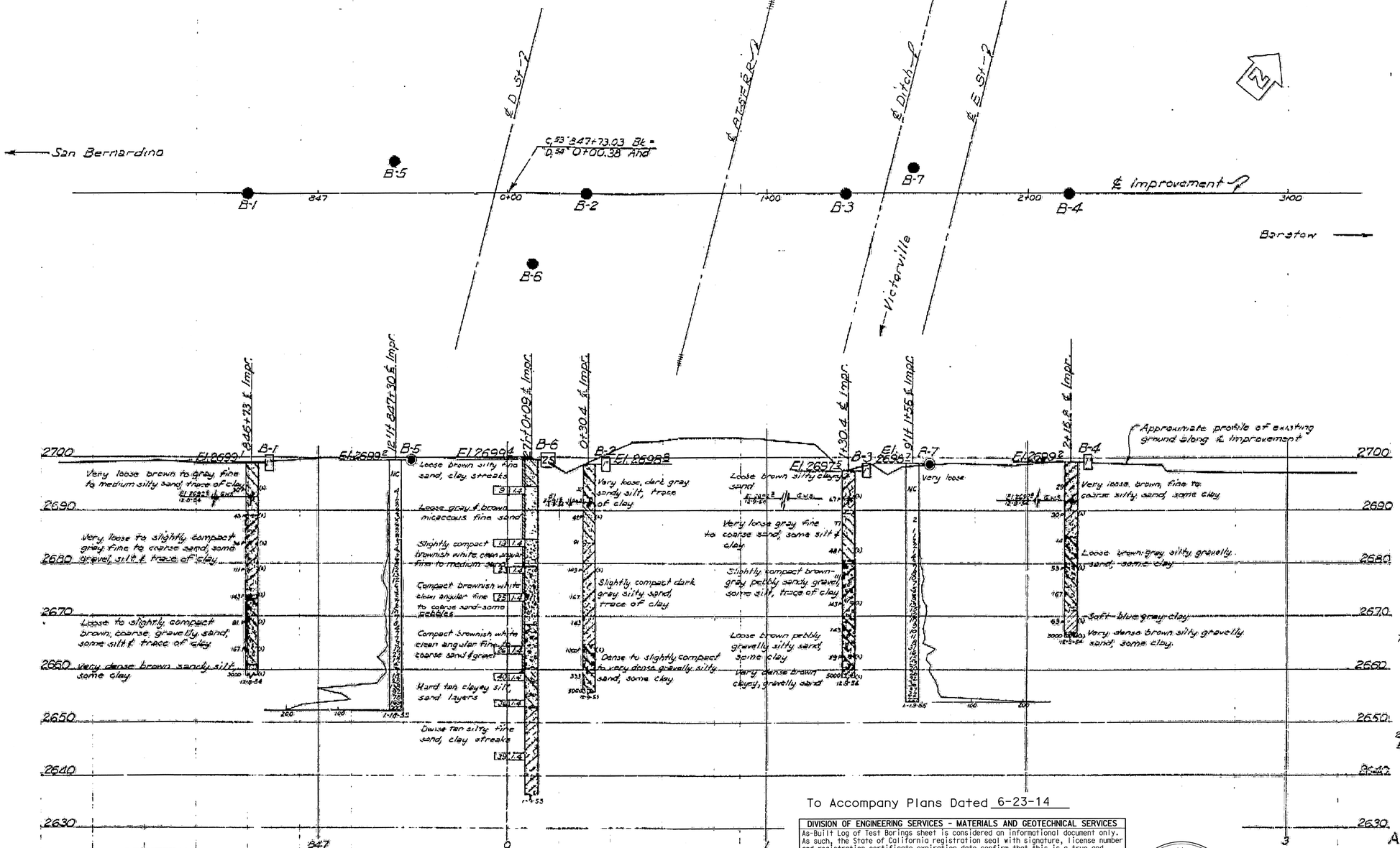

AS BUILT PLANS
Contract No. 57-8VC12
Date Completed
Document No. 8000270

Test Borings by Bridge Dept.

BM "C.53" 85-A-54
2"x2" Redwood Hub & Sp. Nd. Nail
Buried 1.1' 127' lt & Impr. Sta 840+89
Elev 2737.32

BM "D" 5-A-53
Pin in PCC R/W Monument 1.0' above ground 30' rt & Survey 40+00
Elev. 2698.19

AS BUILT 1-7-58 BR REP

To Accompany Plans Dated 6-23-14

FIELD STUDY	R.	J.O. DEPT.	4/55
DRAWN	R.	R.C. McDANIEL	3/55
CHECKED	R.		

Approval Recommended by: G.H. Hallock, Chief Bridge Engineer
Approved: Director of Public Works

CLASSIFICATION OF MATERIAL BASED ON STANDARD GRADE SIZE LIMITS

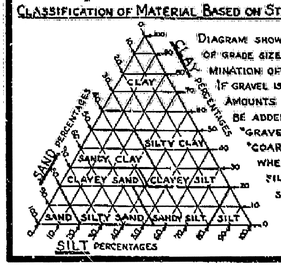

DIAGRAM SHOWING THE BASIS FOR ESTIMATES OF GRADE SIZE DISTRIBUTION USED IN DETERMINATION OF CLASS NAMES.

IF GRAVEL IS PRESENT IN APPRECIABLE AMOUNTS THE TERM "GRAVELLY" MAY BE ADDED TO THE CLASS NAME, VIZ. "GRAVELLY SAND." THE TERMS "COARSE", "MEDIUM" AND "FINE" WHEN USED TO DESCRIBE SAND, SILT AND GRAVEL REFER TO STANDARD GRADE SIZE LIMITS.

LEGEND OF EARTH MATERIALS

- GRAVEL
- SAND
- SILT
- CLAY
- SANDY CLAY OR CLAYEY SAND
- SANDY SILT OR SILTY SAND
- SILTY CLAY OR CLAYEY SILT
- PEAT AND/OR ORGANIC MATTER
- FILL MATERIAL
- IGNEOUS ROCK
- SEDIMENTARY ROCK
- METAMORPHIC ROCK

LEGEND OF

- PLAN OF PILY BORING
- PENETROMETER
- 2¼" CONE PENETROMETER
- SAMPLER BORING (DRY)
- ROTARY BORING (WET)
- AUGER BORING (DRY)
- JET BORING
- CORE BORING
- TEST PIT

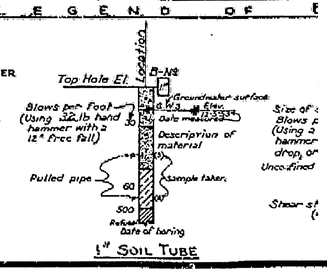

DIVISION OF ENGINEERING SERVICES - MATERIALS AND GEOTECHNICAL SERVICES
As-Built Log of Test Borings sheet is considered an informational document only. As such, the State of California registration seal with signature, license number and registration certificate expiration date confirm that this is a true and accurate copy of the original document. It does not attest to the accuracy or validity of the information contained in the original document. This drawing is available and presented only for the convenience of any bidder, contractor or other interested party.

DIST.	COUNTY	ROUTE	POST MILE-TOTAL PROJECT	Sheet No.	Total Sheets
08	SBd	15	42.5/46.0	806	824

K. Douglas Cook 8-14-13
CERTIFIED ENGINEERING GEOLOGIST DATE

PROFESSIONAL GEOLOGIST K. Douglas Cook No. 1391 Exp. 12-31-13 CERTIFIED ENGINEERING GEOLOGIST STATE OF CALIFORNIA

VICTORVILLE SEPARATION & OVERHEAD (WIDEN)

LOG OF TEST BORINGS 5 OF 5

UNIT: 3643	CONTRACT No.	BRIDGE No.
PROJ. No. & PHASE: 08000006211	08-3555V1	54-0484

AS-BUILT VERT DATUM: NGVD 29 CONVERSION: NGVD 29 +2.729 Ft — Sheet 41 of 41

NOTE: A COPY OF THIS LOG OF TEST BORINGS IS AVAILABLE AT OFFICE OF STRUCTURE MAINTENANCE AND INVESTIGATIONS, SACRAMENTO, CALIFORNIA

NOTES

The contractor's attention is directed to Section 2, Article (c) of the Standard Specifications and to the Special Provisions accompanying this set of plans.

Classification of earth material as shown on this sheet is based upon field inspection and is not to be construed to imply mechanical analysis.

STATE OF CALIFORNIA
DEPARTMENT OF PUBLIC WORKS
DIVISION OF HIGHWAYS

VICTORVILLE OVERHEAD

LOG OF TEST BORINGS

SCALE Horiz. 1"=20' Vert. 1"=10' | BRIDGE 54-484 | FILE | DRAWING C-4269-13

35

PREL. DRAWING NO. P-4269 | 3

FILENAME => 540484zltb41.tif

DIST	COUNTY	ROUTE	POST MILES TOTAL PROJECT	SHEET No.	TOTAL SHEETS
08	SBd	15	42.5/46.0	807	824

REGISTERED CIVIL ENGINEER 11-07-13 DATE

6-23-14
PLANS APPROVAL DATE

REGISTERED PROFESSIONAL ENGINEER RYAN STILTZ No. C65738 Exp. 9/30/15 CIVIL STATE OF CALIFORNIA

The State of California or its officers or agents shall not be responsible for the accuracy or completeness of electronic copies of this plan sheet.

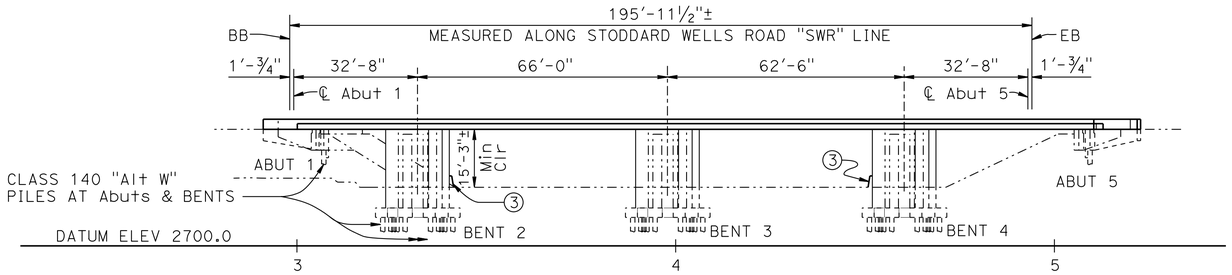

ELEVATION

1" = 20'

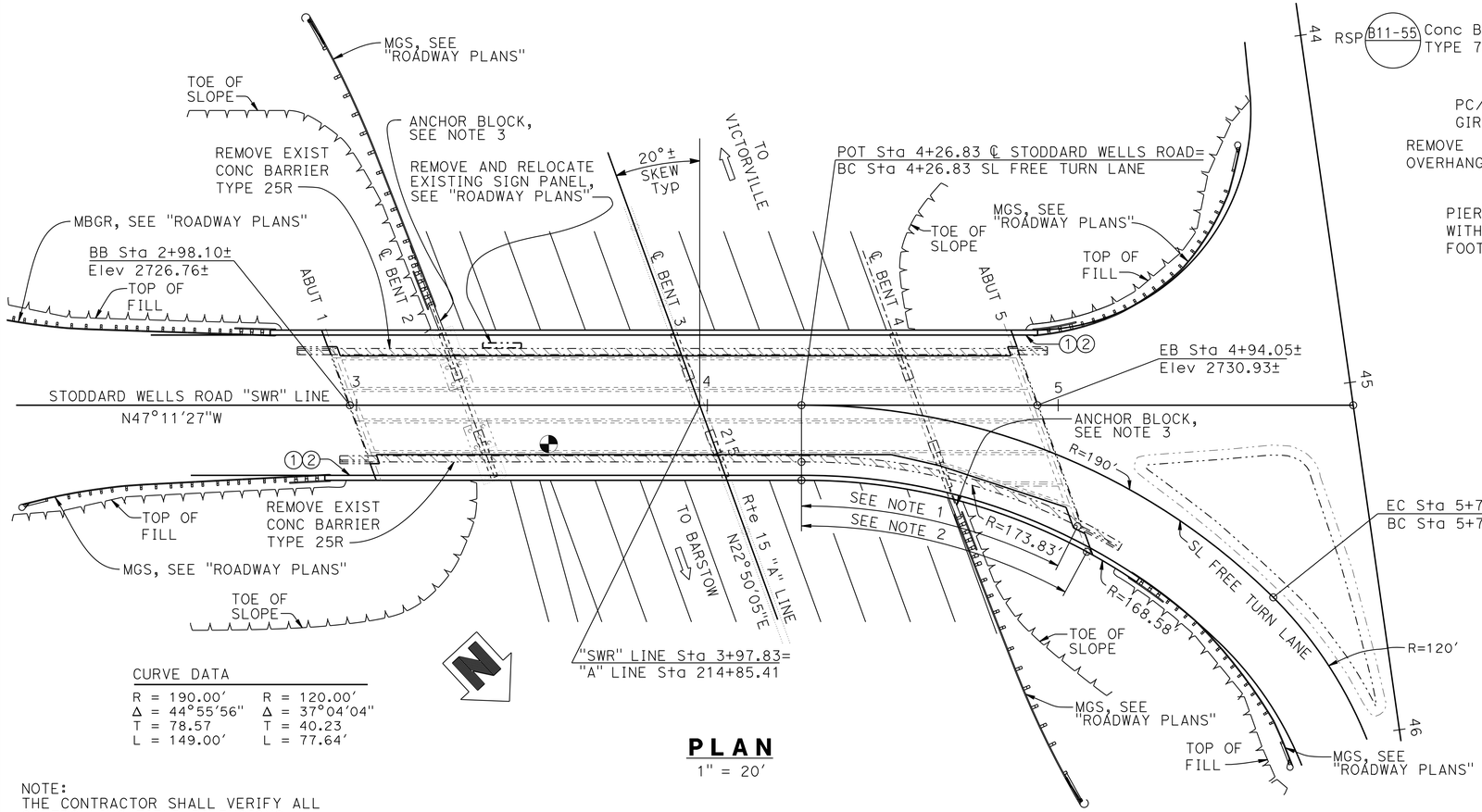

PLAN

1" = 20'

CURVE DATA

R = 190.00'	R = 120.00'
Δ = 44°55'56"	Δ = 37°04'04"
T = 78.57	T = 40.23
L = 149.00'	L = 77.64'

NOTE:
THE CONTRACTOR SHALL VERIFY ALL CONTROLLING FIELD DIMENSIONS BEFORE ORDERING OR FABRICATING ANY MATERIAL.

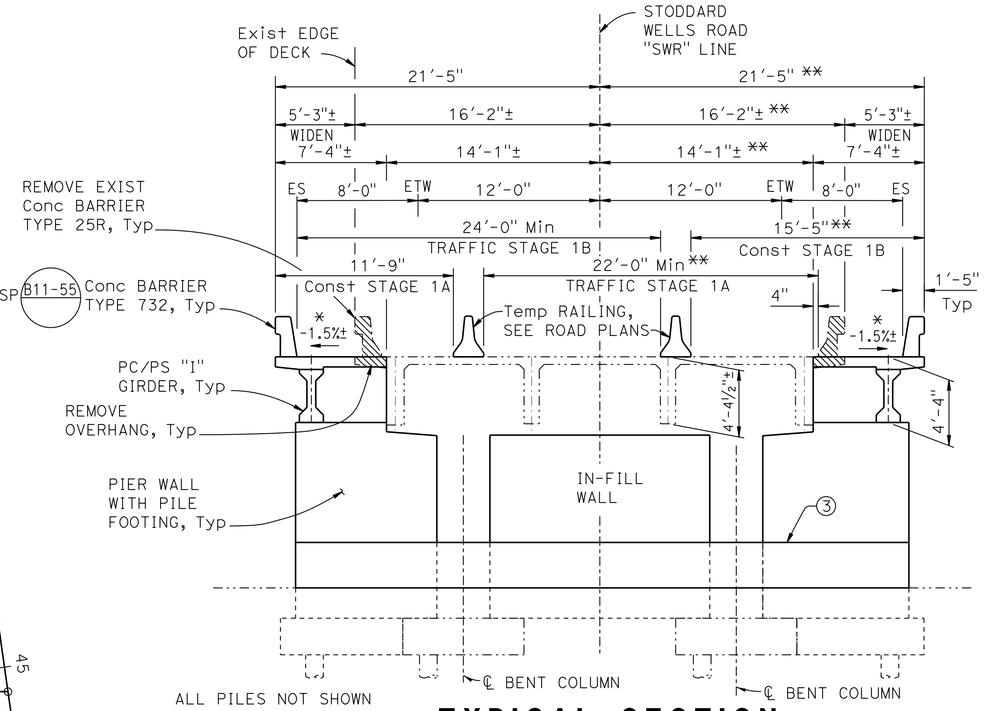

TYPICAL SECTION SPAN 1 AND SPAN 2

1" = 5'

* NOTE: Match existing slope
** NOTE: For Spans 3 & 4, distance to Rt Edge of Deck varies

NOTES:

1. For R=173.83, Exist EOD, length from BC to ℄ of Abut 5 is 81.47'?.
2. For R=168.58, New EOD, length from BC to ℄ of Abut 5 is 84.65'.
3. Concrete Barrier (Transition Anchor Block), see Standard Plan RSP A77U3, Detail C.
4. For "GENERAL NOTES", "INDEX TO PLANS", "STANDARD PLANS", "QUANTITIES", and "PILE DATA TABLE", see "INDEX TO PLANS" sheet.

LEGEND:

① Paint Bridge Name "STODDARD WELLS ROAD OVERCROSSING"
② Paint Bridge Number "54-0535".
③ Concrete Barrier Type 60D (Mod) @ Bents 2 & 4, traffic side.
——— Indicates new construction
-·-·-·- Indicates existing structure
Indicates limits of Bridge Removal (portion)
Point of Min Vertical Clearance

DANIEL T. ADAMS
DESIGN ENGINEER

	BY	CHECKED			
DESIGN	R. Anderson	R. Stiltz	LOAD & RESISTANCE FACTOR DESIGN	LIVE LOADING: HL93 W/"LOW-BOY": PERMIT DESIGN VEHICLE	
DETAILS	G. Hallstrom	R. Stiltz	LAYOUT	R. Anderson	R. Stiltz
QUANTITIES	R. Anderson	H. Vu/Y. Tang	SPECIFICATIONS	K. Doll	PLANS AND SPECS COMPARED K. Doll

ORIGINAL SCALE IN INCHES FOR REDUCED PLANS 0 1 2 3

STATE OF CALIFORNIA
DEPARTMENT OF TRANSPORTATION

DIVISION OF ENGINEERING SERVICES
STRUCTURE DESIGN
DESIGN BRANCH 10

BRIDGE NO. 54-0535
POST MILE 44.35

STODDARD WELLS ROAD OC (WIDEN)
GENERAL PLAN

UNIT: 3589
PROJECT NUMBER & PHASE: 08140000861
CONTRACT NO.: 08-3555V1

DISREGARD PRINTS BEARING EARLIER REVISION DATES

REVISION DATES 5-16-12 9-05-13 10-16-13 10-22-13

SHEET 1 OF 18

STRUCTURES DESIGN GENERAL PLAN SHEET (ENGLISH) (REV.09-01-10)

FILE => 540535agp01.dgn

USERNAME => s124496 DATE PLOTTED => 27-JUN-2014 TIME PLOTTED => 13:10

DIST	COUNTY	ROUTE	POST MILES TOTAL PROJECT	SHEET No.	TOTAL SHEETS
08	SBd	15	42.5/46.0	808	824

REGISTERED CIVIL ENGINEER 11-07-13 DATE

6-23-14
PLANS APPROVAL DATE

REGISTERED PROFESSIONAL ENGINEER RYAN STILTZ No. C65738 Exp. 9/30/15 CIVIL STATE OF CALIFORNIA

The State of California or its officers or agents shall not be responsible for the accuracy or completeness of electronic copies of this plan sheet.

INDEX TO PLANS

Sheet No.	Title
1.	GENERAL PLAN
2.	INDEX TO PLANS
3.	FOUNDATION PLAN
4.	ABUTMENT 1 LAYOUT
5.	ABUTMENT 5 LAYOUT
6.	ABUTMENT DETAILS NO. 1
7.	ABUTMENT DETAILS NO. 2
8.	BENT LAYOUT
9.	BENT DETAILS NO. 1
10.	BENT DETAILS NO. 2
11.	TYPICAL SECTION
12.	GIRDER LAYOUT
13.	PRECAST PRESTRESSED I GIRDER
14.	ARCHITECTURAL DETAILS
15.	LOG OF TEST BORINGS 1 OF 4
16.	LOG OF TEST BORINGS 2 OF 4
17.	LOG OF TEST BORINGS 3 OF 4
18.	LOG OF TEST BORINGS 4 OF 4

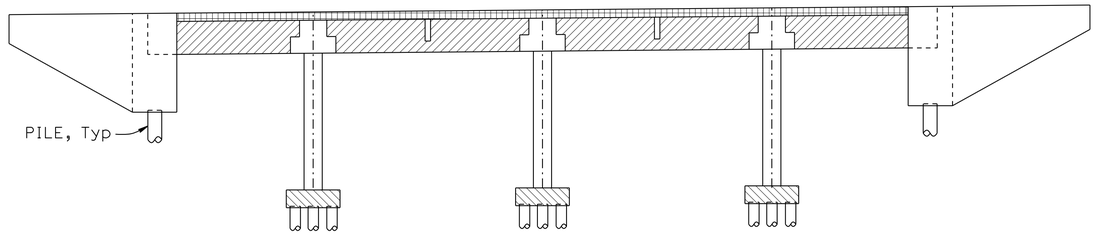

Structural Concrete, Bridge

Structural Concrete, Bridge Footing

PC/PS I-Girders

Structural Concrete, Bridge Deck (f'_c = 5000 psi @ 28 days)

CONCRETE STRENGTH AND TYPE LIMITS

NO SCALE

GENERAL NOTES
LOAD AND RESISTANCE FACTOR DESIGN

DESIGN: AASHTO LRFD BRIDGE DESIGN SPECIFICATIONS, 4th Edition with California Amendments, Preface dated Nov. 2011.

SEISMIC DESIGN: Caltrans Seismic Design Criteria (SDC) Version 1.6, November, 2010.

DEAD LOAD: Includes 35 Psf for future wearing surface. The deck load between girders has been increased by a factor of 10% to allow for the use of steel deck forms.

LIVE LOADING: HL93 and permit design load.

SEISMIC LOADING: Soil Profile: V_{S30} = 755 ft/s
Moment Magnitude: M_{max} = 6.5
Peak Ground Acceleration: 0.48g

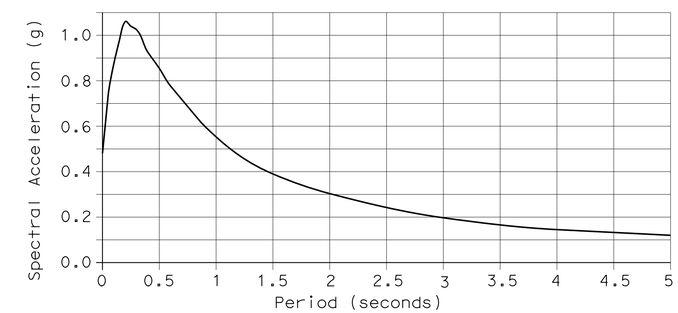

Modified CALTRANS SDC ARS Curve:
Type D Soil Profile, Magnitude Mw=6.5, 5% Damping

REINFORCED CONCRETE: f_y = 60 ksi
f'_c = 4000 psi, unless otherwise noted
n = 9

PRESTRESSED CONCRETE: See "Prestressing Notes" on "PC/PS I- GIRDER" sheet

STANDARD PLANS DATED 2010

A10A	ABBREVIATIONS (SHEET 1 OF 2)
RSP A10B	ABBREVIATIONS (SHEET 2 OF 2)
A10C	LINES AND SYMBOLS (SHEET 1 OF 3)
A10D	LINES AND SYMBOLS (SHEET 2 OF 3)
A10E	LINES AND SYMBOLS (SHEET 3 OF 3)
A10F	LEGEND-SOIL (SHEET 1 OF 2)
A10G	LEGEND-SOIL (SHEET 2 OF 2)
A10H	LEGEND-ROCK
A62C	LIMITS OF PAYMENT FOR EXCAVATION AND BACKFILL BRIDGE
RSP A77U3	MIDWEST GUARDRAIL SYSTEM CONNECTIONS TO ABUTMENTS AND WALLS
BO-1	BRIDGE DETAILS
BO-3	BRIDGE DETAILS
BO-5	BRIDGE DETAILS
BO-13	BRIDGE DETAILS
B2-5	PILE DETAILS CLASS 90 AND CLASS 140
RSP B11-55	CONCRETE BARRIER TYPE 732

Standard Plan sheet number

Detail number

QUANTITIES

BRIDGE REMOVAL (PORTION), LOCATION C	LUMP	SUM
STRUCTURE EXCAVATION (BRIDGE)	163	CY
STRUCTURE BACKFILL (BRIDGE)	89	CY
FURNISH PILING (CLASS 90) (ALTERNATIVE W)	193	LF
DRIVE PILE (CLASS 90) (ALTERNATIVE W)	4	EA
FURNISH PILING (CLASS 140) (ALTERNATIVE W)	1,052	LF
DRIVE PILE (CLASS 140) (ALTERNATIVE W)	30	EA
STRUCTURAL CONCRETE, BRIDGE FOOTING	36	CY
STRUCTURAL CONCRETE, BRIDGE	283	CY
CONCRETE SURFACE TEXTURE (FLUTED RIB)	4,279	SQFT
DRILL AND BOND DOWEL	1,420	LF
DRILL AND BOND DOWEL (CHEMICAL ADHESIVE)	12	EA
FURNISH PRECAST PRESTRESSED CONCRETE GIRDER (30'-40')	3	EA
FURNISH PRECAST PRESTRESSED CONCRETE GIRDER (40'-50')	1	EA
FURNISH PRECAST PRESTRESSED CONCRETE GIRDER (50'-60')	1	EA
FURNISH PRECAST PRESTRESSED CONCRETE GIRDER (60'-70')	3	EA
ERECT PRECAST PRESTRESSED CONCRETE GIRDER	8	EA
BAR REINFORCING STEEL (BRIDGE)	81,944	LB
HEADED BAR REINFORCEMENT	120	EA
CONCRETE BARRIER (TRANSITION ANCHOR BLOCK)	19	LF
CONCRETE BARRIER (TYPE 60D MODIFIED)	94	LF
CONCRETE BARRIER (TYPE 732)	449	LF

PILE DATA TABLE (B2-5)

Location	Pile Type	Nominal Resistance (kips)		Design Tip Elevation (ft)	Specified Tip Elevation (ft)	Nominal Driving Resistance (kips)
		Compression	Tension			
Abut 1	Class 90 Alt "W"	180	0	2680 (a)	2680	180
Bent 2	Class 140 Alt "W"	260	0	2668 (a) 2683 (d)	2668	260
Bent 3	Class 140 Alt "W"	260	0	2668 (a) 2683 (d)	2668	260
Bent 4	Class 140 Alt "W"	260	0	2670 (a) 2683 (d)	2670	260
Abut 5	Class 90 Alt "W"	180	0	2670 (a)	2670	180

NOTE: All design tip elevations are controlled by the following demands: (a) Compression, (b) lateral

	BY	CHECKED
DESIGN	R. Anderson	R. Stiltz
DETAILS	G. Hallstrom	R. Stiltz
QUANTITIES	R. Anderson	H. Vu / Y. Tang

STATE OF CALIFORNIA
DEPARTMENT OF TRANSPORTATION

DIVISION OF ENGINEERING SERVICES
STRUCTURE DESIGN
DESIGN BRANCH 10

BRIDGE NO. 54-0535
POST MILE 44.35

STODDARD WELLS ROAD OC (WIDEN)

INDEX TO PLANS

STRUCTURES DESIGN DETAIL SHEET (ENGLISH) (REV. 09-01-10)

ORIGINAL SCALE IN INCHES FOR REDUCED PLANS 0 1 2 3

UNIT: 3589
PROJECT NUMBER & PHASE: 0800000621
CONTRACT NO.: 08-3555V1

DISREGARD PRINTS BEARING EARLIER REVISION DATES

REVISION DATES 6-14-13 11-07-13 4-28-14 5-14-14

SHEET 2 OF 18

FILE => 540535aitp02.dgn

USERNAME => s127614 DATE PLOTTED => 30-JUN-2014 TIME PLOTTED => 09:20

DIST	COUNTY	ROUTE	POST MILES TOTAL PROJECT	SHEET No.	TOTAL SHEETS
08	SBd	15	42.5/46.0	809	824

REGISTERED CIVIL ENGINEER 11-07-13 DATE

6-23-14
PLANS APPROVAL DATE

REGISTERED PROFESSIONAL ENGINEER RYAN STILTZ No. C65738 Exp. 9/30/15 CIVIL STATE OF CALIFORNIA

The State of California or its officers or agents shall not be responsible for the accuracy or completeness of electronic copies of this plan sheet.

Bridge Location

1. 13.290 Lt. ℄ Rte 15, Sta 4+89.400, Elev 2730.775
2. 32.590 Rt. ℄ Rte 15, Sta 5+05.760, Elev 2730.219
3. 14.560 Lt. ℄ Rte 15, Sta 2+92.780, Elev 2726.362
4. 14.230 Rt. ℄ Rte 15, Sta 3+03.230, Elev 2726.962

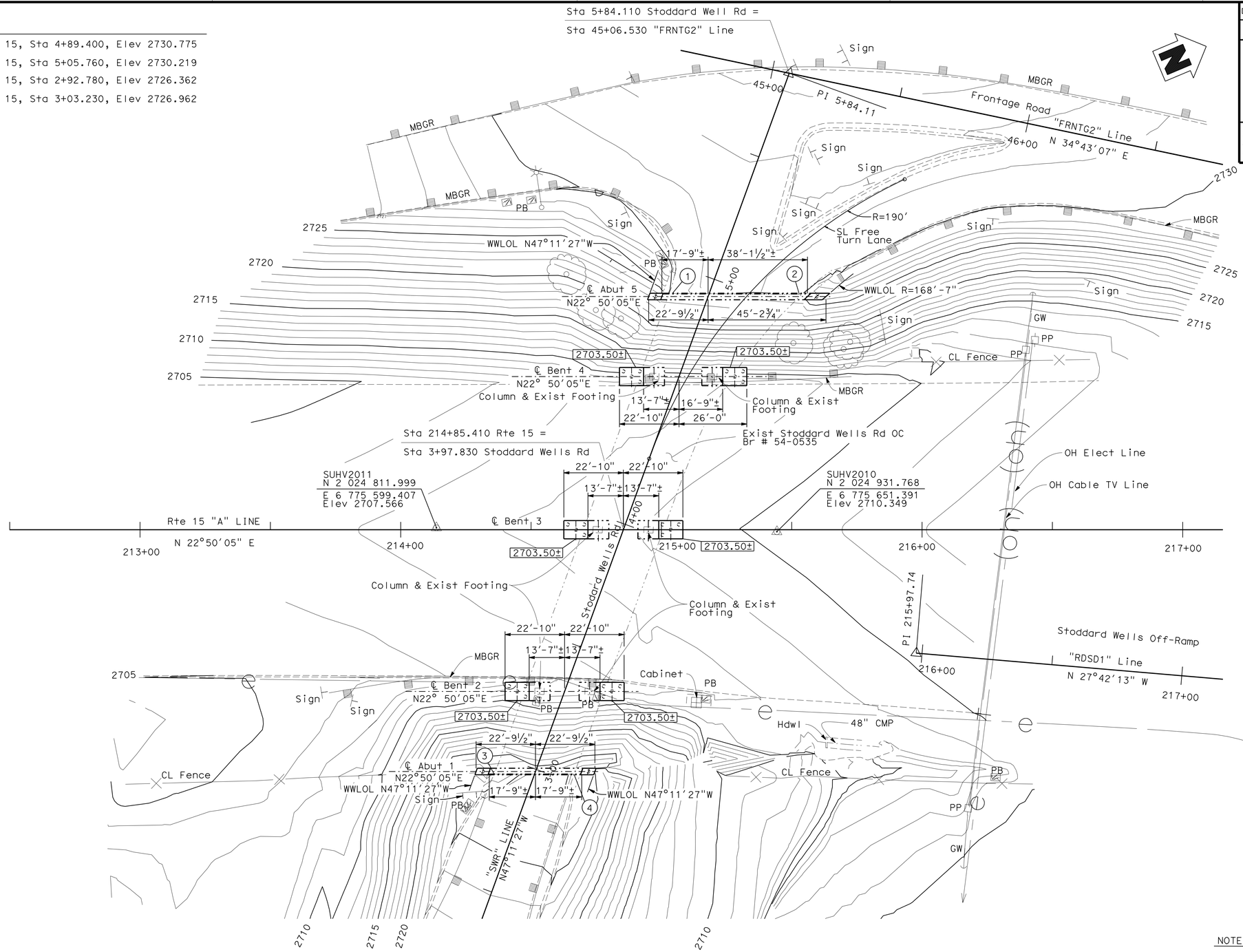

SURVEY CONTROL

SUHV2011
PD: Set PK/AC Med
0.680 Lt. ℄ Rte 15
Sta 214+13.740
N 2 024 811.999
E 6 775 599.407
Elev 2707.566

SUHV2010
PD: Set PK/AC Med
0.750 Rt. ℄ Rte 15
Sta 215+44.300
N 2 024 931.768
E 6 775 651.391
Elev 2710.349

NOTE:

Underground utilities as shown are approximate. See District Utility Plans for details.

Indicates bottom of footing elevation

PRELIMINARY INVESTIGATION SECTION

SCALE 1"=20'	VERT.DATUM NGVD1929	PHOTOGRAMMETRY AS OF: X			
	HORZ.DATUM NAD1983	SURVEYED	BY T. Phung	CHECKED	BY C. Stewart
ALIGNMENT TIES Dist. Traverse Sheet		DRAFTED	BY C. Pham	CHECKED	BY E. Vigjar

DESIGN	BY R. Anderson	CHECKED	R. Stiltz
DETAILS	BY G. Hallstrom	CHECKED	R. Stiltz
QUANTITIES	BY R. Anderson	CHECKED	H. Vu/Y. Tang

STATE OF CALIFORNIA
DEPARTMENT OF TRANSPORTATION

DIVISION OF ENGINEERING SERVICES
STRUCTURE DESIGN
DESIGN BRANCH 10

BRIDGE NO. 54-0535
POST MILE 44.35

STODDARD WELLS ROAD OC (WIDEN)
FOUNDATION PLAN

STRUCTURES FOUNDATION PLAN SHEET (ENGLISH) (REV. 09-01-10)

ORIGINAL SCALE IN INCHES FOR REDUCED PLANS 0 1 2 3

UNIT: 3647
PROJECT NUMBER & PHASE: 08140000861
CONTRACT NO.: 08-3555V1

DISREGARD PRINTS BEARING EARLIER REVISION DATES

REVISION DATES 08/28/13 09/06/13 09/24/13 10/23/13

SHEET 3 OF 18

FILE => 540535efdpl03.dgn

USERNAME => s124496 DATE PLOTTED => 27-JUN-2014 TIME PLOTTED => 13:10

DIST	COUNTY	ROUTE	POST MILES TOTAL PROJECT	SHEET No.	TOTAL SHEETS
08	SBd	15	42.5/46.0	810	824

REGISTERED CIVIL ENGINEER 11-07-13 DATE

6-23-14
PLANS APPROVAL DATE

REGISTERED PROFESSIONAL ENGINEER RYAN STILTZ No. C65738 Exp. 9/30/15 CIVIL STATE OF CALIFORNIA

The State of California or its officers or agents shall not be responsible for the accuracy or completeness of electronic copies of this plan sheet.

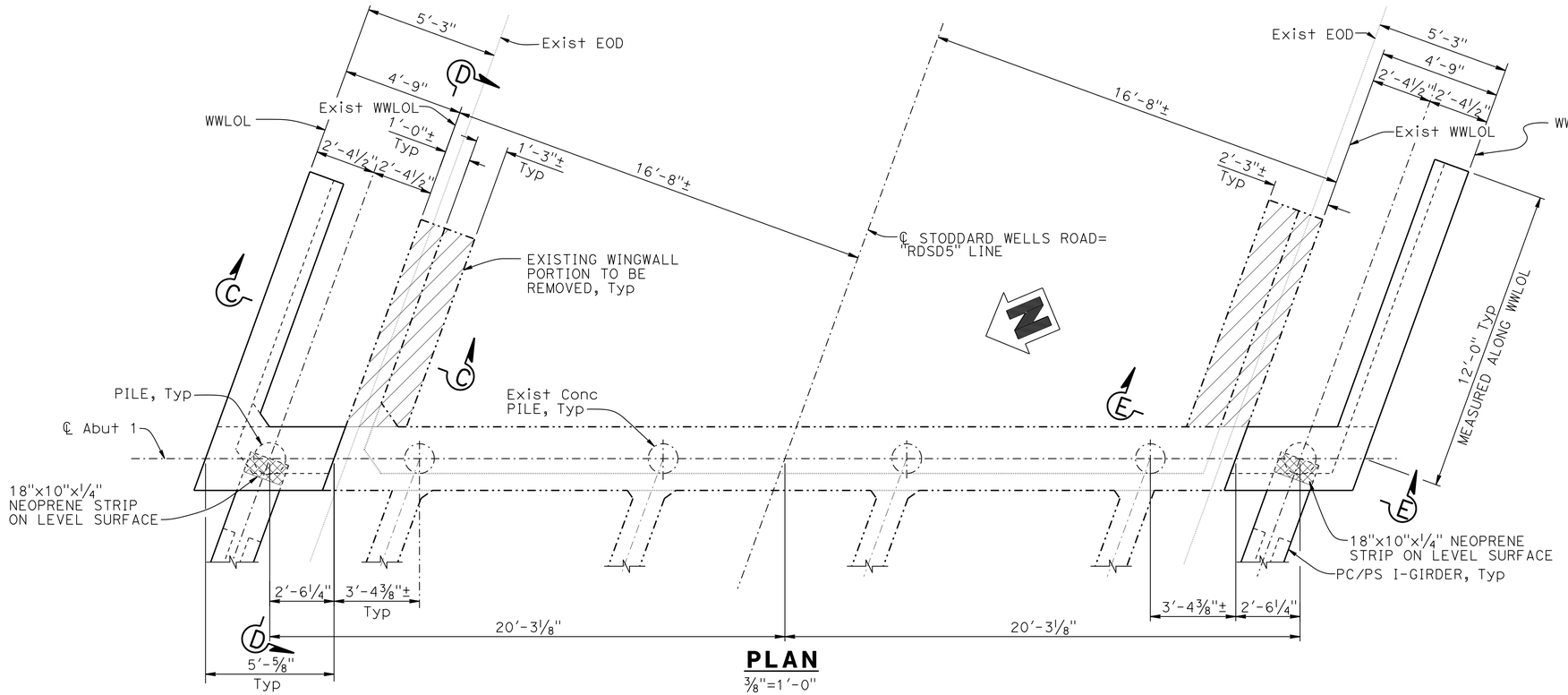

PLAN

⅜"=1'-0"

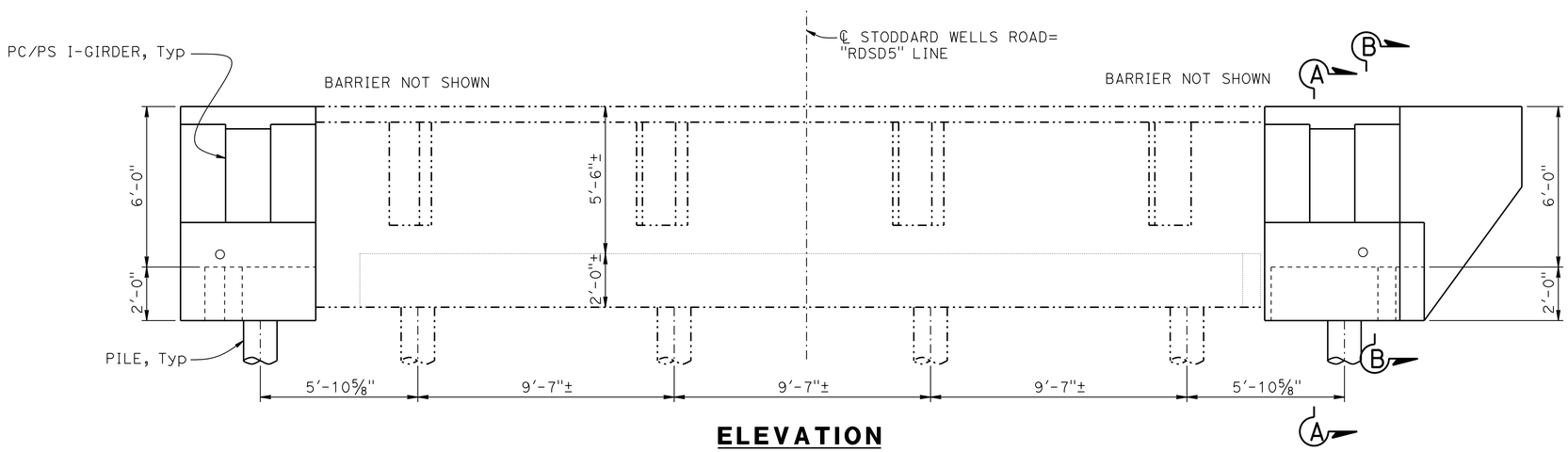

ELEVATION

⅜"=1'-0"

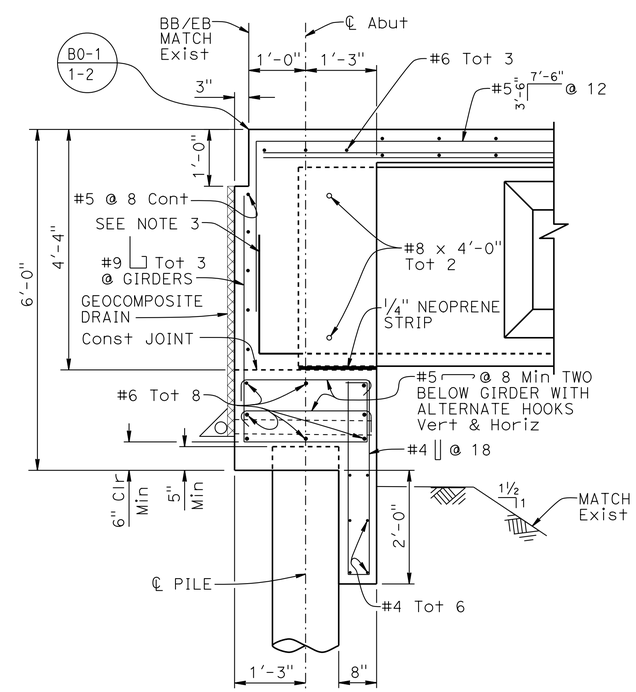

SECTION A-A

¾"=1'-0"

LEGEND:

—— Indicates new construction

-·-·- Indicates existing structure

▨ Indicates limits of Bridge Removal (portion)

NOTES:

1. For "SECTION B-B", "SECTION C-C", "SECTION D-D", and "SECTION E-E", see "ABUTMENT DETAILS NO. 1" sheet.
2. For Geocomposite Drainage details, see "ABUTMENT DETAILS NO. 2" sheet.
3. Extend 2 Prestressed Strands per Grider.

NOTE:
THE CONTRACTOR SHALL VERIFY ALL CONTROLLING FIELD DIMENSIONS BEFORE ORDERING OR FABRICATING ANY MATERIAL.

	BY	CHECKED
DESIGN	R. Anderson	R. Stiltz
DETAILS	G. Hallstrom	R. Stiltz
QUANTITIES	R. Anderson	H. Vu / Y. Tang

STATE OF CALIFORNIA
DEPARTMENT OF TRANSPORTATION

DIVISION OF ENGINEERING SERVICES
STRUCTURE DESIGN
DESIGN BRANCH 10

BRIDGE NO. 54-0535
POST MILE 44.35

STODDARD WELLS ROAD OC (WIDEN)

ABUTMENT 1 LAYOUT

STRUCTURES DESIGN DETAIL SHEET (ENGLISH) (REV. 09-01-10)

ORIGINAL SCALE IN INCHES FOR REDUCED PLANS 0 1 2 3

UNIT: 3589
PROJECT NUMBER & PHASE: 08140000861
CONTRACT NO.: 08-3555V1

DISREGARD PRINTS BEARING EARLIER REVISION DATES

REVISION DATES 6-14-13 10-16-13 11-04-13 9-24-13

SHEET 4 OF 18

FILE => 540535fa_lo04.dgn

USERNAME => s124496 DATE PLOTTED => 27-JUN-2014 TIME PLOTTED => 13:10

DIST	COUNTY	ROUTE	POST MILES TOTAL PROJECT	SHEET No.	TOTAL SHEETS
08	SBd	15	42.5/46.0	811	824

REGISTERED CIVIL ENGINEER 11-07-13 DATE

6-23-14
PLANS APPROVAL DATE

REGISTERED PROFESSIONAL ENGINEER RYAN STILTZ No. C65738 Exp. 9/30/15 CIVIL STATE OF CALIFORNIA

The State of California or its officers or agents shall not be responsible for the accuracy or completeness of electronic copies of this plan sheet.

LEGEND:
- —— Indicates new construction
- —·—·— Indicates existing structure
- ▨ Indicates limits of Bridge Removal (portion)

NOTES:
1. For "SECTION A-A", see "ABUTMENT 1 LAYOUT" sheet.
2. For "SECTION B-B", "SECTION C-C", "SECTION D-D", and "SECTION E-E", see "ABUTMENT DETAILS NO. 1" sheet.

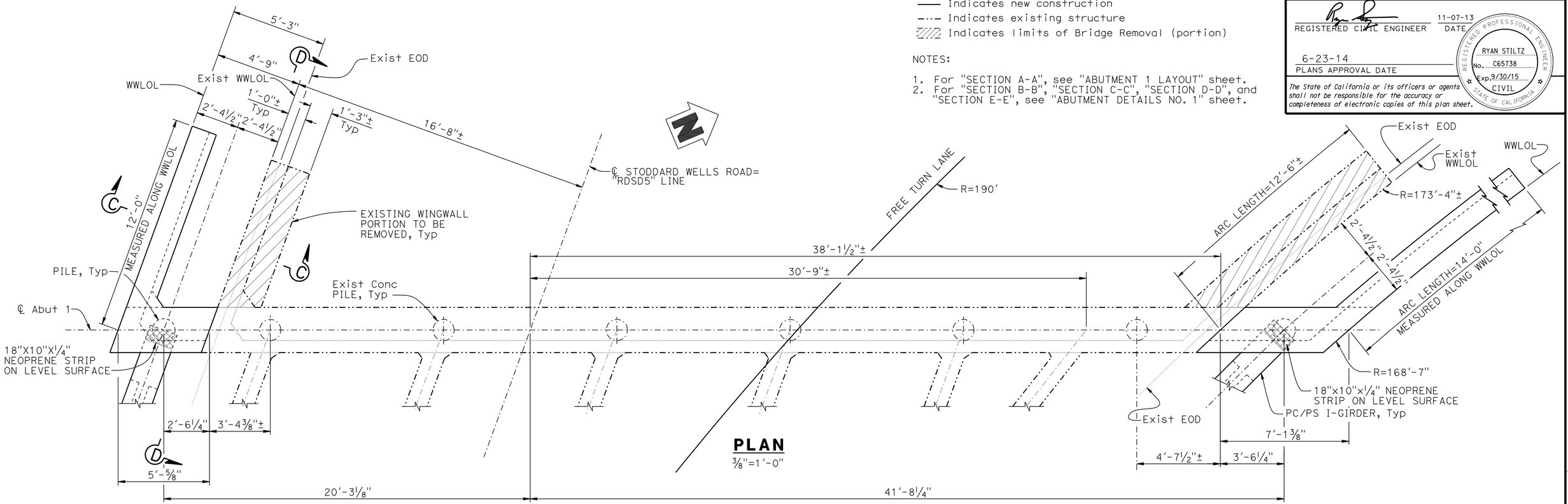

PLAN
⅜"=1'-0"

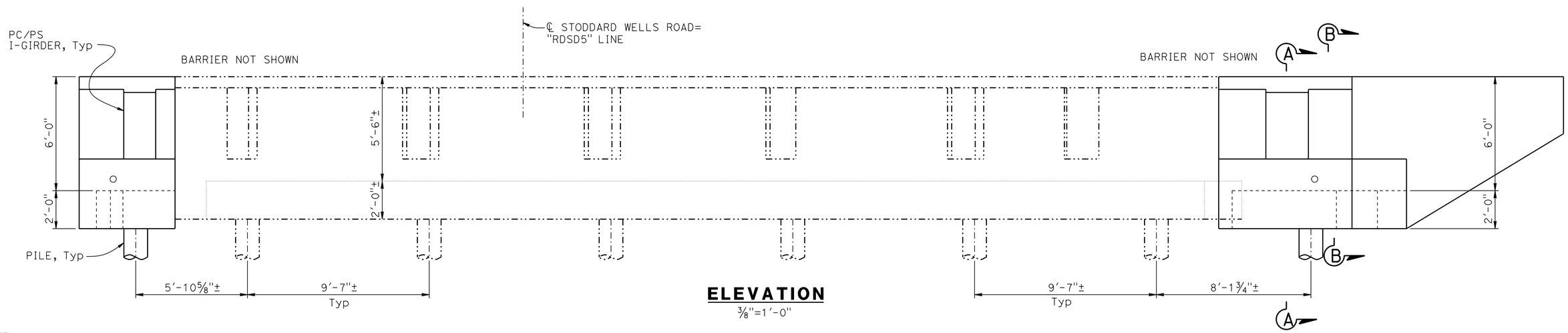

ELEVATION
⅜"=1'-0"

NOTE:
THE CONTRACTOR SHALL VERIFY ALL CONTROLLING FIELD DIMENSIONS BEFORE ORDERING OR FABRICATING ANY MATERIAL.

	BY	CHECKED
DESIGN	R. Anderson	R. Stiltz
DETAILS	G. Hallstrom	R. Stiltz
QUANTITIES	R. Anderson	H. Vu / Y. Tang

STATE OF CALIFORNIA
DEPARTMENT OF TRANSPORTATION

DIVISION OF ENGINEERING SERVICES
STRUCTURE DESIGN
DESIGN BRANCH 10

BRIDGE NO. 54-0535
POST MILE 44.35

STODDARD WELLS ROAD OC (WIDEN)
ABUTMENT 5 LAYOUT

STRUCTURES DESIGN DETAIL SHEET (ENGLISH) (REV. 09-01-10)

ORIGINAL SCALE IN INCHES FOR REDUCED PLANS 0 1 2 3

UNIT: 3589
PROJECT NUMBER & PHASE: 08140000861
CONTRACT NO.: 08-3555V1

DISREGARD PRINTS BEARING EARLIER REVISION DATES

REVISION DATES 6-14-13 11-04-13 12-24-13 10-16-13

SHEET 5 OF 18

FILE => 540535fa_io05.dgn

USERNAME => s124496 DATE PLOTTED => 27-JUN-2014 TIME PLOTTED => 13:10

DIST	COUNTY	ROUTE	POST MILES TOTAL PROJECT	SHEET No.	TOTAL SHEETS
08	SBd	15	42.5/46.0	812	824

REGISTERED CIVIL ENGINEER 11-07-13 DATE

6-23-14
PLANS APPROVAL DATE

REGISTERED PROFESSIONAL ENGINEER RYAN STILTZ No. C65738 Exp. 9/30/15 CIVIL STATE OF CALIFORNIA

The State of California or its officers or agents shall not be responsible for the accuracy or completeness of electronic copies of this plan sheet.

NOTE:
THE CONTRACTOR SHALL VERIFY ALL CONTROLLING FIELD DIMENSIONS BEFORE ORDERING OR FABRICATING ANY MATERIAL.

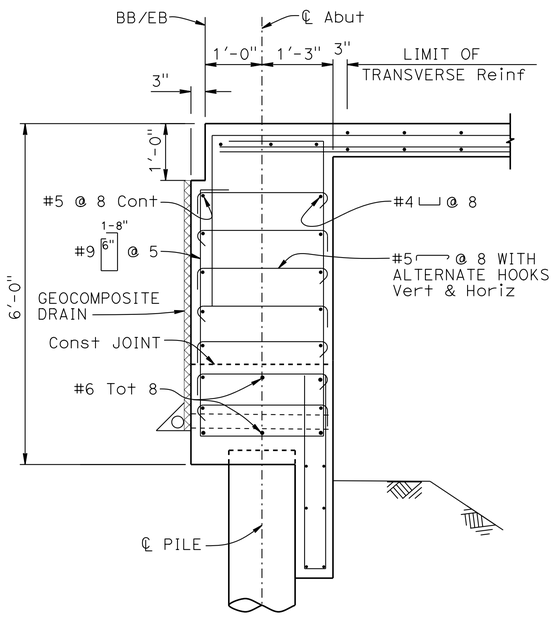

SECTION B-B

3/4"=1'-0"

NOTE: For details not shown, see "SECTION A-A" on "ABUTMENT 1 LAYOUT" sheet.

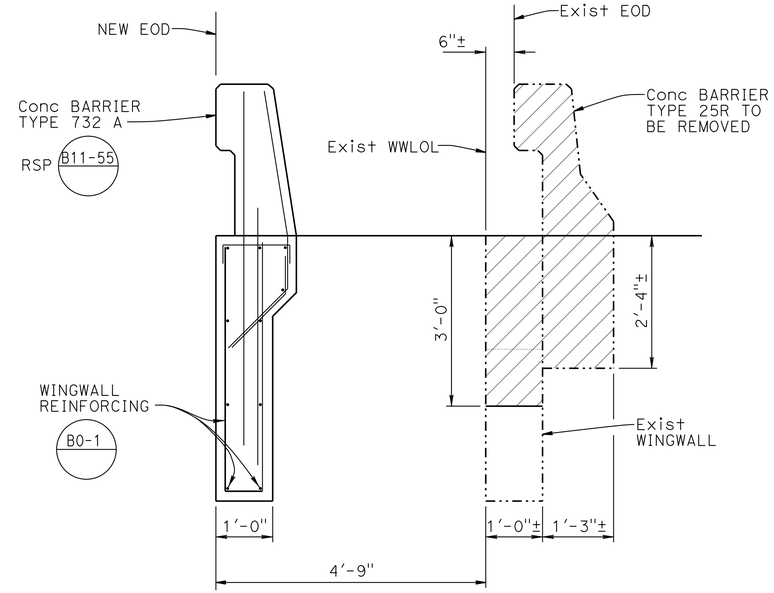

SECTION C-C

3/4"=1'-0"

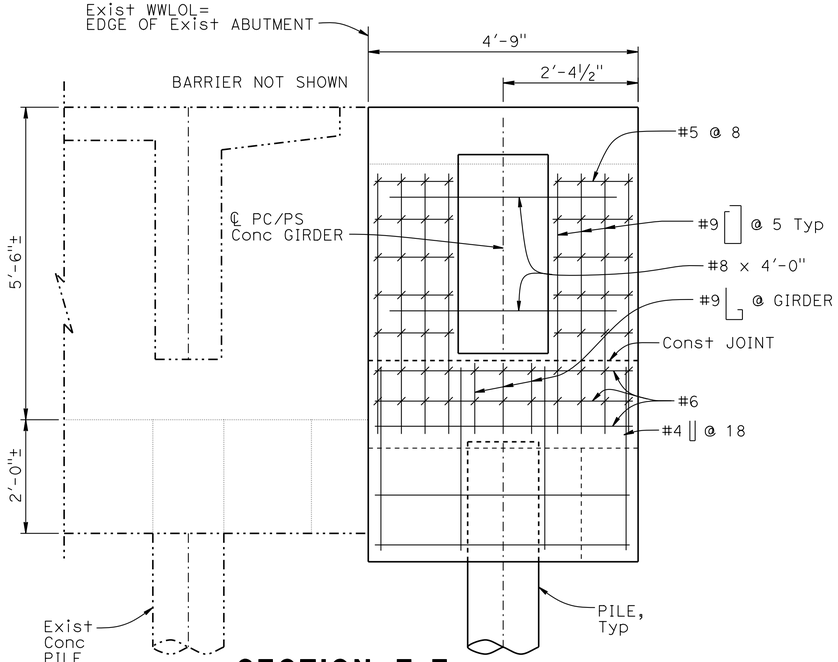

SECTION E-E

3/4"=1'-0"

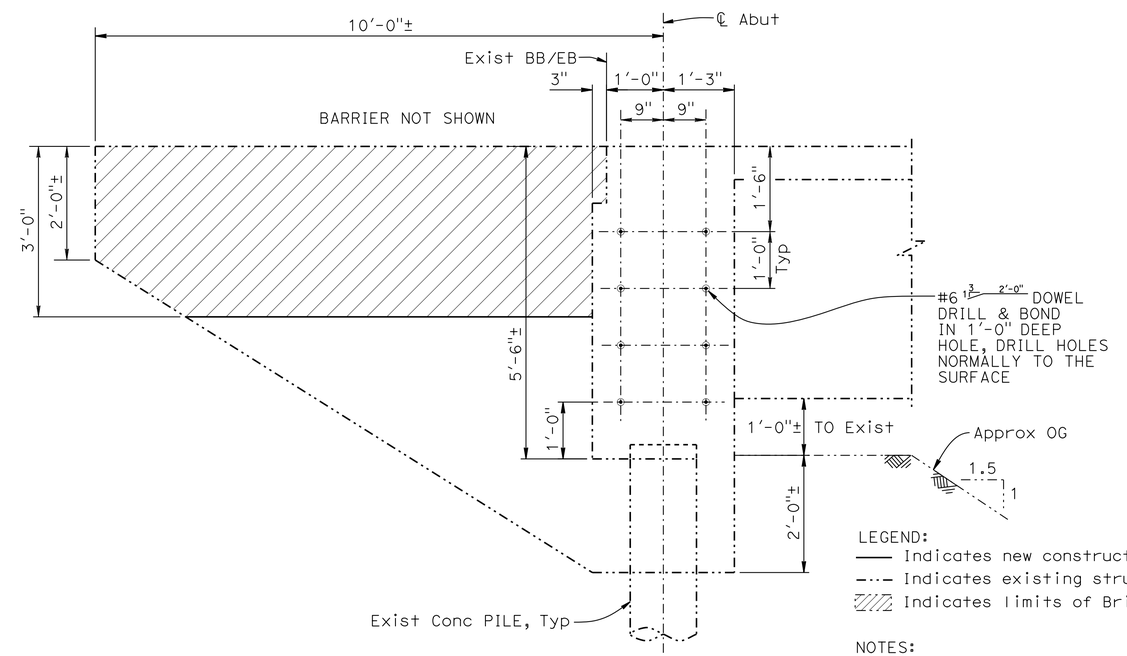

SECTION D-D

3/4"=1'-0"

LEGEND:
—— Indicates new construction
-·-·- Indicates existing structure
▨ Indicates limits of Bridge Removal (portion)

NOTES:

1. For location of "SECTION B-B", "SECTION C-C", "SECTION D-D", and "SECTION E-E", see "ABUTMENT 1 LAYOUT" sheet.

	BY	CHECKED
DESIGN	R. Anderson	R. Stiltz
DETAILS	G. Hallstrom	R. Stiltz
QUANTITIES	R. Anderson	H. Vu / Y. Tang

STATE OF CALIFORNIA
DEPARTMENT OF TRANSPORTATION

DIVISION OF ENGINEERING SERVICES
STRUCTURE DESIGN
DESIGN BRANCH 10

BRIDGE NO. 54-0535
POST MILE 44.35

STODDARD WELLS ROAD OC (WIDEN)

ABUTMENT DETAILS NO. 1

STRUCTURES DESIGN DETAIL SHEET (ENGLISH) (REV. 09-01-10)

ORIGINAL SCALE IN INCHES FOR REDUCED PLANS 0 1 2 3

UNIT: 3589
PROJECT NUMBER & PHASE: 08140000861
CONTRACT NO.: 08-3555V1

DISREGARD PRINTS BEARING EARLIER REVISION DATES

REVISION DATES 6-11-13 8-08-13 11-04-13

SHEET 6 OF 18

FILE => 540535fadt06.dgn

USERNAME => s124496 DATE PLOTTED => 27-JUN-2014 TIME PLOTTED => 13:10

DIST	COUNTY	ROUTE	POST MILES TOTAL PROJECT	SHEET No.	TOTAL SHEETS
08	SBd	15	42.5/46.0	813	824

REGISTERED CIVIL ENGINEER 11-07-13 DATE

6-23-14
PLANS APPROVAL DATE

REGISTERED PROFESSIONAL ENGINEER RYAN STILTZ No. C65738 Exp. 9/30/15 CIVIL STATE OF CALIFORNIA

The State of California or its officers or agents shall not be responsible for the accuracy or completeness of electronic copies of this plan sheet.

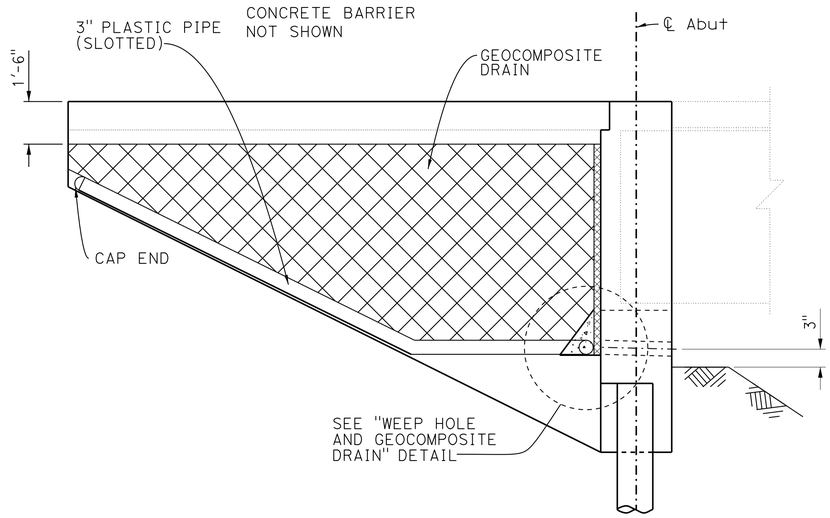

Abutment 1 shown, Abutment 5 similar

WINGWALL ELEVATION GEOCOMPOSITE DRAIN

NO SCALE

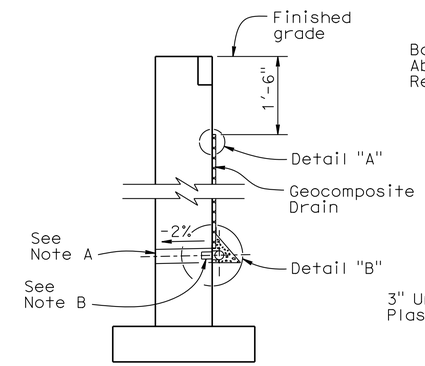

WALL SECTION

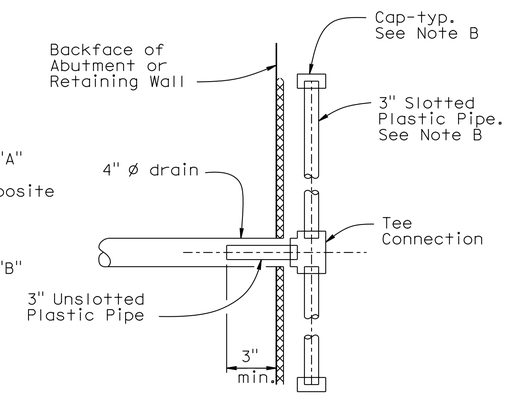

SECTION A-A

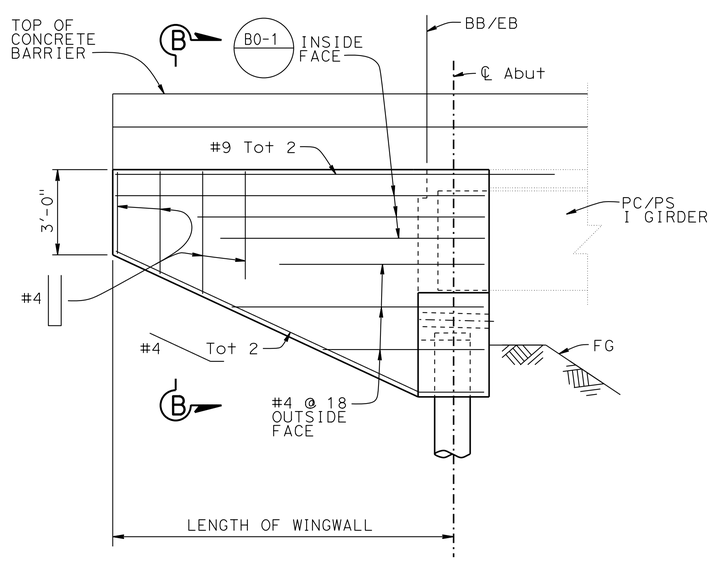

Abutment 1 shown, Abutment 5 similar

WINGWALL ELEVATION

3/8" = 1'-0"

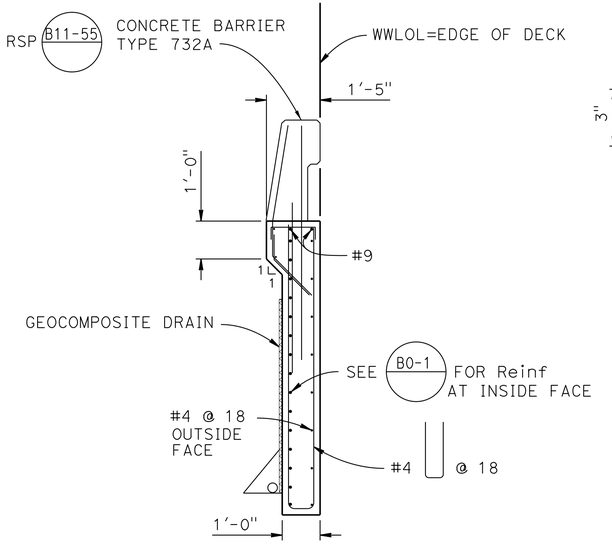

SECTION B-B

1/2" = 1'-0"

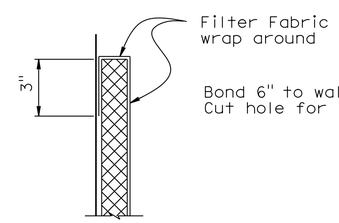

DETAIL "A"

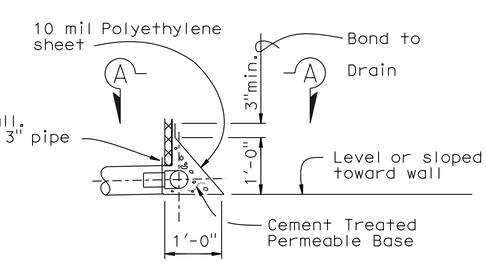

DETAIL "B"

WEEP HOLE AND GEOCOMPOSITE DRAIN

ALTERNATIVE TO BRIDGE DETAIL B0-3 / 3-1

NOTES:

A. 4" ø drains at intermediate sag points and at 25' max center to center.
Exposed wall drains shall be located 3"± above finished grade.

B. Geocomposite drain, cement treated permeable base, and 3"ø slotted plastic pipe continuous behind retaining wall or abutment. Cap ends of pipe. Provide "Tee" connection at each 4" ø drain.

C. Connect the low end of plastic pipe to the main outlet pipe as apprlicable.

NOTE:
THE CONTRACTOR SHALL VERIFY ALL CONTROLLING FIELD DIMENSIONS BEFORE ORDERING OR FABRICATING ANY MATERIAL.

	BY	CHECKED
DESIGN	R. Anderson	R. Stiltz
DETAILS	G. Hallstrom	R. Stiltz
QUANTITIES	R. Anderson	H. Vu / Y. Tang

STATE OF CALIFORNIA DEPARTMENT OF TRANSPORTATION

DIVISION OF ENGINEERING SERVICES STRUCTURE DESIGN DESIGN BRANCH 10

BRIDGE NO. 54-0535
POST MILE 44.35

STODDARD WELLS ROAD OC (WIDEN)

ABUTMENT DETAILS NO. 2

STRUCTURES DESIGN DETAIL SHEET (ENGLISH) (REV. 09-01-10)

ORIGINAL SCALE IN INCHES FOR REDUCED PLANS 0 1 2 3

UNIT: 3589
PROJECT NUMBER & PHASE: 08140000861
CONTRACT NO.: 08-3555V1

DISREGARD PRINTS BEARING EARLIER REVISION DATES

REVISION DATES 5-28-13 8-08-13

SHEET 7 OF 18

FILE => 540535fadt07.dgn

USERNAME => s124496 DATE PLOTTED => 27-JUN-2014 TIME PLOTTED => 13:10

DIST	COUNTY	ROUTE	POST MILES TOTAL PROJECT	SHEET No.	TOTAL SHEETS
08	SBd	15	42.5/46.0	814	824

REGISTERED CIVIL ENGINEER 11-07-13 DATE

6-23-14
PLANS APPROVAL DATE

REGISTERED PROFESSIONAL ENGINEER RYAN STILTZ No. C65738 Exp. 9/30/15 CIVIL STATE OF CALIFORNIA

The State of California or its officers or agents shall not be responsible for the accuracy or completeness of electronic copies of this plan sheet.

NOTE:
THE CONTRACTOR SHALL VERIFY ALL CONTROLLING FIELD DIMENSIONS BEFORE ORDERING OR FABRICATING ANY MATERIAL.

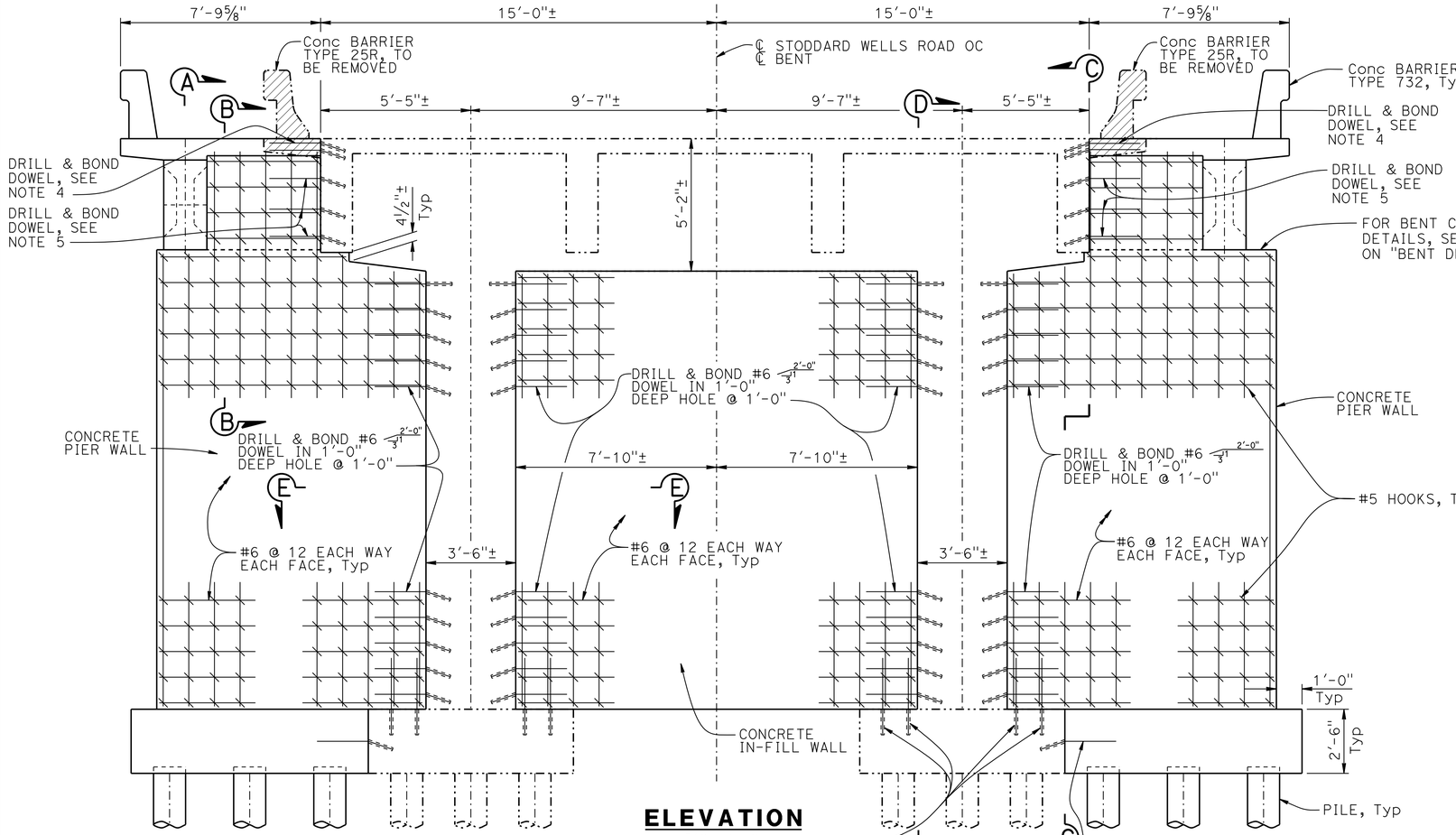

ELEVATION
⅜"=1'-0"

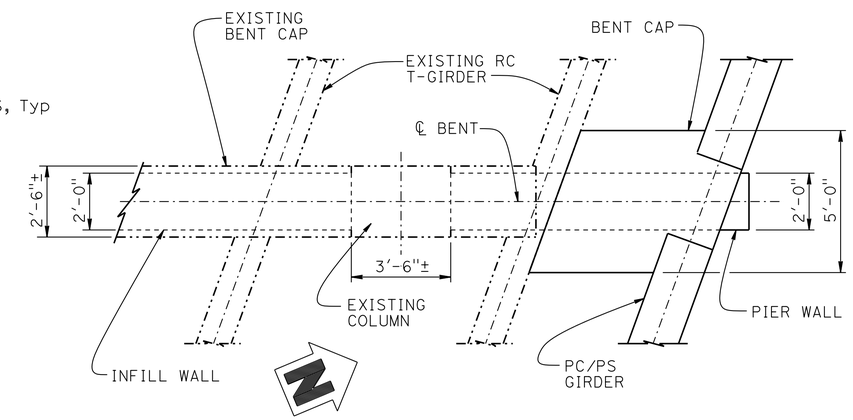

BENT CAP PLAN
⅜"=1'-0"

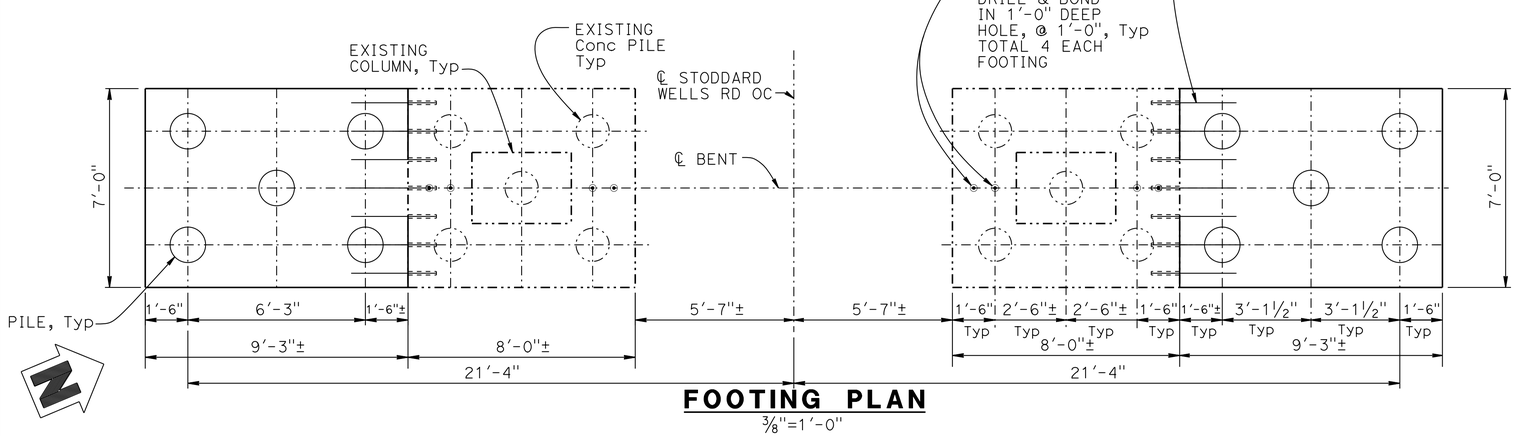

FOOTING PLAN
⅜"=1'-0"

NOTE:

1. For "SECTION A-A" and "SECTION E-E", see "BENT DETAILS NO. 1" sheet.
2. For "SECTION B-B", "SECTION C-C", and "SECTION D-D" see "BENT DETAILS NO. 2" sheet.
3. Bent No. 2, Bent No. 3, and Bent No. 4 Left shown, see "BENT DETAILS NO. 1" sheet for Bent No. 4 Right.
4. See "PART TYPICAL SECTION" on "TYPICAL SECTION" sheet.
5. See "SECTION C-C" on "BENT DETAILS NO. 2" sheet.

LEGEND:
—— Indicates new construction
—·—· Indicates existing structure
//// Indicates limits of Bridge Removal (portion)

	BY	CHECKED
DESIGN	R. Anderson	R. Stiltz
DETAILS	G. Hallstrom	R. Stiltz
QUANTITIES	R. Anderson	H. Vu / Y. Tang

STATE OF CALIFORNIA
DEPARTMENT OF TRANSPORTATION

DIVISION OF ENGINEERING SERVICES
STRUCTURE DESIGN
DESIGN BRANCH 10

BRIDGE NO. 54-0535
POST MILE 44.35

STODDARD WELLS ROAD OC (WIDEN)
BENT LAYOUT

STRUCTURES DESIGN DETAIL SHEET (ENGLISH) (REV. 09-01-10)

ORIGINAL SCALE IN INCHES FOR REDUCED PLANS 0 1 2 3

UNIT: 3589
PROJECT NUMBER & PHASE: 0800000621
CONTRACT NO.: 08-3555V1

DISREGARD PRINTS BEARING EARLIER REVISION DATES

REVISION DATES: 6-14-13 11-04-13 5-14-14 10-16-13

SHEET 8 OF 18

FILE => 540535hb_1o08.dgn

USERNAME => s132614 DATE PLOTTED => 30-JUN-2014 TIME PLOTTED => 09:20

DIST	COUNTY	ROUTE	POST MILES TOTAL PROJECT	SHEET No.	TOTAL SHEETS
08	SBd	15	42.5/46.0	815	824

REGISTERED CIVIL ENGINEER 11-07-13 DATE

6-23-14
PLANS APPROVAL DATE

REGISTERED PROFESSIONAL ENGINEER RYAN STILTZ No. C65738 Exp. 9/30/15 CIVIL STATE OF CALIFORNIA

The State of California or its officers or agents shall not be responsible for the accuracy or completeness of electronic copies of this plan sheet.

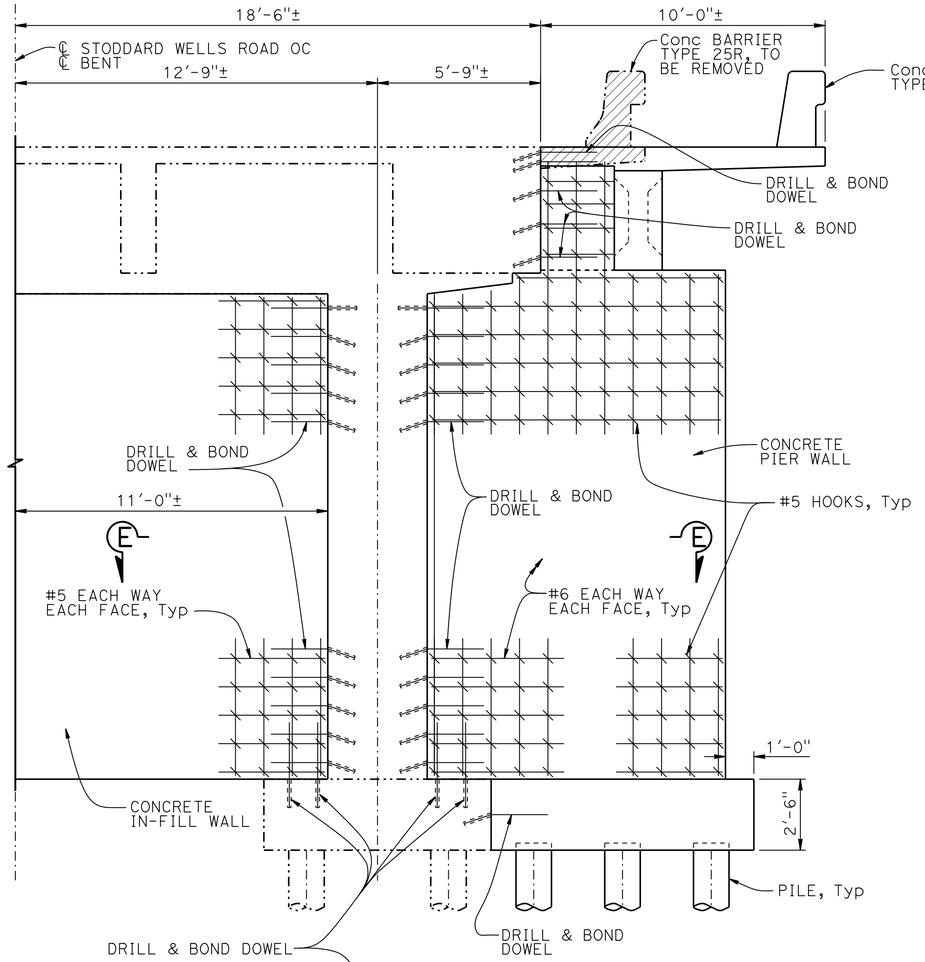

ELEVATION

3/8"=1'-0"

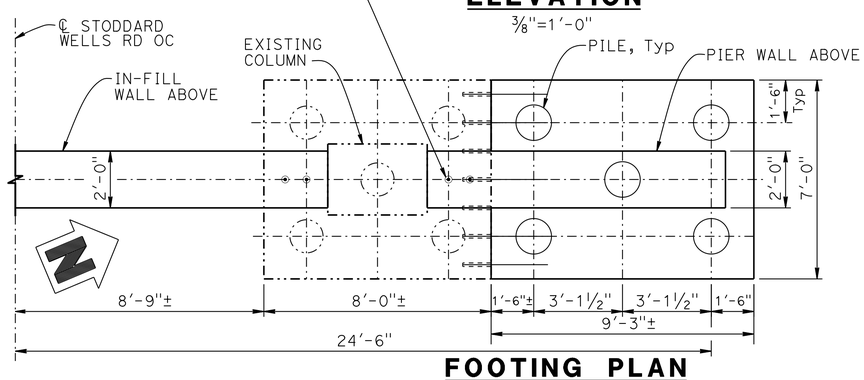

FOOTING PLAN

3/8"=1'-0"

NOTE: Bent No. 4 Right shown. See "BENT LAYOUT" sheet for Bent No. 4 Left and details not shown.

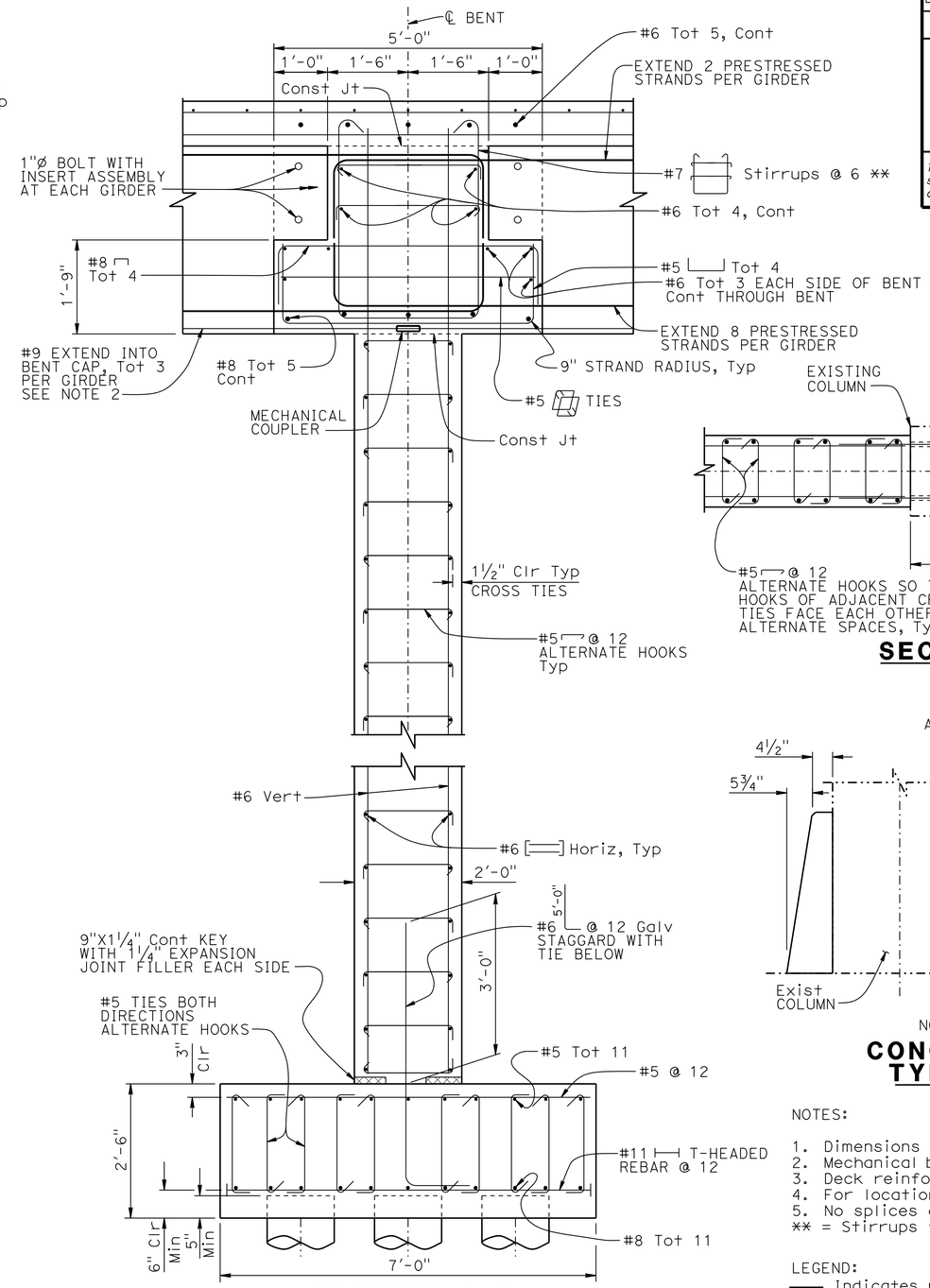

SECTION A-A

¾"=1'-0"

NOTE:
THE CONTRACTOR SHALL VERIFY ALL CONTROLLING FIELD DIMENSIONS BEFORE ORDERING OR FABRICATING ANY MATERIAL.

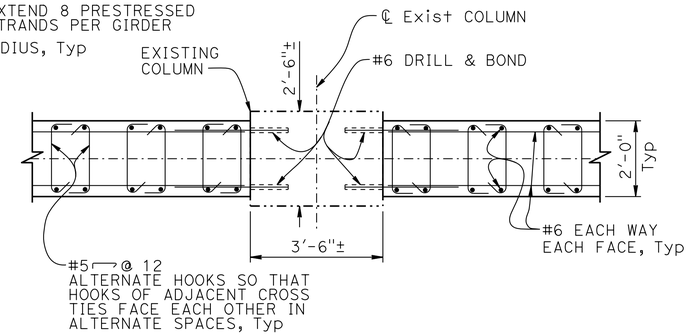

SECTION E-E

1"=1'-0"

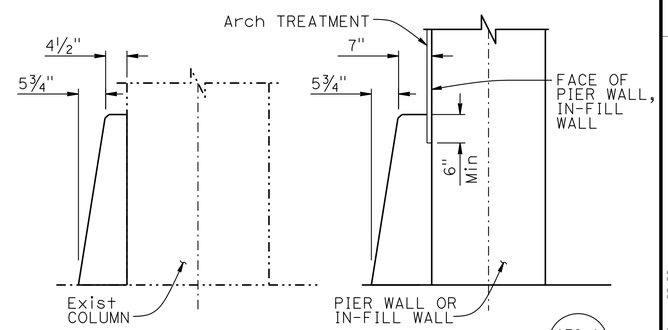

NOTE: For details not shown, see A76-A

CONCRETE BARRIER TYPE 60D (MOD)

3/4 "=1'-0"

NOTES:

1. Dimensions are perpendicular to ℄ Bent.
2. Mechanical butt splices shall be "Ultimate" splices.
3. Deck reinforcing not shown for clarity.
4. For location of "SECTION A-A" see "BENT LAYOUT" sheet.
5. No splices allowed at #6 Vert and #6 Horiz.

** = Stirrups to be perpendicular to ℄ Bent.

LEGEND:

—— Indicates new construction

—·—· Indicates existing structure

▨ Indicates limits of Bridge Removal (portion)

	BY	CHECKED
DESIGN	R. Anderson	R. Stiltz
DETAILS	G. Hallstrom	R. Stiltz
QUANTITIES	R. Anderson	H. Vu / Y. Tang

STATE OF CALIFORNIA DEPARTMENT OF TRANSPORTATION

DIVISION OF ENGINEERING SERVICES STRUCTURE DESIGN DESIGN BRANCH 10

BRIDGE NO. 54-0535 POST MILE 44.35

STODDARD WELLS ROAD OC (WIDEN)

BENT DETAILS NO. 1

STRUCTURES DESIGN DETAIL SHEET (ENGLISH) (REV. 09-01-10)

ORIGINAL SCALE IN INCHES FOR REDUCED PLANS 0 1 2 3

UNIT: 3589
PROJECT NUMBER & PHASE: 0800000621
CONTRACT NO.: 08-3555V1

DISREGARD PRINTS BEARING EARLIER REVISION DATES

REVISION DATES 6-14-13 11-04-13 5-15-14 10-16-13

SHEET 9 OF 18

FILE => 540535hbdt09.dgn

USERNAME => s1216t4 DATE PLOTTED => 30-JUN-2014 TIME PLOTTED => 09:20

DIST	COUNTY	ROUTE	POST MILES TOTAL PROJECT	SHEET No.	TOTAL SHEETS
08	SBd	15	42.5/46.0	816	824

REGISTERED CIVIL ENGINEER 11-07-13 DATE

6-23-14
PLANS APPROVAL DATE

REGISTERED PROFESSIONAL ENGINEER RYAN STILTZ No. C65738 Exp. 9/30/15 CIVIL STATE OF CALIFORNIA

The State of California or its officers or agents shall not be responsible for the accuracy or completeness of electronic copies of this plan sheet.

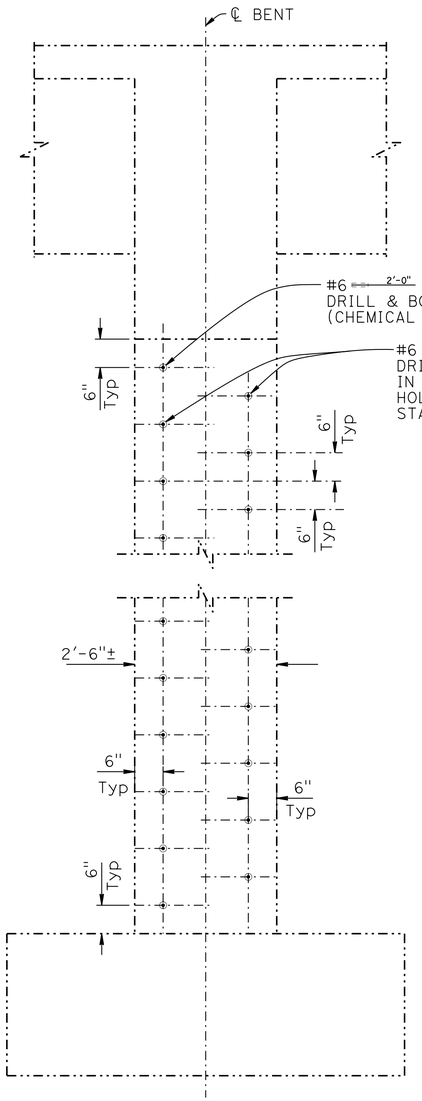

SECTION D-D

3/4"=1'-0"

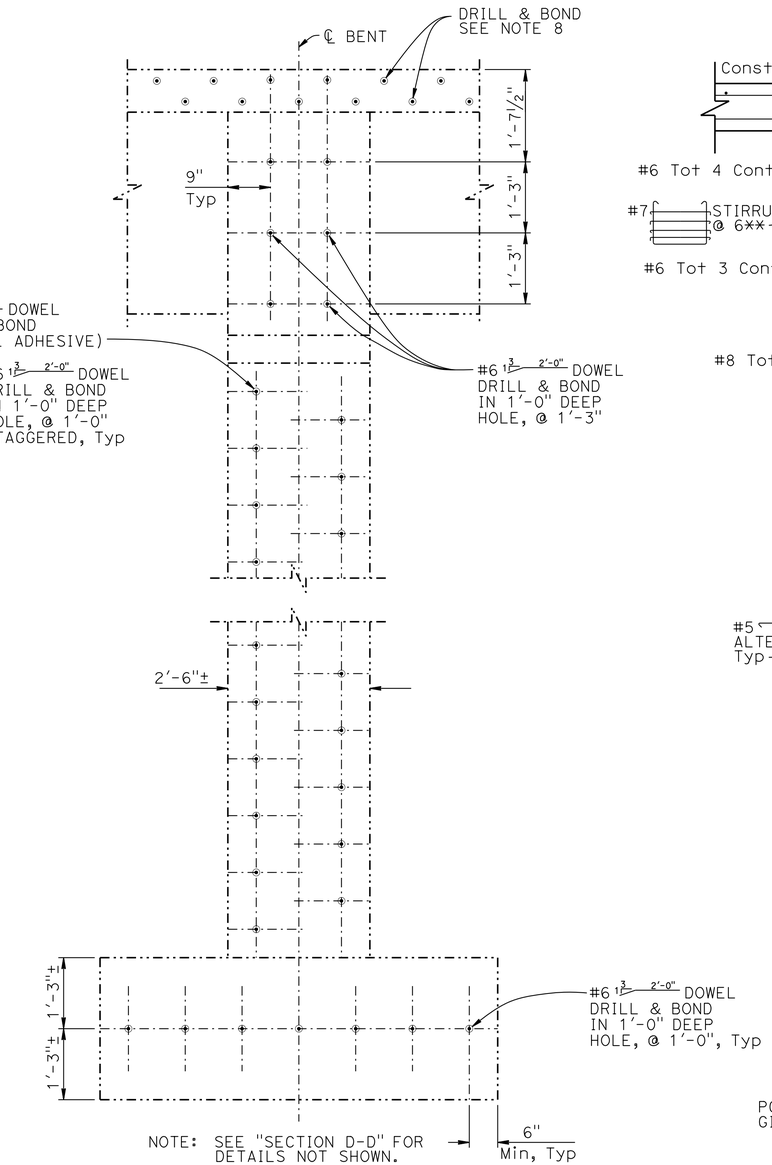

SECTION C-C

3/4"=1'-0"

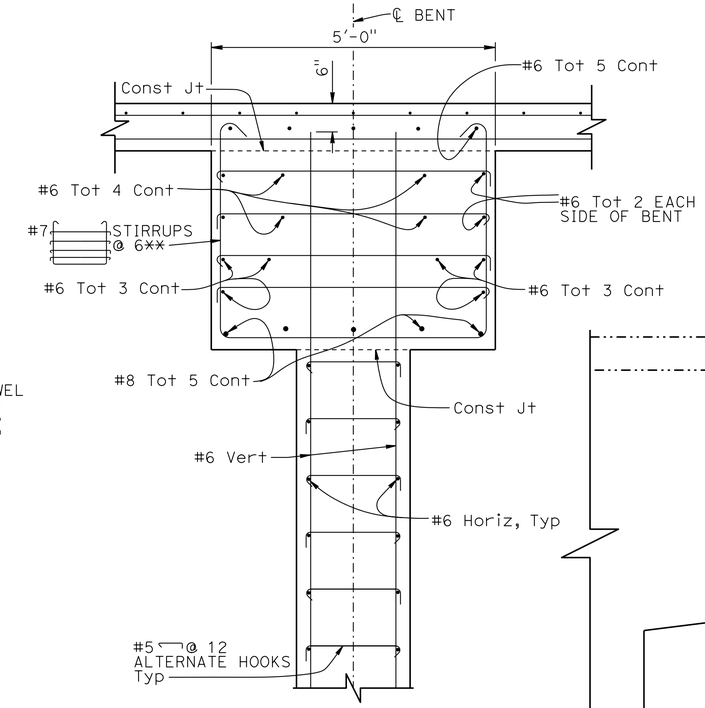

SECTION B-B

3/4"=1'-0"

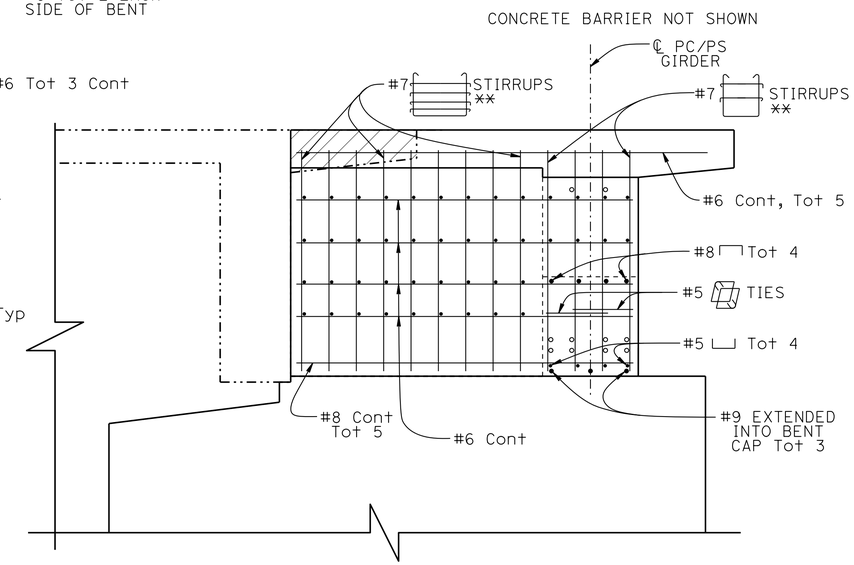

SECTION AT BENT CAP

3/4"=1'-0"

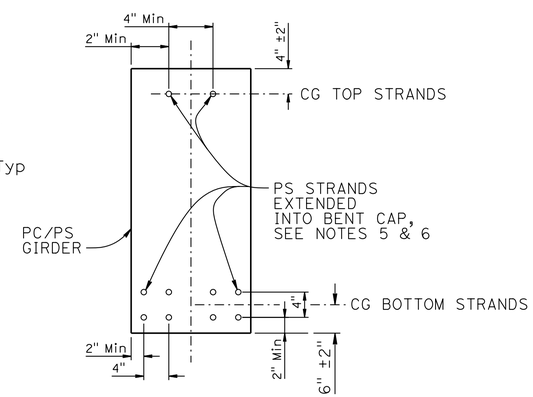

DETAIL C

1"=1'-0"

NOTES:

1. Mechanical butt splices shall be "Ultimate" splices.
2. Deck reinforcing not shown for clarity.
3. For location of "SECTION B-B", "SECTION C-C", and "SECTION D-D", see "BENT LAYOUT" sheet.
4. See "SECTION A-A" on "BENT DETAILS NO. 1" sheet for wall details.
5. Total of 8 bottom P/S Strands and 2 top P/S Strands to be extended into Bent Cap. Strand spacing shall be a Min of 4" both horizontally & vertically.
6. Strands extending into the Bent Cap may be either a portion of the Girder Pretensioned Strands or additional P/S strands with a minimum of 8'-0" embedment into the Precast P/S Girder.
7. Diaphragms shall be poured no earlier than 90 days after precast girders have been cast.
8. See "PART TYPICAL SECTION" on "TYPICAL SECTION" sheet.

LEGEND:

—— Indicates new construction
—·—· Indicates existing structure
Indicates limits of Bridge Removal (portion)
○ PS Strands extended into Bent Cap, see "DETAIL C"
** Stirrups to be perpendicular to ℄ of Bent

NOTE:
THE CONTRACTOR SHALL VERIFY ALL CONTROLLING FIELD DIMENSIONS BEFORE ORDERING OR FABRICATING ANY MATERIAL.

	BY	CHECKED
DESIGN	R. Anderson	R. Stiltz
DETAILS	G. Hallstrom	R. Stiltz
QUANTITIES	R. Anderson	H. Vu / Y. Tang

STATE OF CALIFORNIA
DEPARTMENT OF TRANSPORTATION

DIVISION OF ENGINEERING SERVICES
STRUCTURE DESIGN
DESIGN BRANCH 10

BRIDGE NO. 54-0535
POST MILE 44.35

STODDARD WELLS ROAD OC (WIDEN)

BENT DETAILS NO. 2

STRUCTURES DESIGN DETAIL SHEET (ENGLISH) (REV. 09-01-10)

ORIGINAL SCALE IN INCHES FOR REDUCED PLANS 0 1 2 3

UNIT: 3589
PROJECT NUMBER & PHASE: 0800000621
CONTRACT NO.: 08-3555V1

DISREGARD PRINTS BEARING EARLIER REVISION DATES

REVISION DATES: 5-29-13 11-04-13 5-14-14 10-16-13

SHEET 10 OF 18

FILE => 540535hbdt10.dgn

USERNAME => s127614 DATE PLOTTED => 30-JUN-2014 TIME PLOTTED => 09:21

DIST	COUNTY	ROUTE	POST MILES TOTAL PROJECT	SHEET No.	TOTAL SHEETS
08	SBd	15	42.5/46.0	817	824

REGISTERED CIVIL ENGINEER 11-07-13 DATE

6-23-14
PLANS APPROVAL DATE

REGISTERED PROFESSIONAL ENGINEER RYAN STILTZ No. C65738 Exp. 9/30/15 CIVIL STATE OF CALIFORNIA

The State of California or its officers or agents shall not be responsible for the accuracy or completeness of electronic copies of this plan sheet.

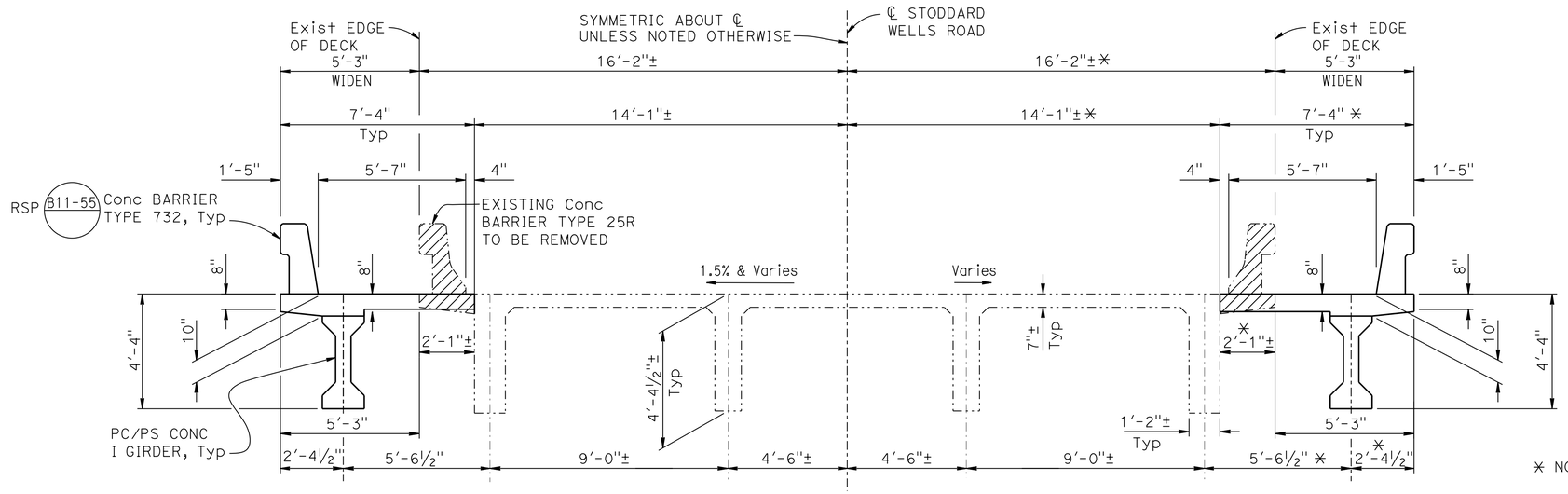

✳ NOTE: Varies at Span 3 and Span 4.

TYPICAL SECTION SPAN 1 AND SPAN 2

⅜"=1'-0"

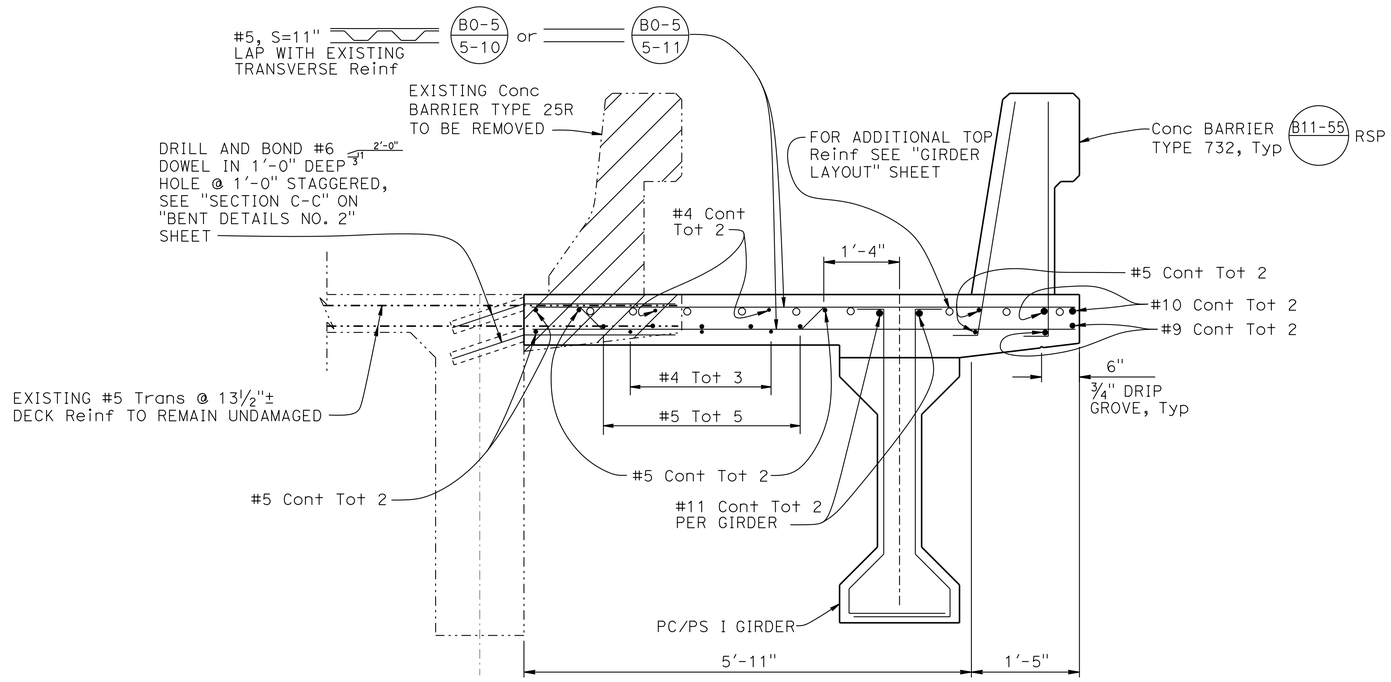

PART TYPICAL SECTION

1"=1'-0"

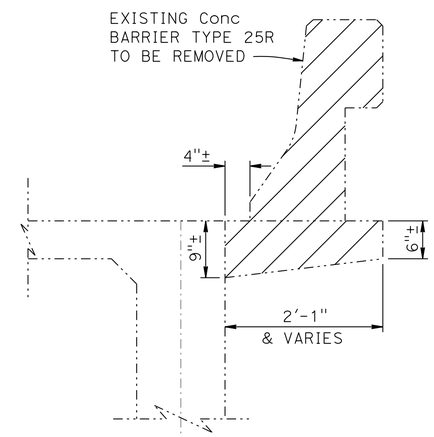

CONCRETE REMOVAL AT EXISTING DECK

1"=1'-0"

LEGEND:

- Indicates new construction
- Indicates existing structure
- Indicates limits of Bridge Removal (portion)

NOTE:
THE CONTRACTOR SHALL VERIFY ALL CONTROLLING FIELD DIMENSIONS BEFORE ORDERING OR FABRICATING ANY MATERIAL.

	BY	CHECKED
DESIGN	R. Anderson	R. Stiltz
DETAILS	G. Hallstrom	R. Stiltz
QUANTITIES	R. Anderson	H. Vu / Y. Tang

STATE OF CALIFORNIA DEPARTMENT OF TRANSPORTATION

DIVISION OF ENGINEERING SERVICES STRUCTURE DESIGN DESIGN BRANCH 10

BRIDGE NO. 54-0535
POST MILE 44.35

STODDARD WELLS ROAD OC (WIDEN)

TYPICAL SECTION

STRUCTURES DESIGN DETAIL SHEET (ENGLISH) (REV. 09-01-10)

ORIGINAL SCALE IN INCHES FOR REDUCED PLANS 0 1 2 3

UNIT: 3589
PROJECT NUMBER & PHASE: 08140000861
CONTRACT NO.: 08-3555V1

DISREGARD PRINTS BEARING EARLIER REVISION DATES

REVISION DATES 6-14-13 10-16-13 11-04-13

SHEET 11 OF 18

FILE => 540535kts11.dgn

USERNAME => s124496 DATE PLOTTED => 27-JUN-2014 TIME PLOTTED => 13:10

DIST	COUNTY	ROUTE	POST MILES TOTAL PROJECT	SHEET No.	TOTAL SHEETS
08	SBd	15	42.5/46.0	818	824

REGISTERED CIVIL ENGINEER 11-07-13 DATE

6-23-14
PLANS APPROVAL DATE

REGISTERED PROFESSIONAL ENGINEER RYAN STILTZ No. C65738 Exp. 9/30/15 CIVIL STATE OF CALIFORNIA

The State of California or its officers or agents shall not be responsible for the accuracy or completeness of electronic copies of this plan sheet.

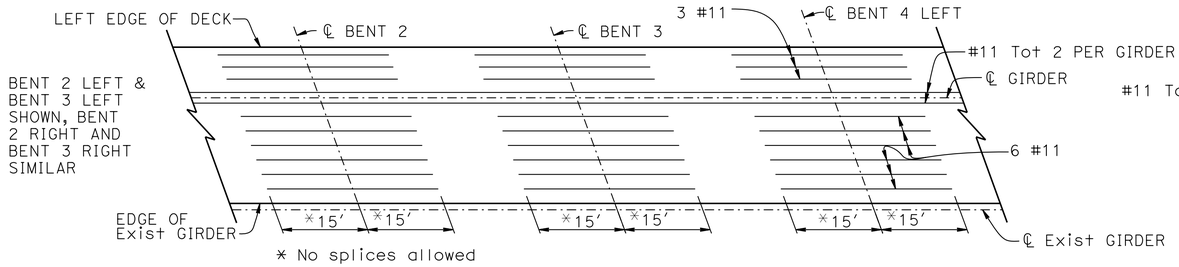

ADDITIONAL TOP REINFORCEMENT

NO SCALE

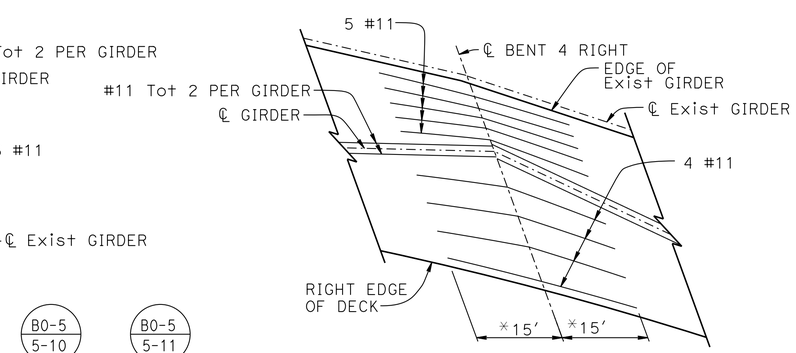

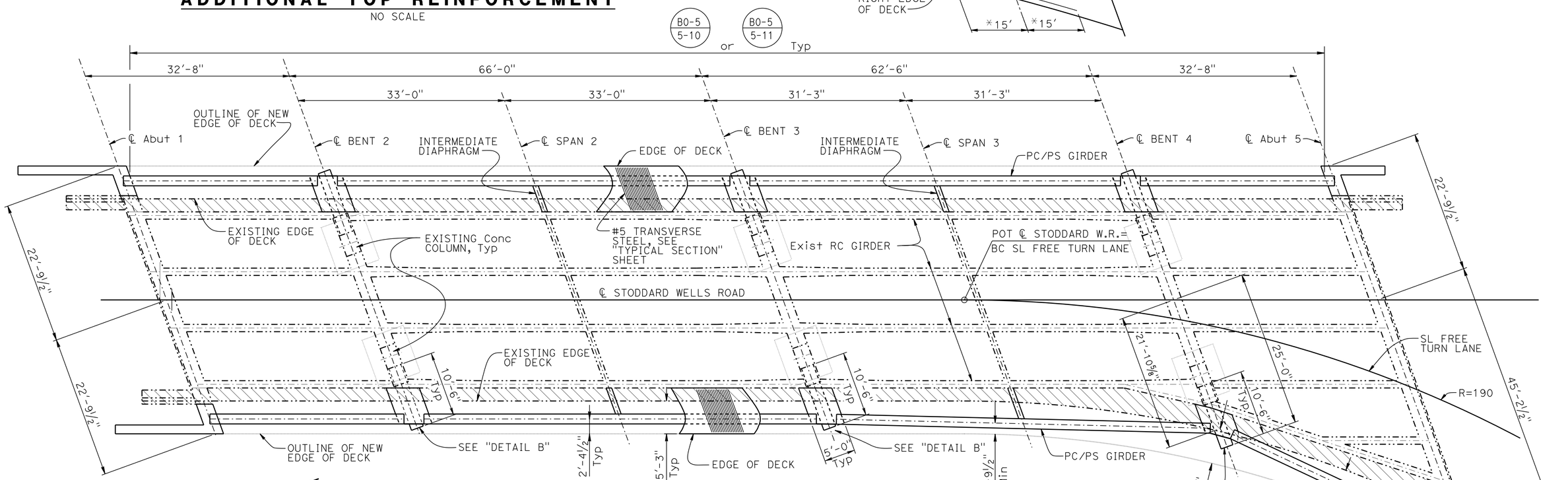

GIRDER LAYOUT

1/8" = 1'-0"

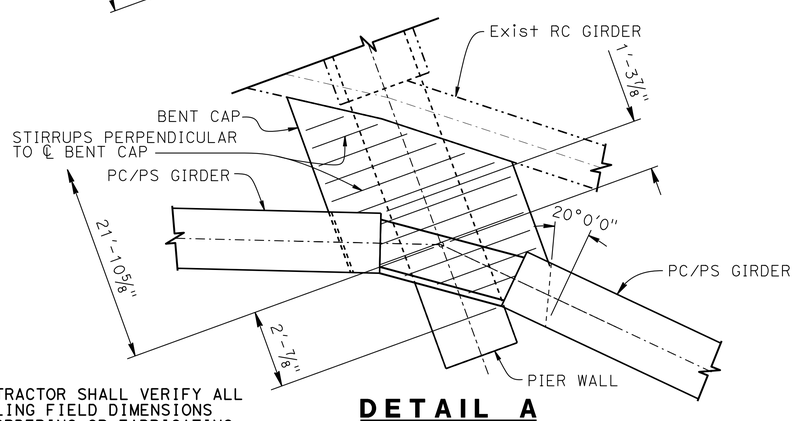

DETAIL A

1/2" = 1'-0"

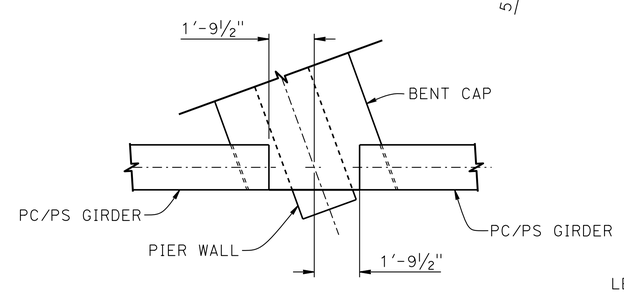

DETAIL B

3/8" = 1'-0"

NOTE:
THE CONTRACTOR SHALL VERIFY ALL CONTROLLING FIELD DIMENSIONS BEFORE ORDERING OR FABRICATING ANY MATERIAL.

LEGEND:
—— Indicates new construction
-·-·- Indicates existing structure
▨ Indicates limits of Bridge Removal (portion)

	BY	CHECKED
DESIGN	R. Anderson	R. Stiltz
DETAILS	G. Hallstrom	R. Stiltz
QUANTITIES	R. Anderson	H. Vu / Y. Tang

STATE OF CALIFORNIA DEPARTMENT OF TRANSPORTATION

DIVISION OF ENGINEERING SERVICES STRUCTURE DESIGN DESIGN BRANCH 10

BRIDGE NO. 54-0535
POST MILE 44.35

STODDARD WELLS ROAD OC (WIDEN)
GIRDER LAYOUT

STRUCTURES DESIGN DETAIL SHEET (ENGLISH) (REV. 09-01-10)

ORIGINAL SCALE IN INCHES FOR REDUCED PLANS 0 1 2 3

UNIT: 3589
PROJECT NUMBER & PHASE: 08140000861
CONTRACT NO.: 08-3555V1

DISREGARD PRINTS BEARING EARLIER REVISION DATES

REVISION DATES 6-11-13 8-13-13 9-25-13 11-04-13

SHEET 12 OF 18

FILE => 5405351g_lo12.dgn

USERNAME => s124496 DATE PLOTTED => 27-JUN-2014 TIME PLOTTED => 13:11

DIST	COUNTY	ROUTE	POST MILES TOTAL PROJECT	SHEET No.	TOTAL SHEETS
08	SBd	15	42.5/46.0	819	824

REGISTERED CIVIL ENGINEER 11-07-13 DATE

6-23-14
PLANS APPROVAL DATE

REGISTERED PROFESSIONAL ENGINEER RYAN STILTZ No. C65738 Exp. 9/30/15 CIVIL STATE OF CALIFORNIA

The State of California or its officers or agents shall not be responsible for the accuracy or completeness of electronic copies of this plan sheet.

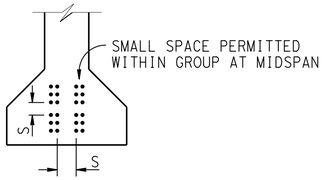

CLEARANCES FOR PRETENSIONED STRANDS

1. Strands may be bundled in groups consisting of 3 vertically, 2 horizontally and separated at the ends
2. The Min distance "S" between groups or individual strands is 1½" for ⅜" ø strands, 1¾" for ½" ø strands, 2" for 0.6" ø strands
3. "S" is measured between centers of adjacent strands
4. Approval by the Engineer is required for deviation

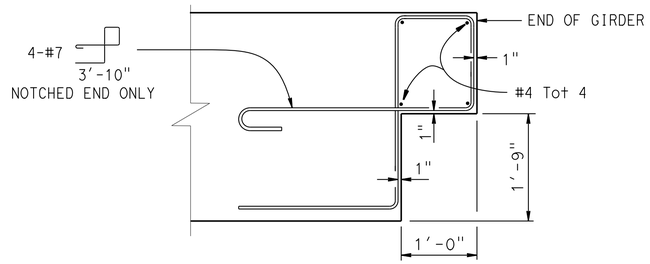

DETAIL B

FOR ~~OPTIONAL~~ NOTCHED END DETAIL ONLY

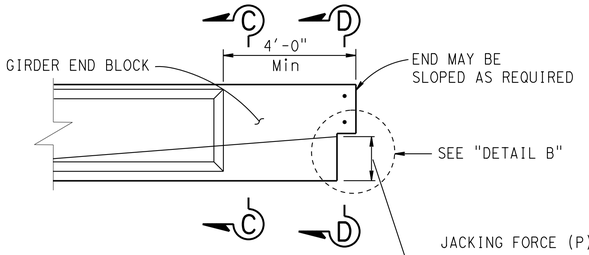

~~OPTIONAL~~ NOTCHED END DETAIL

GENERAL NOTES

JACKING FORCE (P): The jacking force required at the point of control along the span. The jacking force does not include any fabrication specific losses.

The maximum tensile stress in the prestressing steel upon release shall not exceed 75% of the specified minimum ultimate tensile strength of the prestressing steel.

The maximum temporary tensile stress (jacking stress) in the prestressing steel shall not exceed 80% of the specified minimum ultimate tensile strength of the prestressing steel.

CONCRETE STRENGTH: f'ci is at time of initial stressing, f'c is at 28 days

DEFLECTION COMPONENTS: Informational - to be used in setting screed line elevations

Screed line elevations for deck concrete will be determined by the Engineer.

Contractor may interpolate "P" and "X" values between limits shown, as approved by the Engineer.

Use epoxy coated reinforcement in Environmental Area III

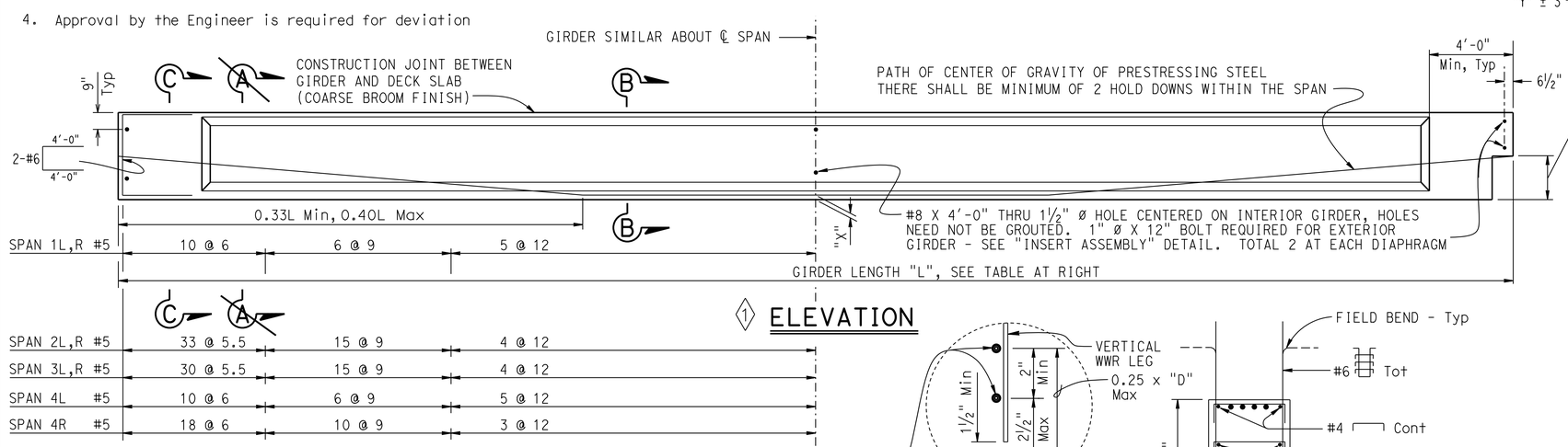

① ELEVATION

Girder location or designation and length	Jacking Force (P) (Kips) "X"		"Y" (in)	Concrete Strength (ksi) f'ci	Concrete Strength (ksi) f'c	Midspan Dead Load Deflection (inches) Deck	Midspan Dead Load Deflection (inches) Rail
Span 1 L & R 31'-1"	4"	150	20	4.0	6.0	0	0
	6"	175					
Span 2 L & R 62'-9¾"	4"	550	20	4.0	6.0	⅞"	⅜"
	6"	600					
Span 3 Left 59'-3¾"	4"	550	20	4.0	6.0	¾"	¼"
	6"	600					
Span 3 Right 59'-10¼"	4"	500	20	4.0	6.0	¾"	¼"
	6"	550					
Span 4 Left 31'-1"	4"	150	20	4.0	6.0	0	0
	6"	175					
Span 4 Right 41'-5⅛"	4"	300	20	4.0	6.0	¼"	0
	6"	350					

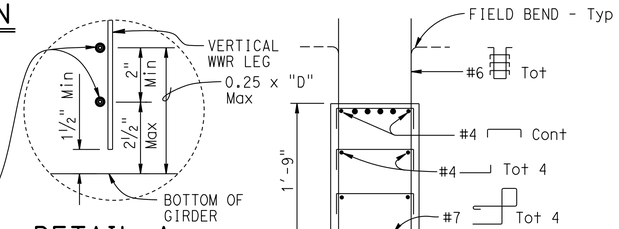

DETAIL A

SECTION D-D

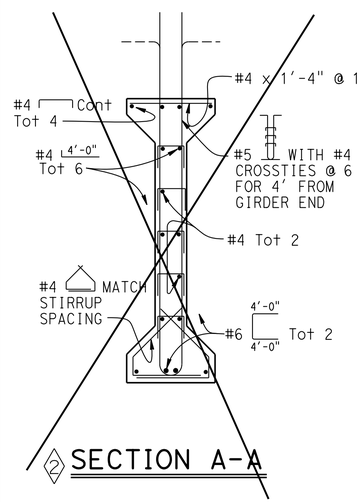

② SECTION A-A

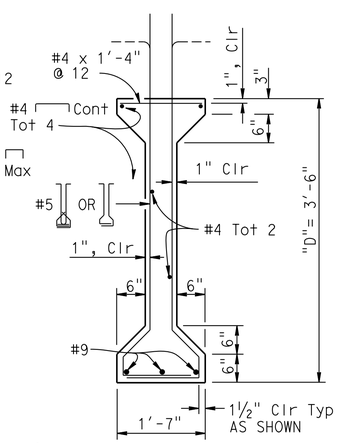

① SECTION B-B

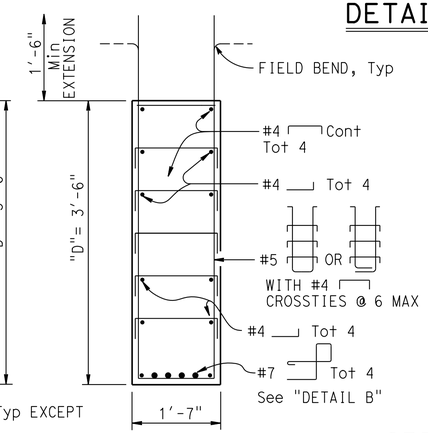

SECTION C-C

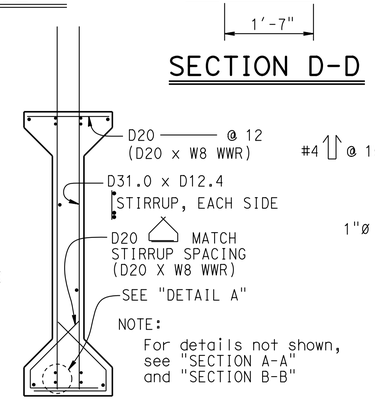

OPTIONAL WELDED WIRE REINFORCEMENT (WWR) DETAIL

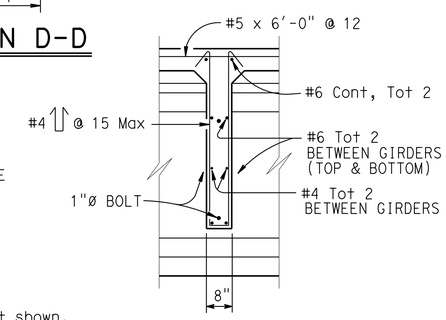

SECTION E-E

WWR NOTE: MANUFACTURER'S SHOP DRAWING SHALL CONFORM TO THE REINFORCEMENT SHOWN ON THIS SHEET AS NOTED AND THE SPECIAL PROVISIONS

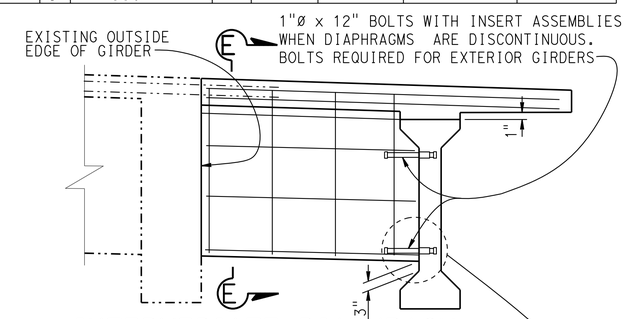

INTERMEDIATE DIAPHRAGM

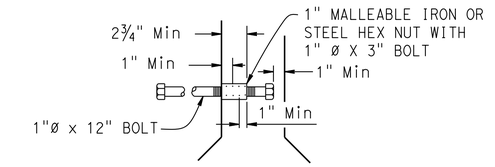

INSERT ASSEMBLY

SPECIAL DETAILS NO SCALE

REVISED STANDARD DRAWING

FILE NO. XS1-120

APPROVAL DATE July 2011

① Revised Detail
② Does Not Apply

STATE OF CALIFORNIA DEPARTMENT OF TRANSPORTATION

DIVISION OF ENGINEERING SERVICES

BRIDGE NO. 54-0535
POST MILE 44.35

STODDARD WELLS ROAD OC (WIDEN)
PRECAST PRESTRESSED I GIRDER

DS OSD 2147A (ENGLISH STANDARD DRAWING "XS" BORDER REV. (02-02-11)

ORIGINAL SCALE IN INCHES FOR REDUCED PLANS 0 1 2 3

UNIT: 3589
PROJECT NUMBER & PHASE: 08140000861
CONTRACT NO.: 08-3555V1

DISREGARD PRINTS BEARING EARLIER REVISION DATES

REVISION DATES 5-30-13 8-12-13 10-08-13 11-04-13

SHEET 13 OF 18

FILE => 540535plgdt13.dgn

USERNAME => s124496 DATE PLOTTED => 27-JUN-2014 TIME PLOTTED => 13:11

DIST	COUNTY	ROUTE	POST MILES TOTAL PROJECT	SHEET No.	TOTAL SHEETS
08	SBd	15	42.5/46.0	820	824

REGISTERED CIVIL ENGINEER 11-07-13 DATE

6-23-14
PLANS APPROVAL DATE

REGISTERED PROFESSIONAL ENGINEER RYAN STILTZ No. C65738 Exp. 9/30/15 CIVIL STATE OF CALIFORNIA

The State of California or its officers or agents shall not be responsible for the accuracy or completeness of electronic copies of this plan sheet.

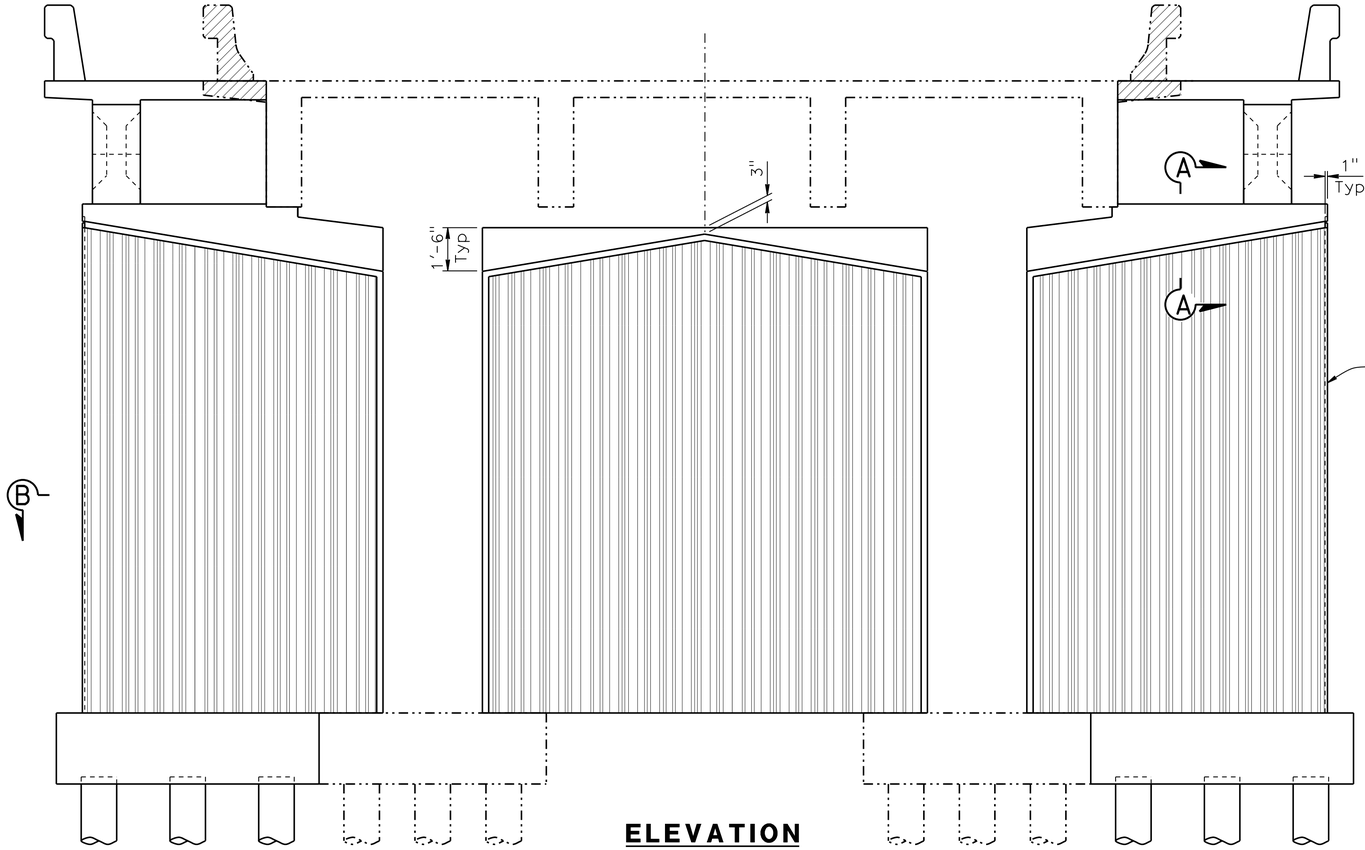

ELEVATION
3/8"=1'-0"

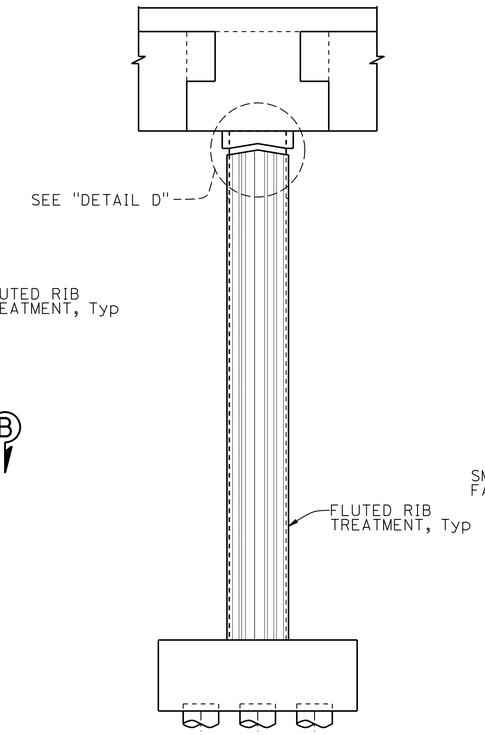

SIDE ELEVATION
3/8"=1'-0"

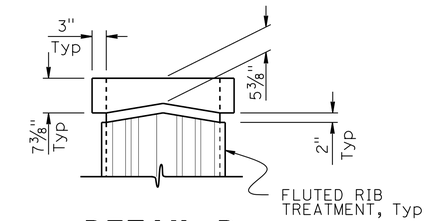

DETAIL D
3/4"=1'-0"

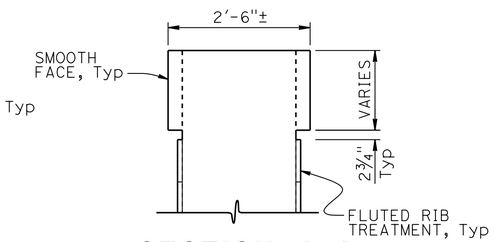

SECTION A-A
3/4"=1'-0"

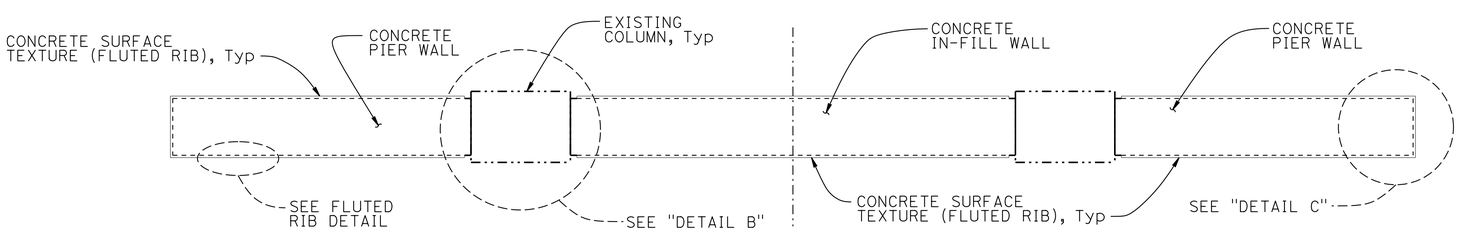

SECTION B-B
3/8"=1'-0"

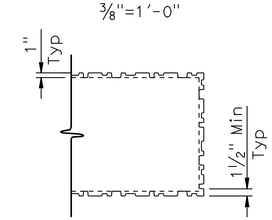

DETAIL C
3/4"=1'-0"

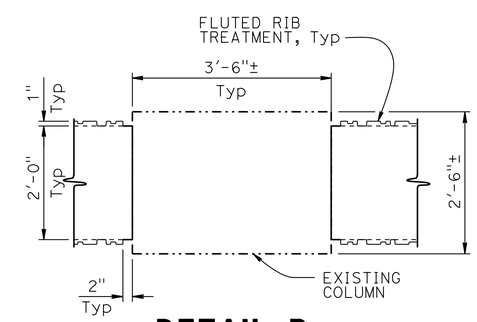

DETAIL B
3/4"=1'-0"

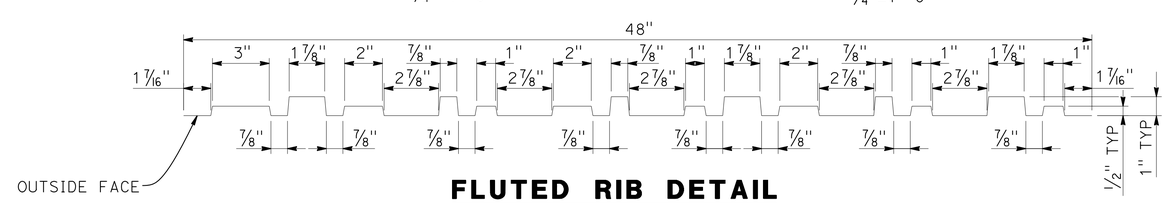

FLUTED RIB DETAIL
3"=1'-0"

NOTE:
Bent 2 shown, others similar.

DESIGN	BY R. Anderson	CHECKED R. Stiltz	
DETAILS	BY G. Hallstrom	CHECKED R. Stiltz	
QUANTITIES	BY R. Anderson	CHECKED H. Vu / Y. Tang	

STATE OF CALIFORNIA
DEPARTMENT OF TRANSPORTATION

DIVISION OF ENGINEERING SERVICES
STRUCTURE DESIGN
DESIGN BRANCH 10

BRIDGE NO. 54-0535
POST MILE 44.35

STODDARD WELLS ROAD OC (WIDEN)
ARCHITECTURAL DETAILS

STRUCTURES DESIGN DETAIL SHEET (ENGLISH) (REV. 09-01-10)

ORIGINAL SCALE IN INCHES FOR REDUCED PLANS 0 1 2 3

UNIT: 3589
PROJECT NUMBER & PHASE: 08140000861
CONTRACT NO.: 08-3555V1

DISREGARD PRINTS BEARING EARLIER REVISION DATES

REVISION DATES 9-18-13 9-26-13 11-04-13

SHEET 14 OF 18

FILE => 540535s_ardt14.dgn

USERNAME => s124496 DATE PLOTTED => 27-JUN-2014 TIME PLOTTED => 13:11

DIST	COUNTY	ROUTE	POST MILES TOTAL PROJECT	SHEET No.	TOTAL SHEETS
08	SBd	15	42.5/46.0	821	824

K. Douglas Cook 8-29-13
CERTIFIED ENGINEERING GEOLOGIST DATE

6-23-14
PLANS APPROVAL DATE

PROFESSIONAL GEOLOGIST K. Douglas Cook No. 1391 Exp. 12-31-13 CERTIFIED ENGINEERING GEOLOGIST STATE OF CALIFORNIA

The State of California or its officers or agents shall not be responsible for the accuracy or completeness of electronic copies of this plan sheet.

This LOTB sheet was prepared in accordance with the Caltrans Soil & Rock Logging, Classification, & Presentation Manual (2010 Edition).

See 2010 Standard Plans A10F and A10G for Soil Legend, and A10H for Rock Legend.

BENCH MARK

Set TBM NWC Deck
@ 2730.3 (Site Spot Elev)
NAVD1929

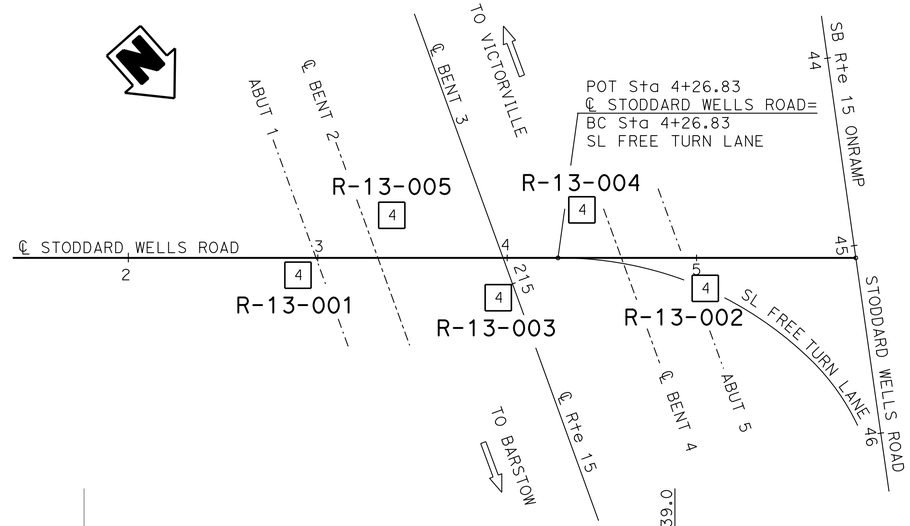

PLAN

1" = 40'

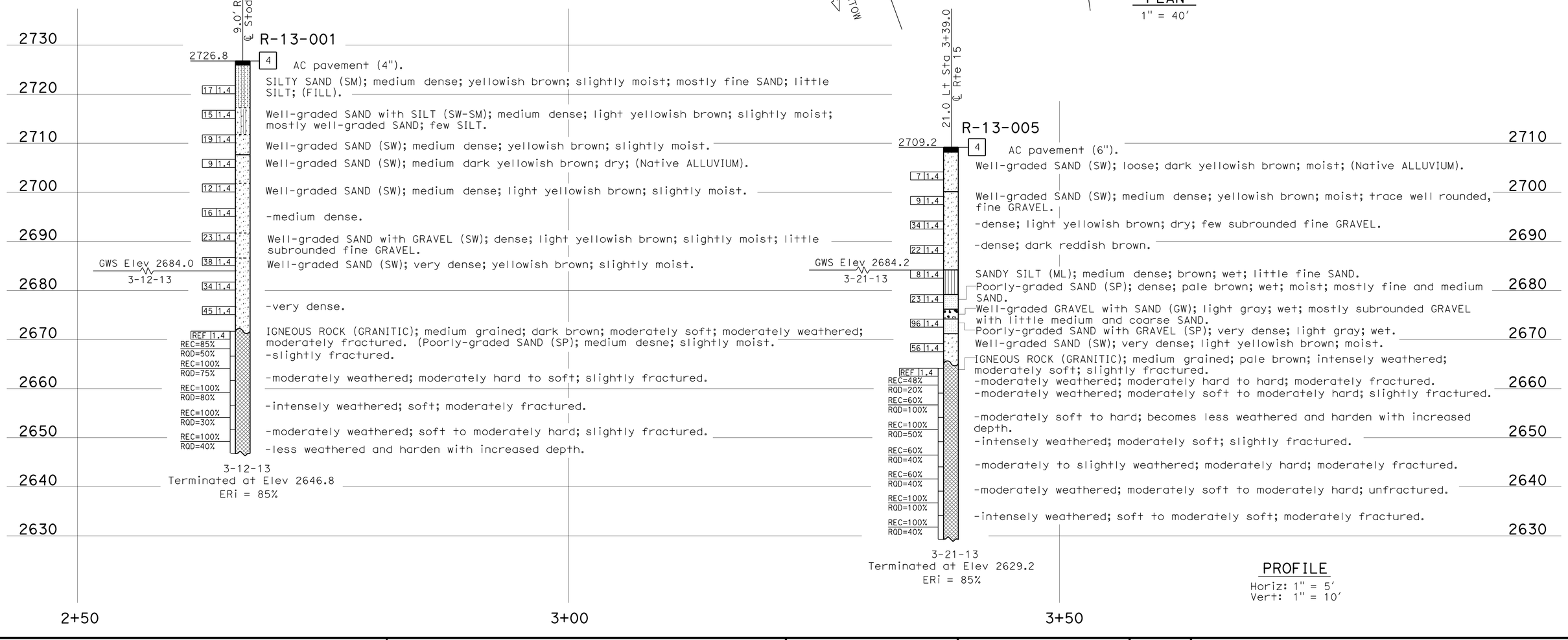

PROFILE

Horiz: 1" = 5'
Vert: 1" = 10'

ENGINEERING SERVICES	MATERIALS AND GEOTECHNICAL SERVICES	STATE OF CALIFORNIA DEPARTMENT OF TRANSPORTATION	DIVISION OF ENGINEERING SERVICES STRUCTURE DESIGN DESIGN BRANCH 10	BRIDGE NO. 54-0535 POST MILE 44.35	STODDARD WELLS ROAD OC (WIDEN)
FUNCTIONAL SUPERVISOR NAME: A. Perez-cobo	DRAWN BY: W. Tang 08/13 CHECKED BY: H. Ibrahim	FIELD INVESTIGATION BY: D. Cook			LOG OF TEST BORINGS 1 OF 4

OGS CIVIL LOG OF TEST BORINGS SHEET

ORIGINAL SCALE IN INCHES FOR REDUCED PLANS 0 1 2 3

UNIT: 3643
PROJECT NUMBER & PHASE: 08140000861 CONTRACT NO.: 08-3555V1

DISREGARD PRINTS BEARING EARLIER REVISION DATES

REVISION DATES 08-23-13 SHEET 15 OF 18

FILE => 540535zltb15.dgn

USERNAME => s124496 DATE PLOTTED => 27-JUN-2014 TIME PLOTTED => 13:11

DIST	COUNTY	ROUTE	POST MILES TOTAL PROJECT	SHEET No.	TOTAL SHEETS
08	SBd	15	42.5/46.0	822	824

K. Douglas Cook 8-29-13
CERTIFIED ENGINEERING GEOLOGIST DATE

6-23-14
PLANS APPROVAL DATE

PROFESSIONAL GEOLOGIST K. Douglas Cook No. 1391 Exp. 12-31-13 CERTIFIED ENGINEERING GEOLOGIST STATE OF CALIFORNIA

The State of California or its officers or agents shall not be responsible for the accuracy or completeness of electronic copies of this plan sheet.

This LOTB sheet was prepared in accordance with the Caltrans Soil & Rock Logging, Classification, & Presentation Manual (2010 Edition).

See 2010 Standard Plans A10F and A10G for Soil Legend, and A10H for Rock Legend.

FOR PLAN VIEW, SEE
"LOG OF TEST BORINGS 1 OF 4"

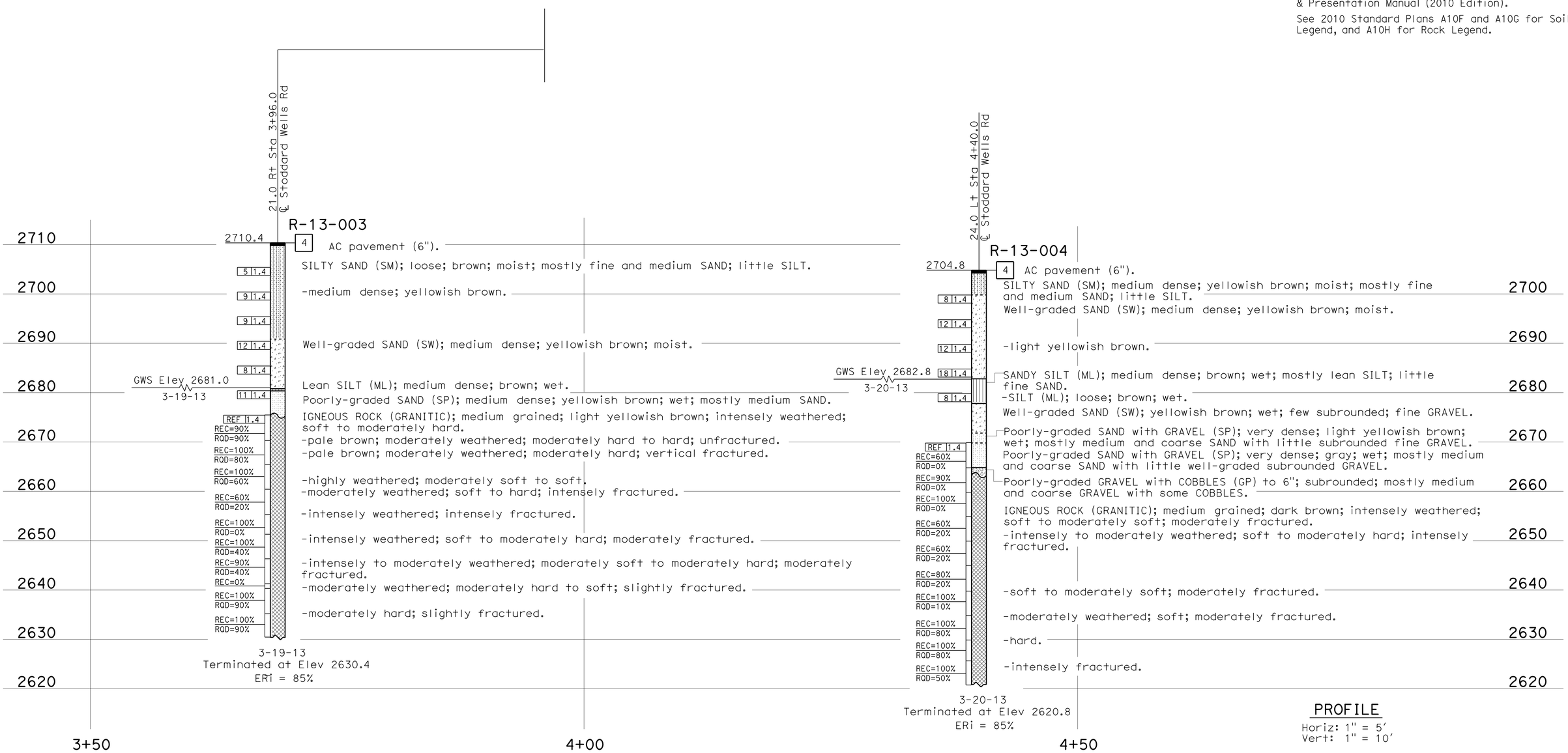

ENGINEERING SERVICES	MATERIALS AND GEOTECHNICAL SERVICES	STATE OF CALIFORNIA DEPARTMENT OF TRANSPORTATION	DIVISION OF ENGINEERING SERVICES STRUCTURE DESIGN DESIGN BRANCH 10	BRIDGE NO. 54-0535 POST MILE 44.35	STODDARD WELLS ROAD OC (WIDEN) LOG OF TEST BORINGS 2 OF 4
FUNCTIONAL SUPERVISOR NAME: A. Perez-cobo	DRAWN BY: W. Tang 08/13 CHECKED BY: H. Ibrahim	FIELD INVESTIGATION BY: D. Cook			

OGS CIVIL LOG OF TEST BORINGS SHEET

ORIGINAL SCALE IN INCHES FOR REDUCED PLANS 0 1 2 3

UNIT: 3643
PROJECT NUMBER & PHASE: 08140000861 CONTRACT NO.: 08-3555V1

DISREGARD PRINTS BEARING EARLIER REVISION DATES → REVISION DATES 08-23-13

SHEET 16 OF 18

FILE => 540535zltb16.dgn

USERNAME => s124496 DATE PLOTTED => 27-JUN-2014 TIME PLOTTED => 13:11

DIST	COUNTY	ROUTE	POST MILES TOTAL PROJECT	SHEET No.	TOTAL SHEETS
08	SBd	15	42.5/46.0	823	824

K. Douglas Cook 8-29-13
CERTIFIED ENGINEERING GEOLOGIST DATE

6-23-14
PLANS APPROVAL DATE

PROFESSIONAL GEOLOGIST K. Douglas Cook No. 1391 Exp. 12-31-13 CERTIFIED ENGINEERING GEOLOGIST STATE OF CALIFORNIA

The State of California or its officers or agents shall not be responsible for the accuracy or completeness of electronic copies of this plan sheet.

This LOTB sheet was prepared in accordance with the Caltrans Soil & Rock Logging, Classification, & Presentation Manual (2010 Edition).

See 2010 Standard Plans A10F and A10G for Soil Legend, and A10H for Rock Legend.

FOR PLAN VIEW, SEE
"LOG OF TEST BORINGS 1 OF 4"

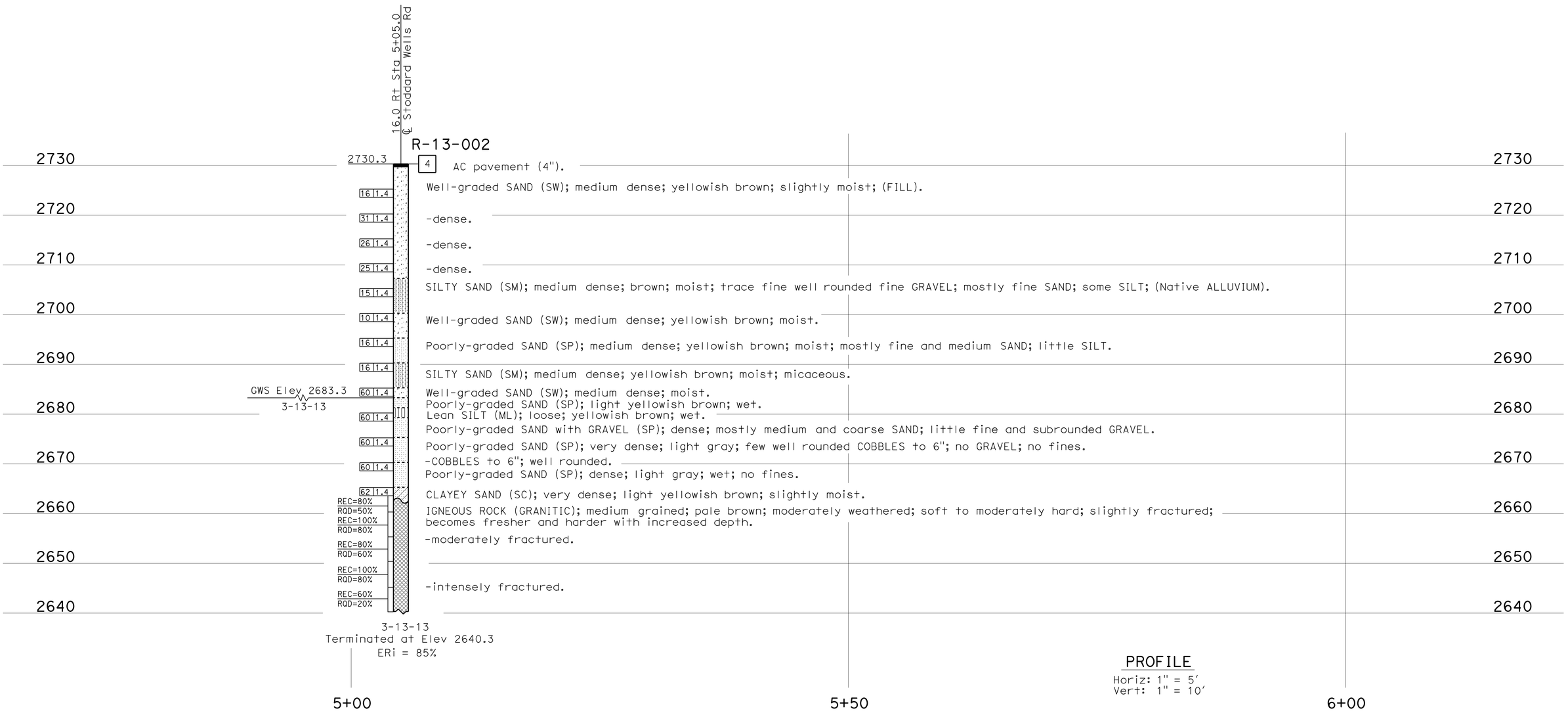

PROFILE
Horiz: 1" = 5'
Vert: 1" = 10'

ENGINEERING SERVICES	MATERIALS AND GEOTECHNICAL SERVICES	STATE OF CALIFORNIA DEPARTMENT OF TRANSPORTATION	DIVISION OF ENGINEERING SERVICES STRUCTURE DESIGN DESIGN BRANCH 10	BRIDGE NO. 54-0535 POST MILE 44.35	STODDARD WELLS ROAD OC (WIDEN) LOG OF TEST BORINGS 3 OF 4
FUNCTIONAL SUPERVISOR NAME: A. Perez-cobo	DRAWN BY: W. Tang 08/13 CHECKED BY: H. Ibrahim	FIELD INVESTIGATION BY: D. Cook			

OGS CIVIL LOG OF TEST BORINGS SHEET

ORIGINAL SCALE IN INCHES FOR REDUCED PLANS 0 1 2 3

UNIT: 3643
PROJECT NUMBER & PHASE: 08140000861 CONTRACT NO.: 08-3555V1

DISREGARD PRINTS BEARING EARLIER REVISION DATES → REVISION DATES 08-23-13 SHEET 17 OF 18

FILE => 540535zltb17.dgn

USERNAME => s124496 DATE PLOTTED => 27-JUN-2014 TIME PLOTTED => 13:11

FED. ROAD DIV. NO.	STATE	PROJ. NO.	FISCAL YEAR	SHEET NO.	TOTAL SHEETS
7	CAL.	I-008(9A)		121	171

DIST.	COUNTY	ROUTE	SECTION	SHEET NO.	TOTAL SHEETS
VIII	SBd	31	D	-11-	-11-

STRUCT. ENGINEER — CHIEF — PROJECT ENGINEER

DATE APPROVED 1957

BRIDGE DEPARTMENT

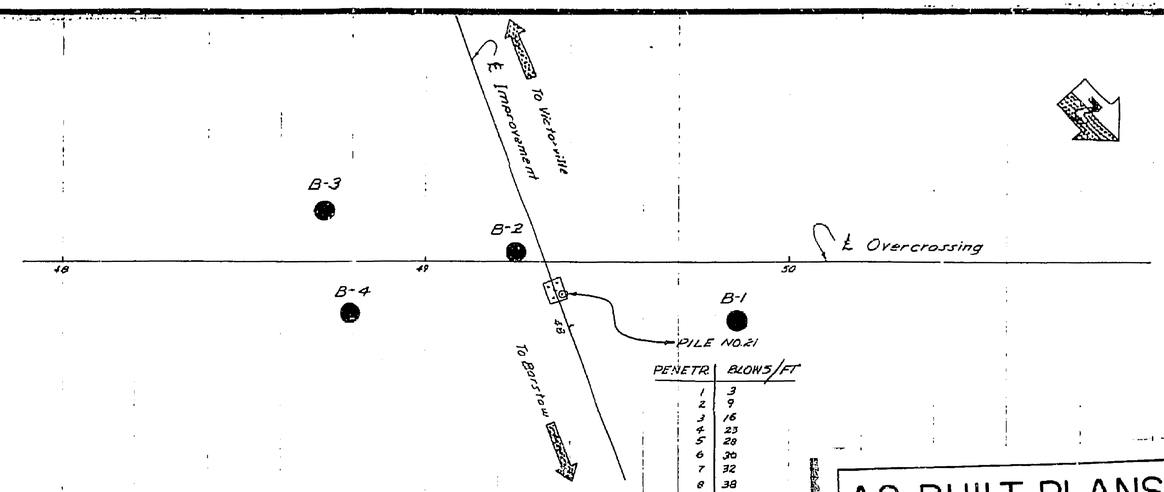

PENETR	BLOWS/FT
1	3
2	9
3	16
4	23
5	28
6	30
7	32
8	38
9	47
10	57
11	85
12	109
13	111

AS BUILT PLANS
Contract No. 58-8VC4
Date Completed
Document No. 80000700

NO TEST PILE SPECIFIED

LOCATION - BENT #3 - RIGHT FOOTING - PILE NO.21 - SEE FIELD BOOK NO 2
TYPE - CAST-IN-PLACE CONCRETE PILE ALTERNATIVE "W"
HAMMER - VULCAN NO. 1
DIAM. - 10" TIP & 16" BUTT
ELEV. - CUT-OFF 2703± TIP 2690±
LOADS - DESIGN 45 TONS E.N.R. LOAD 82+ TONS

LENGTH -

	MAX.	MIN.	AVE.
ABUT #1	28.2	26.8	27.5
BENT #2 L	14.7	12.4	13.1
2R	13.9	12.8	13.0
BENT #3 L	12.8	12.7	12.7+
3R	13.4	11.5	12.9
BENT #4 L	13.6	12.9	13.1+
4R	12.6	11.6	12.3
ABUT #5	35.0	31.7	32.7

TOTAL - 691.9 L.F.
ESTIMATE - 1350 L.F.

ATTEMPT WAS MADE TO DRIVE PILES THROUGH softer area (B-2 & B-4) AT ELEV. 2680 ±, BUT PILES REACHED E.N.R. BEARING WELL BEFORE MIN. PENETRATION.

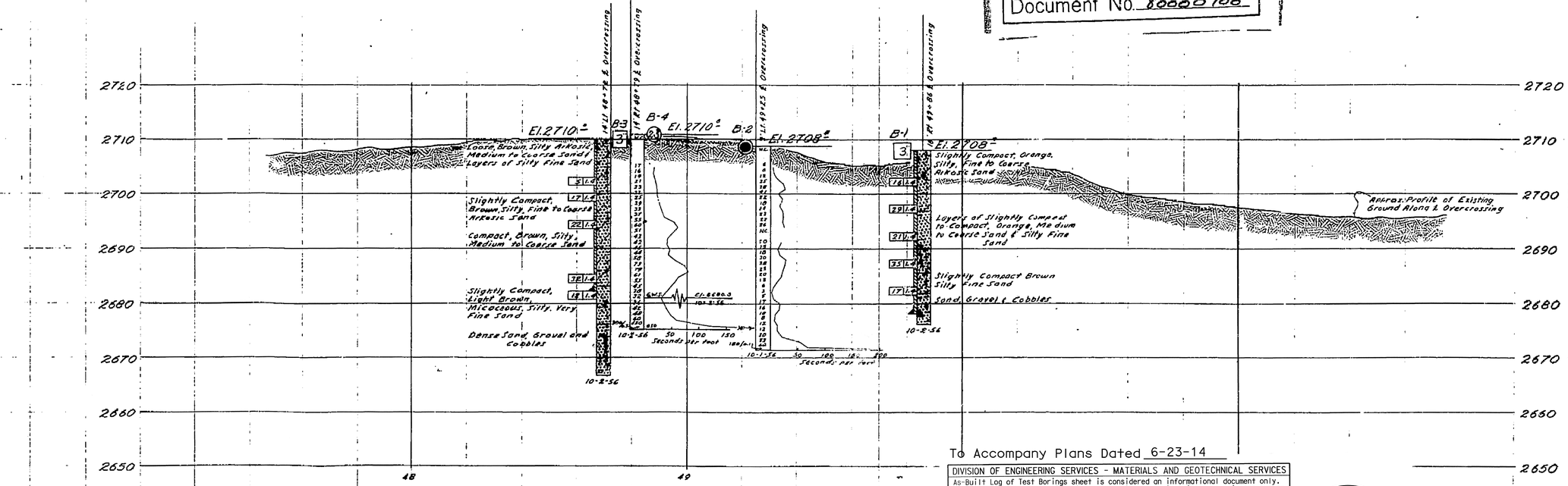

AS BUILT
CORRECTIONS BY W.B. Garrett
CONTRACT NO. 58-8VC4-E1

B.M. #5A-54
Set 2" x 2" Rwd. Hub & Sp. Hd.
nl. Bur. 1.79' Ft. Imp. 44+00
Elev. 2691.66

To Accompany Plans Dated 6-23-14

DIVISION OF ENGINEERING SERVICES - MATERIALS AND GEOTECHNICAL SERVICES

As-Built Log of Test Borings sheet is considered an informational document only. As such, the State of California registration seal with signature, license number and registration certificate expiration date confirm that this is a true and accurate copy of the original document. It does not attest to the accuracy or validity of the information contained in the original document. This drawing is available and presented only for the convenience of any bidder, contractor or other interested party.

DIST.	COUNTY	ROUTE	POST MILE-TOTAL PROJECT	Sheet No.	Total Sheets
08	SBd	15	42.5/46.0	824	824

K. Douglas Cook 8-29-13
CERTIFIED ENGINEERING GEOLOGIST DATE

PROFESSIONAL GEOLOGIST
K. Douglas Cook
No. 1391
Exp. 12-31-13
CERTIFIED ENGINEERING GEOLOGIST
STATE OF CALIFORNIA

STODDARD WELLS ROAD OC (WIDEN)
LOG OF TEST BORINGS 4 OF 4

UNIT: 3643	CONTRACT No.	BRIDGE No.	
PROJ. No. & PHASE: 08000006211	08-3555V1	54-0535	
AS-BUILT VERT DATUM: xx CONVERSION: xx		Sheet 18	of 18

NOTE: A COPY OF THIS LOG OF TEST BORINGS IS AVAILABLE AT OFFICE OF STRUCTURE MAINTENANCE AND INVESTIGATIONS, SACRAMENTO, CALIFORNIA

NOTES

The contractor's attention is directed to Section 2, Article (c) of the Standard Specifications and to the Special Provisions accompanying the set of plans.

Classification of earth material as shown on this sheet is based upon field inspection and is not to be construed to imply mechanical analysis.

STATE OF CALIFORNIA
DEPARTMENT OF PUBLIC WORKS
DIVISION OF HIGHWAYS

STODDARD WELLS RD. OVERCROSSING

LOG OF TEST BORINGS

SCALE Horiz 1" = 20' Vert. 1" = 10' | BRIDGE 54-535 | FILE E-54 | DRAWING C-5224-11

CLASSIFICATION OF MATERIAL BASED ON STANDARD GRADE SIZE LIMITS

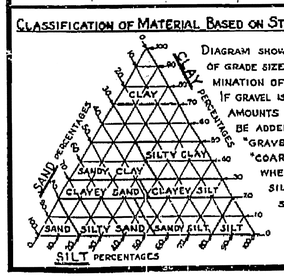

DIAGRAM SHOWING THE BASIS FOR ESTIMATES OF GRADE SIZE DISTRIBUTION USED IN DETERMINATION OF CLASS NAMES.

IF GRAVEL IS PRESENT IN APPRECIABLE AMOUNTS THE TERM "GRAVELLY" MAY BE ADDED TO THE CLASS NAME, VIZ. "GRAVELLY SAND." THE TERMS "COARSE", "MEDIUM" AND "FINE" WHEN USED TO DESCRIBE SAND, SILT AND GRAVEL REFER TO STANDARD GRADE SIZE LIMITS.

LEGEND OF EARTH MATERIALS

- GRAVEL
- SAND
- SILT
- CLAY
- SANDY CLAY OR CLAYEY SAND
- SANDY SILT OR SILTY SAND
- SILTY CLAY OR CLAYEY SILT
- PEAT AND/OR ORGANIC MATTER
- FILL MATERIAL
- IGNEOUS ROCK
- SEDIMENTARY ROCK
- METAMORPHIC ROCK

LEGEND OF B

- PLAN OF ANY BORING
- PENETROMETER
- 2¼" CONE PENETROMETER
- SAMPLER BORING (DRY)
- ROTARY BORING (WET)
- AUGER BORING (DRY)
- JET BORING
- CORE BORING
- TEST PIT

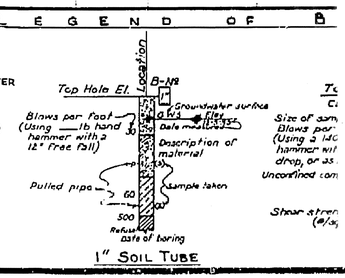

Size of sam
Blows per (Using a lb hammer wit drop, or as
Unconfined com
Shear stren (#/sq

PRELIMINARY NO. P-55-1 72 23

121

FILENAME => 540535z1tb18.tif