Dist	COUNTY	ROUTE	POST MILES TOTAL PROJECT	SHEET No.	TOTAL SHEETS
08	SBd	15	42.5/46.0	11	824

REGISTERED CIVIL ENGINEER 1-30-14 DATE

6-23-14
PLANS APPROVAL DATE

REGISTERED PROFESSIONAL ENGINEER AHMAD SHAH No. C55259 Exp. 9-30-14 CIVIL STATE OF CALIFORNIA

THE STATE OF CALIFORNIA OR ITS OFFICERS OR AGENTS SHALL NOT BE RESPONSIBLE FOR THE ACCURACY OR COMPLETENESS OF SCANNED COPIES OF THIS PLAN SHEET.

(1) SEE LANDSCAPE PLANS

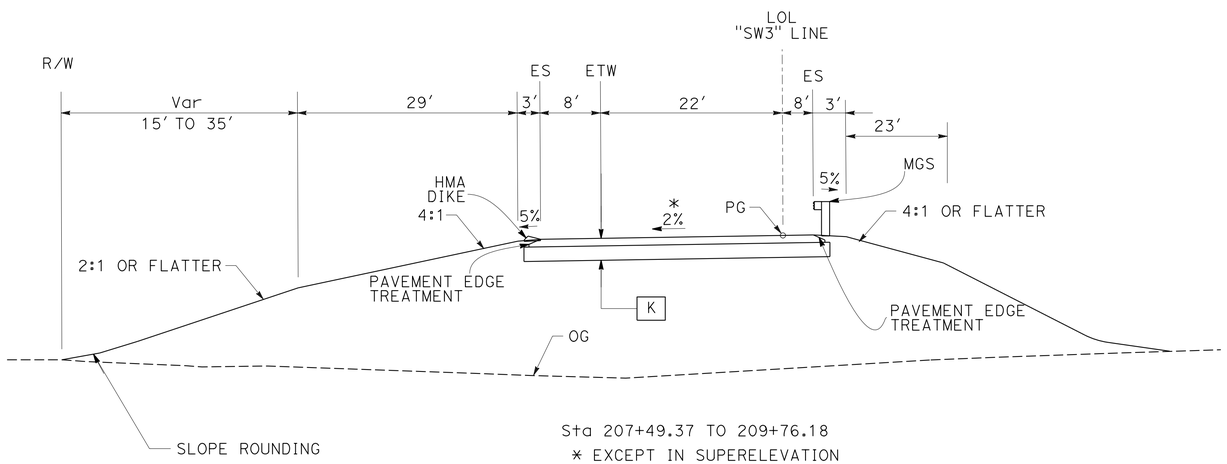

Sta 207+49.37 TO 209+76.18
* EXCEPT IN SUPERELEVATION
Sta 208+70.28 TO 209+76.18
SEE CONSTRUCTION DETAILS

STODDARD WELLS ROAD SB ENTRANCE RAMP "SW3"

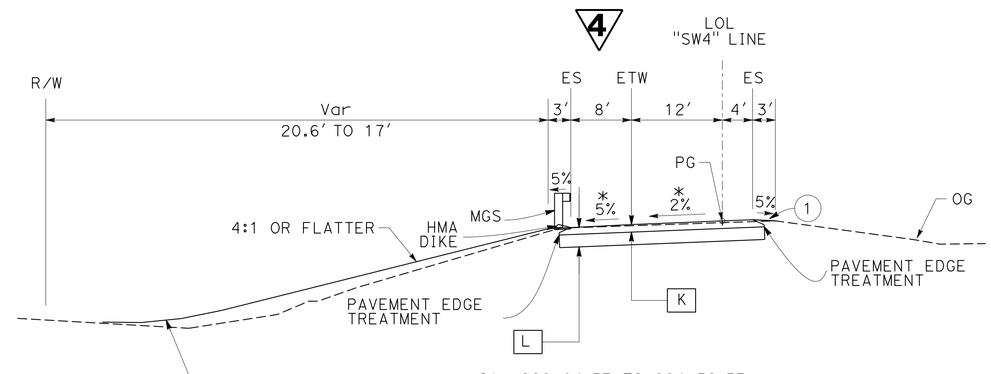

Sta 222+04.57 TO 224+52.53
* EXCEPT IN SUPERELEVATION
Sta 220+67.07 TO 222+04.57
SEE CONSTRUCTION DETAILS

STODDARD WELLS ROAD SB EXIT RAMP "SW4"

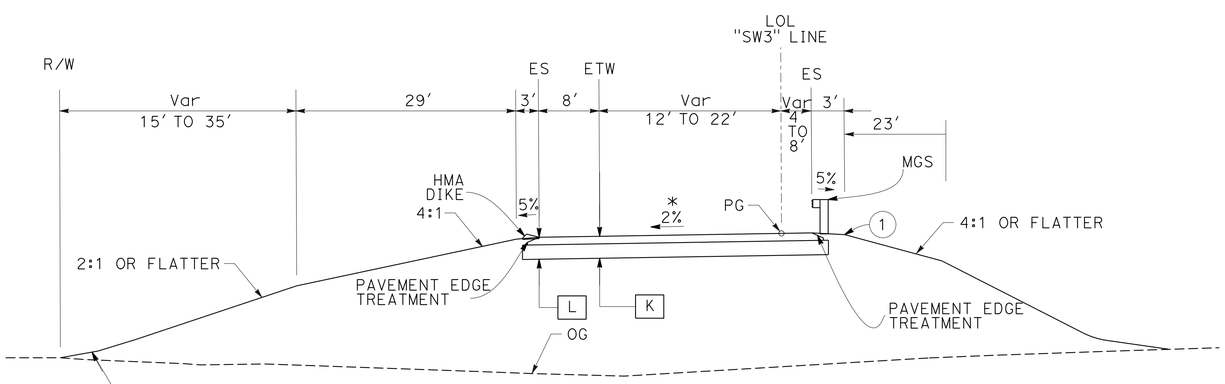

Sta 200+51.98 TO 207+49.37
* EXCEPT IN SUPERELEVATION
Sta 194+00 TO 200+51.98
SEE MAIN LINE
TYPICAL CROSS SECTIONS

STODDARD WELLS ROAD SB ENTRANCE RAMP "SW3"

4 REPLACED PER ADDENDUM No. 4 DATED AUGUST 20, 2015

TYPICAL CROSS SECTIONS

NO SCALE

X-10

STATE OF CALIFORNIA - DEPARTMENT OF TRANSPORTATION
Caltrans® DESIGN
FUNCTIONAL SUPERVISOR GEORGE MORHIG
CALCULATED-DESIGNED BY RAFTAR SHARIA
CHECKED BY AHMAD SHAH
REVISED BY
DATE REVISED

LAST REVISION 01-30-14
DATE PLOTTED => 19-AUG-2015
TIME PLOTTED => 13:13

Dist	COUNTY	ROUTE	POST MILES TOTAL PROJECT	SHEET No.	TOTAL SHEETS
08	SBd	15	42.5/46.0	135	824

REGISTERED CIVIL ENGINEER 1-30-14 DATE

6-23-14
PLANS APPROVAL DATE

REGISTERED PROFESSIONAL ENGINEER HA VU No. C61359 Exp. 6-30-15 CIVIL STATE OF CALIFORNIA

THE STATE OF CALIFORNIA OR ITS OFFICERS OR AGENTS SHALL NOT BE RESPONSIBLE FOR THE ACCURACY OR COMPLETENESS OF SCANNED COPIES OF THIS PLAN SHEET.

NOTE:

FOR ACCURATE RIGHT OF WAY DATA, CONTACT RIGHT OF WAY ENGINEERING AT THE DISTRICT OFFICE.

CURVE DATA

No.	R	Δ	T	L
1	3000.00′	2°09′44″	56.61′	113.21′
2	45.00′	43°33′04″	17.98′	34.20′
3	25.00′ ~~45.00′~~	90°00′00″	25.00′ ~~45.00′~~	39.27′ ~~70.69′~~
4	60.00′	88°40′20″	58.63′	92.86′

4

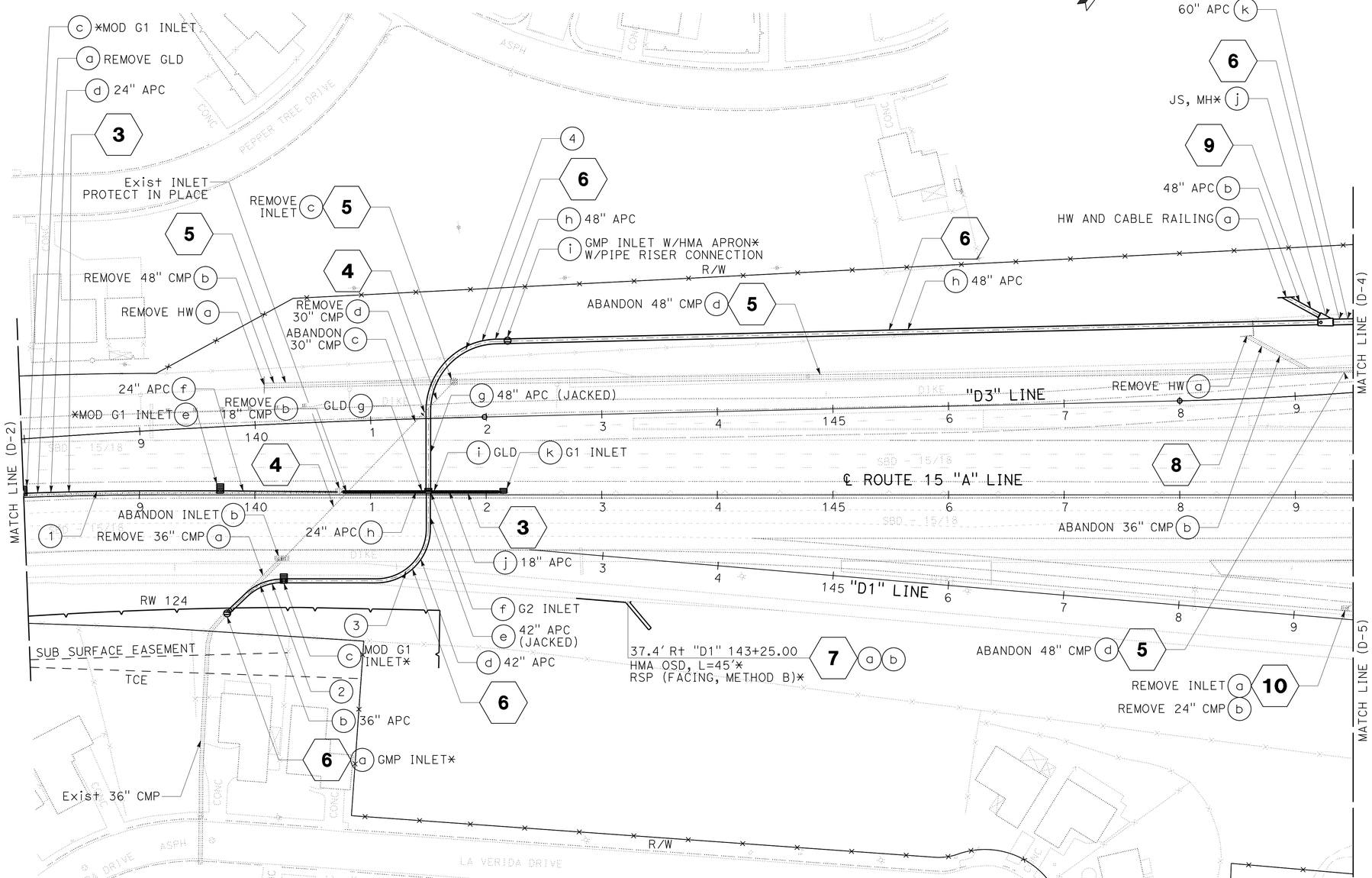

DRAINAGE PLAN

SCALE: 1" = 50′

D-3

4 **REPLACED PER ADDENDUM No. 4 DATED AUGUST 20, 2015**

APPROVED FOR DRAINAGE WORK ONLY

STATE OF CALIFORNIA - DEPARTMENT OF TRANSPORTATION

Caltrans® **DESIGN**

FUNCTIONAL SUPERVISOR: GEORGE MORHIG

CALCULATED-DESIGNED BY: HA VU

CHECKED BY

REVISED BY

DATE REVISED

LAST REVISION 01-30-14

DATE PLOTTED => 19-AUG-2015
TIME PLOTTED => 13:13

Dist	COUNTY	ROUTE	POST MILES TOTAL PROJECT	SHEET No.	TOTAL SHEETS
08	SBd	15	42.5/46.0	154	824

REGISTERED CIVIL ENGINEER 1-30-14 DATE

6-23-14
PLANS APPROVAL DATE

REGISTERED PROFESSIONAL ENGINEER HA VU No. C61359 Exp. 6-30-15 CIVIL STATE OF CALIFORNIA

THE STATE OF CALIFORNIA OR ITS OFFICERS OR AGENTS SHALL NOT BE RESPONSIBLE FOR THE ACCURACY OR COMPLETENESS OF SCANNED COPIES OF THIS PLAN SHEET.

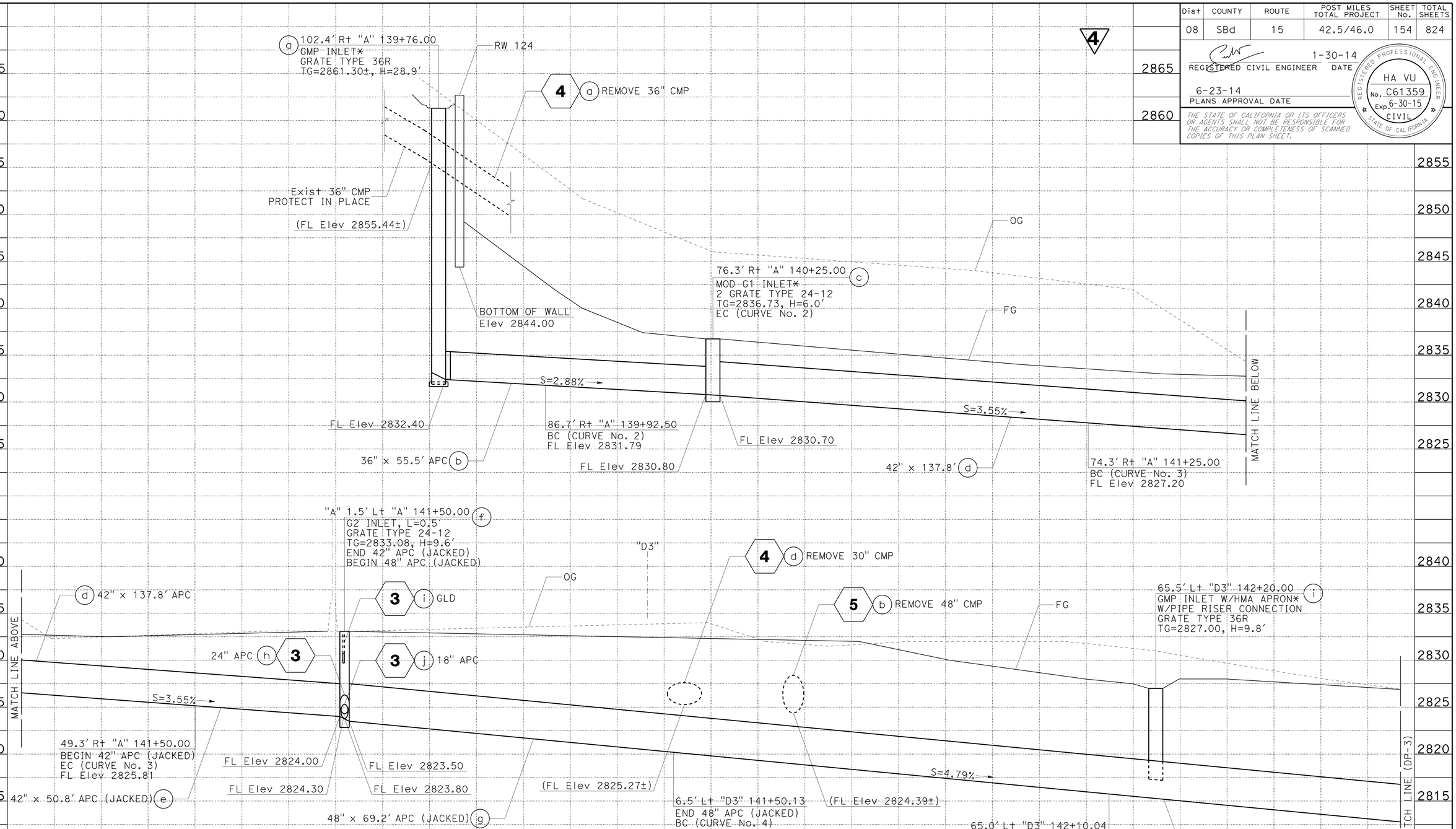

DRAINAGE SYSTEM No. 6

DRAINAGE PROFILES

SCALE: Horiz 1" = 10'
Vert 1" = 5'

DP-2

4 **REPLACED PER ADDENDUM No. 4 DATED AUGUST 20, 2015**

* SEE DRAINAGE DETAIL SHEETS

STATION		TOTAL
CY	Exc	
	Emb	

STATE OF CALIFORNIA - DEPARTMENT OF TRANSPORTATION
Caltrans DESIGN
FUNCTIONAL SUPERVISOR: GEORGE MORHIG
CALCULATED-DESIGNED BY: HA VU
CHECKED BY: VU TRAN
REVISED BY
DATE REVISED

LAST REVISION 01-30-14 | DATE PLOTTED => 19-AUG-2015 | TIME PLOTTED => 13:14

Dist	COUNTY	ROUTE	POST MILES TOTAL PROJECT	SHEET No.	TOTAL SHEETS
08	SBd	15	42.5/46.0	212	824

REGISTERED CIVIL ENGINEER 1-30-14 DATE

6-23-14
PLANS APPROVAL DATE

REGISTERED PROFESSIONAL ENGINEER HA VU No. C61359 Exp. 6-30-15 CIVIL STATE OF CALIFORNIA

THE STATE OF CALIFORNIA OR ITS OFFICERS OR AGENTS SHALL NOT BE RESPONSIBLE FOR THE ACCURACY OR COMPLETENESS OF SCANNED COPIES OF THIS PLAN SHEET.

APC 18" LF	APC 24" LF	APC 30" LF	APC 36" LF	APC 42" LF	APC 48" LF	APC 60" LF	APC 72" LF	APL 24" LF	APL 30" LF	APL 36" LF	APL 42" LF	APL 48" LF	APL 60" LF	APC (JACKED) 42" LF	APC (JACKED) 48" LF	APC (JACKED) 60" LF	CSP (0.064" THICK) 12" LF	CSP (0.064" THICK) 18" LF	CSP (0.064" THICK) 24" LF	CSP (0.079" THICK) 36" LF	RCP 18" LF	RCP 24" LF	RCP 30" LF	RCP 36" LF	12" CSP RISER (0.064" THICK) LF	36" CSP INLET (0.079" THICK) LF	36" PRECAST Conc PIPE INLET LF	36" PRECAST Conc PIPE MH LF	JOINT CLASSIFICATION (N)	MAXIMUN COVER (N) FT	HEIGHT OF INLET (N) FT	DESCRIPTION	STATION	DRAINAGE UNIT No. ◯	DRAINAGE SYSTEM No. ⬡	DRAINAGE PLAN SHEET No.
																										29.4			D		28.9	GMP INLET*	102.4′ R+ "A" 139+76.00	a	6	D-3,4,7
			55.5																										D	25.9		36" APC	102.4′ R+ "A" 139+76.00	b		
				137.8 ~~149.2~~	4																										6.0	MOD G1 INLET*	76.3′ R+ "A" 140+25.00	c		
														50.8 ~~30.8~~		4													P	3.4		42" APC	76.3′ R+ "A" 140+25.00	d		
																													P	6.1		42" APC (JACKED) 4	49.3′ ~~29.3~~ R+ "A" 141+50.00	e		
																															9.6	G2 INLET	1.5′ L+ "A" 141+50.00	f		
															69.2														P	8.2		48" APC (JACKED)	1.5′ L+ "A" 141+50.00	g		
					805.1																								P	9.7		48" APC	6.5′ L+ "D3" 141+50.13	h		
																										9.8			D		9.8	GMP INLET W/HMA APRON*	65.5′ L+ "D3" 142+20.00	i		
																												9.7				JS, MH*	62.4′ L+ "D3" 149+26.38	j		
						850.6																							P	20.0		60" APC	62.4′ L+ "D3" 149+26.38	k		
																										10.7			D		10.7	GMP INLET W/HMA APRON*	57.3′ L+ "D3" 150+50.00	l		
																										14.5					14.5	GMP INLET W/HMA APRON, JS*	54.7′ L+ "D3" 158+14.83	m		
							295.3																						P	20.0		72" APC	54.7′ L+ "D3" 158+14.83	n		
																												13.5				JS, MH*	52.5′ L+ "D3" 160+76.83	o		
							502.5																						P	13.5		72" APC	52.5′ L+ "D3" 160+76.83	p		
																										4.5			D		4.0	GMP INLET W/HMA APRON*	54.0′ L+ "D3" 162+58.00	q		
																									5.3				D			12" CSP RISER (0.064" THICK)				
																																TS*	54.0′ L+ "D3" 165+85.00	r		
																														4.0		10′ (W) x 3′ (H) RCB	54.0′ L+ "D3" 166+05.00	s		
																																HMA OSD, L=45′*	37.4′ R+ "D1" 143+25.00	a	7	D-3
																																RSP (FACING, METHOD B)*	59.4′ R+ "D1" 143+46.00	b		
																																REMOVE HW	54.1′ L+ "D3" 148+60.53	a	8	D-3
																																ABANDON 36" CMP	54.1′ L+ "D3" 148+60.53	b		
																																HW AND CABLE RAILING	85.8′ L+ "D3" 148+97.00	a	9	D-3
					32.9																								P	10.1		48" APC	85.8′ L+ "D3" 148+97.00	b		
																																REMOVE INLET	8.6′ L+ "D1" 149+43.66	a	10	D-3-5
																																REMOVE 24" CMP	8.6′ L+ "D1" 149+43.66	b		
																																ABANDON 24" CMP	54.1′ R+ "A" 150+13.25	c		
																																ABANDON 18" CMP	13.3′ L+ "D3" 150+44.64	d		
																																REMOVE INLET	53.6′ L+ "D3" 150+47.36	e		
			55.5	~~149.2~~ 137.8 4	838.0	850.6	797.8							~~30.8~~ 50.8 4	69.2										5.3	68.9		23.2				SHEET TOTAL				

NOTES:
1. *: SEE DRAINAGE DETAIL SHEETS.
2. (N): NOT A SEPARATE PAY ITEM, FOR INFORMATION ONLY.

4 REPLACED PER ADDENDUM No. 4 DATED AUGUST 20, 2015

DRAINAGE QUANTITIES
DQ-4

REVISED BY | DATE REVISED
VU TRAN | HA VU
CALCULATED-DESIGNED BY | CHECKED BY
FUNCTIONAL SUPERVISOR: GEORGE MORHIG
STATE OF CALIFORNIA - DEPARTMENT OF TRANSPORTATION
Caltrans DESIGN

LAST REVISION 01-30-14 | DATE PLOTTED => 19-AUG-2015 | TIME PLOTTED => 13:14

Dist	COUNTY	ROUTE	POST MILES TOTAL PROJECT	SHEET No.	TOTAL SHEETS
08	SBd	15	42.5/46.0	243	824

REGISTERED CIVIL ENGINEER 1-30-14 DATE

6-23-14
PLANS APPROVAL DATE

REGISTERED PROFESSIONAL ENGINEER HA VU No. C61359 Exp. 6-30-15 CIVIL STATE OF CALIFORNIA

THE STATE OF CALIFORNIA OR ITS OFFICERS OR AGENTS SHALL NOT BE RESPONSIBLE FOR THE ACCURACY OR COMPLETENESS OF SCANNED COPIES OF THIS PLAN SHEET.

DRAINAGE PLAN SHEET No.	DRAINAGE SYSTEM No. ⬡	DRAINAGE UNIT No. ◯	STATION	DESCRIPTION	ABANDON CULVERT (LF)	SAND BACKFILL	REMOVE CONCRETE (CHANNEL)	REMOVE HEADWALL	REMOVE CULVERT (LF)	REMOVE GRATED LINE DRAIN	REMOVE INLET	ABANDON INLET	FRAME, GRATE, CHECKERED PLATE, AND MH (N): TYPE 24-12	TYPE 24-12X	TYPE 36R	1/4" CHECKERED PL COVER	MANHOLE	Misc IRON AND STEEL	MINOR Conc (MINOR STRUCTURE)	MINOR Conc (Misc Const)	HOT MIX ASPHALT (TYPE A)	PLACE HMA (Misc AREA)	CAP INLET	CONCRETE COLLAR (N)	12" ELBOW (N)	18" ELBOW (N)	10'x 6' PRECAST REINFORCED CONCRETE BOX CULVERT	STRUCTURAL Conc, BOX Culv	STRUCTURAL Conc, HEADWALL	BAR REINFORCING STEEL	CABLE RAILING	GRATED LINE DRAIN	AFES 18"	AFES 30"	RSP FABRIC (CLASS 8)	RSP (METHOD B) FACING	RSP (METHOD B) LIGHT	RSP (METHOD B) 1/4T
					LF	CY	LF	EA	LF	LF	EA	EA	EA	EA	EA	EA	EA	LB	CY	CY	TON	SQYD	EA	EA	EA	EA	LF	CY	CY	LB	LF	LF	EA	EA	SQYD	CY	CY	CY
D-19	111	g	71.1' Lt "A" 248+14.01	CONCRETE COLLAR*																				2														
		h	71.1' Lt "A" 248+14.01	2-48" APC																																		
		i	107.0' Lt "A" 248+00.00	HW AND CABLE RAILING																									3.64	200	21.0							
		j	107.0' Lt "A" 248+00.00	RSP (1/4 T, METHOD B)*																															86.0			56.0
D-19	112	a	128.0' Rt "A" 249+95.00	HW, WW TYPE "A", & CABLE RAILING																									29.72	3926	52.8							
		b	128.0' Rt "A" 249+95.00	2-60" APC																																		
		c	66.3' Rt "A" 249+57.60	GMP INLET W/HMA APRON*											1			236	0.40		0.5	4.5																
				12" CSP RISER (0.064" THICK)																																		
		d	49.3' Rt "A" 249+47.50	2-60" APC (JACKED)																																		
		e	49.3' Lt "A" 248+90.46	2-60" APC																																		
		f	100.7' Lt "A" 248+61.50	HW, WW TYPE "A", & CABLE RAILING																									55.10	6057	91.2							
		g	100.7' Lt "A" 248+61.50	RSP (1/4 T, METHOD B)*																															155.1			111.2
D-19	113	a	56.2' Lt "A" 252+00.41	REMOVE 12" CMP					19.6																													
D-19	114	a	57.3' Lt "A" 254+70.00	MOD G1 INLET*									2					634	1.90																			
		b	57.3' Lt "A" 254+70.00	18" APC																																		
		c	57.3' Lt "A" 254+05.00	MOD G1 INLET*									2					634	2.11																			
		d	56.5' Lt "A" 254+02.50	GLD																												102.0						
		e	57.3' Lt "A" 254+05.00	18" APC																																		
		f	57.3' Lt "A" 252+96.00	G1 INLET									1					326	1.48																			
		g	57.3' Lt "A" 252+96.00	18" APC																																		
		h	100.3' Lt "A" 252+96.00	18" AFES																													1					
D-19	115	a	73.0' Lt "A" 256+07.81	REMOVE HW				1																														
		b	115.9' Rt "A" 256+07.67	36" APL																																		
		c	71.5' Lt "A" 256+07.81	CONCRETE COLLAR*																				1														
		d	71.5' Lt "A" 256+07.81	36" APC																																		
		e	109.6' Lt "A" 256+08.00	HW																									1.95	105								
		f	109.6' Lt "A" 256+08.00	RSP (LIGHT, METHOD B)*																															37.3		16.0	
D-20	116	a	56.9' Lt "A" 258+03.17	REMOVE 12" CMP					20.4																													
SHEET TOTAL								1	40.0				5		1			1830	5.89		0.5	4.5		3					90.41	10288	4 ~~697.0~~ 165.0	102.0	1		278.4		16.0	167.2
TOTAL FROM Q-5 AND Q-9																																532.0						
TOTAL FROM Q-2																																			284.0	18.0		
GRAND TOTAL					4318.5	1430.3	1994.2	34	2784.1	1248.0	21	10						34069	275.44	7.87	25.0 **	255 ***	2				385.9	3053.0	773.50	798022	1748.2	514.0	15	1	2045.6	41.6	258.0	794.5

4 **REPLACED PER ADDENDUM No. 4 DATED AUGUST 20, 2015**

NOTES:

1. *: SEE DRAINAGE DETAIL SHEETS.
2. (N): NOT A SEPARATE PAY ITEM, FOR INFORMATION ONLY.
3. **: FOR TOTAL QUANTITY OF HMA (TYPE C), SEE SHEET Q-1.
4. ***: FOR TOTAL QUANTITY OF PLACE HMA (MISCELLANEOUS AREA), SEE SHEET Q-2.

DRAINAGE QUANTITIES
DQ-35

REVISED BY | DATE REVISED
VU TRAN | HA VU
CALCULATED-DESIGNED BY | CHECKED BY
FUNCTIONAL SUPERVISOR: GEORGE MORHIG
STATE OF CALIFORNIA - DEPARTMENT OF TRANSPORTATION
Caltrans DESIGN

LAST REVISION 01-30-14 | DATE PLOTTED => 19-AUG-2015 | TIME PLOTTED => 13:14

Dist	COUNTY	ROUTE	POST MILES TOTAL PROJECT	SHEET No.	TOTAL SHEETS
08	SBd	15	42.5/46.0	244	824

REGISTERED CIVIL ENGINEER 1-30-14 DATE

6-23-14
PLANS APPROVAL DATE

REGISTERED PROFESSIONAL ENGINEER HA VU No. C61359 Exp. 6-30-15 CIVIL STATE OF CALIFORNIA

THE STATE OF CALIFORNIA OR ITS OFFICERS OR AGENTS SHALL NOT BE RESPONSIBLE FOR THE ACCURACY OR COMPLETENESS OF SCANNED COPIES OF THIS PLAN SHEET.

APC 18" LF	APC 24" LF	APC 30" LF	APC 36" LF	APC 42" LF	APC 48" LF	APC 60" LF	APC 72" LF	APL 24" LF	APL 30" LF	APL 36" LF	APL 42" LF	APL 48" LF	APL 60" LF	APC (JACKED) 42" LF	APC (JACKED) 48" LF	APC (JACKED) 60" LF	CSP (0.064" THICK) 12" LF	CSP (0.064" THICK) 18" LF	CSP (0.064" THICK) 24" LF	CSP (0.079" THICK) 36" LF	RCP 18" LF	RCP 24" LF	RCP 30" LF	RCP 36" LF	12" CSP RISER (0.064" THICK) LF	36" CSP INLET (0.079" THICK) LF	36" PRECAST Conc PIPE INLET LF	36" PRECAST Conc PIPE MH LF	JOINT CLASSIFICATION (N)	MAXIMUN COVER (N) FT	HEIGHT OF INLET (N) FT	DESCRIPTION	STATION	DRAINAGE UNIT No. ◯	DRAINAGE SYSTEM No. ⬡	DRAINAGE PLAN SHEET No.
																																CONCRETE COLLAR*	71.1′ L+ "A" 248+14.01	g	111	D-19
					84.6																								S	9.4		2-48" APC	71.1′ L+ "A" 248+14.01	h		
																																HW AND CABLE RAILING	107.0′ L+ "A" 248+00.00	i		
																																RSP (1/4 T, METHOD B)*	107.0′ L+ "A" 248+00.00	j		
																																HW, WW TYPE "A", & CABLE RAILING	128.0′ R+ "A" 249+95.00	a	112	D-19
						182.8																							S	10.4		2-60" APC	128.0′ R+ "A" 249+95.00	b		
																										4.5			D		4.0	GMP INLET W/HMA APRON*	66.3′ R+ "A" 249+57.60	c		
																									3.2				D			12" CSP RISER (0.064" THICK)				
																228.2													S	10.7		2-60" APC (JACKED)	49.3′ R+ "A" 249+47.50	d		
						118.0																							S	10.7		2-60" APC	49.3′ L+ "A" 248+90.46	e		
																																HW, WW TYPE "A", & CABLE RAILING	100.7′ L+ "A" 248+61.50	f		
																																RSP (1/4 T, METHOD B)*	100.7′ L+ "A" 248+61.50	g		
																																REMOVE 12" CMP	56.2′ L+ "A" 252+00.41	a	113	D-19
																															4.0	MOD G1 INLET*	57.3′ L+ "A" 254+70.00	a	114	D-19
62.0																													S	3.2		18" APC	57.3′ L+ "A" 254+70.00	b		
																															4.7	MOD G1 INLET*	57.3′ L+ "A" 254+05.00	c		
																																GLD	56.5′ L+ "A" 254+02.50	d		
106.1																													S	3.9		18" APC	57.3′ L+ "A" 254+05.00	e		
																															5.4	G1 INLET	57.3′ L+ "A" 252+96.00	f		
43.3																													P	5.3		18" APC	57.3′ L+ "A" 252+96.00	g		
																																18" AFES	100.3′ L+ "A" 252+96.00	h		
																																REMOVE HW	73.0′ L+ "A" 256+07.81	a	115	D-19
										187.5																						36" APL	115.9′ R+ "A" 256+07.67	b		
																																CONCRETE COLLAR*	71.5′ L+ "A" 256+07.81	c		
			38.2																										P	3.4		36" APC	71.5′ L+ "A" 256+07.81	d		
																																HW	109.6′ L+ "A" 256+08.00	e		
																																RSP (LIGHT, METHOD B)*	109.6′ L+ "A" 256+08.00	f		
																																REMOVE 12" CMP	56.9′ L+ "A" 258+03.17	a	116	D-20
																																TOTAL FROM Q-5 AND Q-9				
211.4			38.2		84.6	300.8				187.5						228.2									3.2	4.5						SHEET TOTAL				
1876.9	1757.4	544.3	1035.5	~~216.4~~ 205.0	1133.7	2301.1	1290.8	201.3	253.3	350.8	197.8	611.9	243.7	~~30.8~~ 50.8	69.2	425.4	97.1	739.9	17.5	30.6	44.3	957.3	167.6	332.6	51.1	155.1	3.8	23.2				GRAND TOTAL				

4 4

NOTES:

1. *: SEE DRAINAGE DETAIL SHEETS.
2. (N): NOT A SEPARATE PAY ITEM, FOR INFORMATION ONLY.

4 **REPLACED PER ADDENDUM No. 4 DATED AUGUST 20, 2015**

DRAINAGE QUANTITIES
DQ-36

VU TRAN | HA VU | REVISED BY | DATE REVISED | CALCULATED-DESIGNED BY | CHECKED BY | FUNCTIONAL SUPERVISOR GEORGE MORHIG

STATE OF CALIFORNIA - DEPARTMENT OF TRANSPORTATION **DESIGN** Caltrans

LAST REVISION 01-30-14 | DATE PLOTTED => 19-AUG-2015 | TIME PLOTTED => 13:14

Dist	COUNTY	ROUTE	POST MILES TOTAL PROJECT	SHEET No.	TOTAL SHEETS
08	SBd	15	42.5/46.0	250	824

REGISTERED CIVIL ENGINEER 1-30-14 DATE

6-23-14
PLANS APPROVAL DATE

REGISTERED PROFESSIONAL ENGINEER AHMAD SHAH No. C55259 Exp. 9-30-14 CIVIL STATE OF CALIFORNIA

THE STATE OF CALIFORNIA OR ITS OFFICERS OR AGENTS SHALL NOT BE RESPONSIBLE FOR THE ACCURACY OR COMPLETENESS OF SCANNED COPIES OF THIS PLAN SHEET.

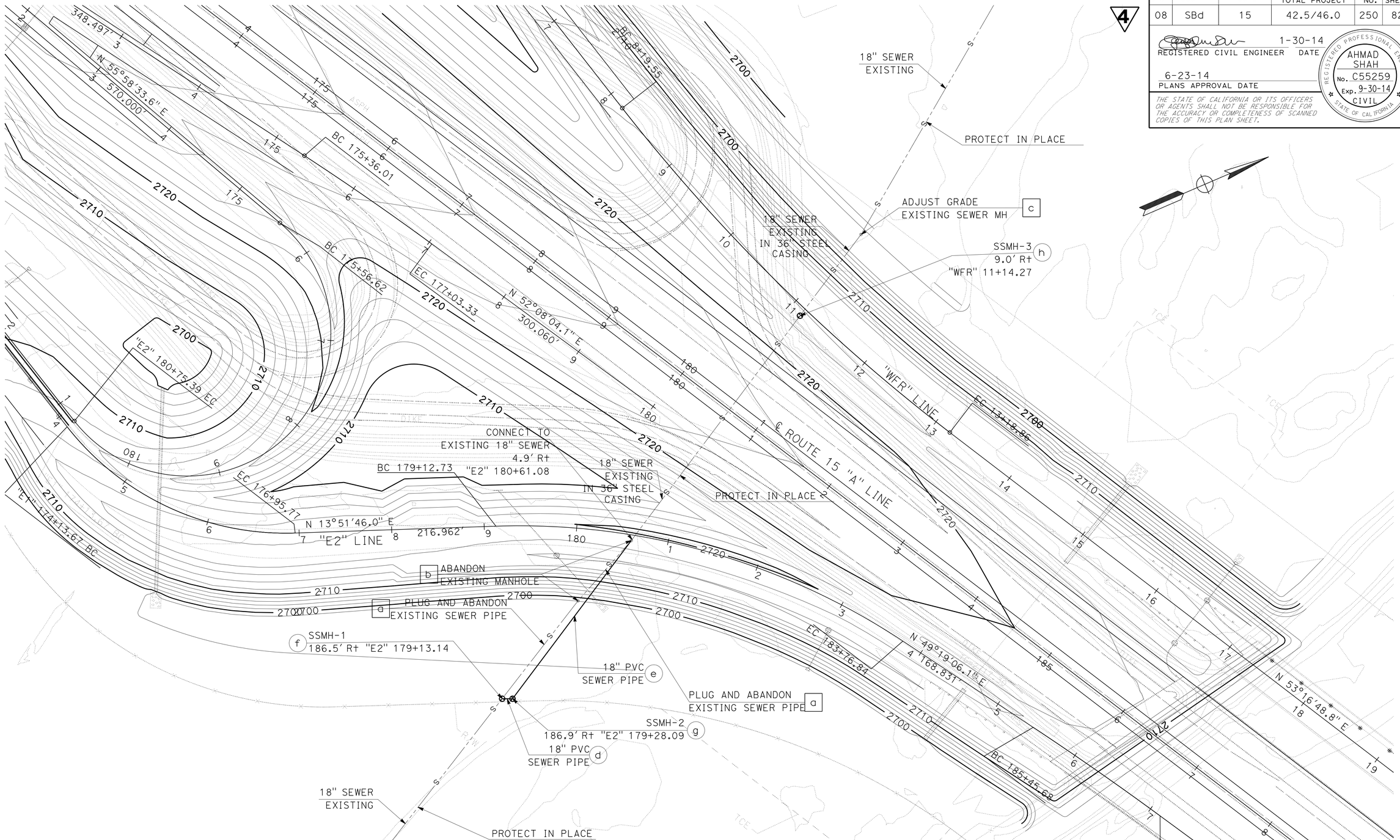

NOTE:

FOR ACCURATE RIGHT OF WAY DATA, CONTACT RIGHT OF WAY ENGINEERING AT THE DISTRICT OFFICE.

4 **SANITARY SEWER SYSTEM** 4

REPLACED PER ADDENDUM No. 4 DATED AUGUST 20, 2015

APPROVED FOR SANITARY SEWER WORK ONLY

SANITARY SEWER PLAN

SCALE: 1" = 50'

SS-6

STATE OF CALIFORNIA - DEPARTMENT OF TRANSPORTATION

Caltrans® **DESIGN**

FUNCTIONAL SUPERVISOR: GEORGE MORHIG

CALCULATED-DESIGNED BY: RAFTAR SHARIA

CHECKED BY: AHMAD SHAH

REVISED BY

DATE REVISED

LAST REVISION 01-30-14

DATE PLOTTED => 19-AUG-2015
TIME PLOTTED => 13:14

DIST	COUNTY	ROUTE	POST MILES TOTAL PROJECT	SHEET No.	TOTAL SHEETS
08	SBd	15	42.5/46.0	644	824

1

REGISTERED CIVIL ENGINEER — DATE 6-30-15

6-23-14
PLANS APPROVAL DATE

REGISTERED PROFESSIONAL ENGINEER — RYAN STILTZ — No. C65738 — Exp. 9/30/15 — CIVIL — STATE OF CALIFORNIA

The State of California or its officers or agents shall not be responsible for the accuracy or completeness of electronic copies of this sheet.

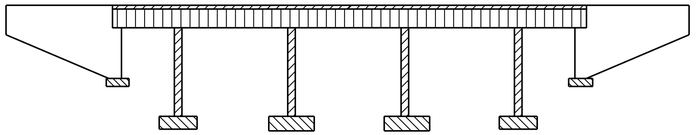

Structural Concrete, Bridge

PC/PS Bulb Tee Girder

Structural Concrete, Bridge Footing

Structural Concrete, Bridge (4,000 psi at 28 days)

CONCRETE STRENGTH AND TYPE LIMITS

No Scale

STANDARD PLANS DATED 2010

	A10A	ABBREVIATIONS (SHEET 1 OF 2)
RSP	A10B	ABBREVIATIONS (SHEET 2 OF 2)
	A10C	LINES AND SYMBOLS (SHEET 1 OF 3)
	A10D	LINES AND SYMBOLS (SHEET 2 OF 3)
	A10E	LINES AND SYMBOLS (SHEET 3 OF 3)
	A10F	LEGEND-SOIL (SHEET 1 OF 2)
	A10G	LEGEND-SOIL (SHEET 2 OF 2)
	A10H	LEGEND-ROCK
	A62C	LIMITS OF PAYMENT FOR EXCAVATION AND BACKFILL BRIDGE
	BO-1	BRIDGE DETAILS
	BO-3	BRIDGE DETAILS
	BO-5	BRIDGE DETAILS
	BO-13	BRIDGE DETAILS
	B2-8	PILE DETAILS CLASS 200
	B6-21	JOINT SEALS (MAXIMUM MOVEMENT RATING = 2")
	B7-8	DECK DRAINAGE DETAILS
	B7-10	UTILITY OPENING BOX GIRDER
	B11-51	TUBULAR HAND RAILING
RSP	B11-54	CONCRETE BARRIER TYPE 26
RSP	B11-56	CONCRETE BARRIER TYPE 736

Standard Plan sheet number

Detail number

QUANTITIES

STRUCTURE EXCAVATION (BRIDGE)	145	CY
STRUCTURE EXCAVATION (TYPE D)	2,260	CY
STRUCTURE BACKFILL (BRIDGE)	93	CY
FURNISH PILING (CLASS 200) (ALTERNATIVE W)	6,812 ~~5,800~~	LF
DRIVE PILE (CLASS 200) (ALTERNATIVE W)	138	EA
STRUCTURAL CONCRETE, BRIDGE FOOTING	512	CY
STRUCTURAL CONCRETE, BRIDGE	1,450	CY
STRUCTURAL CONCRETE, APPROACH SLAB (TYPE N)	57	CY
FURNISH PRECAST PRESTRESSED CONCRETE BULB-TEE GIRDER (140'-150')	15	EA
FURNISH PRECAST PRESTRESSED CONCRETE BULB-TEE GIRDER (50'-60')	10	EA
ERECT PRECAST PRESTRESSED CONCRETE GIRDER	25	EA
JOINT SEAL ASSEMBLY (MR 2 1/2")	87	LF
BAR REINFORCING STEEL (BRIDGE)	644,125	LB
BRIDGE DECK DRAINAGE SYSTEM	12,036	LB
CONCRETE BARRIER (TYPE 26 MODIFIED)	610	LF
CONCRETE BARRIER (TYPE 736)	610	LF
TUBULAR HAND RAILING	610	LF

4

INDEX TO PLANS

Sheet No.	Title
1.	GENERAL PLAN
2.	INDEX TO PLANS
3.	DECK CONTOURS
4.	FOUNDATION PLAN NO. 1
5.	FOUNDATION PLAN NO. 2
6.	ABUTMENT LAYOUT
7.	ABUTMENT DETAILS NO. 1
8.	ABUTMENT DETAILS NO. 2
9.	PIER LAYOUT
10.	PIER DETAILS NO. 1
11.	PIER DETAILS NO. 2
12.	PIER DETAILS NO. 3
13.	TYPICAL SECTION
14.	GIRDER LAYOUT
15.	PC/PS BULB-TEE GIRDER (HARPED STRANDS)
16.	GIRDER DETAILS
17.	GIRDER REINFORCEMENT
18.	STRUCTURE APPROACH TYPE N(30S) MOD
19.	APPROACH DRAINAGE DETAILS
20.	STRUCTURE DRAINAGE LAYOUT
21.	STRUCTURE DRAINAGE DETAILS
22.	JOINT SEAL ASSEMBLY MAXIMUM MOVEMENT RATING = 4"
23.	SIDEWALK COVER PLATE
24.	LOG OF TEST BORINGS 1 OF 11
25.	LOG OF TEST BORINGS 2 OF 11
26.	LOG OF TEST BORINGS 3 OF 11
27.	LOG OF TEST BORINGS 4 OF 11
28.	LOG OF TEST BORINGS 5 OF 11
29.	LOG OF TEST BORINGS 6 OF 11
30.	LOG OF TEST BORINGS 7 OF 11
31.	LOG OF TEST BORINGS 8 OF 11
32.	LOG OF TEST BORINGS 9 OF 11
33.	LOG OF TEST BORINGS 10 OF 11
34.	LOG OF TEST BORINGS 11 OF 11

GENERAL NOTES
LOAD AND RESISTANCE FACTOR DESIGN

DESIGN: AASHTO LRFD BRIDGE DESIGN SPECIFICATIONS, 4th Edition with California Amendments, Preface dated Nov. 2011.

SEISMIC DESIGN: Caltrans Seismic Design Criteria (SDC) Version 1.6, November 2010

DEAD LOAD: Includes 35 Psf for future wearing surface. The deck load between the girders has been increased by a factor of 10% to allow for the use of steel deck forms.

LIVE LOADING: HL93 and permit design load.

SEISMIC LOADING: Soil Profile: V_{S30} = 1030 ft/s
Moment Magnitude: M_{max} = 6.5
Peak Ground Acceleration = 0.49g

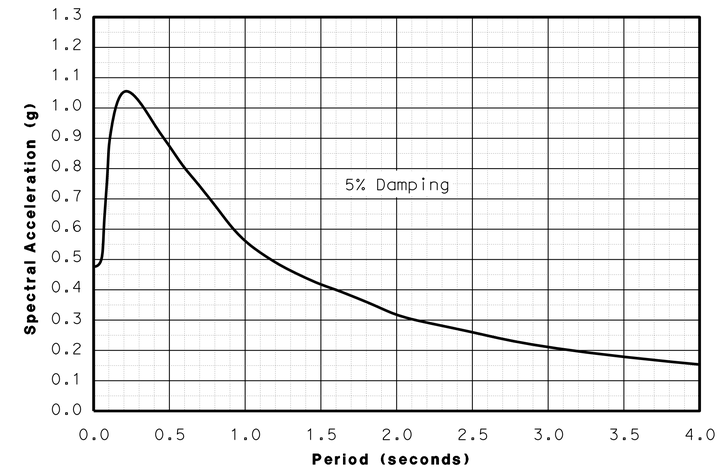

REINFORCED CONCRETE: f_y = 60 ksi
f'_c = 3600 psi, unless otherwise noted
n = 8

STRUCTURAL STEEL:: Steel Pipe Piles: Astm A252 Grade 3

PRESTRESSED CONCRETE: See "Prestressing Notes" on "PC/PS BULB-TEE GIRDER (HARPED STRANDS)" sheet.

PILE DATA TABLE

Location	Pile Type	Nominal Resistance (kips)		Design Tip Elevation (ft)	Specified Tip Elevation (ft)	Nominal Driving Resistance (kips)
		Compression	Tension			
Abut 1	Class 200 Alt "W"	300 kips	0	2663 (a) 2660 (d)	2660	500
Pier 2	Class 200 Alt "W"	430 kips	190	2631 (a) 2628 (b) 2639 (d)	2628	460
Pier 3	Class 200 Alt "W"	370 kips	190	2631 (a) 2625 (b) 2634 (d)	2625	400
Pier 4	Class 200 Alt "W"	370 kips	190	2621 (a) 2633 (b) 2636 (d)	2621	400
Pier 5	Class 200 Alt "W"	430 kips	190	2633 (a) 2624 (b) 2635 (d)	2624	480
Abut 6	Class 200 Alt "W"	300 kips	0	2666 (a) 2660 (d)	2660	500

NOTE: All design tip elevations are controlled by the following demands:
(a) Compression (b) tension (c) settlement (d) lateral

4 REPLACED PER ADDENDUM No. 4 DATED AUGUST 20, 2015

1 REPLACED PER ADDENDUM No. 1 DATED JULY 17, 2015

	BY	CHECKED
DESIGN	R. Stiltz	F. Chen
DETAILS	Y. Tang	F. Chen
QUANTITIES	Y. Tang	F. Chen

STATE OF CALIFORNIA
DEPARTMENT OF TRANSPORTATION

DIVISION OF ENGINEERING SERVICES
STRUCTURE DESIGN
DESIGN BRANCH 10

BRIDGE NO. 54C0661
POST MILE 43.93

MOJAVE RIVER BRIDGE
INDEX TO PLANS

STRUCTURES DESIGN DETAIL SHEET (ENGLISH) (REV. 09-01-10)

ORIGINAL SCALE IN INCHES FOR REDUCED PLANS 0 1 2 3

UNIT: 3589
PROJECT NUMBER & PHASE: 08140000861
CONTRACT NO.: 08-3555V1

DISREGARD PRINTS BEARING EARLIER REVISION DATES

REVISION DATES: 8-14-12 6-30-15 10-30-13 11-06-13

SHEET 2 OF 34

FILE => 54c0661aitp02.dgn

USERNAME => s124496 DATE PLOTTED => 19-AUG-2015 TIME PLOTTED => 13:14

DIST	COUNTY	ROUTE	POST MILES TOTAL PROJECT	SHEET No.	TOTAL SHEETS
08	SBd	15	42.5/46.0	651	824

REGISTERED CIVIL ENGINEER 6-30-15 DATE

6-23-14
PLANS APPROVAL DATE

REGISTERED PROFESSIONAL ENGINEER RYAN STILTZ No. C65738 Exp. 9/30/15 CIVIL STATE OF CALIFORNIA

The State of California or its officers or agents shall not be responsible for the accuracy or completeness of electronic copies of this plan sheet.

1

4 24"x18"x1/2" ~~STEEL REINFORCED~~ ELASTOMERIC BEARING PADS (ELASTOMER ONLY) Typ, EXCEPT AT PIER 2 SPAN 1 SIDE AND PIER 5 SPAN 5 SIDE USE 15" x 15" x1/2" ~~STEEL REINFORCED~~ ELASTOMERIC BEARING PADS

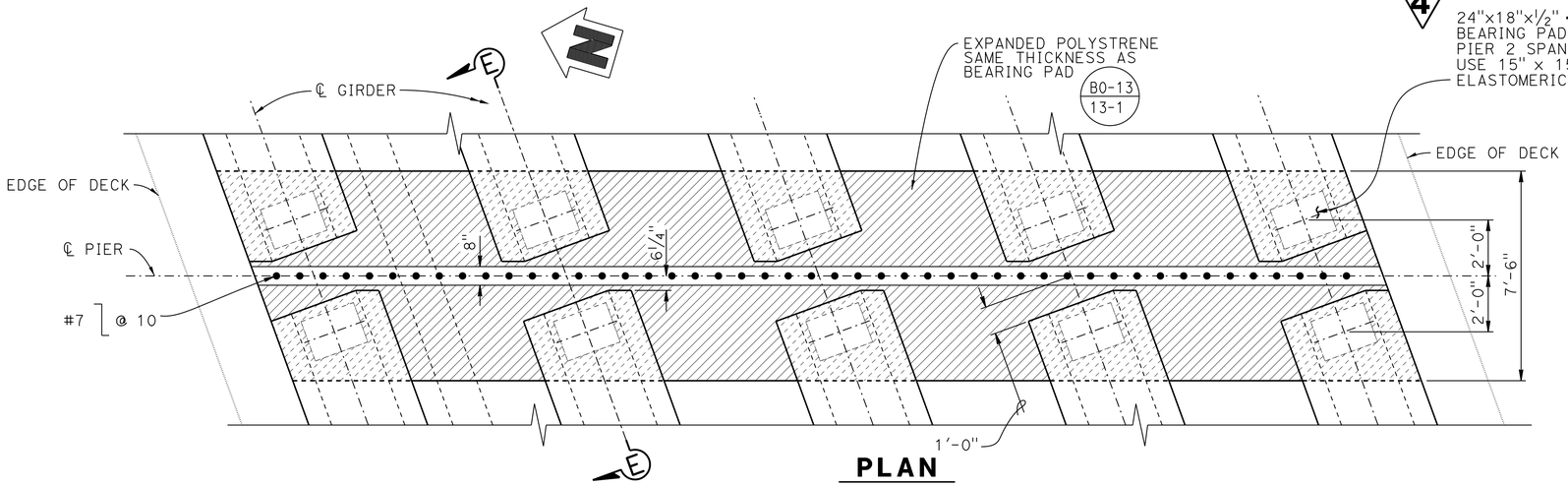

PLAN

3/8" = 1'-0"

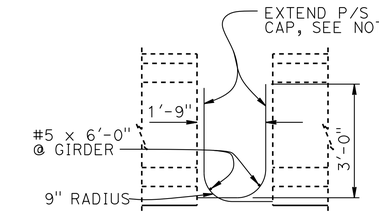

SECTION E-E

1/2"=1'-0"

4 **REPLACED PER ADDENDUM No.4 DATED AUGUST 20, 2015**

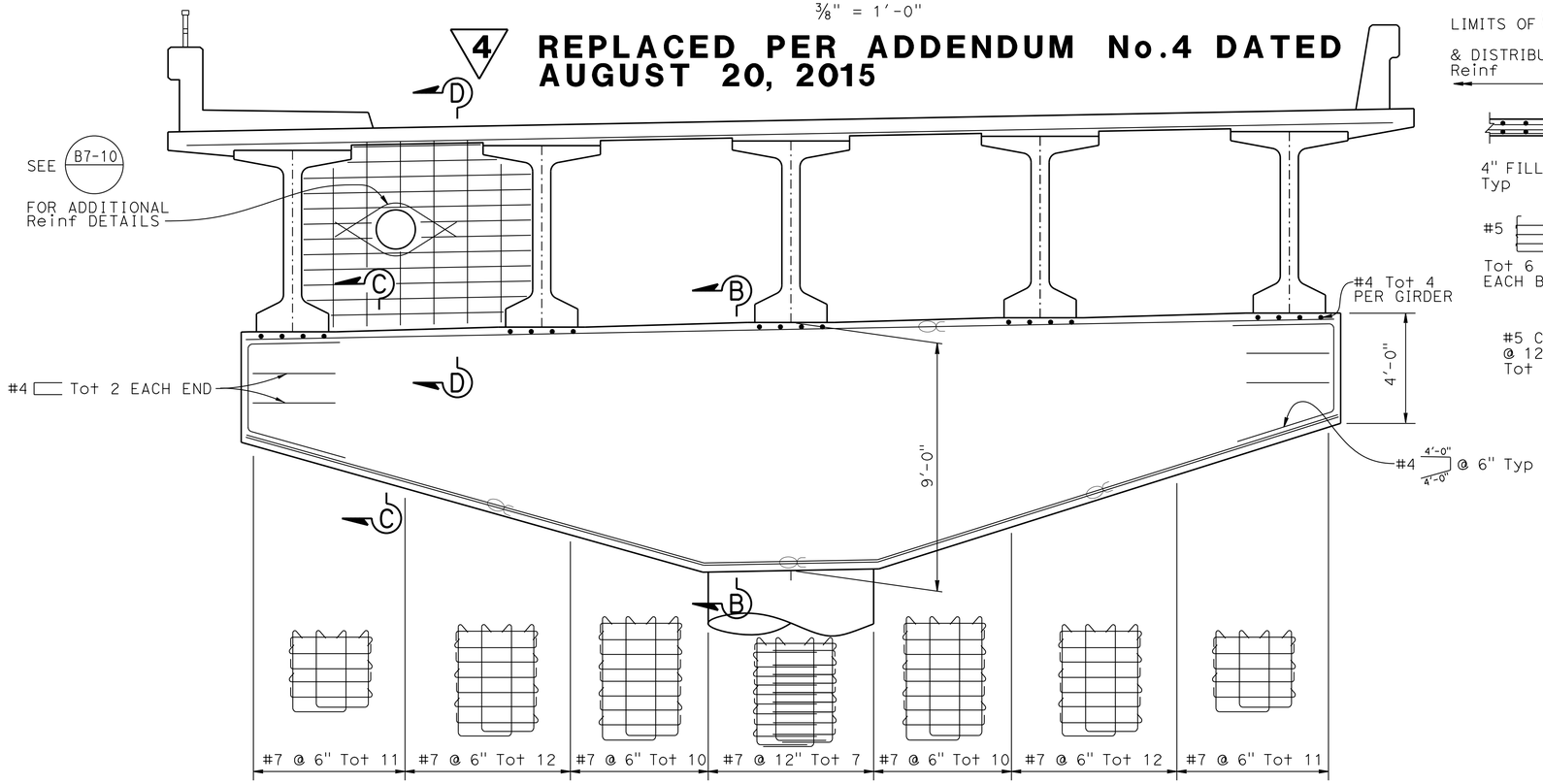

PIER ELEVATION

3/8" = 1'-0"

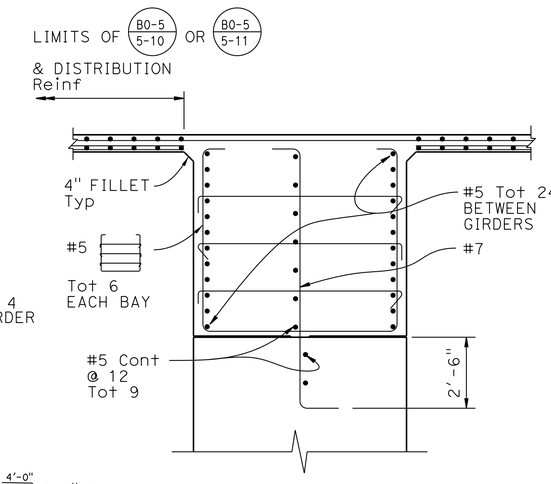

SECTION D-D

3/8" = 1'-0"

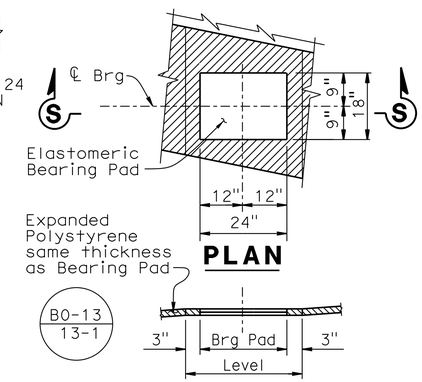

PLAN

SECTION S-S
BEARING PAD DETAIL

No Scale

NOTES:

1. For Section B-B and Section C-C, see "PIER DETAILS NO. 1" sheet.
2. Place stirrups parallel to ℄ girder and space along ℄ of Pier.
3. Place 3'-0" Hook on each end of top bars of each bundle as shown in Elevation.
4. For Column details, see "PIER DETAILS NO. 2, and NO. 3" sheets.
5. Diaphragms shall be poured no earlier than 90 days after precast girders have been cast.
6. Total of 8 bottom P/S Strands shall be extended into Pier Cap. (CG of Strands shall be within the bottom 8" of PC Girder). Strand spacing shall be a minimun of 4" both horizontally and vertically.
7. Strands extending into Cap may be either a portion of the girder pretensioned Strands or additional P/S Strands. Strands shall extend a Min of 8'-0" into P/C Girder.

1 **REPLACED PER ADDENDUM No. 1 DATED JULY 17, 2015**

	BY	CHECKED
DESIGN	R. Stiltz	F. Chen
DETAILS	Y. Tang	F. Chen
QUANTITIES	Y. Tang	F. Chen

STATE OF CALIFORNIA
DEPARTMENT OF TRANSPORTATION

DIVISION OF ENGINEERING SERVICES
STRUCTURE DESIGN
DESIGN BRANCH 10

BRIDGE NO. 54C0661
POST MILE 43.93

MOJAVE RIVER BRIDGE
PIER LAYOUT

STRUCTURES DESIGN DETAIL SHEET (ENGLISH) (REV. 09-01-10)

ORIGINAL SCALE IN INCHES FOR REDUCED PLANS 0 1 2 3

UNIT: 3589
PROJECT NUMBER & PHASE: 08140000861
CONTRACT NO.: 08-3555V1

DISREGARD PRINTS BEARING EARLIER REVISION DATES

REVISION DATES: 8-16-12 6-30-15 10-08-13 3-28-13

SHEET 9 OF 34

FILE => 54c0661hb01_io09.dgn

USERNAME => s124496 DATE PLOTTED => 19-AUG-2015 TIME PLOTTED => 13:15