Dist	COUNTY	ROUTE	POST MILES TOTAL PROJECT	SHEET No.	TOTAL SHEETS
08	SBd	2,138	6.2/6.4, 2.3/R15.2	362	1168

John M Rogers 6-16-14
REGISTERED CIVIL ENGINEER DATE

3-3-14
PLANS APPROVAL DATE

REGISTERED PROFESSIONAL ENGINEER JOHN M. ROGERS No. C52748 Exp. 12-31-14 CIVIL STATE OF CALIFORNIA

THE STATE OF CALIFORNIA OR ITS OFFICERS OR AGENTS SHALL NOT BE RESPONSIBLE FOR THE ACCURACY OR COMPLETENESS OF SCANNED COPIES OF THIS PLAN SHEET.

NOTE: FIELD INSPECTION REQUIRED TO VERIFY MEASUREMENTS
EXACT LOCATION TO BE DETERMINED BY THE ENGINEER

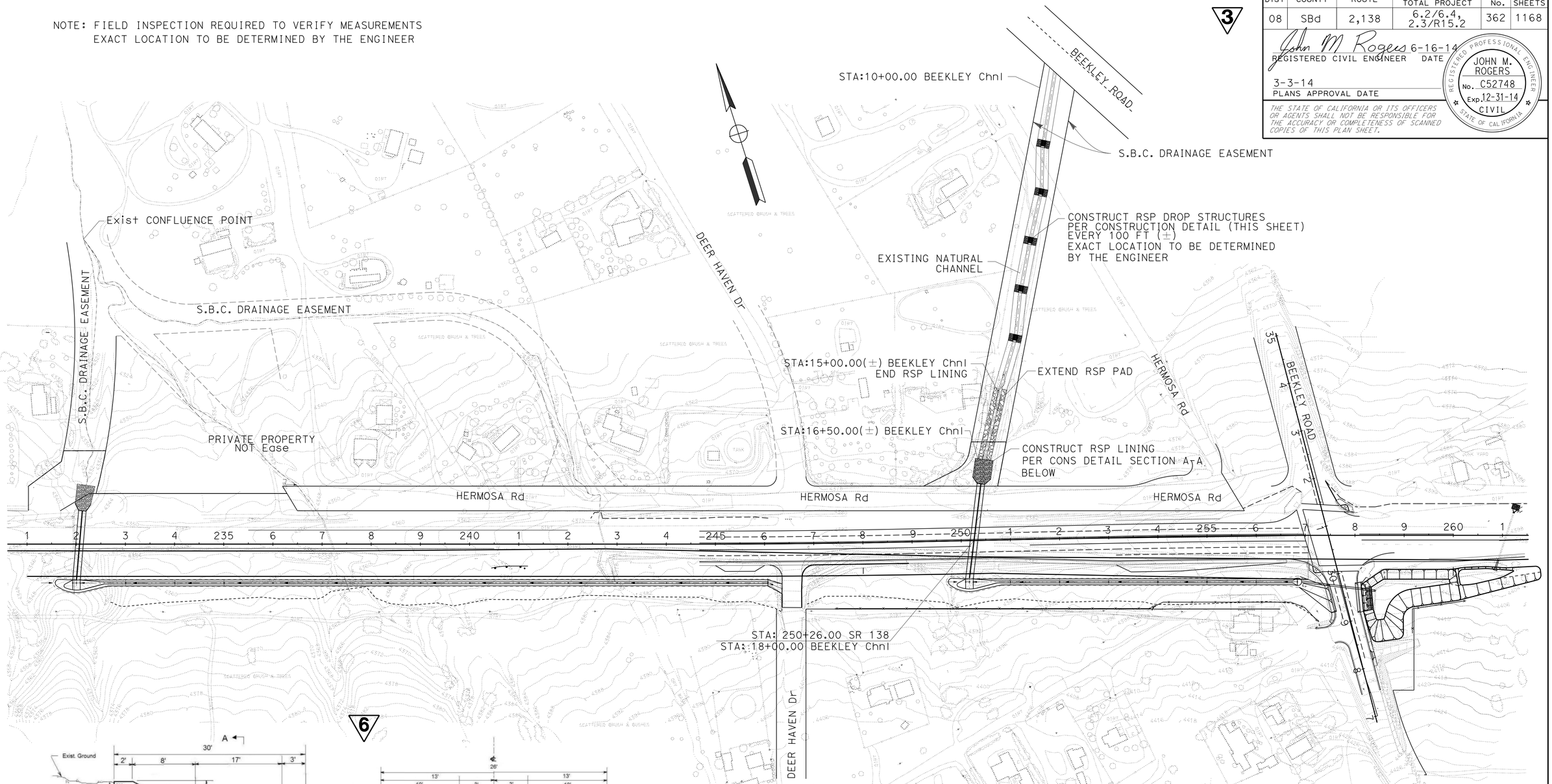

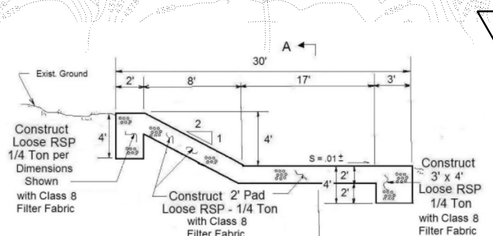

1/4-T ROCK SLOPE PROTECTION - BEEKLEY CHANNEL
1/4-T Rock Slope Protection at Mini-Drop Structures and Culvert Outlet Pad Extension Station 15+00 to Station 16+02
(Not to Scale)
RH King January 2014

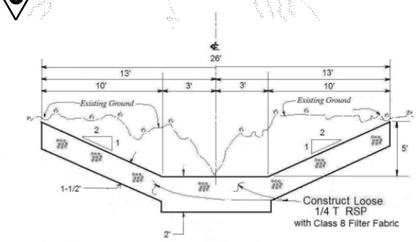

SECTION A-A
BEEKLEY CHANNEL TYPICAL CROSS-SECTION
(Not to Scale)

6 REPLACED PER ADDENDUM No. 6 DATED JULY 17, 2014

3 REPLACED PER ADDENDUM No. 3 DATED JUNE 23, 2014

DRAINAGE DETAILS

NO SCALE

DD-14

STATE OF CALIFORNIA - DEPARTMENT OF TRANSPORTATION
Caltrans HYDRAULICS DESIGN

FUNCTIONAL SUPERVISOR: JOHN M. ROGERS
CALCULATED-DESIGNED BY: SHAHID AHMED
CHECKED BY: JOHN M. ROGERS
REVISED BY
DATE REVISED

LAST REVISION 06-16-14
DATE PLOTTED => 17-JUL-2014
TIME PLOTTED => 09:40

Dist	COUNTY	ROUTE	POST MILES TOTAL PROJECT	SHEET No.	TOTAL SHEETS
08	SBd	2,138	6.2/6.4, 2.3/R15.2	369	1168

REGISTERED CIVIL ENGINEER — DATE 9-5-13

3-3-14
PLANS APPROVAL DATE

REGISTERED PROFESSIONAL ENGINEER — JOHN M. ROGERS — No. C52748 — Exp. 12-31-14 — CIVIL — STATE OF CALIFORNIA

THE STATE OF CALIFORNIA OR ITS OFFICERS OR AGENTS SHALL NOT BE RESPONSIBLE FOR THE ACCURACY OR COMPLETENESS OF SCANNED COPIES OF THIS PLAN SHEET.

3

NOTES:

1. THE PRECISE DETERMINATION OF THE FOLLOWING ITEMS WILL BE MADE BY THE ENGINEER IN THE FIELD: STATION, SKEW, LENGTH, FL ELEVATION, AND DEPTH OF STRUCTURE.
2. (N) - NOT A SEPARATE PAY ITEM; FOR INFORMATION ONLY.

LEGEND AND ABBREVIATIONS:

S - STANDARD JOINT TYPE
P - POSITIVE JOINT TYPE
D - DOWNDRAIN JOINT TYPE
X - BICYCLE PROOF GRATE
RCP - REINFORCED CONCRETE PIPE
CSP - CORRUGATED STEEL PIPE
GA - GAUGE
w/ - WITH
Ω - SEE DRAINAGE DETAIL

DRAINAGE QUANTITIES

ABANDON CULVERT	SAND BACKFILL	REMOVE PIPE	REMOVE HEADWALL	REMOVE RCB CULVERT	REMOVE INLET	REMOVE FLARED END SECTION	RECONSTRUCT RSP	(N) Conc COLLAR	(N) CAP INLET	FRAMES, GRATES & COVERS (N) 24-12	(N) 36R	(N) 24-12 X	Misc IRON & STEEL	MINOR CONCRETE (MINOR STRUCTURE)	STRUCTURAL CONCRETE, BOX CULVERT	BAR REINFORCING STEEL	HMA-A	PLACE HMA (Misc AREA)	CABLE RAILING	RSP RSP FABRIC (CLASS 8)	RSP CONCRETE-RSP (1T, METHOD B)	RSP ROCK SLOPE PROTECTION (LIGHT, METHOD B)	STRUCTURAL CONCRETE (WALL)	CONCRETE (Chnl LINING)	CONCRETE (BACK FILL)	CORRUGATED STEEL PIPE (CSP) (14 GA UNLESS OTHERWISE SPECIFIED) 18" CSP (.079" THICK)	24" CSP (.079" THICK)	30" CSP (.079" THICK)	36" CSP (.079" THICK)	48" CSP (.079" THICK)	54" CSP (.109" THICK)	66" CSP (.109" THICK)	72" CSP (.138" THICK)	RCP 24" RCP	36" RCP	42" RCP	72" RCP	STEEL FLARED END SECTION 18"	24"	30"	36"	12" CSP RISER (.064" THICK)	(N) MAXIMUM COVER	(N) HEIGHT OF INLET "H"	PIPE JOINT CLASSIFICATION	DESCRIPTION	STATION	DRAINAGE PLAN SHEET NO	DRAINAGE SYSTEM NO ⬡	DRAINAGE UNIT ◯
LF	CY	LF	CY	CY	EA	EA	CY	EA	EA	EA	EA	EA	lb	CY	CY	lb	TON	SQYD	LF	SQYD	CY	CY	CY	CY	CY	LF	LF	LF	LF	LF	LF	LF	LF	LF	LF	LF	LF	EA	EA	EA	EA	EA	LF	LF					
																				14		4.0																								RSP	128+95.91	D-1	1	a
																																							1						FES				b
																											54.5																		24" CSP				c
								1																																					Conc Collar				d
								1																																					Conc Collar				e
																											30.3																		24" CSP				f
																																							1						FES				g
																				14		4.0																								RSP	135+66.30	D-2	2	a
																																							1						FES				b
								1																																					Conc COLLAR				c
																											37.4																		24" CSP				d
																																							1						FES				e
																				27		9.0																								RSP	138+35.38	D-2	3	a
																																									1				FES				b
								1																																					Conc COLLAR				c
																								9.8																					Conc BACKFILL				d
																													53.0																36" CSP				e
																																									1				FES				f
								1																																					Conc COLLAR	151+51.50	D-3	4	a
						1																																							REMOVE FES				b
																												94.4																	30" CSP				c
													177																3.5													0.5	3.5	OMP DI	150+37.53			d
														0.80																															Conc APRON				e
																				27		9.0																								RSP	152+09.58	D-3	5	a
														1.50																															HW				b
																																			~~168.0~~										36" RCP (JACKED)				c
											1		236	0.30																													3.0	Mod 36" GMP DI	152+60.71			d
																				101		50.0																								DETENTION BASIN RSP				e
																																			6														
						1							413	2.60						183		76.0			9.8		122.2	94.4	56.5						~~168.0~~				4		2					SHEET TOTALS				

6 **REPLACED PER ADDENDUM No. 6 DATED JULY 17, 2014**

3 **REPLACED PER ADDENDUM No. 3 DATED JUNE 23, 2014**

DRAINAGE QUANTITIES

DQ-1

REVISED BY | DATE REVISED

SHAHID AHMED | JOHN M. ROGERS

CALCULATED-DESIGNED BY | CHECKED BY

FUNCTIONAL SUPERVISOR: JOHN M. ROGERS

STATE OF CALIFORNIA - DEPARTMENT OF TRANSPORTATION
Caltrans® HYDRAULICS DESIGN

LAST REVISION 09-05-13 | DATE PLOTTED => 17-JUL-2014 | TIME PLOTTED => 09:40

Dist	COUNTY	ROUTE	POST MILES TOTAL PROJECT	SHEET No.	TOTAL SHEETS
08	SBd	2,138	6.2/6.4, 2.3/R15.2	399	1168

John M Rogers 3-3-14
REGISTERED CIVIL ENGINEER DATE

3-3-14
PLANS APPROVAL DATE

REGISTERED PROFESSIONAL ENGINEER JOHN M. ROGERS No. C52748 Exp. 12-31-14 CIVIL STATE OF CALIFORNIA

THE STATE OF CALIFORNIA OR ITS OFFICERS OR AGENTS SHALL NOT BE RESPONSIBLE FOR THE ACCURACY OR COMPLETENESS OF SCANNED COPIES OF THIS PLAN SHEET.

SIZE AND TYPE OF JACKED PIPE	ROUTE	Sta	LF
JACKED 36" REINFORCED CONCRETE PIPE (CLASS III)	138	152+09.58	170
JACKED 24" REINFORCED CONCRETE PIPE (CLASS III)	138	745+22.00	203

ROCK SLOPE PROTECTION	ROUTE	LOCATION	CY
1/4TON (METHOD B)	138	BEEKLEY Chnl	660

PIPE DIA	LOCATION	LF
48" RCP	BEEKLEY Conc Chnl	317

DRAINAGE QUANTITIES

ABANDON CULVERT (LF)	SAND BACKFILL (CY)	REMOVE PIPE (LF)	REMOVE HEADWALL (CY)	REMOVE RCB CULVERT (CY)	REMOVE INLET (EA)	REMOVE FLARED END SECTION (EA)	RECONSTRUCT RSP (CY)	(N) Conc COLLAR (EA)	CAP INLET (EA)	FRAMES, GRATES & COVERS (N) 24-12 (EA)	(N) 36R (EA)	(N) 24-12 X (EA)	Misc IRON & STEEL (lb)	MINOR CONCRETE (MINOR STRUCTURE) (CY)	STRUCTURAL CONCRETE, BOX CULVERT (CY)	BAR REINFORCING STEEL (lb)	HMA-A (TON)	PLACE HMA (Misc AREA) (SQYD)	CABLE RAILING (LF)	RSP: RSP FABRIC (CLASS 8) (SQYD)	RSP: ROCK SLOPE PROTECTION (1T, METHOD B) (CY)	RSP: ROCK SLOPE PROTECTION (LIGHT, METHOD B) (CY)	STRUCTURAL CONCRETE (WALL) (CY)	CONCRETE (Chnl LINING) (CY)	CONCRETE (BACKFILL) (CY)	CORRUGATED STEEL PIPE (CSP) (14 GA UNLESS OTHERWISE SPECIFIED): 18" CSP (.079" THICK) (LF)	24" CSP (.079" THICK) (LF)	30" CSP (.079" THICK) (LF)	36" CSP (.079" THICK) (LF)	48" CSP (.079" THICK) (LF)	54" CSP (.109" THICK) (LF)	66" CSP (.109" THICK) (LF)	72" CSP (.138" THICK) (LF)	RCP: 24" RCP (LF)	36" RCP (LF)	42" RCP (LF)	72" RCP (LF)	STEEL FLARED END SECTION: 18" (EA)	24" (EA)	30" (EA)	36" (EA)	(N) 12" CSP RISER (.064" THICK) (EA)	(N) MAXIMUM COVER (LF)	(N) HEIGHT OF INLET "H" (LF)	PIPE JOINT CLASSIFICATION	REMARKS
						1							413	2.6						183		76.0			9.80		122.2	94.4	56.5					~~*168~~				4		2					SHEET TOTALS DQ-1
						3											0.9	6		88		28.3			22.70	30.0		67.9	175.9								2		2	5					SHEET TOTALS DQ-2
						1								8.5			1.8	12	48	151		51.0			24.10	50.0	51.0	103.1	108.6	91.5							2	2							SHEET TOTALS DQ-3
						2														55		17.0			24.40	80.0	88.9		53.1								4	3		1					SHEET TOTALS DQ-4
140	27	70.0				1							656	65.92	364.0	107035			117	1320	520	30.0	36.8	361.0					93.0																SHEET TOTALS DQ-5
			1.8			3	3.7							1.95					12	47		15.3			1.00	80.0		29.6	33.1								4		2	1					SHEET TOTALS DQ-6
58	28		2.8		1				2				1431	12.70					15						8.60	102.7	227.0	45.0		83.0							4								SHEET TOTALS DQ-7
278	34		6.3			3	15.0		6					9.12					34	54		20.3				60.0					39.4	26.1					2								SHEET TOTALS DQ-8
646	76		3.5						5				1673	13.18					17	54		20.3				505.5					25.1														SHEET TOTALS DQ-9
			4.9				30						239	6.39			0.9	6	30	54		16.6					377.2	156.3																	SHEET TOTALS DQ-10
28	2		4.2						2				478	8.51					20	68		20.6				50.8	104.8	192.0																	SHEET TOTALS DQ-11
		120	6.4		2	1	20							7.05			0.9	6	36	95		31.0					65.0		183.6																	SHEET TOTALS DQ-12
275	69		5.6				15		5				1195	10.25					30	88		32.0				635.0				47.4												1				SHEET TOTALS DQ-13
			4.8			1	36						478	8.24					15	86		28.0				33.5	131.7			49.6								1								SHEET TOTALS DQ-14
346	23		4.8				28		3				717	8.00					15	72		24.0				371.0	54.3			26.8																SHEET TOTALS DQ-15
21	2		1.8			2	27		3				717	5.02					12	55		17.0				48.0	47.6		14.0									2								SHEET TOTALS DQ-16
38	5		1.0		1	2	14		2				953	4.59						34		10.3				38.0	41.3	30.0										1	1							SHEET TOTALS DQ-17
418	50					1	10		4				956	3.80						9		2.3				575.0											7								SHEET TOTALS DQ-18
			18.6											25.28		11506			132	130		48.8	121.8		16.64	40.0						106.3				331.9	42.3	2								SHEET TOTALS DQ-19
		45	5.8			1														28		8.0			6.72				65.0					119.5					4		4					SHEET TOTALS DQ-20
200	24		5.6												250.1	71499			48	54		18.0	53.2		6.62	100.0									61.8	83.1			2	2		2					SHEET TOTALS DQ-21
						4	10						600	16.09	214.2	49252			70	24	225	6.0	28.7		8.00	110.0	97.9						151.7					6	4							SHEET TOTALS DQ-22
														28.42		3800			154		96		49.6		10.51	90.0						164.6	207.6					4								SHEET TOTALS DQ-23
						1								14.34					84	121		46.3			6.73	120.0				83.3		69.5						6								SHEET TOTALS DQ-24
		124				1								5.50	219.0	53767			93	44	150.0	16.0	31.5	18.0	3.92	30.0		50.0		75.4								2		2						SHEET TOTALS DQ-25
				115													1.9	12		14		4.0			0.90	130.0	55.0										4	2							SHEET TOTALS DQ-26
													5480	21.73						9		2.3				416.9								376.0				1								SHEET TOTALS DQ-27
		102											3260	10.82						18		4.6				358.0	264.0										2	1							SHEET TOTALS DQ-28
		250																		45		12.0				190.0											5								SHEET TOTALS DQ-29
6		84											1570	4.86			3.6	24		150		52.8				885.0											2				1				SHEET TOTALS DQ-30
2454	340	795	77.9	115	4	28	208.7 **		32				20816	302.86 ***	1047.3	296859	10.0	66	982	3150	991	658.8	321.6	379.0	150.64	5129.4	1727.9	768.3	782.8	457.0	64.5	366.5	359.3	557.3	~~261.1~~ 83.1 6	331.9	42.3	61	26	7	15	2				GRAND TOTALS

* SEE Q-2 FOR GRAND TOTAL.
** SEE Q-10 FOR GRAND TOTAL.
*** SEE Q-5 FOR GRAND TOTAL.
**** SEE Q-15 FOR GRAND TOTAL.
***** SEE Q-7 FOR GRAND TOTAL.

* ***** ****

6 **REPLACED PER ADDENDUM No. 6 DATED JULY 17, 2014**

DRAINAGE QUANTITIES
DQ-31

STATE OF CALIFORNIA - DEPARTMENT OF TRANSPORTATION
Caltrans® HYDRAULICS DESIGN

SHAHID AHMED — REVISED BY
JOHN M. ROGERS — DATE REVISED
CALCULATED-DESIGNED BY
CHECKED BY
FUNCTIONAL SUPERVISOR
JOHN M. ROGERS

LAST REVISION 03-03-14 | DATE PLOTTED => 17-JUL-2014 | TIME PLOTTED => 09:40

DIST	COUNTY	ROUTE	POST MILES TOTAL PROJECT	SHEET No.	TOTAL SHEETS
08	SBd	138	6.2/6.4, 2.3/R15.2	1062	1168

REGISTERED CIVIL ENGINEER 8/26/13 DATE

3-3-14
PLANS APPROVAL DATE

REGISTERED PROFESSIONAL ENGINEER B. R. GUNTER No. C 66195 Exp. 06-30-14 CIVIL STATE OF CALIFORNIA

The State of California or its officers or agents shall not be responsible for the accuracy or completeness of scanned copies of this plan sheet.

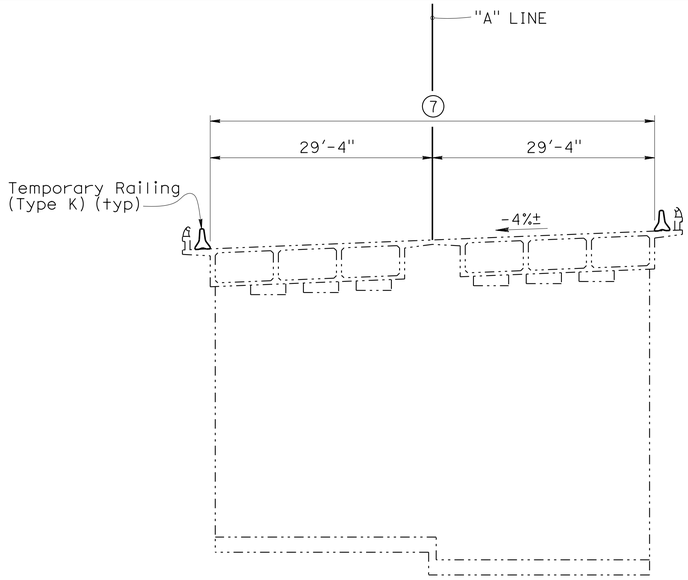

STAGE 1- PHASE A CONSTRUCTION

1" = 10'

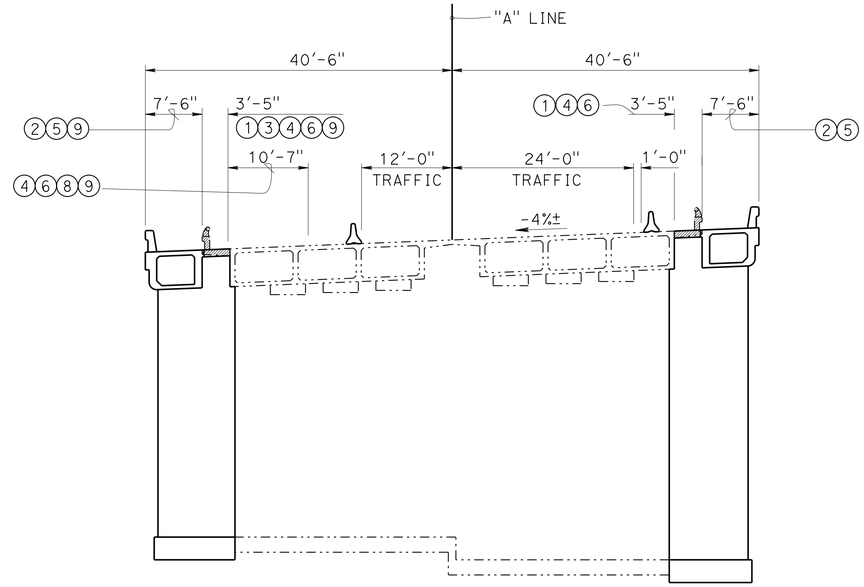

STAGE 1- PHASE B CONSTRUCTION

1" = 10'

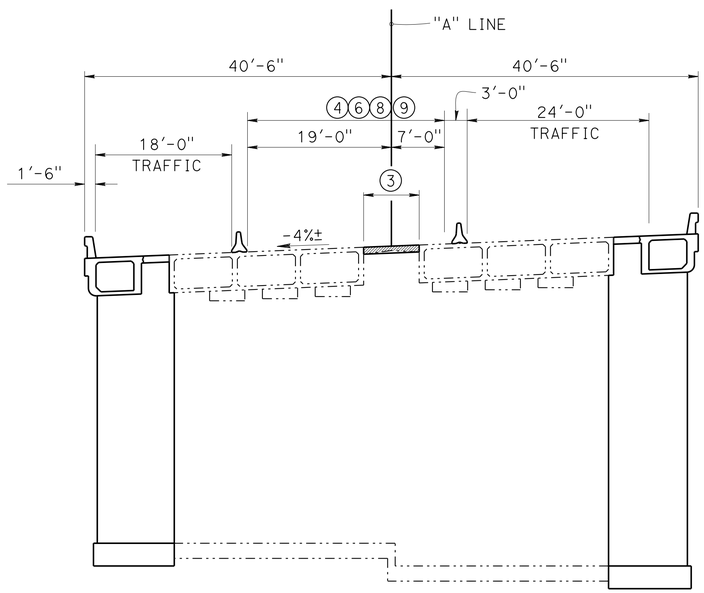

STAGE 2- PHASE A CONSTRUCTION

1" = 10'

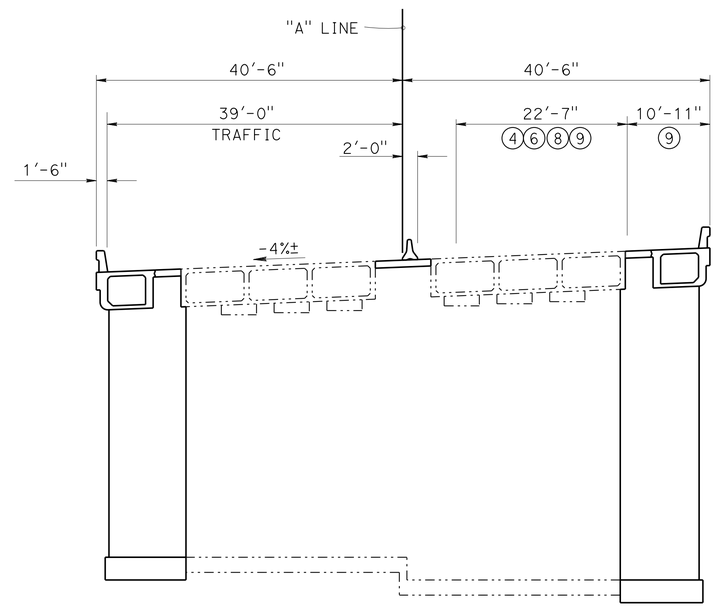

STAGE 2- PHASE B CONSTRUCTION

1" = 10'

NOTES:

1. Remove Existing Barrier Rail and Existing Overhang
2. Construct Outside Bridge Widening, including Barrier Rail Type 736 (mod)
3. Place Closure Pour
4. Place Geocomposite Drain at existing abutments
5. Place Structure Approach Slab Type N(30D)
6. Place Structure Approach Type R(30D)
7. Remove AC Overlay on Bridge Deck
8. Prepare Bridge Deck surface and place high molecular weight Methacrylate Resin Prime coat
9. Place 2" Polyester Concrete Overlay. (Do not place under Barrier Rail Type 736 (mod)

QUANTITIES

REMOVE ASPHALT CONCRETE SURFACING	11,787	SQFT
PREPARE CONCRETE BRIDGE DECK SURFACE	17,410	SQFT
FURNISH POLYESTER CONCRETE OVERLAY	2,902	CF
PLACE POLYESTER CONCRETE OVERLAY	17,410	SQFT
CORE CONCRETE	15	LF
BRIDGE REMOVAL (PORTION), LOCATION A	LUMP	SUM
STRUCTURE EXCAVATION (BRIDGE)	844	CY
STRUCTURE BACKFILL (BRIDGE)	661	CY
FURNISH PILING (CLASS 140) (ALTERNATIVE W) (MODIFIED)	333	LF
DRIVE PILE (CLASS 140) (ALTERNATIVE W) (MODIFIED)	8	EA
STRUCTURAL CONCRETE, BRIDGE FOOTING	94	CY
STRUCTURAL CONCRETE, BRIDGE	622	CY
AGGREGATE BASE (APPROACH SLAB)	20	CY
STRUCTURAL CONCRETE, APPROACH SLAB (TYPE R MODIFIED)	197	CY
STRUCTURAL CONCRETE, APPROACH SLAB (TYPE N MODIFIED)	45	CY
CONCRETE SURFACE TEXTURE	500	SQFT
DRILL AND BOND DOWEL	400	LF
JOINT SEAL (MR 1")	210	LF
BAR REINFORCING STEEL (BRIDGE)	108,118	LB
BAR REINFORCING STEEL (EPOXY COATED) (BRIDGE)	96,269	LB
PREPARE AND STAIN CONCRETE	40,776	SQFT
CONCRETE BARRIER (TYPE 736 MODIFIED)	525	LF
6 **PAVING NOTCH EXTENSION**	**124**	**CF**

NOTE:
THE CONTRACTOR SHALL VERIFY ALL CONTROLLING FIELD DIMENSIONS BEFORE ORDERING OR FABRICATING ANY MATERIAL.

6 REPLACED PER ADDENDUM No. 6 DATED JULY 17, 2014

	BY	CHECKED
DESIGN	J. Torres	R. Wang
DETAILS	F. Hosseinioun/H.I.	R. Wang
QUANTITIES	F. Tannous/R. Padre	R. Novik/ J. Klieby/J. Duffin

STATE OF CALIFORNIA DEPARTMENT OF TRANSPORTATION

DIVISION OF ENGINEERING SERVICES STRUCTURE DESIGN DESIGN BRANCH 19

BRIDGE NO. 54-0561
POST MILE R14.94

CAJON CREEK BRIDGE (WIDEN)
STAGE CONSTRUCTION

STRUCTURES DESIGN DETAIL SHEET (ENGLISH) (REV. 09-01-10)

ORIGINAL SCALE IN INCHES FOR REDUCED PLANS 0 1 2 3

UNIT: 3621
PROJECT NUMBER & PHASE: 0800000609
CONTRACT NO.: 08-3401U1

DISREGARD PRINTS BEARING EARLIER REVISION DATES

REVISION DATES 05-14-13 07-31-13 11-18-13 12-12-13

SHEET 3 OF 25

FILE => 54-0561-c-stagg_1.dwg

USERNAME => s121614 DATE PLOTTED => 17-JUL-2014 TIME PLOTTED => 09:41

DIST	COUNTY	ROUTE	POST MILES TOTAL PROJECT	SHEET No.	TOTAL SHEETS
08	SBd	138	6.2/6.4 2.3/R15.2	1067	1168

REGISTERED CIVIL ENGINEER 8/26/13 DATE

3-3-14
PLANS APPROVAL DATE

REGISTERED PROFESSIONAL ENGINEER
B. R. GUNTER
No. C 66195
Exp. 06-30-14
CIVIL
STATE OF CALIFORNIA

The State of California or its officers or agents shall not be responsible for the accuracy or completeness of electronic copies of this plan sheet.

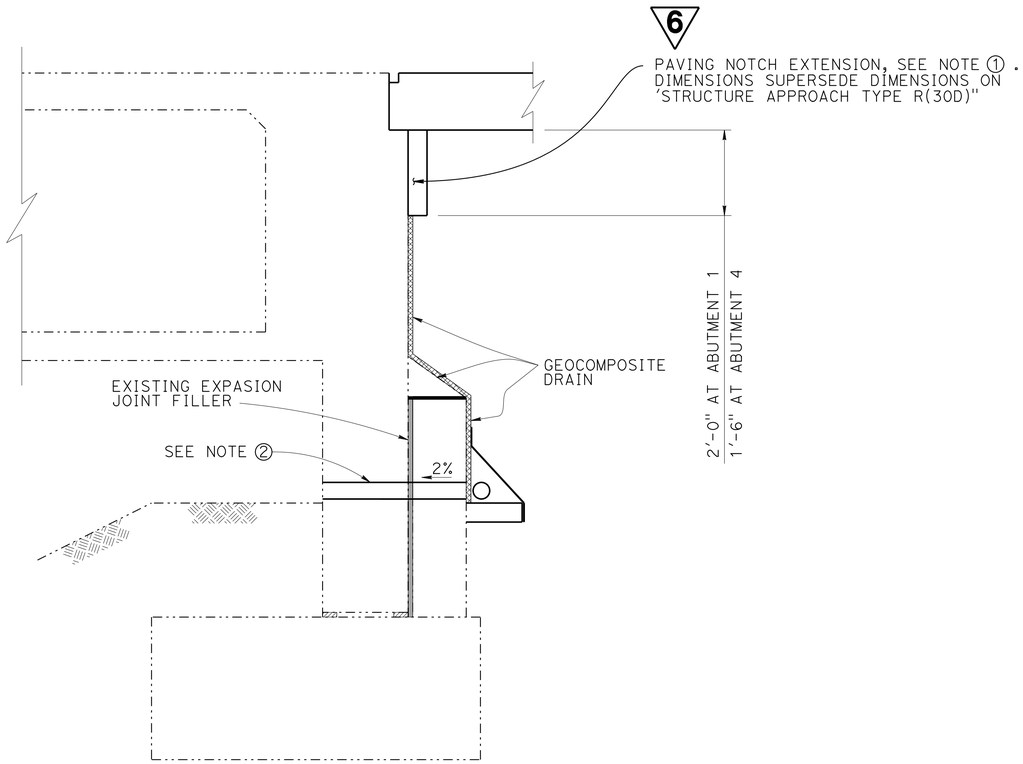

GEOCOMPOSITE DRAIN DETAILS FOR EXISTING ABUTMENTS

½" = 1'-0"

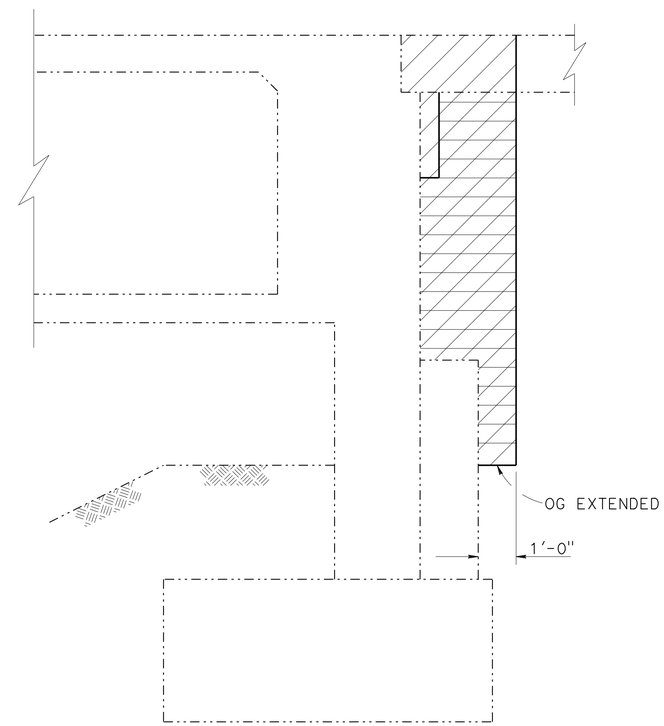

LIMITS OF EXCAVATION AND BACKFILL

½" = 1'-0"

LEGEND:

- STRUCTURAL EXCAVATION
- STRUCTURAL BACKFILL

NOTES:

① For details not shown see "STURCTURE APPROACH TYPE R(30D)

② Core total 3, 3½" ø holes per Abutment @ 24'-0" max O.C. Place 3" PVC into cored holes.

NOTE:
THE CONTRACTOR SHALL VERIFY ALL CONTROLLING FIELD DIMENSIONS BEFORE ORDERING OR FABRICATING ANY MATERIAL.

6 REPLACED PER ADDENDUM No. 6 DATED JULY 17, 2014

	BY	CHECKED
DESIGN	J. Torres	R. Wang
DETAILS	F. Hosseinioun/ H. I.	R. Wang
QUANTITIES	F. Tannous/R. Padre	R. Novik/J. Klieby/J. Duffin

STATE OF CALIFORNIA
DEPARTMENT OF TRANSPORTATION

DIVISION OF ENGINEERING SERVICES
STRUCTURE DESIGN
DESIGN BRANCH 19

BRIDGE NO. 54-0561
POST MILE R14.94

CAJON CREEK BRIDGE (WIDEN)
ABUTMENT DETAILS NO.2

STRUCTURES DESIGN DETAIL SHEET (ENGLISH) (REV. 09-01-10)

ORIGINAL SCALE IN INCHES FOR REDUCED PLANS 0 1 2 3

UNIT: 3621
PROJECT NUMBER & PHASE: 0800000609 - 1 CONTRACT NO.: 08-3401U1

DISREGARD PRINTS BEARING EARLIER REVISION DATES

REVISION DATES: 05-14-13 08-26-13 12-11-13

SHEET 8 OF 25

FILE => 54-0561-f-adet_02.dgn

USERNAME => s121614 DATE PLOTTED => 17-JUL-2014 TIME PLOTTED => 09:41

DIST	COUNTY	ROUTE	POST MILES TOTAL PROJECT	SHEET No.	TOTAL SHEETS
08	SBd	138	6.2/6.4, 2.3/R15.2	1127	1168

Jonathan Szabo 7-30-13
REGISTERED CIVIL ENGINEER DATE

3-3-14
PLANS APPROVAL DATE

REGISTERED PROFESSIONAL ENGINEER JONATHAN SZABO No. C 78563 Exp. 09-30-15 CIVIL STATE OF CALIFORNIA

The State of California or its officers or agents shall not be responsible for the accuracy or completeness of electronic copies of this plan sheet.

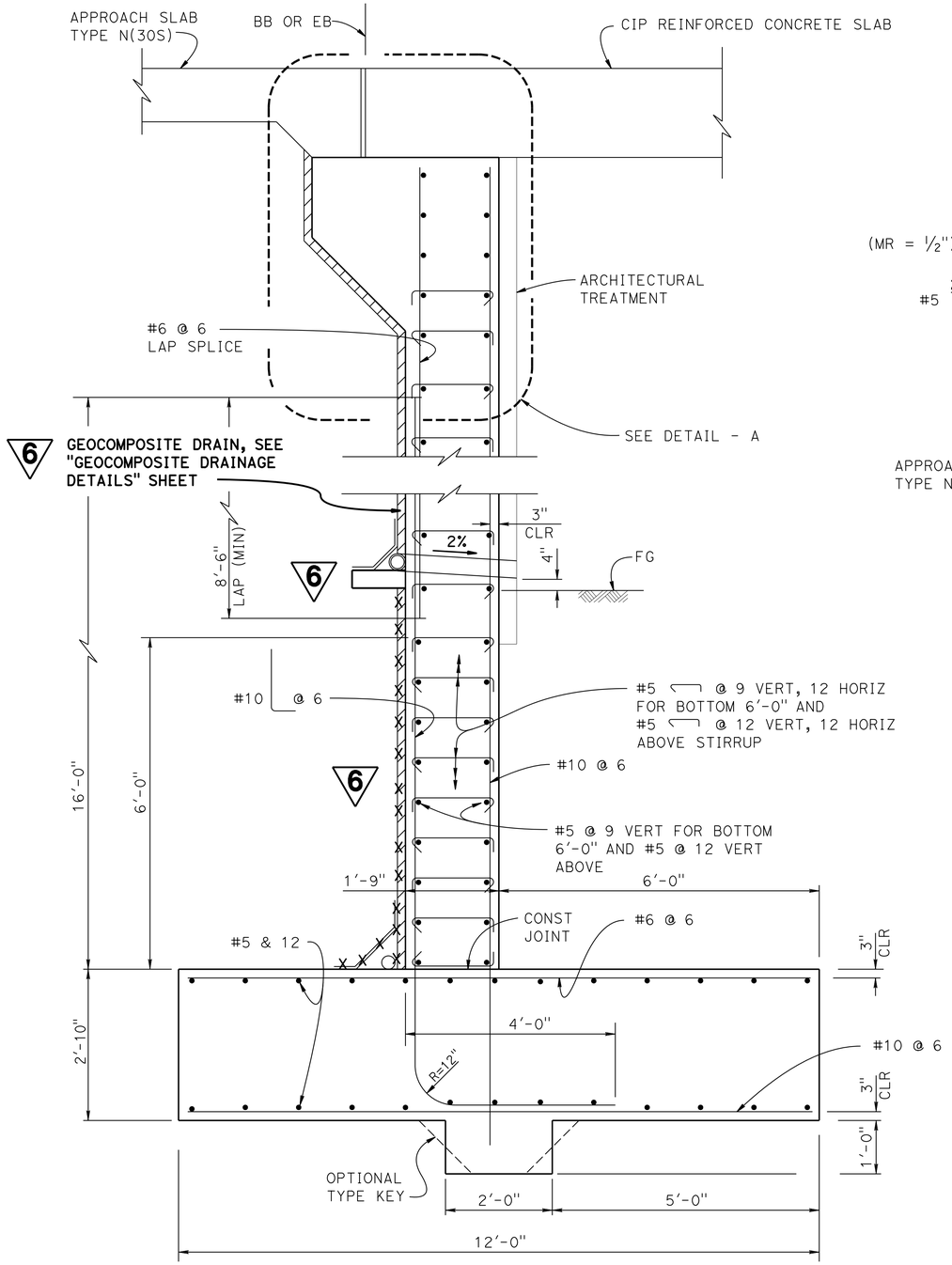

SECTION C-C

3/4" = 1'-0"

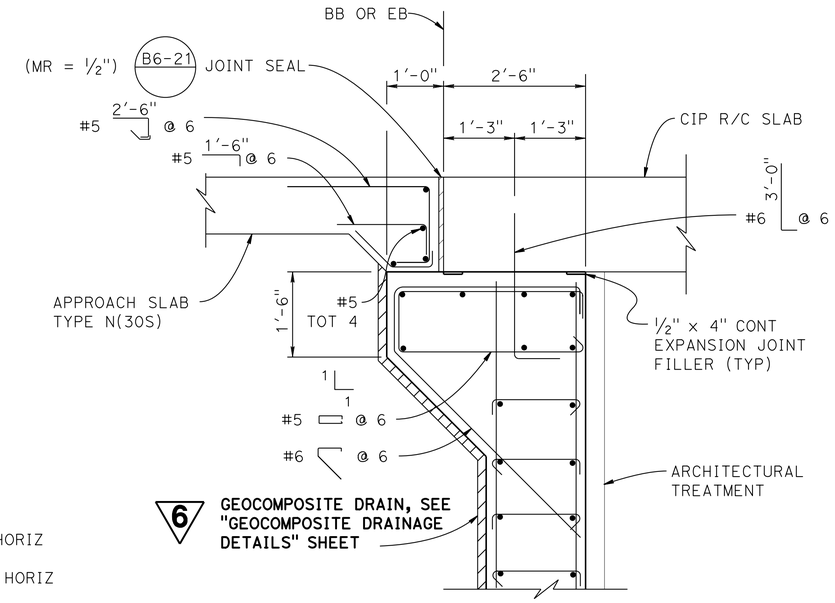

DETAIL - A

3/4" = 1'-0"

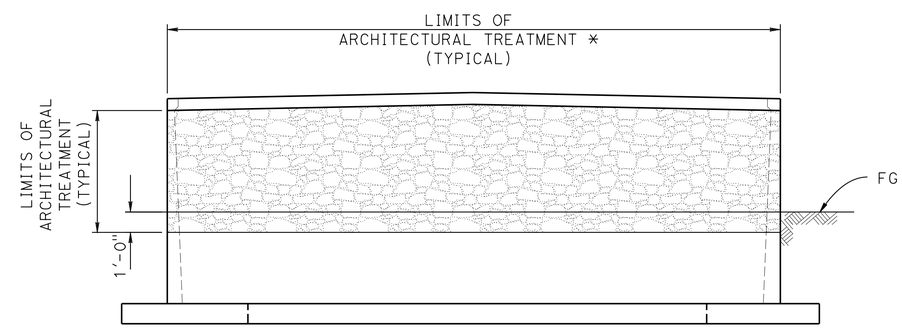

LIMITS OF ARCHITECTURAL TREATMENT

NO SCALE

* NOTE:
SEE "ARCHITECTURAL TREATMENT NO. 1" SHEET.

NOTE:
THE CONTRACTOR SHALL VERIFY ALL CONTROLLING FIELD DIMENSIONS BEFORE ORDERING OR FABRICATING ANY MATERIAL.

6 **REPLACED PER ADDENDUM No. 6 DATED JULY 17, 2014**

	BY	CHECKED
DESIGN	J. Szabo	F. Chen
DETAILS	R. Kirkland	F. Chen
QUANTITIES	J. Szabo	F. Chen

STATE OF CALIFORNIA
DEPARTMENT OF TRANSPORTATION

DIVISION OF ENGINEERING SERVICES
STRUCTURE DESIGN
DESIGN BRANCH 19

BRIDGE NO. 54-1288
POST MILE 13.9

WILDLIFE UNDERCROSSING NO. 2
ABUTMENT DETAILS NO. 1

STRUCTURES DESIGN DETAIL SHEET (ENGLISH) (REV. 09-01-10)

ORIGINAL SCALE IN INCHES FOR REDUCED PLANS 0 1 2 3

UNIT: 3589
PROJECT NUMBER & PHASE: 0800000609 1 CONTRACT NO.: 08-3401U1

DISREGARD PRINTS BEARING EARLIER REVISION DATES

REVISION DATES: 2-25-13 11-19-13 7-26-13

SHEET 7 OF 18

FILE => 54-1288-f-adt07.dgn

USERNAME => s1216814 DATE PLOTTED => 17-JUL-2014 TIME PLOTTED => 09:42

DIST	COUNTY	ROUTE	POST MILES TOTAL PROJECT	SHEET No.	TOTAL SHEETS
08	SBd	138	6.2/6.4, 2.3/R15.2	1128	1168

Jonathan Szabo 7-30-13
REGISTERED CIVIL ENGINEER DATE

3-3-14
PLANS APPROVAL DATE

REGISTERED PROFESSIONAL ENGINEER JONATHAN SZABO No. C 78563 Exp. 09-30-15 CIVIL STATE OF CALIFORNIA

The State of California or its officers or agents shall not be responsible for the accuracy or completeness of electronic copies of this plan sheet.

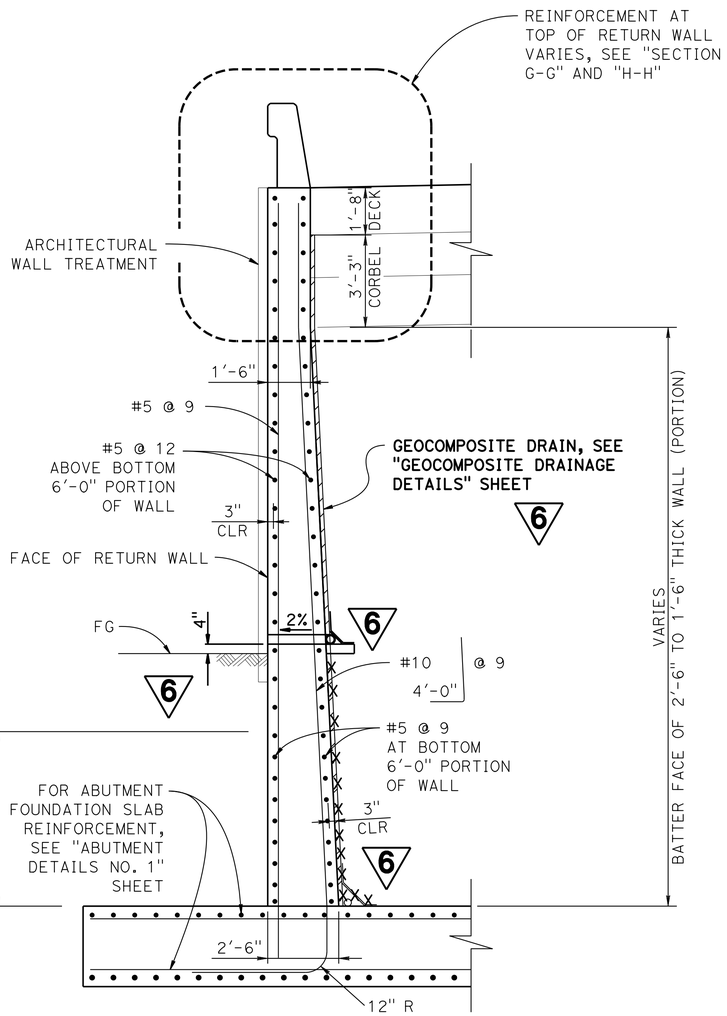

SECTION F-F

3/8" = 1'-0"

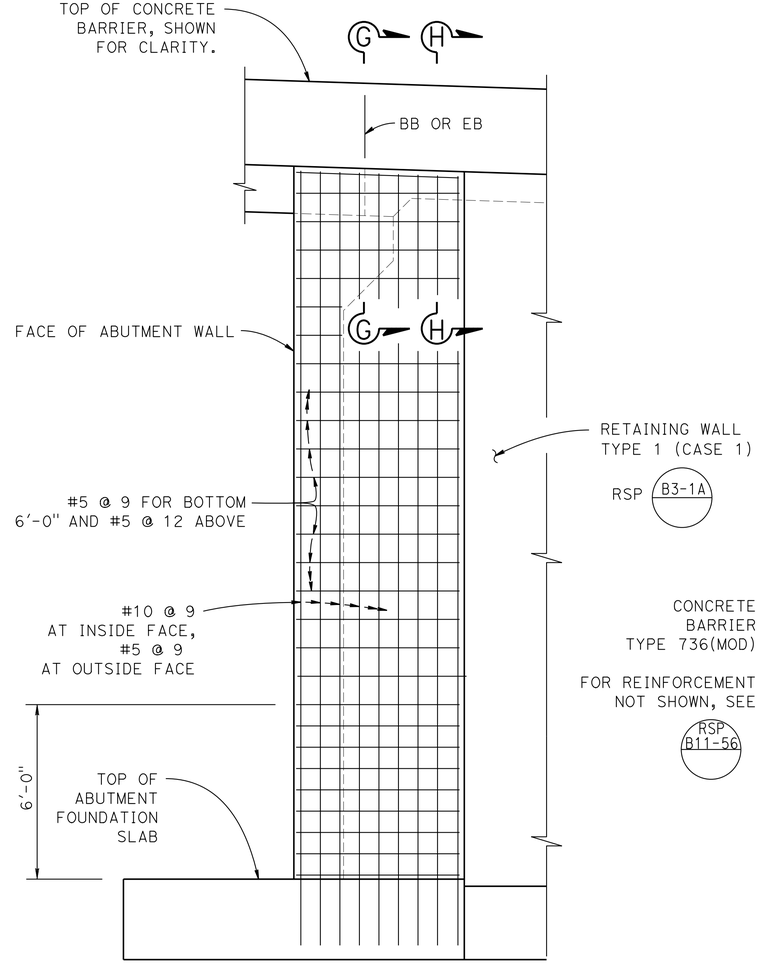

TYPICAL RETURN WALL ELEVATION AT ABUTMENT

3/8" = 1'-0"

NOTE: ABUTMENT 2 RIGHT RETURN WALL SHOWN.

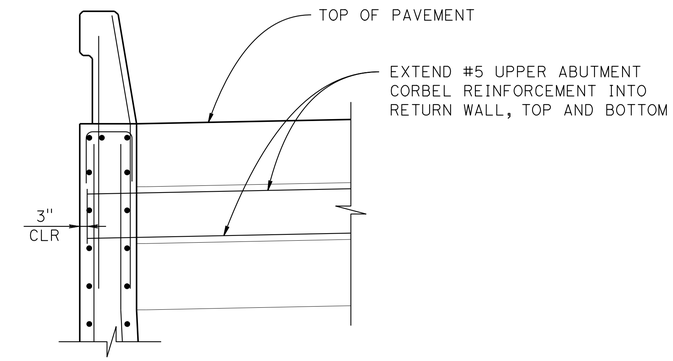

SECTION G-G

1/2" = 1'-0"

NOTE: SECTION G-G SIMILAR TO SECTION H-H, UNLESS SHOWN OTHERWISE.

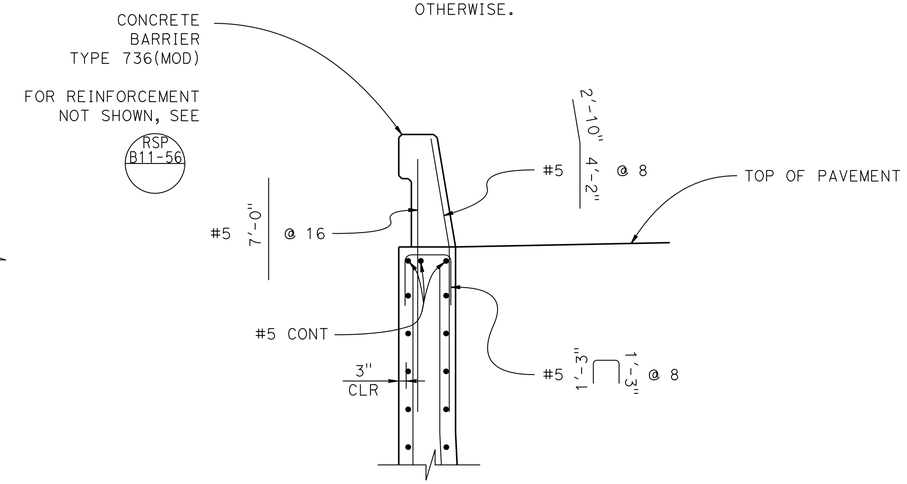

SECTION H-H

1/2" = 1'-0"

NOTE:
THE CONTRACTOR SHALL VERIFY ALL CONTROLLING FIELD DIMENSIONS BEFORE ORDERING OR FABRICATING ANY MATERIAL.

6 REPLACED PER ADDENDUM No. 6 DATED JULY 17, 2014

	BY	CHECKED
DESIGN	J. Szabo	F. Chen
DETAILS	R. Kirkland / J. Szabo	F. Chen
QUANTITIES	J. Szabo	F. Chen

STATE OF CALIFORNIA
DEPARTMENT OF TRANSPORTATION

DIVISION OF ENGINEERING SERVICES
STRUCTURE DESIGN
DESIGN BRANCH 19

BRIDGE NO. 54-1288
POST MILE 13.9

WILDLIFE UNDERCROSSING NO. 2
ABUTMENT DETAILS NO. 2

STRUCTURES DESIGN DETAIL SHEET (ENGLISH) (REV. 09-01-10)

ORIGINAL SCALE IN INCHES FOR REDUCED PLANS 0 1 2 3

UNIT: 3589
PROJECT NUMBER & PHASE: 0800000609 1 CONTRACT NO.: 08-3401U1

DISREGARD PRINTS BEARING EARLIER REVISION DATES

REVISION DATES: 2-25-13 5-13-13 6-3-13 12-12-13

SHEET 8 OF 18

FILE => 54-1288-f-ad108.dgn

USERNAME => s121614 DATE PLOTTED => 17-JUL-2014 TIME PLOTTED => 09:42

DIST	COUNTY	ROUTE	POST MILES TOTAL PROJECT	SHEET No.	TOTAL SHEETS
08	SBd	138	6.2/6.4, 2.3/R15.2	1135	1168

Jonathan Szabo 7-30-13
REGISTERED CIVIL ENGINEER DATE

3-3-14
PLANS APPROVAL DATE

REGISTERED PROFESSIONAL ENGINEER JONATHAN SZABO No. C 78563 Exp. 9-30-15 CIVIL STATE OF CALIFORNIA

The State of California or its officers or agents shall not be responsible for the accuracy or completeness of electronic copies of this plan sheet.

6

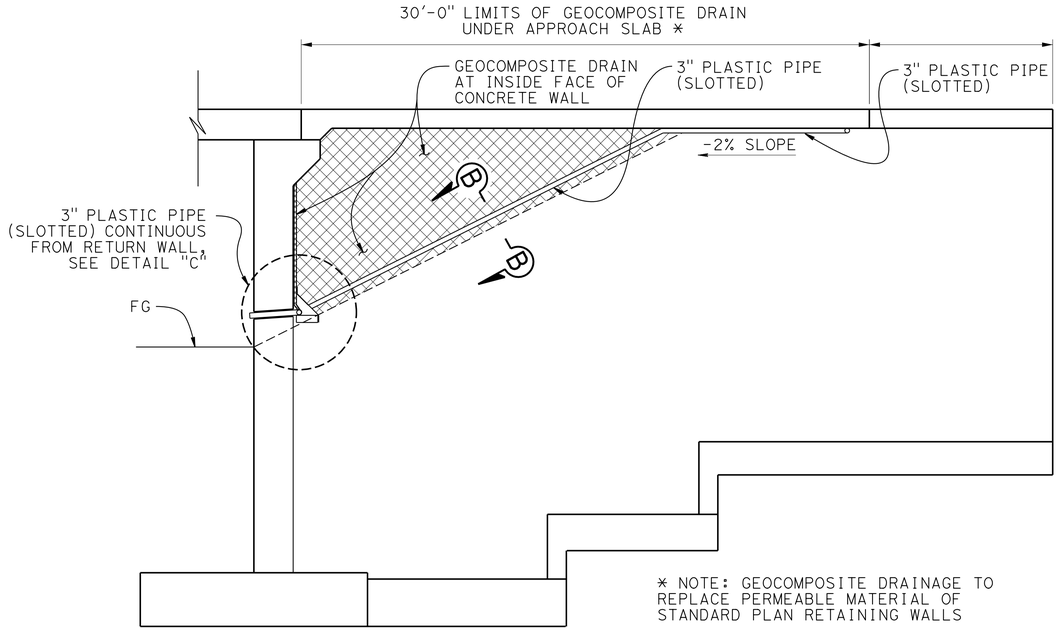

* NOTE: GEOCOMPOSITE DRAINAGE TO REPLACE PERMEABLE MATERIAL OF STANDARD PLAN RETAINING WALLS

SECTION A-A

1/4" = 1'-0"

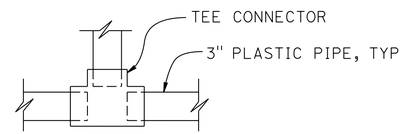

TEE CONNECTOR DETAIL

NO SCALE

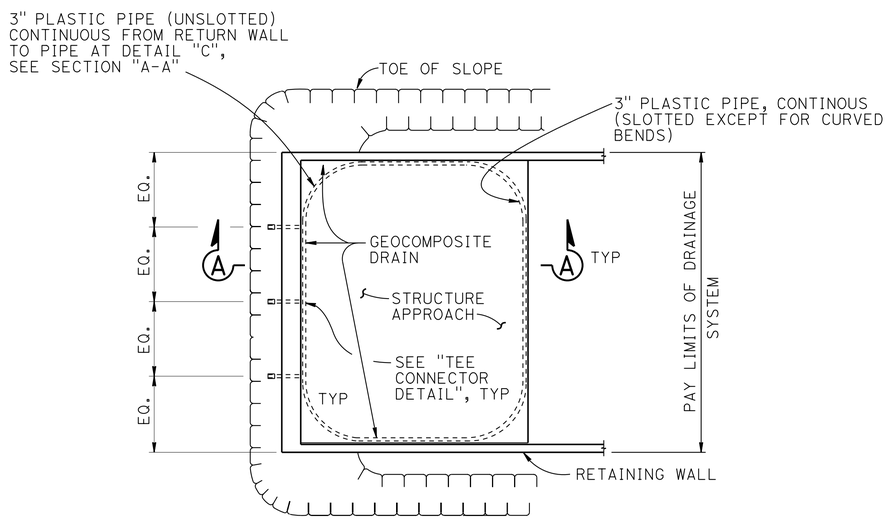

NOTE:
BENDS AND JUNCTIONS IN 3" PLASTIC PIPE ARE 30" RADIUS MINIMUM

TYPICAL PLAN

NO SCALE

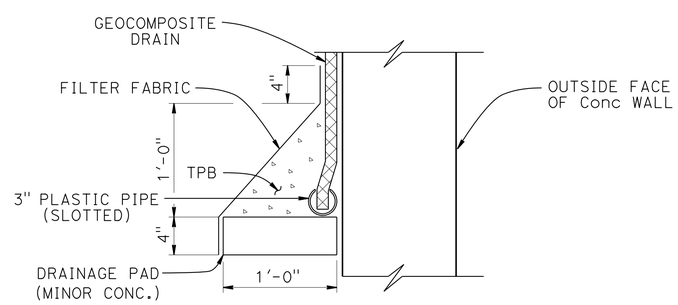

SECTION B-B

1 1/2" = 1'-0"

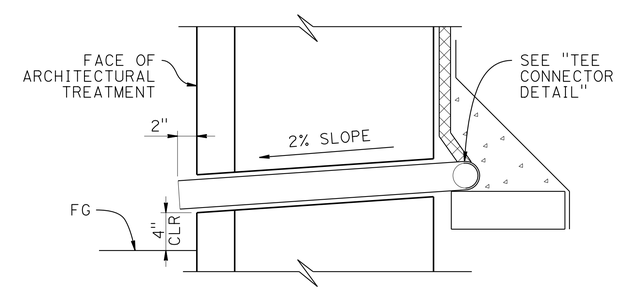

NOTE: DETAIL "C" TO MATCH SECTION B-B UNLESS SHOWN OTHERWISE

DETAIL "C"

1 1/2" = 1'-0"

6 **REPLACED PER ADDENDUM No. 6 DATED JULY 17, 2014**

DESIGN	BY J. Szabo	CHECKED F. Chen	
DETAILS	BY J. Szabo	CHECKED F. Chen	
QUANTITIES	BY J. Szabo	CHECKED F. Chen	

STATE OF CALIFORNIA
DEPARTMENT OF TRANSPORTATION

DIVISION OF ENGINEERING SERVICES

BRIDGE NO. 54-1288
POST MILE 13.9

WILDLIFE UNDERCROSSING NO. 2
GEOCOMPOSITE DRAINAGE DETAILS

STRUCTURES DESIGN DETAIL SHEET (ENGLISH) (REV. 09-01-10)

ORIGINAL SCALE IN INCHES FOR REDUCED PLANS 0 1 2 3

UNIT: 3589
PROJECT NUMBER & PHASE: 0800000609 1
CONTRACT NO.: 08-3401U1

DISREGARD PRINTS BEARING EARLIER REVISION DATES

REVISION DATES

SHEET 15 OF 18

FILE => 54-1288-v-xs3-110_15R.add

USERNAME => s121614 DATE PLOTTED => 17-JUL-2014 TIME PLOTTED => 09:42

DIST	COUNTY	ROUTE	POST MILES TOTAL PROJECT	SHEET No.	TOTAL SHEETS
08	SBd	138	6.2/6.4, 2.3/R15.2	1139	1168

REGISTERED CIVIL ENGINEER 10-03-13 DATE

3-3-14
PLANS APPROVAL DATE

REGISTERED PROFESSIONAL ENGINEER B. R. GUNTER No. C 66195 Exp. 06-30-14 CIVIL STATE OF CALIFORNIA

The State of California or its officers or agents shall not be responsible for the accuracy or completeness of electronic copies of this plan sheet.

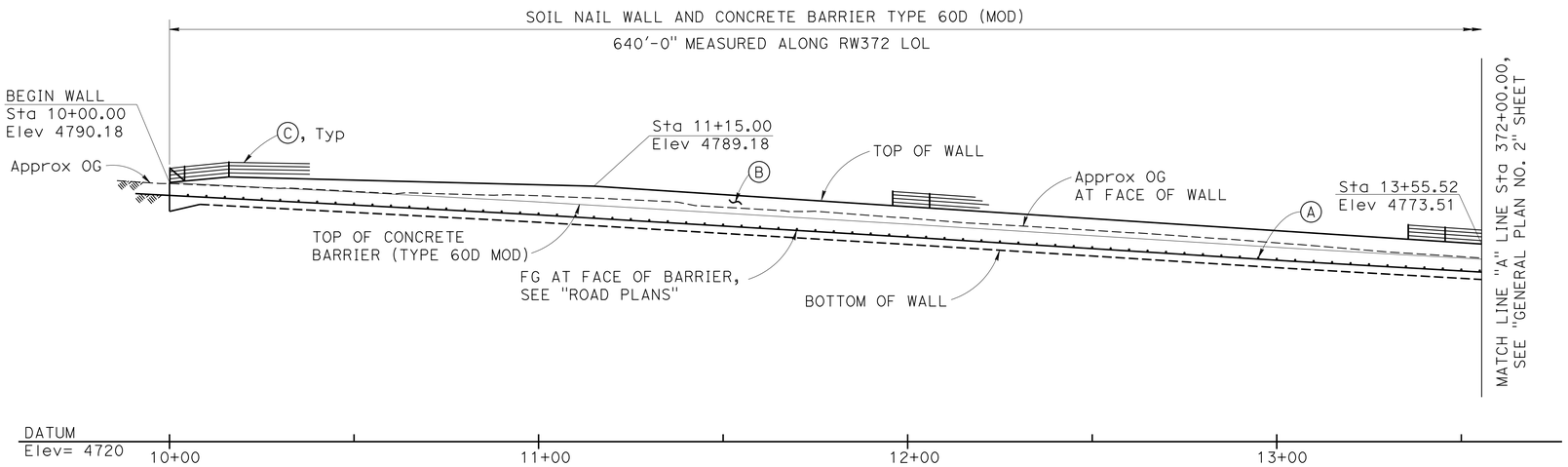

MIRRORED DEVELOPED ELEVATION

1" = 20'

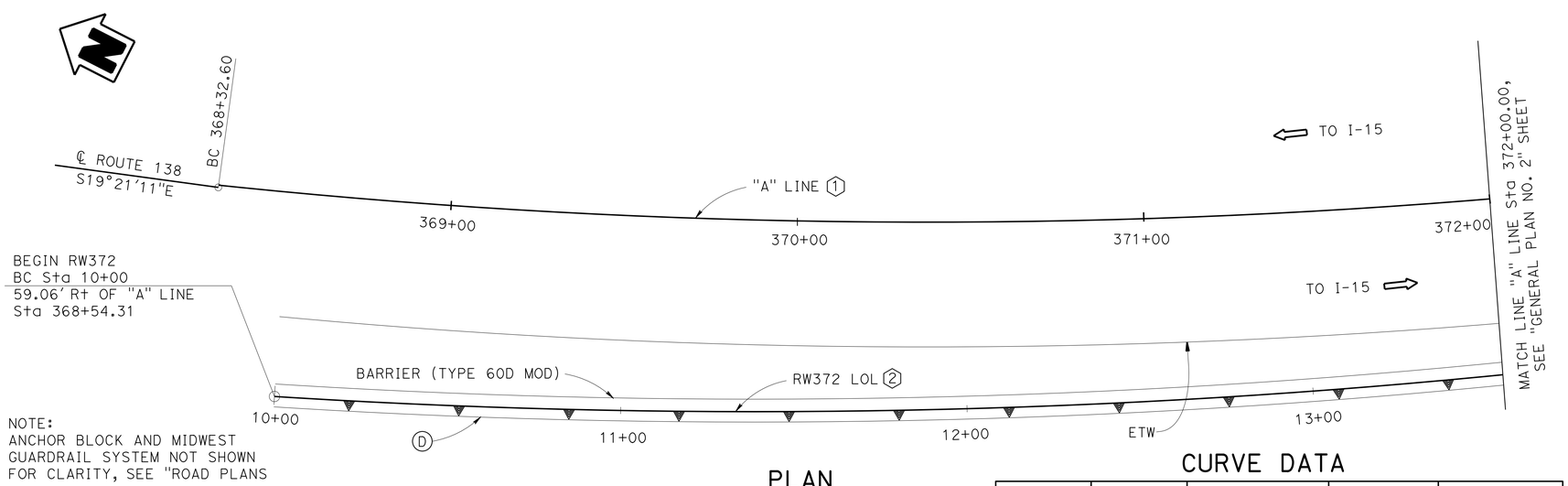

NOTE:
ANCHOR BLOCK AND MIDWEST GUARDRAIL SYSTEM NOT SHOWN FOR CLARITY, SEE "ROAD PLANS

PLAN

1" = 20'

LEGEND:

⇨ Indicates direction of traffic flow

CURVE DATA

No.	R	Δ	T	L
1	1968.500'	38°18'52"	683.857'	1316.362'
2	2192.801'	16°43'21"	322.291'	640.000'

STANDARD PLANS DATED 2010

	A10A	ABBREVIATIONS (SHEET 1 OF 2)
RSP	A10B	ABBREVIATIONS (SHEET 2 OF 2)
	A10C	LINES AND SYMBOLS (SHEET 1 OF 3)
	A10D	LINES AND SYMBOLS (SHEET 2 OF 3)
	A10E	LINES AND SYMBOLS (SHEET 3 OF 3)
	A10F	LEGEND-SOIL (SHEET 1 OF 2)
	A10G	LEGEND-SOIL (SHEET 2 OF 2)
	A10H	LEGEND-ROCK
	BO-3	BRIDGE DETAILS
	B3-6	RETAINING WALL DETAIL NO. 2
RSP	B11-47	CABLE RAILING

STANDARD PLAN SHEET NO. / DETAIL NO.

RSP REVISED STANDARD PLAN SHEET NO. / DETAIL NO.

NOTES:

Ⓐ Weephole between soil nails, see "MISCELLANEOUS DETAILS" sheet.

Ⓑ Concrete surface texture, see "ARCHITECTURAL TREATMENT" sheets.

Ⓒ Cable Railing RSP B11-47

Ⓓ Gutter B3-6

Ⓔ Stain all expose concrete to 1' below top of concrete barrier.

Ⓕ For GENERAL NOTES, see "SOIL NAIL WALL DETAILS" sheet.

Ⓖ For INDEX TO PLANS, see "GENERAL PLAN NO. 2" sheet.

QUANTITIES

STRUCTURE EXCAVATION (SOIL NAIL WALL)	342	CY
STRUCTURE BACKFILL (SOIL NAIL WALL)	56	CY
SOIL NAIL	3,468	LF
STRUCTURAL CONCRETE, RETAINING WALL	184	CY
CONCRETE SURFACE TEXTURE	4,333	SQFT
BAR REINFORCING STEEL (RETAINING WALL)	34,192	LB
STRUCTURAL SHOTCRETE	76	CY
PREPARE AND STAIN CONCRETE	4,333	SQFT
MINOR CONCRETE (GUTTER) (CY)	22	CY
6 CABLE RAILING ~~(MODIFIED)~~	640	LF
CONCRETE BARRIER (TYPE 60D MODIFIED)	640	LF

6 REPLACED PER ADDENDUM No. 6 DATED JULY 17, 2014

DESIGN	BY A. Vega	CHECKED W. Hsia	LOAD & RESISTANCE FACTOR DESIGN	LIVE LOADING: HL93 W/"LOW-BOY": PERMIT DESIGN VEHICLE
DETAILS	BY F. Hosseinioun/T. Dang/H.I.	CHECKED W. Hsia	LAYOUT BY S. Pink	CHECKED A. Vega
QUANTITIES	BY H. Win	CHECKED V. Altamirano	SPECIFICATIONS BY S. Seifert	PLANS AND SPECS COMPARED W. Siu

B. Gunter
DESIGN ENGINEER

ORIGINAL SCALE IN INCHES FOR REDUCED PLANS 0 1 2 3

STATE OF CALIFORNIA
DEPARTMENT OF TRANSPORTATION

DIVISION OF ENGINEERING SERVICES
STRUCTURE DESIGN
DESIGN BRANCH 19

BRIDGE NO. 54E0122
POST MILE 7.04

RETAINING WALL NO. 372
GENERAL PLAN NO. 1

UNIT: 3621
PROJECT NUMBER & PHASE: 0800000609 - 1 CONTRACT NO.: 08-3401U1

DISREGARD PRINTS BEARING EARLIER REVISION DATES

REVISION DATES 02-26-13 11-19-13 12-12-13

SHEET 1 OF 19

USERNAME => s121614 DATE PLOTTED => 17-JUL-2014 TIME PLOTTED => 08:42

STRUCTURES DESIGN GENERAL PLAN SHEET (ENGLISH) (REV.09-01-10)

FILE => 54-rw372-a-gp_01.dgn

DIST	COUNTY	ROUTE	POST MILES TOTAL PROJECT	SHEET No.	TOTAL SHEETS
08	SBd	138	6.2/6.4, 2.3/R15.2	1158	1168

REGISTERED CIVIL ENGINEER 10-03-13 DATE

3-3-14
PLANS APPROVAL DATE

REGISTERED PROFESSIONAL ENGINEER B. R. GUNTER No. C 66195 Exp. 06-30-14 CIVIL STATE OF CALIFORNIA

The State of California or its officers or agents shall not be responsible for the accuracy or completeness of electronic copies of this plan sheet.

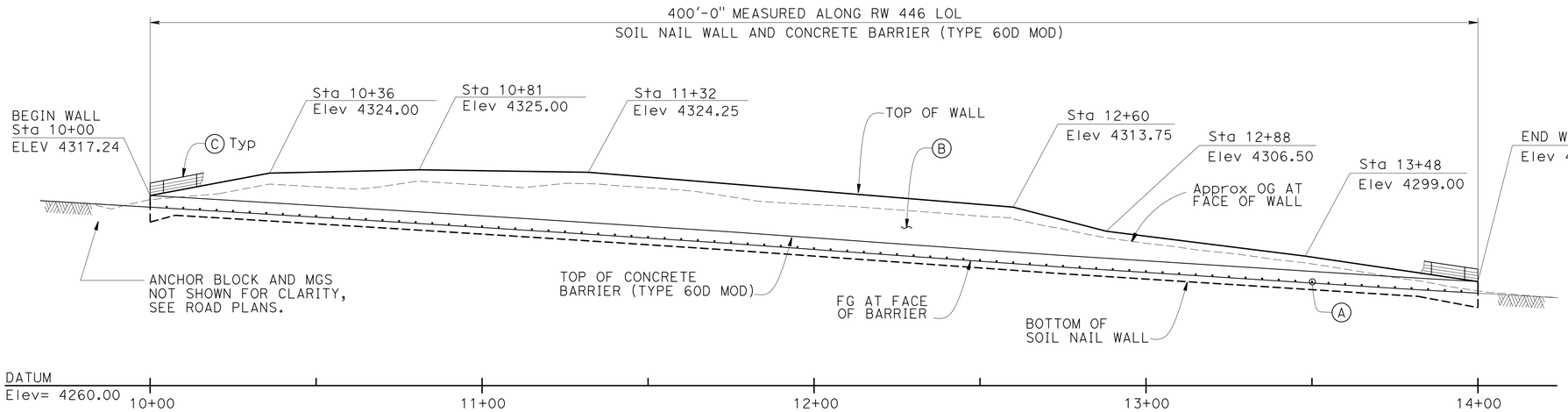

MIRRORED DEVELOPED ELEVATION

1" = 20'

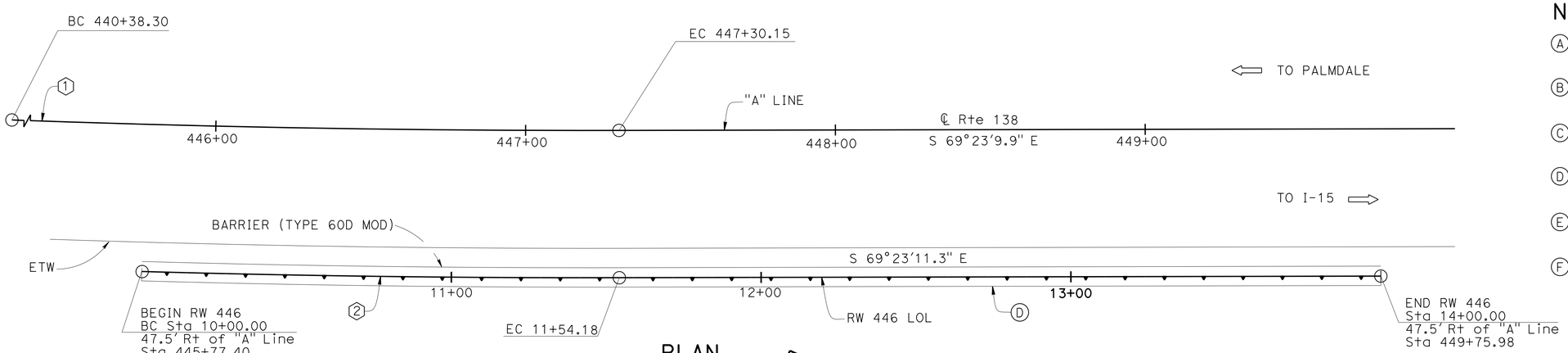

PLAN

1" = 20'

STANDARD PLANS DATED 2010

	A10A	ABBREVIATIONS (SHEET 1 OF 2)
RSP	A10B	ABBREVIATIONS (SHEET 2 OF 2)
	A10C	LINES AND SYMBOLS (SHEET 1 OF 3)
	A10D	LINES AND SYMBOLS (SHEET 2 OF 3)
	A10E	LINES AND SYMBOLS (SHEET 3 OF 3)
	A10F	LEGEND-SOIL (SHEET 1 OF 2)
	A10G	LEGEND-SOIL (SHEET 2 OF 2)
	A10H	LEGEND-ROCK
	BO-3	BRIDGE DETAILS
	B3-6	RETAINING WALL DETAIL NO. 2
RSP	B11-47	CABLE RAILING

STANDARD PLAN SHEET NO. / DETAIL NO.

RSP REVISED STANDARD PLAN SHEET NO. / DETAIL NO.

NOTES:

(A) Weephole between Soil Nails, see "MISCELLANEOUS DETAILS" sheet.

(B) Concrete Surface Texture, see "ARCHITECTURAL TREATMENT" sheets.

(C) Cable Railing RSP B11-47

(D) Gutter B3-6

(E) For GENERAL NOTES, see "SOIL NAIL WALL DETAILS" sheet.

(F) Stain all exposed concrete to 1' below top of concrete barrier.

4 REPLACED PER ADDENDUM No. 4 DATED JUNE 27, 2014

6 REPLACED PER ADDENDUM No. 6 DATED JULY 17, 2014

CURVE DATA

No.	R	Δ	T	L
1	5085.292'	07°47'42.0"	346.459'	691.849'
2	5132.422'	01°43'16.3"	77.096'	154.180'

LEGEND:

⇨ Indicates direction of traffic flow

QUANTITIES

	STRUCTURE EXCAVATION (SOIL NAIL WALL)	432	CY
	STRUCTURE BACKFILL (SOIL NAIL WALL)	35	CY
	SOIL NAIL	5,548	LF
	STRUCTURAL CONCRETE, RETAINING WALL	193	CY
	CONCRETE SURFACE TEXTURE	5,199	SQFT
	BAR REINFORCING STEEL (RETAINING WALL)	35,551	LB
	STRUCTURAL SHOTCRETE	84	CY
	PREPARE AND STAIN CONCRETE	5,189	SQFT
4	~~GEOCOMPOSITE DRAIN~~	~~4,644~~	~~SQFT~~
	MINOR CONCRETE (GUTTER) (CY)	14	CY
6	CABLE RAILING ~~(MODIFIED)~~	400	LF
	CONCRETE BARRIER (TYPE 60D MODIFIED)	400	LF

INDEX TO PLANS

Sheet NO.	Title
1	GENERAL PLAN
2	FOUNDATION PLAN
3	SOIL NAIL ELEVATION NO. 1
4	SOIL NAIL ELEVATION NO. 2
5	SOIL NAIL WALL DETAILS
6	SOIL NAIL ASSEMBLY
7	MISCELLANEOUS DETAILS
8	ARCHITECTURAL TREATMENT NO. 1
9	ARCHITECTURAL TREATMENT NO. 2
10	ARCHITECTURAL TREATMENT DETAIL
11	LOG OF TEST BORINGS

B. Gunter
DESIGN ENGINEER

	BY	CHECKED			
DESIGN	A. Vega	W. Hsia	LOAD & RESISTANCE FACTOR DESIGN	LIVE LOADING: HL93 W/"LOW-BOY": PERMIT DESIGN VEHICLE	
DETAILS	S. Pink/ M. Tran/ H. I.	W. Hsia	LAYOUT	S. Pink	A. Vega
QUANTITIES	H. Win	V. Altamirano	SPECIFICATIONS	S.Seifert	W. Siu

ORIGINAL SCALE IN INCHES FOR REDUCED PLANS 0 1 2 3

STATE OF CALIFORNIA
DEPARTMENT OF TRANSPORTATION

DIVISION OF ENGINEERING SERVICES
STRUCTURE DESIGN
DESIGN BRANCH 19

BRIDGE NO. 54E0121
POST MILE 8.5

RETAINING WALL NO. 446
GENERAL PLAN

UNIT: 3621
PROJECT NUMBER & PHASE: 0800000609 - 1 CONTRACT NO.: 08-3401U1

DISREGARD PRINTS BEARING EARLIER REVISION DATES

REVISION DATES 04/05/13 12/12/13 11-14-13

SHEET 1 OF 11

USERNAME => s121614 DATE PLOTTED => 17-JUL-2014 TIME PLOTTED => 09:42

STRUCTURES DESIGN GENERAL PLAN SHEET (ENGLISH) (REV.09-01-10)

FILE => 54-rw446-a-gp.dgn