DIST	COUNTY	ROUTE	POST MILES TOTAL PROJECT	SHEET No.	TOTAL SHEETS
08	SBd	38	26.3/26.8	45	63

REGISTERED CIVIL ENGINEER — DATE 1-10-14

PLANS APPROVAL DATE 4-01-14

REGISTERED PROFESSIONAL ENGINEER — TIMOTHY J. POWELL — No. C 61037 — Exp. 12-31-14 — CIVIL — STATE OF CALIFORNIA

The State of California or its officers or agents shall not be responsible for the accuracy or completeness of electronic copies of this plan sheet.

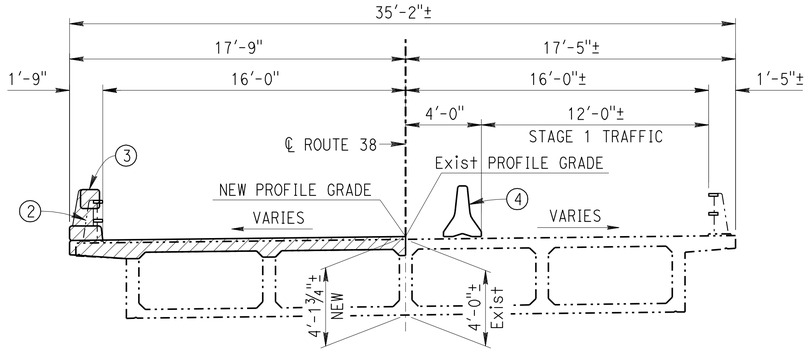

STAGE 1 CONSTRUCTION

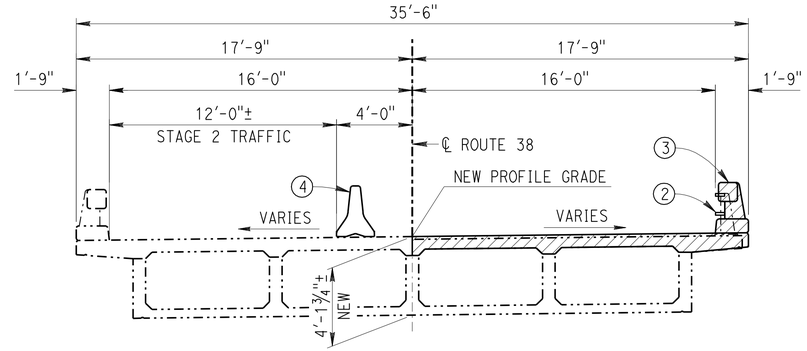

STAGE 2 CONSTRUCTION

TYPICAL SECTION

¼" = 1'

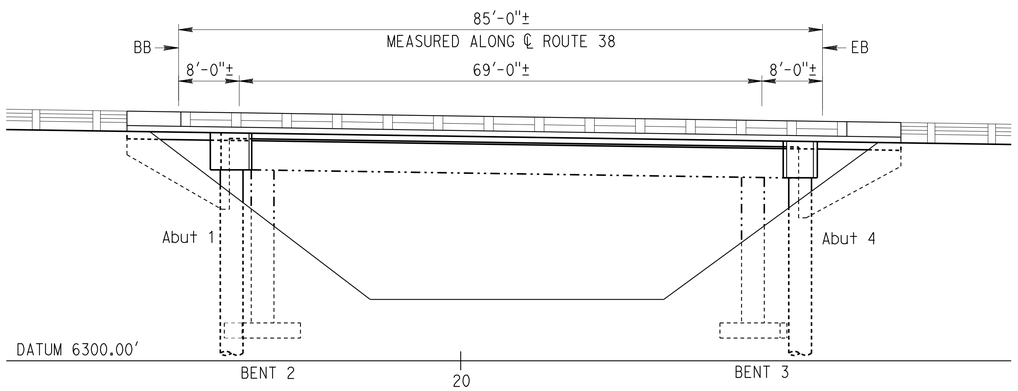

ELEVATION

1" = 10'

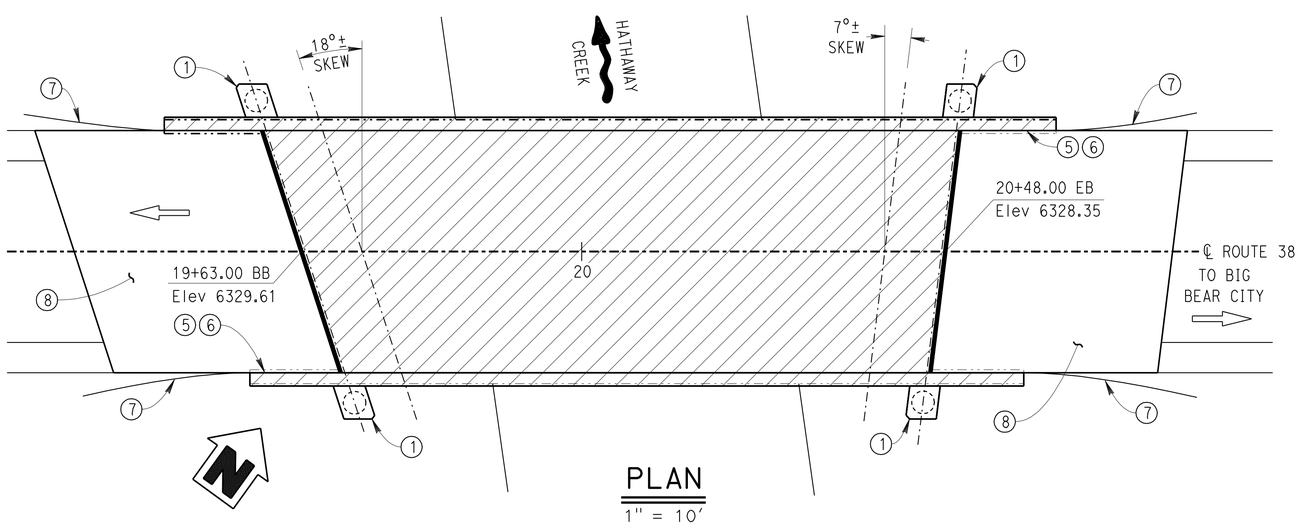

PLAN

1" = 10'

INDEX TO PLANS

SHEET No.	TITLE
1	GENERAL PLAN
2	GENERAL NOTES
3	GRID GRADES
4	EARTHQUAKE RETROFIT DETAILS No. 1
5	EARTHQUAKE RETROFIT DETAILS No. 2
6	EARTHQUAKE RETROFIT DETAILS No. 3
7	EARTHQUAKE RETROFIT DETAILS No. 4
8	EARTHQUAKE RETROFIT DETAILS No. 5
9	EARTHQUAKE RETROFIT DETAILS No. 6
10	EARTHQUAKE RETROFIT DETAILS No. 7
11	EARTHQUAKE RETROFIT DETAILS No. 8
12	EARTHQUAKE RETROFIT DETAILS No. 9
13	ABUTMENT AND BENT CAP DETAILS
14	TYPICAL SECTION
15	DECK REINFORCEMENT DETAILS
16	BARRIER ARCHITECTURAL TREATMENT DETAILS
17	TEMPORARY SUPPORT DETAILS
18	STRUCTURE APPROACH TYPE R(30D)
19	LOG OF TEST BORINGS

STANDARD PLANS DATED 2010

SHEET No.	TITLE
A10A	ABBREVIATIONS (SHEET 1 OF 2)
RSP A10B	ABBREVIATIONS (SHEET 2 OF 2)
A10C	LINES AND SYMBOLS (SHEET 1 OF 3)
A10D	LINES AND SYMBOLS (SHEET 2 OF 3)
A10E	LINES AND SYMBOLS (SHEET 3 OF 3)
A62C	LIMITS OF PAYMENT FOR EXCAVATION AND BACKFILL BRIDGE
B0-1	BRIDGE DETAILS
B0-5	BRIDGE DETAILS
B0-13	BRIDGE DETAILS
B6-21	JOINT SEALS (MAXIMUM MOVEMENT RATING = 2")
B11-60	CONCRETE BARRIER TYPE 80 (SHEET 1 OF 2)
B11-61	CONCRETE BARRIER TYPE 80 (SHEET 2 OF 2)

NOTES: (APPLY TO ALL SHEETS)

Indicates existing.

THE CONTRACTOR SHALL VERIFY ALL CONTROLLING FIELD DIMENSIONS BEFORE ORDERING OR FABRICATING ANY MATERIAL.

All reinforcing steel shall be epoxy coated except for CIDH piles.

STANDARD PLAN SHEET NUMBER
DETAIL NUMBER

NOTES: (APPLY TO THIS SHEET ONLY)

Indicates limits of bridge removal (portion) and place new fiber-reinforced concrete deck and Concrete Barrier Type 80 (Mod).

Indicates location of place joint seal. For details see "DECK REINFORCEMENT DETAILS" sheet.

(1) Earthquake retrofit at Abutments 1 and 4; for details see "EARTHQUAKE RETROFIT DETAILS No. 1" through "EARTHQUAKE RETROFIT DETAILS No. 9" sheets.

(2) Remove existing Barrier Railing Type 8, salvage existing metal railing element.

(3) New Concrete Barrier Type 80 Mod. For architectural treatment see "BARRIER ARCHITECTURAL TREATMENT DETAILS" sheet. For all other details see B11-60

(4) Temporary Railing Type K, for locations see "Road Plans".

(5) Paint: HATHAWAY CREEK BRIDGE

(6) Paint: BR. NO. 54-0015

(7) New MBGR, see "Road Plans".

(8) New Structure Approach Type R(30D). For details see "STRUCTURE APPROACH TYPE R(30D)" sheet.

See "GENERAL NOTES" sheet for "GENERAL NOTES" and "QUANTITIES".

1 ADDED PER ADDENDUM No. 1, DATED MAY 1, 2014

Michael J. Lee 1-10-14
DESIGN ENGINEER

DESIGN	BY Tim Powell	CHECKED Charles Hutchinson	LOAD FACTOR DESIGN	LIVE LOADING: HS20-44 AND ALTERNATIVE AND PERMIT DESIGN LOAD
DETAILS	BY GF Bidwell	CHECKED Charles Hutchinson	LAYOUT	BY GF BIDWELL / CHECKED Tim Powell
QUANTITIES	BY Tim Powell	CHECKED Charles Hutchinson	SPECIFICATIONS	BY Steven Seifert / PLANS AND SPECS COMPARED Steven Seifert

STATE OF CALIFORNIA
DEPARTMENT OF TRANSPORTATION

DIVISION OF MAINTENANCE
STRUCTURE MAINTENANCE DESIGN

BRIDGE No. 54-0015
POST MILE 26.58

1 HATHAWAY CREEK
GENERAL PLAN

STRUCTURES MAINTENANCE GENERAL PLAN SHEET (ENGLISH) (REV. 09-01-10)

ORIGINAL SCALE IN INCHES FOR REDUCED PLANS 0 1 2 3

UNIT: 3488
PROJECT NUMBER & PHASE: 0800000608 1
CONTRACT No.: 08-336301

DISREGARD PRINTS BEARING EARLIER REVISION DATES — REVISION DATES: 3-6-13, 5-31-13, 8-6-13, 12-11-13, 1-10-14

SHEET 1 OF 19

FILE => 08-336301_01gp.dgn

USERNAME => s121511 DATE PLOTTED => 30-APR-2014 TIME PLOTTED => 15:08

DIST	COUNTY	ROUTE	POST MILES TOTAL PROJECT	SHEET No.	TOTAL SHEETS
08	SBd	38	26.3/26.8	46	63

REGISTERED CIVIL ENGINEER 1-10-14 DATE

4-01-14
PLANS APPROVAL DATE

REGISTERED PROFESSIONAL ENGINEER M. Van De Pol No. 35610 Exp. 9/30/2015 CIVIL STATE OF CALIFORNIA

The State of California or its officers or agents shall not be responsible for the accuracy or completeness of electronic copies of this plan sheet.

GENERAL NOTES
LOAD AND RESISTANCE FACTOR DESIGN

DESIGN: AASHTO LRFD BRIDGE DESIGN SPECIFICATIONS, 3rd Edition with the 2005 Interims and Caltrans Amendments v3.06.01

SEISMIC DESIGN: Caltrans Seismic Design Criteria (SDC), Version 1.6 June 2010

DEAD LOAD: Includes 50 psf For Future Wearing Surface

SEISMIC LOADING: See Site Specific Acceleration Response Spectra Curve

REINFORCED CONCRETE:
f_y = 60000 psi n = 9
f'_c = 5000 psi at 28 Days (Bolster and Deck)
f'_c = 4000 psi at 28 Days (CIDH Pile)

QUANTITIES

SALVAGE METAL BRIDGE RAILING	220	LF
BRIDGE REMOVAL (PORTION)	LUMP	SUM
STRUCTURE EXCAVATION (BRIDGE)	34	CY
STRUCTURE BACKFILL (BRIDGE)	20	CY
TEMPORARY SUPPORT	LUMP	SUM
36" CAST-IN-DRILLED-HOLE CONCRETE PILING	170	LF
STRUCTURAL CONCRETE, BRIDGE	30	CY
STRUCTURAL CONCRETE, BRIDGE (FIBER-REINFORCED)	92	CY
AGGREGATE BASE (APPROACH SLAB)	7	CY
STRUCTURAL CONCRETE, APPROACH SLAB (TYPE R)	71	CY
PAVING NOTCH EXTENSION	73	CF
ARCHITECTURAL TREATMENT	570	SQFT
DRILL AND BOND DOWEL	320	LF
JOINT SEAL (MR 1/2")	66	LF
BAR REINFORCING STEEL (BRIDGE)	19,130	LB
BAR REINFORCING STEEL (EPOXY COATED)(BRIDGE)	41,660	LB
PREPARE AND STAIN CONCRETE	1,174	SQFT
CONCRETE BARRIER (TYPE 80)(MODIFIED)	220	LF

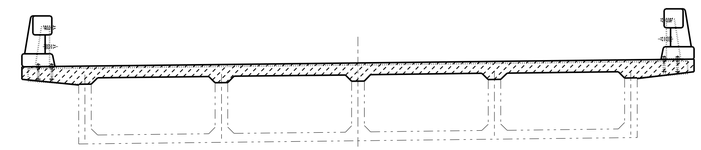

TYPICAL SECTION

DECK REPLACEMENT

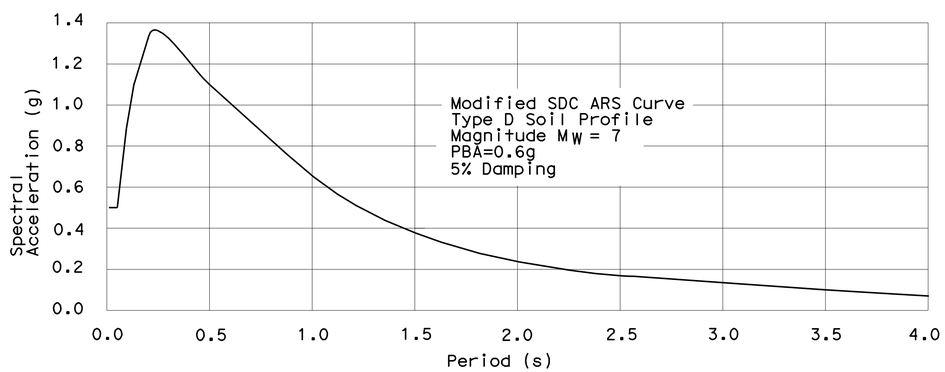

SITE SPECIFIC ACCELERATION RESPONSE SPECTRA CURVE

No Scale

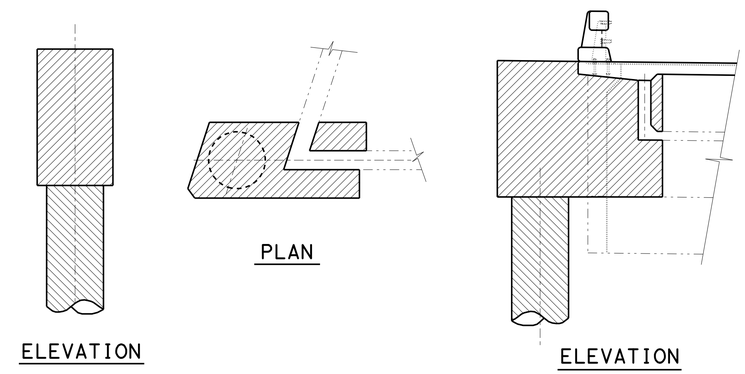

EARTHQUAKE RETROFIT

CONCRETE STRENGTH AND TYPE LIMITS

STRUCTURE CONCRETE (5000 psi @ 28 Days)

STRUCTURE CONCRETE (4000 psi @ 28 Days)

STRUCTURE CONCRETE, FIBER-REINFORCED (4000 psi @ 28 Days)

PILE DATA TABLE

Location	Pile Type	Design Loading (kips)	CIDH Cut-off Elev(Ft)	Nominal Resistance Compression (kips)	Nominal Resistance Tension (kips)	Design Tip Elevation (Ft)	Specified Tip Elevation (Ft)	Nominal Driving Resistance (kips)
Abut 1	36-inch CIDH	N/A	6321.8 - 6323.0	22.0	200	6301 (a) 6281 (d)	6280	N/A
Abut 4	36-inch CIDH	N/A	6321.1 - 6321.4	22.0	200	6301 (a) 6281 (d)	6280	N/A

1) Design tip elevations are controlled by: (a) Compression, (b) Tension, (c) Settlement, (d) Lateral Load, respectively

1 ADDED PER ADDENDUM No. 1, DATED MAY 1, 2014

	BY	CHECKED
DESIGN	M. Van De Pol	P. Norboe
DETAILS	M. Van De Pol	P. Norboe
QUANTITIES	M. Van De Pol	P. Norboe

STATE OF CALIFORNIA
DEPARTMENT OF TRANSPORTATION

DIVISION OF ENGINEERING SERVICES
STRUCTURE DESIGN
DESIGN BRANCH 9

BRIDGE NO. 54-0015
POST MILE 26.6

1 HATHAWAY CREEK
GENERAL NOTES

STRUCTURES DESIGN DETAIL SHEET (ENGLISH) (REV. 09-01-10)

ORIGINAL SCALE IN INCHES FOR REDUCED PLANS 0 1 2 3

UNIT: 3594
PROJECT NUMBER & PHASE: 0800000608 1
CONTRACT NO.: 08-336304

DISREGARD PRINTS BEARING EARLIER REVISION DATES

REVISION DATES 04/26/12 12/07/13 1-10-14

SHEET 2 OF 19

FILE => 08-336301_02gennotes.dgn

USERNAME => s127511 DATE PLOTTED => 30-APR-2014 TIME PLOTTED => 15:08

DIST	COUNTY	ROUTE	POST MILES TOTAL PROJECT	SHEET No.	TOTAL SHEETS
08	SBd	38	26.3/26.8	47	63

REGISTERED CIVIL ENGINEER 1-10-14 DATE

4-01-14
PLANS APPROVAL DATE

REGISTERED PROFESSIONAL ENGINEER TIMOTHY J. POWELL No. C 61037 Exp. 12-31-14 CIVIL STATE OF CALIFORNIA

The State of California or its officers or agents shall not be responsible for the accuracy or completeness of electronic copies of this plan sheet.

NOTES: (APPLY TO THIS SHEET ONLY)

Elevations shown at 10′ increments along ℄ Route 38.

Elevations do not include camber.

GRID OF DECK ELEVATIONS

3/16" = 1′

1 ADDED PER ADDENDUM No. 1, DATED MAY 1, 2014

	BY	CHECKED
DESIGN	Tim Powell	Charles Hutchinson
DETAILS	GF Bidwell	Charles Hutchinson
QUANTITIES	Tim Powell	Charles Hutchinson

STATE OF CALIFORNIA
DEPARTMENT OF TRANSPORTATION

DIVISION OF MAINTENANCE
STRUCTURE MAINTENANCE DESIGN

BRIDGE No. 54-0015
POST MILE 26.58

1 HATHAWAY CREEK
GRID GRADES

STRUCTURES MAINTENANCE GENERAL PLAN SHEET (ENGLISH) (REV. 09-01-10)

ORIGINAL SCALE IN INCHES FOR REDUCED PLANS 0 1 2 3

UNIT: 3488
PROJECT NUMBER & PHASE: 0800000608 1
CONTRACT No.: 08-336301

DISREGARD PRINTS BEARING EARLIER REVISION DATES
REVISION DATES: 3-6-13 5-31-13 8-6-13 12-11-13 1-10-14

SHEET 3 OF 19

FILE => 08-336301_03gridgrades.dgn

USERNAME => s121511 DATE PLOTTED => 30-APR-2014 TIME PLOTTED => 15:08

DIST	COUNTY	ROUTE	POST MILES TOTAL PROJECT	SHEET No.	TOTAL SHEETS
08	SBd	38	26.3/26.8	48	63

REGISTERED CIVIL ENGINEER 1-10-14 DATE

4-01-14
PLANS APPROVAL DATE

REGISTERED PROFESSIONAL ENGINEER M. Van De Pol No. 35610 Exp. 9/30/2015 CIVIL STATE OF CALIFORNIA

The State of California or its officers or agents shall not be responsible for the accuracy or completeness of electronic copies of this plan sheet.

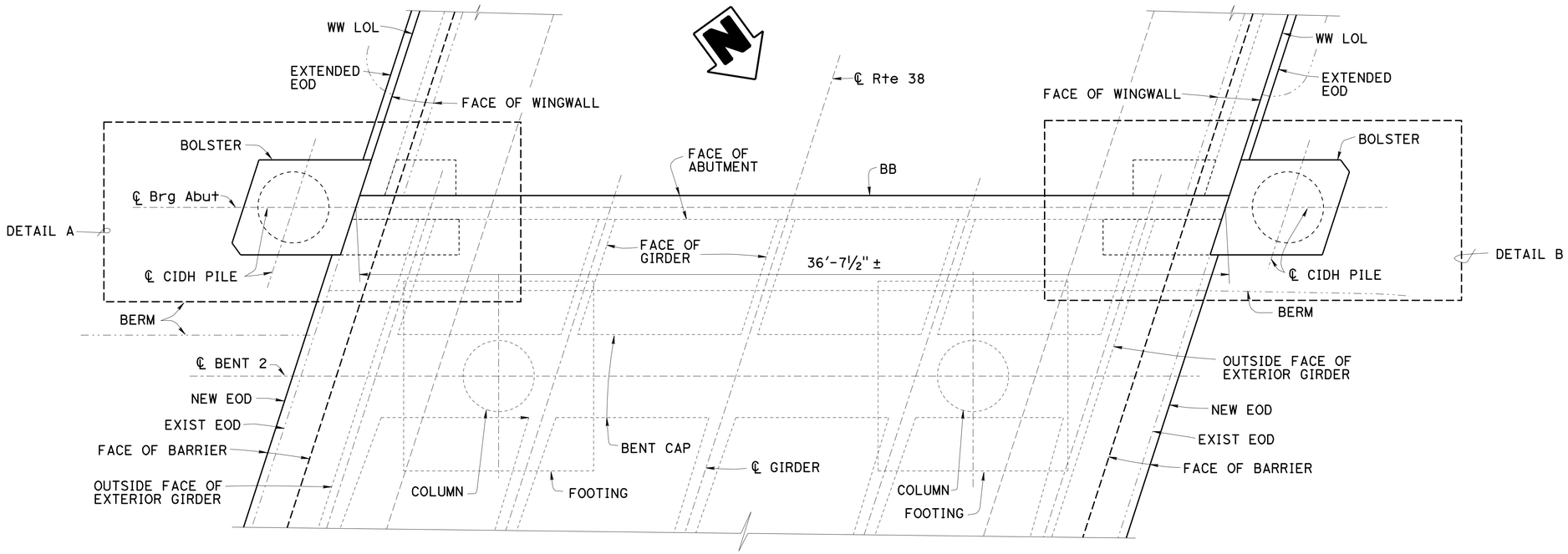

PART PLAN- ABUTMENT 1 (DECK LEVEL)

⅜" = 1'-0"

BARRIER NOT SHOWN

NOTES:

For SECTION A-A Through SECTION C-C, SECTION F-F Through SECTION G-G, see "EARTHQUAKE RETROFIT DETAILS No. 4" Sheet

For SECTION D-D, SECTION E-E, SECTION K-K and SECTION L-L, see "EARTHQUAKE DETAILS No. 6" Sheet

For CIDH Pile Details, see "EARTHQUAKE RETROFIT DETAILS No. 7" Sheet

For SECTION H-H, SECTION J-J, and SECTION M-M, see "EARTHQUAKE RETROFIT DETAILS No. 5" Sheet

For Bolster Reinforcement Plans, see "EARTHQUAKE RETROFIT DETAILS No. 3" Sheet

Architectural Treatment Not Shown

RSP Not Shown

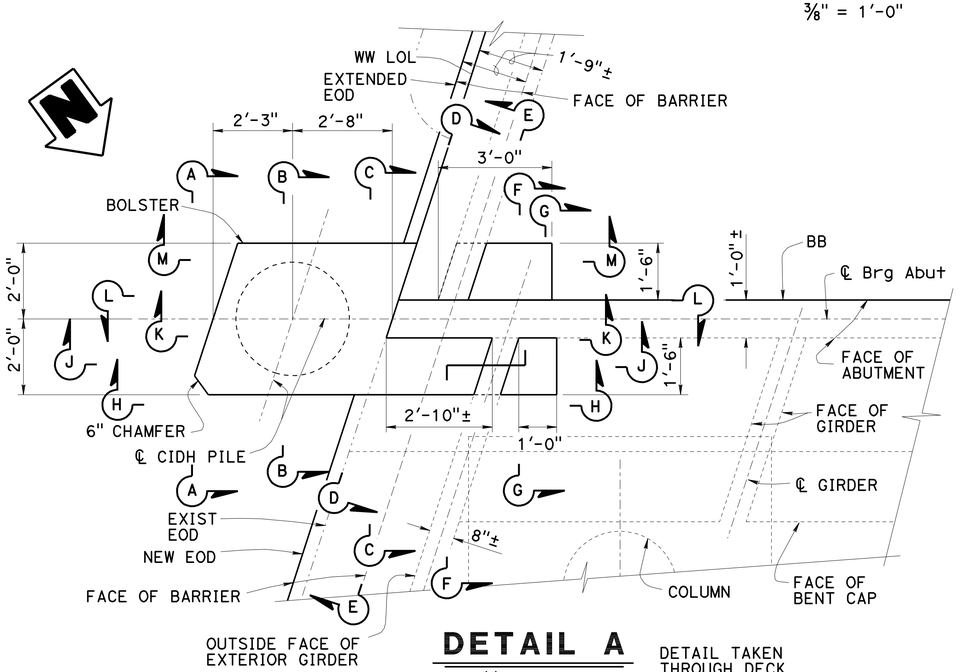

DETAIL A

½" = 1'-0"

DETAIL TAKEN THROUGH DECK

BARRIER NOT SHOWN

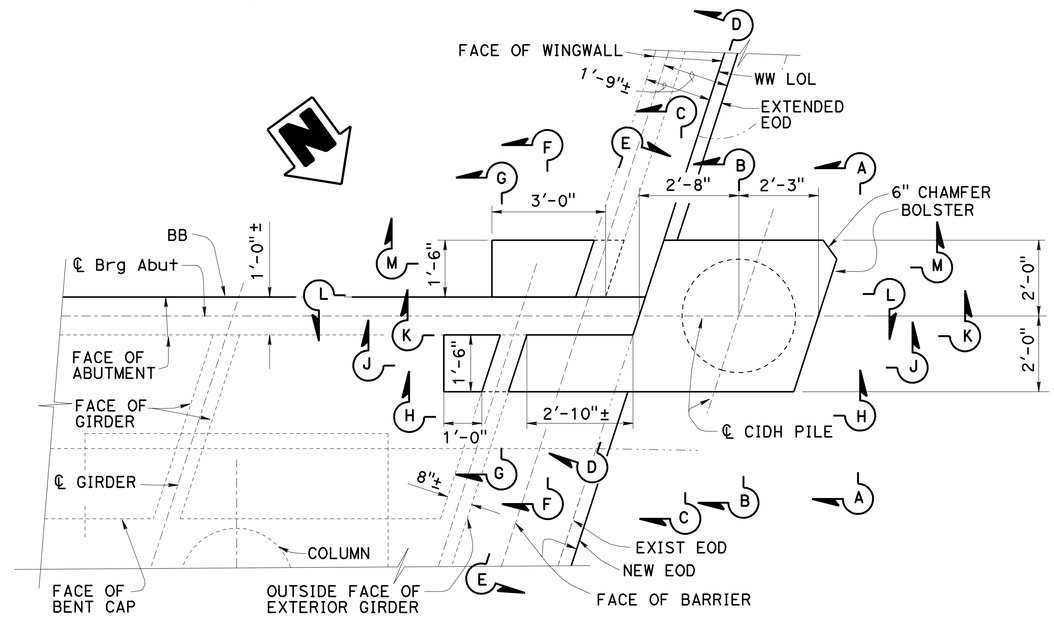

DETAIL TAKEN THROUGH DECK

BARRIER NOT SHOWN

DETAIL B

½" = 1'-0"

1 ADDED PER ADDENDUM No. 1, DATED MAY 1, 2014

DESIGN	BY M. Van De Pol	CHECKED P. Norboe	
DETAILS	BY M. Van De Pol	CHECKED P. Norboe	
QUANTITIES	BY M. Van De Pol	CHECKED P. Norboe	

STATE OF CALIFORNIA
DEPARTMENT OF TRANSPORTATION

DIVISION OF ENGINEERING SERVICES
STRUCTURE DESIGN
DESIGN BRANCH 9

BRIDGE NO. 54-0015
POST MILE 26.6

1 HATHAWAY CREEK
EARTHQUAKE RETROFIT DETAILS NO. 1

STRUCTURES DESIGN DETAIL SHEET (ENGLISH) (REV. 09-01-10)

ORIGINAL SCALE IN INCHES FOR REDUCED PLANS 0 1 2 3

UNIT: 3594
PROJECT NUMBER & PHASE: 0800000608 1
CONTRACT NO.: 08-336304

DISREGARD PRINTS BEARING EARLIER REVISION DATES

REVISION DATES 04/10/12

SHEET 4 OF 19

FILE => 08-336301_04eqretrodets1.dgn

USERNAME => s121511 DATE PLOTTED => 30-APR-2014 TIME PLOTTED => 15:08

DIST	COUNTY	ROUTE	POST MILES TOTAL PROJECT	SHEET No.	TOTAL SHEETS
08	SBd	38	26.3/26.8	49	63

REGISTERED CIVIL ENGINEER 1-10-14 DATE

4-01-14
PLANS APPROVAL DATE

REGISTERED PROFESSIONAL ENGINEER M. Van De Pol No. 35610 Exp. 9/30/2015 CIVIL STATE OF CALIFORNIA

The State of California or its officers or agents shall not be responsible for the accuracy or completeness of electronic copies of this plan sheet.

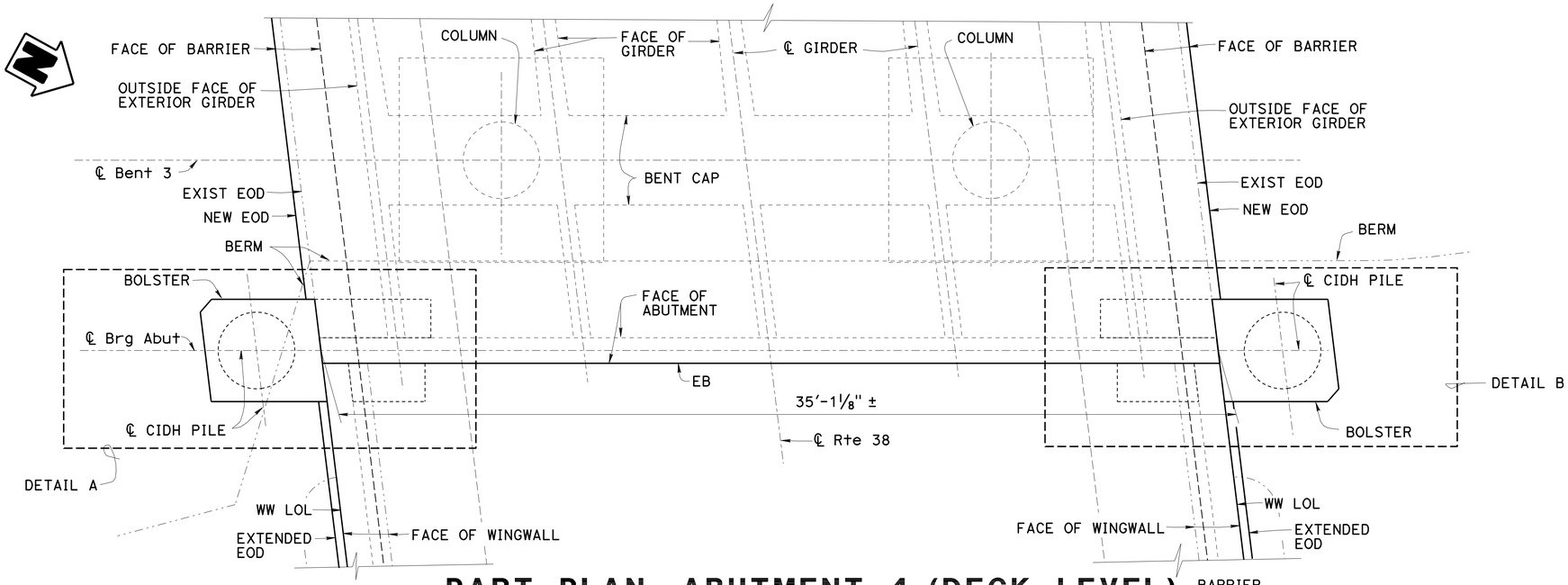

PART PLAN- ABUTMENT 4 (DECK LEVEL)

⅜" = 1'-0"

BARRIER NOT SHOWN

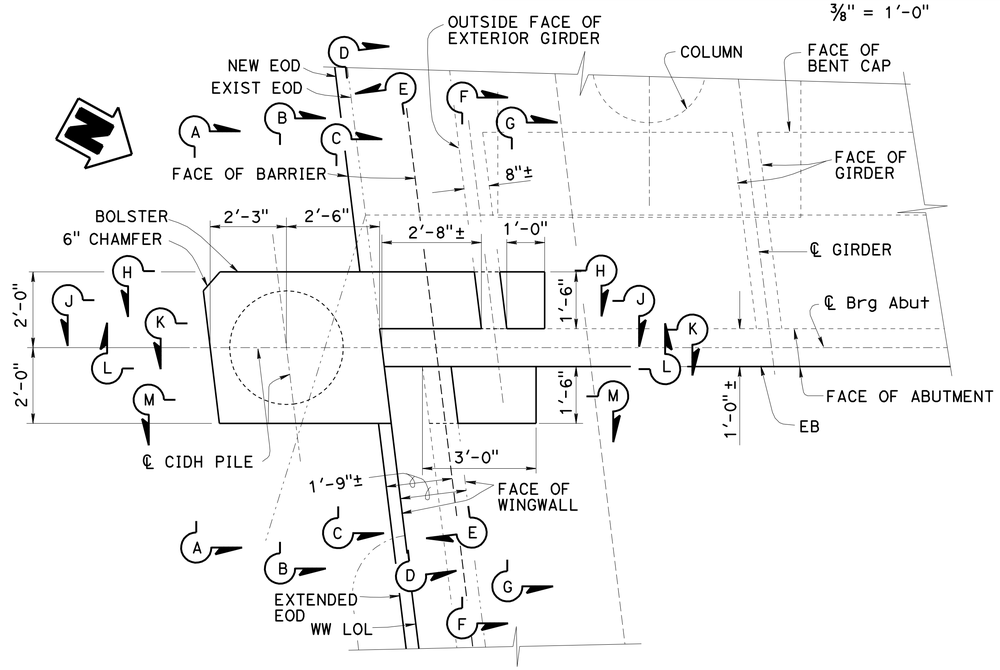

DETAIL A

½" = 1'-0"

DETAIL TAKEN THROUGH DECK

BARRIER NOT SHOWN

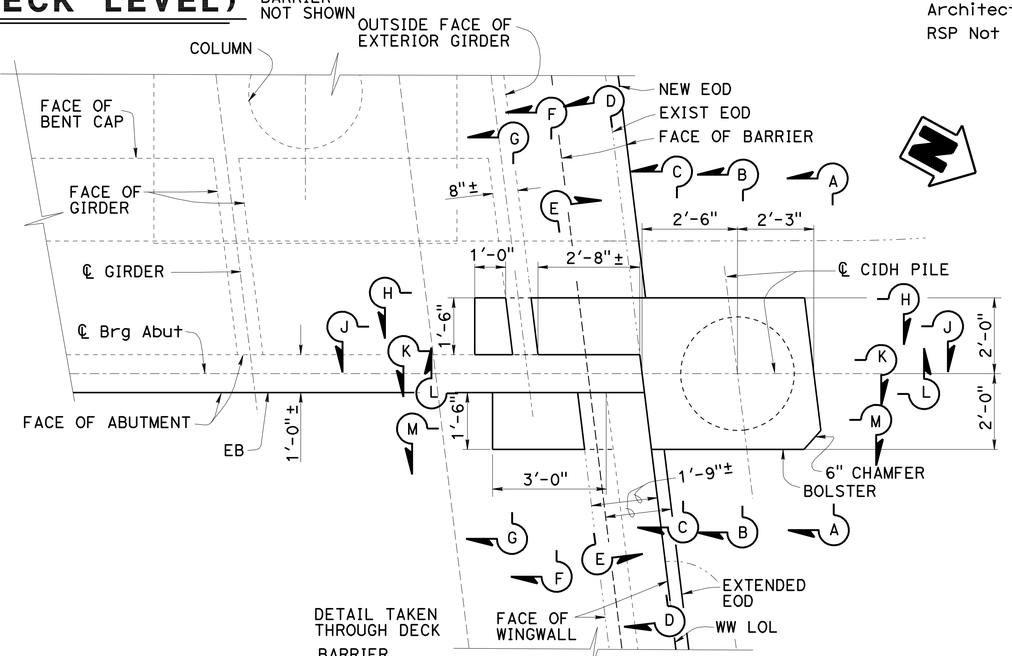

DETAIL TAKEN THROUGH DECK

BARRIER NOT SHOWN

DETAIL B

½" = 1'-0"

NOTES:

For SECTION A-A Through SECTION C-C, SECTION F-F Through SECTION G-G, see "EARTHQUAKE RETROFIT DETAILS No. 4" Sheet

For SECTION D-D, SECTION E-E, SECTION K-K and SECTION L-L, see "EARTHQUAKE RETROFIT DETAILS No. 6" Sheet

For SECTION H-H, SECTION J-J, and SECTION M-M, see "EARTHQUAKE RETROFIT DETAILS No. 5" Sheet

For CIDH Pile Details, see "EARTHQUAKE RETROFIT DETAILS No. 7" Sheet

For Bolster Reinforcement Plans, see "EARTHQUAKE RETROFIT DETAILS NO. 3" Sheets

Architectural Treatment Not Shown

RSP Not Shown

1 ADDED PER ADDENDUM No. 1, DATED MAY 1, 2014

	BY	CHECKED
DESIGN	M. Van De Pol	P. Norboe
DETAILS	M. Van De Pol	P. Norboe
QUANTITIES	M. Van De Pol	P. Norboe

STATE OF CALIFORNIA
DEPARTMENT OF TRANSPORTATION

DIVISION OF ENGINEERING SERVICES
STRUCTURE DESIGN
DESIGN BRANCH 9

BRIDGE NO. 54-0015
POST MILE 26.6

1 HATHAWAY CREEK
EARTHQUAKE RETROFIT DETAILS NO. 2

STRUCTURES DESIGN DETAIL SHEET (ENGLISH) (REV. 09-01-10)

ORIGINAL SCALE IN INCHES FOR REDUCED PLANS 0 1 2 3

UNIT: 3594
PROJECT NUMBER & PHASE: 0800000608 1
CONTRACT NO.: 08-336304

DISREGARD PRINTS BEARING EARLIER REVISION DATES

REVISION DATES 04/10/12

SHEET 5 OF 19

FILE => 08-336301_05eqretrodets2.dgn

USERNAME => s132511 DATE PLOTTED => 30-APR-2014 TIME PLOTTED => 15:08

DIST	COUNTY	ROUTE	POST MILES TOTAL PROJECT	SHEET No.	TOTAL SHEETS
08	SBd	38	26.3/26.8	50	63

REGISTERED CIVIL ENGINEER — DATE 1-10-14

4-01-14
PLANS APPROVAL DATE

REGISTERED PROFESSIONAL ENGINEER — M. Van De Pol — No. 35610 — Exp. 9/30/2015 — CIVIL — STATE OF CALIFORNIA

The State of California or its officers or agents shall not be responsible for the accuracy or completeness of electronic copies of this plan sheet.

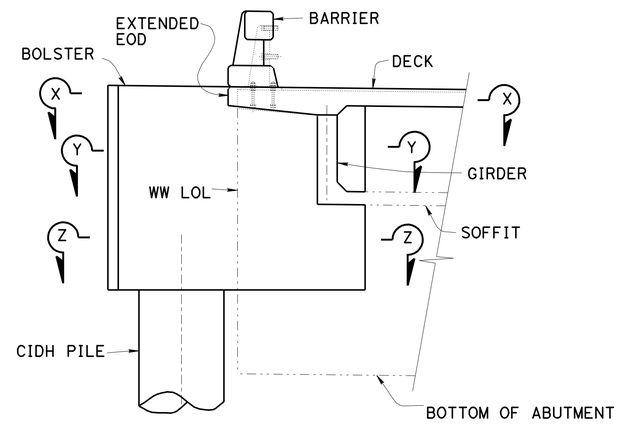

PART ELEVATION

3/8" = 1'-0"

NOTE: Part Elevation at Abut 1 right side shown, Part Elevations for other locations similar.

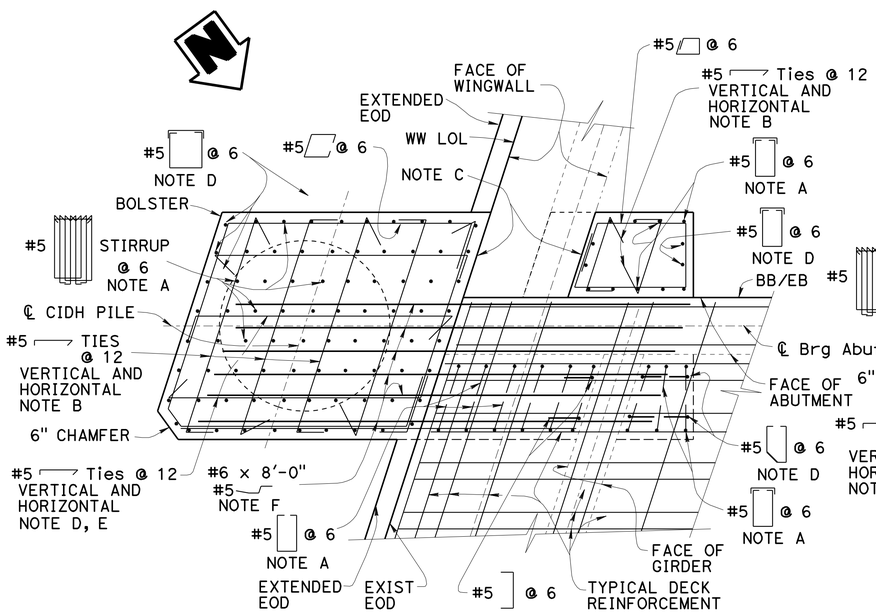

SECTION X-X

3/4" = 1'-0"

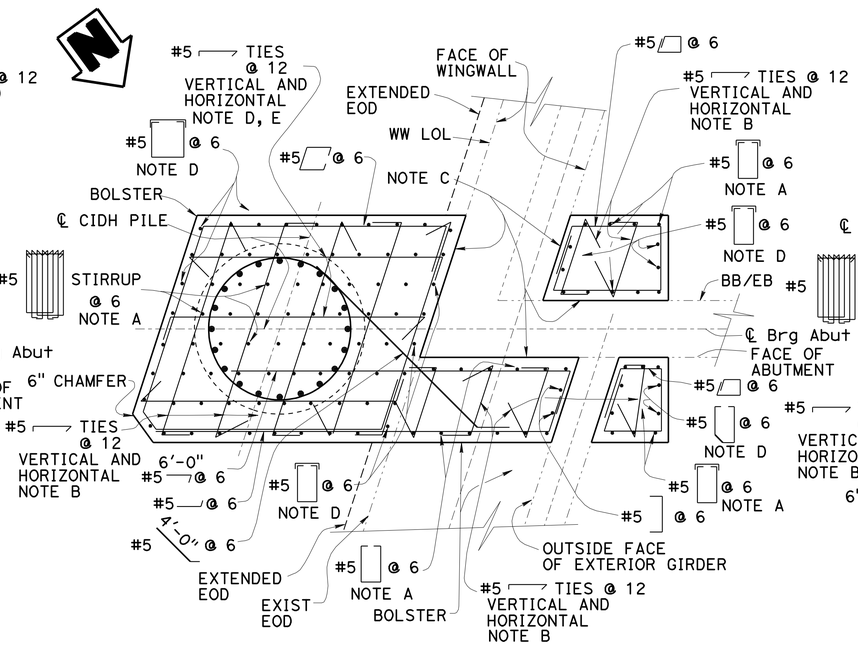

SECTION Y-Y

3/4" = 1'-0"

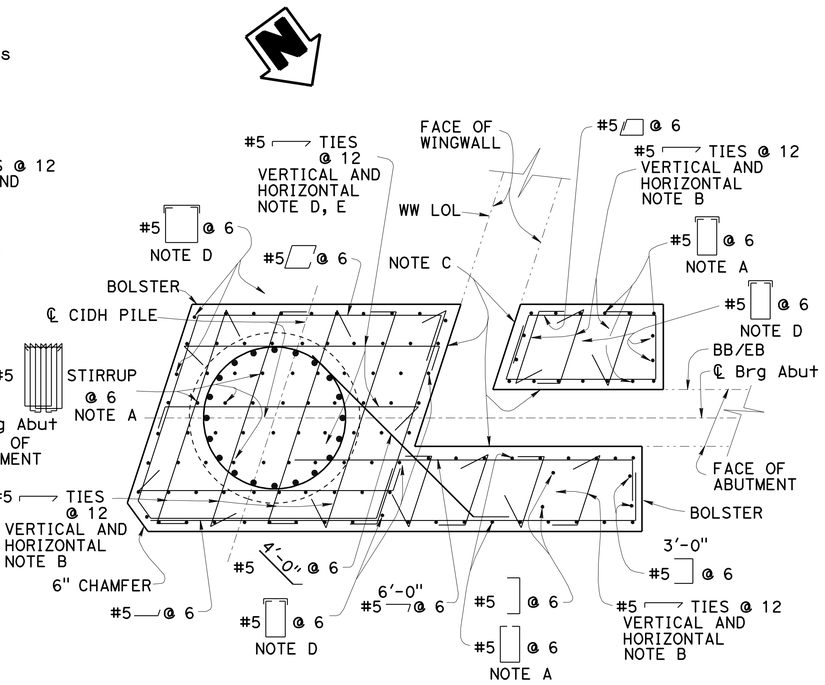

SECTION Z-Z

3/4" = 1'-0"

NOTE A:
Place Parallel to Edge of Deck and Space Along ℄ Brg Abutment

NOTE B:
Place Parallel to Edge of Deck and Space Along ℄ Brg Abutment. Hook Around Vertical Stirrup Legs. Alternate Hooks

NOTE C:
Roughen Surface to 1/4" Minimum Amplitude

NOTE D:
Place Parallel to ℄ Brg Abutment and Space Along WW LOL.

NOTE E
Hook Ties Around Horizontal Reinf. Alternate Hooks

NOTE F
For Other Details, See DETAIL X on "EARTHQUAKE RETROFIT No. 7" Sheet

NOTES:
For Locations of Other Related Sections, see "EARTHQUAKE RETROFIT No. 1" and "EARTHQUAKE RETROFIT No. 2" Sheets

For CIDH Pile Details, see "EARTHQUAKE RETROFIT DETAILS No. 7" Sheet

Drill and Bond Dowels Not Shown. For Details, see "EARTHQUAKE RETROFIT DETAILS No. 6" Sheet

For Bolster Dimensions, see "EARTHQUAKE RETROFIT No. 1" and "EARTHQUAKE RETROFIT No. 2" Sheets

1 ADDED PER ADDENDUM No. 1, DATED MAY 1, 2014

	BY	CHECKED
DESIGN	M. Van De Pol	P. Norboe
DETAILS	M. Van De Pol	P. Norboe
QUANTITIES	M. Van De Pol	P. Norboe

STATE OF CALIFORNIA
DEPARTMENT OF TRANSPORTATION

DIVISION OF ENGINEERING SERVICES
STRUCTURE DESIGN
DESIGN BRANCH 9

BRIDGE NO. 54-0015
POST MILE 26.6

1 HATHAWAY CREEK
EARTHQUAKE RETROFIT DETAILS NO. 3

STRUCTURES DESIGN DETAIL SHEET (ENGLISH) (REV. 09-01-10)

ORIGINAL SCALE IN INCHES FOR REDUCED PLANS 0 1 2 3

UNIT: 3594
PROJECT NUMBER & PHASE: 0800000608 1
CONTRACT NO.: 08-336304

DISREGARD PRINTS BEARING EARLIER REVISION DATES

REVISION DATES 04/10/12

SHEET 6 OF 19

FILE => 08-336301_06eqretrodets3.dgn

USERNAME => s121511 DATE PLOTTED => 30-APR-2014 TIME PLOTTED => 15:08

DIST	COUNTY	ROUTE	POST MILES TOTAL PROJECT	SHEET No.	TOTAL SHEETS
08	SBd	38	26.3/26.8	51	63

REGISTERED CIVIL ENGINEER — DATE 1-10-14

4-01-14
PLANS APPROVAL DATE

REGISTERED PROFESSIONAL ENGINEER — M. Van De Pol — No. 35610 — Exp. 9/30/2015 — CIVIL — STATE OF CALIFORNIA

The State of California or its officers or agents shall not be responsible for the accuracy or completeness of electronic copies of this plan sheet.

NOTE F:
For Additional Deck Overhang Details, see DETAIL X on "EARTHQUAKE RETROFIT DETAILS No. 7" Sheet

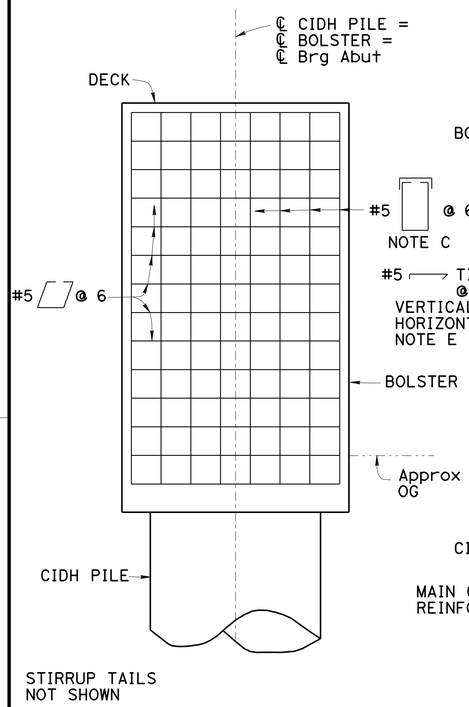

SECTION A-A

¾" = 1'-0"

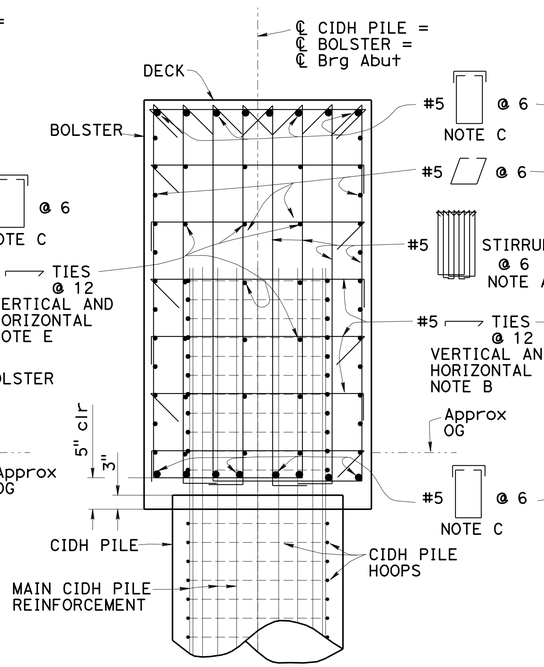

SECTION B-B

¾" = 1'-0"

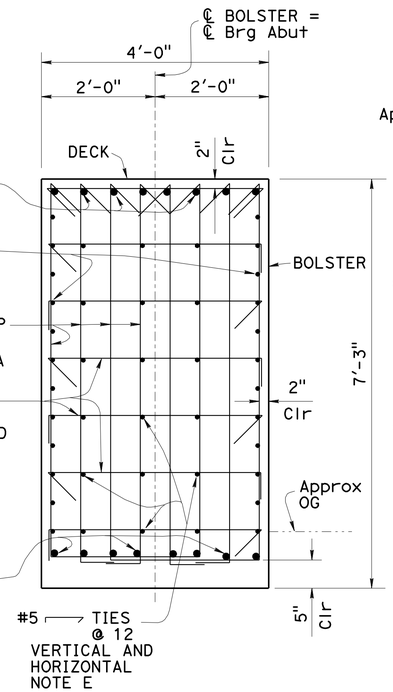

SECTION C-C

¾" = 1'-0"

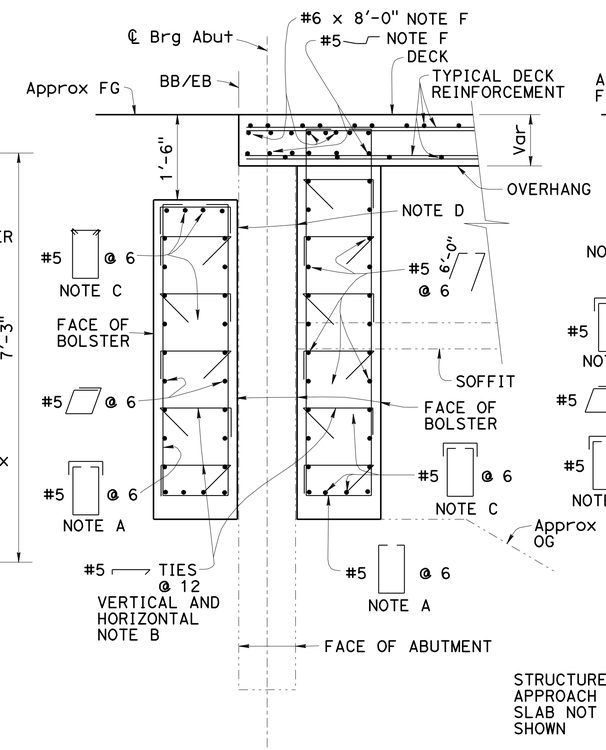

SECTION F-F

¾" = 1'-0"

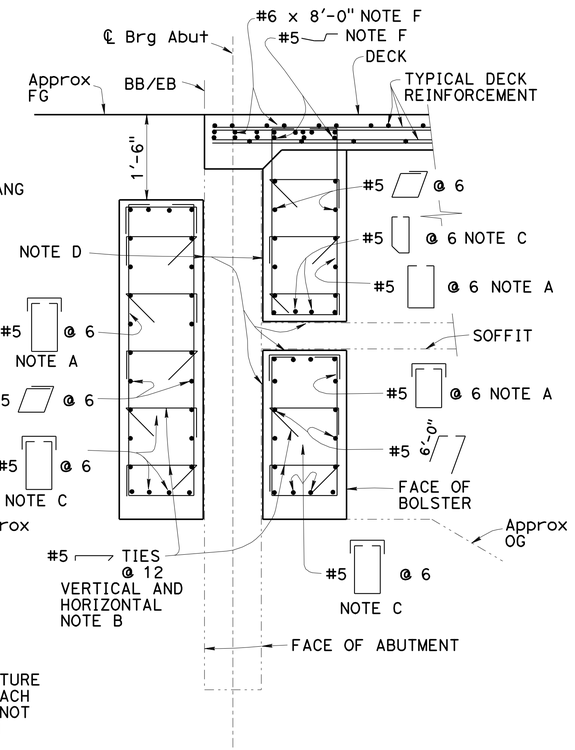

SECTION G-G

¾" = 1'-0"

NOTES:

For Locations of SECTION A-A, SECTION B-B, SECTION C-C, SECTION F-F and SECTION G-G, see "EARTHQUAKE RETROFIT DETAILS No. 1" and "EARTHQUAKE RETROFIT DETAILS No. 2" Sheets

For SECTION D-D and SECTION E-E, see "EARTHQUAKE RETROFIT DETAILS No. 6" Sheet

For CIDH Pile Details, see "EARTHQUAKE RETROFIT DETAILS No. 7" Sheet

Drill and Bond Dowels Not Shown. See "EARTHQUAKE RETROFIT DETAILS No. 6" Sheet

For Bolster Dimensions, see "EARTHQUAKE RETROFIT DETAILS No. 1" and "EARTHQUAKE RETROFIT DETAILS No. 2" Sheets

NOTE A:
Place Parallel to Edge of Deck and Space Along ℄ Brg Abutment

NOTE B:
Place Parallel to Edge of Deck and Space Along ℄ Brg Abutment. Hook Around Vertical Stirrup Legs. Alternate Hooks

NOTE C:
Place Parallel to ℄ Brg Abutment and Space Along WW LOL

NOTE D:
Roughen Surface to ¼" Amplitude

NOTE E:
Place Parallel to ℄ Brg Abutment and Space Along WW LOL. Hook Around Horizontal Reinf. Alternate Hooks

1 ADDED PER ADDENDUM No. 1, DATED MAY 1, 2014

	BY	CHECKED
DESIGN	M. Van De Pol	P. Norboe
DETAILS	M. Van De Pol	P. Norboe
QUANTITIES	M. Van De Pol	P.Norboe

STATE OF CALIFORNIA
DEPARTMENT OF TRANSPORTATION

DIVISION OF ENGINEERING SERVICES
STRUCTURE DESIGN
DESIGN BRANCH 9

BRIDGE NO. 54-0015
POST MILE 26.6

1 HATHAWAY CREEK
EARTHQUAKE RETROFIT DETAILS NO. 4

STRUCTURES DESIGN DETAIL SHEET (ENGLISH) (REV. 09-01-10)

ORIGINAL SCALE IN INCHES FOR REDUCED PLANS 0 1 2 3

UNIT: 3594
PROJECT NUMBER & PHASE: 0800000608 1
CONTRACT NO.: 08-336304

DISREGARD PRINTS BEARING EARLIER REVISION DATES

REVISION DATES 04/10/12

SHEET 7 OF 19

FILE => 08-336301_07eqretrodets4.dgn

USERNAME => s121511 DATE PLOTTED => 30-APR-2014 TIME PLOTTED => 15:08

DIST	COUNTY	ROUTE	POST MILES TOTAL PROJECT	SHEET No.	TOTAL SHEETS
08	SBd	38	26.3/26.8	52	63

REGISTERED CIVIL ENGINEER 1-10-14 DATE

4-01-14
PLANS APPROVAL DATE

REGISTERED PROFESSIONAL ENGINEER M. Van De Pol No. 35610 Exp. 9/30/2015 CIVIL STATE OF CALIFORNIA

The State of California or its officers or agents shall not be responsible for the accuracy or completeness of electronic copies of this plan sheet.

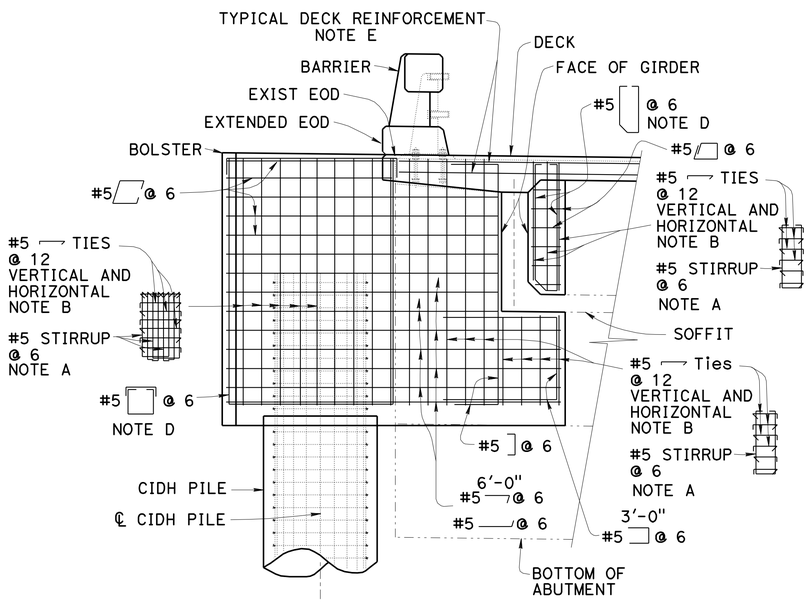

SECTION H-H

½" = 1'-0"

Section at Abutment 1
Right Side Shown, Part
Plans For Other Locations
Similar

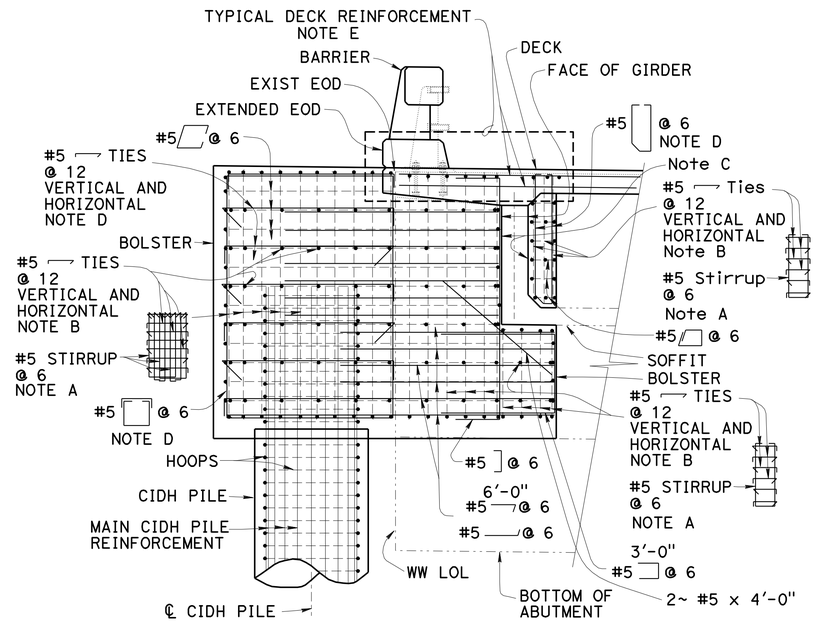

SECTION J-J

½" = 1'-0"

Section at Abutment 1
Right Side Shown, Part
Plans For Other Locations
Similar

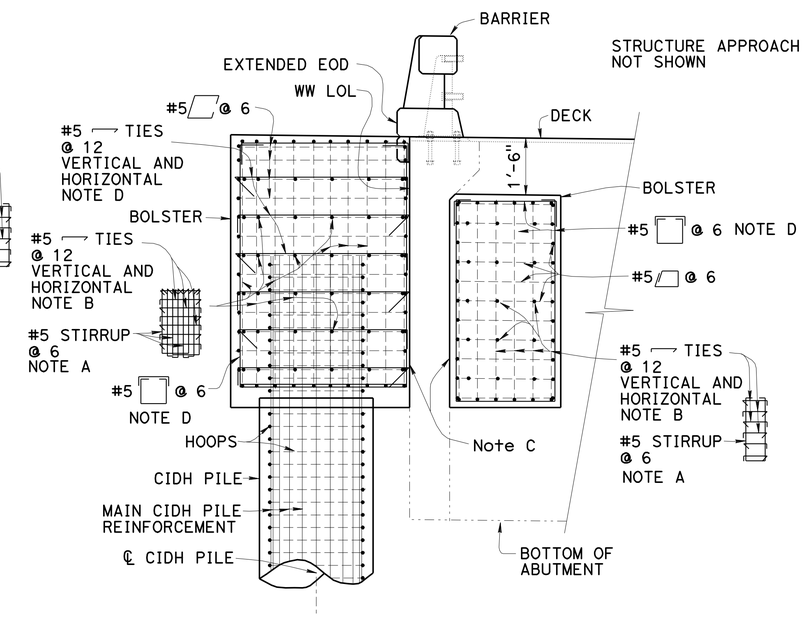

SECTION M-M

½" = 1'-0"

Section at Abutment 1
Right Side Shown, Part
Plans For Other Locations
Similar

Note A
Place Parallel to Edge of Deck and Space Along ℄ Brg Abutment

Note B
Place Parallel to Edge of Deck and Space Along ℄ Brg Abutment. Hook Around Vertical Stirrup Legs. Alternate Hooks

Note C
Roughen Surface to ¼" Minimum Amplitude

Note D
Place Parallel to ℄ Brg Abutment and Space Along WW LOL

Note E
For Added Deck Reinforcement see DETAIL X, on "EARTHQUAKE RETROFIT DETAILS No. 7" Sheet

For Locations of SECTION H-H, SECTION J-J, SECTION M-M and Other Sections, see "EARTHQUAKE RETROFIT DETAILS No. 1" and "EARTHQUAKE RETROFIT DETAILS No. 2" Sheets

For Other Details, see "EARTHQUAKE RETROFIT DETAILS No. 3" and "EARTHQUAKE RETROFIT DETAILS No. 4" Sheets

For CIDH Pile Details, see "EARTHQUAKE RETROFIT DETAILS No. 7" Sheet

Drill and Bond Dowels Not Shown. For Details, see "EARTHQUAKE RETROFIT DETAILS No. 6" Sheet

1 ADDED PER ADDENDUM No. 1, DATED MAY 1, 2014

	BY	CHECKED
DESIGN	M. Van De Pol	P. Norboe
DETAILS	M. Van De Pol	P. Norboe
QUANTITIES	M. Van De Pol	P.Norboe

STATE OF CALIFORNIA
DEPARTMENT OF TRANSPORTATION

DIVISION OF ENGINEERING SERVICES
STRUCTURE DESIGN
DESIGN BRANCH 9

BRIDGE NO. 54-0015
POST MILE 26.6

1 HATHAWAY CREEK
EARTHQUAKE RETROFIT DETAILS NO. 5

STRUCTURES DESIGN DETAIL SHEET (ENGLISH) (REV. 09-01-10)

ORIGINAL SCALE IN INCHES FOR REDUCED PLANS 0 1 2 3

UNIT: 3594
PROJECT NUMBER & PHASE: 0800000608 1
CONTRACT NO.: 08-336304

DISREGARD PRINTS BEARING EARLIER REVISION DATES

REVISION DATES 04/10/12

SHEET 8 OF 19

FILE => 08-336301_08eqretrodets5.dgn

USERNAME => s121511 DATE PLOTTED => 30-APR-2014 TIME PLOTTED => 15:08

DIST	COUNTY	ROUTE	POST MILES TOTAL PROJECT	SHEET No.	TOTAL SHEETS
08	SBd	38	26.3/26.8	53	63

REGISTERED CIVIL ENGINEER 1-10-14 DATE

4-01-14
PLANS APPROVAL DATE

REGISTERED PROFESSIONAL ENGINEER M. Van De Pol No. 35610 Exp. 9/30/2015 CIVIL STATE OF CALIFORNIA

The State of California or its officers or agents shall not be responsible for the accuracy or completeness of electronic copies of this plan sheet.

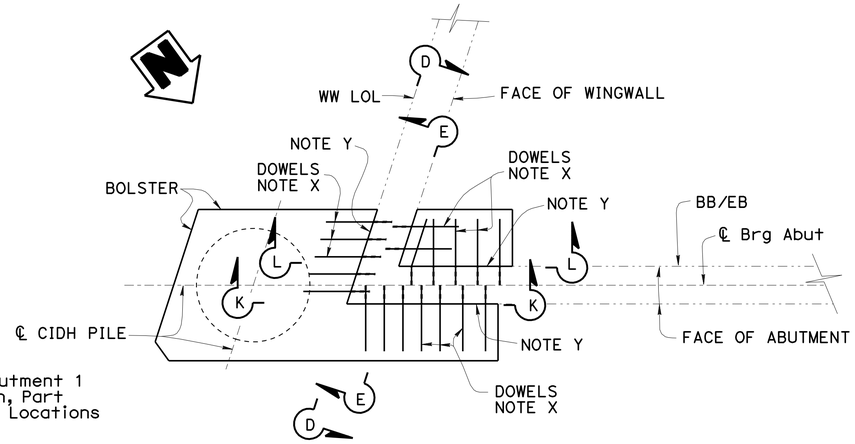

NOTE:
Part Plan at Abutment 1 Right Side Shown, Part Plans For Other Locations Similar

PART PLAN - BELOW SUPERSTRUCTURE

½" = 1'-0"

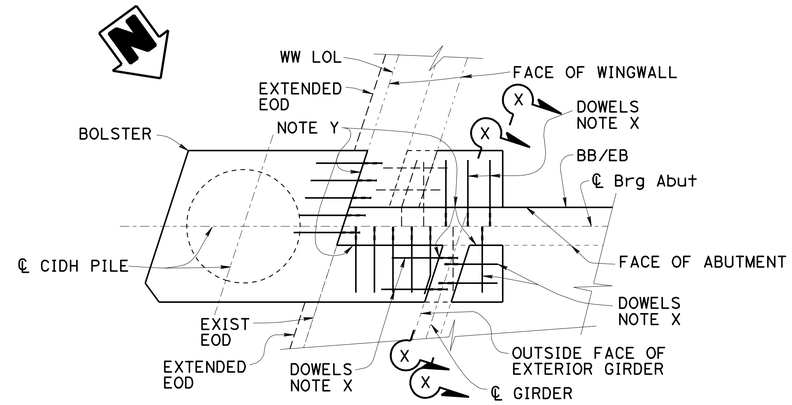

NOTES:
Part Plan at Abutment 1 Right Side Shown, Part Plans For Other Locations Similar

Part Plan Located Below Deck Level

Structure Approach Not Shown

PART PLAN - AT SUPERSTRUCTURE

½" = 1'-0"

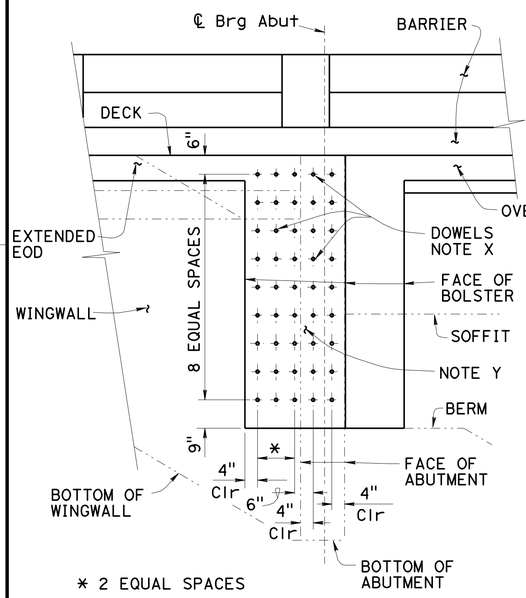

ABUTMENT FACE DOWELS NOT SHOWN

SECTION D-D

½" = 1'-0"

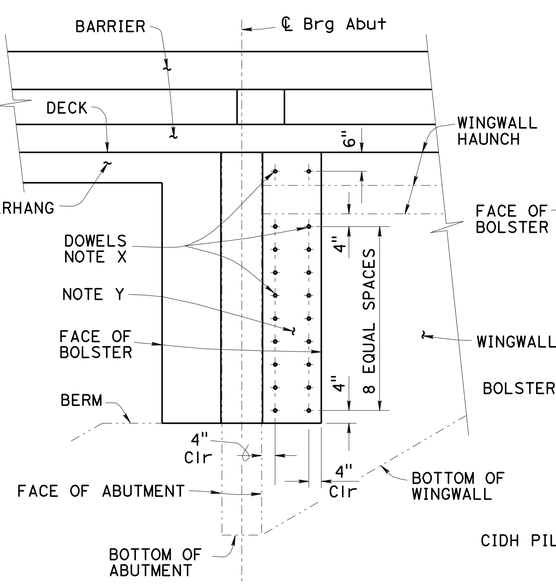

ABUTMENT FACE DOWELS NOT SHOWN

SECTION E-E

½" = 1'-0"

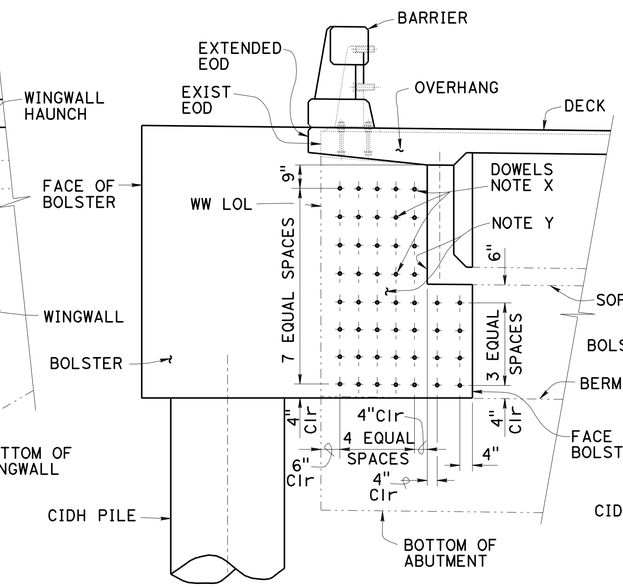

WINGWALL FACE DOWELS NOT SHOWN
GIRDER FACE DOWELS NOT SHOWN

SECTION K-K

½" = 1'-0"

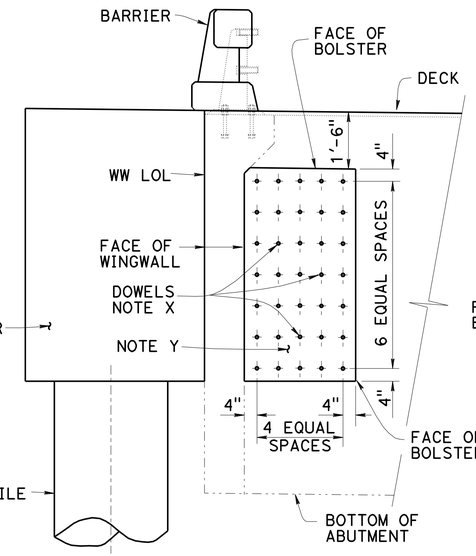

WINGWALL FACE DOWELS NOT SHOWN

SECTION L-L

½" = 1'-0"

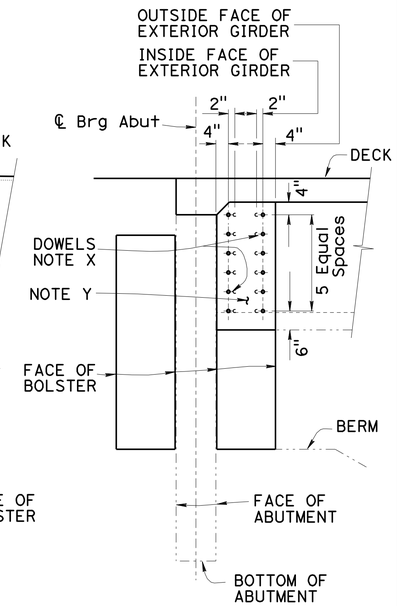

ABUTMENT FACE DOWELS NOT SHOWN

SECTION X-X

½" = 1'-0"

NOTE X:
Drill and Bond
#5 x 1'-9" Dowel
in 6" Deep Hole
Typical Hole Slope 1:3

NOTE Y:
Roughen Surface to
¼" Min Amplitude

NOTES: Bolster and Deck Reinforcement not Shown
Structure Approach Slab not Shown
Dowel Locations and Numbers May be Adjusted as Approved by the Engineer

NOTE:
For Locations of SECTION D-D, SECTION E-E, SECTION K-K and SECTION L-L, Also see "EARTHQUAKE RETROFIT DETAILS NO. 1" and "EARTHQUAKE RETROFIT DETAILS NO. 2" sheets.

DRILL AND BOND DOWEL DETAILS

1 ADDED PER ADDENDUM No. 1, DATED MAY 1, 2014

	BY	CHECKED
DESIGN	M. Van De Pol	P. Norboe
DETAILS	M. Van De Pol	P. Norboe
QUANTITIES	M. Van De Pol	P. Norboe

STATE OF CALIFORNIA
DEPARTMENT OF TRANSPORTATION

DIVISION OF ENGINEERING SERVICES
STRUCTURE DESIGN
DESIGN BRANCH 9

BRIDGE NO. 54-0015
POST MILE 26.6

1 HATHAWAY CREEK
EARTHQUAKE RETROFIT DETAILS NO. 6

STRUCTURES DESIGN DETAIL SHEET (ENGLISH) (REV. 09-01-10)

ORIGINAL SCALE IN INCHES FOR REDUCED PLANS 0 1 2 3

UNIT: 3594
PROJECT NUMBER & PHASE: 0800000608 1
CONTRACT NO.: 08-336304

DISREGARD PRINTS BEARING EARLIER REVISION DATES

REVISION DATES 04/10/12

SHEET 9 OF 19

FILE => 08-336301_09eqretrodets6.dgn

USERNAME => DATE PLOTTED => 30-APR-2014 TIME PLOTTED => 15:08

DIST	COUNTY	ROUTE	POST MILES TOTAL PROJECT	SHEET No.	TOTAL SHEETS
08	SBd	38	26.3/26.8	54	63

REGISTERED CIVIL ENGINEER — DATE 1-10-14

4-01-14
PLANS APPROVAL DATE

REGISTERED PROFESSIONAL ENGINEER — M. Van De Pol — No. 35610 — Exp. 9/30/2015 — CIVIL — STATE OF CALIFORNIA

The State of California or its officers or agents shall not be responsible for the accuracy or completeness of electronic copies of this plan sheet.

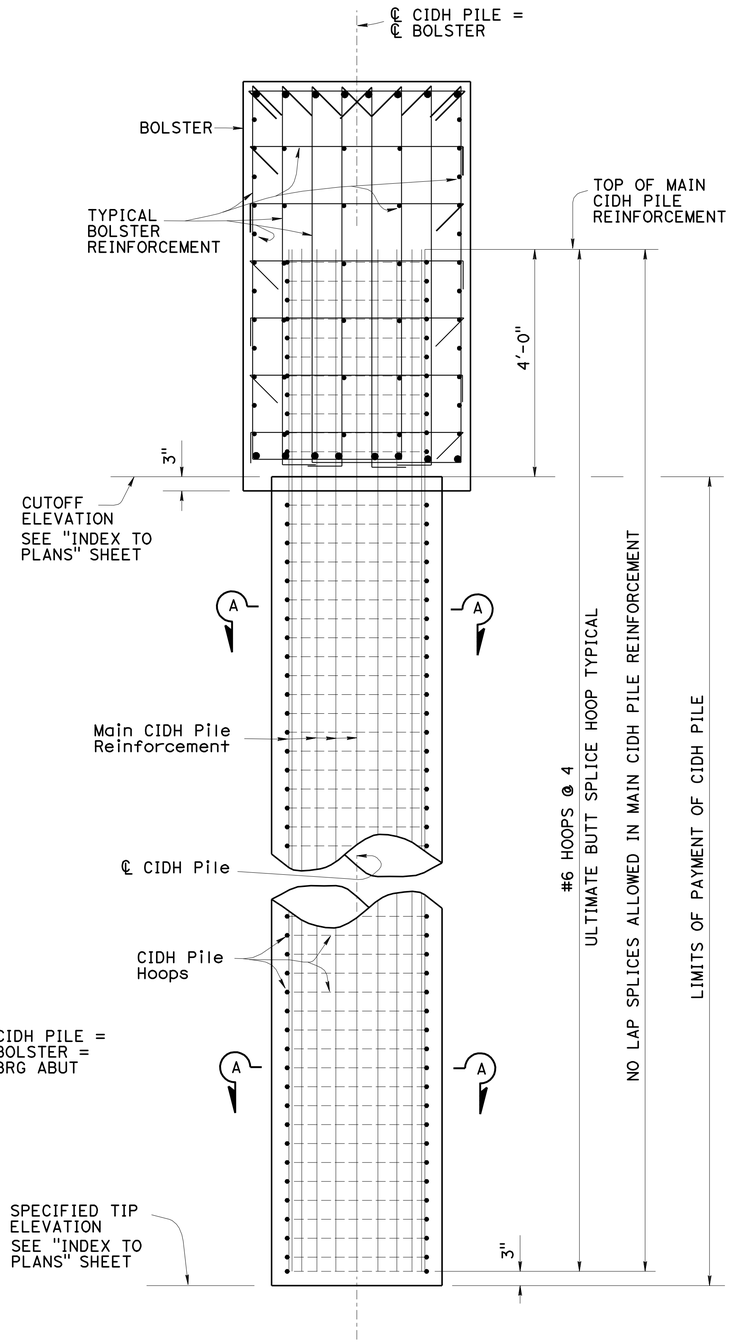

CIDH PILE ELEVATION

¾" = 1'-0"

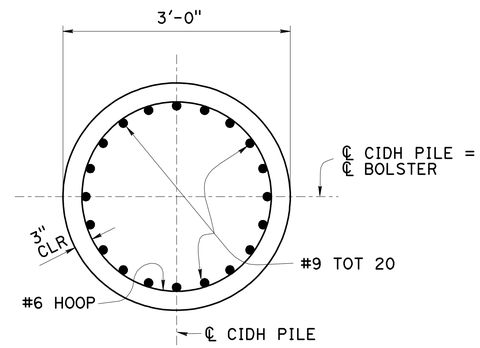

SECTION A-A

1" = 1'-0"

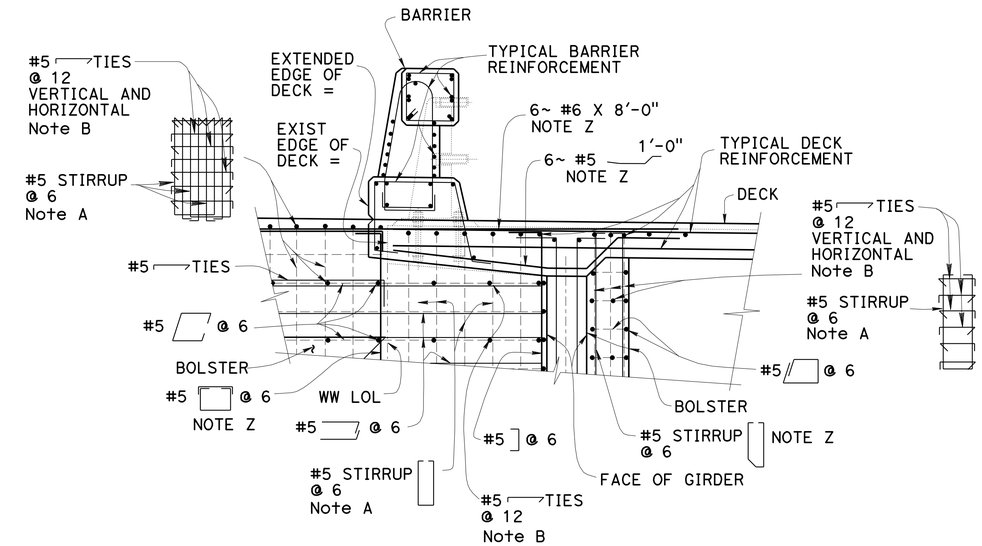

DETAIL X

¾" = 1'-0"
DOWELS NOT SHOWN

For Location of DETAIL X, See "EARTHQUAKE RETROFIT DETAILS No. 5" Sheet

NOTE Z
Place Parallel to ℄ Brg Abutment and Space Along Edge of Deck. Evenly Spaced Across Width of Bolster

Note A
Place Parallel to Edge of Deck and Space Along ℄ Brg Abutment

Note B
Place Parallel to Edge of Deck and Space Along ℄ Brg Abutment. Hook Around Vertical Stirrup Legs. Alternate Hooks

For Cutoff Elevations and Specified Tip Elevations, see "INDEX TO PLANS" Sheet

For CIDH Pile Locations, see Other Detail Sheets

1 ADDED PER ADDENDUM No. 1, DATED MAY 1, 2014

DESIGN	BY M. Van De Pol	CHECKED P. Norboe	
DETAILS	BY M. Van De Pol	CHECKED P. Norboe	
QUANTITIES	BY M. Van De Pol	CHECKED P. Norboe	

STATE OF CALIFORNIA
DEPARTMENT OF TRANSPORTATION

DIVISION OF ENGINEERING SERVICES
STRUCTURE DESIGN
DESIGN BRANCH 9

BRIDGE NO. 54-0015
POST MILE 26.6

1 HATHAWAY CREEK
EARTHQUAKE RETROFIT DETAILS NO. 7

STRUCTURES DESIGN DETAIL SHEET (ENGLISH) (REV. 09-01-10)

ORIGINAL SCALE IN INCHES FOR REDUCED PLANS 0 1 2 3

UNIT: 3594
PROJECT NUMBER & PHASE: 0800000608 1
CONTRACT NO.: 08-336304

DISREGARD PRINTS BEARING EARLIER REVISION DATES → 04/10/12

SHEET 10 OF 19

FILE => 08-336301_10eqretrodets7.dgn

USERNAME => s121511 DATE PLOTTED => 30-APR-2014 TIME PLOTTED => 15:08

DIST	COUNTY	ROUTE	POST MILES TOTAL PROJECT	SHEET No.	TOTAL SHEETS
08	SBd	38	26.3/26.8	55	63

REGISTERED CIVIL ENGINEER — DATE 1-10-14

4-01-14
PLANS APPROVAL DATE

REGISTERED PROFESSIONAL ENGINEER — M. Van De Pol — No. 35610 — Exp. 9/30/2015 — CIVIL — STATE OF CALIFORNIA

The State of California or its officers or agents shall not be responsible for the accuracy or completeness of electronic copies of this plan sheet.

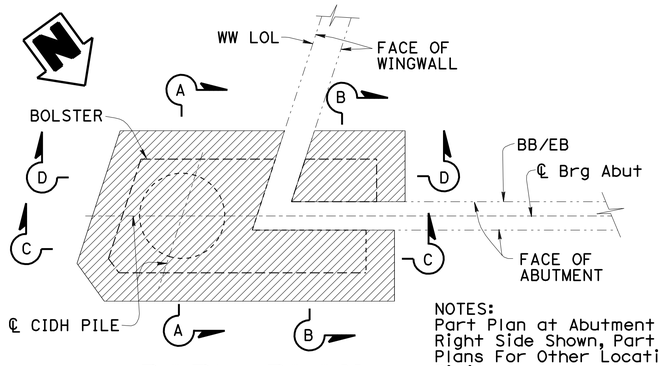

PART PLAN

NOTES:
Part Plan at Abutment 1 Right Side Shown, Part Plans For Other Locations Similar

Part Plan Taken Beneath Superstructure

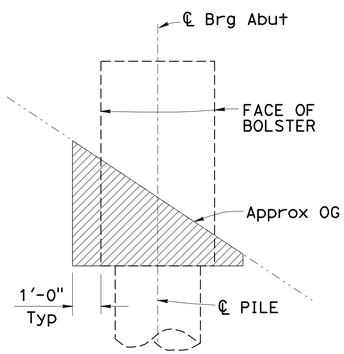

SECTION A-A

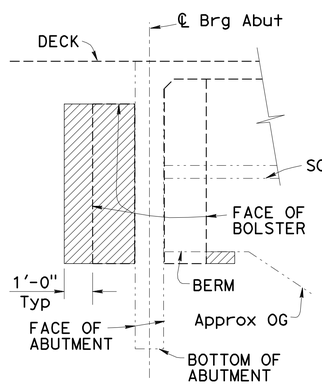

SECTION B-B

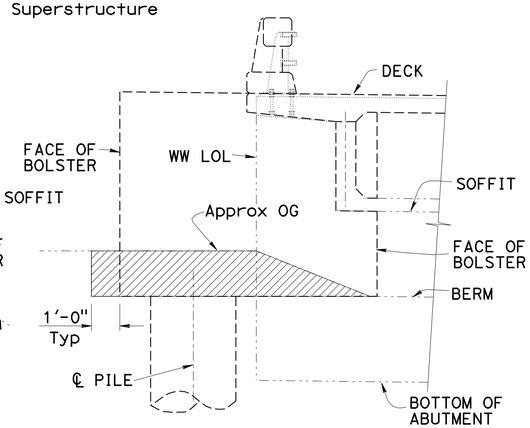

SECTION C-C

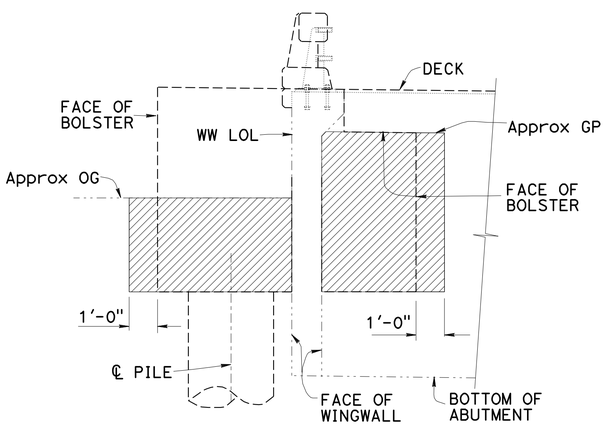

SECTION D-D

EXCAVATION LIMITS

3/8" = 1'-0"

DENOTES LIMITS OF STRUCTURE EXCAVATION

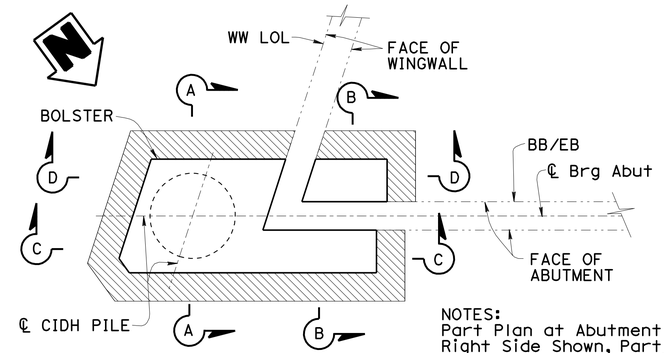

PART PLAN

NOTES:
Part Plan at Abutment 1 Right Side Shown, Part Plans For Other Locations Similar

Part Plan Taken Beneath Superstructure

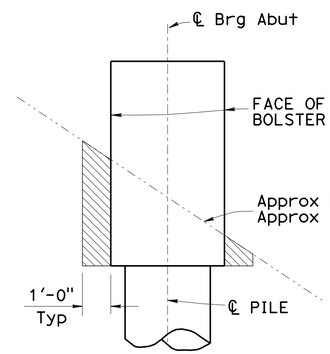

SECTION A-A

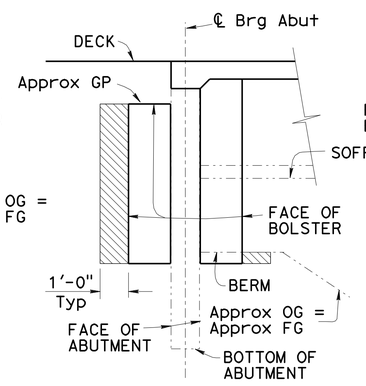

SECTION B-B

Structure Approach Not Shown

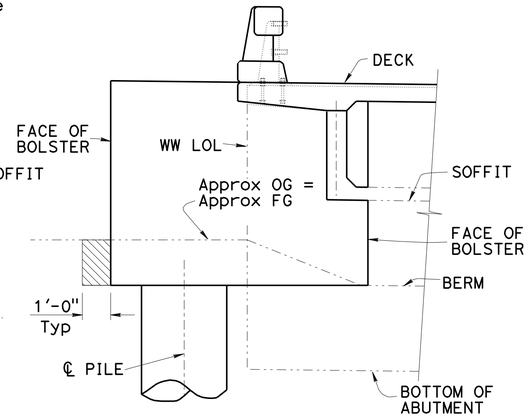

SECTION C-C

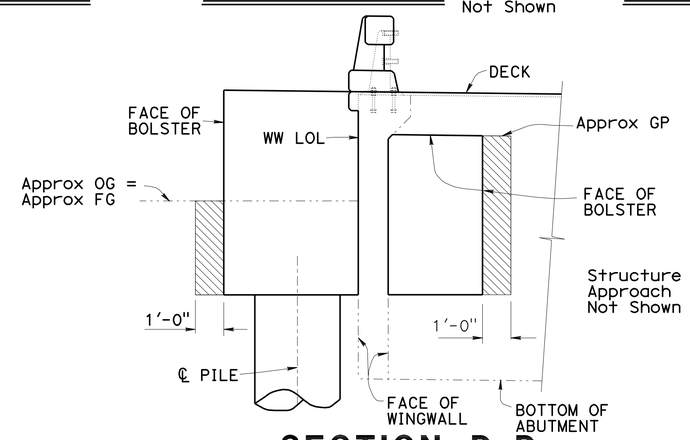

SECTION D-D

BACKFILL LIMITS

3/8" = 1'-0"

DENOTES LIMITS OF STRUCTURE BACKFILL

For Bolster Limits, see "EARTHQUAKE RETROFIT DETAILS No. 1" and "EARTHQUAKE RETROFIT DETAILS No. 2" Sheets

1 ADDED PER ADDENDUM No. 1, DATED MAY 1, 2014

DESIGN	BY M. Van De Pol	CHECKED P. Norboe	
DETAILS	BY M. Van De Pol	CHECKED P. Norboe	
QUANTITIES	BY M. Van De Pol	CHECKED P. Norboe	

STATE OF CALIFORNIA
DEPARTMENT OF TRANSPORTATION

DIVISION OF ENGINEERING SERVICES
STRUCTURE DESIGN
DESIGN BRANCH 9

BRIDGE NO. 54-0015
POST MILE 26.6

1 HATHAWAY CREEK
EARTHQUAKE RETROFIT DETAILS No. 8

STRUCTURES DESIGN DETAIL SHEET (ENGLISH) (REV. 09-01-10)

ORIGINAL SCALE IN INCHES FOR REDUCED PLANS 0 1 2 3

UNIT: 3594
PROJECT NUMBER & PHASE: 0800000608 1
CONTRACT NO.: 08-336304

DISREGARD PRINTS BEARING EARLIER REVISION DATES

REVISION DATES 04/10/12

SHEET 11 OF 19

FILE => 08-336301_11eqretrodets8.dgn

USERNAME => s121511 DATE PLOTTED => 30-APR-2014 TIME PLOTTED => 15:08

DIST	COUNTY	ROUTE	POST MILES TOTAL PROJECT	SHEET No.	TOTAL SHEETS
08	SBd	38	26.3/26.8	56	63

REGISTERED CIVIL ENGINEER 1-10-14 DATE

4-01-14
PLANS APPROVAL DATE

REGISTERED PROFESSIONAL ENGINEER M. Van De Pol No. 35610 Exp. 9/30/2015 CIVIL STATE OF CALIFORNIA

The State of California or its officers or agents shall not be responsible for the accuracy or completeness of electronic copies of this plan sheet.

NOTE:
Part Plan at Abutment 1
Right Side Shown, Part
Plans For Other Locations
Similar

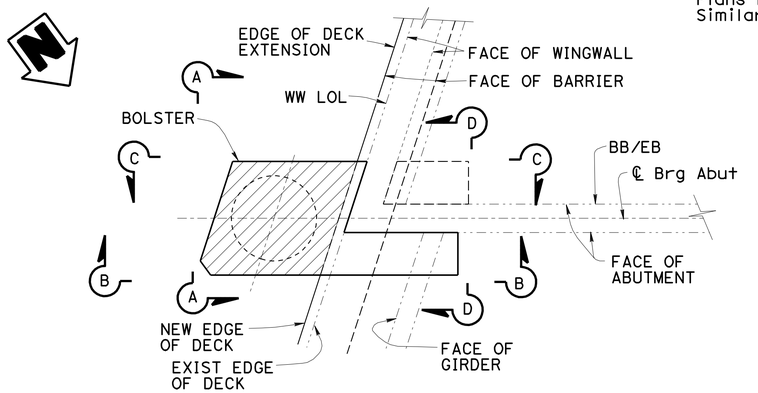

PART PLAN - DECK LEVEL

BARRIER NOT SHOWN

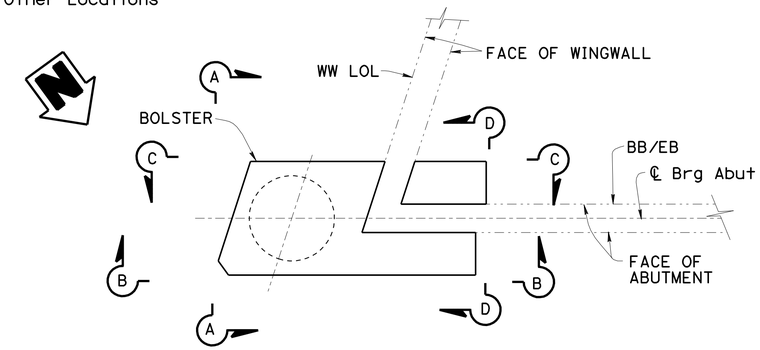

PART PLAN - BELOW SUPERSTRUCTURE

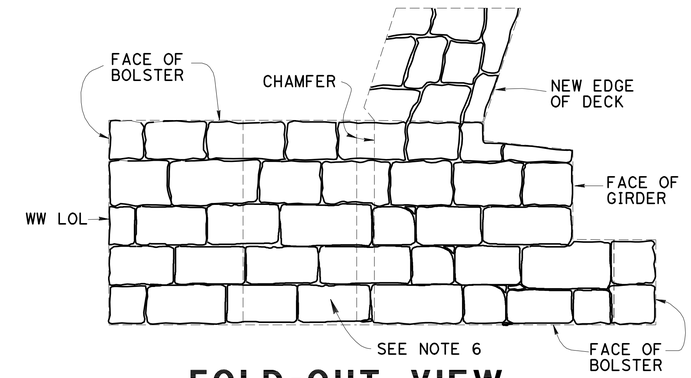

FOLD-OUT VIEW

NO SCALE

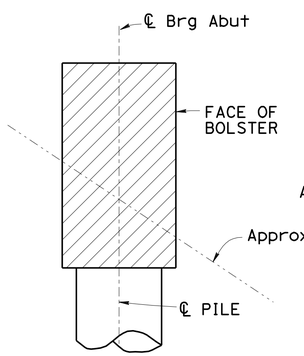

SECTION A-A

CHAMFER NOT SHOWN

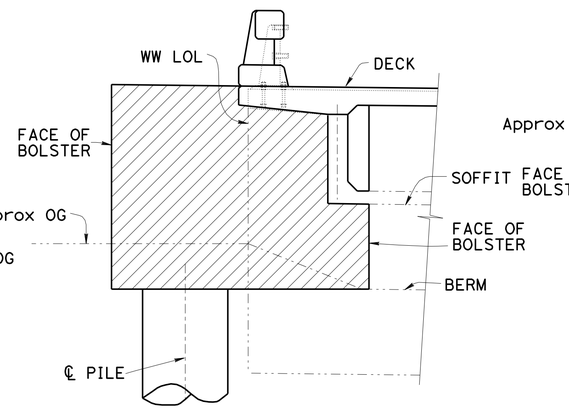

SECTION B-B

CHAMFER NOT SHOWN

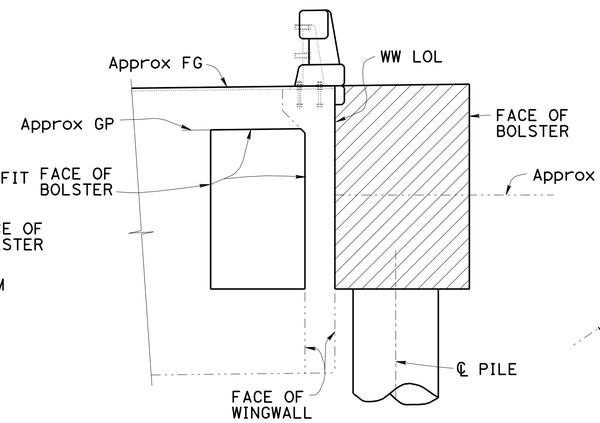

SECTION C-C

CHAMFER NOT SHOWN

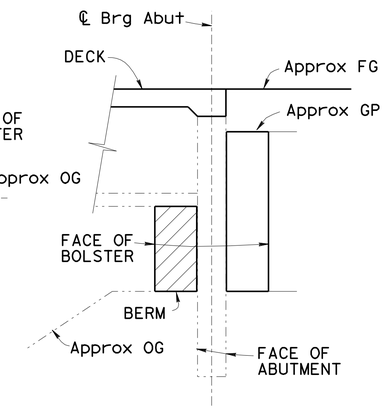

SECTION D-D

STRUCTURE APPROACH NOT SHOWN

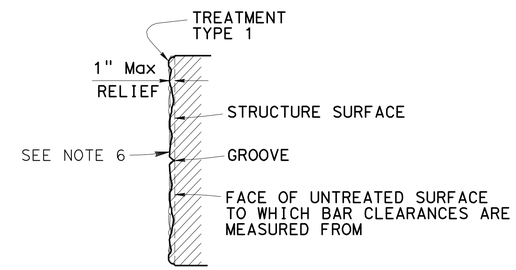

SECTION

NO SCALE

NOTES:

1. No Formliner Seams at Face of Rock or, Cut Stone
2. All Joining of Formliners to Occur at Grooves Between Stacked Stone.
3. Turn Rock at Corners
4. Stagger Vertical and Horizontal Grooves, Except as Shown
5. Architectural Treatment Type 1 Shall Have a Surface Texture Similar to Huen Stone
6. Prepare and stain concrete. Limts of stained concrete must closely resemble combination of colors No. 31575, No. 33531 and No. 36521
7. Stone Arrangement Shown Approximate. Exact Stone Arrangement as Approved by the Architect
8. For Barrier Architectural Treatment Details, see "BARRIER ARCHITECTURAL TREATMENT DETAILS" Sheet

BOLSTER ARCHITECTURAL TREATMENT LIMITS DETAILS

3/8" = 1'-0"

DENOTES LIMITS OF ARCHITECTURAL TREATMENT TYPE 1 MEDIUM TO SMALL RANDOM STACKED STONE BLOCK, STONE FACE TREATMENT. SEE NOTE 5

1 ADDED PER ADDENDUM No. 1, DATED MAY 1, 2014

DESIGN	BY M. Van De Pol	CHECKED P. Norboe	
DETAILS	BY M. Van De Pol	CHECKED P. Norboe	
QUANTITIES	BY M. Van De Pol	CHECKED P. Norboe	

STATE OF CALIFORNIA
DEPARTMENT OF TRANSPORTATION

DIVISION OF ENGINEERING SERVICES
STRUCTURE DESIGN
DESIGN BRANCH 9

BRIDGE NO. 54-0015
POST MILE 26.6

1 HATHAWAY CREEK
EARTHQUAKE RETROFIT DETAILS No. 9

STRUCTURES DESIGN DETAIL SHEET (ENGLISH) (REV. 09-01-10)

ORIGINAL SCALE IN INCHES FOR REDUCED PLANS 0 1 2 3

UNIT: 3594
PROJECT NUMBER & PHASE: 0800000608 1
CONTRACT NO.: 08-336304

DISREGARD PRINTS BEARING EARLIER REVISION DATES

REVISION DATES 04/10/12

SHEET 12 OF 19

FILE => 08-336301_12eqretrodets9.dgn

USERNAME => s121511 DATE PLOTTED => 30-APR-2014 TIME PLOTTED => 15:08

DIST	COUNTY	ROUTE	POST MILES TOTAL PROJECT	SHEET No.	TOTAL SHEETS
08	SBd	38	26.3/26.8	57	63

REGISTERED CIVIL ENGINEER 1-10-14 DATE

4-01-14
PLANS APPROVAL DATE

REGISTERED PROFESSIONAL ENGINEER TIMOTHY J. POWELL No. C 61037 Exp. 12-31-14 CIVIL STATE OF CALIFORNIA

The State of California or its officers or agents shall not be responsible for the accuracy or completeness of electronic copies of this plan sheet.

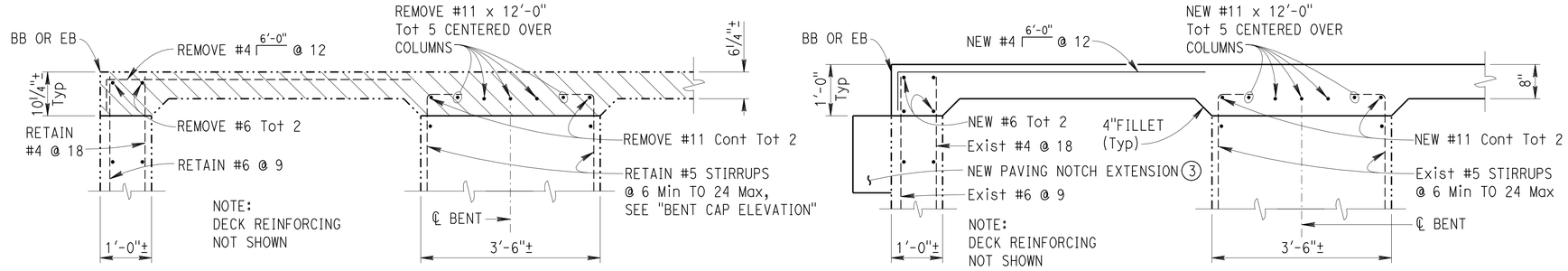

SECTION 1-1

3/4" = 1'

NOTES: (APPLY TO THIS SHEET ONLY)

- Indicates limits of bridge removal (portion).
- Indicates limits of Structure Excavation.
- Indicates limits of Structure Backfill.
- (1) Indicates limits of new Concrete Barrier Type 80A (Mod).
- (2) Indicates limits of new Concrete Barrier Type 80 (Mod).
- (3) For details see "STRUCTURE APPROACH TYPE R(30D)" sheet.
- (4) For details in this area see "EARTHQUAKE RETROFIT DETAILS No. 1" through "EARTHQUAKE RETROFIT DETAILS No. 7" sheets.

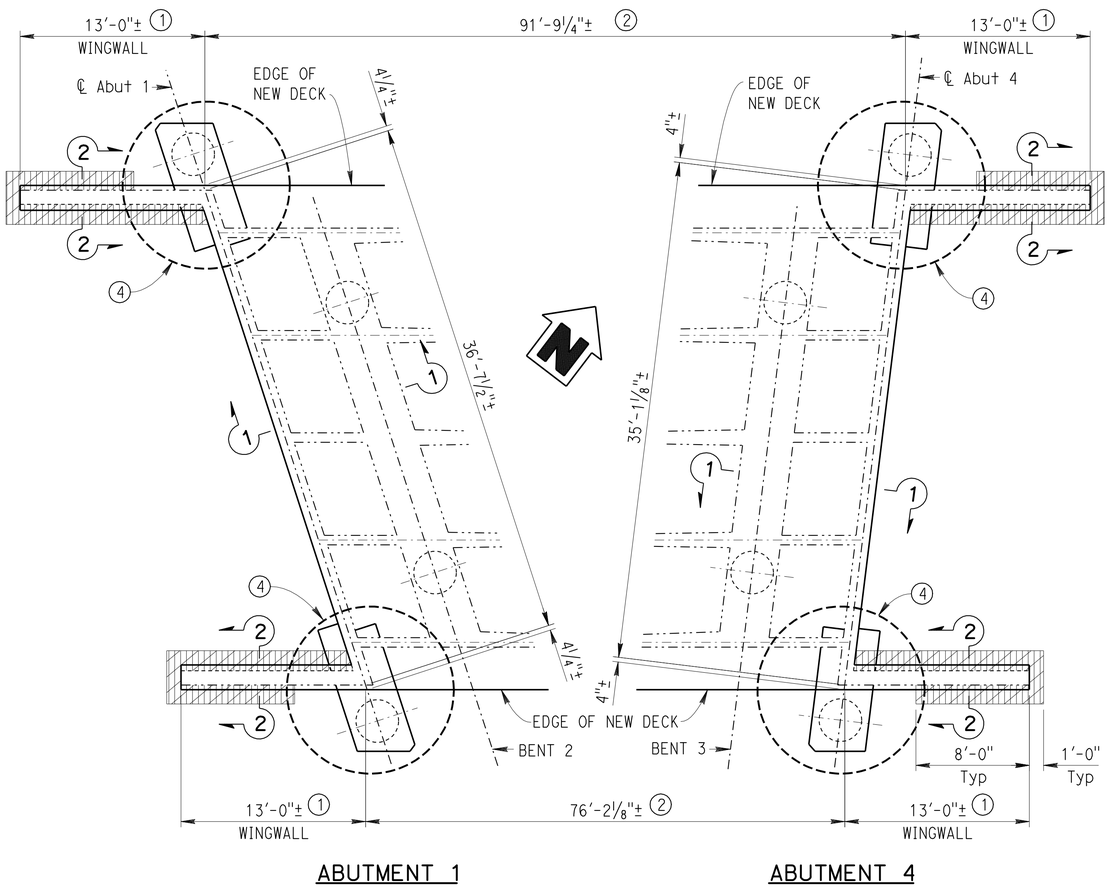

ABUTMENT & BENT CAP PLAN

3/16" = 1'

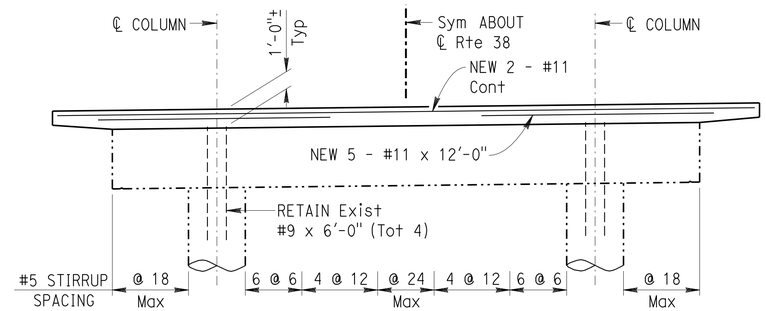

BENT CAP ELEVATION

NO SCALE

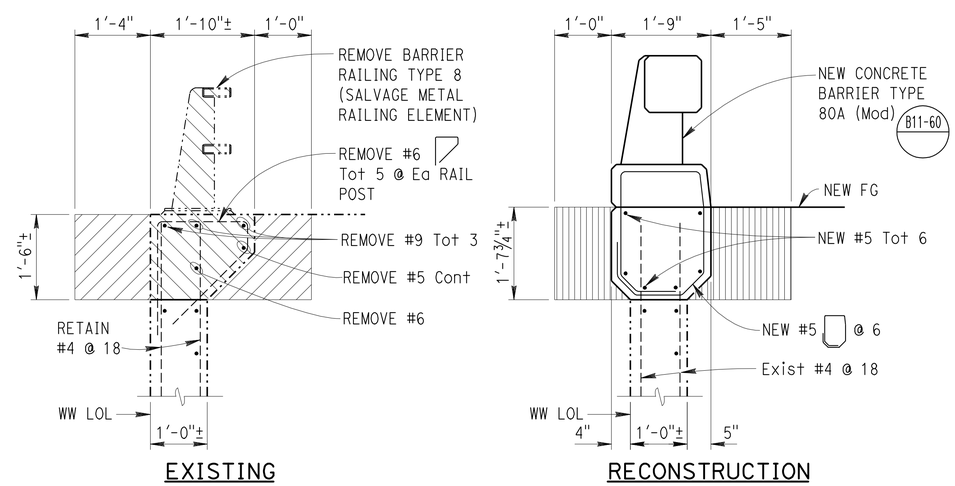

SECTION 2-2

3/4" = 1'

1 ADDED PER ADDENDUM No. 1, DATED MAY 1, 2014

DESIGN	BY Tim Powell	CHECKED Charles Hutchinson	
DETAILS	BY GF Bidwell	CHECKED Charles Hutchinson	
QUANTITIES	BY Tim Powell	CHECKED Charles Hutchinson	

STATE OF CALIFORNIA DEPARTMENT OF TRANSPORTATION

DIVISION OF MAINTENANCE STRUCTURE MAINTENANCE DESIGN

BRIDGE No. 54-0015 POST MILE 26.58

1 HATHAWAY CREEK

ABUTMENT & BENT CAP DETAILS

STRUCTURES MAINTENANCE GENERAL PLAN SHEET (ENGLISH) (REV. 09-01-10)

ORIGINAL SCALE IN INCHES FOR REDUCED PLANS 0 1 2 3

UNIT: 3488
PROJECT NUMBER & PHASE: 0800000608 1
CONTRACT No.: 08-336301

DISREGARD PRINTS BEARING EARLIER REVISION DATES

REVISION DATES 3-6-13 5-31-13 8-6-13 12-11-13 1-10-14

SHEET 13 OF 19

FILE => 08-336301_13abutdets.dgn

USERNAME => s121511 DATE PLOTTED => 30-APR-2014 TIME PLOTTED => 15:09

DIST	COUNTY	ROUTE	POST MILES TOTAL PROJECT	SHEET No.	TOTAL SHEETS
08	SBd	38	26.3/26.8	58	63

REGISTERED CIVIL ENGINEER 1-10-14 DATE

4-01-14
PLANS APPROVAL DATE

REGISTERED PROFESSIONAL ENGINEER TIMOTHY J. POWELL No. C 61037 Exp. 12-31-14 CIVIL STATE OF CALIFORNIA

The State of California or its officers or agents shall not be responsible for the accuracy or completeness of electronic copies of this plan sheet.

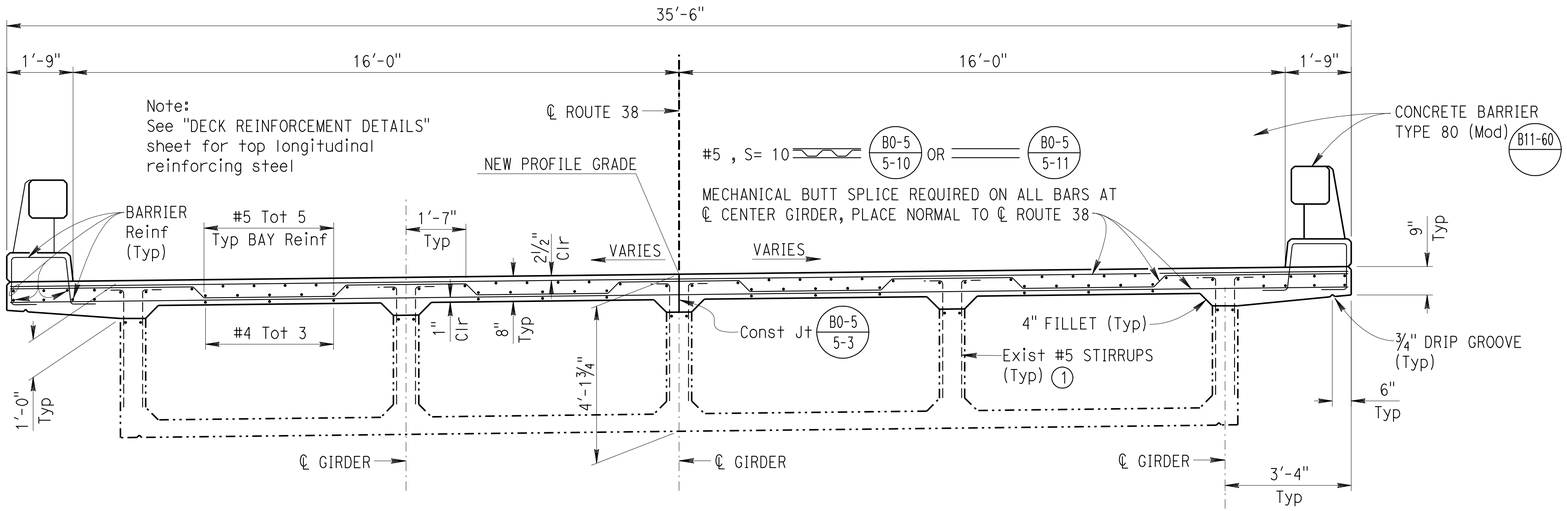

RECONSTRUCTION

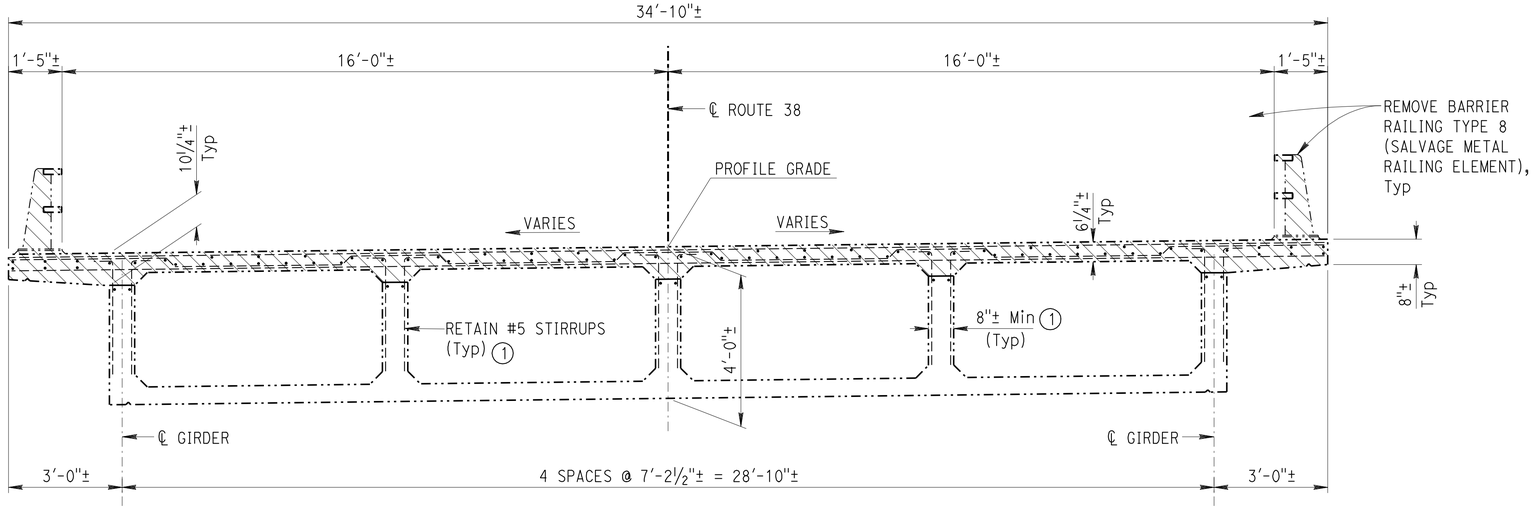

EXISTING

TYPICAL SECTION

½" = 1'

NOTES: (APPLY TO THIS SHEET ONLY)

Indicates limits of bridge removal (portion). Remove all existing reinforcing steel except where shown otherwise. Roughen existing concrete surface ¼" amplitude before placing new concrete.

1 See "DECK REINFORCEMENT DETAILS" sheet for existing girder details and stirrup spacing.

1 ADDED PER ADDENDUM No. 1, DATED MAY 1, 2014

DESIGN	BY Tim Powell	CHECKED Charles Hutchinson	
DETAILS	BY GF Bidwell	CHECKED Charles Hutchinson	
QUANTITIES	BY Tim Powell	CHECKED Charles Hutchinson	

STATE OF CALIFORNIA
DEPARTMENT OF TRANSPORTATION

DIVISION OF MAINTENANCE
STRUCTURE MAINTENANCE DESIGN

BRIDGE No. 54-0015
POST MILE 26.58

1 HATHAWAY CREEK
TYPICAL SECTION

STRUCTURES MAINTENANCE GENERAL PLAN SHEET (ENGLISH) (REV. 09-01-10)

ORIGINAL SCALE IN INCHES FOR REDUCED PLANS 0 1 2 3

UNIT: 3488
PROJECT NUMBER & PHASE: 0800000608 1
CONTRACT No.: 08-336301

DISREGARD PRINTS BEARING EARLIER REVISION DATES
REVISION DATES 3-6-13 5-31-13 8-5-13 12-11-13 1-10-14
SHEET 14 OF 19

FILE => 08-336301_14typsect.dgn

USERNAME => s121511 DATE PLOTTED => 30-APR-2014 TIME PLOTTED => 15:09

DIST	COUNTY	ROUTE	POST MILES TOTAL PROJECT	SHEET No.	TOTAL SHEETS
08	SBd	38	26.3/26.8	59	63

REGISTERED CIVIL ENGINEER 1-10-14 DATE

4-01-14
PLANS APPROVAL DATE

REGISTERED PROFESSIONAL ENGINEER TIMOTHY J. POWELL No. C 61037 Exp. 12-31-14 CIVIL STATE OF CALIFORNIA

The State of California or its officers or agents shall not be responsible for the accuracy or completeness of electronic copies of this plan sheet.

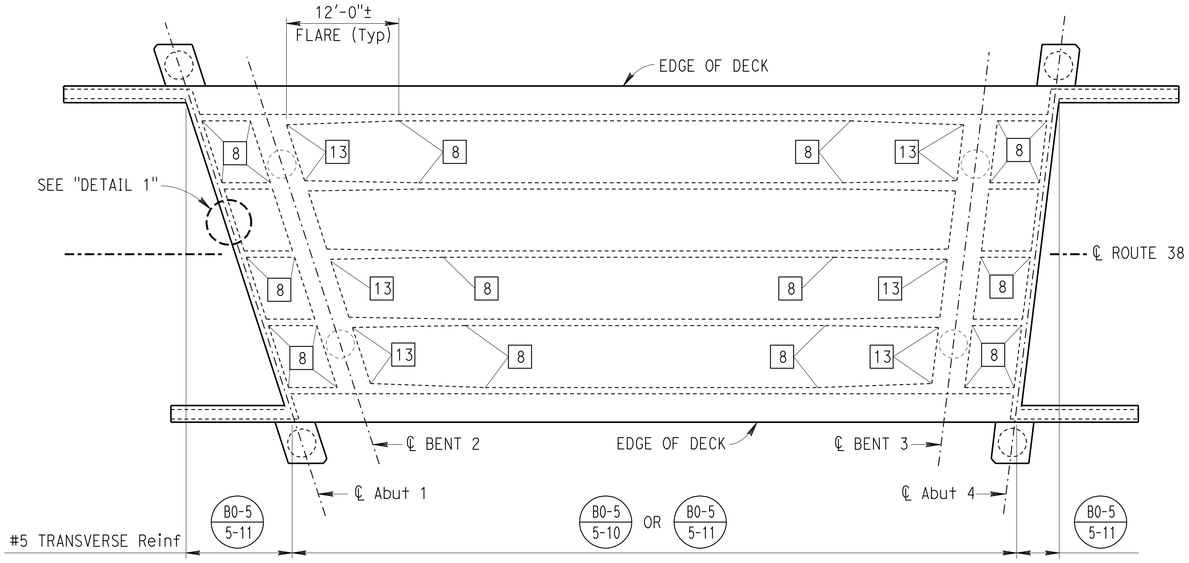

EXISTING GIRDER LAYOUT

1/8" = 1'

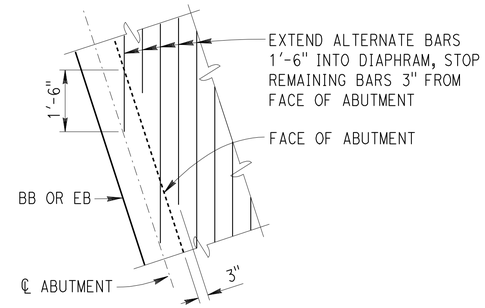

DETAIL 1

NO SCALE

NOTES: (APPLY TO THIS SHEET ONLY)

[X] Indicates width of existing girder in inches (±).

JOINT SEAL TABLE

JOINT LOCATION		MINIMUM MR (INCHES)	Approx LENGTH (FEET)	WATERSTOP
Abut 1	BB	1/2	34.0	NO
Abut 4	EB	1/2	33.0	NO

LEGEND:

BB = PAVING NOTCH AT BEGINNING OF BRIDGE
EB = PAVING NOTCH AT END OF BRIDGE

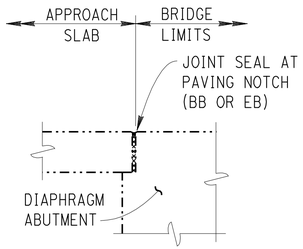

JOINT SEAL LOCATION

NO SCALE

THE FOLLOWING NOTES APPLY TO JOINT SEAL TYPE B:

1) Seal must satisfy both minimum Movement Rating (MR) and minimum W1 requirements.

2) Minimum W1 is the calculated maximum width of the joint based on field measurements. After the joints have been cleaned, minimum W1 is to be recalculated by the engineer.

3) W1 shall be the smaller of the values determined as follows:

   a) 0.85 times the manufacturer's designed minimum uncompressed width of the seal.

   b) The width of the seal on the third successive test cycle of the pressure deflection test, when compressed to an average pressure of 3 psi.

4) Bend Type B joint seal 6" up into curb or rail on the low side of the deck where deck joint matches curb or rail joint.

5) For details not shown see B6-21

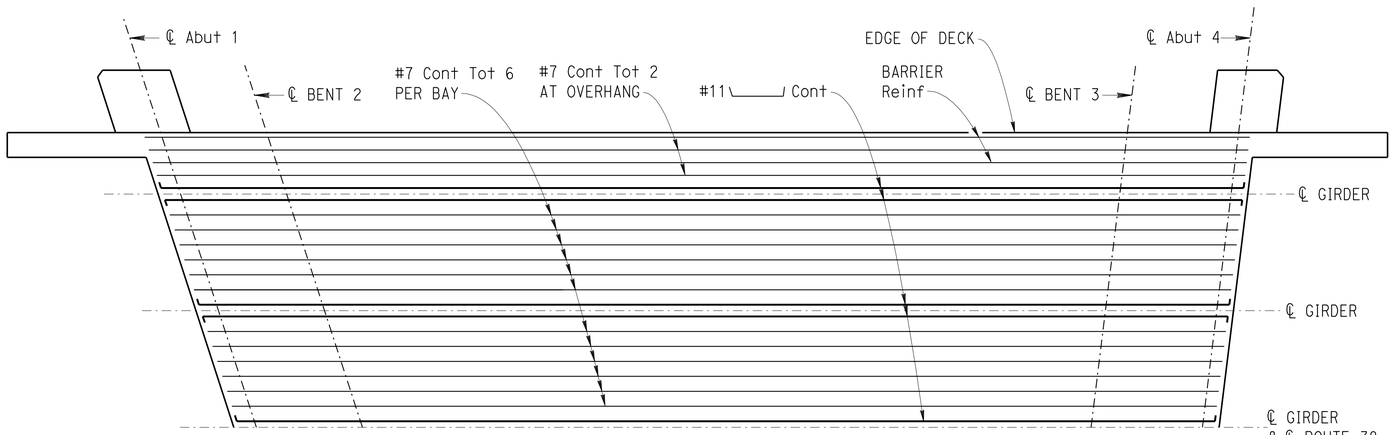

Note:
Reinforcing symmetrical about ℄ Route 38 except for length

TOP LONGITUDINAL REINFORCEMENT

NO SCALE

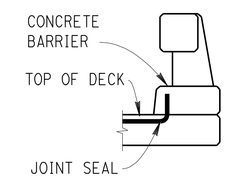

JOINT SEAL AT LOW SIDE OF DECK

DETAILS SHOWN FOR ILLUSTRATION PURPOSES ONLY. FOR USE ONLY WHERE DECK JOINT MATCHES THE BARRIER RAIL JOINT.
NO SCALE

1 ADDED PER ADDENDUM No. 1, DATED MAY 1, 2014

	BY	CHECKED
DESIGN	Tim Powell	Charles Hutchinson
DETAILS	GF Bidwell	Charles Hutchinson
QUANTITIES	Tim Powell	Charles Hutchinson

STATE OF CALIFORNIA
DEPARTMENT OF TRANSPORTATION

DIVISION OF MAINTENANCE
STRUCTURE MAINTENANCE DESIGN

BRIDGE No. 54-0015
POST MILE 26.58

1 HATHAWAY CREEK

DECK REINFORCEMENT DETAILS

STRUCTURES MAINTENANCE GENERAL PLAN SHEET (ENGLISH) (REV. 09-01-10)

ORIGINAL SCALE IN INCHES FOR REDUCED PLANS 0 1 2 3

UNIT: 3488
PROJECT NUMBER & PHASE: 0800000608 1
CONTRACT No.: 08-336301

DISREGARD PRINTS BEARING EARLIER REVISION DATES

REVISION DATES: 3-6-13 5-31-13 8-6-13 12-11-13 1-10-14

SHEET 15 OF 19

FILE => 08-336301_15deckreinf.dgn

USERNAME => s121511 DATE PLOTTED => 30-APR-2014 TIME PLOTTED => 15:09

DIST	COUNTY	ROUTE	POST MILES TOTAL PROJECT	SHEET No.	TOTAL SHEETS
08	SBd	38	26.3/26.8	60	63

REGISTERED CIVIL ENGINEER 1-10-14 DATE

4-01-14
PLANS APPROVAL DATE

REGISTERED PROFESSIONAL ENGINEER M. Van De Pol No. 35610 Exp. 9/30/2015 CIVIL STATE OF CALIFORNIA

The State of California or its officers or agents shall not be responsible for the accuracy or completeness of electronic copies of this plan sheet.

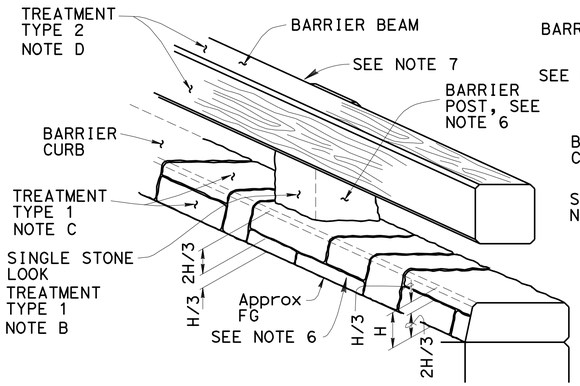

BARRIER

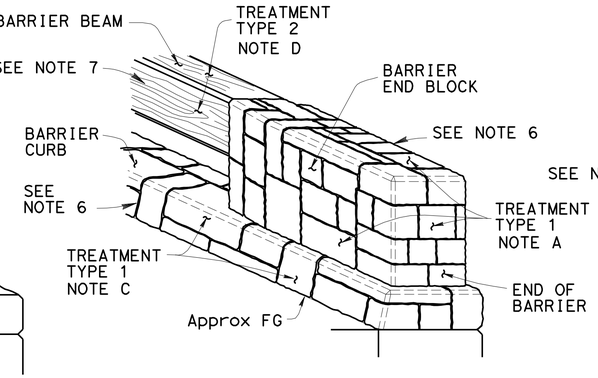

END BLOCK

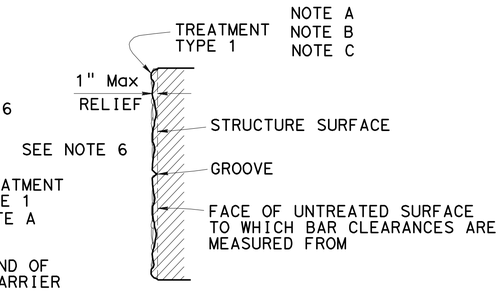

SECTION

3-D VIEWS

TREATMENT TYPE 1

MEDIUM TO SMALL
RANDOM STACKED
STONE BLOCK
STONE FACE TREATMENT

*** STONE LENGTH VARIES
Max = 3'-0"
Min = 1'-0"

Note A
Barrier End Block Treatment Relief Dimensions
Traffic Side, Relief = 3/8" Max
Edge of Deck Side, Relief = 1" Max
Surfaces Normal to Traffic, Relief = 1" Max

Note B
Barrier Post Treatment Relief Dimensions
Traffic Side, Relief = 3/8" Max
Edge of Deck Side, Relief = 1" Max
Surfaces Normal to Traffic, Relief = 1" Max

Note C
Barrier Curb Treatment Relief Dimensions
Traffic Side, Relief = 3/8" Max
Edge of Deck Side, Relief = 1" Max
Horizontal Surface, Relief = 1" Max

Note D
Barrier Beam Treatment Relief Dimension
Typical Relief = 1/4" Max

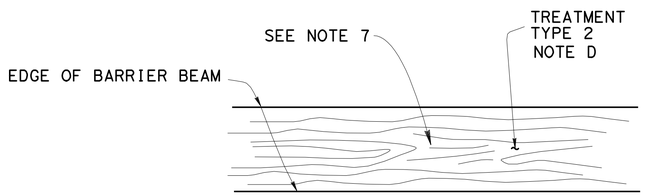

ELEVATION

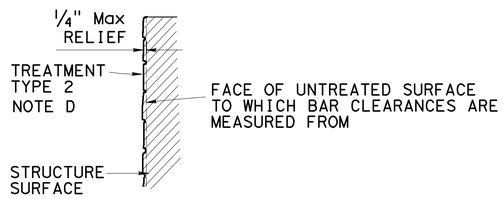

SECTION

TREATMENT TYPE 2

SIMULATING
DRIFTWOOD
WOOD GRAIN
TREATMENT

NOTES:

1. No Formliner Seams at Face of Rock or, Cut Stone
2. All Joining of Formliners to Occur at Grooves Between Stacked Stone.
3. Turn Rock at Corners
4. Stagger Vertical and Horizontal Grooves, Except as Shown
5. Architectural Treatment Type 1 Shall Have a Surface Texture Similar to Huen Stone
6. Prepare and stain concrete. Limts of stained concrete barrier Type 80 end block, posts and curb must closely resemble combination of colors No. 31575, No. 33531 and No. 36521
7. Prepare and stain concrete. Limits of stained concrete barrier Type 80 barrier beam must resemble color No. 30109
8. Barrier Posts Shall Have Single Stone Look
9. Stone Arrangement Shown Approximate. Exact Stone Arrangement as Approved by the Architect
10. MBGR and Holes For Anchorage Not Shown
11. For Abutment Bolster Architectural Treatment Details, see "EARTHQUAKE RETROFIT DETAILS No. 9" Sheet

ARCHITECTURAL TREATMENT TYPE DETAILS

3/8" = 1'-0"

1 ADDED PER ADDENDUM No. 1, DATED MAY 1, 2014

DESIGN	BY M. Van De Pol	CHECKED P. Norboe	
DETAILS	BY M. Van De Pol	CHECKED P. Norboe	
QUANTITIES	BY M. Van De Pol	CHECKED P. Norboe	

STATE OF CALIFORNIA
DEPARTMENT OF TRANSPORTATION

DIVISION OF ENGINEERING SERVICES
STRUCTURE DESIGN
DESIGN BRANCH 9

BRIDGE NO. 54-0015
POST MILE 26.6

1 HATHAWAY CREEK
BARRIER ARCHITECTURAL TREATMENT DETAILS

STRUCTURES DESIGN DETAIL SHEET (ENGLISH) (REV. 09-01-10)

ORIGINAL SCALE IN INCHES FOR REDUCED PLANS 0 1 2 3

UNIT: 3594
PROJECT NUMBER & PHASE: 0800000608 1
CONTRACT NO.: 08-336304

DISREGARD PRINTS BEARING EARLIER REVISION DATES

REVISION DATES 04/10/12

SHEET 16 OF 19

FILE => 08-336301_16barrarchit.dgn

USERNAME => s121511 DATE PLOTTED => 30-APR-2014 TIME PLOTTED => 15:09

DIST	COUNTY	ROUTE	POST MILES TOTAL PROJECT	SHEET No.	TOTAL SHEETS
08	SBd	38	26.3/26.8	61	63

REGISTERED CIVIL ENGINEER 1-10-14 DATE

4-01-14
PLANS APPROVAL DATE

REGISTERED PROFESSIONAL ENGINEER TIMOTHY J. POWELL No. C 61037 Exp. 12-31-14 CIVIL STATE OF CALIFORNIA

The State of California or its officers or agents shall not be responsible for the accuracy or completeness of electronic copies of this plan sheet.

NOTES: (APPLY TO THIS SHEET ONLY)

All details shown are for illustrative purposes only.

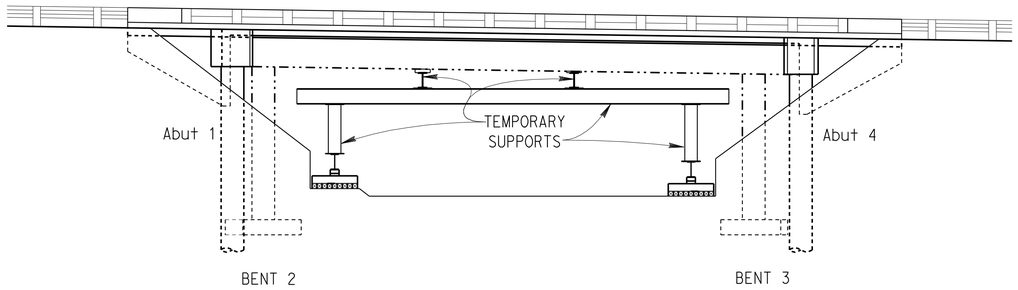

ELEVATION

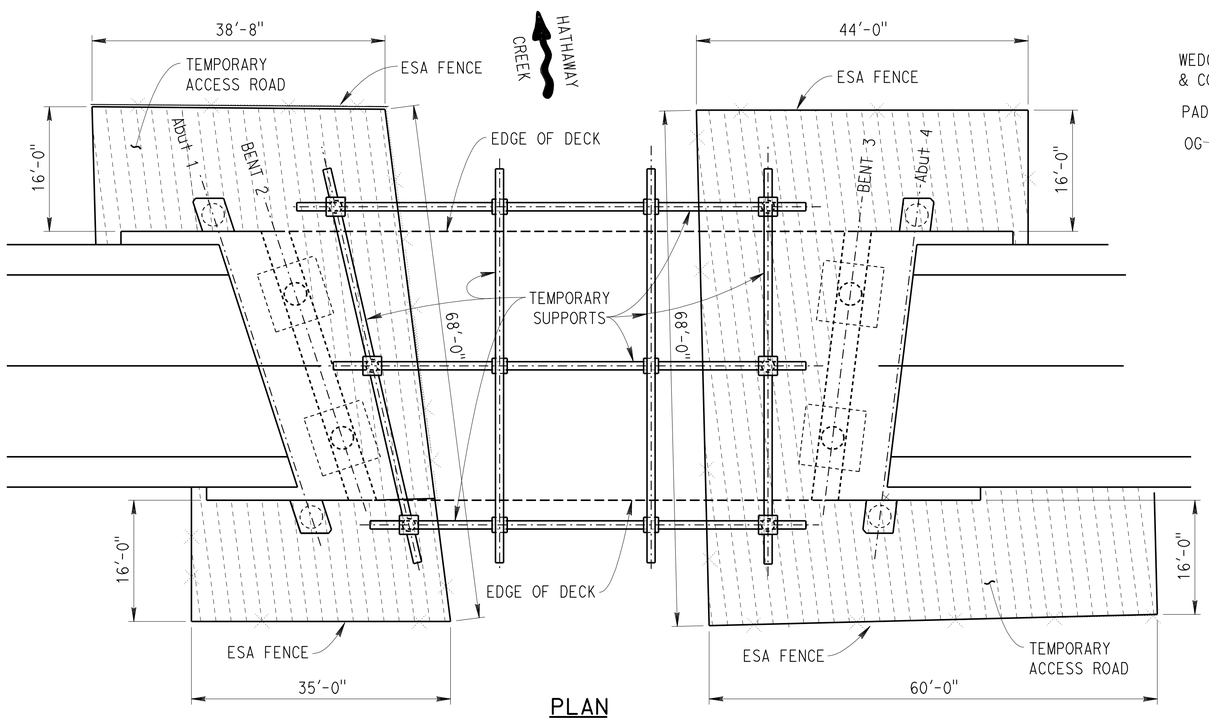

PLAN

TEMPORARY SUPPORTS AND ENVIRONMENTAL STUDY AREA

NO SCALE

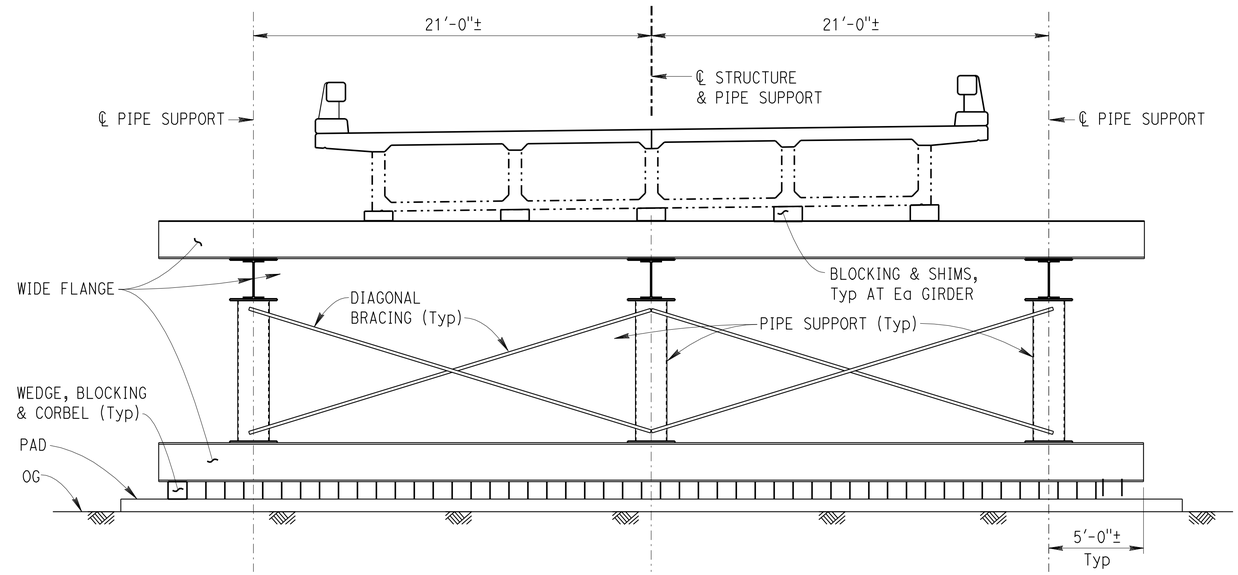

TYPICAL SECTION

NO SCALE

TEMPORARY SUPPORT TABLE

LOCATION SPAN 2	DEAD LOAD (K)	MINIMUM DESIGN LOAD DL+LL+I (K)	MINIMUM LATERAL DESIGN LOAD (K)	MINIMUM UPWARD DEFLECTION (INCHES)
23'-0' FROM ℄ BENT 2	90	45	5	1/4
23'-0' FROM ℄ BENT 3	90	45	5	1/4

TEMPORARY SUPPORT NOTES:

The maximum allowable transverse displacement of the superstructure measuredat the girder soffit relative to the base of the temporary support is 1".

Jacking operations shall not exceed the dead load nor the maximum upward deflection after deck removal.

Upward deflection at the temporary supports shall not exceed 1/4" prior to completion of bridge removal operations.

Vertical deflection shall be maintained during deck placement and until new deck attains the required strength.

1 ADDED PER ADDENDUM No. 1, DATED MAY 1, 2014

	BY	CHECKED
DESIGN	Tim Powell	Charles Hutchinson
DETAILS	GF Bidwell	Charles Hutchinson
QUANTITIES	Tim Powell	Charles Hutchinson

STATE OF CALIFORNIA
DEPARTMENT OF TRANSPORTATION

DIVISION OF MAINTENANCE
STRUCTURE MAINTENANCE DESIGN

BRIDGE No. 54-0015
POST MILE 26.58

1 HATHAWAY CREEK
TEMPORARY SUPPORT DETAILS

STRUCTURES MAINTENANCE GENERAL PLAN SHEET (ENGLISH) (REV. 09-01-10)

ORIGINAL SCALE IN INCHES FOR REDUCED PLANS 0 1 2 3

UNIT: 3488
PROJECT NUMBER & PHASE: 0800000608 1
CONTRACT No.: 08-336301

DISREGARD PRINTS BEARING EARLIER REVISION DATES

REVISION DATES: 3-6-13 5-31-13 8-6-13 12-11-13 1-10-14

SHEET 17 OF 19

FILE => 08-336301_17tempsupp.dgn

USERNAME => s121511 DATE PLOTTED => 30-APR-2014 TIME PLOTTED => 15:09

DIST	COUNTY	ROUTE	POST MILES TOTAL PROJECT	SHEET No.	TOTAL SHEETS
08	SBd	38	26.3/26.8	62	63

REGISTERED CIVIL ENGINEER 1-10-14 DATE

4-01-14
PLANS APPROVAL DATE

REGISTERED PROFESSIONAL ENGINEER TIMOTHY J. POWELL No. C 61037 Exp. 12-31-14 CIVIL STATE OF CALIFORNIA

The State of California or its officers or agents shall not be responsible for the accuracy or completeness of electronic copies of this plan sheet.

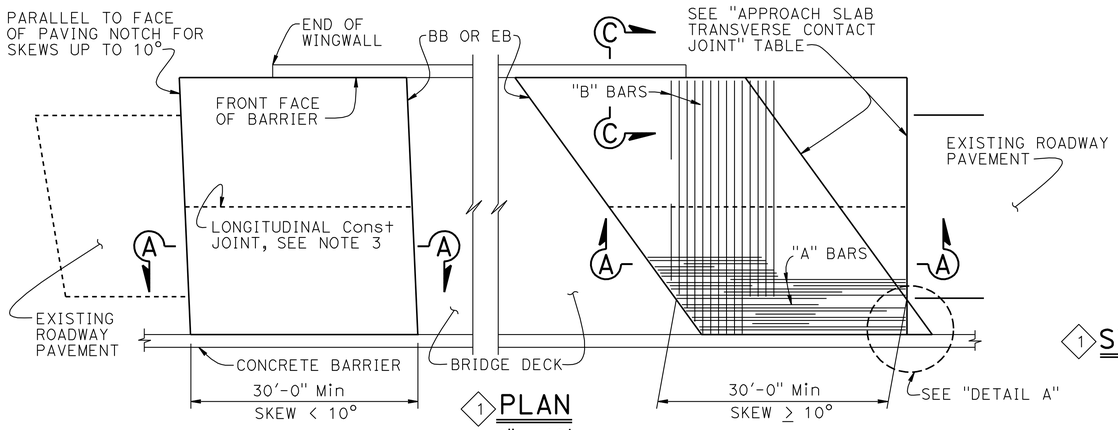

1 PLAN
1" = 10'

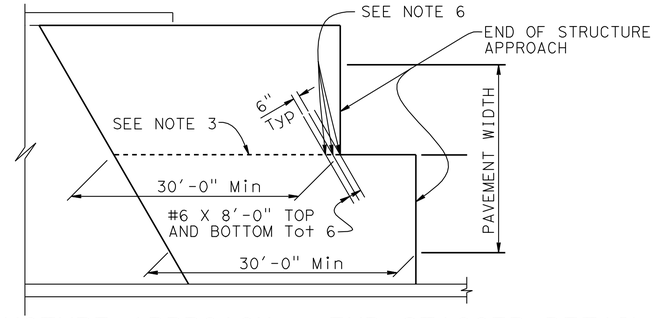

1 STRUCTURE APPROACH - END STAGGER DETAIL
NO SCALE

APPROACH SLAB TRANSVERSE CONTACT JOINT		
APPROACH SKEW	WITH AC ROADWAY PAVEMENT	WITH PCC ROADWAY PAVEMENT
< 10°	PARALLEL TO FACE OF PN	PARALLEL TO FACE OF PAVING NOTCH
10° - 45°	PARALLEL TO FACE OF PN USE "DETAIL A"	STAGGER LINES 24' TO 36' APART
> 45°	PARALLEL TO FACE OF PN USE "DETAIL A"	STAGGER AT EACH LANE LINE

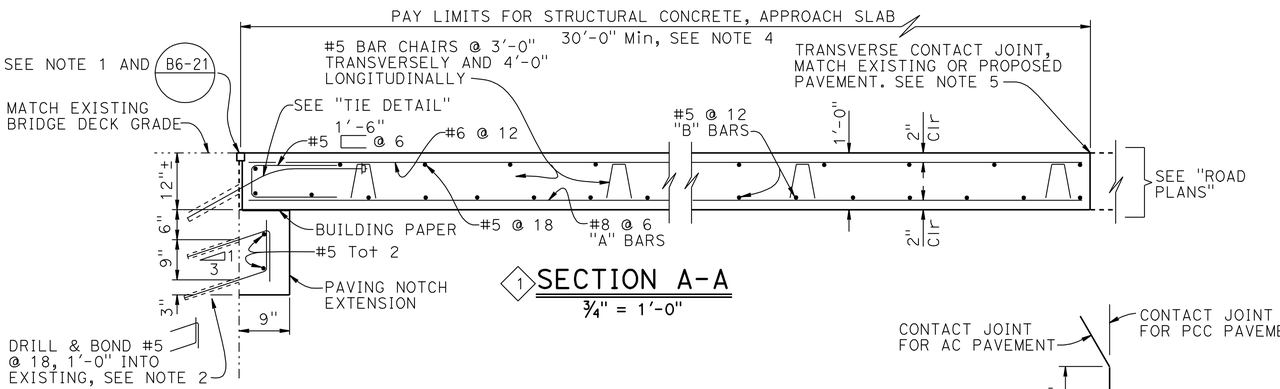

1 SECTION A-A
¾" = 1'-0"

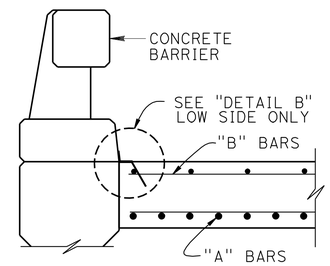

1 SECTION C-C
¾" = 1'-0"

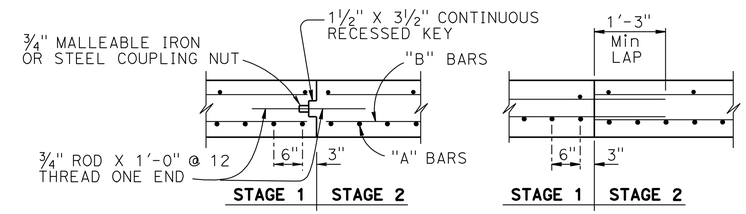

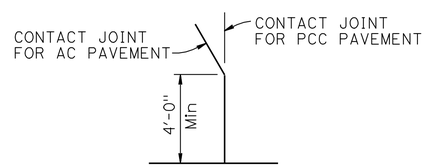

DETAIL A
No Scale

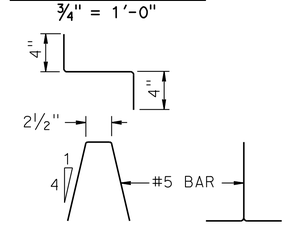

BAR CHAIR DETAIL
1½" = 1'-0"

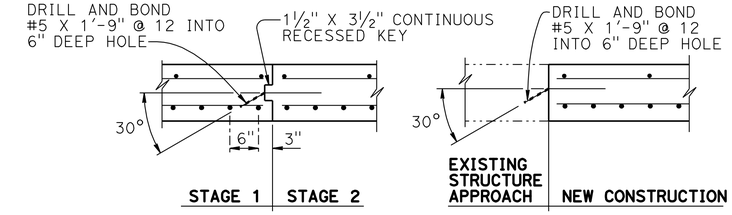

LONGITUDINAL CONSTRUCTION JOINT ALTERNATIVES
¾" = 1'-0"

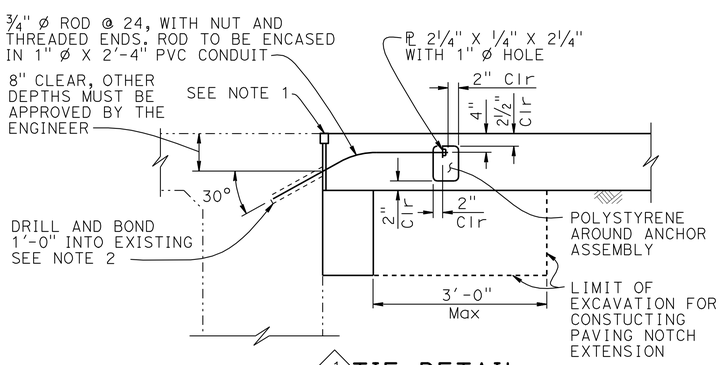

1 TIE DETAIL
¾" = 1'-0"

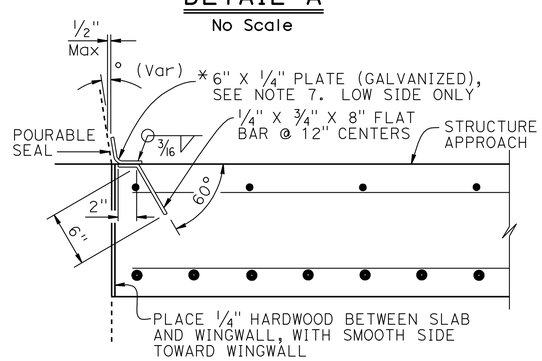

*(TO BE USED WITH CONCRETE BARRIER WITH SLOPING FACE)

1 DETAIL B
1½" = 1'-0"

NOTES:

1. For details not shown or noted, see Structure Plans. Adjust bar reinforcement to clear a sawcut for sealed joint, when required
2. Space to avoid existing prestress anchorages and main reinforcement
3. Longitudinal construction joints, when permitted by the Engineer, shall be located on lane lines
4. Transverse contact joint shall be a minimum of 5'-0" from an existing or constructed weakened plane joint
5. For transverse contact joint with new PCC paving. refer to Standard Plan P10
6. Couplers are required for stage construction
7. End angle or plate at beginning of barrier transition, end of wingwall or end of structure approach as applicable

NOTE:
THE CONTRACTOR SHALL VERIFY ALL CONTROLLING FIELD DIMENSIONS BEFORE ORDERING OR FABRICATING ANY MATERIAL.

1 ADDED PER ADDENDUM No. 1, DATED MAY 1, 2014

STANDARD DRAWING
FILE NO. xs3-150
APPROVAL DATE REVISED

1 DETAIL REVISED

STATE OF CALIFORNIA
DEPARTMENT OF TRANSPORTATION

DIVISION OF ENGINEERING SERVICES

BRIDGE No. 54-0015
POST MILE 26.58

1 HATHAWAY CREEK
STRUCTURE APPROACH TYPE R(30D)

DS OSD 2147A (ENGLISH STANDARD DRAWING "XS" BORDER REV. (02-02-11)

ORIGINAL SCALE IN INCHES FOR REDUCED PLANS 0 1 2 3

UNIT: 3488
PROJECT NUMBER & PHASE: 0800000608 1
CONTRACT No.: 08-336301

DISREGARD PRINTS BEARING EARLIER REVISION DATES
REVISION DATES 3-6-13 5-31-13 8-6-13 12-11-13 1-10-14
SHEET 18 OF 19

FILE => 08-336301_18xs3-150.dgn

USERNAME => s121511 DATE PLOTTED => 30-APR-2014 TIME PLOTTED => 15:09

DIST	COUNTY	ROUTE	POST MILES TOTAL PROJECT	SHEET No.	TOTAL SHEETS
08	SBd	38	26.3/26.8	63	63

REGISTERED CIVIL ENGINEER 4-8-13 DATE

4-01-14
PLANS APPROVAL DATE

REGISTERED PROFESSIONAL ENGINEER Hassan Ibrahim No. C59016 Exp. 6-30-14 CIVIL STATE OF CALIFORNIA

The State of California or its officers or agents shall not be responsible for the accuracy or completeness of electronic copies of this plan sheet.

This LOTB sheet was prepared in accordance with the Caltrans Soil & Rock Logging, Classification, & Presentation Manual (2010 Edition).

See 2010 Standard Plans A10F and A10G for Soil Legend, and A10H for Rock Legend.

BENCH MARK

BM2-A-66
Concrete Nail, Rubble Masonery
End wall 16.5' Lt. Sta 17+30 (As-Built)
Elev = 6326.78'
NAVD29.

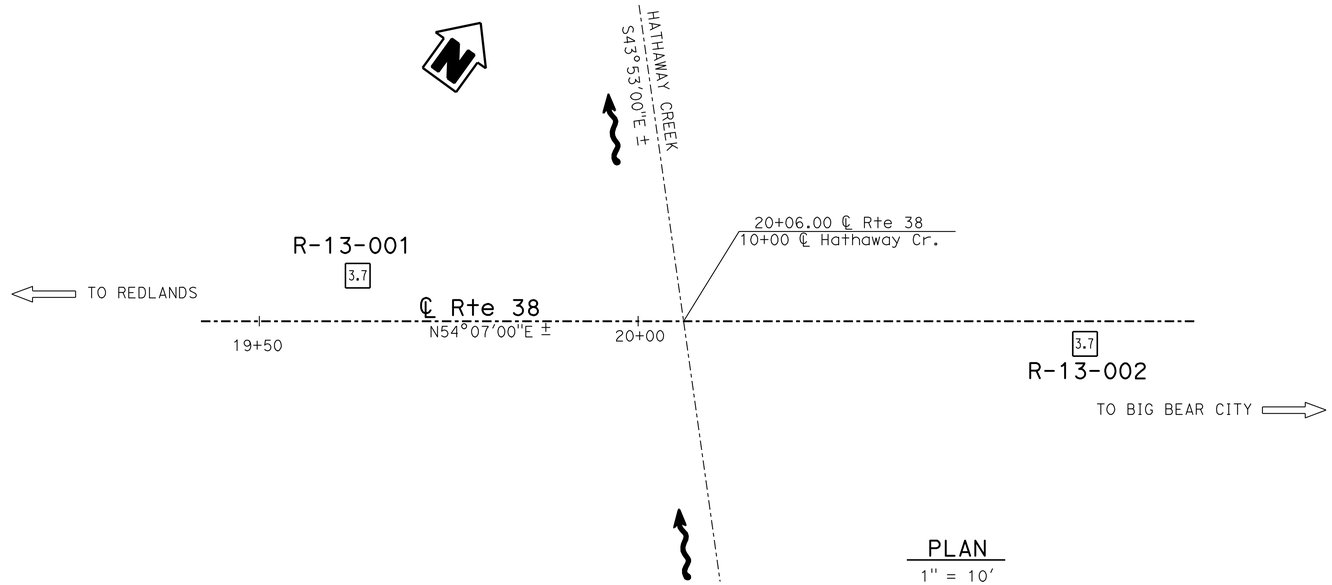

PLAN
1" = 10'

1 ADDED PER ADDENDUM No. 1, DATED MAY 1, 2014

Note: No ground water encountered during field investigation.

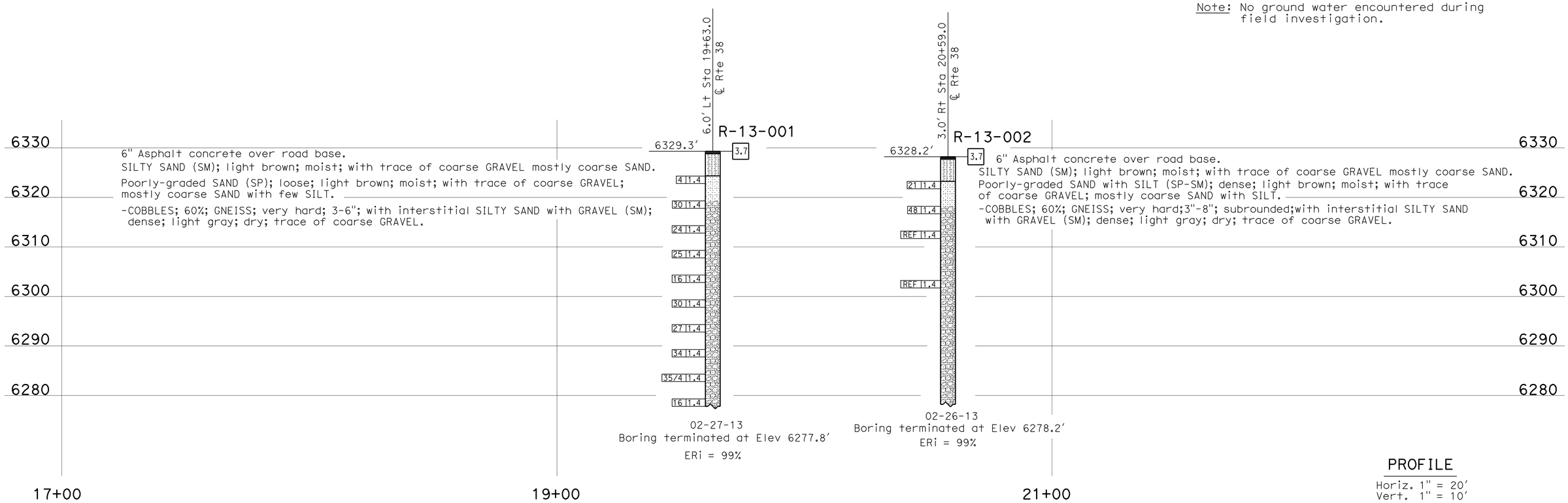

PROFILE
Horiz. 1" = 20'
Vert. 1" = 10'

ENGINEERING SERVICES	MATERIALS AND GEOTECHNICAL SERVICES	STATE OF CALIFORNIA DEPARTMENT OF TRANSPORTATION	DIVISION OF ENGINEERING SERVICES STRUCTURE DESIGN DESIGN BRANCH 9	BRIDGE NO. 54-0015 POST MILE 26.6	1 HATHAWAY CREEK LOG OF TEST BORINGS
FUNCTIONAL SUPERVISOR NAME: A. Perez-Cobo	DRAWN BY: F. Nguyen CHECKED BY: S. Logeswaran	FIELD INVESTIGATION BY: H. Ibrahim			

OGS CIVIL LOG OF TEST BORINGS SHEET

ORIGINAL SCALE IN INCHES FOR REDUCED PLANS 0 1 2 3

UNIT: 3643
PROJECT NUMBER & PHASE: 08000006081 CONTRACT NO.: 08-336301

DISREGARD PRINTS BEARING EARLIER REVISION DATES

REVISION DATES 03-21-13 04-08-13 04-08-13

SHEET 19 OF 19

FILE => 08-336301_191otb.dgn

USERNAME => s121511 DATE PLOTTED => 30-APR-2014 TIME PLOTTED => 15:09