Dist	COUNTY	ROUTE	POST MILES TOTAL PROJECT	SHEET No.	TOTAL SHEETS
08	Riv	10	R74.0/R105.4	3	100

REGISTERED CIVIL ENGINEER 5/18/15 DATE

6/01/15
PLANS APPROVAL DATE

REGISTERED PROFESSIONAL ENGINEER TUAN TRUONG No. 60137 Exp. 2/15/17 CIVIL STATE OF CALIFORNIA

THE STATE OF CALIFORNIA OR ITS OFFICERS OR AGENTS SHALL NOT BE RESPONSIBLE FOR THE ACCURACY OR COMPLETENESS OF SCANNED COPIES OF THIS PLAN SHEET.

NOTE:

EXISTING UTILITY FACILITIES ARE NOT INCLUDED IN THESE PLANS.

LEGEND:

(X) CONSTRUCTION LOCATIONS OF SALVAGING MBGR AND INSTALLING MIDWEST GUARDRAIL SYSTEM (MGS) SEE SUMMARY OF QUANTITIES

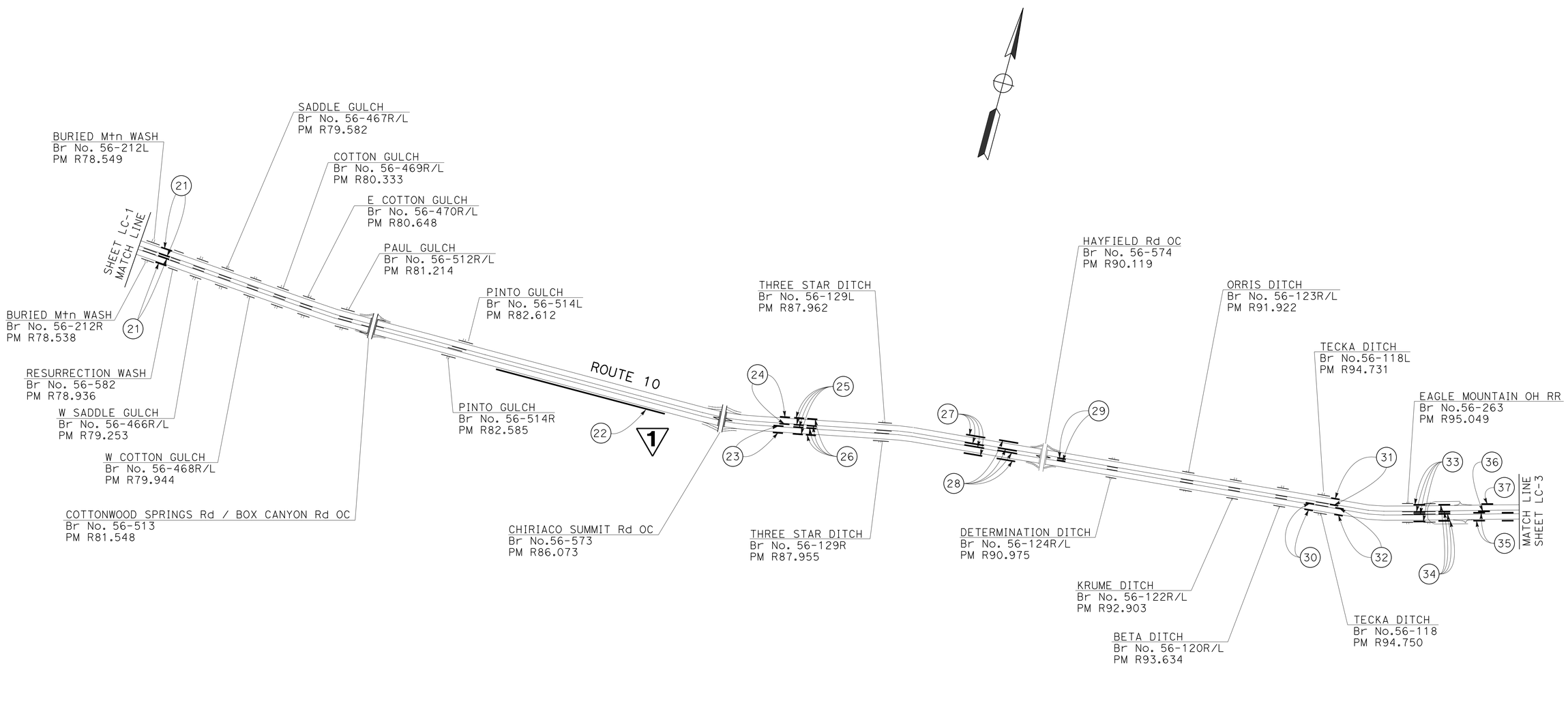

1 REPLACED PER ADDENDUM No. 1 DATED JANUARY 07, 2016

LOCATION OF CONSTRUCTION

NO SCALE

LC-2

STATE OF CALIFORNIA - DEPARTMENT OF TRANSPORTATION
Caltrans DESIGN

FUNCTIONAL SUPERVISOR: DIBORO KANABOLO
CALCULATED-DESIGNED BY: JOE DAMIAN
CHECKED BY: TUAN A. TRUONG
REVISED BY
DATE REVISED

LAST REVISION 06-01-15
DATE PLOTTED => 06-JAN-2016
TIME PLOTTED => 14:49

Dist	COUNTY	ROUTE	POST MILES TOTAL PROJECT	SHEET No.	TOTAL SHEETS
08	Riv	10	R74.0/R105.4	15	100

REGISTERED CIVIL ENGINEER 5/18/15 DATE

6/01/15
PLANS APPROVAL DATE

REGISTERED PROFESSIONAL ENGINEER TUAN TRUONG No. 60137 Exp 2/15/17 CIVIL STATE OF CALIFORNIA

THE STATE OF CALIFORNIA OR ITS OFFICERS OR AGENTS SHALL NOT BE RESPONSIBLE FOR THE ACCURACY OR COMPLETENESS OF SCANNED COPIES OF THIS PLAN SHEET.

NOTE:
USE 15'-7½" LENGTH RAIL.

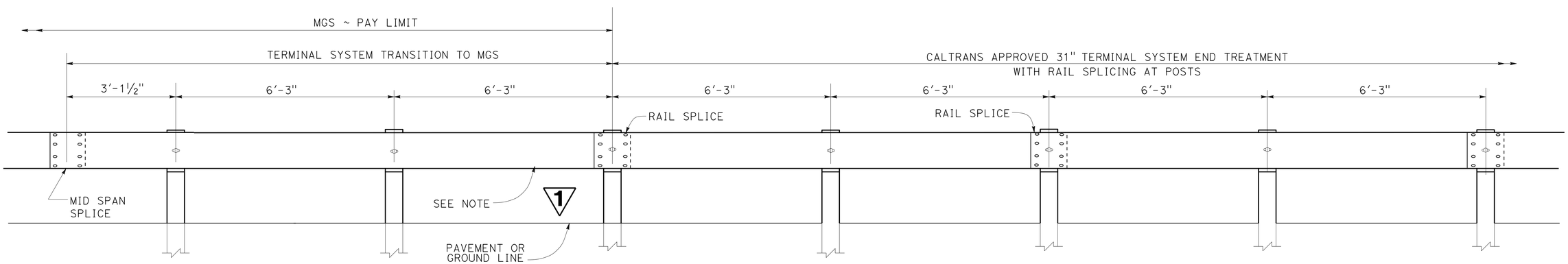

TRANSISTION DETAIL FOR 31" TERMINAL SYSTEM END TREATMENT WITH RAIL SPLICING AT POSTS TO MIDWEST GUARDRAIL SYSTEM

1 REPLACED PER ADDENDUM No. 1 DATED JANUARY 07, 2016

CONSTRUCTION DETAILS

NO SCALE

C-6

STATE OF CALIFORNIA - DEPARTMENT OF TRANSPORTATION
Caltrans DESIGN

FUNCTIONAL SUPERVISOR: DIBORO KANABOLO
CALCULATED-DESIGNED BY: BINH NGUYEN
CHECKED BY: TUAN A. TRUONG
REVISED BY
DATE REVISED

LAST REVISION 06-01-15
DATE PLOTTED => 06-JAN-2016
TIME PLOTTED => 14:49

Dist	COUNTY	ROUTE	POST MILES TOTAL PROJECT	SHEET No.	TOTAL SHEETS
08	Riv	10	R74.0/R105.4	20	100

REGISTERED CIVIL ENGINEER 5/18/15 DATE

6/01/15
PLANS APPROVAL DATE

REGISTERED PROFESSIONAL ENGINEER
TUAN TRUONG
No. 60137
Exp. 2/15/17
CIVIL
STATE OF CALIFORNIA

THE STATE OF CALIFORNIA OR ITS OFFICERS OR AGENTS SHALL NOT BE RESPONSIBLE FOR THE ACCURACY OR COMPLETENESS OF SCANNED COPIES OF THIS PLAN SHEET.

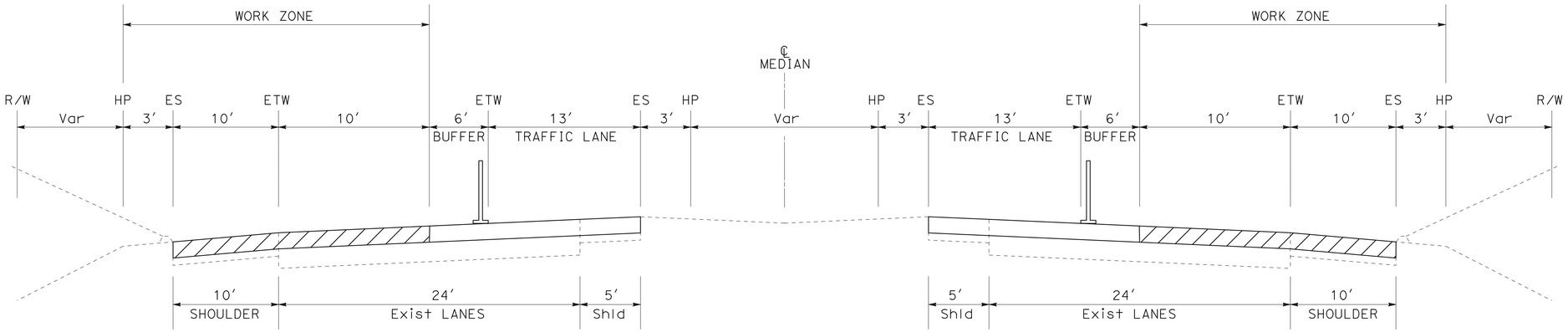

WESTBOUND

EASTBOUND

STAGE 5

COLD PLANE 0.30′
HMA-A 0.30′ (1ST LIFT)

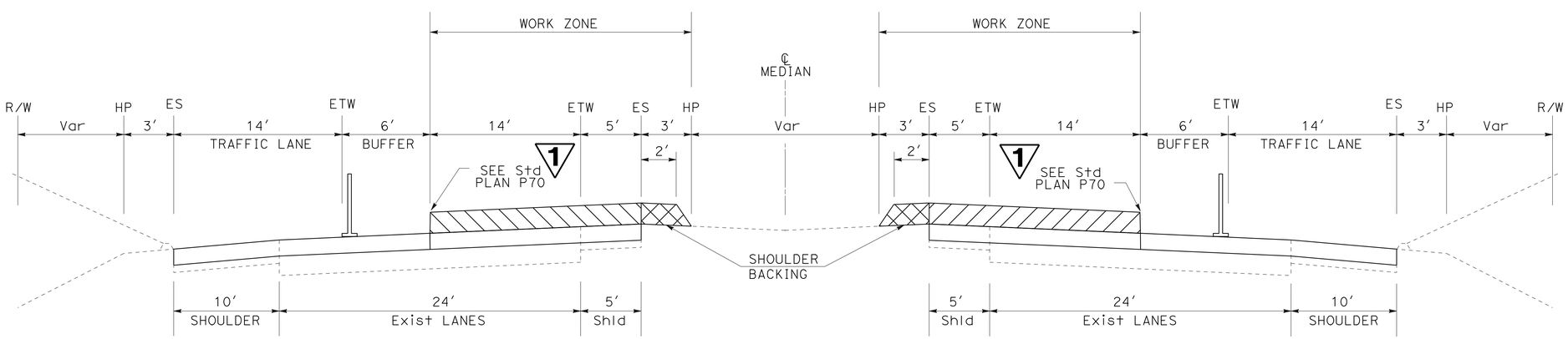

WESTBOUND

EASTBOUND

1 REPLACED PER ADDENDUM No. 1 DATED JANUARY 07, 2016

STAGE 6

HMA-A 0.30′ (2ND LIFT)

STAGE CONSTRUCTION

NO SCALE

SC-3

STATE OF CALIFORNIA - DEPARTMENT OF TRANSPORTATION
Caltrans® DESIGN

FUNCTIONAL SUPERVISOR: DIBORO KANABOLO

CALCULATED-DESIGNED BY: BINH NGUYEN
CHECKED BY: TUAN A. TRUONG

REVISED BY
DATE REVISED

LAST REVISION 06-01-15
DATE PLOTTED => 06-JAN-2016
TIME PLOTTED => 14:49

Dist	COUNTY	ROUTE	POST MILES TOTAL PROJECT	SHEET No.	TOTAL SHEETS
08	Riv	10	R74.0/R105.4	21	100

REGISTERED CIVIL ENGINEER 5/18/15 DATE

6/01/15
PLANS APPROVAL DATE

REGISTERED PROFESSIONAL ENGINEER TUAN TRUONG No. 60137 Exp 2/15/17 CIVIL STATE OF CALIFORNIA

THE STATE OF CALIFORNIA OR ITS OFFICERS OR AGENTS SHALL NOT BE RESPONSIBLE FOR THE ACCURACY OR COMPLETENESS OF SCANNED COPIES OF THIS PLAN SHEET.

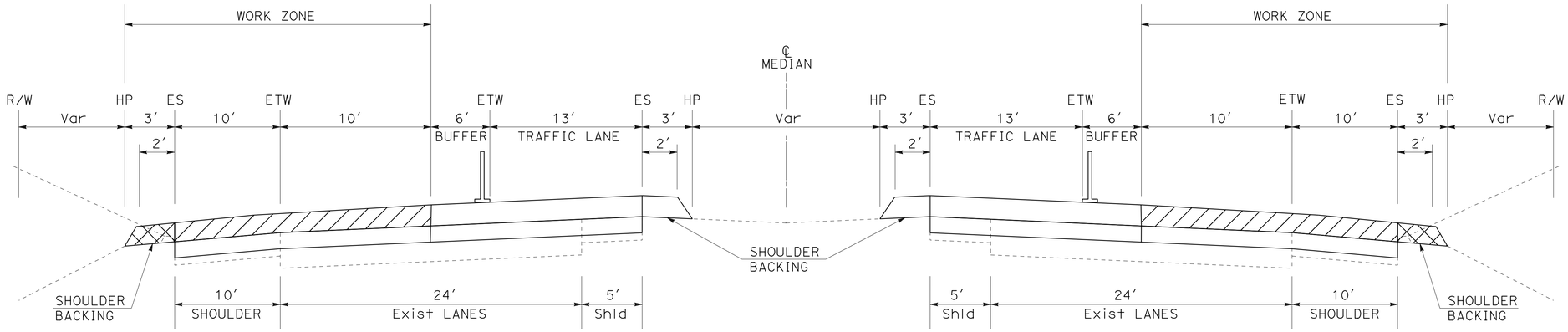

WESTBOUND

EASTBOUND

STAGE 7

HMA-A 0.30′ (2ND LIFT)

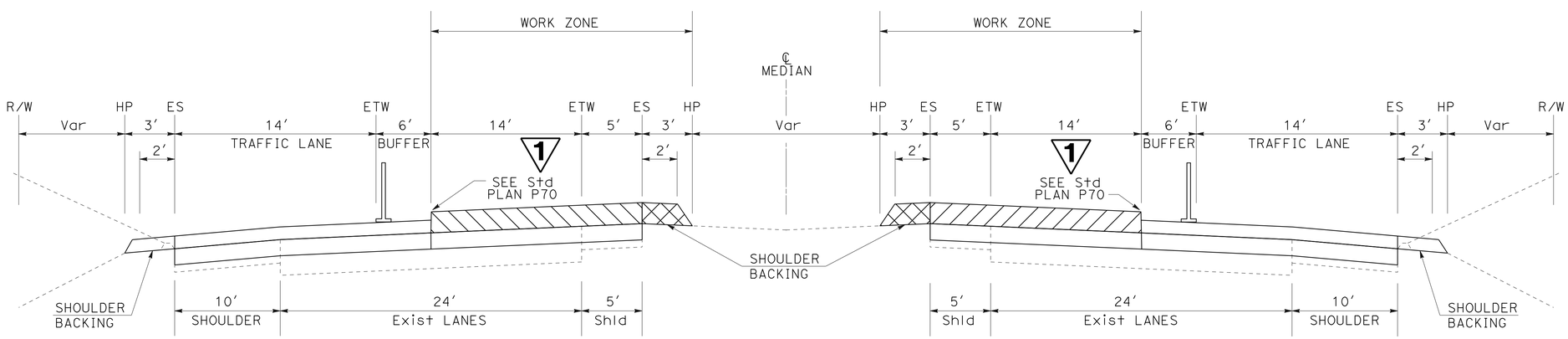

WESTBOUND

EASTBOUND

1 REPLACED PER ADDENDUM No. 1 DATED JANUARY 07, 2016

STAGE 8

RHMA-G 0.20′ (FINISH GRADE)

STAGE CONSTRUCTION

NO SCALE **SC-4**

STATE OF CALIFORNIA - DEPARTMENT OF TRANSPORTATION

Caltrans® DESIGN

FUNCTIONAL SUPERVISOR: DIBORO KANABOLO

CALCULATED-DESIGNED BY: BINH NGUYEN

CHECKED BY: TUAN A. TRUONG

REVISED BY | DATE REVISED

LAST REVISION 06-01-15 | DATE PLOTTED => 06-JAN-2016 | TIME PLOTTED => 14:50

Dist	COUNTY	ROUTE	POST MILES TOTAL PROJECT	SHEET No.	TOTAL SHEETS
08	Riv	10	R74.0/R105.4	26	100

REGISTERED CIVIL ENGINEER 5/18/15 DATE

6/01/15
PLANS APPROVAL DATE

REGISTERED PROFESSIONAL ENGINEER
TRAN HOANG
No. 54996
Exp. 6/30/16
CIVIL
STATE OF CALIFORNIA

THE STATE OF CALIFORNIA OR ITS OFFICERS OR AGENTS SHALL NOT BE RESPONSIBLE FOR THE ACCURACY OR COMPLETENESS OF SCANNED COPIES OF THIS PLAN SHEET.

NOTE:
PAVEMENT DELINEATION SHOWN ON STAGE 8 AND 9 IS PERMANENT DELINEATION (SEE PDQ SHEET FOR QUANTITIES)

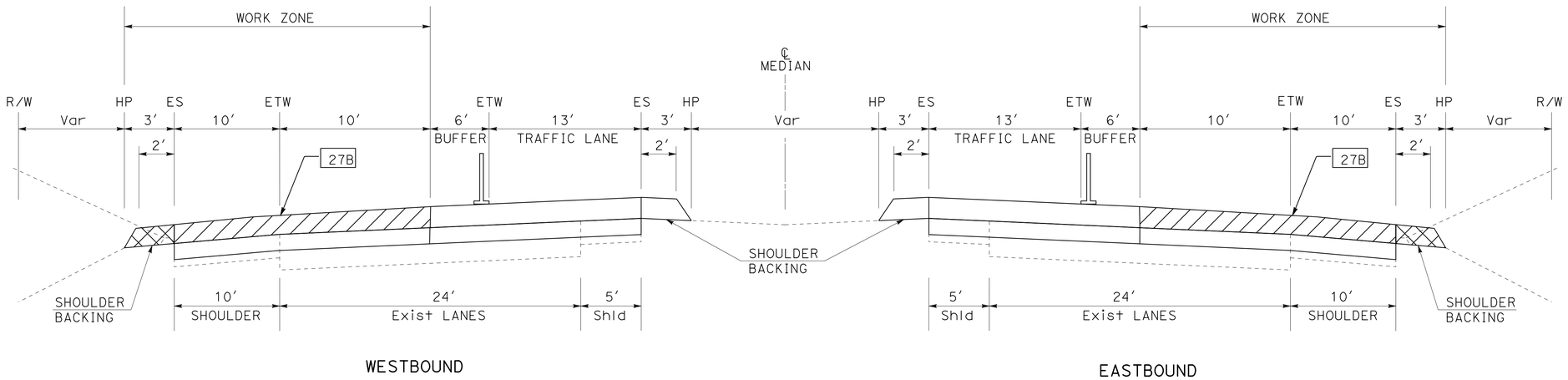

STAGE 7
HMA-A 0.30′ (2ND LIFT)

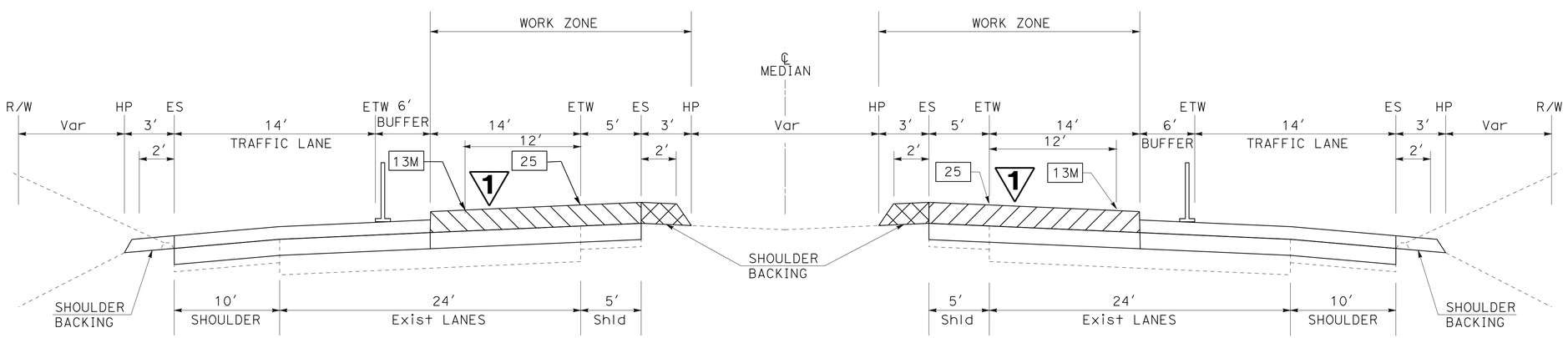

STAGE 8
RHMA-G 0.20′ (FINISH GRADE)

1 REPLACED PER ADDENDUM No. 1 DATED JANUARY 07, 2016

TRAFFIC HANDLING PLAN
NO SCALE
TH-4

STATE OF CALIFORNIA - DEPARTMENT OF TRANSPORTATION
Caltrans® **TRAFFIC DESIGN**

FUNCTIONAL SUPERVISOR: MARIO L. AMANCIO
CALCULATED-DESIGNED BY: TRAN HOANG
CHECKED BY: HORMUZD SETHNA
REVISED BY
DATE REVISED

LAST REVISION 06-01-15
DATE PLOTTED => 06-JAN-2016
TIME PLOTTED => 14:50

Dist	COUNTY	ROUTE	POST MILES TOTAL PROJECT	SHEET No.	TOTAL SHEETS
08	Riv	10	R74.0/R105.4	27	100

REGISTERED CIVIL ENGINEER 5/18/15 DATE

6/01/15
PLANS APPROVAL DATE

REGISTERED PROFESSIONAL ENGINEER
TRAN HOANG
No. 54996
Exp. 6/30/16
CIVIL
STATE OF CALIFORNIA

THE STATE OF CALIFORNIA OR ITS OFFICERS OR AGENTS SHALL NOT BE RESPONSIBLE FOR THE ACCURACY OR COMPLETENESS OF SCANNED COPIES OF THIS PLAN SHEET.

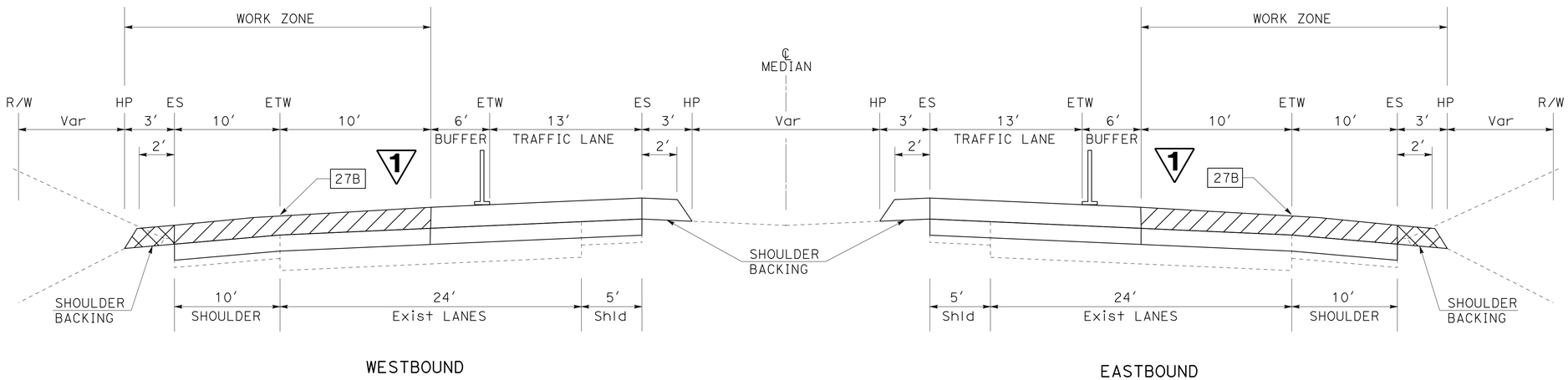

STAGE 9

RHMA-G 0.20′ (FINISH GRADE)

NOTE:
FINAL PAVEMENT DELINEATION TO BE INSTALLED AFTER TEMPORARY PAVEMENT DELINEATION ON STAGES 8 & 9 IS COMPLETE AND AS DIRECTED BY THE ENGINEER.

TEMPORARY PAVEMENT DELINEATION QUANTITIES

LOCATION	TEMPORARY TRAFFIC STRIPE (PAINT) LF	TEMPORARY PAVEMENT MARKING (PAINT) SQFT
MAINLINE AND RAMPS (ALL STAGES)	3,138,141	12,078

1

1 **REPLACED PER ADDENDUM No. 1 DATED JANUARY 07, 2016**

TRAFFIC HANDLING PLAN
NO SCALE
TH-5

STATE OF CALIFORNIA - DEPARTMENT OF TRANSPORTATION
Caltrans® **TRAFFIC DESIGN**

FUNCTIONAL SUPERVISOR: MARIO L. AMANCIO
CALCULATED-DESIGNED BY: TRAN HOANG
CHECKED BY: HORMUZD SETHNA
REVISED BY
DATE REVISED

LAST REVISION 06-01-15
DATE PLOTTED => 06-JAN-2016
TIME PLOTTED => 14:50

Dist	COUNTY	ROUTE	POST MILES TOTAL PROJECT	SHEET No.	TOTAL SHEETS
08	Riv	10	R74.0/R105.4	28	100

REGISTERED CIVIL ENGINEER 5/18/15 DATE

6/01/15
PLANS APPROVAL DATE

REGISTERED PROFESSIONAL ENGINEER TRAN HOANG No. 54996 Exp. 6/30/16 CIVIL STATE OF CALIFORNIA

THE STATE OF CALIFORNIA OR ITS OFFICERS OR AGENTS SHALL NOT BE RESPONSIBLE FOR THE ACCURACY OR COMPLETENESS OF SCANNED COPIES OF THIS PLAN SHEET.

NOTE: TEMPORARY RAILING (TYPE K) USED IN STAGE 2 MAY BE REUSED ON STAGE 4

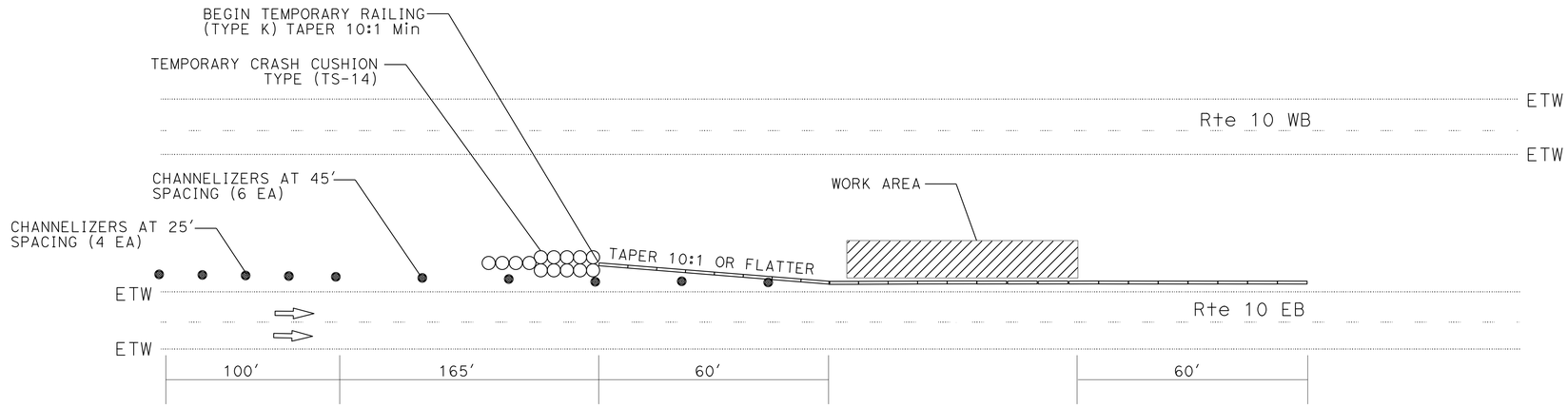

TYPICAL TRAFFIC HANDLING PLAN FOR WORK ON THE MEDIAN (STAGE 2)

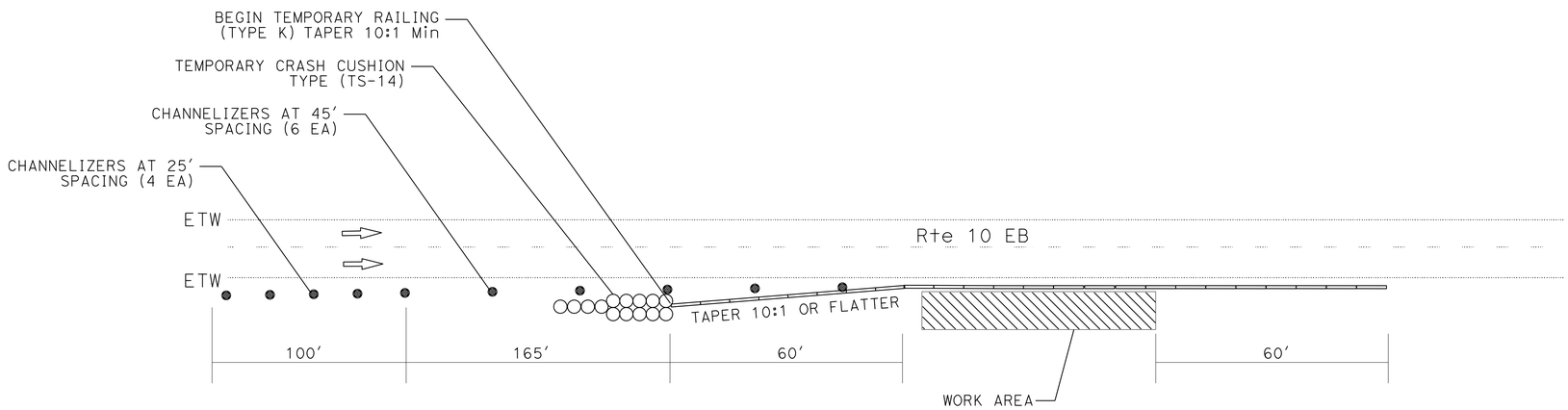

TYPICAL TRAFFIC HANDLING PLAN FOR WORK ON THE SHOULDER (STAGE 4)

TEMPORARY RAILING (TYPE K)

LOCATION				EASTBOUND	TEMPORARY RAILING (TYPE K)
POSTMILE		SIDE			
FROM	TO	INSIDE Shld	OUTSIDE Shld		LF
R77.00	R78.00		X	X	5400
R82.00	R83.00	X		X	5400
TOTAL					10800

CHANNELIZER (SURFACE MOUNTED)

LOCATION				EASTBOUND	CHANNELIZER (SURFACE MOUNTED)
POSTMILE		SIDE			
FROM	TO	INSIDE Shld	OUTSIDE Shld		EA
R77.00	R78.00		X	X	10
R82.00	R83.00	X		X	10
TOTAL					20

TEMPORARY CRASH CUSHION MODULE 1

LOCATION				EASTBOUND	TEMPORARY CRASH CUSHION MODULE
POSTMILE		SIDE			
FROM	TO	INSIDE Shld	OUTSIDE Shld		EA
R77.00	R78.00		X	X	14
R82.00	R83.00	X		X	14
TOTAL					28

1 REPLACED PER ADDENDUM No. 1 DATED JANUARY 07, 2016

TRAFFIC HANDLING PLAN

NO SCALE **TH-6**

STATE OF CALIFORNIA - DEPARTMENT OF TRANSPORTATION
Caltrans® TRAFFIC DESIGN

FUNCTIONAL SUPERVISOR: MARIO L. AMANCIO
CALCULATED-DESIGNED BY: TRAN HOANG
CHECKED BY: HORMUZD SETHNA
REVISED BY / DATE REVISED

LAST REVISION 06-01-15 | DATE PLOTTED => 06-JAN-2016 | TIME PLOTTED => 14:50

Dist	COUNTY	ROUTE	POST MILES TOTAL PROJECT	SHEET No.	TOTAL SHEETS
08	Riv	10	R74.0/R105.4	30	100

REGISTERED CIVIL ENGINEER 5/18/15 DATE

6/01/15
PLANS APPROVAL DATE

REGISTERED PROFESSIONAL ENGINEER TRAN HOANG No. 54996 Exp. 6/30/16 CIVIL STATE OF CALIFORNIA

THE STATE OF CALIFORNIA OR ITS OFFICERS OR AGENTS SHALL NOT BE RESPONSIBLE FOR THE ACCURACY OR COMPLETENESS OF SCANNED COPIES OF THIS PLAN SHEET.

PAVEMENT DELINEATION QUANTITIES

LOCATION	DETAIL No. OR PAVEMENT MARKING	PAVEMENT MARKER				THERMOPLASTIC TRAFFIC STRIPE (SPRAYABLE) ▽1			THERMOPLASTIC PAVEMENT MARKING
		NON-REFLECTIVE	RETROREFLECTIVE						
		TYPE A	TYPE C	TYPE G	TYPE H	4 INCH YELLOW	4 INCH WHITE	8 INCH WHITE	
		EA	EA	EA	EA	LF	LF	LF	SQFT
RTE 10 EASTBOUND	25				3455	165792			
	13M	13820		3455			163344		
	14M	204	68				2448		
	27B						165792		
	AIRCRAFT MARKING (x6)								186
RTE 10 WESTBOUND	25				3455	165792			
	13M	13820		3455			163200		
	14M	216	72				2592		
	27B						165792		
	AIRCRAFT MARKING (x6)								186
FRONTAGE RD ENT RAMP EB	25A				11	240			
	27B						240		
	36A			8			165	165	
	8						120		
	TYPE I (24) ARROW								31
FRONTAGE RD EXT RAMP EB	25A				23	525			
	27B						525		
	36			45				520	
	ISLANDS							180	
	STOP (X2)								44
	AHEAD								31
	TYPE V (X3)								99
FRONTAGE RD ENT RAMP WB	25A				11	250			
	27B						250		
	36A			13			270	270	
	8						125		
	TYPE V ARROW								33
	TYPE I (24) ARROW								31
FRONTAGE RD EXT RAMP WB	25A				24	550			
	27B						550		
	36			14			300	300	
	TYPE V ARROW (X2)								66
COTTONWOOD SPRING RD EB EXIT RAMP	25A				33	750			
	27B						750		
	36			12			275	275	
	STOP (X2)								44
	AHEAD								31
	TYPE V ARROW (X2)								66
	LIMIT LINE								50
COTTONWOOD SPRING RD EB ENTRANCE RAMP	25A				27	625			
	27B						625		
	36A			13			300	300	
	8						225		
	TYPE I (24) ARROW								31
	TYPE V ARROW								33
COTTONWOOD SPRING RD WB EXIT RAMP	25A				34	800			
	27B						800		
	36			2			28	28	
	STOP (X3)								66
	AHEAD								31
	TYPE V ARROW (X2)								66
	LIMIT LINE								55
COTTONWOOD SPRING RD WB ENTRANCE RAMP	25A				33	750			
	27B						750		
	36A			11			245	245	
	8						120		
	TYPE V ARROW								33
SUBTOTAL		28060	140	7028	7106	336074	669831	2283	1213
SHEET TOTAL		28060	14274			1008188			1213

NOTE:
CONTRACTOR WILL REPLACE PAVEMENT DELINEATION IN KIND.

▽1 REPLACED PER ADDENDUM No. 1 DATED JANUARY 07, 2016

PAVEMENT DELINEATION QUANTITIES

PDQ-1

REVISED BY | DATE REVISED
TRAN HOANG | HORMUZD SETHNA
CALCULATED-DESIGNED BY | CHECKED BY
FUNCTIONAL SUPERVISOR: MARIO L. AMANCIO
STATE OF CALIFORNIA - DEPARTMENT OF TRANSPORTATION
Caltrans® TRAFFIC DESIGN

LAST REVISION 06-01-15 | DATE PLOTTED => 06-JAN-2016 | TIME PLOTTED => 14:50

Dist	COUNTY	ROUTE	POST MILES TOTAL PROJECT	SHEET No.	TOTAL SHEETS
08	Riv	10	R74.0/R105.4	31	100

REGISTERED CIVIL ENGINEER 5/18/15 DATE

6/01/15
PLANS APPROVAL DATE

REGISTERED PROFESSIONAL ENGINEER TRAN HOANG No. 54996 Exp. 6/30/16 CIVIL STATE OF CALIFORNIA

THE STATE OF CALIFORNIA OR ITS OFFICERS OR AGENTS SHALL NOT BE RESPONSIBLE FOR THE ACCURACY OR COMPLETENESS OF SCANNED COPIES OF THIS PLAN SHEET.

NOTE:
CONTRACTOR WILL REPLACE PAVEMENT DELINEATION IN KIND.

PAVEMENT DELINEATION QUANTITIES

LOCATION	DETAIL No. OR PAVEMENT MARKING	PAVEMENT MARKER				THERMOPLASTIC TRAFFIC STRIPE (SPRAYABLE) 1			THERMOPLASTIC PAVEMENT MARKING
		NON-REFLECTIVE	RETROREFLECTIVE						
		TYPE A	TYPE C	TYPE G	TYPE H	4 INCH YELLOW	4 INCH WHITE	8 INCH WHITE	
		EA	EA	EA	EA	LF	LF	LF	SQFT
CHIRIACO SUMMIT RD EB EXIT RAMP	25A				40	940			
	27B						940		
	36			19				420	
	STOP (X2)								44
	AHEAD								31
	TYPE V ARROW (X2)								66
	LIMIT LINE								50
CHIRIACO SUMMIT RD EB ENTRANCE RAMP	25A				38	870			
	27B						870		
	36A			13			285	285	
	8						150		
	TYPE V ARROW								33
CHIRIACO SUMMIT RD WB EXIT RAMP	25A				38	880			
	27B						880		
	36			25				570	
	STOP (X2)								44
	AHEAD								31
	TYPE V ARROW (X2)								33
	LIMIT LINE								50
CHIRIACO SUMMIT RD WB ENT RAMP	25A				39	920			
	27B						920		
	36A				10		220	220	
	8						250		
	TYPE I(24) ARROW								31
HAYFIELD RD EB EXIT RAMP	25A				27	625			
	27B						625		
	36			25				600	
	ISLAND								60
	STOP (X3)								66
	AHEAD								31
	TYPE V ARROW (X2)								66
	LIMIT LINE								60
HAYFIELD RD EB ENT RAMP	25A				27	620			
	27B						620		
	36A			11			240	240	
	8						230		
	TYPE I(24) ARROW								31
	TYPE V ARROW								33
HAYFIELD RD WB EXIT RAMP	25A				28	650			
	27B						650		
	36			25				600	
	ISLAND								60
	STOP (X3)								66
	AHEAD								31
	TYPE V ARROW								66
	LIMIT LINE								60
HAYFIELD RD WB ENT RAMP	25A				27	600			
	27B						600		
	36A			11			250	250	
	8						250		
	TYPE I(24) ARROW								31
	TYPE V ARROW								33
SUBTOTAL				129	274	6105	7980	3185	1107
SHEET TOTAL			403			17270			1107

1 **REPLACED PER ADDENDUM No. 1 DATED JANUARY 07, 2016**

PAVEMENT DELINEATION QUANTITIES
PDQ-2

REVISED BY | DATE REVISED
TRAN HOANG | HORMUZD SETHNA
CALCULATED-DESIGNED BY | CHECKED BY
FUNCTIONAL SUPERVISOR
MARIO L. AMANCIO
STATE OF CALIFORNIA - DEPARTMENT OF TRANSPORTATION
Caltrans TRAFFIC DESIGN

LAST REVISION 06-01-15 | DATE PLOTTED => 06-JAN-2016 | TIME PLOTTED => 14:50

Dist	COUNTY	ROUTE	POST MILES TOTAL PROJECT	SHEET No.	TOTAL SHEETS
08	Riv	10	R74.0/R105.4	32	100

REGISTERED CIVIL ENGINEER 5/18/15 DATE

6/01/15
PLANS APPROVAL DATE

REGISTERED PROFESSIONAL ENGINEER TRAN HOANG No. 54996 Exp. 6/30/16 CIVIL STATE OF CALIFORNIA

THE STATE OF CALIFORNIA OR ITS OFFICERS OR AGENTS SHALL NOT BE RESPONSIBLE FOR THE ACCURACY OR COMPLETENESS OF SCANNED COPIES OF THIS PLAN SHEET.

NOTE:
CONTRACTOR WILL REPLACE PAVEMENT DELINEATION IN KIND.

PAVEMENT DELINEATION QUANTITIES

LOCATION	DETAIL No. OR PAVEMENT MARKING	PAVEMENT MARKER				THERMOPLASTIC TRAFFIC STRIPE (SPRAYABLE) ▽1			THERMOPLASTIC PAVEMENT MARKING
		NON-REFLECTIVE	RETROREFLECTIVE						
		TYPE A	TYPE C	TYPE G	TYPE H	4 INCH YELLOW	4 INCH WHITE	8 INCH WHITE	
		EA	EA	EA	EA	LF	LF	LF	SQFT
RED CLOUD MINE RD EB EXIT RAMP	25A				16	360			
	27B						360		
	36			26				600	
	STOP (X3)								66
	AHEAD								31
	TYPE V ARROW (X2)								66
	CHANNELIZING LINE								35
	LIMIT LINE								60
RED CLOUD MINE RD EB ENTRANCE RAMP	25A				11	250			
	27B						250		
	36A			9			200	200	
	8						230		
	TYPE I(24) ARROW								31
	TYPE V ARROW								33
RED CLOUD MINE RD WB EXIT RAMP	25A				26	590			
	27B						590		
	36			24				540	
	TYPE V ARROW (X3)								99
RED CLOUD MINE RD WB ENT RAMP	25A				11	270			
	27B						270		
	36A				10		215	215	
	8						235		
	TYPE I(24) ARROW								31
EAGLE MNT RD EB EXIT RAMP	25A				27	580			
	27B						580		
	36			23				536	
	ISLAND								135
	STOP (X3)								66
	AHEAD								31
	TYPE V ARROW								33
	LIMIT LINE								75
EAGLE MNT RD EB ENT RAMP	25A				27	630			
	27B						630		
	36A			8			167	167	
	8						250		
	TYPE I(24) ARROW								31
EAGLE MNT RD WB EXIT RAMP	25A				25	580			
	27B						580		
	36			25				600	
	ISLAND								144
	STOP (X3)								66
	AHEAD								31
	TYPE V ARROW (x2)								66
	LIMIT LINE								40
EAGLE MNT RD WB ENT RAMP	25A				26	562			
	27B						562		
	36A			11			250	250	
	8						200		
	TYPE I(24) ARROW								31
									33
SUBTOTAL				126	179	3822	5569	3108	1234
SHEET TOTAL			305			12499			1234

▽1 REPLACED PER ADDENDUM No. 1 DATED JANUARY 07, 2016

PAVEMENT DELINEATION QUANTITIES
PDQ-3

STATE OF CALIFORNIA - DEPARTMENT OF TRANSPORTATION
Caltrans® TRAFFIC DESIGN

FUNCTIONAL SUPERVISOR: MARIO L. AMANCIO
CALCULATED-DESIGNED BY: TRAN HOANG
CHECKED BY: HORMUZD SETHNA
REVISED BY
DATE REVISED

LAST REVISION 06-01-15
DATE PLOTTED => 06-JAN-2016
TIME PLOTTED => 14:50

Dist	COUNTY	ROUTE	POST MILES TOTAL PROJECT	SHEET No.	TOTAL SHEETS
08	Riv	10	R74.0/R105.4	33	100

REGISTERED CIVIL ENGINEER 5/18/15 DATE

6/01/15
PLANS APPROVAL DATE

REGISTERED PROFESSIONAL ENGINEER
TRAN HOANG
No. 54996
Exp. 6/30/16
CIVIL
STATE OF CALIFORNIA

THE STATE OF CALIFORNIA OR ITS OFFICERS OR AGENTS SHALL NOT BE RESPONSIBLE FOR THE ACCURACY OR COMPLETENESS OF SCANNED COPIES OF THIS PLAN SHEET.

NOTE:
CONTRACTOR WILL REPLACE PAVEMENT DELINEATION IN KIND.

PAVEMENT DELINEATION QUANTITIES

LOCATION	DETAIL No. OR PAVEMENT MARKING	PAVEMENT MARKER				THERMOPLASTIC TRAFFIC STRIPE (SPRAYABLE) 1			THERMOPLASTIC PAVEMENT MARKING
		NON-REFLECTIVE	RETROREFLECTIVE						
		TYPE A	TYPE C	TYPE G	TYPE H	4 INCH YELLOW	4 INCH WHITE	8 INCH WHITE	
		EA	EA	EA	EA	LF	LF	LF	SQFT
DESERT CENTER RICE RD EB EXIT RAMP	25A				29	670			
	27B						670		
	36			26				620	
	STOP (X3)								66
	AHEAD								31
	YIELD								24
	TYPE V ARROW								33
	CHANNELIZING LINE								70
	LIMIT LINE								45
DESERT CENTER RICE RD EB ENTRANCE RAMP	25A				38	890			
	27B						890		
	36A			10			245	245	
	8						125		
	TYPE I(24) ARROW								31
DESERT CENTER RICE RD WB EXIT RAMP	25A				29	680			
	27B						680		
	36			24				580	
	TYPE V ARROW (X2)								66
	STOP (X2)								44
	AHEAD								31
DESERT CENTER RICE RD WB ENT RAMP	25A				11	600			
	27B						600		
	36A				11		235	235	
	8						125		
	TYPE I(24) ARROW								31
SUBTOTAL				60	118	2840	3570	1680	472
SHEET TOTAL			178			8090			472
GRAND TOTAL		28060	15160			1046047			4026

1 REPLACED PER ADDENDUM No. 1 DATED JANUARY 07, 2016

STATE OF CALIFORNIA - DEPARTMENT OF TRANSPORTATION
Caltrans® TRAFFIC DESIGN

FUNCTIONAL SUPERVISOR: MARIO L. AMANCIO
CALCULATED-DESIGNED BY: TRAN HOANG
CHECKED BY: HORMUZD SETHNA
REVISED BY
DATE REVISED

LAST REVISION 06-01-15
DATE PLOTTED => 06-JAN-2016
TIME PLOTTED => 14:50

PAVEMENT DELINEATION QUANTITIES
PDQ-4

Dist	COUNTY	ROUTE	POST MILES TOTAL PROJECT	SHEET No.	TOTAL SHEETS
08	Riv	10	R74.0/R105.4	34	100

REGISTERED CIVIL ENGINEER 5/18/15 DATE

6/01/15
PLANS APPROVAL DATE

REGISTERED PROFESSIONAL ENGINEER TRAN HOANG No. 54996 Exp. 6/30/16 CIVIL STATE OF CALIFORNIA

THE STATE OF CALIFORNIA OR ITS OFFICERS OR AGENTS SHALL NOT BE RESPONSIBLE FOR THE ACCURACY OR COMPLETENESS OF SCANNED COPIES OF THIS PLAN SHEET.

1

DELINEATOR QUANTITIES

LOCATION	DELINEATOR (CLASS 1)	
	TYPE F	TYPE G
FRONTAGE RD EB EXIT RAMP	20	10
FRONTAGE RD EB ENT RAMP	10	10
FRONTAGE RD WB EXIT RAMP	20	10
FRONTAGE RD WB ENT RAMP	10	10
COTTONWOOD SPRING RD EB EXIT RAMP	20	10
COTTONWOOD SPRING RD EB ENT RAMP	10	10
COTTONWOOD SPRING RD WB EXIT RAMP	20	10
COTTONWOOD SPRING RD WB ENT RAMP	10	10
SUMMIT RD EB EXIT RAMP	20	10
SUMMIT RD EB ENT RAMP	10	10
SUMMIT RD WB EXIT RAMP	20	10
SUMMIT RD WB ENT RAMP	10	10
HAYFIELD RD EB EXIT RAMP	20	10
HAYFIELD RD EB ENT RAMP	10	10
HAYFIELD RD WB EXIT RAMP	20	10
HAYFIELD RD WB ENT RAMP	10	10
RED CLOUD MINE RD EB EXIT RAMP	20	10
RED CLOUD MINE RD EB ENT RAMP	10	10
RED CLOUD MINE RD WB EXIT RAMP	20	10
RED CLOUD MINE RD WB ENT RAMP	10	10
EAGLE MOUNTAIN RD EB EXIT RAMP	20	10
EAGLE MOUNTAIN RD EB ENT RAMP	10	10
EAGLE MOUNTAIN RD WB EXIT RAMP	20	10
EAGLE MOUNTAIN RD WB ENT RAMP	10	10
DESERT CENTER RICE RD EB EXIT RAMP	20	10
DESERT CENTER RICE RD EB ENT RAMP	10	10
DESERT CENTER RICE RD WB EXIT RAMP	20	10
DESERT CENTER RICE RD WB ENT RAMP	10	10
SUBTOTAL	420	280
TOTAL	700	

GUARDRAIL DELINEATOR QUANTITIES

LOCATION	DELINEATOR (CLASS 1)	
	TYPE F	TYPE G
1	1	
2	2	
3	1	
4	1	1
5		1
6	5	2
7	1	1
8	1	1
9	4	1
10	3	
11	1	
12	1	
13	2	2
14	1	1
15	1	1
16	1	
17	1	
18	1	
19	1	
20	1	
21	2	2
22	317	
23	1	1
24	1	1
25	2	2
26	2	2
27	1	2
28	2	2
29		2
30	1	1
31	1	1
32	1	1
33	2	2
34	2	2
35	1	1
36		1
37		1
38	1	1
39	1	1
40	1	1
41	1	1
42	1	1
43	1	1
44	1	1
45	1	1
46	1	1
47	1	1
48	1	1
49	1	1
50	1	1
51	1	1
52	1	1
53	1	1
SUBTOTAL	382	51
TOTAL	433	

GUARDRAIL DELINEATOR QUANTITIES

LOCATION	DELINEATOR (CLASS 1)	
	TYPE F	TYPE G
54	1	1
55	1	1
56	1	
57	1	
58	3	
59	3	
60	1	2
61	2	2
62	2	2
63	11	
64	2	2
65	2	2
66	2	
67	2	2
68	1	
69		1
SUBTOTAL	35	15
TOTAL	50	
GRAND TOTAL	1183	

RESET MARKERS AND DELINEATORS

LOCATION	OBJECT MARKERS		DELINEATOR (CLASS 1)	MILEPOST MARKER
	MEDIAN	SHOULDER		
	EA	EA	EA	EA
RTE 10 R74/ R105.4 EB	10	6	51	
RTE 10 R74/R 105.4 WB	5	3	16	3
SUBTOTAL	15	9	67	3
TOTAL	24		67	3
GRAND TOTAL	91			3

1 REPLACED PER ADDENDUM No. 1 DATED JANUARY 07, 2016

PAVEMENT DELINEATION QUANTITIES

PDQ-5

STATE OF CALIFORNIA - DEPARTMENT OF TRANSPORTATION
Caltrans® TRAFFIC DESIGN

FUNCTIONAL SUPERVISOR: MARIO L. AMANCIO
CALCULATED-DESIGNED BY: TRAN HOANG
CHECKED BY: HORMUZD SETHNA
REVISED BY
DATE REVISED

LAST REVISION 06-01-15
DATE PLOTTED => 06-JAN-2016
TIME PLOTTED => 14:50

Dist	COUNTY	ROUTE	POST MILES TOTAL PROJECT	SHEET No.	TOTAL SHEETS
08	Riv	10	R74.0/R105.4	39	100

REGISTERED CIVIL ENGINEER DATE 5/18/15

PLANS APPROVAL DATE 6/01/15

REGISTERED PROFESSIONAL ENGINEER TUAN TRUONG No. 60137 Exp. 2/15/17 CIVIL STATE OF CALIFORNIA

THE STATE OF CALIFORNIA OR ITS OFFICERS OR AGENTS SHALL NOT BE RESPONSIBLE FOR THE ACCURACY OR COMPLETENESS OF SCANNED COPIES OF THIS PLAN SHEET.

ROADWAY QUANTITES - EASTBOUND

LOCATION	POST MILE FROM	POST MILE TO	HOT MIX ASPHALT (TYPE A) TON	RUBBERIZED HOT MIX ASPHALT (GAP GRADED) TON	SAFETY EDGE (N) TON	SHOULDER BACKING TON	COLD PLANE ASPHALT CONCRETE PAVEMENT SQYD	TACK COAT TON
MATCH EXIST PVMT - MAINLINE / INSIDE SHLD (NO. 7) AND OUTSIDE SHLD (NO. 8)	R74.00	R74.10	606				2381	0.34
HAZY GULCH BR 56-463R	R74.10	R74.11						
MATCH EXIST PVMT - MAINLINE / INSIDE SHLD (NO. 7) AND OUTSIDE SHLD (NO. 8)	R74.11	R74.15	232				911	0.13
PVMT TRANS - MAINLINE / INSIDE SHLD (NO. 3 & NO. 5) AND OUTSIDE SHLD (NO. 4 & NO. 6)	R74.15	R74.19	349		3	28	911	0.21
RAISED PVMT - MAINLINE / INSIDE SHLD (NO. 1) AND OUTSIDE SHLD (NO. 2)	R74.19	R74.76	5276	1848	49	423	13602	4.20
PVMT TRANS - MAINLINE / INSIDE SHLD (NO. 3 & NO. 5) AND OUTSIDE SHLD (NO. 4 & NO. 6)	R74.76	R74.79	349		3	28	911	0.21
MATCH EXIST PVMT - MAINLINE / INSIDE SHLD (NO. 7) AND OUTSIDE SHLD (NO. 8)	R74.79	R74.83	232				911	0.13
EAST CACTUS CITY UC 56-511R	R74.83	R74.85						
MATCH EXIST PVMT - MAINLINE / INSIDE SHLD (NO. 7) AND OUTSIDE SHLD (NO. 8)	R74.85	R74.89	232				911	0.13
PVMT TRANS - MAINLINE / INSIDE SHLD (NO. 3 & NO. 5) AND OUTSIDE SHLD (NO. 4 & NO. 6)	R74.89	R74.93	349		3	28	911	0.21
RAISED PVMT - MAINLINE / INSIDE SHLD (NO. 1) AND OUTSIDE SHLD (NO. 2)	R74.93	R75.60	5972	2079	57	500	15295	4.77
PVMT TRANS - MAINLINE / INSIDE SHLD (NO. 3 & NO. 5) AND OUTSIDE SHLD (NO. 4 & NO. 6)	R75.60	R75.64	335		3	28	867	0.20
MATCH EXIST PVMT - MAINLINE / INSIDE SHLD (NO. 7) AND OUTSIDE SHLD (NO. 8)	R75.64	R75.67	226				867	0.13
HAPPY GULCH BR 56-209R	R75.67	R75.69						
MATCH EXIST PVMT - MAINLINE / INSIDE SHLD (NO. 7) AND OUTSIDE SHLD (NO. 8)	R75.69	R75.72	226				867	0.13
PVMT TRANS - MAINLINE / INSIDE SHLD (NO. 3 & NO. 5) AND OUTSIDE SHLD (NO. 4 & NO. 6)	R75.72	R75.76	335		3	28	867	0.20
RAISED PVMT - MAINLINE / INSIDE SHLD (NO. 1) AND OUTSIDE SHLD (NO. 2)	R75.76	R77.02	11216	3904	107	940	28725	8.96
PVMT TRANS - MAINLINE / INSIDE SHLD (NO. 3 & NO. 5) AND OUTSIDE SHLD (NO. 4 & NO. 6)	R77.02	R77.06	335		3	28	867	0.20
MATCH EXIST PVMT - MAINLINE / INSIDE SHLD (NO. 7) AND OUTSIDE SHLD (NO. 8)	R77.06	R77.09	226				867	0.13
DESPERATION ARROYO BR 56-464R	R77.09	R77.11						
MATCH EXIST PVMT - MAINLINE / INSIDE SHLD (NO. 7) AND OUTSIDE SHLD (NO. 8)	R77.11	R77.14	226				867	0.13
PVMT TRANS - MAINLINE / INSIDE SHLD (NO. 3 & NO. 5) AND OUTSIDE SHLD (NO. 4 & NO. 6)	R77.14	R77.18	335		3	28	867	0.20
RAISED PVMT - MAINLINE / INSIDE SHLD (NO. 1) AND OUTSIDE SHLD (NO. 2)	R77.18	R77.90	6410	2231	60	537	16416	5.12
PVMT TRANS - MAINLINE / INSIDE SHLD (NO. 3 & NO. 5) AND OUTSIDE SHLD (NO. 4 & NO. 6)	R77.90	R77.94	335		3	28	867	0.20
MATCH EXIST PVMT - MAINLINE / INSIDE SHLD (NO. 7) AND OUTSIDE SHLD (NO. 8)	R77.94	R77.97	226				867	0.13
WEST BURRIED MTN WASH 56-465R	R77.97	R77.99						
MATCH EXIST PVMT - MAINLINE / INSIDE SHLD (NO. 7) AND OUTSIDE SHLD (NO. 8)	R77.99	R78.02	226				867	0.13
PVMT TRANS - MAINLINE / INSIDE SHLD (NO. 3 & NO. 5) AND OUTSIDE SHLD (NO. 4 & NO. 6)	R78.02	R78.06	335		3	28	867	0.20
RAISED PVMT - MAINLINE / INSIDE SHLD (NO. 1) AND OUTSIDE SHLD (NO. 2)	R78.06	R78.46	3578	1245	35	300	9163	2.86
PVMT TRANS - MAINLINE / INSIDE SHLD (NO. 3 & NO. 5) AND OUTSIDE SHLD (NO. 4 & NO. 6)	R78.46	R78.50	335		3	28	867	0.20
MATCH EXIST PVMT - MAINLINE / INSIDE SHLD (NO. 7) AND OUTSIDE SHLD (NO. 8)	R78.50	R78.54	226				867	0.13
BURRIED MTN WASH 56-212R	R78.54	R78.55						
MATCH EXIST PVMT - MAINLINE / INSIDE SHLD (NO. 7) AND OUTSIDE SHLD (NO. 8)	R78.55	R78.59	226				867	0.13
PVMT TRANS - MAINLINE / INSIDE SHLD (NO. 3 & NO. 5) AND OUTSIDE SHLD (NO. 4 & NO. 6)	R78.59	R78.63	335		3	28	867	0.20
RAISED PVMT - MAINLINE / INSIDE SHLD (NO. 1) AND OUTSIDE SHLD (NO. 2)	R78.63	R79.18	4891	1703	47	410	12526	3.91
PVMT TRANS - MAINLINE / INSIDE SHLD (NO. 3 & NO. 5) AND OUTSIDE SHLD (NO. 4 & NO. 6)	R79.18	R79.22	335		3	28	867	0.20
MATCH EXIST PVMT - MAINLINE / INSIDE SHLD (NO. 7) AND OUTSIDE SHLD (NO. 8)	R79.22	R79.25	226				867	0.13
WEST SADDLE GULCH 56-466R	R79.25	R79.26						
MATCH EXIST PVMT - MAINLINE / INSIDE SHLD (NO. 7) AND OUTSIDE SHLD (NO. 8)	R79.26	R79.30	226				867	0.13
PVMT TRANS - MAINLINE / INSIDE SHLD (NO. 3 & NO. 5) AND OUTSIDE SHLD (NO. 4 & NO. 6)	R79.30	R79.34	335		3	28	867	0.20
RAISED PVMT - MAINLINE / INSIDE SHLD (NO. 1) AND OUTSIDE SHLD (NO. 2)	R79.34	R79.51	1496	521	15	125	3832	1.20
PVMT TRANS - MAINLINE / INSIDE SHLD (NO. 3 & NO. 5) AND OUTSIDE SHLD (NO. 4 & NO. 6)	R79.51	R79.54	335		3	28	867	0.20
MATCH EXIST PVMT - MAINLINE / INSIDE SHLD (NO. 7) AND OUTSIDE SHLD (NO. 8)	R79.54	R79.58	226				867	0.13
SADDLE GULCH 56-467R	R79.58	R79.60						
MATCH EXIST PVMT - MAINLINE / INSIDE SHLD (NO. 7) AND OUTSIDE SHLD (NO. 8)	R79.60	R79.64	226				867	0.13
PVMT TRANS - MAINLINE / INSIDE SHLD (NO. 3 & NO. 5) AND OUTSIDE SHLD (NO. 4 & NO. 6)	R79.64	R79.67	335		3	28	867	0.20
RAISED PVMT - MAINLINE / INSIDE SHLD (NO. 1) AND OUTSIDE SHLD (NO. 2)	R79.67	R79.87	1737	605	16	146	4450	1.39
PVMT TRANS - MAINLINE / INSIDE SHLD (NO. 3 & NO. 5) AND OUTSIDE SHLD (NO. 4 & NO. 6)	R79.87	R79.91	335		3	28	867	0.20
MATCH EXIST PVMT - MAINLINE / INSIDE SHLD (NO. 7) AND OUTSIDE SHLD (NO. 8)	R79.91	R79.94	226				867	0.13
SUBTOTAL (THIS SHEET)			50218	14136	434	3829	134398	38.06

1 (N) - NOT A SEPARATE PAY ITEM

1 **REPLACED PER ADDENDUM No. 1 DATED JANUARY 07, 2016**

SUMMARY OF QUANTITIES

Q-1

STATE OF CALIFORNIA - DEPARTMENT OF TRANSPORTATION

Caltrans® DESIGN

FUNCTIONAL SUPERVISOR: DIBORO KANABOLO

CALCULATED-DESIGNED BY: WILLIAM PETOSKEY

CHECKED BY: TUAN A. TRUONG

REVISED BY

DATE REVISED

LAST REVISION 06-01-15

DATE PLOTTED => 06-JAN-2016

TIME PLOTTED => 14:50

Dist	COUNTY	ROUTE	POST MILES TOTAL PROJECT	SHEET No.	TOTAL SHEETS
08	Riv	10	R74.0/R105.4	40	100

REGISTERED CIVIL ENGINEER 5/18/15 DATE

6/01/15
PLANS APPROVAL DATE

REGISTERED PROFESSIONAL ENGINEER TUAN TRUONG No. 60137 Exp. 2/15/17 CIVIL STATE OF CALIFORNIA

THE STATE OF CALIFORNIA OR ITS OFFICERS OR AGENTS SHALL NOT BE RESPONSIBLE FOR THE ACCURACY OR COMPLETENESS OF SCANNED COPIES OF THIS PLAN SHEET.

ROADWAY QUANTITES - EASTBOUND

LOCATION	POST MILE FROM	POST MILE TO	HOT MIX ASPHALT (TYPE A) TON	RUBBERIZED HOT MIX ASPHALT (GAP GRADED) TON	SAFETY EDGE (N) TON	SHOULDER BACKING TON	COLD PLANE ASPHALT CONCRETE PAVEMENT SQYD	TACK COAT TON
WEST COTTON GULCH 56-468R	R79.94	R79.97						
MATCH EXIST PVMT - MAINLINE / INSIDE SHLD (NO. 7) AND OUTSIDE SHLD (NO. 8)	R79.97	R80.01	226				867	0.13
PVMT TRANS - MAINLINE / INSIDE SHLD (NO. 3 & NO. 5) AND OUTSIDE SHLD (NO. 4 & NO. 6)	R80.01	R80.04	335		3	28	867	0.20
RAISED PVMT - MAINLINE / INSIDE SHLD (NO. 1) AND OUTSIDE SHLD (NO. 2)	R80.04	R80.26	1898	661	19	159	4862	1.52
PVMT TRANS - MAINLINE / INSIDE SHLD (NO. 3 & NO. 5) AND OUTSIDE SHLD (NO. 4 & NO. 6)	R80.26	R80.30	335		3	28	867	0.20
MATCH EXIST PVMT - MAINLINE / INSIDE SHLD (NO. 7) AND OUTSIDE SHLD (NO. 8)	R80.30	R80.33	226				867	0.13
COTTON GULCH 56-469R	R80.33	R80.35						
MATCH EXIST PVMT - MAINLINE / INSIDE SHLD (NO. 7) AND OUTSIDE SHLD (NO. 8)	R80.35	R80.39	226				867	0.13
PVMT TRANS - MAINLINE / INSIDE SHLD (NO. 3 & NO. 5) AND OUTSIDE SHLD (NO. 4 & NO. 6)	R80.39	R80.42	335		3	28	867	0.20
RAISED PVMT - MAINLINE / INSIDE SHLD (NO. 1) AND OUTSIDE SHLD (NO. 2)	R80.42	R80.57	1318	459	13	110	3374	1.05
PVMT TRANS - MAINLINE / INSIDE SHLD (NO. 3 & NO. 5) AND OUTSIDE SHLD (NO. 4 & NO. 6)	R80.57	R80.61	335		3	28	867	0.20
MATCH EXIST PVMT - MAINLINE / INSIDE SHLD (NO. 7) AND OUTSIDE SHLD (NO. 8)	R80.61	R80.65	226				867	0.13
EAST COTTON GULCH 56-470R	R80.65	R80.66						
MATCH EXIST PVMT - MAINLINE / INSIDE SHLD (NO. 7) AND OUTSIDE SHLD (NO. 8)	R80.66	R80.70	226				867	0.13
PVMT TRANS - MAINLINE / INSIDE SHLD (NO. 3 & NO. 5) AND OUTSIDE SHLD (NO. 4 & NO. 6)	R80.70	R80.74	335		3	28	867	0.20
RAISED PVMT - MAINLINE / INSIDE SHLD (NO. 1) AND OUTSIDE SHLD (NO. 2)	R80.74	R81.14	3599	1253	52	300	9186	2.87
PVMT TRANS - MAINLINE / INSIDE SHLD (NO. 3 & NO. 5) AND OUTSIDE SHLD (NO. 4 & NO. 6)	R81.14	R81.18	338		6	28	867	0.20
MATCH EXIST PVMT - MAINLINE / INSIDE SHLD (NO. 7) AND OUTSIDE SHLD (NO. 8)	R81.18	R81.21	226				867	0.13
PAUL GULCH BR 56-512R	R81.21	R81.23						
MATCH EXIST PVMT - MAINLINE / INSIDE SHLD (NO. 7) AND OUTSIDE SHLD (NO. 8)	R81.23	R81.27	226				867	0.13
PVMT TRANS - MAINLINE / INSIDE SHLD (NO. 3 & NO. 5) AND OUTSIDE SHLD (NO. 4 & NO. 6)	R81.27	R81.30	338		6	28	867	0.20
RAISED PVMT - MAINLINE / INSIDE SHLD (NO. 1) AND OUTSIDE SHLD (NO. 2)	R81.30	R81.47	1516	528	28	126	3855	1.20
PVMT TRANS - MAINLINE / INSIDE SHLD (NO. 3 & NO. 5) AND OUTSIDE SHLD (NO. 4 & NO. 6)	R81.47	R81.51	338		6	28	867	0.20
MATCH EXIST PVMT - MAINLINE / INSIDE SHLD (NO. 7) AND OUTSIDE SHLD (NO. 8)	R81.51	R81.55	226				867	0.13
COTTONWOOD SPRINGS/BOX CANYON RD OC 56-0513	R81.55	R81.56					41	0.02
MATCH EXIST PVMT - MAINLINE / INSIDE SHLD (NO. 7) AND OUTSIDE SHLD (NO. 8)	R81.56	R81.59	226				867	0.13
PVMT TRANS - MAINLINE / INSIDE SHLD (NO. 3 & NO. 5) AND OUTSIDE SHLD (NO. 4 & NO. 6)	R81.59	R81.63	338		6	28	867	0.20
RAISED PVMT - MAINLINE / INSIDE SHLD (NO. 1) AND OUTSIDE SHLD (NO. 2)	R81.63	R82.51	7903	2750	149	657	20100	6.27
PVMT TRANS - MAINLINE / INSIDE SHLD (NO. 3 & NO. 5) AND OUTSIDE SHLD (NO. 4 & NO. 6)	R82.51	R82.55	338		6	28	867	0.20
MATCH EXIST PVMT - MAINLINE / INSIDE SHLD (NO. 7) AND OUTSIDE SHLD (NO. 8)	R82.55	R82.59	226				867	0.13
PINTO GULCH BR 56-514R	R82.59	R82.62						
MATCH EXIST PVMT - MAINLINE / INSIDE SHLD (NO. 7) AND OUTSIDE SHLD (NO. 8)	R82.62	R82.66	226				867	0.13
PVMT TRANS - MAINLINE / INSIDE SHLD (NO. 3 & NO. 5) AND OUTSIDE SHLD (NO. 4 & NO. 6)	R82.66	R82.70	338		6	28	867	0.20
RAISED PVMT - MAINLINE / INSIDE SHLD (NO. 1) AND OUTSIDE SHLD (NO. 2)	R82.70	R86.00	29702	10337	557	2471	75538	23.57
PVMT TRANS - MAINLINE / INSIDE SHLD (NO. 3 & NO. 5) AND OUTSIDE SHLD (NO. 4 & NO. 6)	R86.00	R86.04	338		6	28	867	0.20
MATCH EXIST PVMT - MAINLINE / INSIDE SHLD (NO. 7) AND OUTSIDE SHLD (NO. 8)	R86.04	R86.07	226				867	0.13
CHIRACO SUMMIT RD OC 56-573	R86.07	R86.08					41	0.02
MATCH EXIST PVMT - MAINLINE / INSIDE SHLD (NO. 7) AND OUTSIDE SHLD (NO. 8)	R86.08	R86.12	226				867	0.13
PVMT TRANS - MAINLINE / INSIDE SHLD (NO. 3 & NO. 5) AND OUTSIDE SHLD (NO. 4 & NO. 6)	R86.12	R86.16	338		6	28	867	0.20
RAISED PVMT - MAINLINE / INSIDE SHLD (NO. 1) AND OUTSIDE SHLD (NO. 2)	R86.16	R87.88	15506	5396	291	1290	39433	12.30
PVMT TRANS - MAINLINE / INSIDE SHLD (NO. 3 & NO. 5) AND OUTSIDE SHLD (NO. 4 & NO. 6)	R87.88	R87.92	338		6	28	867	0.20
MATCH EXIST PVMT - MAINLINE / INSIDE SHLD (NO. 7) AND OUTSIDE SHLD (NO. 8)	R87.92	R87.96	226				867	0.13
THREE STAR DITCH BR 56-129R	R87.96	R87.97						
MATCH EXIST PVMT - MAINLINE / INSIDE SHLD (NO. 7) AND OUTSIDE SHLD (NO. 8)	R87.97	R88.01	226				867	0.13
PVMT TRANS - MAINLINE / INSIDE SHLD (NO. 3 & NO. 5) AND OUTSIDE SHLD (NO. 4 & NO. 6)	R88.01	R88.05	338		6	28	867	0.20
RAISED PVMT - MAINLINE / INSIDE SHLD (NO. 1) AND OUTSIDE SHLD (NO. 2)	R88.05	R90.04	17971	6254	336	1495	45702	14.26
PVMT TRANS - MAINLINE / INSIDE SHLD (NO. 3 & NO. 5) AND OUTSIDE SHLD (NO. 4 & NO. 6)	R90.04	R90.08	338		6	28	867	0.20
MATCH EXIST PVMT - MAINLINE / INSIDE SHLD (NO. 7) AND OUTSIDE SHLD (NO. 8)	R90.08	R90.12	226				867	0.13
SUBTOTAL (THIS SHEET)			88422	27638	1526	7056	229876	68.36

1 (N) - NOT A SEPARATE PAY ITEM

1 **REPLACED PER ADDENDUM No. 1 DATED JANUARY 07, 2016**

SUMMARY OF QUANTITIES

Q-2

STATE OF CALIFORNIA - DEPARTMENT OF TRANSPORTATION
Caltrans DESIGN

FUNCTIONAL SUPERVISOR: DIBORO KANABOLO
CALCULATED-DESIGNED BY: WILLIAM PETOSKEY
CHECKED BY: TUAN A. TRUONG
REVISED BY
DATE REVISED

LAST REVISION 06-01-15
DATE PLOTTED => 06-JAN-2016
TIME PLOTTED => 14:50

Dist	COUNTY	ROUTE	POST MILES TOTAL PROJECT	SHEET No.	TOTAL SHEETS
08	Riv	10	R74.0/R105.4	41	100

REGISTERED CIVIL ENGINEER DATE 5/18/15

6/01/15
PLANS APPROVAL DATE

REGISTERED PROFESSIONAL ENGINEER TUAN TRUONG No. 60137 Exp 2/15/17 CIVIL STATE OF CALIFORNIA

THE STATE OF CALIFORNIA OR ITS OFFICERS OR AGENTS SHALL NOT BE RESPONSIBLE FOR THE ACCURACY OR COMPLETENESS OF SCANNED COPIES OF THIS PLAN SHEET.

ROADWAY QUANTITES - EASTBOUND

LOCATION	POST MILE FROM	POST MILE TO	HOT MIX ASPHALT (TYPE A) TON	RUBBERIZED HOT MIX ASPHALT (GAP GRADED) TON	SAFETY EDGE (N) TON	SHOULDER BACKING TON	COLD PLANE ASPHALT CONCRETE PAVEMENT SQYD	TACK COAT TON
HAYFIELD RD OC 56-574	R90.12	R90.13					41	0.02
MATCH EXIST PVMT - MAINLINE / INSIDE SHLD (NO. 7) AND OUTSIDE SHLD (NO. 8)	R90.13	R90.16	226				867	0.13
PVMT TRANS - MAINLINE / INSIDE SHLD (NO. 3 & NO. 5) AND OUTSIDE SHLD (NO. 4 & NO. 6)	R90.16	R90.20	338		6	28	867	0.20
RAISED PVMT - MAINLINE / INSIDE SHLD (NO. 1) AND OUTSIDE SHLD (NO. 2)	R90.20	R90.90	6275	2184	118	522	15958	4.98
PVMT TRANS - MAINLINE / INSIDE SHLD (NO. 3 & NO. 5) AND OUTSIDE SHLD (NO. 4 & NO. 6)	R90.90	R90.94	338		6	28	867	0.20
MATCH EXIST PVMT - MAINLINE / INSIDE SHLD (NO. 7) AND OUTSIDE SHLD (NO. 8)	R90.94	R90.98	226				867	0.13
DETERMINATION DITCH BR 56-124R	R90.98	R90.99						
MATCH EXIST PVMT - MAINLINE / INSIDE SHLD (NO. 7) AND OUTSIDE SHLD (NO. 8)	R90.99	R91.03	226				867	0.13
PVMT TRANS - MAINLINE / INSIDE SHLD (NO. 3 & NO. 5) AND OUTSIDE SHLD (NO. 4 & NO. 6)	R91.03	R91.07	338		6	28	867	0.20
RAISED PVMT - MAINLINE / INSIDE SHLD (NO. 1) AND OUTSIDE SHLD (NO. 2)	R91.07	R91.85	7013	2440	132	583	17835	5.56
PVMT TRANS - MAINLINE / INSIDE SHLD (NO. 3 & NO. 5) AND OUTSIDE SHLD (NO. 4 & NO. 6)	R91.85	R91.88	338		6	28	867	0.20
MATCH EXIST PVMT - MAINLINE / INSIDE SHLD (NO. 7) AND OUTSIDE SHLD (NO. 8)	R91.88	R91.92	226				867	0.13
ORRIS DITCH BR 56-123R	R91.92	R91.94						
MATCH EXIST PVMT - MAINLINE / INSIDE SHLD (NO. 7) AND OUTSIDE SHLD (NO. 8)	R91.94	R91.97	226				867	0.13
PVMT TRANS - MAINLINE / INSIDE SHLD (NO. 3 & NO. 5) AND OUTSIDE SHLD (NO. 4 & NO. 6)	R91.97	R92.01	338		6	28	867	0.20
RAISED PVMT - MAINLINE / INSIDE SHLD (NO. 1) AND OUTSIDE SHLD (NO. 2)	R92.01	R92.83	7328	2550	138	610	18635	5.81
PVMT TRANS - MAINLINE / INSIDE SHLD (NO. 3 & NO. 5) AND OUTSIDE SHLD (NO. 4 & NO. 6)	R92.83	R92.87	338		6	28	867	0.20
MATCH EXIST PVMT - MAINLINE / INSIDE SHLD (NO. 7) AND OUTSIDE SHLD (NO. 8)	R92.87	R92.90	226				867	0.13
KRUME DITCH BR 56-122R	R92.90	R92.92						
MATCH EXIST PVMT - MAINLINE / INSIDE SHLD (NO. 7) AND OUTSIDE SHLD (NO. 8)	R92.92	R92.96	226				867	0.13
PVMT TRANS - MAINLINE / INSIDE SHLD (NO. 3 & NO. 5) AND OUTSIDE SHLD (NO. 4 & NO. 6)	R92.96	R93.00	338		6	28	867	0.20
RAISED PVMT - MAINLINE / INSIDE SHLD (NO. 1) AND OUTSIDE SHLD (NO. 2)	R93.00	R93.56	5043	1755	94	419	12824	4.00
PVMT TRANS - MAINLINE / INSIDE SHLD (NO. 3 & NO. 5) AND OUTSIDE SHLD (NO. 4 & NO. 6)	R93.56	R93.60	338		6	28	867	0.20
MATCH EXIST PVMT - MAINLINE / INSIDE SHLD (NO. 7) AND OUTSIDE SHLD (NO. 8)	R93.60	R93.63	226				867	0.13
BETA DITCH BR 56-120R	R93.63	R93.65						
MATCH EXIST PVMT - MAINLINE / INSIDE SHLD (NO. 7) AND OUTSIDE SHLD (NO. 8)	R93.65	R93.68	226				867	0.13
PVMT TRANS - MAINLINE / INSIDE SHLD (NO. 3 & NO. 5) AND OUTSIDE SHLD (NO. 4 & NO. 6)	R93.68	R93.72	338		6	28	867	0.20
RAISED PVMT - MAINLINE / INSIDE SHLD (NO. 1) AND OUTSIDE SHLD (NO. 2)	R93.72	R94.67	8569	2982	161	713	21793	6.80
PVMT TRANS - MAINLINE / INSIDE SHLD (NO. 3 & NO. 5) AND OUTSIDE SHLD (NO. 4 & NO. 6)	R94.67	R94.71	338		6	28	867	0.20
MATCH EXIST PVMT - MAINLINE / INSIDE SHLD (NO. 7) AND OUTSIDE SHLD (NO. 8)	R94.71	R94.75	226				867	0.13
TECKA DITCH BR 56-118R	R94.75	R94.78						
MATCH EXIST PVMT - MAINLINE / INSIDE SHLD (NO. 7) AND OUTSIDE SHLD (NO. 8)	R94.78	R94.81	226				867	0.13
PVMT TRANS - MAINLINE / INSIDE SHLD (NO. 3 & NO. 5) AND OUTSIDE SHLD (NO. 4 & NO. 6)	R94.81	R94.85	338		6	28	867	0.20
RAISED PVMT - MAINLINE / INSIDE SHLD (NO. 1) AND OUTSIDE SHLD (NO. 2)	R94.85	R94.97	1102	383	22	92	2802	0.87
PVMT TRANS - MAINLINE / INSIDE SHLD (NO. 3 & NO. 5) AND OUTSIDE SHLD (NO. 4 & NO. 6)	R94.97	R95.01	338		6	28	867	0.20
MATCH EXIST PVMT - MAINLINE / INSIDE SHLD (NO. 7) AND OUTSIDE SHLD (NO. 8)	R95.01	R95.05	226				867	0.13
EAGLE MOUNTAIN OH 56-263	R95.05	R95.08						
MATCH EXIST PVMT - MAINLINE / INSIDE SHLD (NO. 7) AND OUTSIDE SHLD (NO. 8)	R95.08	R95.11	226				867	0.13
PVMT TRANS - MAINLINE / INSIDE SHLD (NO. 3 & NO. 5) AND OUTSIDE SHLD (NO. 4 & NO. 6)	R95.11	R95.15	338		6	28	867	0.20
RAISED PVMT - MAINLINE / INSIDE SHLD (NO. 1) AND OUTSIDE SHLD (NO. 2)	R95.15	R96.42	11439	3981	215	952	29092	9.08
PVMT TRANS - MAINLINE / INSIDE SHLD (NO. 3 & NO. 5) AND OUTSIDE SHLD (NO. 4 & NO. 6)	R96.42	R96.46	338		6	28	867	0.20
MATCH EXIST PVMT - MAINLINE / INSIDE SHLD (NO. 7) AND OUTSIDE SHLD (NO. 8)	R96.46	R96.50	226				867	0.13
IROLO DITCH BR 56-113R	R96.50	R96.52						
MATCH EXIST PVMT - MAINLINE / INSIDE SHLD (NO. 7) AND OUTSIDE SHLD (NO. 8)	R96.52	R96.56	226				867	0.13
PVMT TRANS - MAINLINE / INSIDE SHLD (NO. 3 & NO. 5) AND OUTSIDE SHLD (NO. 4 & NO. 6)	R96.56	R96.59	338		6	28	867	0.20
RAISED PVMT - MAINLINE / INSIDE SHLD (NO. 1) AND OUTSIDE SHLD (NO. 2)	R96.59	R96.76	1471	512	29	122	3741	1.17
PVMT TRANS - MAINLINE / INSIDE SHLD (NO. 3 & NO. 5) AND OUTSIDE SHLD (NO. 4 & NO. 6)	R96.76	R96.80	338		6	28	867	0.20
MATCH EXIST PVMT - MAINLINE / INSIDE SHLD (NO. 7) AND OUTSIDE SHLD (NO. 8)	R96.80	R96.83	226				867	0.13
SUBTOTAL (THIS SHEET)			57264	16787	1005	4461	150465	43.57

1 (N) - NOT A SEPARATE PAY ITEM

1 **REPLACED PER ADDENDUM No. 1 DATED JANUARY 07, 2016**

SUMMARY OF QUANTITIES

Q-3

STATE OF CALIFORNIA - DEPARTMENT OF TRANSPORTATION
Caltrans® DESIGN

FUNCTIONAL SUPERVISOR: DIBORO KANABOLO
CALCULATED-DESIGNED BY: WILLIAM PETOSKEY
CHECKED BY: TUAN A. TRUONG
REVISED BY
DATE REVISED

LAST REVISION 06-01-15 | DATE PLOTTED => 06-JAN-2016 | TIME PLOTTED => 14:50

Dist	COUNTY	ROUTE	POST MILES TOTAL PROJECT	SHEET No.	TOTAL SHEETS
08	Riv	10	R74.0/R105.4	42	100

REGISTERED CIVIL ENGINEER 5/18/15 DATE

6/01/15
PLANS APPROVAL DATE

REGISTERED PROFESSIONAL ENGINEER TUAN TRUONG No. 60137 Exp. 2/15/17 CIVIL STATE OF CALIFORNIA

THE STATE OF CALIFORNIA OR ITS OFFICERS OR AGENTS SHALL NOT BE RESPONSIBLE FOR THE ACCURACY OR COMPLETENESS OF SCANNED COPIES OF THIS PLAN SHEET.

ROADWAY QUANTITES - EASTBOUND

LOCATION	POST MILE FROM	POST MILE TO	HOT MIX ASPHALT (TYPE A) TON	RUBBERIZED HOT MIX ASPHALT (GAP GRADED) TON	SAFETY EDGE (N) TON	SHOULDER BACKING TON	COLD PLANE ASPHALT CONCRETE PAVEMENT SQYD	TACK COAT TON
AJAX DITCH BR 56-112R	R96.83	R96.85						
MATCH EXIST PVMT - MAINLINE / INSIDE SHLD (NO. 7) AND OUTSIDE SHLD (NO. 8)	R96.85	R96.89	226				867	0.13
PVMT TRANS - MAINLINE / INSIDE SHLD (NO. 3 & NO. 5) AND OUTSIDE SHLD (NO. 4 & NO. 6)	R96.89	R96.93	338		6	28	867	0.20
RAISED PVMT - MAINLINE / INSIDE SHLD (NO. 1) AND OUTSIDE SHLD (NO. 2)	R96.93	R97.26	2964	1032	56	247	7539	2.35
PVMT TRANS - MAINLINE / INSIDE SHLD (NO. 3 & NO. 5) AND OUTSIDE SHLD (NO. 4 & NO. 6)	R97.26	R97.29	338		6	28	867	0.20
MATCH EXIST PVMT - MAINLINE / INSIDE SHLD (NO. 7) AND OUTSIDE SHLD (NO. 8)	R97.29	R97.33	226				867	0.13
SHANTY DITCH BR 56-111R	R97.33	R97.35						
MATCH EXIST PVMT - MAINLINE / INSIDE SHLD (NO. 7) AND OUTSIDE SHLD (NO. 8)	R97.35	R97.38	226				867	0.13
PVMT TRANS - MAINLINE / INSIDE SHLD (NO. 3 & NO. 5) AND OUTSIDE SHLD (NO. 4 & NO. 6)	R97.38	R97.42	338		6	28	867	0.20
RAISED PVMT - MAINLINE / INSIDE SHLD (NO. 1) AND OUTSIDE SHLD (NO. 2)	R97.42	R97.74	2847	991	54	237	7241	2.26
PVMT TRANS - MAINLINE / INSIDE SHLD (NO. 3 & NO. 5) AND OUTSIDE SHLD (NO. 4 & NO. 6)	R97.74	R97.78	338		6	28	867	0.20
MATCH EXIST PVMT - MAINLINE / INSIDE SHLD (NO. 7) AND OUTSIDE SHLD (NO. 8)	R97.78	R97.81	226				867	0.13
UNION DITCH BR 56-109R	R97.81	R97.83						
MATCH EXIST PVMT - MAINLINE / INSIDE SHLD (NO. 7) AND OUTSIDE SHLD (NO. 8)	R97.83	R97.87	226				867	0.13
PVMT TRANS - MAINLINE / INSIDE SHLD (NO. 3 & NO. 5) AND OUTSIDE SHLD (NO. 4 & NO. 6)	R97.87	R97.91	338		6	28	867	0.20
RAISED PVMT - MAINLINE / INSIDE SHLD (NO. 1) AND OUTSIDE SHLD (NO. 2)	R97.91	R98.71	7166	2494	135	596	18224	5.69
PVMT TRANS - MAINLINE / INSIDE SHLD (NO. 3 & NO. 5) AND OUTSIDE SHLD (NO. 4 & NO. 6)	R98.71	R98.74	338		6	28	867	0.20
MATCH EXIST PVMT - MAINLINE / INSIDE SHLD (NO. 7) AND OUTSIDE SHLD (NO. 8)	R98.74	R98.78	226				867	0.13
BULA DITCH BR 56-105R	R98.78	R98.79						
MATCH EXIST PVMT - MAINLINE / INSIDE SHLD (NO. 7) AND OUTSIDE SHLD (NO. 8)	R98.79	R98.83	226				867	0.13
PVMT TRANS - MAINLINE / INSIDE SHLD (NO. 3 & NO. 5) AND OUTSIDE SHLD (NO. 4 & NO. 6)	R98.83	R98.87	338		6	28	867	0.20
RAISED PVMT - MAINLINE / INSIDE SHLD (NO. 1) AND OUTSIDE SHLD (NO. 2)	R98.87	R98.97	859	299	17	71	2185	0.68
PVMT TRANS - MAINLINE / INSIDE SHLD (NO. 3 & NO. 5) AND OUTSIDE SHLD (NO. 4 & NO. 6)	R98.97	R99.00	338		6	28	867	0.20
MATCH EXIST PVMT - MAINLINE / INSIDE SHLD (NO. 7) AND OUTSIDE SHLD (NO. 8)	R99.00	R99.04	226				867	0.13
TARO DITCH BR 56-104R	R99.04	R99.06						
MATCH EXIST PVMT - MAINLINE / INSIDE SHLD (NO. 7) AND OUTSIDE SHLD (NO. 8)	R99.06	R99.10	226				867	0.13
PVMT TRANS - MAINLINE / INSIDE SHLD (NO. 3 & NO. 5) AND OUTSIDE SHLD (NO. 4 & NO. 6)	R99.10	R99.14	338		6	28	867	0.20
RAISED PVMT - MAINLINE / INSIDE SHLD (NO. 1) AND OUTSIDE SHLD (NO. 2)	R99.14	R100.31	10539	3668	198	877	26804	8.36
PVMT TRANS - MAINLINE / INSIDE SHLD (NO. 3 & NO. 5) AND OUTSIDE SHLD (NO. 4 & NO. 6)	R100.31	R100.35	338		6	28	867	0.20
MATCH EXIST PVMT - MAINLINE / INSIDE SHLD (NO. 7) AND OUTSIDE SHLD (NO. 8)	R100.35	R100.38	226				867	0.13
ADAIR DITCH BR 56-099R	R100.38	R100.39						
MATCH EXIST PVMT - MAINLINE / INSIDE SHLD (NO. 7) AND OUTSIDE SHLD (NO. 8)	R100.39	R100.43	226				867	0.13
PVMT TRANS - MAINLINE / INSIDE SHLD (NO. 3 & NO. 5) AND OUTSIDE SHLD (NO. 4 & NO. 6)	R100.43	R100.47	338		6	28	867	0.20
RAISED PVMT - MAINLINE / INSIDE SHLD (NO. 1) AND OUTSIDE SHLD (NO. 2)	R100.47	R100.60	1174	409	23	98	2985	0.93
PVMT TRANS - MAINLINE / INSIDE SHLD (NO. 3 & NO. 5) AND OUTSIDE SHLD (NO. 4 & NO. 6)	R100.60	R100.64	338		6	28	867	0.20
MATCH EXIST PVMT - MAINLINE / INSIDE SHLD (NO. 7) AND OUTSIDE SHLD (NO. 8)	R100.64	R100.68	226				867	0.13
HILLOCK DITCH BR 56-098R	R100.68	R100.69						
MATCH EXIST PVMT - MAINLINE / INSIDE SHLD (NO. 7) AND OUTSIDE SHLD (NO. 8)	R100.69	R100.73	226				867	0.13
PVMT TRANS - MAINLINE / INSIDE SHLD (NO. 3 & NO. 5) AND OUTSIDE SHLD (NO. 4 & NO. 6)	R100.73	R100.76	338		6	28	867	0.20
RAISED PVMT - MAINLINE / INSIDE SHLD (NO. 1) AND OUTSIDE SHLD (NO. 2)	R100.76	R101.06	2658	925	51	221	6761	2.11
PVMT TRANS - MAINLINE / INSIDE SHLD (NO. 3 & NO. 5) AND OUTSIDE SHLD (NO. 4 & NO. 6)	R101.06	R101.10	338		6	28	867	0.20
MATCH EXIST PVMT - MAINLINE / INSIDE SHLD (NO. 7) AND OUTSIDE SHLD (NO. 8)	R101.10	R101.14	226				867	0.13
WIDE DITCH BR 56-097R	R101.14	R101.15						
MATCH EXIST PVMT - MAINLINE / INSIDE SHLD (NO. 7) AND OUTSIDE SHLD (NO. 8)	R101.15	R101.19	226				867	0.13
PVMT TRANS - MAINLINE / INSIDE SHLD (NO. 3 & NO. 5) AND OUTSIDE SHLD (NO. 4 & NO. 6)	R101.19	R101.23	338		6	28	867	0.20
RAISED PVMT - MAINLINE / INSIDE SHLD (NO. 1) AND OUTSIDE SHLD (NO. 2)	R101.23	R101.94	6401	2228	120	533	16279	5.08
PVMT TRANS - MAINLINE / INSIDE SHLD (NO. 3 & NO. 5) AND OUTSIDE SHLD (NO. 4 & NO. 6)	R101.94	R101.98	338		6	28	867	0.20
MATCH EXIST PVMT - MAINLINE / INSIDE SHLD (NO. 7) AND OUTSIDE SHLD (NO. 8)	R101.98	R102.01	226				867	0.13
SUBTOTAL (THIS SHEET)			43632	12046	750	3328	115762	32.74

1 (N) - NOT A SEPARATE PAY ITEM

1 **REPLACED PER ADDENDUM No. 1 DATED JANUARY 07, 2016**

SUMMARY OF QUANTITIES

Q-4

STATE OF CALIFORNIA - DEPARTMENT OF TRANSPORTATION
Caltrans® DESIGN

FUNCTIONAL SUPERVISOR: DIBORO KANABOLO
CALCULATED-DESIGNED BY: WILLIAM PETOSKEY
CHECKED BY: TUAN A. TRUONG
REVISED BY
DATE REVISED

LAST REVISION 06-01-15
DATE PLOTTED => 06-JAN-2016
TIME PLOTTED => 14:50

Dist	COUNTY	ROUTE	POST MILES TOTAL PROJECT	SHEET No.	TOTAL SHEETS
08	Riv	10	R74.0/R105.4	43	100

REGISTERED CIVIL ENGINEER 5/18/15 DATE

6/01/15
PLANS APPROVAL DATE

REGISTERED PROFESSIONAL ENGINEER TUAN TRUONG No. 60137 Exp 2/15/17 CIVIL STATE OF CALIFORNIA

THE STATE OF CALIFORNIA OR ITS OFFICERS OR AGENTS SHALL NOT BE RESPONSIBLE FOR THE ACCURACY OR COMPLETENESS OF SCANNED COPIES OF THIS PLAN SHEET.

ROADWAY QUANTITES - EASTBOUND

LOCATION	POST MILE		HOT MIX ASPHALT (TYPE A)	RUBBERIZED HOT MIX ASPHALT (GAP GRADED)	SAFETY EDGE (N)	SHOULDER BACKING	COLD PLANE ASPHALT CONCRETE PAVEMENT	TACK COAT
	FROM	TO	TON	TON	TON	TON	SQYD	TON
EAGLE MOUNTAIN RD UC 56-575R	R102.01	R102.03						
MATCH EXIST PVMT - MAINLINE / INSIDE SHLD (NO. 7) AND OUTSIDE SHLD (NO. 8)	R102.03	R102.07	226				867	0.13
PVMT TRANS - MAINLINE / INSIDE SHLD (NO. 3 & NO. 5) AND OUTSIDE SHLD (NO. 4 & NO. 6)	R102.07	R102.11	338		6	28	867	0.20
RAISED PVMT - MAINLINE / INSIDE SHLD (NO. 1) AND OUTSIDE SHLD (NO. 2)	R102.11	R102.55	3981	1385	75	331	10124	3.16
PVMT TRANS - MAINLINE / INSIDE SHLD (NO. 3 & NO. 5) AND OUTSIDE SHLD (NO. 4 & NO. 6)	R102.55	R102.59	338		6	28	867	0.20
MATCH EXIST PVMT - MAINLINE / INSIDE SHLD (NO. 7) AND OUTSIDE SHLD (NO. 8)	R102.59	R102.63	226				867	0.13
TEX WASH BR 56-576R	R102.63	R102.65						
MATCH EXIST PVMT - MAINLINE / INSIDE SHLD (NO. 7) AND OUTSIDE SHLD (NO. 8)	R102.65	R102.68	226				867	0.13
PVMT TRANS - MAINLINE / INSIDE SHLD (NO. 3 & NO. 5) AND OUTSIDE SHLD (NO. 4 & NO. 6)	R102.68	R102.72	338		6	28	867	0.20
RAISED PVMT - MAINLINE / INSIDE SHLD (NO. 1) AND OUTSIDE SHLD (NO. 2)	R102.72	R105.01	20607	7171	386	1714	52406	16.35
PVMT TRANS - MAINLINE / INSIDE SHLD (NO. 3 & NO. 5) AND OUTSIDE SHLD (NO. 4 & NO. 6)	R105.01	R105.05	338		6	28	867	0.20
MATCH EXIST PVMT - MAINLINE / INSIDE SHLD (NO. 7) AND OUTSIDE SHLD (NO. 8)	R105.05	R105.09	226				867	0.13
DESERT CENTER UC 56-577R	R105.09	R105.11						
MATCH EXIST PVMT - MAINLINE / INSIDE SHLD (NO. 7) AND OUTSIDE SHLD (NO. 8)	R105.11	R105.40	1752				6727	0.98
SUBTOTAL (THIS SHEET)			28596	8556	485	2157	76193	21.81

1 (N) - NOT A SEPARATE PAY ITEM

1 REPLACED PER ADDENDUM No. 1 DATED JANUARY 07, 2016

SUMMARY OF QUANTITIES

Q-5

STATE OF CALIFORNIA - DEPARTMENT OF TRANSPORTATION
Caltrans DESIGN

FUNCTIONAL SUPERVISOR: DIBORO KANABOLO
CALCULATED-DESIGNED BY: WILLIAM PETOSKEY
CHECKED BY: TUAN A. TRUONG
REVISED BY
DATE REVISED

LAST REVISION 06-01-15 | DATE PLOTTED => 06-JAN-2016 | TIME PLOTTED => 14:50

Dist	COUNTY	ROUTE	POST MILES TOTAL PROJECT	SHEET No.	TOTAL SHEETS
08	Riv	10	R74.0/R105.4	44	100

Tuan Truong 5/18/15
REGISTERED CIVIL ENGINEER DATE

6/01/15
PLANS APPROVAL DATE

REGISTERED PROFESSIONAL ENGINEER TUAN TRUONG No. 60137 Exp. 2/15/17 CIVIL STATE OF CALIFORNIA

THE STATE OF CALIFORNIA OR ITS OFFICERS OR AGENTS SHALL NOT BE RESPONSIBLE FOR THE ACCURACY OR COMPLETENESS OF SCANNED COPIES OF THIS PLAN SHEET.

ROADWAY QUANTITES - WESTBOUND

LOCATION	POST MILE		HOT MIX ASPHALT (TYPE A)	RUBBERIZED HOT MIX ASPHALT (GAP GRADED)	SAFETY EDGE (N)	SHOULDER BACKING	COLD PLANE ASPHALT CONCRETE PAVEMENT	TACK COAT
	FROM	TO	TON	TON	TON	TON	SQYD	TON
MATCH EXIST PVMT - MAINLINE / INSIDE SHLD (NO. 7) AND OUTSIDE SHLD (NO. 8)	R74.00	R74.10	606				2381	0.34
HAZY GULCH BR 56-463L	R74.10	R74.11						
MATCH EXIST PVMT - MAINLINE / INSIDE SHLD (NO. 7) AND OUTSIDE SHLD (NO. 8)	R74.11	R74.15	232				911	0.13
PVMT TRANS - MAINLINE / INSIDE SHLD (NO. 3 & NO. 5) AND OUTSIDE SHLD (NO. 4 & NO. 6)	R74.15	R74.19	349		3	28	911	0.21
RAISED PVMT - MAINLINE / INSIDE SHLD (NO. 1) AND OUTSIDE SHLD (NO. 2)	R74.19	R74.76	5276	1848	49	423	13602	4.20
PVMT TRANS - MAINLINE / INSIDE SHLD (NO. 3 & NO. 5) AND OUTSIDE SHLD (NO. 4 & NO. 6)	R74.76	R74.79	349		3	28	911	0.21
MATCH EXIST PVMT - MAINLINE / INSIDE SHLD (NO. 7) AND OUTSIDE SHLD (NO. 8)	R74.79	R74.83	232				911	0.13
EAST CACTUS CITY UC 56-511L	R74.83	R74.85						
MATCH EXIST PVMT - MAINLINE / INSIDE SHLD (NO. 7) AND OUTSIDE SHLD (NO. 8)	R74.85	R74.89	232				911	0.13
PVMT TRANS - MAINLINE / INSIDE SHLD (NO. 3 & NO. 5) AND OUTSIDE SHLD (NO. 4 & NO. 6)	R74.89	R74.93	349		3	28	911	0.21
RAISED PVMT - MAINLINE / INSIDE SHLD (NO. 1) AND OUTSIDE SHLD (NO. 2)	R74.93	R75.60	5972	2079	57	500	15295	4.77
PVMT TRANS - MAINLINE / INSIDE SHLD (NO. 3 & NO. 5) AND OUTSIDE SHLD (NO. 4 & NO. 6)	R75.60	R75.64	335		3	28	867	0.20
MATCH EXIST PVMT - MAINLINE / INSIDE SHLD (NO. 7) AND OUTSIDE SHLD (NO. 8)	R75.64	R75.67	226				867	0.13
HAPPY GULCH BR 56-209L	R75.67	R75.69						
MATCH EXIST PVMT - MAINLINE / INSIDE SHLD (NO. 7) AND OUTSIDE SHLD (NO. 8)	R75.69	R75.72	226				867	0.13
PVMT TRANS - MAINLINE / INSIDE SHLD (NO. 3 & NO. 5) AND OUTSIDE SHLD (NO. 4 & NO. 6)	R75.72	R75.76	335		3	28	867	0.20
RAISED PVMT - MAINLINE / INSIDE SHLD (NO. 1) AND OUTSIDE SHLD (NO. 2)	R75.76	R77.02	11216	3904	107	940	28725	8.96
PVMT TRANS - MAINLINE / INSIDE SHLD (NO. 3 & NO. 5) AND OUTSIDE SHLD (NO. 4 & NO. 6)	R77.02	R77.06	335		3	28	867	0.20
MATCH EXIST PVMT - MAINLINE / INSIDE SHLD (NO. 7) AND OUTSIDE SHLD (NO. 8)	R77.06	R77.09	226				867	0.13
DESPERATION ARROYO BR 56-464L	R77.09	R77.11						
MATCH EXIST PVMT - MAINLINE / INSIDE SHLD (NO. 7) AND OUTSIDE SHLD (NO. 8)	R77.11	R77.14	226				867	0.13
PVMT TRANS - MAINLINE / INSIDE SHLD (NO. 3 & NO. 5) AND OUTSIDE SHLD (NO. 4 & NO. 6)	R77.14	R77.18	335		3	28	867	0.20
RAISED PVMT - MAINLINE / INSIDE SHLD (NO. 1) AND OUTSIDE SHLD (NO. 2)	R77.18	R77.90	6410	2231	61	537	16416	5.12
PVMT TRANS - MAINLINE / INSIDE SHLD (NO. 3 & NO. 5) AND OUTSIDE SHLD (NO. 4 & NO. 6)	R77.90	R77.94	335		3	28	867	0.20
MATCH EXIST PVMT - MAINLINE / INSIDE SHLD (NO. 7) AND OUTSIDE SHLD (NO. 8)	R77.94	R77.97	226				867	0.13
WEST BURRIED MTN WASH 56-465L	R77.97	R77.99						
MATCH EXIST PVMT - MAINLINE / INSIDE SHLD (NO. 7) AND OUTSIDE SHLD (NO. 8)	R77.99	R78.02	226				867	0.13
PVMT TRANS - MAINLINE / INSIDE SHLD (NO. 3 & NO. 5) AND OUTSIDE SHLD (NO. 4 & NO. 6)	R78.02	R78.06	335		3	28	867	0.20
RAISED PVMT - MAINLINE / INSIDE SHLD (NO. 1) AND OUTSIDE SHLD (NO. 2)	R78.06	R78.47	3676	1280	36	308	9415	2.94
PVMT TRANS - MAINLINE / INSIDE SHLD (NO. 3 & NO. 5) AND OUTSIDE SHLD (NO. 4 & NO. 6)	R78.47	R78.51	335		3	28	867	0.20
MATCH EXIST PVMT - MAINLINE / INSIDE SHLD (NO. 7) AND OUTSIDE SHLD (NO. 8)	R78.51	R78.55	226				867	0.13
BURRIED MTN WASH 56-212L	R78.55	R78.57						
MATCH EXIST PVMT - MAINLINE / INSIDE SHLD (NO. 7) AND OUTSIDE SHLD (NO. 8)	R78.57	R78.61	226				867	0.13
PVMT TRANS - MAINLINE / INSIDE SHLD (NO. 3 & NO. 5) AND OUTSIDE SHLD (NO. 4 & NO. 6)	R78.61	R78.65	335		3	28	867	0.20
RAISED PVMT - MAINLINE / INSIDE SHLD (NO. 1) AND OUTSIDE SHLD (NO. 2)	R78.65	R79.18	4748	1653	46	398	12160	3.79
PVMT TRANS - MAINLINE / INSIDE SHLD (NO. 3 & NO. 5) AND OUTSIDE SHLD (NO. 4 & NO. 6)	R79.18	R79.22	335		3	28	867	0.20
MATCH EXIST PVMT - MAINLINE / INSIDE SHLD (NO. 7) AND OUTSIDE SHLD (NO. 8)	R79.22	R79.25	226				867	0.13
WEST SADDLE GULCH 56-466L	R79.25	R79.26						
MATCH EXIST PVMT - MAINLINE / INSIDE SHLD (NO. 7) AND OUTSIDE SHLD (NO. 8)	R79.26	R79.30	226				867	0.13
PVMT TRANS - MAINLINE / INSIDE SHLD (NO. 3 & NO. 5) AND OUTSIDE SHLD (NO. 4 & NO. 6)	R79.30	R79.34	335		3	28	867	0.20
RAISED PVMT - MAINLINE / INSIDE SHLD (NO. 1) AND OUTSIDE SHLD (NO. 2)	R79.34	R79.51	1496	521	15	125	3832	1.20
PVMT TRANS - MAINLINE / INSIDE SHLD (NO. 3 & NO. 5) AND OUTSIDE SHLD (NO. 4 & NO. 6)	R79.51	R79.54	335		3	28	867	0.20
MATCH EXIST PVMT - MAINLINE / INSIDE SHLD (NO. 7) AND OUTSIDE SHLD (NO. 8)	R79.54	R79.58	226				867	0.13
SADDLE GULCH 56-467L	R79.58	R79.60						
MATCH EXIST PVMT - MAINLINE / INSIDE SHLD (NO. 7) AND OUTSIDE SHLD (NO. 8)	R79.60	R79.64	226				867	0.13
PVMT TRANS - MAINLINE / INSIDE SHLD (NO. 3 & NO. 5) AND OUTSIDE SHLD (NO. 4 & NO. 6)	R79.64	R79.67	335		3	28	867	0.20
RAISED PVMT - MAINLINE / INSIDE SHLD (NO. 1) AND OUTSIDE SHLD (NO. 2)	R79.67	R79.87	1737	605	16	146	4450	1.39
PVMT TRANS - MAINLINE / INSIDE SHLD (NO. 3 & NO. 5) AND OUTSIDE SHLD (NO. 4 & NO. 6)	R79.87	R79.91	335		3	28	867	0.20
MATCH EXIST PVMT - MAINLINE / INSIDE SHLD (NO. 7) AND OUTSIDE SHLD (NO. 8)	R79.91	R79.94	226				867	0.13
SUBTOTAL (THIS SHEET)			50173	14121	435	3825	134284	38.02

1 (N) - NOT A SEPARATE PAY ITEM

1 **REPLACED PER ADDENDUM No. 1 DATED JANUARY 07, 2016**

SUMMARY OF QUANTITIES

Q-6

STATE OF CALIFORNIA - DEPARTMENT OF TRANSPORTATION
Caltrans® DESIGN

WILLIAM PETOSKEY
TUAN A. TRUONG
DIBORO KANABOLO

REVISED BY | DATE REVISED
CALCULATED-DESIGNED BY | CHECKED BY
FUNCTIONAL SUPERVISOR

LAST REVISION 06-01-15 | DATE PLOTTED => 06-JAN-2016 | TIME PLOTTED => 14:50

Dist	COUNTY	ROUTE	POST MILES TOTAL PROJECT	SHEET No.	TOTAL SHEETS
08	Riv	10	R74.0/R105.4	45	100

Tuan Truong 5/18/15
REGISTERED CIVIL ENGINEER DATE

6/01/15
PLANS APPROVAL DATE

REGISTERED PROFESSIONAL ENGINEER
TUAN TRUONG
No. 60137
Exp. 2/15/17
CIVIL
STATE OF CALIFORNIA

THE STATE OF CALIFORNIA OR ITS OFFICERS OR AGENTS SHALL NOT BE RESPONSIBLE FOR THE ACCURACY OR COMPLETENESS OF SCANNED COPIES OF THIS PLAN SHEET.

ROADWAY QUANTITES - WESTBOUND

LOCATION	POST MILE FROM	POST MILE TO	HOT MIX ASPHALT (TYPE A) TON	RUBBERIZED HOT MIX ASPHALT (GAP GRADED) TON	SAFETY EDGE (N) TON	SHOULDER BACKING TON	COLD PLANE ASPHALT CONCRETE PAVEMENT SQYD	TACK COAT TON
WEST COTTON GULCH 56-468L	R79.94	R79.97						
MATCH EXIST PVMT - MAINLINE / INSIDE SHLD (NO. 7) AND OUTSIDE SHLD (NO. 8)	R79.97	R80.01	226				867	0.13
PVMT TRANS - MAINLINE / INSIDE SHLD (NO. 3 & NO. 5) AND OUTSIDE SHLD (NO. 4 & NO. 6)	R80.01	R80.04	335		3	28	867	0.20
RAISED PVMT - MAINLINE / INSIDE SHLD (NO. 1) AND OUTSIDE SHLD (NO. 2)	R80.04	R80.26	1898	661	19	159	4862	1.52
PVMT TRANS - MAINLINE / INSIDE SHLD (NO. 3 & NO. 5) AND OUTSIDE SHLD (NO. 4 & NO. 6)	R80.26	R80.30	335		3	28	867	0.20
MATCH EXIST PVMT - MAINLINE / INSIDE SHLD (NO. 7) AND OUTSIDE SHLD (NO. 8)	R80.30	R80.33	226				867	0.13
COTTON GULCH 56-469L	R80.33	R80.35						
MATCH EXIST PVMT - MAINLINE / INSIDE SHLD (NO. 7) AND OUTSIDE SHLD (NO. 8)	R80.35	R80.39	226				867	0.13
PVMT TRANS - MAINLINE / INSIDE SHLD (NO. 3 & NO. 5) AND OUTSIDE SHLD (NO. 4 & NO. 6)	R80.39	R80.42	335		3	28	867	0.20
RAISED PVMT - MAINLINE / INSIDE SHLD (NO. 1) AND OUTSIDE SHLD (NO. 2)	R80.42	R80.57	1318	459	13	110	3374	1.05
PVMT TRANS - MAINLINE / INSIDE SHLD (NO. 3 & NO. 5) AND OUTSIDE SHLD (NO. 4 & NO. 6)	R80.57	R80.61	335		3	28	867	0.20
MATCH EXIST PVMT - MAINLINE / INSIDE SHLD (NO. 7) AND OUTSIDE SHLD (NO. 8)	R80.61	R80.65	226				867	0.13
EAST COTTON GULCH 56-470L	R80.65	R80.66						
MATCH EXIST PVMT - MAINLINE / INSIDE SHLD (NO. 7) AND OUTSIDE SHLD (NO. 8)	R80.66	R80.70	226				867	0.13
PVMT TRANS - MAINLINE / INSIDE SHLD (NO. 3 & NO. 5) AND OUTSIDE SHLD (NO. 4 & NO. 6)	R80.70	R80.74	335		3	28	867	0.20
RAISED PVMT - MAINLINE / INSIDE SHLD (NO. 1) AND OUTSIDE SHLD (NO. 2)	R80.74	R81.14	3599	1253	52	300	9186	2.87
PVMT TRANS - MAINLINE / INSIDE SHLD (NO. 3 & NO. 5) AND OUTSIDE SHLD (NO. 4 & NO. 6)	R81.14	R81.18	338		6	28	867	0.20
MATCH EXIST PVMT - MAINLINE / INSIDE SHLD (NO. 7) AND OUTSIDE SHLD (NO. 8)	R81.18	R81.21	226				867	0.13
PAUL GULCH BR 56-512L	R81.21	R81.23						
MATCH EXIST PVMT - MAINLINE / INSIDE SHLD (NO. 7) AND OUTSIDE SHLD (NO. 8)	R81.23	R81.27	226				867	0.13
PVMT TRANS - MAINLINE / INSIDE SHLD (NO. 3 & NO. 5) AND OUTSIDE SHLD (NO. 4 & NO. 6)	R81.27	R81.30	338		6	28	867	0.20
RAISED PVMT - MAINLINE / INSIDE SHLD (NO. 1) AND OUTSIDE SHLD (NO. 2)	R81.30	R81.47	1516	528	29	126	3855	1.20
PVMT TRANS - MAINLINE / INSIDE SHLD (NO. 3 & NO. 5) AND OUTSIDE SHLD (NO. 4 & NO. 6)	R81.47	R81.51	338		6	28	867	0.20
MATCH EXIST PVMT - MAINLINE / INSIDE SHLD (NO. 7) AND OUTSIDE SHLD (NO. 8)	R81.51	R81.55	226				867	0.13
COTTONWOOD SPRINGS/BOX CANYON RD OC 56-0513	R81.55	R81.56					41	0.02
MATCH EXIST PVMT - MAINLINE / INSIDE SHLD (NO. 7) AND OUTSIDE SHLD (NO. 8)	R81.56	R81.59	226				867	0.13
PVMT TRANS - MAINLINE / INSIDE SHLD (NO. 3 & NO. 5) AND OUTSIDE SHLD (NO. 4 & NO. 6)	R81.59	R81.63	338		6	28	867	0.20
RAISED PVMT - MAINLINE / INSIDE SHLD (NO. 1) AND OUTSIDE SHLD (NO. 2)	R81.63	R82.54	8146	2835	153	678	20717	6.46
PVMT TRANS - MAINLINE / INSIDE SHLD (NO. 3 & NO. 5) AND OUTSIDE SHLD (NO. 4 & NO. 6)	R82.54	R82.57	338		6	28	867	0.20
MATCH EXIST PVMT - MAINLINE / INSIDE SHLD (NO. 7) AND OUTSIDE SHLD (NO. 8)	R82.57	R82.61	226				867	0.13
PINTO GULCH BR 56-514L	R82.61	R82.65						
MATCH EXIST PVMT - MAINLINE / INSIDE SHLD (NO. 7) AND OUTSIDE SHLD (NO. 8)	R82.65	R82.68	226				867	0.13
PVMT TRANS - MAINLINE / INSIDE SHLD (NO. 3 & NO. 5) AND OUTSIDE SHLD (NO. 4 & NO. 6)	R82.68	R82.72	338		6	28	867	0.20
RAISED PVMT - MAINLINE / INSIDE SHLD (NO. 1) AND OUTSIDE SHLD (NO. 2)	R82.72	R86.00	29460	10252	522	2451	74920	23.37
PVMT TRANS - MAINLINE / INSIDE SHLD (NO. 3 & NO. 5) AND OUTSIDE SHLD (NO. 4 & NO. 6)	R86.00	R86.04	338		6	28	867	0.20
MATCH EXIST PVMT - MAINLINE / INSIDE SHLD (NO. 7) AND OUTSIDE SHLD (NO. 8)	R86.04	R86.07	226				867	0.13
CHIRACO SUMMIT RD OC 56-573	R86.07	R86.08					41	0.02
MATCH EXIST PVMT - MAINLINE / INSIDE SHLD (NO. 7) AND OUTSIDE SHLD (NO. 8)	R86.08	R86.12	226				867	0.13
PVMT TRANS - MAINLINE / INSIDE SHLD (NO. 3 & NO. 5) AND OUTSIDE SHLD (NO. 4 & NO. 6)	R86.12	R86.16	338		6	28	867	0.20
RAISED PVMT - MAINLINE / INSIDE SHLD (NO. 1) AND OUTSIDE SHLD (NO. 2)	R86.16	R87.89	15569	5418	292	1295	39593	12.35
PVMT TRANS - MAINLINE / INSIDE SHLD (NO. 3 & NO. 5) AND OUTSIDE SHLD (NO. 4 & NO. 6)	R87.89	R87.92	338		6	28	867	0.20
MATCH EXIST PVMT - MAINLINE / INSIDE SHLD (NO. 7) AND OUTSIDE SHLD (NO. 8)	R87.92	R87.96	226				867	0.13
THREE STAR DITCH BR 56-129L	R87.96	R87.98						
MATCH EXIST PVMT - MAINLINE / INSIDE SHLD (NO. 7) AND OUTSIDE SHLD (NO. 8)	R87.98	R88.01	226				867	0.13
PVMT TRANS - MAINLINE / INSIDE SHLD (NO. 3 & NO. 5) AND OUTSIDE SHLD (NO. 4 & NO. 6)	R88.01	R88.05	338		6	28	867	0.20
RAISED PVMT - MAINLINE / INSIDE SHLD (NO. 1) AND OUTSIDE SHLD (NO. 2)	R88.05	R90.04	17908	6232	335	1490	45542	14.21
PVMT TRANS - MAINLINE / INSIDE SHLD (NO. 3 & NO. 5) AND OUTSIDE SHLD (NO. 4 & NO. 6)	R90.04	R90.08	338		6	28	867	0.20
MATCH EXIST PVMT - MAINLINE / INSIDE SHLD (NO. 7) AND OUTSIDE SHLD (NO. 8)	R90.08	R90.12	226				867	0.13
SUBTOTAL (THIS SHEET)			88423	27638	1496	7057	229875	68.35

1 (N) - NOT A SEPARATE PAY ITEM

1 **REPLACED PER ADDENDUM No. 1 DATED JANUARY 07, 2016**

SUMMARY OF QUANTITIES

Q-7

STATE OF CALIFORNIA - DEPARTMENT OF TRANSPORTATION
Caltrans® DESIGN

FUNCTIONAL SUPERVISOR: DIBORO KANABOLO
CALCULATED-DESIGNED BY: WILLIAM PETOSKEY
CHECKED BY: TUAN A. TRUONG
REVISED BY
DATE REVISED

LAST REVISION DATE PLOTTED => 06-JAN-2016
06-01-15 TIME PLOTTED => 14:50

Dist	COUNTY	ROUTE	POST MILES TOTAL PROJECT	SHEET No.	TOTAL SHEETS
08	Riv	10	R74.0/R105.4	46	100

REGISTERED CIVIL ENGINEER 5/18/15 DATE

6/01/15
PLANS APPROVAL DATE

REGISTERED PROFESSIONAL ENGINEER TUAN TRUONG No. 60137 Exp. 2/15/17 CIVIL STATE OF CALIFORNIA

THE STATE OF CALIFORNIA OR ITS OFFICERS OR AGENTS SHALL NOT BE RESPONSIBLE FOR THE ACCURACY OR COMPLETENESS OF SCANNED COPIES OF THIS PLAN SHEET.

ROADWAY QUANTITES - WESTBOUND

LOCATION	POST MILE FROM	POST MILE TO	HOT MIX ASPHALT (TYPE A) TON	RUBBERIZED HOT MIX ASPHALT (GAP GRADED) TON	SAFETY EDGE (N) TON	SHOULDER BACKING TON	COLD PLANE ASPHALT CONCRETE PAVEMENT SQYD	TACK COAT TON
HAYFIELD RD OC 56-574	R90.12	R90.13					41	0.02
MATCH EXIST PVMT - MAINLINE / INSIDE SHLD (NO. 7) AND OUTSIDE SHLD (NO. 8)	R90.13	R90.16	226				867	0.13
PVMT TRANS - MAINLINE / INSIDE SHLD (NO. 3 & NO. 5) AND OUTSIDE SHLD (NO. 4 & NO. 6)	R90.16	R90.20	338		6	28	867	0.20
RAISED PVMT - MAINLINE / INSIDE SHLD (NO. 1) AND OUTSIDE SHLD (NO. 2)	R90.20	R90.90	6275	2184	118	522	15958	4.98
PVMT TRANS - MAINLINE / INSIDE SHLD (NO. 3 & NO. 5) AND OUTSIDE SHLD (NO. 4 & NO. 6)	R90.90	R90.94	338		6	28	867	0.20
MATCH EXIST PVMT - MAINLINE / INSIDE SHLD (NO. 7) AND OUTSIDE SHLD (NO. 8)	R90.94	R90.98	226				867	0.13
DETERMINATION DITCH BR 56-124L	R90.98	R90.99						
MATCH EXIST PVMT - MAINLINE / INSIDE SHLD (NO. 7) AND OUTSIDE SHLD (NO. 8)	R90.99	R91.03	226				867	0.13
PVMT TRANS - MAINLINE / INSIDE SHLD (NO. 3 & NO. 5) AND OUTSIDE SHLD (NO. 4 & NO. 6)	R91.03	R91.07	338		6	28	867	0.20
RAISED PVMT - MAINLINE / INSIDE SHLD (NO. 1) AND OUTSIDE SHLD (NO. 2)	R91.07	R91.85	7013	2440	132	583	17835	5.56
PVMT TRANS - MAINLINE / INSIDE SHLD (NO. 3 & NO. 5) AND OUTSIDE SHLD (NO. 4 & NO. 6)	R91.85	R91.88	338		6	28	867	0.20
MATCH EXIST PVMT - MAINLINE / INSIDE SHLD (NO. 7) AND OUTSIDE SHLD (NO. 8)	R91.88	R91.92	226				867	0.13
ORRIS DITCH BR 56-123L	R91.92	R91.94						
MATCH EXIST PVMT - MAINLINE / INSIDE SHLD (NO. 7) AND OUTSIDE SHLD (NO. 8)	R91.94	R91.97	226				867	0.13
PVMT TRANS - MAINLINE / INSIDE SHLD (NO. 3 & NO. 5) AND OUTSIDE SHLD (NO. 4 & NO. 6)	R91.97	R92.01	338		6	28	867	0.20
RAISED PVMT - MAINLINE / INSIDE SHLD (NO. 1) AND OUTSIDE SHLD (NO. 2)	R92.01	R92.83	7328	2550	138	610	18635	5.81
PVMT TRANS - MAINLINE / INSIDE SHLD (NO. 3 & NO. 5) AND OUTSIDE SHLD (NO. 4 & NO. 6)	R92.83	R92.87	338		6	28	867	0.20
MATCH EXIST PVMT - MAINLINE / INSIDE SHLD (NO. 7) AND OUTSIDE SHLD (NO. 8)	R92.87	R92.90	226				867	0.13
KRUME DITCH BR 56-122L	R92.90	R92.92						
MATCH EXIST PVMT - MAINLINE / INSIDE SHLD (NO. 7) AND OUTSIDE SHLD (NO. 8)	R92.92	R92.96	226				867	0.13
PVMT TRANS - MAINLINE / INSIDE SHLD (NO. 3 & NO. 5) AND OUTSIDE SHLD (NO. 4 & NO. 6)	R92.96	R93.00	338		6	28	867	0.20
RAISED PVMT - MAINLINE / INSIDE SHLD (NO. 1) AND OUTSIDE SHLD (NO. 2)	R93.00	R93.56	5043	1755	95	419	12824	4.00
PVMT TRANS - MAINLINE / INSIDE SHLD (NO. 3 & NO. 5) AND OUTSIDE SHLD (NO. 4 & NO. 6)	R93.56	R93.60	338		6	28	867	0.20
MATCH EXIST PVMT - MAINLINE / INSIDE SHLD (NO. 7) AND OUTSIDE SHLD (NO. 8)	R93.60	R93.63	226				867	0.13
BETA DITCH BR 56-120L	R93.63	R93.65						
MATCH EXIST PVMT - MAINLINE / INSIDE SHLD (NO. 7) AND OUTSIDE SHLD (NO. 8)	R93.65	R93.68	226				867	0.13
PVMT TRANS - MAINLINE / INSIDE SHLD (NO. 3 & NO. 5) AND OUTSIDE SHLD (NO. 4 & NO. 6)	R93.68	R93.72	338		6	28	867	0.20
RAISED PVMT - MAINLINE / INSIDE SHLD (NO. 1) AND OUTSIDE SHLD (NO. 2)	R93.72	R94.66	8398	2923	158	699	21358	6.66
PVMT TRANS - MAINLINE / INSIDE SHLD (NO. 3 & NO. 5) AND OUTSIDE SHLD (NO. 4 & NO. 6)	R94.66	R94.69	338		6	28	867	0.20
MATCH EXIST PVMT - MAINLINE / INSIDE SHLD (NO. 7) AND OUTSIDE SHLD (NO. 8)	R94.69	R94.73	226				867	0.13
TECKA DITCH BR 56-118L	R94.73	R94.76						
MATCH EXIST PVMT - MAINLINE / INSIDE SHLD (NO. 7) AND OUTSIDE SHLD (NO. 8)	R94.76	R94.79	226				867	0.13
PVMT TRANS - MAINLINE / INSIDE SHLD (NO. 3 & NO. 5) AND OUTSIDE SHLD (NO. 4 & NO. 6)	R94.79	R94.83	338		6	28	867	0.20
RAISED PVMT - MAINLINE / INSIDE SHLD (NO. 1) AND OUTSIDE SHLD (NO. 2)	R94.83	R94.97	1273	443	25	106	3237	1.01
PVMT TRANS - MAINLINE / INSIDE SHLD (NO. 3 & NO. 5) AND OUTSIDE SHLD (NO. 4 & NO. 6)	R94.97	R95.01	338		6	28	867	0.20
MATCH EXIST PVMT - MAINLINE / INSIDE SHLD (NO. 7) AND OUTSIDE SHLD (NO. 8)	R95.01	R95.05	226				867	0.13
EAGLE MOUNTAIN OH 56-263	R95.05	R95.08						
MATCH EXIST PVMT - MAINLINE / INSIDE SHLD (NO. 7) AND OUTSIDE SHLD (NO. 8)	R95.08	R95.11	226				867	0.13
PVMT TRANS - MAINLINE / INSIDE SHLD (NO. 3 & NO. 5) AND OUTSIDE SHLD (NO. 4 & NO. 6)	R95.11	R95.15	338		6	28	867	0.20
RAISED PVMT - MAINLINE / INSIDE SHLD (NO. 1) AND OUTSIDE SHLD (NO. 2)	R95.15	R96.43	11493	4000	216	956	29229	9.12
PVMT TRANS - MAINLINE / INSIDE SHLD (NO. 3 & NO. 5) AND OUTSIDE SHLD (NO. 4 & NO. 6)	R96.43	R96.47	338		6	28	867	0.20
MATCH EXIST PVMT - MAINLINE / INSIDE SHLD (NO. 7) AND OUTSIDE SHLD (NO. 8)	R96.47	R96.50	226				867	0.13
IROLO DITCH BR 56-113L	R96.50	R96.53						
MATCH EXIST PVMT - MAINLINE / INSIDE SHLD (NO. 7) AND OUTSIDE SHLD (NO. 8)	R96.53	R96.56	226				867	0.13
PVMT TRANS - MAINLINE / INSIDE SHLD (NO. 3 & NO. 5) AND OUTSIDE SHLD (NO. 4 & NO. 6)	R96.56	R96.60	338		6	28	867	0.20
RAISED PVMT - MAINLINE / INSIDE SHLD (NO. 1) AND OUTSIDE SHLD (NO. 2)	R96.60	R96.77	1534	534	29	128	3901	1.22
PVMT TRANS - MAINLINE / INSIDE SHLD (NO. 3 & NO. 5) AND OUTSIDE SHLD (NO. 4 & NO. 6)	R96.77	R96.81	338		6	28	867	0.20
MATCH EXIST PVMT - MAINLINE / INSIDE SHLD (NO. 7) AND OUTSIDE SHLD (NO. 8)	R96.81	R96.85	226				867	0.13
SUBTOTAL (THIS SHEET)			57381	16829	1007	4471	150762	43.66

1 (N) - NOT A SEPARATE PAY ITEM

1 REPLACED PER ADDENDUM No. 1 DATED JANUARY 07, 2016

SUMMARY OF QUANTITIES

Q-8

STATE OF CALIFORNIA - DEPARTMENT OF TRANSPORTATION
Caltrans DESIGN

FUNCTIONAL SUPERVISOR: DIBORO KANABOLO
CALCULATED-DESIGNED BY: WILLIAM PETOSKEY
CHECKED BY: TUAN A. TRUONG
REVISED BY
DATE REVISED

LAST REVISION 06-01-15 | DATE PLOTTED => 06-JAN-2016 | TIME PLOTTED => 14:50

Dist	COUNTY	ROUTE	POST MILES TOTAL PROJECT	SHEET No.	TOTAL SHEETS
08	Riv	10	R74.0/R105.4	47	100

REGISTERED CIVIL ENGINEER DATE 5/18/15

6/01/15
PLANS APPROVAL DATE

REGISTERED PROFESSIONAL ENGINEER TUAN TRUONG No. 60137 Exp. 2/15/17 CIVIL STATE OF CALIFORNIA

THE STATE OF CALIFORNIA OR ITS OFFICERS OR AGENTS SHALL NOT BE RESPONSIBLE FOR THE ACCURACY OR COMPLETENESS OF SCANNED COPIES OF THIS PLAN SHEET.

ROADWAY QUANTITES - WESTBOUND

LOCATION	POST MILE		HOT MIX ASPHALT (TYPE A)	RUBBERIZED HOT MIX ASPHALT (GAP GRADED)	SAFETY EDGE (N)	SHOULDER BACKING	COLD PLANE ASPHALT CONCRETE PAVEMENT	TACK COAT
	FROM	TO	TON	TON	TON	TON	SQYD	TON
AJAX DITCH BR 56-112L	R96.85	R96.86						
MATCH EXIST PVMT - MAINLINE / INSIDE SHLD (NO. 7) AND OUTSIDE SHLD (NO. 8)	R96.86	R96.90	226				867	0.13
PVMT TRANS - MAINLINE / INSIDE SHLD (NO. 3 & NO. 5) AND OUTSIDE SHLD (NO. 4 & NO. 6)	R96.90	R96.94	338		6	28	867	0.20
RAISED PVMT - MAINLINE / INSIDE SHLD (NO. 1) AND OUTSIDE SHLD (NO. 2)	R96.94	R97.26	2901	1010	55	241	7378	2.30
PVMT TRANS - MAINLINE / INSIDE SHLD (NO. 3 & NO. 5) AND OUTSIDE SHLD (NO. 4 & NO. 6)	R97.26	R97.30	338		6	28	867	0.20
MATCH EXIST PVMT - MAINLINE / INSIDE SHLD (NO. 7) AND OUTSIDE SHLD (NO. 8)	R97.30	R97.34	226				867	0.13
SHANTY DITCH BR 56-111L	R97.34	R97.35						
MATCH EXIST PVMT - MAINLINE / INSIDE SHLD (NO. 7) AND OUTSIDE SHLD (NO. 8)	R97.35	R97.39	226				867	0.13
PVMT TRANS - MAINLINE / INSIDE SHLD (NO. 3 & NO. 5) AND OUTSIDE SHLD (NO. 4 & NO. 6)	R97.39	R97.43	338		6	28	867	0.20
RAISED PVMT - MAINLINE / INSIDE SHLD (NO. 1) AND OUTSIDE SHLD (NO. 2)	R97.43	R97.74	2784	969	53	232	7081	2.21
PVMT TRANS - MAINLINE / INSIDE SHLD (NO. 3 & NO. 5) AND OUTSIDE SHLD (NO. 4 & NO. 6)	R97.74	R97.78	338		6	28	867	0.20
MATCH EXIST PVMT - MAINLINE / INSIDE SHLD (NO. 7) AND OUTSIDE SHLD (NO. 8)	R97.78	R97.81	226				867	0.13
UNION DITCH BR 56-109L	R97.81	R97.83						
MATCH EXIST PVMT - MAINLINE / INSIDE SHLD (NO. 7) AND OUTSIDE SHLD (NO. 8)	R97.83	R97.87	226				867	0.13
PVMT TRANS - MAINLINE / INSIDE SHLD (NO. 3 & NO. 5) AND OUTSIDE SHLD (NO. 4 & NO. 6)	R97.87	R97.91	338		6	28	867	0.20
RAISED PVMT - MAINLINE / INSIDE SHLD (NO. 1) AND OUTSIDE SHLD (NO. 2)	R97.91	R98.71	7238	2519	136	602	18407	5.74
PVMT TRANS - MAINLINE / INSIDE SHLD (NO. 3 & NO. 5) AND OUTSIDE SHLD (NO. 4 & NO. 6)	R98.71	R98.75	338		6	28	867	0.20
MATCH EXIST PVMT - MAINLINE / INSIDE SHLD (NO. 7) AND OUTSIDE SHLD (NO. 8)	R98.75	R98.79	226				867	0.13
BULA DITCH BR 56-105L	R98.79	R98.80						
MATCH EXIST PVMT - MAINLINE / INSIDE SHLD (NO. 7) AND OUTSIDE SHLD (NO. 8)	R98.80	R98.84	226				867	0.13
PVMT TRANS - MAINLINE / INSIDE SHLD (NO. 3 & NO. 5) AND OUTSIDE SHLD (NO. 4 & NO. 6)	R98.84	R98.88	338		6	28	867	0.20
RAISED PVMT - MAINLINE / INSIDE SHLD (NO. 1) AND OUTSIDE SHLD (NO. 2)	R98.88	R98.99	1030	358	20	86	2619	0.82
PVMT TRANS - MAINLINE / INSIDE SHLD (NO. 3 & NO. 5) AND OUTSIDE SHLD (NO. 4 & NO. 6)	R98.99	R99.03	338		6	28	867	0.20
MATCH EXIST PVMT - MAINLINE / INSIDE SHLD (NO. 7) AND OUTSIDE SHLD (NO. 8)	R99.03	R99.07	226				867	0.13
TARO DITCH BR 56-104L	R99.07	R99.09						
MATCH EXIST PVMT - MAINLINE / INSIDE SHLD (NO. 7) AND OUTSIDE SHLD (NO. 8)	R99.09	R99.13	226				867	0.13
PVMT TRANS - MAINLINE / INSIDE SHLD (NO. 3 & NO. 5) AND OUTSIDE SHLD (NO. 4 & NO. 6)	R99.13	R99.16	338		6	28	867	0.20
RAISED PVMT - MAINLINE / INSIDE SHLD (NO. 1) AND OUTSIDE SHLD (NO. 2)	R99.16	100.31	10297	3583	194	857	26186	8.17
PVMT TRANS - MAINLINE / INSIDE SHLD (NO. 3 & NO. 5) AND OUTSIDE SHLD (NO. 4 & NO. 6)	R100.31	R100.35	338		6	28	867	0.20
MATCH EXIST PVMT - MAINLINE / INSIDE SHLD (NO. 7) AND OUTSIDE SHLD (NO. 8)	R100.35	R100.38	226				867	0.13
ADAIR DITCH BR 56-099L	R100.38	R100.39						
MATCH EXIST PVMT - MAINLINE / INSIDE SHLD (NO. 7) AND OUTSIDE SHLD (NO. 8)	R100.39	R100.43	226				867	0.13
PVMT TRANS - MAINLINE / INSIDE SHLD (NO. 3 & NO. 5) AND OUTSIDE SHLD (NO. 4 & NO. 6)	R100.43	R100.47	338		6	28	867	0.20
RAISED PVMT - MAINLINE / INSIDE SHLD (NO. 1) AND OUTSIDE SHLD (NO. 2)	R100.47	R100.61	1291	449	25	107	3283	1.02
PVMT TRANS - MAINLINE / INSIDE SHLD (NO. 3 & NO. 5) AND OUTSIDE SHLD (NO. 4 & NO. 6)	R100.61	R100.65	338		6	28	867	0.20
MATCH EXIST PVMT - MAINLINE / INSIDE SHLD (NO. 7) AND OUTSIDE SHLD (NO. 8)	R100.65	R100.69	226				867	0.13
HILLOCK DITCH BR 56-098L	R100.69	R100.70						
MATCH EXIST PVMT - MAINLINE / INSIDE SHLD (NO. 7) AND OUTSIDE SHLD (NO. 8)	R100.70	R100.74	226				867	0.13
PVMT TRANS - MAINLINE / INSIDE SHLD (NO. 3 & NO. 5) AND OUTSIDE SHLD (NO. 4 & NO. 6)	R100.74	R100.78	338		6	28	867	0.20
RAISED PVMT - MAINLINE / INSIDE SHLD (NO. 1) AND OUTSIDE SHLD (NO. 2)	R100.78	R101.07	2604	906	50	217	6623	2.07
PVMT TRANS - MAINLINE / INSIDE SHLD (NO. 3 & NO. 5) AND OUTSIDE SHLD (NO. 4 & NO. 6)	R101.07	R101.11	338		6	28	867	0.20
MATCH EXIST PVMT - MAINLINE / INSIDE SHLD (NO. 7) AND OUTSIDE SHLD (NO. 8)	R101.11	R101.14	226				867	0.13
WIDE DITCH BR 56-097L	R101.14	R101.16						
MATCH EXIST PVMT - MAINLINE / INSIDE SHLD (NO. 7) AND OUTSIDE SHLD (NO. 8)	R101.16	R101.20	226				867	0.13
PVMT TRANS - MAINLINE / INSIDE SHLD (NO. 3 & NO. 5) AND OUTSIDE SHLD (NO. 4 & NO. 6)	R101.20	R101.24	338		6	28	867	0.20
RAISED PVMT - MAINLINE / INSIDE SHLD (NO. 1) AND OUTSIDE SHLD (NO. 2)	R101.24	R101.95	6401	2228	120	533	16279	5.08
PVMT TRANS - MAINLINE / INSIDE SHLD (NO. 3 & NO. 5) AND OUTSIDE SHLD (NO. 4 & NO. 6)	R101.95	R101.99	338		6	28	867	0.20
MATCH EXIST PVMT - MAINLINE / INSIDE SHLD (NO. 7) AND OUTSIDE SHLD (NO. 8)	R101.99	R102.02	226				867	0.13
SUBTOTAL (THIS SHEET)			43570	12022	749	3323	115600	32.69

1 (N) - NOT A SEPARATE PAY ITEM

1 **REPLACED PER ADDENDUM No. 1 DATED JANUARY 07, 2016**

SUMMARY OF QUANTITIES

Q-9

STATE OF CALIFORNIA - DEPARTMENT OF TRANSPORTATION
Caltrans® DESIGN

FUNCTIONAL SUPERVISOR: DIBORO KANABOLO
CALCULATED-DESIGNED BY: WILLIAM PETOSKEY
CHECKED BY: TUAN A. TRUONG
REVISED BY
DATE REVISED

LAST REVISION 06-01-15 | DATE PLOTTED => 06-JAN-2016 | TIME PLOTTED => 14:50

Dist	COUNTY	ROUTE	POST MILES TOTAL PROJECT	SHEET No.	TOTAL SHEETS
08	Riv	10	R74.0/R105.4	48	100

REGISTERED CIVIL ENGINEER 5/18/15 DATE

6/01/15
PLANS APPROVAL DATE

REGISTERED PROFESSIONAL ENGINEER TUAN TRUONG No. 60137 Exp. 2/15/17 CIVIL STATE OF CALIFORNIA

THE STATE OF CALIFORNIA OR ITS OFFICERS OR AGENTS SHALL NOT BE RESPONSIBLE FOR THE ACCURACY OR COMPLETENESS OF SCANNED COPIES OF THIS PLAN SHEET.

ROADWAY QUANTITES - WESTBOUND

LOCATION	POST MILE		HOT MIX ASPHALT (TYPE A)	RUBBERIZED HOT MIX ASPHALT (GAP GRADED)	SAFETY EDGE (N)	SHOULDER BACKING	COLD PLANE ASPHALT CONCRETE PAVEMENT	TACK COAT
	FROM	TO	TON	TON	TON	TON	SQYD	TON
EAGLE MOUNTAIN RD UC 56-575L	R102.02	R102.04						
MATCH EXIST PVMT - MAINLINE / INSIDE SHLD (NO. 7) AND OUTSIDE SHLD (NO. 8)	R102.04	R102.08	226				867	0.13
PVMT TRANS - MAINLINE / INSIDE SHLD (NO. 3 & NO. 5) AND OUTSIDE SHLD (NO. 4 & NO. 6)	R102.08	R102.12	338		6	28	867	0.20
RAISED PVMT - MAINLINE / INSIDE SHLD (NO. 1) AND OUTSIDE SHLD (NO. 2)	R102.12	R102.56	3954	1376	74	329	10055	3.14
PVMT TRANS - MAINLINE / INSIDE SHLD (NO. 3 & NO. 5) AND OUTSIDE SHLD (NO. 4 & NO. 6)	R102.56	R102.60	338		6	28	867	0.20
MATCH EXIST PVMT - MAINLINE / INSIDE SHLD (NO. 7) AND OUTSIDE SHLD (NO. 8)	R102.60	R102.63	226				867	0.13
TEX WASH BR 56-576L	R102.63	R102.65						
MATCH EXIST PVMT - MAINLINE / INSIDE SHLD (NO. 7) AND OUTSIDE SHLD (NO. 8)	R102.65	R102.69	226				867	0.13
PVMT TRANS - MAINLINE / INSIDE SHLD (NO. 3 & NO. 5) AND OUTSIDE SHLD (NO. 4 & NO. 6)	R102.69	R102.73	338		6	28	867	0.20
RAISED PVMT - MAINLINE / INSIDE SHLD (NO. 1) AND OUTSIDE SHLD (NO. 2)	R102.73	R105.01	20562	7156	385	1711	52292	16.31
PVMT TRANS - MAINLINE / INSIDE SHLD (NO. 3 & NO. 5) AND OUTSIDE SHLD (NO. 4 & NO. 6)	R105.01	R105.05	338		6	28	867	0.20
MATCH EXIST PVMT - MAINLINE / INSIDE SHLD (NO. 7) AND OUTSIDE SHLD (NO. 8)	R105.05	R105.09	226				867	0.13
DESERT CENTER UC 56-577L	R105.09	R105.11						
MATCH EXIST PVMT - MAINLINE / INSIDE SHLD (NO. 7) AND OUTSIDE SHLD (NO. 8)	R105.11	R105.40	1752				6727	0.98
SUBTOTAL (THIS SHEET)			28524	8532	483	2152	76010	21.75

1 (N) - NOT A SEPARATE PAY ITEM

1 REPLACED PER ADDENDUM No. 1 DATED JANUARY 07, 2016

SUMMARY OF QUANTITIES
Q-10

STATE OF CALIFORNIA - DEPARTMENT OF TRANSPORTATION
Caltrans DESIGN

FUNCTIONAL SUPERVISOR: DIBORO KANABOLO
CALCULATED-DESIGNED BY: WILLIAM PETOSKEY
CHECKED BY: TUAN A. TRUONG
REVISED BY
DATE REVISED

LAST REVISION 06-01-15 | DATE PLOTTED => 06-JAN-2016 | TIME PLOTTED => 14:50

Dist	COUNTY	ROUTE	POST MILES TOTAL PROJECT	SHEET No.	TOTAL SHEETS
08	Riv	10	R74.0/R105.4	49	100

REGISTERED CIVIL ENGINEER 5/18/15 DATE

6/01/15
PLANS APPROVAL DATE

REGISTERED PROFESSIONAL ENGINEER TUAN TRUONG No. 60137 Exp 2/15/17 CIVIL STATE OF CALIFORNIA

THE STATE OF CALIFORNIA OR ITS OFFICERS OR AGENTS SHALL NOT BE RESPONSIBLE FOR THE ACCURACY OR COMPLETENESS OF SCANNED COPIES OF THIS PLAN SHEET.

ROADWAY QUANTITIES - ENTRANCE AND EXIT RAMPS

LOCATION	POST MILE		HOT MIX ASPHALT (TYPE A)	RUBBERIZED HOT MIX ASPHALT (GAP GRADED)	SAFETY EDGE (N)	SHOULDER BACKING	COLD PLANE ASPHALT CONCRETE PAVEMENT	TACK COAT
	FROM	TO	TON	TON	TON	TON	SQYD	TON
FRONTAGE Rd EASTBOUND OFF RAMP	R75.08	R75.16	775	317	12	95	2710	0.57
FRONTAGE Rd EASTBOUND ON RAMP	R75.16	R75.22	413	168	5	65	1514	0.30
FRONTAGE Rd WESTBOUND ON RAMP	R75.08	R75.12	619	248		93	2272	0.46
FRONTAGE Rd WESTBOUND OFF RAMP	R75.12	R75.22	822	333	7	108	2923	0.60
COTTONWODD SPRINGS Rd EASTBOUND OFF RAMP	R81.40	R81.55	1006	410	12	145	3629	0.74
COTTONWOOD SPRINGS Rd EASTBOUND ON RAMP	R81.56	R81.68	1056	423		166	3912	0.78
COTTONWOOD SPRINGS Rd WESTBOUND ON RAMP	R81.39	R81.55	1043	417		159	3838	0.77
COTTONWOOD SPRINGS Rd WESTBOUND OFF RAMP	R81.56	R81.70	1029	412		153	3767	0.76
CHIRIACO SUMMIT Rd EASTBOUND OFF RAMP	R85.91	R86.07	1075	446	28	163	3868	0.78
CHIRIACO SUMMIT Rd EASTBOUND ON RAMP	R86.08	R86.24	1296	529	18	189	4678	0.95
CHIRIACO SUMMIT Rd WESTBOUND ON RAMP	R85.90	R86.07	1169	477	16	184	4285	0.85
CHIRIACO SUMMIT Rd WESTBOUND OFF RAMP	R86.08	R86.24	1045	430	20	154	3762	0.76
HAYFIELD Rd EASTBOUND OFF RAMP	R90.00	R90.12	905	367	9	122	3229	0.66
HAYFIELD Rd EASTBOUND ON RAMP	R90.13	R90.23	913	373	12	152	3386	0.67
HAYFIELD Rd WESTBOUND ON RAMP	R90.00	R90.12	955	388	10	154	3526	0.70
HAYFIELD Rd WESTBOUND OFF RAMP	R90.13	R90.24	871	354	10	123	3132	0.64
RED CLOUD Rd EASTBOUND OFF RAMP	R95.37	R95.46	803	328	11	106	2845	0.59
RED CLOUD Rd EASTBOUND ON RAMP	R95.46	R95.49	632	257	7	96	2305	0.46
RED CLOUD Rd WESTBOUND ON RAMP	R95.37	R95.39	546	220	4	88	2019	0.40
RED CLOUD Rd WESTBOUND OFF RAMP	R95.39	R95.49	860	357	21	108	2991	0.62
EAGLE MOUNTAIN Rd EASTBOUND OFF RAMP	R101.90	R102.01	849	340		116	3063	0.63
EAGLE MOUNTAIN Rd EASTBOUND ON RAMP	R102.02	R102.12	972	389		147	3572	0.72
EAGLE MOUNTAIN Rd WESTBOUND ON RAMP	R101.93	R102.02	1011	405		150	3703	0.75
EAGLE MOUNTAIN Rd WESTBOUND OFF RAMP	R102.03	R102.16	869	361	21	116	3057	0.63
RICE RD/STATE ROUTE 177 EASTBOUND OFF RAMP	R104.96	R105.09	998	399		137	3600	0.74
RICE RD/STATE ROUTE 177 EASTBOUND ON RAMP	R105.10	R105.23	971	402	22	152	3527	0.70
RICE RD/STATE ROUTE 177 WESTBOUND ON RAMP	R104.97	R105.09	878	351		138	3248	0.65
RICE RD/STATE ROUTE 177 WESTBOUND OFF RAMP	R105.10	R105.23	961	391	11	108		0.70
RAMP TOTAL			25342	10292	256	3687	88361	18.58

1 (N) - NOT A SEPARATE PAY ITEM

1 REPLACED PER ADDENDUM No. 1 DATED JANUARY 07, 2016

SUMMARY OF QUANTITIES

Q-11

STATE OF CALIFORNIA - DEPARTMENT OF TRANSPORTATION
Caltrans® DESIGN

FUNCTIONAL SUPERVISOR: DIBORO KANABOLO
CALCULATED-DESIGNED BY: WILLIAM PETOSKEY
CHECKED BY: TUAN A. TRUONG
REVISED BY
DATE REVISED

LAST REVISION 06-01-15 | DATE PLOTTED => 06-JAN-2016 | TIME PLOTTED => 14:50

Dist	COUNTY	ROUTE	POST MILES TOTAL PROJECT	SHEET No.	TOTAL SHEETS
08	Riv	10	R74.0/R105.4	50	100

REGISTERED CIVIL ENGINEER 5/18/15 DATE

6/01/15
PLANS APPROVAL DATE

REGISTERED PROFESSIONAL ENGINEER TUAN TRUONG No. 60137 Exp. 2/15/17 CIVIL STATE OF CALIFORNIA

THE STATE OF CALIFORNIA OR ITS OFFICERS OR AGENTS SHALL NOT BE RESPONSIBLE FOR THE ACCURACY OR COMPLETENESS OF SCANNED COPIES OF THIS PLAN SHEET.

ROADWAY QUANTITES - LOCAL ROADS

LOCATION	POST MILE		HOT MIX ASPHALT (TYPE A)	RUBBERIZED HOT MIX ASPHALT (GAP GRADED)	SAFETY EDGE (N)	SHOULDER BACKING	COLD PLANE ASPHALT CONCRETE PAVEMENT	TACK COAT
	FROM	TO	TON	TON	TON	TON	SQYD	TON
COTTONWODD SPRINGS Rd	R81.55	R81.56	286				2117	0.53
CHIRIACO SUMMIT Rd	R85.91	R86.07	238				1766	0.44
HAYFIELD Rd	R90.00	R90.12	279				2067	0.52
EAGLE MOUNTAIN Rd	R101.90	R102.01	502				3721	0.93
RICE Rd/STATE ROUTE 177	R104.96	R105.09	374				2767	0.69
LOCAL ROAD TOTAL (THIS SHEET)			1679				12438	3.11
RAMP TOTAL (Q-11)			25342	10292	256	3687	88361	18.58
SUBTOTAL (Q-1)			50218	14136	434	3829	134398	38.06
SUBTOTAL (Q-2)			88422	27638	1526	7056	229876	68.36
SUBTOTAL (Q-3)			57264	16787	1005	4461	150465	43.57
SUBTOTAL (Q-4)			43632	12046	750	3328	115762	32.74
SUBTOTAL (Q-5)			28596	8556	485	2157	76193	21.81
SUBTOTAL (Q-6)			50173	14121	435	3825	134284	38.02
SUBTOTAL (Q-7)			88423	27638	1496	7057	229875	68.35
SUBTOTAL (Q-8)			57381	16829	1007	4471	150762	43.66
SUBTOTAL (Q-9)			43570	12022	749	3323	115600	32.69
SUBTOTAL (Q-10)			28524	8532	483	2152	76010	21.75
FROM HMA DIKES (Q-17)			1711	1629				
FROM RUMBLE STRIP REMOVAL (Q-19)			10997				108594	
TOTAL			575932	170226	8626	45346	1622618	433.81

1 (N) - NOT A SEPARATE PAY ITEM

PRIME COAT

POSTMILE		EASTBOUND	WESTBOUND	SIDE		PRIME COAT
FROM	TO			INSIDE Shld	OUTSIDE Shld	TON
R85.75	R86.25	X			X	1.16
R89.75	R90.25	X			X	1.16
R91.75	R92.25	X			X	1.16
R94.25	R96.25	X		X		9.28
R96.75	R98.25	X			X	3.48
R98.75	R99.25	X		X		2.32
R85.50	R90.50		X		X	11.59
R85.75	R86.25		X	X		2.32
R86.75	R87.25		X	X		2.32
R90.75	R91.25		X	X		2.32
R91.75	R94.25		X		X	5.80
R94.75	R95.25		X	X		2.32
R95.75	R99.25		X		X	8.12
R96.25	R97.25		X	X		4.64
R98.25	R99.25		X	X		4.64
R100.25	R100.75		X	X		2.32
R101.75	R102.25		X		X	1.16
TOTAL						66.11

1 REPLACED PER ADDENDUM No. 1 DATED JANUARY 07, 2016

SUMMARY OF QUANTITIES

Q-12

STATE OF CALIFORNIA - DEPARTMENT OF TRANSPORTATION
Caltrans DESIGN

FUNCTIONAL SUPERVISOR: DIBORO KANABOLO
CALCULATED-DESIGNED BY: WILLIAM PETOSKEY
CHECKED BY: TUAN A. TRUONG
REVISED BY
DATE REVISED

LAST REVISION 06-01-15
DATE PLOTTED => 06-JAN-2016
TIME PLOTTED => 14:50

Dist	COUNTY	ROUTE	POST MILES TOTAL PROJECT	SHEET No.	TOTAL SHEETS
08	Riv	10	R74.0/R105.4	51	100

Tuan Truong 5/18/15
REGISTERED CIVIL ENGINEER DATE

6/01/15
PLANS APPROVAL DATE

REGISTERED PROFESSIONAL ENGINEER TUAN TRUONG No. 60137 Exp. 2/15/17 CIVIL STATE OF CALIFORNIA

THE STATE OF CALIFORNIA OR ITS OFFICERS OR AGENTS SHALL NOT BE RESPONSIBLE FOR THE ACCURACY OR COMPLETENESS OF SCANNED COPIES OF THIS PLAN SHEET.

MIDWEST GUARDRAIL SYSTEM

	LOCATION No.	POSTMILE	EAST BOUND	WEST BOUND	POSITION (M-MEDIAN, O-OUTSIDE)	LAYOUT TYPE	MIDWEST GUARDRAIL SYSTEM (WOOD POST)	MIDWEST GUARDRAIL SYSTEM (8' POST)	ALTERNATIVE FLARED TERMINAL SYSTEM	ALTERNATIVE INLINE TERMINAL SYSTEM	END ANCHOR ASSEMBLY (TYPE SFT)	PLACE HMA DIKE (TYPE F)	PLACE HMA DIKE (TYPE C)	VEGETATION CONTROL (MINOR CONCRETE)	SALVAGE SINGLE METAL BEAM GUARD RAILING	REMARKS
							LF	LF	EA	EA	EA	LF	LF	SQYD	LF	
	1	R74.67		X	O	16B		50.0	1		1	50.0	62.5	66.3		
	2	R74.75	X		O	-		125.0		1		125.0	75.0	146.1	175.0	MGS TRANSITION TO MBGR RSP A77U5
	3	R74.77		X	O	-		87.5			1	87.5		160.1	125.0	MGS TRANSITION TO MBGR RSP A77U5
	4	R75.05		X	M	16B		75.0	1		1			78.6	112.5	
		R75.05		X	O	16B		87.5	1		1	87.5	62.5	84.7	125.0	
	5	R75.1	X		M	16A		87.5		1	1			73.1	137.5	
	6	R76.1	X		O	16A		200.0		1	1	200.0	75.0	128.3	250.0	
		R76.1	X		M	16B		50.0	1		1			66.3	87.5	
		R76.1		X	M	16B		75.0	1		1			78.6	112.5	
		R76.1		X	O	16B		75.0	1		1			78.6	112.5	
	7	R76.5	X		O	16B		62.5	1		1	62.5	62.5	72.5	100.0	
		R76.5	X		M	16B		87.5	1		1			84.7	125.0	
	8	R76.55		X	M	16B		87.5	1		1			84.7	125.0	
		R76.55		X	O	16B		87.5	1		1			84.7	125.0	
	9	R76.6	X		O	16A		212.5		1	1	212.5	75.0	134.4	262.5	
		R76.6	X		M	16B		75.0	1		1			78.6	112.5	
	10	R76.8	X		O	16A		187.5		1	1			122.2	237.5	
	11	R76.90		X	O	16B		75.0	1		1	187.5	75.0	78.6	112.5	
	12	R76.96		X	O	16B		75.0	1		1			78.6	112.5	
	13	R77.3	X		O	16A		62.5		1	1			60.8	112.5	
		R77.3	X		M	16B		62.5	1		1	62.5	75.0	72.5	100.0	
		R77.3		X	M	16B		62.5	1		1			72.5	100.0	
		R77.3		X	O	16B		87.5	1		1			84.7	125.0	
	14	R77.65	X		O	16A		50.0		1	1			54.7	100.0	
		R77.65	X		M	16B		75.0	1		1	50.0	75.0	78.6	112.5	
	15	R77.66		X	M	16B		75.0	1		1			78.6	112.5	
		R77.66		X	O	16B		75.0	1		1			78.6	112.5	
	16	R77.86		X	O	16B		50.0	1		1			66.3	87.5	
	17	R78.1		X	O	16B		62.5	1		1			72.5	100.0	
	18	R78.2		X	O	16B		62.5	1		1			72.5	100.0	
	19	R78.29	X		O	16A		37.5		1	1	37.5	75.0	48.6	87.5	
	20	R78.3		X	O	16B		62.5	1		1			72.5	100.0	
	21	R78.93	X		O	16A		87.5		1	1	87.5	75.0	73.1	137.5	
		R78.93	X		M	16B		87.5	1		1			84.7	125.0	
		R78.93		X	M	16B		87.5	1		1			84.7	125.0	
1		R78.93		X	O	16A		87.5	1	1	1			108.1	137.5	
	22	R82.7	X		O	11A	15850.0			1	1			7808.4		
	23	R86.7	X		O	16B	62.5		1		1			72.5	100.0	
		R86.7	X		M	16B	50.0		1		1			66.3	50.0	
	24	R86.77		X	O	16B	50.0		1		1			66.3	87.5	
		R86.77		X	M	16B	50.0		1		1			66.3	87.5	
	25	R87.2	X		O	16A	62.5			1	1			60.8	112.5	
		R87.2	X		M	16A	62.5			1	1			60.8	112.5	
		R87.2		X	M	16B	50.0		1		1			66.3	87.5	
		R87.2		X	O	16B	50.0		1		1			66.3	87.5	
	26	R87.5	X		O	16B	62.5		1		1			72.5	100.0	
		R87.5	X		M	16B	50.0		1		1			66.3	87.5	
		R87.5		X	M	16B	50.0		1		1			66.3	87.5	
		R87.5		X	O	16B	50.0		1		1			66.3	87.5	
	27	R89.1	X		O	16A	75.0			1	1			67.0	125.0	
		R89.1	X		M	16B	50.0		1		1			66.3	87.5	
		R89.1		X	M	16A	50.0			1	1			54.7	100.0	
		R89.1		X	O	16A	50.0			1	1			54.7	100.0	
	SUBTOTAL						16725.0	3037.5	37	16	52	1250.0	787.5	11891.8	5925.0	

1 REPLACED PER ADDENDUM No. 1 DATED JANUARY 07, 2016

SUMMARY OF QUANTITIES

Q-13

STATE OF CALIFORNIA - DEPARTMENT OF TRANSPORTATION
Caltrans DESIGN

FUNCTIONAL SUPERVISOR: DIBORO KANABOLO
CALCULATED-DESIGNED BY: WILLIAM PETOSKEY
CHECKED BY: TUAN A. TRUONG
REVISED BY
DATE REVISED

LAST REVISION 06-01-15
DATE PLOTTED => 06-JAN-2016
TIME PLOTTED => 14:50

Dist	COUNTY	ROUTE	POST MILES TOTAL PROJECT	SHEET No.	TOTAL SHEETS
08	Riv	10	R74.0/R105.4	52	100

Tuan Truong 5/18/15
REGISTERED CIVIL ENGINEER DATE

6/01/15
PLANS APPROVAL DATE

REGISTERED PROFESSIONAL ENGINEER
TUAN TRUONG
No. 60137
Exp. 2/15/17
CIVIL
STATE OF CALIFORNIA

THE STATE OF CALIFORNIA OR ITS OFFICERS OR AGENTS SHALL NOT BE RESPONSIBLE FOR THE ACCURACY OR COMPLETENESS OF SCANNED COPIES OF THIS PLAN SHEET.

MIDWEST GUARDRAIL SYSTEM

LOCATION No.	POSTMILE	EAST BOUND	WEST BOUND	POSITION (M-MEDIAN, O-OUTSIDE)	LAYOUT TYPE	MIDWEST GUARDRAIL SYSTEM (WOOD POST)	MIDWEST GUARDRAIL SYSTEM (8" POST)	ALTERNATIVE FLARED TERMINAL SYSTEM	ALTERNATIVE INLINE TERMINAL SYSTEM	END ANCHOR ASSEMBLY (TYPE SFT)	PLACE HMA DIKE (TYPE F)	PLACE HMA DIKE (TYPE C)	VEGETATION CONTROL (MINOR CONCRETE)	SALVAGE SINGLE METAL BEAM GUARD RAILING	REMARKS
						LF	LF	EA	EA	EA	LF	LF	SQYD	LF	
28	R89.9	X		O	16B	87.5		1		1			84.7	125.0	
	R89.9	X		M	16A	50.0			1	1			54.7	100.0	
	R89.9		X	M	16A	50.0			1	1			54.7	100.0	
	R89.9		X	O	16A	50.0			1	1	50.0	75.0	54.7	100.0	
29	R90.2	X		M	16A	50.0			1	1			54.7	100.0	
	R90.2		X	M	16A	50.0			1	1			54.7	100.0	
30	R94.71	X		M	-		50.0		1				158.3	62.5	MGS TRANSITION TO MBGR RSP A77U5
	R94.71	X		O	-		50.0		1				158.3	50.0	MGS TRANSITION TO MBGR RSP A77U5
31	R94.79		X	O	-		1175.0				1175.0		687.0	1175.0	MGS TRANSITION TO MBGR RSP A77U5
	R94.79		X	M	-		1175.0						687.0	1175.0	MGS TRANSITION TO MBGR RSP A77U5
32	R94.81	X		O	-		1025.0				1025.0		613.4	1025.0	MGS TRANSITION TO MBGR RSP A77U5
	R94.81	X		M	-		1025.0						613.4	1025.0	MGS TRANSITION TO MBGR RSP A77U5
33	R95.11	X		O	-		912.5			1	912.5		565.0	912.5	MGS TRANSITION TO MBGR RSP A77U5
	R95.11	X		M	-		1212.5			1			712.2	1212.5	MGS TRANSITION TO MBGR RSP A77U5
	R95.11		X	M	-		1237.5	1					741.1	1275.0	MGS TRANSITION TO MBGR RSP A77U5
	R95.11		X	O	-		1037.5		1		1037.5		643.0	1087.5	MGS TRANSITION TO MBGR RSP A77U5
34	R95.9	X		O	16B	62.5		1		1			72.5	100.0	
	R95.9	X		M	16A	50.0			1	1			54.7	100.0	
	R95.9		X	M	16A	50.0			1	1			54.7	100.0	
	R95.9		X	O	16A	75.0			1	1			67.0	125.0	
35	R96.25	X		O	16B	75.0		1		1			78.6	112.5	
	R96.25	X		M	16A	50.0			1	1			54.7	100.0	
36	R96.26		X	M	16A	50.0			1	1			54.7	100.0	
37	R96.27		X	O	16A	62.5			1	1			60.8	112.5	
38	R96.46	X		O	-	50.0			1				158.3	100.0	MGS TRANSITION TO MBGR RSP A77U5
	R96.46	X		M	-	50.0			1				158.3	100.0	MGS TRANSITION TO MBGR RSP A77U5
39	R96.56		X	M	-	50.0			1				158.3	100.0	MGS TRANSITION TO MBGR RSP A77U5
	R96.56		X	O	-	50.0			1				158.3	100.0	MGS TRANSITION TO MBGR RSP A77U5
40	R96.80	X		O	-	50.0			1				158.3	100.0	MGS TRANSITION TO MBGR RSP A77U5
	R96.80	X		M	-	50.0			1				158.3	100.0	MGS TRANSITION TO MBGR RSP A77U5
41	R96.90		X	M	-	50.0			1				158.3	100.0	MGS TRANSITION TO MBGR RSP A77U5
	R96.90		X	O	-	50.0			1				158.3	100.0	MGS TRANSITION TO MBGR RSP A77U5
42	R97.29	X		O	-	50.0			1				158.3	100.0	MGS TRANSITION TO MBGR RSP A77U5
	R97.29	X		M	-	50.0			1				158.3	100.0	MGS TRANSITION TO MBGR RSP A77U5
43	R97.39		X	M	-	50.0			1				158.3	100.0	MGS TRANSITION TO MBGR RSP A77U5
	R97.39		X	O	-	50.0			1				158.3	100.0	MGS TRANSITION TO MBGR RSP A77U5
44	R97.63	X		O	16B	75.0		1		1			189.0	112.5	MGS TRANSITION TO MBGR RSP A77U5
	R97.63	X		M	16A	50.0			1	1			165.1	100.0	MGS TRANSITION TO MBGR RSP A77U5
45	R97.64		X	M	16A	50.0			1	1			165.1	100.0	MGS TRANSITION TO MBGR RSP A77U5
	R97.64		X	O	16A	75.0			1	1			177.4	125.0	MGS TRANSITION TO MBGR RSP A77U5
46	R97.78	X		O	-	50.0			1				47.9	100.0	
	R97.78	X		M	-	50.0			1				158.3	100.0	MGS TRANSITION TO MBGR RSP A77U5
47	R97.87		X	M	-	50.0			1				158.3	100.0	MGS TRANSITION TO MBGR RSP A77U5
	R97.87		X	O	-	50.0			1				158.3	100.0	MGS TRANSITION TO MBGR RSP A77U5
48	R97.96	X		O	16B	75.0		1		1			78.6	112.5	
	R97.96	X		M	16A	50.0			1	1			54.7	100.0	
49	R97.98		X	M	16A	50.0			1	1			54.7	100.0	
	R97.98		X	O	16B	50.0		1		1			66.3	87.5	
50	R98.26	X		O	16A	75.0			1	1			67.0	125.0	
	R98.26	X		M	16A	50.0			1	1			54.7	100.0	
51	R98.28		X	M	16A	50.0			1	1			54.7	100.0	
	R98.28		X	O	16B	50.0		1		1			66.3	87.5	
52	R98.74	X		O	-	50.0			1				158.3	100.0	MGS TRANSITION TO MBGR RSP A77U5
	R98.74	X		M	-	50.0			1				158.3	100.0	MGS TRANSITION TO MBGR RSP A77U5
SUBTOTAL						2412.5	8900.0	8	40	28	4200.0	75.0	10367.2	13525.0	

1

1 REPLACED PER ADDENDUM No. 1 DATED JANUARY 07, 2016

SUMMARY OF QUANTITIES

Q-14

STATE OF CALIFORNIA - DEPARTMENT OF TRANSPORTATION
Caltrans DESIGN

FUNCTIONAL SUPERVISOR: DIBORO KANABOLO
CALCULATED-DESIGNED BY: WILLIAM PETOSKEY
CHECKED BY: TUAN A. TRUONG
REVISED BY
DATE REVISED

LAST REVISION 06-01-15
DATE PLOTTED => 06-JAN-2016
TIME PLOTTED => 14:50

Dist	COUNTY	ROUTE	POST MILES TOTAL PROJECT	SHEET No.	TOTAL SHEETS
08	Riv	10	R74.0/R105.4	53	100

REGISTERED CIVIL ENGINEER 5/18/15 DATE

6/01/15
PLANS APPROVAL DATE

REGISTERED PROFESSIONAL ENGINEER TUAN TRUONG No. 60137 Exp 2/15/17 CIVIL STATE OF CALIFORNIA

THE STATE OF CALIFORNIA OR ITS OFFICERS OR AGENTS SHALL NOT BE RESPONSIBLE FOR THE ACCURACY OR COMPLETENESS OF SCANNED COPIES OF THIS PLAN SHEET.

MIDWEST GUARDRAIL SYSTEM

LOCATION No.	POSTMILE	EAST BOUND	WEST BOUND	POSITION (M-MEDIAN, O-OUTSIDE)	LAYOUT TYPE	MIDWEST GUARDRAIL SYSTEM (WOOD POST)	MIDWEST GUARDRAIL SYSTEM (8' POST)	ALTERNATIVE FLARED TERMINAL SYSTEM	ALTERNATIVE INLINE TERMINAL SYSTEM	END ANCHOR ASSEMBLY (TYPE SFT)	PLACE HMA DIKE (TYPE F)	PLACE HMA DIKE (TYPE C)	VEGETATION CONTROL (MINOR CONCRETE)	SALVAGE SINGLE METAL BEAM GUARD RAILING	REMARKS
						LF	LF	EA	EA	EA	LF	LF	SQYD	LF	
53	R98.84		X	M	-	50.0			1				158.3	100.0	MGS TRANSITION TO MBGR RSP A77U5
	R98.84		X	O	-	50.0			1				158.3	100.0	MGS TRANSITION TO MBGR RSP A77U5
54	R99.0	X		O	-	50.0			1				158.3	100.0	MGS TRANSITION TO MBGR RSP A77U5
	R99.0	X		M	-	50.0			1				158.3	100.0	MGS TRANSITION TO MBGR RSP A77U5
55	R99.1		X	M	-	50.0			1				158.3	100.0	MGS TRANSITION TO MBGR RSP A77U5
	R99.1		X	O	-	50.0			1				158.3	100.0	MGS TRANSITION TO MBGR RSP A77U5
56	R99.32	X		O	16A	75.0			1	1			67.0	125.0	
57	R99.35		X	O	16A	62.5			1	1			60.8	112.5	
58	R99.46	X		O	16A	100.0			1	1			189.7	137.5	MGS TRANSITION TO MBGR RSP A77U5
	R99.46		X	O	16A	50.0			1	1			165.1	100.0	MGS TRANSITION TO MBGR RSP A77U5
59	R99.63	X		O	16A	62.5			1	1			60.8	112.5	
	R99.63		X	O	16A	75.0			1	1			67.0	125.0	
60	R101.23	X		O	16B	75.0		1		1			78.6	112.5	
	R101.23	X		M	16B	62.5		1		1			72.5	100.0	
	R101.23		X	M	16A	50.0			1	1			54.7	100.0	
	R101.23		X	O	16B	62.5		1		1			72.5	112.5	
61	R101.76	X		O	16B	75.0		1		1			78.6	112.5	
	R101.76	X		M	16A	75.0			1	1			79.2	125.0	MGS TRANSITION TO MBGR RSP A77U5
	R101.76		X	M	16A	50.0			1	1			67.0	100.0	MGS TRANSITION TO MBGR RSP A77U5
	R101.76		X	O	16B	75.0		1		1			90.9	87.5	MGS TRANSITION TO MBGR RSP A77U5
62	R102.22	X		O	16B	62.5		1		1			72.5	100.0	
	R102.22	X		M	16B	75.0		1		1			78.6	112.5	
	R102.22		X	M	16B	62.5		1		1			72.5	87.5	
	R102.22		X	O	16A	62.5			1	1			60.8	112.5	
63	R102.48	X			-	550.0		1					415.4	587.5	MGS TRANSITION TO MBGR RSP A77U5
64	R103.32	X		O	16A	75.0			1	1			67.0	125.0	
	R103.32	X		M	16B	50.0		1		1			66.3	87.5	
	R103.32		X	M	16A	50.0			1	1			54.7	100.0	
	R103.32		X	O	16A	75.0			1	1			67.0	125.0	
65	R103.95	X		O	16A	87.5			1	1			73.1	125.0	
	R103.95	X		M	16A	50.0			1	1			165.1	100.0	MGS TRANSITION TO MBGR RSP A77U5
	R103.95		X	M	16A	50.0			1	1			54.7	100.0	
	R103.95		X	O	16A	75.0			1	1			67.0	112.5	
66	R104.4	X		O	16A	75.0			1	1			67.0	125.0	
	R104.4		X	O	16A	75.0			1	1			67.0	125.0	
67	R104.7	X		O	16A	87.5			1	1			73.1	137.5	
	R104.7	X		M	16A	50.0			1	1			54.7	100.0	
	R104.7		X	M	16A	87.5			1	1			73.1	137.5	
	R104.7		X	O	16A	87.5			1	1			73.1	137.5	
68	R105.05	X		O	-	50.0			1				158.3	100.0	MGS TRANSITION TO MBGR RSP A77U5
69	R105.14		X	M	-	50.0			1				158.3	100.0	MGS TRANSITION TO MBGR RSP A77U5
SUBTOTAL						3137.5		10	31	32			4193.5	5000.0	
SUBTOTAL (SHEET Q-13)						16725.0	3037.5	37	16	52	1250.0	787.5	10367.2	5925.0	
SUBTOTAL (SHEET Q-14)						2412.5	8900.0	8	40	28	4200.0	75.0	11891.8	13525.0	
TOTAL						22275.0	11937.5	55	87	112	5450.0	862.5	26452.5	24450.0	

1

1 **REPLACED PER ADDENDUM No. 1 DATED JANUARY 07, 2016**

SUMMARY OF QUANTITIES

Q-15

STATE OF CALIFORNIA - DEPARTMENT OF TRANSPORTATION
Caltrans® DESIGN

FUNCTIONAL SUPERVISOR: DIBORO KANABOLO
CALCULATED-DESIGNED BY: WILLIAM PETOSKEY
CHECKED BY: TUAN A. TRUONG
REVISED BY
DATE REVISED

LAST REVISION 06-01-15 | DATE PLOTTED => 06-JAN-2016 | TIME PLOTTED => 14:50

Dist	COUNTY	ROUTE	POST MILES TOTAL PROJECT	SHEET No.	TOTAL SHEETS
08	Riv	10	R74.0/R105.4	55	100

Tuan Truong 5/18/15
REGISTERED CIVIL ENGINEER DATE

6/01/15
PLANS APPROVAL DATE

REGISTERED PROFESSIONAL ENGINEER TUAN TRUONG No. 60137 Exp 2/15/17 CIVIL STATE OF CALIFORNIA

THE STATE OF CALIFORNIA OR ITS OFFICERS OR AGENTS SHALL NOT BE RESPONSIBLE FOR THE ACCURACY OR COMPLETENESS OF SCANNED COPIES OF THIS PLAN SHEET.

HMA DIKE QUANTITES

RAMPS							
RAMP	(TYPE C)	(TYPE E)	(TYPE F)	PLACE HMA (Misc AREA)	HMA (TYPE A)	RHMA (GAP-GRADED)	REMARKS
	LF	LF	LF	SQYD	TON	TON	
FRONTAGE Rd EB OFF RAMP		490			13	12	
FRONTAGE Rd EB ON RAMP		210			6	5	
FRONTAGE Rd WB ON RAMP		1365			36	34	
FRONTAGE Rd WB OFF RAMP		555			15	14	
COTTONWOOD SPRINGS Rd EB OFF RAMP		1060			28	27	
COTTONWOOD SPRINGS Rd EB ON RAMP		1190			31	30	
COTTONWOOD SPRINGS Rd WB ON RAMP		2145			56	54	
COTTONWOOD SPRINGS Rd WB OFF RAMP		1615			43	40	
CHIRACO SUMMIT Rd EB ON RAMP		400			11	10	
CHIRACO SUMMIT Rd WB ON RAMP		675			18	17	
CHIRACO SUMMIT Rd WB OFF RAMP		400			11	10	
HAYFIELD Rd EB OFF RAMP		530			14	13	
HAYFIELD Rd EB ON RAMP		300			8	8	
HAYFIELD Rd WB ON RAMP		1625			43	41	
HAYFIELD Rd WB OFF RAMP		430			11	11	
RED CLOUD Rd EB OFF RAMP		440			12	11	
RED CLOUD Rd WB ON RAMP		355			9	9	
EAGLE MOUNTAIN Rd EB OFF RAMP		910			24	23	
EAGLE MOUNTAIN Rd EB ON RAMP		1290			34	32	
EAGLE MOUNTAIN Rd WB ON RAMP		880			23	22	
EAGLE MOUNTAIN Rd WB OFF RAMP		550			14	14	
RICE Rd/STATE RTE 177 EB OFF RAMP		1180			31	30	
RICE Rd/STATE RTE 177 WB ON RAMP		2080			55	52	
RICE Rd/STATE RTE 177 WB OFF RAMP		650			17	16	
SUBTOTAL (RAMPS)		21325			563	535	
SUBTOTAL (EASTBOUND - Q16)		28301			744	709	
SUBTOTAL (WESTBOUND - Q16)		12249		860	324	306	
SUBTOTAL (MGS - Q15)	862.5		5450		80	79	
TOTAL	862.5	61875	5450	860	1711	1629	

1

JOB SITE BMPs

TEMPORARY CONSTRUCTION SITE BMPs	UNITS	QUANTITIES
TEMPORARY SOIL BINDER	SQYD	20,000
TEMPORARY COVER	SQYD	20,000
TEMPORARY FIBER ROLLS	LF	20,000
TEMPORARY GRAVEL BAG BERM	LF	1,000
TEMPORARY CONSTRUCTION ENTRANCE	EA	6
TEMPORARY CONCRETE WASHOUT BIN	EA	1
STORM WATER ANNUAL REPORT	EA	1

NOTE:
THE QUANTITIES OF JOB SITE BMPs SHOWN ON THIS QUANTITY SHEET ARE INTENDED TO BE USED AS A GUIDELINE ONLY. FIELD CONDITIONS MAY NECESSITATE MODIFICATION OR RELOCATION OF BMPs AND ITS QUANTITIES AS PER INSTRUCTION OF THE ENGINEER.

1 REPLACED PER ADDENDUM No. 1 DATED JANUARY 07, 2016

SUMMARY OF QUANTITIES

Q-17

STATE OF CALIFORNIA - DEPARTMENT OF TRANSPORTATION
Caltrans DESIGN
FUNCTIONAL SUPERVISOR: DIBORO KANABOLO
CALCULATED-DESIGNED BY: WILLIAM PETOSKEY
CHECKED BY: TUAN A. TRUONG
REVISED BY
DATE REVISED

LAST REVISION 06-01-15
DATE PLOTTED => 06-JAN-2016
TIME PLOTTED => 14:50

Dist	COUNTY	ROUTE	POST MILES TOTAL PROJECT	SHEET No.	TOTAL SHEETS
08	Riv	10	R74.0/R105.4	57	100

Tuan Truong 5/18/15
REGISTERED CIVIL ENGINEER DATE

6/01/15
PLANS APPROVAL DATE

REGISTERED PROFESSIONAL ENGINEER
TUAN TRUONG
No. 60137
Exp. 2/15/17
CIVIL
STATE OF CALIFORNIA

THE STATE OF CALIFORNIA OR ITS OFFICERS OR AGENTS SHALL NOT BE RESPONSIBLE FOR THE ACCURACY OR COMPLETENESS OF SCANNED COPIES OF THIS PLAN SHEET.

REMOVE RUMBLE STRIP

EASTBOUND				
POSTMILE		(N) REMOVE RUMBLE STRIP	HOT MIX ASPHALT (TYPE A)	COLD PLANE ASPHALT CONCRETE PAVEMENT
FROM	TO	LF	TON	SQYD
R74.00	R74.10	523	18	174
R74.11	R74.83	3786	128	1262
R74.85	R75.67	4330	146	1443
R75.68	R77.09	7429	251	2476
R77.11	R77.97	4588	155	1529
R77.99	R78.54	2915	98	972
R78.55	R79.25	3691	125	1230
R79.26	R79.58	1684	57	561
R79.60	R79.94	1827	62	609
R79.97	R80.33	1922	65	641
R80.35	R80.65	1579	53	526
R80.66	R81.21	2920	99	973
R81.23	R82.59	7165	242	2388
R82.62	R87.96	28169	951	9390
R87.97	R90.98	15866	535	5289
R90.99	R91.92	4916	166	1639
R91.94	R92.90	5100	172	1700
R92.92	R93.63	3759	127	1253
R93.65	R94.75	5829	197	1943
R94.78	R95.05	1447	49	482
R95.08	R96.50	7513	254	2504
R96.52	R96.83	1663	56	554
R96.85	R97.33	2540	86	847
R97.35	R97.81	2471	83	824
R97.83	R98.78	5005	169	1668
R98.79	R99.04	1304	44	435
R99.06	R100.38	6985	236	2328
R100.39	R100.68	1489	50	496
R100.69	R101.14	2355	79	785
R101.15	R102.01	4557	154	1519
R102.03	R102.63	3136	106	1045
R102.65	R105.09	12894	435	4298
R105.11	R105.40	1552	52	517
SUBTOTAL (EASTBOUND)		162909	5500	54300

1 (N) - NOT A SEPARATE PAY ITEM,

REMOVE RUMBLE STRIP

WESTBOUND				
POSTMILE		(N) REMOVE RUMBLE STRIP	HOT MIX ASPHALT (TYPE A)	COLD PLANE ASPHALT CONCRETE PAVEMENT
FROM	TO	LF	TON	SQYD
R74.00	R74.10	523	18	174
R74.11	R74.83	3786	128	1262
R74.85	R75.67	4330	146	1443
R75.68	R77.09	7429	251	2476
R77.11	R77.97	4588	155	1529
R77.99	R78.55	2973	100	972
R78.57	R79.25	3606	122	1202
R79.26	R79.58	1684	57	561
R79.60	R79.94	1827	62	609
R79.97	R80.33	1922	65	641
R80.35	R80.65	1579	53	526
R80.66	R81.21	2920	99	973
R81.23	R82.61	7308	247	2436
R82.65	R87.96	28063	947	9354
R87.98	R90.98	15829	534	5276
R90.99	R91.92	4916	166	1639
R91.94	R92.90	5100	172	1700
R92.92	R93.63	3759	127	1253
R93.65	R94.73	5729	193	1910
R94.76	R95.05	1547	52	516
R95.08	R96.50	7545	255	2515
R96.53	R96.85	1700	57	567
R96.86	R97.34	2503	84	834
R97.35	R97.81	2434	82	834
R97.83	R98.79	5048	170	1683
R98.80	R99.07	1404	47	468
R99.09	R100.38	6843	231	2281
R100.39	R100.69	1558	53	519
R100.70	R101.14	2328	79	776
R101.16	R102.02	4557	154	1519
R102.04	R102.63	3120	105	1040
R102.65	R105.09	12867	434	4289
R105.11	R105.40	1552	52	517
SUBTOTAL (WESTBOUND)		162877	5497	54294
SUBTOTAL (EASTBOUND)		162909	5500	54300
TOTAL		325786	10997	108594

1 (N) - NOT A SEPARATE PAY ITEM,

1 REPLACED PER ADDENDUM No. 1 DATED JANUARY 07, 2016

SUMMARY OF QUANTITIES

Q-19

STATE OF CALIFORNIA - DEPARTMENT OF TRANSPORTATION
Caltrans® DESIGN

FUNCTIONAL SUPERVISOR: DIBORO KANABOLO
CALCULATED-DESIGNED BY: WILLIAM PETOSKEY
CHECKED BY: TUAN A. TRUONG
REVISED BY
DATE REVISED

LAST REVISION 06-01-15
DATE PLOTTED => 06-JAN-2016
TIME PLOTTED => 14:50

Dist	COUNTY	ROUTE	POST MILES TOTAL PROJECT	SHEET No.	TOTAL SHEETS
08	Riv	10	R74.0/R105.4	58	100

REGISTERED CIVIL ENGINEER 5/18/15 DATE

6/01/15
PLANS APPROVAL DATE

REGISTERED PROFESSIONAL ENGINEER TUAN TRUONG No. 60137 Exp. 2/15/17 CIVIL STATE OF CALIFORNIA

THE STATE OF CALIFORNIA OR ITS OFFICERS OR AGENTS SHALL NOT BE RESPONSIBLE FOR THE ACCURACY OR COMPLETENESS OF SCANNED COPIES OF THIS PLAN SHEET.

SAFETY EDGE

EASTBOUND				
POSTMILE		SIDE		(N) SAFETY EDGE
FROM	TO	INSIDE Shld	OUTSIDE Shld	LF
R74.15	R74.79	X		3379
R74.89	R75.64	X		3960
R75.08	R75.60	X		2725
R75.72	R77.06	X		7075
R77.14	R77.94	X		4224
R78.02	R78.50	X		2534
R78.59	R79.22	X		3326
R79.30	R79.54	X		1267
R79.64	R79.91	X		1426
R80.01	R80.30	X		1531
R80.39	R80.61	X		1162
R80.70	R81.00	X		1584
R81.00	R81.18	X	X	1901
R81.27	R81.51	X	X	2534
R81.59	R82.55	X	X	10138
R82.66	R86.04	X	X	35693
R86.12	R87.92	X	X	19008
R88.01	R90.08	X	X	21859
R90.16	R90.94	X	X	8237
R91.03	R91.88	X	X	8976
R91.97	R92.87	X	X	9504
R92.96	R93.60	X	X	6758
R93.68	R94.71	X	X	10877
R94.81	R95.01	X	X	2112
R95.11	R96.46	X	X	14256
R96.56	R96.80	X	X	2534
R96.89	R97.29	X	X	4224
R97.38	R97.78	X	X	4224
R97.87	R98.74	X	X	9187
R98.83	R99.00	X	X	1795
R99.10	R100.35	X	X	13200
R100.43	R100.64	X	X	2218
R100.73	R101.10	X	X	3907
R101.19	R101.98	X	X	8342
R102.07	R102.59	X	X	5491
R102.68	R105.05	X	X	25027
R105.11	R105.40	X	X	3062
SUBTOTAL (EASTBOUND)				269257

1 (N) - NOT A SEPARATE PAY ITEM,

SAFETY EDGE

WESTBOUND				
POSTMILE		SIDE		(N) SAFETY EDGE
FROM	TO	INSIDE Shld	OUTSIDE Shld	LF
R74.15	R74.79		X	3379
R74.89	R75.21		X	1690
R75.21	R75.64	X	X	4541
R75.72	R77.06	X	X	14150
R77.14	R77.94	X	X	8448
R78.02	R78.34	X	X	3379
R78.34	R78.51		X	898
R78.61	R79.22	X	X	6442
R79.30	R79.54	X		2534
R79.64	R79.91	X		2851
R80.01	R80.30	X		3062
R80.39	R81.61	X		2323
R81.70	R81.00	X		3168
R81.00	R81.18	X	X	1901
R81.27	R81.51	X	X	2534
R81.59	R82.57	X	X	10349
R82.68	R86.04	X	X	35482
R86.12	R87.92	X	X	19008
R88.01	R88.50	X	X	5174
R88.50	R88.87		X	1954
R88.87	R90.08	X	X	12778
R90.16	R90.94	X	X	8237
R91.03	R91.88	X	X	8976
R91.97	R92.87	X	X	9504
R92.96	R93.60	X	X	6758
R93.68	R94.69	X	X	10666
R94.79	R95.01	X	X	2323
R95.11	R96.47	X	X	14362
R96.56	R96.81	X	X	2640
R96.90	R97.30	X	X	4224
R97.39	R97.78	X	X	4118
R97.87	R98.75	X	X	9293
R98.84	R99.03	X	X	2006
R99.13	R100.35	X	X	12883
R100.43	R100.65	X	X	2323
R100.74	R101.11	X	X	3907
R101.20	R101.99	X	X	8342
R102.08	R102.60	X	X	5491
R102.69	R105.40	X	X	28618
SUBTOTAL (WESTBOUND)				290716

1 (N) - NOT A SEPARATE PAY ITEM,

SAFETY EDGE

RAMPS			
POSTMILE	SIDE		(N) SAFETY EDGE
RAMP	INSIDE Shld	OUTSIDE Shld	LF
FRONTAGE Rd EB OFF RAMP		X	750
FRONTAGE Rd EB ON RAMP		X	310
FRONTAGE Rd WB OFF RAMP		X	420
COTTONWOOD SPRINGS Rd EB OFF RAMP		X	750
CHIRACO SUMMIT Rd EB OFF RAMP	X	X	1735
CHIRACO SUMMIT Rd EB ON RAMP	X	X	1115
CHIRACO SUMMIT Rd WB ON RAMP	X	X	985
CHIRACO SUMMIT Rd WB OFF RAMP	X	X	1265
HAYFIELD Rd EB OFF RAMP	X		560
HAYFIELD Rd EB ON RAMP	X		570
HAYFIELD Rd WB ON RAMP	X		600
HAYFIELD Rd WB OFF RAMP	X		590
RED CLOUD Rd EB OFF RAMP	X	X	695
RED CLOUD Rd EB ON RAMP	X	X	450
RED CLOUD Rd WB ON RAMP	X		220
RED CLOUD Rd WB OFF RAMP	X	X	1340
EAGLE MOUNTAIN Rd WB OFF RAMP	X		350
RICE Rd/STATE RTE 177 EB ON RAMP	X	X	1140
RICE Rd/STATE RTE 177 WB OFF RAMP	X		700
SUBTOTAL (RAMPS)			14545
SUBTOTAL (EASTBOUND)			269257
SUBTOTAL (WESTBOUND)			290716
TOTAL			574518

1 (N) - NOT A SEPARATE PAY ITEM,

1 **REPLACED PER ADDENDUM No. 1 DATED JANUARY 07, 2016**

SUMMARY OF QUANTITIES

Q-20

STATE OF CALIFORNIA - DEPARTMENT OF TRANSPORTATION
Caltrans® **DESIGN**
FUNCTIONAL SUPERVISOR: DIBORO KANABOLO
CALCULATED-DESIGNED BY: WILLIAM PETOSKEY
CHECKED BY: TUAN A. TRUONG
REVISED BY
DATE REVISED

LAST REVISION 06-01-15 | DATE PLOTTED => 06-JAN-2016 | TIME PLOTTED => 14:51

Dist	COUNTY	ROUTE	POST MILES TOTAL PROJECT	SHEET No.	TOTAL SHEETS
08	Riv	10	R74.0/R105.4	60	100

REGISTERED CIVIL ENGINEER 5/18/15 DATE

6/01/15
PLANS APPROVAL DATE

REGISTERED PROFESSIONAL ENGINEER TUAN TRUONG No. 60137 Exp. 2/15/17 CIVIL STATE OF CALIFORNIA

THE STATE OF CALIFORNIA OR ITS OFFICERS OR AGENTS SHALL NOT BE RESPONSIBLE FOR THE ACCURACY OR COMPLETENESS OF SCANNED COPIES OF THIS PLAN SHEET.

RECONSTRUCT ASPHALT CONCRETE ENTRANCE TAPER

EASTBOUND	
POST MILE	RECONSTRUCT ASPHALT CONCRETE ENTRANCE TAPER
	EA
74.66	1
74.99	1
75.44	1
75.89	1
75.99	1
76.15	1
76.26	1
76.37	1
76.86	1
77.31	1
77.50	1
78.14	1
78.61	1
79.00	1
79.03	1
80.16	1
80.83	1
94.91	1
95.20	1
95.29	1
SUBTOTAL (EASTBOUND)	20

RECONSTRUCT ASPHALT CONCRETE ENTRANCE TAPER

WESTBOUND	
POST MILE	RECONSTRUCT ASPHALT CONCRETE ENTRANCE TAPER
	EA
81.28	1
81.83	1
82.02	1
82.21	1
82.40	1
89.84	1
95.18	1
95.28	1
95.34	1
104.81	1
SUBTOTAL (WESTBOUND)	10

RECONSTRUCT ASPHALT CONCRETE ENTRANCE TAPER

RAMPS	
RAMP	RECONSTRUCT ASPHALT CONCRETE ENTRANCE TAPER
	EA
COTTONWOOD SPRINGS Rd EB OFF RAMP	1
COTTONWOOD SPRINGS Rd EB ON RAMP	1
COTTONWOOD SPRINGS Rd WB ON RAMP	1
COTTONWOOD SPRINGS Rd WB OFF RAMP	1
CHIRACO SUMMIT Rd EB ON RAMP	1
CHIRACO SUMMIT Rd WB ON RAMP	1
CHIRACO SUMMIT Rd WB OFF RAMP	1
HAYFIELD Rd EB OFF RAMP	1
HAYFIELD Rd EB ON RAMP	1
HAYFIELD Rd WB ON RAMP	1
HAYFIELD Rd WB OFF RAMP	3
RED CLOUD Rd EB OFF RAMP	1
RED CLOUD Rd WB ON RAMP	1
EAGLE MOUNTAIN Rd EB ON RAMP	1
RICE Rd/STATE RTE 177 WB ON RAMP	1
SUBTOTAL (RAMPS)	17
SUBTOTAL (EASTBOUND)	20
SUBTOTAL (WESTBOUND)	10
TOTAL	47

1

EARTHWORK QUANTITIES

LOCATION				EASTBOUND	WESTBOUND	IMPORTED BORROW
POSTMILE		SIDE				
FROM	TO	INSIDE Shld	OUTSIDE Shld			CY
R77.00	R78.00		X	X		2306
R82.00	R83.00	X		X		1128
TOTAL						3434

TEMPORARY FENCE (TYPE DESERT TORTOISE)

LOCATION				EASTBOUND	WESTBOUND	TEMPORARY FENCE (TYPE DESERT TORTOISE)
POSTMILE		SIDE				
FROM	TO	INSIDE Shld	OUTSIDE Shld			LF
R77.00	R78.00		X	X		5500
R82.00	R83.00	X		X		5500
TOTAL						11000

1 REPLACED PER ADDENDUM No. 1 DATED JANUARY 07, 2016

SUMMARY OF QUANTITIES

Q-22

STATE OF CALIFORNIA - DEPARTMENT OF TRANSPORTATION
Caltrans DESIGN

FUNCTIONAL SUPERVISOR: DIBORO KANABOLO
CALCULATED-DESIGNED BY: WILLIAM PETOSKEY
CHECKED BY: TUAN A. TRUONG
REVISED BY / DATE REVISED

LAST REVISION 06-01-15 | DATE PLOTTED => 06-JAN-2016 | TIME PLOTTED => 14:51