Dist	COUNTY	ROUTE	POST MILES TOTAL PROJECT	SHEET No.	TOTAL SHEETS
08	SBd	95	R57.2/80.5	1	29

STATE OF CALIFORNIA **ACHSNHPG-P095 (029) E**

DEPARTMENT OF TRANSPORTATION

PROJECT PLANS FOR CONSTRUCTION ON

STATE HIGHWAY

IN SAN BERNARDINO COUNTY
NEAR NEEDLES
FROM WEST JUNCTION ROUTE 40
TO NEVADA STATE LINE

TO BE SUPPLEMENTED BY STANDARD PLANS DATED 2010

INDEX OF PLANS

SHEET No.	DESCRIPTION
1	TITLE AND LOCATION MAP
2	TYPICAL CROSS SECTIONS
3-4	CONSTRUCTION DETAILS
5	STAGING AREA
6	CONSTRUCTION AREA SIGNS
7-8	PAVEMENT DELINEATION QUANTITIES
9	SUMMARY OF QUANTITIES
10-14	ELECTRICAL PLANS AND QUANTITIES
15-25	REVISED STANDARD PLANS

THE STANDARD PLANS LIST APPLICABLE TO THIS CONTRACT IS INCLUDED IN THE NOTICE TO BIDDERS AND SPECIAL PROVISIONS BOOK

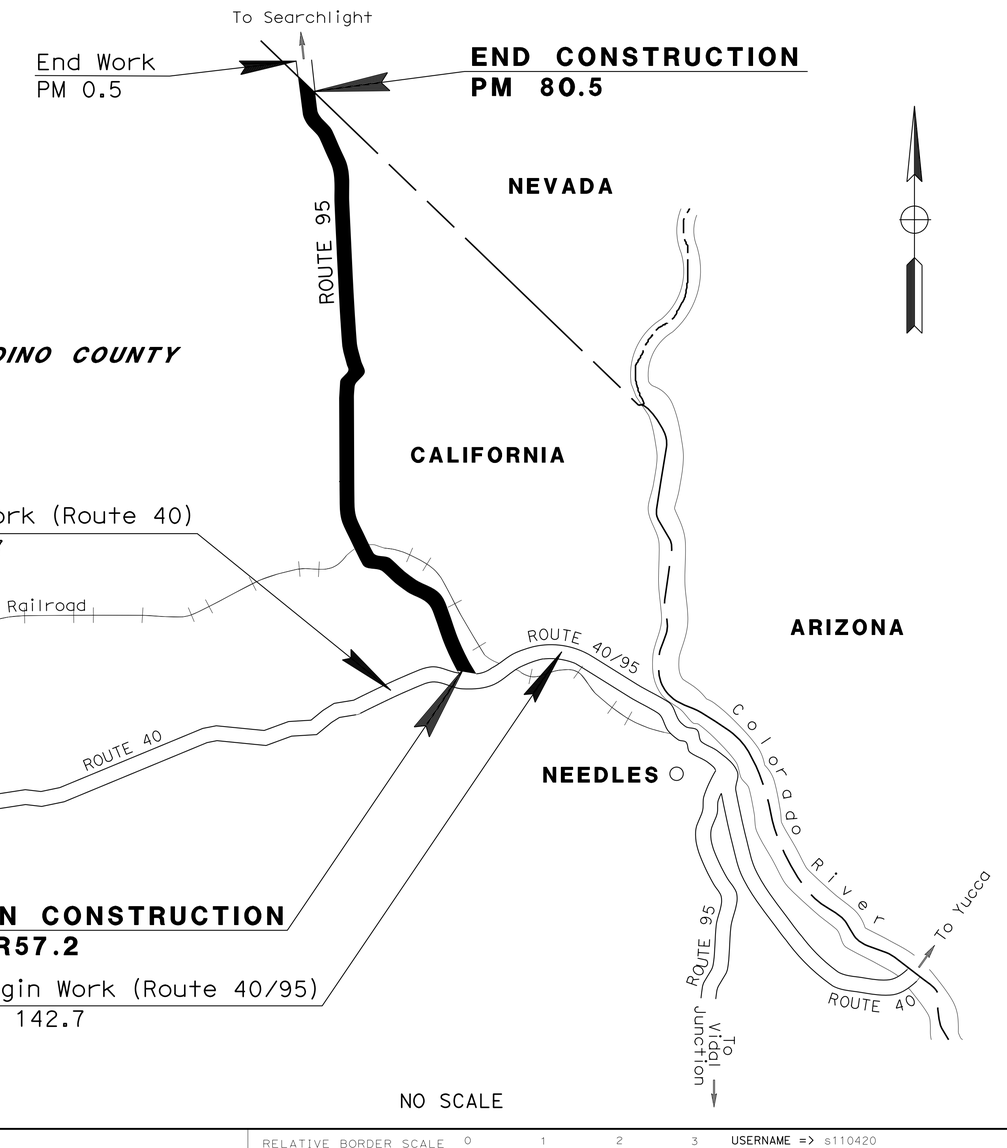

NO SCALE

LOCATION MAP

PROJECT MANAGER	CHARLES CHEN
DESIGN MANAGER	JAMAL ELSALEH

THE CONTRACTOR SHALL POSSESS THE CLASS (OR CLASSES) OF LICENSE AS SPECIFIED IN THE "NOTICE TO BIDDERS."

A Heil'b 8-10-15
PROJECT ENGINEER DATE
REGISTERED CIVIL ENGINEER

August 14, 2015
PLANS APPROVAL DATE

REGISTERED PROFESSIONAL ENGINEER — AYSHA HABIB — No. 79619 — Exp. 9/30/16 — CIVIL — STATE OF CALIFORNIA

THE STATE OF CALIFORNIA OR ITS OFFICERS OR AGENTS SHALL NOT BE RESPONSIBLE FOR THE ACCURACY OR COMPLETENESS OF SCANNED COPIES OF THIS PLAN SHEET.

CONTRACT No.	08-1C9104
PROJECT ID	0813000082

LAST REVISION 08-10-15 DATE PLOTTED => 24-NOV-2015 TIME PLOTTED => 12:38

Dist	COUNTY	ROUTE	POST MILES TOTAL PROJECT	SHEET No.	TOTAL SHEETS
08	SBd	95	R57.2/80.5	2	29

A Habib 8-10-15
REGISTERED CIVIL ENGINEER DATE

8-14-15
PLANS APPROVAL DATE

REGISTERED PROFESSIONAL ENGINEER
AYSHA HABIB
No. 79619
Exp. 9/30/16
CIVIL
STATE OF CALIFORNIA

THE STATE OF CALIFORNIA OR ITS OFFICERS OR AGENTS SHALL NOT BE RESPONSIBLE FOR THE ACCURACY OR COMPLETENESS OF SCANNED COPIES OF THIS PLAN SHEET.

NOTES:

1. EXISTING UTILITY FACILITIES HAVE NOT BEEN PLOTTED ON THESE PLAN SHEETS.
2. EXACT LIMITS OF WORK SHALL BE DETERMINED BY THE ENGINEER.
3. FOR GROUND-IN RUMBLE STRIP, SEE STANDARD PLAN A40B.
4. PLACE EDGE LINE RUMBLE STRIP WHERE SHOULDER WIDTH IS LESS THAN ONE FOOT, SEE CONSTRUCTION DETAILS C-2.
5. NO WORK WILL BE DONE OUTSIDE THE PAVED OR GRADED SHOULDER.
6. FOR COMPLETE R/W AND ACCURATE ACCESS DATA SEE R/W RECORD MAP AT DISTRICT OFFICE.

DESIGN DESIGNATION (ROUTE 95)

AADT (2016)	2,900
AADT (2036)	4,400
DHV (2034)	660
T (2014)	10%
T (2034)	10%

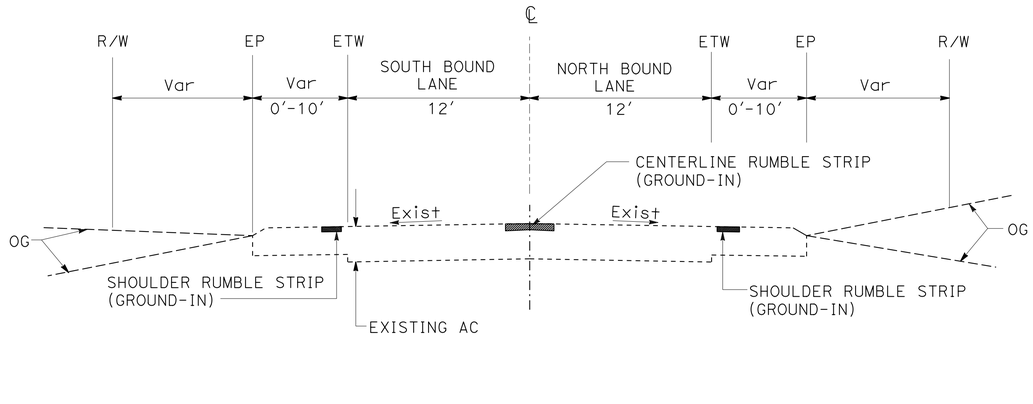

SOUTHBOUND NORTHBOUND

TYPICAL CROSS SECTION

TYPICAL CROSS SECTION

NO SCALE **X-1**

STATE OF CALIFORNIA - DEPARTMENT OF TRANSPORTATION
Caltrans® DESIGN A
FUNCTIONAL SUPERVISOR: MUSTAPHA RAOUF
CALCULATED-DESIGNED BY: AYSHA HABIB
CHECKED BY: PAUL PHAN
REVISED BY / DATE REVISED

LAST REVISION | DATE PLOTTED => 24-NOV-2015 | 08-10-15 | TIME PLOTTED => 12:38

BORDER LAST REVISED 7/2/2010 | USERNAME => s110420 | DGN FILE => 0813000082ca001.dgn | RELATIVE BORDER SCALE IS IN INCHES 0 1 2 3 | UNIT 2229 | PROJECT NUMBER & PHASE 08130000821

Dist	COUNTY	ROUTE	POST MILES TOTAL PROJECT	SHEET No.	TOTAL SHEETS
08	SBd	95	R57.2/80.5	3	29

A Habib 8-10-15
REGISTERED CIVIL ENGINEER DATE

8-14-15
PLANS APPROVAL DATE

REGISTERED PROFESSIONAL ENGINEER
AYSHA HABIB
No. 79619
Exp. 9/30/16
CIVIL
STATE OF CALIFORNIA

THE STATE OF CALIFORNIA OR ITS OFFICERS OR AGENTS SHALL NOT BE RESPONSIBLE FOR THE ACCURACY OR COMPLETENESS OF SCANNED COPIES OF THIS PLAN SHEET.

NOTE:

STOP INSTALL GROUND-IN RUMBLE STRIP 50' PRIOR AND AFTER THE BRIDGE.

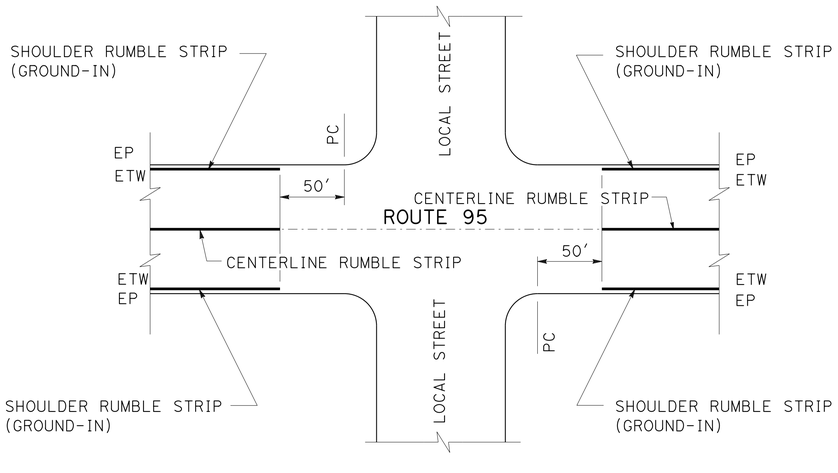

LIMITS OF WORK AT TYPICAL INTERSECTION

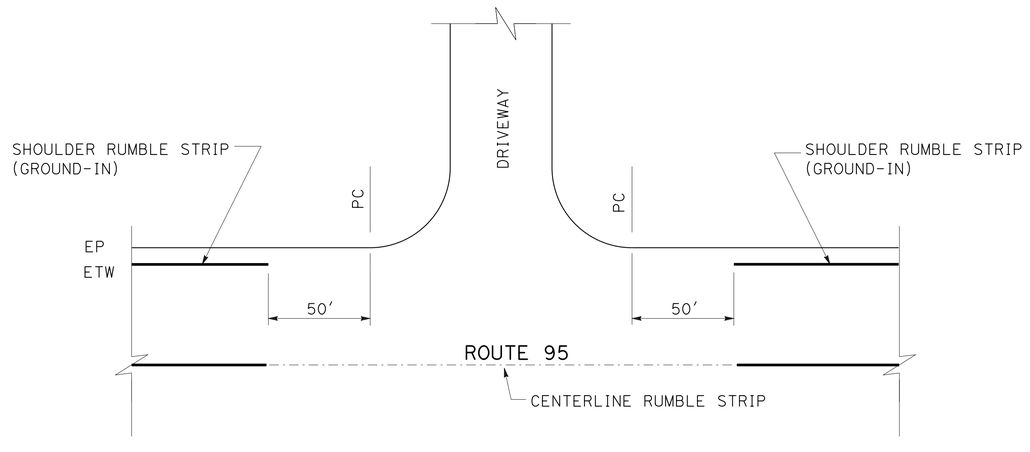

LIMITS OF WORK AT TYPICAL DRIVEWAY

PLAN VIEW

CONSTRUCTION DETAILS

NO SCALE

C-1

STATE OF CALIFORNIA - DEPARTMENT OF TRANSPORTATION
Caltrans
DESIGN A

FUNCTIONAL SUPERVISOR: MUSTAPHA RAOUF
CALCULATED-DESIGNED BY: AYSHA HABIB
CHECKED BY: PAUL PHAN
REVISED BY
DATE REVISED

LAST REVISION 08-10-15
DATE PLOTTED => 24-NOV-2015
TIME PLOTTED => 12:38

Dist	COUNTY	ROUTE	POST MILES TOTAL PROJECT	SHEET No.	TOTAL SHEETS
08	SBd	95	R57.2/80.5	4	29

A Habib 8-10-15
REGISTERED CIVIL ENGINEER DATE

8-14-15
PLANS APPROVAL DATE

REGISTERED PROFESSIONAL ENGINEER
AYSHA HABIB
No. 79619
Exp. 9/30/16
CIVIL
STATE OF CALIFORNIA

THE STATE OF CALIFORNIA OR ITS OFFICERS OR AGENTS SHALL NOT BE RESPONSIBLE FOR THE ACCURACY OR COMPLETENESS OF SCANNED COPIES OF THIS PLAN SHEET.

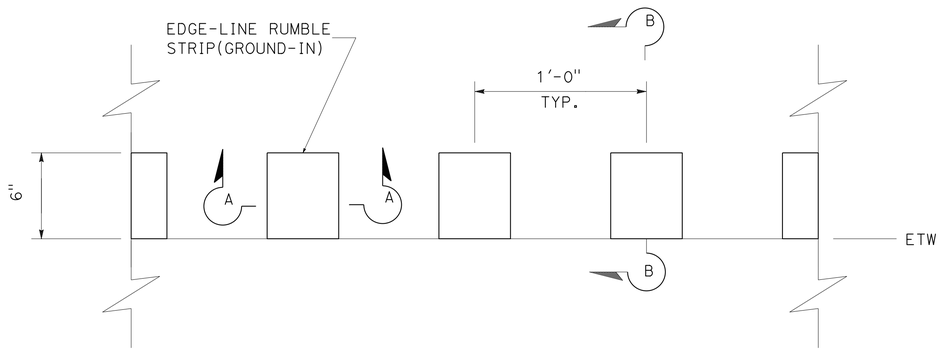

EDGE LINE RUMBLE STRIPS (GROUND-IN)

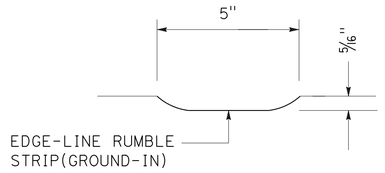

SECTION A-A

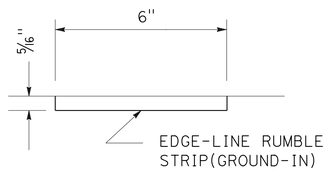

SECTION B-B

EDGE-LINE RUMBLE STRIP (GROUND-IN) PLACEMENT

LEFT DIRECTION OF TRAVEL

EDGE-LINE RUMBLE STRIP (GROUND-IN) PLACEMENT

RIGHT DIRECTION OF TRAVEL

CONSTRUCTION DETAILS

NO SCALE **C-2**

STATE OF CALIFORNIA - DEPARTMENT OF TRANSPORTATION
Caltrans®
DESIGN A
FUNCTIONAL SUPERVISOR: MUSTAPHA RAOUF
CALCULATED-DESIGNED BY: AYSHA HABIB
CHECKED BY: PAUL PHAN
REVISED BY
DATE REVISED

LAST REVISION 08-10-15
DATE PLOTTED => 24-NOV-2015
TIME PLOTTED => 12:38

BORDER LAST REVISED 7/2/2010
USERNAME => s110420
DGN FILE => 08130000082ga002.dgn
RELATIVE BORDER SCALE IS IN INCHES 0 1 2 3
UNIT 2229
PROJECT NUMBER & PHASE 08130000821

NOTE:
FOR PAVEMENT MARKING AND STRIPPING DETAIL NUMBERS, SEE PAVEMENT DELINEATION QUANTITIES SHEET.

Dist	COUNTY	ROUTE	POST MILES TOTAL PROJECT	SHEET No.	TOTAL SHEETS
08	SBd	95	R57.2/80.5	5	29

A Habib 8-10-15
REGISTERED CIVIL ENGINEER DATE

8-14-15
PLANS APPROVAL DATE

REGISTERED PROFESSIONAL ENGINEER
AYSHA HABIB
No. 79619
Exp. 9/30/16
CIVIL
STATE OF CALIFORNIA

THE STATE OF CALIFORNIA OR ITS OFFICERS OR AGENTS SHALL NOT BE RESPONSIBLE FOR THE ACCURACY OR COMPLETENESS OF SCANNED COPIES OF THIS PLAN SHEET.

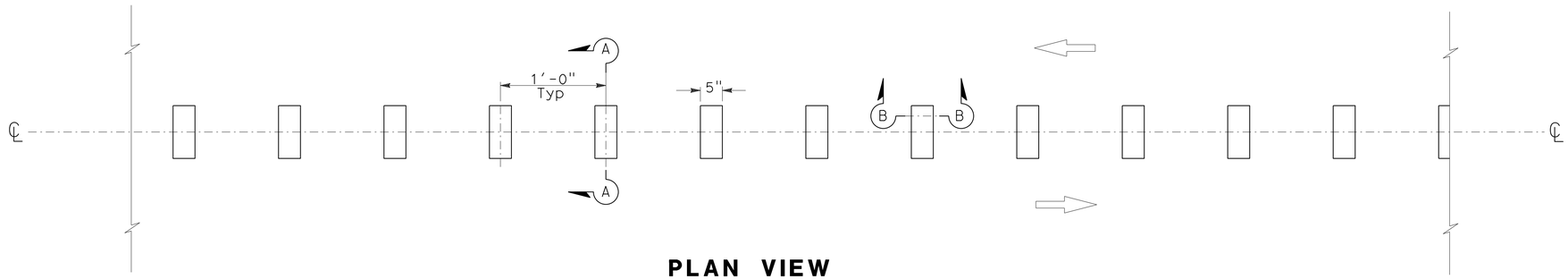

PLAN VIEW
ASPHALT CONCRETE SURFACING
GROUND-IN RUMBLE STRIP

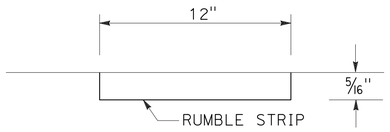

SECTION A-A

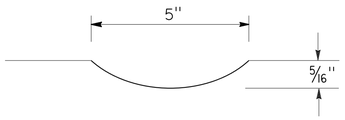

SECTION B-B

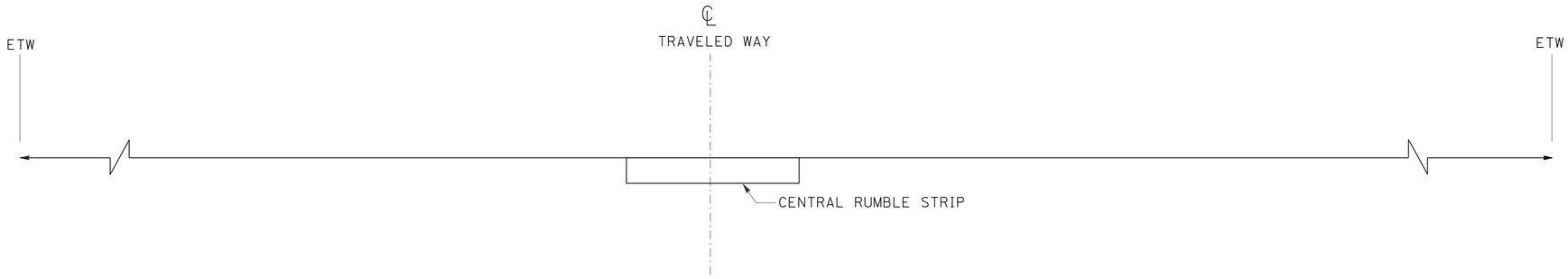

TYPICAL CENTERLINE RUMBLE STRIP PLACEMENT

CONSTRUCTION DETAILS
NO SCALE C-3

STATE OF CALIFORNIA - DEPARTMENT OF TRANSPORTATION
DESIGN A
FUNCTIONAL SUPERVISOR: MUSTAPHA RAOUF
CALCULATED-DESIGNED BY: AYSHA HABIB
CHECKED BY: PAUL PHAN
REVISED BY
DATE REVISED

LAST REVISION 08-10-15
DATE PLOTTED => 24-NOV-2015
TIME PLOTTED => 12:38

Dist	COUNTY	ROUTE	POST MILES TOTAL PROJECT	SHEET No.	TOTAL SHEETS
08	SBd	95	R57.2/80.5	6	29

A Habib 8-10-15
REGISTERED CIVIL ENGINEER DATE

8-14-15
PLANS APPROVAL DATE

REGISTERED PROFESSIONAL ENGINEER
AYSHA HABIB
No. 79619
Exp. 9/30/16
CIVIL
STATE OF CALIFORNIA

THE STATE OF CALIFORNIA OR ITS OFFICERS OR AGENTS SHALL NOT BE RESPONSIBLE FOR THE ACCURACY OR COMPLETENESS OF SCANNED COPIES OF THIS PLAN SHEET.

LEGEND:

Desert Tortoise Habitat

NOTES:

1. Exact locations for temporary desert tortoise fence are shown on the plans.
2. Horizontal portion of hardware cloth must be on habitat side of posts.

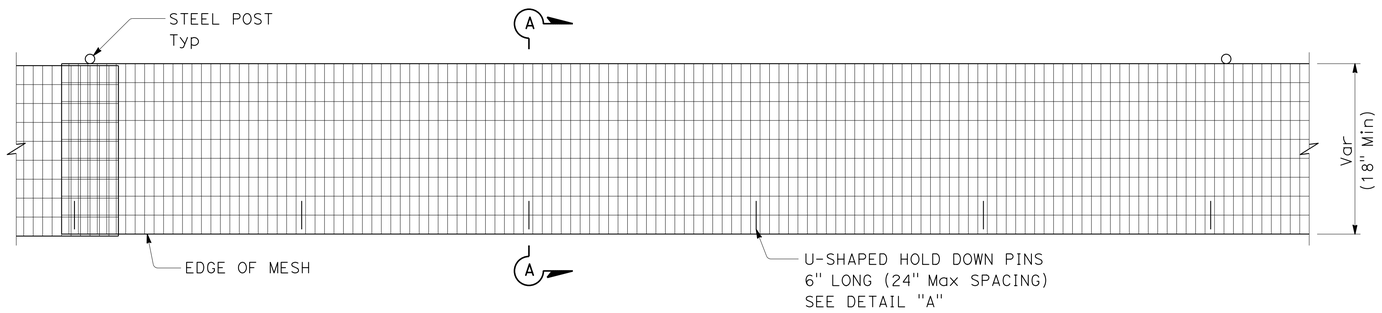

PLAN VIEW

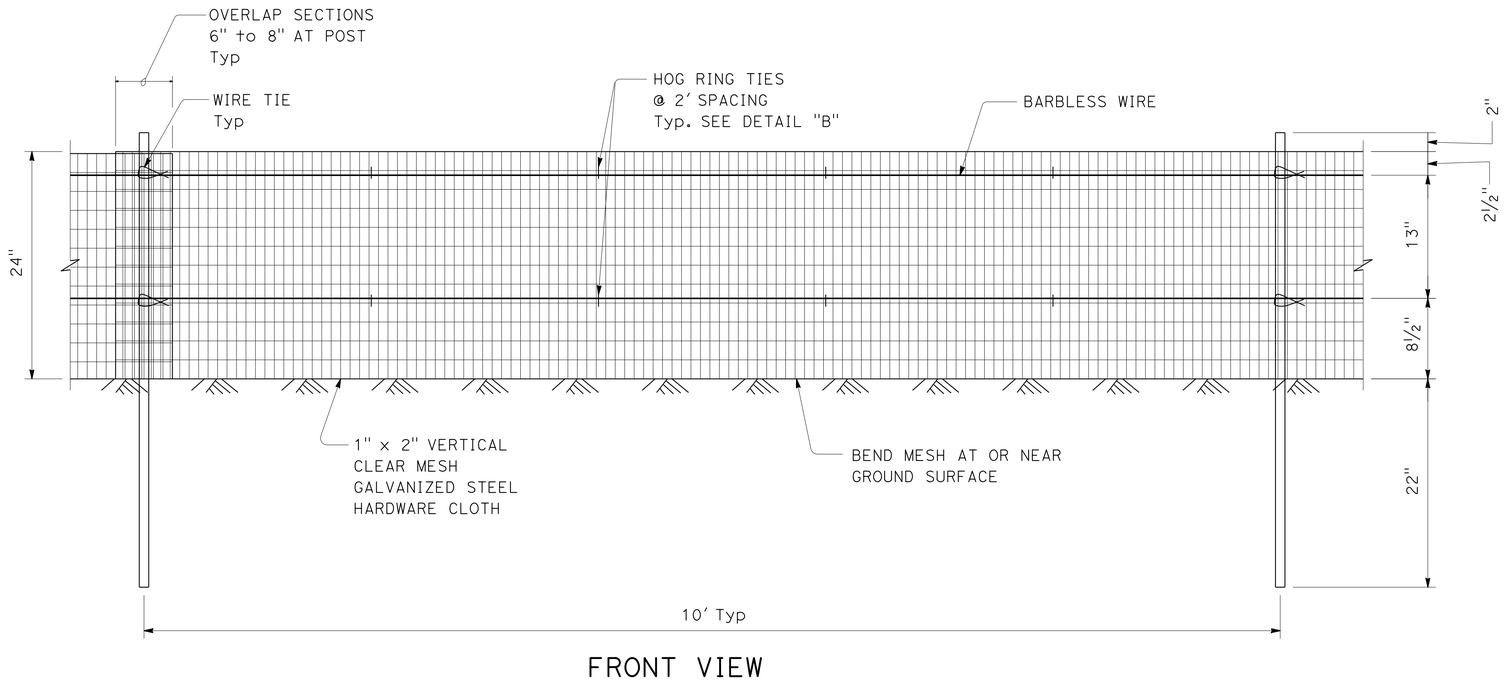

FRONT VIEW

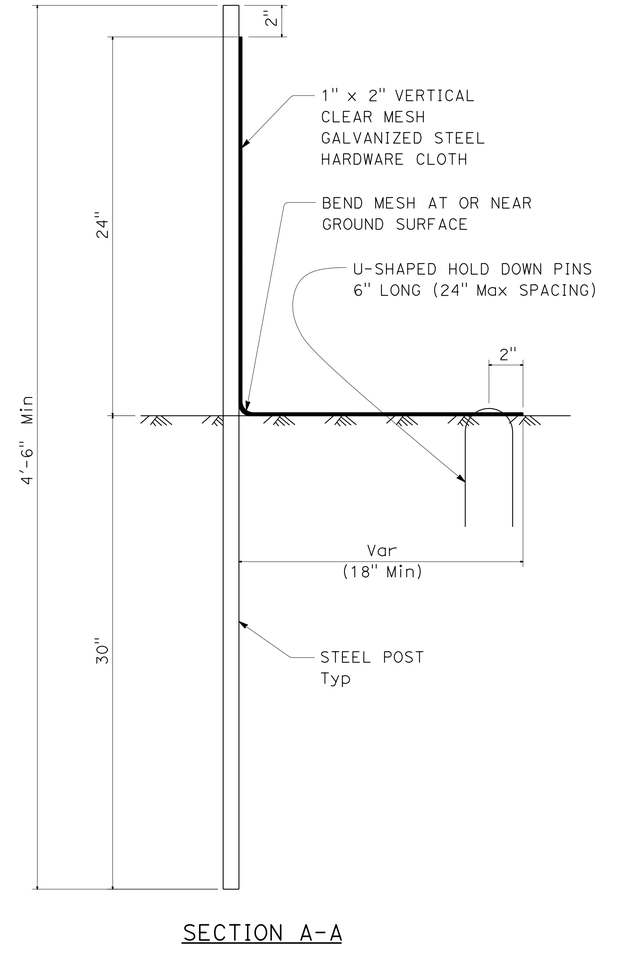

SECTION A-A

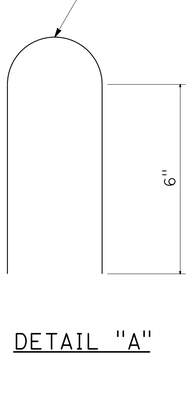

DETAIL "A"

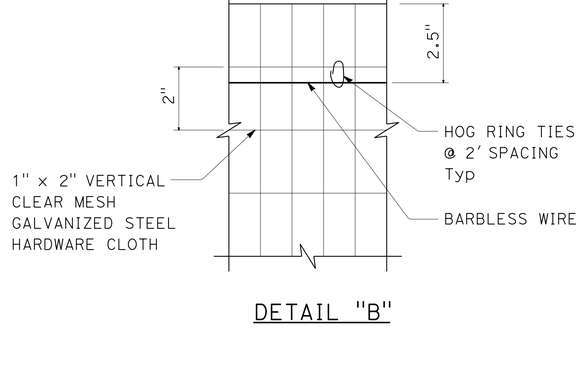

DETAIL "B"

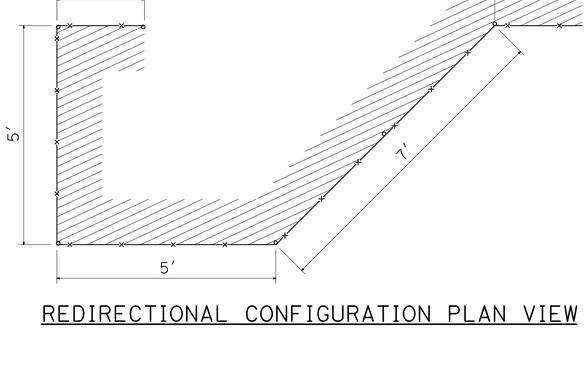

REDIRECTIONAL CONFIGURATION PLAN VIEW

CONSTRUCTION DETAILS TEMPORARY DESERT TORTOISE FENCE

NO SCALE

C-4

STATE OF CALIFORNIA - DEPARTMENT OF TRANSPORTATION
DESIGN A
FUNCTIONAL SUPERVISOR: MUSTAPHA RAOUF
CALCULATED-DESIGNED BY: AYSHA HABIB
CHECKED BY: PAUL PHAN
REVISED BY
DATE REVISED

LAST REVISION | DATE PLOTTED => 24-NOV-2015
08-10-15 | TIME PLOTTED => 12:38

BORDER LAST REVISED 7/2/2010
USERNAME => s110420
DGN FILE => 08130000082ga004.dgn
RELATIVE BORDER SCALE IS IN INCHES 0 1 2 3
UNIT 2229
PROJECT NUMBER & PHASE 08130000821

Dist	COUNTY	ROUTE	POST MILES TOTAL PROJECT	SHEET No.	TOTAL SHEETS
08	SBd	95	R57.2/80.5	7	29

Daryush Nami 8-10-15
REGISTERED CIVIL ENGINEER DATE

8-14-15
PLANS APPROVAL DATE

REGISTERED PROFESSIONAL ENGINEER
DARYUSH NAMI
No. 78890
Exp. 3/31/16
CIVIL
STATE OF CALIFORNIA

THE STATE OF CALIFORNIA OR ITS OFFICERS OR AGENTS SHALL NOT BE RESPONSIBLE FOR THE ACCURACY OR COMPLETENESS OF SCANNED COPIES OF THIS PLAN SHEET.

NOTES:

1. LOCATIONS OF ALL CONSTRUCTION AREA SIGNS, AND PCMS ARE APPROXIMATE. EXACT LOCATIONS OF THE CONSTRUCTION AREA SIGNS AND PCMS WILL BE DETERMINED BY THE ENGINEER.

2 REFER TO STANDARD PLANS RSP T9, AND RSP T13, FOR ADDITIONAL TRAFFIC CONTROL REQUIREMENT.

LEGEND:

CONSTRUCTION AREA

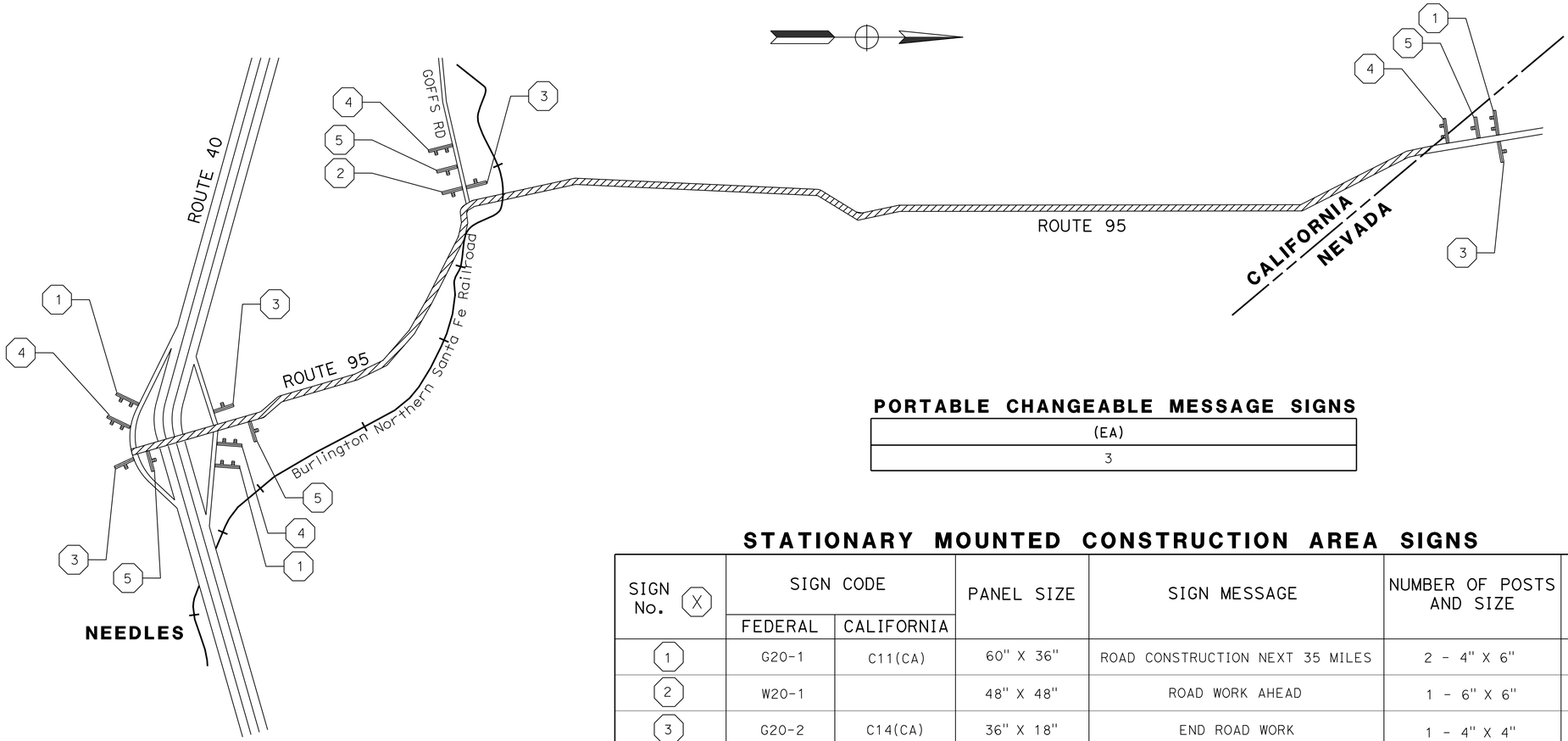

PORTABLE CHANGEABLE MESSAGE SIGNS

(EA)
3

STATIONARY MOUNTED CONSTRUCTION AREA SIGNS

SIGN No. (X)	SIGN CODE		PANEL SIZE	SIGN MESSAGE	NUMBER OF POSTS AND SIZE	NUMBER OF SIGNS
	FEDERAL	CALIFORNIA				
1	G20-1	C11(CA)	60" X 36"	ROAD CONSTRUCTION NEXT 35 MILES	2 - 4" X 6"	3
2	W20-1		48" X 48"	ROAD WORK AHEAD	1 - 6" X 6"	1
3	G20-2	C14(CA)	36" X 18"	END ROAD WORK	1 - 4" X 4"	4
4		C40(CA)	108" X 42"	TRAFFIC FINES DOUBLED IN CONSTRUCTION ZONES	2 - 6" X 6"	4
5	W11-1	W79(CA)	36" X 36"	BICYCLE TRAFFIC	1 - 6" X 6"	4
	W16-1	W79A(CA)	36" X 30"	SHARE THE ROAD		4

APPROVED FOR CONSTRUCTION AREA SIGN WORK ONLY

CONSTRUCTION AREA SIGN

NO SCALE **CS-1**

STATE OF CALIFORNIA - DEPARTMENT OF TRANSPORTATION
Caltrans® TRAFFIC DESIGN
FUNCTIONAL SUPERVISOR: WILLIAM E. WASSER
CALCULATED-DESIGNED BY: DARYUSH NAMI
CHECKED BY: T.HOANG
REVISED BY | DATE REVISED

LAST REVISION | DATE PLOTTED => 24-NOV-2015
08-10-15 | TIME PLOTTED => 12:38

BORDER LAST REVISED 7/2/2010
USERNAME => s110420
DGN FILE => 08130000821a001.dgn
RELATIVE BORDER SCALE IS IN INCHES 0 1 2 3
UNIT 2284
PROJECT NUMBER & PHASE 08130000821

Dist	COUNTY	ROUTE	POST MILES TOTAL PROJECT	SHEET No.	TOTAL SHEETS
08	SBd	95	R57.2/80.5	8	29

A Habib 8-10-15
REGISTERED CIVIL ENGINEER DATE

8-14-15
PLANS APPROVAL DATE

REGISTERED PROFESSIONAL ENGINEER
AYSHA HABIB
No. 79619
Exp. 9/30/16
CIVIL
STATE OF CALIFORNIA

THE STATE OF CALIFORNIA OR ITS OFFICERS OR AGENTS SHALL NOT BE RESPONSIBLE FOR THE ACCURACY OR COMPLETENESS OF SCANNED COPIES OF THIS PLAN SHEET.

NOTE:

STAGING AREAS HAVE BEEN IDENTIFIED AT PAVER PULLOUT AT SR-95, NOT OTHER THAN PM 58.7 AND PM 74.8.

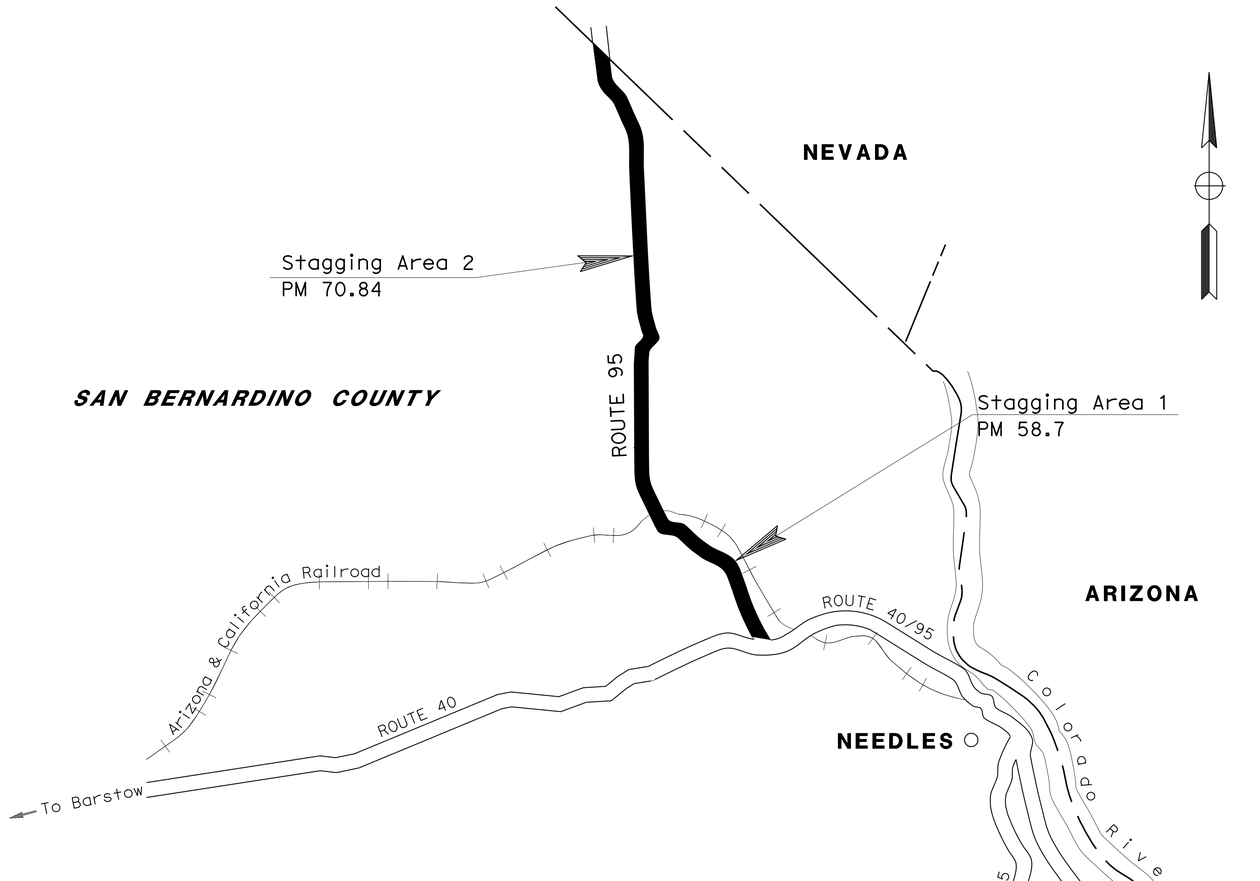

STAGE CONSTRUCTION

NO SCALE **SC-1**

REVISED BY	DATE REVISED

CALCULATED-DESIGNED BY: AYSHA HABIB
CHECKED BY: PAUL PHAN
FUNCTIONAL SUPERVISOR: MUSTAPHA RAOUF

STATE OF CALIFORNIA - DEPARTMENT OF TRANSPORTATION
Caltrans®
DESIGN A

LAST REVISION 08-10-15
DATE PLOTTED => 24-NOV-2015
TIME PLOTTED => 12:39

BORDER LAST REVISED 7/2/2010
USERNAME => s110420
DGN FILE => 0813000082ma001.dgn
RELATIVE BORDER SCALE IS IN INCHES 0 1 2 3
UNIT 2229
PROJECT NUMBER & PHASE 08130000821

Dist	COUNTY	ROUTE	POST MILES TOTAL PROJECT	SHEET No.	TOTAL SHEETS
08	SBd	95	R57.2/80.5	9	29

Daryush Nami 8-10-15
REGISTERED CIVIL ENGINEER DATE

8-14-15
PLANS APPROVAL DATE

REGISTERED PROFESSIONAL ENGINEER
DARYUSH NAMI
No. 78890
Exp. 3/31/16
CIVIL
STATE OF CALIFORNIA

THE STATE OF CALIFORNIA OR ITS OFFICERS OR AGENTS SHALL NOT BE RESPONSIBLE FOR THE ACCURACY OR COMPLETENESS OF SCANNED COPIES OF THIS PLAN SHEET.

ROUTE 95 PAVEMENT DELINEATION QUANTITIES

LOCATION		DIR	DETAIL No. and QUANTITY OF PAVEMENT MARKING		REMOVE THERMO-PLASTIC PAVEMENT MARKING	REMOVE PAVEMENT MARKER	4" THERMOPLASTIC TRAFFIC STRIPE (SPRAYABLE)		8" THERMO-PLASTIC TRAFFIC STRIPE	THERMO-PLASTIC PAVEMENT MARKING	PAVEMENT MARKER					
											RETROREFLECTIVE			RETROREFLECTIVE-RECESSED		
FROM PM	TO PM		EA	DETAIL	SQFT	EA	WHITE LF	YELLOW LF	WHITE LF	SQFT	TYPE D EA	TYPE G EA	TYPE H EA	TYPE D EA	TYPE G EA	TYPE H EA
57.21	80.50	NB/SB		27B			245942									
57.21	57.61	NB/SB		22		178		2112						178		
57.61	57.96	SB		19		118		1848						40		78
57.96	58.06	NB/SB		6		12		528						12		
58.06	58.89	NB/SB		22		369		4396						369		
58.89	58.97	SB		19		29		424						10		19
58.97	59.14	NB		19		59		898						20		39
59.14	59.40	NB/SB		22		117		1376						117		
59.40	59.57	SB		19		57		896						19		38
59.57	59.88	NB		19		105		1632						35		70
59.88	60.04	SB		19		54		864						18		36
60.04	60.07	NB/SB		6		4		144						4		
60.07	60.28	NB		19		72		1108						24		48
60.28	60.43	SB		19		49		768						16		33
60.43	60.47	NB/SB		6		6		192						6		
60.47	60.67	NB		19		68		1056						23		45
60.67	60.71	NB/SB		22		20		240						20		
60.71	60.89	SB		19		62		960			21		41			
60.89	61.33	NB/SB		6		50		2352			50					
61.33	61.52	NB		19		66		1008			22		44			
61.52	61.72	SB		19		68		1056			23		45			
61.72	62.48	NB/SB		6		85		4032			85					
62.48	62.67	NB		19		65		1008			22		43			
62.67	62.90	SB		19		78		1248			26		52			
62.90	62.97	NB/SB		22		32		384			32					
62.97	63.06	SB		19		32		480			11		21			
63.06	63.71	NB/SB		22		289		3456			289					
63.71	63.84	NB/SB		29		60		1392			60					
63.73	64.00	NB/SB	4	RAILROAD CROSSING	736					472						
63.85	63.87	NB/SB	2	TYPE IV(L) ARROW	96					30						
63.91	63.61	NB/SB	2	LIMIT LINE	48					48						
63.85	63.87	NB		38		5			96			5				
63.84	64.00	NB/SB		22		72		864			72					
64.00	64.12	SB		19		42		624						15		27
64.12	65.52	NB/SB		6		155		7440						155		
65.52	65.71	NB		19		65		1008						22		43
65.71	65.91	SB		19		68		1056						23		45
65.91	67.38	NB/SB		6		162		7728						162		
67.38	67.49	NB		19		38		576						13		25
67.49	67.61	SB		19		42		624						14		28
SUB TOTAL PDQ-1					880	2853	301720		96	550	964			1889		

APPROVED FOR PAVEMENT DELINEATION QUANTITIES ONLY

PAVEMENT DELINEATION QUANTITIES
NO SCALE
PDQ-1

LAST REVISION 08-10-15
DATE PLOTTED => 24-NOV-2015
TIME PLOTTED => 12:39

STATE OF CALIFORNIA - DEPARTMENT OF TRANSPORTATION
Caltrans® TRAFFIC DESIGN
FUNCTIONAL SUPERVISOR: WILLIAM E. WASSER
CALCULATED-DESIGNED BY: DARYUSH NAMI
CHECKED BY: T.HOANG
REVISED BY / DATE REVISED

BORDER LAST REVISED 7/2/2010
USERNAME => s110420
DGN FILE => 0813000082nc001.dgn
RELATIVE BORDER SCALE IS IN INCHES 0 1 2 3
UNIT 2284
PROJECT NUMBER & PHASE 08130000821

Dist	COUNTY	ROUTE	POST MILES TOTAL PROJECT	SHEET No.	TOTAL SHEETS
08	SBd	95	R57.2/80.5	10	29

Daryush Nami 8-10-15
REGISTERED CIVIL ENGINEER DATE

8-14-15
PLANS APPROVAL DATE

REGISTERED PROFESSIONAL ENGINEER — DARYUSH NAMI No. 78890 Exp. 3/31/16 CIVIL — STATE OF CALIFORNIA

THE STATE OF CALIFORNIA OR ITS OFFICERS OR AGENTS SHALL NOT BE RESPONSIBLE FOR THE ACCURACY OR COMPLETENESS OF SCANNED COPIES OF THIS PLAN SHEET.

ROUTE 95 PAVEMENT DELINEATION QUANTITIES

LOCATION		DIR	DETAIL No. and QUANTITY OF PAVEMENT MARKING		REMOVE THERMO-PLASTIC PAVEMENT MARKING	REMOVE PAVEMENT MARKER	4" THERMOPLASTIC TRAFFIC STRIPE (SPRAYABLE)		8" THERMO-PLASTIC TRAFFIC STRIPE	THERMO-PLASTIC PAVEMENT MARKING	PAVEMENT MARKER					
											RETROREFLECTIVE			RETROREFLECTIVE RECESSED		
FROM PM	TO PM		EA	DETAIL	SQFT	EA	WHITE LF	YELLOW LF	WHITE LF	SQFT	TYPE D EA	TYPE G EA	TYPE H EA	TYPE D EA	TYPE G EA	TYPE H EA
67.61	68.79	NB/SB		6		132		6240						132		
68.79	68.98	NB		19		66		1008						22		44
68.98	69.79	NB/SB		22		359		4320						359		
69.79	69.96	SB		19		59		912						20		39
69.96	70.29	NB/SB		6		38		1776						38		
70.29	70.54	NB		19		85		1296						29		56
70.54	70.67	NB/SB		22		60		720						60		
70.67	70.91	SB		19		81		1296						27		54
70.91	70.98	NB/SB		6		9		384						9		
70.98	71.21	NB		19		79		1200						27		52
71.21	71.45	SB		19		80		1248						27		53
71.45	77.58	NB/SB		6		675		32304						675		
77.58	77.80	NB		19		75		1152						25		50
77.80	77.88	NB/SB		22		37		432						37		
77.88	78.11	SB		19		79		1200						27		52
78.11	78.61	NB/SB		6		56		2640						56		
78.61	78.82	NB		19		71		1104						24		47
78.82	79.93	NB/SB		22		491		5856						491		
79.93	80.13	SB		19		68		1056						23		45
80.13	80.50	NB/SB		6		42		1968						42		
SUB TOTAL PDQ-2						2642	68112							2642		
SUB TOTAL PDQ-1					880	2853	301720		96	550	964			1889		
					880	5495	369832		96	550	964			4531		

APPROVED FOR PAVEMENT DELINEATION QUANTITIES ONLY

PAVEMENT DELINEATION QUANTITIES

NO SCALE

PDQ-2

CALCULATED-DESIGNED BY: DARYUSH NAMI
CHECKED BY: T.HOANG
REVISED BY
DATE REVISED
FUNCTIONAL SUPERVISOR: WILLIAM E. WASSER
STATE OF CALIFORNIA - DEPARTMENT OF TRANSPORTATION
Caltrans® TRAFFIC DESIGN

LAST REVISION 08-10-15
DATE PLOTTED => 24-NOV-2015
TIME PLOTTED => 12:39

BORDER LAST REVISED 7/2/2010
USERNAME => s110420
DGN FILE => 0813000082nc002.dgn
RELATIVE BORDER SCALE IS IN INCHES 0 1 2 3
UNIT 2284
PROJECT NUMBER & PHASE 08130000821

Dist	COUNTY	ROUTE	POST MILES TOTAL PROJECT	SHEET No.	TOTAL SHEETS
08	SBd	95	R57.2/80.5	11	29

A Habib 8-10-15
REGISTERED CIVIL ENGINEER DATE

8-14-15
PLANS APPROVAL DATE

REGISTERED PROFESSIONAL ENGINEER
AYSHA HABIB
No. 79619
Exp. 9/30/16
CIVIL
STATE OF CALIFORNIA

THE STATE OF CALIFORNIA OR ITS OFFICERS OR AGENTS SHALL NOT BE RESPONSIBLE FOR THE ACCURACY OR COMPLETENESS OF SCANNED COPIES OF THIS PLAN SHEET.

RUMBLE STRIP QUANTITIES

POST MILE	CENTERLINE RUMBLE STRIP (GROUND-IN)	SHOULDER RUMBLE STRIP (GROUND-IN)
	STATION	STATION
R57.2 TO 80.5	1231	
R57.2 TO 80.5		2462
TOTAL	1231	2462

SUMMARY OF QUANTITIES

Q-1

CALCULATED-DESIGNED BY: AYSHA HABIB
CHECKED BY: PAUL PHAN
FUNCTIONAL SUPERVISOR: MUSTAPHA RAOUF
REVISED BY
DATE REVISED

STATE OF CALIFORNIA - DEPARTMENT OF TRANSPORTATION
Caltrans®
DESIGN A

LAST REVISION | DATE PLOTTED => 24-NOV-2015
08-10-15 | TIME PLOTTED => 12:39

BORDER LAST REVISED 7/2/2010
USERNAME => s110420
DGN FILE => 0813000082pa001.dgn
RELATIVE BORDER SCALE IS IN INCHES 0 1 2 3
UNIT 2229
PROJECT NUMBER & PHASE 08130000821

Dist	COUNTY	ROUTE	POST MILES TOTAL PROJECT	SHEET No.	TOTAL SHEETS
08	SBd	95	R57.2/80.5	12	29

REGISTERED ELECTRICAL ENGINEER — 8-10-15 DATE

8-14-15
PLANS APPROVAL DATE

REGISTERED PROFESSIONAL ENGINEER
FERDINAND DE LA CRUZ
No. 17215
Exp. 6/30/16
ELECTRICAL
STATE OF CALIFORNIA

THE STATE OF CALIFORNIA OR ITS OFFICERS OR AGENTS SHALL NOT BE RESPONSIBLE FOR THE ACCURACY OR COMPLETENESS OF SCANNED COPIES OF THIS PLAN SHEET.

NOTES: (SHEET E-1 AND E-2 ONLY)

1. ALL DISTANCES ARE APPROXIMATE. PRIOR TO CONSTRUCTION, THE CONTRACTOR MUST VERIFY ALL LOOP LOCATIONS.
2. NEW DETECTOR LOOPS MUST BE INSTALLED AT LOCATION OF EXISTING LOOPS.
3. CONTRACTOR MUST COORDINATE WITH TRAFFIC OPERATIONS AT 909-383-5947 TO VERIFY COUNT LOOP DETECTOR OPERATION.
4. LABEL CONDUCTOR ENDS AS PER STANDARD PLANS ES-13B.

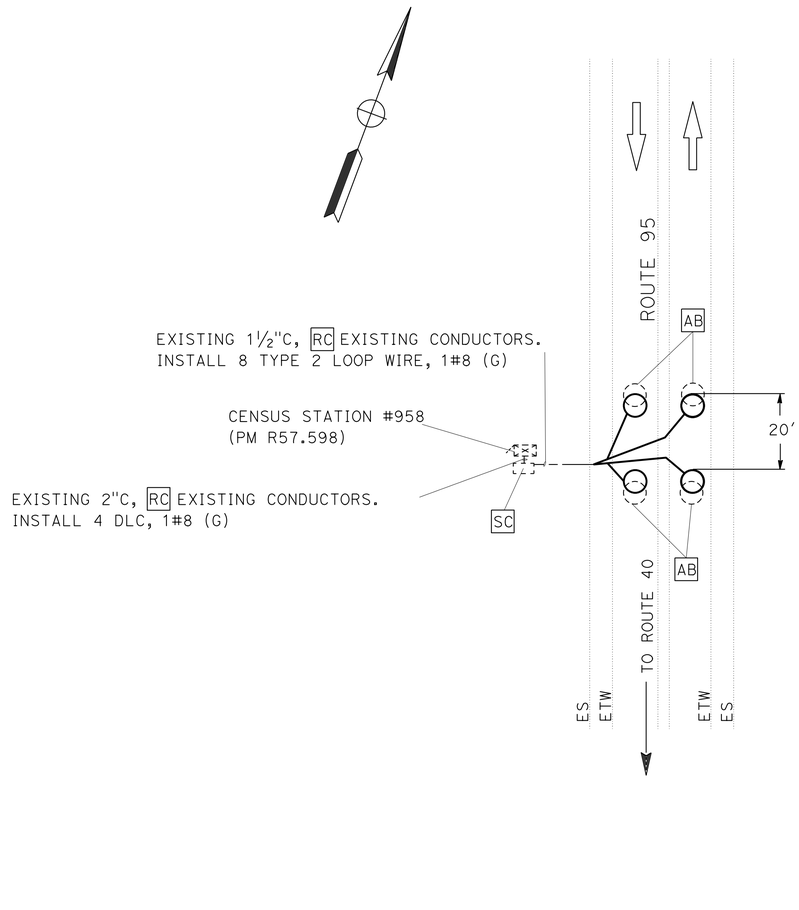

INDUCTIVE LOOP DETECTOR (EACH)

NO SCALE

E-1

APPROVED FOR ELECTRICAL WORK ONLY

STATE OF CALIFORNIA - DEPARTMENT OF TRANSPORTATION
Caltrans® ELECTRICAL DESIGN
FUNCTIONAL SUPERVISOR: FERDINAND DE LA CRUZ
CALCULATED-DESIGNED BY
CHECKED BY
REVISED BY: LUIS PENALOZA JR
DATE REVISED: FERDINAND DE LA CRUZ

LAST REVISION
DATE PLOTTED => 24-NOV-2015
TIME PLOTTED => 12:39
08-10-15

BORDER LAST REVISED 7/2/2010
USERNAME => s110420
DGN FILE => 08130000082ua001.dgn
RELATIVE BORDER SCALE IS IN INCHES 0 1 2 3
UNIT 2292
PROJECT NUMBER & PHASE 08130000821

Dist	COUNTY	ROUTE	POST MILES TOTAL PROJECT	SHEET No.	TOTAL SHEETS
08	SBd	95	R57.2/80.5	13	29

Ferdinand de la Cruz 8-10-15
REGISTERED ELECTRICAL ENGINEER DATE

8-14-15
PLANS APPROVAL DATE

REGISTERED PROFESSIONAL ENGINEER
FERDINAND DE LA CRUZ
No. 17215
Exp. 6/30/16
ELECTRICAL
STATE OF CALIFORNIA

THE STATE OF CALIFORNIA OR ITS OFFICERS OR AGENTS SHALL NOT BE RESPONSIBLE FOR THE ACCURACY OR COMPLETENESS OF SCANNED COPIES OF THIS PLAN SHEET.

LEGEND: (THIS SHEET ONLY)

[1] INSTALL 334L CONTROLLER CABINET ON NEW FOUNDATION.

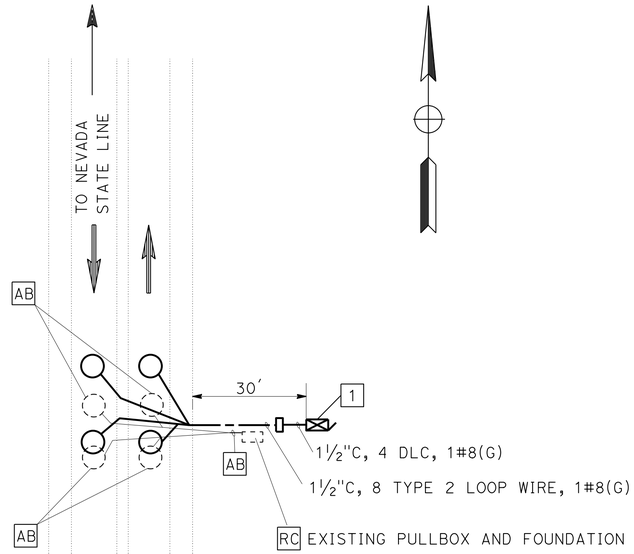

CENSUS STATION #959
(PM 80.424)

APPROVED FOR ELECTRICAL WORK ONLY

MODIFY TRAFFIC MONITORING STATION (COUNT)

NO SCALE

E-2

STATE OF CALIFORNIA - DEPARTMENT OF TRANSPORTATION
Caltrans® ELECTRICAL DESIGN

FUNCTIONAL SUPERVISOR: FERDINAND DE LA CRUZ
CALCULATED-DESIGNED BY: LUIS PENALOZA JR
CHECKED BY: FERDINAND DE LA CRUZ
REVISED BY
DATE REVISED

LAST REVISION | DATE PLOTTED => 24-NOV-2015
08-10-15 | TIME PLOTTED => 12:39

BORDER LAST REVISED 7/2/2010 | USERNAME => s110420 | DGN FILE => 08130000082ua002.dgn | RELATIVE BORDER SCALE IS IN INCHES 0 1 2 3 | UNIT 2292 | PROJECT NUMBER & PHASE 08130000821

Dist	COUNTY	ROUTE	POST MILES TOTAL PROJECT	SHEET No.	TOTAL SHEETS
08	SBd	95	R57.2/80.5	14	29

Ferdinand de la Cruz 8-10-15
REGISTERED ELECTRICAL ENGINEER DATE

8-14-15
PLANS APPROVAL DATE

REGISTERED PROFESSIONAL ENGINEER
FERDINAND DE LA CRUZ
No. 17215
Exp. 6/30/16
ELECTRICAL
STATE OF CALIFORNIA

THE STATE OF CALIFORNIA OR ITS OFFICERS OR AGENTS SHALL NOT BE RESPONSIBLE FOR THE ACCURACY OR COMPLETENESS OF SCANNED COPIES OF THIS PLAN SHEET.

NOTES:

1. THE QUANTITIES SHOWN IN TABLES ARE NOT SEPARATE PAY ITEMS, FOR INFORMATION ONLY.
2. FOR COMPLETE ELECTRICAL WORK, SEE ELECTRICAL PLAN SHEETS.

INDUCTIVE LOOP DETECTOR

SHEET No.	TYPE E LOOP	DLC
	EA	LF
E-1	4	160

MODIFY TRAFFIC MONITORING STATION (COUNT)

SHEET No.	TYPE E LOOP	DLC	TYPE 5 PULLBOX	334 CONTROLLER CABINET	334 L CONTROLLER CABINET FOUNDATION
	EA	LF	EA	EA	EA
E-2	4	160	1	1	1

APPROVED FOR ELECTRICAL WORK ONLY

ELECTRICAL QUANTITIES

NO SCALE **E-3**

CALCULATED-DESIGNED BY
CHECKED BY
FUNCTIONAL SUPERVISOR
FERDINAND DE LA CRUZ
REVISED BY
DATE REVISED
LUIS PENALOZA JR
FERDINAND DE LA CRUZ

STATE OF CALIFORNIA - DEPARTMENT OF TRANSPORTATION
Caltrans® ELECTRICAL DESIGN

LAST REVISION | DATE PLOTTED => 24-NOV-2015
08-10-15 | TIME PLOTTED => 12:39

BORDER LAST REVISED 7/2/2010
USERNAME => s110420
DGN FILE => 08130000082ua003.dgn
RELATIVE BORDER SCALE IS IN INCHES 0 1 2 3
UNIT 2292
PROJECT NUMBER & PHASE 08130000821

M

Maint	MAINTENANCE
Max	MAXIMUM
MB	METAL BEAM
MBB	METAL BEAM BARRIER
MBGR	METAL BEAM GUARD RAILING
Med	MEDIAN
MGS	MIDWEST GUARDRAIL SYSTEM
MH	MANHOLE
Min	MINIMUM
Misc	MISCELLANEOUS
Misc I & S	MISCELLANEOUS IRON AND STEEL
Mkr	MARKER
Mod	MODIFIED, MODIFY
Mon	MONUMENT
MP	METAL PLATE
MPGR	METAL PLATE GUARD RAILING
MR	MOVEMENT RATING
MSE	MECHANICALLY STABILIZED EMBANKMENT
Mt	MOUNTAIN, MOUNT
Mtl	MATERIAL
MVP	MAINTENANCE VEHICLE PULLOUT

N

N	NORTH
NB	NORTHBOUND
No.	NUMBER (MUST HAVE PERIOD)
Nos.	NUMBERS (MUST HAVE PERIOD)
NPS	NOMINAL PIPE SIZE
NS	NEAR SIDE
NSP	NEW STANDARD PLAN
NTS	NOT TO SCALE

O

Oblr	OBLITERATE
OC	OVERCROSSING
OD	OUTSIDE DIAMETER
OF	OUTSIDE FACE
OG	ORIGINAL GROUND
OGAC	OPEN GRADED ASPHALT CONCRETE
OGFC	OPEN GRADED FRICTION COURSE
OH	OVERHEAD
OHWM	ORDINARY HIGH WATER MARK
O-O	OUT TO OUT
Opp	OPPOSITE
OSD	OVERSIDE DRAIN

P

P	PAGE
PAP	PERFORATED ALUMINUM PIPE
PB	PULL BOX
PC	POINT OF CURVATURE, PRECAST
PCC	POINT OF COMPOUND CURVE, PORTLAND CEMENT CONCRETE
PCMS	PORTABLE CHANGEABLE MESSAGE SIGN
PCP	PERFORATED CONCRETE PIPE, PRESTRESSED CONCRETE PIPE
PCVC	POINT OF COMPOUND VERTICAL CURVE
PEC	PERMIT TO ENTER AND CONSTRUCT
Ped	PEDESTRIAN
Ped OC	PEDESTRIAN OVERCROSSING
Ped UC	PEDESTRIAN UNDERCROSSING
Perm Mtl	PERMEABLE MATERIAL

P continued

PG	PROFILE GRADE
PI	POINT OF INTERSECTION
PJP	PARTIAL JOINT PENETRATION
Pkwy	PARKWAY
℄,PL	PLATE
P/L	PROPERTY LINE
PM	POST MILE, TIME FROM NOON TO MIDNIGHT
PN	PAVING NOTCH
POC	POINT OF HORIZONTAL CURVE
POT	POINT OF TANGENT
POVC	POINT OF VERTICAL CURVE
PP	PIPE PILE, PLASTIC PIPE, POWER POLE
PPL	PREFORMED PERMEABLE LINER
PPP	PERFORATED PLASTIC PIPE
PRC	POINT OF REVERSE CURVE
PRF	PAVEMENT REINFORCING FABRIC
PRVC	POINT OF REVERSE VERTICAL CURVE
PS&E	PLANS, SPECIFICATIONS AND ESTIMATES
PS, P/S	PRESTRESSED
PSP	PERFORATED STEEL PIPE
PT	POINT OF TANGENCY
PVC	POLYVINYL CHLORIDE
Pvmt	PAVEMENT

Q

Qty	QUANTITY

R

R	RADIUS
R & D	REMOVE AND DISPOSE
R & S	REMOVE AND SALVAGE
R/C	RATE OF CHANGE
RCA	REINFORCED CONCRETE ARCH
RCB	REINFORCED CONCRETE BOX
RCP	REINFORCED CONCRETE PIPE
RCPA	REINFORCED CONCRETE PIPE ARCH
Rd	ROAD
Reinf	REINFORCED, REINFORCEMENT, REINFORCING
Rel	RELOCATE
Repl	REPLACEMENT
Ret	RETAINING
Rev	REVISED, REVISION
Rdwy	ROADWAY
RHMA	RUBBERIZED HOT MIX ASPHALT
Riv	RIVER
RM	ROAD-MIXED
RP	RADIUS POINT, REFERENCE POINT
RR	RAILROAD
RSP	ROCK SLOPE PROTECTION, REVISED STANDARD PLAN
Rt	RIGHT
Rte	ROUTE
RW	REDWOOD, RETAINING WALL
R/W	RIGHT OF WAY
Rwy	RAILWAY

S

S	SOUTH, SUPPLEMENT
SAE	STRUCTURE APPROACH EMBANKMENT
Salv	SALVAGE
SAPP	STRUCTURAL ALUMINUM PLATE PIPE
SB	SOUTHBOUND
SC	SAND CUSHION
SCSP	SLOTTED CORRUGATED STEEL PIPE
SD	STORM DRAIN
Sec	SECOND, SECTION
Sep	SEPARATION
SG	SUBGRADE
Shld	SHOULDER
Sht	SHEET
Sim	SIMILAR
℄	STATION LINE
SM	SELECTED MATERIAL
Spec	SPECIAL, SPECIFICATIONS
SPP	SLOTTED PLASTIC PIPE
SS	SLOPE STAKE
SSBM	STRAP AND SADDLE BRACKET METHOD
SSD	STRUCTURAL SECTION DRAIN
SSPA	STRUCTURAL STEEL PLATE ARCH
SSPP	STRUCTURAL STEEL PLATE PIPE
SSPPA	STRUCTURAL STEEL PLATE PIPE ARCH
SSRP	STEEL SPIRAL RIB PIPE
St	STREET
Sta	STATION
STBB	SINGLE THRIE BEAM BARRIER
Std	STANDARD
Str	STRUCTURE
Surf	SURFACING
SW	SIDEWALK, SOUND WALL
Swr	SEWER
Sym	SYMMETRICAL
S4S	SURFACE 4 SIDES

T

T	SEMI-TANGENT
Tan	TANGENT
TBB	THRIE BEAM BARRIER
Tbr	TIMBER
TC	TOP OF CURB
TCB	TRAFFIC CONTROL BOX
TCE	TEMPORARY CONSTRUCTION EASEMENT
Tel	TELEPHONE
Temp	TEMPORARY
TG	TOP OF GRADE
Tot	TOTAL
TP	TELEPHONE POLE
TPB	TREATED PERMEABLE BASE
TPM	TREATED PERMEABLE MATERIAL
Trans	TRANSITION

T continued

TS	TRANSVERSE, TRAFFIC SIGNAL, TUBULAR STEEL
Typ	TYPICAL

U

UC	UNDERCROSSING
UD	UNDERDRAIN
UG	UNDERGROUND
UON	UNLESS OTHERWISE NOTED
UP	UNDERPASS

V

V	VALVE, DESIGN SPEED
Var	VARIABLE, VARIES
VC	VERTICAL CURVE
VCP	VITRIFIED CLAY PIPE
Vert	VERTICAL
Via	VIADUCT
Vol	VOLUME

W

W	WEST, WIDTH
WB	WESTBOUND
WH	WEEP HOLE
WM	WIRE MESH
WS	WATER SURFACE
WSP	WELDED STEEL PIPE
Wt	WEIGHT
WV	WATER VALVE
WW	WINGWALL
WWLOL	WINGWALL LAYOUT LINE

X

X Sec	CROSS SECTION
Xing	CROSSING

Y

Yr	YEAR
Yrs	YEARS

Dist	COUNTY	ROUTE	POST MILES TOTAL PROJECT	SHEET No.	TOTAL SHEETS
08	SBd	95	R57.2/80.5	15	29

Grace M. Tsushima
REGISTERED CIVIL ENGINEER

July 19, 2013
PLANS APPROVAL DATE

REGISTERED PROFESSIONAL ENGINEER — Grace M. Tsushima — No. C49814 — Exp. 9-30-14 — CIVIL — STATE OF CALIFORNIA

THE STATE OF CALIFORNIA OR ITS OFFICERS OR AGENTS SHALL NOT BE RESPONSIBLE FOR THE ACCURACY OR COMPLETENESS OF SCANNED COPIES OF THIS PLAN SHEET.

TO ACCOMPANY PLANS DATED 8-14-15

UNIT OF MEASUREMENT SYMBOLS:

Some of the symbols used in the project plan quantity tables and in the Bid Item List are:

TABLE A

SYMBOL USED	DEFINITIONS
ACRE	ACRE
CF	CUBIC FOOT
CY	CUBIC YARD
EA	EACH
GAL	GALLON
LB	POUND
LF	LINEAR FOOT
SQFT	SQUARE FOOT
SQYD	SQUARE YARD
STA	100 FEET
TAB	TABLET
TON	2,000 POUNDS

Some of the symbols used in the plans other than in the project plan quantity tables are:

TABLE B

SYMBOL USED	DEFINITIONS
ksi	KIPS PER SQUARE INCH
ksf	KIPS PER SQUARE FOOT
psi	POUNDS PER SQUARE INCH
psf	POUNDS PER SQUARE FOOT
lb/ft^3, pcf	POUNDS PER CUBIC FOOT
tsf	TONS PER SQUARE FOOT
mph, MPH *	MILES PER HOUR
ø	NOMINAL DIAMETER
oz	OUNCE
lb	POUND
kip	1,000 POUNDS
cal	CALORIE
ft	FOOT OR FEET
gal	GALLON

* For use on a sign panel only

STATE OF CALIFORNIA
DEPARTMENT OF TRANSPORTATION

ABBREVIATIONS (SHEET 2 OF 2)

NO SCALE

RSP A10B DATED JULY 19, 2013 SUPERSEDES STANDARD PLAN A10B DATED MAY 20, 2011 - PAGE 2 OF THE STANDARD PLANS BOOK DATED 2010.

REVISED STANDARD PLAN RSP A10B

2010 REVISED STANDARD PLAN RSP A10B

6-7-13

Dist	COUNTY	ROUTE	POST MILES TOTAL PROJECT	SHEET No.	TOTAL SHEETS
08	SBd	95	R57.2/80.5	16	29

Roberta L. McLaughlin
REGISTERED CIVIL ENGINEER

April 20, 2012
PLANS APPROVAL DATE

REGISTERED PROFESSIONAL ENGINEER
Roberta L. McLaughlin
No. C40375
Exp. 3-31-13
CIVIL
STATE OF CALIFORNIA

THE STATE OF CALIFORNIA OR ITS OFFICERS OR AGENTS SHALL NOT BE RESPONSIBLE FOR THE ACCURACY OR COMPLETENESS OF SCANNED COPIES OF THIS PLAN SHEET.

TO ACCOMPANY PLANS DATED 8-14-15

2010 REVISED STANDARD PLAN RSP A24A

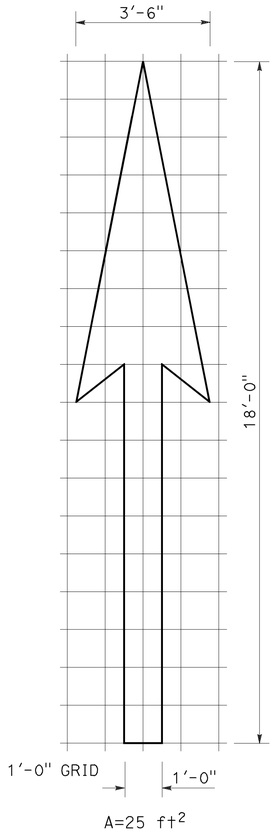

A=25 ft²

TYPE I 18'-0" ARROW

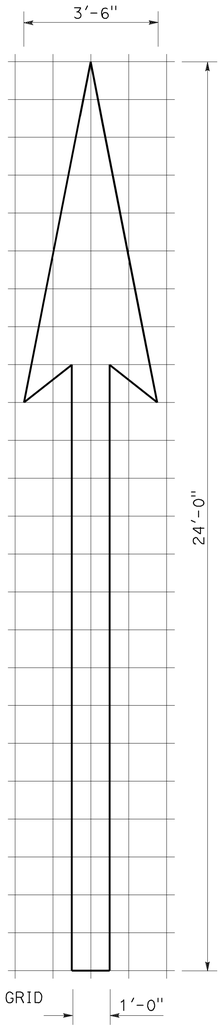

A=31 ft²

TYPE I 24'-0" ARROW

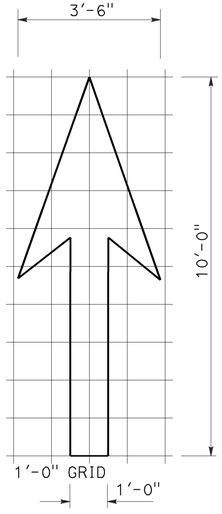

A=14 ft²

TYPE I 10'-0" ARROW

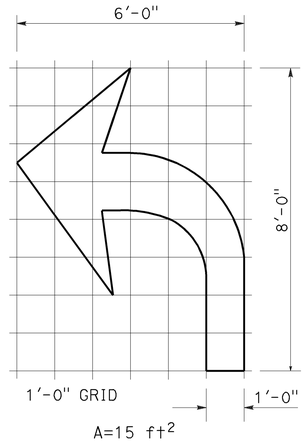

A=15 ft²

TYPE IV (L) ARROW

(For Type IV (R) arrow, use mirror image)

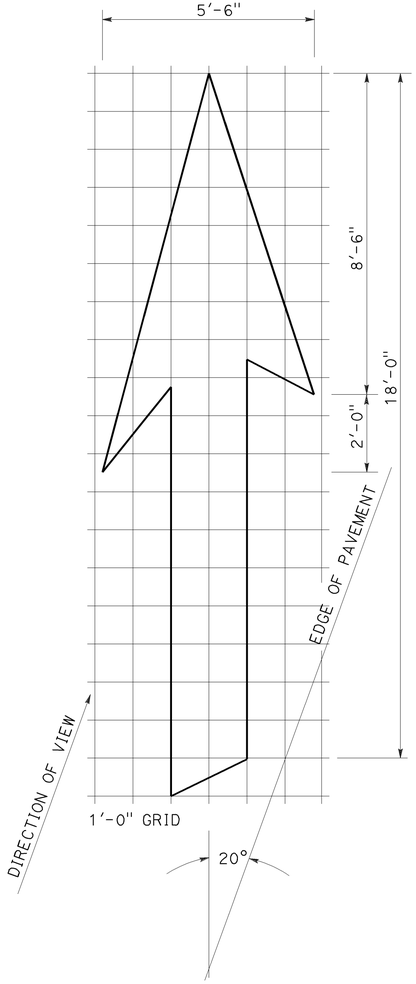

A=42 ft²

TYPE VI ARROW

Right lane drop arrow (For left lane, use mirror image)

A=3.5 ft²

BIKE LANE ARROW

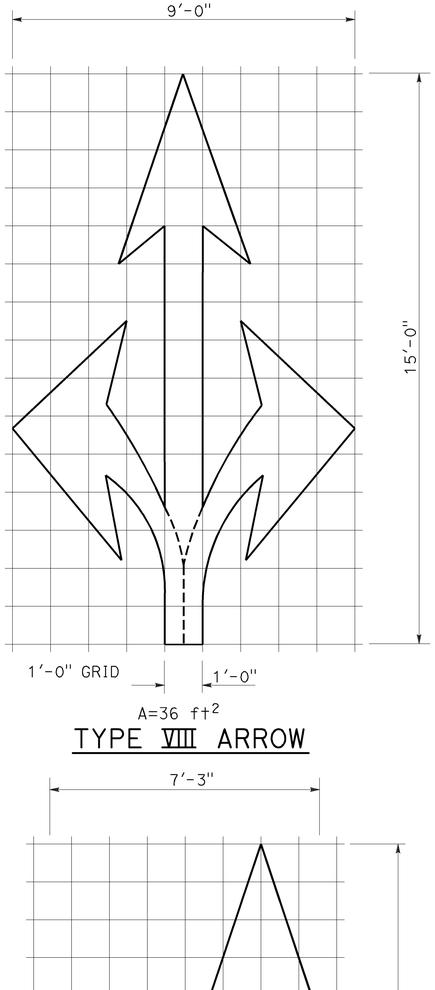

A=36 ft²

TYPE VIII ARROW

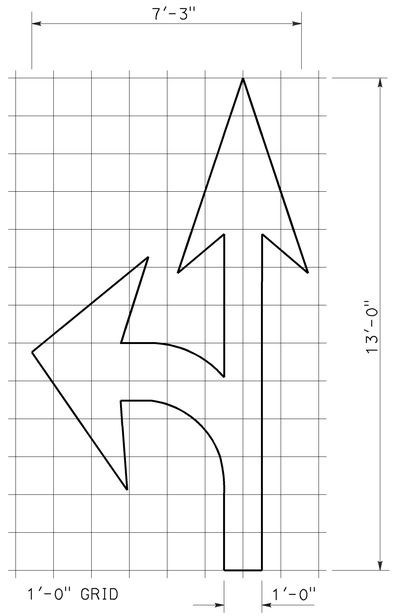

A=27 ft²

TYPE VII (L) ARROW

(For Type VII (R) arrow, use mirror image)

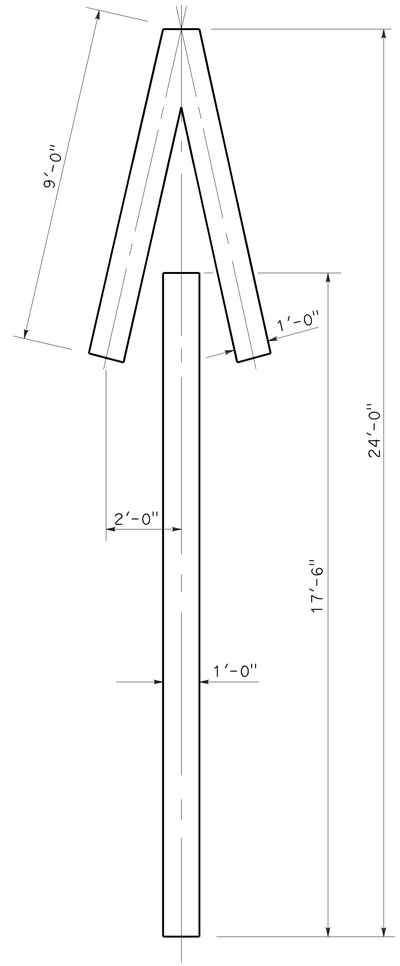

A=33 ft²

TYPE V ARROW

NOTE:
Minor variations in dimensions may be accepted by the Engineer.

STATE OF CALIFORNIA
DEPARTMENT OF TRANSPORTATION

PAVEMENT MARKINGS ARROWS

NO SCALE

RSP A24A DATED APRIL 20, 2012 SUPERSEDES STANDARD PLAN A24A DATED MAY 20, 2011 - PAGE 13 OF THE STANDARD PLANS BOOK DATED 2010.

REVISED STANDARD PLAN RSP A24A

3-14-12

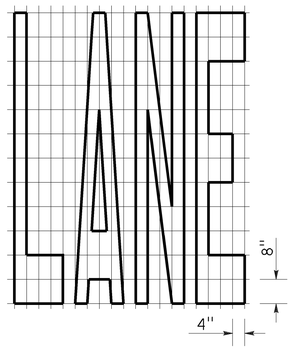

A=24 ft²

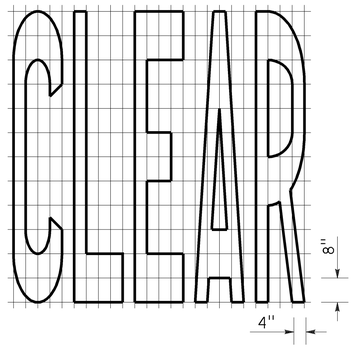

A=27 ft²

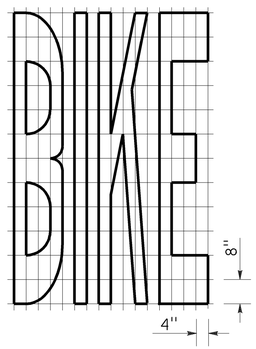

A=21 ft²

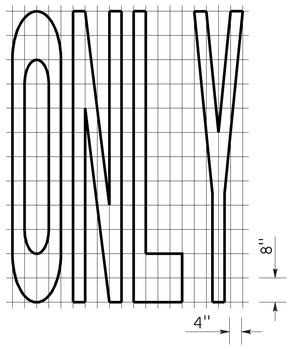

A=22 ft²

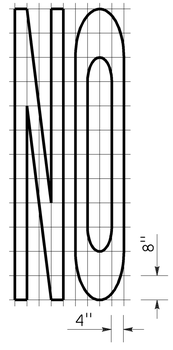

A=14 ft²

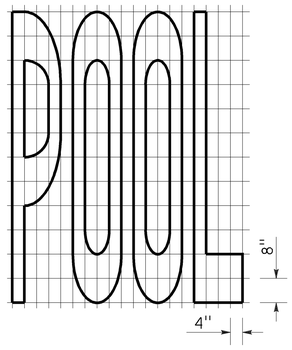

A=23 ft²

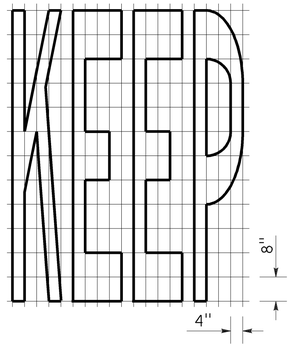

A=24 ft²

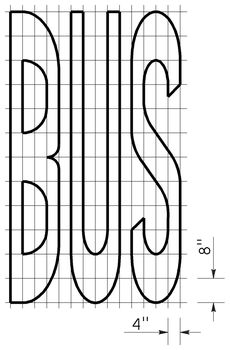

A=20 ft²

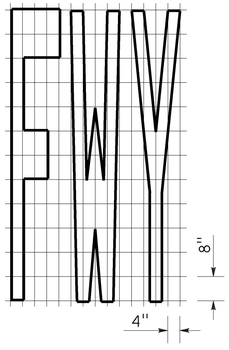

A=16 ft²

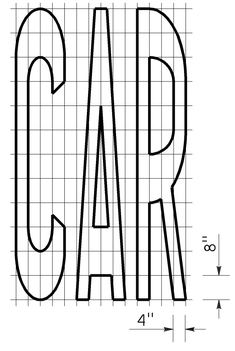

A=17 ft²

Dist	COUNTY	ROUTE	POST MILES TOTAL PROJECT	SHEET No.	TOTAL SHEETS
08	SBd	95	R57.2/80.5	17	29

Roberta L. McLaughlin
REGISTERED CIVIL ENGINEER

July 20, 2012
PLANS APPROVAL DATE

REGISTERED PROFESSIONAL ENGINEER
Roberta L. McLaughlin
No. C40375
Exp. 3-31-13
CIVIL
STATE OF CALIFORNIA

THE STATE OF CALIFORNIA OR ITS OFFICERS OR AGENTS SHALL NOT BE RESPONSIBLE FOR THE ACCURACY OR COMPLETENESS OF SCANNED COPIES OF THIS PLAN SHEET.

TO ACCOMPANY PLANS DATED 8-14-15

WORD MARKINGS			
ITEM	ft²	ITEM	ft²
LANE	24	NO	14
POOL	23	BIKE	21
CAR	17	BUS	20
CLEAR	27	ONLY	22
KEEP	24	FWY	16

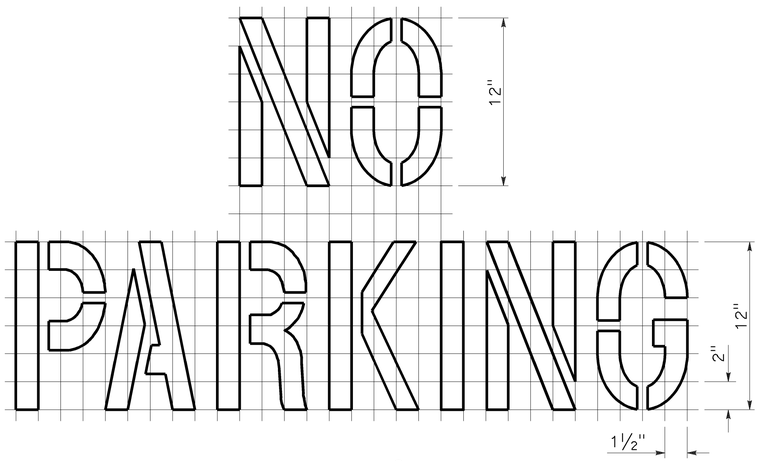

A=2 ft²
See Notes 6 and 7

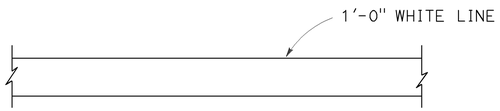

LIMIT LINE (STOP LINE)

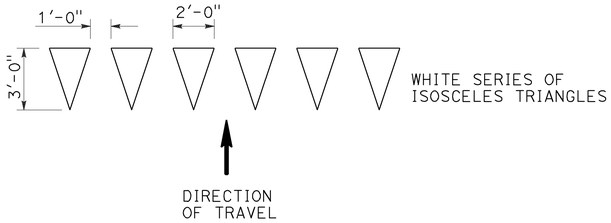

YIELD LINE

NOTES:

1. If a message consists of more than one word, it should read "UP", i.e., the first word should be nearest the driver.
2. The space between words should be at least four times the height of the characters for low speed roads, but not more than ten times the height of the characters. The space may be reduced appropriately where there is limited space because of local conditions.
3. Minor variations in dimensions may be accepted by the Engineer.
4. Portions of a letter, number or symbol may be separated by connecting segments not to exceed 2" in width.
5. The words "NO PARKING" pavement marking is to be used for parking facilities. For typical locations of markings, see Standard Plans A90A and A90B.
6. The words "NO PARKING", shall be painted in white letters no less than 1'-0" high on a contrasting background and located so that it is visible to traffic enforcement officials.

STATE OF CALIFORNIA
DEPARTMENT OF TRANSPORTATION

PAVEMENT MARKINGS WORDS, LIMIT AND YIELD LINES

NO SCALE

RSP A24E DATED JULY 20, 2012 SUPERSEDES STANDARD PLAN A24E
DATED MAY 20, 2011 - PAGE 17 OF THE STANDARD PLANS BOOK DATED 2010.

REVISED STANDARD PLAN RSP A24E

2010 REVISED STANDARD PLAN RSP A24E

6-12-12

Dist	COUNTY	ROUTE	POST MILES TOTAL PROJECT	SHEET No.	TOTAL SHEETS
08	SBd	95	R57.2/80.5	18	29

REGISTERED CIVIL ENGINEER

July 19, 2013
PLANS APPROVAL DATE

REGISTERED PROFESSIONAL ENGINEER
Gurinderpal Bhullar
No. C48815
Exp. 9-30-14
CIVIL
STATE OF CALIFORNIA

THE STATE OF CALIFORNIA OR ITS OFFICERS OR AGENTS SHALL NOT BE RESPONSIBLE FOR THE ACCURACY OR COMPLETENESS OF SCANNED COPIES OF THIS PLAN SHEET.

TO ACCOMPANY PLANS DATED 8-14-15

TABLE 1

TAPER LENGTH CRITERIA AND CHANNELIZING DEVICE SPACING

SPEED (S)	MINIMUM TAPER LENGTH * FOR WIDTH OF OFFSET 12 FEET (W)				MAXIMUM CHANNELIZING DEVICE SPACING		
					X	Y	Z **
	TANGENT 2L	MERGING L	SHIFTING L/2	SHOULDER L/3	TAPER	TANGENT	CONFLICT
mph	ft	ft	ft	ft	ft	ft	ft
20	160	80	40	27	20	40	10
25	250	125	63	42	25	50	12
30	360	180	90	60	30	60	15
35	490	245	123	82	35	70	17
40	640	320	160	107	40	80	20
45	1080	540	270	180	45	90	22
50	1200	600	300	200	50	100	25
55	1320	660	330	220	55	110	27
60	1440	720	360	240	60	120	30
65	1560	780	390	260	65	130	32
70	1680	840	420	280	70	140	35

* - For other offsets, use the following merging taper length formula for L:
For speed of 40 mph or less, $L = WS^2/60$
For speed of 45 mph or more, $L = WS$

Where: L = Taper length in feet
W = Width of offset in feet
S = Posted speed limit, off-peak 85th-percentile speed prior to work starting, or the anticipated operating speed in mph

** - Use for taper and tangent sections where there are no pavement markings or where there is a conflict between existing pavement markings and channelizers (CA).

TABLE 2

LONGITUDINAL BUFFER SPACE AND FLAGGER STATION SPACING

SPEED *	Min D **	DOWNGRADE Min D ***		
		-3%	-6%	-9%
mph	ft	ft	ft	ft
20	115	116	120	126
25	155	158	165	173
30	200	205	215	227
35	250	257	271	287
40	305	315	333	354
45	360	378	400	427
50	425	446	474	507
55	495	520	553	593
60	570	598	638	686
65	645	682	728	785
70	730	771	825	891

* - Speed is posted speed limit, off-peak 85th-percentile speed prior to work starting, or the anticipated operating speed in mph

** - Longitudinal buffer space or flagger station spacing

*** - Use on sustained downgrade steeper than -3 percent and longer than 1 mile.

TABLE 3

ADVANCE WARNING SIGN SPACING

ROAD TYPE	DISTANCE BETWEEN SIGNS *		
	A	B	C
	ft	ft	ft
URBAN - 25 mph OR LESS	100	100	100
URBAN - MORE THAN 25 mph TO 40 mph	250	250	250
URBAN - MORE THAN 40 mph	350	350	350
RURAL	500	500	500
EXPRESSWAY / FREEWAY	1000	1500	2640

* - The distances are approximate, are intended for guidance purposes only, and should be applied with engineering judgment. These distances should be adjusted by the Engineer for field conditions, if necessary, by increasing or decreasing the recommmended distances.

2010 REVISED STANDARD PLAN RSP T9

STATE OF CALIFORNIA
DEPARTMENT OF TRANSPORTATION

TRAFFIC CONTROL SYSTEM TABLES FOR LANE AND RAMP CLOSURES

NO SCALE

RSP T9 DATED JULY 19, 2013 SUPERSEDES RSP T9 DATED APRIL 19, 2013 THAT SUPPLEMENTS THE STANDARD PLANS BOOK DATED 2010.

REVISED STANDARD PLAN RSP T9

4-30-13

Dist	COUNTY	ROUTE	POST MILES TOTAL PROJECT	SHEET No.	TOTAL SHEETS
08	SBd	95	R57.2/80.5	19	29

Devinder Singh
REGISTERED CIVIL ENGINEER

October 17, 2014
PLANS APPROVAL DATE

REGISTERED PROFESSIONAL ENGINEER — Devinder Singh — No. C50470 — Exp. 6-30-15 — CIVIL — STATE OF CALIFORNIA

THE STATE OF CALIFORNIA OR ITS OFFICERS OR AGENTS SHALL NOT BE RESPONSIBLE FOR THE ACCURACY OR COMPLETENESS OF SCANNED COPIES OF THIS PLAN SHEET.

TO ACCOMPANY PLANS DATED 8-14-15

NOTES:

See Revised Standard Plan RSP T9 for tables.

Use cone spacing X for taper segment, Y for tangent segment or Z for conflict situations, as approriate, per Table 1, unless X, Y, or Z cone spacing is shown on this sheet.

Unless otherwise specified in the special provisions, all temporary warning signs shall have black legend on fluorescent orange background.

California codes are designated by (CA). Otherwise, Federal (MUTCD) codes are shown.

TYPICAL LANE CLOSURE WITH REVERSIBLE CONTROL

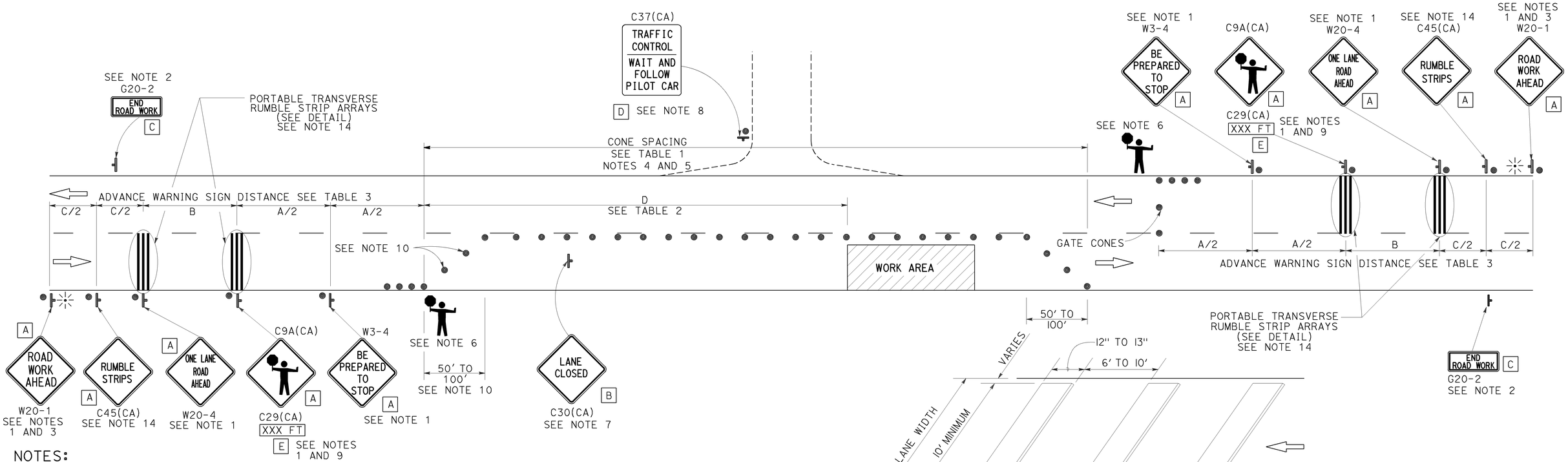

NOTES:

1. Each advance warning sign in each direction of travel shall be equipped with at least two flags for daytime closure. Each flag shall be at least 16" x 16" in size and shall be orange or fluorescent red-orange in color. Flashing beacons shall be placed at the locations indicated for lane closure during hours of darkness.
2. A G20-2 "END ROAD WORK" sign, as appropriate, shall be placed at the end of the lane control unless the end of work area is obvious, or ends within a larger project's limits.
3. If the W20-1 sign would follow within 2000' of a stationary W20-1 or G20-1 "ROAD WORK NEXT _____ MILES", use a W20-4 sign for the first advance warning sign.
4. All cones used for lane closures during the hours of darkness shall be fitted with retroreflective bands (or sleeves) as specified in the specifications.
5. Portable delineators, placed at one-half the spacing indicated for traffic cones, may be used instead of cones for daytime closures only.
6. Additional advance flaggers may be required. Flagger should stand in a conspicuous place, be visible to approaching traffic as well as approaching vehicles after the first vehicle has stopped. During the hours of darkness, the flagging-station and flagger shall be illuminated and clearly visible to approaching traffic. The illumination footprint of the lighting on the ground shall be at least 20' in diameter. Place a minimum of four cones at 50' intervals in advance of flagger station as shown.
7. Place C30(CA) "LANE CLOSED" sign at 500' to 1000' intervals throughout extended work areas. They are optional if the work area is visible from the flagger station.
8. When a pilot car is used, place a C37(CA) "TRAFFIC CONTROL-WAIT AND FOLLOW PILOT CAR" sign with black legend on white background at all intersections, driveways and alleys without a flagger within traffic control area. Signs shall be clean and visible at all times. Where traffic can not be effectively self-regulated, at least one flagger shall be used at each intersection within traffic control area.
9. An optional C29(CA) sign may be placed below the C9A(CA) sign.
10. Either traffic cones or barricades shall be placed on the taper. Barricades shall be Type I, II, or III.
11. The color of the portable transverse rumble strips shall be black or orange. Use 2 arrays, each array shall consist of 3 rumble strips.
12. Portable transverse rumble strips shall not be placed on sharp horizontal or vertical curves nor shall they be placed through pedestrian crossings.
13. If the portable transverse rumble strips become out of alignment (skewed) by more than 6 inches, measured from one end to the other, they shall be readjusted to bring the placement back to the original location.
14. Portable transverse rumble strips are not required if any one of the following conditions is satisfied:
    A. Work duration occupies a location for four hours or less
    B. Posted speed limit is below 45 MPH
    C. Work is of emergency nature
    D. Work zone is in snow or icy weather conditions

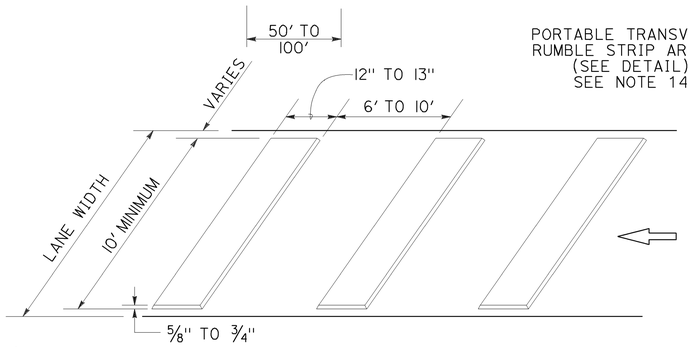

PORTABLE TRANSVERSE RUMBLE STRIP ARRAY DETAIL

LEGEND

- TRAFFIC CONE
- TEMPORARY TRAFFIC CONTROL SIGN
- PORTABLE FLASHING BEACON
- FLAGGER

SIGN PANEL SIZE (Min)

A	48" x 48"
B	30" x 30"
C	36" x 18"
D	36" x 42"
E	20" x 7"

STATE OF CALIFORNIA
DEPARTMENT OF TRANSPORTATION

TRAFFIC CONTROL SYSTEM FOR LANE CLOSURE ON TWO LANE CONVENTIONAL HIGHWAYS

NO SCALE

RSP T13 DATED OCTOBER 17, 2014 SUPERSEDES RSP T13 DATED JULY 18, 2014 AND RSP T13 DATED APRIL 19, 2013 AND STANDARD PLAN T13 DATED MAY 20, 2011 - PAGE 241 OF THE STANDARD PLANS BOOK DATED 2010.

REVISED STANDARD PLAN RSP T13

2010 REVISED STANDARD PLAN RSP T13

9-26-14

Dist	COUNTY	ROUTE	POST MILES TOTAL PROJECT	SHEET No.	TOTAL SHEETS
08	SBd	95	R57.2/80.5	20	29

REGISTERED CIVIL ENGINEER

April 19, 2013
PLANS APPROVAL DATE

REGISTERED PROFESSIONAL ENGINEER
Gurinderpal Bhullar
No. C48815
Exp. 9-30-14
CIVIL
STATE OF CALIFORNIA

THE STATE OF CALIFORNIA OR ITS OFFICERS OR AGENTS SHALL NOT BE RESPONSIBLE FOR THE ACCURACY OR COMPLETENESS OF SCANNED COPIES OF THIS PLAN SHEET.

TO ACCOMPANY PLANS DATED 8-14-15

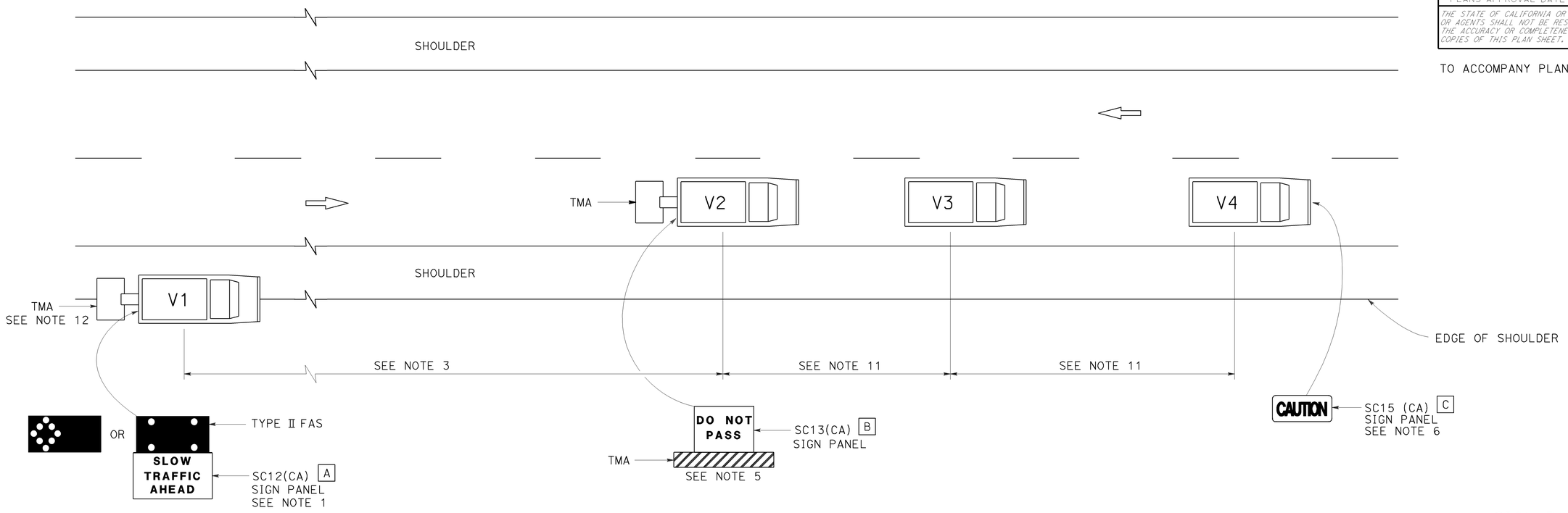

NOTES:

1. Either a changeable message sign or a SC12(CA) "SLOW TRAFFIC AHEAD" sign shall be mounted on the rear of sign vehicle V1. The changeable message sign shall be sequenced to show the "CAUTION" message first, follow by the "SLOW TRAFFIC AHEAD" message. A Type II flashing arrow sign may be used with the SC12(CA) sign panel.
2. Sign vehicle V1 should be positioned where highly visible when shoulders are not available.
3. If traffic queues develop, sign vehicle V1 should be positioned upstream from the end of queue.
4. Vehicle-mounted sign panels shall have Type III or above retroreflective sheeting, black on white, or black on fluorescent orange, with 6" minimum series D letters per Caltrans sign specifications.
5. Shadow vehicle shall be equipped with a truck-mounted attenuator. The sign panel shown shall be mounted on the rear of shadow vehicle V2. The message "LANE CLOSED" may be used in place of the "DO NOT PASS" message.
6. The sign panel shown shall be mounted on the front of sign vehicle V4, facing opposing traffic.
7. All vehicles shall be equipped with flashing or rotating amber lights.
8. Sign vehicle V4 will not be required when the work and vehicles V2 and V3 are 2′ or more from the centerline of the highway during the work or application operations.
9. All vehicles used for lane closures shall be equipped with two-way radios and the vehicle operators shall maintain communication during the work or application operation.
10. This plan shall not be used where workers would be on foot in the work area. Use a stationary type lane closure (Revised Standard Plan T13) for this condition.
11. Minimize spacing between vehicles V2 and V3 and vehicles V3 and V4 to deter road users from driving in between them.
12. If sign vehicle V1 encroaches into the traffic lane due to insufficient shoulder width, sign vehicle V1 shall be equipped with a truck-mounted attenuator. Sign vehicle V1 shall stay as close to the edge of shoulder as practicable.

LEGEND

V1	SIGN VEHICLE
V2	SHADOW VEHICLE
V3	WORK/APPLICATION VEHICLE
V4	SIGN VEHICLE
TMA	TRUCK-MOUNTED ATTENUATOR
	FLASHING ARROW SIGN (FAS) IN FLASHING CAUTION MODE
	FLASHING ARROW SIGN (FAS) IN ALTERNATING DIAMOND CAUTION

SIGN PANEL SIZE (Min)

A	72" x 42"
B	54" x 42"
C	54" x 24"

STATE OF CALIFORNIA
DEPARTMENT OF TRANSPORTATION

TRAFFIC CONTROL SYSTEM FOR MOVING LANE CLOSURE ON TWO LANE HIGHWAYS

NO SCALE

RSP T17 DATED APRIL 19, 2013 SUPERSEDES STANDARD PLAN T17
DATED MAY 20, 2011 - PAGE 245 OF THE STANDARD PLANS BOOK DATED 2010.

REVISED STANDARD PLAN RSP T17

2010 REVISED STANDARD PLAN RSP T17

12-18-12

LEGEND:

AB	ABANDON. IF APPLIED TO CONDUIT, REMOVE CONDUCTORS
BC	INSTALL PULL BOX IN EXISTING CONDUIT RUN
BP	PEDESTRIAN BARRICADE, TYPE AS INDICATED ON PLAN
CB	INSTALL CONDUIT INTO EXISTING PULL BOX
CC	CONNECT NEW AND EXISTING CONDUIT. REMOVE EXISTING CONDUCTORS AND INSTALL CONDUCTORS AS INDICATED
CF	CONDUIT TO REMAIN FOR FUTURE USE. REMOVE CONDUCTORS. INSTALL PULL TAPE
DH	DETECTOR HANDHOLE
FA	FOUNDATION TO BE ABANDONED
IS	INSTALL SIGN ON SIGNAL MAST ARM
NS	NO SLIP BASE ON STANDARD
PEC	PHOTOELECTRIC CONTROL
PEU	PHOTOELECTRIC UNIT
RC	EQUIPMENT OR MATERIAL TO BE REMOVED AND BECOME THE PROPERTY OF THE CONTRACTOR
RE	REMOVE ELECTROLIER, FUSES AND BALLAST. TAPE ENDS OF CONDUCTORS
RL	RELOCATE EQUIPMENT
RR	REMOVE AND REUSE EQUIPMENT
RS	REMOVE AND SALVAGE EQUIPMENT
SC	SPLICE NEW TO EXISTING CONDUCTORS
SD	SERVICE DISCONNECT
TSP	TELEPHONE SERVICE POINT

ABBREVIATIONS

APS	ACCESSIBLE PEDESTRIAN SIGNAL
BBS	BATTERY BACKUP SYSTEM
BC	BOLT CIRCLE
BPB	BICYCLE PUSH BUTTON
C	CONDUIT
CB	CIRCUIT BREAKER
CCTV	CLOSED CIRCUIT TELEVISION
Ckt	CIRCUIT
CMS	CHANGEABLE MESSAGE SIGN
Ctid	CALTRANS IDENTIFICATION
Comm	COMMUNICATION
DLC	LOOP DETECTOR LEAD-IN CABLE
EMS	EXTINGUISHABLE MESSAGE SIGN
EVUC	EMERGENCY VEHICLE UNIT CABLE
EVUD	EMERGENCY VEHICLE UNIT DETECTOR
FB	FLASHING BEACON
FBCA	FLASHING BEACON CONTROL ASSEMBLY
FBS	FLASHING BEACON WITH SLIP BASE
FO	FIBER OPTIC
G	EQUIPMENT GROUNDING CONDUCTOR
GB	GROUND BUS
GFCI	GROUND FAULT CIRCUIT INTERRUPTER
HAR	HIGHWAY ADVISORY RADIO
Hex	HEXAGONAL
HPS	HIGH PRESSURE SODIUM
IISNS	INTERNALLY ILLUMINATED STREET NAME SIGN
ISL	INDUCTION SIGN LIGHTING
LED	LIGHT EMITTING DIODE
LMA	LUMINAIRE MAST ARM
LPS	LOW PRESSURE SODIUM
Ltg	LIGHTING
Lum	LUMINAIRE
M	METERED
MAT	MAST ARM MOUNTING TOP ATTACHMENT
MAS	MAST ARM MOUNTING SIDE ATTACHMENT
M/M	MULTIPLE TO MULTIPLE TRANSFORMER
Mtg	MOUNTING
MV	MERCURY VAPOR LIGHTING FIXTURE
MVDS	MICROWAVE VEHICLE DETECTION SYSTEM
N	NEUTRAL (GROUNDED CONDUCTOR)
NB	NEUTRAL BUS
NC	NORMALLY CLOSE
NO	NORMALLY OPEN
P	CIRCUIT BREAKER'S POLE
PB	PULL BOX
PBA	PUSH BUTTON ASSEMBLY
PEC	PHOTOELECTRIC CONTROL
Ped	PEDESTRIAN
PEU	PHOTOELECTRIC UNIT
PT	CONDUIT WITH PULL TAPE
RE	RELOCATED EQUIPMENT
RM	RAMP METERING
RWIS	ROADSIDE WEATHER INFORMATION SYSTEM
SB	SLIP BASE
SIC	SIGNAL INTERCONNECT CABLE
Sig	SIGNAL
SMA	SIGNAL MAST ARM
SNS	STREET NAME SIGN
SP	SERVICE POINT
TDC	TELEPHONE DEMARCATION CABINET
TMS	TRAFFIC MONITORING STATION
TOS	TRAFFIC OPERATIONS SYSTEM
Veh	VEHICLE
VIVDS	VIDEO IMAGE VEHICLE DETECTION SYSTEM
WIM	WEIGH-IN-MOTION
Xfmr	TRANSFORMER

Dist	COUNTY	ROUTE	POST MILES TOTAL PROJECT	SHEET No.	TOTAL SHEETS
08	SBd	95	R57.2/80.5	21	29

Theresa Gabriel
REGISTERED ELECTRICAL ENGINEER

Theresa Aziz Gabriel No. E15129 Exp. 6-30-14 ELECTRICAL — REGISTERED PROFESSIONAL ENGINEER — STATE OF CALIFORNIA

July 19, 2013
PLANS APPROVAL DATE

THE STATE OF CALIFORNIA OR ITS OFFICERS OR AGENTS SHALL NOT BE RESPONSIBLE FOR THE ACCURACY OR COMPLETENESS OF SCANNED COPIES OF THIS PLAN SHEET.

TO ACCOMPANY PLANS DATED 8-14-15

SOFFIT AND WALL MOUNTED LUMINAIRES

- PENDANT, 70 W HPS UNLESS OTHERWISE SPECIFIED
- FLUSH, 70 W HPS UNLESS OTHERWISE SPECIFIED
- WALL SURFACE, 70 W HPS UNLESS OTHERWISE SPECIFIED
- EXISTING SOFFIT OR WALL LUMINAIRE TO REMAIN UNMODIFIED
- (M) EXISTING SOFFIT OR WALL LUMINAIRE TO BE MODIFIED AS SPECIFIED

NOTE:
Arrow indicates "street side" of luminaire.

COMMONLY USED SYMBOLS FOR UNITED STATES CUSTOMARY UNITS OF MEASUREMENT:

SYMBOL USED	DEFINITIONS
Ω	OHMS
min	MINUTE
s	SECOND
bps	BITS PER SECOND
Bps	BYTES PER SECOND
A	AMPERE
V	VOLT
V(dc)	VOLT (DIRECT CURRENT)
V(ac)	VOLT (ALTERNATING CURRENT)
FC	FOOT - CANDLE
W	WATTS
VA	VOLT-AMPERE
M	MEGA
k	KILO
m	MILLI
μ	MICRO
P	PICO
Hz	HERTZ

MISCELLANEOUS ELECTROLIERS

NEW	EXISTING	
		LUMINAIRE ON WOOD POLE
		NON-STANDARD ELECTROLIER (SEE PROJECT NOTES OR PROJECT PLANS)
		CITY ELECTROLIER
		ELECTROLIER FOUNDATION (FUTURE INSTALLATION)

NOTES:

1. HPS luminaires shall be 310 W HPS when installed on Type 21, 21D, 30, 31 and 32 Standards, unless otherwise specified. HPS luminaires shall be 200 W when installed on other type standards or poles, unless otherwise specified.
2. LED luminaires shall be 235 W when installed on Type 21, 21D, 30, 31 and 32 Standards, unless otherwise specified. LED luminaires shall be 165 W when installed on other type standards or poles, unless otherwise specified.
3. Luminaires shall be the cutoff type, ANSI Type III medium cutoff lighting distribution, unless otherwise specified.

STANDARD ELECTROLIER

NEW	EXISTING	STANDARD TYPE
		15
		15D
		15 STRUCTURE
		15D STRUCTURE
		21
		21D
		21 STRUCTURE
		21D STRUCTURE
		30
		31
		32

STATE OF CALIFORNIA
DEPARTMENT OF TRANSPORTATION

ELECTRICAL SYSTEMS (LEGEND AND ABBREVIATIONS)

NO SCALE

RSP ES-1A DATED JULY 19, 2013 SUPERSEDES STANDARD PLAN ES-1A DATED MAY 20, 2011 - PAGE 425 OF THE STANDARD PLANS BOOK DATED 2010.

REVISED STANDARD PLAN RSP ES-1A

2010 REVISED STANDARD PLAN RSP ES-1A

7-15-13

Dist	COUNTY	ROUTE	POST MILES TOTAL PROJECT	SHEET No.	TOTAL SHEETS
08	SBd	95	R57.2/80.5	22	29

Theresa Gabriel
REGISTERED ELECTRICAL ENGINEER

July 19, 2013
PLANS APPROVAL DATE

Theresa Aziz Gabriel No. E15129 Exp. 6-30-14 ELECTRICAL — REGISTERED PROFESSIONAL ENGINEER — STATE OF CALIFORNIA

THE STATE OF CALIFORNIA OR ITS OFFICERS OR AGENTS SHALL NOT BE RESPONSIBLE FOR THE ACCURACY OR COMPLETENESS OF SCANNED COPIES OF THIS PLAN SHEET.

TO ACCOMPANY PLANS DATED 8-14-15

CONDUIT

NEW	EXISTING	
		LIGHTING CONDUIT, UNLESS OTHERWISE INDICATED OR NOTED
		TRAFFIC SIGNAL CONDUIT
C	c	COMMUNICATION CONDUIT
T	t	TELEPHONE CONDUIT
F	f	FIRE ALARM CONDUIT
FO	fo	FIBER OPTIC CONDUIT
		CONDUIT TERMINATION
R	r	CONDUIT RISER ATTACHED TO THE STRUCTURE OR SERVICE POLE

SERVICE EQUIPMENT

NEW	EXISTING	
OH	oh	OVERHEAD LINES
U	U	WOOD POLE, "U" INDICATES UTILITY OWNED
		POLE GUY WITH ANCHOR
		UTILITY TRANSFORMER - GROUND MOUNTED
III	III	SERVICE EQUIPMENT ENCLOSURE TYPE. DOOR INDICATES FRONT OF ENCLOSURE
T	t	TELEPHONE DEMARCATION CABINET

POLE-MOUNTED SERVICE DESIGNATION

TYPE H SERVICE, 28'-10" — TYPE OF INSTALLATION AND POLE HEIGHT ABOVE GRADE

FLASHING BEACON

NEW	EXISTING	
R	R	FLASHING BEACON (ONE VEHICLE SIGNAL HEAD WITH BACKPLATE AND VISOR) "R" INDICATES RED INDICATION, "Y" INDICATES YELLOW INDICATION
Y Y	Y Y	FLASHING BEACON WITH TYPE 15-FBS STANDARD AND A SIGN.
R R	R R	FLASHING BEACON WITH TYPES 9, 9A OR 9B SIGN UNLESS OTHERWISE SPECIFIED OR INDICATED

SIGNAL EQUIPMENT

NEW	EXISTING	
C	C	PEDESTRIAN SIGNAL HEAD "C" INDICATES COUNTDOWN PEDESTRIAN HEAD
		PUSH BUTTON ASSEMBLY POST
		PEDESTRIAN BARRICADE
		VEHICLE SIGNAL HEAD (WITH BACKPLATE AND 3-SECTIONS: RED, YELLOW AND GREEN)
		VEHICLE SIGNAL HEAD WITH ANGLE VISOR
PV	PV	MODIFICATIONS OF BASIC SYMBOL: "L" INDICATES ALL NON-ARROW SECTIONS LOUVERED "LG" INDICATES LOUVERED GREEN SECTION ONLY "PV" INDICATES ALL 12" SECTIONS PROGRAMMED VISIBILITY "8" INDICATES ALL 8" SECTIONS (ONLY WHEN SPECIFIED)
		VEHICLE SIGNAL HEAD CONSISTING OF RED, YELLOW AND GREEN LEFT ARROW SECTIONS
		VEHICLE SIGNAL HEAD CONSISTING OF RED AND YELLOW SECTIONS WITH AN UP GREEN ARROW SECTION
		VEHICLE SIGNAL HEAD (5 SECTION) CONSISTING OF RED, YELLOW AND GREEN SECTIONS WITH YELLOW AND GREEN RIGHT ARROW SECTIONS
		TYPE 15TS STANDARD WITH VEHICLE SIGNAL HEAD AND LUMINAIRE
		TYPE 21TS STANDARD WITH VEHICLE SIGNAL HEAD AND LUMINAIRE
		STANDARD WITH LUMINAIRE AND SIGNAL MAST ARMS AND ATTACHED VEHICLE SIGNAL HEADS
		TYPE 1 STANDARD WITH ATTACHED VEHICLE SIGNAL HEADS
		STANDARD WITH A SIGNAL MAST ARM, ATTACHED VEHICLE SIGNAL HEADS AND INTERNALLY ILLUMINATED STREET NAME SIGN
		CONTROLLER ASSEMBLY. DOOR INDICATES FRONT OF CABINET

SIGNAL EQUIPMENT Cont

NEW	EXISTING	
		GUARD POST
		TYPE 1 STANDARD WITH RAMP METERING SIGN
		OPTICAL DETECTOR FOR THE EMERGENCY VEHICLE DETECTION SYSTEM

NOTES:

1. All signal sections shall be 12" unless shown otherwise.
2. Signal heads shall be provided with backplates unless shown otherwise.

ILLUMINATED OVERHEAD SIGN

NEW	EXISTING	
		SINGLE POST, SINGLE ILLUMINATED SIGN, BALANCED BUTTERFLY
		SINGLE POST, DOUBLE ILLUMINATED SIGN, BALANCED BUTTERFLY
		SINGLE POST, SINGLE ILLUMINATED SIGN, FULL CANTILEVER
		DOUBLE POST, SINGLE ILLUMINATED SIGN
		SINGLE ILLUMINATED SIGN MOUNTED ON STRUCTURE
		DOUBLE POST, SINGLE ILLUMINATED SIGN WITH ELECTROLIER

STATE OF CALIFORNIA
DEPARTMENT OF TRANSPORTATION

ELECTRICAL SYSTEMS (LEGEND AND ABBREVIATIONS)

NO SCALE

RSP ES-1B DATED JULY 19, 2013 SUPERSEDES STANDARD PLAN ES-1B DATED MAY 20, 2011 - PAGE 426 OF THE STANDARD PLANS BOOK DATED 2010.

REVISED STANDARD PLAN RSP ES-1B

2010 REVISED STANDARD PLAN RSP ES-1B

7-15-13

Dist	COUNTY	ROUTE	POST MILES TOTAL PROJECT	SHEET No.	TOTAL SHEETS
08	SBd	95	R57.2/80.5	23	29

Theresa Gabriel
REGISTERED ELECTRICAL ENGINEER

Theresa Aziz Gabriel No. E15129 Exp. 6-30-16 ELECTRICAL — REGISTERED PROFESSIONAL ENGINEER — STATE OF CALIFORNIA

October 30, 2015
PLANS APPROVAL DATE

THE STATE OF CALIFORNIA OR ITS OFFICERS OR AGENTS SHALL NOT BE RESPONSIBLE FOR THE ACCURACY OR COMPLETENESS OF SCANNED COPIES OF THIS PLAN SHEET.

TO ACCOMPANY PLANS DATED 8-14-15

EQUIPMENT IDENTIFICATION

ILLUMINATED SIGN IDENTIFICATION NUMBER:

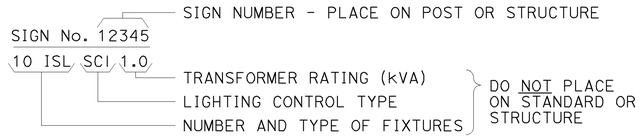

ELECTROLIER OR EQUIPMENT IDENTIFICATION NUMBER:

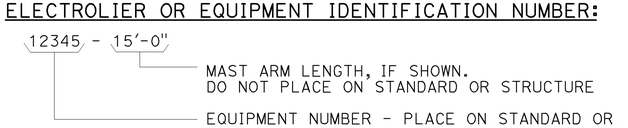

CONDUIT AND CONDUCTOR IDENTIFICATION:

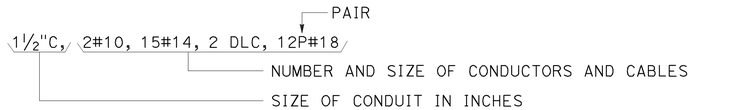

SIGNAL AND LIGHTING STANDARD (TYPICAL DESIGNATION):

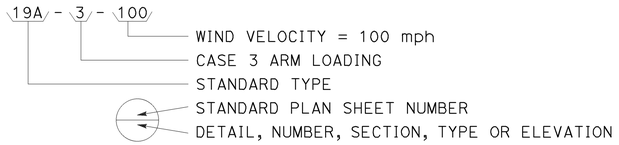

MISCELLANEOUS EQUIPMENT

NEW	EXISTING	
CMS	cms	CHANGEABLE MESSAGE SIGN
		CLOSED CIRCUIT TELEVISION CAMERA
		HIGHWAY ADVISORY RADIO POLE AND ANTENNA
EMS	ems	LED EXTINGUISHABLE MESSAGE SIGN
M V	m v	DETECTION DEVICE M = MICROWAVE SENSOR V = VIDEO IMAGE SENSOR

WIRING DIAGRAM LEGEND

	EXTERNAL CONDUCTOR
	CONDUCTOR OR BUS
	TIE POINT
	CONTACTOR COIL
	CONTACTOR, NO CONTACT
	TERMINAL BLOCKS
	CONTACTOR, NC CONTACT
	ENCLOSURE BOND
	GROUNDING ELECTRODE
	CIRCUIT BREAKER
	RECEPTACLE

PULL BOXES

NEW	EXISTING	
		PULL BOX, No. 5 UNLESS OTHERWISE INDICATED OR NOTED
3	9A(21)	PULL BOX, ADDITIONAL DESIGNATIONS OR DESCRIPTIONS

3 No. 3½ PULL BOX
5 No. 5 PULL BOX
6 No. 6 PULL BOX
7 No. 7 (CEILING PULL BOX)
8 No. 8 (PENDANT SOFFIT PULL BOX)
9 No. 9 PULL BOX
9A No. 9A PULL BOX

(C) COMMUNICATIONS PULL BOX
(E) PULL BOX WITH EXTENSION
(S) SPRINKLER CONTROL PULL BOX
(21) ANCHOR BOLTS AND CONDUIT FOR FUTURE INSTALLATION OF TYPE 21 STANDARD
(T) TRAFFIC PULL BOX

VEHICLE DETECTORS

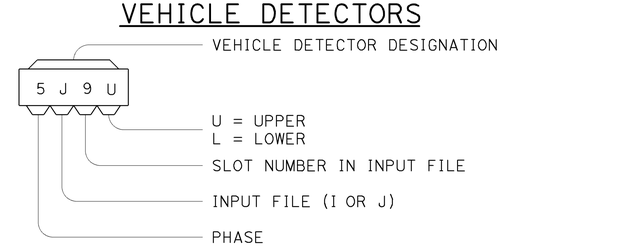

NEW	EXISTING	
		TYPE A LOOP DETECTOR. OUTLINE OF SAWCUT SHOWN
		TYPE B LOOP DETECTOR. OUTLINE OF SAWCUT SHOWN
		TYPE C LOOP DETECTOR. OUTLINE OF SAWCUT SHOWN
		TYPE D LOOP DETECTOR. OUTLINE OF SAWCUT SHOWN
		TYPE E LOOP DETECTOR. OUTLINE OF SAWCUT SHOWN
		TYPE Q LOOP DETECTOR. OUTLINE OF SAWCUT SHOWN
DH	dh	DETECTOR HANDHOLE
		MICROWAVE OR VIDEO DETECTION ZONE

STATE OF CALIFORNIA
DEPARTMENT OF TRANSPORTATION

ELECTRICAL SYSTEMS (LEGEND AND ABBREVIATIONS)

NO SCALE

RSP ES-1C DATED OCTOBER 30, 2015 SUPERSEDES RSP ES-1C DATED JULY 19, 2013 AND STANDARD PLAN ES-1C DATED MAY 20, 2011 - PAGE 427 OF THE STANDARD PLANS BOOK DATED 2010.

REVISED STANDARD PLAN RSP ES-1C

2010 REVISED STANDARD PLAN RSP ES-1C

8-19-15

NOTES:

1. Foundation shall be located to provide 2'-0" minimum clearance between face of curb and any portion of cabinet.
2. Controller units, plug-mounted equipment, shelf-mounted equipment and wall-mounted equipment shall be located to permit safe and easy removal or replacement without removing any other piece of equipment.
3. Cabinet fan may be installed at an alternate location near the top of the cabinet when approved by the Engineer.
4. Where telephone interconnect is required, a minimum of 5" clear vertical space shall be provided inside the cabinet for the equipment.
5. Telephone interconnect conductors shall be enclosed in a ¾"C or larger conduit through the foundation. Type 4 conduit shall be used to separate telephone and power conductors in cabinets.

Dist	COUNTY	ROUTE	POST MILES TOTAL PROJECT	SHEET No.	TOTAL SHEETS
08	SBd	95	R57.2/80.5	24	29

Theresa Gabriel
REGISTERED ELECTRICAL ENGINEER

Theresa Aziz Gabriel No. E15129 Exp. 6-30-16 ELECTRICAL — REGISTERED PROFESSIONAL ENGINEER — STATE OF CALIFORNIA

October 30, 2015
PLANS APPROVAL DATE

THE STATE OF CALIFORNIA OR ITS OFFICERS OR AGENTS SHALL NOT BE RESPONSIBLE FOR THE ACCURACY OR COMPLETENESS OF SCANNED COPIES OF THIS PLAN SHEET.

TO ACCOMPANY PLANS DATED 8-14-15

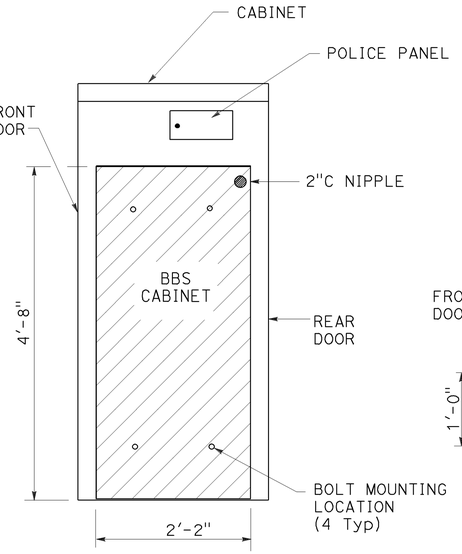

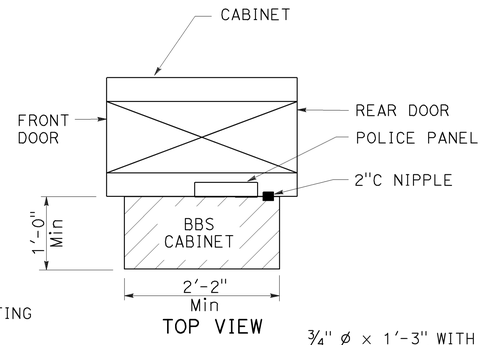

BBS CABINET MOUNTED TO THE MODEL 332L CABINET

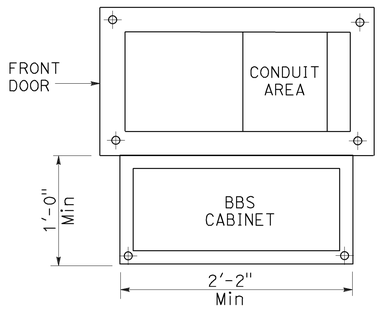

BASE PLAN FOR BBS MOUNTED TO THE MODEL 332L CABINET

(FOR DIMENSIONS AND DETAILS NOT SHOWN, SEE CABINET HOUSING DETAILS OF THE TRANSPORTATION ELECTRICAL EQUIPMENT SPECIFICATION (TEES))

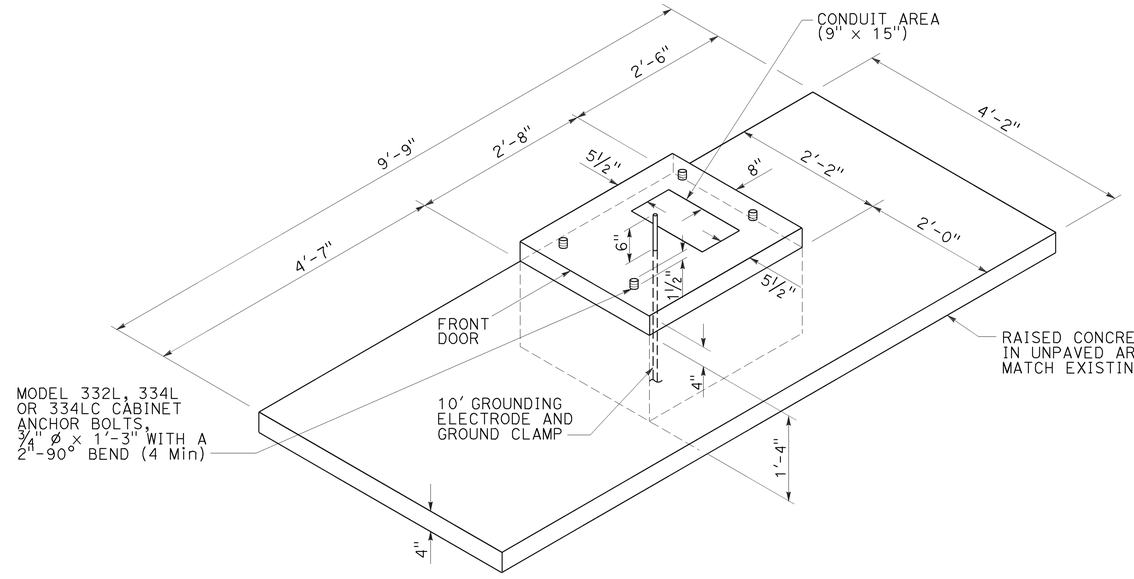

FOUNDATION AND PAD DETAIL

Model 332L, 334L and 334LC

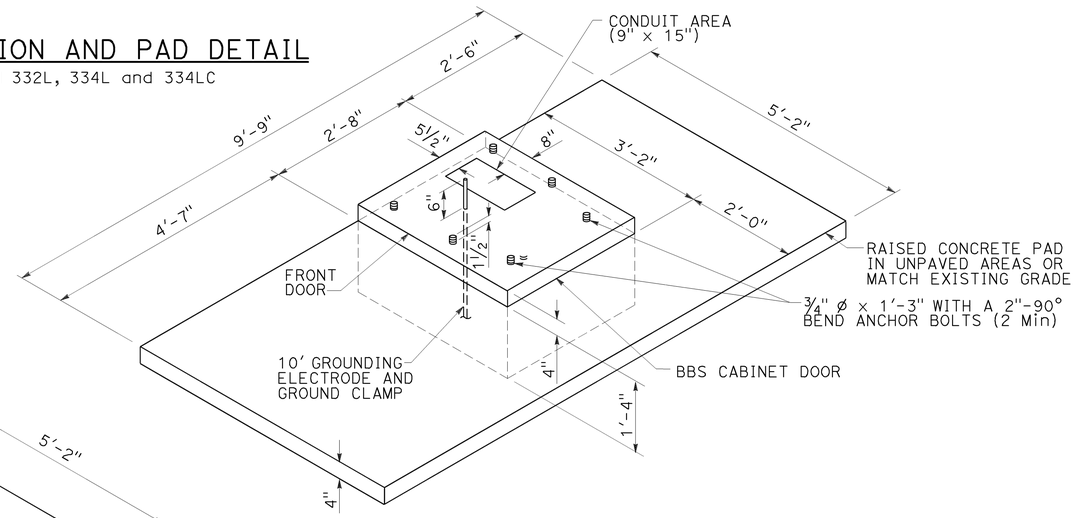

RIGHT SIDE INSTALLATION

DETAIL B

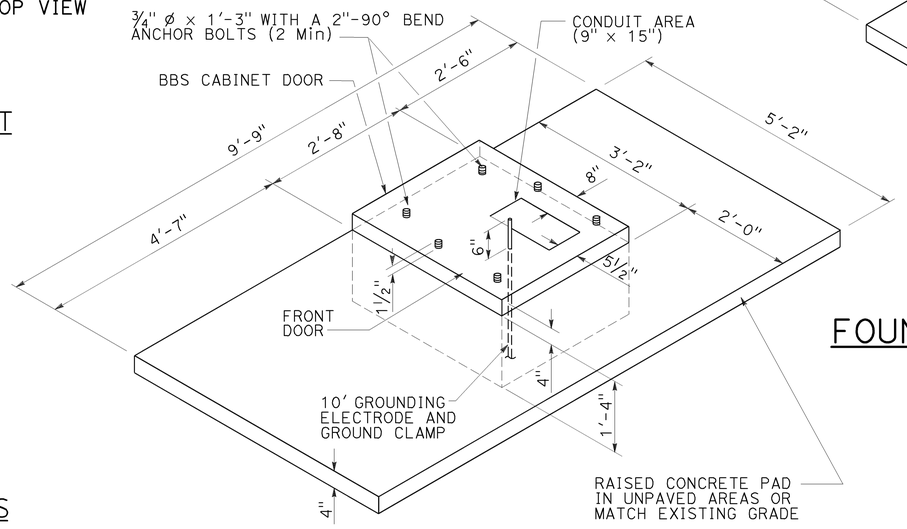

LEFT SIDE INSTALLATION

DETAIL A

MODIFIED MODEL 332L CABINET FOUNDATION DETAIL FOR BATTERY BACKUP SYSTEM

STATE OF CALIFORNIA
DEPARTMENT OF TRANSPORTATION

ELECTRICAL SYSTEMS (CONTROLLER CABINET FOUNDATION AND PAD DETAILS)

NO SCALE

RSP ES-3C DATED OCTOBER 30, 2015 SUPERSEDES STANDARD PLAN ES-3C DATED MAY 20, 2011 - PAGE 437 OF THE STANDARD PLANS BOOK DATED 2010.

REVISED STANDARD PLAN RSP ES-3C

2010 REVISED STANDARD PLAN RSP ES-3C

9-2-15

Dist	COUNTY	ROUTE	POST MILES TOTAL PROJECT	SHEET No.	TOTAL SHEETS
08	SBd	95	R57.2/80.5	25	29

Theresa Gabriel
REGISTERED ELECTRICAL ENGINEER

Theresa Aziz Gabriel
No. E15129
Exp. 6-30-16
ELECTRICAL
REGISTERED PROFESSIONAL ENGINEER
STATE OF CALIFORNIA

October 30, 2015
PLANS APPROVAL DATE

THE STATE OF CALIFORNIA OR ITS OFFICERS OR AGENTS SHALL NOT BE RESPONSIBLE FOR THE ACCURACY OR COMPLETENESS OF SCANNED COPIES OF THIS PLAN SHEET.

TO ACCOMPANY PLANS DATED 8-14-15

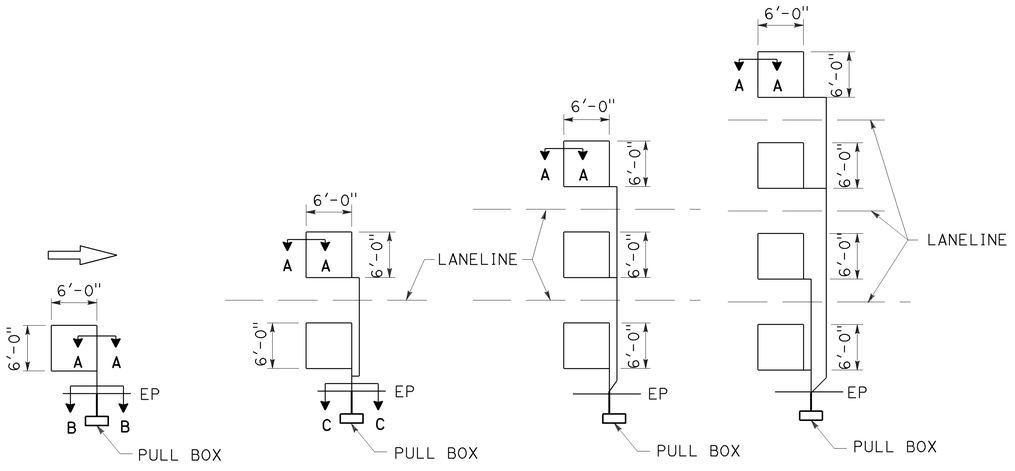

TYPE 1A INSTALLATION | TYPE 2A INSTALLATION | TYPE 3A INSTALLATION | TYPE 4A INSTALLATION

SAWCUT DETAILS

Type A loop detector configurations illustrated

1. 1A thru 4A = 1 Type A loop configuration in each lane.
2. 1B thru 4B = 1 Type B loop configuration in each lane.
3. 1C = 1 Type C loop configuration entering lanes as required.
4. 1D thru 4D = 1 Type D loop configuration in each lane.
5. 1E thru 4E = 1 Type E loop configuration in each lane.
6. 1Q thru 4Q = 1 Type Q loop configuration in each lane.
   Use Type A, B, C, D, E or Q loop detector configurations only when specified or shown on plans.

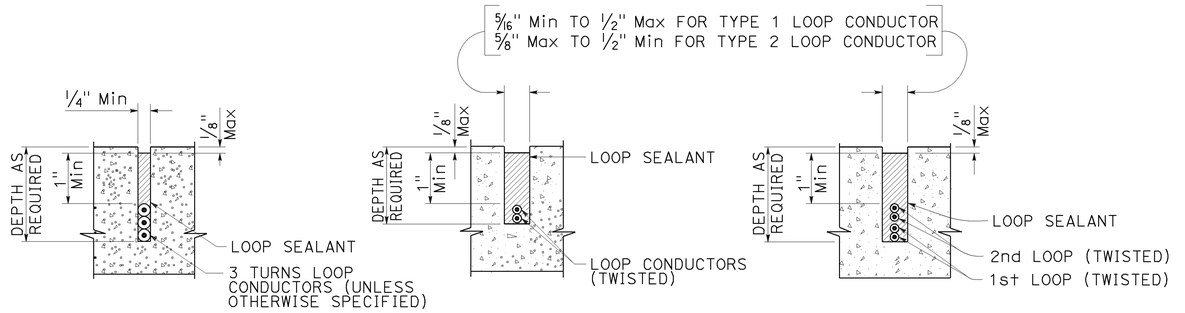

SECTION A-A | SECTION B-B | SECTION C-C

SLOT DETAILS - TYPE 1 AND TYPE 2 LOOP CONDUCTOR

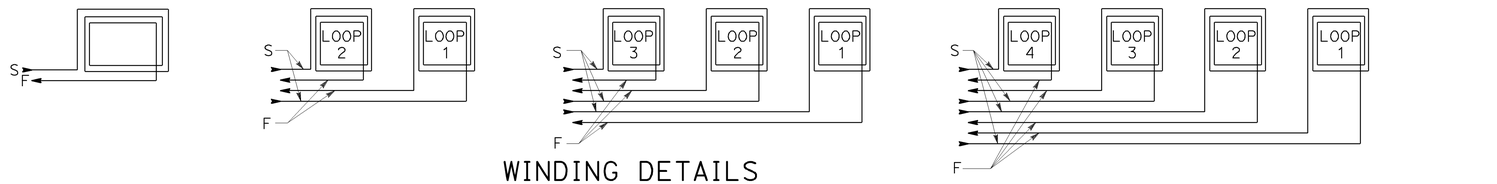

WINDING DETAILS

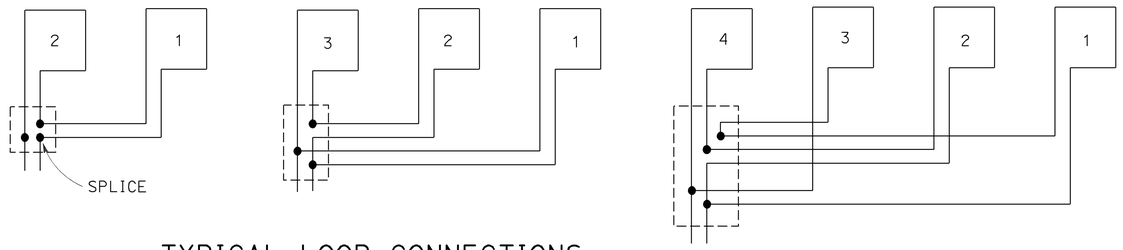

TYPICAL LOOP CONNECTIONS

Dashed lines represent the pull box

ABBREVIATIONS:

S - START
F - FINISH

STATE OF CALIFORNIA
DEPARTMENT OF TRANSPORTATION

ELECTRICAL SYSTEMS (LOOP DETECTORS)

NO SCALE

RSP ES-5A DATED OCTOBER 30, 2015 SUPERSEDES STANDARD PLAN ES-5A DATED MAY 20, 2011 - PAGE 448 OF THE STANDARD PLANS BOOK DATED 2010.

REVISED STANDARD PLAN RSP ES-5A

2010 REVISED STANDARD PLAN RSP ES-5A

8-24-15

Dist	COUNTY	ROUTE	POST MILES TOTAL PROJECT	SHEET No.	TOTAL SHEETS
08	SBd	95	R57.2/80.5	26	29

Theresa Gabriel
REGISTERED ELECTRICAL ENGINEER

July 19, 2013
PLANS APPROVAL DATE

REGISTERED PROFESSIONAL ENGINEER
Theresa Aziz Gabriel
No. E15129
Exp. 6-30-14
ELECTRICAL
STATE OF CALIFORNIA

THE STATE OF CALIFORNIA OR ITS OFFICERS OR AGENTS SHALL NOT BE RESPONSIBLE FOR THE ACCURACY OR COMPLETENESS OF SCANNED COPIES OF THIS PLAN SHEET.

TO ACCOMPANY PLANS DATED 8-14-15

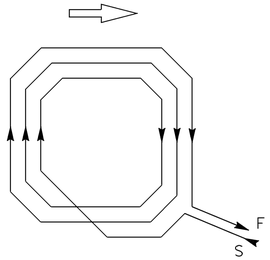

WINDING DETAIL

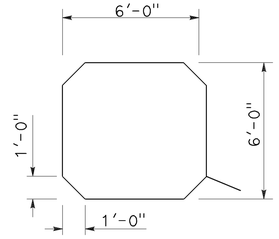

SAWCUT DETAIL

TYPE A LOOP DETECTOR CONFIGURATION

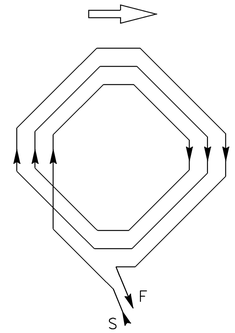

WINDING DETAIL

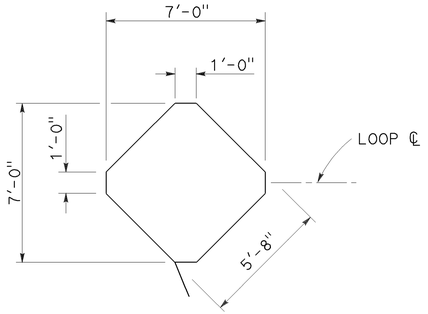

SAWCUT DETAIL

TYPE B LOOP DETECTOR CONFIGURATION

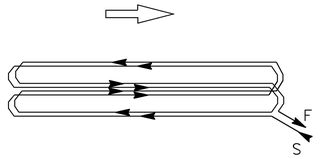

WINDING DETAIL

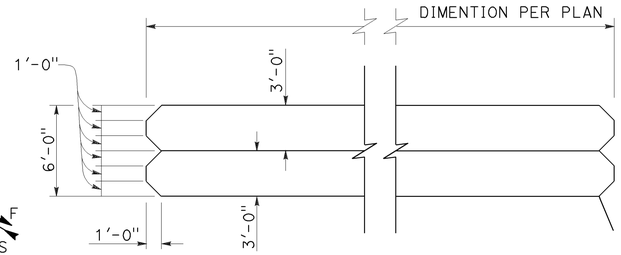

SAWCUT DETAIL

TYPE C LOOP DETECTOR CONFIGURATION

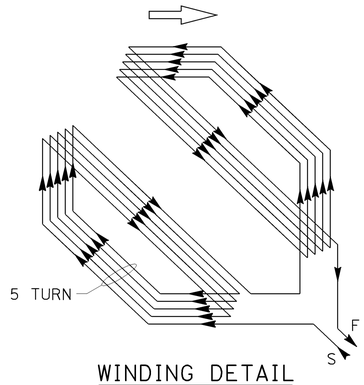

WINDING DETAIL

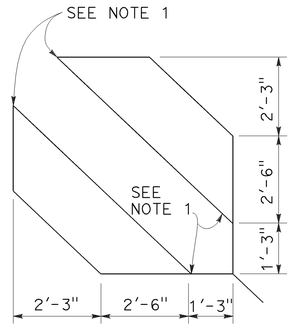

SAWCUT DETAIL

TYPE D LOOP DETECTOR CONFIGURATION

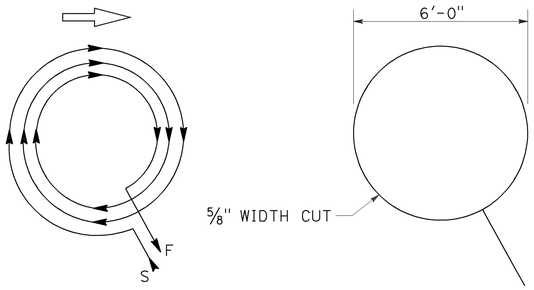

WINDING DETAIL SAWCUT DETAIL

TYPE E LOOP DETECTOR CONFIGURATION

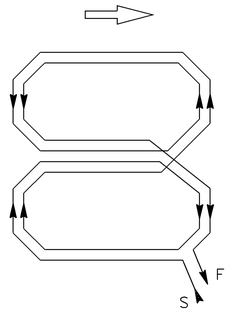

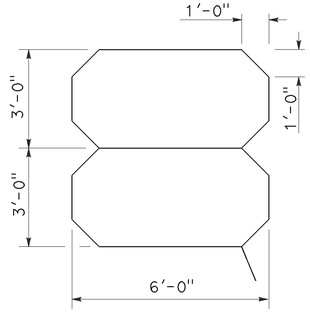

WINDING DETAIL SAWCUT DETAIL

TYPE Q LOOP DETECTOR CONFIGURATION

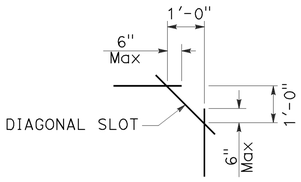

PLAN VIEW OF DIAGONAL SLOT AT CORNERS

NOTES:

1. Round corners of acute angle sawcuts to prevent damage to conductors.
2. Typical distance separating loops from edge to edge is 10' for Type A, B, D and E installation in single lane.

STATE OF CALIFORNIA
DEPARTMENT OF TRANSPORTATION

ELECTRICAL SYSTEMS (DETECTORS)

NO SCALE

RSP ES-5B DATED JULY 19, 2013 SUPERSEDES STANDARD PLAN ES-5B
DATED MAY 20, 2011 - PAGE 449 OF THE STANDARD PLANS BOOK DATED 2010.

REVISED STANDARD PLAN RSP ES-5B

2010 REVISED STANDARD PLAN RSP ES-5B

7-9-13

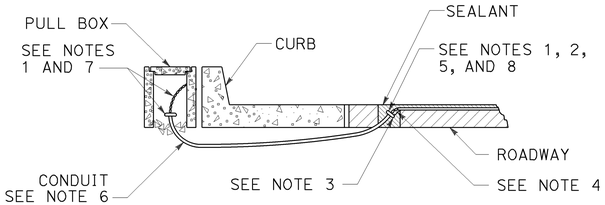

TYPE A

CURB TERMINATION DETAIL

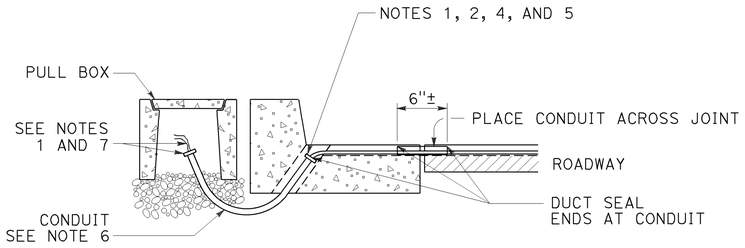

CROSS SECTION

PLAN VIEW

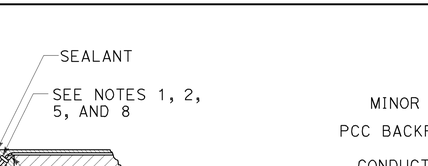

SECTION C-C

TYPE B

CURB TERMINATION DETAIL

CROSS SECTION

PLAN VIEW

SHOULDER TERMINATION DETAILS

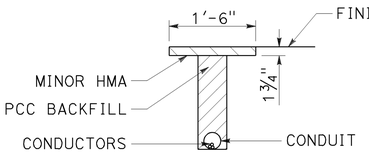

"T" TRENCH DETAIL T

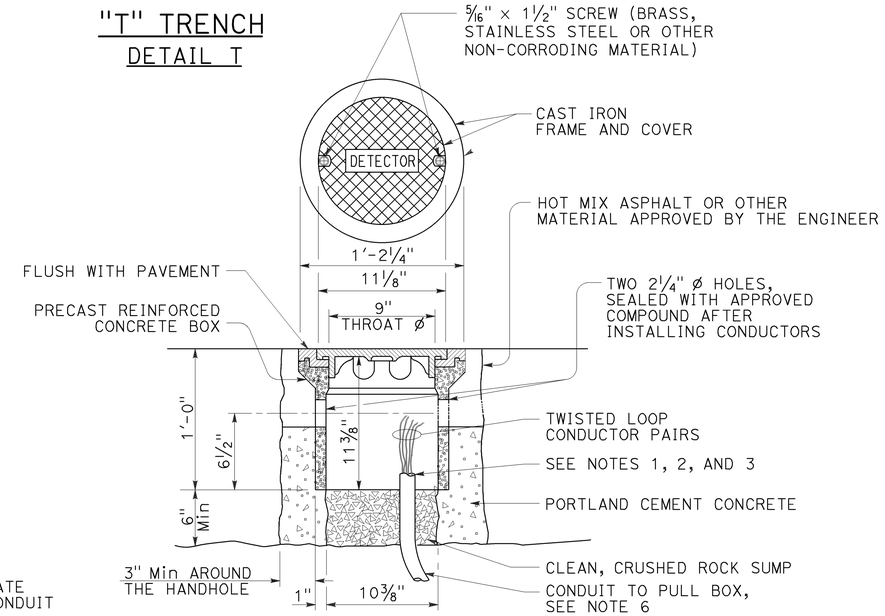

DETECTOR HANDHOLE DETAIL

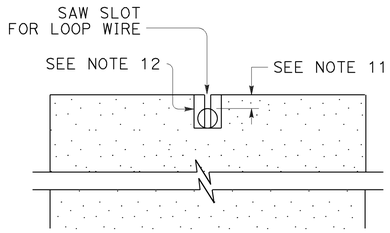

SECTION A-A

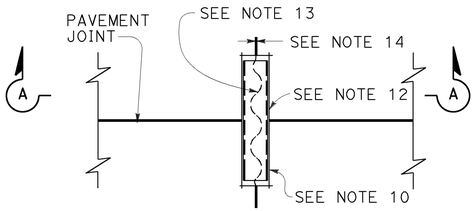

PLAN VIEW

TYPICAL LOOP LEAD-IN DETAIL AT PAVEMENT JOINT

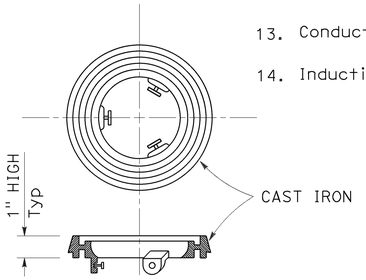

LOCKING GRADE RING

Dist	COUNTY	ROUTE	POST MILES TOTAL PROJECT	SHEET No.	TOTAL SHEETS
08	SBd	95	R57.2/80.5	27	29

Theresa Gabriel
REGISTERED ELECTRICAL ENGINEER

Theresa Aziz Gabriel No. E15129 Exp. 6-30-16 ELECTRICAL — REGISTERED PROFESSIONAL ENGINEER — STATE OF CALIFORNIA

October 30, 2015
PLANS APPROVAL DATE

THE STATE OF CALIFORNIA OR ITS OFFICERS OR AGENTS SHALL NOT BE RESPONSIBLE FOR THE ACCURACY OR COMPLETENESS OF SCANNED COPIES OF THIS PLAN SHEET.

TO ACCOMPANY PLANS DATED 8-14-15

NOTES:

1. Bushing shall be used at end of conduit.
2. Tape detector conductors or cables 3" each side of bushings.
3. Install duct seal compound to each end of termination conduit before installing sealant.
4. Round all sharp edges where detector conductors or cables have to pass.
5. End of conduit shall be 3⅛" below roadway surface.
6.

Conduit size	Loop conductors
1"C minimum	1 to 2 pairs
1½"C minimum	3 to 4 pairs
2"C minimum	5 or more pairs

7. Splice detector conductors or cables to detector lead-in-cable.
8. Location of detector handhole when shown on plans.
9. When the shoulder and traveled way are paved with the same material and there is no joint between them, the conduit shall extend only 2'-0" into the shoulder pavement.
10. ¾"C, Type 3 conduit 6" long minimum, plug both ends with duct compound to keep out sealant.
11. ½" Minimum between top of conduit and pavement surface.
12. Sawcut shall not exceed 1" in width and ⅛" longer than conduit to be installed.
13. Conductors with ½" minimum slack inside conduit.
14. Inductive loop detector saw slot.

STATE OF CALIFORNIA
DEPARTMENT OF TRANSPORTATION

ELECTRICAL SYSTEMS (CURB AND SHOULDER TERMINATION, TRENCH, AND HANDHOLE DETAILS)

NO SCALE

RSP ES-5D DATED OCTOBER 30, 2015 SUPERSEDES RSP ES-5D DATED JULY 19, 2013 AND STANDARD PLAN ES-5D DATED MAY 20, 2011 - PAGE 451 OF THE STANDARD PLANS BOOK DATED 2010.

REVISED STANDARD PLAN RSP ES-5D

2010 REVISED STANDARD PLAN RSP ES-5D

8-19-15

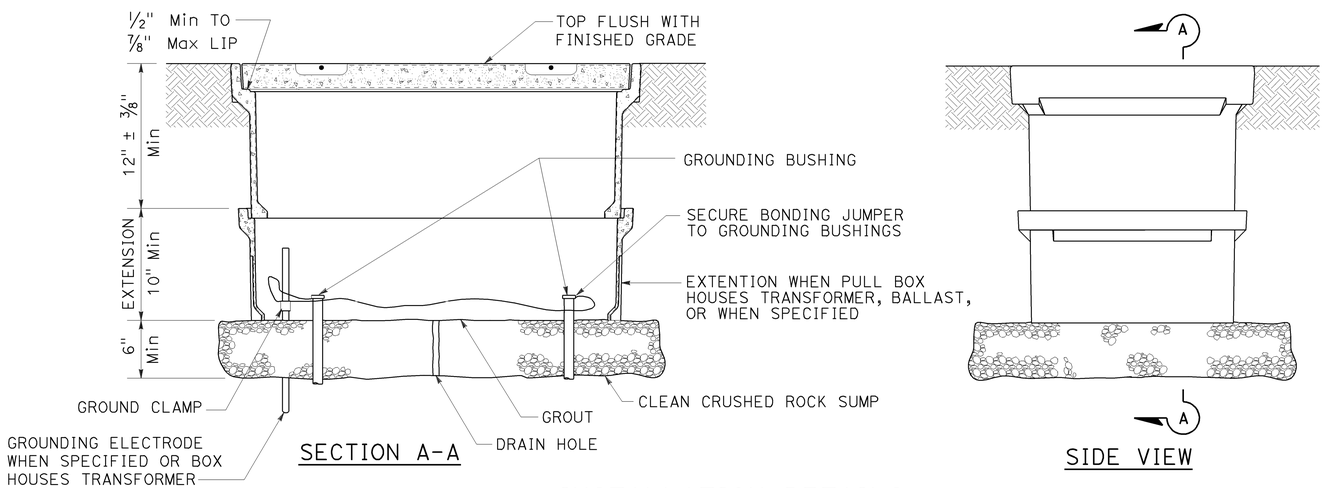

SECTION A-A

SIDE VIEW

INSTALLATION DETAILS

DETAIL A

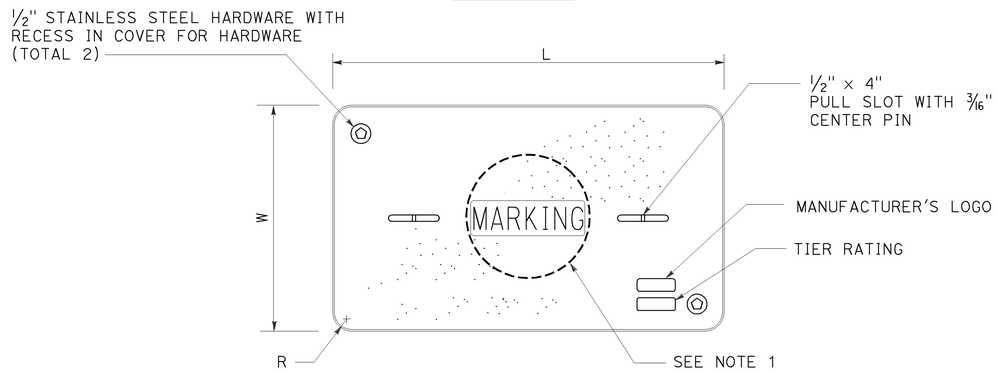

COVER TOP VIEW

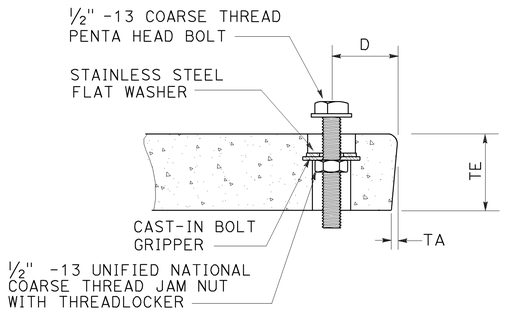

TYPICAL COVER CAPTIVE BOLT
OR SIMILAR

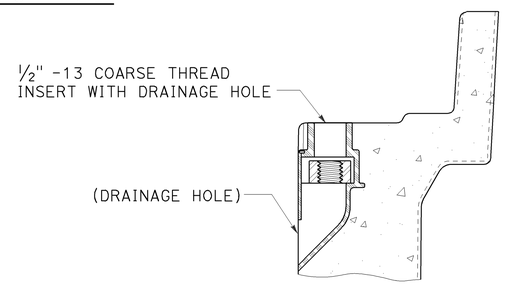

TYPICAL THREADED INSERT
OR SIMILAR

DIMENSION TABLE

PULL BOX	PULL BOX			COVER						
	MINIMUM DEPTH BOX	MINIMUM DEPTH EXTENSION	MAXIMUM WEIGHT	L	W	R	TE	TA	D	MAXIMUM WEIGHT
No. 3½	12"	N/A	40 lb	1′ - 3⅜"	10⅛"	1⅜"	2"	⅛"	1¾"	30 lb
No. 5	12"	10"	55 lb	1′ - 11¼"	1′ - 1¾"	1⅜"	2"	⅛"	1¾"	60 lb
No. 6	12"	10"	70 lb	2′ - 6½"	1′ - 5½"	1⅜"	2"	⅛"	2"	85 lb

DIST	COUNTY	ROUTE	POST MILES TOTAL PROJECT	SHEET NO.	TOTAL SHEETS
08	SBd	95	R57.2/80.5	28	29

Theresa Gabriel
REGISTERED ELECTRICAL ENGINEER

Theresa Aziz Gabriel
No. E15129
Exp. 6-30-14
ELECTRICAL
REGISTERED PROFESSIONAL ENGINEER
STATE OF CALIFORNIA

July 19, 2013
PLANS APPROVAL DATE

THE STATE OF CALIFORNIA OR ITS OFFICERS OR AGENTS SHALL NOT BE RESPONSIBLE FOR THE ACCURACY OR COMPLETENESS OF SCANNED COPIES OF THIS PLAN SHEET.

TO ACCOMPANY PLANS DATED 8-14-15

NOTES:

1. Pull box covers shall be marked as follows: "SERVICE" Service circuits between service point and service disconnect; "SPRINKLER-CONTROL" sprinkler control circuits, 50 V or less; "CALTRANS" on all pull boxes, except pull boxes marked "SPRINKLER-CONTROL"; and "TELEPHONE" Telephone service;

   A) No. 3½ pull box.
      1) "SIGNAL" - Traffic signal circuits with or without lighting or sign lighting circuits.
      2) "LIGHTING" - Lighting or sign lighting circuits where voltage is under 600 V.

   B) No. 5, 6, 9 or 9A pull box.
      1) "TRAFFIC SIGNAL" - Traffic signal circuits with or without lighting or sign lighting circuits.
      2) "LIGHTING" - Lighting or sign lighting circuits where voltage is under 600 V.
      3) "LIGHTING-HIGH VOLTAGE" - Lighting or sign lighting circuits where voltage is above 600 V.
      4) "IRRIGATION" - Circuits to irrigation controller 120 V or more.
      5) "RAMP METER" - Ramp meter circuits.
      6) "COUNT STATION" - Count or speed monitor circuits.
      7) "COMMUNICATIONS" - Communication circuits.
      8) "TOS COMMUNICATIONS" - TOS communication line.
      9) "TOS POWER" - TOS power.
      10) "TDC POWER" - Telephone demarcation cabinet power.
      11) "CCTV" - Closed circuit television circuits.
      12) "TMS" - Traffic monitoring station circuits.
      13) "CMS" - Changeable message sign circuits.
      14) "HAR" - Highway advisory radio circuits.
      15) "BOOSTER PUMP" - Booster pump circuit.

2. The nominal dimensions of the opening in which the cover sets shall be the same as the cover dimensions except the length and width dimensions shall be ⅛" greater.
3. Covers and boxes shall be interchangeable with California standard male and female gages. When interchanged with a standard male or female gage, the top surfaces shall be flush within ⅛". Top outside radius of covers and pull boxes shall have a ⅛" radius.
4. Pull box extension may be another pull box as long as the bottom edge of the pull box can fit into the cover opening.
5. All dimensions for the cover for non-traffic pull box are nominal values.

STATE OF CALIFORNIA
DEPARTMENT OF TRANSPORTATION

ELECTRICAL SYSTEMS (NON-TRAFFIC PULL BOX)

NO SCALE

RSP ES-8A DATED JULY 19, 2013 SUPERSEDES RSP ES-8A DATED JANUARY 20, 2012 THAT SUPPLEMENTS THE STANDARD PLANS BOOK DATED 2010.

REVISED STANDARD PLAN RSP ES-8A

2010 REVISED STANDARD PLAN RSP ES-8A

7-15-13

Dist	COUNTY	ROUTE	POST MILES TOTAL PROJECT	SHEET No.	TOTAL SHEETS
08	SBd	95	R57.2/80.5	29	29

Theresa Gabriel
REGISTERED ELECTRICAL ENGINEER

REGISTERED PROFESSIONAL ENGINEER
Theresa Aziz Gabriel
No. E15129
Exp. 6-30-16
ELECTRICAL
STATE OF CALIFORNIA

October 30, 2015
PLANS APPROVAL DATE

THE STATE OF CALIFORNIA OR ITS OFFICERS OR AGENTS SHALL NOT BE RESPONSIBLE FOR THE ACCURACY OR COMPLETENESS OF SCANNED COPIES OF THIS PLAN SHEET.

TO ACCOMPANY PLANS DATED 8-14-15

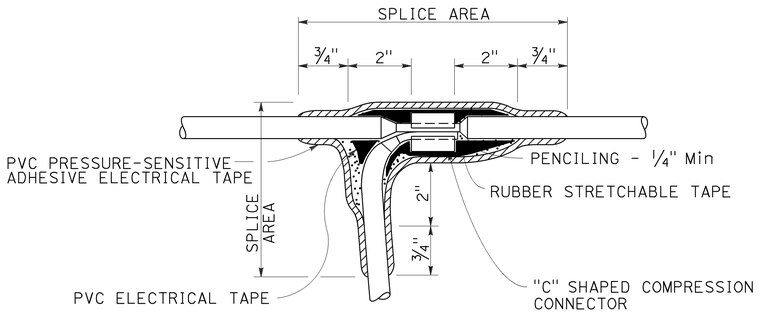

TYPE C SPLICE

See Note 3

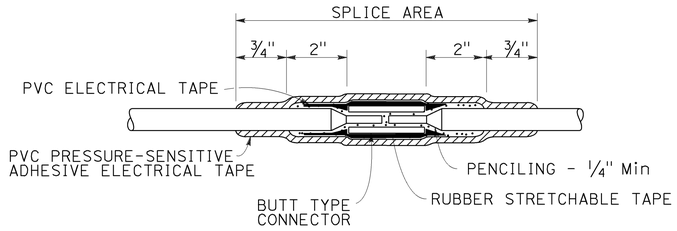

TYPE S SPLICE

See Note 4

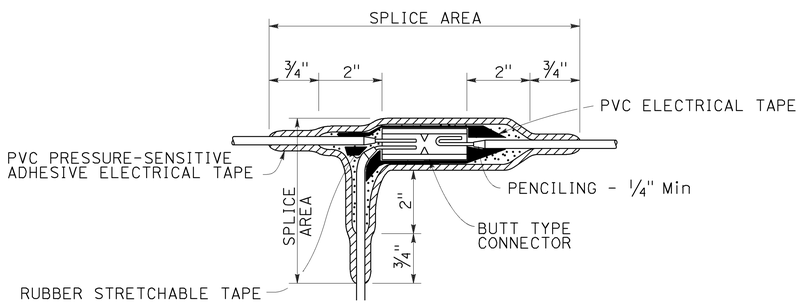

TYPE ST SPLICE

See Note 5

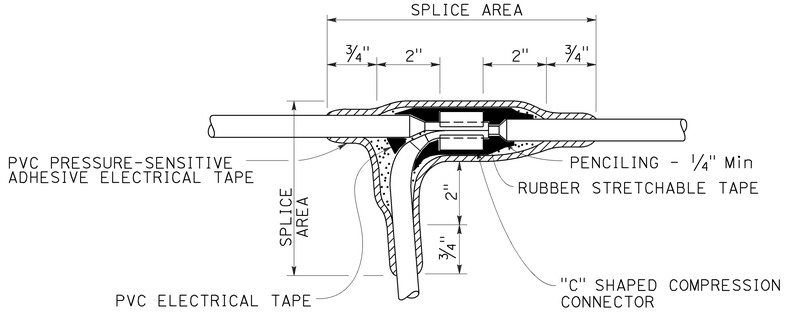

TYPE T SPLICE

See Note 5

NOTES:

1. Dimensions are minimum.
2. Rubber tapes shall be rolled after application.
3. Between 1 free-end and 1 through conductor.
4. Between 2 free-end conductors.
5. Between 3 free-end conductors.

STATE OF CALIFORNIA
DEPARTMENT OF TRANSPORTATION

ELECTRICAL SYSTEMS (SPLICING DETAILS)

NO SCALE

RSP ES-13A DATED OCTOBER 30, 2015 SUPERSEDES STANDARD PLAN ES-13A DATED MAY 20, 2011 - PAGE 491 OF THE STANDARD PLANS BOOK DATED 2010.

REVISED STANDARD PLAN RSP ES-13A

2010 REVISED STANDARD PLAN RSP ES-13A

9-28-15