Dist	COUNTY	ROUTE	POST MILES TOTAL PROJECT	SHEET No.	TOTAL SHEETS
08	Riv	60	R12.2/22.1, 26.5/30.4	1	113

STATE OF CALIFORNIA

DEPARTMENT OF TRANSPORTATION

ACNHP-P060(147)E

PROJECT PLANS FOR CONSTRUCTION ON

STATE HIGHWAY

IN RIVERSIDE COUNTY FROM ROUTE 60/215 SEPARATION TO GILMAN SPRINGS ROAD AND FROM 1.5 MILES WEST OF JACK RABBIT TRAIL TO ROUTE 60/10 SEPARATION

TO BE SUPPLEMENTED BY STANDARD PLANS DATED 2010

INDEX OF PLANS

SHEET No.	DESCRIPTION
1	TITLE AND LOCATION MAP
2-7	TYPICAL CROSS SECTIONS
8-17	CONSTRUCTION DETAILS
18	CONSTRUCTION AREA SIGNS
19-39	PAVEMENT DELINEATION QUANTITIES
40-56	SUMMARY OF QUANTITIES
57-64	ELECTRICAL PLANS & QUANTITIES
65-113	REVISED STANDARD PLANS

THE STANDARD PLANS LIST APPLICABLE TO THIS CONTRACT IS INCLUDED IN THE NOTICE TO BIDDERS AND SPECIAL PROVISIONS BOOK.

LOCATION MAP

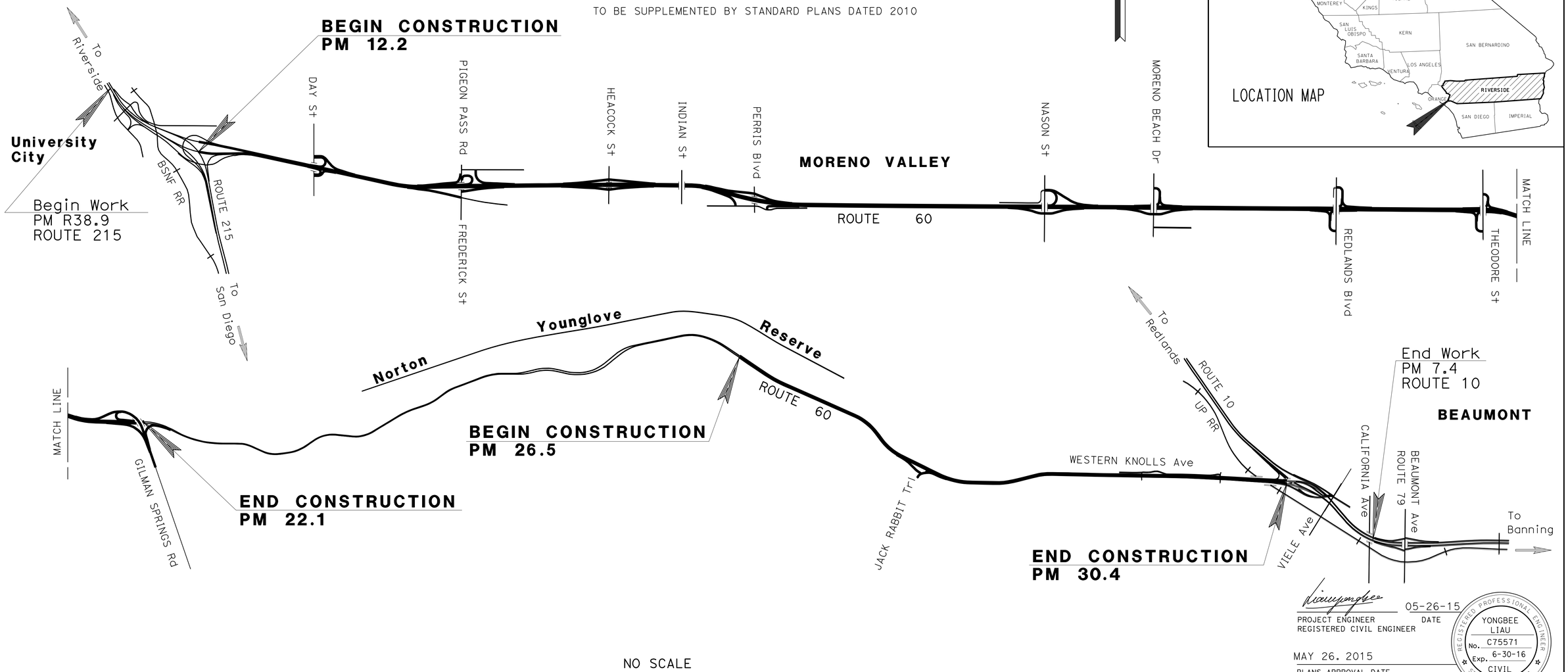

NO SCALE

PROJECT ENGINEER
REGISTERED CIVIL ENGINEER

05-26-15
DATE

REGISTERED PROFESSIONAL ENGINEER
YONGBEE LIAU
No. C75571
Exp. 6-30-16
CIVIL
STATE OF CALIFORNIA

MAY 26. 2015
PLANS APPROVAL DATE

THE STATE OF CALIFORNIA OR ITS OFFICERS OR AGENTS SHALL NOT BE RESPONSIBLE FOR THE ACCURACY OR COMPLETENESS OF SCANNED COPIES OF THIS PLAN SHEET.

THE CONTRACTOR SHALL POSSESS THE CLASS (OR CLASSES) OF LICENSE AS SPECIFIED IN THE "NOTICE TO BIDDERS."

CONTRACT No.	08-1C0914
PROJECT ID	0814000223

PROJECT MANAGER: RAGHURAM RADHAKRISHNAN
DESIGN ENGINEER: YONGBEE LIAU

LAST REVISION 05-26-15
DATE PLOTTED => 16-NOV-2015
TIME PLOTTED => 12:43

Dist	COUNTY	ROUTE	POST MILES TOTAL PROJECT	SHEET No.	TOTAL SHEETS
08	Riv	60	R12.2/22.1, 26.5/30.4	2	113

REGISTERED CIVIL ENGINEER DATE 05-26-15

05-26-15
PLANS APPROVAL DATE

REGISTERED PROFESSIONAL ENGINEER
YONGBEE LIAU
No. C75571
Exp. 6-30-16
CIVIL
STATE OF CALIFORNIA

THE STATE OF CALIFORNIA OR ITS OFFICERS OR AGENTS SHALL NOT BE RESPONSIBLE FOR THE ACCURACY OR COMPLETENESS OF SCANNED COPIES OF THIS PLAN SHEET.

NOTES:

1. DIMENSIONS OF THE STRUCTURAL SECTIONS ARE SUBJECT TO TOLERANCES SPECIFIED IN THE STANDARD SPECIFICATIONS.
2. SUPERELEVATIONS AS SHOWN OR AS DIRECTED BY THE ENGINEER.
3. NO SURFACING, COLD PLANING, OR SLURRY SEAL SHALL BE ALLOWED ON APPROACH SLABS AND ON BRIDGE DECK STRUCTURES.
4. EXISTING UTILITY FACILITIES HAVE NOT BEEN INCLUDED ON THESE PLANS.
5. EXISTING STRUCTURAL SECTIONS NOT SHOWN.
6. CENTERLINE, LANE WIDTH AND SHOULDER WIDTH SHOWN ARE APPROXIMATE.
7. FOR LOCATIONS OF GUARD RAIL AND DIKES SEE SUMMARY OF QUANTITIES SHEETS.
8. THE POST MILE LOCATIONS, LANE NUMBERS, AND DIMENSIONS TO BE DETERMINED BY THE ENGINEER.
9. INSTALL SAFETY EDGE PER RSP P74 TO P76.

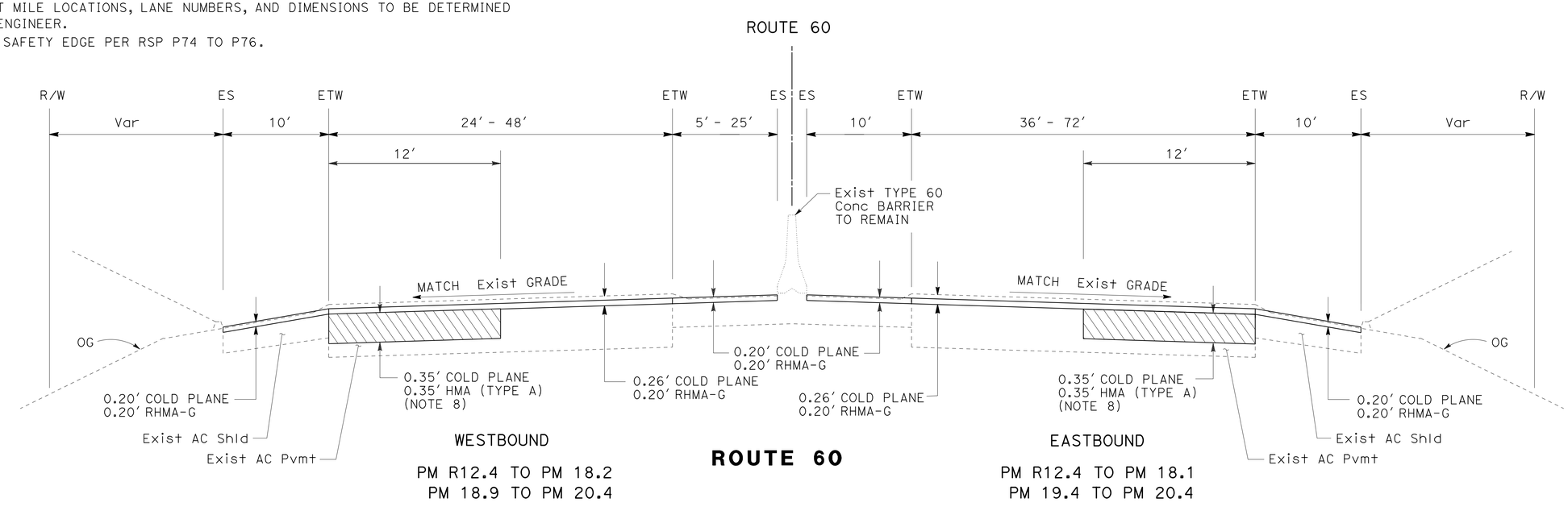

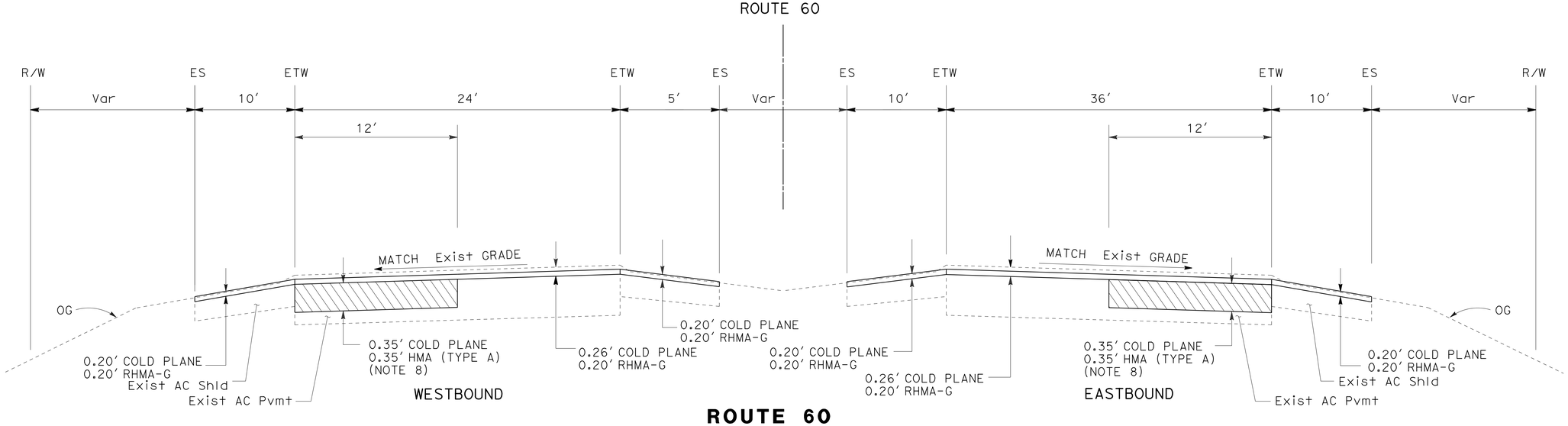

ROUTE 60
PM R12.2 TO PM R12.4

TYPICAL CROSS SECTIONS

NO SCALE

X-1

REVISED BY	DATE REVISED

CALCULATED-DESIGNED BY	CHECKED BY
YONGBEE LIAU	KEVIN CHEN

FUNCTIONAL SUPERVISOR: KEVIN CHEN

STATE OF CALIFORNIA - DEPARTMENT OF TRANSPORTATION
Caltrans MAINTENANCE ENGINEERING

LAST REVISION 05-14-15 | DATE PLOTTED => 16-NOV-2015 | TIME PLOTTED => 12:43

Dist	COUNTY	ROUTE	POST MILES TOTAL PROJECT	SHEET No.	TOTAL SHEETS
08	Riv	60	R12.2/22.1, 26.5/30.4	3	113

REGISTERED CIVIL ENGINEER 05-26-15 DATE

05-26-15
PLANS APPROVAL DATE

REGISTERED PROFESSIONAL ENGINEER YONGBEE LIAU No. C75571 Exp. 6-30-16 CIVIL STATE OF CALIFORNIA

THE STATE OF CALIFORNIA OR ITS OFFICERS OR AGENTS SHALL NOT BE RESPONSIBLE FOR THE ACCURACY OR COMPLETENESS OF SCANNED COPIES OF THIS PLAN SHEET.

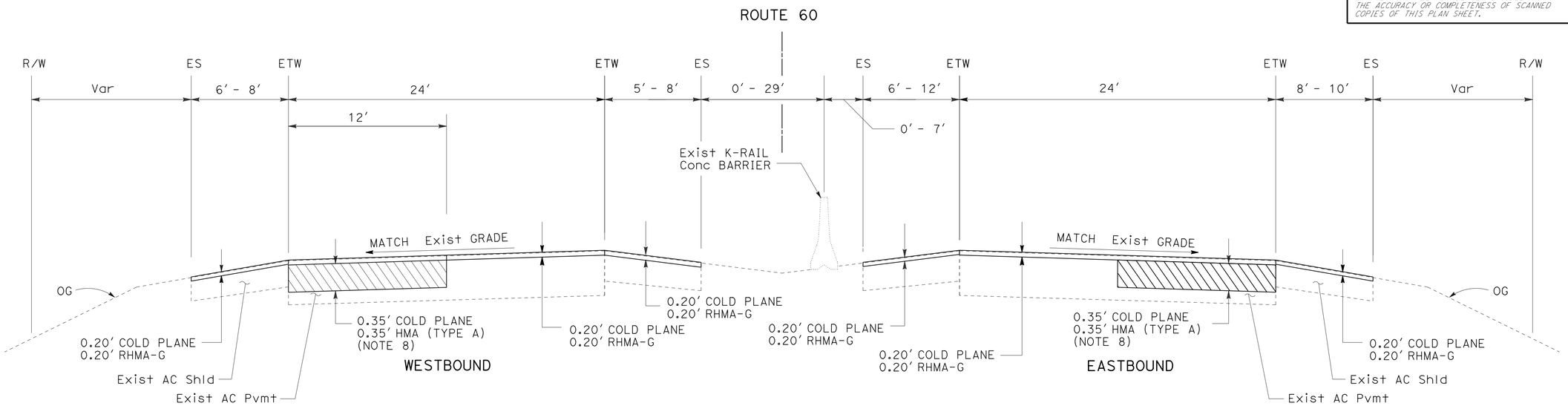

ROUTE 60

PM 20.4 TO PM 21.4

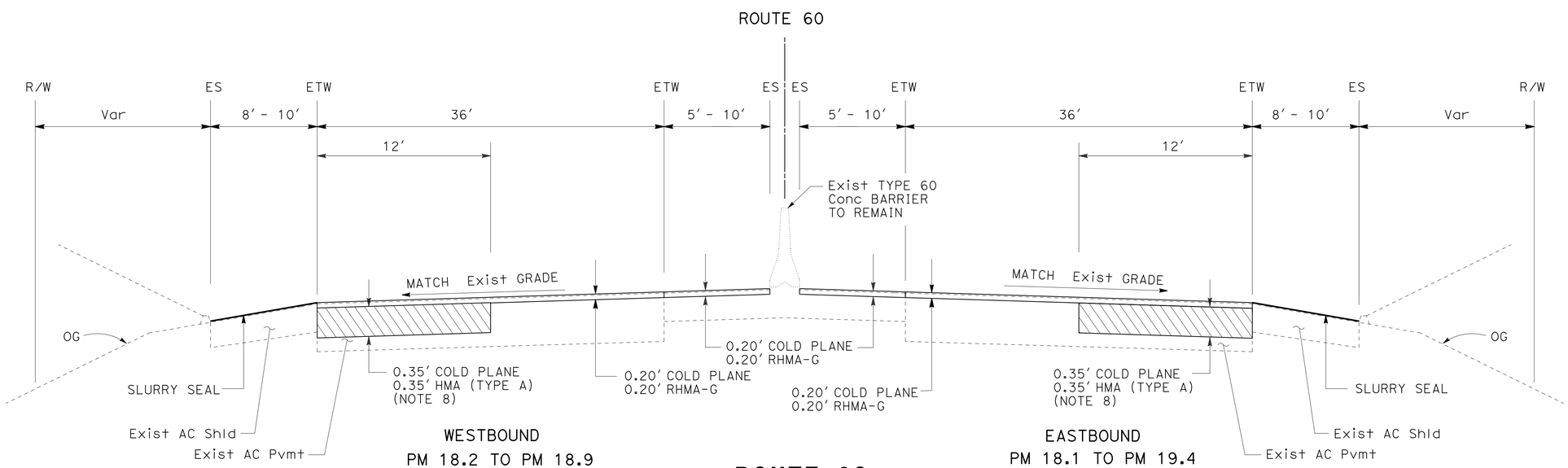

ROUTE 60

TYPICAL CROSS SECTIONS

NO SCALE

X-2

STATE OF CALIFORNIA - DEPARTMENT OF TRANSPORTATION
Caltrans MAINTENANCE ENGINEERING

FUNCTIONAL SUPERVISOR: KEVIN CHEN

CALCULATED-DESIGNED BY: YONGBEE LIAU
CHECKED BY: KEVIN CHEN

REVISED BY | DATE REVISED

LAST REVISION 05-14-15 | DATE PLOTTED => 16-NOV-2015 | TIME PLOTTED => 12:43

Dist	COUNTY	ROUTE	POST MILES TOTAL PROJECT	SHEET No.	TOTAL SHEETS
08	Riv	60	R12.2/22.1, 26.5/30.4	4	113

REGISTERED CIVIL ENGINEER 05-26-15 DATE

05-26-15
PLANS APPROVAL DATE

REGISTERED PROFESSIONAL ENGINEER
YONGBEE LIAU
No. C75571
Exp. 6-30-16
CIVIL
STATE OF CALIFORNIA

THE STATE OF CALIFORNIA OR ITS OFFICERS OR AGENTS SHALL NOT BE RESPONSIBLE FOR THE ACCURACY OR COMPLETENESS OF SCANNED COPIES OF THIS PLAN SHEET.

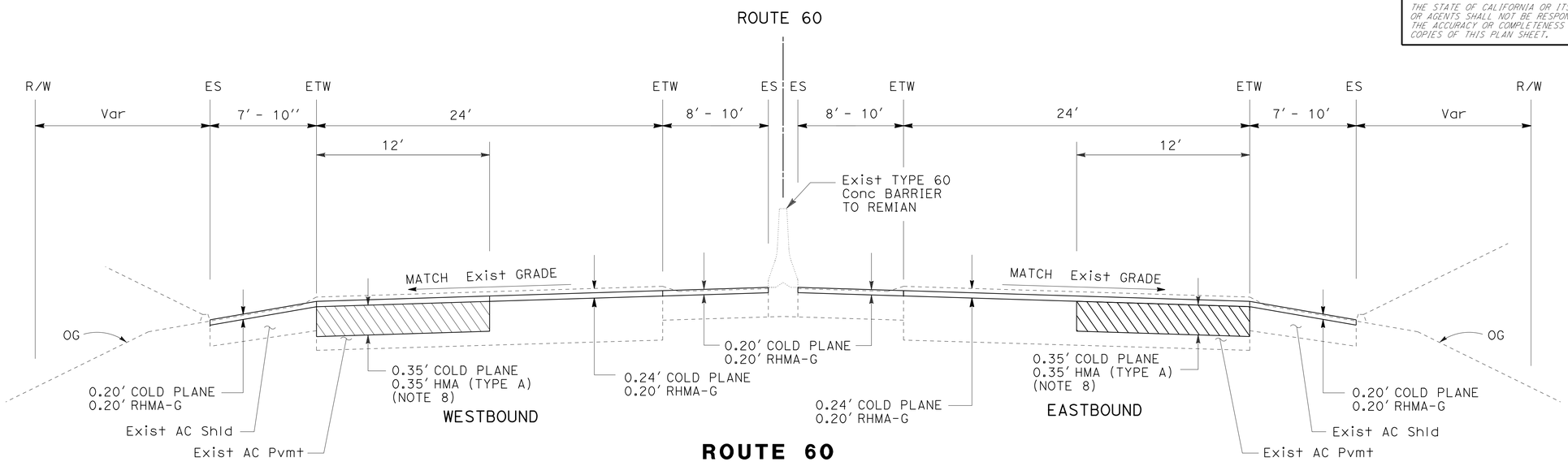

ROUTE 60

PM 26.5 TO PM 27.8
PM 28.0 TO PM 29.8

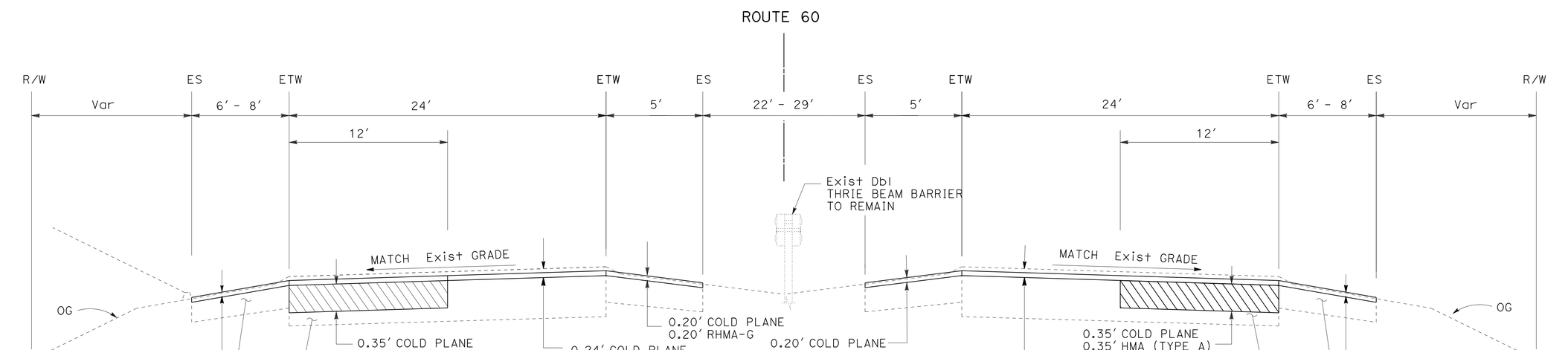

ROUTE 60

PM 21.4 TO PM 22.1

TYPICAL CROSS SECTIONS

NO SCALE

X-3

STATE OF CALIFORNIA - DEPARTMENT OF TRANSPORTATION
Caltrans MAINTENANCE ENGINEERING

FUNCTIONAL SUPERVISOR: KEVIN CHEN

CALCULATED-DESIGNED BY: YONGBEE LIAU
CHECKED BY: KEVIN CHEN

REVISED BY | DATE REVISED

LAST REVISION 05-14-15 | DATE PLOTTED => 16-NOV-2015 | TIME PLOTTED => 12:43

Dist	COUNTY	ROUTE	POST MILES TOTAL PROJECT	SHEET No.	TOTAL SHEETS
08	Riv	60	R12.2/22.1, 26.5/30.4	5	113

REGISTERED CIVIL ENGINEER 05-26-15 DATE

05-26-15
PLANS APPROVAL DATE

REGISTERED PROFESSIONAL ENGINEER
YONGBEE LIAU
No. C75571
Exp. 6-30-16
CIVIL
STATE OF CALIFORNIA

THE STATE OF CALIFORNIA OR ITS OFFICERS OR AGENTS SHALL NOT BE RESPONSIBLE FOR THE ACCURACY OR COMPLETENESS OF SCANNED COPIES OF THIS PLAN SHEET.

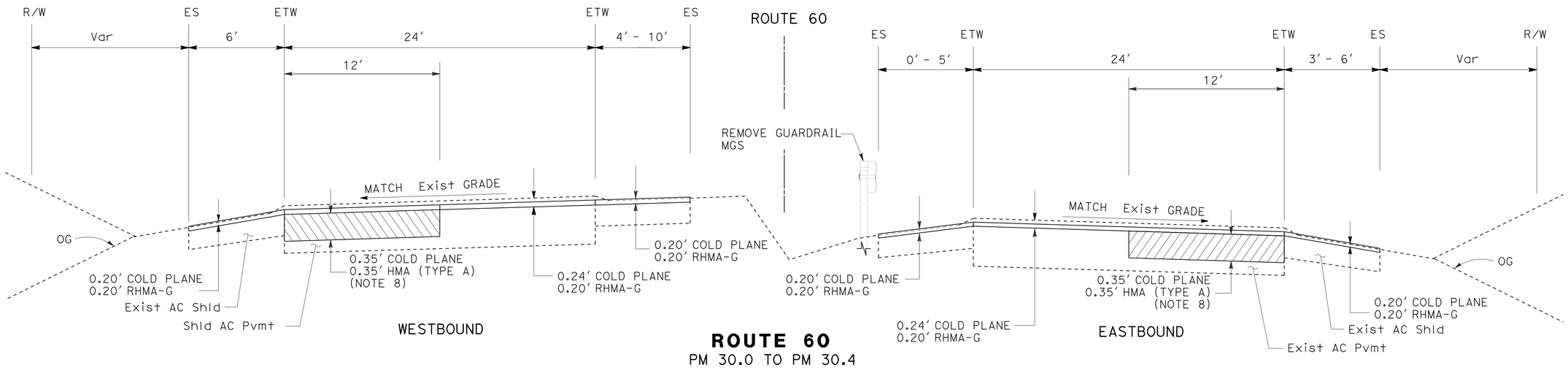

ROUTE 60
PM 30.0 TO PM 30.4

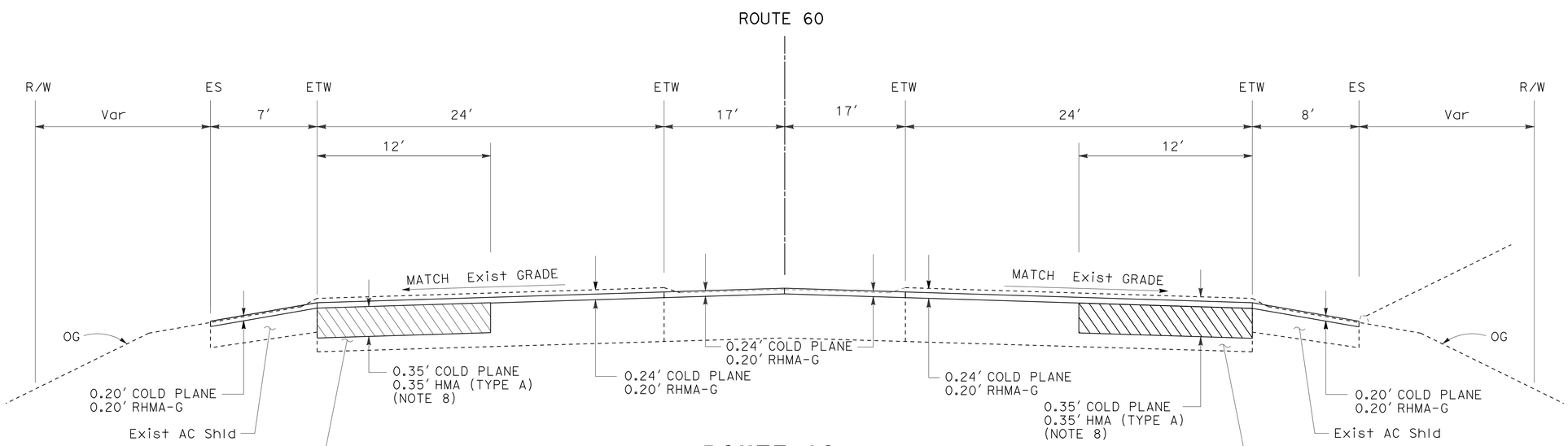

ROUTE 60
PM 27.8 TO PM 28.0
PM 29.8 TO PM 30.0

TYPICAL CROSS SECTIONS

NO SCALE

X-4

STATE OF CALIFORNIA - DEPARTMENT OF TRANSPORTATION
Caltrans MAINTENANCE ENGINEERING

FUNCTIONAL SUPERVISOR: MICHAEL RISTIC
CALCULATED-DESIGNED BY: YONGBEE LIAU
CHECKED BY: MICHAEL RISTIC
REVISED BY
DATE REVISED

LAST REVISION 05-14-15
DATE PLOTTED => 16-NOV-2015
TIME PLOTTED => 12:43

Dist	COUNTY	ROUTE	POST MILES TOTAL PROJECT	SHEET No.	TOTAL SHEETS
08	Riv	60	R12.2/22.1, 26.5/30.4	6	113

REGISTERED CIVIL ENGINEER 05-26-15 DATE

05-26-15
PLANS APPROVAL DATE

REGISTERED PROFESSIONAL ENGINEER
YONGBEE LIAU
No. C75571
Exp. 6-30-16
CIVIL
STATE OF CALIFORNIA

THE STATE OF CALIFORNIA OR ITS OFFICERS OR AGENTS SHALL NOT BE RESPONSIBLE FOR THE ACCURACY OR COMPLETENESS OF SCANNED COPIES OF THIS PLAN SHEET.

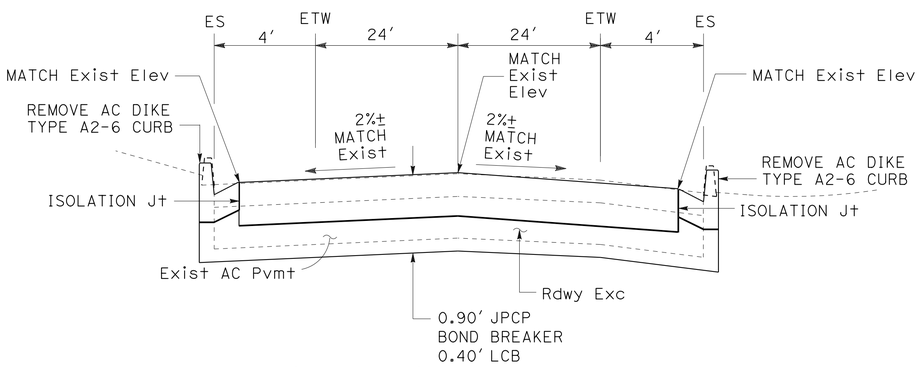

ROUTE 60 EB EXIT RAMP
(RAMP TERMINUS)
FREDERICK STREET

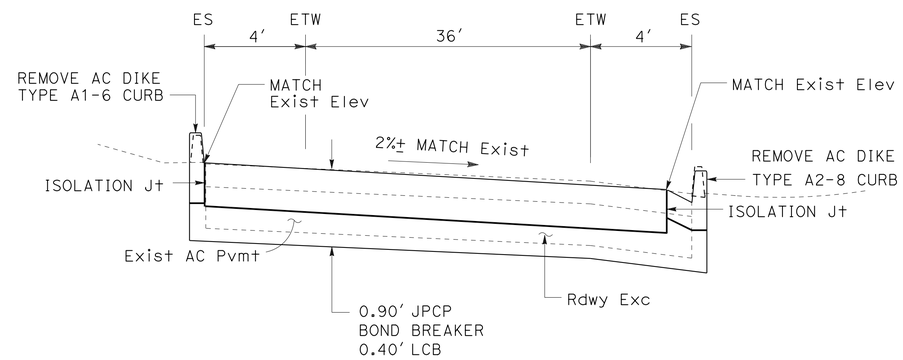

ROUTE 60 EB EXIT RAMP
(RAMP TERMINUS)
HEACOCK STREET

TYPICAL CROSS SECTIONS

NO SCALE

X-5

STATE OF CALIFORNIA - DEPARTMENT OF TRANSPORTATION
Caltrans MAINTENANCE ENGINEERING

FUNCTIONAL SUPERVISOR: KEVIN CHEN

CALCULATED-DESIGNED BY: YONGBEE LIAU
CHECKED BY: KEVIN CHEN

REVISED BY
DATE REVISED

LAST REVISION 05-27-15
DATE PLOTTED => 16-NOV-2015
TIME PLOTTED => 12:43

Dist	COUNTY	ROUTE	POST MILES TOTAL PROJECT	SHEET No.	TOTAL SHEETS
08	Riv	60	R12.2/22.1, 26.5/30.4	7	113

REGISTERED CIVIL ENGINEER 05-26-15 DATE

05-26-15
PLANS APPROVAL DATE

REGISTERED PROFESSIONAL ENGINEER
YONGBEE LIAU
No. C75571
Exp. 6-30-16
CIVIL
STATE OF CALIFORNIA

THE STATE OF CALIFORNIA OR ITS OFFICERS OR AGENTS SHALL NOT BE RESPONSIBLE FOR THE ACCURACY OR COMPLETENESS OF SCANNED COPIES OF THIS PLAN SHEET.

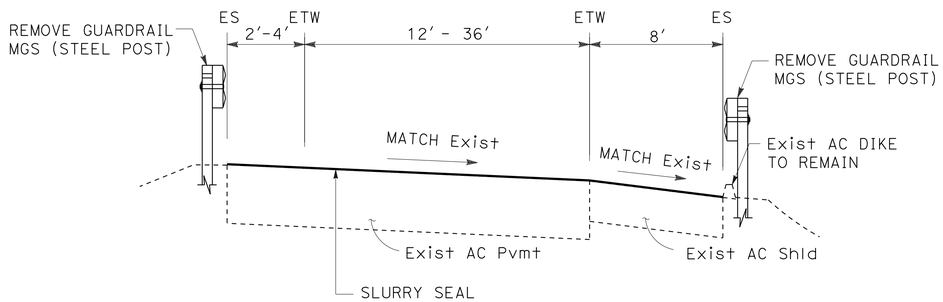

ROUTE 60 EB ENTRANCE/EXIT RAMP

DAY St
FREDERICK St (ENTRANCE RAMP ONLY)
PERRIS Blvd (EXIT RAMP ONLY)
NASON St
MORENO BEACH Dr

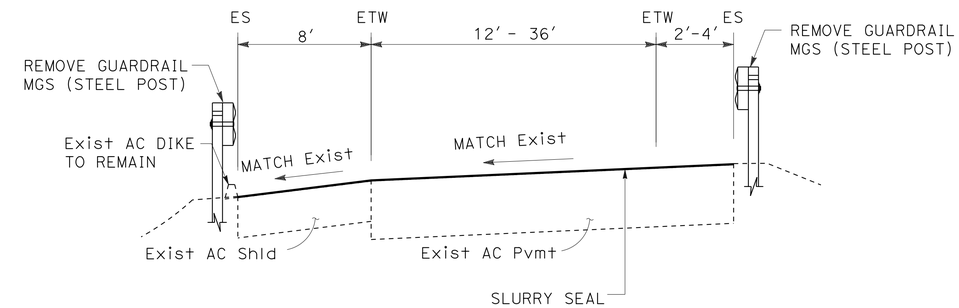

ROUTE 60 WB ENTRANCE/EXIT RAMP

DAY St
PIGEON PASS Rd
HEACOCK St
PERRIS Blvd
NASON St
WB 60 Conn TO SB 215

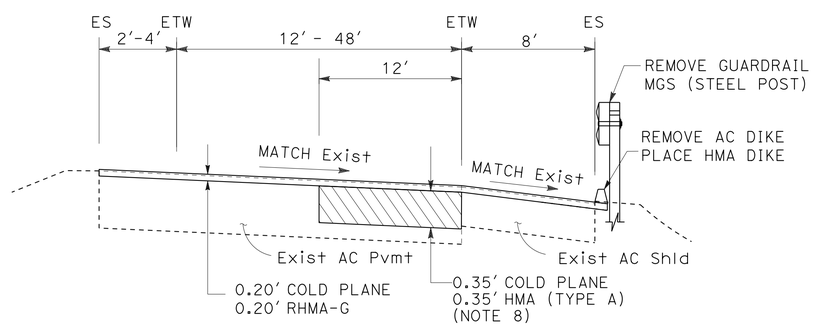

ROUTE 60 EB ENTRANCE/EXIT RAMP

FREDERICK St (EXIT RAMP ONLY)
HEACOCK St
PERRIS Blvd (ENTRANCE RAMP ONLY)
REDLANDS Blvd
THEODORE St
GILMAN SPRINGS Rd
EB 60 Conn FROM NB 215
JACK RABBIT Trl
6TH St (EXIT RAMP ONLY)

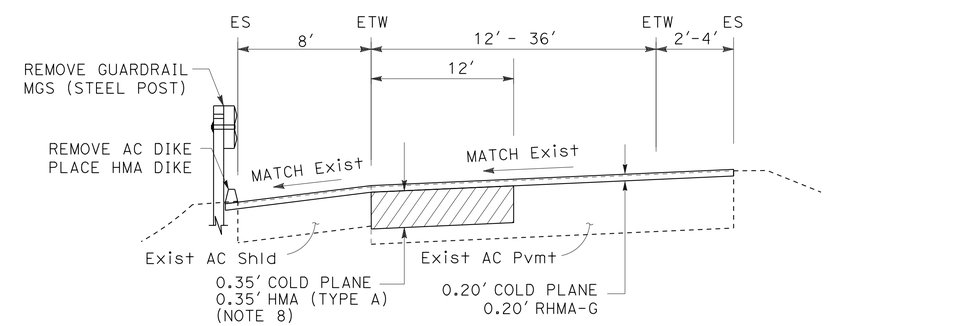

ROUTE 60 WB ENTRANCE/EXIT RAMP

MORENO BEACH Dr
REDLANDS Blvd
THEODORE St
GILMAN SPRINGS Rd
WB 60 Conn FROM EB 10

TYPICAL CROSS SECTIONS

NO SCALE

X-6

STATE OF CALIFORNIA - DEPARTMENT OF TRANSPORTATION
Caltrans MAINTENANCE ENGINEERING

FUNCTIONAL SUPERVISOR: KEVIN CHEN
CALCULATED-DESIGNED BY: YONGBEE LIAU
CHECKED BY: KEVIN CHEN
REVISED BY
DATE REVISED

LAST REVISION 05-14-15
DATE PLOTTED => 16-NOV-2015
TIME PLOTTED => 12:43

Dist	COUNTY	ROUTE	POST MILES TOTAL PROJECT	SHEET No.	TOTAL SHEETS
08	Riv	60	R12.2/22.1, 26.5/30.4	8	113

REGISTERED CIVIL ENGINEER 05-26-15 DATE

05-26-15
PLANS APPROVAL DATE

REGISTERED PROFESSIONAL ENGINEER YONGBEE LIAU No. C75571 Exp. 6-30-16 CIVIL STATE OF CALIFORNIA

THE STATE OF CALIFORNIA OR ITS OFFICERS OR AGENTS SHALL NOT BE RESPONSIBLE FOR THE ACCURACY OR COMPLETENESS OF SCANNED COPIES OF THIS PLAN SHEET.

NOTE:

1. FOR LOCATIONS, DIMENSIONS, AND QUANTITIES OF SHOULDER SLURRY SEAL OR COLD PLANE AND OVERLAY SEE SUMMARY ON QUANTITIES SHEETS.

LEGEND:

: LIMIT OF SLURRY SEAL

: LIMIT OF COLD PLANE AND OVERLAY

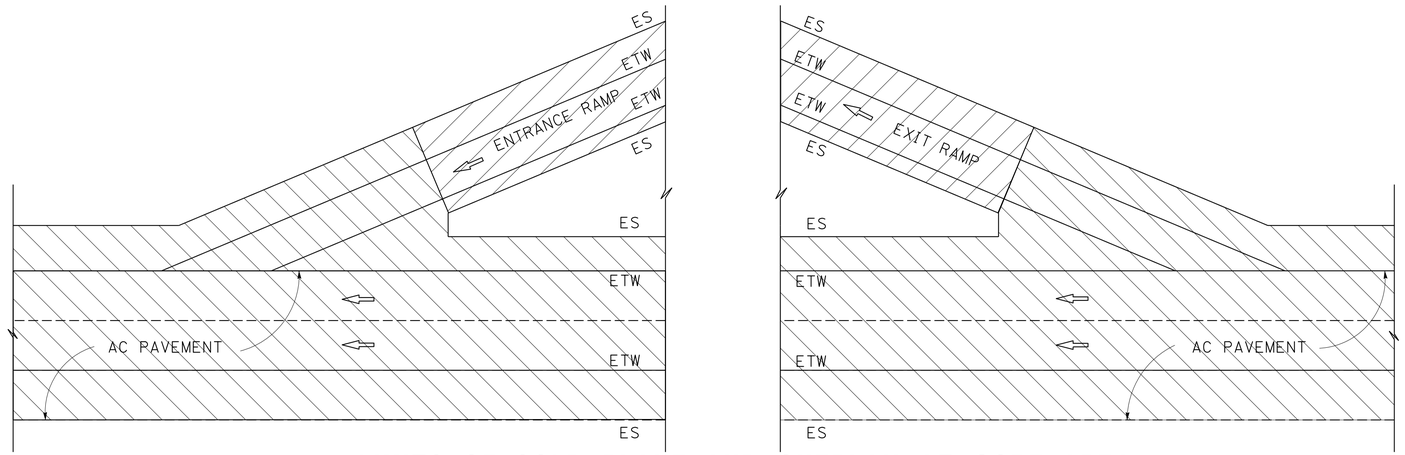

LIMITS OF COLD PLANE AND OVERLAY AT GORE AREA

DAY St (ALL RAMPS)
FREDERICK St (EXCEPT EB EXIT RAMP)
HEACOCK St (WB EXIT & ENTRANCE RAMPS)
PERRIS Blvd (EXCEPT EB ENTRANCE RAMP)
NASON St (ALL RAMPS)
MORENO BEACH Dr (EB EXIT & ENTRANCE RAMPS)

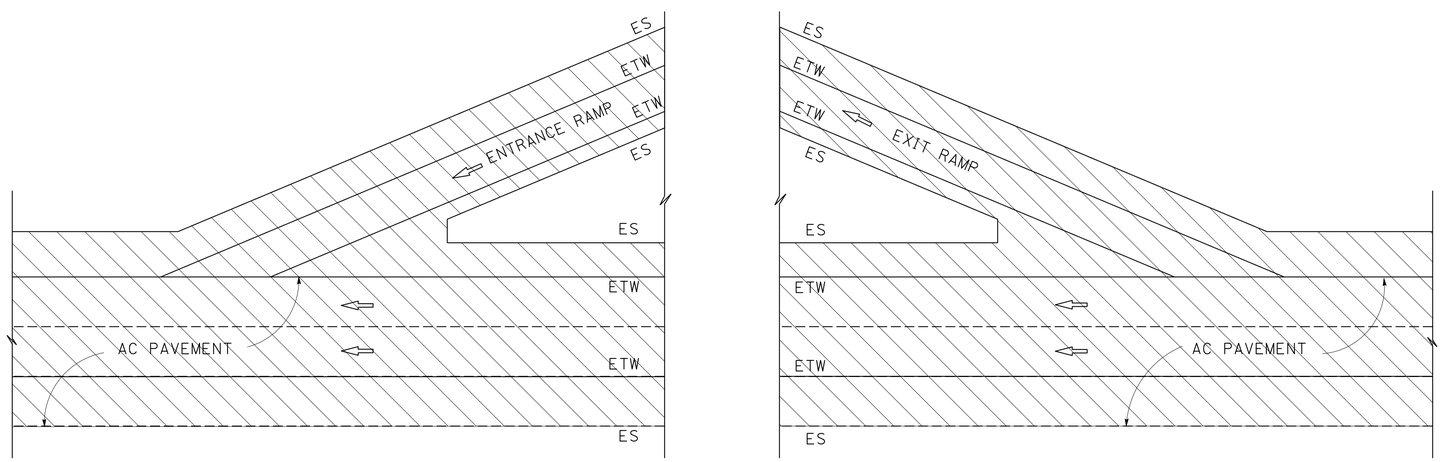

LIMITS OF COLD PLANE AND OVERLAY AT GORE AREA

FREDERICK St (EB EXIT RAMP ONLY)
HEACOCK St (EB EXIT & ENTRANCE RAMPS)
PERRIS Blvd (EB ENTRANCE RAMP ONLY)
MORENO BEACH Blvd (WB EXIT & ENTRANCE RAMPS)
REDLANDS Blvd (ALL RAMPS)
THEODORE St (ALL RAMPS)

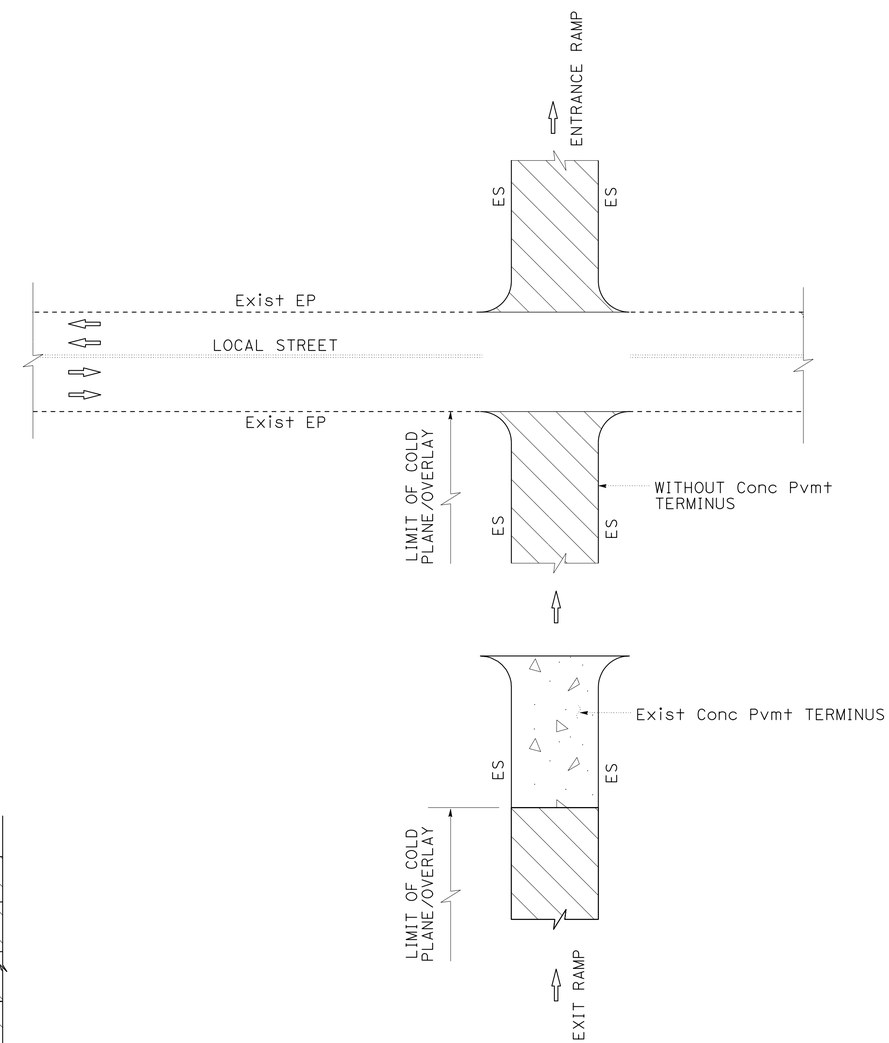

COLD PLANE/OVERLAY LIMITS OF WORK

EXIT AND ENTRANCE RAMPS AT LOCAL STREETS

CONSTRUCTION DETAILS

NO SCALE

C-1

STATE OF CALIFORNIA - DEPARTMENT OF TRANSPORTATION
Caltrans MAINTENANCE ENGINEERING

FUNCTIONAL SUPERVISOR: KEVIN CHEN
CALCULATED-DESIGNED BY: YONGBEE LIAU
CHECKED BY: KEVIN CHEN
REVISED BY
DATE REVISED

LAST REVISION 05-28-15
DATE PLOTTED => 16-NOV-2015
TIME PLOTTED => 12:43

Dist	COUNTY	ROUTE	POST MILES TOTAL PROJECT	SHEET No.	TOTAL SHEETS
08	Riv	60	R12.2/22.1, 26.5/30.4	9	113

REGISTERED CIVIL ENGINEER DATE 05-26-15

05-26-15
PLANS APPROVAL DATE

REGISTERED PROFESSIONAL ENGINEER
YONGBEE LIAU
No. C75571
Exp. 6-30-16
CIVIL
STATE OF CALIFORNIA

THE STATE OF CALIFORNIA OR ITS OFFICERS OR AGENTS SHALL NOT BE RESPONSIBLE FOR THE ACCURACY OR COMPLETENESS OF SCANNED COPIES OF THIS PLAN SHEET.

NOTES:

1. EXISTING UTILITY FACILITIES HAVE NOT BEEN INCLUDED ON THESE PLANS.
2. CONTRACTOR TO VERIFY EXISTING FIELD CONDITIONS.
3. SUBJECT TO EXISTING FIELD CONDITIONS THE EXACT MAINTENANCE PULLOUT LOCATIONS CAN BE ADJUSTED AS DIRECTED BY THE ENGINEER.

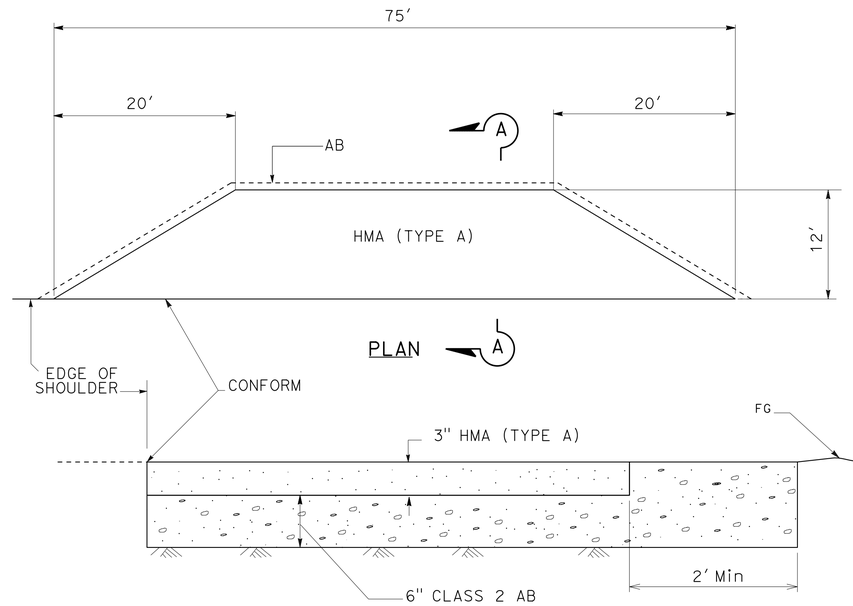

SECTION A-A

MAINTENANCE VEHICLE PULLOUT

EB ROUTE 60 PM 16.96 (SOUTH SIDE)
EB ROUTE 60 PM 17.36 (SOUTH SIDE)
WB ROUTE 60 PM 16.80 (NORTH SIDE)
WB ROUTE 60 PM 17.53 (NORTH SIDE)

CONSTRUCTION DETAILS

NO SCALE

C-2

STATE OF CALIFORNIA - DEPARTMENT OF TRANSPORTATION
Caltrans MAINTENANCE ENGINEERING

FUNCTIONAL SUPERVISOR: KEVIN CHEN
CALCULATED-DESIGNED BY: YONGBEE LIAU
CHECKED BY: KEVIN CHEN
REVISED BY
DATE REVISED

LAST REVISION
DATE PLOTTED => 19-NOV-2015
TIME PLOTTED => 12:43
05-26-15

Dist	COUNTY	ROUTE	POST MILES TOTAL PROJECT	SHEET No.	TOTAL SHEETS
08	Riv	60	R12.2/22.1, 26.5/30.4	10	113

REGISTERED CIVIL ENGINEER 05-26-15 DATE

05-26-15
PLANS APPROVAL DATE

REGISTERED PROFESSIONAL ENGINEER YONGBEE LIAU No. C75571 Exp. 6-30-16 CIVIL STATE OF CALIFORNIA

THE STATE OF CALIFORNIA OR ITS OFFICERS OR AGENTS SHALL NOT BE RESPONSIBLE FOR THE ACCURACY OR COMPLETENESS OF SCANNED COPIES OF THIS PLAN SHEET.

NOTES:

1. DOWELS AND TIE BARS SPACING PER REVISED STANDARD PLANS RSP P10 AND RSP P18.
2. LONGITUDINAL WEAKENED PLANE JOINTS SHALL EXTEND TO AND TERMINATE AT THE TRANSVERSE JOINT WHERE NO SLAB WIDTH LESS THAN 2′ OR GREATER THAN 15′ RESULTS.
3. MATCH AND JOIN EXISTING GRADE ALONG EXISTING LOCAL STREET.
4. FOR DETAILS NOT SHOWN, SEE REVISED STANDARD PLANS RSP 12 RSP P17, RSP P20, AND RSP P30.
5. SEE SHEET X-5 FOR PAVEMENT TYPICAL CROSS SECTIONS.
6. EXISTING UTILITY FACILITIES HAVE NOT BEEN INCLUDED ON THESE PLANS.
7. CONTRACTOR TO VERIFY EXISTING FIELD CONDITIONS.
8. RAMP WIDTH DIMENSIONS SHOWN ARE APPROXIMATE. CONTRACTOR TO VERIFY AND MATCH EXISTING DIMENSIONS.
9. PROVIDE ISOLATION JOINT BETWEEN EXISTING CROSS GUTTER AND NEW CONCRETE PAVEMENT PER STD PLAN P45.
10. JOINTED PLAIN CONCRETE PAVEMENT TO MATCH EXISTING ELEVATIONS.
11. SEE SHEET C-9 FOR DIKE AND CURB FACE TRANSITION DETAILS.

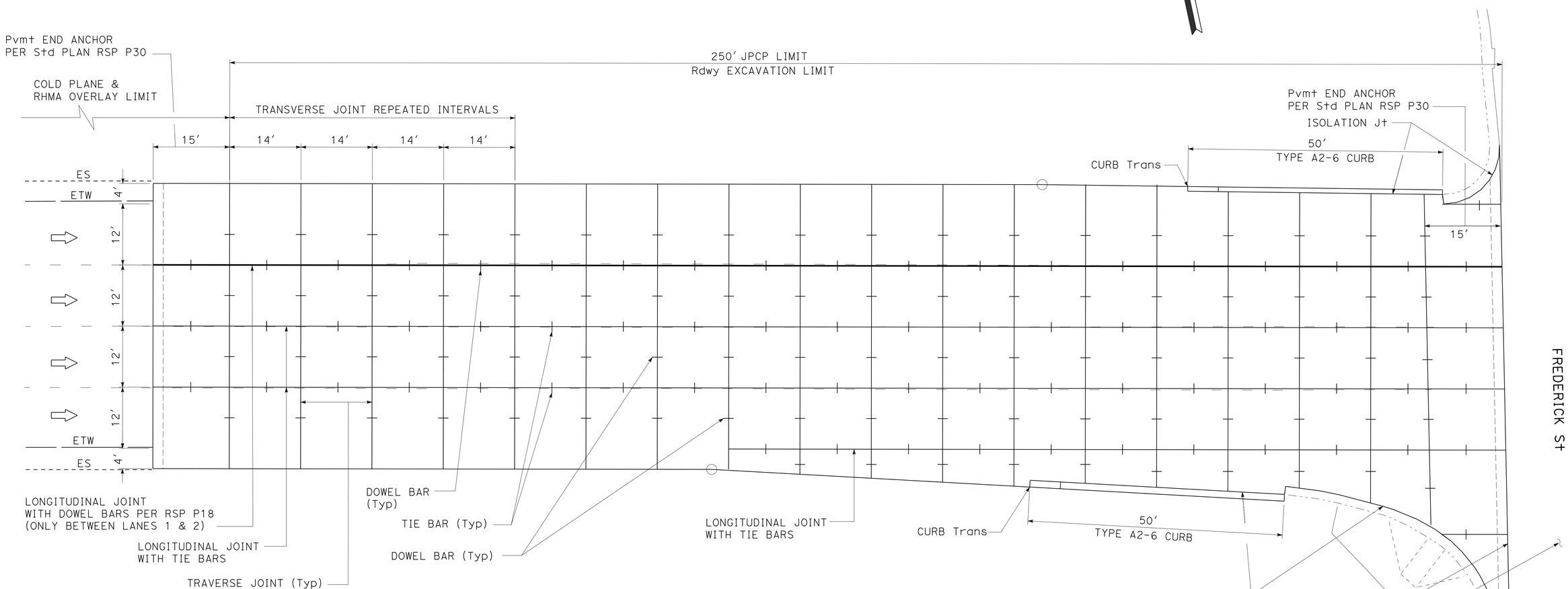

EXIT RAMP TERMINUS JPCP PAVING

@ EB EXIT RAMP FREDERICK St

CONSTRUCTION DETAILS

SCALE 1" = 10′

C-3

STATE OF CALIFORNIA - DEPARTMENT OF TRANSPORTATION
Caltrans MAINTENANCE ENGINEERING

FUNCTIONAL SUPERVISOR: KEVIN CHEN
CALCULATED-DESIGNED BY: YONGBEE LIAU
CHECKED BY: KEVIN CHEN
REVISED BY
DATE REVISED

LAST REVISION 05-26-15
DATE PLOTTED => 16-NOV-2015
TIME PLOTTED => 12:43

Dist	COUNTY	ROUTE	POST MILES TOTAL PROJECT	SHEET No.	TOTAL SHEETS
08	Riv	60	R12.2/22.1, 26.5/30.4	11	113

REGISTERED CIVIL ENGINEER 05-26-15 DATE

05-26-15
PLANS APPROVAL DATE

REGISTERED PROFESSIONAL ENGINEER YONGBEE LIAU No. C75571 Exp. 6-30-16 CIVIL STATE OF CALIFORNIA

THE STATE OF CALIFORNIA OR ITS OFFICERS OR AGENTS SHALL NOT BE RESPONSIBLE FOR THE ACCURACY OR COMPLETENESS OF SCANNED COPIES OF THIS PLAN SHEET.

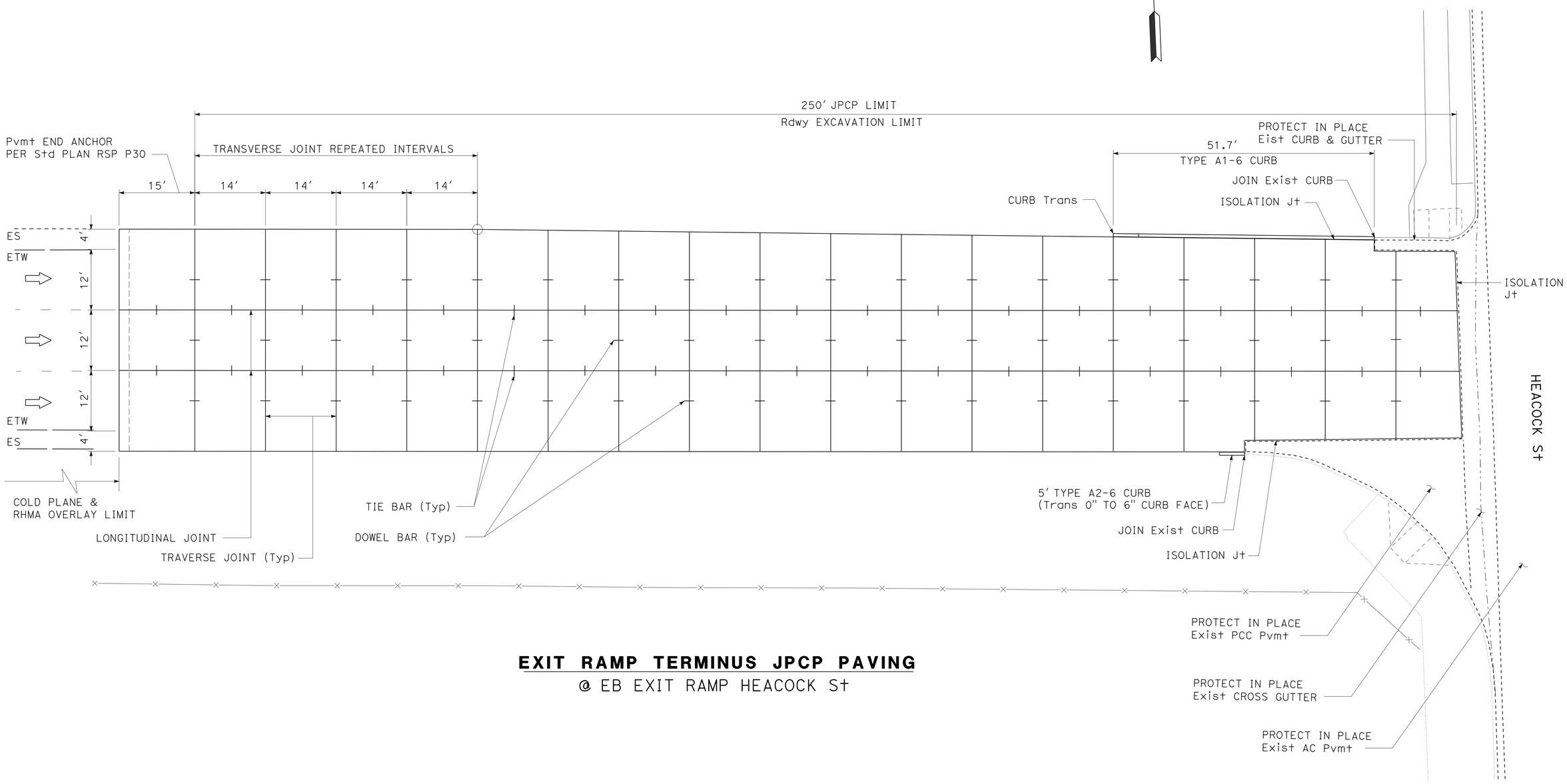

EXIT RAMP TERMINUS JPCP PAVING

@ EB EXIT RAMP HEACOCK St

CONSTRUCTION DETAILS

SCALE 1" = 10'

C-4

REVISED BY	DATE REVISED
YONGBEE LIAU	KEVIN CHEN
CALCULATED-DESIGNED BY	CHECKED BY
FUNCTIONAL SUPERVISOR	KEVIN CHEN

STATE OF CALIFORNIA - DEPARTMENT OF TRANSPORTATION
Caltrans® MAINTENANCE ENGINEERING

LAST REVISION 05-26-15 | DATE PLOTTED => 16-NOV-2015 | TIME PLOTTED => 12:43

Dist	COUNTY	ROUTE	POST MILES TOTAL PROJECT	SHEET No.	TOTAL SHEETS
08	Riv	60	R12.2/22.1, 26.5/30.4	12	113

REGISTERED CIVIL ENGINEER 05-26-15 DATE

05-26-15
PLANS APPROVAL DATE

REGISTERED PROFESSIONAL ENGINEER YONGBEE LIAU No. C75571 Exp. 6-30-16 CIVIL STATE OF CALIFORNIA

THE STATE OF CALIFORNIA OR ITS OFFICERS OR AGENTS SHALL NOT BE RESPONSIBLE FOR THE ACCURACY OR COMPLETENESS OF SCANNED COPIES OF THIS PLAN SHEET.

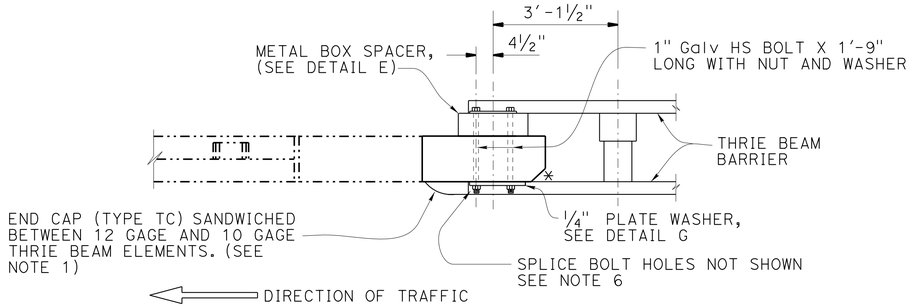

PLAN

* 5" X 5" CHAMFER

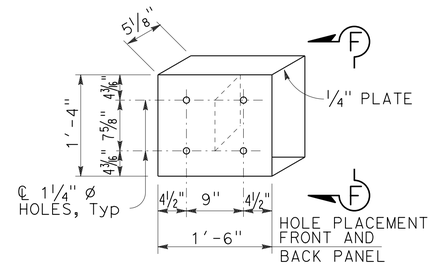

DETAIL E

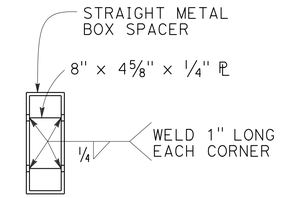

VIEW F-F

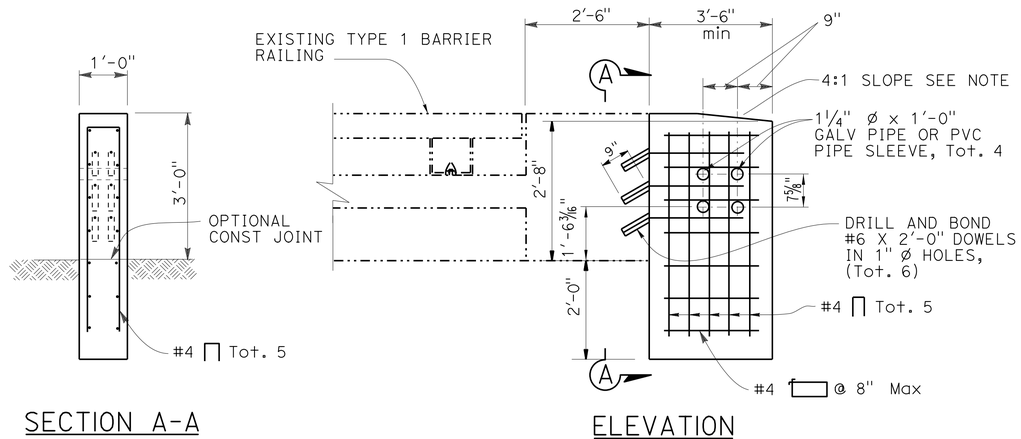

SECTION A-A

ELEVATION

TYPE I

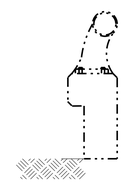

TYPICAL SECTION

(TYPE 1 BARRIER)

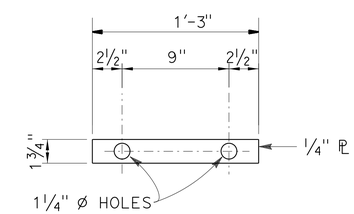

DETAIL G

THRIE BEAM CONNECTION DETAILS

BARRIER RAILING TYPE 1

TRANSITION RAILING CONNECTION (TYPE WB-31)

DETAIL 1

NOTES:

1. FOR DETAILS NOT SHOWN, SEE STANDARD PLANS, 2010.
2. DEPENDENT DIMENSIONS WILL BE VERIFIED IN THE FIELD BEFORE FABRICATING ANY END CONNECTION TO CONFORM WITH EXISTING PAVED CONDITIONS.
3. WHEN END SECTION IS CALLED FOR, MODIFY TYPICAL TERMINAL SECTION TO FIT. SEE DETAIL E
4. ALL PLATES AND BOLTS ARE GALVANIZED.
5. CUT AND REMOVE PORTION OF TYPE 1, 2 AND BAGR AS REQUIRED.
6. EXTERIOR SPLICE BOLT HOLES SHALL BE THE STANDARD " X 1 "SLOT SIZE FOR RAIL SPLICES AT POST #T4 AND THE CONNECTION TO THE CONCRETE BARRIER OR RAILING. INTERIOR SPLICE BOLT HOLES MAY BE INCREASED UP TO 1 " DIA. WASHERS SHALL BE USED WITH SPLICE BOLTS ON BACK SIDE OF RAIL ELEMENT AT POST #T4 AND CONNECTION TO THE CONCRETE BARRIER OR RAILING.
7. TAPER THE TOP OF THE END OF THE BRIDGE RAILING AT 4:1 TO MATCH THE TOP ELEVATION OF THE THRIE BEAM RAIL ELEMENT.
8. EXISTING UTILITIES HAVE NOT BEEN INCLUDED ON THESE PLANS.

CONSTRUCTION DETAILS

NO SCALE

C-5

STATE OF CALIFORNIA - DEPARTMENT OF TRANSPORTATION
Caltrans MAINTENANCE ENGINEERING

FUNCTIONAL SUPERVISOR: KEVIN CHEN
CALCULATED-DESIGNED BY: YONGBEE LIAU
CHECKED BY: KEVIN CHEN
REVISED BY
DATE REVISED

LAST REVISION 05-26-15
DATE PLOTTED => 16-NOV-2015
TIME PLOTTED => 12:43

Dist	COUNTY	ROUTE	POST MILES TOTAL PROJECT	SHEET No.	TOTAL SHEETS
08	Riv	60	R12.2/22.1, 26.5/30.4	13	113

REGISTERED CIVIL ENGINEER 05-26-15 DATE

05-26-15
PLANS APPROVAL DATE

REGISTERED PROFESSIONAL ENGINEER YONGBEE LIAU No. C75571 Exp. 6-30-16 CIVIL STATE OF CALIFORNIA

THE STATE OF CALIFORNIA OR ITS OFFICERS OR AGENTS SHALL NOT BE RESPONSIBLE FOR THE ACCURACY OR COMPLETENESS OF SCANNED COPIES OF THIS PLAN SHEET.

NOTES:

1. THE CONTRACTOR MUST VERIFY ALL CONTROLLING FIELD DIMENSIONS BEFORE ORDERING OR FABRICATING ANY MATERIAL.
2. EXISTING UTILITIES HAVE NOT BEEN INCLUDED ON THESE PLANS.

LEGEND:

INDICATES EXISTING STRUCTURE

INDICATES NEW STRUCTURE

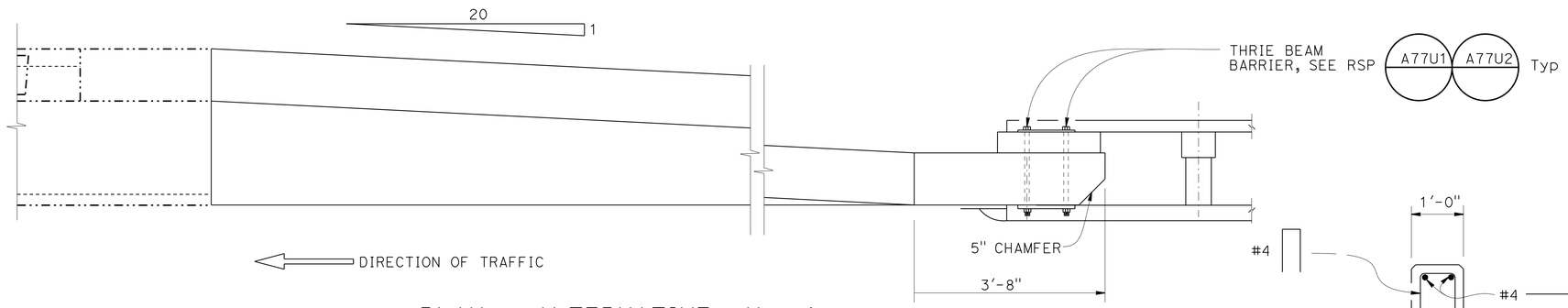

PLAN - ALTERNATIVE No. 1
NO SCALE

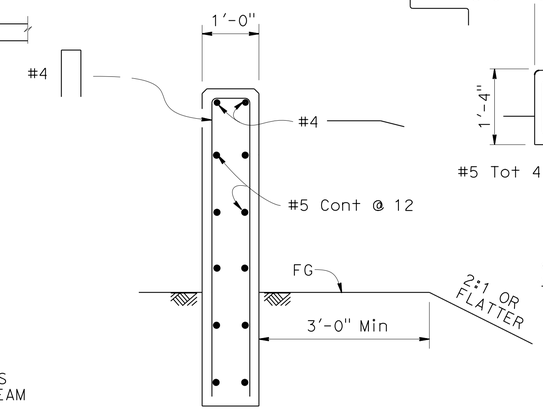

SECTION E-E
3/4" = 1'-0"

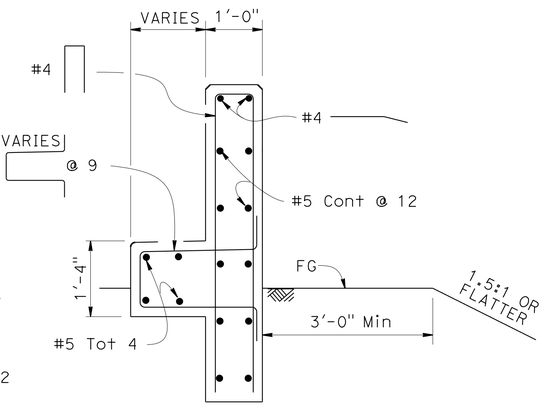

SECTION F-F
3/4" = 1'-0"

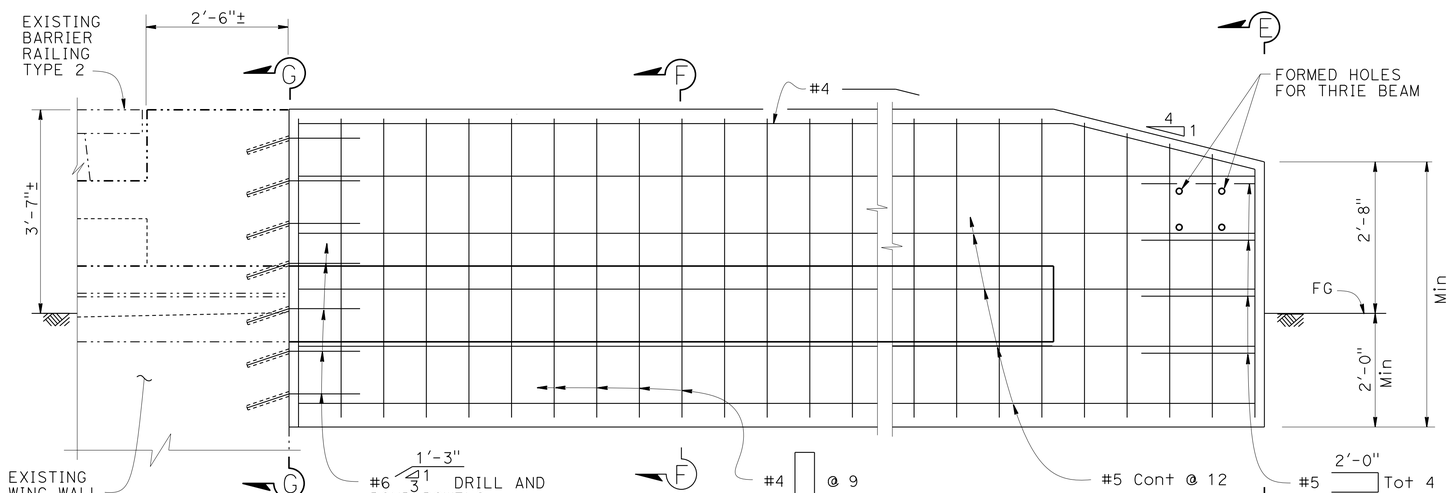

ELEVATION
3/4" = 1'-0"

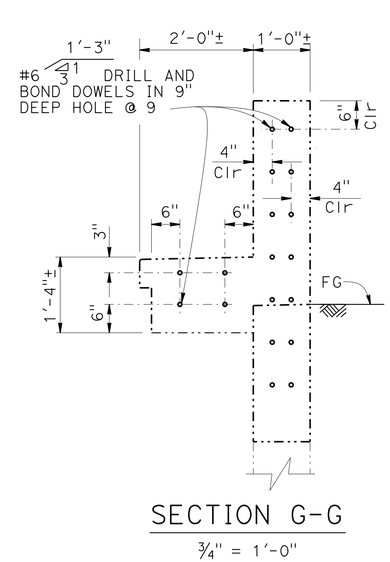

SECTION G-G
3/4" = 1'-0"

CONCRETE ANCHOR BLOCK DETAIL 2

CONSTRUCTION DETAILS

NO SCALE

C-6

STATE OF CALIFORNIA - DEPARTMENT OF TRANSPORTATION
Caltrans MAINTENANCE ENGINEERING

FUNCTIONAL SUPERVISOR: KEVIN CHEN
CALCULATED-DESIGNED BY: YONGBEE LIAU
CHECKED BY: KEVIN CHEN
REVISED BY
DATE REVISED

LAST REVISION 05-27-15
DATE PLOTTED => 16-NOV-2015
TIME PLOTTED => 12:43

Dist	COUNTY	LOCATION CODE	POST MILES TOTAL PROJECT	SHEET No.	TOTAL SHEETS
08	Riv	60	R12.2/22.1, 26.5/30.4	14	113

REGISTERED CIVIL ENGINEER 05-26-15 DATE

05-26-15
PLANS APPROVAL DATE

REGISTERED PROFESSIONAL ENGINEER IYAD NAMY No. C74762 Exp. 12/31/15 CIVIL STATE OF CALIFORNIA

THE STATE OF CALIFORNIA OR ITS OFFICERS OR AGENTS SHALL NOT BE RESPONSIBLE FOR THE ACCURACY OR COMPLETENESS OF SCANNED COPIES OF THIS PLAN SHEET.

NOTES:

1. SEE SUMMARY SHEETS OF QUANTITIES FOR HMA DIKE PLACEMENT AND REMOVAL MIDWEST GUARDRAIL SYSTEM AND CONCRETE BARRIER QUANTITIES.
2. SEE REVISED STANDARD PLANS (A77L1, A77N4, A77R3, A77S1, A77U4) FOR DETAILS NOT SHOWN.
3. SEE STANDARD PLANS (A76G, A78B) FOR DETAILS NOT SHOWN.
4. SEE SHEET C-8 FOR DETAILS.
5. LOCATION OF NEW CONCRETE BARRIER AND MGS WILL BE THE SAME AS EXISTING MBGR.
6. GILMAN SPRING Rd OC HAS 3 EXISTING COLUMNS.

LEGEND:

⇨ DIRECTION OF TRAFFIC

LOCATION CHART

LOCATION DESCRIPTION	PM	DIRECTION
MORENO BEACH DR OC	19.12	WB
REDLANDS BLVD OC	20.37	WB/EB
THEODORE ST OC	21.37	WB/EB
GILMAN SPRINGS RD OC	22.10	WB

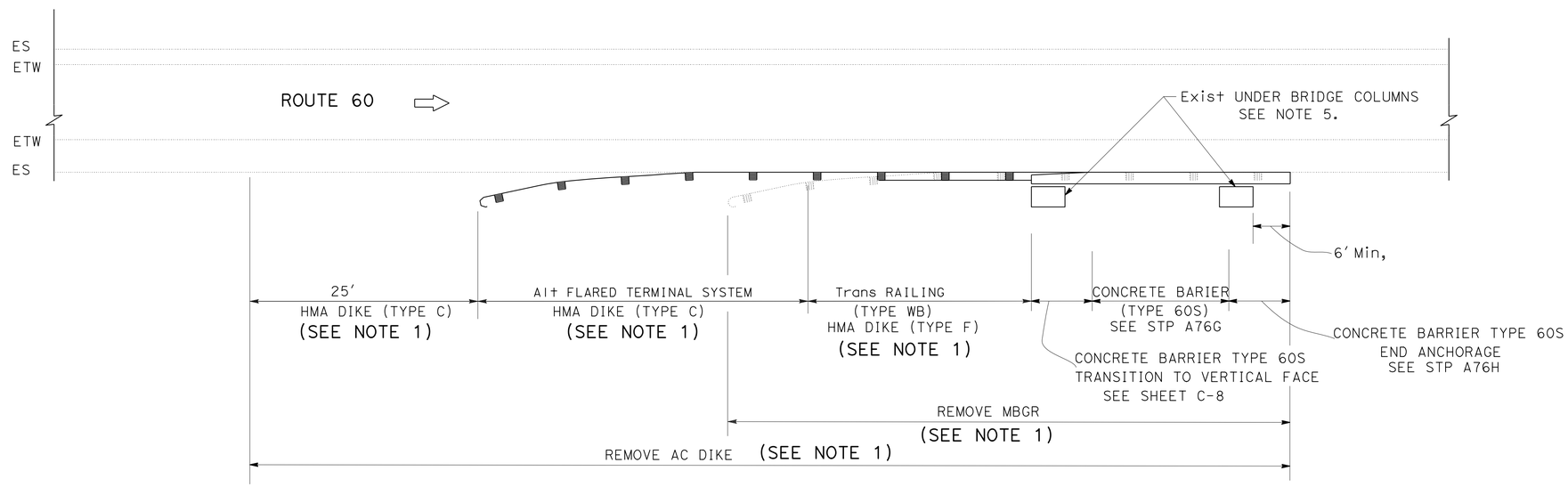

CONCRETE BARRIER AND MGS CONSTRUCTION
TYPICAL LAYOUT UNDER BRIDGES

(SEE LOCATION CHART)

ROUTE 60 EB/WB

NO SCALE

CONSTRUCTION DETAILS

NO SCALE **C-7**

STATE OF CALIFORNIA - DEPARTMENT OF TRANSPORTATION
Caltrans MAINTENANCE ENGINEERING

FUNCTIONAL SUPERVISOR: KEVIN CHEN
CALCULATED-DESIGNED BY: YONGBEE LIAU
CHECKED BY: KEVIN CHEN
REVISED BY
DATE REVISED

LAST REVISION 05-25-15
DATE PLOTTED => 16-NOV-2015
TIME PLOTTED => 12:43

Dist	COUNTY	LOCATION CODE	POST MILES TOTAL PROJECT	SHEET No.	TOTAL SHEETS
08	Riv	60	R12.2/22.1, 26.5/30.4	15	113

REGISTERED CIVIL ENGINEER 05-26-15 DATE

05-26-15
PLANS APPROVAL DATE

REGISTERED PROFESSIONAL ENGINEER
IYAD NAMY
No. C74762
Exp. 12/31/15
CIVIL
STATE OF CALIFORNIA

THE STATE OF CALIFORNIA OR ITS OFFICERS OR AGENTS SHALL NOT BE RESPONSIBLE FOR THE ACCURACY OR COMPLETENESS OF SCANNED COPIES OF THIS PLAN SHEET.

NOTES:

1. FOR DETAILS NOT SHOWN, SEE STANDARD PLANS.
2. FOOTING MONOLITHIC OR DOWELED WITH 2-#8X8" @ 32". THE FOOTING IS REQUIRED AT CONCRETE BARRIER ENDS AND AT INTERRUPTIONS IN CONCRETE BARRIER.
3. SEE STANDARD PLANS A76G, A76H FOR CONCRETE BARRIER TYPE 60S AND TYPE 60SC.
4. 10" CONCRETE BARRIER FOOTING EXTENDS 10' BACK FROM BARRIER TERMINI.
5. SEE REVISED STANDARD PLAN RSP A77U4 FOR TRANSITION RAILING (TYPE WB-31) CONSTRUCTION DETAILS.

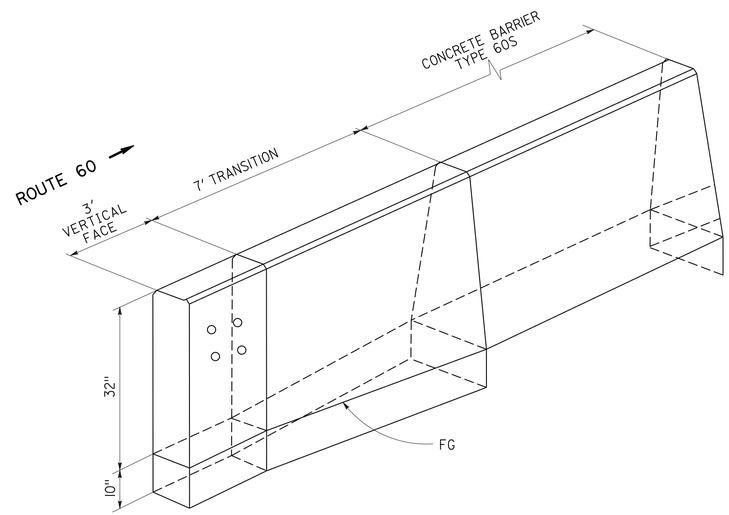

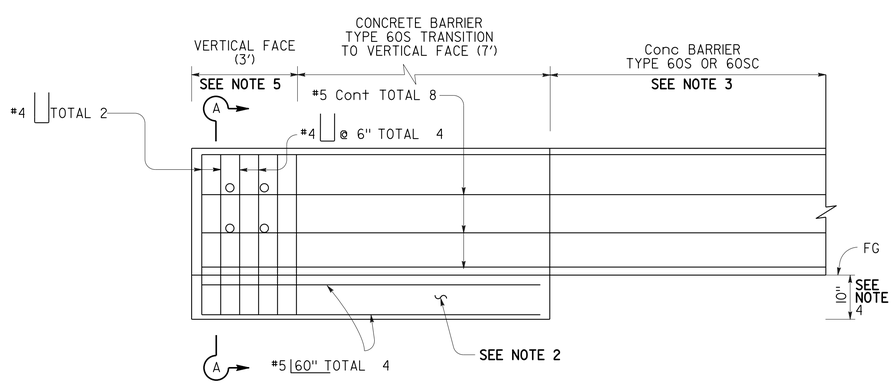

CONCRETE BARRIER (TYPE 60S) TRANSITIONS TO VERTICAL FACE

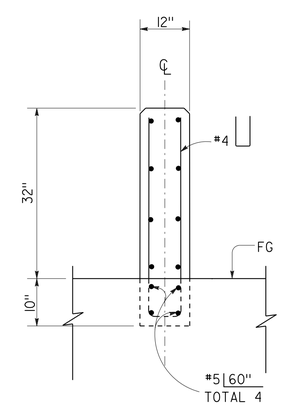

SECTION A-A

CONSTRUCTION DETAILS

NO SCALE

C-8

STATE OF CALIFORNIA - DEPARTMENT OF TRANSPORTATION
Caltrans MAINTENANCE ENGINEERING

FUNCTIONAL SUPERVISOR: KEVIN CHEN
CALCULATED-DESIGNED BY: YONGBEE LIAU
CHECKED BY: KEVIN CHEN
REVISED BY
DATE REVISED

LAST REVISION 05-15-15
DATE PLOTTED => 16-NOV-2015
TIME PLOTTED => 12:43

Dist	COUNTY	ROUTE	POST MILES TOTAL PROJECT	SHEET No.	TOTAL SHEETS
08	Riv	60	R12.2/22.1, 26.5/30.4	16	113

REGISTERED CIVIL ENGINEER 05-26-15 DATE

05-26-15
PLANS APPROVAL DATE

REGISTERED PROFESSIONAL ENGINEER YONGBEE LIAU No. C75571 Exp. 6-30-16 CIVIL STATE OF CALIFORNIA

THE STATE OF CALIFORNIA OR ITS OFFICERS OR AGENTS SHALL NOT BE RESPONSIBLE FOR THE ACCURACY OR COMPLETENESS OF SCANNED COPIES OF THIS PLAN SHEET.

NOTE:

HMA DIKE AND PCC CURB TRANSITIONS SHALL BE AS SHOWN OR AS DIRECTED BY THE ENGINEER.

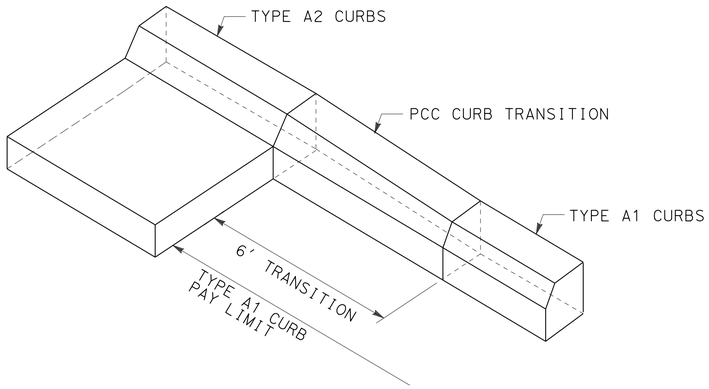

FROM TYPE A2 CURB TO TYPE A1 CURB

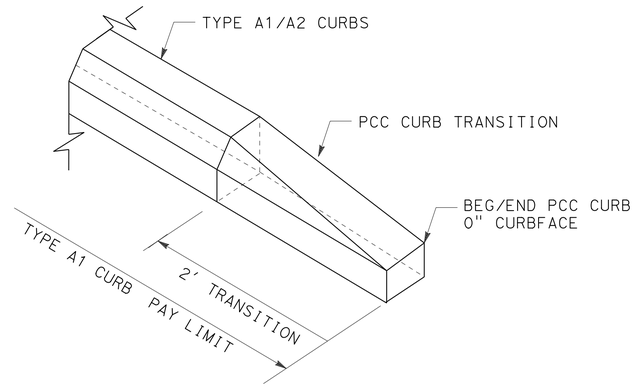

PCC CURB TRANSITION DETAIL

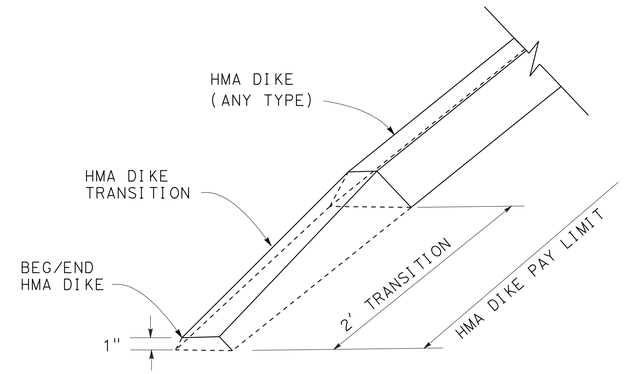

HMA DIKE TRANSITION DETAIL

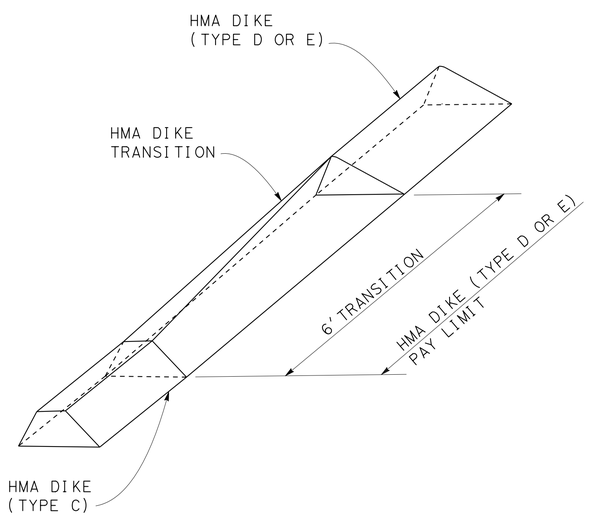

FROM TYPE 'C' TO TYPE 'D" OR 'E'

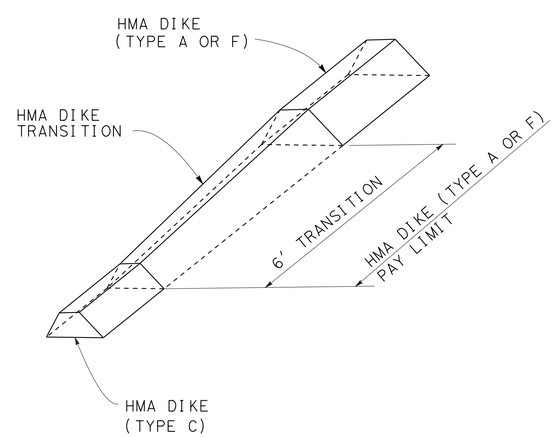

FROM TYPE 'C' TO TYPE 'A' OR 'F'

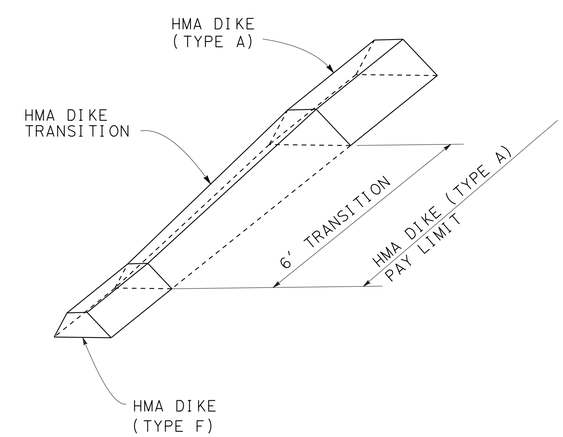

FROM TYPE 'F' TO TYPE 'A'

DETAILS OF HMA DIKE AND PCC CURB TRANSITIONS

CONSTRUCTION DETAILS

NO SCALE

C-9

STATE OF CALIFORNIA - DEPARTMENT OF TRANSPORTATION
Caltrans MAINTENANCE ENGINEERING

FUNCTIONAL SUPERVISOR: KEVIN CHEN
CALCULATED-DESIGNED BY: YONGBEE LIAU
CHECKED BY: KEVIN CHEN
REVISED BY
DATE REVISED

LAST REVISION 05-15-15
DATE PLOTTED => 16-NOV-2015
TIME PLOTTED => 12:43

Dist	COUNTY	ROUTE	POST MILES TOTAL PROJECT	SHEET No.	TOTAL SHEETS
08	Riv	60	R12.2/22.1, 26.5/30.4	17	113

REGISTERED CIVIL ENGINEER DATE 05-26-15

PLANS APPROVAL DATE 05-26-15

REGISTERED PROFESSIONAL ENGINEER MINLUNG HO No. C 68641 Exp. 9/30/15 STATE OF CALIFORNIA

THE STATE OF CALIFORNIA OR ITS OFFICERS OR AGENTS SHALL NOT BE RESPONSIBLE FOR THE ACCURACY OR COMPLETENESS OF SCANNED COPIES OF THIS PLAN SHEET.

NOTES:

1. ALL WORK WITHIN STATE RIGHT OF WAY.
2. EXACT LIMITS SHALL BE DETERMINED BY THE ENGINEER.
3. SAWCUT IS NEEDED BEFORE REMOVE EXISTING RETAINING CURB REMOVE EXISTING RETAINING CURB SHOULD BE 2" WIDE AS SHOWN IN SECTION A-A
4. THE CONTRACTOR SHALL VERIFY ALL CONTROLLING FIELD DIMENSIONS BEFORE ORDERING OR FABRICATING ANY MATERIAL.

LEGEND:

REMOVE CONCRETE (MISCELLANEOUS)

SECTION A-A

ADA RAMP DETAIL

EB OFFRAMP TO FREDERICK ST. SW QUADRANT

CONSTRUCTION DETAILS

NO SCALE

C-10

STATE OF CALIFORNIA - DEPARTMENT OF TRANSPORTATION
Caltrans MAINTENANCE ENGINEERING

FUNCTIONAL SUPERVISOR: MARIO AMANCIO

CALCULATED-DESIGNED BY: MINLUNG HO

CHECKED BY: KUANG H. CHEN

REVISED BY

DATE REVISED

LAST REVISION 05-15-15 | DATE PLOTTED => 16-NOV-2015 | TIME PLOTTED => 12:43

Dist	COUNTY	ROUTE	POST MILES TOTAL PROJECT	SHEET No.	TOTAL SHEETS
08	Riv	60	R12.2/22.1, 26.5/30.4	18	113

REGISTERED CIVIL ENGINEER 05-26-15 DATE

05-26-15
PLANS APPROVAL DATE

REGISTERED PROFESSIONAL ENGINEER T. HOANG No. 54996 Exp. 6-30-16 CIVIL STATE OF CALIFORNIA

THE STATE OF CALIFORNIA OR ITS OFFICERS OR AGENTS SHALL NOT BE RESPONSIBLE FOR THE ACCURACY OR COMPLETENESS OF SCANNED COPIES OF THIS PLAN SHEET.

NOTES:

1. LOCATIONS OF CONSTRUCTION AREA SIGNS SHOWN ARE APPROXIMATE. EXACT LOCATIONS TO BE DETERMINED BY THE ENGINEER.
2. EXACT LOCATIONS AND MESSAGES OF PORTABLE CHANGEABLE MESSAGE SIGNS (PCMS) WILL BE DETERMINED BY THE ENGINEER.

LEGEND:

- CONSTRUCTION AREA
- STATIONARY CONSTRUCTION AREA SIGN (ONE-POST)
- STATIONARY CONSTRUCTION AREA SIGN (TWO-POST)
- (X) CONSTRUCTION AREA SIGN NUMBER

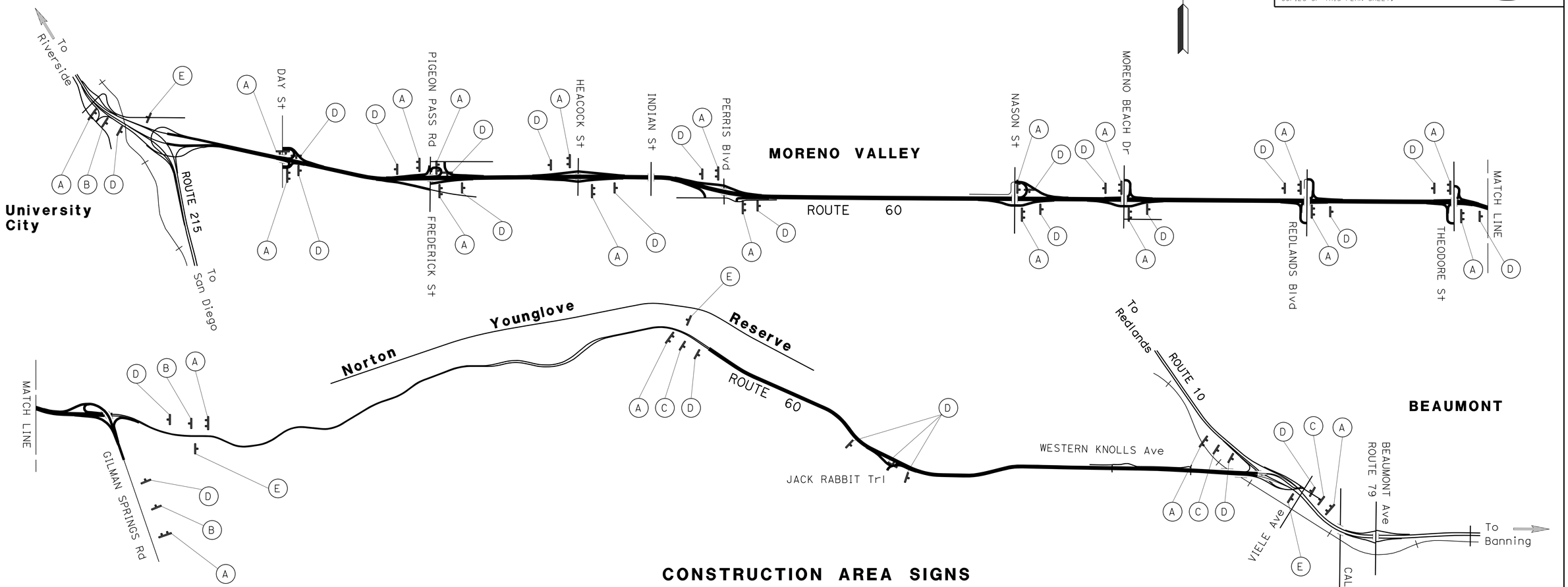

CONSTRUCTION AREA SIGNS

SIGN	SIGN CODE	PANEL SIZE	No. OF POSTS - POST SIZE	SIGN MESSAGE	No. OF SIGNS		REMARKS
					ONE POST	TWO POST	
A	C40(CA)	144" x 60"	2 - 6" x 8"	TRAFFIC FINES DOUBLE IN CONSTRUCTION ZONES		23	
B	G20-1	90" x 36"	1 - 6" x 6"	ROAD WORK NEXT 10 MILES	3		
C	G20-1	90" x 36"	1 - 6" x 6"	ROAD WORK NEXT 4 MILES	3		
D	W20-1	48" x 48"	1 - 6" x 6"	ROAD WORK AHEAD	26		
E	G20-2	48" x 24"	1 - 4" x 4"	END ROAD WORK	4		
	R9-9 (*)	24" x 12"	1 - 4" x 4"	SIDEWALK CLOSED	1		LEFT IN PLACE.
TOTAL					37	23	

(*) PLACE ON BACK OF SIDEWALK WEST SIDE OF FREDERICK ST/PIGEON PASS RD, SOUTH OF HEMLOCK STREET.

PORTABLE CHANGEABLE MESSAGE SIGN (PCMS)

EA
6

APPROVED FOR CONSTRUCTION AREA SIGN WORK ONLY

CONSTRUCTION AREA SIGNS

NO SCALE

CS-1

STATE OF CALIFORNIA - DEPARTMENT OF TRANSPORTATION
Caltrans® TRAFFIC DESIGN

FUNCTIONAL SUPERVISOR: MARIO AMANCIO
CALCULATED-DESIGNED BY: PHIL VU
CHECKED BY: TRAN HOANG
REVISED BY / DATE REVISED

LAST REVISION 05-15-15 | DATE PLOTTED => 16-NOV-2015 | TIME PLOTTED => 12:44

Dist	COUNTY	ROUTE	POST MILES TOTAL PROJECT	SHEET No.	TOTAL SHEETS
08	Riv	60	R12.2/22.1, 26.5/30.4	19	110

REGISTERED CIVIL ENGINEER 05-26-15 DATE

05-26-15
PLANS APPROVAL DATE

REGISTERED PROFESSIONAL ENGINEER T. HOANG No. 54996 Exp. 6-30-16 CIVIL STATE OF CALIFORNIA

THE STATE OF CALIFORNIA OR ITS OFFICERS OR AGENTS SHALL NOT BE RESPONSIBLE FOR THE ACCURACY OR COMPLETENESS OF SCANNED COPIES OF THIS PLAN SHEET.

PAVEMENT DELINEATION QUANTITIES

DIRECTION	DETAIL NUMBER	PAVEMENT MARKERS						THERMOPLASTIC TRAFFIC STRIPE (SPRAYABLE)			THERMOPLASTIC PAVEMENT MARKING		TEMPORARY TRAFFIC STRIPE (PAINT)		
		NON-REFLECTIVE	RETROREFLECTIVE				RETRO-REFLECTIVE RECESSED	4 INCH YELLOW	4 INCH WHITE	8 INCH WHITE	WHITE	YELLOW	4 INCH YELLOW	4 INCH WHITE	8 INCH WHITE
		A	C	D	G	H	H								
		EA						LF			SQFT		LF		
DAY St EB EXIT RAMP	10M	150			25				1200					1200	
	25A					60		1400					1400		
	27B								2060					2060	
	36				28					660					660
	38				10					200					200
	38B				20					200					200
	CROSS WALK										300				
	SIGNAL AHEAD										126				
	ARROW TYPE V										66				
	ARROW TYPE III (L)										210				
	ARROW TYPE III (R)										84				
	ARROW TYPE III (B)										73				
DAY St EB ENTRANCE RAMP	8								180					180	
	10M	160			26				1250					1250	
	25A					60		1350					1350		
	27B								1820					1820	
	36A				20					470					470
	LIMIT LINE										24				
	ARROW TYPE I (24′)										48				
SHEET TOTAL		310			129	120		2750	6510	1530	931		2750	6510	1530

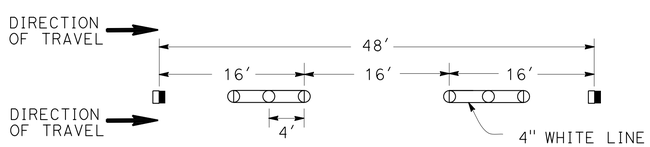

○ TYPE A WHITE NON-REFLECTIVE MARKER
◨ TYPE G ONE-WAY CLEAR RETROREFLECTIVE MARKER

DETAIL 10M
(NO SCALE)

PAVEMENT DELINEATION QUANTITIES

NO SCALE

PDQ-1

REVISED BY | DATE REVISED
PHIL VU | TRAN HOANG
CALCULATED-DESIGNED BY | CHECKED BY
FUNCTIONAL SUPERVISOR | MARIO AMANCIO

STATE OF CALIFORNIA - DEPARTMENT OF TRANSPORTATION
Caltrans® TRAFFIC DESIGN

LAST REVISION 06-02-15 | DATE PLOTTED => 16-NOV-2015 | TIME PLOTTED => 12:44

Dist	COUNTY	ROUTE	POST MILES TOTAL PROJECT	SHEET No.	TOTAL SHEETS
08	Riv	60	R12.2/22.1, 26.5/30.4	20	113

REGISTERED CIVIL ENGINEER 05-26-15 DATE

05-26-15
PLANS APPROVAL DATE

REGISTERED PROFESSIONAL ENGINEER T. HOANG No. 54996 Exp. 6-30-16 CIVIL STATE OF CALIFORNIA

THE STATE OF CALIFORNIA OR ITS OFFICERS OR AGENTS SHALL NOT BE RESPONSIBLE FOR THE ACCURACY OR COMPLETENESS OF SCANNED COPIES OF THIS PLAN SHEET.

PAVEMENT DELINEATION QUANTITIES

DIRECTION	DETAIL NUMBER	PAVEMENT MARKERS						THERMOPLASTIC TRAFFIC STRIPE (SPRAYABLE)			THERMOPLASTIC PAVEMENT MARKING		TEMPORARY TRAFFIC STRIPE (PAINT)		
		NON-REFLECTIVE	RETROREFLECTIVE				RETRO-REFLECTIVE RECESSED	4 INCH YELLOW	4 INCH WHITE	8 INCH WHITE	WHITE	YELLOW	4 INCH YELLOW	4 INCH WHITE	8 INCH WHITE
		A	C	D	G	H	H								
		EA						LF			SQFT		LF		
DAY St WB EXIT RAMP	9				12				550					550	
	25A					55		1320					1320		
	27B								1700					1700	
	36				36					820					820
	38B				34					400					400
	SIGNAL AHEAD										126				
	ARROW TYPE III (L)										252				
	ARROW TYPE III (R)										126				
DAY St WB ENTRANCE RAMP	8								150					150	
	25A					28		660					660		
	27B								900					900	
	36A				10					240					240
	LIMIT LINE										16				
	CROSS WALK										210				
SHEET TOTAL					92	83		1980	3300	1460	730		1980	3300	1460

STATE OF CALIFORNIA - DEPARTMENT OF TRANSPORTATION
Caltrans TRAFFIC DESIGN

FUNCTIONAL SUPERVISOR: MARIO AMANCIO
CALCULATED-DESIGNED BY: PHIL VU
CHECKED BY: TRAN HOANG
REVISED BY
DATE REVISED

PAVEMENT DELINEATION QUANTITIES

NO SCALE

PDQ-2

LAST REVISION 06-02-15
DATE PLOTTED => 16-NOV-2015
TIME PLOTTED => 12:44

Dist	COUNTY	ROUTE	POST MILES TOTAL PROJECT	SHEET No.	TOTAL SHEETS
08	Riv	60	R12.2/22.1, 26.5/30.4	21	113

REGISTERED CIVIL ENGINEER 05-26-15 DATE

05-26-15
PLANS APPROVAL DATE

REGISTERED PROFESSIONAL ENGINEER T. HOANG No. 54996 Exp. 6-30-16 CIVIL STATE OF CALIFORNIA

THE STATE OF CALIFORNIA OR ITS OFFICERS OR AGENTS SHALL NOT BE RESPONSIBLE FOR THE ACCURACY OR COMPLETENESS OF SCANNED COPIES OF THIS PLAN SHEET.

PAVEMENT DELINEATION QUANTITIES

DIRECTION	DETAIL NUMBER	PAVEMENT MARKERS						THERMOPLASTIC TRAFFIC STRIPE (SPRAYABLE)			THERMOPLASTIC PAVEMENT MARKING		TEMPORARY TRAFFIC STRIPE (PAINT)		
		NON-REFLECTIVE	RETROREFLECTIVE				RETRO-REFLECTIVE RECESSED	4 INCH YELLOW	4 INCH WHITE	8 INCH WHITE	WHITE	YELLOW	4 INCH YELLOW	4 INCH WHITE	8 INCH WHITE
		A	C	D	G	H	H								
		EA						LF			SQFT		LF		
FREDERICK St EB EXIT RAMP	10M	360			60				2900					2900	
	25A					62		1450					1450		
	27B								1500					1500	
	36				25					600					600
	38A				25					630					630
	LIMIT LINE										65				
	SIGNAL AHEAD										189				
	ARROW TYPE I (24')										31				
	ARROW TYPE III (L)										84				
	ARROW TYPE III (R)										42				
	ARROW TYPE I (10')										28				
	ARROW TYPE IV (L)										60				
	ARROW TYPE IV (R)										30				
FREDERICK St EB ENTRANCE RAMP	8								200					200	
	9				13				600					600	
	25A					34		800					800		
	27B								1500					1500	
	36A				18					420					420
	LIMIT LINE										26				
	CROSS WALK										80				
	ARROW TYPE I (24')										62				
SHEET TOTAL		360			141	96		2250	6700	1650	697		2250	6700	1650

PAVEMENT DELINEATION QUANTITIES

NO SCALE

PDQ-3

STATE OF CALIFORNIA - DEPARTMENT OF TRANSPORTATION
Caltrans TRAFFIC DESIGN

FUNCTIONAL SUPERVISOR: MARIO AMANCIO
CALCULATED-DESIGNED BY: PHIL VU
CHECKED BY: TRAN HOANG
REVISED BY
DATE REVISED

LAST REVISION 06-02-15
DATE PLOTTED => 16-NOV-2015
TIME PLOTTED => 12:44

Dist	COUNTY	ROUTE	POST MILES TOTAL PROJECT	SHEET No.	TOTAL SHEETS
08	Riv	60	R12.2/22.1, 26.5/30.4	22	113

REGISTERED CIVIL ENGINEER 05-26-15 DATE

05-26-15
PLANS APPROVAL DATE

REGISTERED PROFESSIONAL ENGINEER T. HOANG No. 54996 Exp. 6-30-16 CIVIL STATE OF CALIFORNIA

THE STATE OF CALIFORNIA OR ITS OFFICERS OR AGENTS SHALL NOT BE RESPONSIBLE FOR THE ACCURACY OR COMPLETENESS OF SCANNED COPIES OF THIS PLAN SHEET.

PAVEMENT DELINEATION QUANTITIES

DIRECTION	DETAIL NUMBER	PAVEMENT MARKERS						THERMOPLASTIC TRAFFIC STRIPE (SPRAYABLE)			THERMOPLASTIC PAVEMENT MARKING		TEMPORARY TRAFFIC STRIPE (PAINT)		
		NON-REFLECTIVE	RETROREFLECTIVE				RETRO-REFLECTIVE RECESSED	4 INCH YELLOW	4 INCH WHITE	8 INCH WHITE	WHITE	YELLOW	4 INCH YELLOW	4 INCH WHITE	8 INCH WHITE
		A	C	D	G	H	H								
		EA						LF			SQFT		LF		
PIGEON PASS Rd WB EXIT RAMP	9				8				350					350	
	25A					52		1250					1250		
	27B								1650					1650	
	36				42					1000					1000
	38A									150					150
	CROSS WALK										130				
	SIGNAL AHEAD										124				
	ARROW TYPE IV (L)										30				
	ARROW TYPE IV (R)										27				
	ARROW TYPE VII (L)										42				
PIGEON PASS Rd WB ENTRANCE RAMP	8								150					150	
	25A					30		700					700		
	27B								1000					1000	
	36A				19					200					200
	LIMIT LINE										20				
	CROSS WALK										50				
SHEET TOTAL					69	82		1950	3150	1350	423		1950	3150	1350

REVISED BY | DATE REVISED
PHIL VU | TRAN HOANG
CALCULATED-DESIGNED BY | CHECKED BY
FUNCTIONAL SUPERVISOR | MARIO AMANCIO

STATE OF CALIFORNIA - DEPARTMENT OF TRANSPORTATION
Caltrans® TRAFFIC DESIGN

PAVEMENT DELINEATION QUANTITIES

NO SCALE

PDQ-4

LAST REVISION 06-02-15 | DATE PLOTTED => 16-NOV-2015 TIME PLOTTED => 12:44

Dist	COUNTY	ROUTE	POST MILES TOTAL PROJECT	SHEET No.	TOTAL SHEETS
08	Riv	60	R12.2/22.1, 26.5/30.4	23	113

REGISTERED CIVIL ENGINEER 05-26-15 DATE

05-26-15
PLANS APPROVAL DATE

REGISTERED PROFESSIONAL ENGINEER T. HOANG No. 54996 Exp. 6-30-16 CIVIL STATE OF CALIFORNIA

THE STATE OF CALIFORNIA OR ITS OFFICERS OR AGENTS SHALL NOT BE RESPONSIBLE FOR THE ACCURACY OR COMPLETENESS OF SCANNED COPIES OF THIS PLAN SHEET.

PAVEMENT DELINEATION QUANTITIES

DIRECTION	DETAIL NUMBER	PAVEMENT MARKERS						THERMOPLASTIC TRAFFIC STRIPE (SPRAYABLE)			THERMOPLASTIC PAVEMENT MARKING		TEMPORARY TRAFFIC STRIPE (PAINT)		
		NON-REFLECTIVE	RETROREFLECTIVE				RETRO-REFLECTIVE RECESSED	4 INCH YELLOW	4 INCH WHITE	8 INCH WHITE	WHITE	YELLOW	4 INCH YELLOW	4 INCH WHITE	8 INCH WHITE
		A	C	D	G	H	H								
		EA						LF			SQFT		LF		
HEACOCK St EB EXIT RAMP	12				22				1040					1040	
	25A					46		1100					1100		
	27B								1500					1500	
	36				34					820					820
	38B				18					210					210
	CROSS WALK										110				
	SIGNAL AHEAD										189				
	ARROW TYPE II (L)										135				
	ARROW TYPE III (L)										126				
	ARROW TYPE III (R)										126				
HEACOCK St EB ENTRANCE RAMP	8								150					150	
	25A					42		1000					1000		
	27B								1400					1400	
	36A				16					370					370
	CROSS WALK										80				
	ARROW TYPE I (24')										62				
SHEET TOTAL					90	88		2100	4090	1400	828		2100	4090	1400

REVISED BY | DATE REVISED

PHIL VU | TRAN HOANG

CALCULATED-DESIGNED BY | CHECKED BY

FUNCTIONAL SUPERVISOR | MARIO AMANCIO

STATE OF CALIFORNIA - DEPARTMENT OF TRANSPORTATION

Caltrans® TRAFFIC DESIGN

PAVEMENT DELINEATION QUANTITIES

NO SCALE

PDQ-5

LAST REVISION 06-02-15 | DATE PLOTTED => 16-NOV-2015 TIME PLOTTED => 12:44

Dist	COUNTY	ROUTE	POST MILES TOTAL PROJECT	SHEET No.	TOTAL SHEETS
08	Riv	60	R12.2/22.1, 26.5/30.4	24	113

REGISTERED CIVIL ENGINEER 05-26-15 DATE

05-26-15
PLANS APPROVAL DATE

REGISTERED PROFESSIONAL ENGINEER T. HOANG No. 54996 Exp. 6-30-16 CIVIL STATE OF CALIFORNIA

THE STATE OF CALIFORNIA OR ITS OFFICERS OR AGENTS SHALL NOT BE RESPONSIBLE FOR THE ACCURACY OR COMPLETENESS OF SCANNED COPIES OF THIS PLAN SHEET.

PAVEMENT DELINEATION QUANTITIES

DIRECTION	DETAIL NUMBER	PAVEMENT MARKERS						THERMOPLASTIC TRAFFIC STRIPE (SPRAYABLE)			THERMOPLASTIC PAVEMENT MARKING		TEMPORARY TRAFFIC STRIPE (PAINT)		
		NON-REFLECTIVE	RETROREFLECTIVE				RETRO-REFLECTIVE RECESSED	4 INCH YELLOW	4 INCH WHITE	8 INCH WHITE	WHITE	YELLOW	4 INCH YELLOW	4 INCH WHITE	8 INCH WHITE
		A	C	D	G	H	H								
		EA						LF			SQFT		LF		
HEACOCK St WB EXIT RAMP	25A					48		1150					1150		
	27B								1600					1600	
	36				38					900					900
	38A									50					50
	SIGNAL AHEAD										189				
	ARROW TYPE V										135				
HEACOCK St WB ENTRANCE RAMP	8								170					170	
	9				20				950					950	
	25A					42		1000					1000		
	27B								1600					1600	
	36A				22					520					520
	LIMIT LINE										26				
	CROSS WALK										100				
	ARROW TYPE I (24')										62				
SUBTOTAL 6					80	90		2150	4320	1470	512		2150	4320	1470

PAVEMENT DELINEATION QUANTITIES

NO SCALE

PDQ-6

REVISED BY	DATE REVISED

CALCULATED-DESIGNED BY	CHECKED BY
PHIL VU	TRAN HOANG

FUNCTIONAL SUPERVISOR
MARIO AMANCIO

STATE OF CALIFORNIA - DEPARTMENT OF TRANSPORTATION
Caltrans® TRAFFIC DESIGN

LAST REVISION 06-02-15 | DATE PLOTTED => 16-NOV-2015 | TIME PLOTTED => 12:44

Dist	COUNTY	ROUTE	POST MILES TOTAL PROJECT	SHEET No.	TOTAL SHEETS
08	Riv	60	R12.2/22.1, 26.5/30.4	25	113

REGISTERED CIVIL ENGINEER 05-26-15 DATE

05-26-15
PLANS APPROVAL DATE

REGISTERED PROFESSIONAL ENGINEER T. HOANG No. 54996 Exp. 6-30-16 CIVIL STATE OF CALIFORNIA

THE STATE OF CALIFORNIA OR ITS OFFICERS OR AGENTS SHALL NOT BE RESPONSIBLE FOR THE ACCURACY OR COMPLETENESS OF SCANNED COPIES OF THIS PLAN SHEET.

PAVEMENT DELINEATION QUANTITIES

DIRECTION	DETAIL NUMBER	PAVEMENT MARKERS						THERMOPLASTIC TRAFFIC STRIPE (SPRAYABLE)			THERMOPLASTIC PAVEMENT MARKING		TEMPORARY TRAFFIC STRIPE (PAINT)		
		NON-REFLECTIVE	RETROREFLECTIVE				RETRO-REFLECTIVE RECESSED	4 INCH YELLOW	4 INCH WHITE	8 INCH WHITE	WHITE	YELLOW	4 INCH YELLOW	4 INCH WHITE	8 INCH WHITE
		A	C	D	G	H	H								
		EA						LF			SQFT		LF		
PERRIS Blvd EB EXIT RAMP	25A					37		880					880		
	27B								1300					1300	
	36				38					920					920
	38B				28					320					320
	CROSS WALK										85				
	ARROW TYPE III (L)										84				
	ARROW TYPE III (B)										146				
PERRIS Blvd EB ENTRANCE RAMP	8								170					170	
	25A					32		750					750		
	27B								1000					1000	
	36A				15					350					350
	LIMIT LINE										16				
	ARROW TYPE I (24')										31				
SHEET TOTAL					81	69		1630	2470	1590	362		1630	2470	1590

REVISED BY | DATE REVISED

PHIL VU | TRAN HOANG

CALCULATED-DESIGNED BY | CHECKED BY

FUNCTIONAL SUPERVISOR | MARIO AMANCIO

STATE OF CALIFORNIA - DEPARTMENT OF TRANSPORTATION

Caltrans® TRAFFIC DESIGN

PAVEMENT DELINEATION QUANTITIES

NO SCALE

PDQ-7

LAST REVISION 06-02-15 | DATE PLOTTED => 16-NOV-2015 TIME PLOTTED => 12:44

Dist	COUNTY	ROUTE	POST MILES TOTAL PROJECT	SHEET No.	TOTAL SHEETS
08	Riv	60	R12.2/22.1, 26.5/30.4	26	113

REGISTERED CIVIL ENGINEER 05-26-15 DATE

05-26-15
PLANS APPROVAL DATE

REGISTERED PROFESSIONAL ENGINEER T. HOANG No. 54996 Exp. 6-30-16 CIVIL STATE OF CALIFORNIA

THE STATE OF CALIFORNIA OR ITS OFFICERS OR AGENTS SHALL NOT BE RESPONSIBLE FOR THE ACCURACY OR COMPLETENESS OF SCANNED COPIES OF THIS PLAN SHEET.

PAVEMENT DELINEATION QUANTITIES

DIRECTION	DETAIL NUMBER	PAVEMENT MARKERS						THERMOPLASTIC TRAFFIC STRIPE (SPRAYABLE)			THERMOPLASTIC PAVEMENT MARKING		TEMPORARY TRAFFIC STRIPE (PAINT)		
		NON-REFLECTIVE	RETROREFLECTIVE				RETRO-REFLECTIVE RECESSED	4 INCH YELLOW	4 INCH WHITE	8 INCH WHITE	WHITE	YELLOW	4 INCH YELLOW	4 INCH WHITE	8 INCH WHITE
		A	C	D	G	H	H								
		EA						LF			SQFT		LF		
PERRIS Blvd WB EXIT RAMP	25A					32		750					750		
	27B								1300					1300	
	36				42					1000					1000
	CROSS WALK										75				
	SIGNAL AHEAD										63				
	ARROW TYPE V										33				
PERRIS Blvd WB ENTRANCE RAMP	8								150					150	
	12				18				850					850	
	25A					39		920					920		
	27B								1350					1350	
	36A				21					500					500
	LIMIT LINE										26				
	CROSS WALK										110				
	ARROW TYPE I (24')										62				
SHEET TOTAL					81	71		1670	3650	1500	369		1670	3650	1500

REVISED BY | DATE REVISED

PHIL VU | TRAN HOANG

CALCULATED-DESIGNED BY | CHECKED BY

FUNCTIONAL SUPERVISOR | MARIO AMANCIO

STATE OF CALIFORNIA - DEPARTMENT OF TRANSPORTATION

Caltrans® TRAFFIC DESIGN

PAVEMENT DELINEATION QUANTITIES

NO SCALE

PDQ-8

LAST REVISION 06-02-15 | DATE PLOTTED => 16-NOV-2015 | TIME PLOTTED => 12:44

Dist	COUNTY	ROUTE	POST MILES TOTAL PROJECT	SHEET No.	TOTAL SHEETS
08	Riv	60	R12.2/22.1, 26.5/30.4	27	113

REGISTERED CIVIL ENGINEER 05-26-15 DATE

05-26-15
PLANS APPROVAL DATE

REGISTERED PROFESSIONAL ENGINEER T. HOANG No. 54996 Exp. 6-30-16 CIVIL STATE OF CALIFORNIA

THE STATE OF CALIFORNIA OR ITS OFFICERS OR AGENTS SHALL NOT BE RESPONSIBLE FOR THE ACCURACY OR COMPLETENESS OF SCANNED COPIES OF THIS PLAN SHEET.

PAVEMENT DELINEATION QUANTITIES

DIRECTION	DETAIL NUMBER	PAVEMENT MARKERS						THERMOPLASTIC TRAFFIC STRIPE (SPRAYABLE)			THERMOPLASTIC PAVEMENT MARKING		TEMPORARY TRAFFIC STRIPE (PAINT)		
		NON-REFLECTIVE	RETROREFLECTIVE				RETRO-REFLECTIVE RECESSED	4 INCH YELLOW	4 INCH WHITE	8 INCH WHITE	WHITE	YELLOW	4 INCH YELLOW	4 INCH WHITE	8 INCH WHITE
		A	C	D	G	H	H								
		EA						LF			SQFT		LF		
NASON St EB EXIT RAMP	12				11				500					500	
	25A					59		1400					1400		
	27B								1300					1300	
	36				25					600					600
	38				14					320					320
	HATCH AREA										30	330			
	CROSS WALK											140			
	SIGNAL AHEAD										124				
	ARROW TYPE V										66				
	ARROW TYPE III (R)										84				
	ARROW TYPE II (L)										90				
NASON St EB ENTRANCE RAMP	8								300					300	
	25A					44		1050					1050		
	27B								1800					1800	
	36A				15					360					360
	38				30					720					720
	LIMIT LINE										26				
	CAR POOL LANE										128				
	DIAMOND SYMBOL										44				
	ARROW TYPE I (24')										31				
SHEET TOTAL					95	103		2450	3900	2000	623	470	2450	3900	2000

REVISED BY | DATE REVISED
PHIL VU | TRAN HOANG
CALCULATED-DESIGNED BY | CHECKED BY
FUNCTIONAL SUPERVISOR: MARIO AMANCIO

STATE OF CALIFORNIA - DEPARTMENT OF TRANSPORTATION
Caltrans® TRAFFIC DESIGN

PAVEMENT DELINEATION QUANTITIES

NO SCALE

PDQ-9

LAST REVISION 06-02-15 | DATE PLOTTED => 16-NOV-2015 TIME PLOTTED => 12:44

Dist	COUNTY	ROUTE	POST MILES TOTAL PROJECT	SHEET No.	TOTAL SHEETS
08	Riv	60	R12.2/22.1, 26.5/30.4	28	113

REGISTERED CIVIL ENGINEER 05-26-15 DATE

05-26-15
PLANS APPROVAL DATE

REGISTERED PROFESSIONAL ENGINEER T. HOANG No. 54996 Exp. 6-30-16 CIVIL STATE OF CALIFORNIA

THE STATE OF CALIFORNIA OR ITS OFFICERS OR AGENTS SHALL NOT BE RESPONSIBLE FOR THE ACCURACY OR COMPLETENESS OF SCANNED COPIES OF THIS PLAN SHEET.

PAVEMENT DELINEATION QUANTITIES

DIRECTION	DETAIL NUMBER	PAVEMENT MARKERS						THERMOPLASTIC TRAFFIC STRIPE (SPRAYABLE)			THERMOPLASTIC PAVEMENT MARKING		TEMPORARY TRAFFIC STRIPE (PAINT)		
		NON-REFLECTIVE	RETROREFLECTIVE				RETRO-REFLECTIVE RECESSED	4 INCH YELLOW	4 INCH WHITE	8 INCH WHITE	WHITE	YELLOW	4 INCH YELLOW	4 INCH WHITE	8 INCH WHITE
		A	C	D	G	H	H								
		EA						LF			SQFT		LF		
NASON St WB EXIT RAMP	12				25				1200					1200	
	25A					67		1600					1600		
	27B								2000					2000	
	36				25					600					600
	38				17					400					400
	38B				25					300					300
	LIMIT LINE										60				
	SIGNAL AHEAD										126				
	ARROW TYPE I (24')										62				
	ARROW TYPE III (L)										84				
	ARROW TYPE III (R)										84				
	ARROW TYPE V										132				
NASON St WB ENTRANCE RAMP	8								270					270	
	25A					40		950					950		
	27B								1500					1500	
	36A				15					360					360
	38				34					800					800
	LIMIT LINE										26				
	CAR POOL LANE										128				
	DIAMOND SYMBOL										44				
	ARROW TYPE I (24')										62				
SHEET TOTAL					141	107		2550	4970	2460	808		2550	4970	2460

REVISED BY | DATE REVISED

PHIL VU | TRAN HOANG

CALCULATED-DESIGNED BY | CHECKED BY

FUNCTIONAL SUPERVISOR: MARIO AMANCIO

STATE OF CALIFORNIA - DEPARTMENT OF TRANSPORTATION
Caltrans® TRAFFIC DESIGN

PAVEMENT DELINEATION QUANTITIES

NO SCALE

PDQ-10

LAST REVISION 06-02-15 | DATE PLOTTED => 16-NOV-2015 TIME PLOTTED => 12:44

Dist	COUNTY	ROUTE	POST MILES TOTAL PROJECT	SHEET No.	TOTAL SHEETS
08	Riv	60	R12.2/22.1, 26.5/30.4	29	113

REGISTERED CIVIL ENGINEER 05-26-15 DATE

05-26-15
PLANS APPROVAL DATE

REGISTERED PROFESSIONAL ENGINEER T. HOANG No. 54996 Exp. 6-30-16 CIVIL STATE OF CALIFORNIA

THE STATE OF CALIFORNIA OR ITS OFFICERS OR AGENTS SHALL NOT BE RESPONSIBLE FOR THE ACCURACY OR COMPLETENESS OF SCANNED COPIES OF THIS PLAN SHEET.

PAVEMENT DELINEATION QUANTITIES

DIRECTION	DETAIL NUMBER	PAVEMENT MARKERS						THERMOPLASTIC TRAFFIC STRIPE (SPRAYABLE)			THERMOPLASTIC PAVEMENT MARKING		TEMPORARY TRAFFIC STRIPE (PAINT)		
		NON-REFLECTIVE	RETROREFLECTIVE				RETRO-REFLECTIVE RECESSED	4 INCH YELLOW	4 INCH WHITE	8 INCH WHITE	WHITE	YELLOW	4 INCH YELLOW	4 INCH WHITE	8 INCH WHITE
		A	C	D	G	H	H								
		EA						LF			SQFT		LF		
MORENO BEACH Dr WB EXIT RAMP	12				10				460					460	
	25A					72		1700					1700		
	27B								1400					1400	
	36				24					520					520
	38B				16					170					170
	LIMIT LINE										70				200
	SIGNAL AHEAD										126				
	ARROW TYPE V										66				
	ARROW TYPE II (L)										90				
	ARROW TYPE III (R)										84				
	HATCH AREA										30	620			
MORENO BEACH Dr WB ENTRANCE RAMP	8								400					400	
	12				18				800					800	
	25A					36		850					850		
	27B								1350					1350	
	36A				18					400					400
	LIMIT LINE										110				
	ARROW TYPE I (24')										62				
SHEET TOTAL					86	108		2550	4410	1090	638	620	2550	4410	1090

REVISED BY | DATE REVISED

PHIL VU | TRAN HOANG

CALCULATED-DESIGNED BY | CHECKED BY

FUNCTIONAL SUPERVISOR: MARIO AMANCIO

STATE OF CALIFORNIA - DEPARTMENT OF TRANSPORTATION

Caltrans® TRAFFIC DESIGN

PAVEMENT DELINEATION QUANTITIES

NO SCALE

PDQ-11

LAST REVISION 06-02-15 | DATE PLOTTED => 16-NOV-2015 TIME PLOTTED => 12:44

Dist	COUNTY	ROUTE	POST MILES TOTAL PROJECT	SHEET No.	TOTAL SHEETS
08	Riv	60	R12.2/22.1, 26.5/30.4	30	113

REGISTERED CIVIL ENGINEER 05-26-15 DATE

05-26-15
PLANS APPROVAL DATE

REGISTERED PROFESSIONAL ENGINEER T. HOANG No. 54996 Exp 6-30-16 CIVIL STATE OF CALIFORNIA

THE STATE OF CALIFORNIA OR ITS OFFICERS OR AGENTS SHALL NOT BE RESPONSIBLE FOR THE ACCURACY OR COMPLETENESS OF SCANNED COPIES OF THIS PLAN SHEET.

PAVEMENT DELINEATION QUANTITIES

DIRECTION	DETAIL NUMBER	PAVEMENT MARKERS						THERMOPLASTIC TRAFFIC STRIPE (SPRAYABLE)			THERMOPLASTIC PAVEMENT MARKING		TEMPORARY TRAFFIC STRIPE (PAINT)		
		NON-REFLECTIVE	RETROREFLECTIVE				RETRO-REFLECTIVE RECESSED	4 INCH YELLOW	4 INCH WHITE	8 INCH WHITE	WHITE	YELLOW	4 INCH YELLOW	4 INCH WHITE	8 INCH WHITE
		A	C	D	G	H	H								
		EA						LF			SQFT		LF		
MORENO BEACH Dr EB EXIT RAMP	12				10				460					460	
	25A					72		1700					1700		
	27B								1400					1400	
	36				24					520					520
	38B				16					170					170
	LIMIT LINE										70				200
	SIGNAL AHEAD										126				
	ARROW TYPE V										66				
	ARROW TYPE II (L)										90				
	ARROW TYPE III (R)										84				
	HATCH AREA										30	620			
MORENO BEACH Dr EB ENTRANCE RAMP	8								400					400	
	12				18				800					800	
	25A					36		850					850		
	27B								1350					1350	
	36A				18					400					400
	LIMIT LINE										110				
	ARROW TYPE I (24')										62				
SHEET TOTAL					86	108		2550	4410	1090	638	620	2550	4410	1090

PAVEMENT DELINEATION QUANTITIES

NO SCALE

PDQ-12

REVISED BY | DATE REVISED

PHIL VU | TRAN HOANG

CALCULATED-DESIGNED BY | CHECKED BY

FUNCTIONAL SUPERVISOR: MARIO AMANCIO

STATE OF CALIFORNIA - DEPARTMENT OF TRANSPORTATION

Caltrans TRAFFIC DESIGN

LAST REVISION 06-02-15 | DATE PLOTTED => 16-NOV-2015 | TIME PLOTTED => 12:44

Dist	COUNTY	ROUTE	POST MILES TOTAL PROJECT	SHEET No.	TOTAL SHEETS
08	Riv	60	R12.2/22.1, 26.5/30.4	31	113

REGISTERED CIVIL ENGINEER DATE 05-26-15

05-26-15
PLANS APPROVAL DATE

REGISTERED PROFESSIONAL ENGINEER T. HOANG No. 54996 Exp. 6-30-16 CIVIL STATE OF CALIFORNIA

THE STATE OF CALIFORNIA OR ITS OFFICERS OR AGENTS SHALL NOT BE RESPONSIBLE FOR THE ACCURACY OR COMPLETENESS OF SCANNED COPIES OF THIS PLAN SHEET.

PAVEMENT DELINEATION QUANTITIES

DIRECTION	DETAIL NUMBER	PAVEMENT MARKERS						THERMOPLASTIC TRAFFIC STRIPE (SPRAYABLE)			THERMOPLASTIC PAVEMENT MARKING		TEMPORARY TRAFFIC STRIPE (PAINT)		
		NON-REFLECTIVE	RETROREFLECTIVE				RETRO-REFLECTIVE RECESSED	4 INCH YELLOW	4 INCH WHITE	8 INCH WHITE	WHITE	YELLOW	4 INCH YELLOW	4 INCH WHITE	8 INCH WHITE
		A	C	D	G	H	H								
		EA						LF			SQFT		LF		
REDLANDS Blvd EB EXIT RAMP	25A					18		400					400		
	27B								1500					1500	
	36				40					960					960
	38B				30					350					350
	LIMIT LINE										20				
	SIGNAL AHEAD										63				
	ARROW TYPE V										66				
	ARROW TYPE III (B)										73				
REDLANDS Blvd EB ENTRANCE RAMP	8								530					530	
	22			46				550					550		
	25A					18		400					400		
	27B								1300					1300	
	36A				18					400					400
	ARROW TYPE I (24')										62				
SHEET TOTAL				46	88	36		1350	3330	1710	284		1350	3330	1710

PAVEMENT DELINEATION QUANTITIES

NO SCALE

PDQ-13

STATE OF CALIFORNIA - DEPARTMENT OF TRANSPORTATION
Caltrans® TRAFFIC DESIGN

FUNCTIONAL SUPERVISOR: MARIO AMANCIO
CALCULATED-DESIGNED BY: PHIL VU
CHECKED BY: TRAN HOANG
REVISED BY
DATE REVISED

LAST REVISION 06-02-15 | DATE PLOTTED => 16-NOV-2015 | TIME PLOTTED => 12:44

Dist	COUNTY	ROUTE	POST MILES TOTAL PROJECT	SHEET No.	TOTAL SHEETS
08	Riv	60	R12.2/22.1, 26.5/30.4	32	113

REGISTERED CIVIL ENGINEER DATE 05-26-15

05-26-15
PLANS APPROVAL DATE

REGISTERED PROFESSIONAL ENGINEER T. HOANG No. 54996 Exp 6-30-16 CIVIL STATE OF CALIFORNIA

THE STATE OF CALIFORNIA OR ITS OFFICERS OR AGENTS SHALL NOT BE RESPONSIBLE FOR THE ACCURACY OR COMPLETENESS OF SCANNED COPIES OF THIS PLAN SHEET.

PAVEMENT DELINEATION QUANTITIES

DIRECTION	DETAIL NUMBER	PAVEMENT MARKERS						THERMOPLASTIC TRAFFIC STRIPE (SPRAYABLE)			THERMOPLASTIC PAVEMENT MARKING		TEMPORARY TRAFFIC STRIPE (PAINT)		
		NON-REFLECTIVE	RETROREFLECTIVE				RETRO-REFLECTIVE RECESSED	4 INCH YELLOW	4 INCH WHITE	8 INCH WHITE	WHITE	YELLOW	4 INCH YELLOW	4 INCH WHITE	8 INCH WHITE
		A	C	D	G	H	H								
		EA						LF			SQFT		LF		
REDLANDS Blvd WB EXIT RAMP	25A					14		310					310		
	27B								1300					1300	
	36				28					660					660
	LIMIT LINE										26				
	STOP AHEAD										53				
	STOP										22				
	ARROW TYPE V										99				
REDLANDS Blvd WB ENTRANCE RAMP	8								530					530	
	22			48				570					570		
	25A					14		330					330		
	27B								1300					1300	
	36A				18					400					400
	ARROW TYPE I (24')										62				
SHEET TOTAL				48	46	28		1210	3130	1060	262		1210	3130	1060

PAVEMENT DELINEATION QUANTITIES

NO SCALE

PDQ-14

STATE OF CALIFORNIA - DEPARTMENT OF TRANSPORTATION
Caltrans TRAFFIC DESIGN

FUNCTIONAL SUPERVISOR: MARIO AMANCIO
CALCULATED-DESIGNED BY: PHIL VU
CHECKED BY: TRAN HOANG
REVISED BY
DATE REVISED

LAST REVISION 06-02-15 | DATE PLOTTED => 16-NOV-2015 | TIME PLOTTED => 12:44

Dist	COUNTY	ROUTE	POST MILES TOTAL PROJECT	SHEET No.	TOTAL SHEETS
08	Riv	60	R12.2/22.1, 26.5/30.4	33	113

REGISTERED CIVIL ENGINEER 05-26-15 DATE

05-26-15
PLANS APPROVAL DATE

REGISTERED PROFESSIONAL ENGINEER T. HOANG No. 54996 Exp. 6-30-16 CIVIL STATE OF CALIFORNIA

THE STATE OF CALIFORNIA OR ITS OFFICERS OR AGENTS SHALL NOT BE RESPONSIBLE FOR THE ACCURACY OR COMPLETENESS OF SCANNED COPIES OF THIS PLAN SHEET.

PAVEMENT DELINEATION QUANTITIES

DIRECTION	DETAIL NUMBER	PAVEMENT MARKERS						THERMOPLASTIC TRAFFIC STRIPE (SPRAYABLE)			THERMOPLASTIC PAVEMENT MARKING		TEMPORARY TRAFFIC STRIPE (PAINT)		
		NON-REFLECTIVE	RETROREFLECTIVE				RETRO-REFLECTIVE RECESSED	4 INCH YELLOW	4 INCH WHITE	8 INCH WHITE	WHITE	YELLOW	4 INCH YELLOW	4 INCH WHITE	8 INCH WHITE
		A	C	D	G	H	H								
		EA						LF			SQFT		LF		
THEODORE St EB EXIT RAMP	25A					16		350					350		
	27					12		510					510		
	27B								1300					1300	
	36				28					660					660
	38B				22					260					260
	LIMIT LINE										60				
	STOP AHEAD										53				
	STOP										44				
	ARROW TYPE III (L)										84				
	ARROW TYPE III (R)										84				
	ARROW TYPE V										66				
THEODORE St EB ENTRANCE RAMP	8								150					150	
	25A					10		200					200		
	27					14		590					590		
	27B								1200					1200	
	36A				12					250					250
	HATCH AREA											360			
	ARROW TYPE I (24')										62				
SHEET TOTAL					62	52		1650	2650	1170	453	360	1650	2650	1170

STATE OF CALIFORNIA - DEPARTMENT OF TRANSPORTATION
Caltrans TRAFFIC DESIGN

FUNCTIONAL SUPERVISOR: MARIO AMANCIO
CALCULATED-DESIGNED BY: PHIL VU
CHECKED BY: TRAN HOANG
REVISED BY
DATE REVISED

PAVEMENT DELINEATION QUANTITIES

NO SCALE

PDQ-15

LAST REVISION 06-02-15
DATE PLOTTED => 16-NOV-2015
TIME PLOTTED => 12:44

Dist	COUNTY	ROUTE	POST MILES TOTAL PROJECT	SHEET No.	TOTAL SHEETS
08	Riv	60	R12.2/22.1, 26.5/30.4	34	113

REGISTERED CIVIL ENGINEER 05-26-15 DATE

05-26-15
PLANS APPROVAL DATE

REGISTERED PROFESSIONAL ENGINEER T. HOANG No. 54996 Exp. 6-30-16 CIVIL STATE OF CALIFORNIA

THE STATE OF CALIFORNIA OR ITS OFFICERS OR AGENTS SHALL NOT BE RESPONSIBLE FOR THE ACCURACY OR COMPLETENESS OF SCANNED COPIES OF THIS PLAN SHEET.

PAVEMENT DELINEATION QUANTITIES

DIRECTION	DETAIL NUMBER	PAVEMENT MARKERS						THERMOPLASTIC TRAFFIC STRIPE (SPRAYABLE)			THERMOPLASTIC PAVEMENT MARKING		TEMPORARY TRAFFIC STRIPE (PAINT)		
		NON-REFLECTIVE	RETROREFLECTIVE				RETRO-REFLECTIVE RECESSED	4 INCH YELLOW	4 INCH WHITE	8 INCH WHITE	WHITE	YELLOW	4 INCH YELLOW	4 INCH WHITE	8 INCH WHITE
		A	C	D	G	H	H								
		EA						LF			SQFT		LF		
THEODORE St EB EXIT RAMP	22			30				350					350		
	25A					16		350					350		
	27B								1000					1000	
	36				28					660					660
	LIMIT LINE										30				
	STOP AHEAD										53				
	STOP										22				
	ARROW TYPE V										99				
THEODORE St EB ENTRANCE RAMP	8								530					530	
	25A					14		330					330		
	27B								960					960	
	36A				20					480					480
	ARROW TYPE I (24')										62				
SHEET TOTAL				30	48	30		1030	2490	1140	266		1030	2490	1140

REVISED BY | DATE REVISED

PHIL VU | TRAN HOANG

CALCULATED-DESIGNED BY | CHECKED BY

FUNCTIONAL SUPERVISOR | MARIO AMANCIO

STATE OF CALIFORNIA - DEPARTMENT OF TRANSPORTATION

Caltrans TRAFFIC DESIGN

PAVEMENT DELINEATION QUANTITIES

NO SCALE

PDQ-16

LAST REVISION 06-02-15 | DATE PLOTTED => 16-NOV-2015 | TIME PLOTTED => 12:44

Dist	COUNTY	ROUTE	POST MILES TOTAL PROJECT	SHEET No.	TOTAL SHEETS
08	Riv	60	R12.2/22.1, 26.5/30.4	35	113

REGISTERED CIVIL ENGINEER 05-26-15 DATE

05-26-15
PLANS APPROVAL DATE

REGISTERED PROFESSIONAL ENGINEER T. HOANG No. 54996 Exp. 6-30-16 CIVIL STATE OF CALIFORNIA

THE STATE OF CALIFORNIA OR ITS OFFICERS OR AGENTS SHALL NOT BE RESPONSIBLE FOR THE ACCURACY OR COMPLETENESS OF SCANNED COPIES OF THIS PLAN SHEET.

PAVEMENT DELINEATION QUANTITIES

DIRECTION	DETAIL NUMBER	PAVEMENT MARKERS						THERMOPLASTIC TRAFFIC STRIPE (SPRAYABLE)			THERMOPLASTIC PAVEMENT MARKING		TEMPORARY TRAFFIC STRIPE (PAINT)		
		NON-REFLECTIVE	RETROREFLECTIVE				RETRO-REFLECTIVE RECESSED	4 INCH YELLOW	4 INCH WHITE	8 INCH WHITE	WHITE	YELLOW	4 INCH YELLOW	4 INCH WHITE	8 INCH WHITE
		A	C	D	G	H	H								
		EA						LF			SQFT		LF		
GILMAN SPRING Rd WB EXIT RAMP	8								100					100	
	25A					50		1200					1200		
	27B								1800					1800	
	36				28					660					660
	38A									200					200
	ARROW TYPE V										33				
GILMAN SPRING Rd WB ENTRANCE RAMP	8								150					150	
	25A					30		700					700		
	27B								1300					1300	
	36A				34					780					780
	ARROW TYPE I (24')										31				
SHEET TOTAL					62	80		1900	3350	1640	64		1900	3350	1640

PAVEMENT DELINEATION QUANTITIES

NO SCALE

PDQ-17

REVISED BY	DATE REVISED
PHIL VU	TRAN HOANG
CALCULATED-DESIGNED BY	CHECKED BY
FUNCTIONAL SUPERVISOR	MARIO AMANCIO

STATE OF CALIFORNIA - DEPARTMENT OF TRANSPORTATION
Caltrans TRAFFIC DESIGN

LAST REVISION 06-02-15 | DATE PLOTTED => 16-NOV-2015 | TIME PLOTTED => 12:44

Dist	COUNTY	ROUTE	POST MILES TOTAL PROJECT	SHEET No.	TOTAL SHEETS
08	Riv	60	R12.2/22.1, 26.5/30.4	36	113

REGISTERED CIVIL ENGINEER 05-26-15 DATE

05-26-15
PLANS APPROVAL DATE

REGISTERED PROFESSIONAL ENGINEER T. HOANG No. 54996 Exp 6-30-16 CIVIL STATE OF CALIFORNIA

THE STATE OF CALIFORNIA OR ITS OFFICERS OR AGENTS SHALL NOT BE RESPONSIBLE FOR THE ACCURACY OR COMPLETENESS OF SCANNED COPIES OF THIS PLAN SHEET.

PAVEMENT DELINEATION QUANTITIES

DIRECTION	DETAIL NUMBER	PAVEMENT MARKERS						THERMOPLASTIC TRAFFIC STRIPE (SPRAYABLE)			THERMOPLASTIC PAVEMENT MARKING		TEMPORARY TRAFFIC STRIPE (PAINT)		
		NON-REFLECTIVE	RETROREFLECTIVE				RETRO-REFLECTIVE RECESSED	4 INCH YELLOW	4 INCH WHITE	8 INCH WHITE	WHITE	YELLOW	4 INCH YELLOW	4 INCH WHITE	8 INCH WHITE
		A	C	D	G	H	H								
		EA						LF			SQFT		LF		
GILMAN SPRING Rd EB EXIT RAMP	25A					22		520					520		
	27B								800					800	
	36				30					680					680
	ARROW TYPE V										66				
GILMAN SPRING Rd EB ENTRANCE RAMP	8								120					120	
	25A					46		1100					1100		
	27B								1500					1500	
	36A				60					1350					1350
	ARROW TYPE I (24')										31				
SHEET TOTAL					90	68		1620	2420	2030	97		1620	2420	2030

PAVEMENT DELINEATION QUANTITIES

NO SCALE

PDQ-18

STATE OF CALIFORNIA - DEPARTMENT OF TRANSPORTATION
Caltrans TRAFFIC DESIGN

FUNCTIONAL SUPERVISOR: MARIO AMANCIO
CALCULATED-DESIGNED BY: PHIL VU
CHECKED BY: TRAN HOANG
REVISED BY
DATE REVISED

LAST REVISION 06-02-15
DATE PLOTTED => 16-NOV-2015
TIME PLOTTED => 12:44

Dist	COUNTY	ROUTE	POST MILES TOTAL PROJECT	SHEET No.	TOTAL SHEETS
08	Riv	60	R12.2/22.1, 26.5/30.4	37	113

REGISTERED CIVIL ENGINEER 05-26-15 DATE

05-26-15
PLANS APPROVAL DATE

REGISTERED PROFESSIONAL ENGINEER T. HOANG No. 54996 Exp. 6-30-16 CIVIL STATE OF CALIFORNIA

THE STATE OF CALIFORNIA OR ITS OFFICERS OR AGENTS SHALL NOT BE RESPONSIBLE FOR THE ACCURACY OR COMPLETENESS OF SCANNED COPIES OF THIS PLAN SHEET.

PAVEMENT DELINEATION QUANTITIES

DIRECTION	DETAIL NUMBER	PAVEMENT MARKERS						THERMOPLASTIC TRAFFIC STRIPE (SPRAYABLE)			THERMOPLASTIC PAVEMENT MARKING		TEMPORARY TRAFFIC STRIPE (PAINT)		
		NON-REFLECTIVE	RETROREFLECTIVE				RETRO-REFLECTIVE RECESSED	4 INCH YELLOW	4 INCH WHITE	8 INCH WHITE	WHITE	YELLOW	4 INCH YELLOW	4 INCH WHITE	8 INCH WHITE
		A	C	D	G	H	H								
		EA						LF			SQFT		LF		
JACK RABBIT Trl EB EXIT RAMP	25A					32		750					750		
	27B								900					900	
	36				16					340					340
	LIMIT LINE										90				
	STOP										44				
	ARROW TYPE V										66				
JACK RABBIT Trl EB ENTRANCE RAMP	8								150					150	
	22			30				350					350		
	27B								820					820	
	36A				18					400					400
	38				18					400					400
	LIMIT LINE										16				
	STOP AHEAD										63				
	STOP										22				
SHEET TOTAL				30	52	32		1100	1870	1140	301		1100	1870	1140

CONCRETE BARRIER MARKERS ON EXISTING CONCRETE MEDIAN BARRIER

LOCATION	REMOVE BARRIER MARKERS (EACH) (N)	INSTALL BARRIER MARKERS (EACH)
EB	18225	9113
WB	18225	9113
TOTAL	36450	18226

(N) NOT A SEPARATE PAY ITEM, FOR INFORMATION ONLY.

PAVEMENT DELINEATION QUANTITIES

NO SCALE

PDQ-19

REVISED BY | DATE REVISED
PHIL VU | TRAN HOANG
CALCULATED-DESIGNED BY | CHECKED BY
FUNCTIONAL SUPERVISOR: MARIO AMANCIO

STATE OF CALIFORNIA - DEPARTMENT OF TRANSPORTATION
Caltrans® TRAFFIC DESIGN

LAST REVISION 06-02-15 | DATE PLOTTED => 16-NOV-2015 | TIME PLOTTED => 12:44

Dist	COUNTY	ROUTE	POST MILES TOTAL PROJECT	SHEET No.	TOTAL SHEETS
08	Riv	60	R12.2/22.1, 26.5/30.4	38	113

REGISTERED CIVIL ENGINEER 05-26-15 DATE

05-26-15
PLANS APPROVAL DATE

REGISTERED PROFESSIONAL ENGINEER T. HOANG No. 54996 Exp. 6-30-16 CIVIL STATE OF CALIFORNIA

THE STATE OF CALIFORNIA OR ITS OFFICERS OR AGENTS SHALL NOT BE RESPONSIBLE FOR THE ACCURACY OR COMPLETENESS OF SCANNED COPIES OF THIS PLAN SHEET.

PAVEMENT DELINEATION QUANTITIES

DIRECTION	DETAIL NUMBER	PAVEMENT MARKERS						THERMOPLASTIC TRAFFIC STRIPE (SPRAYABLE)			THERMOPLASTIC PAVEMENT MARKING		TEMPORARY TRAFFIC STRIPE (PAINT)		
		NON-REFLECTIVE	RETROREFLECTIVE				RETRO-REFLECTIVE RECESSED	4 INCH YELLOW	4 INCH WHITE	8 INCH WHITE	WHITE	YELLOW	4 INCH YELLOW	4 INCH WHITE	8 INCH WHITE
		A	C	D	G	H	H								
		EA						LF			SQFT		LF		
EB	13M	11656			2914				139900					139900	
	25					1090	430	72900					72900		
	27B								72900					72900	
	37		24		490					7350					7350
	42				1560					37300					37300
	ARROW TYPE V										396				
	ARROW TYPE VI										378				
	CAR POOL ONLY										248				
	DIAMOND SYMBOL										803				
WB	13M	1500			380				17900					17900	
	25					1090	430	72900					72900		
	27					18		1690					1690		
	27B								72900					72900	
	37		60		1250					18750					18750
	37A	1260	16		315					4700					4700
	38				48					1265					1265
	42				1520					36300					36300
	ARROW TYPE IV										60				
	ARROW TYPE V										396				
	ARROW TYPE VI										84				
	CAR POOL ONLY										62				
	DIAMOND SYMBOL										825				
	AIRCRAFT MARKING										84				
SHEET TOTAL		14416	100		8477	2198	860	147490	303600	100965	3336		147490	303600	105665
TOTAL		15086	13936				860	824160			13816		824160		

8 INCHES TRAFFIC STRIPING COUNT AS 2 TIMES OF 4 INCHES TRAFFIC STRIPING.

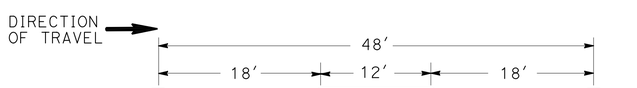

DETAIL 13M
(NO SCALE)

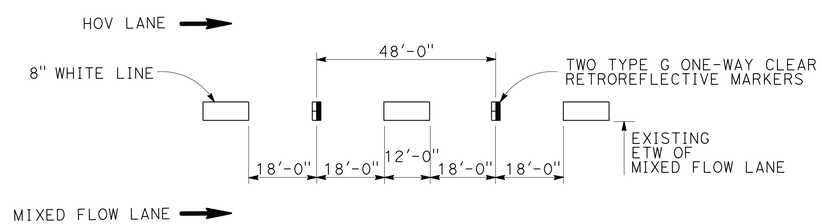

DETAIL 42
(NO SCALE)

PAVEMENT DELINEATION QUANTITIES

NO SCALE

PDQ-20

STATE OF CALIFORNIA - DEPARTMENT OF TRANSPORTATION
Caltrans® TRAFFIC DESIGN

FUNCTIONAL SUPERVISOR: MARIO AMANCIO
CALCULATED-DESIGNED BY: PHIL VU
CHECKED BY: TRAN HOANG
REVISED BY
DATE REVISED

LAST REVISION 06-02-15
DATE PLOTTED => 16-NOV-2015
TIME PLOTTED => 12:44

Dist	COUNTY	ROUTE	POST MILES TOTAL PROJECT	SHEET No.	TOTAL SHEETS
08	Riv	60	R12.2/22.1, 26.5/30.4	39	113

REGISTERED CIVIL ENGINEER 05-26-15 DATE

05-26-15
PLANS APPROVAL DATE

REGISTERED PROFESSIONAL ENGINEER T. HOANG No. 54996 Exp. 6-30-16 CIVIL STATE OF CALIFORNIA

THE STATE OF CALIFORNIA OR ITS OFFICERS OR AGENTS SHALL NOT BE RESPONSIBLE FOR THE ACCURACY OR COMPLETENESS OF SCANNED COPIES OF THIS PLAN SHEET.

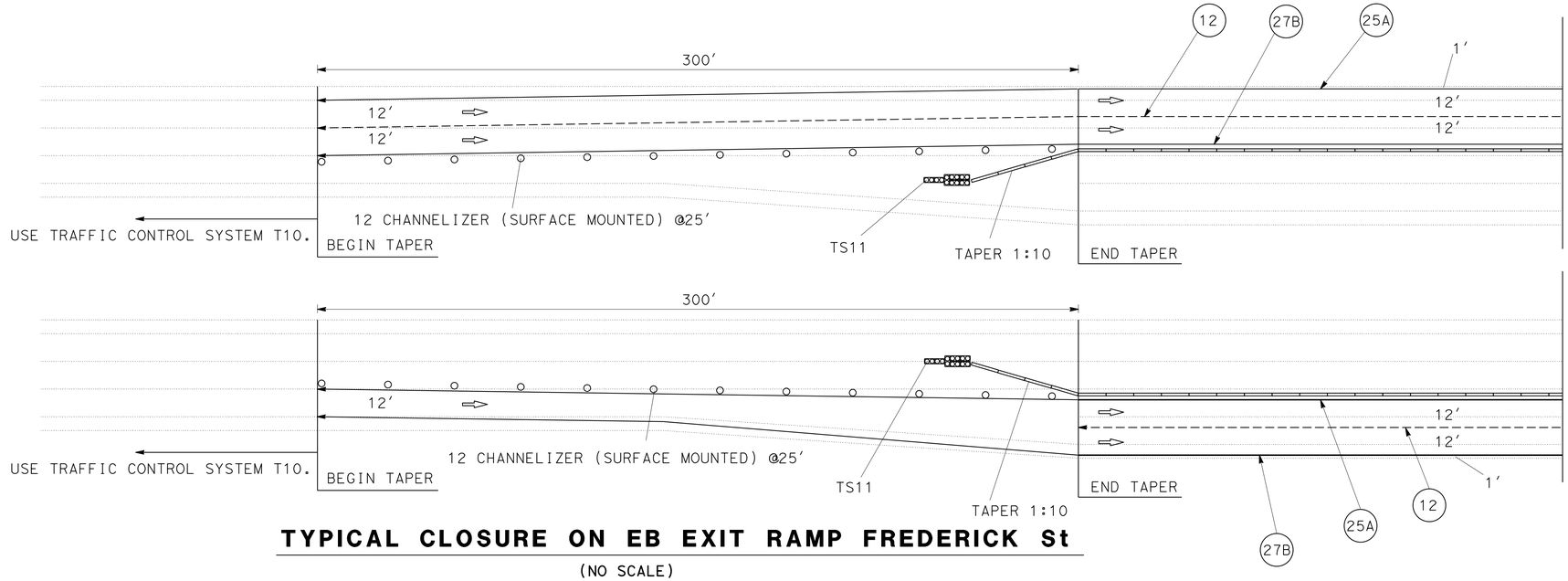

TYPICAL CLOSURE ON EB EXIT RAMP FREDERICK St

(NO SCALE)

⇨ DIRECTION OF TRAFFIC

(XX) Temp STRIPING DETAIL NUMBER

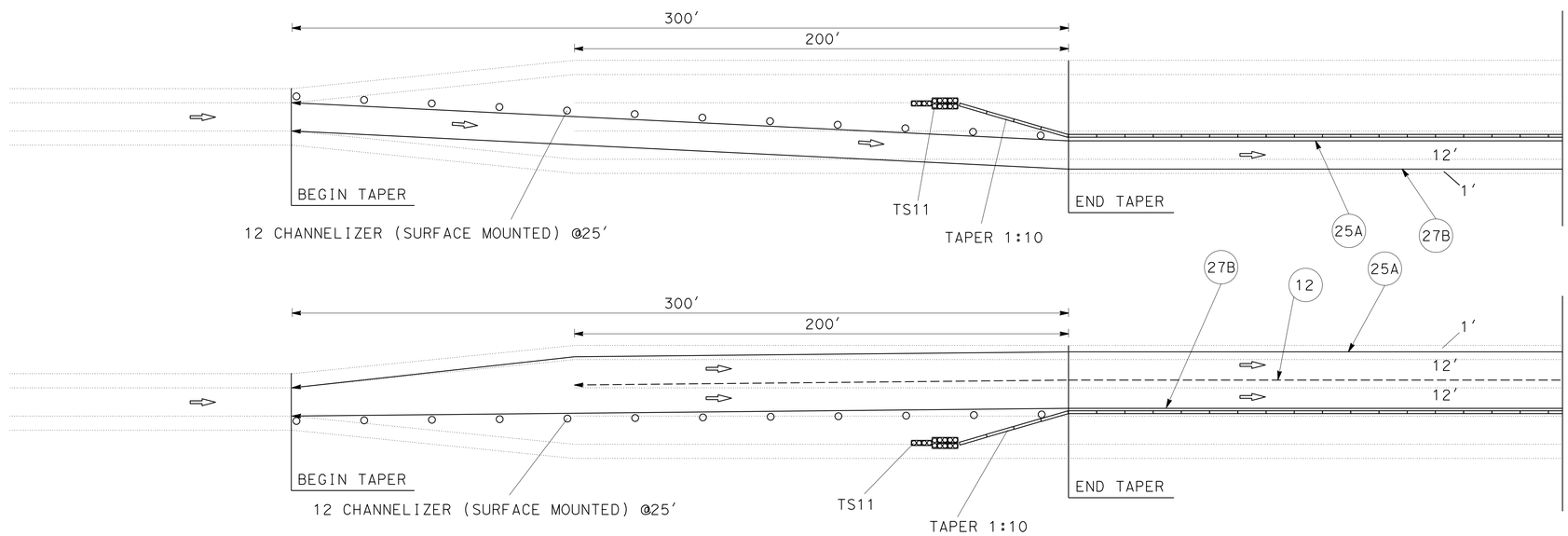

TYPICAL CLOSURE ON EB EXIT RAMP HEACOCK St

(NO SCALE)

PAVEMENT DELINEATION QUANTITIES

LOCATION	TEMPORARY RAILING (TYPE K)	TEMPORARY CRASH CUSHION MODULE	CHANNELIZER (SURFACE MOUNTED)	TEMPORARY TRAFFIC STRIPE (PAINT)	
				4 INCH YELLOW	4 INCH WHITE
	FT	EA	EA	LF	
EB EXIT RAMP FREDERICK St	1580	11	24	3600	6900
EB EXIT RAMP HEACOCK St	1380	11	24	3200	4700
TOTAL	2960	22	48	6800	11600

PAVEMENT DELINEATION QUANTITIES

NO SCALE

PDQ-21

STATE OF CALIFORNIA - DEPARTMENT OF TRANSPORTATION
Caltrans® **TRAFFIC DESIGN**

FUNCTIONAL SUPERVISOR: MARIO AMANCIO
CALCULATED-DESIGNED BY: PHIL VU
CHECKED BY: TRAN HOANG
REVISED BY
DATE REVISED

LAST REVISION 05-15-15
DATE PLOTTED => 16-NOV-2015
TIME PLOTTED => 12:44

Dist	COUNTY	ROUTE	POST MILES TOTAL PROJECT	SHEET No.	TOTAL SHEETS
08	Riv	60	R12.2/22.1, 26.5/30.4	40	113

REGISTERED CIVIL ENGINEER 05-26-15 DATE

05-26-15
PLANS APPROVAL DATE

REGISTERED PROFESSIONAL ENGINEER YONGBEE LIAU No. C75571 Exp. 6-30-16 CIVIL STATE OF CALIFORNIA

THE STATE OF CALIFORNIA OR ITS OFFICERS OR AGENTS SHALL NOT BE RESPONSIBLE FOR THE ACCURACY OR COMPLETENESS OF SCANNED COPIES OF THIS PLAN SHEET.

NOTES:

1. POSTMILES ARE APPROXIMATE.
2. LEFT (L+) AND RIGHT (R+) SIDES BASED ON THE TRAFFIC DIRECTION OF TRAVEL.
3. SUBJECT TO INTERFERING PORTIONS OF EXISTING LANDSCAPE AND IRRIGATION FACILITIES, VEGETATION CONTROL LOCATIONS CAN BE ADJUSTED OR DELETED AS DIRECTED BY THE ENGINEER.

ROADWAY AND PAVING QUANTITIES

LOCATION		PM		HMA (TYPE A)	RHMA-G	COLD PLANE ASPHALT Conc PAVEMENT	SLURRY SEAL	TACK COAT	CLASS 2 AB	Rdwy Exc
DIRECTION		FROM	TO	TON	TON	SQYD	TON	TON	CY	CY
60	EB	12.20	12.40		916.6	6571		1.81		
60	EB	12.40	12.54		790.2	5665		1.56		
60	EB	12.54	13.43		6701.1	48036		13.21		
60	EB	13.43	13.57		779.1	5585		1.54		
60	EB	13.57	14.06		3208.1	22997		6.32		
60	EB	14.06	14.21		834.8	5984		1.65		
60	EB	14.21	18.10		17828.0	127799		35.14		
60	EB	18.10	19.40		3830.1	27456	125.1	7.55		
60	EB	19.40	20.28		4033.1	28911		7.95		
60	EB	20.28	21.40		4033.1	28911		7.95		
60	EB	21.40	22.10		2119.7	15195		4.18		
60	EB	26.50	27.83		4571.6	32771		9.01		
60	EB	27.83	28.06		922.3	6612		1.82		
60	EB	28.06	29.84		6118.4	43859		12.06		
60	EB	29.84	29.99		601.5	4312		1.19		
60	EB	29.99	30.42		1196.5	8577		2.36		
60	WB	12.20	12.35		478.8	3432		0.94		
60	WB	12.35	13.53		5408.0	38767		10.66		
60	WB	13.53	14.15		3450.4	24734		6.80		
61	WB	14.15	18.20		18561.3	133056		36.59		
62	WB	18.2	18.90		2749.8	19712	67.3	5.42		
63	WB	18.9	19.11		1168.7	8378		2.30		
60	WB	19.11	20.35		5683.0	40738		11.20		
60	WB	20.35	21.40		3265.4	23408		6.44		
60	WB	21.40	22.10		2119.7	15195		4.18		
60	WB	26.50	27.83		4680.4	33551		9.23		
60	WB	27.83	28.06		903.5	6477		1.78		
60	WB	28.06	29.84		6118.4	43859		12.06		
60	WB	29.84	29.99		589.2	4224		1.16		
60	WB	29.99	30.43		1368.4	9809		2.70		
EB 60 Conn FROM NB 215					361.5	2591		0.71		
WB 60 Conn TO SB 215							59.0			
DAY St EB EXIT RAMP							32.5			
DAY St EB ENTRANCE RAMP							41.7			
DAY St WB EXIT RAMP							37.6			
DAY St WB ENTRANCE RAMP							14.2			
FREDERICK St EB EXIT RAMP					1283.9	9203		2.53		
FREDERICK St EB ENTRANCE RAMP							35.6			
FREDERICK St WB EXIT RAMP							33.3			
FREDERICK St WB ENTRANCE RAMP							35.4			
FREDERICK St WB ENTRANCE RAMP LOOP							13.6			
HEACOCK St EB EXIT RAMP					738.9	5297		1.46		
HEACOCK St EB ENTRANCE RAMP					521.7	3740		1.03		
HEACOCK St WB EXIT RAMP							32.1			
HEACOCK St WB ENTRANCE RAMP							31.9			
PERRIS Blvd EB EXIT RAMP							19.4			
		SHEET TOTAL			117935.0	845412	578.7	232.5		

SUMMARY OF QUANTITIES

Q-1

STATE OF CALIFORNIA - DEPARTMENT OF TRANSPORTATION
Caltrans® MAINTENANCE ENGINEERING

FUNCTIONAL SUPERVISOR: KEVIN CHEN
CALCULATED-DESIGNED BY: YONGBEE LIAU
CHECKED BY: KEVIN CHEN
REVISED BY
DATE REVISED

LAST REVISION 05-28-15
DATE PLOTTED => 16-NOV-2015
TIME PLOTTED => 12:44

Dist	COUNTY	ROUTE	POST MILES TOTAL PROJECT	SHEET No.	TOTAL SHEETS
08	Riv	60	R12.2/22.1 26.5/30.4	41	113

REGISTERED CIVIL ENGINEER 05-26-15 DATE

05-26-15
PLANS APPROVAL DATE

REGISTERED PROFESSIONAL ENGINEER YONGBEE LIAU No. C75571 Exp. 6-30-16 CIVIL STATE OF CALIFORNIA

THE STATE OF CALIFORNIA OR ITS OFFICERS OR AGENTS SHALL NOT BE RESPONSIBLE FOR THE ACCURACY OR COMPLETENESS OF SCANNED COPIES OF THIS PLAN SHEET.

ROADWAY AND PAVING QUANTITIES

LOCATION	PM		HMA (TYPE A)	RHMA-G	COLD PLANE ASPHALT Conc PAVEMENT	SLURRY SEAL	TACK COAT	CLASS 2 AB	Rdwy Exc
DIRECTION	FROM	TO	TON	TON	SQYD	TON	TON	CY	CY
PERRIS Blvd EB ENTRANCE RAMP				388.7	2787		0.77		
PERRIS Blvd WB EXIT RAMP						19.0			
PERRIS Blvd WB ENTRANCE RAMP						30.4			
NASON St EB EXIT RAMP						34.8			
NASON St EB ENTRANCE RAMP						28.9			
NASON St WB EXIT RAMP						47.1			
NASON St WB ENTRANCE RAMP						24.6			
MORENO BEACH Blvd EB EXIT RAMP						34.8			
MORENO BEACH Blvd EB ENTRANCE RAMP						28.9			
MORENO BEACH Blvd WB EXIT RAMP				400.2	2869		0.79		
MORENO BEACH Blvd WB ENTRANCE RAMP				319.0	2287		0.63		
REDLANDS Blvd EB EXIT RAMP				413.4	2963		0.81		
REDLANDS Blvd EB ENTRANCE RAMP				358.1	2567		0.71		
REDLANDS Blvd WB EXIT RAMP				358.1	2567		0.71		
REDLANDSBlvd WB ENTRANCE RAMP				390.6	2800		0.77		
THEODORE St EB EXIT RAMP				366.2	2625		0.72		
THEODORE St EB ENTRANCE RAMP				352.2	2525		0.69		
THEODORE St WB EXIT RAMP				283.2	2030		0.56		
THEODORE St WB ENTRANCE RAMP				276.7	1983		0.55		
GILMAN SPRINGS Rd EB EXIT RAMP				467.2	3349		0.92		
GILMAN SPRINGS Rd EB ENTRANCE RAMP				324.0	2322		0.64		
GILMAN SPRINGS Rd WB EXIT RAMP				262.6	1882		0.52		
GILMAN SPRINGS Rd WB ENTRANCE RAMP				456.9	3276		0.90		
JACK RABBIT Tr EB EXIT RAMP				186.0	1333		0.37		
JACK RABBIT Tr EB ENTRANCE RAMP				74.4	533		0.15		
6TH St EB EXIT RAMP				416.6	2987		0.82		
WB 60 Conn FROM EB 10				248.9	1784		0.49		
DIGOUTS (0.35' COLD PLANE/0.35' HMA (TYPE A)									
60 EB	12.20	22.10	750.0				28.00		
60 EB	26.50	30.40	550.0				21.00		
61 EB	RAMPS		1000				37.00		
60 WB	12.20	22.10	750.0				28.00		
60 WB	26.50	30.40	550.0				21.00		
61 WB	RAMPS		1000				37.00		
MAINTENANCE VEHICLE PULLOUT									
60 EB	16.96		12.8					17.0	23.1
60 EB	17.36		12.8					17.0	23.1
60 WB	16.80		12.8					17.0	23.1
60 WB	17.53		12.8					17.0	23.1
SHEET TOTAL			4651.2	6342.9	45469	248.4	184.5	68.0	92.4
TOTAL			4651.2	124277.9	890881	827.1	417.0	68.0	92.4

SUMMARY OF QUANTITIES

Q-2

REVISED BY | DATE REVISED
YONGBEE LIAU | KEVIN CHEN
CALCULATED-DESIGNED BY | CHECKED BY
FUNCTIONAL SUPERVISOR: KEVIN CHEN
STATE OF CALIFORNIA - DEPARTMENT OF TRANSPORTATION
Caltrans MAINTENANCE ENGINEERING

LAST REVISION 05-28-15 | DATE PLOTTED => 16-NOV-2015 | TIME PLOTTED => 12:44

Dist	COUNTY	ROUTE	POST MILES TOTAL PROJECT	SHEET No.	TOTAL SHEETS
08	Riv	60	R12.2/22.1, 26.5/30.4	42	113

REGISTERED CIVIL ENGINEER 05-26-15 DATE

05-26-15
PLANS APPROVAL DATE

REGISTERED PROFESSIONAL ENGINEER YONGBEE LIAU No. C75571 Exp. 6-30-16 CIVIL STATE OF CALIFORNIA

THE STATE OF CALIFORNIA OR ITS OFFICERS OR AGENTS SHALL NOT BE RESPONSIBLE FOR THE ACCURACY OR COMPLETENESS OF SCANNED COPIES OF THIS PLAN SHEET.

RAMP TERMINI CONCRETE PAVEMENT QUANTITIES

Sht No.	RAMP LOCATION	Rdwy Exc	LEAN Conc BASE	JOINTED PLAIN Conc Pvmt	JOINT SEAL (PERFORMED COMPRESSION)	BASE BOND BREAKER	(N) TYPE A2-6 CURB	MINOR Conc CURB & GUTTER
		CY	CY	CY	LF	SQYD	LF	CY
C-3	FREDERICK St EB EXIT RAMP	674.1	207.4	466.7	600.0	550	100	5.90
C-4	HEACOCK St EB EXIT RAMP	553.7	170.4	383.3	600.0	550	5	1.64
	TOTAL	1227.8	377.8	850.0	1200.0	1100	105	7.54

(N) NOT A SEPARATE PAY ITEM, FOR INFORMATION ONLY.

CURB RAMP QUANTITIES

Const DETAIL Sht No.	LOCATION	REMOVE CONCRETE
		CY
C-10	FREDERICK St EB Exist RAMP SOUTHWEST CURB RAMP	0.1
	TOTAL	0.1

SURVEY MONUMENT QUANTITIES

LOCATION	SURVEY MONUMENT (TYPE D)
R12.2/22.1, 26.5/30.4	EA
	10

TREATED WOOD WASTE

LB
123, 650

MISCELLANEOUS DRAINAGE QUANTITIES

LOCATION		No. OF LOCATIONS	PLACE HMA (Misc AREA)	HMA (TYPE A)	TACK COAT	COLD PLANE	DESCRIPTION
FROM	TO	(N)	SQYD	Ton	Ton	SQYD	
ROUTE 60 EB							
R12.2	22.1	30	150.0	21.0	0.04	150.0	REPLACE PAVED GUTTER SLOPE @ AC OVERSIDE DRAIN
26.5	30.4	7	35.0	4.9	0.01	35.0	REPLACE PAVED GUTTER SLOPE @ AC OVERSIDE DRAIN
ROUTE 60 WB							
R12.2	22.1	19	95.0	13.3	0.03	95.0	REPLACE PAVED GUTTER SLOPE @ AC OVERSIDE DRAIN
26.5	30.4	12	60.0	8.4	0.02	60.0	REPLACE PAVED GUTTER SLOPE @ AC OVERSIDE DRAIN
	TOTAL	68	340.0	47.6	0.09	340.0	

(N) NOT A SEPARATE PAY ITEM, FOR INFORMATION ONLY.

WATER POLLUTION CONTROL QUANTITIES

DESCRIPTION	UNIT	QUANTITY
Temp EROSION CONTROL BLANKET	SQYD	3000
Temp SOIL BINDER	SQYD	29100
Temp Conc WASHOUT	LS	LS
FIBER ROLLS	LF	500
Temp DRAINAGE INLET PROTECTION	EA	4
Temp SILT FENCE	LF	180

SUMMARY OF QUANTITIES

Q-3

REVISED BY | DATE REVISED
YONGBEE LIAU | KEVIN CHEN
CALCULATED-DESIGNED BY | CHECKED BY
FUNCTIONAL SUPERVISOR: KEVIN CHEN
STATE OF CALIFORNIA - DEPARTMENT OF TRANSPORTATION
Caltrans MAINTENANCE ENGINEERING

LAST REVISION 06-02-15 | DATE PLOTTED => 16-NOV-2015 TIME PLOTTED => 12:44

Dist	COUNTY	ROUTE	POST MILES TOTAL PROJECT	SHEET No.	TOTAL SHEETS
08	Riv	60	R12.2/22.1, 26.5/30.4	43	113

REGISTERED CIVIL ENGINEER 05-26-15 DATE

05-26-15
PLANS APPROVAL DATE

REGISTERED PROFESSIONAL ENGINEER YONGBEE LIAU No. C75571 Exp. 6-30-16 CIVIL STATE OF CALIFORNIA

THE STATE OF CALIFORNIA OR ITS OFFICERS OR AGENTS SHALL NOT BE RESPONSIBLE FOR THE ACCURACY OR COMPLETENESS OF SCANNED COPIES OF THIS PLAN SHEET.

MIDWEST GUARDRAIL SYSTEM AND HMA DIKE QUANTITIES

LOCATION	POST MILE		MGS LAYOUT TYPE (N)	REMOVE GUARDRAIL	MGS (STEEL POST)	Trans RAILING (TYPE WB-31)	Trans RAILING Conn Det (N)	DRILL AND BOND DOWEL (CHEMICAL ADHESIVE)	Conc BARRIER (TYPE 60S)	MINOR Conc (MINOR Str)	END ANCHOR Assy (TYPE SFT)	VEGETATION CONTROL (MINOR Conc)	END CAP (TYPE A)	Alt FLARED TERMINAL SYSTEM	Alt IN-LINE TERMINAL SYSTEM	REMOVE AC DIKE	PLACE HMA DIKE				HMA (TYPE A)
																	TYPE C	TYPE D	TYPE E	TYPE F	
	FROM	TO	--	LF	LF	EA	--	EA	LF	CY	EA	SQYD	EA	EA	EA	LFLF	LF	LF	LF	LF	TON
	Rte 60 EB																				
	12.341	12.414														385			385		10.48
Rt	(215 N TO 60 E Conn @ NOSE)																				
Rt	12.414	12.435	16A	112.5	56.3						1	37.5			1	113	75			62.5	1.46
		(OH SIGN POST)																			
	(OH SIGN POST)																				
Rt	12.435	12.507														380			380		10.34
		(Beg COBBLE STONE PAVING, GORE)																			
		(215 S TO 60 E TRUCK Conn)																			
	(Beg COBBLE STONE PAVING, GORE)																				
Rt	12.507	12.995														2577			2577		70.09
	(215 S TO 60 E TRUCK Conn)	(OH SIGN POST)																			
Rt	12.995	13.012	16B	87.5	43.8						1	29.2				88	62.5			50.0	1.19
		(OH SIGN POST)																			
		(EXIT 59)																			
	(OH SIGN POST)																				
Rt	13.012	13.232														1162			1162		31.60
	(BEFORE OH SIGN POST)																				
Rt	13.232	13.302	12B	375.0	312.5	1	(Exist)					125.0		1		375	62.5			312.5	4.81
DAY St UC		(APPROACH)																			
	(12 ' W OF COBBLE STONE PAVING)																				
Rt	13.369	13.385	16B	87.5	43.8						1	25.0		1		75				75	1.04
		(OH SIGN POST)																			
	(OH SIGN POST)																				
Rt	13.385	13.494														576			576		15.67
		(Beg COBBLE STONE PAVING)																			
DAY St ENTRANCE RAMP GORE	(ENTRANCE RAMP @ NOSE)																				
Rt	13.567	13.695														676			676		18.39
		SHEET TOTAL		662.5	456.4	1					3	216.7		2	1	6407	200.0		5756.0	500.0	165.07

(N) NOT A SEPARATE PAY ITEM, FOR INFORMATION ONLY.

SUMMARY OF QUANTITIES

Q-4

REVISED BY | DATE REVISED
YONGBEE LIAU | KEVIN CHEN
CALCULATED-DESIGNED BY | CHECKED BY
FUNCTIONAL SUPERVISOR
KEVIN CHEN
STATE OF CALIFORNIA - DEPARTMENT OF TRANSPORTATION
Caltrans MAINTENANCE ENGINEERING

LAST REVISION 06-03-15 | DATE PLOTTED => 16-NOV-2015 | TIME PLOTTED => 12:44

Dist	COUNTY	ROUTE	POST MILES TOTAL PROJECT	SHEET No.	TOTAL SHEETS
08	Riv	60	R12.2/22.1, 26.5/30.4	44	113

REGISTERED CIVIL ENGINEER DATE 05-26-15

05-26-15
PLANS APPROVAL DATE

REGISTERED PROFESSIONAL ENGINEER
YONGBEE LIAU
No. C75571
Exp. 6-30-16
CIVIL
STATE OF CALIFORNIA

THE STATE OF CALIFORNIA OR ITS OFFICERS OR AGENTS SHALL NOT BE RESPONSIBLE FOR THE ACCURACY OR COMPLETENESS OF SCANNED COPIES OF THIS PLAN SHEET.

MIDWEST GUARDRAIL SYSTEM AND HMA DIKE QUANTITIES

LOCATION	POST MILE		MGS LAYOUT TYPE (N)	REMOVE GUARDRAIL	MGS (STEEL POST)	Trans RAILING (TYPE WB-31)	Trans RAILING Conn Det (N)	DRILL AND BOND DOWEL (CHEMICAL ADHESIVE)	Conc BARRIER (TYPE 60S)	MINOR Conc (MINOR Str)	END ANCHOR Assy (TYPE SFT)	VEGETATION CONTROL (MINOR Conc)	END CAP (TYPE A)	Alt FLARED TERMINAL SYSTEM	Alt IN-LINE TERMINAL SYSTEM	REMOVE AC DIKE	PLACE HMA DIKE TYPE C	PLACE HMA DIKE TYPE D	PLACE HMA DIKE TYPE E	PLACE HMA DIKE TYPE F	HMA (TYPE A)
	FROM	TO	--	LF	LF	EA	--	EA	LF	CY	EA	SQYD	EA	EA	EA	LF	LF	LF	LF	LF	TON
	Rte 60 EB																				
Rt	13.695	13.712	16B	87.5	43.8						1	29.2		1		88	62.5			50	1.19
		(OH SIGN POST)																			
	(OH SIGN POST)																				
Rt	13.712	13.763														269			269		7.32
	(EDGE OF Conc SLOPE PAVING)																				
Rt	13.998	14.010	16B	62.5	18.8						1	20.8		1							
Rt	14.134	14.146	16B	62.5	18.8						1	20.8		1							
		(CCTV/MVP)																			
Rt	14.290	14.305														79			79		2.15
							Det 1														
Rt	14.305	14.317	12B	62.5		1	Sht C-5	6		0.65		20.8		1		63	62.5			25	0.84
PIGEON PASS Rd UC		(APPROACH)																			
PIGEON PASS Rd UC	(DEPARTURE)																				
Rt	14.350	14.475														660			660		17.95
PIGEON PASS Rd ENTRANCE RAMP GORE		(Beg COBBLE STONE PAVING)																			
PIGEON PASS Rd ENTRANCE RAMP GORE																					
	(ENTRANCE RAMP @ NOSE)																				
Rt	14.490	14.735														1294			1294		35.19
Rt	14.753	14.768	16B	75	31.3							25.0		1							
		(CCTV/MVP)																			
Rt	14.901	15.018														618			618		16.81
		SHEET TOTAL		350.0	112.7	1		6		0.65	3	116.6		5		3071	125.0		2920.0	75.0	81.45

(N) NOT A SEPARATE PAY ITEM, FOR INFORMATION ONLY.

SUMMARY OF QUANTITIES

Q-5

YONGBEE LIAU — REVISED BY
DATE REVISED
KEVIN CHEN — CALCULATED-DESIGNED BY
CHECKED BY
KEVIN CHEN — FUNCTIONAL SUPERVISOR

STATE OF CALIFORNIA - DEPARTMENT OF TRANSPORTATION
Caltrans MAINTENANCE ENGINEERING

LAST REVISION 06-03-15 | DATE PLOTTED => 16-NOV-2015 | TIME PLOTTED => 12:44

Dist	COUNTY	ROUTE	POST MILES TOTAL PROJECT	SHEET No.	TOTAL SHEETS
08	Riv	60	R12.2/22.1, 26.5/30.4	45	113

REGISTERED CIVIL ENGINEER 05-26-15 DATE

05-26-15
PLANS APPROVAL DATE

REGISTERED PROFESSIONAL ENGINEER YONGBEE LIAU No. C75571 Exp. 6-30-16 CIVIL STATE OF CALIFORNIA

THE STATE OF CALIFORNIA OR ITS OFFICERS OR AGENTS SHALL NOT BE RESPONSIBLE FOR THE ACCURACY OR COMPLETENESS OF SCANNED COPIES OF THIS PLAN SHEET.

MIDWEST GUARDRAIL SYSTEM AND HMA DIKE QUANTITIES

LOCATION	POST MILE		MGS LAYOUT TYPE (N)	REMOVE GUARDRAIL	MGS (STEEL POST)	Trans RAILING (TYPE WB-31)	Trans RAILING Conn Det (N)	DRILL AND BOND DOWEL (CHEMICAL ADHESIVE)	Conc BARRIER (TYPE 60S)	MINOR Conc (MINOR Str)	END ANCHOR Assy (TYPE SFT)	VEGETATION CONTROL (MINOR Conc)	END CAP (TYPE A)	Alt FLARED TERMINAL SYSTEM	Alt IN-LINE TERMINAL SYSTEM	REMOVE AC DIKE	PLACE HMA DIKE TYPE C	PLACE HMA DIKE TYPE D	PLACE HMA DIKE TYPE E	PLACE HMA DIKE TYPE F	HMA (TYPE A)
	FROM	TO	--	LF	LF	EA	--	EA	LF	CY	EA	SQYD	EA	EA	EA	LF	LF	LF	LF	LF	TON
	Rte 60 EB																				
	(End COBBLE STONE PAVING)						Det 1														
Rt	15.170	15.335	12B	62.5		1	Sht C-5	6		0.65		20.8			1	871	62.5		784	25	22.16
HEACOCK St UC		(APPROACH)																			
HEACOCK St UC	(DEPARTURE/OH SIGN POST)																				
Rt	15.369	15.488	16B	62.5	18.8						1	20.8		1		628	62.5		541	25	15.55
		(CCTV/MVP)																			
	(CCTV/MVP)																				
Rt	15.502	15.542														211			211		5.75
(HEACOCK St ENTRANCE RAMP GORE)		(ML @ RAMP NOSE)																			
		(Beg COBBLE STONE PAVING)																			
HEACOCK St ENTRANCE RAMP GORE	(ENTRANCE RAMP @ NOSE)																				
Rt	15.552	15.850	16B	100	56.3						1	33.3				1573	62.5		1448	62.5	40.76
INDIAN St OC		(EDGE OF Conc SLOPE PAVING)																			
INDIAN St OC	(EDGE OF Conc SLOPE PAVING)																				
Rt	15.859	16.103														1288			1288		35.04
PERRIS Blvd EXIT RAMP		(Exist RAMP @ NOSE)																			
PERRIS Blvd EXIT RAMP GORE	(ML END COBBLE STONE PAVING)																				
Rt	16.121	16.205	16B	62.5	18.8						1	20.8				444	62.5		356	25	10.53
		(CCTV/MVP)																			
	(CCTV/MVP)																				
Rt	16.215	16.338	12B	62.5	18.8	1	(Exist)					20.8		1		649	62.5		562	25	16.13
PERRIS Blvd UC		(APPROACH)																			
PERRIS Blvd UC	(DEPARTURE)																				
Rt	16.392	16.454	12DD	325.0	293.8						1	20.8	1								
		(MVP/Elect CABINET)																			
	(NEAR Beg SW)																				
Rt	16.723	16.865														750			750		20.40
		(NEAR OH POWER LINES)																			
		SHEET TOTAL		675.0	406.5	2		6		0.65	4	137.3	1	2	1	6414	312.5		5940.0	162.5	166.32

(N) NOT A SEPARATE PAY ITEM, FOR INFORMATION ONLY.

SUMMARY OF QUANTITIES

Q-6

REVISED BY | DATE REVISED

YONGBEE LIAU | KEVIN CHEN

CALCULATED-DESIGNED BY | CHECKED BY

FUNCTIONAL SUPERVISOR: KEVIN CHEN

STATE OF CALIFORNIA - DEPARTMENT OF TRANSPORTATION
Caltrans MAINTENANCE ENGINEERING

LAST REVISION 06-03-15 | DATE PLOTTED => 16-NOV-2015 | TIME PLOTTED => 12:44

Dist	COUNTY	ROUTE	POST MILES TOTAL PROJECT	SHEET No.	TOTAL SHEETS
08	Riv	60	R12.2/22.1, 26.5/30.4	46	113

REGISTERED CIVIL ENGINEER DATE 05-26-15

05-26-15
PLANS APPROVAL DATE

REGISTERED PROFESSIONAL ENGINEER YONGBEE LIAU No. C75571 Exp. 6-30-16 CIVIL STATE OF CALIFORNIA

THE STATE OF CALIFORNIA OR ITS OFFICERS OR AGENTS SHALL NOT BE RESPONSIBLE FOR THE ACCURACY OR COMPLETENESS OF SCANNED COPIES OF THIS PLAN SHEET.

MIDWEST GUARDRAIL SYSTEM AND HMA DIKE QUANTITIES

LOCATION	POST MILE		(N) MGS LAYOUT TYPE	REMOVE GUARDRAIL	MGS (STEEL POST)	Trans RAILING (TYPE WB-31)	(N) Trans RAILING Conn Det	DRILL AND BOND (DOWEL) (CHEMICAL ADHESIVE)	Conc BARRIER (TYPE 60S)	MINOR Conc (MINOR Str)	END ANCHOR Assy (TYPE SFT)	VEGETATION CONTROL (MINOR Conc)	END CAP (TYPE A)	Alt FLARED TERMINAL SYSTEM	Alt IN-LINE TERMINAL SYSTEM	REMOVE AC DIKE	PLACE HMA DIKE				HMA (TYPE A)
																	TYPE C	TYPE D	TYPE E	TYPE F	
	FROM	TO	--	LF	LF	EA	--	EA	LF	CY	EA	SQYD	EA	EA	EA	LF	LF	LF	LF	LF	TON
	Rte 60 EB																				
Rt	17.370	17.561					Det 1									1009			1009		27.43
Rt	17.610	17.638														148			148		4.03
Rt	17.727	18.085														1890			1890		51.42
Rt	18.090	18.104	16B	75	31.3						1	25.0		1							
		(OH SIGN POST EXIT 64)																			
Rt	18.780	18.794	16B	75	31.3						1	25.0		1							
	(Exist CROSS CULVERT)																				
Rt	18.870	18.884	16B	75	31.3						1	25.0		1							
	(Exist CROSS CULVERT)																				
Rt	19.520	19.635	16B	62.5	18.8						1	20.8		1		607	62.5		545		15.31
		(OH SIGN POST EXIT 66)																			
	(OH SIGN POST EXIT 66)																				
Rt	19.635	19.870														1241			1241		33.75
Rt	20.165	20.189	16B	125.0	81.3						1	20.8									
		(OH SIGN POST)																			
Rt	20.351	20.371	12B	105.0	12.5	1	Sht C-7		13.0	4.08		25.0		1		134	62.5			37.5	1.01
	(REDLANDS Blvd	(UNDER REDLANDS Blvd OC)																			
	EB ENTRANCE RAMP)																				
Rt	(UNDER REDLANDS Blvd OC)																				
	20.371	20.386														79			79		2.15
		SHEET TOTAL		517.5	206.5	1			13.0	4.08	5	141.6		5		5108	125.0		4912	37.5	135.10

(N) NOT A SEPARATE PAY ITEM, FOR INFORMATION ONLY.

SUMMARY OF QUANTITIES

Q-7

REVISED BY | DATE REVISED
YONGBEE LIAU | KEVIN CHEN
CALCULATED-DESIGNED BY | CHECKED BY
FUNCTIONAL SUPERVISOR: KEVIN CHEN
STATE OF CALIFORNIA - DEPARTMENT OF TRANSPORTATION
Caltrans MAINTENANCE ENGINEERING

LAST REVISION 06-03-15
DATE PLOTTED => 24-NOV-2015
TIME PLOTTED => 2:44

Dist	COUNTY	ROUTE	POST MILES TOTAL PROJECT	SHEET No.	TOTAL SHEETS
08	Riv	60	R12.2/22.1, 26.5/30.4	47	113

REGISTERED CIVIL ENGINEER 05-26-15 DATE

05-26-15
PLANS APPROVAL DATE

REGISTERED PROFESSIONAL ENGINEER YONGBEE LIAU No. C75571 Exp. 6-30-16 CIVIL STATE OF CALIFORNIA

THE STATE OF CALIFORNIA OR ITS OFFICERS OR AGENTS SHALL NOT BE RESPONSIBLE FOR THE ACCURACY OR COMPLETENESS OF SCANNED COPIES OF THIS PLAN SHEET.

MIDWEST GUARDRAIL SYSTEM AND HMA DIKE QUANTITIES

LOCATION	POST MILE		(N) MGS LAYOUT TYPE	REMOVE GUARDRAIL	MGS (STEEL POST)	Trans RAILING (TYPE WB-31)	(N) Trans RAILING Conn Det	DRILL AND BOND DOWEL (CHEMICAL ADHESIVE)	Conc BARRIER (TYPE 60S)	MINOR Conc (MINOR Str)	END ANCHOR Assy (TYPE SFT)	VEGETATION CONTROL (MINOR Conc)	END CAP (TYPE A)	Alt FLARED TERMINAL SYSTEM	Alt IN-LINE TERMINAL SYSTEM	REMOVE AC DIKE	PLACE HMA DIKE				HMA (TYPE A)
																	TYPE C	TYPE D	TYPE E	TYPE F	
	FROM	TO	--	LF	LF	EA	--	EA	LF	CY	EA	SQYD	EA	EA	EA	LF	LF	LF	LF	LF	TON
	Rte 60 EB																				
Rt	20.490	20.618	16B	675.0	631.3						1	225.0		1		675	675				5.37
Rt	20.618	21.124														2672			2672		72.68
		(300' W OF OH SIGN POST)																			
	(ENTRANCE RAMP @ NOSE)	THEODORE St OC																			
Rt	21.349	21.373	16B	125.0	25.0	1	Sht C-7		13.0	4.08		29.2		1		100				50.0	0.69
		(6' W OF PIER)																			
THEODORE St OC	(EDGE OF Conc SLOPE PAVING)																				
Rt	21.373	21.505														697			697		18.96
Rt	21.568	21.656														465			465		12.65
Rt	21.825	21.849														127		127			7.77
(OH SIGN "HEMET SAN JACINTO")	21.850	21.874	16B	125.0	81.3						1	41.7		1							
Rt		(OH SIGN POST)																			
		(HEMET, SAN JACINTO)																			
	(E OF OH SIGN)																				
Rt	(HEMET, SAN JACINTO)																				
	21.877	21.933														296		296			18.13
Rt	21.933	21.971														201			201		5.46
		(Exist RAMP @ NOSE)																			
		(GILMAN SPRINGS Rd EXIT RAMP)																			
Rt	22.087	22.112	16B	125.0	81.3						1	41.7		1							
		(GILMAN SPRINGS Rd OC)																			
		SHEET TOTAL		1050.0	818.9	1			13.0	4.08	3	337.6		4		5233	675.0	423.0	4035.0	50.0	141.71

(N) NOT A SEPARATE PAY ITEM, FOR INFORMATION ONLY.

SUMMARY OF QUANTITIES

Q-8

REVISED BY | DATE REVISED
YONGBEE LIAU | KEVIN CHEN
CALCULATED-DESIGNED BY | CHECKED BY
FUNCTIONAL SUPERVISOR: KEVIN CHEN
STATE OF CALIFORNIA - DEPARTMENT OF TRANSPORTATION
Caltrans® MAINTENANCE ENGINEERING

LAST REVISION 06-03-15 | DATE PLOTTED => 16-NOV-2015 | TIME PLOTTED => 12:44

Dist	COUNTY	ROUTE	POST MILES TOTAL PROJECT	SHEET No.	TOTAL SHEETS
08	Riv	60	R12.2/22.1, 26.5/30.4	48	113

REGISTERED CIVIL ENGINEER 05-26-15 DATE

05-26-15
PLANS APPROVAL DATE

REGISTERED PROFESSIONAL ENGINEER YONGBEE LIAU No. C75571 Exp. 6-30-16 CIVIL STATE OF CALIFORNIA

THE STATE OF CALIFORNIA OR ITS OFFICERS OR AGENTS SHALL NOT BE RESPONSIBLE FOR THE ACCURACY OR COMPLETENESS OF SCANNED COPIES OF THIS PLAN SHEET.

MIDWEST GUARDRAIL SYSTEM AND HMA DIKE QUANTITIES

LOCATION	POST MILE		(N) MGS LAYOUT TYPE	REMOVE GUARDRAIL	MGS (STEEL POST)	Trans RAILING (TYPE WB-31)	(N) Trans RAILING Conn Det	DRILL AND BOND DOWEL (CHEMICAL ADHESIVE)	Conc BARRIER (TYPE 60S)	MINOR Conc (MINOR Str)	END ANCHOR Assy (TYPE SFT)	VEGETATION CONTROL (MINOR Conc)	END CAP (TYPE A)	Alt FLARED TERMINAL SYSTEM	Alt IN-LINE TERMINAL SYSTEM	REMOVE AC DIKE	PLACE HMA DIKE				HMA (TYPE A)
																	TYPE C	TYPE D	TYPE E	TYPE F	
	FROM	TO	--	LF	LF	EA	--	EA	LF	CY	EA	SQYD	EA	EA	EA	LF	LF	LF	LF	LF	TON
	Rte 60 EB																				
Rt	26.500	26.552														275			275		7.47
Rt	26.627	26.682														290		290			17.80
Rt	26.834	26.990														824			824		22.41
Rt	26.990	27.085														502			502		13.64
Rt	27.150	27.196														243			243		6.61
Rt	27.549	27.599														264			264		7.18
	(ML E OF EXIT RAMP NOSE)																				
	(JACK RABBIT Tr EXIT RAMP)																				
Rt	27.843	27.900														301			301		8.19
JACK RABBIT Tr	27.919	27.962														227			227		6.18
Rt		(W OF JACK RABBIT Tr)																			
	(ML @ RAMP NOSE)																				
	(JACK RABBIT Tr ENTRANCE RAMP)																				
Rt	28.047	28.059														63			63		1.71
SAN TIMOTEO Cr BRIDGE	28.165	28.344	12A	125.0	50.0	1	(Exist)			1.00		41.7			1	945	75		795	75.0	23.26
Rt		(APPROACH)																			
Rt	28.660	28.901														1273			1273		34.62
		(End OF Conc DITCH)																			
		SHEET TOTAL		125.0	50.0	1				1.00		41.7			1	5207	75.0	290.0	4767.0	75.0	149.07

(N) NOT A SEPARATE PAY ITEM, FOR INFORMATION ONLY.

SUMMARY OF QUANTITIES

Q-9

YONGBEE LIAU — REVISED BY
KEVIN CHEN — DATE REVISED
CALCULATED-DESIGNED BY
CHECKED BY
FUNCTIONAL SUPERVISOR: KEVIN CHEN

STATE OF CALIFORNIA - DEPARTMENT OF TRANSPORTATION
Caltrans MAINTENANCE ENGINEERING

LAST REVISION 06-03-15 | DATE PLOTTED => 16-NOV-2015 | TIME PLOTTED => 12:44

Dist	COUNTY	ROUTE	POST MILES TOTAL PROJECT	SHEET No.	TOTAL SHEETS
08	Riv	60	R12.2/22.1, 26.5/30.4	49	113

REGISTERED CIVIL ENGINEER DATE 05-26-15

05-26-15
PLANS APPROVAL DATE

REGISTERED PROFESSIONAL ENGINEER YONGBEE LIAU No. C75571 Exp. 6-30-16 CIVIL STATE OF CALIFORNIA

THE STATE OF CALIFORNIA OR ITS OFFICERS OR AGENTS SHALL NOT BE RESPONSIBLE FOR THE ACCURACY OR COMPLETENESS OF SCANNED COPIES OF THIS PLAN SHEET.

MIDWEST GUARDRAIL SYSTEM AND HMA DIKE QUANTITIES

LOCATION	POST MILE		(N) MGS LAYOUT TYPE	REMOVE GUARDRAIL	MGS (STEEL POST)	Trans RAILING (TYPE WB-31)	(N) Trans RAILING Conn Det	DRILL AND BOND DOWEL (CHEMICAL ADHESIVE)	Conc BARRIER (TYPE 60S)	MINOR Conc (MINOR Str)	END ANCHOR Assy (TYPE SFT)	VEGETATION CONTROL (MINOR Conc)	END CAP (TYPE A)	Alt FLARED TERMINAL SYSTEM	Alt IN-LINE TERMINAL SYSTEM	REMOVE AC DIKE	PLACE HMA DIKE				HMA (TYPE A)
																	TYPE C	TYPE D	TYPE E	TYPE F	
	FROM	TO	--	LF	LF	EA	--	EA	LF	CY	EA	SQYD	EA	EA	EA	LF	LF	LF	LF	LF	TON
	Rte 60 EB																				
Rt	28.901	28.991														475			475		12.93
Rt	29.087	29.157														370			370		10.05
		(Beg PAVED PULLOUT)																			
	(Beg PAVED PULLOUT)																				
Rt	29.335	29.448														597			597		16.23
		UNNAMED SIDE STREET																			
		(CURB RETURN)																			
	UNNAMED SIDE STREET																				
	(CURB RETURN)																				
Rt	29.452	29.631														945		945			57.94
BEAUMONT OH	30.172	30.232	12A	87.5	12.5	1	(Exist)					29.2			1	317	75		204	37.5	6.67
Rt		(APPROACH)																			
BEAUMONT OH	30.035	30.219	12B	975.0	912.5	1	(Exist)					325.0		1							
Lt		(APPROACH)																			
	(DEPARTURE)																				
BEAUMONT OH	30.293	30.358														343			343		9.33
Rt		(EXIT RAMP @ NOSE)																			
	(END COBBLE STONE PAVING)																				
Rt	30.397	30.430	12B	87.5	25.0	1	(Exist)					29.2		1		174	62.5		62	50	2.87
E 60 TO E 10 Conn		(APPROACH)																			
Lt	30.401	30.417	12B	87.5	25.0	1	(Exist)					29.2		1							
E 60 TO E 10 Conn		(APPROACH)																			
		SHEET TOTAL		1237.5	975.0	4						412.6		3	1	3221	137.5	945.0	2051.0	87.5	116.02

(N) NOT A SEPARATE PAY ITEM, FOR INFORMATION ONLY.

SUMMARY OF QUANTITIES

Q-10

REVISED BY | DATE REVISED
YONGBEE LIAU | KEVIN CHEN
CALCULATED-DESIGNED BY | CHECKED BY
FUNCTIONAL SUPERVISOR: KEVIN CHEN
STATE OF CALIFORNIA - DEPARTMENT OF TRANSPORTATION
Caltrans MAINTENANCE ENGINEERING

LAST REVISION 06-03-15 | DATE PLOTTED => 16-NOV-2015 | TIME PLOTTED => 12:45

Dist	COUNTY	ROUTE	POST MILES TOTAL PROJECT	SHEET No.	TOTAL SHEETS
08	Riv	60	R12.2/22.1, 26.5/30.4	50	113

REGISTERED CIVIL ENGINEER DATE 05-26-15

05-26-15
PLANS APPROVAL DATE

REGISTERED PROFESSIONAL ENGINEER
YONGBEE LIAU
No. C75571
Exp. 6-30-16
CIVIL
STATE OF CALIFORNIA

THE STATE OF CALIFORNIA OR ITS OFFICERS OR AGENTS SHALL NOT BE RESPONSIBLE FOR THE ACCURACY OR COMPLETENESS OF SCANNED COPIES OF THIS PLAN SHEET.

MIDWEST GUARDRAIL SYSTEM AND HMA DIKE QUANTITIES

LOCATION	POST MILE		MGS LAYOUT TYPE (N)	REMOVE GUARDRAIL	MGS (STEEL POST)	Trans RAILING (TYPE WB-31)	Trans RAILING Conn Det (N)	DRILL AND BOND DOWEL (CHEMICAL ADHESIVE)	Conc BARRIER (TYPE 60S)	MINOR Conc (MINOR Str)	END ANCHOR Assy (TYPE SFT)	VEGETATION CONTROL (MINOR Conc)	END CAP (TYPE A)	Alt FLARED TERMINAL SYSTEM	Alt IN-LINE TERMINAL SYSTEM	REMOVE AC DIKE	PLACE HMA DIKE TYPE C	PLACE HMA DIKE TYPE D	PLACE HMA DIKE TYPE E	PLACE HMA DIKE TYPE F	HMA (TYPE A)
	FROM	TO	--	LF	LF	EA	--	EA	LF	CY	EA	SQYD	EA	EA	EA	LF	LF	LF	LF	LF	TON
	Rte 60 WB																				
	Rte 60 WB Rt																				
	(ACTION OH SIGN POST, EXIT 58)																				
Rt	12.368	12.381	16B	62.5	18.8						1	20.8		1							
	(OH SIGN POST, EXIT 58)																				
Rt	12.591	12.603	16B	62.5	18.8						1	20.8		1							
Rt	13.218	13.303														449		449			27.52
DAY St UC		(DEPARTURE)																			
DAY St UC	(APPROACH)						Det 2														
Rt	13.336	13.358	12B	112.5	50.0	1	Sht C-6	18		11.95		37.5			1		37.5			75	1.33
Rt	(CCTV/OH SIGN POST)																				
	13.420	13.437	16B	87.5	43.8						1	29.2		1							
	(OH SIGN POST & LIGHTING)																				
Rt	13.997	14.018	16B	87.5	43.8						1	29.2		1		112	62.5			50	1.19
		(MVP)																			
	(END COBBLE STONE PAVING)																				
Rt	14.215	14.317														539			539		14.65
PIGEON PASS UC		(DEPARTURE)																			
PIGEON PASS UC	(APPROCH)						Det 2														
Rt	14.350	14.390	12B	112.5	50.0	1	Sht C-6	18		11.95		37.5			1	209	62.5		71	75	3.48
	(EXIT RAMP @ NOSE)																				
	(FREDERICK St EXIT RAMP)																				
Rt	14.601	14.629														148			148		4.02
	(OH SIGN POST)																				
Rt	14.733	14.754	16B	112.5	68.8						1	37.5									
		SHEET TOTAL		637.5	294.0	2		36		23.90	5	212.5		4	2	1457	162.5	449.0	758.0	200.0	52.19

(N) NOT A SEPARATE PAY ITEM, FOR INFORMATION ONLY.

SUMMARY OF QUANTITIES

Q-11

REVISED BY | DATE REVISED
YONGBEE LIAU | KEVIN CHEN
CALCULATED-DESIGNED BY | CHECKED BY
FUNCTIONAL SUPERVISOR
KEVIN CHEN
STATE OF CALIFORNIA - DEPARTMENT OF TRANSPORTATION
Caltrans® MAINTENANCE ENGINEERING

LAST REVISION 06-03-15 | DATE PLOTTED => 16-NOV-2015 | TIME PLOTTED => 12:45

Dist	COUNTY	ROUTE	POST MILES TOTAL PROJECT	SHEET No.	TOTAL SHEETS
08	Riv	60	R12.2/22.1, 26.5/30.4	51	113

REGISTERED CIVIL ENGINEER DATE 05-26-15

05-26-15
PLANS APPROVAL DATE

REGISTERED PROFESSIONAL ENGINEER YONGBEE LIAU No. C75571 Exp. 6-30-16 CIVIL STATE OF CALIFORNIA

THE STATE OF CALIFORNIA OR ITS OFFICERS OR AGENTS SHALL NOT BE RESPONSIBLE FOR THE ACCURACY OR COMPLETENESS OF SCANNED COPIES OF THIS PLAN SHEET.

MIDWEST GUARDRAIL SYSTEM AND HMA DIKE QUANTITIES

LOCATION	POST MILE		(N) MGS LAYOUT TYPE	REMOVE GUARDRAIL	MGS (STEEL POST)	Trans RAILING (TYPE WB-31)	(N) Trans RAILING Conn Det	DRILL AND BOND DOWEL (CHEMICAL ADHESIVE)	Conc BARRIER (TYPE 60S)	MINOR Conc (MINOR Str)	END ANCHOR Assy (TYPE SFT)	VEGETATION CONTROL (MINOR Conc)	END CAP (TYPE A)	Alt FLARED TERMINAL SYSTEM	Alt IN-LINE TERMINAL SYSTEM	REMOVE AC DIKE	PLACE HMA DIKE				HMA (TYPE A)
																	TYPE C	TYPE D	TYPE E	TYPE F	
	FROM	TO	--	LF	LF	EA	--	EA	LF	CY	EA	SQYD	EA	EA	EA	LF	LF	LF	LF	LF	TON
	Rte 60 WB																				
	(End OF COBBLE STONE PAVING)																				
Rt	15.166	15.177														58			58		1.58
		(Beg SW)																			
HEACOCK St UC	(APPROCH)						Det 1														
Rt	15.368	15.395	12B	62.5		1	Sht C-5	6		0.65		25.0			1	144	75			69	1.55
Rt	15.395	15.471														401			401		10.92
		(CMS SIGN POST/MVP)																			
	(CMS SIGN POST/MVP))																				
Rt	15.471	15.552	16A	125.0	68.8						1	41.7			1	425			425		11.57
		(Beg COBBLE STONE PAVING)																			
		(HEACOCK St EXIT RAMP GORE)																			
	(OH SIGN POST "HEACOCK St)																				
Rt	15.675	15.696	16B	87.5	43.8							29.2		1		109	109				0.86
Rt	15.696	15.850														813			813		22.12
INDIAN St OC		(E EDGE OF Conc SLOPE PAVING)																			
INDIAN St OC	(E EDGE OF Conc SLOPE PAVING)																				
Rt	15.860	15.886														137			137		3.73
	(ML @ NOSE)																				
Rt	16.180	16.340	12DD	312.5	306.3						1	104.2	1			700			700		19.03
PERRIS Blvd UC		(DEPARTURE/OH SIGN BRIDGE)																			
PERRIS Blvd UC	(APPROACH)																				
Rt	16.389	16.494	12B	62.5		1	(Exist)					20.8		1		554			554		15.08
		(Beg COBBLE STONE PAVING)																			
		(PERRIS Blvd EXIT RAMP GORE)																			
	(EXIT RAMP @ NOSE)																				
Rt	16.507	16.619														591			591		16.09
		(E OF OH SIGN POST)																			
		SHEET TOTAL		650.0	418.9	2		6		0.65	2	220.9	1	2	2	3932	184.0		3679.0	69.0	102.53

(N) NOT A SEPARATE PAY ITEM, FOR INFORMATION ONLY.

SUMMARY OF QUANTITIES

Q-12

REVISED BY | DATE REVISED
YONGBEE LIAU | KEVIN CHEN
CALCULATED-DESIGNED BY | CHECKED BY
FUNCTIONAL SUPERVISOR: KEVIN CHEN
STATE OF CALIFORNIA - DEPARTMENT OF TRANSPORTATION
Caltrans® MAINTENANCE ENGINEERING

LAST REVISION 06-03-15 | DATE PLOTTED => 16-NOV-2015 | TIME PLOTTED => 12:45

Dist	COUNTY	ROUTE	POST MILES TOTAL PROJECT	SHEET No.	TOTAL SHEETS
08	Riv	60	R12.2/22.1, 26.5/30.4	52	113

REGISTERED CIVIL ENGINEER DATE 05-26-15

05-26-15
PLANS APPROVAL DATE

REGISTERED PROFESSIONAL ENGINEER YONGBEE LIAU No. C75571 Exp. 6-30-16 CIVIL STATE OF CALIFORNIA

THE STATE OF CALIFORNIA OR ITS OFFICERS OR AGENTS SHALL NOT BE RESPONSIBLE FOR THE ACCURACY OR COMPLETENESS OF SCANNED COPIES OF THIS PLAN SHEET.

MIDWEST GUARDRAIL SYSTEM AND HMA DIKE QUANTITIES

LOCATION	POST MILE		MGS LAYOUT TYPE (N)	REMOVE GUARDRAIL	MGS (STEEL POST)	Trans RAILING (TYPE WB-31)	Trans RAILING Conn Det (N)	DRILL AND BOND DOWEL (CHEMICAL ADHESIVE)	Conc BARRIER (TYPE 60S)	MINOR Conc (MINOR Str)	END ANCHOR Assy (TYPE SFT)	VEGETATION CONTROL (MINOR Conc)	END CAP (TYPE A)	Alt FLARED TERMINAL SYSTEM	Alt IN-LINE TERMINAL SYSTEM	REMOVE AC DIKE	PLACE HMA DIKE TYPE C	PLACE HMA DIKE TYPE D	PLACE HMA DIKE TYPE E	PLACE HMA DIKE TYPE F	HMA (TYPE A)
	FROM	TO	--	LF	LF	EA	--	EA	LF	CY	EA	SQYD	EA	EA	EA	LF	LF	LF	LF	LF	TON
	Rte 60 WB																				
	(OUTLET TO Conc DITCH)																				
Rt	16.816	16.993														932			932		25.36
		(WINGWALL AT DRAINAGE OUTLET)																			
	(WINGWALL AT DRAINAGE OUTLET)																				
Rt	16.993	17.224	16A	100.0	43.8						1	33.3			1	1220	75		1145		31.74
	(End SW)																				
Rt	17.866	17.977	16A	112.5	56.3						1	37.5			1	586	75		511		14.50
Rt	17.998	18.187																			
		(JOINS Exist DIKE)																			
	(OH SIGN POST)																				
Rt	18.725	18.744	16B	75.0	31.3						1	25.0		1							
	(E OF OH SIGN POST)																				
Rt	18.791	18.805	16B	75.0	31.3						1	25.0		1							
Rt	18.872	18.884	16B	62.5	18.8						1	20.8		1							
	MORENO BEACH Blvd OC																				
Rt	19.114	19.133	16B	100.0	12.5	1			14.0	4.08		25.0		1							
	(6' W OF PIER)																				
	(OH SIGN POST)																				
Rt	19.296	19.310	16A	75.0	18.8						1	25.0			1						
	REDLANDS Blvd OC																				
Rt	20.362	20.381	12B	100.0	12.5	1	Sht C-7		22.0	4.08		25.0		1		125	62.5			37.5	1.01
	(6' W OF PIER)	(ENTRANCE RAMP @ NOSE)																			
		SHEET TOTAL		700.0	225.3	2			36.0	8.16	6	216.6		5	3	2863	212.5		2588.0	37.5	72.61

(N) NOT A SEPARATE PAY ITEM, FOR INFORMATION ONLY.

SUMMARY OF QUANTITIES

Q-13

REVISED BY | DATE REVISED
YONGBEE LIAU | KEVIN CHEN
CALCULATED-DESIGNED BY | CHECKED BY
FUNCTIONAL SUPERVISOR: KEVIN CHEN
STATE OF CALIFORNIA - DEPARTMENT OF TRANSPORTATION
Caltrans MAINTENANCE ENGINEERING

LAST REVISION 06-03-15 | DATE PLOTTED => 16-NOV-2015 | TIME PLOTTED => 12:45

Dist	COUNTY	ROUTE	POST MILES TOTAL PROJECT	SHEET No.	TOTAL SHEETS
08	Riv	60	R12.2/22.1, 26.5/30.4	53	113

REGISTERED CIVIL ENGINEER 05-26-15 DATE

05-26-15
PLANS APPROVAL DATE

REGISTERED PROFESSIONAL ENGINEER YONGBEE LIAU No. C75571 Exp. 6-30-16 CIVIL STATE OF CALIFORNIA

THE STATE OF CALIFORNIA OR ITS OFFICERS OR AGENTS SHALL NOT BE RESPONSIBLE FOR THE ACCURACY OR COMPLETENESS OF SCANNED COPIES OF THIS PLAN SHEET.

MIDWEST GUARDRAIL SYSTEM AND HMA DIKE QUANTITIES

LOCATION	POST MILE		MGS LAYOUT TYPE (N)	REMOVE GUARDRAIL	MGS (STEEL POST)	Trans RAILING (TYPE WB-31)	Trans RAILING Conn Det (N)	DRILL AND BOND DOWEL (CHEMICAL ADHESIVE)	Conc BARRIER (TYPE 60S)	MINOR Conc (MINOR Str)	END ANCHOR Assy (TYPE SFT)	VEGETATION CONTROL (MINOR Conc)	END CAP (TYPE A)	Alt FLARED TERMINAL SYSTEM	Alt IN-LINE TERMINAL SYSTEM	REMOVE AC DIKE	PLACE HMA DIKE				HMA (TYPE A)
																	TYPE C	TYPE D	TYPE E	TYPE F	
	FROM	TO	--	LF	LF	EA	--	EA	LF	CY	EA	SQYD	EA	EA	EA	LF	LF	LF	LF	LF	TON
	Rte 60 WB																				
	(OH SIGN POST)																				
Rt	20.546	20.567	16B	112.5	68.8						1	37.5									
	(DRAINAGE HW)																				
Rt	20.731	20.886	16A	100.0	43.8						1	33.3			1	818	75		718	25	20.48
Rt	20.886	21.000	16A	100.0	43.8						1	33.3			1	602	75		477	50	14.26
		(DRAINAGE HW)																			
Rt	21.000	21.134														708			708		19.25
	THEODORE St OC																				
Rt	21.368	21.386	16B	112.5	12.5	1			13.0	4.08		25.0		1		137	62.5			13	0.68
	(@ Br PIERS)	(EXIT/ENTRANCE RAMP NOSE)																			
	(OH SIGN POST)																				
Rt	21.499	21.566	16A	75.0	18.8						1	25.0			1						
	(GILMAN SPRINGS Rd OC)																				
Rt	22.091	22.130	12B	200.0	75.0	1	Sht C-7		39.0	4.08		45.8		1		175	62.5			100	1.88
	(6' W OF PIER)	(W OF 2-POST OH SIGN)																			
Rt	26.500	26.747														1304			1304		35.48
		(DIRT TRAIL ACCESS)																			
	(DIRT TRAIL ACCESS)																				
Rt	26.754	27.098														1816			1816		49.41
		(DIRT TRAIL ACCESS)																			
		SHEET TOTAL		700.0	262.7	2			52.0	8.16	4	199.9		2	3	5560	275.0		5023.0	188.0	141.44

(N) NOT A SEPARATE PAY ITEM, FOR INFORMATION ONLY.

SUMMARY OF QUANTITIES

Q-14

REVISED BY | DATE REVISED
YONGBEE LIAU | KEVIN CHEN
CALCULATED-DESIGNED BY | CHECKED BY
FUNCTIONAL SUPERVISOR: KEVIN CHEN

STATE OF CALIFORNIA - DEPARTMENT OF TRANSPORTATION
Caltrans® MAINTENANCE ENGINEERING

LAST REVISION 06-03-15 | DATE PLOTTED => 16-NOV-2015 | TIME PLOTTED => 12:45

Dist	COUNTY	ROUTE	POST MILES TOTAL PROJECT	SHEET No.	TOTAL SHEETS
08	Riv	60	R12.2/22.1, 26.5/30.4	54	113

REGISTERED CIVIL ENGINEER DATE 05-26-15

05-26-15
PLANS APPROVAL DATE

REGISTERED PROFESSIONAL ENGINEER
YONGBEE LIAU
No. C75571
Exp. 6-30-16
CIVIL
STATE OF CALIFORNIA

THE STATE OF CALIFORNIA OR ITS OFFICERS OR AGENTS SHALL NOT BE RESPONSIBLE FOR THE ACCURACY OR COMPLETENESS OF SCANNED COPIES OF THIS PLAN SHEET.

MIDWEST GUARDRAIL SYSTEM AND HMA DIKE QUANTITIES

LOCATION	POST MILE		MGS LAYOUT TYPE (N)	REMOVE GUARDRAIL	MGS (STEEL POST)	Trans RAILING (TYPE WB-31)	Trans RAILING Conn Det (N)	DRILL AND BOND DOWEL (CHEMICAL ADHESIVE)	Conc BARRIER (TYPE 60S)	MINOR Conc (MINOR Str)	END ANCHOR Assy (TYPE SFT)	VEGETATION CONTROL (MINOR Conc)	END CAP (TYPE A)	Alt FLARED TERMINAL SYSTEM	Alt IN-LINE TERMINAL SYSTEM	REMOVE AC DIKE	PLACE HMA DIKE				HMA (TYPE A)
																	TYPE C	TYPE D	TYPE E	TYPE F	
	FROM	TO	--	LF	LF	EA	--	EA	LF	CY	EA	SQYD	EA	EA	EA	LF	LF	LF	LF	LF	TON
	Rte 60 WB																				
Rt	27.127	27.378														1325			1325		36.05
Rt	27.566	27.902														1774			1774		48.26
	(Beg MEDIAN Conc BARRIER)																				
Rt	28.070	28.183														597			597		16.23
	(APPROACH)																				
SAN TIMOTEO Cr BRIDGE	28.348	28.360	12B	62.5		1	(Exist)					20.8		1							
Rt																					
	(NE CURB RETURN)																				
WESTERN KNOLLS Ave	29.452	29.611														840			840		22.84
Rt																					
Rt	30.129	30.228														523			523		14.22
BEAUMONT OH		(DEPARTURE)																			
BEAUMONT OH	(APPROACH)																				
Rt	30.279	30.360	12B	112.5	50.0	1	(Exist)					37.5		1		428	62.5		290	75	9.43
		(Conn RAMP @ NOSE)																			
		(W 60 Conn FROM E 10)																			
BEAUMONT OH	(APPROACH)																				
Lt	30.292	30.318	12B	137.5	75.0	1	(Exist)					45.8		1							
	(ML @ NOSE)																				
	(W 60 Conn FROM E 10)																				
Rt	30.348	30.413														343			343		9.34
(Rte 60/10 SEPARATION)		(DEPARTURE)																			
		SHEET TOTAL		312.5	125.0	3						104.2		3		5830	62.5		5692.0	75.0	156.37

(N) NOT A SEPARATE PAY ITEM, FOR INFORMATION ONLY.

SUMMARY OF QUANTITIES

REVISED BY | DATE REVISED
YONGBEE LIAU | KEVIN CHEN
CALCULATED-DESIGNED BY | CHECKED BY
FUNCTIONAL SUPERVISOR: KEVIN CHEN
STATE OF CALIFORNIA - DEPARTMENT OF TRANSPORTATION
Caltrans MAINTENANCE ENGINEERING

LAST REVISION 06-03-15 | DATE PLOTTED => 16-NOV-2015 | TIME PLOTTED => 12:45

Dist	COUNTY	ROUTE	POST MILES TOTAL PROJECT	SHEET No.	TOTAL SHEETS
08	Riv	60	R12.2/22.1, 26.5/30.4	55	113

REGISTERED CIVIL ENGINEER 05-26-15 DATE

05-26-15
PLANS APPROVAL DATE

REGISTERED PROFESSIONAL ENGINEER YONGBEE LIAU No. C75571 Exp. 6-30-16 CIVIL STATE OF CALIFORNIA

THE STATE OF CALIFORNIA OR ITS OFFICERS OR AGENTS SHALL NOT BE RESPONSIBLE FOR THE ACCURACY OR COMPLETENESS OF SCANNED COPIES OF THIS PLAN SHEET.

MIDWEST GUARDRAIL SYSTEM AND HMA DIKE QUANTITIES

LOCATION	POST MILE		MGS LAYOUT TYPE (N)	REMOVE GUARDRAIL	MGS (STEEL POST)	Trans RAILING (TYPE WB-31)	Trans RAILING Conn Det (N)	DRILL AND BOND DOWEL (CHEMICAL ADHESIVE)	Conc BARRIER (TYPE 60S)	MINOR Conc (MINOR Str)	END ANCHOR Assy (TYPE SFT)	VEGETATION CONTROL (MINOR Conc)	END CAP (TYPE A)	Alt FLARED TERMINAL SYSTEM	Alt IN-LINE TERMINAL SYSTEM	REMOVE AC DIKE	PLACE HMA DIKE TYPE C	PLACE HMA DIKE TYPE D	PLACE HMA DIKE TYPE E	PLACE HMA DIKE TYPE F	HMA (TYPE A)
	FROM	TO	--	LF	LF	EA	--	EA	LF	CY	EA	SQYD	EA	EA	EA	LF	LF	LF	LF	LF	TON
EB 60 Conn FROM NB 215	(Rte 215 PM)																				
Lt	R38.017	13.241														750		360	390		32.68
	(Beg CURB & GUTTER, Lt)	(TO EB 60 Conn @ Nose)																			
HEACOCK St EB EXIT RAMP																					
Rt		(OH BILLBOARD POST)	16B	112.5	68.8						1										
HEACOCK St EB ENTRANCE RAMP		(JOINS CURB RETURN)														6				6	0.08
	(End OF COBBLE STONE PAVING)																				
Rt	15.376	15.552														929			929		25.28
		(ENTRANCE RAMP @ NOSE)																			
PERRIS Blvd EB ENTRANCE RAMP																					
	(End OF COBBLE STONE PAVING)																				
Rt	16.463	16.580														618			618		16.81
		(ENTRANCE RAMP @ NOSE)																			
MORENO BEACH Blvd WB EXIT RAMP																					
Rt	(ON THE RAMP Rt)	18.615	16B	450.0	406.3						1	150.0		1							
		(EXIT RAMP @ NOSE)																			
MORENO BEACH Blvd WB EXIT RAMP																					
Rt	(EXIT RAMP @ NOSE)	(ON THE RAMP Rt)														320		320			19.62
THEODORE St EB EXIT RAMP																					
Rt	(ON THE RAMP Rt)	(THEODORE St INTERSECTION)																			
		(SW CURVE RETURN)	11E	375.0	300.0							125.0		2							
THEODORE St WB EXIT RAMP																					
Rt	(W OF EXIT RAMP NOSE)	(EXIT RAMP/ENTRANCE RAMP FORK)														170		170			10.42
Rt	(ON THE RAMP Rt)		Exist									41.7									
		SHEET TOTAL		937.5	775.1						2	316.7		3		2793		850.0	1937.0	6.0	104.89

(N) NOT A SEPARATE PAY ITEM, FOR INFORMATION ONLY.

SUMMARY OF QUANTITIES

Q-16

REVISED BY | DATE REVISED
YONGBEE LIAU | KEVIN CHEN
CALCULATED-DESIGNED BY | CHECKED BY
FUNCTIONAL SUPERVISOR: KEVIN CHEN
STATE OF CALIFORNIA - DEPARTMENT OF TRANSPORTATION
Caltrans MAINTENANCE ENGINEERING

LAST REVISION 06-03-15 | DATE PLOTTED => 16-NOV-2015 TIME PLOTTED => 12:45

Dist	COUNTY	ROUTE	POST MILES TOTAL PROJECT	SHEET No.	TOTAL SHEETS
08	Riv	60	R12.2/22.1, 26.5/30.4	56	113

REGISTERED CIVIL ENGINEER DATE 05-26-15

05-26-15
PLANS APPROVAL DATE

REGISTERED PROFESSIONAL ENGINEER
YONGBEE LIAU
No. C75571
Exp. 6-30-16
CIVIL
STATE OF CALIFORNIA

THE STATE OF CALIFORNIA OR ITS OFFICERS OR AGENTS SHALL NOT BE RESPONSIBLE FOR THE ACCURACY OR COMPLETENESS OF SCANNED COPIES OF THIS PLAN SHEET.

MIDWEST GUARDRAIL SYSTEM AND HMA DIKE QUANTITIES

LOCATION	POST MILE FROM	POST MILE TO	MGS LAYOUT TYPE (N)	REMOVE GUARDRAIL	MGS (STEEL POST)	Trans RAILING (TYPE WB-31)	Trans RAILING Conn Det (N)	DRILL AND BOND DOWEL (CHEMICAL ADHESIVE)	Conc BARRIER (TYPE 60S)	MINOR Conc (MINOR Str)	END ANCHOR Assy (TYPE SFT)	VEGETATION CONTROL (MINOR Conc)	END CAP (TYPE A)	Alt FLARED TERMINAL SYSTEM	Alt IN-LINE TERMINAL SYSTEM	REMOVE AC DIKE	PLACE HMA DIKE TYPE C	PLACE HMA DIKE TYPE D	PLACE HMA DIKE TYPE E	PLACE HMA DIKE TYPE F	HMA (TYPE A)
			--	LF	LF	EA	--	EA	LF	CY	EA	SQYD	EA	EA	EA	LF	LF	LF	LF	LF	TON
THEODORE St WB ENTRANCE RAMP																					
Rt	(EXIT/ENTRANCE RAMP NOSE)	(ENTRANCE RAMP @ NOSE)		100.0								33.3				100			100		2.72
GILMAN SPRINGS EB EXIT RAMP																					
	(EXIT RAMP @ NOSE)																				
Rt	21.971	(EXIT RAMP @ NOSE)														980			980		26.66
		(GILMAN SPRINGS Rd SB)																			
JACK RABBIT Trl	JACK RABBIT Trl																				
EB EXIT RAMP	EB EXIT RAMP		16B	175.0	131.3						1	58.3		1		600	62.5		470	138.0	15.19
Rt	Rt																				
	JACK RABBIT Trl																				
	EB ENTRANCE RAMP															495			495		13.47
	Rt																				
	(EXIT RAMP @ NOSE)																				
6TH St EB EXIT RAMP	30.358															205			205		5.58
	Rt	Rt																			
SHEET TOTAL				275.0	131.3						1	91.6		1		2380	62.5		2250.0	138.0	63.62
TOTAL				8830.0	5258.3	22		54	114.0	51.3	38	2766.5	2	41	14	59476	2609.0	2957.0	52308.0	1701.0	1648.3

(N) NOT A SEPARATE PAY ITEM, FOR INFORMATION ONLY.

SUMMARY OF QUANTITIES

Q-17

YONGBEE LIAU | REVISED BY
KEVIN CHEN | DATE REVISED
CALCULATED-DESIGNED BY
CHECKED BY
FUNCTIONAL SUPERVISOR
KEVIN CHEN
STATE OF CALIFORNIA - DEPARTMENT OF TRANSPORTATION
Caltrans® MAINTENANCE ENGINEERING

LAST REVISION 06-03-15 | DATE PLOTTED => 16-NOV-2015 | TIME PLOTTED => 12:45

Dist	COUNTY	ROUTE	POST MILES TOTAL PROJECT	SHEET No.	TOTAL SHEETS
08	Riv	60	R12.2/22.1, 26.5/30.4	57	113

REGISTERED ELECTRICAL ENGINEER 05-26-15 DATE

PLANS APPROVAL DATE 05-26-15

REGISTERED PROFESSIONAL ENGINEER DAVID A. GONZALEZ No. E15382 Exp. 06-30-17 ELECTRICAL STATE OF CALIFORNIA

THE STATE OF CALIFORNIA OR ITS OFFICERS OR AGENTS SHALL NOT BE RESPONSIBLE FOR THE ACCURACY OR COMPLETENESS OF SCANNED COPIES OF THIS PLAN SHEET.

NOTES: (THIS SHEET ONLY)

1. ALL DISTANCES ARE APPROXIMATE. PRIOR TO CONSTRUCTION, THE CONTRACTOR MUST VERIFY ALL LOOP LOCATIONS.
2. NEW INDUCTIVE LOOP DETECTORS MUST BE INSTALLED AT LOCATION OF EXISTING LOOPS.
3. NEW INDUCTIVE LOOP DETECTORS MUST BE SPLICED TO EXISTING DLC.
4. CONTRACTOR MUST COORDINATE WITH TRAFFIC OPERATIONS AT 909-383-5947 TO VERIFY INDUCTIVE LOOP DETECTOR OPERATION.

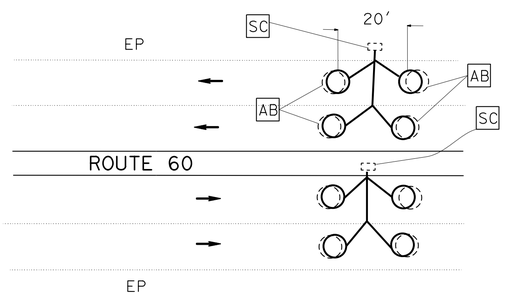

(TRAFFIC MONITORING COUNT LOOP)
ROUTE 60 (PM 30.08)

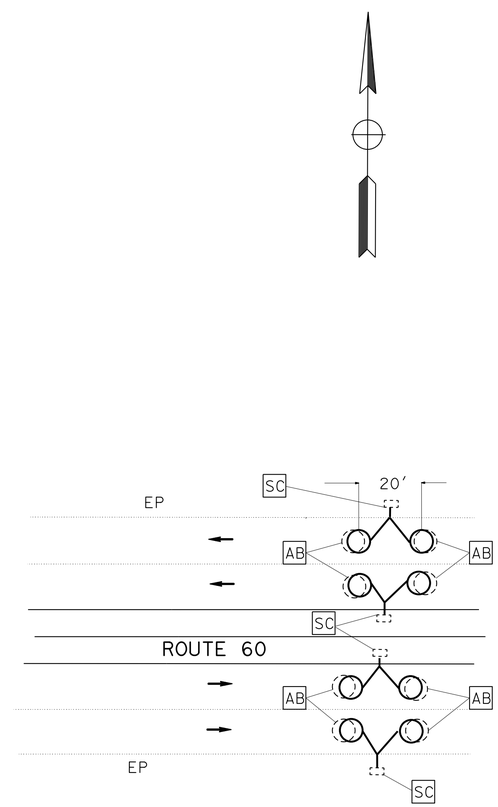

(TRAFFIC MONITORING COUNT LOOP)
ROUTE 60 (PM 21.5)

(TRAFFIC MONITORING COUNT LOOP)

INDUCTIVE LOOP DETECTOR (LS)

APPROVED FOR ELECTRICAL WORK ONLY

NO SCALE

E-1

STATE OF CALIFORNIA - DEPARTMENT OF TRANSPORTATION
Caltrans® ELECTRICAL DESIGN A

FUNCTIONAL SUPERVISOR: DAVID A GONZALEZ
CALCULATED-DESIGNED BY: NASIMA A HYDER
CHECKED BY: DAVID A GONZALEZ
REVISED BY
DATE REVISED

LAST REVISION 06-02-15
DATE PLOTTED => 16-NOV-2015
TIME PLOTTED => 12:45

Dist	COUNTY	ROUTE	POST MILES TOTAL PROJECT	SHEET No.	TOTAL SHEETS
08	Riv	60	R12.2/22.1, 26.5/30.4	58	113

05-26-15
REGISTERED ELECTRICAL ENGINEER DATE

05-26-15
PLANS APPROVAL DATE

REGISTERED PROFESSIONAL ENGINEER
DAVID A. GONZALEZ
No. E15382
Exp. 06-30-17
ELECTRICAL
STATE OF CALIFORNIA

THE STATE OF CALIFORNIA OR ITS OFFICERS OR AGENTS SHALL NOT BE RESPONSIBLE FOR THE ACCURACY OR COMPLETENESS OF SCANNED COPIES OF THIS PLAN SHEET.

NOTES: (THIS SHEET ONLY)

1. PRIOR TO CONSTRUCTION, THE CONTRACTOR MUST VERIFY ALL LOCATIONS OF EXISTING PIEZO AXLE SENSOR AND INDUCTIVE LOOP DETECTORS.
2. NEW INDUCTIVE LOOP DETECTORS MUST BE SPLICED TO EXISTING DLC.
3. THE CONTRACTOR MUST NOTIFY THE ENGINEER 3 WORKING DAYS PRIOR TO INSTALLING
4. INDUCTIVE LOOP DETECTORS AND PIEZO AXLE SENSOR.
5. FOR PIEZO AXLE SENSOR INSTALLATION DETAILS SEE SHEET E-6.
   NEW PIEZO AXLE SENSOR LEAD CABLE MUST NOT BE SPLICED AND MUST RUN CONTNUOUSLY TO THE EXISTING CABINET.

PIEZO AXLE SENSOR EQUIPMENT

EXISTING PIEZO AXLE SENSOR

NEW PIEZO AXLE SENSOR

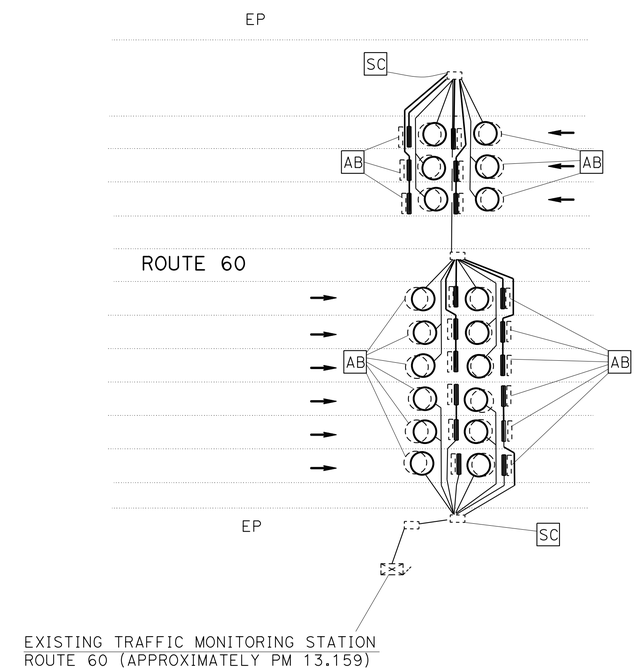

(PIEZO DETECTION)

APPROVED FOR ELECTRICAL WORK ONLY

PIEZO AXLE SENSOR

NO SCALE

E-2

STATE OF CALIFORNIA - DEPARTMENT OF TRANSPORTATION
Caltrans® **ELECTRICAL DESIGN A**

FUNCTIONAL SUPERVISOR: DAVID A GONZALEZ
CALCULATED-DESIGNED BY: NASIMA A HYDER
CHECKED BY: DAVID A GONZALEZ
REVISED BY
DATE REVISED

LAST REVISION 06-02-15
DATE PLOTTED => 16-NOV-2015
TIME PLOTTED => 12:45

Dist	COUNTY	ROUTE	POST MILES TOTAL PROJECT	SHEET No.	TOTAL SHEETS
08	Riv	60	R12.2/22.1, 26.5/30.4	59	113

REGISTERED ELECTRICAL ENGINEER 05-26-15 DATE

05-26-15
PLANS APPROVAL DATE

REGISTERED PROFESSIONAL ENGINEER
DAVID A. GONZALEZ
No. E15382
Exp 06-30-17
ELECTRICAL
STATE OF CALIFORNIA

THE STATE OF CALIFORNIA OR ITS OFFICERS OR AGENTS SHALL NOT BE RESPONSIBLE FOR THE ACCURACY OR COMPLETENESS OF SCANNED COPIES OF THIS PLAN SHEET.

NOTES: (THIS SHEET ONLY)

1. ALL DISTANCES ARE APPROXIMATE. PRIOR TO CONSTRUCTION, THE CONTRACTOR MUST VERIFY ALL LOOP LOCATIONS.
2. NEW INDUCTIVE LOOP DETECTORS MUST BE INSTALLED AT LOCATION OF EXISTING LOOPS.
3. NEW INDUCTIVE LOOP DETECTORS MUST BE SPLICED TO EXISTING DLC.

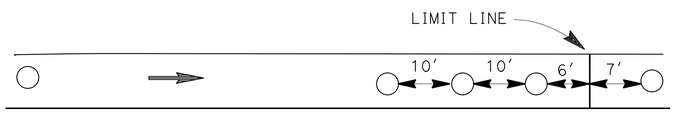

TYPICAL RAMP METER LOOP DETECTOR SETBACKS

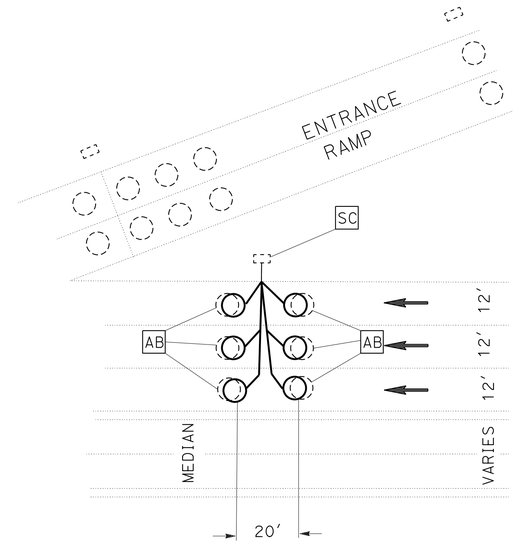

RAMP METERING (MAIN LINE) LOOP DETECTOR
ROUTE 60 WB ENTRANCE RAMP FROM NASON St (PM 18.420)

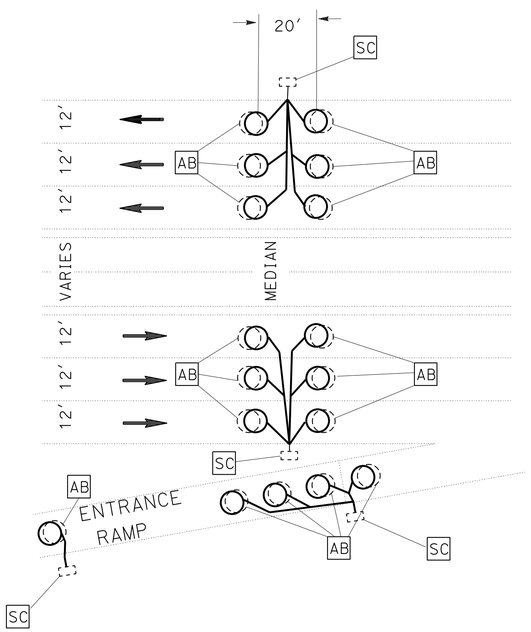

(RAMP METERING LOOP DETECTOR)
ROUTE 60 EB ENTRANCE RAMP FROM HEACOCK St (PM 15.352)

AND

(RAMP METERING LOOP DETECTOR)
ROUTE 60 EB ENTRANCE RAMP FROM PERRIS Blvd (PM 16.638)

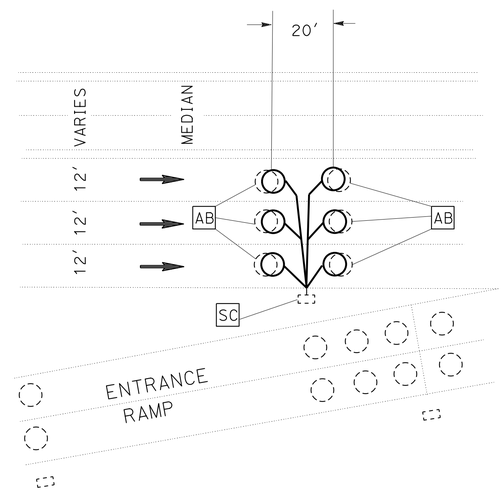

RAMP METERING (MAIN LINE) LOOP DETECTOR
ROUTE 60 EB ENTRANCE RAMP FROM NASON St (PM 18.490)

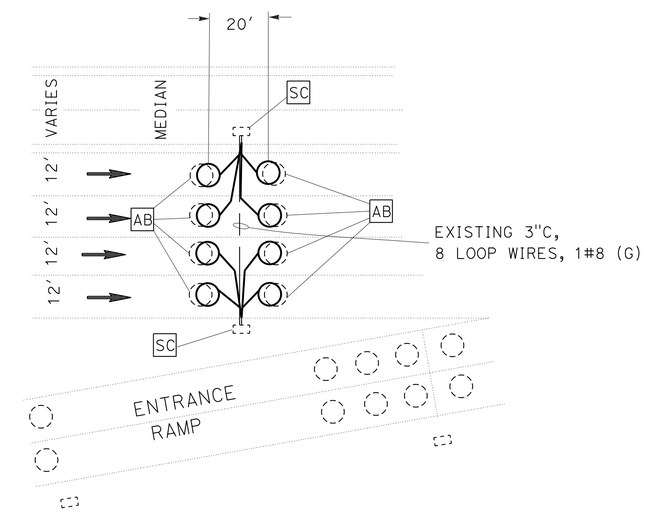

RAMP METERING (MAIN LINE) LOOP DETECTOR
ROUTE 60 EB ENTRANCE RAMP FROM MORENO BEACH Dr (PM 19.118)

MODIFY RAMP METERING SYSTEM

APPROVED FOR ELECTRICAL WORK ONLY

NO SCALE

E-3

STATE OF CALIFORNIA - DEPARTMENT OF TRANSPORTATION
Caltrans® **ELECTRICAL DESIGN A**

FUNCTIONAL SUPERVISOR: DAVID A GONZALEZ
CALCULATED-DESIGNED BY: NASIMA A HYDER
CHECKED BY: DAVID A GONZALEZ
REVISED BY
DATE REVISED

LAST REVISION 06-02-15
DATE PLOTTED => 16-NOV-2015
TIME PLOTTED => 12:45

Dist	COUNTY	ROUTE	POST MILES TOTAL PROJECT	SHEET No.	TOTAL SHEETS
08	Riv	60	R12.2/22.1, 26.5/30.4	60	113

REGISTERED ELECTRICAL ENGINEER 05-26-15 DATE

05-26-15
PLANS APPROVAL DATE

REGISTERED PROFESSIONAL ENGINEER DAVID A. GONZALEZ No. E15382 Exp. 06-30-17 ELECTRICAL STATE OF CALIFORNIA

THE STATE OF CALIFORNIA OR ITS OFFICERS OR AGENTS SHALL NOT BE RESPONSIBLE FOR THE ACCURACY OR COMPLETENESS OF SCANNED COPIES OF THIS PLAN SHEET.

NOTES: (THIS SHEET ONLY)

1. ALL DISTANCES ARE APPROXIMATE. PRIOR TO CONSTRUCTION, THE CONTRACTOR MUST VERIFY ALL LOOP LOCATIONS.
2. NEW INDUCTIVE LOOP DETECTORS MUST BE INSTALLED AT LOCATION OF EXISTING LOOPS.
3. NEW INDUCTIVE LOOP DETECTORS MUST BE SPLICED TO EXISTING DLC.

LEGEND: (THIS SHEET ONLY)

1 SOLDER CONTRACTOR FURNISHED 8 INCH, 14 AWG NICKEL CHROMIUM WIRE IN PARALLEL TO TWO TYPE "E" INDUCTIVE LOOPS DETECTORS AS DIRECTED BY THE ENGINEER.

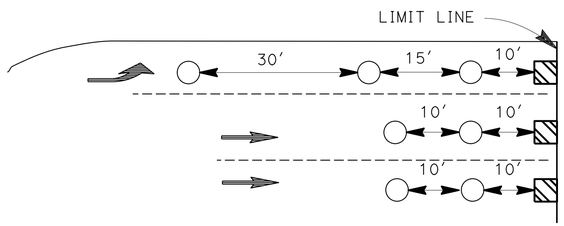

TYPICAL LOOP DETECTOR SETBACKS

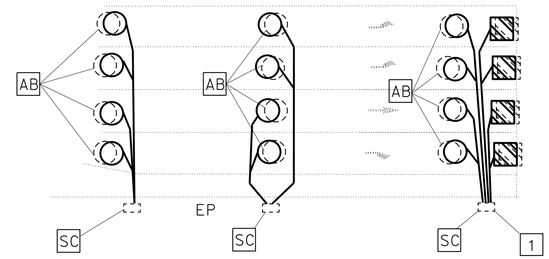

(TRAFFIC SIGNAL LOOP)
ROUTE 60 EB EXIT RAMP TO FREDERICK St (PM R14.336)

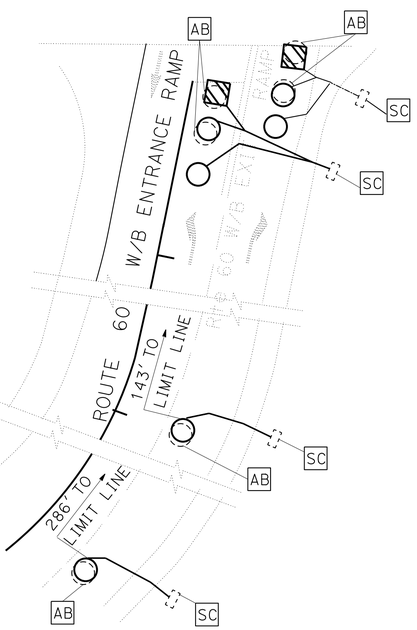

(TRAFFIC SIGNAL LOOP)
ROUTE 60 WB EXIT RAMP TO MORENO BEACH Dr (PM 19.125)

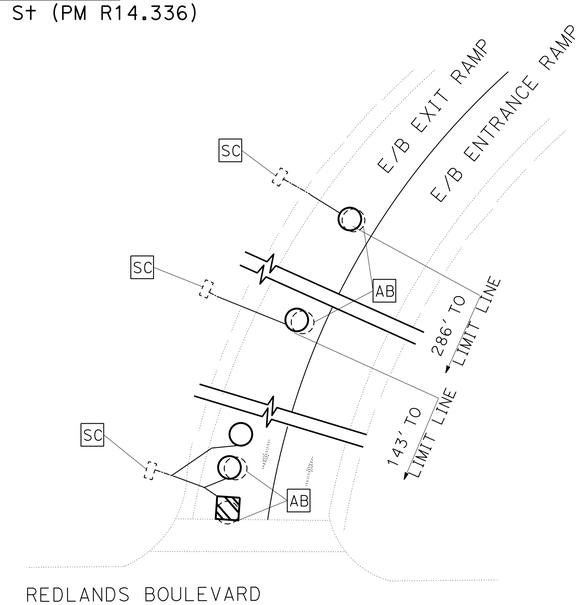

(TRAFFIC SIGNAL LOOP)
ROUTE 60 EB EXIT RAMP TO REDLANDS Blvd (PM 20.369)

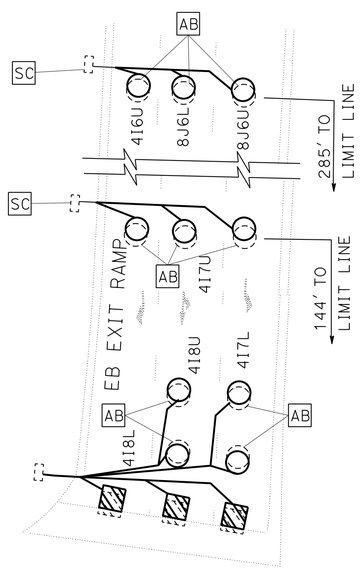

(TRAFFIC SIGNAL LOOP)
ROUTE 60 EB EXIT RAMP TO HEACOCK St (PM 15.352)

(TRAFFIC SIGNAL LOOP)

APPROVED FOR ELECTRICAL WORK ONLY

MODIFY SIGNAL

NO SCALE **E-4**

STATE OF CALIFORNIA - DEPARTMENT OF TRANSPORTATION
Caltrans® **ELECTRICAL DESIGN A**

FUNCTIONAL SUPERVISOR: DAVID A GONZALEZ
CALCULATED-DESIGNED BY: NASIMA A HYDER
CHECKED BY: DAVID A GONZALEZ
REVISED BY
DATE REVISED

LAST REVISION 06-02-15
DATE PLOTTED => 16-NOV-2015
TIME PLOTTED => 12:45

Dist	COUNTY	ROUTE	POST MILES TOTAL PROJECT	SHEET No.	TOTAL SHEETS
08	Riv	60	R12.2/22.1, 26.5/30.4	61	113

REGISTERED ELECTRICAL ENGINEER 05-26-15 DATE

PLANS APPROVAL DATE 05-26-15

REGISTERED PROFESSIONAL ENGINEER DAVID A. GONZALEZ No. E15382 Exp. 06-30-17 ELECTRICAL STATE OF CALIFORNIA

THE STATE OF CALIFORNIA OR ITS OFFICERS OR AGENTS SHALL NOT BE RESPONSIBLE FOR THE ACCURACY OR COMPLETENESS OF SCANNED COPIES OF THIS PLAN SHEET.

NOTES: (THIS SHEET ONLY)

1. LOCATIONS ARE APPROXIMATE. PRIOR TO CONSTRUCTION, THE CONTRACTOR MUST VERIFY ALL VEHICLE SENSOR NODE LOCATIONS.
2. NEW VSN MUST BE INSTALLED AT LOCATION OF EXISTING VSN.
3. VSN MUST BE DEPARTMENT FURNISHED.
   CONTACT PERSON: OMAR PEREZ AT 909-356-3734
   ADDRESS: CALTRANS TMC
   13892 VICTORIA ST.
   FONTANA, CA 92336

LEGEND: (THIS SHEET ONLY)

[1] [RC] EXISTING VEHICLE DETECTOR SENSOR SHOWN AS PER MANUFACTURER'S INSTRUCTION.

[2] SEE E-7 FOR INSTALLATION DETAILS.

VSN EQUIPMENT: (SHEETS E-5 AND E-8)

○ EXISTNG VEHICLE SENSOR NODE

● NEW VEHICLE SENSOR NODE (DEPARTMENT FURNISHED).

ABBREVIATIONS:

WVDS- WIRELESS VIDEO DETECTION SYSTEM

VSN- VEHICLE SENSOR NODE

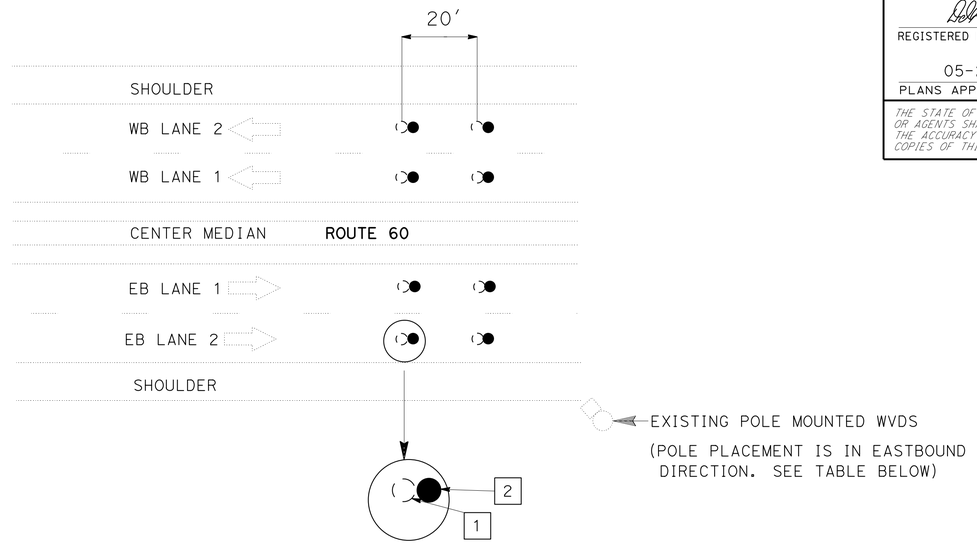

TYPICAL LAYOUT FOR LOCATIONS ① - ③

RIVERSIDE COUNTY ROUTE 60

LOCATION	COUNTY	ROUTE	DESCRIPTION	POSTMILE	VSN LOCATIONS	NOTE	QUANTITY OF VSN TO BE [RC]	QUANTITY OF VSN TO BE INSTALLED
①	Riv	60	EAST OF REDLANDS Blvd	20.4	EB LANES 1-2; WB LANES 1-2	WVDS POLE LOCATION IS ON THE EASTBOUND SIDE	8	8
②	Riv	60	THEODORE OVER CROSSING	21.4	EB LANES 1-2; WB LANES 1-2	WVDS POLE LOCATION IS ON THE EASTBOUND SIDE	8	8
③	Riv	60	GILMAN SPRINGS OVER CROSSING	22.0	EB LANES 1-2; WB LANES 1-2	WVDS POLE LOCATION IS ON THE EASTBOUND SIDE	8	8
						TOTAL	24	24

(REMOVAL AND INSTALLATION)

APPROVED FOR ELECTRICAL WORK ONLY

VEHICLE SENSOR NODE REPLACEMENT

NO SCALE

E-5

REVISED BY | DATE REVISED

NASIMA A HYDER | DAVID A GONZALEZ

CALCULATED-DESIGNED BY | CHECKED BY

FUNCTIONAL SUPERVISOR: DAVID A GONZALEZ

STATE OF CALIFORNIA - DEPARTMENT OF TRANSPORTATION

Caltrans® ELECTRICAL DESIGN A

LAST REVISION 06-02-15 | DATE PLOTTED => 16-NOV-2015 TIME PLOTTED => 12:45

Dist	COUNTY	ROUTE	POST MILES TOTAL PROJECT	SHEET No.	TOTAL SHEETS
08	Riv	60	R12.2/22.1, 26.5/30.4	62	113

REGISTERED ELECTRICAL ENGINEER 05-26-15 DATE

PLANS APPROVAL DATE 05-26-15

REGISTERED PROFESSIONAL ENGINEER DAVID A. GONZALEZ No. E15382 Exp. 06-30-17 ELECTRICAL STATE OF CALIFORNIA

THE STATE OF CALIFORNIA OR ITS OFFICERS OR AGENTS SHALL NOT BE RESPONSIBLE FOR THE ACCURACY OR COMPLETENESS OF SCANNED COPIES OF THIS PLAN SHEET.

NOTES: (PIEZO-ELECTRIC AXLE SENSOR INSTALLATION PROCEDURE)

1. MARK THE POSITION OF THE PIEZO-ELECTRIC AXLE SENSORS AS DIRECTED BY THE ENGINEER. PIEZO-ELECTRIC AXLE SENSOR CHANNELS MUST BE PERPENDICULAR TO TRAFFIC.
2. MARK THE HOME RUN CUTS AS SHOWN IN THE PIEZO-ELECTRIC AXLE SENSOR INSTALATION DETAIL.
3. USING A CONCRETE SAW, CUT THE PIEZO-ELECTRIC AXLE SENSOR CHANNELS ¾" WIDE BY 1½" DEEP IN A SINGLE PASS. CUTS MUST BE STRAIGHT AND TRUE.
4. DRILL ½" Dia HOLES 1" DEEP AT A 45 DEGREE ANGLE AT THE BOTTOM OF EACH PIEZO-ELECTRIC AXLE SENSOR CHANNEL. HOLES MUST BE 12" APART AND ON ALTERNATING SIDES OF THE CHANNEL.
5. WASH OUT THE CHANNELS AND ALL SAW CUTS THOROUGHLY WITH HIGH PRESSURE WATER. DRY COMPLETELY WITH AN AIR COMPRESSOR. IN PCC PAVEMENT ONLY, WIPE OUT THE CHANNELS WITH LACQUER THINNER AND CLEAN COTTON RAGS.
6. PLACE 4" DUCT TAPE STRIPS ON THE PAVEMENT AROUND THE CHANNELS.
7. ENSURE THAT EACH PIEZO-ELECTRIC AXLE SENSOR IS STRAIGHT AND FLAT. BEND EACH END DOWN SLIGHTLY AND PLACE THE INSTALLATION CLIPS ON THE PIEZO-ELECTRIC AXLE SENSOR EVERY 6" ALONG THE LENGTH. SEE SECTION B-B BELOW.
8. BLOCK OFF THE CABLE END OF THE CHANNEL WITH DUCT TAPE TO PREVENT THE EPOXY GROUT FROM FLOWING OUT OF THE CHANNEL.
9. ATTACH STATIC MIXING TUBE ONTO CARTRIDGE.
10. HALF FILL THE CHANNEL WITH EPOXY GROUT. ENSURE THAT THE BOTTOM OF THE CHANNEL IS COMPLETELY COVERED, AND THAT THE HOLES DRILLED IN STEP 4 ARE FILLED.
11. PLACE THE PIEZO-ELECTRIC AXLE SENSOR IN THE CHANNEL ¾" BELOW THE ROAD SURFACE (AS SHOWN IN SECTION B-B BELOW), WITH NO VOIDS BENEATH THE PIEZO-ELECTRIC AXLE SENSOR.
12. COMPLETELY FILL THE CHANNEL WITH EPOXY GROUT. SMOOTH OUT THE EPOXY GROUT ON TOP OF THE PIEZO-ELECTRIC AXLE SENSOR TO ROAD LEVEL, WITH NO TROUGH ON TOP.
13. WHEN EPOXY GROUT HAS BEGUN TO SET, REMOVE THE DUCT TAPE FROM THE PAVEMENT. REMOVE THE DUCT SEAL FROM THE END OF THE CHANNEL.
14. SEAL ALL SAW CUTS. ELASTOMERIC SEALANT MUST BE USED ONLY IN ALL CUTS CONTAINING SCREENED TRANSMISSION CABLE.
15. REMOVE ANY HIGH SPOTS IN THE EPOXY GROUT WITH A HAND GRINDER.
16. CLEAN UP THE SITE. WHEN ALL SEALANTS ARE COMPLETELY CURED, LANES MAY BE OPENED TO TRAFFIC.

DETAILED PIEZO SENSOR INSTALLATION - ELEVATION

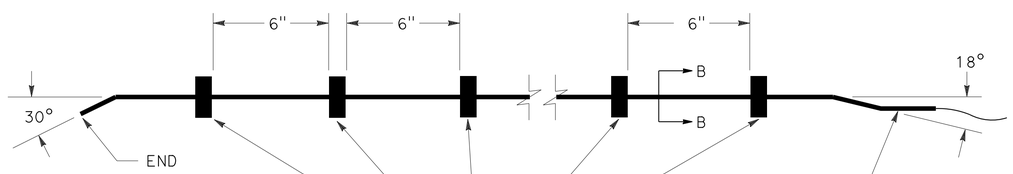

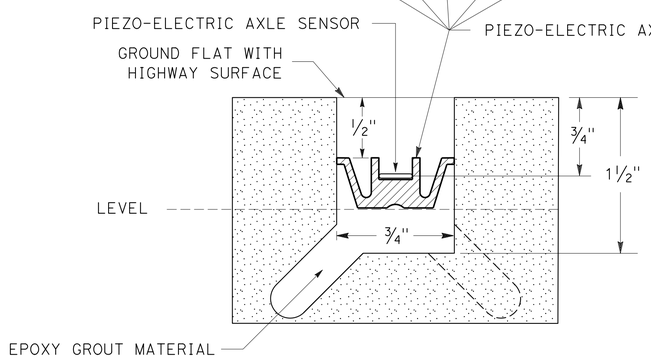

DETAIL "A"

NO SCALE

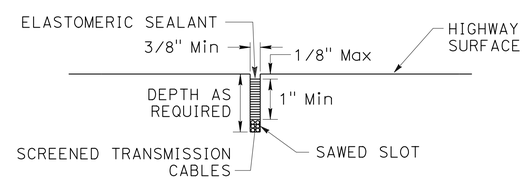

SECTION A-A

NO SCALE

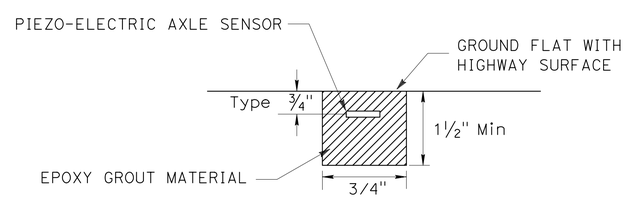

SECTION B-B

NO SCALE

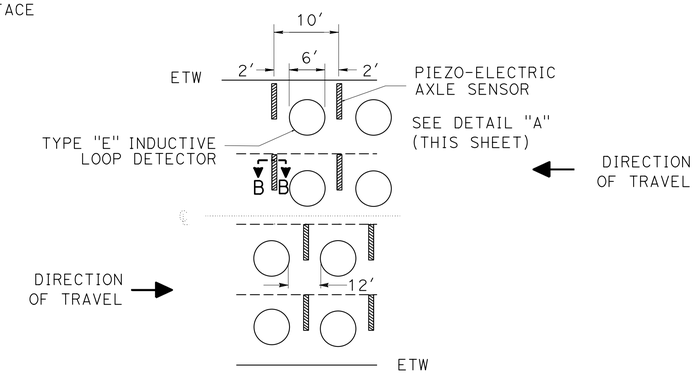

TYPICAL AXLE SENSOR INSTALLATION

NO SCALE

APPROVED FOR ELECTRICAL WORK ONLY

ELECTRICAL DETAILS

NO SCALE

E-6

STATE OF CALIFORNIA - DEPARTMENT OF TRANSPORTATION

Caltrans® **ELECTRICAL DESIGN A**

FUNCTIONAL SUPERVISOR: DAVID A GONZALEZ

CALCULATED-DESIGNED BY: NASIMA A HYDER

CHECKED BY: DAVID A GONZALEZ

REVISED BY

DATE REVISED

LAST REVISION 06-02-15

DATE PLOTTED => 16-NOV-2015

TIME PLOTTED => 12:45

Dist	COUNTY	ROUTE	POST MILES TOTAL PROJECT	SHEET No.	TOTAL SHEETS
08	Riv	60	R12.2/22.1, 26.5/30.4	63	113

REGISTERED ELECTRICAL ENGINEER 05-26-15 DATE

05-26-15
PLANS APPROVAL DATE

REGISTERED PROFESSIONAL ENGINEER
DAVID A. GONZALEZ
No. E15382
Exp. 06-30-17
ELECTRICAL
STATE OF CALIFORNIA

THE STATE OF CALIFORNIA OR ITS OFFICERS OR AGENTS SHALL NOT BE RESPONSIBLE FOR THE ACCURACY OR COMPLETENESS OF SCANNED COPIES OF THIS PLAN SHEET.

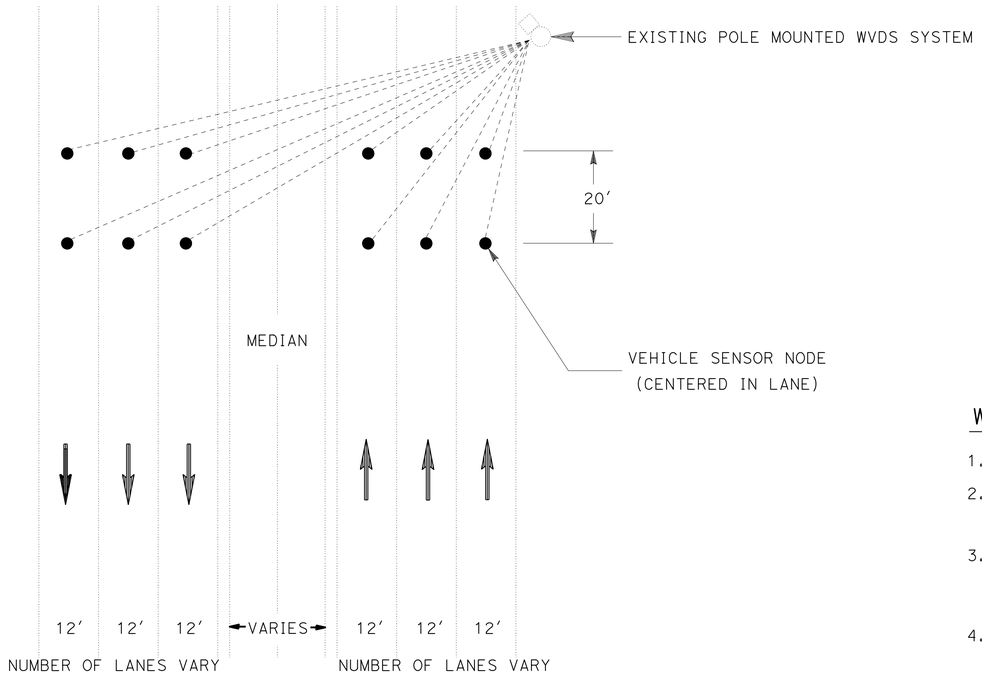

DETAIL 'A'

VEHICLE DETECTOR SENSOR NODE PLACEMENT DETAIL

WIRELESS VEHICLE DETECTOR SENSOR INSTALLATION PROCEDURE

1. PRIOR TO INSTALLATION, IDENTIFY SENSOR'S ID, LANE NUMBER, AND LOCATION IN LANE.
2. INSTALL VEHICLE DETECTOR SENSOR AS PER MANUFACTURER'S INSTRUCTION. EXISTING HOLE MAY HAVE TO BE CUT DEEPER TO ENSURE 1" MINIMUM CLEARANCE FROM ROADWAY SURFACE.
3. DEPENDING ON AMBIENT TEMPERATURE AND HUMIDITY, ADHESIVE DRYING TIME WILL VARY FROM 5 MINUTES TO 15 MINUTES. VERIFY HARDNESS OF EPOXY BEFORE REOPENING THE LANE FOR TRAFFIC.
4. RECORD THE DISTANCES BETWEEN EACH SENSOR PAIR.

LEGEND: (THIS SHEET ONLY)

● VEHICLE SENSOR NODE (DEPARTMENT-FURNISHED)

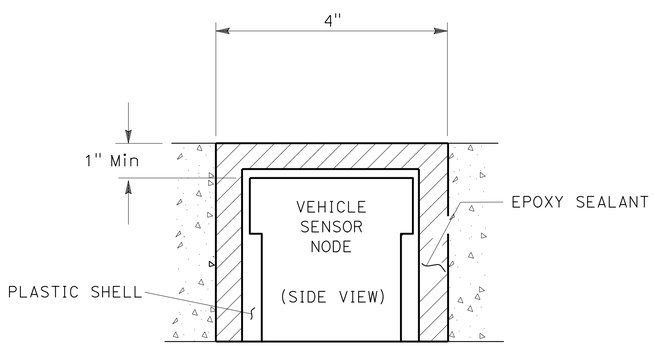

DETAIL 'B'

VEHICLE SENSOR NODE INSTALLATION DETAIL

(VEHICLE SENSOR NODE INSTALLATION)

APPROVED FOR ELECTRICAL WORK ONLY

ELECTRICAL DETAILS

NO SCALE **E-7**

STATE OF CALIFORNIA - DEPARTMENT OF TRANSPORTATION
Caltrans® ELECTRICAL DESIGN A

FUNCTIONAL SUPERVISOR: DAVID A GONZALEZ
CALCULATED-DESIGNED BY: NASIMA A HYDER
CHECKED BY: DAVID A GONZALEZ
REVISED BY
DATE REVISED

LAST REVISION 06-02-15
DATE PLOTTED => 16-NOV-2015
TIME PLOTTED => 12:45

Dist	COUNTY	ROUTE	POST MILES TOTAL PROJECT	SHEET No.	TOTAL SHEETS
08	Riv	60	R12.2/22.1, 26.5/30.4	64	113

REGISTERED ELECTRICAL ENGINEER 05-26-15 DATE

05-26-15
PLANS APPROVAL DATE

REGISTERED PROFESSIONAL ENGINEER
DAVID A. GONZALEZ
No. E15382
Exp. 06-30-17
ELECTRICAL
STATE OF CALIFORNIA

THE STATE OF CALIFORNIA OR ITS OFFICERS OR AGENTS SHALL NOT BE RESPONSIBLE FOR THE ACCURACY OR COMPLETENESS OF SCANNED COPIES OF THIS PLAN SHEET.

NOTE:

1. (N) THE QUANTITIES SHOWN IN TABLES ARE NOT SEPARATE PAY ITEMS, FOR INFORMATION ONLY. FOR COMPLETE ELECTRICAL WORK, SEE ELECTRICAL PLAN SHEETS.

INDUCTIVE LOOP DETECTOR (LS)

SHEET No.	TYPE E LOOP (N)
	EA
E-1	16

PIEZO AXLE SENSOR

SHEET No.	TYPE E LOOP (N)	PIEZO AXLE SENSOR (N)
	EA	EA
E-2	18	18

MODIFY RAMP METERING SYSTEM

SHEET No.	TYPE E LOOP (N)
	EA
E-3	54

MODIFY SIGNAL

SHEET No.	TYPE D LOOP (N)	TYPE E LOOP (N)
	EA	EA
E-4	10	32

VEHICLE SENSOR NODE REPLACEMENT

SHEET No.	VSN (N)
	EA
E-5	24

ELECTRICAL QUANTITIES

NO SCALE

E-8

REVISED BY | DATE REVISED
NASIMA A HYDER | DAVID A GONZALEZ
CALCULATED-DESIGNED BY | CHECKED BY
FUNCTIONAL SUPERVISOR
DAVID A GONZALEZ

STATE OF CALIFORNIA - DEPARTMENT OF TRANSPORTATION
Caltrans® ELECTRICAL DESIGN A

LAST REVISION 06-03-15 | DATE PLOTTED => 16-NOV-2015 TIME PLOTTED => 12:45

M

Maint	MAINTENANCE
Max	MAXIMUM
MB	METAL BEAM
MBB	METAL BEAM BARRIER
MBGR	METAL BEAM GUARD RAILING
Med	MEDIAN
MGS	MIDWEST GUARDRAIL SYSTEM
MH	MANHOLE
Min	MINIMUM
Misc	MISCELLANEOUS
Misc I & S	MISCELLANEOUS IRON AND STEEL
Mkr	MARKER
Mod	MODIFIED,
	MODIFY
Mon	MONUMENT
MP	METAL PLATE
MPGR	METAL PLATE GUARD RAILING
MR	MOVEMENT RATING
MSE	MECHANICALLY STABILIZED EMBANKMENT
Mt	MOUNTAIN, MOUNT
Mtl	MATERIAL
MVP	MAINTENANCE VEHICLE PULLOUT

N

N	NORTH
NB	NORTHBOUND
No.	NUMBER (MUST HAVE PERIOD)
Nos.	NUMBERS (MUST HAVE PERIOD)
NPS	NOMINAL PIPE SIZE
NS	NEAR SIDE
NSP	NEW STANDARD PLAN
NTS	NOT TO SCALE

O

Oblr	OBLITERATE
OC	OVERCROSSING
OD	OUTSIDE DIAMETER
OF	OUTSIDE FACE
OG	ORIGINAL GROUND
OGAC	OPEN GRADED ASPHALT CONCRETE
OGFC	OPEN GRADED FRICTION COURSE
OH	OVERHEAD
OHWM	ORDINARY HIGH WATER MARK
O-O	OUT TO OUT
Opp	OPPOSITE
OSD	OVERSIDE DRAIN

P

P	PAGE
PAP	PERFORATED ALUMINUM PIPE
PB	PULL BOX
PC	POINT OF CURVATURE,
	PRECAST
PCC	POINT OF COMPOUND CURVE,
	PORTLAND CEMENT CONCRETE
PCMS	PORTABLE CHANGEABLE MESSAGE SIGN
PCP	PERFORATED CONCRETE PIPE,
	PRESTRESSED CONCRETE PIPE
PCVC	POINT OF COMPOUND VERTICAL CURVE
PEC	PERMIT TO ENTER AND CONSTRUCT
Ped	PEDESTRIAN
Ped OC	PEDESTRIAN OVERCROSSING
Ped UC	PEDESTRIAN UNDERCROSSING
Perm Mtl	PERMEABLE MATERIAL

P continued

PG	PROFILE GRADE
PI	POINT OF INTERSECTION
PJP	PARTIAL JOINT PENETRATION
Pkwy	PARKWAY
ℙ,PL	PLATE
P/L	PROPERTY LINE
PM	POST MILE,
	TIME FROM NOON TO MIDNIGHT
PN	PAVING NOTCH
POC	POINT OF HORIZONTAL CURVE
POT	POINT OF TANGENT
POVC	POINT OF VERTICAL CURVE
PP	PIPE PILE,
	PLASTIC PIPE,
	POWER POLE
PPL	PREFORMED PERMEABLE LINER
PPP	PERFORATED PLASTIC PIPE
PRC	POINT OF REVERSE CURVE
PRF	PAVEMENT REINFORCING FABRIC
PRVC	POINT OF REVERSE VERTICAL CURVE
PS&E	PLANS, SPECIFICATIONS AND ESTIMATES
PS, P/S	PRESTRESSED
PSP	PERFORATED STEEL PIPE
PT	POINT OF TANGENCY
PVC	POLYVINYL CHLORIDE
Pvmt	PAVEMENT

Q

Qty	QUANTITY

R

R	RADIUS
R & D	REMOVE AND DISPOSE
R & S	REMOVE AND SALVAGE
R/C	RATE OF CHANGE
RCA	REINFORCED CONCRETE ARCH
RCB	REINFORCED CONCRETE BOX
RCP	REINFORCED CONCRETE PIPE
RCPA	REINFORCED CONCRETE PIPE ARCH
Rd	ROAD
Reinf	REINFORCED,
	REINFORCEMENT,
	REINFORCING
Rel	RELOCATE
Repl	REPLACEMENT
Ret	RETAINING
Rev	REVISED, REVISION
Rdwy	ROADWAY
RHMA	RUBBERIZED HOT MIX ASPHALT
Riv	RIVER
RM	ROAD-MIXED
RP	RADIUS POINT,
	REFERENCE POINT
RR	RAILROAD
RSP	ROCK SLOPE PROTECTION,
	REVISED STANDARD PLAN
Rt	RIGHT
Rte	ROUTE
RW	REDWOOD,
	RETAINING WALL
R/W	RIGHT OF WAY
Rwy	RAILWAY

S

S	SOUTH,
	SUPPLEMENT
SAE	STRUCTURE APPROACH EMBANKMENT
Salv	SALVAGE
SAPP	STRUCTURAL ALUMINUM PLATE PIPE
SB	SOUTHBOUND
SC	SAND CUSHION
SCSP	SLOTTED CORRUGATED STEEL PIPE
SD	STORM DRAIN
Sec	SECOND,
	SECTION
Sep	SEPARATION
SG	SUBGRADE
Shld	SHOULDER
Sht	SHEET
Sim	SIMILAR
℄	STATION LINE
SM	SELECTED MATERIAL
Spec	SPECIAL,
	SPECIFICATIONS
SPP	SLOTTED PLASTIC PIPE
SS	SLOPE STAKE
SSBM	STRAP AND SADDLE BRACKET METHOD
SSD	STRUCTURAL SECTION DRAIN
SSPA	STRUCTURAL STEEL PLATE ARCH
SSPP	STRUCTURAL STEEL PLATE PIPE
SSPPA	STRUCTURAL STEEL PLATE PIPE ARCH
SSRP	STEEL SPIRAL RIB PIPE
St	STREET
Sta	STATION
STBB	SINGLE THRIE BEAM BARRIER
Std	STANDARD
Str	STRUCTURE
Surf	SURFACING
SW	SIDEWALK,
	SOUND WALL
Swr	SEWER
Sym	SYMMETRICAL
S4S	SURFACE 4 SIDES

T

T	SEMI-TANGENT
Tan	TANGENT
TBB	THRIE BEAM BARRIER
Tbr	TIMBER
TC	TOP OF CURB
TCB	TRAFFIC CONTROL BOX
TCE	TEMPORARY CONSTRUCTION EASEMENT
Tel	TELEPHONE
Temp	TEMPORARY
TG	TOP OF GRADE
Tot	TOTAL
TP	TELEPHONE POLE
TPB	TREATED PERMEABLE BASE
TPM	TREATED PERMEABLE MATERIAL
Trans	TRANSITION

T continued

TS	TRANSVERSE,
	TRAFFIC SIGNAL,
	TUBULAR STEEL
Typ	TYPICAL

U

UC	UNDERCROSSING
UD	UNDERDRAIN
UG	UNDERGROUND
UON	UNLESS OTHERWISE NOTED
UP	UNDERPASS

V

V	VALVE,
	DESIGN SPEED
Var	VARIABLE,
	VARIES
VC	VERTICAL CURVE
VCP	VITRIFIED CLAY PIPE
Vert	VERTICAL
Via	VIADUCT
Vol	VOLUME

W

W	WEST,
	WIDTH
WB	WESTBOUND
WH	WEEP HOLE
WM	WIRE MESH
WS	WATER SURFACE
WSP	WELDED STEEL PIPE
Wt	WEIGHT
WV	WATER VALVE
WW	WINGWALL
WWLOL	WINGWALL LAYOUT LINE

X

X Sec	CROSS SECTION
Xing	CROSSING

Y

Yr	YEAR
Yrs	YEARS

Dist	COUNTY	ROUTE	POST MILES TOTAL PROJECT	SHEET No.	TOTAL SHEETS
08	Riv	60	R12.2/22.1, 26.5/30.4	65	113

Grace M. Tsushima
REGISTERED CIVIL ENGINEER

July 19, 2013
PLANS APPROVAL DATE

REGISTERED PROFESSIONAL ENGINEER
Grace M. Tsushima
No. C49814
Exp. 9-30-14
CIVIL
STATE OF CALIFORNIA

THE STATE OF CALIFORNIA OR ITS OFFICERS OR AGENTS SHALL NOT BE RESPONSIBLE FOR THE ACCURACY OR COMPLETENESS OF SCANNED COPIES OF THIS PLAN SHEET.

TO ACCOMPANY PLANS DATED 05-26-15

UNIT OF MEASUREMENT SYMBOLS:

Some of the symbols used in the project plan quantity tables and in the Bid Item List are:

TABLE A

SYMBOL USED	DEFINITIONS
ACRE	ACRE
CF	CUBIC FOOT
CY	CUBIC YARD
EA	EACH
GAL	GALLON
LB	POUND
LF	LINEAR FOOT
SQFT	SQUARE FOOT
SQYD	SQUARE YARD
STA	100 FEET
TAB	TABLET
TON	2,000 POUNDS

Some of the symbols used in the plans other than in the project plan quantity tables are:

TABLE B

SYMBOL USED	DEFINITIONS
ksi	KIPS PER SQUARE INCH
ksf	KIPS PER SQUARE FOOT
psi	POUNDS PER SQUARE INCH
psf	POUNDS PER SQUARE FOOT
lb/ft^3, pcf	POUNDS PER CUBIC FOOT
tsf	TONS PER SQUARE FOOT
mph, MPH *	MILES PER HOUR
ø	NOMINAL DIAMETER
oz	OUNCE
lb	POUND
kip	1,000 POUNDS
cal	CALORIE
ft	FOOT OR FEET
gal	GALLON

* For use on a sign panel only

STATE OF CALIFORNIA
DEPARTMENT OF TRANSPORTATION

ABBREVIATIONS (SHEET 2 OF 2)

NO SCALE

RSP A10B DATED JULY 19, 2013 SUPERSEDES STANDARD PLAN A10B DATED MAY 20, 2011 - PAGE 2 OF THE STANDARD PLANS BOOK DATED 2010.

REVISED STANDARD PLAN RSP A10B

2010 REVISED STANDARD PLAN RSP A10B

6-7-13

Dist	COUNTY	ROUTE	POST MILES TOTAL PROJECT	SHEET No.	TOTAL SHEETS
08	Riv	60	R12.2/22.1, 26.5/30.4	66	113

REGISTERED CIVIL ENGINEER

July 19, 2013
PLANS APPROVAL DATE

Roberta L. McLaughlin No. C40375 Exp. 3-31-15 CIVIL STATE OF CALIFORNIA REGISTERED PROFESSIONAL ENGINEER

THE STATE OF CALIFORNIA OR ITS OFFICERS OR AGENTS SHALL NOT BE RESPONSIBLE FOR THE ACCURACY OR COMPLETENESS OF SCANNED COPIES OF THIS PLAN SHEET.

TO ACCOMPANY PLANS DATED 05-26-15

EXIT RAMP NEUTRAL AREA (GORE) TREATMENT

DETAIL 36

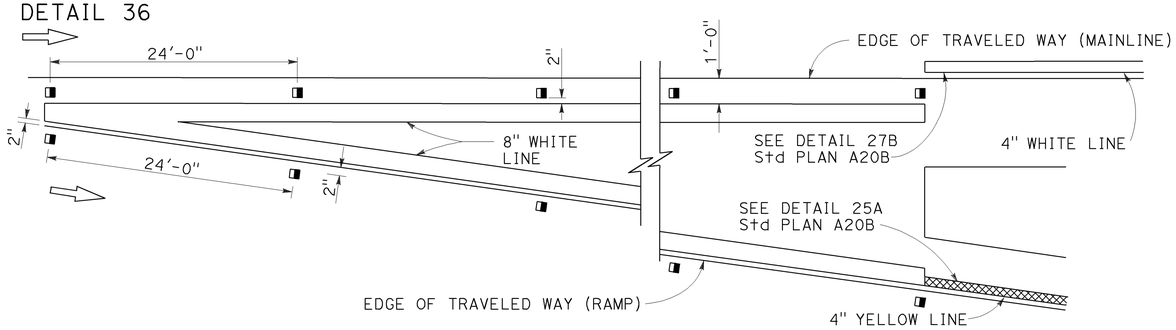

ENTRANCE RAMP NEUTRAL AREA (MERGE) TREATMENT

DETAIL 36A

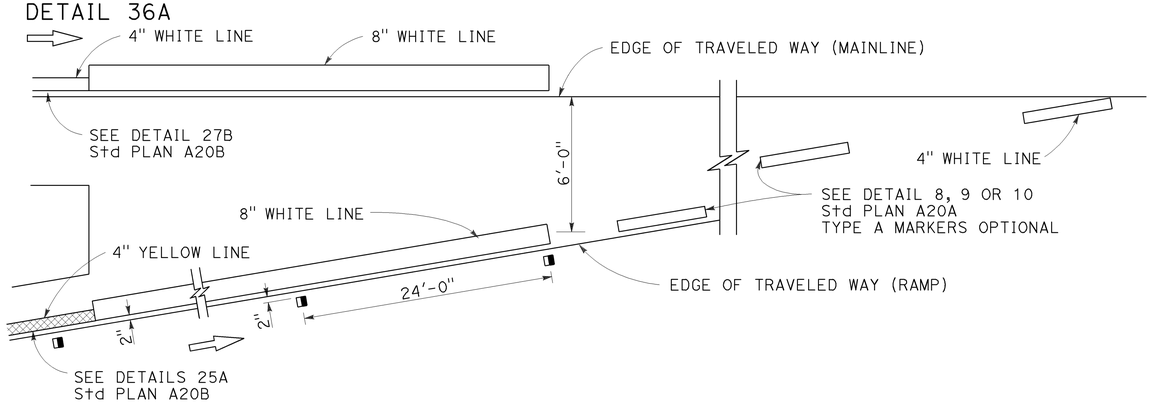

ENTRANCE RAMP NEUTRAL AREA (ACCELERATION LANE) TREATMENT

DETAIL 36B

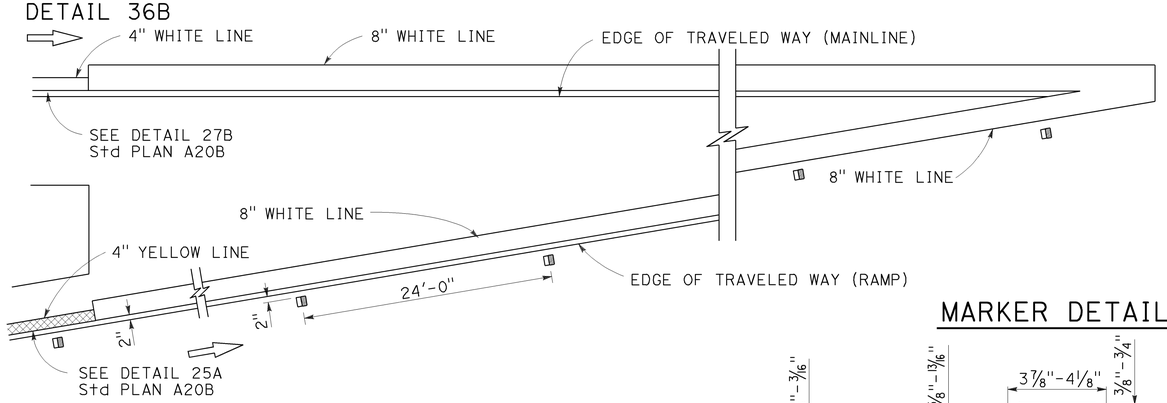

LANE DROP AT EXIT RAMPS

DETAIL 37

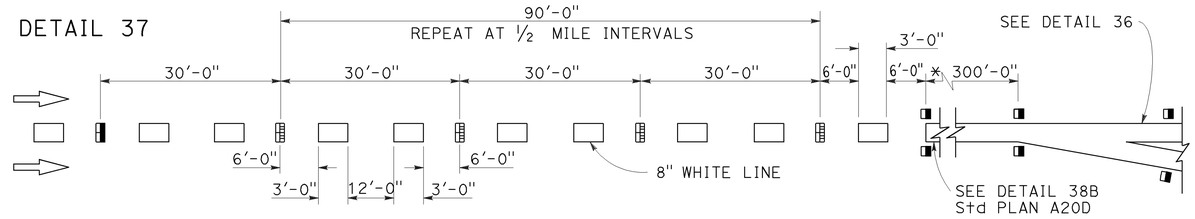

DETAIL 37A

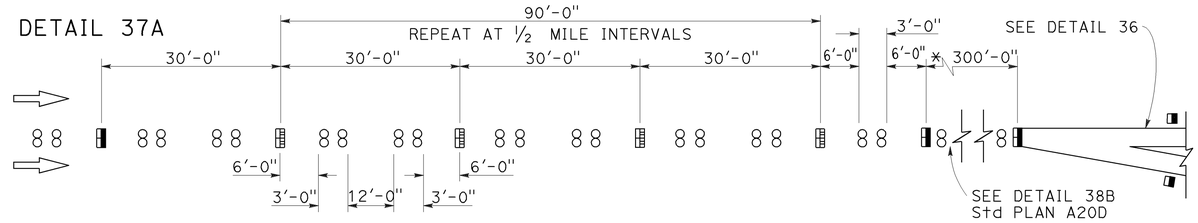

* The solid channelizing line shown may be omitted on short auxiliary lanes where weaving length is critical.

LANE DROP AT INTERSECTIONS

DETAIL 37B

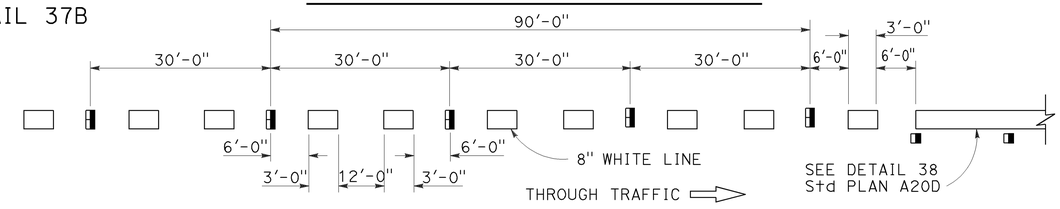

DETAIL 37C

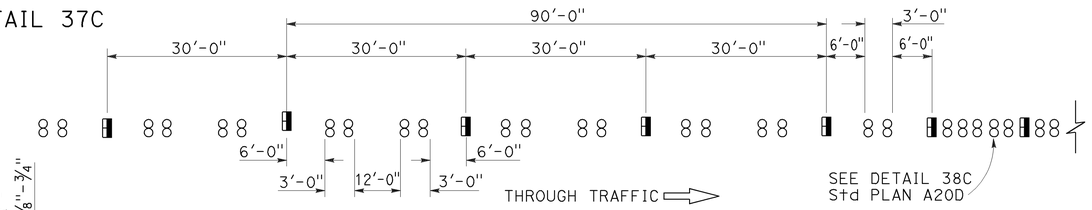

MARKER DETAILS

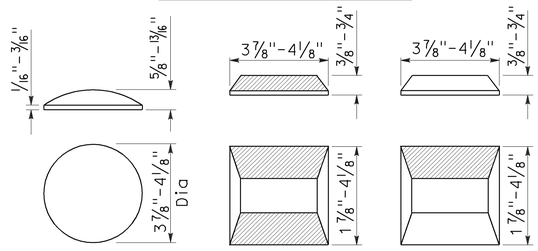

LEGEND:

MARKERS

- ○ TYPE A WHITE NON-REFLECTIVE
- ⊟ TYPE C RED-CLEAR RETROREFLECTIVE
- ◨ TYPE G ONE-WAY CLEAR RETROREFLECTIVE

STATE OF CALIFORNIA
DEPARTMENT OF TRANSPORTATION

PAVEMENT MARKERS AND TRAFFIC LINE TYPICAL DETAILS

NO SCALE

RSP A20C DATED JULY 19, 2013 SUPERSEDES STANDARD PLAN A20C DATED MAY 20, 2011 - PAGE 11 OF THE STANDARD PLANS BOOK DATED 2010.

REVISED STANDARD PLAN RSP A20C

2010 REVISED STANDARD PLAN RSP A20C

4-29-13

Dist	COUNTY	ROUTE	POST MILES TOTAL PROJECT	SHEET No.	TOTAL SHEETS
08	Riv	60	R12.2/22.1, 26.5/30.4	67	113

REGISTERED CIVIL ENGINEER

April 20, 2012
PLANS APPROVAL DATE

REGISTERED PROFESSIONAL ENGINEER
Roberta L. McLaughlin
No. C40375
Exp. 3-31-13
CIVIL
STATE OF CALIFORNIA

THE STATE OF CALIFORNIA OR ITS OFFICERS OR AGENTS SHALL NOT BE RESPONSIBLE FOR THE ACCURACY OR COMPLETENESS OF SCANNED COPIES OF THIS PLAN SHEET.

TO ACCOMPANY PLANS DATED 05-26-15

2010 REVISED STANDARD PLAN RSP A24A

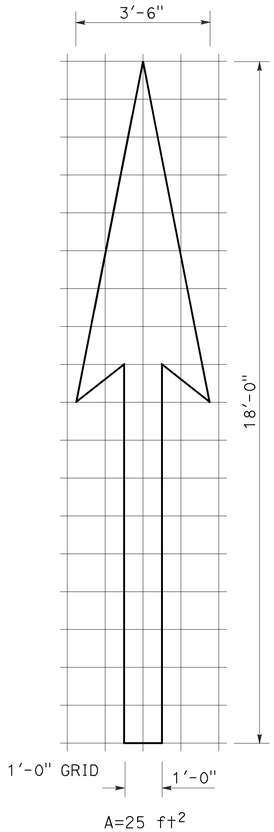

A=25 ft^2

TYPE I 18'-0" ARROW

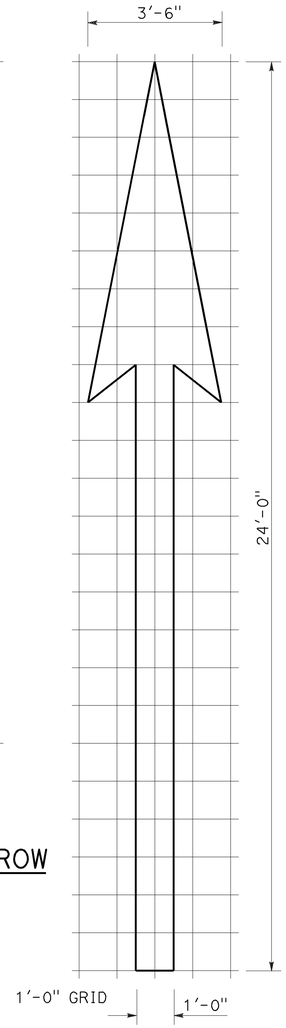

A=31 ft^2

TYPE I 24'-0" ARROW

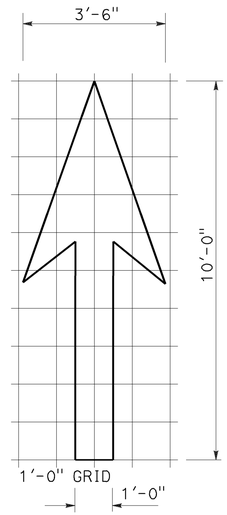

A=14 ft^2

TYPE I 10'-0" ARROW

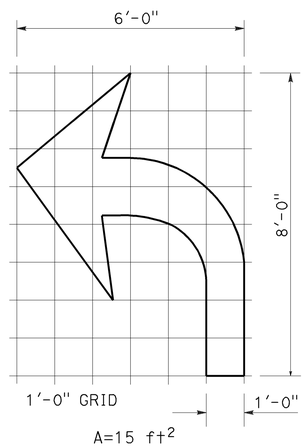

A=15 ft^2

TYPE IV (L) ARROW

(For Type IV (R) arrow, use mirror image)

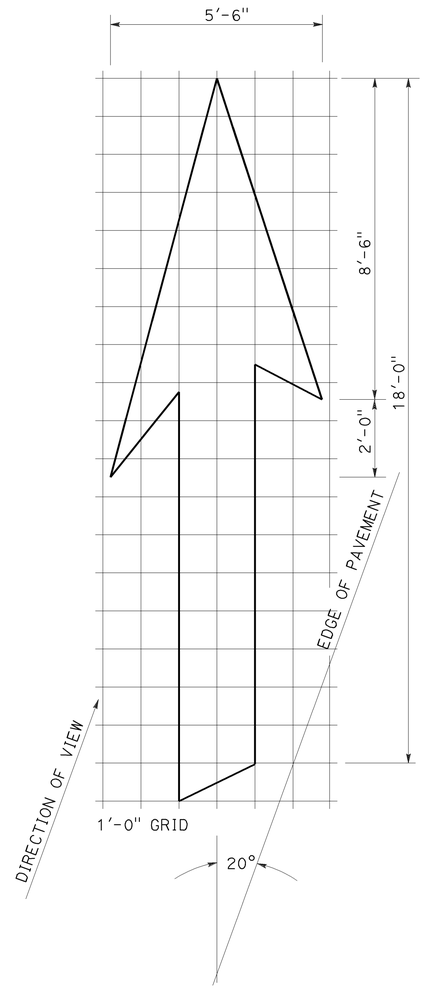

A=42 ft^2

TYPE VI ARROW

Right lane drop arrow
(For left lane, use mirror image)

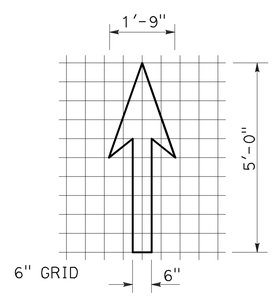

A=3.5 ft^2

BIKE LANE ARROW

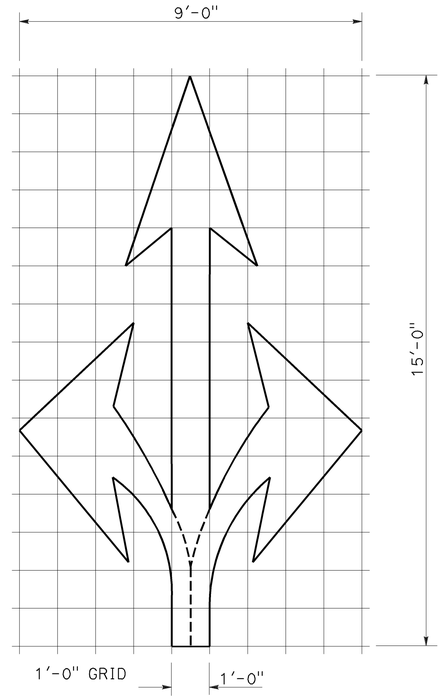

A=36 ft^2

TYPE VIII ARROW

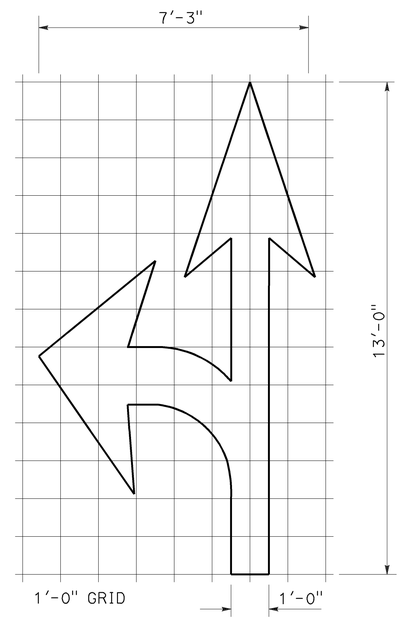

A=27 ft^2

TYPE VII (L) ARROW

(For Type VII (R) arrow, use mirror image)

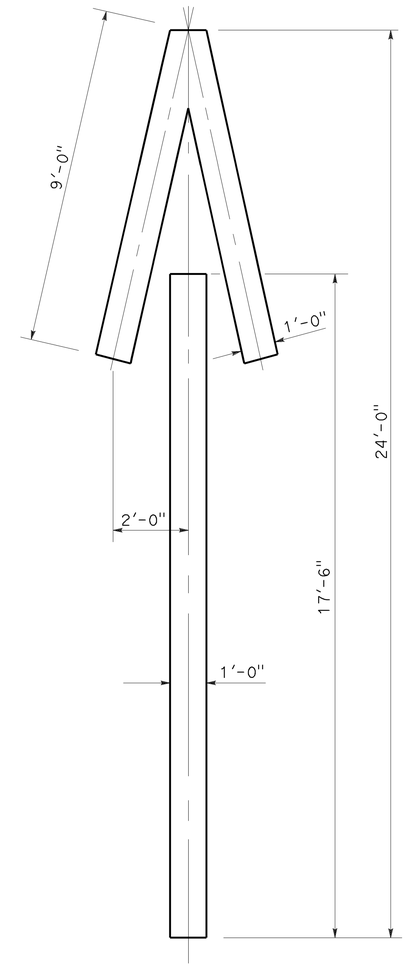

A=33 ft^2

TYPE V ARROW

NOTE:
Minor variations in dimensions may be accepted by the Engineer.

STATE OF CALIFORNIA
DEPARTMENT OF TRANSPORTATION

PAVEMENT MARKINGS ARROWS

NO SCALE

RSP A24A DATED APRIL 20, 2012 SUPERSEDES STANDARD PLAN A24A DATED MAY 20, 2011 - PAGE 13 OF THE STANDARD PLANS BOOK DATED 2010.

REVISED STANDARD PLAN RSP A24A

3-14-12

Dist	COUNTY	ROUTE	POST MILES TOTAL PROJECT	SHEET No.	TOTAL SHEETS
08	Riv	60	R12.2/22.1, 26.5/30.4	68	113

REGISTERED CIVIL ENGINEER

October 19, 2012
PLANS APPROVAL DATE

Roberta L. McLaughlin
No. C40375
Exp. 3-31-13
CIVIL
STATE OF CALIFORNIA
REGISTERED PROFESSIONAL ENGINEER

THE STATE OF CALIFORNIA OR ITS OFFICERS OR AGENTS SHALL NOT BE RESPONSIBLE FOR THE ACCURACY OR COMPLETENESS OF SCANNED COPIES OF THIS PLAN SHEET.

NOTE: TO ACCOMPANY PLANS DATED 05-26-15

Minor variations in dimensions may be accepted by the Engineer.

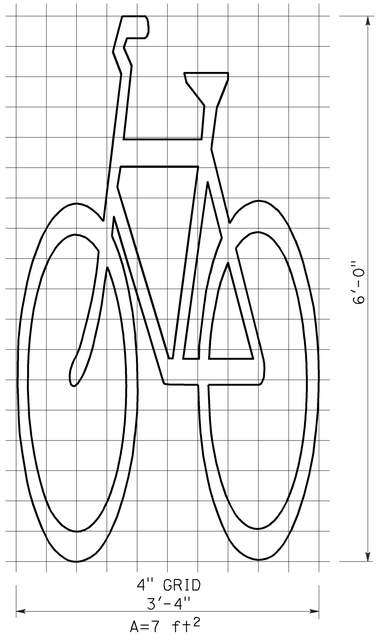

BIKE LANE SYMBOL WITHOUT PERSON

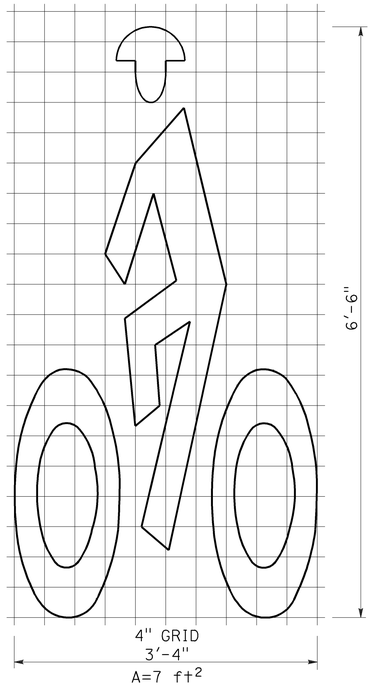

BIKE LANE SYMBOL WITH PERSON

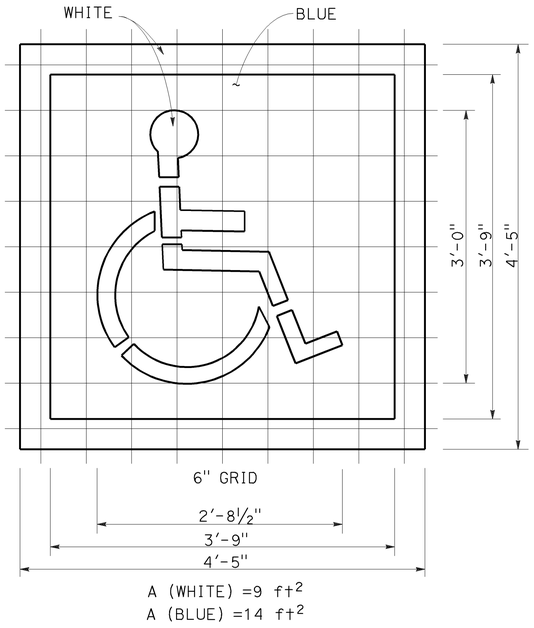

INTERNATIONAL SYMBOL OF ACCESSIBILITY (ISA) MARKING

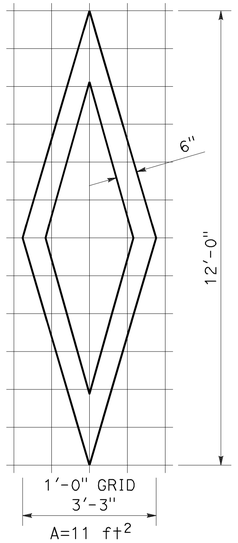

DIAMOND SYMBOL

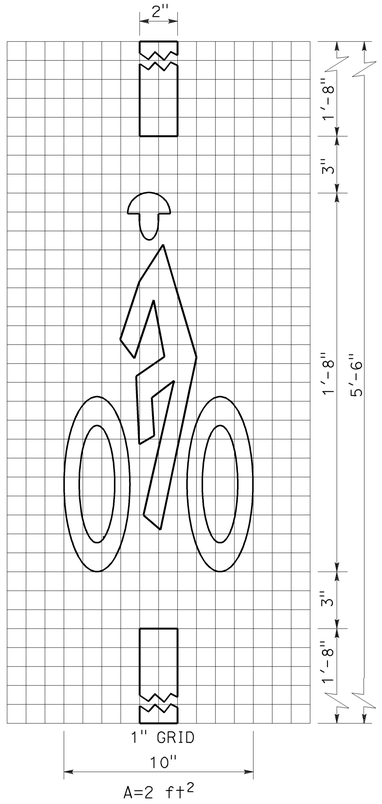

BICYCLE LOOP DETECTOR SYMBOL

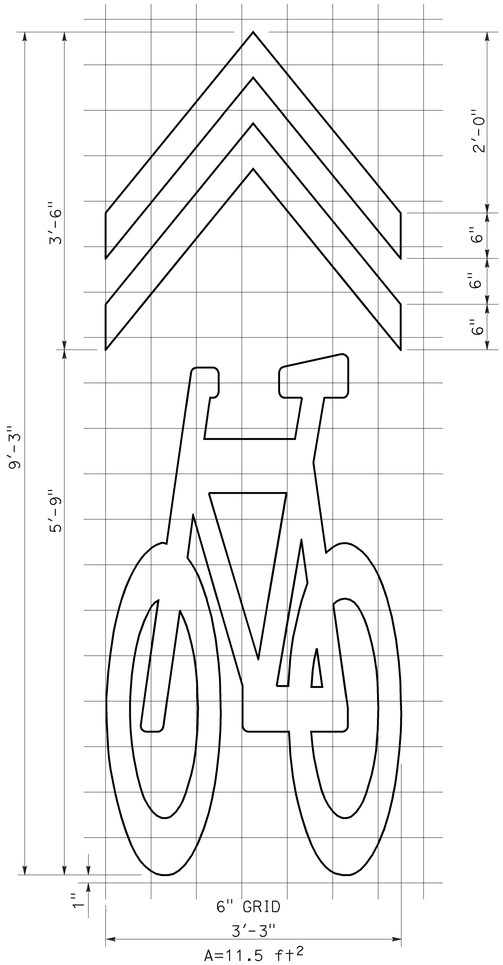

SHARED ROADWAY BICYCLE MARKING

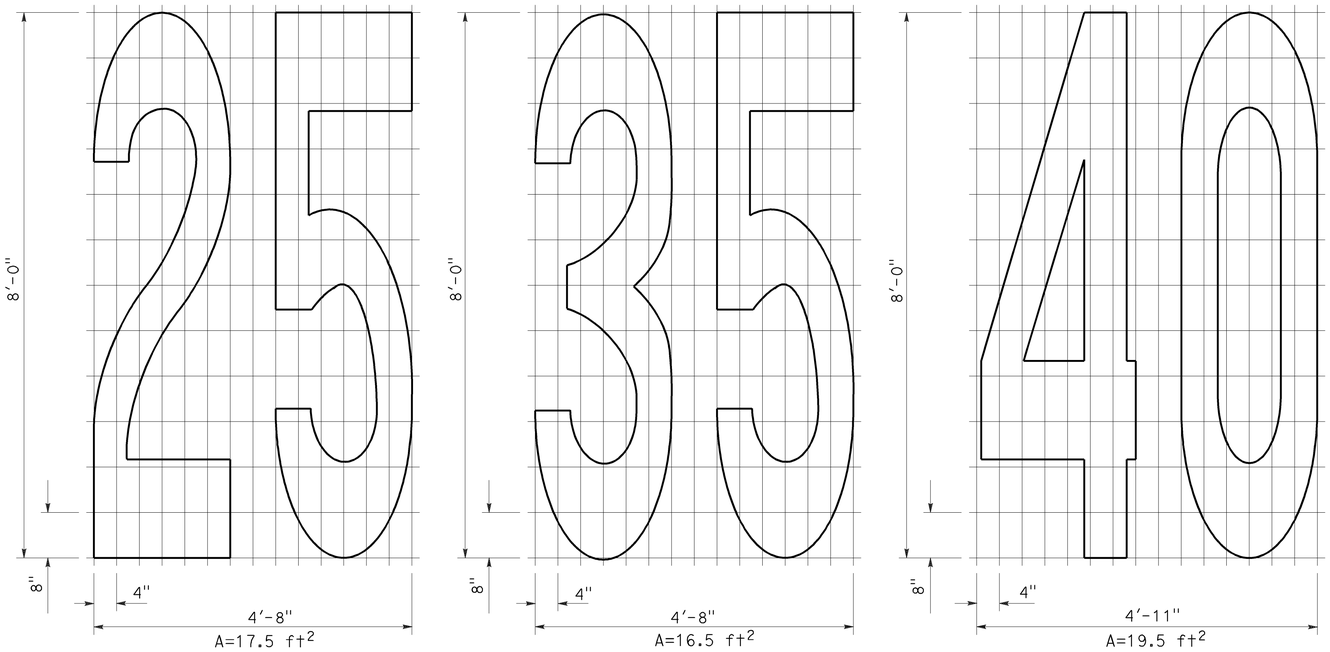

NUMERALS

STATE OF CALIFORNIA
DEPARTMENT OF TRANSPORTATION

PAVEMENT MARKINGS SYMBOLS AND NUMERALS

NO SCALE

RSP A24C DATED OCTOBER 19, 2012 SUPERSEDES STANDARD PLAN A24C DATED MAY 20, 2011 - PAGE 15 OF THE STANDARD PLANS BOOK DATED 2010.

REVISED STANDARD PLAN RSP A24C

2010 REVISED STANDARD PLAN RSP A24C

6-28-12

Dist	COUNTY	ROUTE	POST MILES TOTAL PROJECT	SHEET No.	TOTAL SHEETS
08	Riv	60	R12.2/22.1, 26.5/30.4	69	113

REGISTERED CIVIL ENGINEER

July 20, 2012
PLANS APPROVAL DATE

REGISTERED PROFESSIONAL ENGINEER
Roberta L. McLaughlin
No. C40375
Exp. 3-31-13
CIVIL
STATE OF CALIFORNIA

THE STATE OF CALIFORNIA OR ITS OFFICERS OR AGENTS SHALL NOT BE RESPONSIBLE FOR THE ACCURACY OR COMPLETENESS OF SCANNED COPIES OF THIS PLAN SHEET.

TO ACCOMPANY PLANS DATED 05-26-15

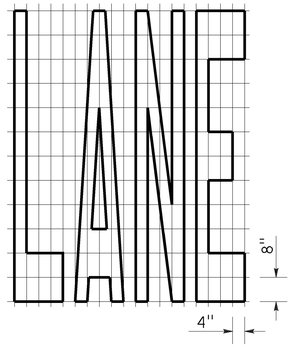

A=24 ft^2

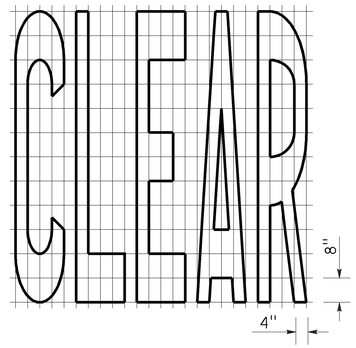

A=27 ft^2

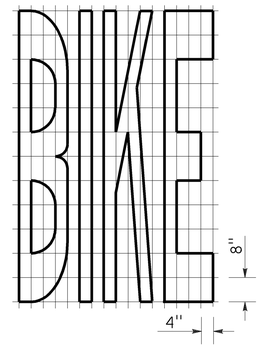

A=21 ft^2

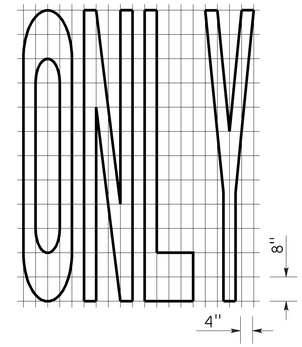

A=22 ft^2

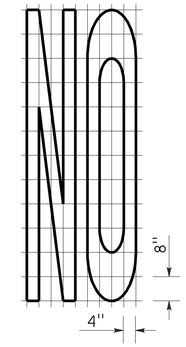

A=14 ft^2

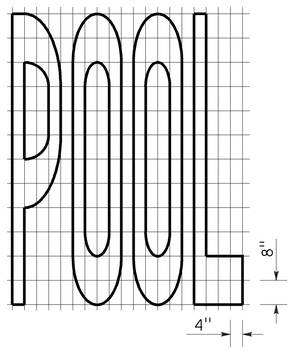

A=23 ft^2

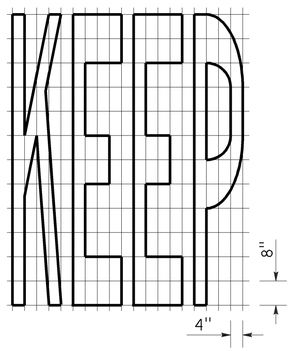

A=24 ft^2

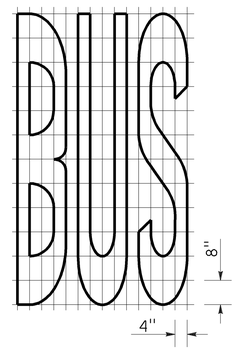

A=20 ft^2

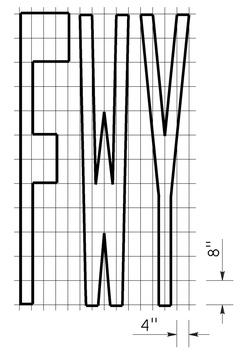

A=16 ft^2

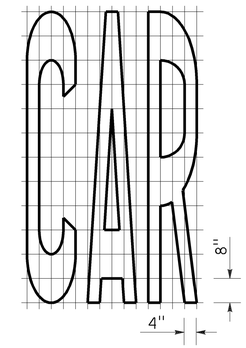

A=17 ft^2

WORD MARKINGS			
ITEM	ft^2	ITEM	ft^2
LANE	24	NO	14
POOL	23	BIKE	21
CAR	17	BUS	20
CLEAR	27	ONLY	22
KEEP	24	FWY	16

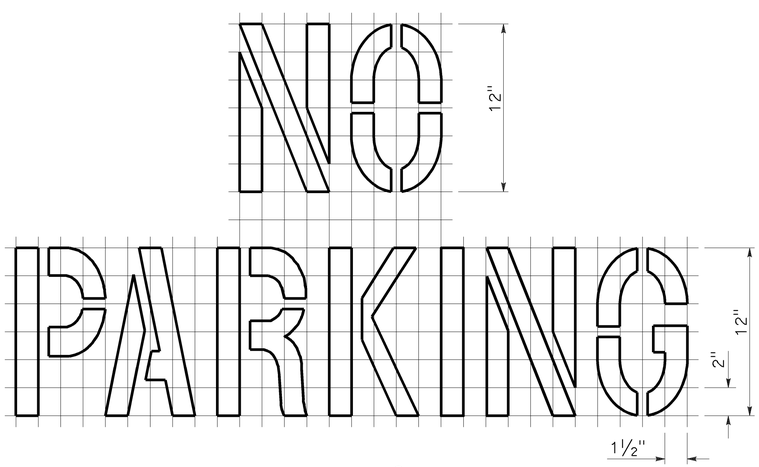

A=2 ft^2
See Notes 6 and 7

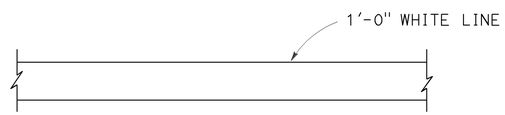

LIMIT LINE (STOP LINE)

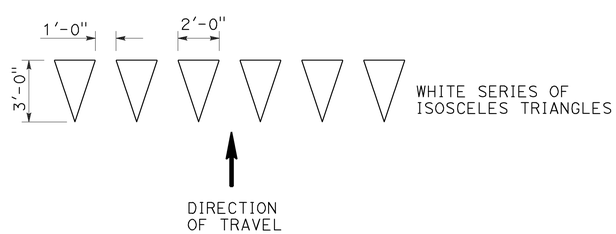

YIELD LINE

NOTES:

1. If a message consists of more than one word, it should read "UP", i.e., the first word should be nearest the driver.
2. The space between words should be at least four times the height of the characters for low speed roads, but not more than ten times the height of the characters. The space may be reduced appropriately where there is limited space because of local conditions.
3. Minor variations in dimensions may be accepted by the Engineer.
4. Portions of a letter, number or symbol may be separated by connecting segments not to exceed 2" in width.
5. The words "NO PARKING" pavement marking is to be used for parking facilities. For typical locations of markings, see Standard Plans A90A and A90B.
6. The words "NO PARKING", shall be painted in white letters no less than 1'-0" high on a contrasting background and located so that it is visible to traffic enforcement officials.

STATE OF CALIFORNIA
DEPARTMENT OF TRANSPORTATION

PAVEMENT MARKINGS WORDS, LIMIT AND YIELD LINES

NO SCALE

RSP A24E DATED JULY 20, 2012 SUPERSEDES STANDARD PLAN A24E
DATED MAY 20, 2011 - PAGE 17 OF THE STANDARD PLANS BOOK DATED 2010.

REVISED STANDARD PLAN RSP A24E

2010 REVISED STANDARD PLAN RSP A24E

6-12-12

Dist	COUNTY	ROUTE	POST MILES TOTAL PROJECT	SHEET No.	TOTAL SHEETS
08	Riv	60	R12.2/22.1, 26.5/30.4	70	113

Roberta L. McLaughlin
REGISTERED CIVIL ENGINEER

July 20, 2012
PLANS APPROVAL DATE

REGISTERED PROFESSIONAL ENGINEER
Roberta L. McLaughlin
No. C40375
Exp. 3-31-13
CIVIL
STATE OF CALIFORNIA

THE STATE OF CALIFORNIA OR ITS OFFICERS OR AGENTS SHALL NOT BE RESPONSIBLE FOR THE ACCURACY OR COMPLETENESS OF SCANNED COPIES OF THIS PLAN SHEET.

TO ACCOMPANY PLANS DATED 05-26-15

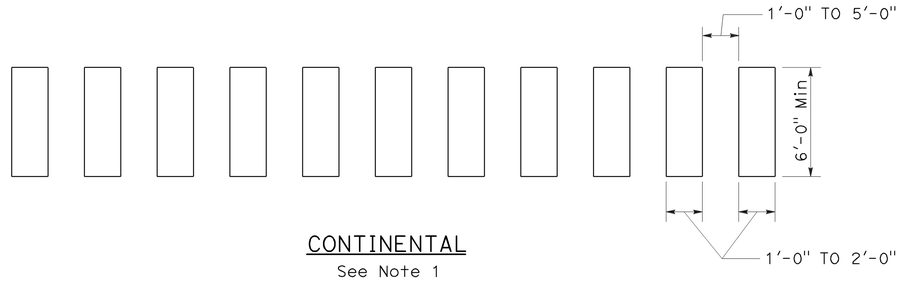

CONTINENTAL
See Note 1

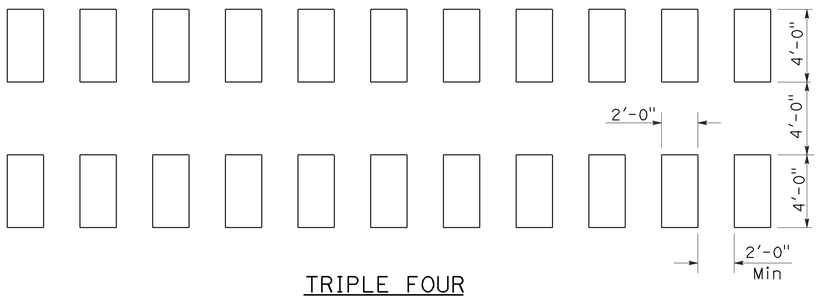

TRIPLE FOUR
See Note 1

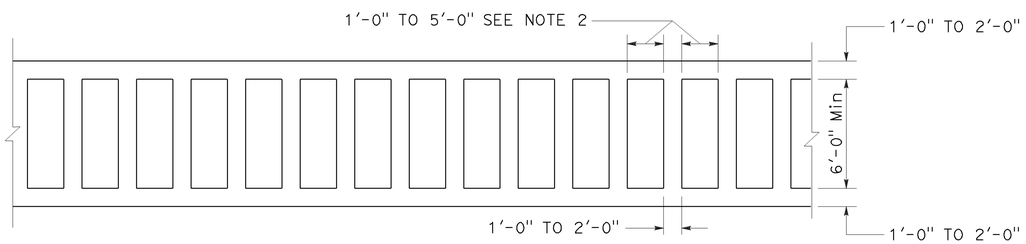

LADDER

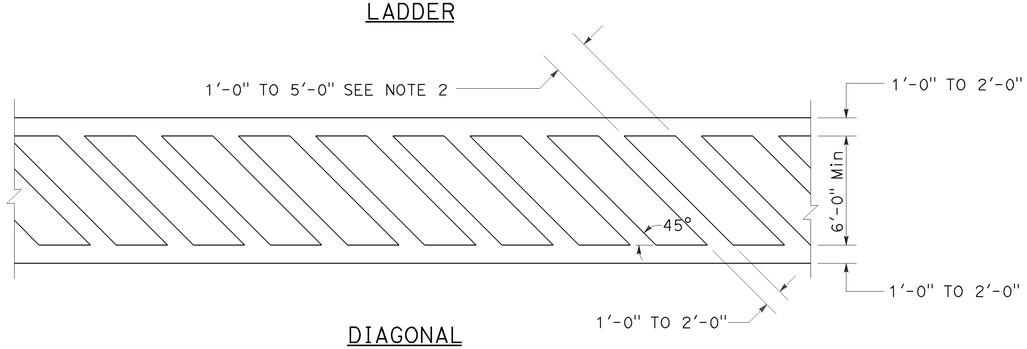

DIAGONAL

HIGHER VISIBILITY CROSSWALKS

NOTES:

1. Spaces between markings should be placed in wheel tracks of each lane.
2. Spacings not to exceed 2.5 times width of longitudinal line.
3. All crosswalk markings must be white except for those near schools must be yellow.

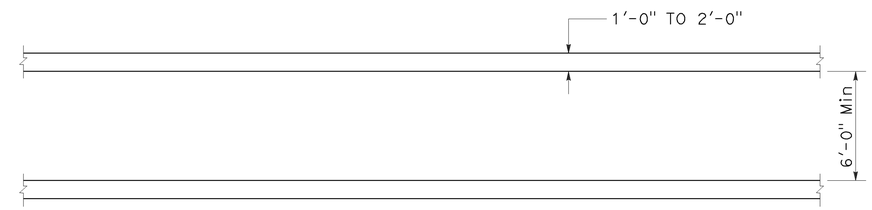

BASIC

STATE OF CALIFORNIA
DEPARTMENT OF TRANSPORTATION

PAVEMENT MARKINGS CROSSWALKS

NO SCALE

RSP A24F DATED JULY 20, 2012 SUPPLEMENTS THE STANDARD PLANS BOOK DATED 2010.

REVISED STANDARD PLAN RSP A24F

2010 REVISED STANDARD PLAN RSP A24F

6-28-12

Dist	COUNTY	ROUTE	POST MILES TOTAL PROJECT	SHEET No.	TOTAL SHEETS
08	Riv	60	R12.2/22.1, 26.5/30.4	71	113

Randell D. Hiatt
REGISTERED CIVIL ENGINEER

October 30, 2015
PLANS APPROVAL DATE

REGISTERED PROFESSIONAL ENGINEER
Randell D. Hiatt
No. C50200
Exp. 6-30-17
CIVIL
STATE OF CALIFORNIA

THE STATE OF CALIFORNIA OR ITS OFFICERS OR AGENTS SHALL NOT BE RESPONSIBLE FOR THE ACCURACY OR COMPLETENESS OF SCANNED COPIES OF THIS PLAN SHEET.

TO ACCOMPANY PLANS DATED 05-26-15

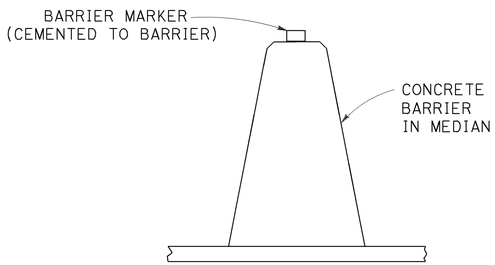

CONCRETE BARRIER TYPE 60 DELINEATION

See Note 5

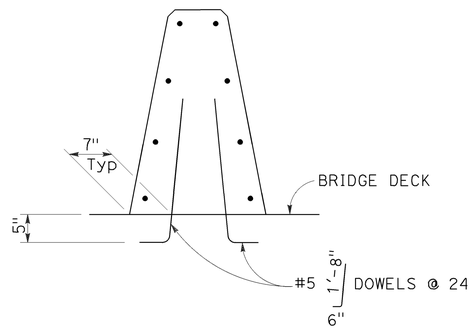

CONCRETE BARRIER TYPE 60A

Details similar to Type 60 except as noted.

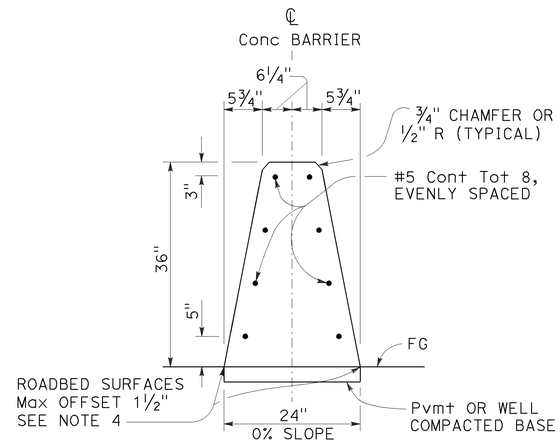

CONCRETE BARRIER TYPE 60

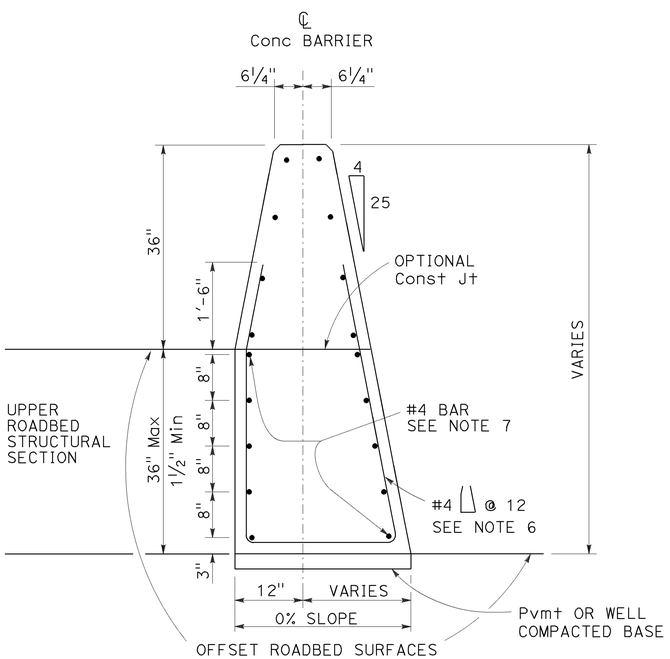

CONCRETE BARRIER TYPE 60C

Details similar to Type 60 except as noted.
Use concrete barrier end anchor when necessary.
36" roadbed surfaces offset shown.

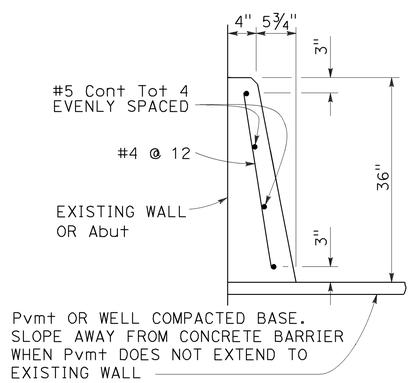

CONCRETE BARRIER TYPE 60D

NOTES:

1. See Standard Plan A76B for details of Concrete Barrier Type 60 end anchors, connection to structures and transitions to Concrete Barrier Type 50 and Concrete Barrier Type 60S.
2. See Revised Standard Plan RSP A76C for Concrete Barrier Type 60 transitions at bridge column and sign pedestals.
3. Where glare screen is required on Concrete Barrier Type 60, use Concrete Barrier Type 60G.
4. Where roadbed offset is greater than 1½", see Concrete Barrier Type 60C.
5. See Project Plans for barrier delineation locations.
6. Reinforcing stirrup not required for roadbed offsets less than 1'-0".
7. For roadbed surfaces offset greater than 1½" and less than or equal to 3", no reinforcement required. For roadbed surfaces offset greater than 3" and less than or equal to 8", use two #4 Reinf at 3" above the lower roadbed surface. For roadbed surfaces offset greater than 8" and less than or equal to 12", use two #4 Reinf at 3" above the lower roadbed surface and two #4 Reinf at 8" above the lower roadbed surface. For roadbed surfaces offset greater than 12" and less than or equal to 36", use two #4 Reinf at 3" above the lower roadbed surface and two #4 Reinf at every 8" increment vertical spacing above the first two #4 Reinf.

STATE OF CALIFORNIA
DEPARTMENT OF TRANSPORTATION

CONCRETE BARRIER TYPE 60

NO SCALE

RSP A76A DATED OCTOBER 30, 2015 SUPERSEDES STANDARD PLAN A76A DATED MAY 20, 2011 - PAGE 34 OF THE STANDARD PLANS BOOK DATED 2010.

REVISED STANDARD PLAN RSP A76A

2010 REVISED STANDARD PLAN RSP A76A

10-7-15

Dist	COUNTY	ROUTE	POST MILES TOTAL PROJECT	SHEET No.	TOTAL SHEETS
08	Riv	60	R12.2/22.1, 26.5/30.4	72	113

Randell D. Hiatt
REGISTERED CIVIL ENGINEER

July 19, 2013
PLANS APPROVAL DATE

REGISTERED PROFESSIONAL ENGINEER
Randell D. Hiatt
No. C50200
Exp. 6-30-15
CIVIL
STATE OF CALIFORNIA

THE STATE OF CALIFORNIA OR ITS OFFICERS OR AGENTS SHALL NOT BE RESPONSIBLE FOR THE ACCURACY OR COMPLETENESS OF SCANNED COPIES OF THIS PLAN SHEET.

TO ACCOMPANY PLANS DATED 05-26-15

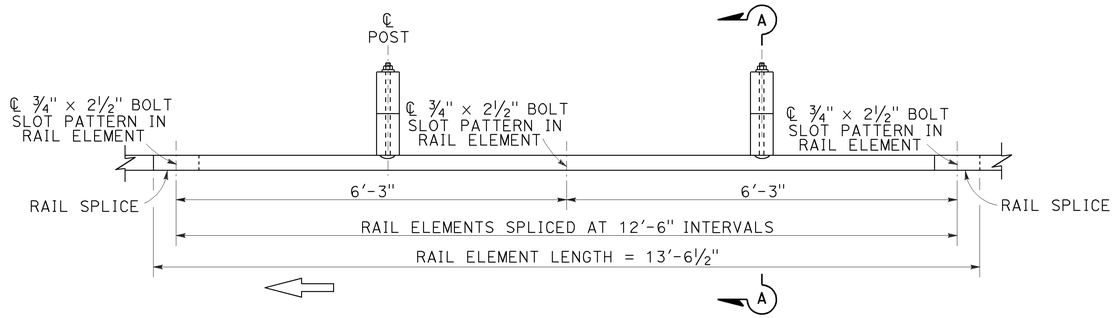

PLAN

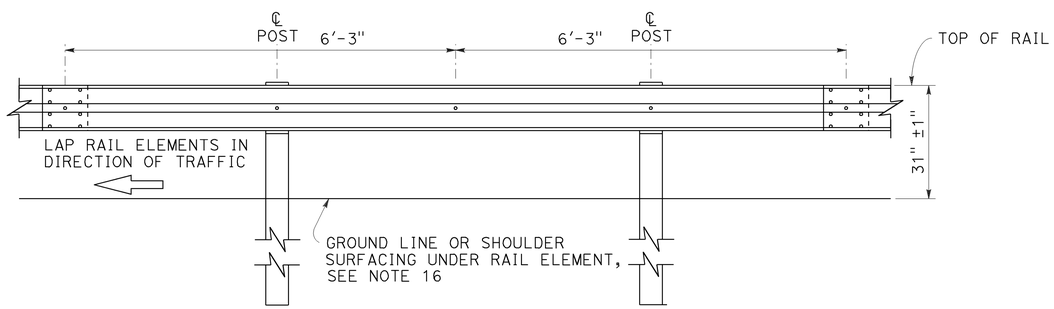

ELEVATION

MIDWEST GUARDRAIL SYSTEM WITH WOOD POST AND BLOCKS

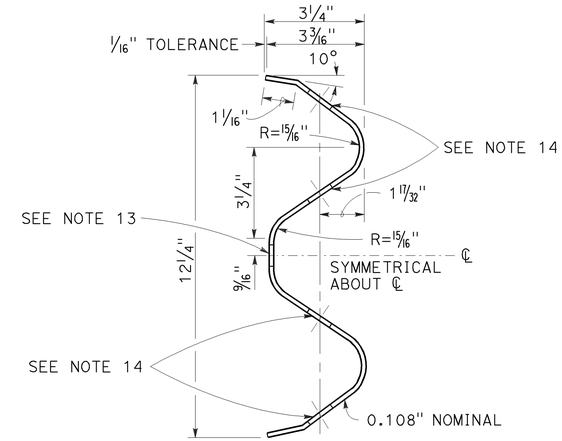

SECTION THRU RAIL ELEMENT

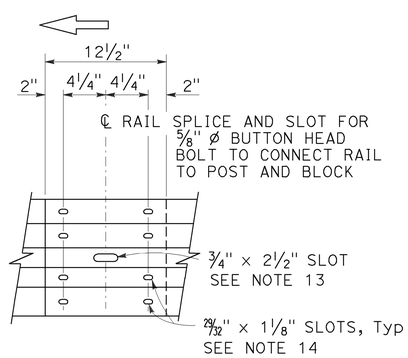

ELEVATION

RAIL ELEMENT SPLICE DETAIL

a) Connect the over lapped end of the rail elements with ⅝" ø × 1⅜" button head oval shoulder splice bolts inserted into the 29⁄32" × 1⅛" slots and bolted together with ⅝" ø recessed hex nuts. Recess of hex nut points toward rail element. A total of 8 bolts and nuts are to be used at each rail splice connection.

b) The ends of the rail elements are to be overlapped in the direction of traffic (see details).

c) Where end cap is to be attached to the end of a rail element, a total of 4 of the above described splice bolts and nuts are to be used.

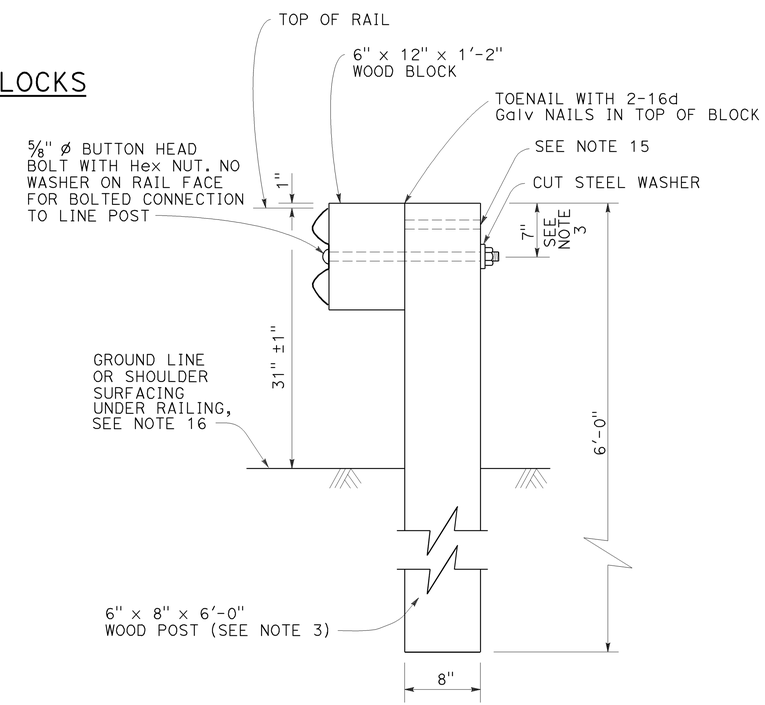

SECTION A-A

TYPICAL WOOD LINE POST INSTALLATION

See Note 4

NOTES:

1. For details of steel post installations, see Revised Standard Plan RSP A77L2.
2. For details of standard hardware used to construct MGS, see Revised Standard Plan RSP A77M1.
3. For details of wood posts and wood blocks used to construct MGS, see Revised Standard Plan RSP A77N1.
4. For additional installation details, see Revised Standard Plan RSP A77N3.
5. MGS post spacing to be 6'-3" center to center, except as otherwise noted.
6. For MGS typical layouts, see the A77P, A77Q and A77R Series of Standard Plans.
7. If railing is connected to terminal system end treatment, use 31" height terminal system end treatment.
8. For MGS end anchor details, see Revised Standard Plans RSP A77S1 and RSP A77T2.
9. For details of MGS transition to bridge railing, see Revised Standard Plan RSP A77U4.
10. For additional details of MSG connection to bridge railing, see Revised Standard Plans RSP A77U1, RSP A77U2 and RSP A77V1.
11. For MGS connection details to abutments and walls, see Revised Standard Plan RSP A77U3.
12. For typical MGS delineation and dike positioning details, see Revised Standard Plan RSP A77N4.
13. Slotted hole for bolted connection of rail element to block and post. See "Section Thru Rail Element".
14. Slotted holes for splice bolts to overlap ends of rail element. See "Section Thru Rail Element".
15. Additional hole in uppermost portion of line post is for potential future adjustments of railing height. See Revised Standard Plan RSP A77N1.
16. Install posts in soil.

STATE OF CALIFORNIA
DEPARTMENT OF TRANSPORTATION

MIDWEST GUARDRAIL SYSTEM STANDARD RAILING SECTION (WOOD POST WITH WOOD BLOCK)

NO SCALE

RSP A77L1 DATED JULY 19, 2013 SUPPLEMENTS STANDARD PLANS BOOK DATED 2010.

REVISED STANDARD PLAN RSP A77L1

2010 REVISED STANDARD PLAN RSP A77L1

Dist	COUNTY	ROUTE	POST MILES TOTAL PROJECT	SHEET No.	TOTAL SHEETS
08	Riv	60	R12.2/22.1, 26.5/30.4	73	113

Randell D. Hiatt
REGISTERED CIVIL ENGINEER

July 19, 2013
PLANS APPROVAL DATE

REGISTERED PROFESSIONAL ENGINEER
Randell D. Hiatt
No. C50200
Exp. 6-30-15
CIVIL
STATE OF CALIFORNIA

THE STATE OF CALIFORNIA OR ITS OFFICERS OR AGENTS SHALL NOT BE RESPONSIBLE FOR THE ACCURACY OR COMPLETENESS OF SCANNED COPIES OF THIS PLAN SHEET.

TO ACCOMPANY PLANS DATED 05-26-15

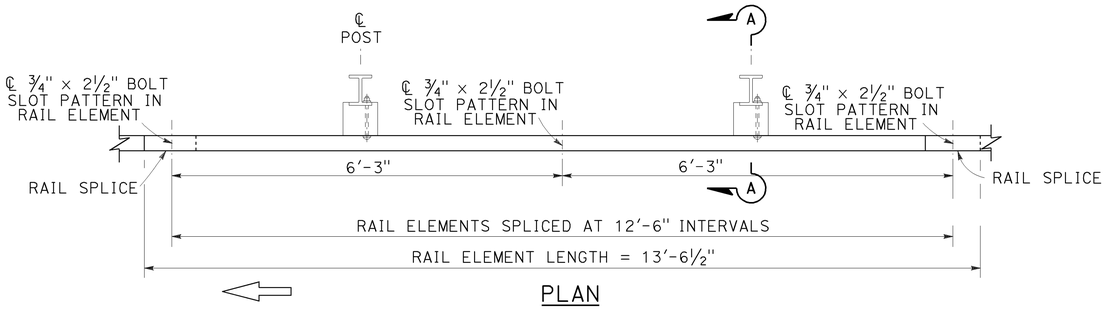

PLAN

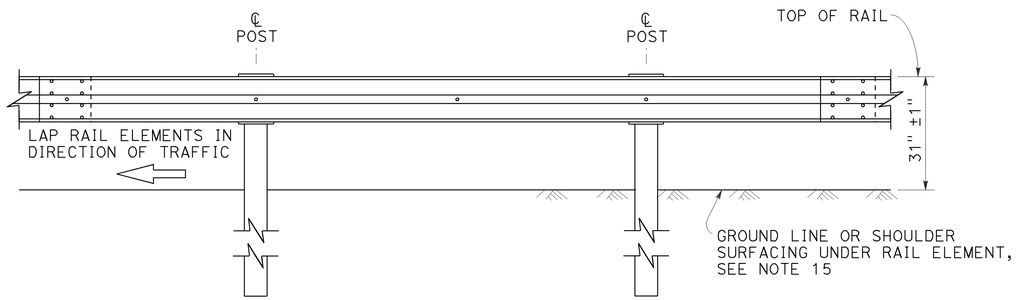

ELEVATION

MIDWEST GUARDRAIL SYSTEM WITH STEEL POSTS AND NOTCHED WOOD OR NOTCHED RECYCLED PLASTIC BLOCKS

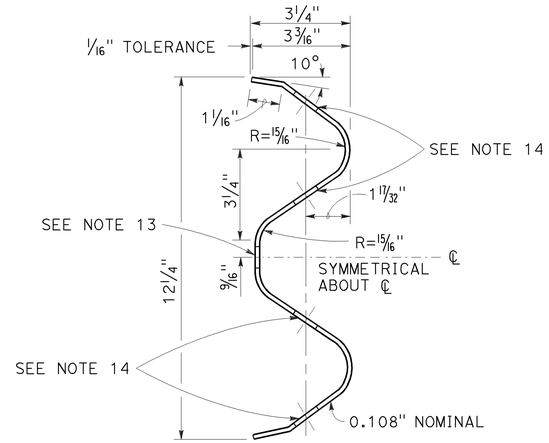

SECTION THRU RAIL ELEMENT

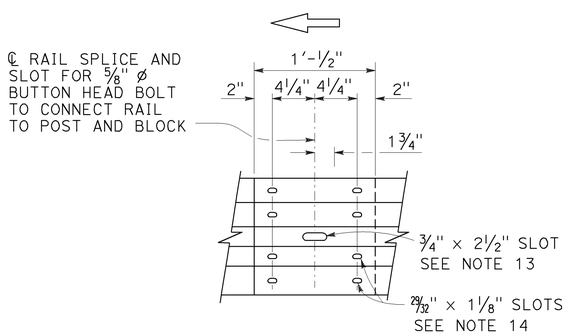

ELEVATION

RAIL ELEMENT SPLICE DETAIL

a) Connect the over lapped end of the rail elements with ⅝" ø × 1⅜" button head oval shoulder splice bolts inserted into the 29⁄32" × 1⅛" slots and bolted together with ⅝" ø recessed hex nuts. Recess of hex nut points toward rail element. A total of 8 bolts and nuts are to be used at each rail splice connection.

b) The ends of the rail elements are to be overlapped in the direction of traffic (see details).

c) Where end cap is to be attached to the end of a rail element, a total of 4 of the above described splice bolts and nuts are to be used.

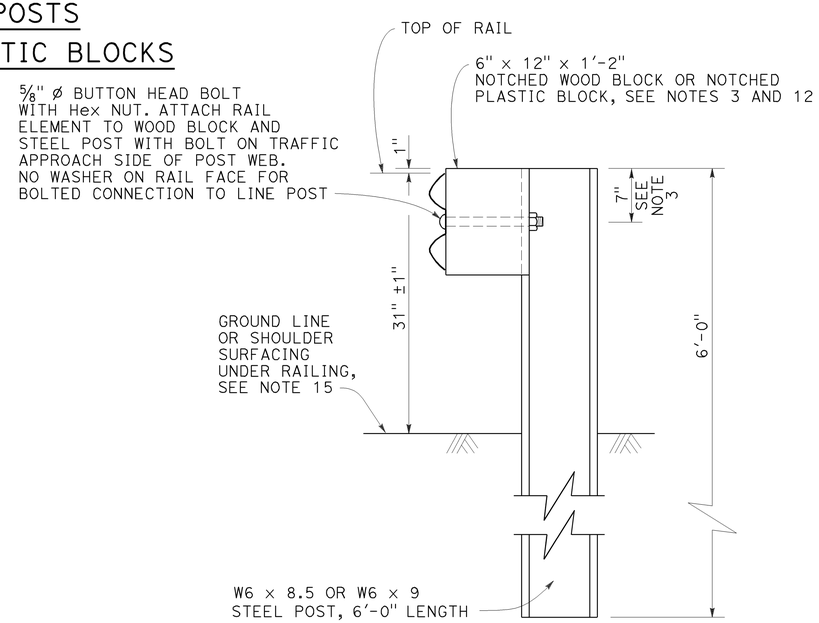

SECTION A-A

TYPICAL STEEL LINE POST INSTALLATION

See Note 4

NOTES:

1. For details of wood post installations, see Revised Standard Plan RSP A77L1.
2. For details of standard hardware used to construct MGS, see Revised Standard Plan RSP A77M1.
3. For details of steel posts and notched wood blocks used to construct MGS, see Revised Standard Plan RSP A77N2.
4. For additional installation details, see Revised Standard Plan RSP A77N3.
5. MGS post spacing to be 6'-3" center to center, except as otherwise noted.
6. For MGS typical layouts, see the A77P, A77Q and A77R Series of Standard Plans.
7. If railing is connected to terminal system end treatment, use 31" height terminal system end treatment.
8. For MGS end anchor details, see Revised Standard Plans RSP A77S1 and RSP A77T2.
9. For details of MGS transition to bridge railing, see Revised Standard Plan RSP A77U4.
10. For additional details of MGS connection to bridge railings, see Revised Standard Plans RSP A77U1, RSP A77U2 and RSP A77V1.
11. For dike positioning and MGS delineation details, see Revised Standard Plan RSP A77N4.
12. Notched face of block faces steel post.
13. Slotted hole for bolted connection of rail element to block and post. See "Section Thru Rail Element".
14. Slotted holes for splice bolts to overlap ends of rail element. See "Section Thru Rail Element".
15. Install posts in soil.

STATE OF CALIFORNIA
DEPARTMENT OF TRANSPORTATION

MIDWEST GUARDRAIL SYSTEM STANDARD RAILING SECTION (STEEL POST WITH NOTCHED WOOD OR NOTCHED RECYCLED PLASTIC BLOCK)

NO SCALE

RSP A77L2 DATED JULY 19, 2013 SUPPLEMENTS THE STANDARD PLANS BOOK DATED 2010.

REVISED STANDARD PLAN RSP A77L2

2010 REVISED STANDARD PLAN RSP A77L2

7-3-13

Dist	COUNTY	ROUTE	POST MILES TOTAL PROJECT	SHEET No.	TOTAL SHEETS
08	Riv	60	R12.2/22.1, 26.5/30.4	74	113

Randell D. Hiatt
REGISTERED CIVIL ENGINEER

July 19, 2013
PLANS APPROVAL DATE

REGISTERED PROFESSIONAL ENGINEER
Randell D. Hiatt
No. C50200
Exp. 6-30-15
CIVIL
STATE OF CALIFORNIA

THE STATE OF CALIFORNIA OR ITS OFFICERS OR AGENTS SHALL NOT BE RESPONSIBLE FOR THE ACCURACY OR COMPLETENESS OF SCANNED COPIES OF THIS PLAN SHEET.

TO ACCOMPANY PLANS DATED 05-26-15

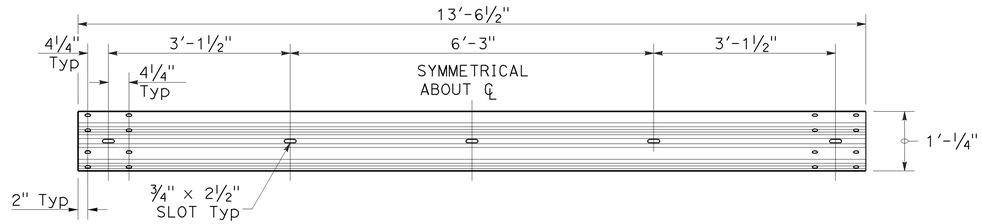

TYPICAL RAIL ELEMENT

NOTE:

1. Slotted holes for splice bolts to overlap ends of rail element.

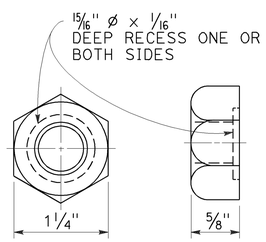

⅝" Ø RECESS NUT

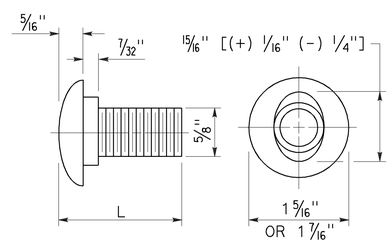

⅝" Ø BUTTON HEAD BOLT

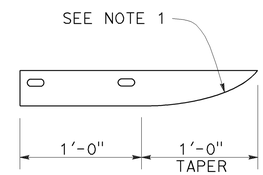

PLAN

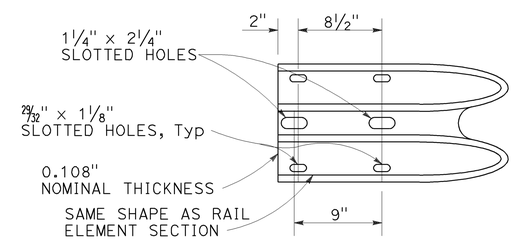

ELEVATION

END CAP
(TYPE A)

BUTTON HEAD BOLT

L	THREAD LENGTH
1⅜"	FULL THREAD LENGTH
2"	FULL THREAD LENGTH
10"	4" Min THREAD LENGTH
18"	4" Min THREAD LENGTH
20"	4" Min THREAD LENGTH
22"	4" Min THREAD LENGTH
26"	4" Min THREAD LENGTH
36"	4" Min THREAD LENGTH
** 2¾"	2" Min THREAD LENGTH
** 19"	4" Min THREAD LENGTH

** For nested rail applications.

STATE OF CALIFORNIA
DEPARTMENT OF TRANSPORTATION

MIDWEST GUARDRAIL SYSTEM STANDARD HARDWARE

NO SCALE

RSP A77M1 DATED JULY 19, 2013 SUPPLEMENTS THE STANDARD PLANS BOOK DATED 2010.

REVISED STANDARD PLAN RSP A77M1

2010 REVISED STANDARD PLAN RSP A77M1

7-3-13

Dist	COUNTY	ROUTE	POST MILES TOTAL PROJECT	SHEET No.	TOTAL SHEETS
08	Riv	60	R12.2/22.1, 26.5/30.4	75	113

Randell D. Hiatt
REGISTERED CIVIL ENGINEER

July 19, 2013
PLANS APPROVAL DATE

REGISTERED PROFESSIONAL ENGINEER
Randell D. Hiatt
No. C50200
Exp. 6-30-15
CIVIL
STATE OF CALIFORNIA

THE STATE OF CALIFORNIA OR ITS OFFICERS OR AGENTS SHALL NOT BE RESPONSIBLE FOR THE ACCURACY OR COMPLETENESS OF SCANNED COPIES OF THIS PLAN SHEET.

TO ACCOMPANY PLANS DATED 05-26-15

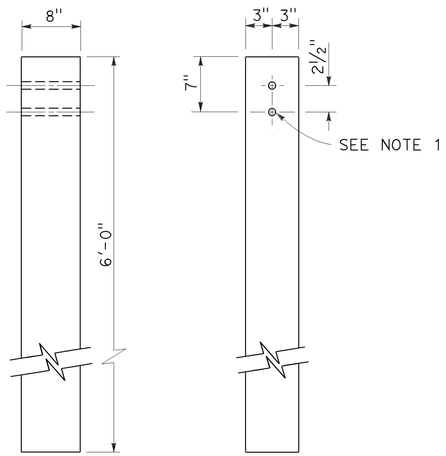

SIDE FRONT

6" x 8" WOOD POST
See Note 3

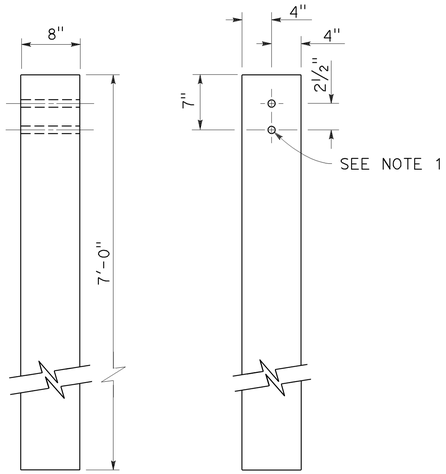

SIDE FRONT

8" x 8" WOOD POST
See Note 4

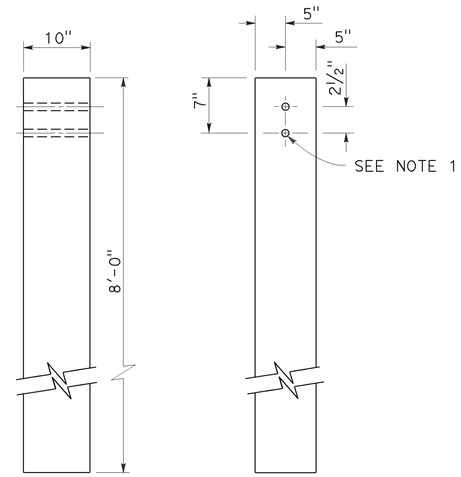

SIDE FRONT

10" x 10" WOOD POST
See Note 5

NOTES:

1. All holes in wood posts and blocks shall be ¾" Dia ± 1/16".
2. Dimensions shown for wood post are nominal.
3. This post and block combination used for standard line post sections of MGS.
4. This post and 8" x 12" block combination used for line post sections of MGS on narrow roadways.
5. This post and 8" x 12" block combination is typically used where strengthened line post sections of MGS are warranted to shield fixed objects.
6. See Revised Standard Plan RSP A77L3 for use of 6" x 8" and 8" x 8" wood blocks.

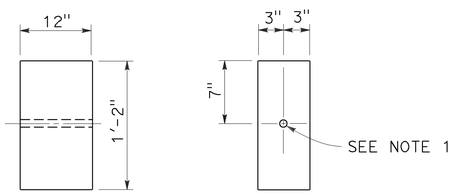

SIDE FRONT

6" x 12" WOOD BLOCK
See Note 3

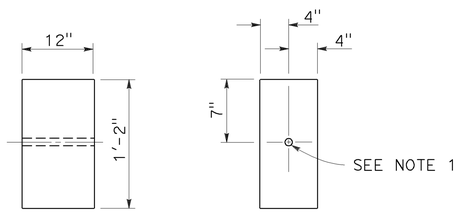

SIDE FRONT

8" x 12" WOOD BLOCK

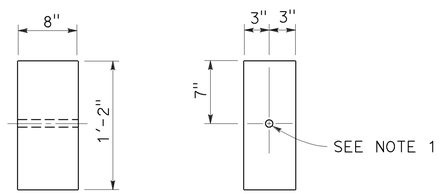

SIDE FRONT

6" x 8" WOOD BLOCK
Only for use with metal beam guard rail see Note 6

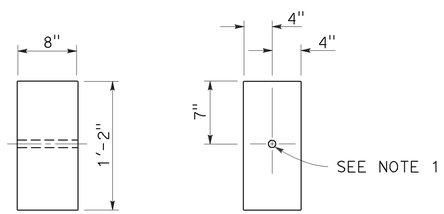

SIDE FRONT

8" x 8" WOOD BLOCK
Only for use with metal beam guard rail see Note 6

STATE OF CALIFORNIA
DEPARTMENT OF TRANSPORTATION

MIDWEST GUARDRAIL SYSTEM WOOD POST AND WOOD BLOCK DETAILS

NO SCALE

RSP A77N1 DATED JULY 19, 2013 SUPPLEMENTS THE STANDARD PLANS BOOK DATED 2010.

REVISED STANDARD PLAN RSP A77N1

2010 REVISED STANDARD PLAN RSP A77N1

7-3-13

Dist	COUNTY	ROUTE	POST MILES TOTAL PROJECT	SHEET No.	TOTAL SHEETS
08	Riv	60	R12.2/22.1, 26.5/30.4	76	113

Randell D. Hiatt
REGISTERED CIVIL ENGINEER

November 15, 2013
PLANS APPROVAL DATE

REGISTERED PROFESSIONAL ENGINEER
Randell D. Hiatt
No. C50200
Exp. 6-30-15
CIVIL
STATE OF CALIFORNIA

THE STATE OF CALIFORNIA OR ITS OFFICERS OR AGENTS SHALL NOT BE RESPONSIBLE FOR THE ACCURACY OR COMPLETENESS OF SCANNED COPIES OF THIS PLAN SHEET.

TO ACCOMPANY PLANS DATED 05-26-15

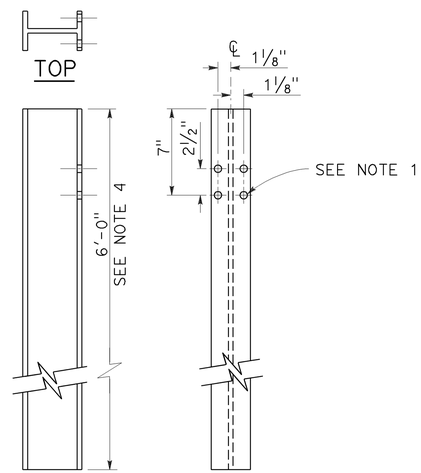

W6 x 9 OR W6 x 8.5
STEEL POST
See Note 4

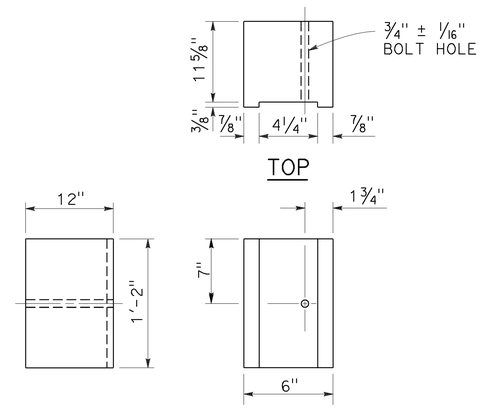

6" x 12"
NOTCHED WOOD BLOCK
See Notes 2 and 3

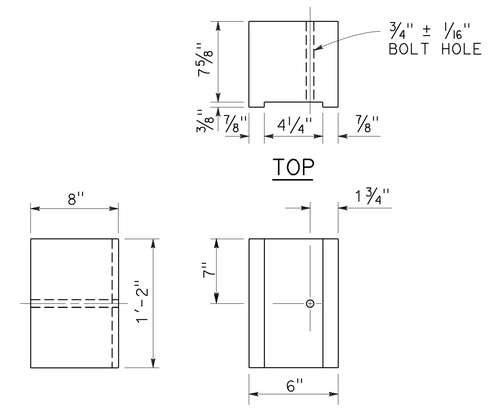

6" x 8"
NOTCHED WOOD BLOCK
Only for use with metal beam guard railing. See Note 5

NOTES:

1. All holes in steel post shall be 13/16" Dia maximum.
2. Dimensions shown for wood block are nominal.
3. Notched face of block faces steel post.
4. 6'-0" length posts to be used for typical roadway installation. See Revised Standard Plan RSP A77N3.
5. See Revised Standard Plan RSP A77L3 for use of 6" x 8" and 8" x 8" notched wood blocks.
6. This post and 8" x 12" block combination to be used for line post sections of MGS on narrow roadways and where strengthened line post sections of MGS are warranted to shield fixed objects.

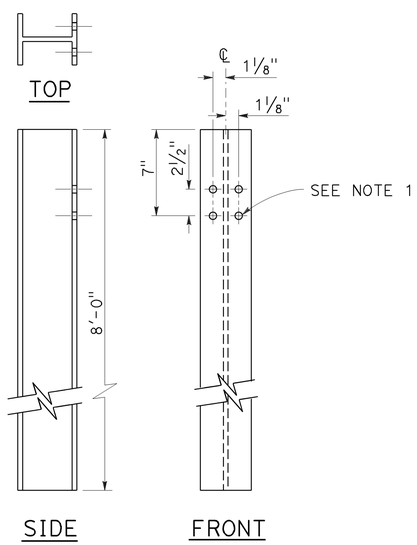

W6 x 15
STEEL POST
See Note 6

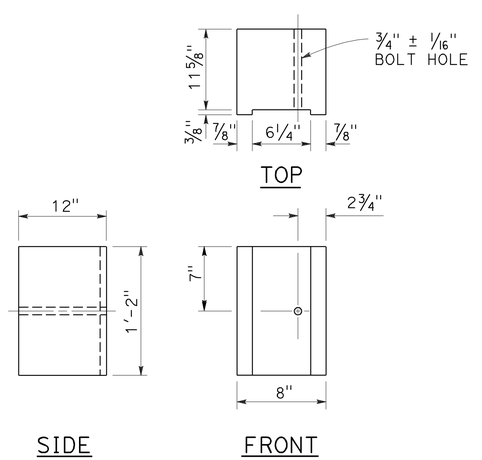

8" x 12"
NOTCHED WOOD BLOCK
See Notes 2 and 3

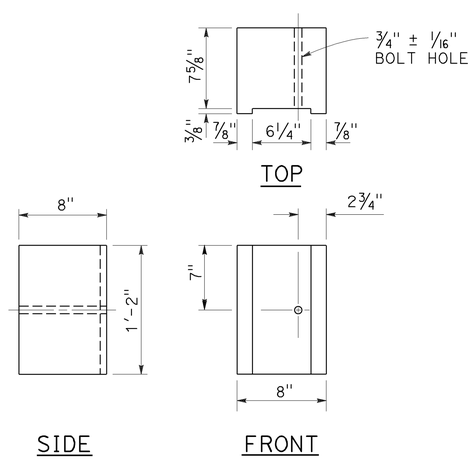

8" x 8"
NOTCHED WOOD BLOCK
Only for use with metal beam guard railing. See Note 5

STATE OF CALIFORNIA
DEPARTMENT OF TRANSPORTATION

MIDWEST GUARDRAIL SYSTEM STEEL POST AND NOTCHED WOOD BLOCK DETAILS

NO SCALE

RSP A77N2 DATED NOVEMBER 15, 2013 SUPERSEDES RSP A77N2
DATED JULY 19, 2013 THAT SUPPLEMENTS THE STANDARD PLANS BOOK DATED 2010.

REVISED STANDARD PLAN RSP A77N2

2010 REVISED STANDARD PLAN RSP A77N2

10-29-13

Dist	COUNTY	ROUTE	POST MILES TOTAL PROJECT	SHEET No.	TOTAL SHEETS
08	Riv	60	R12.2/22.1, 26.5/30.4	77	113

Randell D. Hiatt
REGISTERED CIVIL ENGINEER

November 15, 2013
PLANS APPROVAL DATE

REGISTERED PROFESSIONAL ENGINEER
Randell D. Hiatt
No. C50200
Exp. 6-30-15
CIVIL
STATE OF CALIFORNIA

THE STATE OF CALIFORNIA OR ITS OFFICERS OR AGENTS SHALL NOT BE RESPONSIBLE FOR THE ACCURACY OR COMPLETENESS OF SCANNED COPIES OF THIS PLAN SHEET.

TO ACCOMPANY PLANS DATED 05-26-15

2010 REVISED STANDARD PLAN RSP A77N3

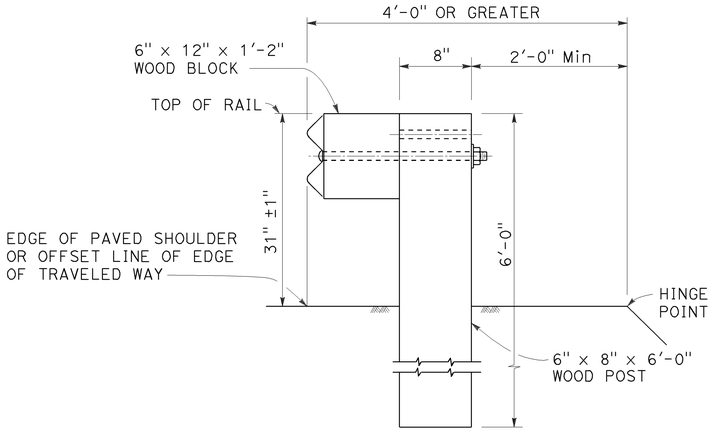

DETAIL A

TYPICAL ROADWAY INSTALLATION

See Note 1

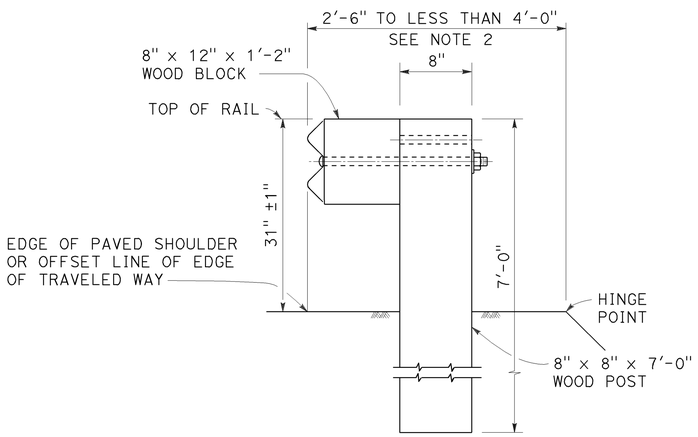

DETAIL B

NARROW ROADWAY INSTALLATION

See Note 1

POST EMBEDMENT

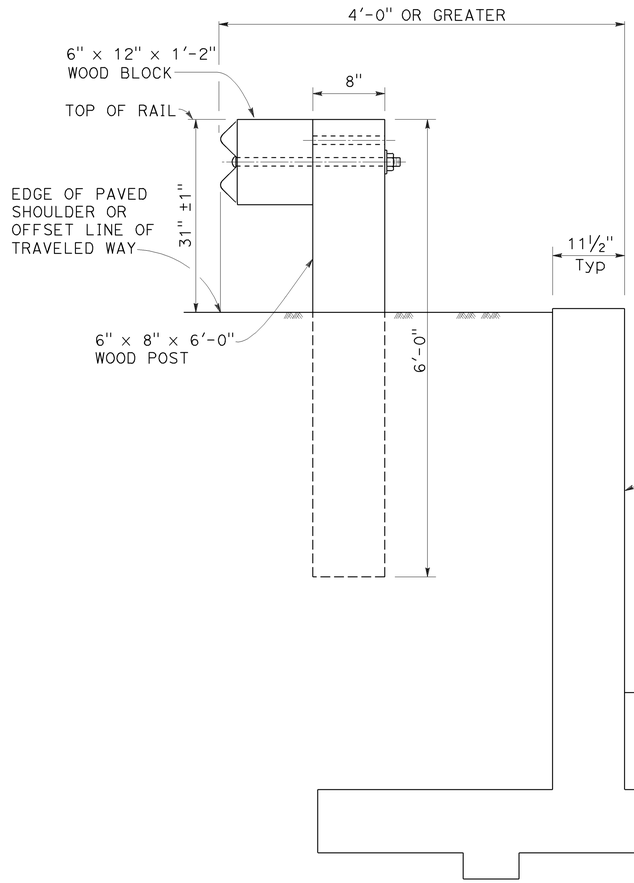

DETAIL C

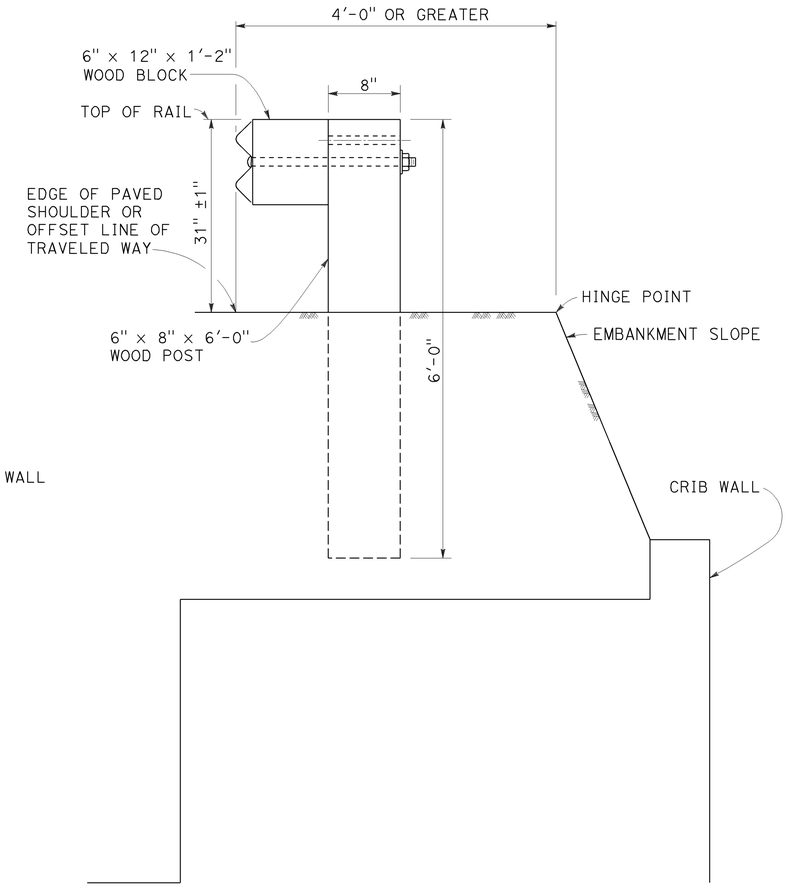

DETAIL D

INSTALLATION AT EARTH RETAINING WALLS

NOTES:

1. These installation details also applicable to steel line post installations. For Detail A, C, and D, where steel line post installations are constructed, W6 x 8.5 or W6 x 9 steel post, 6'-0" in length, with 6" x 12" x 1'-2" notched wood blocks or notched recycled plastic blocks are to be used in place of the size of wood post and wood block shown. For Detail B, where steel line post installations are constructed, W6 x 15 steel post, 8'-0" in length, with 8" x 12" x 1'-2" notched wood blocks or notched recycled plastic blocks are to be used in place of the size of wood post and wood block shown. For additional installation details, see Revised Standard Plan RSP A77L1 and RSP A77L2.
2. Where the distance between the face of the rail and the hinge point is less than 2'-6", see the Project Plans for special details.
3. For dike positioning with MGS installations, see Revised Standard Plan RSP A77N4.

STATE OF CALIFORNIA
DEPARTMENT OF TRANSPORTATION

MIDWEST GUARDRAIL SYSTEM TYPICAL LINE POST EMBEDMENT AND HINGE POINT OFFSET DETAILS

NO SCALE

RSP A77N3 DATED NOVEMBER 15, 2013 SUPERSEDES RSP A77N3
DATED JULY 19, 2013 THAT SUPPLEMENTS THE STANDARD PLANS BOOK DATED 2010.

REVISED STANDARD PLAN RSP A77N3

10-29-13

Dist	COUNTY	ROUTE	POST MILES TOTAL PROJECT	SHEET No.	TOTAL SHEETS
08	Riv	60	R12.2/22.1, 26.5/30.4	78	113

Randell D. Hiatt
REGISTERED CIVIL ENGINEER

July 19, 2013
PLANS APPROVAL DATE

REGISTERED PROFESSIONAL ENGINEER
Randell D. Hiatt
No. C50200
Exp. 6-30-15
CIVIL
STATE OF CALIFORNIA

THE STATE OF CALIFORNIA OR ITS OFFICERS OR AGENTS SHALL NOT BE RESPONSIBLE FOR THE ACCURACY OR COMPLETENESS OF SCANNED COPIES OF THIS PLAN SHEET.

TO ACCOMPANY PLANS DATED 05-26-15

NOTES:

1. When necessary to place dike more than 7" in front of face of MGS, only Type C dike may be used. For dike details, see Revised Standard Plan RSP A87B.
2. For standard railing post embedment, see Revised Standard Plan RSP A77N3.
3. MGS delineation to be used where shown on the Project Plans.
4. When dike or curb is placed under MGS, the maximum height of the dike or curb shall be 6". Mountable dike should not be used. For dike and curb details, see Revised Standard Plans RSP A87A and RSP A87B.
5. For details of typical distance between the face of rail and hinge point, see Revised Standard Plan RSP A77N3.
6. For steel line posts, use 1/4 - 20 self-tapping screws in 0.22" diameter holes or 1/4" bolts in 9/32" diameter holes.

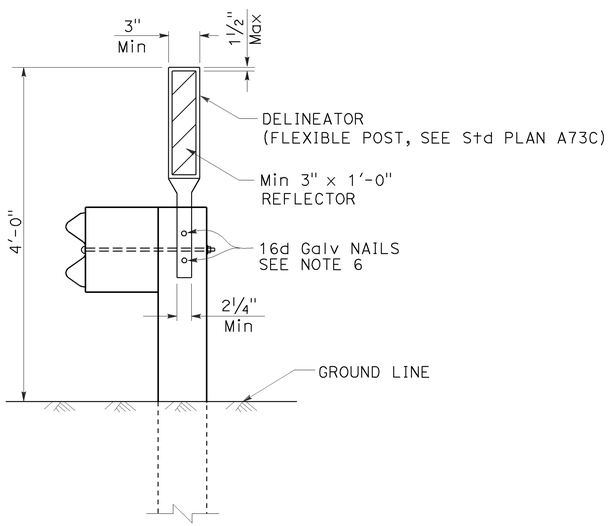

MGS DELINEATION

See Note 3

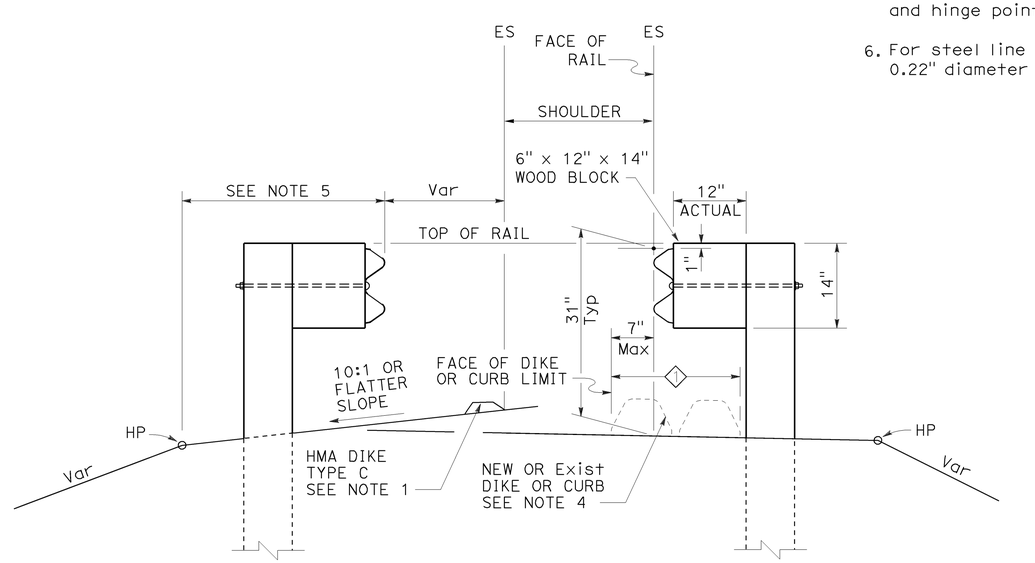

DIKE POSITIONING

See Note 1

1 PERMISSIBLE DIKE OR CURB PLACEMENT AREA

STATE OF CALIFORNIA
DEPARTMENT OF TRANSPORTATION

MIDWEST GUARDRAIL SYSTEM TYPICAL RAILING DELINEATION AND DIKE POSITIONING DETAILS

NO SCALE

RSP A77N4 DATED JULY 19, 2013 SUPPLEMENTS THE STANDARD PLANS BOOK DATED 2010.

REVISED STANDARD PLAN RSP A77N4

2010 REVISED STANDARD PLAN RSP A77N4

7-10-13

Dist	COUNTY	ROUTE	POST MILES TOTAL PROJECT	SHEET No.	TOTAL SHEETS
08	Riv	60	R12.2/22.1, 26.5/30.4	79	113

Randell D. Hiatt
REGISTERED CIVIL ENGINEER

July 19, 2013
PLANS APPROVAL DATE

REGISTERED PROFESSIONAL ENGINEER
Randell D. Hiatt
No. C50200
Exp. 6-30-15
CIVIL
STATE OF CALIFORNIA

THE STATE OF CALIFORNIA OR ITS OFFICERS OR AGENTS SHALL NOT BE RESPONSIBLE FOR THE ACCURACY OR COMPLETENESS OF SCANNED COPIES OF THIS PLAN SHEET.

TO ACCOMPANY PLANS DATED 05-26-15

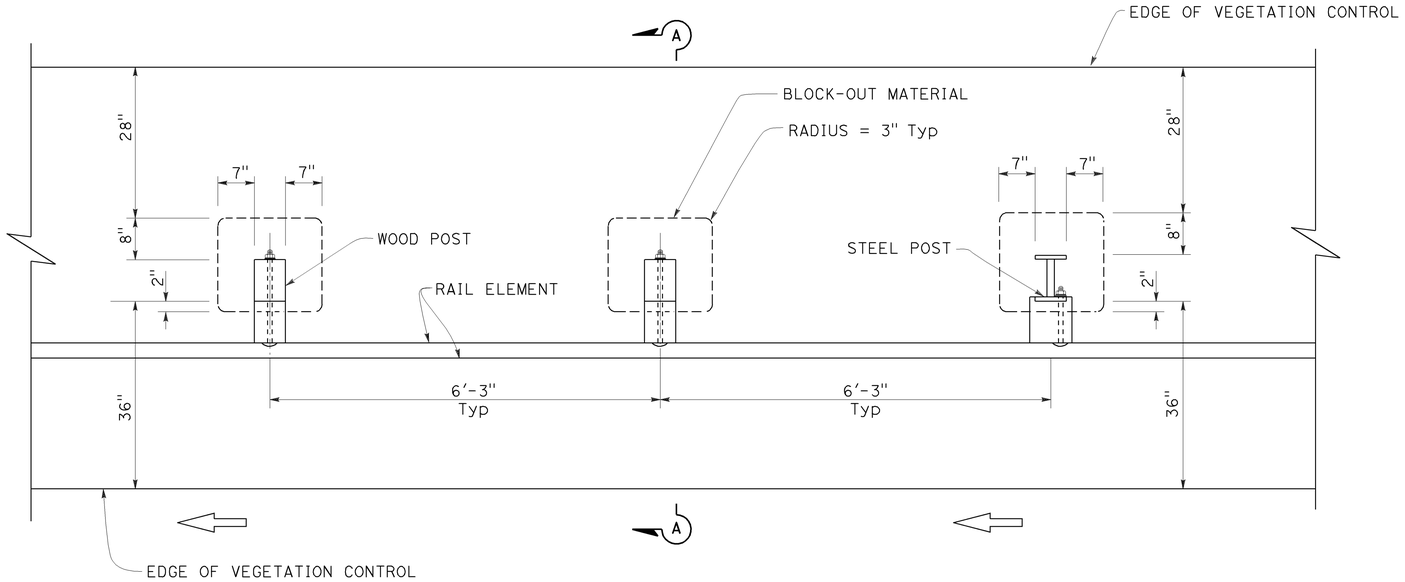

PLAN

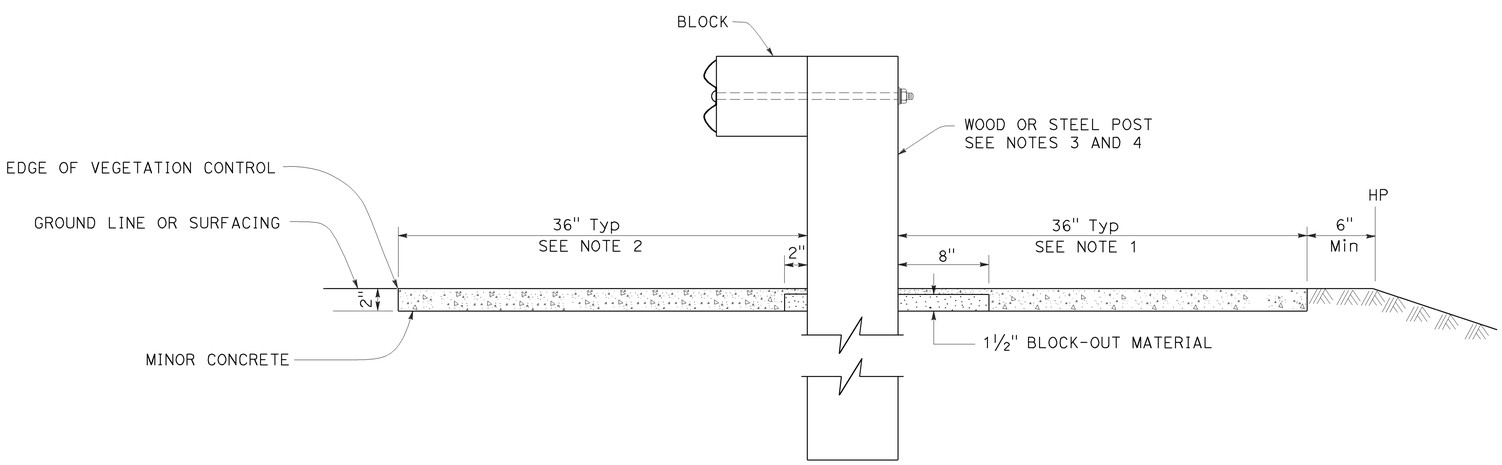

SECTION A-A

NOTES:

1. Where the distance between back of post and hinge point is less than 42", construct vegetation control to 6" from hinge point while maintaining the 8" block-out at back of post. If the 8" block-out at back of post can not be maintained, construct vegetation control flush with the back edge of post.
2. Where dike is constructed under railing, construct vegetation control to back edge of dike. Where paved shoulder is constructed within 36" in front of the post, construct vegetation control to the edge of paved shoulder.
3. For wood post sizes, see Revised Standard Plan RSP A77N1.
4. For steel post sizes, see Revised Standard Plan RSP A77N2.
5. For details not shown, see Revised Standard Plans RSP A77L1 and RSP A77L2.

STATE OF CALIFORNIA
DEPARTMENT OF TRANSPORTATION

MIDWEST GUARDRAIL SYSTEM TYPICAL VEGETATION CONTROL STANDARD RAILING SECTION

NO SCALE

RSP A77N5 DATED JULY 19, 2013 SUPPLEMENTS THE STANDARD PLANS BOOK DATED 2010.

REVISED STANDARD PLAN RSP A77N5

2010 REVISED STANDARD PLAN RSP A77N5

7-3-13

Dist	COUNTY	ROUTE	POST MILES TOTAL PROJECT	SHEET No.	TOTAL SHEETS
08	Riv	60	R12.2/22.1, 26.5/30.4	80	113

Randell D. Hiatt
REGISTERED CIVIL ENGINEER

July 19, 2013
PLANS APPROVAL DATE

REGISTERED PROFESSIONAL ENGINEER
Randell D. Hiatt
No. C50200
Exp. 6-30-15
CIVIL
STATE OF CALIFORNIA

THE STATE OF CALIFORNIA OR ITS OFFICERS OR AGENTS SHALL NOT BE RESPONSIBLE FOR THE ACCURACY OR COMPLETENESS OF SCANNED COPIES OF THIS PLAN SHEET.

TO ACCOMPANY PLANS DATED 05-26-15

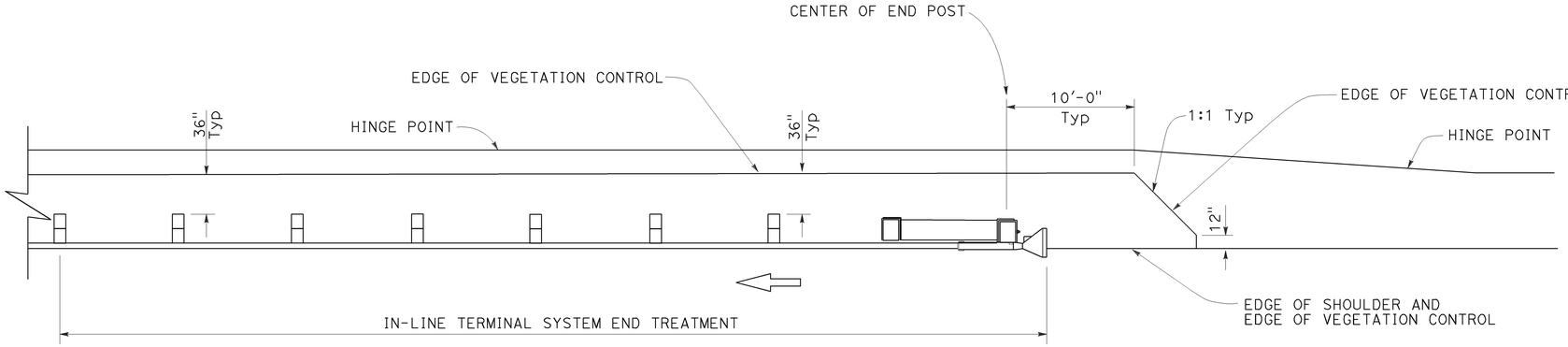

PLAN

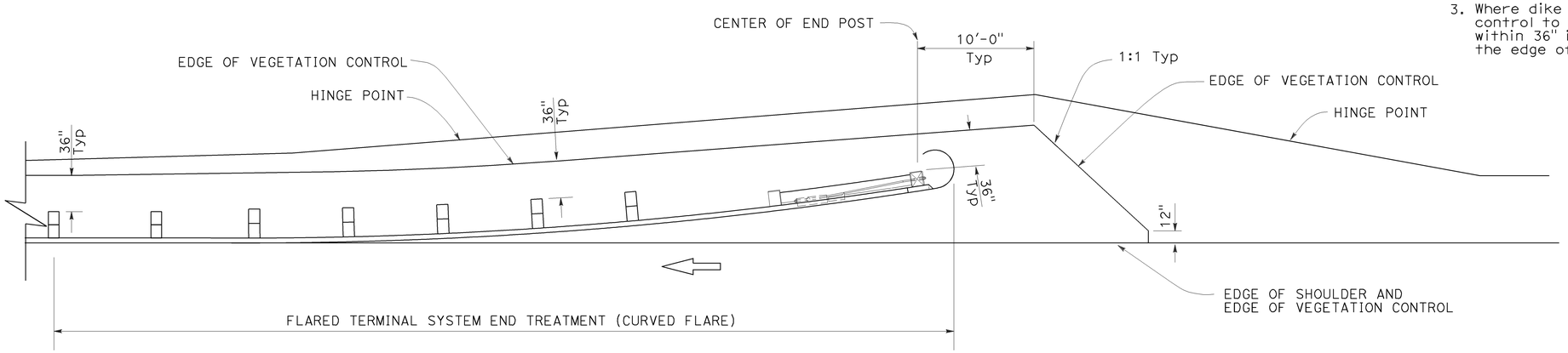

PLAN

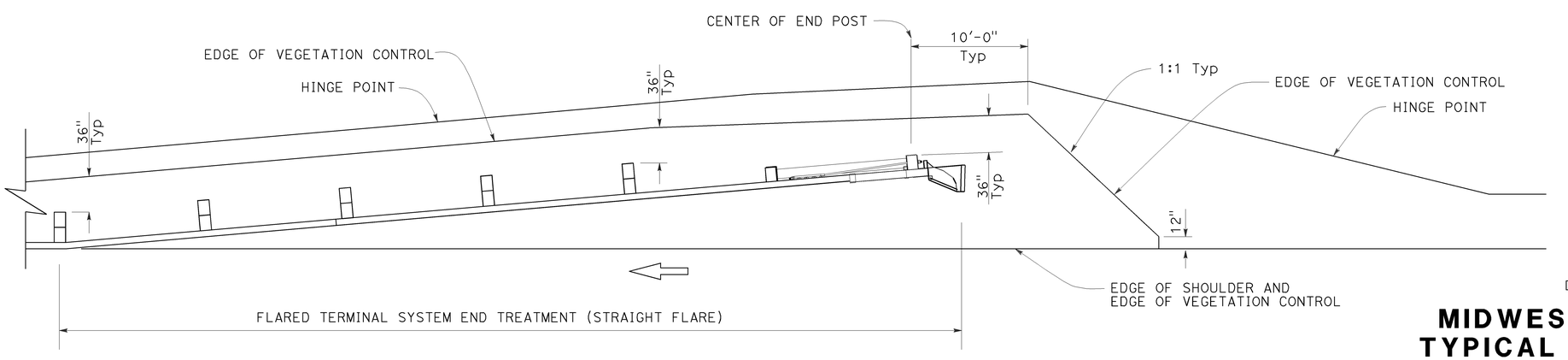

PLAN

NOTES:

1. See Revised Standard Plan RSP A77N5 for additional vegetation control details.
2. Where the distance between back of post and hinge point is less than 42", construct vegetation control to 6" from hinge point while maintaining the 8" block-out at back of post. If the 8" block-out at back of post can not be maintained, construct vegetation control flush with the back edge of post.
3. Where dike is constructed under railing, construct vegetation control to back edge of dike. Where paved shoulder is constructed within 36" in front of the post, construct vegetation control to the edge of paved shoulder.

STATE OF CALIFORNIA
DEPARTMENT OF TRANSPORTATION

MIDWEST GUARDRAIL SYSTEM TYPICAL VEGETATION CONTROL FOR TERMINAL SYSTEM END TREATMENTS

NO SCALE

RSP A77N6 DATED JULY 19, 2013 SUPPLEMENTS THE STANDARD PLANS BOOK DATED 2010.

REVISED STANDARD PLAN RSP A77N6

2010 REVISED STANDARD PLAN RSP A77N6

6-12-13

Dist	COUNTY	ROUTE	POST MILES TOTAL PROJECT	SHEET No.	TOTAL SHEETS
08	Riv	60	R12.2/22.1, 26.5/30.4	81	113

Randell D. Hiatt
REGISTERED CIVIL ENGINEER

July 19, 2013
PLANS APPROVAL DATE

REGISTERED PROFESSIONAL ENGINEER
Randell D. Hiatt
No. C50200
Exp. 6-30-15
CIVIL
STATE OF CALIFORNIA

THE STATE OF CALIFORNIA OR ITS OFFICERS OR AGENTS SHALL NOT BE RESPONSIBLE FOR THE ACCURACY OR COMPLETENESS OF SCANNED COPIES OF THIS PLAN SHEET.

TO ACCOMPANY PLANS DATED 05-26-15

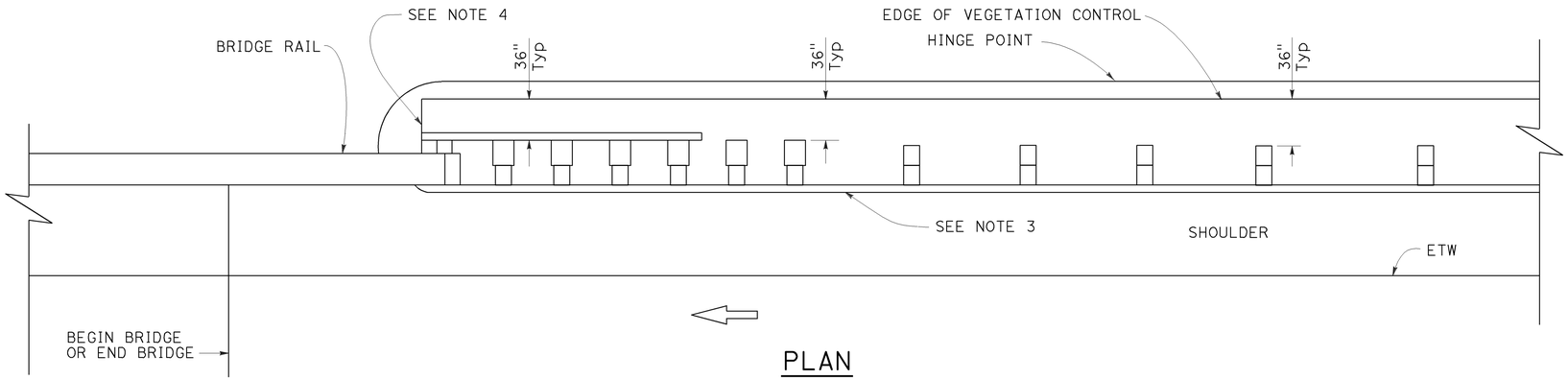

PLAN

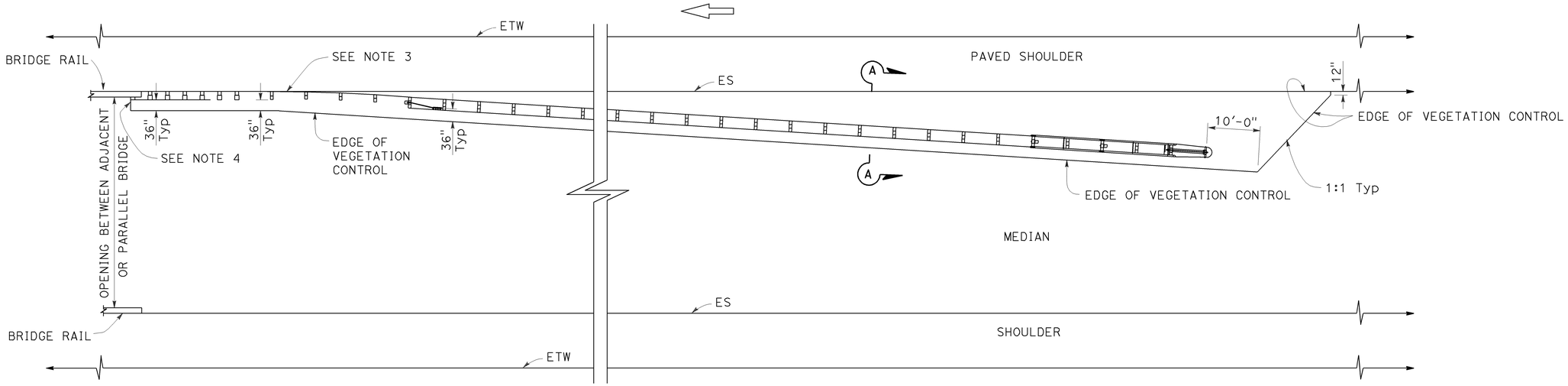

PLAN

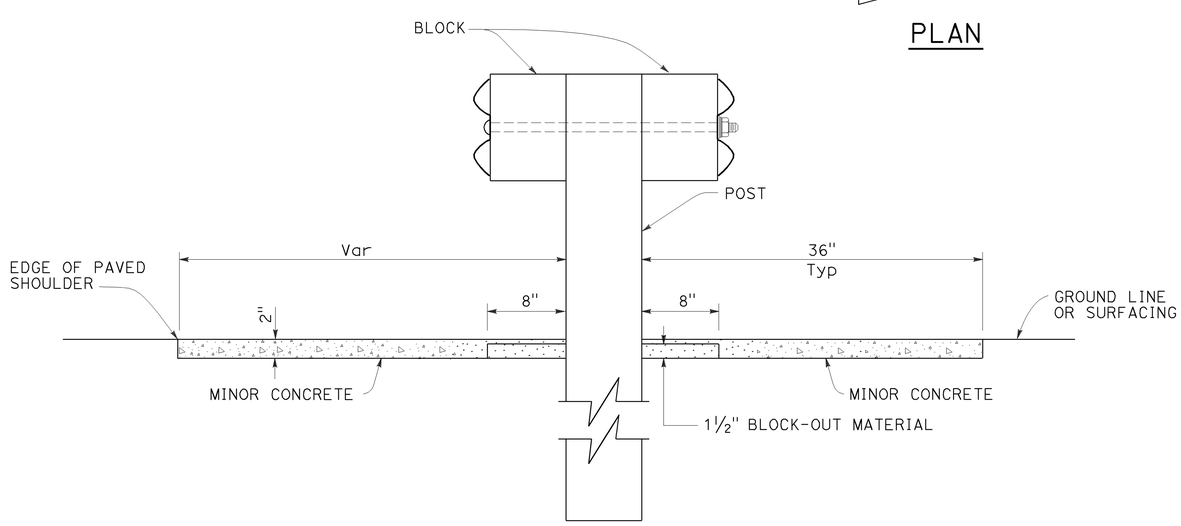

SECTION A-A

NOTES:

1. See Revised Standard Plan RSP A77N5 for additional vegetation control details.
2. Where the distance between back of post and hinge point is less than 42", construct vegetation control to 6" from hinge point while maintaining the 8" block-out at back of post. If the 8" block-out at back of post can not be maintained, construct vegetation control flush with the back edge of post.
3. Where dike is constructed under railing, construct vegetation control to back edge of dike. Where paved shoulder is constructed within 36" in front of the post, construct vegetation control to the edge of paved shoulder.
4. End vegetation control at end of backside rail element.

STATE OF CALIFORNIA
DEPARTMENT OF TRANSPORTATION

MIDWEST GUARDRAIL SYSTEM TYPICAL VEGETATION CONTROL AT STRUCTURE APPROACH

NO SCALE

RSP A77N7 DATED JULY 19, 2013 SUPPLEMENTS THE STANDARD PLANS BOOK DATED 2010.

REVISED STANDARD PLAN RSP A77N7

2010 REVISED STANDARD PLAN RSP A77N7

6-12-13

Dist	COUNTY	ROUTE	POST MILES TOTAL PROJECT	SHEET No.	TOTAL SHEETS
08	Riv	60	R12.2/22.1, 26.5/30.4	82	113

Randell D. Hiatt
REGISTERED CIVIL ENGINEER

July 19, 2013
PLANS APPROVAL DATE

REGISTERED PROFESSIONAL ENGINEER
Randell D. Hiatt
No. C50200
Exp. 6-30-15
CIVIL
STATE OF CALIFORNIA

THE STATE OF CALIFORNIA OR ITS OFFICERS OR AGENTS SHALL NOT BE RESPONSIBLE FOR THE ACCURACY OR COMPLETENESS OF SCANNED COPIES OF THIS PLAN SHEET.

TO ACCOMPANY PLANS DATED 05-26-15

NOTES:

1. See Revised Standard Plan RSP A77N5 for additional vegetation control details.
2. Where the distance between back of post and hinge point is less than 42", construct vegetation control to 6" from hinge point while maintaining the 8" block-out at back of post. If the 8" block-out at back of post can not be maintained, construct vegetation control flush with the back edge of post.
3. Where dike is constructed under railing, construct vegetation control to back edge of dike. Where paved shoulder is constructed within 36" in front of the post, construct vegetation control to the edge of paved shoulder.

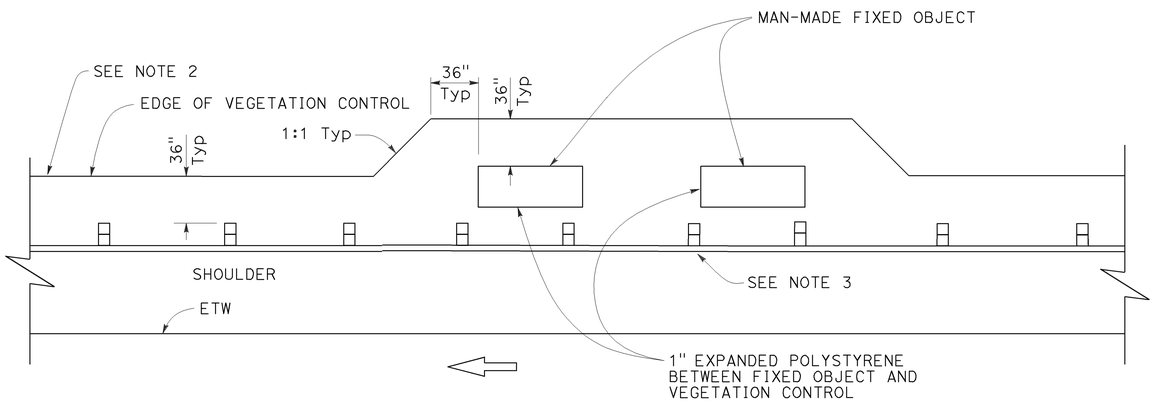

PLAN

Fixed object(s) on shoulder

STATE OF CALIFORNIA
DEPARTMENT OF TRANSPORTATION

MIDWEST GUARDRAIL SYSTEM TYPICAL VEGETATION CONTROL AT FIXED OBJECT

NO SCALE

RSP A77N8 DATED JULY 19, 2013 SUPPLEMENTS THE STANDARD PLANS BOOK DATED 2010.

REVISED STANDARD PLAN RSP A77N8

2010 REVISED STANDARD PLAN RSP A77N8

6-12-13

Dist	COUNTY	ROUTE	POST MILES TOTAL PROJECT	SHEET No.	TOTAL SHEETS
08	Riv	60	R12.2/22.1, 26.5/30.4	83	113

Randell D. Hiatt
REGISTERED CIVIL ENGINEER

July 19, 2013
PLANS APPROVAL DATE

REGISTERED PROFESSIONAL ENGINEER
Randell D. Hiatt
No. C50200
Exp. 6-30-15
CIVIL
STATE OF CALIFORNIA

THE STATE OF CALIFORNIA OR ITS OFFICERS OR AGENTS SHALL NOT BE RESPONSIBLE FOR THE ACCURACY OR COMPLETENESS OF SCANNED COPIES OF THIS PLAN SHEET.

TO ACCOMPANY PLANS DATED 05-26-15

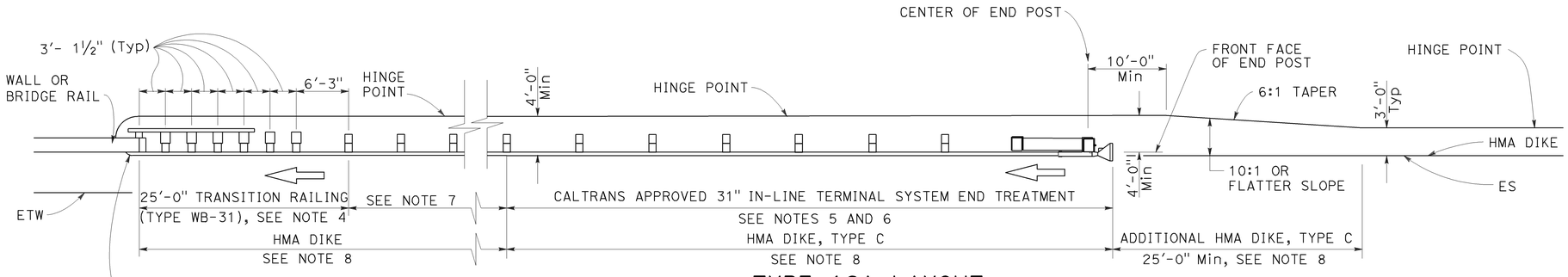

TYPE 12A LAYOUT

(MGS installation at structure approach with
31" In-line end treatment at traffic approach end of railing)
See Notes 9

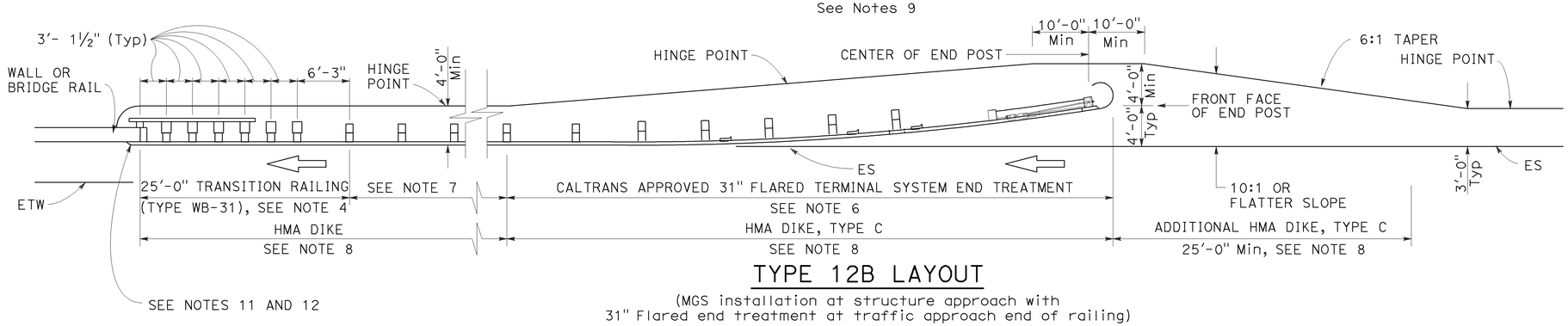

TYPE 12B LAYOUT

(MGS installation at structure approach with
31" Flared end treatment at traffic approach end of railing)
See Notes 9

NOTES:

1. Line post, blocks and hardware to be used are shown on Revised Standard Plans RSP A77L1, RSP A77L2, RSP A77M1, RSP A77N1 and RSP A77N2.
2. MGS post spacing to be 6'-3" center to center, except as otherwise noted.
3. Except as noted, line posts are 6" x 8" x 6'-0" wood with 6" x 12" x 1'-2" wood blocks. W6 x 8.5 or W6 x 9 steel posts, 6'-0" in length, with 6" x 12" x 1'-2" notched wood blocks or plastic blocks may be used for 6" x 8" x 6'-0" wood posts with 6" x 12" x 1'-2" wood blocks where applicable and when specified.
4. For Transition Railing (Type WB-31) details for Types 12A and 12B Layouts, see Revised Standard Plan RSP A77U4.
5. 31" in-line terminal system end treatments are used where site conditions will not accommodate a 31" flared end treatment.
6. The type 31" of terminal system end treatment to be used will be shown on the Project Plans.
7. Dependent on site conditions (embankment height, side slopes, or other fixed objects), it may be advisable to construct additional guard railing (a length equal to multiples of 12'-6" with 6'-3" post spacing) between the transition railing and end treatment. A 12.5 degree angle of departure can be drawn on the Project Plans from the edge of traveled way through the outer most point of the fixed object to determine the additional length of railing needed.
8. Where placement of dike is required with guard railing installations, see Revised Standard Plan RSP A77N4 for dike positioning details.
9. Type 12A or Type 12B Layouts are typically used:
   a. To the right of approaching traffic, at the end of a structure, on two-lane conventional highway where the roadbed width across the structure is less than 40 feet.
   b. To the left of approaching traffic, at the end of a structure, on two-lane conventional highway where the roadbed width across the structure is less than 40 feet.
   c. To the right of approaching traffic at the end of each structure on multilane freeways or expressways with separate adjacent or parallel bridges.
   d. To the right of approaching traffic at the end of the structure on multilane freeways or expressways with decked median on the bridge.
10. See Revised Standard Plan RSP A77Q3 for typical layout used left of approaching traffic at the ends of each structure on multilane freeways or expressways with separate adjacent or parallel bridges.
11. For additional details of typical connections to bridge rail, see Connection Detail AA on Revised Standard Plans RSP A77U1 and RSP A77U2 and Connection Detail FF on Revised Standard Plans RSP A77V1 and RSP A77V2.
12. For additional details of a typical connection to walls or abutments, see Revised Standard Plan RSP A77U3.

STATE OF CALIFORNIA
DEPARTMENT OF TRANSPORTATION

MIDWEST GUARDRAIL SYSTEM TYPICAL LAYOUTS FOR STRUCTURE APPROACH

NO SCALE

RSP A77Q1 DATED JULY 19, 2013 SUPPLEMENTS THE STANDARD PLANS BOOK DATED 2010.

REVISED STANDARD PLAN RSP A77Q1

2010 REVISED STANDARD PLAN RSP A77Q1

6-19-13

Dist	COUNTY	ROUTE	POST MILES TOTAL PROJECT	SHEET No.	TOTAL SHEETS
08	Riv	60	R12.2/22.1, 26.5/30.4	84	113

Randell D. Hiatt
REGISTERED CIVIL ENGINEER

July 19, 2013
PLANS APPROVAL DATE

REGISTERED PROFESSIONAL ENGINEER
Randell D. Hiatt
No. C50200
Exp. 6-30-15
CIVIL
STATE OF CALIFORNIA

THE STATE OF CALIFORNIA OR ITS OFFICERS OR AGENTS SHALL NOT BE RESPONSIBLE FOR THE ACCURACY OR COMPLETENESS OF SCANNED COPIES OF THIS PLAN SHEET.

TO ACCOMPANY PLANS DATED 05-26-15

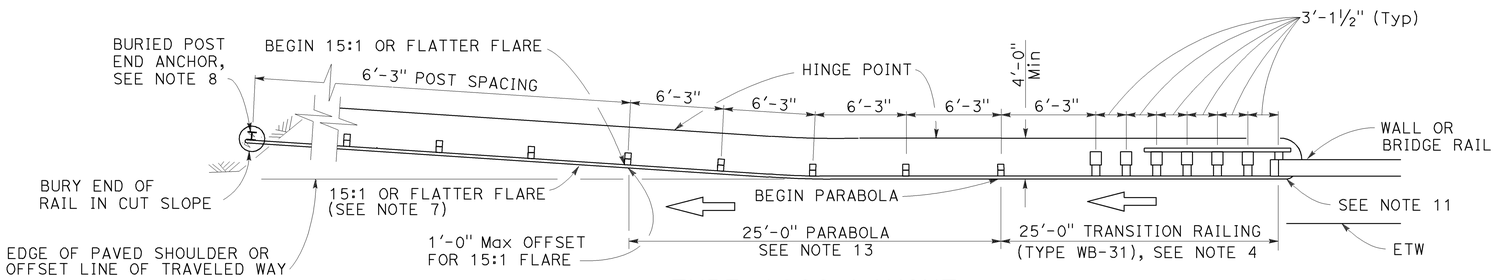

TYPE 12CC LAYOUT

(MGS installation at structure departure with a
Buried end anchor treatment at trailing end of railing)
See Notes 9 and 10

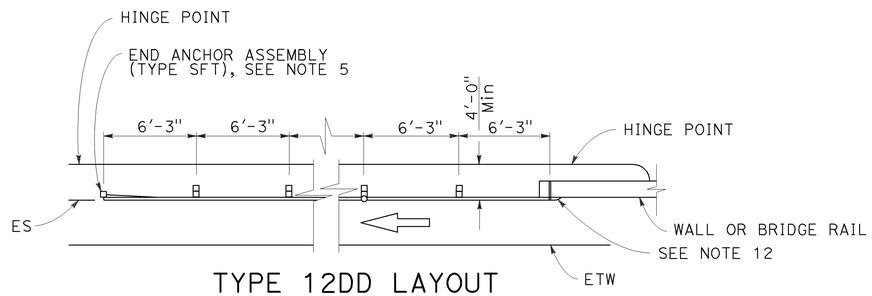

TYPE 12DD LAYOUT

(MGS installation at structure departure
With end anchor assembly at trailing end of railing)
See Notes 6 and 9

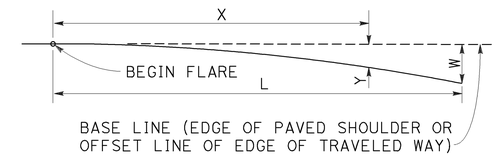

$$Y = \frac{WX^2}{L^2}$$

Y = OFFSET FROM BASE LINE
W = MAXIMUM OFFSET
X = DISTANCE ALONG BASE LINE
L = LENGTH OF FLARE

PARABOLIC FLARE OFFSETS

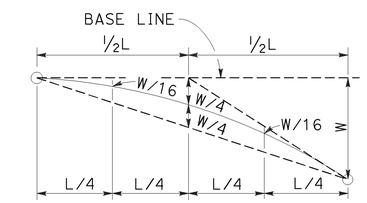

TYPICAL PARABOLIC LAYOUT

NOTES:

1. Line post, blocks and hardware to be used are shown on Revised Standard Plans RSP A77L1, RSP A77L2, RSP A77M1, RSP A77N1 and RSP A77N2.
2. MSG post spacing to be 6'-3" center to center, except as otherwise noted.
3. Except as noted, line posts are 6" x 8" x 6'-0" wood with 6" x 12" x 1'-2" wood blocks. W6 x 8.5 or W6 x 9 steel posts, 6'-0" in length, with 6" x 12" x 1'-2" notched wood blocks or notched recycled plastic blocks may be used for 6" x 8" x 6'-0" wood line posts with 6" x 12" x 1'-2" wood blocks where applicable and when specified.
4. For Transition Railing (Type WB-31) details for Type 12CC Layout, see Revised Standard Plan RSP A77U4.
5. For details of End Anchor Assembly (Type SFT) used with Type 12DD Layout, see Revised Standard Plan RSP A77S1.
6. Type 12DD layout is typically used to the right of traffic departing a structure on two-way conventional highways where the roadbed width across the structure is equal to or greater than 40 feet and MGS is recommended (embankment height, side slopes, other fixed objects). Length of railing to be equal to multiples of 12'-6". For MGS connection details to bridge rail, see Revised Standard Plans RSP A77U1 and RSP A77V1. For MGS connection details to wall, see Revised Standard Plan RSP A77U3.
7. The 15:1 or flatter flare for Type 12CC Layout is based on the edge of the paved shoulder or offset line of edge of the traveled way. The length of MGS within the 15:1 or flatter flare is based on site conditions and should be a length equal to multiples of 12'-6".
8. For details of the buried post end anchor used with Type 12CC Layout, see Revised Standard Plan RSP A77T2.
9. Where placement of dike is required with MGS installations, see Revised Standard Plan RSP A77N4 for dike positioning details.
10. Type 12CC Layout is typically used to the right of traffic departing a structure on two-way conventional highways where the roadbed width across the structure is less than 40 feet.
11. For additional details of a typical connection to bridge rail for Layout Type 12CC, see Connection Detail CC on Revised Standard Plan RSP A77U2 and Connection Detail HH on Revised Standard Plan RSP A77V2.
12. For additional details of a typical connection to bridge rail for Layout Type 12DD, see Connection Detail BB on Revised Standard Plan RSP A77U1 and Connection Detail GG on Revised Standard Plan RSP A77V1.
13. For typical flare offsets for 25'-0" length parabola with maximum offset of 1'-0", see Revised Standard Plan RSP A77P1.

STATE OF CALIFORNIA
DEPARTMENT OF TRANSPORTATION

MIDWEST GUARDRAIL SYSTEM TYPICAL LAYOUTS FOR STRUCTURE DEPARTURE

NO SCALE

RSP A77Q5 DATED JULY 19, 2013 SUPPLEMENTS THE STANDARD PLANS BOOK DATED 2010.

REVISED STANDARD PLAN RSP A77Q5

2010 REVISED STANDARD PLAN RSP A77Q5

6-20-13

Dist	COUNTY	ROUTE	POST MILES TOTAL PROJECT	SHEET No.	TOTAL SHEETS
08	Riv	60	R12.2/22.1, 26.5/30.4	85	113

Randell D. Hiatt
REGISTERED CIVIL ENGINEER

July 19, 2013
PLANS APPROVAL DATE

REGISTERED PROFESSIONAL ENGINEER Randell D. Hiatt No. C50200 Exp. 6-30-15 CIVIL STATE OF CALIFORNIA

THE STATE OF CALIFORNIA OR ITS OFFICERS OR AGENTS SHALL NOT BE RESPONSIBLE FOR THE ACCURACY OR COMPLETENESS OF SCANNED COPIES OF THIS PLAN SHEET.

TO ACCOMPANY PLANS DATED 05-26-15

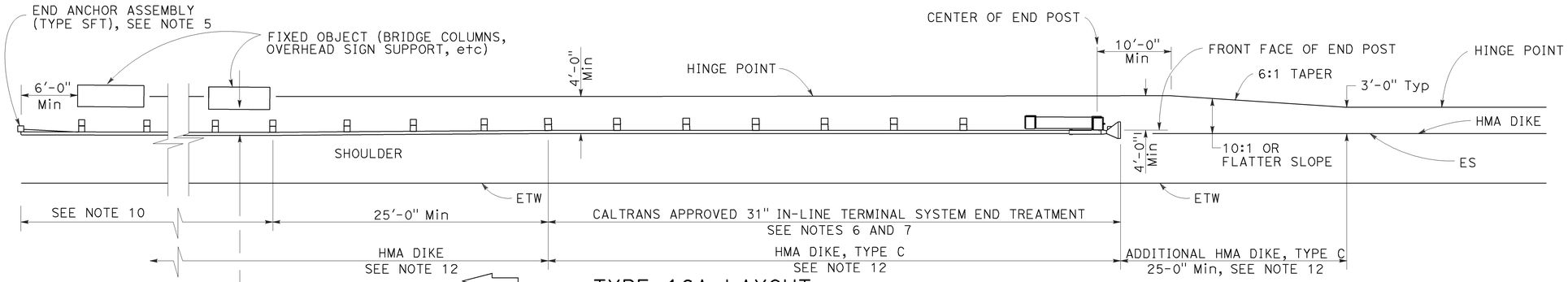

TYPE 16A LAYOUT

(MGS installation at roadside fixed object or objects with 31" in-line end treatment at traffic approach end of railing)
See Notes 11 and 12

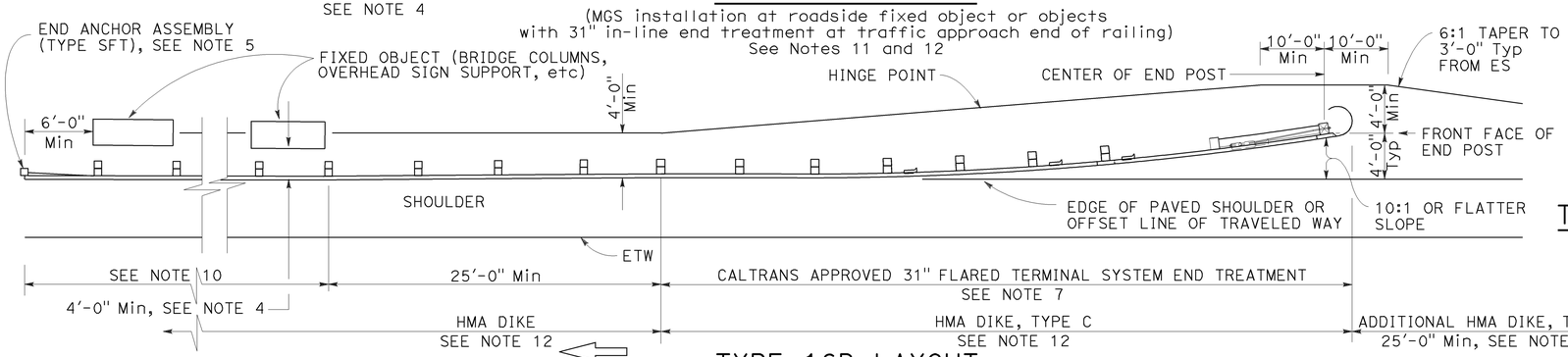

TYPE 16B LAYOUT

(MGS installation at roadside fixed object or objects with 31' flared end treatment at traffic approach end of railing)
See Notes 11 and 12

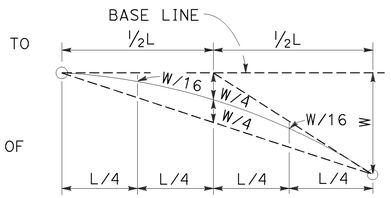

TYPIC AL PARABOLIC LAYOUT

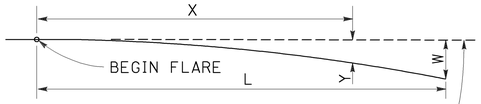

BASE LINE (EDGE OF PAVED SHOULDER OR OFFSET LINE OF EDGE OF TRAVELED WAY)

$$Y = \frac{WX^2}{L^2}$$

Y = OFFSET FROM BASE LINE
W = MAXIMUM OFFSET
X = DISTANCE ALONG BASE LINE
L = LENGTH OF FLARE

PARABOLIC FLARE OFFSETS

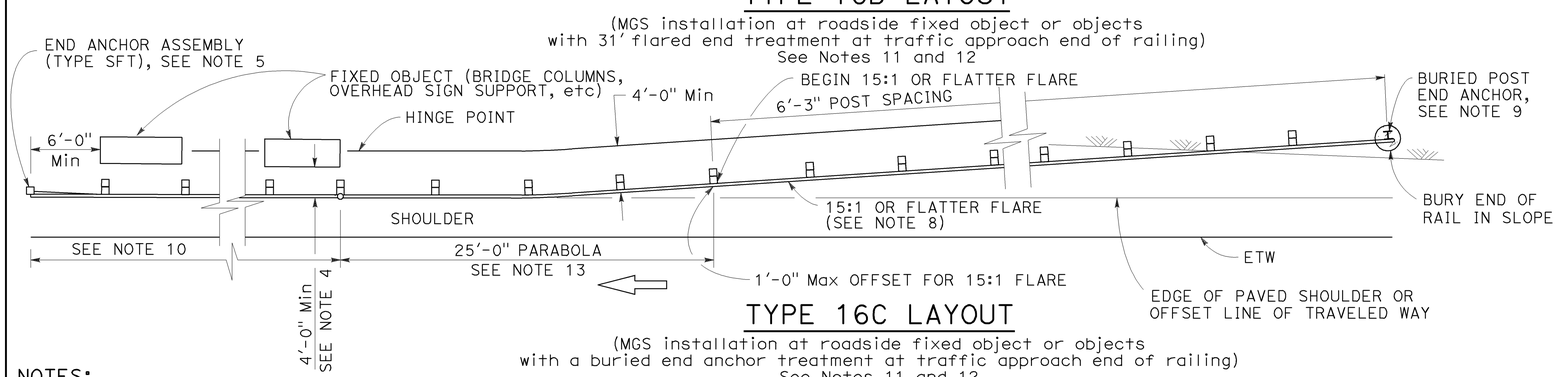

TYPE 16C LAYOUT

(MGS installation at roadside fixed object or objects with a buried end anchor treatment at traffic approach end of railing)
See Notes 11 and 12

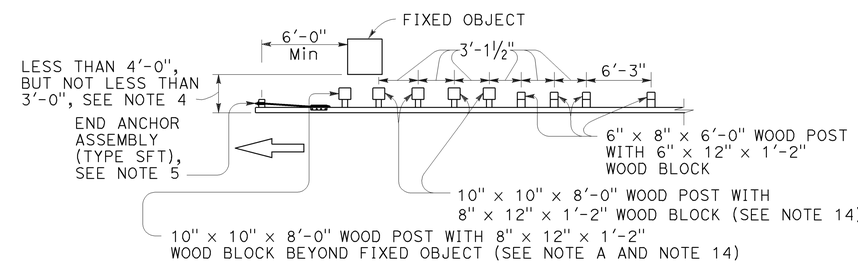

NOTE A: For a series of fixed objects (bridge columns, overhead sign supports, etc.) additional 10" x 10" x 8'-0" wood post with 8" x 12" x 1'-2" wood blocks at 3'-1½" center to center spacing are to be used between fixed objects.

STRENGTHENED MIDWEST GUARDRAIL SYSTEM SECTIONS FOR FIXED OBJECT

Use strengthened MGS sections with Types 16A, 16B or 16C layouts where minimum clearance between the face of the railing and fixed object(s) is less than 4'-0", but not less than 3'-0". See Note 4

NOTES:

1. Line post, blocks and hardware to be used are shown on Revised Standard Plans RSP A77L1, RSP A77L2, RSP A77M1, RSP A77N1 and RSP A77N2.
2. MGS post spacing to be 6'-3" center to center, except as otherwise noted.
3. Except as noted, line posts are 6" x 8" x 6'-0" wood with 6" x 12" x 1'-2" wood blocks. W6 x 8.5 or W6 x 9 steel posts, 6'-0" in length, with 6" x 12" x 1'-2" notched wood blocks or notched recycled plastic blocks may be used for 6" x 8" x 6'-0" wood line posts with 6" x 12" x 1'-2" wood blocks where applicable and when specified.
4. A 4'-0" minimum clearance is required between the face of the railing and the face of a fixed object located directly behind MGS sections with post spacing of 6'-3". Construct MGS as shown in the detail "Strengthened Midwest Guardrail System Sections for Fixed Object" on this plan, where the clearance between the face of the railing and the face of a fixed object is less than 4'-0", but not less than 3'-0". Where the clearance is less than 3'-0", a concrete wall or barrier should be constructed to shield the fixed object(s).
5. For End Anchor Assembly (Type SFT) details, see Revised Standard Plan RSP A77S1.
6. 31" in-line terminal system end treatments are used where site conditions will not accommodate a 31" flared end treatment.
7. The type of 31" terminal system to be used will be shown on the Project Plans.
8. The 15:1 or flatter flare used with Type 16C Layout is based on the edge of the paved shoulder or offset line of edge of the traveled way. The length of MGS within the 15:1 or flatter flare is based on site conditions and should be a length equal to multiples of 12'-6".
9. For details of the Buried Post End Anchor used with Type 16C Layout, see Revised Standard Plan RSP A77T2.
10. As site conditions dictate, construct additional MGS to shield fixed object(s). Additional MGS length equal to multiples of 12'-6". Post spacing at 6'-3" except as specified in Note 4.
11. Layout Types 16A, 16B or 16C are typically used where MGS is recommended to shield roadside fixed object(s) and a crashworthy 31" end treatment is required for only one direction of traffic.
12. Where placement of dike is required with MGS, see Revised Standard Plan RSP A77N4 for dike positioning details.
13. For typical flare offsets for 25'-0" length parabola with maximum offset of 1'-0", see Revised Standard Plan RSP A77P1.
14. W6 x 15 steel post, 8'-0" in length, with 8" x 12" x 1'-2" notched wood block or notched recycled plastic blocks may be used in place of the 10" x 10" x 8'-0" wood post with 8" x 12" x 1'-2" wood block shown in the detail "Strengthened Midwest Guardrail System Sections for Fixed Object".

STATE OF CALIFORNIA
DEPARTMENT OF TRANSPORTATION

MIDWEST GUARDRAIL SYSTEM TYPICAL LAYOUTS FOR ROADSIDE FIXED OBJECTS

NO SCALE

RSP A77R3 DATED JULY 19, 2013 SUPPLEMENTS THE STANDARD PLANS BOOK DATED 2010.

REVISED STANDARD PLAN RSP A77R3

2010 REVISED STANDARD PLAN RSP A77R3

6-20-13

Dist	COUNTY	ROUTE	POST MILES TOTAL PROJECT	SHEET No.	TOTAL SHEETS
08	Riv	60	R12.2/22.1, 26.5/30.4	86	113

Randell D. Hiatt
REGISTERED CIVIL ENGINEER

November 15, 2013
PLANS APPROVAL DATE

REGISTERED PROFESSIONAL ENGINEER
Randell D. Hiatt
No. C50200
Exp. 6-30-15
CIVIL
STATE OF CALIFORNIA

THE STATE OF CALIFORNIA OR ITS OFFICERS OR AGENTS SHALL NOT BE RESPONSIBLE FOR THE ACCURACY OR COMPLETENESS OF SCANNED COPIES OF THIS PLAN SHEET.

TO ACCOMPANY PLANS DATED 05-26-15

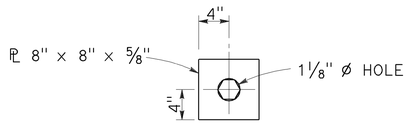

DETAIL "A"
CABLE CONNECTION END PLATE

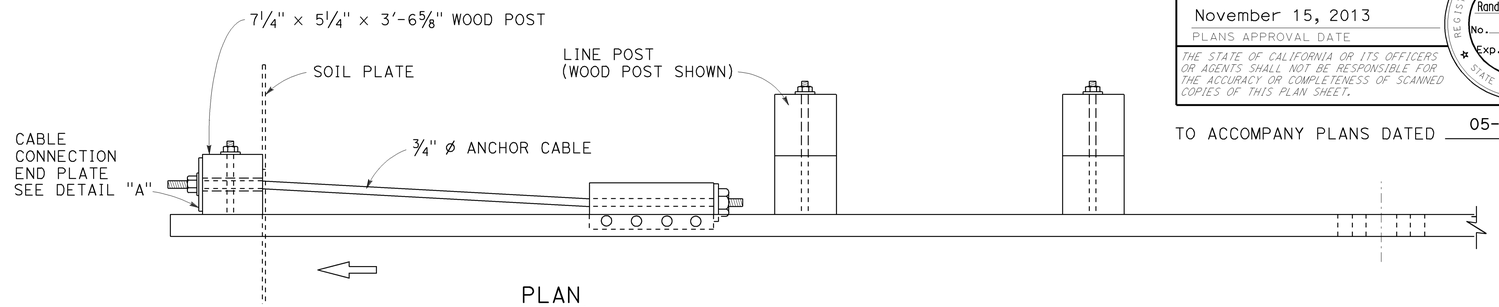

PLAN

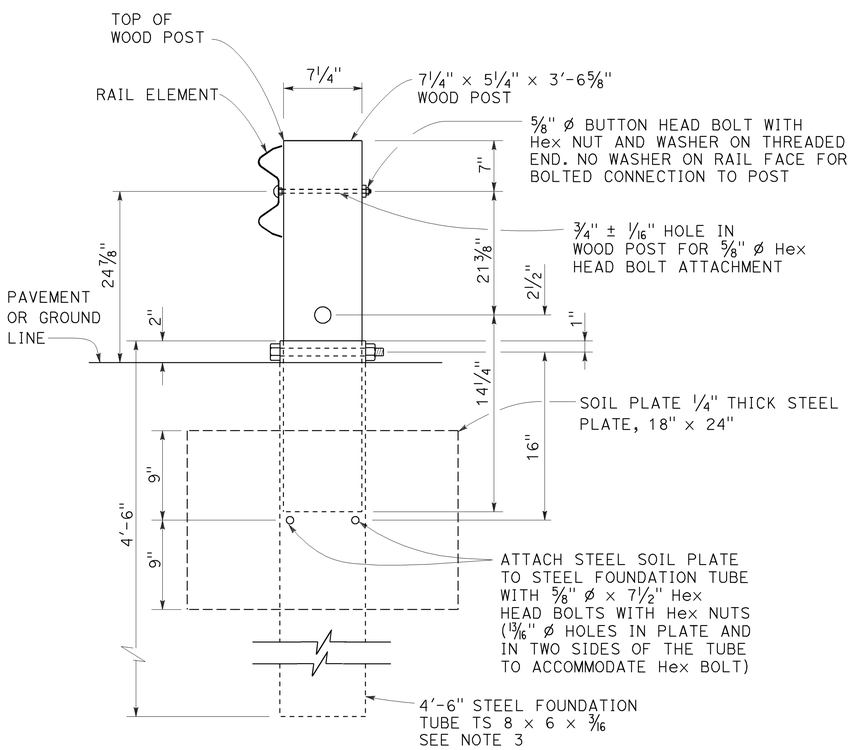

SECTION A-A

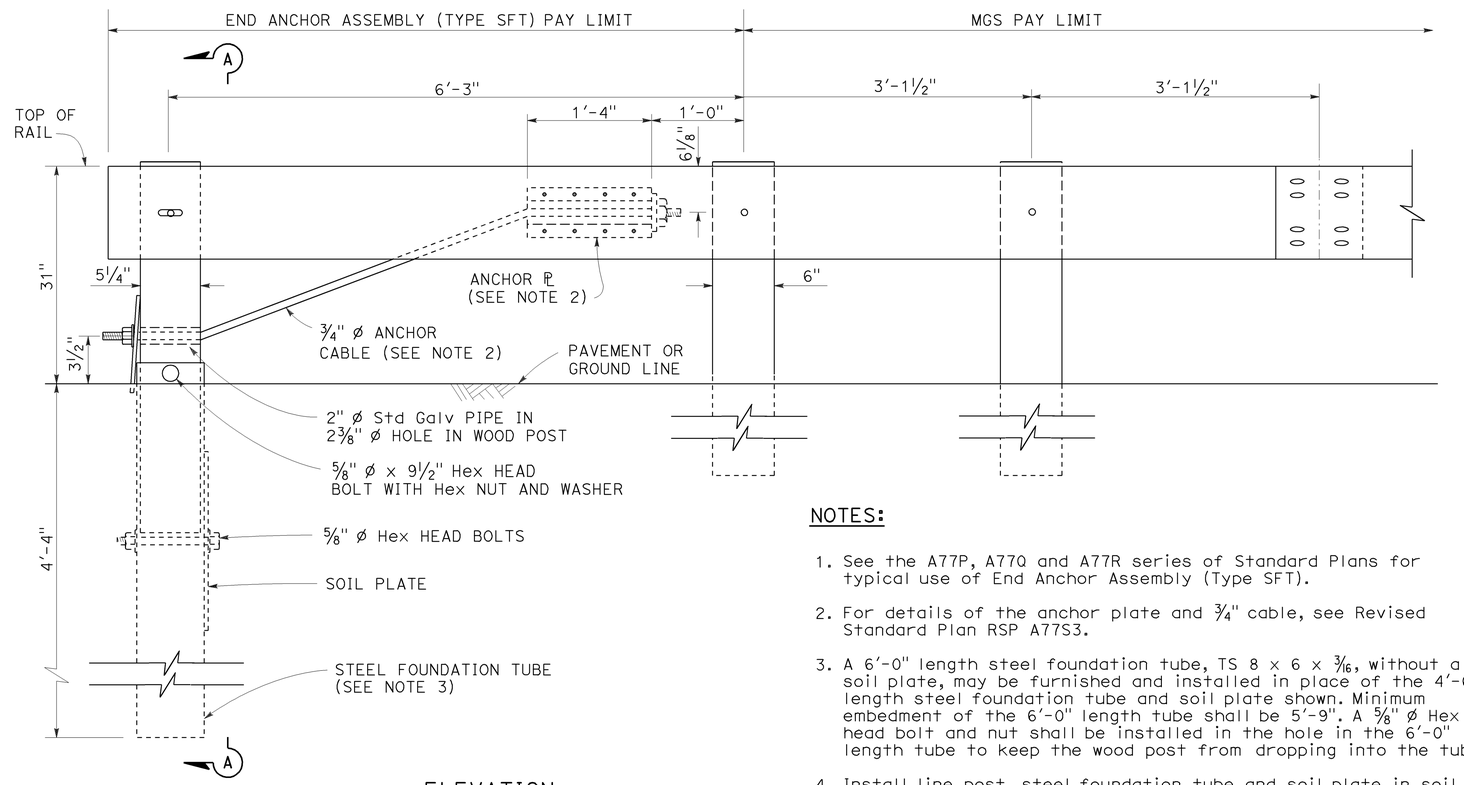

ELEVATION

END ANCHOR ASSEMBLY (TYPE SFT)
See Note 1

NOTES:

1. See the A77P, A77Q and A77R series of Standard Plans for typical use of End Anchor Assembly (Type SFT).
2. For details of the anchor plate and 3/4" cable, see Revised Standard Plan RSP A77S3.
3. A 6'-0" length steel foundation tube, TS 8 x 6 x 3/16, without a soil plate, may be furnished and installed in place of the 4'-6" length steel foundation tube and soil plate shown. Minimum embedment of the 6'-0" length tube shall be 5'-9". A 5/8" ø Hex head bolt and nut shall be installed in the hole in the 6'-0" length tube to keep the wood post from dropping into the tube.
4. Install line post, steel foundation tube and soil plate in soil.

STATE OF CALIFORNIA
DEPARTMENT OF TRANSPORTATION

MIDWEST GUARDRAIL SYSTEM END ANCHOR ASSEMBLY (TYPE SFT)

NO SCALE

RSP A77S1 DATED NOVEMBER 15, 2013 SUPERSEDES RSP A77S1 DATED JULY 19, 2013 THAT SUPPLEMENTS THE STANDARD PLANS BOOK DATED 2010.

REVISED STANDARD PLAN RSP A77S1

2010 REVISED STANDARD PLAN RSP A77S1

10-4-13

Dist	COUNTY	ROUTE	POST MILES TOTAL PROJECT	SHEET No.	TOTAL SHEETS
08	Riv	60	R12.2/22.1, 26.5/30.4	87	113

Randell D. Hiatt
REGISTERED CIVIL ENGINEER

November 15, 2013
PLANS APPROVAL DATE

REGISTERED PROFESSIONAL ENGINEER
Randell D. Hiatt
No. C50200
Exp. 6-30-15
CIVIL
STATE OF CALIFORNIA

THE STATE OF CALIFORNIA OR ITS OFFICERS OR AGENTS SHALL NOT BE RESPONSIBLE FOR THE ACCURACY OR COMPLETENESS OF SCANNED COPIES OF THIS PLAN SHEET.

TO ACCOMPANY PLANS DATED 05-26-15

2010 REVISED STANDARD PLAN RSP A77S3

NOTE:

See Revised Standard Plans RSP A77S1, RSP A77S2 and RSP A77T1 for typical use of anchor cable and anchor plate.

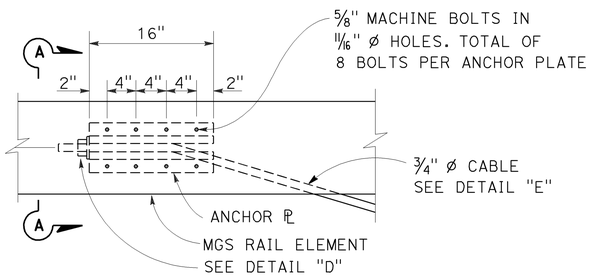

ANCHOR PLATE DETAIL
(MGS shown, TBB similar)

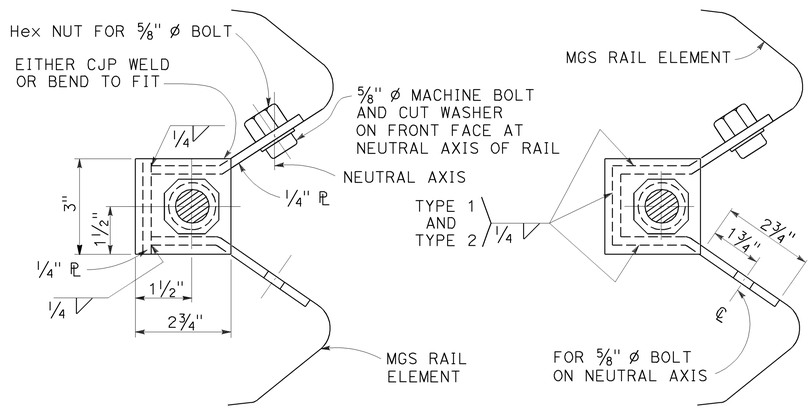

NOTE:
Dimensioning applies to both types.

SECTION A-A
(ALTERNATIVE TYPE 1)

SECTION A-A
(ALTERNATIVE TYPE 2)

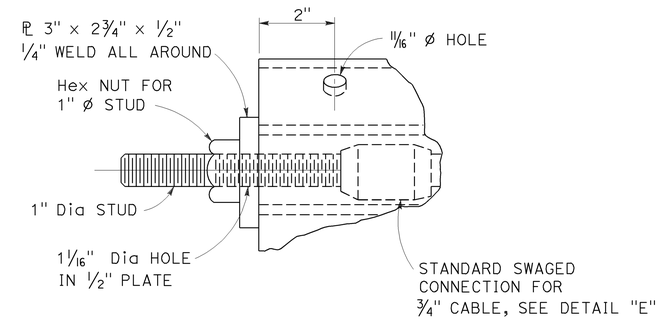

DETAIL "D"

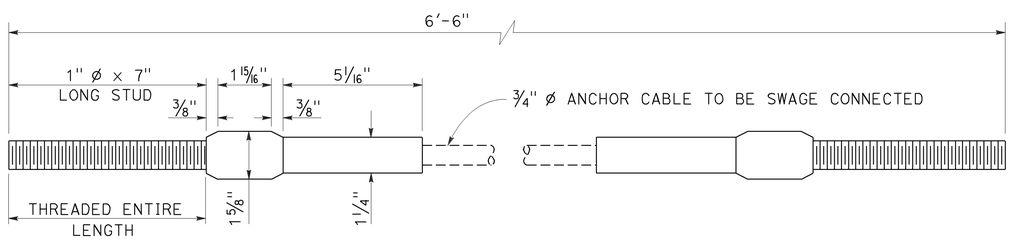

ANCHOR CABLE WITH
SWAGED FITTING AND STUD
DETAIL "E"

STATE OF CALIFORNIA
DEPARTMENT OF TRANSPORTATION

METAL RAILING ANCHOR CABLE AND ANCHOR PLATE DETAILS

NO SCALE

RSP A77S3 DATED NOVEMBER 15, 2013 SUPERSEDES RSP A77S3
DATED JULY 19, 2013 THAT SUPPLEMENTS THE STANDARD PLANS BOOK DATED 2010.

REVISED STANDARD PLAN RSP A77S3

10-4-13

Dist	COUNTY	ROUTE	POST MILES TOTAL PROJECT	SHEET No.	TOTAL SHEETS
08	Riv	60	R12.2/22.1, 26.5/30.4	88	113

Randell D. Hiatt
REGISTERED CIVIL ENGINEER

July 19, 2013
PLANS APPROVAL DATE

REGISTERED PROFESSIONAL ENGINEER
Randell D. Hiatt
No. C50200
Exp. 6-30-15
CIVIL
STATE OF CALIFORNIA

THE STATE OF CALIFORNIA OR ITS OFFICERS OR AGENTS SHALL NOT BE RESPONSIBLE FOR THE ACCURACY OR COMPLETENESS OF SCANNED COPIES OF THIS PLAN SHEET.

TO ACCOMPANY PLANS DATED 05-26-15

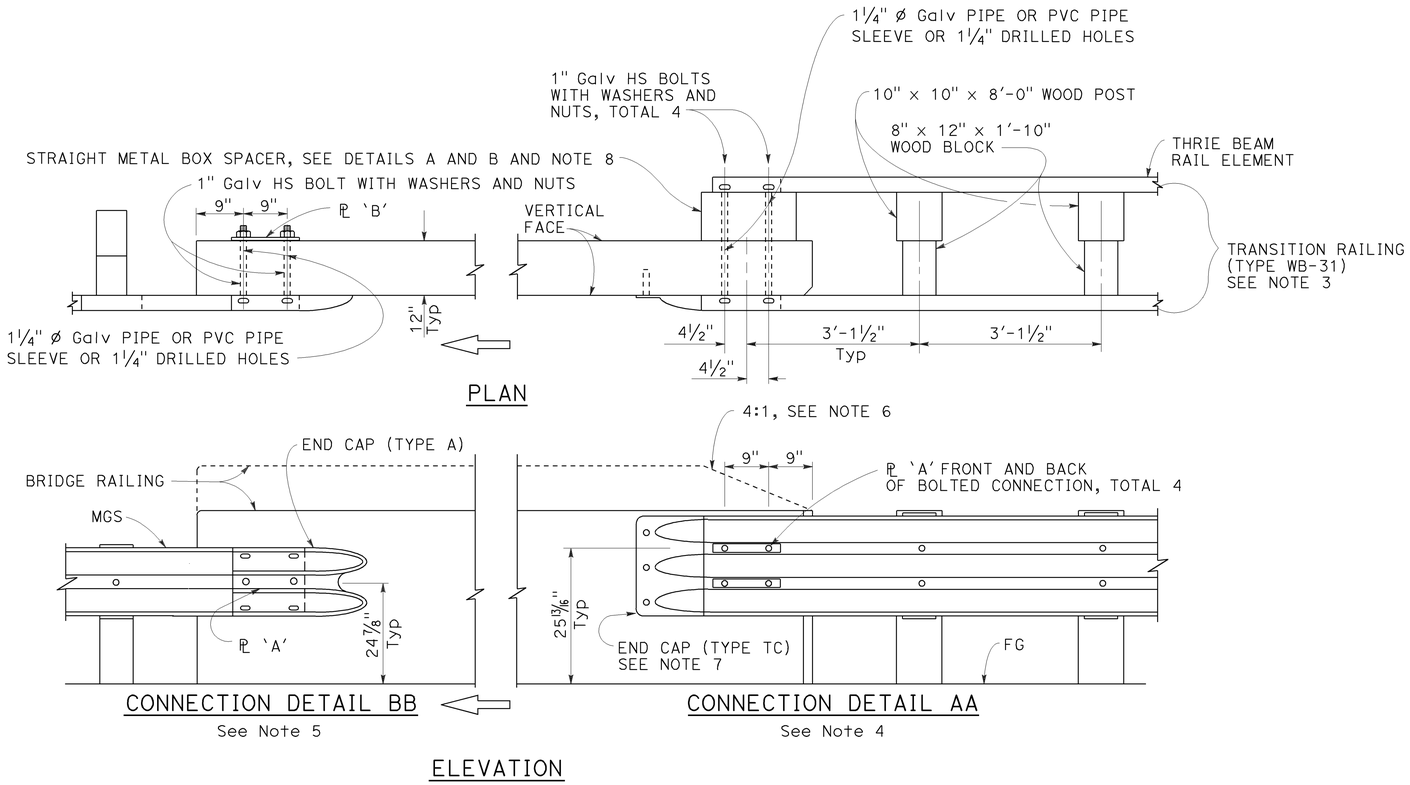

MIDWEST GUARDRAIL SYSTEM CONNECTION TO BRIDGE RAILING WITHOUT SIDEWALK

NOTES:

1. See Revised Standard Plan RSP A77U2 for additional connection details to bridges without sidewalks.
2. Additional details of posts, blocks and hardware are shown on Revised Standard Plans RSP A77M1, RSP A77N1 and RSP A77N2.
3. For additional details of Transition Railing (Type WB-31), see Revised Standard Plan RSP A77U4. Transition Railing (Type WB-31) transitions the 12 gauge MGS railing section to a heavier gage nested thrie beam railing section which is connected to the concrete bridge railing.
4. For typical use of Connection Detail AA, see Layout Types 12A and 12B on Revised Standard Plan RSP A77Q1, Layout Types 12C and 12D on Revised Standard Plan RSP A77Q2, and Layout Type 12E on Revised Standard Plan RSP A77Q3.
5. For typical use of Connection Detail BB, see Layout Type 12D (structure departure railing connection) on Revised Standard Plan RSP A77Q2 and Layout Type 12DD on Revised Standard Plan RSP A77Q5.
6. Where the height of the bridge railing exceeds the height of the thrie beam railing by more than 1" at Connection Detail AA, taper the top of the end of the bridge railing at 4:1 to match the top elevation of the thrie beam rail.
7. For details of End Cap (Type TC), see Revised Standard Plan RSP A77U4.
8. See Revised Standard Plan RSP A77U4 for additional details regarding depth dimension for straight metal box spacer.

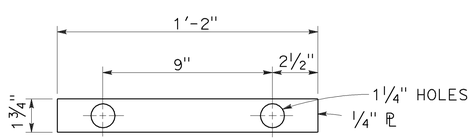

PLATE 'A'

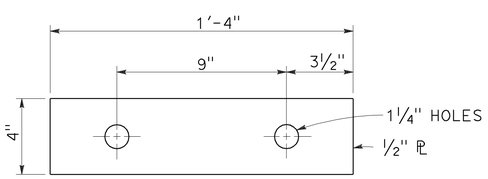

PLATE 'B'
(For backside of connection BB)

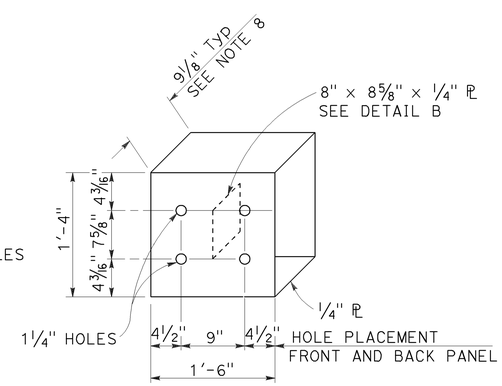

DETAIL A

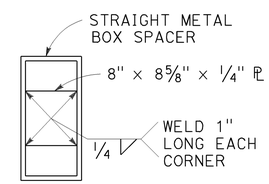

DETAIL B

STRAIGHT METAL BOX SPACER

STATE OF CALIFORNIA
DEPARTMENT OF TRANSPORTATION

MIDWEST GUARDRAIL SYSTEM CONNECTIONS TO BRIDGE RAILINGS WITHOUT SIDEWALKS DETAILS No. 1

NO SCALE

RSP A77U1 DATED JULY 19, 2013 SUPPLEMENTS THE STANDARD PLANS BOOK DATED 2010.

REVISED STANDARD PLAN RSP A77U1

2010 REVISED STANDARD PLAN RSP A77U1

7-8-13

Dist	COUNTY	ROUTE	POST MILES TOTAL PROJECT	SHEET No.	TOTAL SHEETS
08	Riv	60	R12.2/22.1, 26.5/30.4	89	113

Randell D. Hiatt
REGISTERED CIVIL ENGINEER

July 19, 2013
PLANS APPROVAL DATE

REGISTERED PROFESSIONAL ENGINEER
Randell D. Hiatt
No. C50200
Exp. 6-30-15
CIVIL
STATE OF CALIFORNIA

THE STATE OF CALIFORNIA OR ITS OFFICERS OR AGENTS SHALL NOT BE RESPONSIBLE FOR THE ACCURACY OR COMPLETENESS OF SCANNED COPIES OF THIS PLAN SHEET.

TO ACCOMPANY PLANS DATED 05-26-15

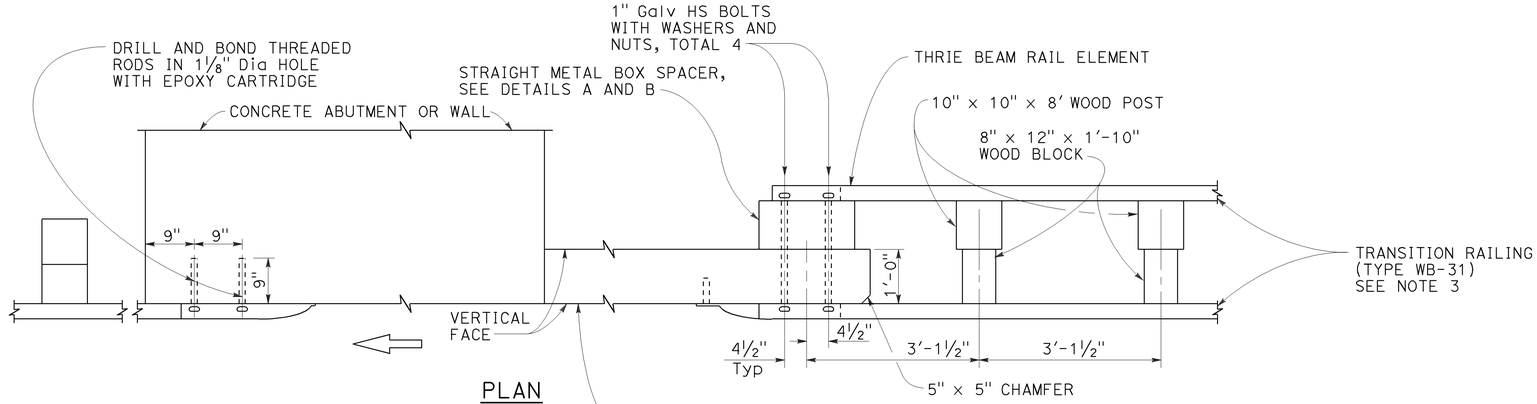

PLAN

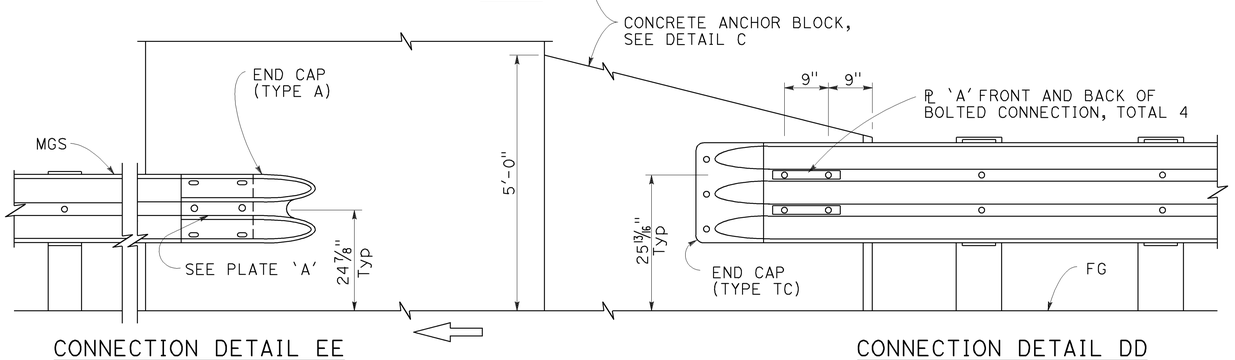

CONNECTION DETAIL EE
See Note 5

CONNECTION DETAIL DD
See Note 4

ELEVATION

MIDWEST GUARDRAIL SYSTEM CONNECTION TO ABUTMENT OR WALL

NOTES:

1. These connection details apply to abutments and walls.
2. Additional details of posts, blocks and hardware are shown on Revised Standard Plans RSP A77M1, RSP A77N1 and RSP A77N2.
3. For additional details of Transition Railing (Type WB-31), see Revised Standard Plan RSP A77U4. Transition Railing (Type WB-31) transitions the 12 gauge MGS railing section to a heavier gage nested thrie beam railingsection which is connected to the concrete anchor block.
4. For typical use of Connection Details DD, see Layout Types 12A and 12B on Revised Standard Plan RSP A77Q1 and Layout Types 12C and 12D on Revised Standard Plan RSP A77Q2.
5. For typical use of Connection Detail EE, see Layout Type 12D on Revised Standard Plan RSP A77Q2 and Layout Type 12DD on Revised Standard Plan RSP A77Q5.

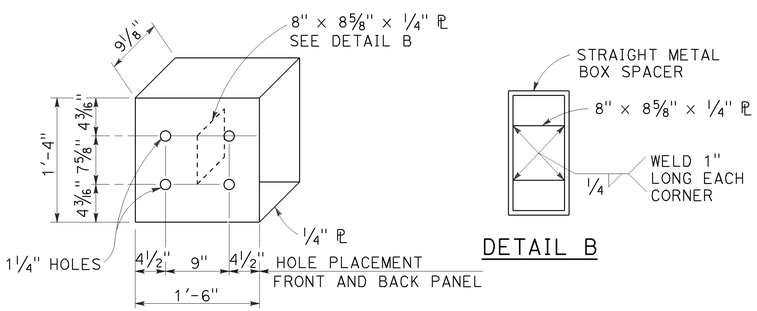

DETAIL A

DETAIL B

STRAIGHT METAL BOX SPACER

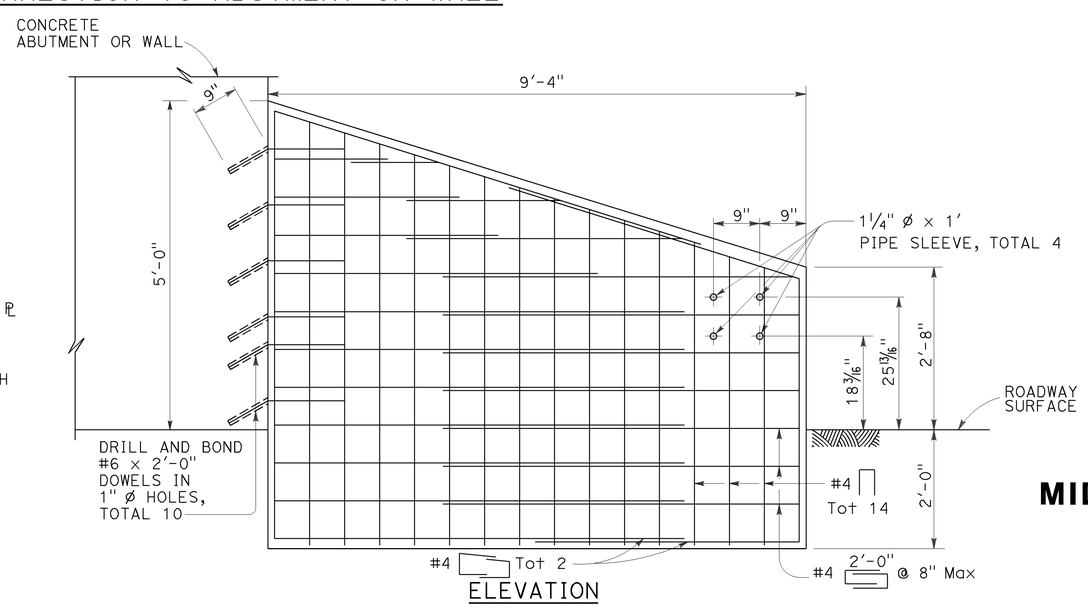

ELEVATION

ANCHOR BLOCK FOR TRANSITION RAILING CONNECTION

DETAIL C

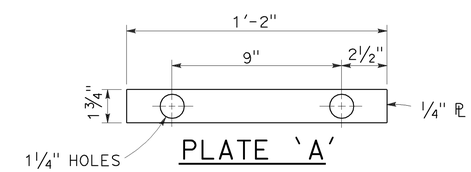

PLATE 'A'

STATE OF CALIFORNIA
DEPARTMENT OF TRANSPORTATION

MIDWEST GUARDRAIL SYSTEM CONNECTIONS TO ABUTMENTS AND WALLS

NO SCALE

RSP A77U3 DATED JULY 19, 2013 SUPPLEMENTS THE STANDARD PLANS BOOK DATED 2010.

REVISED STANDARD PLAN RSP A77U3

2010 REVISED STANDARD PLAN RSP A77U3

7-8-13

Dist	COUNTY	ROUTE	POST MILES TOTAL PROJECT	SHEET No.	TOTAL SHEETS
08	Riv	60	R12.2/22.1, 26.5/30.4	90	113

Randell D. Hiatt
REGISTERED CIVIL ENGINEER

January 23, 2015
PLANS APPROVAL DATE

REGISTERED PROFESSIONAL ENGINEER Randell D. Hiatt No. C50200 Exp. 6-30-15 CIVIL STATE OF CALIFORNIA

THE STATE OF CALIFORNIA OR ITS OFFICERS OR AGENTS SHALL NOT BE RESPONSIBLE FOR THE ACCURACY OR COMPLETENESS OF SCANNED COPIES OF THIS PLAN SHEET.

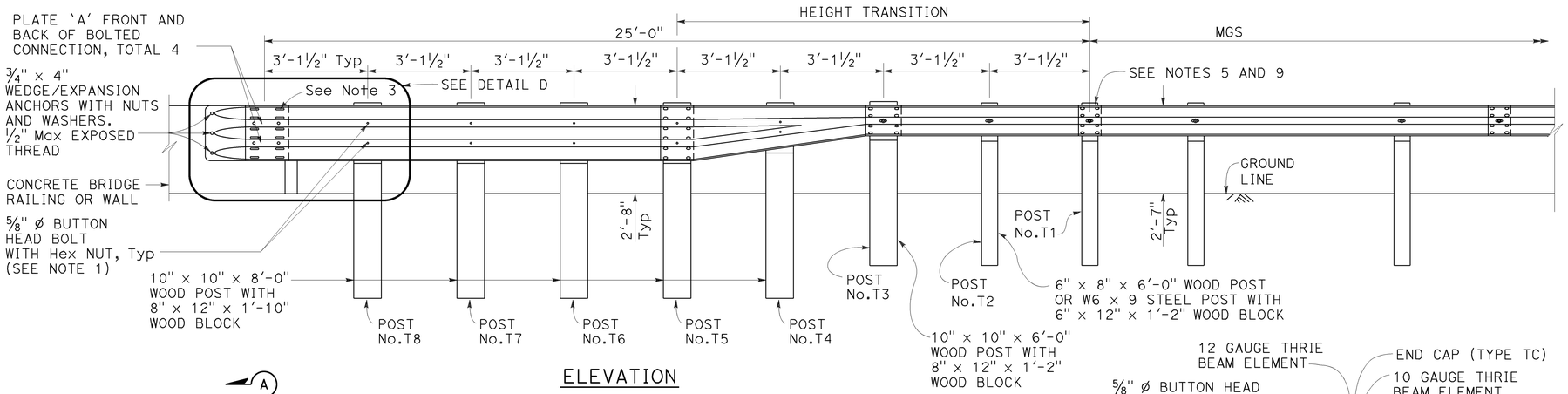

ELEVATION

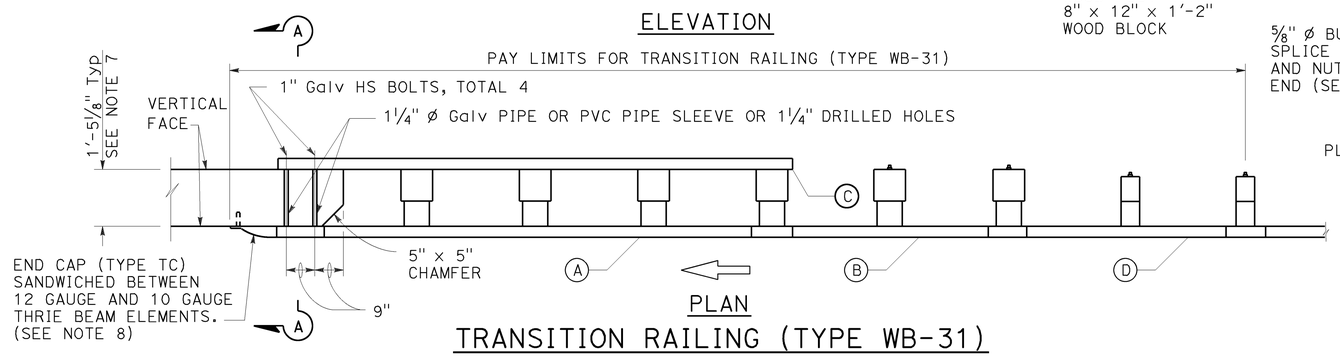

PLAN

TRANSITION RAILING (TYPE WB-31)

(No Blockout Attachment)

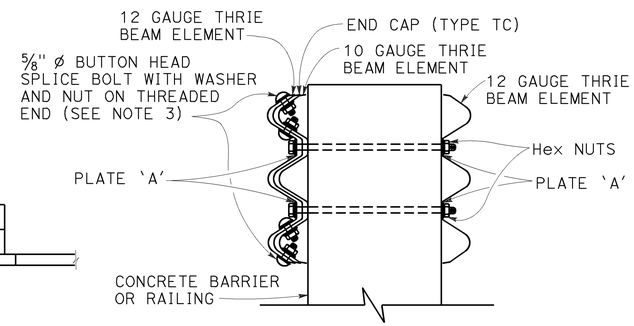

SECTION A-A

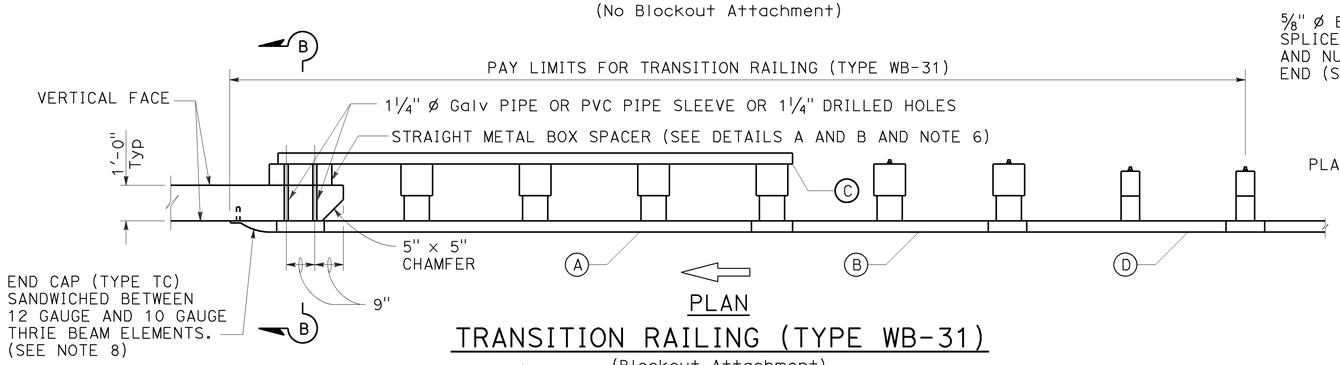

PLAN

TRANSITION RAILING (TYPE WB-31)

(Blockout Attachment)

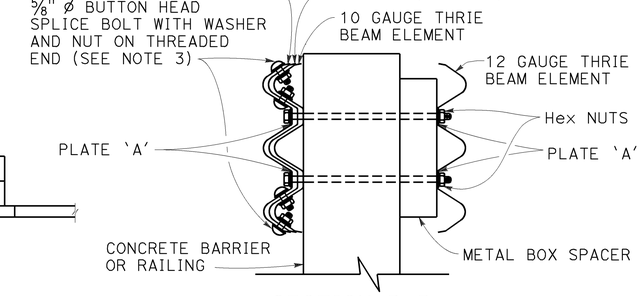

SECTION B-B

LEGEND:

(A) NESTED THRIE BEAM ELEMENTS (ONE 12 GAUGE ELEMENT NESTED OVER ONE 10 GAUGE ELEMENT).

(B) ONE ASYMMETRICAL 10 GAUGE "W" BEAM TO THRIE BEAM ELEMENT.

(C) ONE 12 GAUGE THRIE BEAM ELEMENT.

(D) ONE 10 GAUGE "W" BEAM RAIL ELEMENT (7'-3 1/2"LENGTH)

10 GAUGE = 0.138" THICK
12 GAUGE = 0.108" THICK

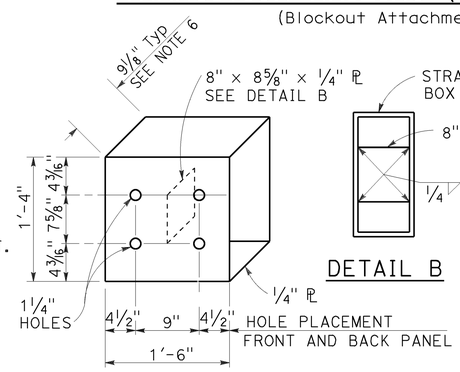

DETAIL A

STRAIGHT METAL BOX SPACER

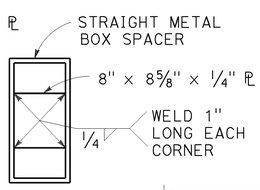

DETAIL B

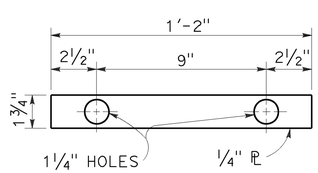

DETAIL C

PLATE 'A'

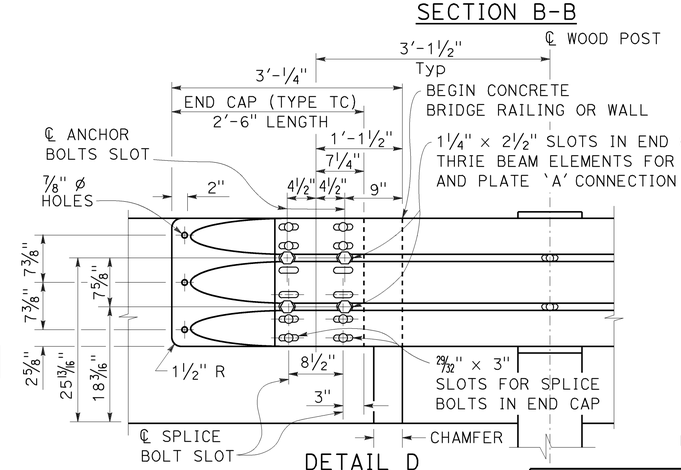

DETAIL D

NOTES:

TO ACCOMPANY PLANS DATED 05-26-15

1. Use 5/8" ø Button head bolts and hex nuts for connections to posts. No washer on rail face for bolted connections to post.
2. The nested rail elements, end cap, and 'W' beam to thrie beam element may be spliced together prior to bolting the elements to the wood post and concrete barrier or railing.
3. Exterior splice bolt holes for rail element splices at Post No. T5 and the connection to the concrete barrier or railing shall be the standard 29/32" x 1 1/8" slot size. Interior splice bolt holes at these locations may be increased up to 1 1/4" ø. Only the top 4 and the bottom 4 splice bolts with washers and nuts are required for rail splices at Post No. T5 and the connection to the concrete barrier or railing.
4. The top elevation of Posts No. T2 through No. T7 shall not project more than 1" above the top elevation of the rail element.
5. Typically, the railing connected to Transition Railing (Type WB-31) will be either standard railing section of MGS with height transition ratio of 150:1 or a Caltrans approved 31" end treatment attached to Post No. T1.
6. The depth of the metal box spacer varies from the 9 1/8" to 1 1/2" and is dependent on the width of the concrete railing or wall. The combined dimension for the depth of the metal box spacer plus the width of railing or wall is typically 21 1/8". Where the space between the backside of the concrete railing or wall and the rear thrie beam element is less than 1 1/2", metal plates similar to Plate 'A' are to be used as spacers.
7. Where the width of the concrete railing or wall is greater than 17 1/8", wood blocks are to be used to fill the space created between the backside of Posts No. T5 through No. T8 and the rear thrie beam element. These wood blocks shall be 8" in width and 1'-2" in length. The dimension between the front thrie beam element and the rear thrie beam element is to match the width of the concrete railing or wall.
8. End cap may be installed over 12 gauge and 10 gauge thrie beam elements where transition railing is installed on the departure end of bridge railing.
9. Conform standard railing section height to 31" at Post No. T1 using height transition ratio of 150:1.

STATE OF CALIFORNIA
DEPARTMENT OF TRANSPORTATION

MIDWEST GUARDRAIL SYSTEM TRANSITION RAILING (TYPE WB-31)

NO SCALE

RSP A77U4 DATED JANUARY 23, 2015 SUPERSEDES RSP A77U4 DATED NOVEMBER 15, 2013 AND RSP A77U4 DATED JULY 19, 2013 THAT SUPPLEMENTS THE STANDARD PLANS BOOK DATED 2010.

REVISED STANDARD PLAN RSP A77U4

2010 REVISED STANDARD PLAN RSP A77U4

1-8-15

Dist	COUNTY	ROUTE	POST MILES TOTAL PROJECT	SHEET No.	TOTAL SHEETS
08	Riv	60	R12.2/22.1, 26.5/30.4	91	113

REGISTERED CIVIL ENGINEER

July 19, 2013
PLANS APPROVAL DATE

REGISTERED PROFESSIONAL ENGINEER
Michael Janzen
No. 44788
Exp. 03-31-14
CIVIL
STATE OF CALIFORNIA

THE STATE OF CALIFORNIA OR ITS OFFICERS OR AGENTS SHALL NOT BE RESPONSIBLE FOR THE ACCURACY OR COMPLETENESS OF SCANNED COPIES OF THIS PLAN SHEET.

TO ACCOMPANY PLANS DATED 05-26-15

2010 REVISED STANDARD PLAN RSP A87A

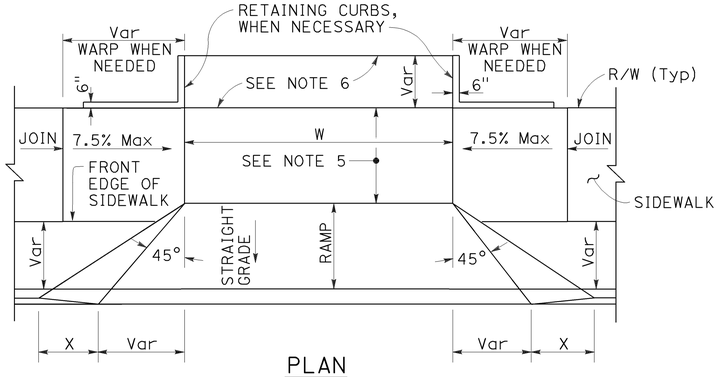

PLAN

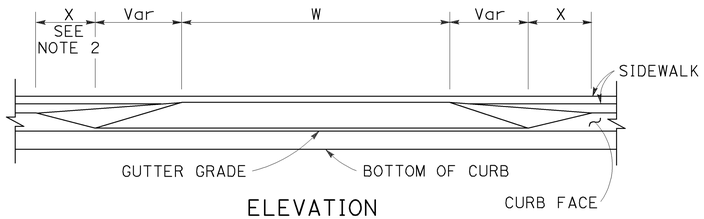

ELEVATION

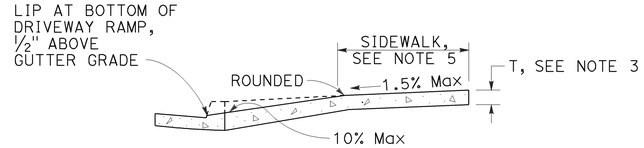

CASE A

Typical driveway, sidewalk not depressed

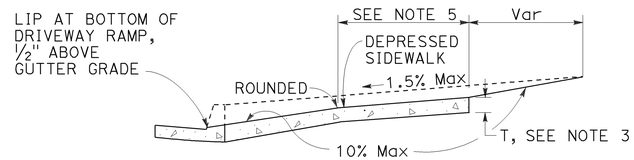

CASE B

Driveway with depressed sidewalk

SECTIONS

DRIVEWAYS

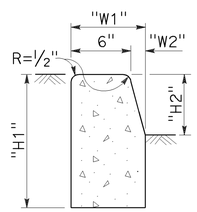

TYPE A1 CURBS

See Table A

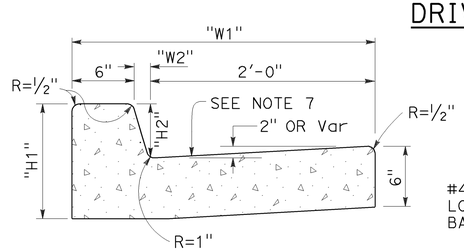

TYPE A2 CURBS

See Table A

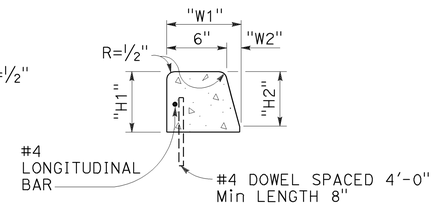

TYPE A3 CURBS

Superimposed on existing pavement
See Table A

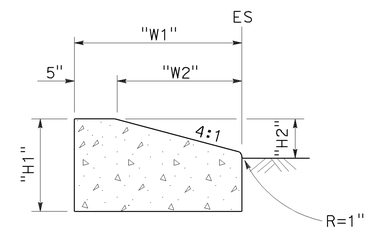

TYPE D CURBS

See Table A

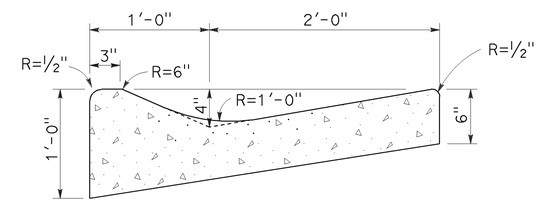

TYPE E CURB

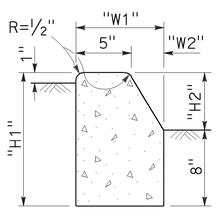

TYPE B1 CURBS

See Table A

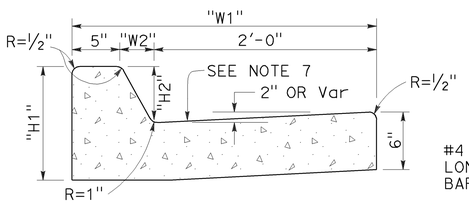

TYPE B2 CURBS

See Table A

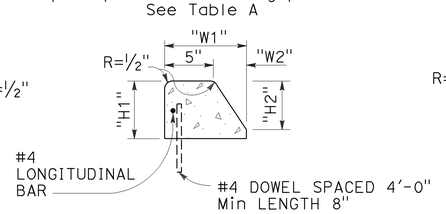

TYPE B3 CURBS

Superimposed on existing pavement
See Table A

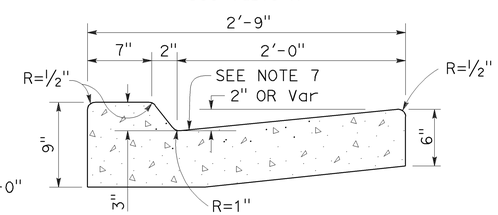

TYPE B4 CURBS

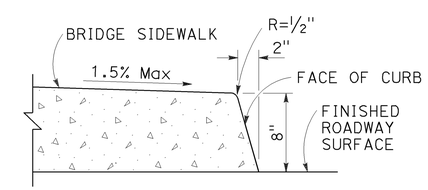

TYPE H CURB

On Bridges

CURBS

TABLE A

CURB TYPE	DIMENSIONS			
	"H1"	"H2"	"W1"	"W2"
A1-6	1'-2"	6"	7½"	1½"
A1-8	1'-4"	8"	8"	2"
A2-6	1'-0"	6"	2'-7½"	1½"
A2-8	1'-2"	8"	2'-8"	2"
A3-6	6"	5"	7¼"	1¼"
A3-8	8"	7"	7¾"	1¾"
B1-4	1'-0"	4"	7½"	2½"
B1-6	1'-2"	6"	9"	4"
B2-4	10"	4"	2'-7½"	2½"
B2-6	1'-0"	6"	2'-9"	4"
B3-4	4"	3"	7"	2"
B3-6	6"	5"	8½"	3½"
D-4	10"	4"	1'-6"	1'-1"
D-6	1'-0"	6"	2'-2"	1'-9"

CURB QUANTITIES

TYPE	CUBIC YARDS PER LINEAR FOOT
A1-6	0.02585
A1-8	0.03084
A2-6	0.05903
A2-8	0.06379
A3-6	0.01036
A3-8	0.01435
B1-4	0.02185
B1-6	0.02930
B2-4	0.05515
B2-6	0.06171
B3-4	0.00641
B3-6	0.01074
B4	0.05709
D-4	0.04083
D-6	0.06804
E	0.06661

NOTES:

1. Case A driveway section typically applies.
2. X=3'-0" except for curb heights over 10" where 4:1 slopes shall be used on curb slope.
3. Sidewalk and ramp thickness "T" at driveway shall be 4" for residental and 6" for commercial.
4. Difference in slope of the driveway ramp and the slope of a line between the gutter and a point on the roadway 5'-0" from gutter line shall not exceed 15%. Reduce driveway ramp slope, not gutter slope, where required.
5. Minimum width of clear passageway for sidewalk shall be 4'-2".
6. Retaining curbs and acquisition of construction easement may be necessary for narrow sidewalks or curb heights in excess of 6".
7. Across the pedestrian route at curb ramp locations, the gutter pan slope shall not exceed 1" of depth for each 2'-0" of width.

STATE OF CALIFORNIA
DEPARTMENT OF TRANSPORTATION

CURBS AND DRIVEWAYS

NO SCALE

RSP A87A DATED JULY 19, 2013 SUPERSEDES STANDARD PLAN A87A
DATED MAY 20, 2011 - PAGE 119 OF THE STANDARD PLANS BOOK DATED 2010.

REVISED STANDARD PLAN RSP A87A

Dist	COUNTY	ROUTE	POST MILES TOTAL PROJECT	SHEET No.	TOTAL SHEETS
08	Riv	60	R12.2/22.1, 26.5/30.4	92	113

REGISTERED CIVIL ENGINEER

July 19, 2013
PLANS APPROVAL DATE

REGISTERED PROFESSIONAL ENGINEER
Michael Janzen
No. 44788
Exp. 03-31-14
CIVIL
STATE OF CALIFORNIA

THE STATE OF CALIFORNIA OR ITS OFFICERS OR AGENTS SHALL NOT BE RESPONSIBLE FOR THE ACCURACY OR COMPLETENESS OF SCANNED COPIES OF THIS PLAN SHEET.

TO ACCOMPANY PLANS DATED 05-26-15

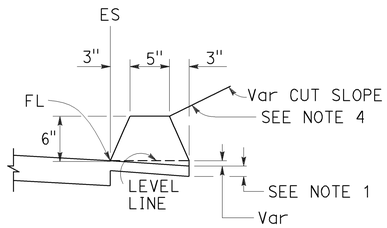

TYPE A
See Note 3

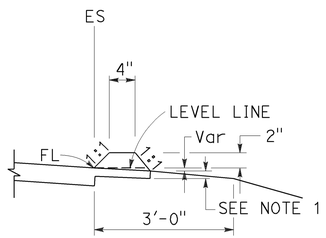

TYPE C

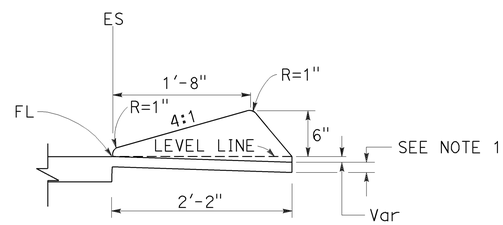

TYPE D

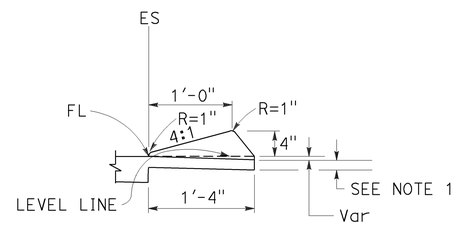

TYPE E

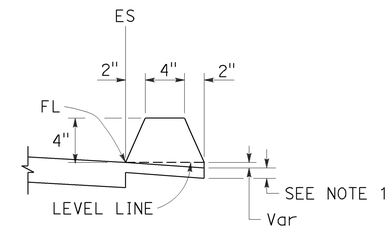

TYPE F
See Note 5

DIKES

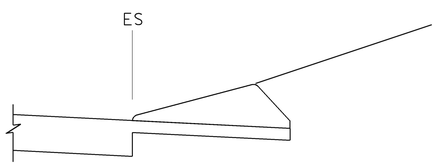

CASE C-1
Cut Slope

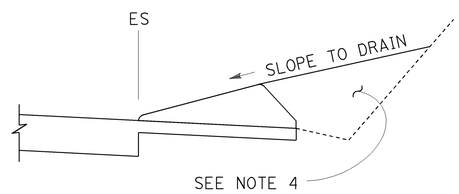

CASE C-2
Cut Slope

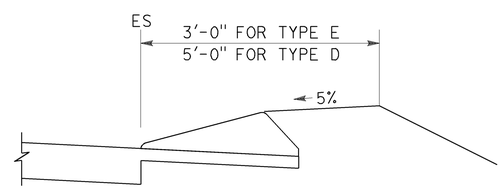

CASE F

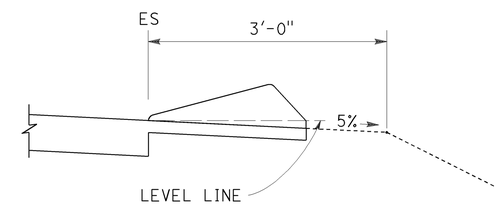

CASE R
See Note 2

TYPE D AND E BACKFILL DETAILS

NOTES:

1. For HMA shoulders only, extend top layer of HMA placed on the shoulder under dike with no joint at the ES. For projects with OGFC shoulders, do not extend OGFC under dike. See project plans for modified dike detail.
2. Case R applies to retrofit only projects where restrictive conditions do not provide enough width for Case F backfill.
3. Type A dike only to be used where restrictive slope conditions do not provide enough width to use Type D or Type E dike.
4. Fill and compact with excavated material to top of dike.
5. Use Type F dike, where dike is required with guard railing installations. See Revised Standard Plan RSP A77N4 for dike positioning details.

DIKE QUANTITIES

TYPE	CUBIC YARDS PER LINEAR FOOT
A	0.0135
C	0.0038
D	0.0293
E	0.0130
F	0.0066

Quantities based on 5% cross slope.

STATE OF CALIFORNIA
DEPARTMENT OF TRANSPORTATION

HOT MIX ASPHALT DIKES

NO SCALE

RSP A87B DATED JULY 19, 2013 SUPERSEDES STANDARD PLAN A87B DATED MAY 20, 2011 - PAGE 120 OF THE STANDARD PLANS BOOK DATED 2010.

REVISED STANDARD PLAN RSP A87B

2010 REVISED STANDARD PLAN RSP A87B

6-27-13

Dist	COUNTY	ROUTE	POST MILES TOTAL PROJECT	SHEET No.	TOTAL SHEETS
08	Riv	60	R12.2/22.1, 26.5/30.4	93	113

William K. Farnbach
REGISTERED CIVIL ENGINEER

July 19, 2013
PLANS APPROVAL DATE

REGISTERED PROFESSIONAL ENGINEER
William K. Farnbach
No. C49042
Exp. 9-30-14
CIVIL
STATE OF CALIFORNIA

THE STATE OF CALIFORNIA OR ITS OFFICERS OR AGENTS SHALL NOT BE RESPONSIBLE FOR THE ACCURACY OR COMPLETENESS OF SCANNED COPIES OF THIS PLAN SHEET.

TO ACCOMPANY PLANS DATED 05-26-15

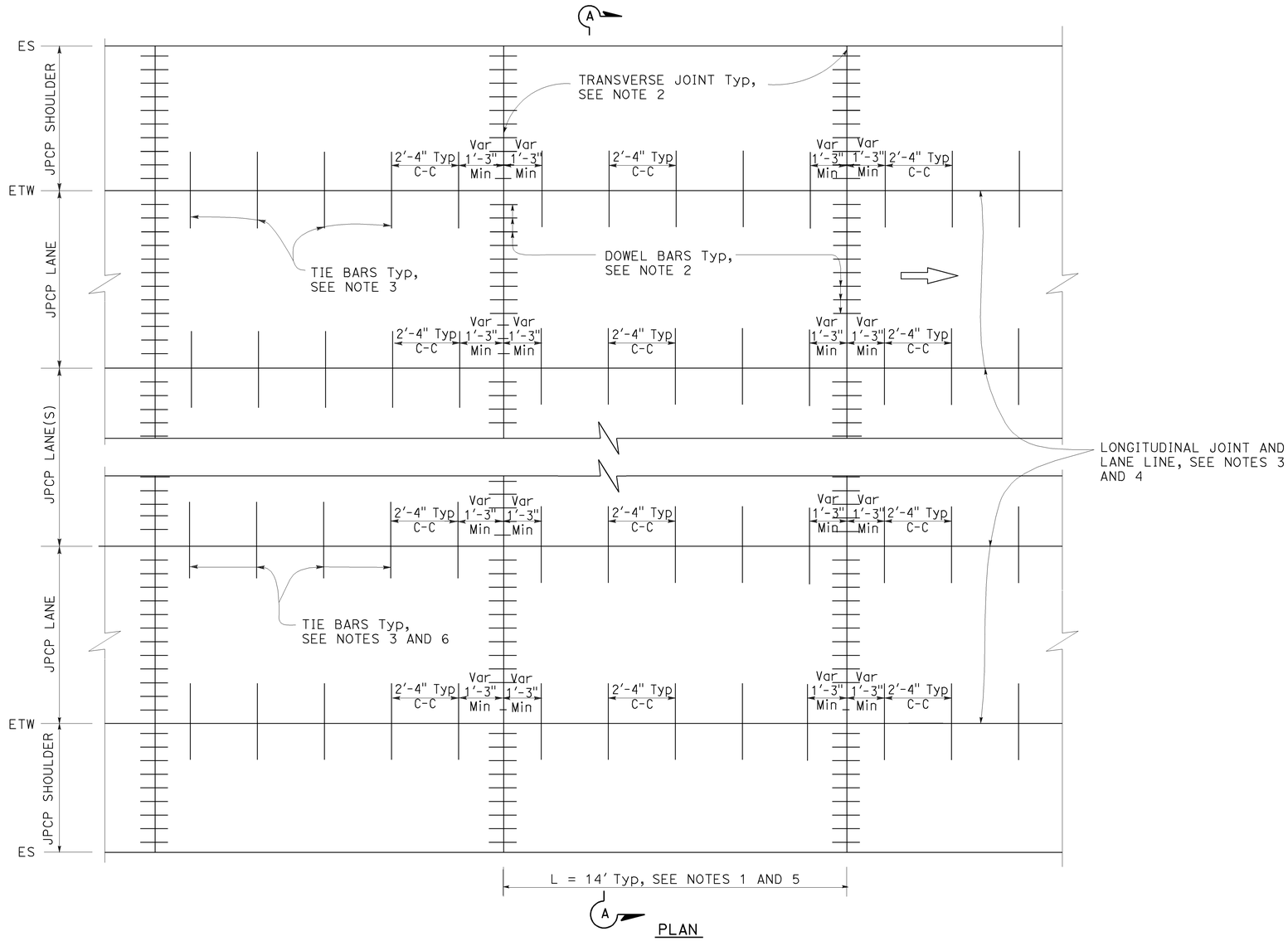

PLAN

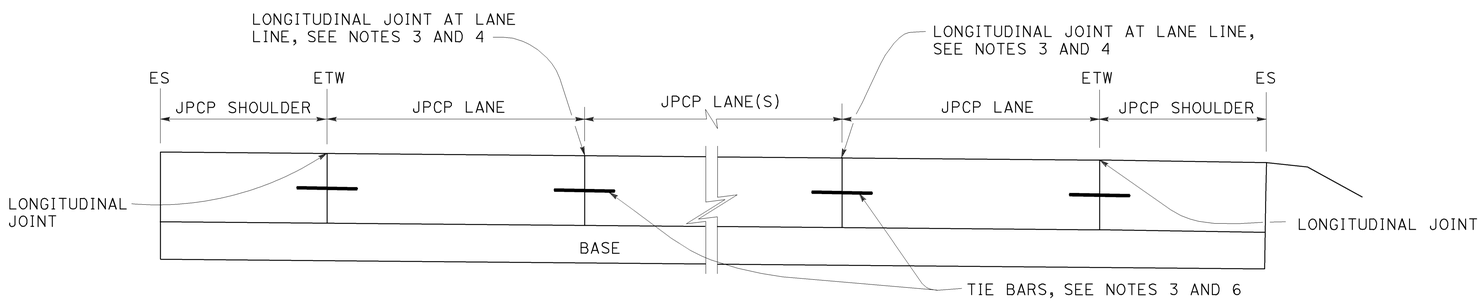

SECTION A-A

NOTES:

1. Transverse joint spacing may be adjusted to no less than 10' and no more than 14' to conform to bridges, change in pavement type, and hardened concrete pavement.
2. For transverse joint and dowel bar details not shown, see Revised Standard Plan RSP P10.
3. For longitudinal joint and tie bar details not shown, see Revised Standard Plan RSP P15.
4. For additional longitudinal joint layout details, see Revised Standard Plan RSP P18.
5. For joint layout at intersections, see Project Plans.
6. For dowel bars at longitudinal joint. see Revised Standard Plan RSP P18.

STATE OF CALIFORNIA
DEPARTMENT OF TRANSPORTATION

JOINTED PLAIN CONCRETE PAVEMENT NEW CONSTRUCTION

NO SCALE

RSP P1 DATED JULY 19, 2013 SUPERSEDES STANDARD PLAN P1
DATED MAY 20, 2011 - PAGE 125 OF THE STANDARD PLANS BOOK DATED 2010.

REVISED STANDARD PLAN RSP P1

2010 REVISED STANDARD PLAN RSP P1

5-31-13

Dist	COUNTY	ROUTE	POST MILES TOTAL PROJECT	SHEET No.	TOTAL SHEETS
08	Riv	60	R12.2/22.1, 26.5/30.4	94	113

William K. Farnbach
REGISTERED CIVIL ENGINEER

July 19, 2013
PLANS APPROVAL DATE

REGISTERED PROFESSIONAL ENGINEER William K. Farnbach No. C49042 Exp. 9-30-14 CIVIL STATE OF CALIFORNIA

THE STATE OF CALIFORNIA OR ITS OFFICERS OR AGENTS SHALL NOT BE RESPONSIBLE FOR THE ACCURACY OR COMPLETENESS OF SCANNED COPIES OF THIS PLAN SHEET.

TO ACCOMPANY PLANS DATED 05-26-15

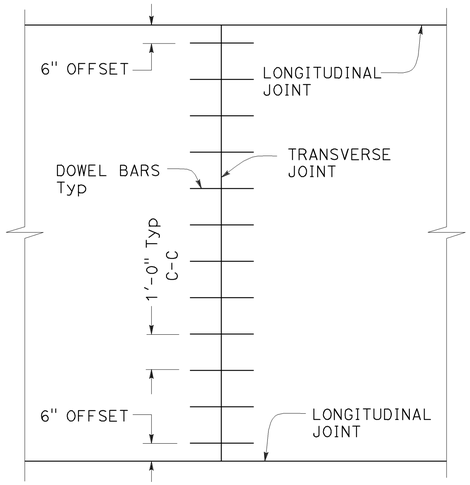

TRANSVERSE JOINT DOWEL BAR LAYOUT

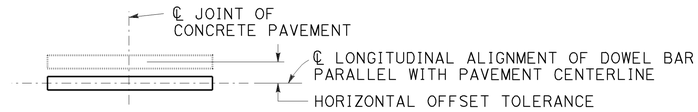

PLAN

HORIZONTAL OFFSET TOLERANCE

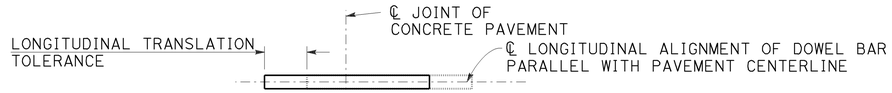

PLAN

LONGITUDINAL TRANSLATION TOLERANCE

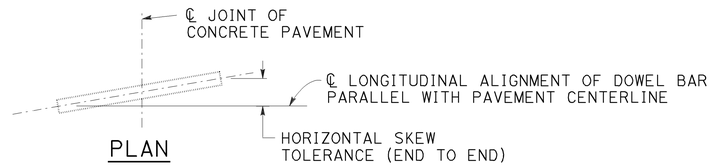

PLAN

HORIZONTAL SKEW TOLERANCE

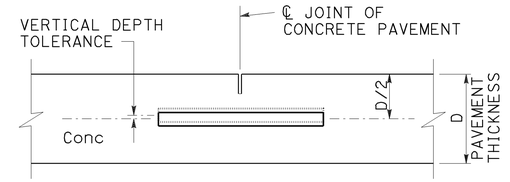

ELEVATION

VERTICAL DEPTH TOLERANCE

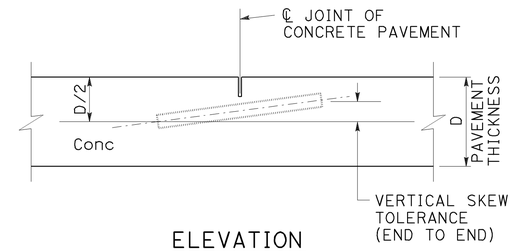

ELEVATION

VERTICAL SKEW TOLERANCE

NOTES:

1. See Revised Standard Plan RSP P1 for typical dowel bar placement and locations.
2. Where fresh concrete pavement is placed against new concrete or existing concrete pavement, rounding the corner of the existing concrete pavement is not required.
3. May also use ¾" Dia dowel bars 2'-4" ± ¼" in length. Center the length of dowel bars at the centerline of longitudinal joint.

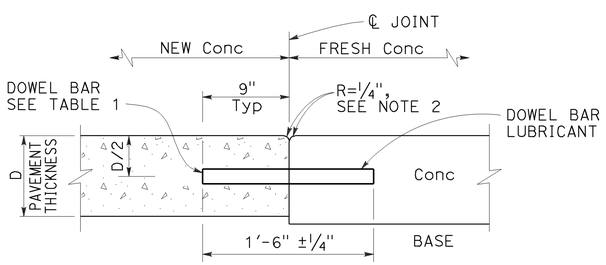

TRANSVERSE CONSTRUCTION JOINT DETAIL

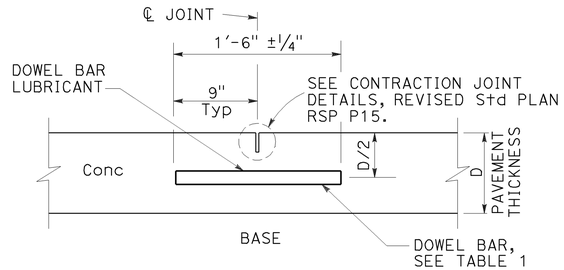

TRANSVERSE CONTRACTION JOINT

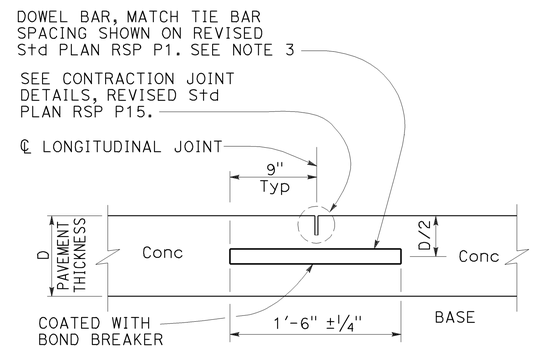

LONGITUDINAL CONTRACTION JOINT WITH DOWEL BARS

See Revised Std Plan RSP P18

TABLE 1

DOWEL BAR DIAMETER TABLE			
PAVEMENT THICKNESS	0.65'	> 0.65' - 0.85'	> 0.85'
MINIMUM DOWEL * BAR DIAMETER	1"	1¼"	1½"

* The drilled hole diameter must be ⅛" to 3/16" larger than the bar diameter.

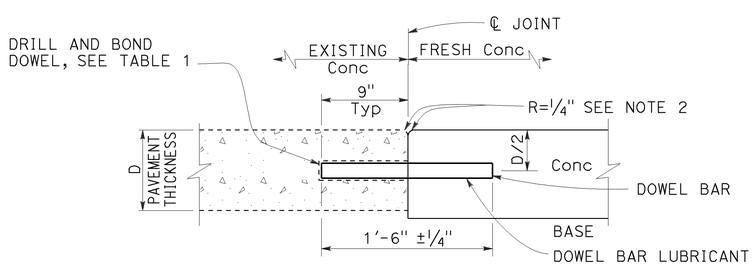

TRANSVERSE CONSTRUCTION JOINT FOR EXISTING CONCRETE PAVEMENT

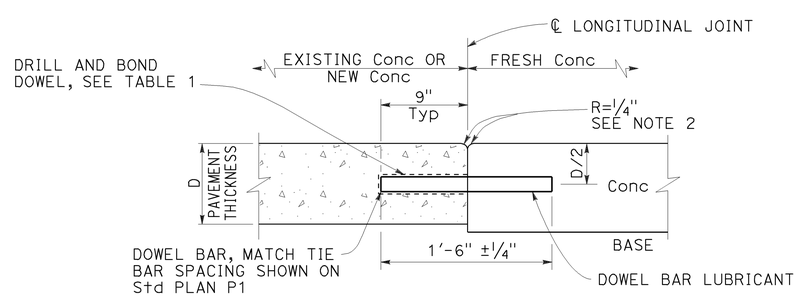

LONGITUDINAL CONSTRUCTION JOINT WITH DOWEL BARS

See Revised Std Plan RSP P18

STATE OF CALIFORNIA
DEPARTMENT OF TRANSPORTATION

CONCRETE PAVEMENT DOWEL BAR DETAILS

NO SCALE

RSP P10 DATED JULY 19, 2013 SUPERSEDES RSP P10 DATED APRIL 20, 2012 AND STANDARD PLAN P10 DATED MAY 20, 2011 - PAGE 131 OF THE STANDARD PLANS BOOK DATED 2010.

REVISED STANDARD PLAN RSP P10

2010 REVISED STANDARD PLAN RSP P10

5-31-13

Dist	COUNTY	ROUTE	POST MILES TOTAL PROJECT	SHEET No.	TOTAL SHEETS
08	Riv	60	R12.2/22.1, 26.5/30.4	95	113

William K. Farnbach
REGISTERED CIVIL ENGINEER

July 19, 2013
PLANS APPROVAL DATE

REGISTERED PROFESSIONAL ENGINEER William K. Farnbach No. C49042 Exp. 9-30-14 CIVIL STATE OF CALIFORNIA

THE STATE OF CALIFORNIA OR ITS OFFICERS OR AGENTS SHALL NOT BE RESPONSIBLE FOR THE ACCURACY OR COMPLETENESS OF SCANNED COPIES OF THIS PLAN SHEET.

TO ACCOMPANY PLANS DATED 05-26-15

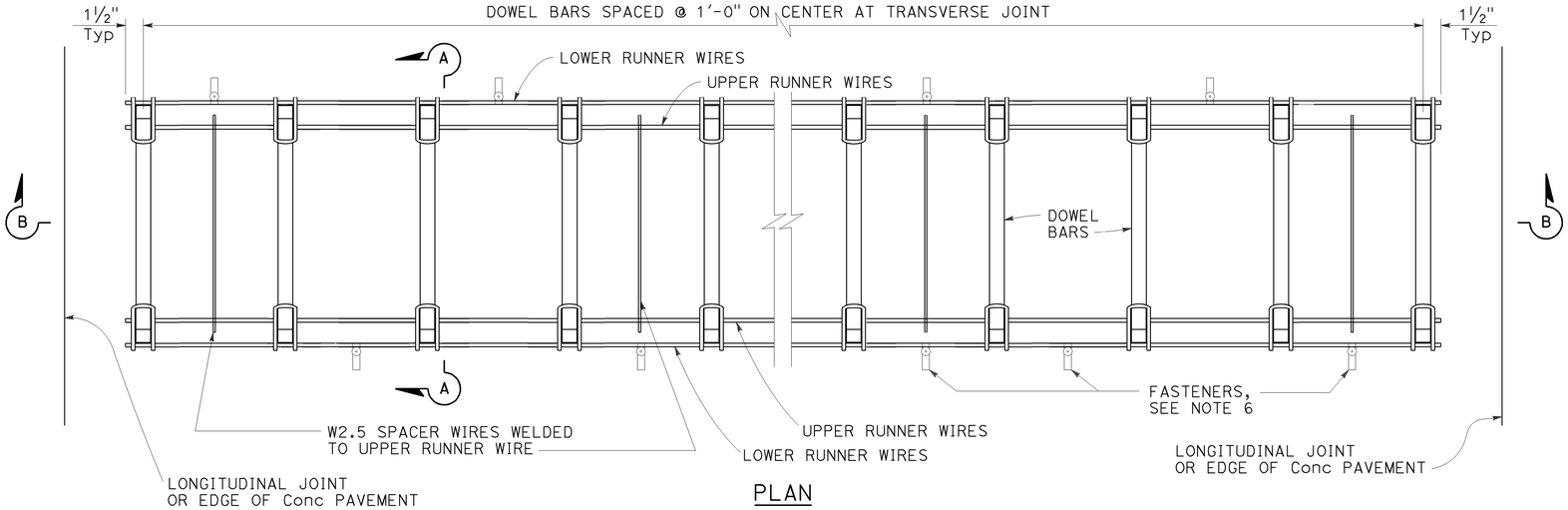

PLAN

DOWEL BAR BASKET (TRANSVERSE JOINT)

See Note 1

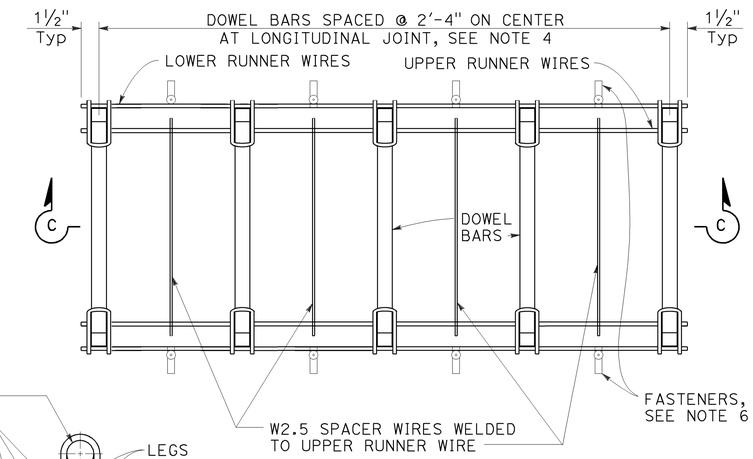

PLAN

DOWEL BAR BASKET (LONGITUDINAL JOINT)

See Note 1

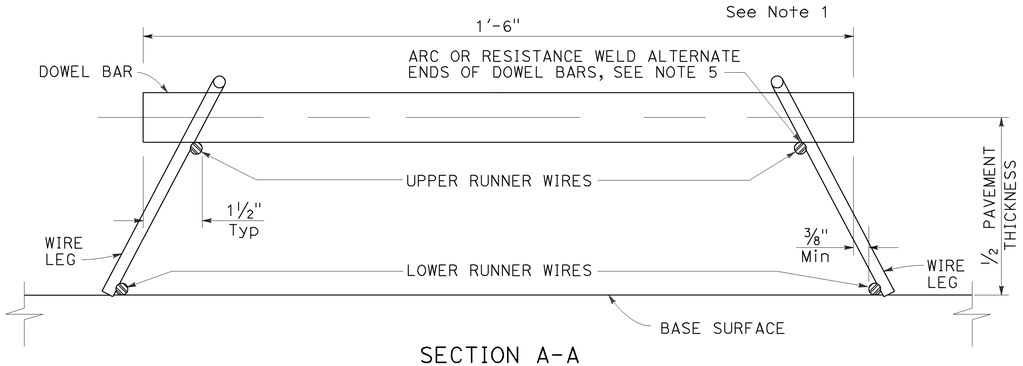

SECTION A-A

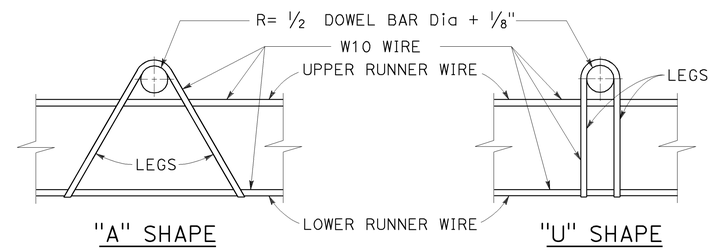

ASSEMBLY FRAME DETAILS

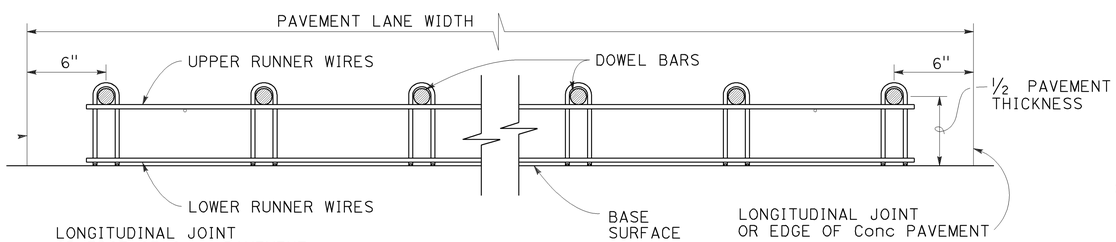

SECTION B-B

See Note 1

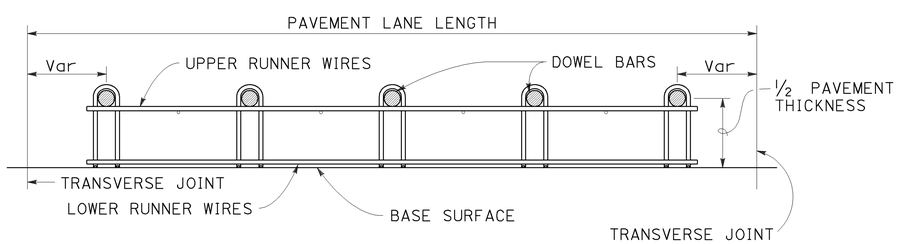

SECTION C-C

See Notes 1 and 4

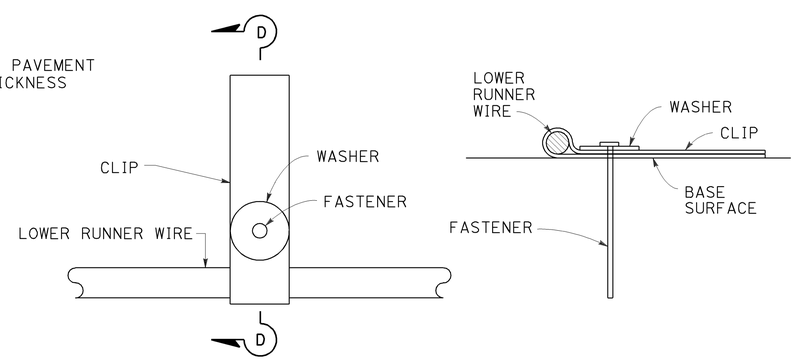

PLAN

SECTION D-D

FASTENER DETAIL

See Note 6

NOTES:

1. "U" frame shape assembly shown. Use either "U" frame shape or "A" frame shape.
2. Wire sizes shown are the minimum required.
3. All wire intersections must be resistance welded.
4. Use tie bar spacing for longitudinal dowel bar locations. See Revised Standard Plans RSP P1, RSP P2, RSP P3A, and RSP P3B for tie bar requirements.
5. Weld may be at the top or bottom of the dowel bar.
6. Use anchor pins where soil or granular base is used. See Revised Standard Plan RSP P17 for Anchor Pin Detail.

STATE OF CALIFORNIA
DEPARTMENT OF TRANSPORTATION

CONCRETE PAVEMENT DOWEL BAR BASKET DETAILS

NO SCALE

RSP P12 DATED JULY 19, 2013 SUPERSEDES STANDARD PLAN P12 DATED MAY 20, 2011 - PAGE 132 OF THE STANDARD PLANS BOOK DATED 2010.

REVISED STANDARD PLAN RSP P12

2010 REVISED STANDARD PLAN RSP P12

5-31-13

Dist	COUNTY	ROUTE	POST MILES TOTAL PROJECT	SHEET No.	TOTAL SHEETS
08	Riv	60	R12.2/22.1, 26.5/30.4	96	113

William K. Farnbach
REGISTERED CIVIL ENGINEER

July 19, 2013
PLANS APPROVAL DATE

REGISTERED PROFESSIONAL ENGINEER William K. Farnbach No. C49042 Exp. 9-30-14 CIVIL STATE OF CALIFORNIA

THE STATE OF CALIFORNIA OR ITS OFFICERS OR AGENTS SHALL NOT BE RESPONSIBLE FOR THE ACCURACY OR COMPLETENESS OF SCANNED COPIES OF THIS PLAN SHEET.

TO ACCOMPANY PLANS DATED 05-26-15

2010 REVISED STANDARD PLAN RSP P15

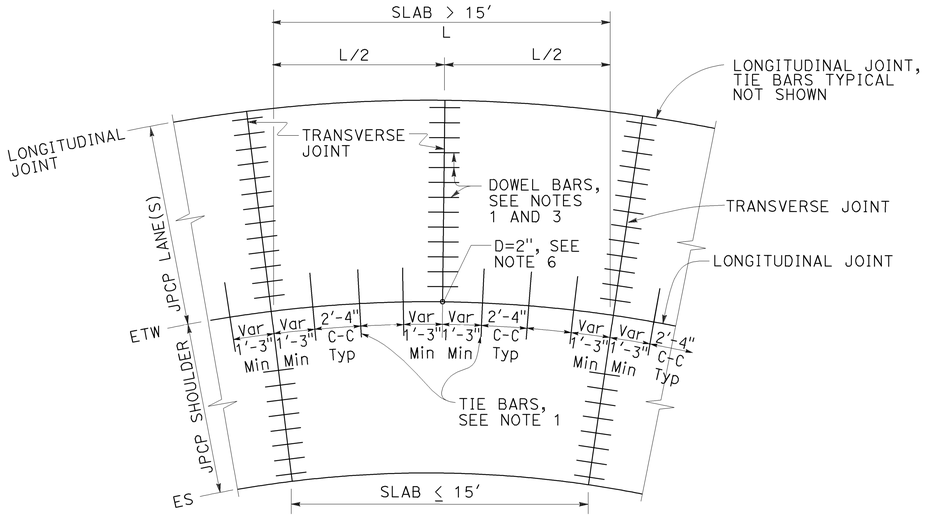

TIE BAR LAYOUT IN CURVED LANES

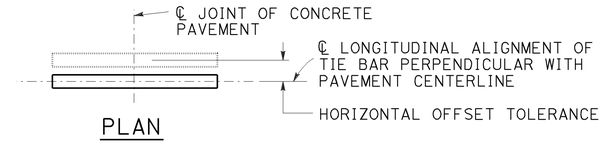

PLAN

HORIZONTAL OFFSET TOLERANCE

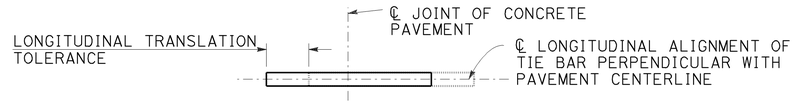

PLAN

LONGITUDINAL TRANSLATION TOLERANCE

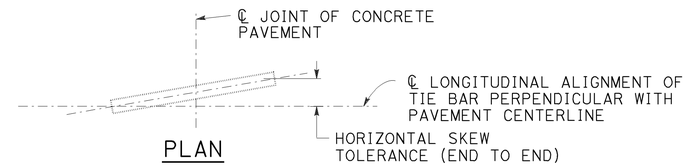

PLAN

HORIZONTAL SKEW TOLERANCE

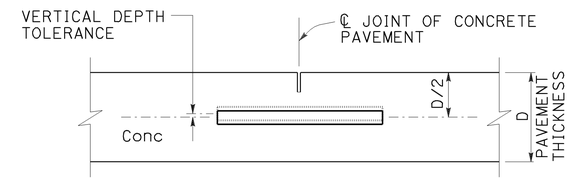

ELEVATION

VERTICAL DEPTH TOLERANCE

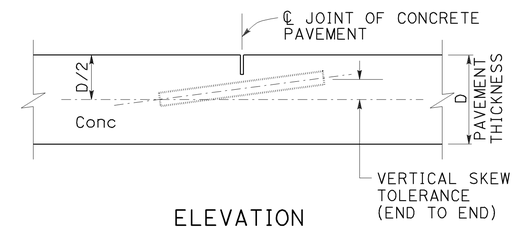

ELEVATION

VERTICAL SKEW TOLERANCE

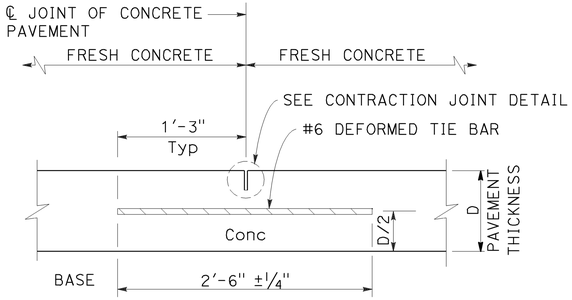

LONGITUDINAL CONTRACTION JOINT

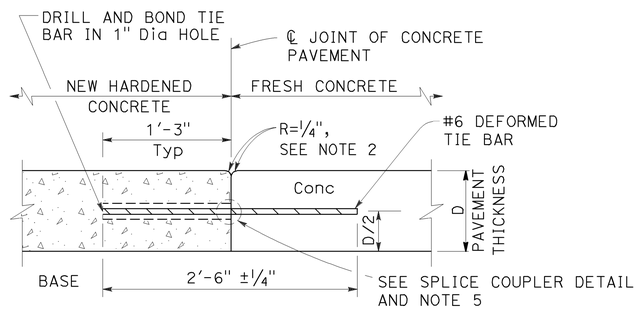

LONGITUDINAL CONSTRUCTION JOINT

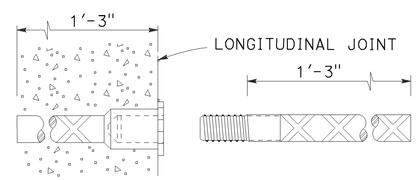

ALTERNATIVE SPLICE COUPLER

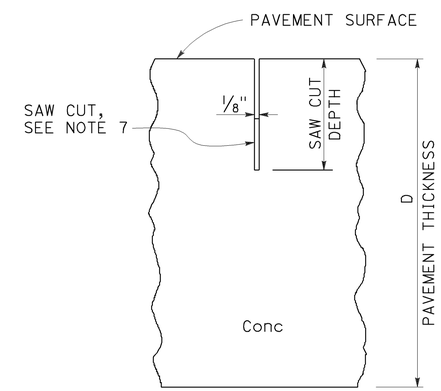

CONTRACTION JOINT DETAIL

NOTES:

1. See Revised Standard Plan RSP P1 for typical dowel bar and tie bar placement and locations.
2. Where new pavement is placed against existing concrete pavement, rounding the corner is not required.
3. For dowel bar sizes, See Revised Standard Plan RSP P10.
4. Tie bar details apply to inside widenings.
5. Use either drill and bond or splice couplers.
6. Full depth drilled hole. Fill hole with filler material.
7. The bottom of the saw cut must be at least 0.5" clear of any dowel bar, tie bar and bar reinforcement.

STATE OF CALIFORNIA
DEPARTMENT OF TRANSPORTATION

CONCRETE PAVEMENT-TIE BAR DETAILS

NO SCALE

RSP P15 DATED JULY 19, 2013 SUPPLEMENTS THE STANDARD PLANS BOOK DATED 2010.

REVISED STANDARD PLAN RSP P15

5-31-13

Dist	COUNTY	ROUTE	POST MILES TOTAL PROJECT	SHEET No.	TOTAL SHEETS
08	Riv		R12.2/22.1, 26.5/30.4	97	113

William K. Farnbach
REGISTERED CIVIL ENGINEER

July 19, 2013
PLANS APPROVAL DATE

REGISTERED PROFESSIONAL ENGINEER William K. Farnbach No. C49042 Exp. 9-30-14 CIVIL STATE OF CALIFORNIA

THE STATE OF CALIFORNIA OR ITS OFFICERS OR AGENTS SHALL NOT BE RESPONSIBLE FOR THE ACCURACY OR COMPLETENESS OF SCANNED COPIES OF THIS PLAN SHEET.

TO ACCOMPANY PLANS DATED 05-26-15

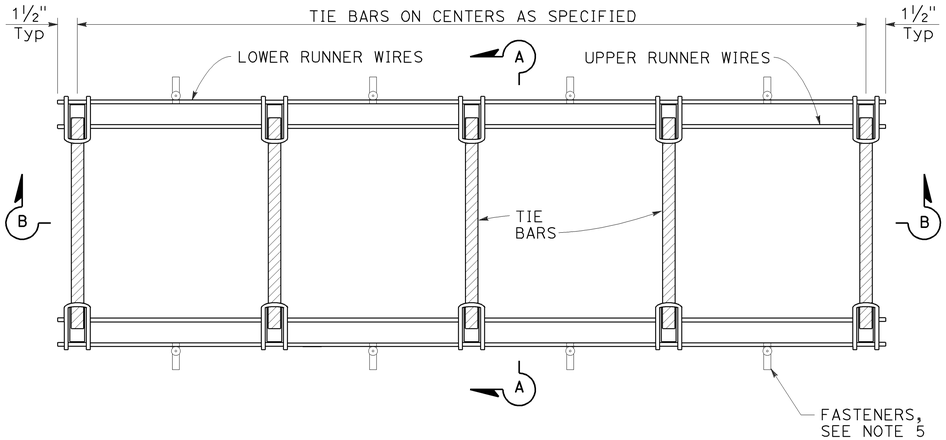

PLAN

TIE BAR BASKET

(Tie bars at longitudinal joint)
See Note 1

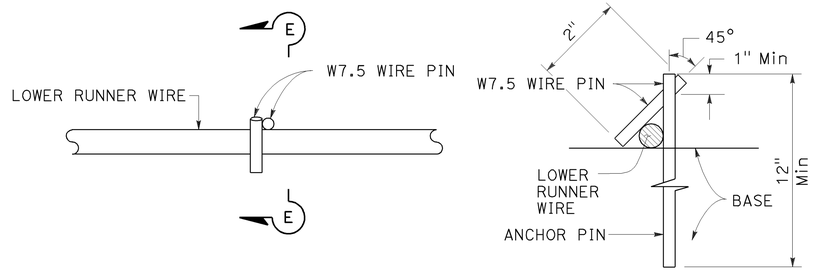

PLAN

SECTION E-E

ANCHOR PIN DETAIL

See Note 5

NOTES:

1. "U" frame shape assembly shown. Use either "U" frame shape or "A" frame shape.
2. Wire sizes shown are the minimum required.
3. All wire intersections must be resistance welded.
4. Weld may be at top or bottom of tie bars.
5. Use anchor pins where soil or granular base is used.

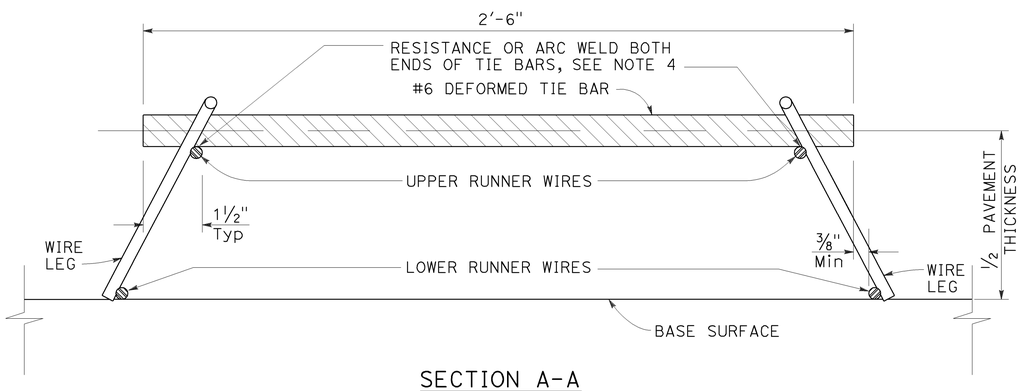

SECTION A-A

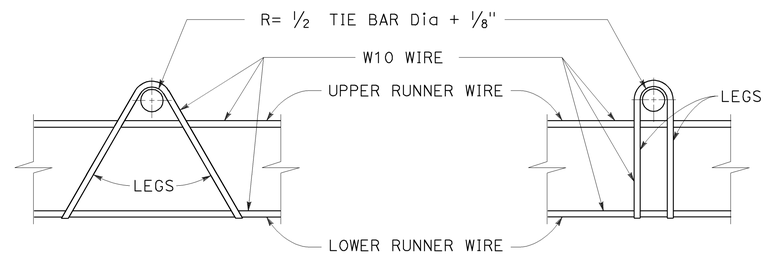

"A" SHAPE

"U" SHAPE

ASSEMBLY FRAME DETAILS

See Note 1

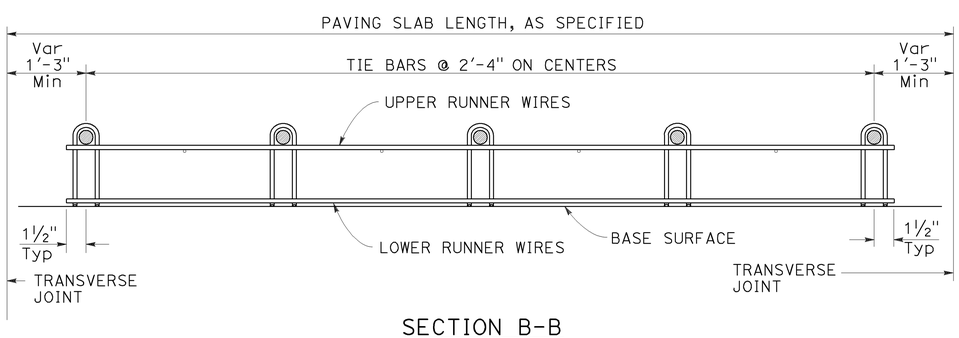

SECTION B-B

See Note 1

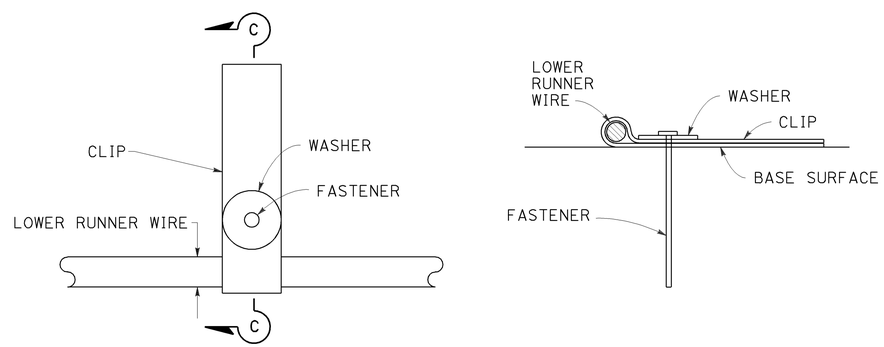

PLAN

SECTION C-C

FASTENER DETAIL

STATE OF CALIFORNIA
DEPARTMENT OF TRANSPORTATION

CONCRETE PAVEMENT TIE BAR BASKET DETAILS

NO SCALE

RSP P17 DATED JULY 19, 2013 SUPERSEDES STANDARD PLAN P17
DATED MAY 20, 2011 - PAGE 134 OF THE STANDARD PLANS BOOK DATED 2010.

REVISED STANDARD PLAN RSP P17

2010 REVISED STANDARD PLAN RSP P17

5-31-13

Dist	COUNTY	ROUTE	POST MILES TOTAL PROJECT	SHEET No.	TOTAL SHEETS
08	Riv	60	R12.2/22.1, 26.5/30.4	98	113

William K. Farnbach
REGISTERED CIVIL ENGINEER

July 19, 2013
PLANS APPROVAL DATE

REGISTERED PROFESSIONAL ENGINEER William K. Farnbach No. C49042 Exp. 9-30-14 CIVIL STATE OF CALIFORNIA

THE STATE OF CALIFORNIA OR ITS OFFICERS OR AGENTS SHALL NOT BE RESPONSIBLE FOR THE ACCURACY OR COMPLETENESS OF SCANNED COPIES OF THIS PLAN SHEET.

TO ACCOMPANY PLANS DATED 05-26-15

2010 REVISED STANDARD PLAN RSP P18

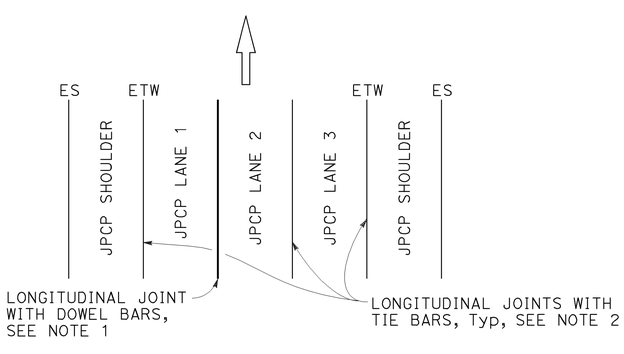

3 LANES WITH CONCRETE SHOULDERS
PLAN

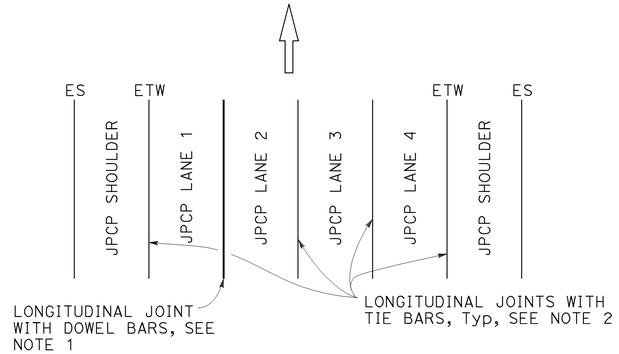

4 LANES WITH CONCRETE SHOULDERS
PLAN

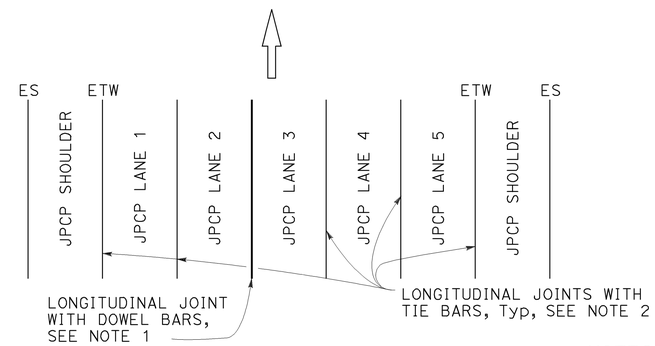

5 LANES WITH CONCRETE SHOULDERS
PLAN

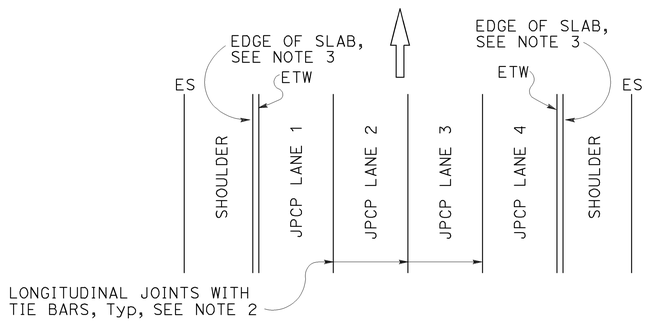

4 LANES OR LESS WITH AC SHOULDERS
PLAN

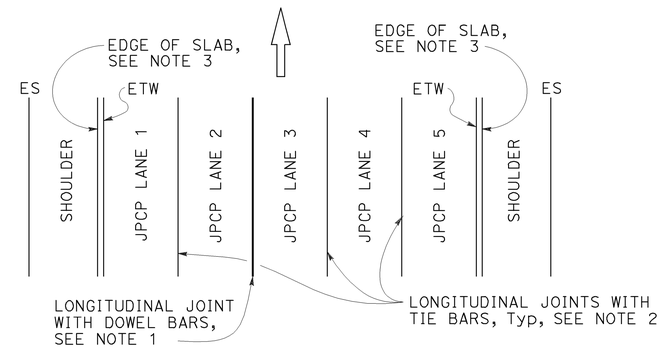

5 LANES WITH AC SHOULDERS
PLAN

NEW CONSTRUCTION

Location of Longitudinal Joints
For JPCP

NOTES:

1. See Revised Standard Plan RSP P10 for longitudinal joint with dowel bars.
2. See Revised Standard Plan RSP P15 for longitudinal joint with tie bars.
3. S= Reservoir depth.
   S= 7/8" ± 1/16" for asphalt rubber seals
   S= 9/16" ± 1/16" for silicone seals
   Preformed compression seals must be 13/16" wide and S= 1 11/16" ± 1/16"

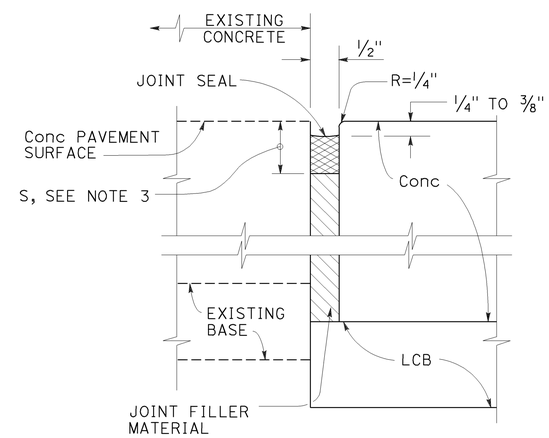

DETAIL "A"

ISOLATION JOINT

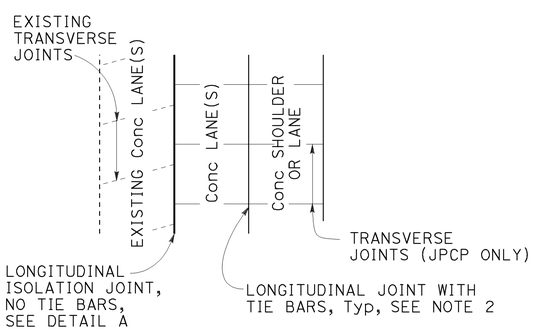

CASE 1
PLAN

Transverse Joints do not align between new and existing.

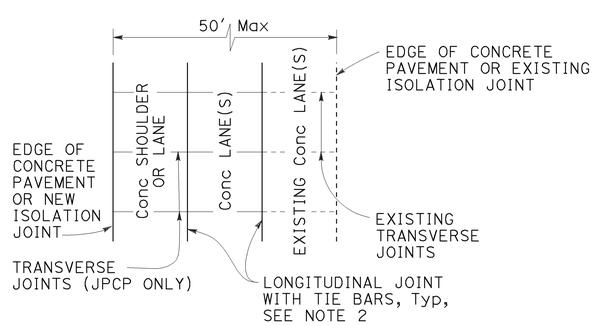

CASE 2
PLAN

Transverse Joints align between new and existing.
(For JPCP only)

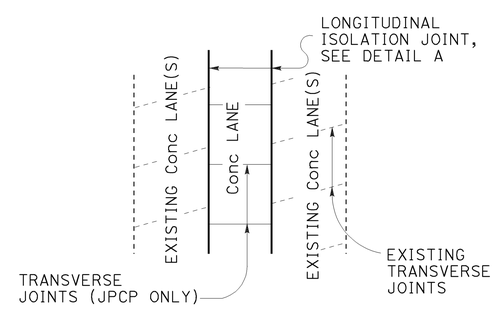

CASE 3 (INTERIOR LANE REPLACEMENT)
PLAN

Transverse Joints do not align between new and existing.

LANE/SHOULDER ADDITION OR RECONSTRUCTION

For JPCP and CRCP

STATE OF CALIFORNIA
DEPARTMENT OF TRANSPORTATION

CONCRETE PAVEMENT LANE SCHEMATICS AND ISOLATION JOINT DETAIL

NO SCALE

RSP P18 DATED JULY 19, 2013 SUPERSEDES RSP P18 DATED APRIL 20, 2012 AND STANDARD PLAN P18 DATED MAY 20, 2011 - PAGE 135 OF THE STANDARD PLANS BOOK DATED 2010.

REVISED STANDARD PLAN RSP P18

5-31-13

Dist	COUNTY	ROUTE	POST MILES TOTAL PROJECT	SHEET No.	TOTAL SHEETS
08	Riv	60	R12.2/22.1, 26.5/30.4	99	113

William K. Farnbach
REGISTERED CIVIL ENGINEER

July 19, 2013
PLANS APPROVAL DATE

REGISTERED PROFESSIONAL ENGINEER
William K. Farnbach
No. C49042
Exp. 9-30-14
CIVIL
STATE OF CALIFORNIA

THE STATE OF CALIFORNIA OR ITS OFFICERS OR AGENTS SHALL NOT BE RESPONSIBLE FOR THE ACCURACY OR COMPLETENESS OF SCANNED COPIES OF THIS PLAN SHEET.

TO ACCOMPANY PLANS DATED 05-26-15

2010 REVISED STANDARD PLAN RSP P20

NOTES:

1. Details do not apply to isolation joints and longitudinal construction joints.
2. Tie bars, dowel bars, and bar reinforcement are not shown.
3. Depths are measured from the final concrete pavement surface elevation after any grinding.

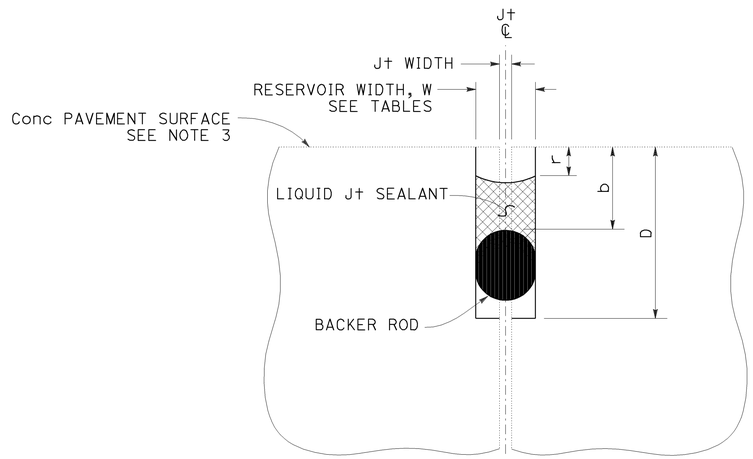

LIQUID JOINT SEALANT

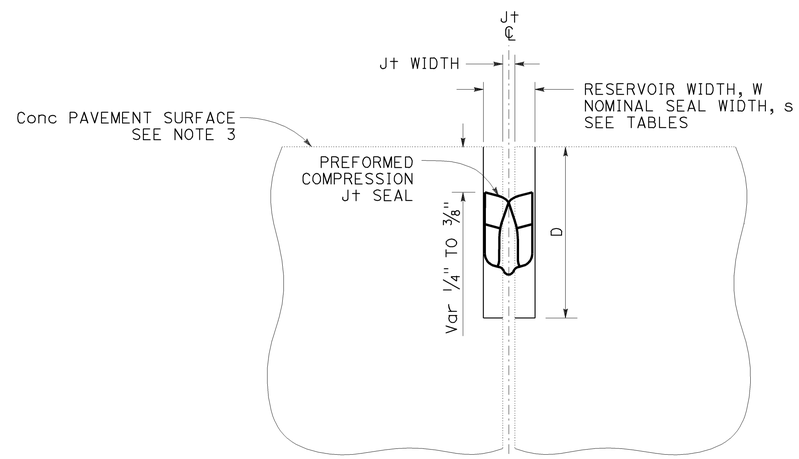

PREFORMED COMPRESSION JOINT SEAL

Const SEASON	Min RESERVOIR WIDTH * W ± 1/16"
WINTER	1/4"
SPRING	3/8"
SUMMER	3/8"
FALL	3/8"

* Minimum reservoir width for replace joint seal = existing joint width + 1/8"

RESERVOIR WIDTH W ±1/16"	LIQUID JOINT SEALANT DIMENSIONS					
	BACKER ROD NOMINAL Dia *	DEPTHS (ASPHALT RUBBER) **		DEPTHS (SILICONE)		
		RESERVOIR D ± 1/4"	BACKER ROD b ± 1/16"	RESERVOIR D ± 1/4"	BACKER ROD b ± 1/16"	RECESS r ± 1/16"
1/4"	3/8"	1 3/4"	7/8"	1 3/8"	1/2"	1/4"
3/8"	1/2"	1 7/8"	7/8"	1 1/2"	1/2"	1/4"
1/2"	3/4"	2"	7/8"	1 3/4"	9/16"	5/16"
5/8"	7/8"	2 1/4"	1"	2"	5/8"	5/16"
3/4"	1"	2 3/4"	1 1/8"	2 1/4"	3/4"	3/8"
7/8"	1 1/4"	3"	1 1/4"	2 1/2"	13/16"	3/8"
1"	1 1/2"	3 1/4"	1 3/8"	2 5/8"	7/8"	3/8"
1 1/8"	1 1/2"	3 1/2"	1 1/2"	2 13/16"	1"	1/2"

* Larger diameter backer rods may be substituted according to manufacturer recommendations if reservoir depth is increased equivalently.

** Asphalt rubber sealant recess depth "r" varies from 1/4" to 3/8"

RESERVOIR WIDTH W ±1/16"	PREFORMED COMPRESSION JOINT SEAL DIMENSIONS	
	NOMINAL SEAL WIDTH s	RESERVOIR DEPTH D ± 1/4"
1/4"	7/16"	1 1/4"
3/8"	11/16"	1 7/16"
1/2"	13/16"	1 11/16"
5/8"	1"	1 7/8"
3/4"	1 1/4"	2 1/8"
7/8"	1 5/8"	2 5/8"
1"	1 5/8"	2 5/8"
1 1/8"	2"	2 7/8"

STATE OF CALIFORNIA
DEPARTMENT OF TRANSPORTATION

JOINT SEALS

NO SCALE

RSP P20 DATED JULY 19, 2013 SUPERSEDES STANDARD PLAN P20
DATED MAY 20, 2011 - PAGE 136 OF THE STANDARD PLANS BOOK DATED 2010.

REVISED STANDARD PLAN RSP P20

6-17-13

Dist	COUNTY	ROUTE	POST MILES TOTAL PROJECT	SHEET No.	TOTAL SHEETS
08	Riv	60	R12.2/22.1, 26.5/30.4	100	113

William K. Farnbach
REGISTERED CIVIL ENGINEER

July 19, 2013
PLANS APPROVAL DATE

REGISTERED PROFESSIONAL ENGINEER William K. Farnbach No. C49042 Exp. 9-30-14 CIVIL STATE OF CALIFORNIA

THE STATE OF CALIFORNIA OR ITS OFFICERS OR AGENTS SHALL NOT BE RESPONSIBLE FOR THE ACCURACY OR COMPLETENESS OF SCANNED COPIES OF THIS PLAN SHEET.

TO ACCOMPANY PLANS DATED 05-26-15

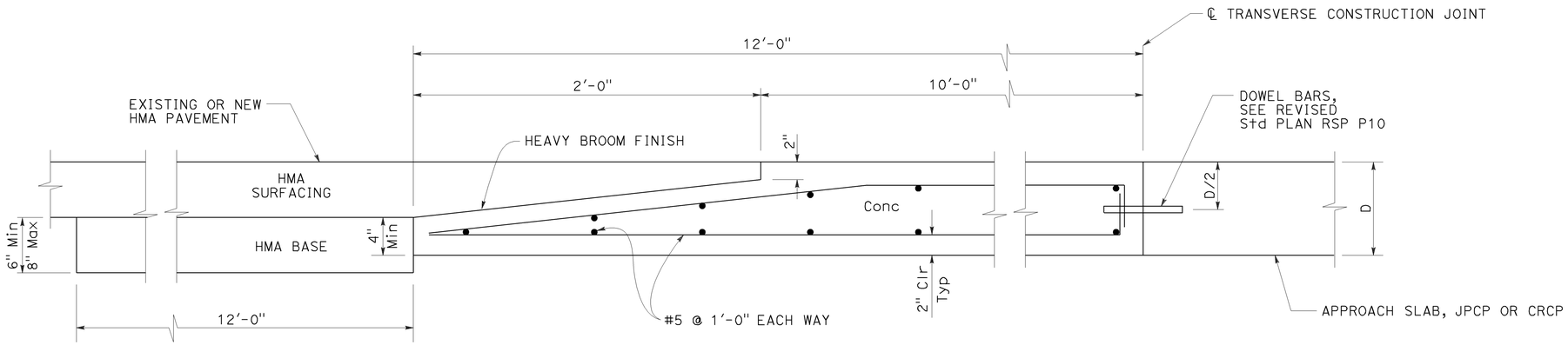

ELEVATION

CONCRETE PAVEMENT TRANSITION PANEL

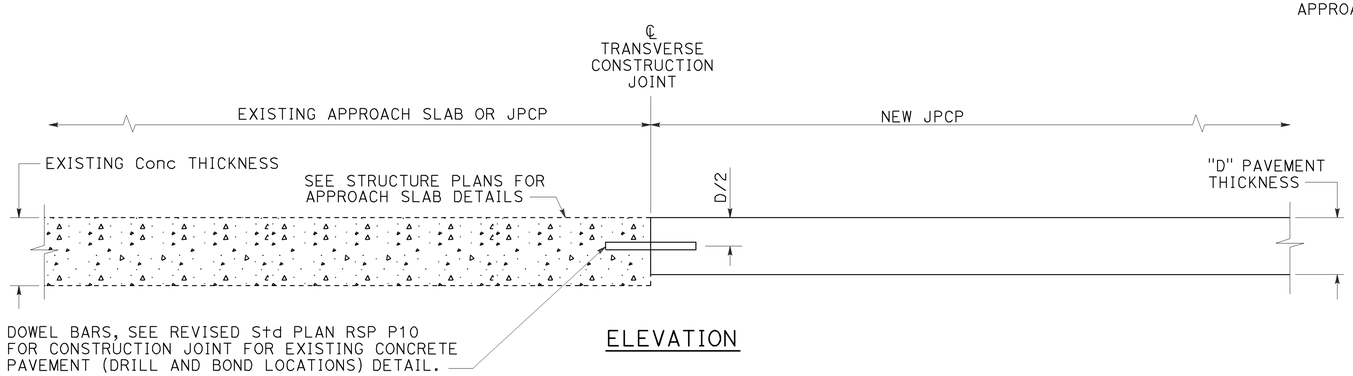

ELEVATION

TERMINAL JOINT TYPE 1

For Exist JPCP or Approach Slab

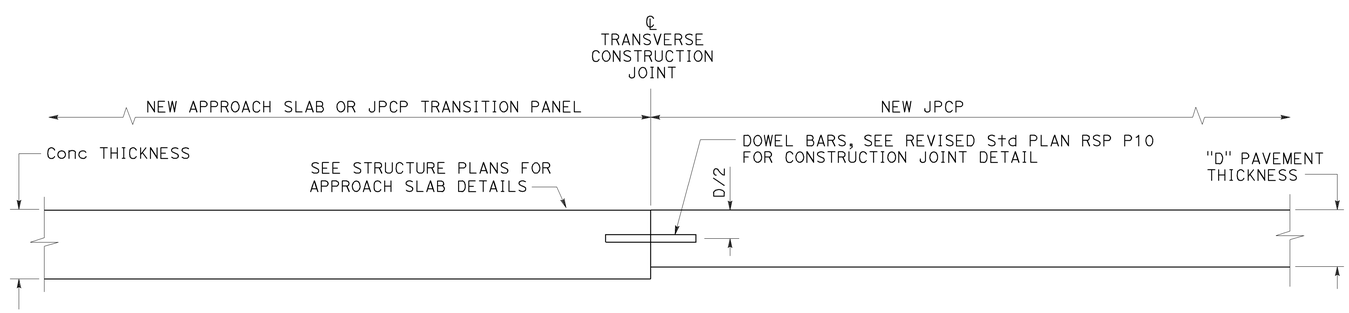

ELEVATION

TERMINAL JOINT TYPE 2

For JPCP Transition Panel or Approach Slab

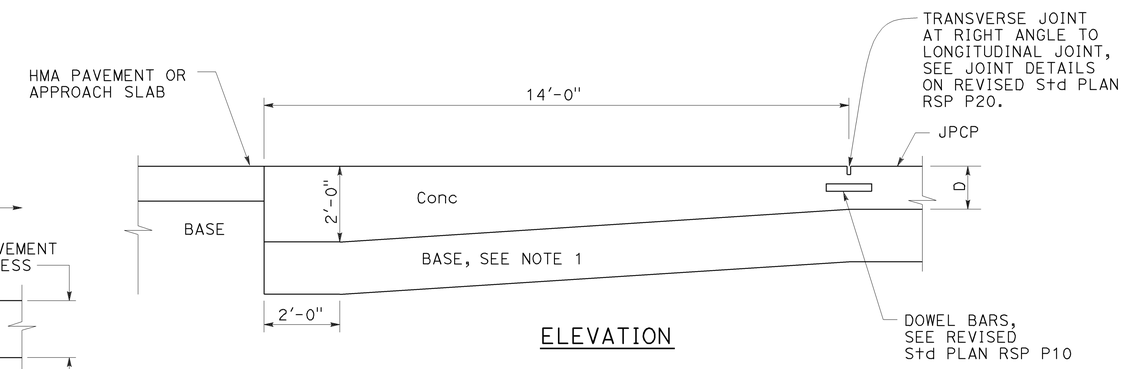

ELEVATION

PAVEMENT END ANCHOR

For HMA Pvmt or Approach Slab

NOTE:

1. Maintain same base thickness as JPCP.

STATE OF CALIFORNIA
DEPARTMENT OF TRANSPORTATION

CONCRETE PAVEMENT-END PANEL PAVEMENT TRANSITIONS

NO SCALE

RSP P30 DATED JULY 19, 2013 SUPERSEDES RSP P30 DATED APRIL 20, 2012 AND STANDARD PLAN P30 DATED MAY 20, 2011 - PAGE 137 OF THE STANDARD PLANS BOOK DATED 2010.

REVISED STANDARD PLAN RSP P30

2010 REVISED STANDARD PLAN RSP P30

3-26-13