Dist	COUNTY	ROUTE	POST MILES TOTAL PROJECT	SHEET No.	TOTAL SHEETS
08	Riv	371	70.6/70.9	1	30

ACHSSTP-P371(007)E

STATE OF CALIFORNIA
DEPARTMENT OF TRANSPORTATION

PROJECT PLANS FOR CONSTRUCTION ON
STATE HIGHWAY

IN RIVERSIDE COUNTY
AT ANZA
FROM 0.2 MILE WEST OF BAHRMAN ROAD
TO 0.03 MILE WEST OF BAILIFF ROAD

TO BE SUPPLEMENTED BY STANDARD PLANS DATED 2010

INDEX OF PLANS

SHEET No.	DESCRIPTION
1	TITLE AND LOCATION MAP
2-3	TYPICAL CROSS SECTIONS
4-5	LAYOUT
6	CONSTRUCTION DETAILS
7-10	DRAINAGE PLANS, PROFILES, DETAILS AND QUANTITIES
11-12	UTILITY PLANS
13-14	CONSTRUCTION AREA SIGNS
15-17	PAVEMENT DELINEATION PLANS AND QUANTITIES
18	SPECIAL DESIGN SIGNS
19	SUMMARY OF QUANTITIES
20	EROSION CONTROL LEGEND
21-22	EROSION CONTROL PLAN
23-30	REVISED STANDARD PLANS

THE STANDARD PLANS LIST APPLICABLE TO THIS CONTRACT IS INCLUDED IN THE NOTICE TO BIDDERS AND SPECIAL PROVISIONS BOOK

LOCATION MAP

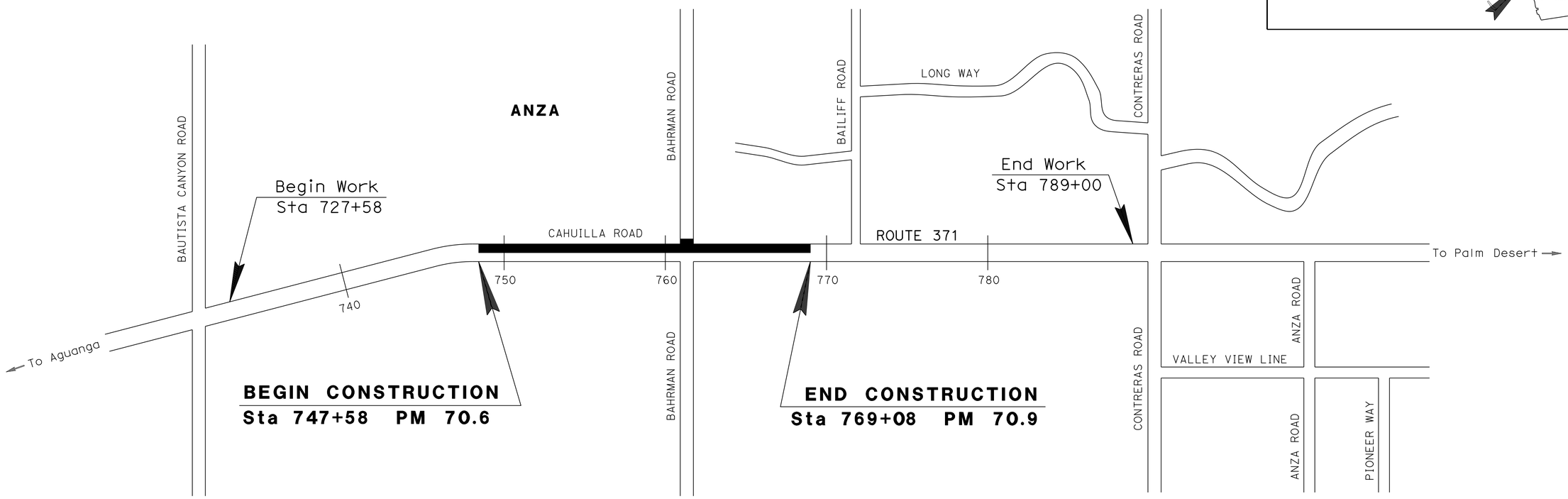

NO SCALE

PROJECT ENGINEER
REGISTERED CIVIL ENGINEER
6-22-15
DATE

June 22, 2015
PLANS APPROVAL DATE

REGISTERED PROFESSIONAL ENGINEER
DUNG HUY PHAN
No. 73061
Exp. 12/31/16
CIVIL
STATE OF CALIFORNIA

THE STATE OF CALIFORNIA OR ITS OFFICERS OR AGENTS SHALL NOT BE RESPONSIBLE FOR THE ACCURACY OR COMPLETENESS OF SCANNED COPIES OF THIS PLAN SHEET.

THE CONTRACTOR SHALL POSSESS THE CLASS (OR CLASSES) OF LICENSE AS SPECIFIED IN THE "NOTICE TO BIDDERS."

CONTRACT No.	08-0R9504
PROJECT ID	0812000218

PROJECT MANAGER: CHARLES CHEN
DESIGN MANAGER: JAMAL ELSALEH

LAST REVISION 06-22-15
DATE PLOTTED => 24-NOV-2015
TIME PLOTTED => 09:33

Dist	COUNTY	ROUTE	POST MILES TOTAL PROJECT	SHEET No.	TOTAL SHEETS
08	Riv	371	70.6/70.9	2	30

REGISTERED CIVIL ENGINEER 6-22-15 DATE

6-22-15
PLANS APPROVAL DATE

REGISTERED PROFESSIONAL ENGINEER DUNG HUY PHAN No. 73061 Exp. 12/31/16 CIVIL STATE OF CALIFORNIA

THE STATE OF CALIFORNIA OR ITS OFFICERS OR AGENTS SHALL NOT BE RESPONSIBLE FOR THE ACCURACY OR COMPLETENESS OF SCANNED COPIES OF THIS PLAN SHEET.

NOTES:

1. DIMENSIONS OF THE STRUCTURAL SECTIONS ARE SUBJECT TO TOLERANCES SPECIFIED IN THE STANDARD SPECIFICATIONS.
2. FOR SAFETY EDGE, SEE STD PLANS RSP P74, AND RSP P76.

LEGEND:

(a) MEDIAN WIDTH, VARIES BETWEEN 0′ TO 12′
(b) VARIES BETWEEN 0.0′ TO 5.4′
(c) MEDIAN WIDTH, VARY BETWEEN 0′ TO 8′
(d) EXISTING MEDIAN WIDTH, VARY BETWEEN 0.0′ TO 4.6′
(e) EXISTING MEDIAN WIDTH, VARY BETWEEN 0.0′ TO 8.4′

DESIGN DESIGNATION (ROUTE 371)

ADT (2013) =	7,200	D =	65%
ADT (2033) =	9,600	T =	5%
DHV =	960	V =	55 MPH
ESAL =	1,446,619	TI_{40} =	9.5

PAVEMENT CLIMATE REGION: SOUTH MOUNTAIN

STRUCTURAL SECTIONS

1
- 0.20′ RHMA-G
- 0.50′ HMA-A
- 0.50′ CL 2 AB

2
- Exist
- 0.20′ RHMA-G
- 0.30′ HMA-A
- 0.55′ CL 2 AB

3
- Exist
- 0.20′ RHMA-G
- 0.25′ HMA-A
- 0.55′ CL 2 AB

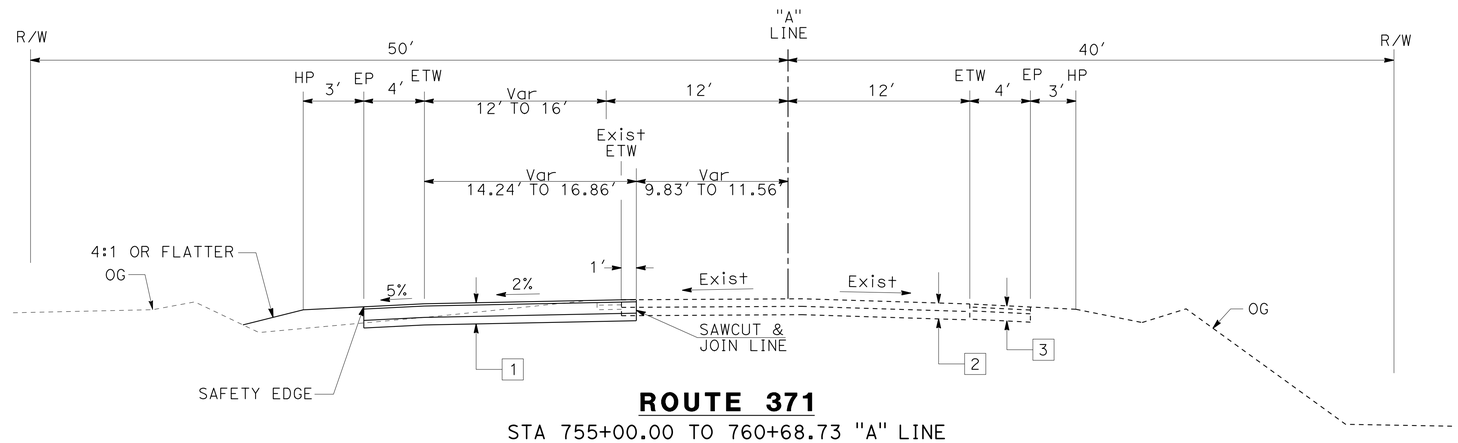

ROUTE 371

STA 755+00.00 TO 760+68.73 "A" LINE

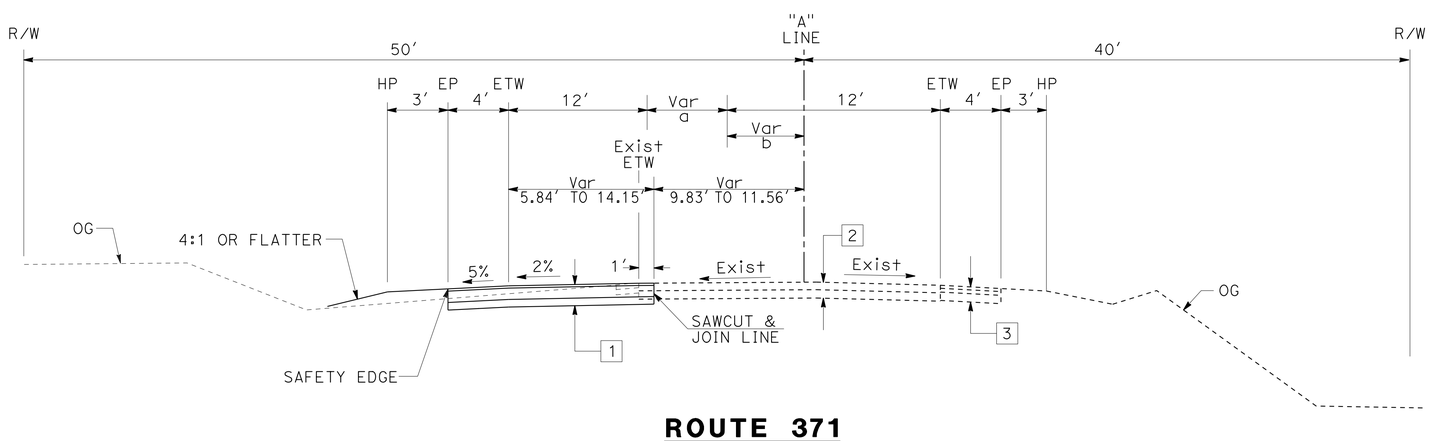

ROUTE 371

STA 747+58.00 TO 755+00.00 "A" LINE

TYPICAL CROSS SECTIONS

NO SCALE

X-1

REVISED BY	DATE REVISED

CALCULATED-DESIGNED BY	CHECKED BY
MYLINH NGUYEN	PAUL PHAN

FUNCTIONAL SUPERVISOR: RENEE SASSE

STATE OF CALIFORNIA - DEPARTMENT OF TRANSPORTATION

Caltrans® **DESIGN A**

LAST REVISION 06-22-15 | DATE PLOTTED => 23-NOV-2015 | TIME PLOTTED => 12:35

Dist	COUNTY	ROUTE	POST MILES TOTAL PROJECT	SHEET No.	TOTAL SHEETS
08	Riv	371	70.6/70.9	3	30

REGISTERED CIVIL ENGINEER 6-22-15 DATE

6-22-15
PLANS APPROVAL DATE

REGISTERED PROFESSIONAL ENGINEER DUNG HUY PHAN No. 73061 Exp. 12/31/16 CIVIL STATE OF CALIFORNIA

THE STATE OF CALIFORNIA OR ITS OFFICERS OR AGENTS SHALL NOT BE RESPONSIBLE FOR THE ACCURACY OR COMPLETENESS OF SCANNED COPIES OF THIS PLAN SHEET.

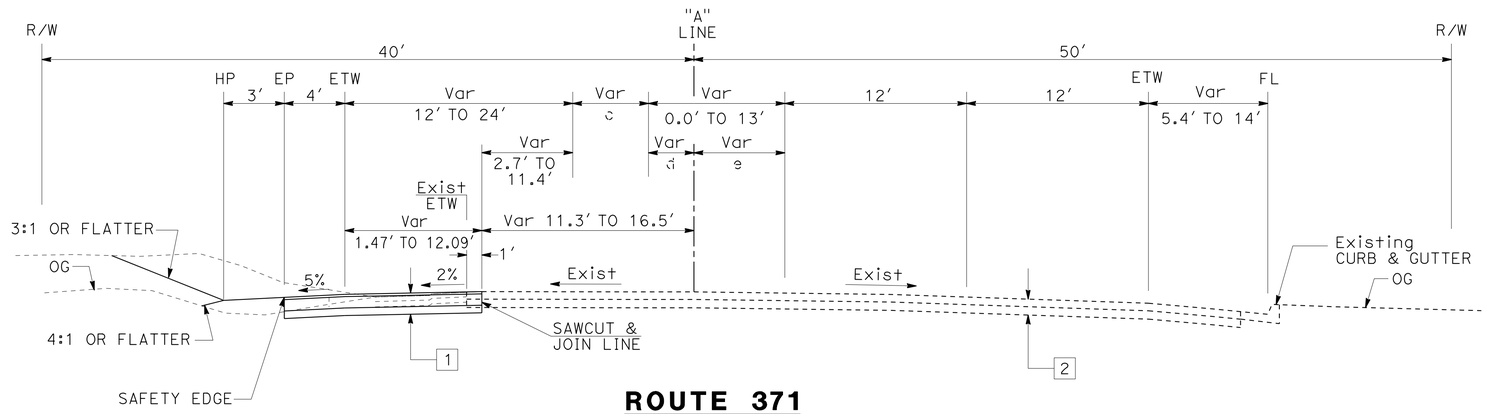

ROUTE 371

STA 764+44.00 TO 769+00.00 "A" LINE

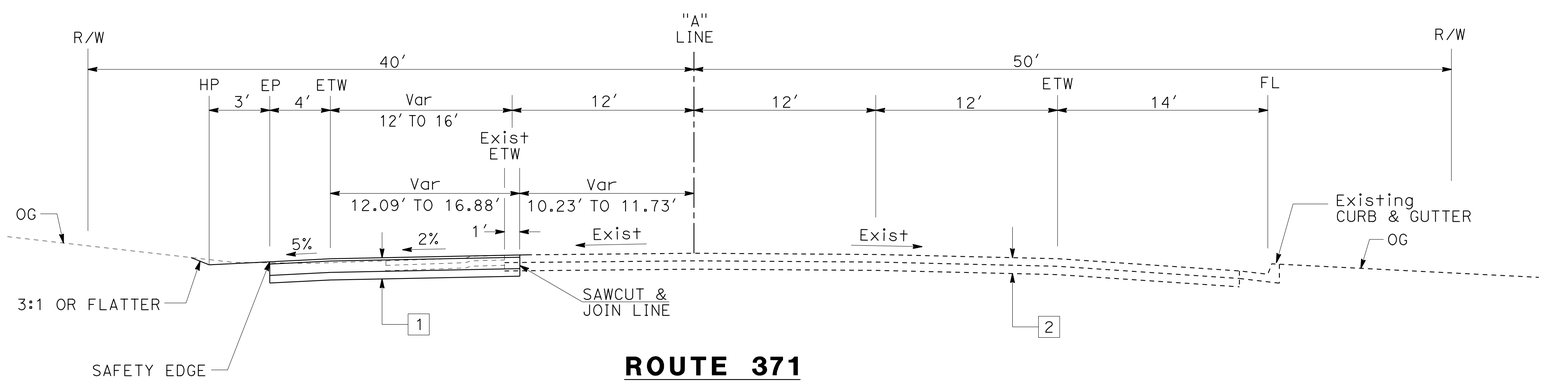

ROUTE 371

STA 760+68.73 TO 764+44.00 "A" LINE

TYPICAL CROSS SECTIONS

NO SCALE

X-2

STATE OF CALIFORNIA - DEPARTMENT OF TRANSPORTATION

Caltrans®

DESIGN A

FUNCTIONAL SUPERVISOR: RENEE SASSE

CALCULATED-DESIGNED BY: MYLINH NGUYEN

CHECKED BY: PAUL PHAN

REVISED BY | DATE REVISED

LAST REVISION 06-22-15 | DATE PLOTTED => 23-NOV-2015 | TIME PLOTTED => 12:35

Dist	COUNTY	ROUTE	POST MILES TOTAL PROJECT	SHEET No.	TOTAL SHEETS
08	Riv	371	70.6/70.9	4	30

REGISTERED CIVIL ENGINEER 6-22-15 DATE

6-22-15
PLANS APPROVAL DATE

REGISTERED PROFESSIONAL ENGINEER
DUNG HUY PHAN
No. 73061
Exp. 12/31/16
CIVIL
STATE OF CALIFORNIA

THE STATE OF CALIFORNIA OR ITS OFFICERS OR AGENTS SHALL NOT BE RESPONSIBLE FOR THE ACCURACY OR COMPLETENESS OF SCANNED COPIES OF THIS PLAN SHEET.

NOTES:

1. FOR ACCURATE RIGHT OF WAY DATA, CONTACT RIGHT OF WAY ENGINEERING AT THE DISTRICT OFFICE.
2. FOR UTILITY, SEE UTILITY SHEETS.

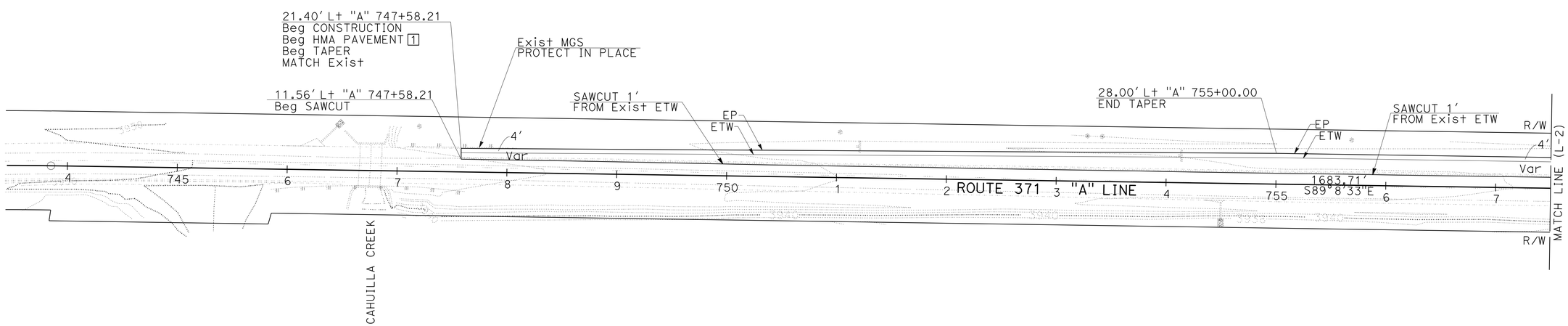

LAYOUT

SCALE: 1" = 50'

L-1

STATE OF CALIFORNIA - DEPARTMENT OF TRANSPORTATION
Caltrans
DESIGN A

FUNCTIONAL SUPERVISOR: RENEE SASSE

CALCULATED-DESIGNED BY: MYLINH NGUYEN
CHECKED BY: PAUL PHAN

REVISED BY
DATE REVISED

LAST REVISION 06-22-15
DATE PLOTTED => 23-NOV-2015
TIME PLOTTED => 12:35

Dist	COUNTY	ROUTE	POST MILES TOTAL PROJECT	SHEET No.	TOTAL SHEETS
08	Riv	371	70.6/70.9	5	30

REGISTERED CIVIL ENGINEER 6-22-15 DATE

6-22-15
PLANS APPROVAL DATE

REGISTERED PROFESSIONAL ENGINEER
DUNG HUY PHAN
No. 73061
Exp. 12/31/16
CIVIL
STATE OF CALIFORNIA

THE STATE OF CALIFORNIA OR ITS OFFICERS OR AGENTS SHALL NOT BE RESPONSIBLE FOR THE ACCURACY OR COMPLETENESS OF SCANNED COPIES OF THIS PLAN SHEET.

NOTE:

FOR ACCURATE RIGHT OF WAY DATA, CONTACT
RIGHT OF WAY ENGINEERING AT THE DISTRICT OFFICE.

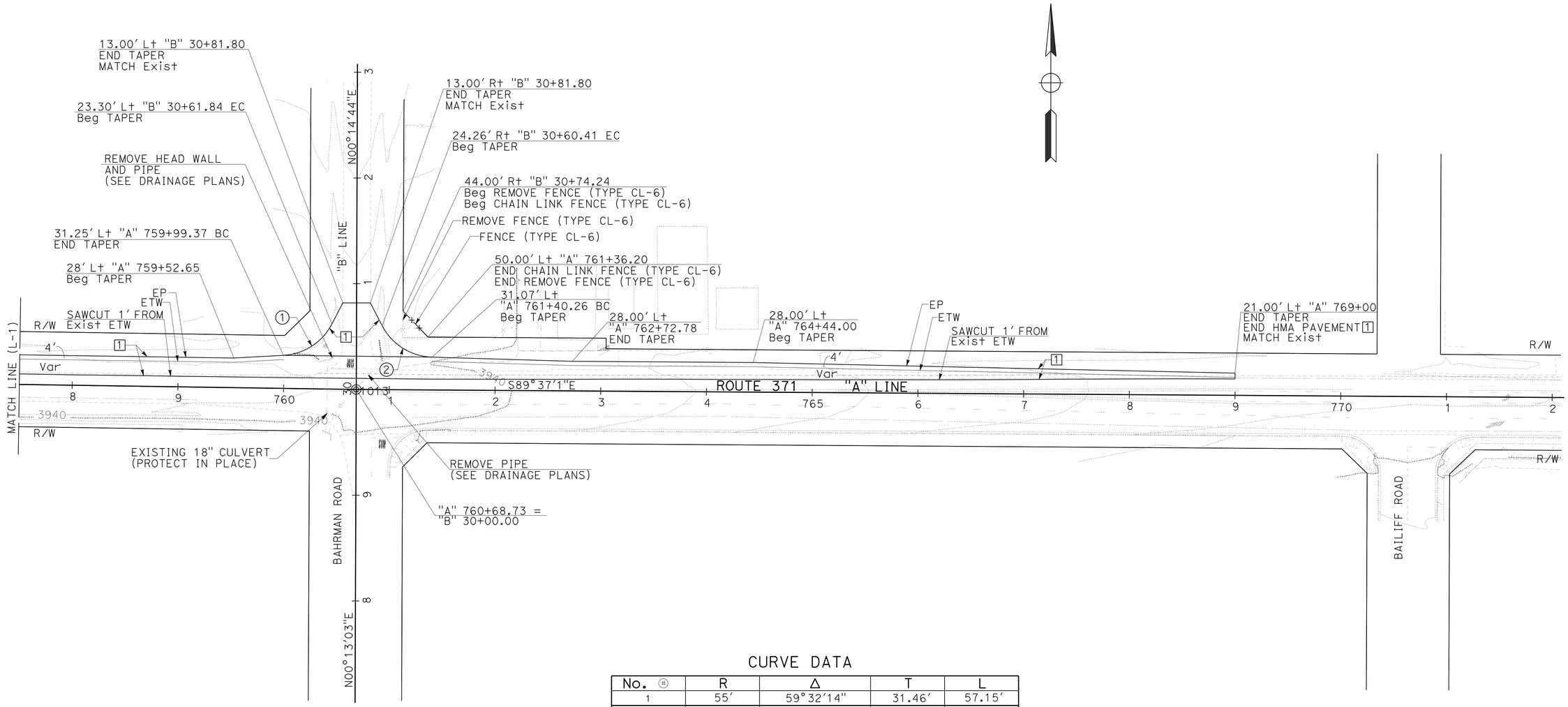

CURVE DATA

No. ⊕	R	Δ	T	L
1	55'	59°32'14"	31.46'	57.15'
2	55'	60°57'05"	32.37'	58.51'

LAYOUT

SCALE: 1" = 50'

L-2

REVISED BY	DATE REVISED

CALCULATED-DESIGNED BY	CHECKED BY
MYLINH NGUYEN	PAUL PHAN

FUNCTIONAL SUPERVISOR: RENEE SASSE

STATE OF CALIFORNIA - DEPARTMENT OF TRANSPORTATION
Caltrans
DESIGN A

LAST REVISION 06-22-15
DATE PLOTTED => 23-NOV-2015
TIME PLOTTED => 12:35

Dist	COUNTY	ROUTE	POST MILES TOTAL PROJECT	SHEET No.	TOTAL SHEETS
08	Riv	371	70.6/70.9	6	30

REGISTERED CIVIL ENGINEER 6-22-15 DATE

6-22-15
PLANS APPROVAL DATE

REGISTERED PROFESSIONAL ENGINEER
DUNG HUY PHAN
No. 73061
Exp. 12/31/16
CIVIL
STATE OF CALIFORNIA

THE STATE OF CALIFORNIA OR ITS OFFICERS OR AGENTS SHALL NOT BE RESPONSIBLE FOR THE ACCURACY OR COMPLETENESS OF SCANNED COPIES OF THIS PLAN SHEET.

NOTES:

1. FOR ACCURATE RIGHT OF WAY AND ACCESS DATA, CONTACT RIGHT OF WAY ENGINEERING AT THE DISTRICT OFFICE.
2. FOR UTILITY, SEE UTILITY SHEETS.

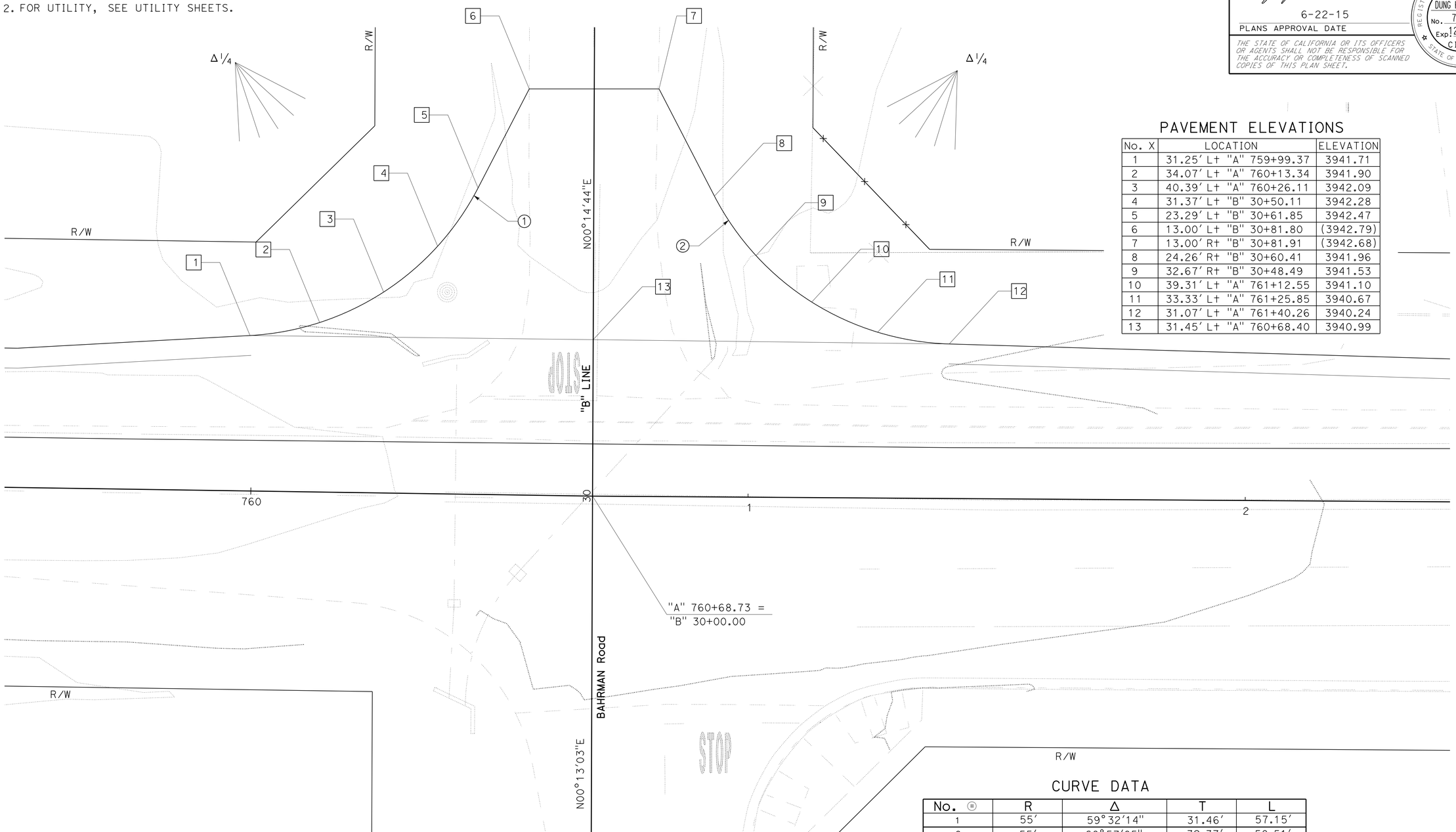

PAVEMENT ELEVATIONS

No. X	LOCATION	ELEVATION
1	31.25′ Lt "A" 759+99.37	3941.71
2	34.07′ Lt "A" 760+13.34	3941.90
3	40.39′ Lt "A" 760+26.11	3942.09
4	31.37′ Lt "B" 30+50.11	3942.28
5	23.29′ Lt "B" 30+61.85	3942.47
6	13.00′ Lt "B" 30+81.80	(3942.79)
7	13.00′ Rt "B" 30+81.91	(3942.68)
8	24.26′ Rt "B" 30+60.41	3941.96
9	32.67′ Rt "B" 30+48.49	3941.53
10	39.31′ Lt "A" 761+12.55	3941.10
11	33.33′ Lt "A" 761+25.85	3940.67
12	31.07′ Lt "A" 761+40.26	3940.24
13	31.45′ Lt "A" 760+68.40	3940.99

CURVE DATA

No. Ⓡ	R	Δ	T	L
1	55′	59°32′14"	31.46′	57.15′
2	55′	60°57′05"	32.37′	58.51′

CONSTRUCTION DETAILS

NO SCALE

C-1

STATE OF CALIFORNIA - DEPARTMENT OF TRANSPORTATION
Caltrans
DESIGN A

FUNCTIONAL SUPERVISOR: RENEE SASSE
CALCULATED-DESIGNED BY: MYLINH NGUYEN
CHECKED BY: PAUL PHAN
REVISED BY
DATE REVISED

LAST REVISION 06-22-15
DATE PLOTTED => 23-NOV-2015
TIME PLOTTED => 12:36

Dist	COUNTY	ROUTE	POST MILES TOTAL PROJECT	SHEET No.	TOTAL SHEETS
08	Riv	371	70.6/70.9	7	30

REGISTERED CIVIL ENGINEER 6-22-15 DATE

6-22-15
PLANS APPROVAL DATE

REGISTERED PROFESSIONAL ENGINEER
DUNG HUY PHAN
No. 73061
Exp. 12/31/16
CIVIL
STATE OF CALIFORNIA

THE STATE OF CALIFORNIA OR ITS OFFICERS OR AGENTS SHALL NOT BE RESPONSIBLE FOR THE ACCURACY OR COMPLETENESS OF SCANNED COPIES OF THIS PLAN SHEET.

NOTES:

1. FOR ACCURATE RIGHT OF WAY AND ACCESS DATA, CONTACT RIGHT OF WAY ENGINEERING AT THE DISTRICT OFFICE.
2. FOR UTILITY, SEE UTILITY SHEETS.
3. THE PRECISE DETERMINATION OF THE FOLLOWING ITEMS WILL BE MADE BY THE ENGINEER IN THE FIELD: STATION, SKEW, LENGTH, FLOW LINE ELEVATION.

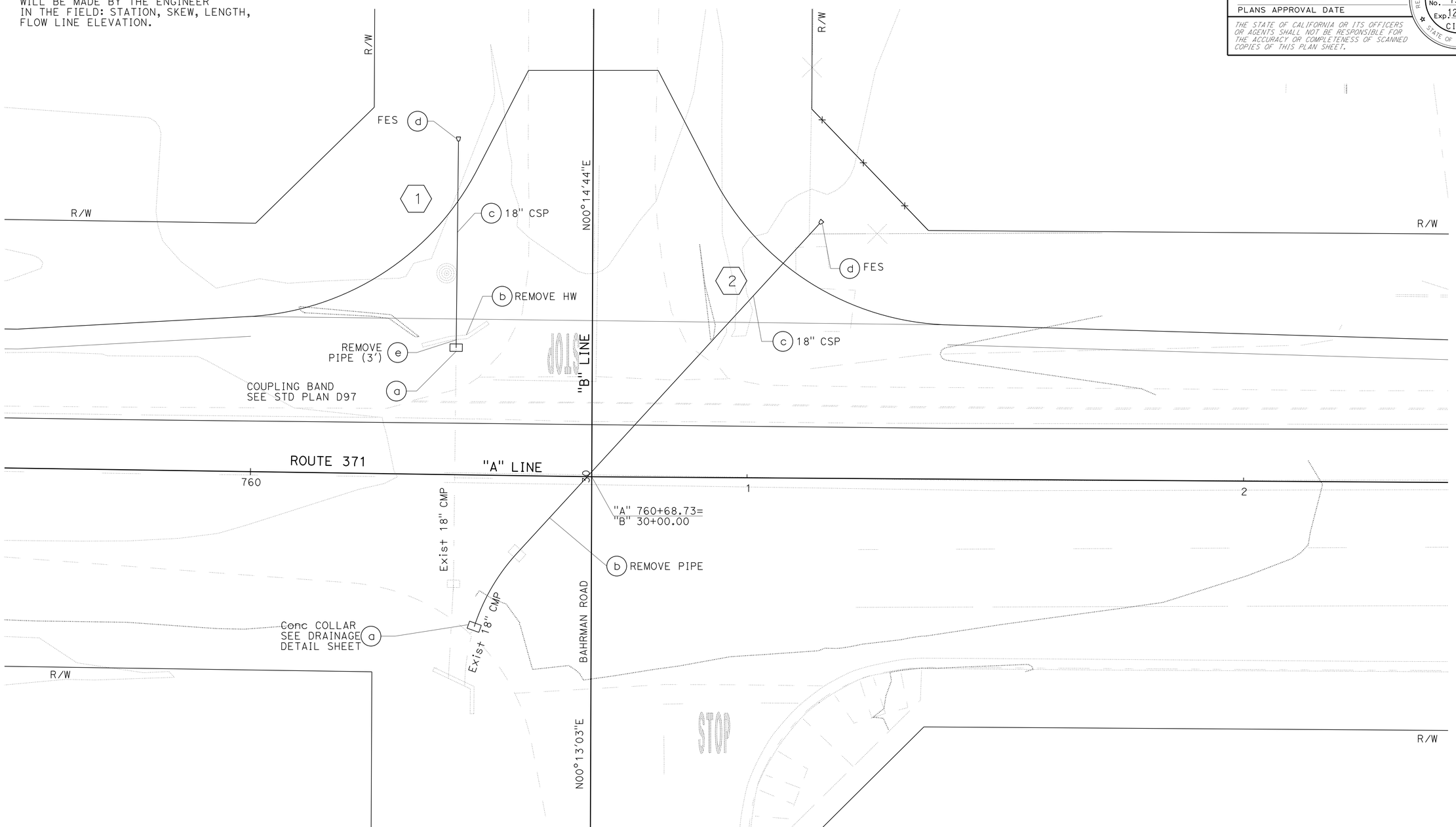

DRAINAGE PLAN

SCALE: 1" = 10'

D-1

APPROVED FOR DRAINAGE WORK ONLY

STATE OF CALIFORNIA - DEPARTMENT OF TRANSPORTATION
Caltrans
DESIGN A

FUNCTIONAL SUPERVISOR: RENEE SASSE
CALCULATED-DESIGNED BY: MYLINH NGUYEN
CHECKED BY: PAUL PHAN
REVISED BY
DATE REVISED

LAST REVISION 06-22-15
DATE PLOTTED => 23-NOV-2015
TIME PLOTTED => 12:36

Dist	COUNTY	ROUTE	POST MILES TOTAL PROJECT	SHEET No.	TOTAL SHEETS
08	Riv	371	70.6/70.9	8	30

REGISTERED CIVIL ENGINEER 6-22-15 DATE

6-22-15
PLANS APPROVAL DATE

REGISTERED PROFESSIONAL ENGINEER
DUNG HUY PHAN
No. 73061
Exp. 12/31/16
CIVIL
STATE OF CALIFORNIA

THE STATE OF CALIFORNIA OR ITS OFFICERS OR AGENTS SHALL NOT BE RESPONSIBLE FOR THE ACCURACY OR COMPLETENESS OF SCANNED COPIES OF THIS PLAN SHEET.

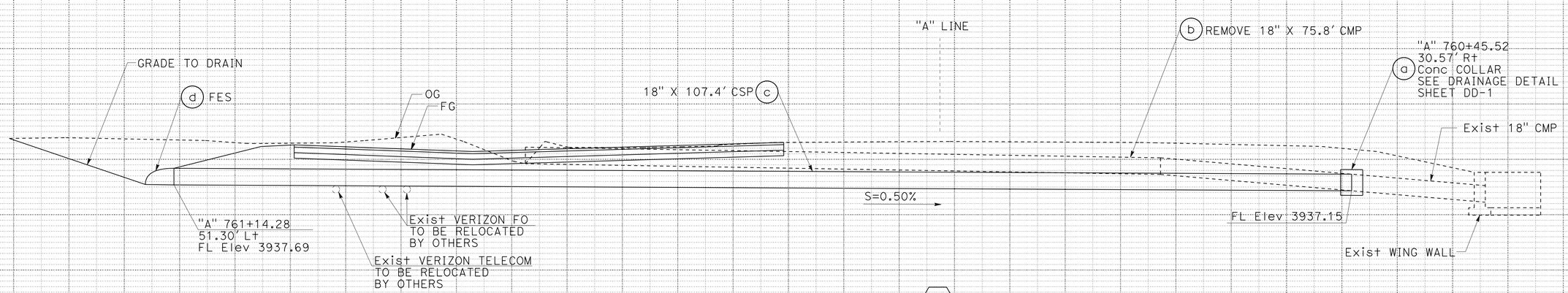

DRAINAGE SYSTEM No. 2

"A" 760+67.83

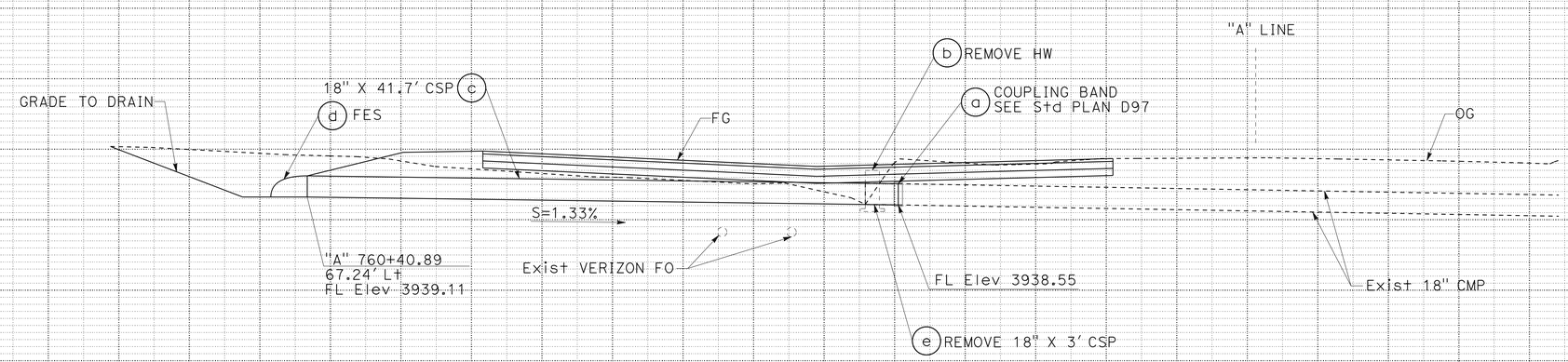

DRAINAGE SYSTEM No. 1

"B" 30+25.87 TO 30+67.53

DRAINAGE PROFILES

SCALE: Herz 1"=5'
Vert 1"=5

DP-1

STATE OF CALIFORNIA - DEPARTMENT OF TRANSPORTATION
Caltrans®
DESIGN A
FUNCTIONAL SUPERVISOR: RENEE SASSE
CALCULATED-DESIGNED BY: MYLINH NGUYEN
CHECKED BY: PAUL PHAN
REVISED BY
DATE REVISED

LAST REVISION 06-22-15
DATE PLOTTED => 23-NOV-2015
TIME PLOTTED => 12:36

Dist	COUNTY	ROUTE	POST MILES TOTAL PROJECT	SHEET No.	TOTAL SHEETS
08	Riv	371	70.6/70.9	9	30

REGISTERED CIVIL ENGINEER 6-22-15 DATE

6-22-15
PLANS APPROVAL DATE

REGISTERED PROFESSIONAL ENGINEER
DUNG HUY PHAN
No. 73061
Exp. 12/31/16
CIVIL
STATE OF CALIFORNIA

THE STATE OF CALIFORNIA OR ITS OFFICERS OR AGENTS SHALL NOT BE RESPONSIBLE FOR THE ACCURACY OR COMPLETENESS OF SCANNED COPIES OF THIS PLAN SHEET.

NOTES:

1. WHERE PIPES OF DIFFERENT DIAMETERS ARE JOINED WITH A CONCRETE COLLAR, 'L' AND 'T' SHALL BE THOSE OF THE LARGER PIPE. D=D1 OR D2, WHICHEVER IS GREATER.
2. FOR PIPE SIZE NOT LISTED USE NEXT SIZE LARGER.
3. OMIT REINFORCING ON PIPES 24" AND LESS IN DIAMETER AND ON ALL PIPES WHERE ANGLE A IS LESS THAN 10°.
4. JOIN PIPES AT INVERTS.
5. REINFORCEMENT SHALL BE PLACED 1½" CLEAR FROM OUTSIDE DIAMETER OF PIPE.

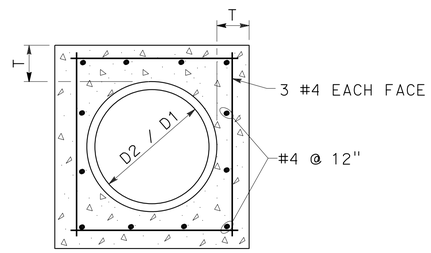

SECTION B-B

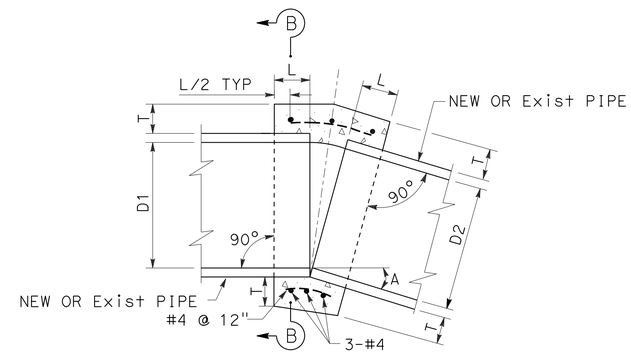

CONCRETE COLLAR

D	L	T
12"	1.0'	4"
18"	1.0'	5"
24"	1.0'	6"
36"	1.5'	8"
48"	1.5'	10"
54"	1.5'	10"
60"	1.75'	11"
66"	1.75'	11"
72"	2.0'	12"

DRAINAGE DETAIL

NO SCALE

DD-1

STATE OF CALIFORNIA - DEPARTMENT OF TRANSPORTATION
Caltrans®
DESIGN A

FUNCTIONAL SUPERVISOR: RENEE SASSE
CALCULATED-DESIGNED BY: MYLINH NGUYEN
CHECKED BY: PAUL PHAN
REVISED BY
DATE REVISED

LAST REVISION 06-22-15
DATE PLOTTED => 23-NOV-2015
TIME PLOTTED => 12:36

Dist	COUNTY	ROUTE	POST MILES TOTAL PROJECT	SHEET No.	TOTAL SHEETS
08	Riv	371	70.6/70.9	10	30

REGISTERED CIVIL ENGINEER 6-22-15 DATE

6-22-15
PLANS APPROVAL DATE

REGISTERED PROFESSIONAL ENGINEER
DUNG HUY PHAN
No. 73061
Exp. 12/31/16
CIVIL
STATE OF CALIFORNIA

THE STATE OF CALIFORNIA OR ITS OFFICERS OR AGENTS SHALL NOT BE RESPONSIBLE FOR THE ACCURACY OR COMPLETENESS OF SCANNED COPIES OF THIS PLAN SHEET.

NOTES :

1. THE PRECISE DETERMINATION OF THE FOLLOWING ITEMS WILL BE MADE BY THE ENGINEER IN THE FIELD: STATION, SKEW, LENGTH, FLOW LINE ELEVATION.
2. FOR DRAINAGE LOCATIONS AND DETAILS, SEE DRAINAGE LAYOUTS, PROFILES, AND DETAILS SHEETS.

DRAINAGE QUANTITIES

DRAINAGE SHEET NO.	DRAINAGE SYSTEM NO. ⬡	DRAINAGE UNIT ◯	REMOVE PIPE	REMOVE HEADWALL	MINOR CONCRETE (N) (Conc COLLAR)	18" CSP (0.109" THICK)	18" STEEL FES	COUPLING BAND (N)	DESCRIPTION
			LF	EA	CY	LF	EA	EA	
D-1	1	a						1	COUPLING BAND
		b		1					REMOVE HEAD WALL
		c				41.7			18" CSP (0.109" THICK)
		d	3.0						Exist 18" CSP
		e					1		FES
D-1	2								
		a			0.3				Conc COLLAR, SEE SHEET DD-1
		b	75.8						Exist 18" CSP
		c				107.4			18" CSP (0.109" THICK)
		d					1		18" STEEL FES
			78.8	1		149.1	2		TOTAL

(N) - NOT A SEPARATE PAY ITEM, FOR INFORMATION ONLY.

DRAINAGE QUANTITIES

DQ-1

REVISED BY | DATE REVISED
MYLINH NGUYEN | PAUL PHAN
CALCULATED-DESIGNED BY | CHECKED BY
FUNCTIONAL SUPERVISOR: RENEE SASSE
STATE OF CALIFORNIA - DEPARTMENT OF TRANSPORTATION
Caltrans
DESIGN A

LAST REVISION 06-22-15 | DATE PLOTTED => 23-NOV-2015 TIME PLOTTED => 12:36

Dist	COUNTY	ROUTE	POST MILES TOTAL PROJECT	SHEET No.	TOTAL SHEETS
08	Riv	371	70.6/70.9	11	30

REGISTERED CIVIL ENGINEER 6-22-15 DATE

6-22-15
PLANS APPROVAL DATE

REGISTERED PROFESSIONAL ENGINEER
DUNG HUY PHAN
No. 73061
Exp. 12/31/16
CIVIL
STATE OF CALIFORNIA

THE STATE OF CALIFORNIA OR ITS OFFICERS OR AGENTS SHALL NOT BE RESPONSIBLE FOR THE ACCURACY OR COMPLETENESS OF SCANNED COPIES OF THIS PLAN SHEET.

NOTES:

1. FOR ACCURATE RIGHT OF WAY AND ACCESS DATA, CONTACT RIGHT OF WAY ENGINEERING AT THE DISTRICT OFFICE.

LEGEND:

—— fo —— —— —— fo —— UNDERGROUND Exist FIBER OPTIC (VERIZON - V)

——-- tc ——— ———-- tc — BURIED CABLE (VERIZON - V)

——- e ——— ———(oh)— ANZA ELECTRIC OVERHEAD LINE

* OVERHEAD Exist POWER POLE (ANZA ELECTRIC COOPERATIVE DISTRIBUTION)

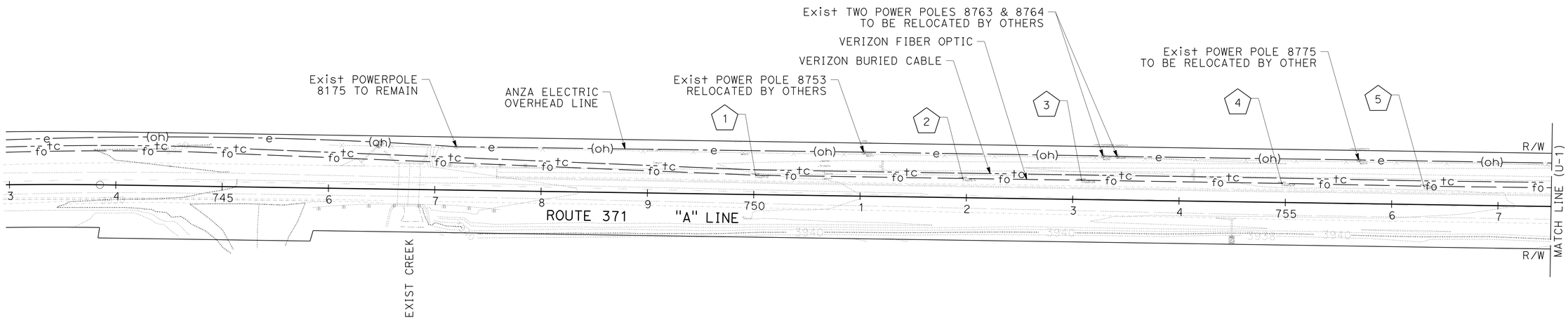

POTHOLE LOCATION TABLE

⬠	DESCRIPTION	POTHOLE COORDINATE		ELEVATION	DEPTH (FT)
		NORTHING	EASTING		
1	FIBER OPTIC LINE (V) *	2145929.33	6428547.18	3945.93	3.4
2	FIBER OPTIC LINE (V) *	2145926.19	6428742.14	3944.56	3.3
3	FIBER OPTIC LINE (V) *	2145924.59	6428853.85	3944.17	3.3
4	FIBER OPTIC LINE (V) *	2145921.58	6429042.09	3943.73	3.3
5	FIBER OPTIC LINE (V) *	2145918.94	6429175.78	3943.52	3.6

* V : VERIZON

UTILITY PLAN

SCALE: 1" = 50'

U-1

APPROVED FOR UTILITY INFORMATION ONLY

STATE OF CALIFORNIA - DEPARTMENT OF TRANSPORTATION
Caltrans®
DESIGN A
FUNCTIONAL SUPERVISOR: RENEE SASSE
CALCULATED-DESIGNED BY: MYLINH NGUYEN
CHECKED BY: PAUL PHAN
REVISED BY
DATE REVISED

LAST REVISION 06-22-15
DATE PLOTTED => 23-NOV-2015
TIME PLOTTED => 12:36

Dist	COUNTY	ROUTE	POST MILES TOTAL PROJECT	SHEET No.	TOTAL SHEETS
08	Riv	371	70.6/70.9	12	30

REGISTERED CIVIL ENGINEER 6-22-15 DATE

6-22-15
PLANS APPROVAL DATE

REGISTERED PROFESSIONAL ENGINEER
DUNG HUY PHAN
No. 73061
Exp. 12/31/16
CIVIL
STATE OF CALIFORNIA

THE STATE OF CALIFORNIA OR ITS OFFICERS OR AGENTS SHALL NOT BE RESPONSIBLE FOR THE ACCURACY OR COMPLETENESS OF SCANNED COPIES OF THIS PLAN SHEET.

NOTES:

1. FOR ACCURATE RIGHT OF WAY AND ACCESS DATA, CONTACT RIGHT OF WAY ENGINEERING AT THE DISTRICT OFFICE.

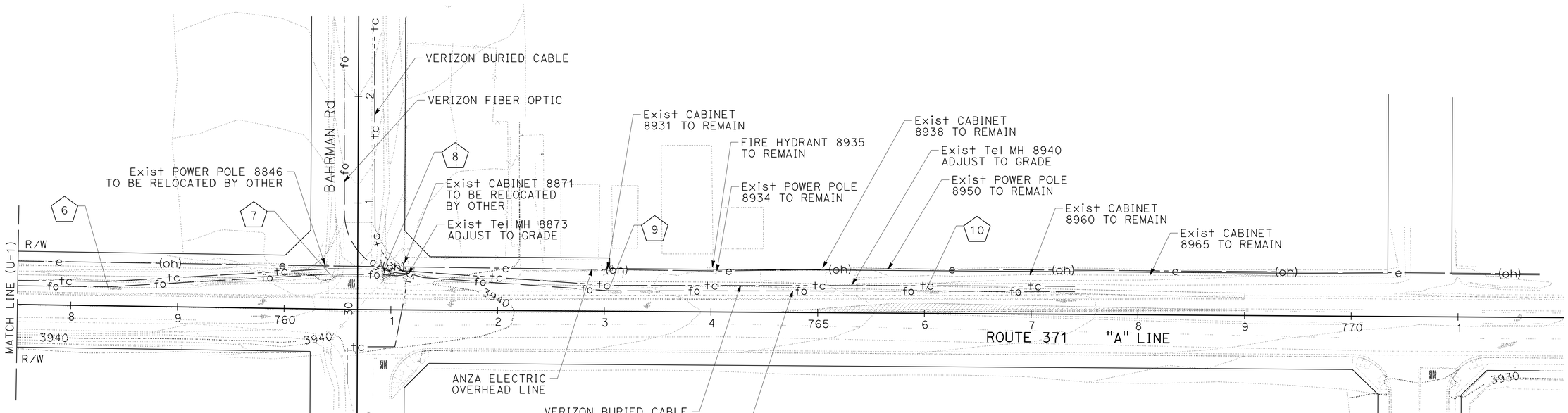

POTHOLE LOCATION TABLE

⬠	DESCRIPTION	COORDINATE		ELEVATION	DEPTH (FT)
		NORTHING	EASTING		
6	FIBER OPTIC LINE (V) *	2145916.47	6429380.27	3942.44	3.1
7	FIBER OPTIC LINE (V) *	2145928.39	6429588.25	3940.26	3.3
8	FIBER OPTIC LINE (V) *	2145927.94	6429636.69	3940.42	2.8
9	FIBER OPTIC LINE (V) *	2145912.75	6429849.18	3938.47	3.17
10	FIBER OPTIC LINE (V) *	2145912.51	6430146.43	3934.86	2.8

* V : VERIZON

UTILITY PLAN

SCALE: 1" = 50'

U-2

APPROVED FOR UTILITY INFORMATION ONLY

STATE OF CALIFORNIA - DEPARTMENT OF TRANSPORTATION
Caltrans
DESIGN A
FUNCTIONAL SUPERVISOR: RENEE SASSE
CALCULATED-DESIGNED BY: MYLINH NGUYEN
CHECKED BY: PAUL PHAN
REVISED BY
DATE REVISED

LAST REVISION 06-22-15
DATE PLOTTED => 23-NOV-2015
TIME PLOTTED => 12:36

Dist	COUNTY	ROUTE	POST MILES TOTAL PROJECT	SHEET No.	TOTAL SHEETS
08	Riv	371	70.6/70.9	13	30

W E Wasser 6-22-15
REGISTERED CIVIL ENGINEER DATE

6-22-15
PLANS APPROVAL DATE

REGISTERED PROFESSIONAL ENGINEER W.E.WASSER No. 37378 Exp. 06-30-16 CIVIL STATE OF CALIFORNIA

THE STATE OF CALIFORNIA OR ITS OFFICERS OR AGENTS SHALL NOT BE RESPONSIBLE FOR THE ACCURACY OR COMPLETENESS OF SCANNED COPIES OF THIS PLAN SHEET.

NOTES:

1. LOCATIONS OF CONSTRUCTION AREA SIGNS ARE APPROXIMATE. EXACT LOCATIONS WILL BE DETERMINED BY THE ENGINEER.
2. LOCATIONS OF PCMS WILL BE DETERMINED BY THE ENGINEER, EXCEPT FOR PCMS LOCATIONS IN SPEED REDUCTION ZONE, SHEET CS-2.
3. USE RSP T13 FOR TRAFFIC CONTROL SYSTEM FOR WORK AT INTERSECTION BETWEEN ROUTE 371 AND BAHRMAN Rd MAINTAIN TWO-LANE TWO-WAY TRAFFIC ON ROUTE 371 AND BAHRMAN Rd DURING NON-WORKING HOURS.
4. USE STEEL PLATES TO COVER EXCAVATED TRENCH FOR CULVERT CONSTRUCTION AT INTERSECTION OF ROUTE 371 AND BAHRMAN Rd DURING NON-WORKING HOURS.

LEGENDS:

- (X) CONSTRUCTION AREA SIGN SYMBOL.
- ONE POST SIGN
- FLASHING BEACON (PORTABLE)
- WORK AREA

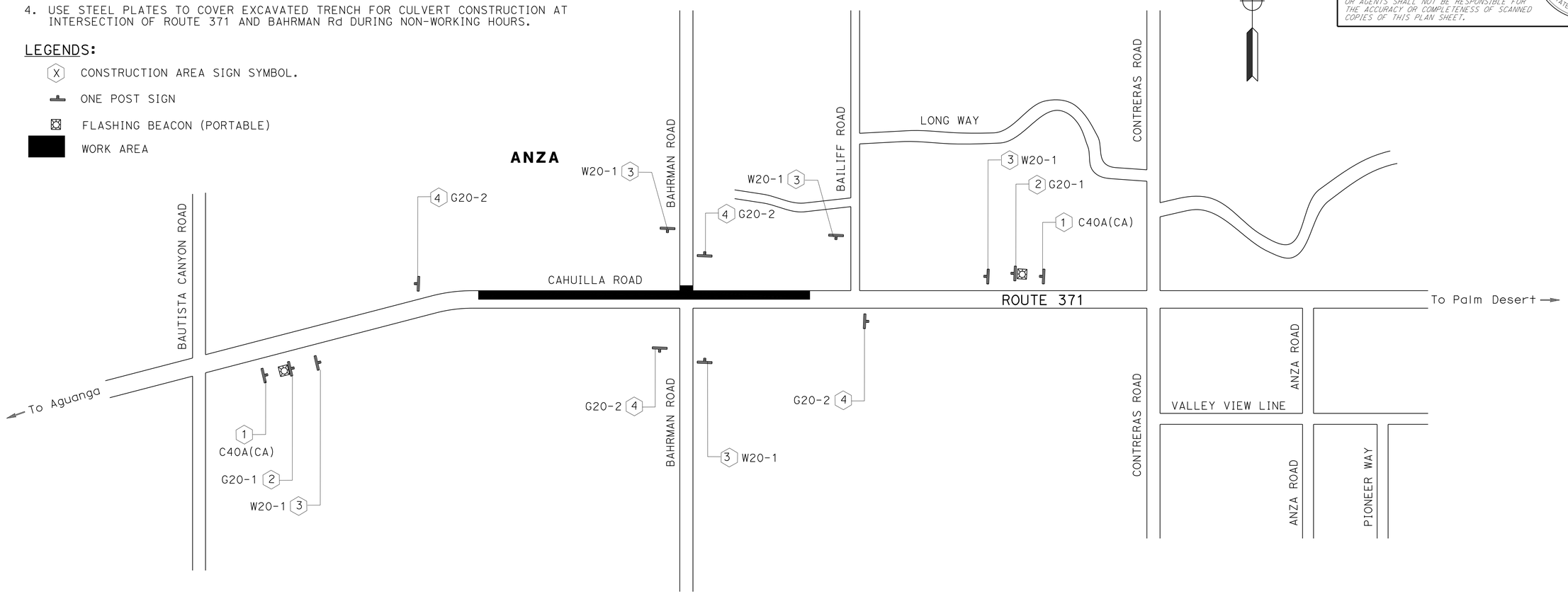

STATIONARY MOUNTED CONSTRUCTION AREA SIGNS

SIGN No. (X)	SIGN CODE		PANEL SIZE	SIGN MESSAGE	NUMBER OF POSTS AND SIZE	NUMBER OF SIGNS
	FEDERAL	CALIFORNIA				
1		C40A(CA)	48" x 48"	TRAFFIC FINES DOUBLED IN WORK ZONES	1-6" x 6"	2
2	G20-1		36" x 18"	ROAD WORK NEXT 1 MILE	1-4" x 4"	2
3	W20-1		48" x 48"	ROAD WORK AHEAD	1-6" x 6"	5
4	G20-2		36" x 18"	END ROAD WORK	1-4" x 4"	4

PORTABLE CMS

QUANTITY	REMARKS
4 EA	QTY INCLUDING SPEED REDUCTION ZONE IN CS-2

FLASHING BEACON (PORTABLE)

QUANTITY
2 EA

CONSTRUCTION AREA SIGNS

NO SCALE

CS-1

APPROVED FOR CONSTRUCTION AREA SIGN WORK ONLY

REVISED BY | DATE REVISED
KEVIN NGUYEN | BILL WASSER
CALCULATED-DESIGNED BY | CHECKED BY
FUNCTIONAL SUPERVISOR: BILL WASSER
STATE OF CALIFORNIA - DEPARTMENT OF TRANSPORTATION
Caltrans® TRAFFIC DESIGN

LAST REVISION 06-22-15 | DATE PLOTTED => 23-NOV-2015 | TIME PLOTTED => 12:36

Dist	COUNTY	ROUTE	POST MILES TOTAL PROJECT	SHEET No.	TOTAL SHEETS
08	Riv	371	70.6/70.9	14	30

W E Wasser 6-22-15
REGISTERED CIVIL ENGINEER DATE

6-22-15
PLANS APPROVAL DATE

REGISTERED PROFESSIONAL ENGINEER
W.E.WASSER
No. 37378
Exp. 06-30-16
CIVIL
STATE OF CALIFORNIA

THE STATE OF CALIFORNIA OR ITS OFFICERS OR AGENTS SHALL NOT BE RESPONSIBLE FOR THE ACCURACY OR COMPLETENESS OF SCANNED COPIES OF THIS PLAN SHEET.

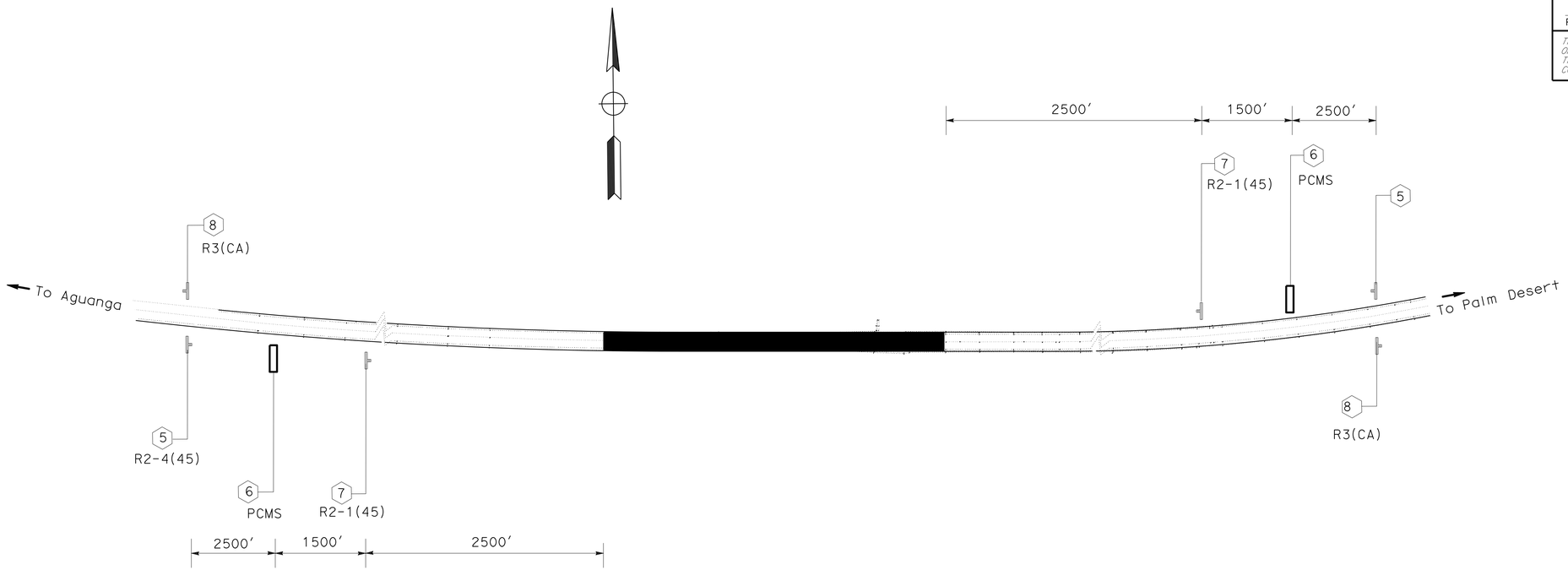

SPEED REDUCTION ZONE

STATIONARY MOUNTED CONSTRUCTION AREA SIGNS

SIGN No. (X)	SIGN CODE		PANEL SIZE	SIGN MESSAGE	NUMBER OF POSTS AND SIZE	NUMBER OF SIGNS
	FEDERAL	CALIFORNIA				
5	R2-4(45)		48" x 60"	45 ZONE AHEAD	1- 6" x 6"	2
6			PCMS	45 ZONE AHEAD STRICT ENFORCEMENT		2
7	R2-1(45)		48" x 60"	SPEED LIMIT 45	1- 6" x 6"	2
8		R3(CA)	48" x 60"	END 45 SPEED LIMIT	1- 6" x 6"	2

APPROVED FOR CONSTRUCTION AREA SIGN WORK ONLY

CONSTRUCTION AREA SIGNS
NO SCALE

CS-2

REVISED BY | DATE REVISED
KEVIN NGUYEN | BILL WASSER
CALCULATED-DESIGNED BY | CHECKED BY
FUNCTIONAL SUPERVISOR
BILL WASSER
STATE OF CALIFORNIA - DEPARTMENT OF TRANSPORTATION
Caltrans TRAFFIC DESIGN

LAST REVISION 06-22-15 | DATE PLOTTED => 23-NOV-2015 | TIME PLOTTED => 12:36

Dist	COUNTY	ROUTE	POST MILES TOTAL PROJECT	SHEET No.	TOTAL SHEETS
08	Riv	371	70.6/70.9	15	30

W E Wasser 6-22-15
REGISTERED CIVIL ENGINEER DATE

6-22-15
PLANS APPROVAL DATE

REGISTERED PROFESSIONAL ENGINEER
W. E. WASSER
No. C37378
Exp. 06/30/16
CIVIL
STATE OF CALIFORNIA

THE STATE OF CALIFORNIA OR ITS OFFICERS OR AGENTS SHALL NOT BE RESPONSIBLE FOR THE ACCURACY OR COMPLETENESS OF SCANNED COPIES OF THIS PLAN SHEET.

LEGEND:

- (#) PAVEMENT DELINEATION DETAIL No.
- STRIPING TERMINATION
- DIRECTION OF TRAVEL

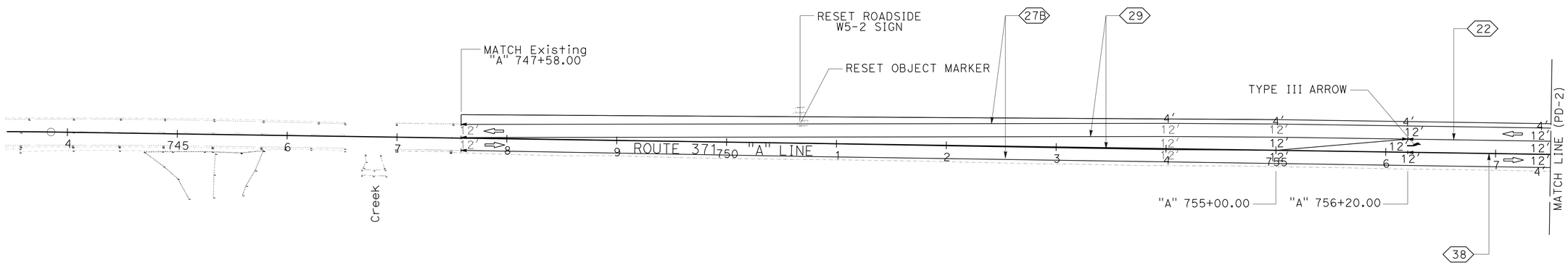

PAVEMENT DELINEATION AND SIGN PLAN

SCALE: 1" = 50'

PD-1

APPROVED FOR PAVEMENT DELINEATION AND SIGN WORK ONLY

REVISED BY | DATE REVISED
KEVIN NGUYEN | W. E. WASSER
CALCULATED-DESIGNED BY | CHECKED BY
FUNCTIONAL SUPERVISOR: W. E. WASSER

STATE OF CALIFORNIA - DEPARTMENT OF TRANSPORTATION
Caltrans® TRAFFIC DESIGN

LAST REVISION 06-22-15 | DATE PLOTTED => 23-NOV-2015 | TIME PLOTTED => 12:36

Dist	COUNTY	ROUTE	POST MILES TOTAL PROJECT	SHEET No.	TOTAL SHEETS
08	Riv	371	70.6/70.9	16	30

W E Wasser 6-22-15
REGISTERED CIVIL ENGINEER DATE

6-22-15
PLANS APPROVAL DATE

REGISTERED PROFESSIONAL ENGINEER W. E. WASSER No. 37378 Exp. 06/30/16 CIVIL STATE OF CALIFORNIA

THE STATE OF CALIFORNIA OR ITS OFFICERS OR AGENTS SHALL NOT BE RESPONSIBLE FOR THE ACCURACY OR COMPLETENESS OF SCANNED COPIES OF THIS PLAN SHEET.

NOTE:

W3-1 SIGN ON BAHRMAN Rd ON EACH DIRECTION 300' FROM THE LIMIT LINE

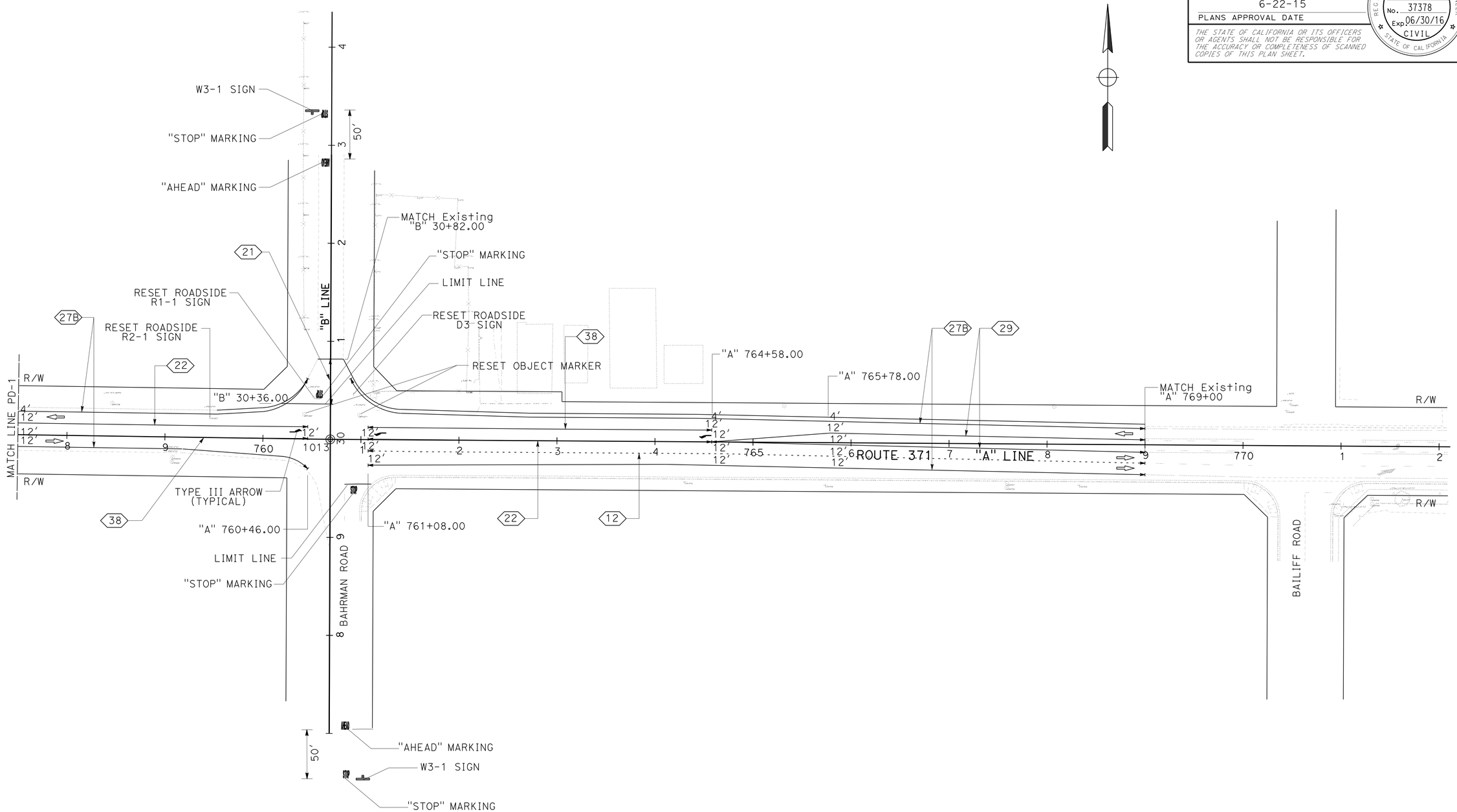

PAVEMENT DELINEATION AND SIGN PLAN

SCALE: 1" = 50'

PD-2

APPROVED FOR PAVEMENT DELINEATION AND SIGN WORK ONLY

STATE OF CALIFORNIA - DEPARTMENT OF TRANSPORTATION
Caltrans® **TRAFFIC DESIGN**

FUNCTIONAL SUPERVISOR: W. E. WASSER
CALCULATED-DESIGNED BY: KEVIN NGUYEN
CHECKED BY: W. E. WASSER
REVISED BY
DATE REVISED

LAST REVISION 06-22-15
DATE PLOTTED => 23-NOV-2015
TIME PLOTTED => 12:36

Dist	COUNTY	ROUTE	POST MILES TOTAL PROJECT	SHEET No.	TOTAL SHEETS
8	Riv	371	70.6/70.9	17	30

W E Wasser 6-22-15
REGISTERED CIVIL ENGINEER DATE

6-22-15
PLANS APPROVAL DATE

REGISTERED PROFESSIONAL ENGINEER W.E.WASSER No. C37378 Exp 06/30/16 CIVIL STATE OF CALIFORNIA

THE STATE OF CALIFORNIA OR ITS OFFICERS OR AGENTS SHALL NOT BE RESPONSIBLE FOR THE ACCURACY OR COMPLETENESS OF SCANNED COPIES OF THIS PLAN SHEET.

PAVEMENT DELINEATION QUANTITIES

LOCATION	DETAIL No. MARKING TYPE	REMOVE PAVEMENT MARKER	REMOVE THERMOPLASTIC TRAFFIC STRIPE	REMOVE YELLOW THERMOPLASTIC TRAFFIC STRIPE (HAZARDOUS WASTE)	PAVEMENT MARKER (RETROREFLECTIVE-RECESSED)		THERMOPLASTIC PAVEMENT MARKING	THERMOPLASTIC TRAFFIC STRIPE (SPRAYABLE)			RESET OBJECT MARKER	REMARKS
					TYPE D	TYPE G		4" YELLOW	4" WHITE	8" WHITE		
		(EA)	(LF)	(LF)	(EA)	(EA)	(SQFT)	(LF)	(LF)	(LF)	(EA)	
A LINE: STA 761+08.00 TO STA 769+00.00	12		198			18			792			
A LINE: STA 747+58 TO STA 760+46.00	19	83		1612								ON ROUTE 371
B LINE: STA 30+36.00 TO STA 30+82.00	21							46				ON BAHRMAN Rd
A LINE: STA 747+58 TO STA 769+00.00	22	44		1020	66			776				ON ROUTE 371
A LINE: STA 747+58 TO STA 769+00.00	27B		4284						4210			ON ROUTE 371
A LINE: STA 747+58 TO STA 769+00.00	29	26		1168	110			2608				ON ROUTE 371
A LINE: STA 756+20 TO STA 764+58.00	38					33				776		ON ROUTE 371
VARIOUS STATIONS ON B LINE	STOP						88					ON BAHRMAN Rd
VARIOUS STATIONS ON B LINE	AHEAD						62					ON BAHRMAN Rd
A LINE: STA 756+20 TO STA 764+58.00	TYPE III ARROW (L)						168					ON ROUTE 371
B LINE: STA 30+36.00, STA 29+54.00	LIMIT LINE (1'-0" WHITE)						80					ON BAHRMAN Rd
VARIOUS STATIONS ON A LINE											3	ON ROUTE 371
		153	4482	3800	176	51	398	3430	5002	776		
		153	4482	3800	227		398	9208			3	

PAVEMENT DELINEATION QUANTITIES

PDQ-1

REVISED BY | DATE REVISED
KEVIN NGUYEN | W.E.WASSER
CALCULATED-DESIGNED BY | CHECKED BY
FUNCTIONAL SUPERVISOR
BILL WASSER

STATE OF CALIFORNIA - DEPARTMENT OF TRANSPORTATION
Caltrans TRAFFIC DESIGN

LAST REVISION 06-22-15 | DATE PLOTTED => 23-NOV-2015 TIME PLOTTED => 12:36

Dist	COUNTY	ROUTE	POST MILES TOTAL PROJECT	SHEET No.	TOTAL SHEETS
8	Riv	371	70.6/70.9	18	30

W E Wasser 6-22-15
REGISTERED CIVIL ENGINEER DATE

6-22-15
PLANS APPROVAL DATE

REGISTERED PROFESSIONAL ENGINEER W.E.WASSER No. C37378 Exp 06/30/16 CIVIL STATE OF CALIFORNIA

THE STATE OF CALIFORNIA OR ITS OFFICERS OR AGENTS SHALL NOT BE RESPONSIBLE FOR THE ACCURACY OR COMPLETENESS OF SCANNED COPIES OF THIS PLAN SHEET.

ROADSIDE SIGN QUANTITIES

SHEET No.	SIGN CODE	SIGN MESSAGE/SYMBOL	PANEL SIZE	POST SIZE	ROADSIDE SIGN	RESET ROADSIDE SIGN
				4" x 6"	ONE POST	
	FEDERAL			(FT) (N)	(EA)	(EA)
PD-2	D3	BAHRMAN Rd	EXISTING			1
PD-2	R1-1	STOP	EXISTING			1
PD-2	R2-1	SPEED LIMIT	EXISTING			1
PD-1	W5-2	NARROW BRIDGE	EXISTING			1
PD-2	W3-1	STOP AHEAD SYMBOL	36"x36"	14.0	2	1
			TOTAL		2	4

(N) - NOT A SEPARATE PAY ITEM, FOR INFORMATION ONLY

SIGN PANEL MATERIAL QUANTITIES

SHEET No.	SIGN CODE	SIGN SIZE	FURNISH SINGLE SHEET ALUMINUM (0.063" UNFRAMED)	SINGLE FACED	BACKGROUND		LEGEND		GRAFFITI FILM	REMARKS
		L x D			SHEETING COLOR	RETRORE-FLECTIVE ASTM TYPE	SHEETING COLOR	RETRORE-FLECTIVE ASTM TYPE	PREMIUM	
	FEDERAL		SQFT							
PD-1	W3-1	36"x36"	18.0	x	YELLOW	3	RED, YELLOW	x	x	2 W3-1 SIGN PANELS
TOTAL			18.0							

SIGN QUANTITIES
SQ-1

STATE OF CALIFORNIA - DEPARTMENT OF TRANSPORTATION
Caltrans TRAFFIC DESIGN

FUNCTIONAL SUPERVISOR: BILL WASSER
CALCULATED-DESIGNED BY: KEVIN NGUYEN
CHECKED BY: W.E.WASSER
REVISED BY
DATE REVISED

LAST REVISION 06-22-15
DATE PLOTTED => 23-NOV-2015
TIME PLOTTED => 12:36

Dist	COUNTY	ROUTE	POST MILES TOTAL PROJECT	SHEET No.	TOTAL SHEETS
08	Riv	371	70.6/70.9	19	30

REGISTERED CIVIL ENGINEER DATE 6-22-15

PLANS APPROVAL DATE 6-22-15

REGISTERED PROFESSIONAL ENGINEER DUNG HUY PHAN No. 73061 Exp. 12/31/16 CIVIL STATE OF CALIFORNIA

THE STATE OF CALIFORNIA OR ITS OFFICERS OR AGENTS SHALL NOT BE RESPONSIBLE FOR THE ACCURACY OR COMPLETENESS OF SCANNED COPIES OF THIS PLAN SHEET.

PAVEMENT STRUCTURE QUANTITIES

SHEET No.	LINE DESIGNATION	STATION	DIRECTION	RUBBERIZED HOT MIX ASPHALT (GAP GRADED)	HOT MIX ASPHALT (TYPE A)	HOT MIX ASPHALT (SAFETY EDGE)	CLASS 2 AGGREGATE BASE	CLASS 2 AGGREGATE BASE (SAFETY EDGE)	PRIME COAT	TACK COAT
				TON	TON	TON	CY	CY	TON	TON
L-1	"A"	747+58.21 TO 757+50	WB	224.9	562.2	14.8	277.6	23.0	1.4	0.2
L-2	"A"	757+50 TO 769+00	WB	312.6	781.6	9.0	386.0	14.0	1.9	0.3
SUB TOTAL				537.5	1,343.8	23.8	663.6	37.0	3.3	0.5
TOTAL				537.5	1,367.6		700.6		3.3	0.5

EARTHWORK QUANTITIES

STATION	ROADWAY EXCAVATION
	CY
"A" 747+58.00 TO 769+00.00	2,000
TOTAL	2,000

ADJUST MANHOLE TO GRADE

LOCATION	EA
34.33' Lt "A" 761+16.83	1
26.75' Lt "A" 765+32.45	1
TOTAL	2

FENCE (TYPE CL-6)

LOCATION	LF
44' Rt "B" 30+74.24 TO 50' Lt "A" 761+36.20	34
TOTAL	34

REMOVE FENCE

LOCATION	LF
44' Rt "B" 30+74.24 TO 50' Lt "A" 761+36.20	50
TOTAL	50

TEMPORARY SOIL BINDER

LOCATION	SQYD
"A" 747+58.00 TO 769+00.00	3,995
TOTAL	3,995

SUMMARY OF QUANTITIES

NO SCALE

Q-1

REVISED BY | DATE REVISED

MYLINH NGUYEN | PAUL PHAN

CALCULATED-DESIGNED BY | CHECKED BY

FUNCTIONAL SUPERVISOR: RENEE SASSE

STATE OF CALIFORNIA - DEPARTMENT OF TRANSPORTATION

Caltrans DESIGN

LAST REVISION 06-22-15 | DATE PLOTTED => 23-NOV-2015 | TIME PLOTTED => 12:36

Dist	COUNTY	ROUTE	POST MILES TOTAL PROJECT	SHEET No.	TOTAL SHEETS
08	Riv	371	70.6/71.0	20	30

LICENSED LANDSCAPE ARCHITECT

6-22-15

PLANS APPROVAL DATE

LICENSED LANDSCAPE ARCHITECT RAY I. DESSELLE No. 2498 Signature 11/30/15 Renewal Date 6-22-15 Date STATE OF CALIFORNIA

THE STATE OF CALIFORNIA OR ITS OFFICERS OR AGENTS SHALL NOT BE RESPONSIBLE FOR THE ACCURACY OR COMPLETENESS OF SCANNED COPIES OF THIS PLAN SHEET.

NOTE:

FOR ACCURATE RIGHT OF WAY DATA, CONTACT RIGHT OF WAY ENGINEERING AT THE DISTRICT OFFICE.

LEGEND:

EROSION CONTROL (DUFF & HYDROSEED)

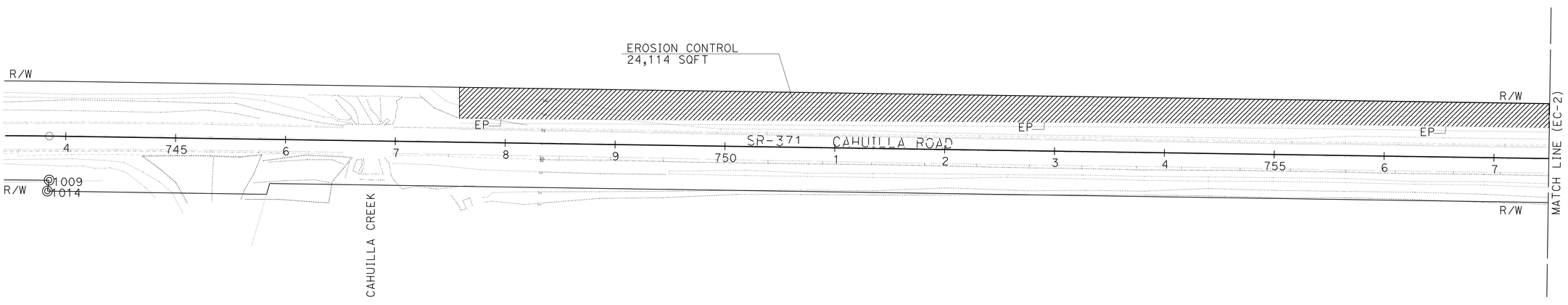

EROSION CONTROL PLAN

SCALE: 1" = 50'

EC-1

APPROVED FOR EROSION CONTROL WORK ONLY

STATE OF CALIFORNIA - DEPARTMENT OF TRANSPORTATION

Caltrans® LANDSCAPE ARCHITECTURE

SENIOR LANDSCAPE ARCHITECT: RAY I. DESSELLE

CALCULATED-DESIGNED BY: TONY CALVILLO

CHECKED BY: MIKE STIVERS

REVISED BY

DATE REVISED

LAST REVISION 06-22-15 DATE PLOTTED => 23-NOV-2015 TIME PLOTTED => 12:36

Dist	COUNTY	ROUTE	POST MILES TOTAL PROJECT	SHEET No.	TOTAL SHEETS
08	Riv	371	70.6/71.0	21	30

LICENSED LANDSCAPE ARCHITECT

6-22-15

PLANS APPROVAL DATE

LICENSED LANDSCAPE ARCHITECT RAY I. DESSELLE No. 2415 Signature 11/30/15 Renewal Date 6-22-15 Date STATE OF CALIFORNIA

THE STATE OF CALIFORNIA OR ITS OFFICERS OR AGENTS SHALL NOT BE RESPONSIBLE FOR THE ACCURACY OR COMPLETENESS OF SCANNED COPIES OF THIS PLAN SHEET.

NOTE:

FOR ACCURATE RIGHT OF WAY DATA, CONTACT RIGHT OF WAY ENGINEERING AT THE DISTRICT OFFICE.

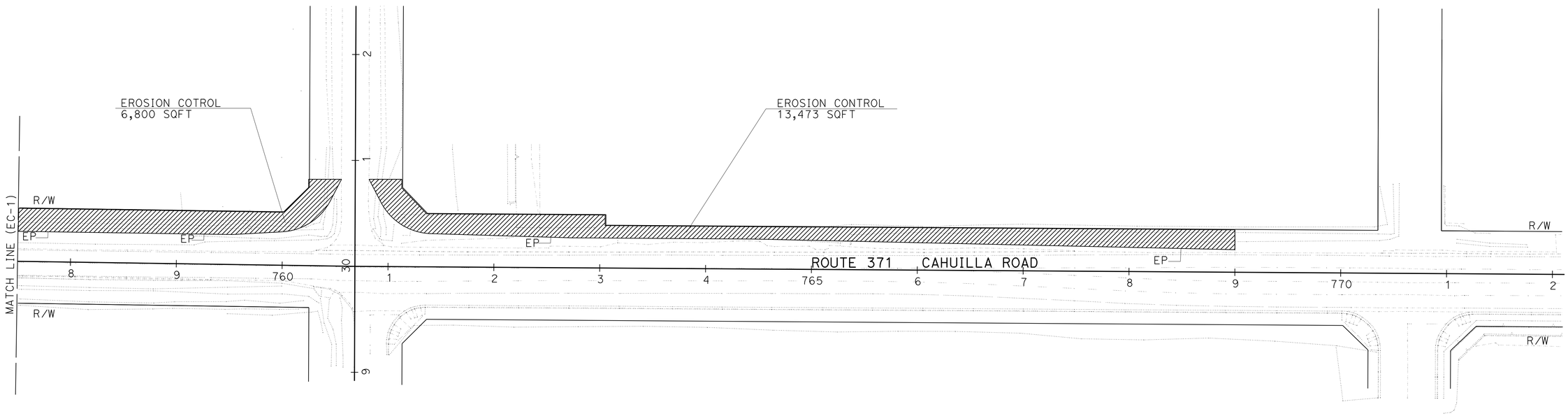

EROSION CONTROL PLAN

SCALE: 1" = 50'

EC-2

APPROVED FOR EROSION CONTROL WORK ONLY

STATE OF CALIFORNIA - DEPARTMENT OF TRANSPORTATION

Caltrans LANDSCAPE ARCHITECTURE

SENIOR LANDSCAPE ARCHITECT: RAY I. DESSELLE

CALCULATED-DESIGNED BY: TONY CALVILLO

CHECKED BY: MIKE STIVERS

REVISED BY

DATE REVISED

LAST REVISION 06-22-15

DATE PLOTTED => 23-NOV-2015

TIME PLOTTED => 12:36

Dist	COUNTY	ROUTE	POST MILES TOTAL PROJECT	SHEET No.	TOTAL SHEETS
08	Riv	371	70.6/71.0	22	30

LICENSED LANDSCAPE ARCHITECT

6-22-15

PLANS APPROVAL DATE

LICENSED LANDSCAPE ARCHITECT RAY I. DESSELLE NO. 2272 STATE OF CALIFORNIA
Signature 11/30/15
Renewal Date 6-22-15
Date

THE STATE OF CALIFORNIA OR ITS OFFICERS OR AGENTS SHALL NOT BE RESPONSIBLE FOR THE ACCURACY OR COMPLETENESS OF SCANNED COPIES OF THIS PLAN SHEET.

EROSION CONTROL

SEQUENCE	ITEM	MATERIAL DESCRIPTION	MATERIAL TYPE	(HYDROSEED) APPLICATION RATE	UNIT	QUANTITY
STEP 1	DUFF	CHIPPED VEGETATION INCLUDING ROOTS REMOVED AND COLLECTED	-	SPREAD OVER ENTIRE AREA TO A UNIFORM DEPTH	AC	1.02
STEP 2	HYDROSEED	SEED	MIX	30 LB PURE LIVE SEED/ACRE	SQFT	44,387
		BFM FIBER	WOOD	2000 LB/ACRE		
		BFM TACKIFIER	ORGANIC			

SEED MIX

BOTANICAL NAME (COMMON NAME)	PERCENT GERMINATION (MINIMUM)	POUNDS PURE LIVE SEED PER ACRE (SLOPE MEASUREMENT) (LB)
ACHILLEA MILLEFOLIUM (WHITE YARROW)	40	0.5
BROMUS CARINATUS (CALIFORNIA BROME)	50	3.0
ESCHSCHOLZIA CALIFORNICA (CALIFORNIA POPPY)	50	2.0
FESTUCA (VULPIA) MYCROSTACHYS (SMALL FESCUE)	50	4.0
LASTHENIA CALIFORNICA (DWARF GOLDFIELDS)	30	1.5
LUPINUS BICOLOR (PIGMY-LEAVED LUPINE)	50	3.0
POA SECUNDA (PINE BLUEGRASS)	50	2.0
MELICA IMPERFECTA (SMALL FLOWERED MELICA)	40	4.0
LOTUS SCOPARIUS (DEERWEED)	40	2.0
STIPA (NASSELLA) CERNUA (NODDING NEEDLEGRASS)	50	6.0
STIPA (NASSELLA) LEPIDA (FOOTHILL NEEDLEGRASS)	50	2.0

APPROVED FOR EROSION CONTROL WORK ONLY

EROSION CONTROL QUANTITIES

ECQ-1

REVISED BY | DATE REVISED
TONY CALVILLO | MIKE STIVERS
CALCULATED-DESIGNED BY | CHECKED BY
SENIOR LANDSCAPE ARCHITECT
RAY I. DESSELLE

STATE OF CALIFORNIA - DEPARTMENT OF TRANSPORTATION
Caltrans® LANDSCAPE ARCHITECTURE

LAST REVISION 06-22-15 | DATE PLOTTED => 23-NOV-2015 | TIME PLOTTED => 12:36

M

Maint	MAINTENANCE
Max	MAXIMUM
MB	METAL BEAM
MBB	METAL BEAM BARRIER
MBGR	METAL BEAM GUARD RAILING
Med	MEDIAN
MGS	MIDWEST GUARDRAIL SYSTEM
MH	MANHOLE
Min	MINIMUM
Misc	MISCELLANEOUS
Misc I & S	MISCELLANEOUS IRON AND STEEL
Mkr	MARKER
Mod	MODIFIED,
	MODIFY
Mon	MONUMENT
MP	METAL PLATE
MPGR	METAL PLATE GUARD RAILING
MR	MOVEMENT RATING
MSE	MECHANICALLY STABILIZED EMBANKMENT
Mt	MOUNTAIN, MOUNT
Mtl	MATERIAL
MVP	MAINTENANCE VEHICLE PULLOUT

N

N	NORTH
NB	NORTHBOUND
No.	NUMBER (MUST HAVE PERIOD)
Nos.	NUMBERS (MUST HAVE PERIOD)
NPS	NOMINAL PIPE SIZE
NS	NEAR SIDE
NSP	NEW STANDARD PLAN
NTS	NOT TO SCALE

O

Oblr	OBLITERATE
OC	OVERCROSSING
OD	OUTSIDE DIAMETER
OF	OUTSIDE FACE
OG	ORIGINAL GROUND
OGAC	OPEN GRADED ASPHALT CONCRETE
OGFC	OPEN GRADED FRICTION COURSE
OH	OVERHEAD
OHWM	ORDINARY HIGH WATER MARK
O-O	OUT TO OUT
Opp	OPPOSITE
OSD	OVERSIDE DRAIN

P

P	PAGE
PAP	PERFORATED ALUMINUM PIPE
PB	PULL BOX
PC	POINT OF CURVATURE,
	PRECAST
PCC	POINT OF COMPOUND CURVE,
	PORTLAND CEMENT CONCRETE
PCMS	PORTABLE CHANGEABLE MESSAGE SIGN
PCP	PERFORATED CONCRETE PIPE,
	PRESTRESSED CONCRETE PIPE
PCVC	POINT OF COMPOUND VERTICAL CURVE
PEC	PERMIT TO ENTER AND CONSTRUCT
Ped	PEDESTRIAN
Ped OC	PEDESTRIAN OVERCROSSING
Ped UC	PEDESTRIAN UNDERCROSSING
Perm Mtl	PERMEABLE MATERIAL

P continued

PG	PROFILE GRADE
PI	POINT OF INTERSECTION
PJP	PARTIAL JOINT PENETRATION
Pkwy	PARKWAY
ℙL,PL	PLATE
P/L	PROPERTY LINE
PM	POST MILE,
	TIME FROM NOON TO MIDNIGHT
PN	PAVING NOTCH
POC	POINT OF HORIZONTAL CURVE
POT	POINT OF TANGENT
POVC	POINT OF VERTICAL CURVE
PP	PIPE PILE,
	PLASTIC PIPE,
	POWER POLE
PPL	PREFORMED PERMEABLE LINER
PPP	PERFORATED PLASTIC PIPE
PRC	POINT OF REVERSE CURVE
PRF	PAVEMENT REINFORCING FABRIC
PRVC	POINT OF REVERSE VERTICAL CURVE
PS&E	PLANS, SPECIFICATIONS AND ESTIMATES
PS, P/S	PRESTRESSED
PSP	PERFORATED STEEL PIPE
PT	POINT OF TANGENCY
PVC	POLYVINYL CHLORIDE
Pvmt	PAVEMENT

Q

Qty	QUANTITY

R

R	RADIUS
R & D	REMOVE AND DISPOSE
R & S	REMOVE AND SALVAGE
R/C	RATE OF CHANGE
RCA	REINFORCED CONCRETE ARCH
RCB	REINFORCED CONCRETE BOX
RCP	REINFORCED CONCRETE PIPE
RCPA	REINFORCED CONCRETE PIPE ARCH
Rd	ROAD
Reinf	REINFORCED,
	REINFORCEMENT,
	REINFORCING
Rel	RELOCATE
Repl	REPLACEMENT
Ret	RETAINING
Rev	REVISED, REVISION
Rdwy	ROADWAY
RHMA	RUBBERIZED HOT MIX ASPHALT
Riv	RIVER
RM	ROAD-MIXED
RP	RADIUS POINT,
	REFERENCE POINT
RR	RAILROAD
RSP	ROCK SLOPE PROTECTION,
	REVISED STANDARD PLAN
Rt	RIGHT
Rte	ROUTE
RW	REDWOOD,
	RETAINING WALL
R/W	RIGHT OF WAY
Rwy	RAILWAY

S

S	SOUTH,
	SUPPLEMENT
SAE	STRUCTURE APPROACH EMBANKMENT
Salv	SALVAGE
SAPP	STRUCTURAL ALUMINUM PLATE PIPE
SB	SOUTHBOUND
SC	SAND CUSHION
SCSP	SLOTTED CORRUGATED STEEL PIPE
SD	STORM DRAIN
Sec	SECOND,
	SECTION
Sep	SEPARATION
SG	SUBGRADE
Shld	SHOULDER
Sht	SHEET
Sim	SIMILAR
℄	STATION LINE
SM	SELECTED MATERIAL
Spec	SPECIAL,
	SPECIFICATIONS
SPP	SLOTTED PLASTIC PIPE
SS	SLOPE STAKE
SSBM	STRAP AND SADDLE BRACKET METHOD
SSD	STRUCTURAL SECTION DRAIN
SSPA	STRUCTURAL STEEL PLATE ARCH
SSPP	STRUCTURAL STEEL PLATE PIPE
SSPPA	STRUCTURAL STEEL PLATE PIPE ARCH
SSRP	STEEL SPIRAL RIB PIPE
St	STREET
Sta	STATION
STBB	SINGLE THRIE BEAM BARRIER
Std	STANDARD
Str	STRUCTURE
Surf	SURFACING
SW	SIDEWALK,
	SOUND WALL
Swr	SEWER
Sym	SYMMETRICAL
S4S	SURFACE 4 SIDES

T

T	SEMI-TANGENT
Tan	TANGENT
TBB	THRIE BEAM BARRIER
Tbr	TIMBER
TC	TOP OF CURB
TCB	TRAFFIC CONTROL BOX
TCE	TEMPORARY CONSTRUCTION EASEMENT
Tel	TELEPHONE
Temp	TEMPORARY
TG	TOP OF GRADE
Tot	TOTAL
TP	TELEPHONE POLE
TPB	TREATED PERMEABLE BASE
TPM	TREATED PERMEABLE MATERIAL
Trans	TRANSITION

T continued

TS	TRANSVERSE,
	TRAFFIC SIGNAL,
	TUBULAR STEEL
Typ	TYPICAL

U

UC	UNDERCROSSING
UD	UNDERDRAIN
UG	UNDERGROUND
UON	UNLESS OTHERWISE NOTED
UP	UNDERPASS

V

V	VALVE,
	DESIGN SPEED
Var	VARIABLE,
	VARIES
VC	VERTICAL CURVE
VCP	VITRIFIED CLAY PIPE
Vert	VERTICAL
Via	VIADUCT
Vol	VOLUME

W

W	WEST,
	WIDTH
WB	WESTBOUND
WH	WEEP HOLE
WM	WIRE MESH
WS	WATER SURFACE
WSP	WELDED STEEL PIPE
Wt	WEIGHT
WV	WATER VALVE
WW	WINGWALL
WWLOL	WINGWALL LAYOUT LINE

X

X Sec	CROSS SECTION
Xing	CROSSING

Y

Yr	YEAR
Yrs	YEARS

Dist	COUNTY	ROUTE	POST MILES TOTAL PROJECT	SHEET No.	TOTAL SHEETS
08	Riv	371	70.6/71.0	23	30

Grace M. Tsushima
REGISTERED CIVIL ENGINEER

July 19, 2013
PLANS APPROVAL DATE

REGISTERED PROFESSIONAL ENGINEER
Grace M. Tsushima
No. C49814
Exp. 9-30-14
CIVIL
STATE OF CALIFORNIA

THE STATE OF CALIFORNIA OR ITS OFFICERS OR AGENTS SHALL NOT BE RESPONSIBLE FOR THE ACCURACY OR COMPLETENESS OF SCANNED COPIES OF THIS PLAN SHEET.

TO ACCOMPANY PLANS DATED 6-22-15

UNIT OF MEASUREMENT SYMBOLS:

Some of the symbols used in the project plan quantity tables and in the Bid Item List are:

TABLE A

SYMBOL USED	DEFINITIONS
ACRE	ACRE
CF	CUBIC FOOT
CY	CUBIC YARD
EA	EACH
GAL	GALLON
LB	POUND
LF	LINEAR FOOT
SQFT	SQUARE FOOT
SQYD	SQUARE YARD
STA	100 FEET
TAB	TABLET
TON	2,000 POUNDS

Some of the symbols used in the plans other than in the project plan quantity tables are:

TABLE B

SYMBOL USED	DEFINITIONS
ksi	KIPS PER SQUARE INCH
ksf	KIPS PER SQUARE FOOT
psi	POUNDS PER SQUARE INCH
psf	POUNDS PER SQUARE FOOT
lb/ft^3, pcf	POUNDS PER CUBIC FOOT
tsf	TONS PER SQUARE FOOT
mph, MPH *	MILES PER HOUR
ø	NOMINAL DIAMETER
oz	OUNCE
lb	POUND
kip	1,000 POUNDS
cal	CALORIE
ft	FOOT OR FEET
gal	GALLON

* For use on a sign panel only

STATE OF CALIFORNIA
DEPARTMENT OF TRANSPORTATION

ABBREVIATIONS (SHEET 2 OF 2)

NO SCALE

RSP A10B DATED JULY 19, 2013 SUPERSEDES STANDARD PLAN A10B DATED MAY 20, 2011 - PAGE 2 OF THE STANDARD PLANS BOOK DATED 2010.

REVISED STANDARD PLAN RSP A10B

2010 REVISED STANDARD PLAN RSP A10B

6-7-13

Dist	COUNTY	ROUTE	POST MILES TOTAL PROJECT	SHEET No.	TOTAL SHEETS
08	Riv	371	70.6/71.0	24	30

REGISTERED CIVIL ENGINEER

July 20, 2012
PLANS APPROVAL DATE

REGISTERED PROFESSIONAL ENGINEER
Roberta L. McLaughlin
No. C40375
Exp. 3-31-13
CIVIL
STATE OF CALIFORNIA

THE STATE OF CALIFORNIA OR ITS OFFICERS OR AGENTS SHALL NOT BE RESPONSIBLE FOR THE ACCURACY OR COMPLETENESS OF SCANNED COPIES OF THIS PLAN SHEET.

TO ACCOMPANY PLANS DATED 6-22-15

2010 REVISED STANDARD PLAN RSP A24E

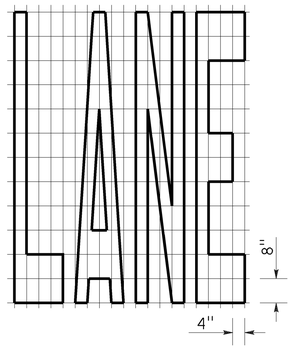

A=24 ft^2

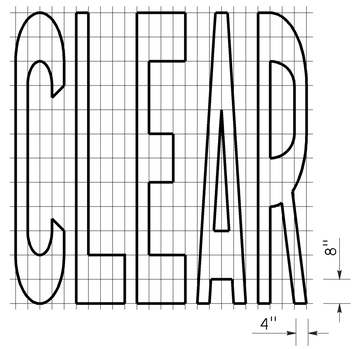

A=27 ft^2

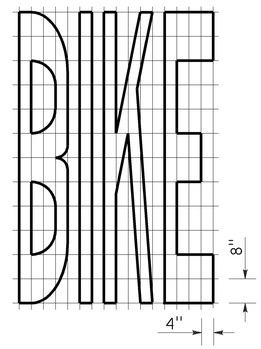

A=21 ft^2

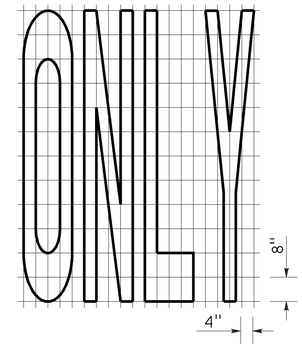

A=22 ft^2

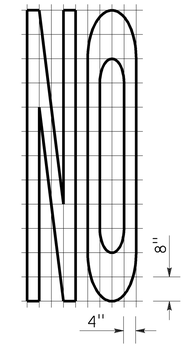

A=14 ft^2

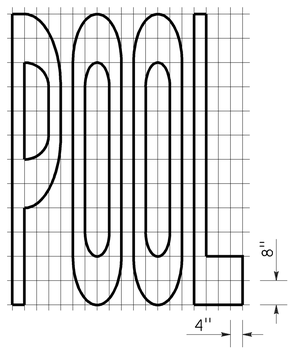

A=23 ft^2

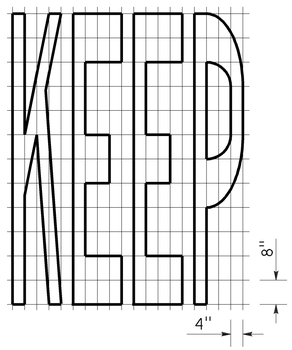

A=24 ft^2

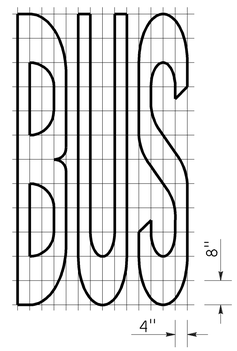

A=20 ft^2

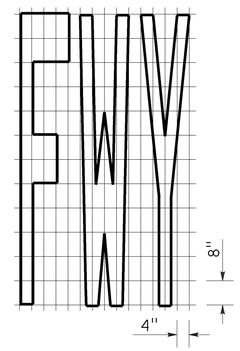

A=16 ft^2

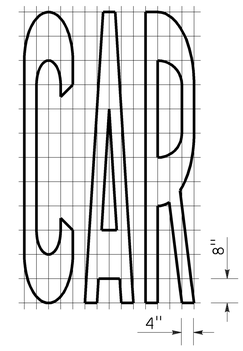

A=17 ft^2

WORD MARKINGS			
ITEM	ft^2	ITEM	ft^2
LANE	24	NO	14
POOL	23	BIKE	21
CAR	17	BUS	20
CLEAR	27	ONLY	22
KEEP	24	FWY	16

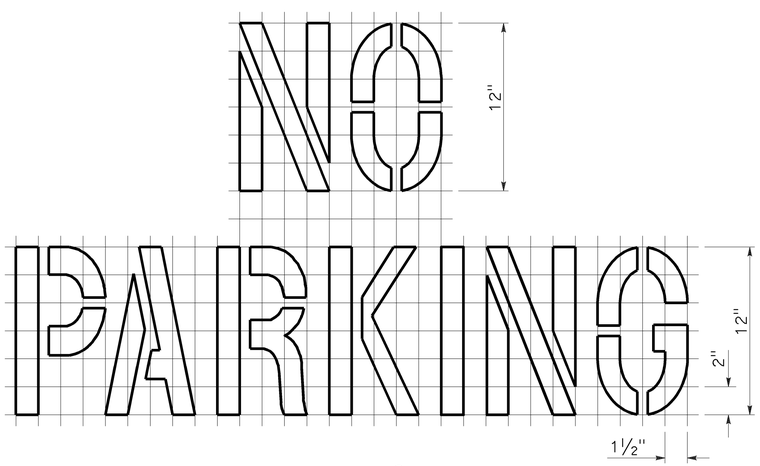

A=2 ft^2
See Notes 6 and 7

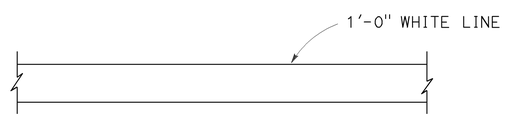

LIMIT LINE (STOP LINE)

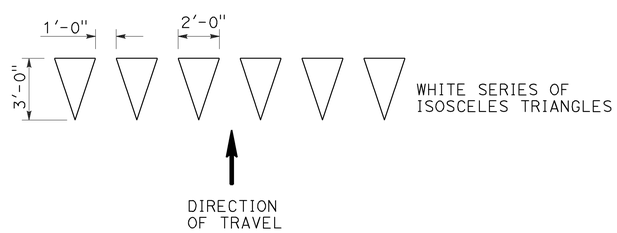

YIELD LINE

NOTES:

1. If a message consists of more than one word, it should read "UP", i.e., the first word should be nearest the driver.
2. The space between words should be at least four times the height of the characters for low speed roads, but not more than ten times the height of the characters. The space may be reduced appropriately where there is limited space because of local conditions.
3. Minor variations in dimensions may be accepted by the Engineer.
4. Portions of a letter, number or symbol may be separated by connecting segments not to exceed 2" in width.
5. The words "NO PARKING" pavement marking is to be used for parking facilities. For typical locations of markings, see Standard Plans A90A and A90B.
6. The words "NO PARKING", shall be painted in white letters no less than 1'-0" high on a contrasting background and located so that it is visible to traffic enforcement officials.

STATE OF CALIFORNIA
DEPARTMENT OF TRANSPORTATION

PAVEMENT MARKINGS
WORDS, LIMIT AND YIELD LINES

NO SCALE

RSP A24E DATED JULY 20, 2012 SUPERSEDES STANDARD PLAN A24E
DATED MAY 20, 2011 - PAGE 17 OF THE STANDARD PLANS BOOK DATED 2010.

REVISED STANDARD PLAN RSP A24E

6-12-12

DIST	COUNTY	ROUTE	POST MILES TOTAL PROJECT	SHEET No.	TOTAL SHEETS
08	Riv	371	70.6/71.0	25	30

REGISTERED CIVIL ENGINEER

November 15, 2013
PLANS APPROVAL DATE

REGISTERED PROFESSIONAL ENGINEER
Cornelis M. Hakim
No. C55610
Exp. 12-31-14
CIVIL
STATE OF CALIFORNIA

THE STATE OF CALIFORNIA OR ITS OFFICERS OR AGENTS SHALL NOT BE RESPONSIBLE FOR THE ACCURACY OR COMPLETENESS OF SCANNED COPIES OF THIS PLAN SHEET.

TO ACCOMPANY PLANS DATED 6-22-15

ABBREVIATIONS:

SE SAFETY EDGE

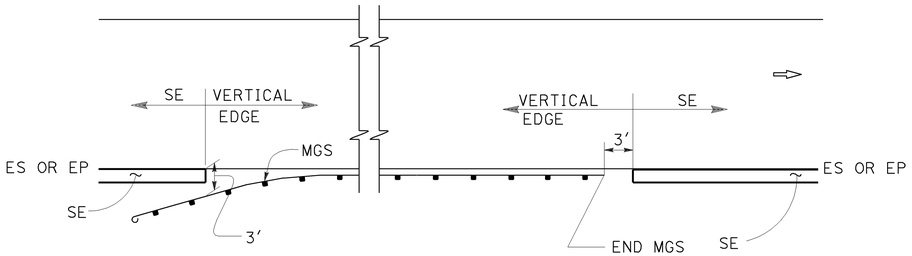

MGS

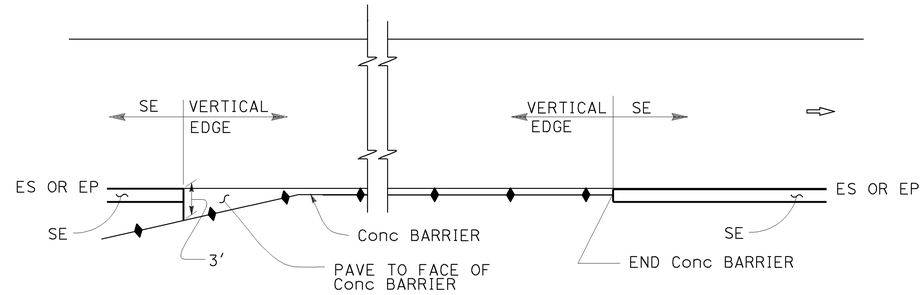

CONCRETE BARRIER

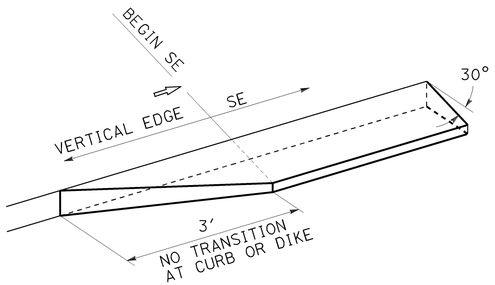

TRANSITION DETAIL FOR CONCRETE ONLY

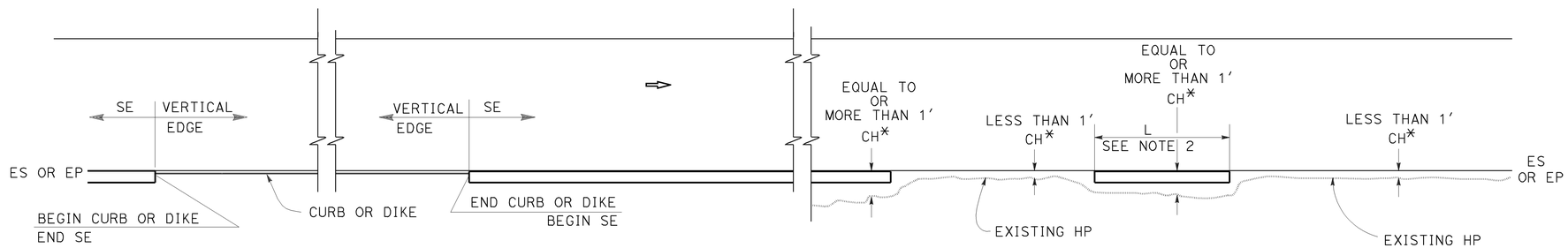

CURB OR DIKE

NARROW SIDE SLOPE

* CH = Distance from ES or EP to existing HP.

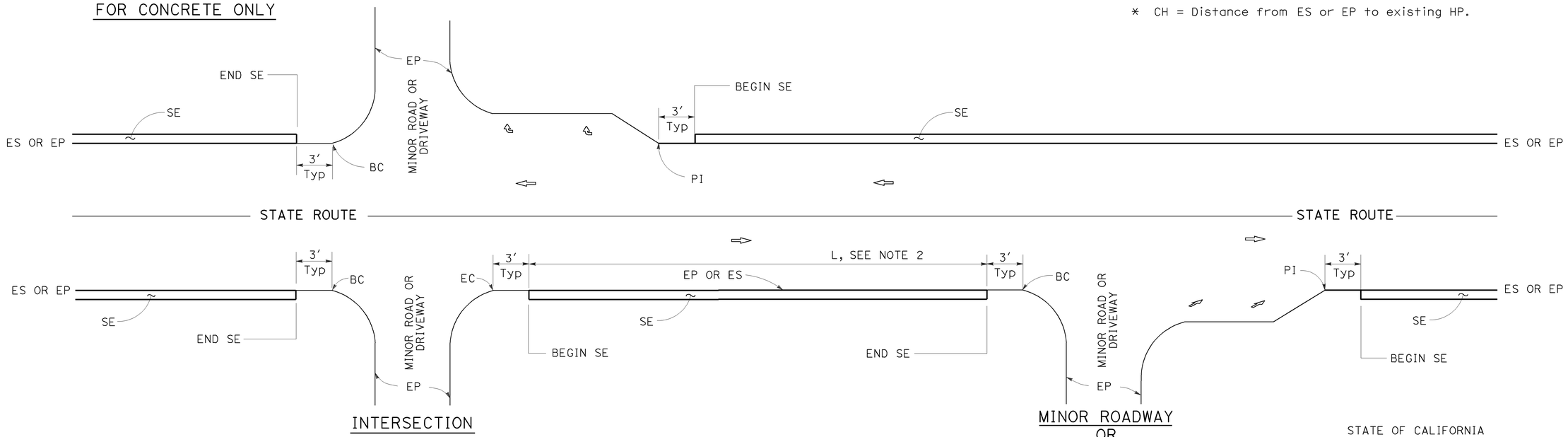

INTERSECTION

MINOR ROADWAY OR DRIVEWAY

DRIVEWAY AND INTERSECTION

NOTES:

1. For details not shown, see Revised Standard Plans RSP P75 and RSP P76.
2. Safety edge is optional when L is less than 30′.

STATE OF CALIFORNIA
DEPARTMENT OF TRANSPORTATION

PAVEMENT EDGE TREATMENTS

NO SCALE

RSP P74 DATED NOVEMBER 15, 2013 SUPERSEDES RSP P74 DATED JANUARY 20, 2012 THAT SUPPLEMENTS THE STANDARD PLANS BOOK DATED 2010.

REVISED STANDARD PLAN RSP P74

2010 REVISED STANDARD PLAN RSP P74

10-11-13

DIST	COUNTY	ROUTE	POST MILES TOTAL PROJECT	SHEET No.	TOTAL SHEETS
08	Riv	371	70.6/71.0	26	30

REGISTERED CIVIL ENGINEER

November 15, 2013
PLANS APPROVAL DATE

REGISTERED PROFESSIONAL ENGINEER
Cornelis M. Hakim
No. C55610
Exp. 12-31-14
CIVIL
STATE OF CALIFORNIA

THE STATE OF CALIFORNIA OR ITS OFFICERS OR AGENTS SHALL NOT BE RESPONSIBLE FOR THE ACCURACY OR COMPLETENESS OF SCANNED COPIES OF THIS PLAN SHEET.

TO ACCOMPANY PLANS DATED 6-22-15

LEGEND:

- HMA PAVEMENT
- HMA OR CONCRETE PAVEMENT
- CONCRETE PAVEMENT

ABBREVIATIONS:

SE SAFETY EDGE
TT TOTAL THICKNESS OF SE
HW HINGE WIDTH, DISTANCE FROM ES OR EP TO HP

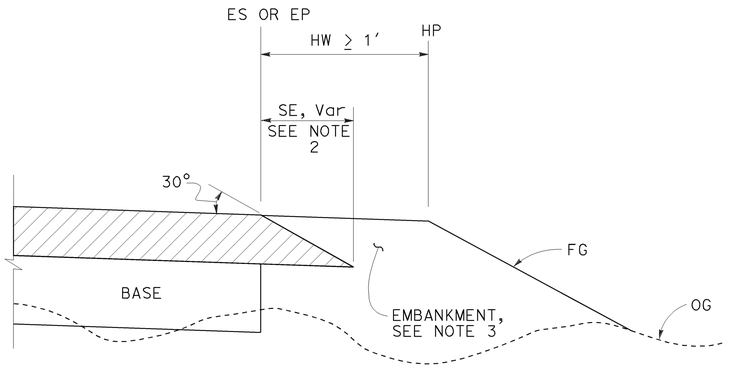

CASE K
Safety Edge - Fill Section, HW ≥ 1′

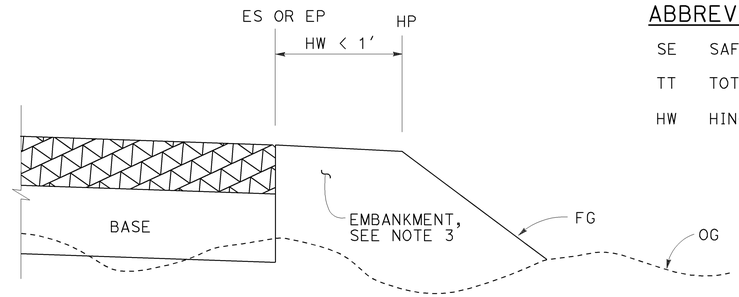

CASE L
Vertical Edge - Fill Section, HW < 1′

FILL SECTION

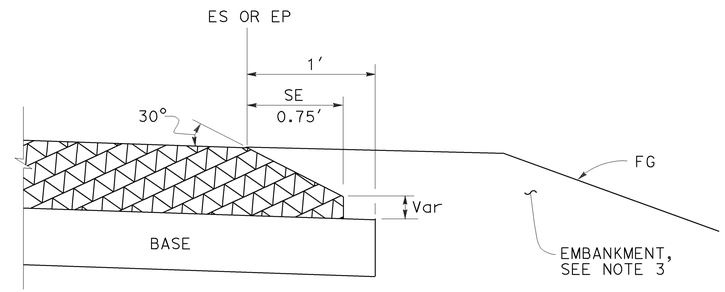

DETAIL "B"
For HMA pavement thickness more than 0.43′ or concrete pavement

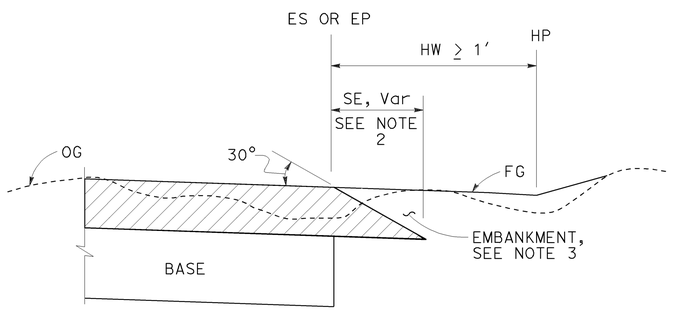

CASE M
Safety Edge - Cut Section, HW ≥ 1′

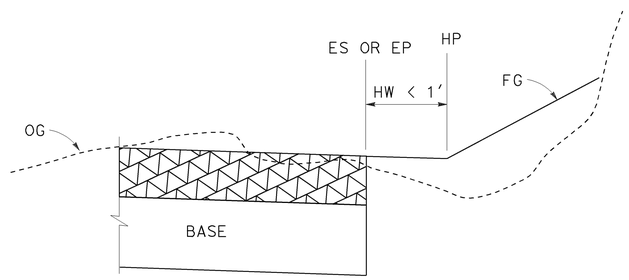

CASE N
Vertical Edge - Cut Section, HW < 1′

CUT SECTION

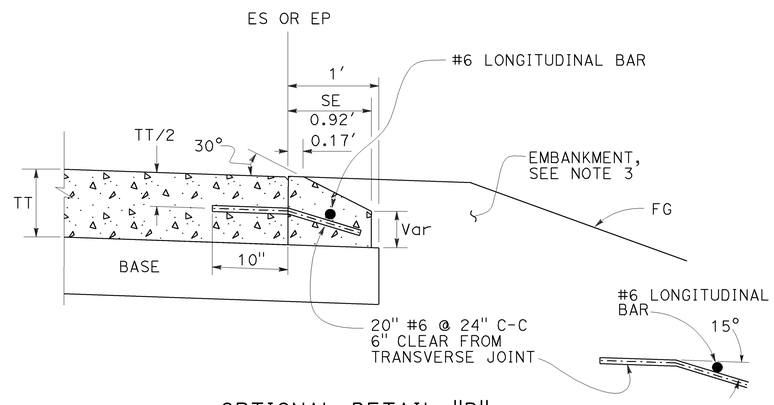

OPTIONAL DETAIL "B"
For concrete pavement
See Note 4

NOTES:

1. For limits of safety edge and vertical edge treatments, see Revised Standard Plan RSP P74
2. Details shown for HMA pavement thickness less than 0.43′. See Detail "B" for HMA pavement thickness more than 0.43′ or concrete pavement.
3. For locations and limits of embankment see project plans.
4. Safety edge transverse joint must match pavement transverse joint. End of #6 longitudinal bar must be 2" ±½" clear from transverse joint.
5. Safety edge is not needed in the area of MGS, barrier, right turn lane and acceleration lane. See Revised Standard Plan RSP P74.

STATE OF CALIFORNIA
DEPARTMENT OF TRANSPORTATION

PAVEMENT EDGE TREATMENTS-NEW CONSTRUCTION

NO SCALE

RSP P76 DATED NOVEMBER 15, 2013 SUPERSEDES RSP P76 DATED JANUARY 20, 2012 THAT SUPPLEMENTS THE STANDARD PLANS BOOK DATED 2010.

REVISED STANDARD PLAN RSP P76

2010 REVISED STANDARD PLAN RSP P76

10-4-13

Dist	COUNTY	ROUTE	POST MILES TOTAL PROJECT	SHEET No.	TOTAL SHEETS
08	Riv	371	70.6/71.0	27	30

Raymond Don Tsztoo
REGISTERED CIVIL ENGINEER

October 30, 2015
PLANS APPROVAL DATE

REGISTERED PROFESSIONAL ENGINEER
Raymond Don Tsztoo
No. C37332
Exp. 6-30-16
CIVIL
STATE OF CALIFORNIA

THE STATE OF CALIFORNIA OR ITS OFFICERS OR AGENTS SHALL NOT BE RESPONSIBLE FOR THE ACCURACY OR COMPLETENESS OF SCANNED COPIES OF THIS PLAN SHEET.

TO ACCOMPANY PLANS DATED 6-22-15

ANNULAR AND HELICAL PROFILE

COUPLING TYPE	PIPE CORRUGATION	PIPE SIZE	W OR A	PIPE WALL THICKNESS		BAND THICKNESS		BAR AND STRAP (CSP ONLY)				ANGLE						
												DIMENSIONS		BOLTS (No.- Dia)		RIVETS ANGLE TO BAND		SPOT WELDS ANGLE TO BAND
				CSP	CAP	CSP	CAP	STRAP THICKNESS	BOLTS Dia	BAR Dia	BAR YIELD STRENGTH	CSP	CAP	CSP	CAP	CSP	CAP	CSP
TWO PIECE INTEGRAL FLANGE	1½′ × ¼"	6"	7"	0.064"-0.168"		0.052"								3-⅜"				
	1½′ × ¼"	8"-10"	7"	0.064"-0.168"	0.060"-0.164"	0.064"	0.060"							3-⅜"	3-⅜"			
ANNULAR	2⅔" × ½"	THROUGH 24"	12"	0.064"-0.168"	0.060"-0.164"	0.064"	0.060"					2" × 2" × 3/16"	2" × 2" × 3/16"	3-½"	3-½"	3-⅜"	3-⅜"	3-½"
HUGGER	2⅔" × ½" REROLLED END	THROUGH 24"	10½"	0.064"-0.168"		0.064"		0.079"	½"	⅞"	32 ksi							

SPIRAL RIB PROFILE

COUPLING TYPE	PIPE CORRUGATION	PIPE SIZE	W	PIPE WALL THICKNESS		BAND THICKNESS		BAR AND STRAP (SSRP ONLY)				ANGLE						
												DIMENSIONS		BOLTS (No.- Dia)		RIVETS ANGLE TO BAND		SPOT WELDS ANGLE TO BAND
				SSRP	ASRP	SSRP	ASRP	STRAP THICKNESS	BOLTS Dia	BAR Dia	BAR YIELD STRENGTH	SSRP	ASRP	SSRP	ASRP	SSRP	ASRP	SSRP
ANNULAR	2⅔" × ½" * REROLLED END	24"	12"	0.064"-0.168"	0.060"-0.164"	0.064"	0.060"					2" × 2" × 3/16"	2" × 2" × 3/16"	3-½"	3-½"	3-⅜"	3-⅜"	3-½"
HUGGER	2⅔" × ½" * REROLLED END	24"	10½"	0.064"-0.168"		0.064"		0.079"	½"	⅞"	32 ksi							

* See Note 11.

11. All profiles of Spiral Rib Pipe (¾" × ¾" ribs at 7½" pitch and ¾" × 1" ribs at 11½" pitch in both steel and aluminum and ¾" × 1" ribs at 8½" pitch in steel only) shall be manufactured with rerolled ends. Corrugation profile of the rerolled ends shall be 2⅔" × ½" annual corrugations with a minimum of two full corrugations at each end.

NOTES:

1. For helically corrugated coupling bands, the connection angles may be oriented parallel to the pipe axis, provided connecting holes are slotted lengthwise sufficiently to allow adjustment for the helix angle.
2. Tension strap may be connected to band with either spot welds or fillet welds that develop minimum required strength of strap.
3. Use 1¼" gage line dimension on attached angle leg for rivets and spot welds.
4. Band thickness shall not be less than:
   a. 3 standard thicknesses lighter than the thickness of the pipe for Corrugated Steel Pipe.
   b. 2 standard thicknesses lighter than the thickness of the pipe and in no case lighter than 0.060" for Corrugated Aluminum Pipe.
5. Dimensions, thicknesses and strengths shown are minimum.
6. For pipe arches use same width band as for round pipe of equal periphery.
7. Fillet welds of equivalent strength may be substituted for spot welds or rivets.
8. Spot welds shall develop minimum required strength of strap.
9. Pipe with rerolled ends having at least two 2⅔" × ½" annular corrugations at each end with or without an upturned flange may be connected with any of the annular coupling bands shown for pipe of the same diameter and wall thickness and having 2⅔" × ½" corrugations.
10. For downdrain applications, two piece integral flange couplers shall have factory applied sleeve type rubber gaskets with a minimum length of 7" measured along the length of the pipe.

STATE OF CALIFORNIA
DEPARTMENT OF TRANSPORTATION

CORRUGATED METAL PIPE COUPLING DETAILS No. 7 DOWNDRAIN

NO SCALE

RSP D97G DATED OCTOBER 30, 2015 SUPERSEDES STANDARD PLAN D97G DATED MAY 20, 2011 - PAGE 202 OF THE STANDARD PLANS BOOK DATED 2010.

REVISED STANDARD PLAN RSP D97G

2010 REVISED STANDARD PLAN RSP D97G

8-19-16

Dist	COUNTY	ROUTE	POST MILES TOTAL PROJECT	SHEET No.	TOTAL SHEETS
08	Riv	371	70.6/71.0	28	30

Gregory A. Balzer
LICENSED LANDSCAPE ARCHITECT

July 19, 2013
PLANS APPROVAL DATE

THE STATE OF CALIFORNIA OR ITS OFFICERS OR AGENTS SHALL NOT BE RESPONSIBLE FOR THE ACCURACY OR COMPLETENESS OF SCANNED COPIES OF THIS PLAN SHEET.

LICENSED LANDSCAPE ARCHITECT
Gregory A. Balzer 2576
Original 2-28-15
Renewal Date 7-19-13
Date
STATE OF CALIFORNIA

TO ACCOMPANY PLANS DATED 6-22-15

A

AB	AGGREGATE BASE
ABS	ACRYLONITRILE-BUTADIENE-STYRENE
AC	ASPHALT CONCRETE
ACC	ARMOR-CLAD CONDUCTORS
Adj	ADJACENT/ADJUSTABLE
AIC	AUXILIARY IRRIGATION CONTROLLER
Alt	ALTERNATIVE
AMEND	AMENDMENT
ARV	AIR RELEASE VALVE
AUTO	AUTOMATIC
AUX	AUXILIARY
AVB	ATMOSPHERIC VACUUM BREAKER

B

B&B	BALLED AND BURLAPPED
B/B	BRASS/BRONZE
B/B/PL	BRASS/BRONZE/PLASTIC
B/PL	BRASS/PLASTIC
BFM	BONDED FIBER MATRIX
Bit Ctd	BITUMINOUS COATED
BP	BOOSTER PUMP
BPA	BACKFLOW PREVENTER ASSEMBLY
BPE	BACKFLOW PREVENTER ENCLOSURE
BV	BALL VALVE

C

C	CONDUIT
CAP	CORRUGATED ALUMINUM PIPE
CARV	COMBINATION AIR RELEASE VALVE
CB	COUPLING BAND
CCA	CAM COUPLER ASSEMBLY
CEC	CONTROLLER ENCLOSURE CABINET
CHDPE	CORRUGATED HIGH DENSITY POLYETHYLENE
CL	CHAIN LINK
CNC	CONTROL AND NEUTRAL CONDUCTORS
Conc	CONCRETE
CP	COPPER PIPE
CS	COMPOST SOCK
CSP	CORRUGATED STEEL PIPE
CST	CENTER STRIP
CV	CHECK VALVE

D

Dia	DIAMETER
DIP	DUCTILE IRON PIPE
DIT	DRIP IRRIGATION TUBING
DG	DECOMPOSED GRANITE
DN	DIAMETER NOMINAL
DVA	DRIP VALVE ASSEMBLY

E

EC	EROSION CONTROL
ECTC	EROSION CONTROL TECHNOLOGY COUNCIL
Elect	ELECTRIC/ELECTRICAL
Elev	ELEVATION
ELL	ELBOW
ENCL	ENCLOSURE
EP	EDGE OF PAVEMENT
ES	EDGE OF SHOULDER
EST	END STRIP
ESTB	ESTABLISHMENT
ETW	EDGE OF TRAVELED WAY

F

F	FULL CIRCLE
F/P	FULL/PART CIRCLE
FCV	FLOW CONTROL VALVE
FERT	FERTILIZER
FG	FINISHED GRADE
FH	FLEXIBLE HOSE
FIPT	FEMALE IRON PIPE THREAD
FIS	FERTILIZER INJECTOR SYSTEM
FL	FLOW LINE
FR	FIBER ROLL
FS	FLOW SENSOR
FSC	FLOW SENSOR CABLE
FV	FLUSH VALVE

G

Galv	GALVANIZED
GARV	GARDEN VALVE
GARVA	GARDEN VALVE ASSEMBLY
GM	GRAVEL MULCH
GPH	GALLONS PER HOUR
GPM	GALLONS PER MINUTE
GSP	GALVANIZED STEEL PIPE
GV	GATE VALVE

H

H	HALF CIRCLE
HDPE	HIGH DENSITY POLYETHYLENE
HP	HORSEPOWER/HINGE POINT
HPL	HIGH PRESSURE LINE
Hwy	HIGHWAY

I

IC	IRRIGATION CONTROLLER
ICC	IRRIGATION CONTROLLER(S) IN CONTROLLER ENCLOSURE CABINET
ID	INSIDE DIAMETER
IFS	IRRIGATION FILTRATION SYSTEM
IPS	IRON PIPE SIZE
IPT	IRON PIPE THREAD
Irr	IRRIGATION

L

L	LENGTH

M

Max	MAXIMUM
MBGR	METAL BEAM GUARD RAILING
MCV	MANUAL CONTROL VALVE
MIC	MASTER IRRIGATION CONTROLLER
Min	MINIMUM
MIPT	MALE IRON PIPE THREAD
Misc	MISCELLANEOUS
Mtl	MATERIAL
MVP	MAINTENANCE VEHICLE PULLOUT

N

NCN	NO COMMON NAME
NL	NOZZLE LINE
No.	NUMBER
NPT	NATIONAL PIPE THREAD

O

O/C	ON CENTER
OD	OUTSIDE DIAMETER
OL	OVERLAP

P

P	PART CIRCLE
PB	PULL BOX
PCC	PORTLAND CEMENT CONCRETE
PE	POLYETHYLENE
Pkt	PACKET
PL	PLASTIC
PLS	PURE LIVE SEED
PLT	PLANT/PLANTING
PLT ESTB	PLANT ESTABLISHMENT
PM	POST MILE
PR	PRESSURE RATED
PRLV	PRESSURE RELIEF VALVE
PRV	PRESSURE REGULATING VALVE
PVC	POLYVINYL CHLORIDE
Pvmt	PAVEMENT

Q

Q	QUARTER CIRCLE
QCV	QUICK COUPLING VALVE

R

R	RADIUS
RCP	REINFORCED CONCRETE PIPE
RCV	REMOTE CONTROL VALVE
RCVM	REMOTE CONTROL VALVE (MASTER)
RCVMF	REMOTE CONTROL VALVE (MASTER) W/FLOW SENSOR
RCVP	REMOTE CONTROL VALVE W/PRESSURE REGULATOR
RCW	RECYCLED WATER
RECP	ROLLED EROSION CONTROL PRODUCT
REQ	REQUIRED
RICS	REMOTE IRRIGATION CONTROL SYSTEM
R/W	RIGHT OF WAY

S

S	SLIP
SCH	SCHEDULE
SF	STATE-FURNISHED
Shld	SHOULDER
Sq	SQUARE
SST	SIDE STRIP
Sta	STATION
Std	STANDARD
SW	SIDEWALK/SOUND WALL

T

T	THIRD CIRCLE/THREAD
TLS	TRUCK LOADING STANDPIPE
TQ	THREE QUARTER CIRCLE
TRM	TURF REINFORCEMENT MAT
TT	TWO-THIRDS CIRCLE
TWSA	TREE WELL SPRINKLER ASSEMBLY
Typ	TYPICAL

U

UG	UNDERGROUND

W

W	WIDTH
W/	WITH
WM	WATER METER
WS	WYE STRAINER
WSA	WYE STRAINER ASSEMBLY
WSP	WELDED STEEL PIPE
WWM	WELDED WIRE MESH

NOTE:
For additional abbreviations, see Standard Plans A10A and A10B.

STATE OF CALIFORNIA
DEPARTMENT OF TRANSPORTATION

LANDSCAPE AND EROSION CONTROL ABBREVIATIONS

NO SCALE

RSP H1 DATED JULY 19, 2013 SUPERSEDES STANDARD PLAN H1
DATED MAY 20, 2011 - PAGE 218 OF THE STANDARD PLANS BOOK DATED 2010.

REVISED STANDARD PLAN RSP H1

2010 REVISED STANDARD PLAN RSP H1

Dist	COUNTY	ROUTE	POST MILES TOTAL PROJECT	SHEET No.	TOTAL SHEETS
08	Riv	371	70.6/71.0	29	30

REGISTERED CIVIL ENGINEER

April 19, 2013
PLANS APPROVAL DATE

REGISTERED PROFESSIONAL ENGINEER
Gurinderpal Bhullar
No. C48815
Exp. 9-30-14
CIVIL
STATE OF CALIFORNIA

THE STATE OF CALIFORNIA OR ITS OFFICERS OR AGENTS SHALL NOT BE RESPONSIBLE FOR THE ACCURACY OR COMPLETENESS OF SCANNED COPIES OF THIS PLAN SHEET.

TO ACCOMPANY PLANS DATED 6-22-15

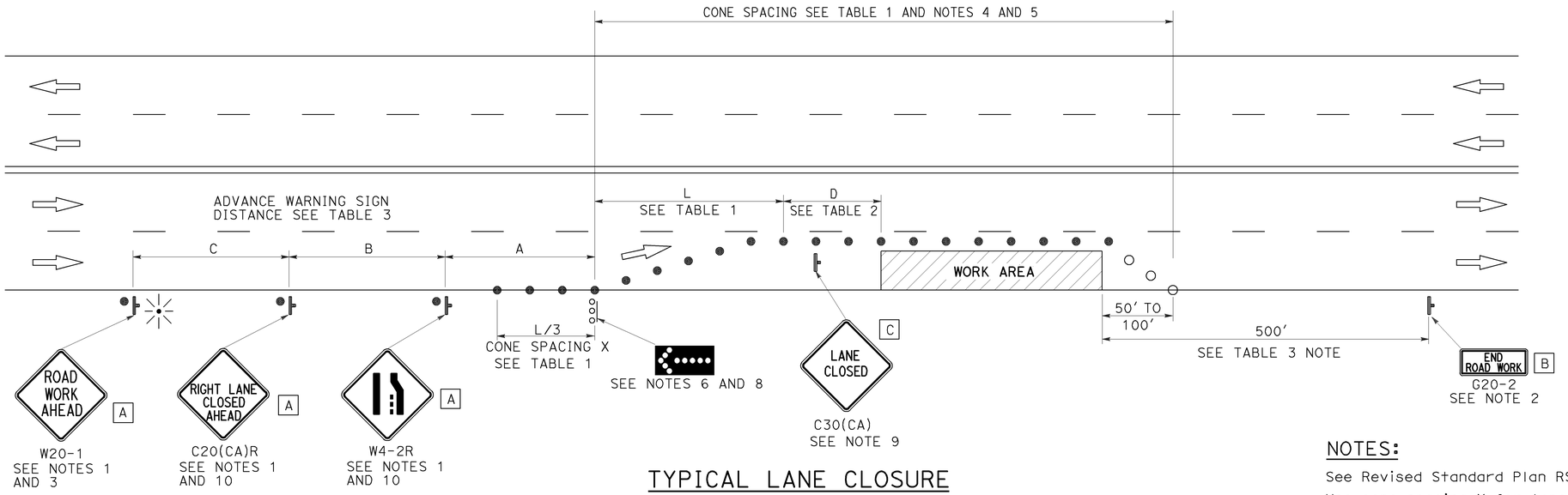

TYPICAL LANE CLOSURE

NOTES:

See Revised Standard Plan RSP T9 for tables.

Use cone spacing X for taper segment, Y for tangent segment or Z for conflict situations, as approriate, per Table 1, unless X, Y, or Z cone spacing is shown on this sheet.

Unless otherwise specified in the special provisions, all temporary warning signs shall have black legend on fluorescent orange background.

California codes are designated by (CA). Otherwise, Federal (MUTCD) codes are shown.

NOTES:

1. Each advance warning sign shall be equipped with at least two flags for daytime closure. Each flag shall be at least 16" x 16" in size and shall be orange or fluorescent red-orange in color. Flashing beacons shall be placed at the locations indicated for lane closure during hours of darkness.
2. A G20-2 "END ROAD WORK" sign, as appropriate, shall be placed at the end of the lane closure unless the end of work area is obvious, or ends within a larger project's limits.
3. If the W20-1 sign would follow within 2000' of a stationary W20-1 or G20-1 "ROAD WORK NEXT _____ MILES", use a C20(CA) sign for the first advance warning sign.
4. All cones used for lane closures during the hours of darkness shall be fitted with retroreflective bands (or sleeves) as specified in the specifications.
5. Portable delineators, placed at one-half the spacing indicated for traffic cones, may be used instead of cones for daytime closures only.
6. Flashing arrow sign shall be either Type I or Type II.
7. For approach speeds over 50 mph, use the "Traffic Control System for Lane Closure On Freeways And Expressways" plan for lane closure details and requirements.
8. A minimum 1500' of sight distance shall be provided where possible for vehicles approaching the first flashing arrow sign. Lane closures shall not begin at the top of crest vertical curve or on a horizontal curve.
9. Place a C30(CA) sign every 2000' throughout length of lane closure.
10. Median lane closures shall conform to the details as shown except that C20(CA)L and W4-2L signs shall be used.
11. At least one person shall be assigned to provide full time maintenance of traffic control devices for lane closure unless, otherwise directed by the Engineer.

LEGEND

- TRAFFIC CONE
- TRAFFIC CONE (OPTIONAL TAPER)
- TEMPORARY TRAFFIC CONTROL SIGN
- FLASHING ARROW SIGN (FAS)
- FAS SUPPORT OR TRAILER
- PORTABLE FLASHING BEACON

SIGN PANEL SIZE (Min)

A	48" x 48"
B	36" x 18"
C	30" x 30"

STATE OF CALIFORNIA
DEPARTMENT OF TRANSPORTATION

TRAFFIC CONTROL SYSTEM FOR LANE CLOSURE ON MULTILANE CONVENTIONAL HIGHWAYS

NO SCALE

RSP T11 DATED APRIL 19, 2013 SUPERSEDES STANDARD PLAN T11
DATED MAY 20, 2011 - PAGE 239 OF THE STANDARD PLANS BOOK DATED 2010.

REVISED STANDARD PLAN RSP T11

2010 REVISED STANDARD PLAN RSP T11

4-2-13

Dist	COUNTY	ROUTE	POST MILES TOTAL PROJECT	SHEET No.	TOTAL SHEETS
08	Riv	371	70.6/71.0	30	30

REGISTERED CIVIL ENGINEER

October 17, 2014
PLANS APPROVAL DATE

REGISTERED PROFESSIONAL ENGINEER Devinder Singh No. C50470 Exp. 6-30-15 CIVIL STATE OF CALIFORNIA

THE STATE OF CALIFORNIA OR ITS OFFICERS OR AGENTS SHALL NOT BE RESPONSIBLE FOR THE ACCURACY OR COMPLETENESS OF SCANNED COPIES OF THIS PLAN SHEET.

TO ACCOMPANY PLANS DATED 6-22-15

NOTES:

See Revised Standard Plan RSP T9 for tables.

Use cone spacing X for taper segment, Y for tangent segment or Z for conflict situations, as approriate, per Table 1, unless X, Y, or Z cone spacing is shown on this sheet.

Unless otherwise specified in the special provisions, all temporary warning signs shall have black legend on fluorescent orange background.

California codes are designated by (CA). Otherwise, Federal (MUTCD) codes are shown.

TYPICAL LANE CLOSURE WITH REVERSIBLE CONTROL

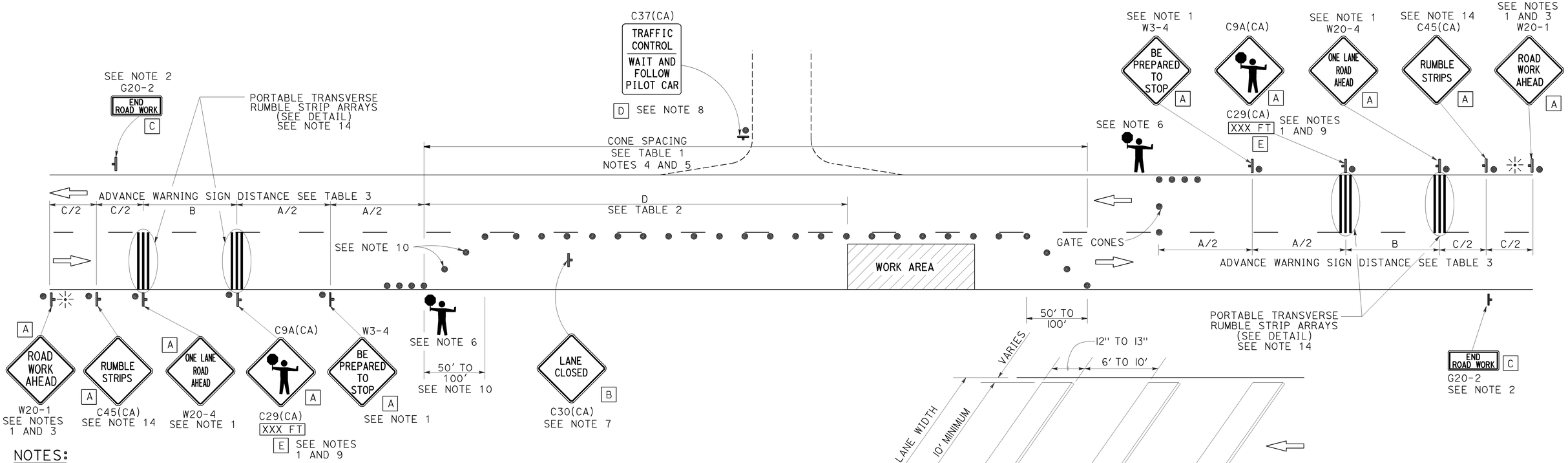

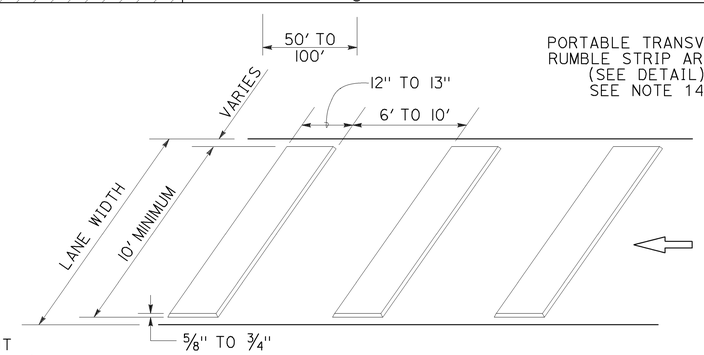

PORTABLE TRANSVERSE RUMBLE STRIP ARRAY DETAIL

NOTES:

1. Each advance warning sign in each direction of travel shall be equipped with at least two flags for daytime closure. Each flag shall be at least 16" x 16" in size and shall be orange or fluorescent red-orange in color. Flashing beacons shall be placed at the locations indicated for lane closure during hours of darkness.
2. A G20-2 "END ROAD WORK" sign, as appropriate, shall be placed at the end of the lane control unless the end of work area is obvious, or ends within a larger project's limits.
3. If the W20-1 sign would follow within 2000' of a stationary W20-1 or G20-1 "ROAD WORK NEXT _____ MILES", use a W20-4 sign for the first advance warning sign.
4. All cones used for lane closures during the hours of darkness shall be fitted with retroreflective bands (or sleeves) as specified in the specifications.
5. Portable delineators, placed at one-half the spacing indicated for traffic cones, may be used instead of cones for daytime closures only.
6. Additional advance flaggers may be required. Flagger should stand in a conspicuous place, be visible to approaching traffic as well as approaching vehicles after the first vehicle has stopped. During the hours of darkness, the flagging-station and flagger shall be illuminated and clearly visible to approaching traffic. The illumination footprint of the lighting on the ground shall be at least 20' in diameter. Place a minimum of four cones at 50' intervals in advance of flagger station as shown.
7. Place C30(CA) "LANE CLOSED" sign at 500' to 1000' intervals throughout extended work areas. They are optional if the work area is visible from the flagger station.
8. When a pilot car is used, place a C37(CA) "TRAFFIC CONTROL-WAIT AND FOLLOW PILOT CAR" sign with black legend on white background at all intersections, driveways and alleys without a flagger within traffic control area. Signs shall be clean and visible at all times. Where traffic can not be effectively self-regulated, at least one flagger shall be used at each intersection within traffic control area.
9. An optional C29(CA) sign may be placed below the C9A(CA) sign.
10. Either traffic cones or barricades shall be placed on the taper. Barricades shall be Type I, II, or III.
11. The color of the portable transverse rumble strips shall be black or orange. Use 2 arrays, each array shall consist of 3 rumble strips.
12. Portable transverse rumble strips shall not be placed on sharp horizontal or vertical curves nor shall they be placed through pedestrian crossings.
13. If the portable transverse rumble strips become out of alignment (skewed) by more than 6 inches, measured from one end to the other, they shall be readjusted to bring the placement back to the original location.
14. Portable transverse rumble strips are not required if any one of the following conditions is satisfied:
    A. Work duration occupies a location for four hours or less
    B. Posted speed limit is below 45 MPH
    C. Work is of emergency nature
    D. Work zone is in snow or icy weather conditions

LEGEND

- TRAFFIC CONE
- TEMPORARY TRAFFIC CONTROL SIGN
- PORTABLE FLASHING BEACON
- FLAGGER

SIGN PANEL SIZE (Min)

A	48" x 48"
B	30" x 30"
C	36" x 18"
D	36" x 42"
E	20" x 7"

STATE OF CALIFORNIA
DEPARTMENT OF TRANSPORTATION

TRAFFIC CONTROL SYSTEM FOR LANE CLOSURE ON TWO LANE CONVENTIONAL HIGHWAYS

NO SCALE

RSP T13 DATED OCTOBER 17, 2014 SUPERSEDES RSP T13 DATED JULY 18, 2014 AND RSP T13 DATED APRIL 19, 2013 AND STANDARD PLAN T13 DATED MAY 20, 2011 - PAGE 241 OF THE STANDARD PLANS BOOK DATED 2010.

REVISED STANDARD PLAN RSP T13

2010 REVISED STANDARD PLAN RSP T13

9-26-14