Dist	COUNTY	ROUTE	POST MILES TOTAL PROJECT	SHEET No.	TOTAL SHEETS
08	SBd	62	16.8/25.2	3	84

REGISTERED CIVIL ENGINEER 5-2-16 DATE

5-2-16
PLANS APPROVAL DATE

REGISTERED PROFESSIONAL ENGINEER KENT Q. NGUYEN No. C81710 Exp. 3/31/18 CIVIL STATE OF CALIFORNIA

THE STATE OF CALIFORNIA OR ITS OFFICERS OR AGENTS SHALL NOT BE RESPONSIBLE FOR THE ACCURACY OR COMPLETENESS OF SCANNED COPIES OF THIS PLAN SHEET.

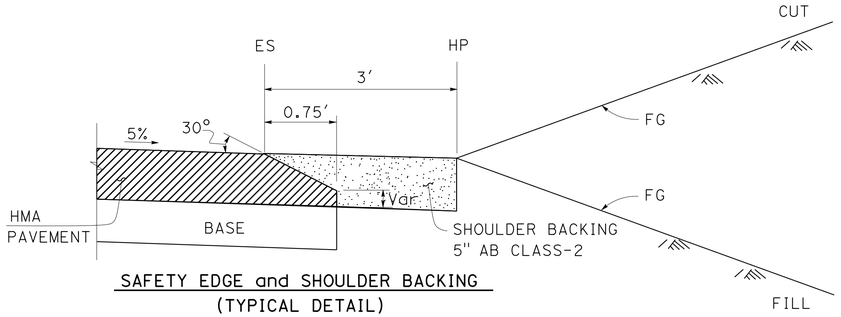

SAFETY EDGE and SHOULDER BACKING
(TYPICAL DETAIL)
For HMA pavement thickness more than 0.43′

TRAFFIC DATA

	2014 Existing	2037 Forecast
ADT	17,100	18,600
DHV	1,700	1,770
% Trucks in ADT	6%	6%
Level of Service (LOS)	A	A

TRAFFIC INDEX

	Main Lanes	Shoulders
20-Year Traffic Index	10.5	6.5
40-Year Traffic Index	11.5	7.0

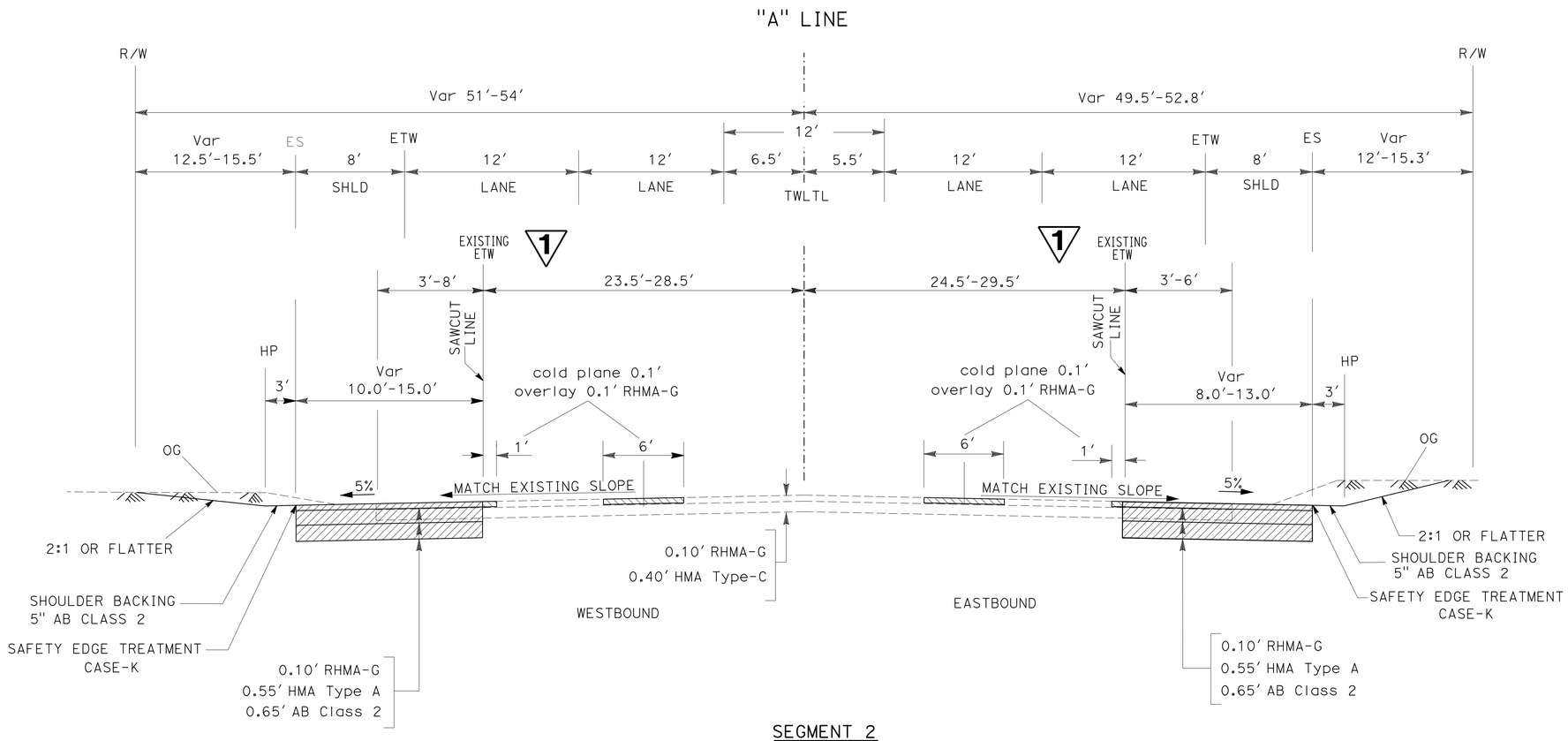

SEGMENT 2
A-LINE STA. 451+86.7 TO 508+97.5

1 REPLACED PER ADDENDUM No. 1 DATED JULY 15, 2016

TYPICAL CROSS SECTIONS

NO SCALE

X-2

STATE OF CALIFORNIA - DEPARTMENT OF TRANSPORTATION
Caltrans®
DESIGN
FUNCTIONAL SUPERVISOR: MARK PERTILE
CALCULATED-DESIGNED BY: KENT NGUYEN
CHECKED BY: MARK PERTILE
REVISED BY
DATE REVISED

LAST REVISION 05-02-16
DATE PLOTTED => 12-JUL-2016
TIME PLOTTED => 09:51

Dist	COUNTY	ROUTE	POST MILES TOTAL PROJECT	SHEET No.	TOTAL SHEETS
08	SBd	62	16.8/25.2	4	84

REGISTERED CIVIL ENGINEER 5-2-16 DATE

5-2-16
PLANS APPROVAL DATE

REGISTERED PROFESSIONAL ENGINEER KENT Q. NGUYEN No. C81710 Exp. 3/31/18 CIVIL STATE OF CALIFORNIA

THE STATE OF CALIFORNIA OR ITS OFFICERS OR AGENTS SHALL NOT BE RESPONSIBLE FOR THE ACCURACY OR COMPLETENESS OF SCANNED COPIES OF THIS PLAN SHEET.

TRAFFIC DATA

	2014 Existing	2037 Forecast
ADT	14,300	18,600
DHV	1,430	1,770
% Trucks in ADT	6%	6%
Level of Service (LOS)	A	A

TRAFFIC INDEX

	Main Lanes	Shoulders
10-Year Traffic Index	10.5	6.5
20-Year Traffic Index	11.5	7.0

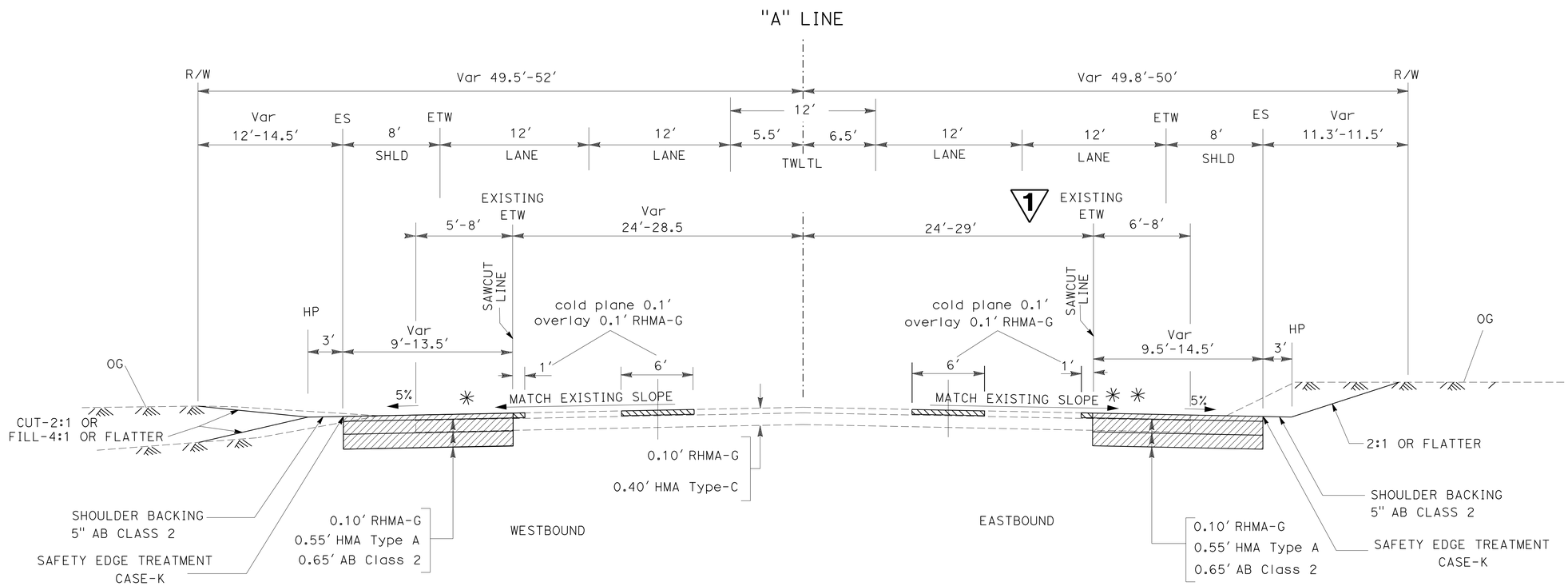

SEGMENT 3

✳✳ A-LINE EASTBOUND BEGIN WIDEN, COLDPLANE AND OVERLAY STA. 615+40.7 END STA. 668+33.8

✳ A-LINE WESTBOUND BEGIN WIDEN, COLDPLANE AND OVERLAY STA. 615+59.0 END STA. 668+33.7

1 REPLACED PER ADDENDUM No. 1 DATED JULY 15, 2016

TYPICAL CROSS SECTIONS

NO SCALE

X-3

STATE OF CALIFORNIA - DEPARTMENT OF TRANSPORTATION
Caltrans
DESIGN

FUNCTIONAL SUPERVISOR: MARK PERTILE

CALCULATED-DESIGNED BY: KENT NGUYEN
CHECKED BY: MARK PERTILE

REVISED BY
DATE REVISED

LAST REVISION 05-02-16
DATE PLOTTED => 12-JUL-2016
TIME PLOTTED => 09:51

Dist	COUNTY	ROUTE	POST MILES TOTAL PROJECT	SHEET No.	TOTAL SHEETS
08	SBd	62	16.8/25.2	41	84

REGISTERED CIVIL ENGINEER 5-2-16 DATE

5-2-16
PLANS APPROVAL DATE

REGISTERED PROFESSIONAL ENGINEER KENT Q. NGUYEN No. C81710 Exp. 3/31/18 CIVIL STATE OF CALIFORNIA

THE STATE OF CALIFORNIA OR ITS OFFICERS OR AGENTS SHALL NOT BE RESPONSIBLE FOR THE ACCURACY OR COMPLETENESS OF SCANNED COPIES OF THIS PLAN SHEET.

PAVEMENT STRUCTURE QUANTITIES

SEGMENT	LOCATION STATION	COLD PLANE ASPHALT CONCRETE PAVEMENT	HOT MIX ASPHALT (TYPE A)	RUBBERIZED HOT MIX ASPHALT (GAP-GRADED)	CLASS-2 AB	TACK COAT	LIQUID ASPHALT PRIME COAT	SHOULDER BACKING CLASS-2(5") AB
		(SQYD)	(TON)	(TON)	(CY)	(TON)	(TON)	(TON)
SEGMENT # 1	328+46.01 TO 341+05.3	235	392	87	229	1	2	0
SEGMENT # 2	451+86.7 TO 508+97.5	18069	5271	2178	3076	15	18	556
SEGMENT # 3	615+40.7 TO 668+33.8	16427	5009	2020	2924	15	17	505
SEGMENT # 4	722+05.8 TO 778+74.1	16427	5009	2020	2924	15	17	253
ADDITIONAL QUANTITY UNDER "PLACE HMA DIKE (TYPE D DIKE)" 1		-	75	-	-	-	-	-
TOTAL		51158	15756	6305	9153	46	54	1314

EARTHWORK QUANTITIES

SEGMENT	LOCATION STATION	ROADWAY EXCAVATION	EMBANKMENT (N)
		CY	CY
SEGMENT # 1	328+46.01 TO 341+05.3	773.26	20.04
SEGMENT # 2	451+86.7 TO 508+97.5	9636.92	50.98
SEGMENT # 3	615+40.7 TO 668+33.8	8893.85	146.44
SEGMENT # 4	722+05.8 TO 778+74.1	8003.32	601.99
TOTAL		27,307.35	819.45

(N) NOT A SEPERATE BID ITEM, FOR INFORMATION ONLY.

ASPHALT CONCRETE DIKE QUANTITIES

STATION LOCATION		REMOVE AC DIKE (N)	PLACE HMA DIKE (TYPE D DIKE)	HMA (AC DIKE TYPE D)
FROM	TO	FT	FT	(TON)
328+46.1	341+05.3	1260	1260	75
SUBTOTAL			1260	* 75

(N) NOT A SEPERATE BID ITEM, FOR INFORMATION ONLY.
* QUANTITY INCLUDED IN PAVEMENT STRUCTURE QUANTITIES

WATER POLLUTION CONTROL QUANTITIES

ITEM	UNIT	QUANTITY
STORM WATER ANNUAL REPORT	EA	3
TEMPORARY COVER	SQYD	2000
TEMPORARY SOIL BINDER	SQYD	1000
TEMPORARY FIBER ROLL	LF	8710
CONTRACTOR SUPPLIED BIOLOGIST	DAY	25

TEMPORARY FENCE (TYPE DESERT TORTOISE)

SEGMENT	LOCATION STATION	TEMPORARY FENCE "TYPE DESERT TORTOISE" (FT)
SEGMENT # 1	315+28 TO 341+27	2650
SEGMENT # 2	438+86 TO 522+17	15500
SEGMENT # 3	615+59 TO 668+51	11000
SEGMENT # 4	708+35 TO 791+95	15500
SUBTOTAL		44650

1 REPLACED PER ADDENDUM No. 1 DATED JULY 15, 2016

1

MINOR CONCRETE DRIVEWAY, MBGR, MAILBOX AND MANHOLE ADJUST QUANTITIES

STATION LOCATION		DIRECTION		REMOVE GUARDRAIL	MINOR CONCRETE DRIVEWAYS	RESET MAILBOX	ADJUST MANHOLE TO GRADE
FROM	TO	EAST	WEST	LF	CY	EA	EA
STA. 728+16,81	STA. 729+00.00		X	76			
STA. 473+40.50	-		X		15		
STA.768+20.50	-	X				1	
STA. 461+70.00	-		X				2
SUBTOTAL				76	15	1	2

SURVEY MONUMENT QUANTITIES

SURVEY MONUMENT (TYPE D) (EA)
80

SUMMARY OF QUANTITIES
Q-1

STATE OF CALIFORNIA - DEPARTMENT OF TRANSPORTATION
Caltrans DESIGN
FUNCTIONAL SUPERVISOR MARK PERTILE
CALCULATED-DESIGNED BY KENT NGUYEN
CHECKED BY MARK PERTILE
REVISED BY
DATE REVISED

LAST REVISION 05-02-16 | DATE PLOTTED => 12-JUL-2016 | TIME PLOTTED => 09:51

Dist	COUNTY	ROUTE	POST MILES TOTAL PROJECT	SHEET No.	TOTAL SHEETS
08	SBd	62	16.8/25.2	51	84

REGISTERED ELECTRICAL ENGINEER 5-2-16 DATE

5-2-16
PLANS APPROVAL DATE

REGISTERED PROFESSIONAL ENGINEER Ferdinand De La Cruz No. 17215 Exp. 6/30/18 ELECTRICAL STATE OF CALIFORNIA

THE STATE OF CALIFORNIA OR ITS OFFICERS OR AGENTS SHALL NOT BE RESPONSIBLE FOR THE ACCURACY OR COMPLETENESS OF SCANNED COPIES OF THIS PLAN SHEET.

NOTES:

1. FOR ACCURATE RIGHT OF WAY DATA, CONTACT RIGHT OF WAY ENGINEERING AT THE DISTRICT OFFICE.
2. REFER TO UTILITY PLANS PRIOR TO EXCAVATION AND REMOVAL OF ELECTRICAL EQUIPMENT.

LEGEND: (THIS SHEET ONLY)

1 EXISTING TYPE III-CF SERVICE EQUIPMENT ENCLOSURE

METER A: 100 A, 120 / 240 V, 2P CB MAIN TC-1
50 A, 120 V, 2P CB (SIGNAL)
15 A, 120 V, 1P CB (FLASHING BEACON)
CTID 08-54-62-0-024.100-M

METER B: 100 A, 120 / 240 V, 2P CB MAIN LS-3
30 A, 240 V, 1P CB (LIGHTING)
CTID 08-54-62-0-024.101-M

2 REMAINDER OF CIRCUIT NOT SHOWN.

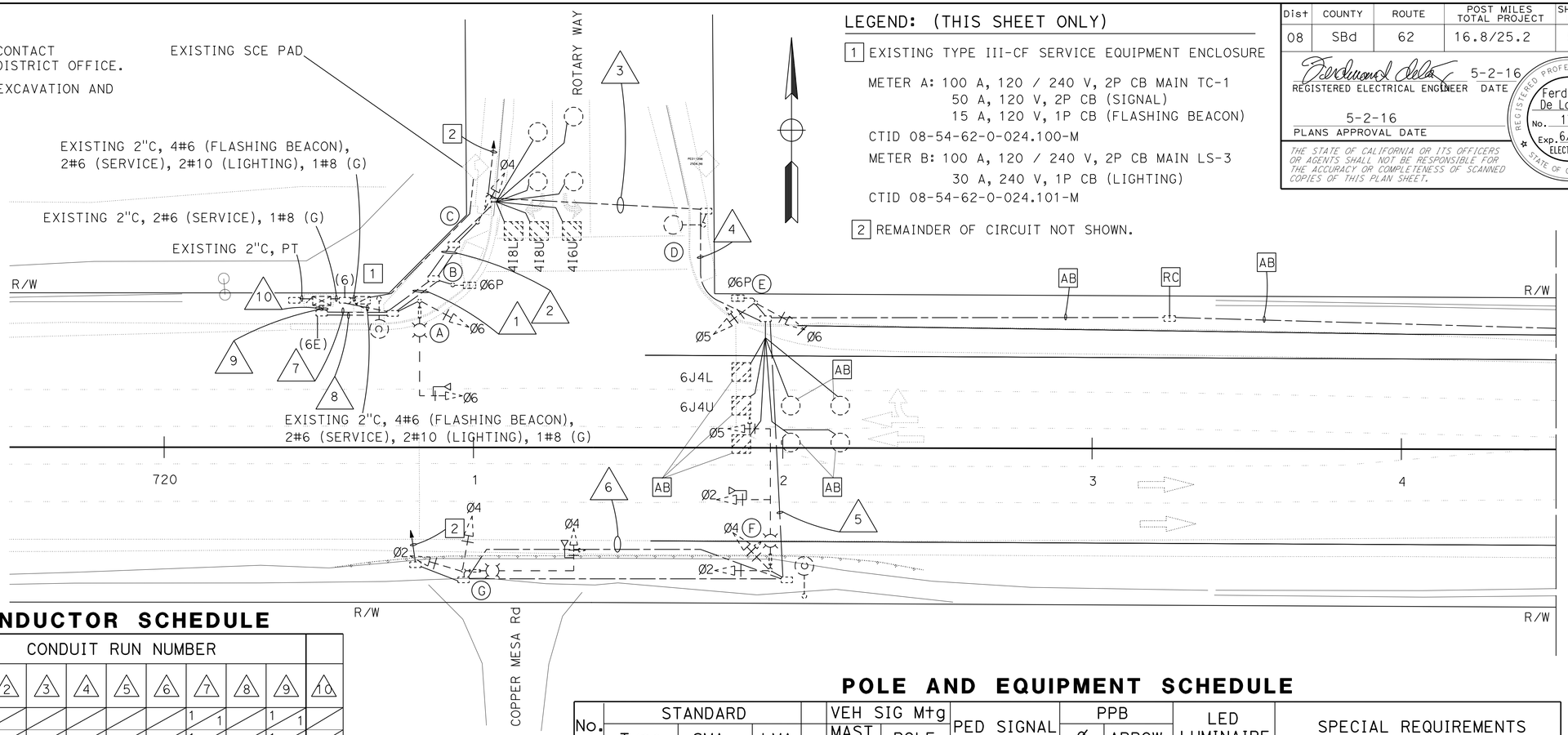

CONDUIT AND CONDUCTOR SCHEDULE

CABLE, AWG, AND DLC SCHEDULE			CONDUIT RUN NUMBER									
CABLE TYPE	S+d	PHASE	1	2	3	4	5	6	7	8	9	10
VEH-PED 12CSC	Ⓐ	Ø6							1 1		1 1	
	Ⓑ	Ø6P / Ø6	1 1						1 1		1 1	
	Ⓒ	Ø4 / Ø6	1 1						1		1	
	Ⓓ	Ø6	1	1	1				1		1	
	Ⓔ	Ø5,Ø6,Ø6P	1	1	1	1			1		1	
	Ⓕ	Ø2,Ø4,Ø5	1	1	1	1	1		1		1	
APS 3CSC	Ⓖ	Ø2,Ø4	1 1	1 1	1 1	1 1	1 1	1 1	1 1		1 1	
		TOTAL	5 3	4 2	3 2	3 1	2 1	1 1	6 4	PT PT	6 4	PT PT
AWG		CIRCUIT										
#10		LIGHTING	2	2	2	2	2	2				
#8		GROUND	4	4	2	4	2	2				
#6		FLASHING BEACON	1	1	1	1	1	1	1	1	1	1
EMERGENCY PREEMPTION CABLE			2	2	2	2	2	1		3		3
DLC												
		Ø2	5	5	5	5	5	5		5		5
		Ø4	4	4						4		4
		Ø5	2	2	2	2	2	2		2		2
		* Ø6	5	5	5	5				5		5
		TOTAL DLC	16	16	12	12	7	7		16		16
CONDUIT SIZE			2-4"	2-4"	4"	4"	4"	4"	4"	4"	4"	4"

* RC DLCS. SEE SHEET E-5 FOR NEW CONDUCTOR SCHEDULE.

1

POLE AND EQUIPMENT SCHEDULE

No.	STANDARD Type	SMA	LMA	VEH SIG Mtg MAST ARM	POLE	PED SIGNAL	PPB Ø	ARROW	LED LUMINAIRE	SPECIAL REQUIREMENTS
Ⓐ	I9-4-100	30′	15′	I-MAS	SV-1-T	—	—	—	200 W	
Ⓑ	I-A	—	—	—	—	TP-1-T	6	←	—	
Ⓒ	I-A	—	—	—	TV-1-T	—	—	—	—	
Ⓓ	15TS	—	15′	—	—	—	6	←	200 W	
Ⓔ	I-A	—	—	—	TV-2-T	SP-1-T	—	—	—	
Ⓕ	26-4-100	40′	15′	2-MAS	SV-2-T	—	—	—	200 W	
Ⓖ	26-4-100	35′	15′	MAS-4B	SV-2-T	—	—	—	200 W	

PHASE DIAGRAM-STEADY DEMAND

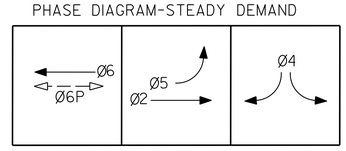

1 REPLACED PER ADDENDUM No. 1 DATED JULY 15, 2016

1 MODIFYING EXISTING ELECTRICAL SYSTEM

APPROVED FOR ELECTRICAL WORK ONLY

SCALE: 1"=20′

E-1

STATE OF CALIFORNIA - DEPARTMENT OF TRANSPORTATION
Caltrans ELECTRICAL DESIGN B

FUNCTIONAL SUPERVISOR: FERDINAND DE LA CRUZ
CALCULATED-DESIGNED BY: LUIS PENALOZA
CHECKED BY: FERDINAND DE LA CRUZ
REVISED BY / DATE REVISED

LAST REVISION 11-16-15 | DATE PLOTTED => 12-JUL-2016 | TIME PLOTTED => 09:51

Dist	COUNTY	ROUTE	POST MILES TOTAL PROJECT	SHEET No.	TOTAL SHEETS
08	SBd	62	16.8/25.2	52	84

REGISTERED ELECTRICAL ENGINEER 5-2-16 DATE

5-2-16
PLANS APPROVAL DATE

REGISTERED PROFESSIONAL ENGINEER Ferdinand De La Cruz No. 17215 Exp. 6/30/18 ELECTRICAL STATE OF CALIFORNIA

THE STATE OF CALIFORNIA OR ITS OFFICERS OR AGENTS SHALL NOT BE RESPONSIBLE FOR THE ACCURACY OR COMPLETENESS OF SCANNED COPIES OF THIS PLAN SHEET.

NOTES:

1. FOR ACCURATE RIGHT OF WAY DATA, CONTACT RIGHT OF WAY ENGINEERING AT THE DISTRICT OFFICE.
2. REFER TO UTILITY PLANS PRIOR TO EXCAVATION AND REMOVAL OF ELECTRICAL EQUIPMENT.

RS TYPE 9 CANTILEVER FLASHING BEACON.
RC EXISTING FOUNDATION.

INSTALL PORTABLE CMS DURING STAGE CONSTRUCTION.

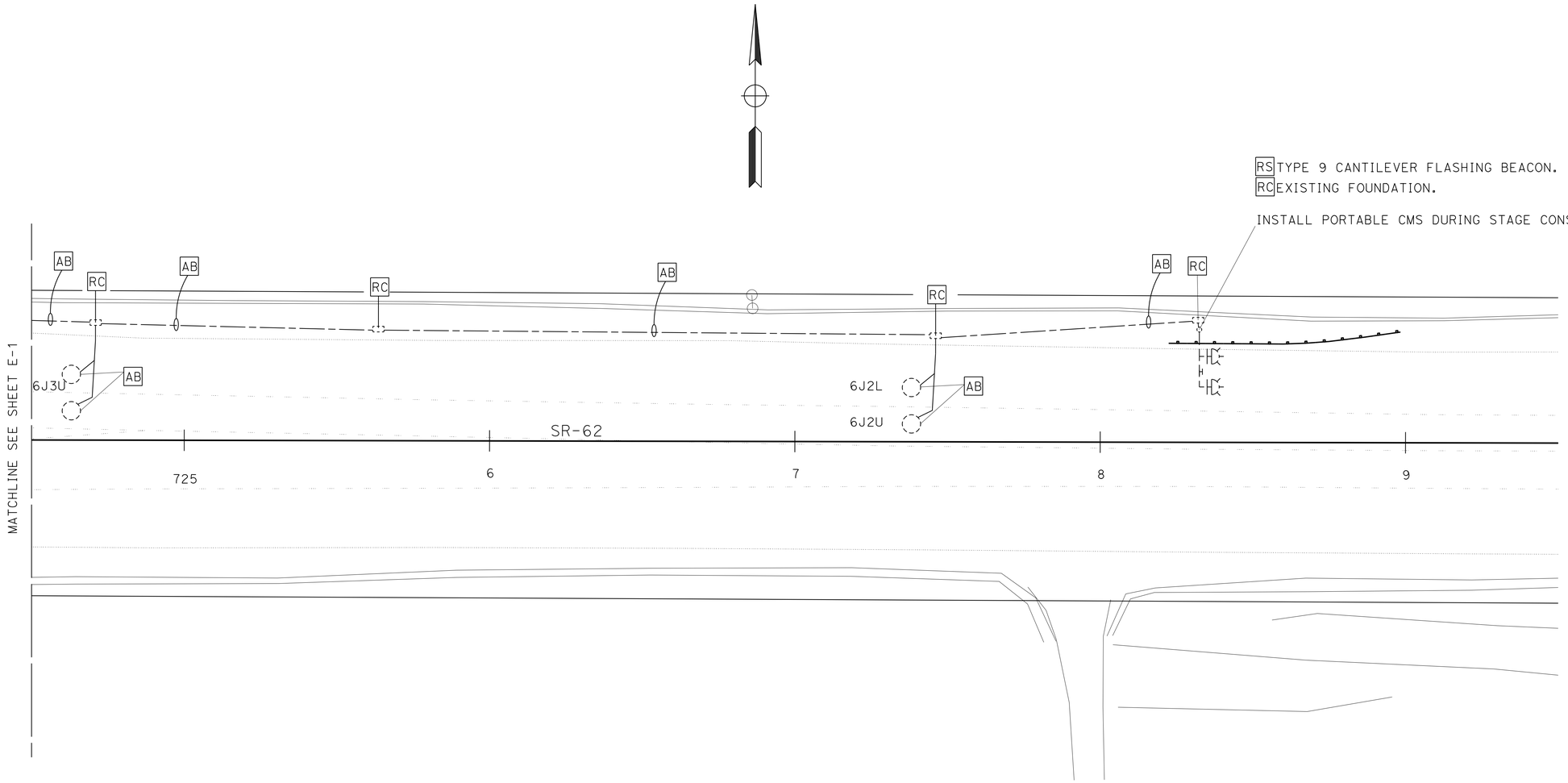

1 REPLACED PER ADDENDUM No. 1 DATED JULY 15, 2016

1 MODIFYING EXISTING ELECTRICAL SYSTEM

APPROVED FOR ELECTRICAL WORK ONLY

SCALE: 1"=20'

E-2

STATE OF CALIFORNIA - DEPARTMENT OF TRANSPORTATION
Caltrans® ELECTRICAL DESIGN B

FUNCTIONAL SUPERVISOR: FERDINAND DE LA CRUZ

CALCULATED-DESIGNED BY: LUIS PENALOZA
CHECKED BY: FERDINAND DE LA CRUZ

REVISED BY
DATE REVISED

LAST REVISION 11-16-15
DATE PLOTTED => 12-JUL-2016
TIME PLOTTED => 09:51

Dist	COUNTY	ROUTE	POST MILES TOTAL PROJECT	SHEET No.	TOTAL SHEETS
08	SBd	62	16.8/25.2	53	84

REGISTERED ELECTRICAL ENGINEER 5-2-16 DATE

5-2-16
PLANS APPROVAL DATE

REGISTERED PROFESSIONAL ENGINEER Ferdinand De La Cruz No. 17215 Exp. 6/30/18 ELECTRICAL STATE OF CALIFORNIA

THE STATE OF CALIFORNIA OR ITS OFFICERS OR AGENTS SHALL NOT BE RESPONSIBLE FOR THE ACCURACY OR COMPLETENESS OF SCANNED COPIES OF THIS PLAN SHEET.

NOTES: (SHEETS 4 THRU 5)

1. FOR ACCURATE RIGHT OF WAY DATA, CONTACT RIGHT OF WAY ENGINEERING AT THE DISTRICT OFFICE.
2. THE CONTRACTOR MUST CONTACT THE ENGINEER THREE WORKING DAYS PRIOR TO INSTALLING DETECTOR LOOPS.
3. LABEL CONDUCTOR ENDS AS PER STANDARD PLANS RSP ES-13B.
4. ALL DISTANCES ARE APPROXIMATE AND MUST BE VERIFIED IN THE FIELD.
5. REFER TO UTILITY PLANS PRIOR TO INSTALLATION OF EQUIPMENT.

LEGEND: (THIS SHEET ONLY)

1 EXISTING TYPE III-CF SERVICE EQUIPMENT ENCLOSURE

METER A: 100 A, 120 / 240 V, 2P CB MAIN TC-1
50 A, 120 V, 2P CB (SIGNAL)
15 A, 120 V, 1P CB (FLASHING BEACON)
CTID 08-54-62-0-024.100-M

METER B: 100 A, 120 / 240 V, 2P CB MAIN LS-3
30 A, 240 V, 1P CB (LIGHTING)
CTID 08-54-62-0-024.101-M

2 REMAINDER OF CIRCUIT NOT SHOWN.

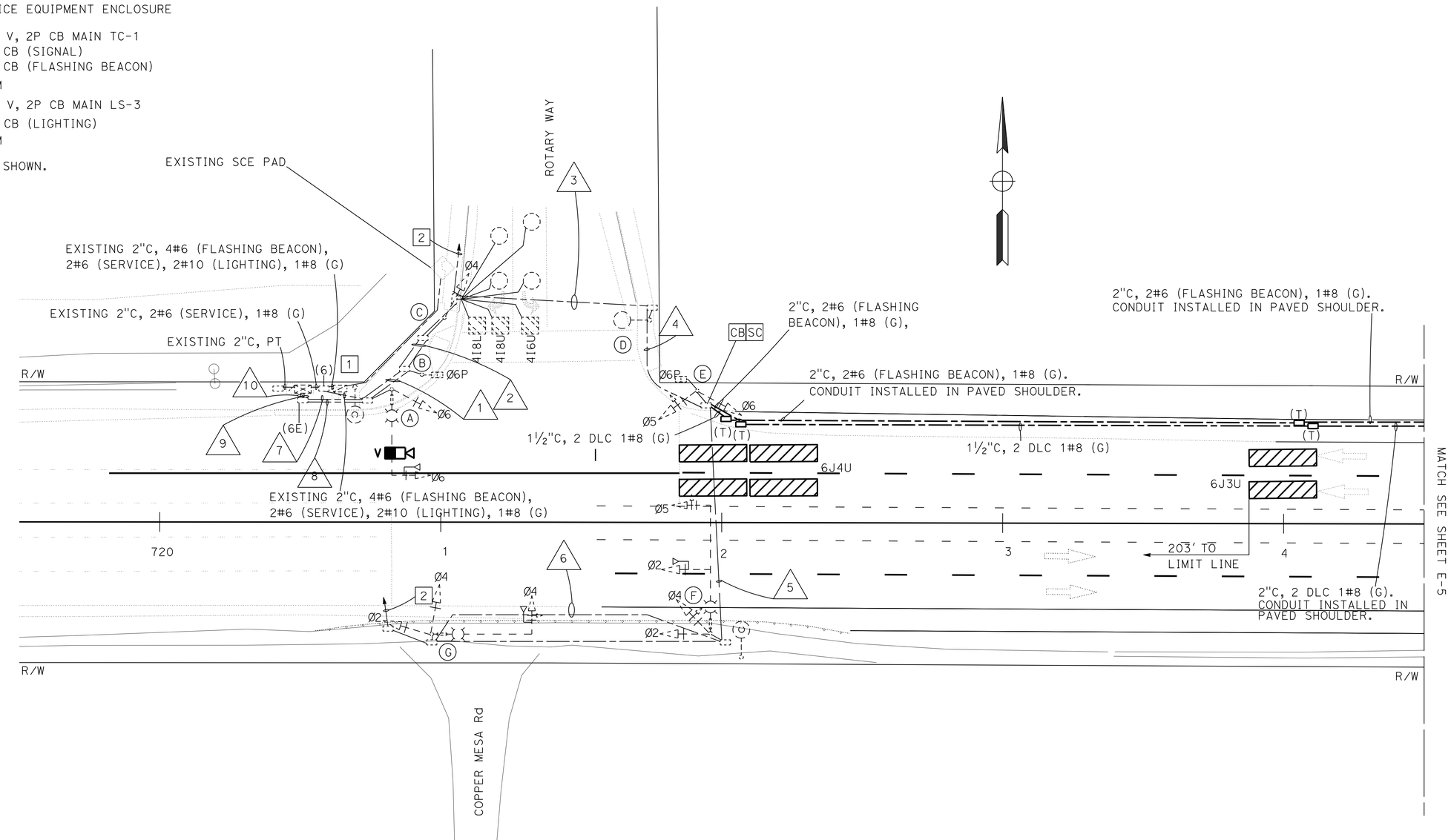

1 REPLACED PER ADDENDUM No. 1 DATED JULY 15, 2016

1 MODIFYING EXISTING ELECTRICAL SYSTEM

APPROVED FOR ELECTRICAL WORK ONLY

SCALE: 1"=20'

E-3

STATE OF CALIFORNIA - DEPARTMENT OF TRANSPORTATION
Caltrans® **ELECTRICAL DESIGN B**

FUNCTIONAL SUPERVISOR: FERDINAND DE LA CRUZ
CALCULATED-DESIGNED BY: LUIS PENALOZA
CHECKED BY: FERDINAND DE LA CRUZ
REVISED BY
DATE REVISED

LAST REVISION 11-16-15
DATE PLOTTED => 12-JUL-2016
TIME PLOTTED => 09:51

Dist	COUNTY	ROUTE	POST MILES TOTAL PROJECT	SHEET No.	TOTAL SHEETS
08	SBd	62	16.8/25.2	54	84

REGISTERED ELECTRICAL ENGINEER 5-2-16 DATE

5-2-16
PLANS APPROVAL DATE

REGISTERED PROFESSIONAL ENGINEER
Ferdinand De La Cruz
No. 17215
Exp. 6/30/18
ELECTRICAL
STATE OF CALIFORNIA

THE STATE OF CALIFORNIA OR ITS OFFICERS OR AGENTS SHALL NOT BE RESPONSIBLE FOR THE ACCURACY OR COMPLETENESS OF SCANNED COPIES OF THIS PLAN SHEET.

NOTE:

1. FOR ACCURATE RIGHT OF WAY DATA, CONTACT RIGHT OF WAY ENGINEERING AT THE DISTRICT OFFICE.

LEGEND: (THIS SHEET ONLY)

1 SEE TRAFFIC PLANS FOR SIGN DETAILS.

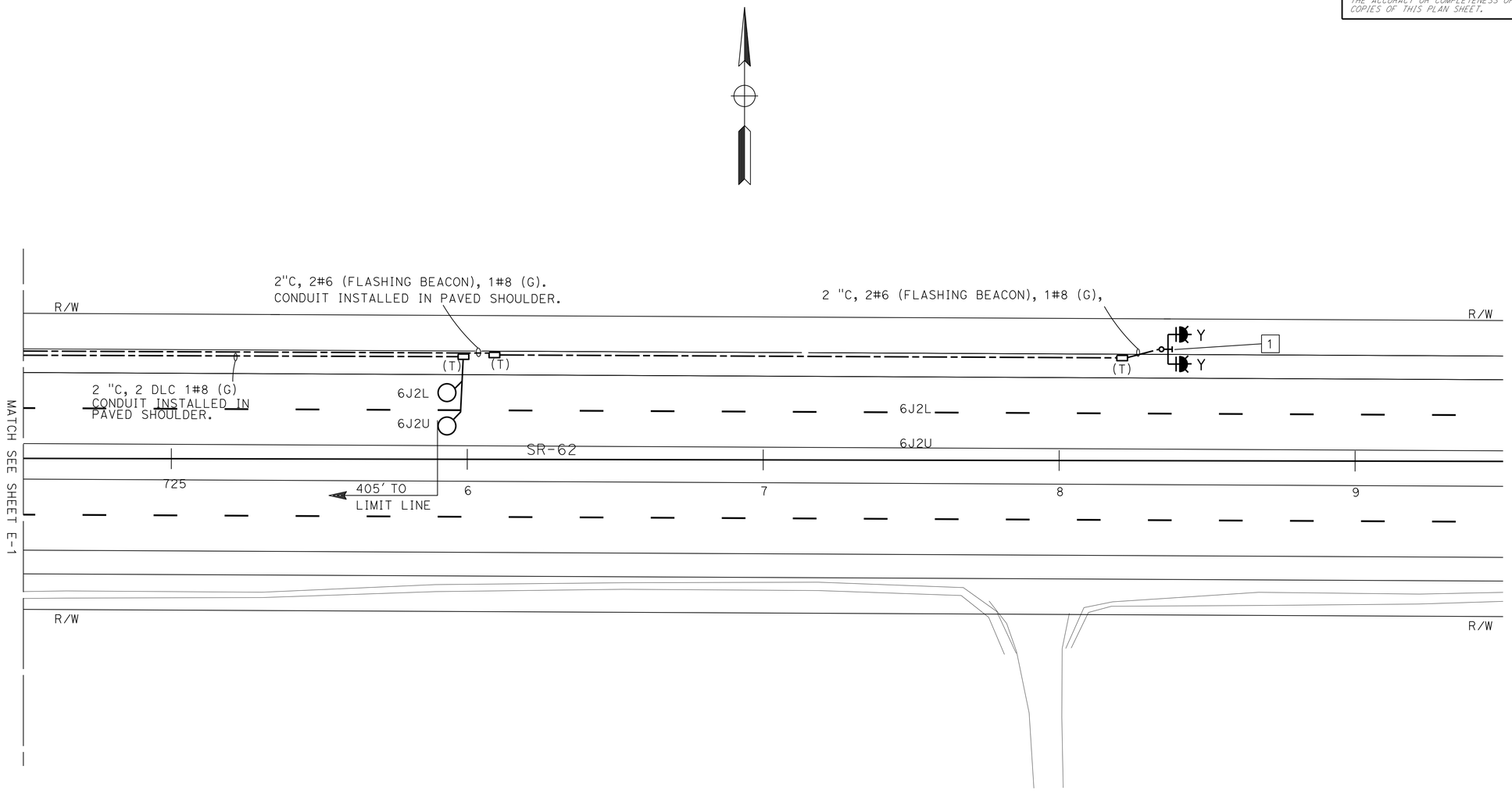

1 REPLACED PER ADDENDUM No. 1 DATED JULY 15, 2016

1 MODIFYING EXISTING ELECTRICAL SYSTEM

APPROVED FOR ELECTRICAL WORK ONLY

SCALE: 1"=20'

E-4

STATE OF CALIFORNIA - DEPARTMENT OF TRANSPORTATION
Caltrans® ELECTRICAL DESIGN B

FUNCTIONAL SUPERVISOR: FERDINAND DE LA CRUZ
CALCULATED-DESIGNED BY: LUIS PENALOZA
CHECKED BY: FERDINAND DE LA CRUZ
REVISED BY
DATE REVISED

LAST REVISION 11-16-15
DATE PLOTTED => 12-JUL-2016
TIME PLOTTED => 09:51

Dist	COUNTY	ROUTE	POST MILES TOTAL PROJECT	SHEET No.	TOTAL SHEETS
08	SBd	62	16.8/25.2	55	84

REGISTERED ELECTRICAL ENGINEER 5-2-16 DATE

5-2-16
PLANS APPROVAL DATE

REGISTERED PROFESSIONAL ENGINEER Ferdinand De La Cruz No. 17215 Exp. 6/30/18 ELECTRICAL STATE OF CALIFORNIA

THE STATE OF CALIFORNIA OR ITS OFFICERS OR AGENTS SHALL NOT BE RESPONSIBLE FOR THE ACCURACY OR COMPLETENESS OF SCANNED COPIES OF THIS PLAN SHEET.

POLE AND EQUIPMENT SCHEDULE

No.	STANDARD Type	STANDARD SMA	STANDARD LMA	VEH SIG M+g MAST ARM	VEH SIG M+g POLE	PED SIGNAL	PPB Ø	PPB ARROW	LED LUMINAIRE	SPECIAL REQUIREMENTS
A	19-4-100	30′	15′	1-MAS	SV-1-T	—	—	—	200 W	
B	1-A	—	—	—	—	TP-1-T	6	←	—	
C	1-A	—	—	—	TV-1-T	—	—	—	—	
D	15TS	—	15′	—	—	—	6	←	200 W	
E	1-A	—	—	—	TV-2-T	SP-1-T	—	—	—	
F	26-4-100	40′	15′	2-MAS	SV-2-T	—	—	—	200 W	
G	26-4-100	35′	15′	MAS-4B	SV-2-T	—	—	—	200 W	

PHASE DIAGRAM-STEADY DEMAND

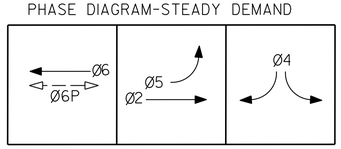

CONDUIT AND CONDUCTOR SCHEDULE

CABLE, AWG, AND DLC SCHEDULE: CABLE TYPE	Std	PHASE	CONDUIT RUN NUMBER 1	2	3	4	5	6	7	8	9	10
VEH-PED 12CSC	A	Ø6							1	1	1	1
	B	Ø6P / Ø6	1	1					1	1	1	1
	C	Ø4 / Ø6	1	1					1		1	
	D	Ø6		1	1	1				1		1
	E	Ø5,Ø6,Ø6P	1	1	1	1			1		1	
	F	Ø2,Ø4,Ø5	1	1	1	1	1		1		1	
APS 3CSC	G	Ø2,Ø4	1	1	1	1	1	1	1	1	1	1
		TOTAL	5	3	4	2	3	2	3	1	2	1
			1	1	1	1	1	1	6	4	6	4
			PT	PT	PT	PT	PT	PT	PT	PT	PT	PT

AWG	CIRCUIT	1	2	3	4	5	6	7	8	9	10
#10	LIGHTING	2	2	2	2	2	2				
#8	GROUND	4	4	2	4	2	2				
#6	FLASHING BEACON	1	1	1	1	1	1	1	1	1	1
EMERGENCY PREEMPTION CABLE		2	2	2	2	2	1		3		3
*** VIVDS CABLE**									*** 1**	*** 1**	
*** VIVDS POWER CABLE**									*** 1**	*** 1**	
DLC											
	Ø2	5	5	5	5	5	5		5		5
	Ø4	4	4						4		4
	Ø5	2	2	2	2	2	2		2		2
	Ø6	**2**	**2**	**2**	**2**				**2**		**2**
	TOTAL DLC	13	13	9	9	7	7		13		13
CONDUIT SIZE		2-4"	2-4"	4"	4"	4"	4"	4"	4"	4"	4"

* DENOTES NEW EQUIPMENT

1 REPLACED PER ADDENDUM No. 1 DATED JULY 15, 2016

1 MODIFYING EXISTING ELECTRICAL SYSTEM

APPROVED FOR ELECTRICAL WORK ONLY

E-5

STATE OF CALIFORNIA - DEPARTMENT OF TRANSPORTATION
Caltrans® **ELECTRICAL DESIGN B**

FUNCTIONAL SUPERVISOR: FERDINAND DE LA CRUZ
CALCULATED-DESIGNED BY: LUIS PENALOZA
CHECKED BY: FERDINAND DE LA CRUZ
REVISED BY
DATE REVISED

LAST REVISION 11-16-15
DATE PLOTTED => 12-JUL-2016
TIME PLOTTED => 09:51

Dist	COUNTY	ROUTE	POST MILES TOTAL PROJECT	SHEET No.	TOTAL SHEETS
08	SBd	62	16.8/25.2	56	84

REGISTERED ELECTRICAL ENGINEER 5-2-16 DATE

5-2-16
PLANS APPROVAL DATE

REGISTERED PROFESSIONAL ENGINEER
Ferdinand De La Cruz
No. 17215
Exp. 6/30/18
ELECTRICAL
STATE OF CALIFORNIA

THE STATE OF CALIFORNIA OR ITS OFFICERS OR AGENTS SHALL NOT BE RESPONSIBLE FOR THE ACCURACY OR COMPLETENESS OF SCANNED COPIES OF THIS PLAN SHEET.

NOTE:
THE QUANTITIES SHOWN IN TABLES ARE NOT SEPARATE PAY ITEMS, FOR INFORMATION ONLY.
FOR COMPLETE ELECTRICAL WORK, SEE ELECTRICAL PLAN SHEETS.

MODIFYING EXISITING ELECTRICAL SYSTEM

SHEET No.	(N) 2" CONDUIT PVC SCHEDULE 80	(N) #6 GAUGE WIRE CABLE	(N) #8 (G) GAUGE WIRE CABLE	(N) TYPE 5(T) PULLBOX	(N) VIDEO DETECTION CAMERA	(N) VIVDS CABLE	(N) VIVDS POWER CABLE
	LF	LF	LF	EA	EA	LF	LF
E-3	530	600	600	4	1	150	150

SHEET No.	(N) 2" CONDUIT PVC SCHEDULE 80	(N) DLC	(N) TYPE E INDUCTIVE LOOP DETECTOR	(N) #6 (G) GAUGE WIRE CABLE	(N) #8 (G) GAUGE WIRE CABLE	(N) TYPE 5(T) PULLBOX	(N) TYPE 15-FBS CANTILEVER FLASHING BEACON
	LF	LF	EA	LF	LF	EA	EA
E-4	900	1400	2	800	900	3	1

1 REPLACED PER ADDENDUM No. 1 DATED JULY 15, 2016

APPROVED FOR ELECTRICAL WORK ONLY

ELECTRICAL QUANTITIES
E-6

STATE OF CALIFORNIA - DEPARTMENT OF TRANSPORTATION
Caltrans® ELECTRICAL DESIGN B

FUNCTIONAL SUPERVISOR: FERDINAND DE LA CRUZ
CALCULATED-DESIGNED BY: LUIS PENALOZA
CHECKED BY: FERDINAND DE LA CRUZ
REVISED BY
DATE REVISED

LAST REVISION 11-16-15
DATE PLOTTED => 12-JUL-2016
TIME PLOTTED => 09:51

Dist	COUNTY	ROUTE	POST MILES TOTAL PROJECT	SHEET No.	TOTAL SHEETS
08	SBd	62	16.8/25.2	74	84

Theresa Gabriel
REGISTERED ELECTRICAL ENGINEER

April 15, 2016
PLANS APPROVAL DATE

REGISTERED PROFESSIONAL ENGINEER Theresa Aziz Gabriel No. E15129 Exp. 6-30-16 ELECTRICAL STATE OF CALIFORNIA

THE STATE OF CALIFORNIA OR ITS OFFICERS OR AGENTS SHALL NOT BE RESPONSIBLE FOR THE ACCURACY OR COMPLETENESS OF SCANNED COPIES OF THIS PLAN SHEET.

TO ACCOMPANY PLANS DATED 5-2-16

1

EQUIPMENT IDENTIFICATION

ILLUMINATED SIGN IDENTIFICATION:

SIGN No. 12345
10 ISL SCI 1.0

- SIGN EQUIPMENT IDENTIFICATION CHARACTERS - PLACE ON POST OR STRUCTURE
- TRANSFORMER RATING (kVA)
- LIGHTING CONTROL TYPE
- NUMBER AND TYPE OF FIXTURES

} DO NOT PLACE ON STANDARD OR STRUCTURE

ELECTROLIER OR EQUIPMENT IDENTIFICATION:

L2745 - 15'-0"

- MAST ARM LENGTH, IF SHOWN. DO NOT PLACE ON STANDARD OR STRUCTURE
- EQUIPMENT IDENTIFICATION CHARACTERS - PLACE ON STANDARD OR STRUCTURE. EXISTING EQUIPMENT IDENTIFICATION CHARACTERS ARE SHOWN IN PARENTHESIS

CONDUIT AND CONDUCTOR IDENTIFICATION:

1½"C, 2#10, 15#14, 2 DLC, 12P#18 (PAIR)

- NUMBER AND SIZE OF CONDUCTORS AND CABLES
- SIZE OF CONDUIT IN INCHES

ø1, ø2, ø2P, etc.	TRAFFIC PHASE IDENTIFICATION FOR SIGNALS, DETECTORS AND PHASE DIAGRAMS
1 2 3	LEGEND NUMBERS
A B C	EQUIPMENT, SIGNAL POLES, INSTALLATION OR ITEMS
1 2 3	CONDUIT RUN NUMBERS

SIGNAL AND LIGHTING STANDARD (TYPICAL DESIGNATION):

19A - 3 - 100

- WIND VELOCITY = 100 mph
- CASE 3 ARM LOADING
- STANDARD TYPE
- STANDARD PLAN SHEET NUMBER
- DETAIL, NUMBER, SECTION, TYPE OR ELEVATION

MISCELLANEOUS EQUIPMENT

NEW	EXISTING	
CMS	cms	CHANGEABLE MESSAGE SIGN
		CLOSED CIRCUIT TELEVISION CAMERA
		HIGHWAY ADVISORY RADIO POLE AND ANTENNA
EMS	ems	LED EXTINGUISHABLE MESSAGE SIGN
M V	m v	DETECTION DEVICE M = MICROWAVE SENSOR V = VIDEO IMAGE SENSOR

WIRING DIAGRAM LEGEND

----	EXTERNAL CONDUCTOR
——	CONDUCTOR OR BUS
	TIE POINT
	CONTACTOR COIL
	CONTACTOR, NO CONTACT
	TERMINAL BLOCKS
	CONTACTOR, NC CONTACT
	ENCLOSURE BOND
	GROUNDING ELECTRODE
	CIRCUIT BREAKER
	RECEPTACLE

PULL BOXES

NEW	EXISTING	
		PULL BOX, No. 5 UNLESS OTHERWISE INDICATED OR NOTED
3	9A(21)	PULL BOX, ADDITIONAL DESIGNATIONS OR DESCRIPTIONS

3 No. 3½ PULL BOX
5 No. 5 PULL BOX
6 No. 6 PULL BOX
7 No. 7 PULL BOX (CEILING)
8 No. 8 PULL BOX
9 No. 9 PULL BOX (STRUCTURE)
9A No. 9A PULL BOX (STRUCTURE)

(C) COMMUNICATIONS PULL BOX
(E) PULL BOX WITH EXTENSION
(S) SPRINKLER CONTROL PULL BOX
(21) ANCHOR BOLTS AND CONDUIT FOR FUTURE INSTALLATION OF TYPE 21 STANDARD
(T) TRAFFIC PULL BOX

VEHICLE DETECTORS

5 J 9 U

- VEHICLE DETECTOR DESIGNATION
- U = UPPER
  L = LOWER
- SLOT NUMBER IN INPUT FILE
- INPUT FILE (I OR J)
- PHASE

NEW	EXISTING	
		TYPE A LOOP DETECTOR. OUTLINE OF SAW CUT SHOWN
		TYPE B LOOP DETECTOR. OUTLINE OF SAW CUT SHOWN
		TYPE C LOOP DETECTOR. OUTLINE OF SAW CUT SHOWN
		TYPE D LOOP DETECTOR. OUTLINE OF SAW CUT SHOWN
		TYPE E LOOP DETECTOR. OUTLINE OF SAW CUT SHOWN
		TYPE Q LOOP DETECTOR. OUTLINE OF SAW CUT SHOWN
DH	dh	DETECTOR HANDHOLE
		MICROWAVE OR VIDEO DETECTION ZONE

STATE OF CALIFORNIA
DEPARTMENT OF TRANSPORTATION

ELECTRICAL SYSTEMS (LEGEND AND ABBREVIATIONS)

NO SCALE

RSP ES-1C DATED APRIL 15, 2016 SUPERSEDES RSP ES-1C DATED OCTOBER 30, 2015 AND RSP ES-1C DATED JULY 19, 2013 AND STANDARD PLAN ES-1C DATED MAY 20, 2011 - PAGE 427 OF THE STANDARD PLANS BOOK DATED 2010.

REVISED STANDARD PLAN RSP ES-1C

2010 REVISED STANDARD PLAN RSP ES-1C

1 **REPLACED PER ADDENDUM No. 1 DATED JULY 15, 2016**

1-22-16

Dist	COUNTY	ROUTE	POST MILES TOTAL PROJECT	SHEET No.	TOTAL SHEETS
08	SBd	62	16.8/25.2	75	84

Theresa Gabriel
REGISTERED ELECTRICAL ENGINEER

April 15, 2016
PLANS APPROVAL DATE

REGISTERED PROFESSIONAL ENGINEER
Theresa Aziz Gabriel
No. E15129
Exp. 6-30-16
ELECTRICAL
STATE OF CALIFORNIA

THE STATE OF CALIFORNIA OR ITS OFFICERS OR AGENTS SHALL NOT BE RESPONSIBLE FOR THE ACCURACY OR COMPLETENESS OF SCANNED COPIES OF THIS PLAN SHEET.

TO ACCOMPANY PLANS DATED 5-2-16

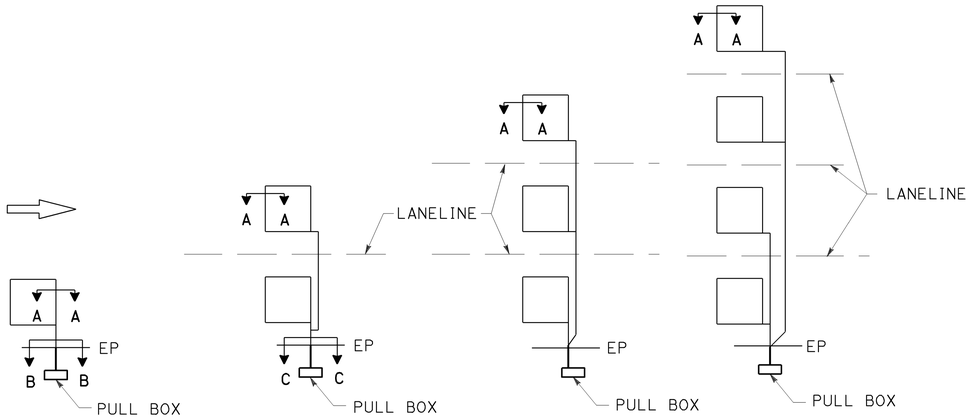

SAW CUT DETAILS

Type A loop detector configurations illustrated

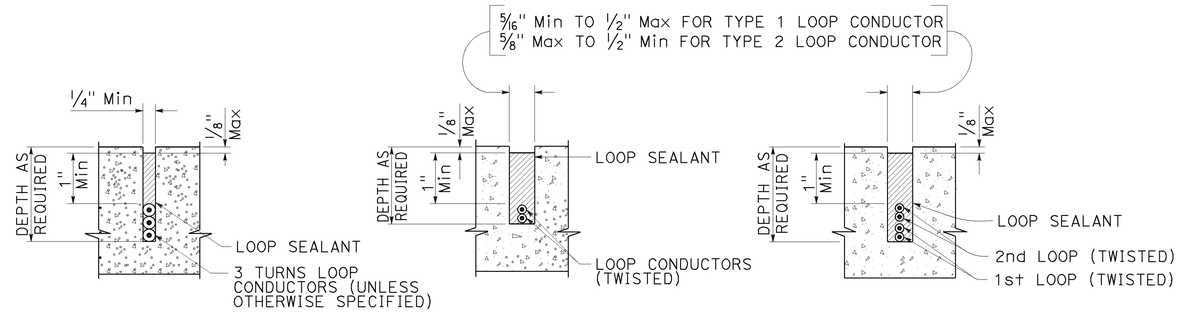

SECTION A-A SECTION B-B SECTION C-C

SLOT DETAILS - TYPE 1 AND TYPE 2 LOOP CONDUCTOR

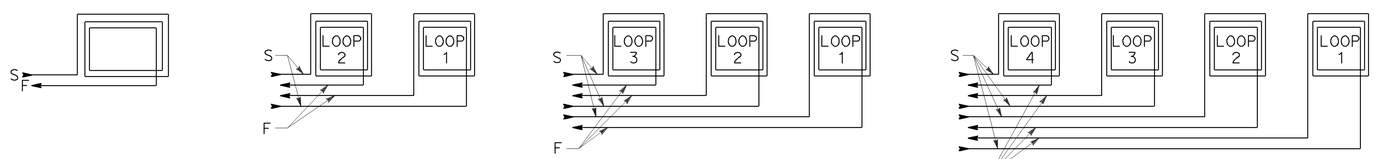

WINDING DETAILS

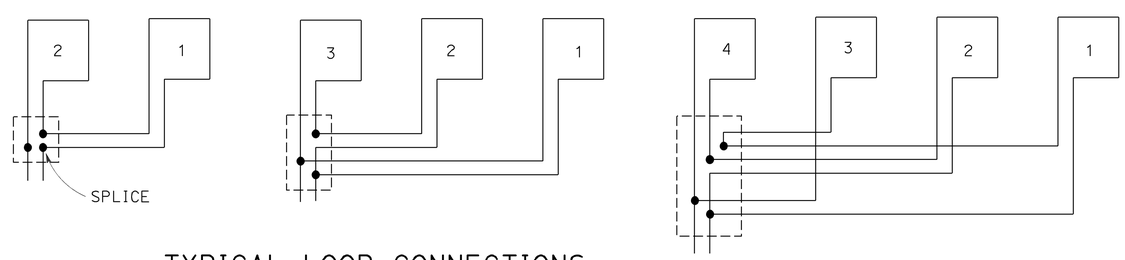

TYPICAL LOOP CONNECTIONS

Dashed lines represent the pull box

ABBREVIATIONS:

S - START
F - FINISH

STATE OF CALIFORNIA
DEPARTMENT OF TRANSPORTATION

ELECTRICAL SYSTEMS (LOOP DETECTORS)

NO SCALE

RSP ES-5A DATED APRIL 15, 2016 SUPERSEDES RSP ES-5A DATED OCTOBER 30, 2015 AND STANDARD PLAN ES-5A DATED MAY 20, 2011 - PAGE 448 OF THE STANDARD PLANS BOOK DATED 2010.

1 REPLACED PER ADDENDUM No. 1 DATED JULY 15, 2016

REVISED STANDARD PLAN RSP ES-5A

2010 REVISED STANDARD PLAN RSP ES-5A

1-12-16

Dist	COUNTY	ROUTE	POST MILES TOTAL PROJECT	SHEET No.	TOTAL SHEETS
08	SBd	62	16.8/25.2	76	84

1

Theresa Gabriel
REGISTERED ELECTRICAL ENGINEER

April 15, 2016
PLANS APPROVAL DATE

REGISTERED PROFESSIONAL ENGINEER
Theresa Aziz Gabriel
No. E15129
Exp. 6-30-16
ELECTRICAL
STATE OF CALIFORNIA

THE STATE OF CALIFORNIA OR ITS OFFICERS OR AGENTS SHALL NOT BE RESPONSIBLE FOR THE ACCURACY OR COMPLETENESS OF SCANNED COPIES OF THIS PLAN SHEET.

TO ACCOMPANY PLANS DATED 5-2-16

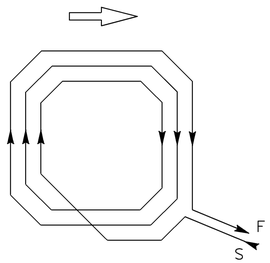

WINDING DETAIL

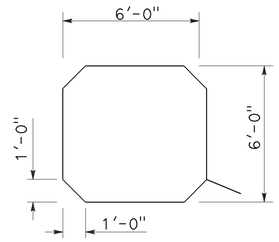

SAW CUT DETAIL

TYPE A LOOP DETECTOR CONFIGURATION

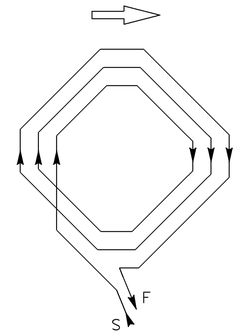

WINDING DETAIL

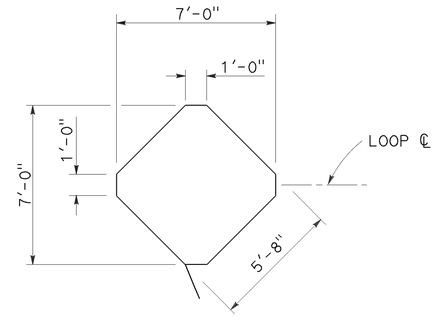

SAW CUT DETAIL

TYPE B LOOP DETECTOR CONFIGURATION

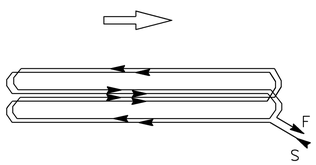

WINDING DETAIL

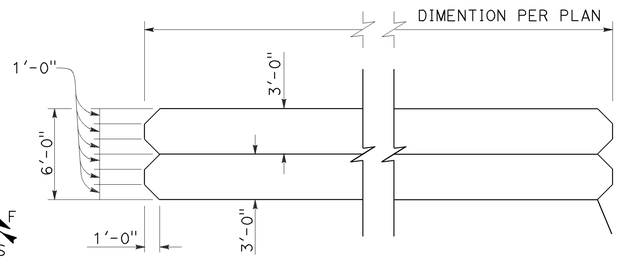

SAW CUT DETAIL

TYPE C LOOP DETECTOR CONFIGURATION

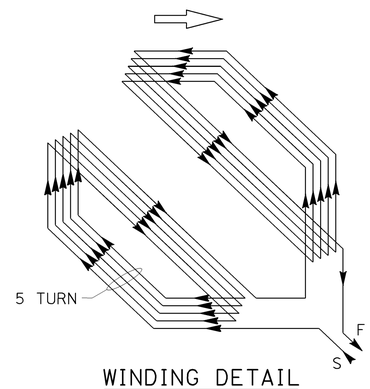

WINDING DETAIL

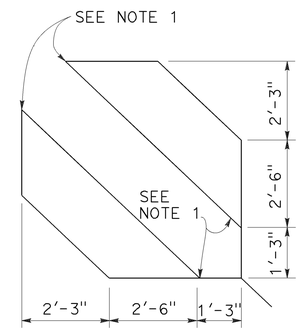

SAW CUT DETAIL

TYPE D LOOP DETECTOR CONFIGURATION

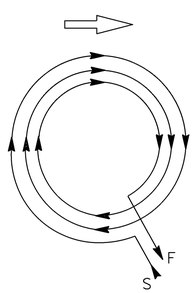

WINDING DETAIL

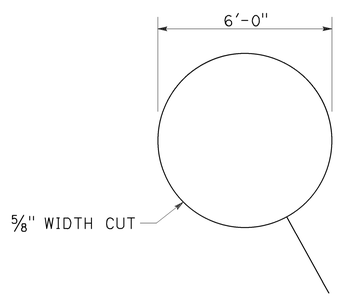

SAW CUT DETAIL

TYPE E LOOP DETECTOR CONFIGURATION

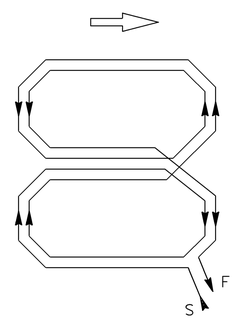

WINDING DETAIL

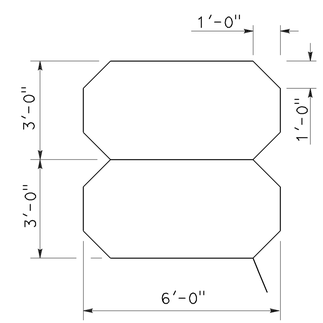

SAW CUT DETAIL

TYPE Q LOOP DETECTOR CONFIGURATION

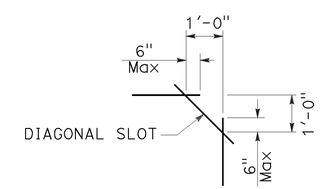

PLAN VIEW OF DIAGONAL SLOT AT CORNERS

NOTES:

1. Round corners of acute angle saw cuts to prevent damage to conductors.
2. Typical distance separating loops from edge to edge is 10' for Type A, B, D and E installation in single lane.
3. Use Type D loops for limit line detection and bicycle lanes.

1 **REPLACED PER ADDENDUM No. 1 DATED JULY 15, 2016**

STATE OF CALIFORNIA
DEPARTMENT OF TRANSPORTATION

ELECTRICAL SYSTEMS (DETECTORS)

NO SCALE

RSP ES-5B DATED APRIL 15, 2016 SUPERSEDES RSP ES-5B DATED OCTOBER 30, 2015 AND RSP ES-5B DATED JULY 19, 2013 AND STANDARD PLAN ES-5B DATED MAY 20, 2011 - PAGE 449 OF THE STANDARD PLANS BOOK DATED 2010.

REVISED STANDARD PLAN RSP ES-5B

2010 REVISED STANDARD PLAN RSP ES-5B

1-22-16

Dist	COUNTY	ROUTE	POST MILES TOTAL PROJECT	SHEET No.	TOTAL SHEETS
08	SBd	62	16.8/25.2	79	84

REGISTERED CIVIL ENGINEER

April 15, 2016
PLANS APPROVAL DATE

REGISTERED PROFESSIONAL ENGINEER Stanley P. Johnson No. C57793 Exp. 3-31-18 CIVIL STATE OF CALIFORNIA

THE STATE OF CALIFORNIA OR ITS OFFICERS OR AGENTS SHALL NOT BE RESPONSIBLE FOR THE ACCURACY OR COMPLETENESS OF SCANNED COPIES OF THIS PLAN SHEET.

TO ACCOMPANY PLANS DATED 5-2-16

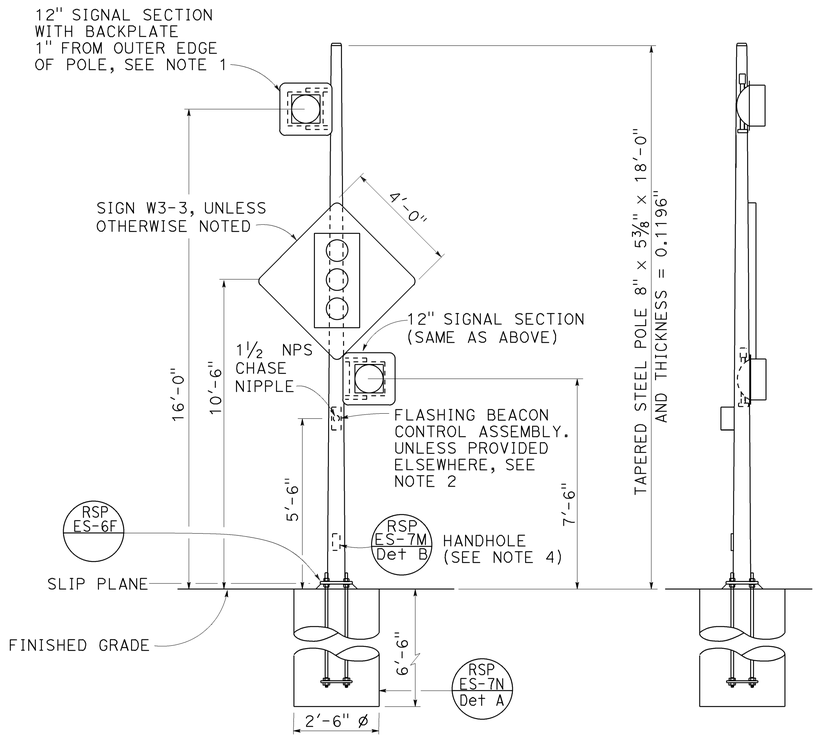

FRONT VIEW

SIDE VIEW

TYPE 15-FBS
FLASHING BEACON WITH SLIP BASE INSTALLATION
DETAIL A

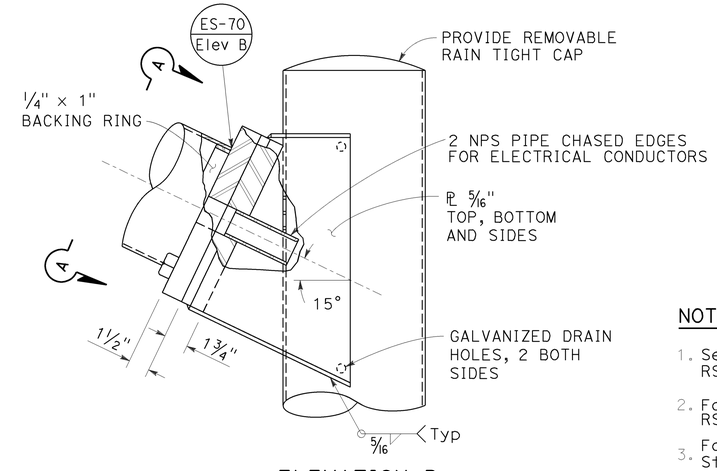

ELEVATION B

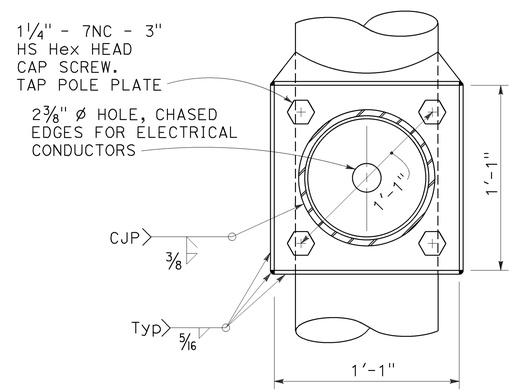

VIEW A-A

FLASHING BEACON MAST ARM CONNECTION DETAIL
DETAIL B

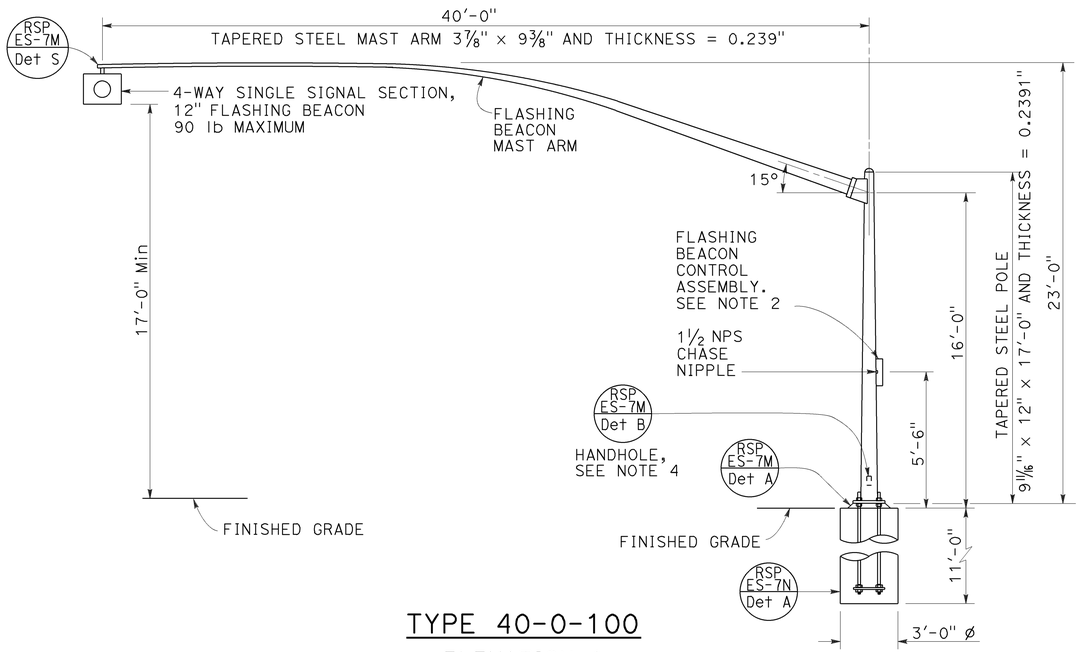

TYPE 40-0-100
ELEVATION A

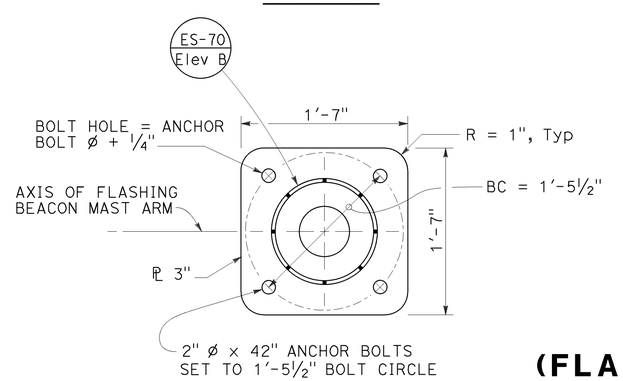

BASE PLATE
DETAIL C

NOTES:

1. See Revised Standard Plans RSP ES-4A and RSP ES-4D for attachment fitting details.
2. For wiring diagram, see Revised Standard Plan RSP ES-14B.
3. For additional notes and details, see Revised Standard Plans RSP ES-7M and RSP ES-7N.
4. Handhole shall be located on the downstream side of traffic.
5. See project plans for type of standard to be installed.

1 REPLACED PER ADDENDUM No. 1 DATED JULY 15, 2016

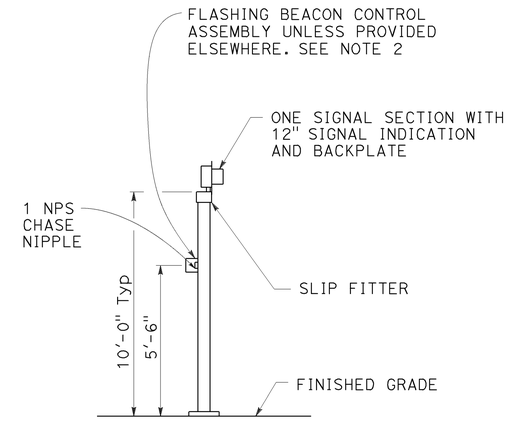

TYPE 1-A, 1-B, 1-C, AND 1-D
FLASHING BEACON INSTALLATION
DETAIL D
See Note 5

STATE OF CALIFORNIA
DEPARTMENT OF TRANSPORTATION

ELECTRICAL SYSTEMS (FLASHING BEACON ON A TYPE 1, TYPE 15-FBS, AND TYPE 40 STANDARD)

NO SCALE

RSP ES-7J DATED APRIL 15, 2016 SUPERSEDES RSP ES-7J DATED OCTOBER 30, 2015 AND RSP ES-7J DATED JULY 19, 2013 AND STANDARD PLAN ES-7J DATED MAY 20, 2011 - PAGE 471 OF THE STANDARD PLANS BOOK DATED 2010.

REVISED STANDARD PLAN RSP ES-7J

2010 REVISED STANDARD PLAN RSP ES-7J

1-26-16

DIST	COUNTY	ROUTE	POST MILES TOTAL PROJECT	SHEET NO.	TOTAL SHEETS
08	SBd	62	16.8/25.2	82	84

1

Theresa Gabriel
REGISTERED ELECTRICAL ENGINEER

April 15, 2016
PLANS APPROVAL DATE

REGISTERED PROFESSIONAL ENGINEER
Theresa Aziz Gabriel
No. E15129
Exp. 6-30-16
ELECTRICAL
STATE OF CALIFORNIA

THE STATE OF CALIFORNIA OR ITS OFFICERS OR AGENTS SHALL NOT BE RESPONSIBLE FOR THE ACCURACY OR COMPLETENESS OF SCANNED COPIES OF THIS PLAN SHEET.

TO ACCOMPANY PLANS DATED 5-2-16

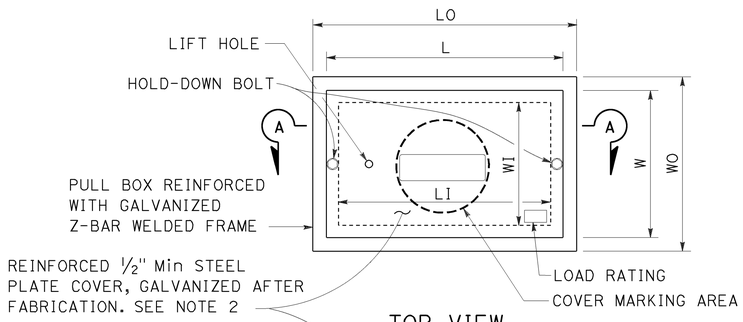

TOP VIEW

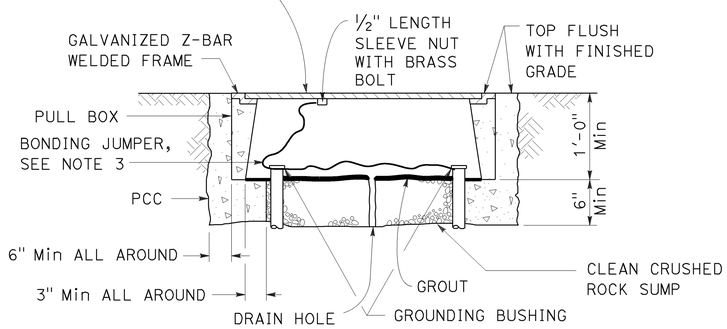

SECTION A-A

No. 3½(T), No. 5(T) AND No. 6(T) TRAFFIC PULL BOX

NOTES:

1. Traffic pull box shall be provided with steel cover and special concrete footing. Steel cover shall have embossed non-skid pattern.
2. Steel reinforcing shall be as regularly used in the standard products of the respective manufacturer.
3. Bonding jumper for metal covers shall be 3' long, minimum.
4. The nominal dimensions of the opening in which the cover sets shall be the same as the cover dimensions except the length and width dimensions shall be ⅛" greater.
5. Covers and boxes shall be interchangeable with California standard male and female gages. When interchanged with a standard male or female gage, the top surfaces shall be flush within ⅛".

1 REPLACED PER ADDENDUM No. 1 DATED JULY 15, 2016

DIMENSION TABLE

PULL BOX	PULL BOX						COVER	
	MINIMUM * THICKNESS	MINIMUM DEPTH BOX AND EXTENSION	LO	LI	WO	WI	L **	W **
No. 3½(T)	1½"	1'-0"	1'-10" - 1'-11"	1'-5" - 1'-6½"	1'-3" - 1'-4"	10" - 1'-0"	1'-8" -1'-8½"	1'-1" - 1'-2"
No. 5(T)	1¾"	1'-0"	2'-5" - 2'-6"	2'-0" - 2'-1"	1'-6" - 1'-7"	1'-1" - 1'-2"	2'-3" - 2'-3½"	1'-4" - 1'-4½"
No. 6(T)	2"	1'-0"	2'-11" - 3'-1"	2'-6" - 2'-7"	1'-10" - 2'-0"	1'-5" - 1'-6"	2'-9" - 2'-9½"	1'-8" - 1'-8½"

* EXCLUDING CONDUIT WEB ** TOP DIMENSION

STATE OF CALIFORNIA
DEPARTMENT OF TRANSPORTATION

ELECTRICAL SYSTEMS (TRAFFIC PULL BOX)

NO SCALE

RSP ES-8B DATED APRIL 15, 2016 SUPERSEDES RSP ES-8B DATED OCTOBER 30, 2015 AND RSP ES-8B DATED JULY 19, 2013 AND RSP ES-8B DATED JANUARY 20, 2012 THAT SUPPLEMENTS THE STANDARD PLANS BOOK DATED 2010.

REVISED STANDARD PLAN RSP ES-8B

2010 REVISED STANDARD PLAN RSP ES-8B

1-22-16

Dist	COUNTY	ROUTE	POST MILES TOTAL PROJECT	SHEET No.	TOTAL SHEETS
08	SBd	62	16.8/25.2	83	84

Theresa Gabriel
REGISTERED ELECTRICAL ENGINEER

April 15, 2016
PLANS APPROVAL DATE

REGISTERED PROFESSIONAL ENGINEER Theresa Aziz Gabriel No. E15129 Exp. 6-30-16 ELECTRICAL STATE OF CALIFORNIA

THE STATE OF CALIFORNIA OR ITS OFFICERS OR AGENTS SHALL NOT BE RESPONSIBLE FOR THE ACCURACY OR COMPLETENESS OF SCANNED COPIES OF THIS PLAN SHEET.

TO ACCOMPANY PLANS DATED 5-2-16

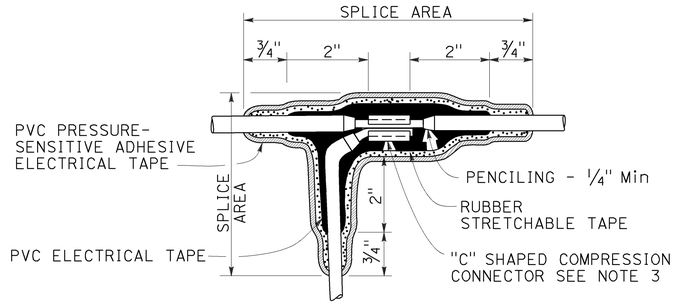

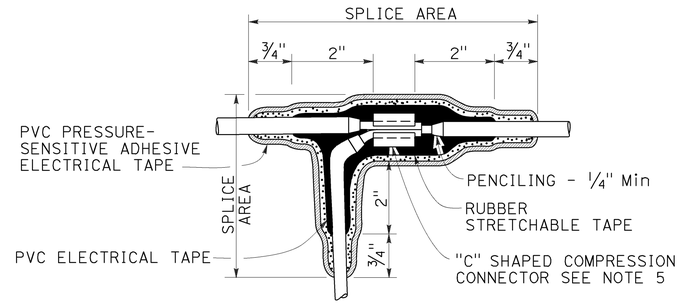

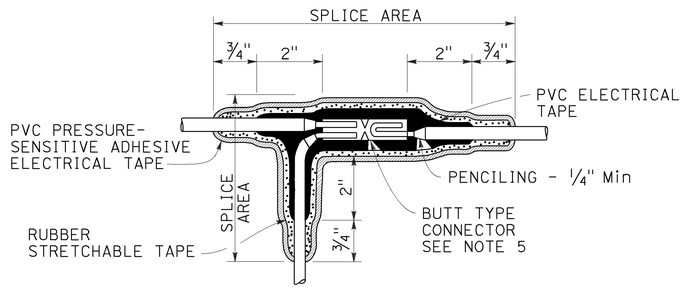

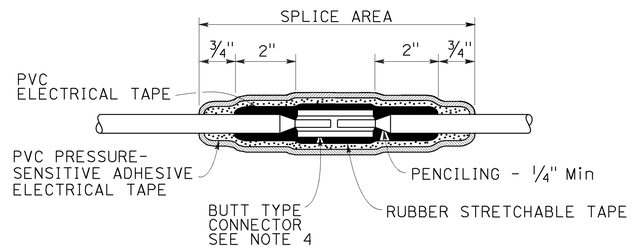

TYPICAL SPLICE INSULATION METHOD B

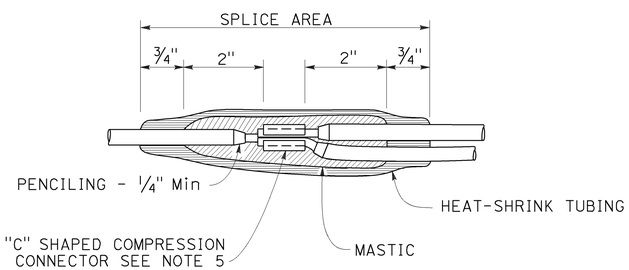

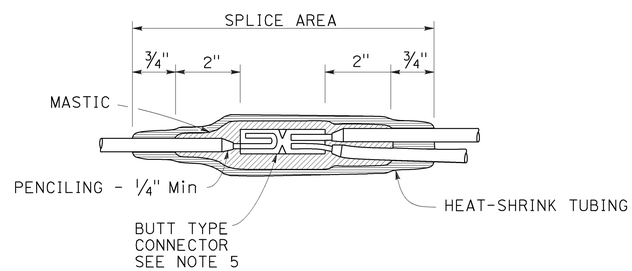

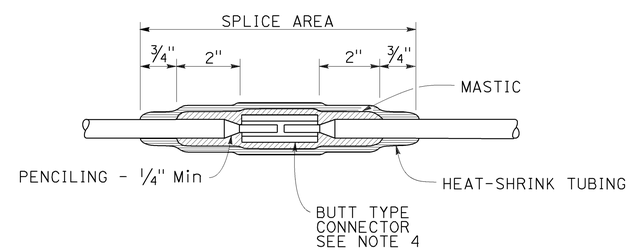

TYPICAL SPLICE INSULATION HEAT-SHRINK TUBING

NOTES:

1. Dimensions are minimum.
2. Rubber tapes shall be rolled after application.
3. Between 1 free-end and 1 through conductor.
4. Between 2 free-end conductors.
5. Between 3 free-end conductors.

STATE OF CALIFORNIA
DEPARTMENT OF TRANSPORTATION

ELECTRICAL SYSTEMS (SPLICE INSULATION METHODS DETAILS)

NO SCALE

RSP ES-13A DATED APRIL 15, 2016 SUPERSEDES RSP ES-13A DATED OCTOBER 30, 2015 AND STANDARD PLAN ES-13A DATED MAY 20, 2011 - PAGE 491 OF THE STANDARD PLANS BOOK DATED 2010.

1 REPLACED PER ADDENDUM No. 1 DATED JULY 15, 2016

REVISED STANDARD PLAN RSP ES-13A

2010 REVISED STANDARD PLAN RSP ES-13A

1-22-16