DIST	COUNTY	ROUTE	POST MILES TOTAL PROJECT	SHEET No.	TOTAL SHEETS
08	SBd	138	R17.1/R19.2	201	212

Peter W. Norboe 3-5-15
REGISTERED CIVIL ENGINEER DATE

9-11-15
PLANS APPROVAL DATE

REGISTERED PROFESSIONAL ENGINEER
Peter W. Norboe
No. 57519
Exp. 12-31-2015
CIVIL
STATE OF CALIFORNIA

The State of California or its officers or agents shall not be responsible for the accuracy or completeness of electronic copies of this plan sheet.

EXPANSION BEARING TABLE

LOCATION	MAXIMUM VERTICAL LOAD (kips)	MINIMUM DEAD LOAD (kips)	DESIGN ROTATION (Radians)	CONCAVE PLATE						CONVEX PLATE		MASONRY PLATE			SOLE PLATE			ASSEMBLY HEIGHT
				WIDTH / LENGTH	FLAT PTFE AREA (in^2)	DIAMETER	SPHERICAL RADIUS	MINIMUM THICKNESS	MAXIMUM THICKNESS	DIAMETER	MAXIMUM THICKNESS	WIDTH	LENGTH	THICKNESS	WIDTH	LENGTH	THICKNESS	
				L_{cp}	A_{PTFE}	D_m	R_{act}	T_{Min}	T_{Max}	C_m	H_{act}	W_{mp}	L_{mp}	T_{mp}	W_{sp}	L_{sp}	T_{sp}	A_h
Abut 1	305	189	2	12"	86	10.5"	22.75"	.75"	1.5"	12"	1.5"	16.75"	16.75"	.75"	42"	48"	2.25"	5.125"
Abut 5	305	189	2	12"	86	10.5"	22.75"	.75"	1.5"	12"	1.5"	16.75"	16.75"	.75"	42"	48"	2.25"	5.125"

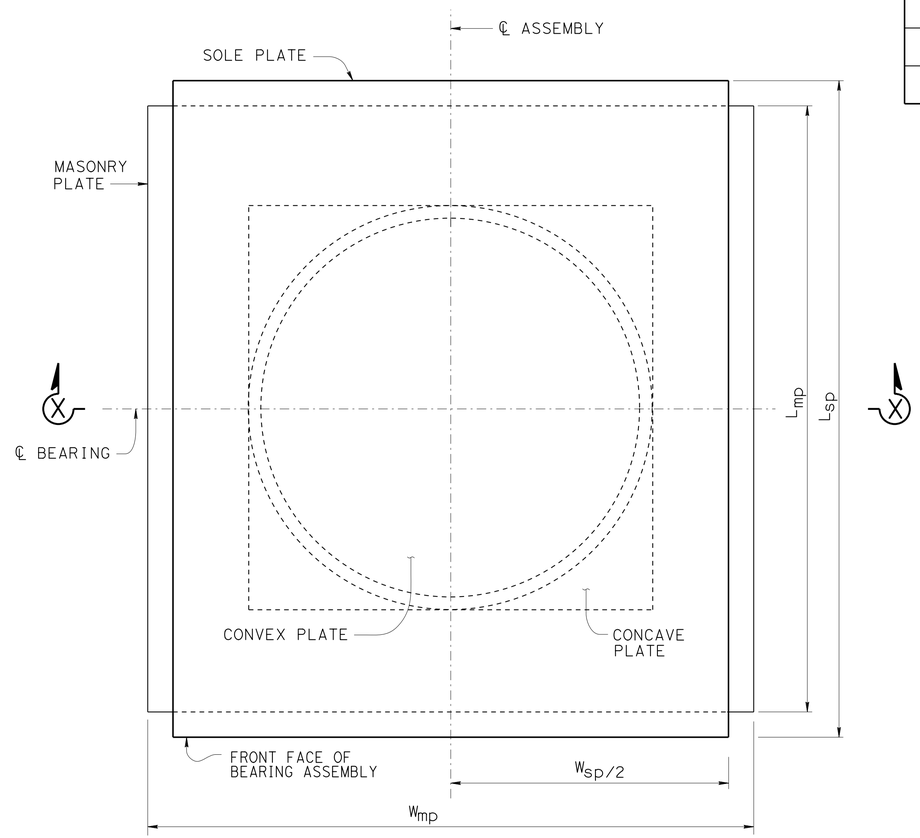

PLAN

NO SCALE

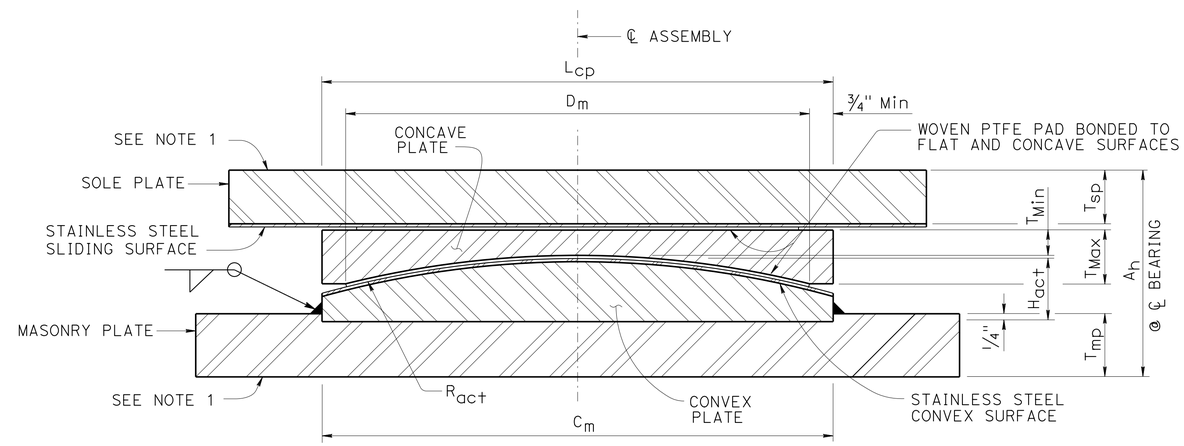

SECTION X-X

NO SCALE

NOTES:

1. Anchorage method not shown
2. All units in inches unless otherwise noted
3. All dimensions shown are steel only unless otherwise noted
4. H_{act} includes stainless steel
5. A_h includes PTFE, substratum and stainless steel, (varies)
6. R_{act} is to sliding surface

STANDARD DRAWING

FILE NO. xs9-010

APPROVAL DATE July 2011

STATE OF CALIFORNIA
DEPARTMENT OF TRANSPORTATION

DIVISION OF ENGINEERING SERVICES

BRIDGE NO. 54-1220
POST MILE R18.1

DOUBLE DRAIN CREEK BRIDGE

PTFE/SPHERICAL EXPANSION BEARING DETAILS NO. 1

DS OSD 2147A (ENGLISH STANDARD DRAWING "XS" BORDER REV. (02-02-11)

ORIGINAL SCALE IN INCHES FOR REDUCED PLANS 0 1 2 3

UNIT: 3594
PROJECT NUMBER & PHASE: 0800020191-1
CONTRACT NO.: 08-303004

DISREGARD PRINTS BEARING EARLIER REVISION DATES

REVISION DATES: 2-6-13 3-28-13 9-11-13

SHEET 18 OF 29

FILE => 54-1220-q-brgdet.dgn

USERNAME => s102458 DATE PLOTTED => 16-NOV-2015 TIME PLOTTED => 10:19

DIST	COUNTY	ROUTE	POST MILES TOTAL PROJECT	SHEET No.	TOTAL SHEETS
08	SBd	138	R17.1/R19.2	202	212

Peter W. Norboe 3-5-15
REGISTERED CIVIL ENGINEER DATE

9-11-15
PLANS APPROVAL DATE

REGISTERED PROFESSIONAL ENGINEER
Peter W. Norboe
No. C57519
Exp. 12-31-15
CIVIL
STATE OF CALIFORNIA

The State of California or its officers or agents shall not be responsible for the accuracy or completeness of scanned copies of this plan sheet.

NOTE: For Expansion Bearing Table, see "PTFE/SPHERICAL EXPANSION BEARING DETAILS NO. 1" sheet.

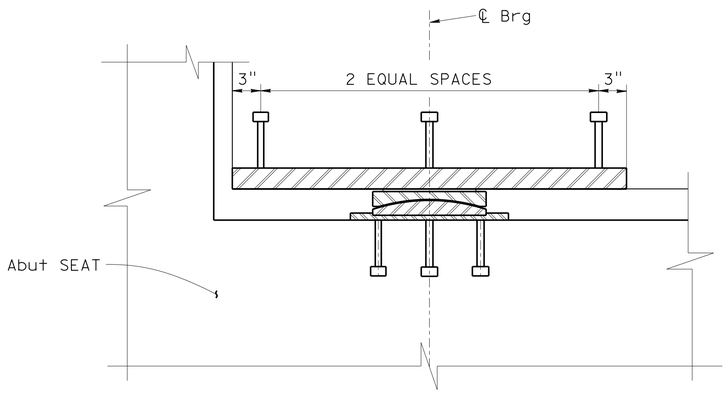

SIDE VIEW
1½" = 1'-0"

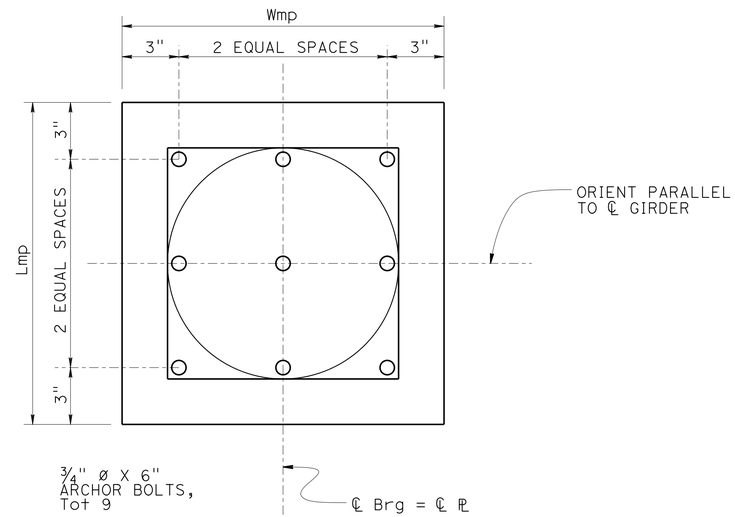

MASONRY PLATE
3" = 1'-0"

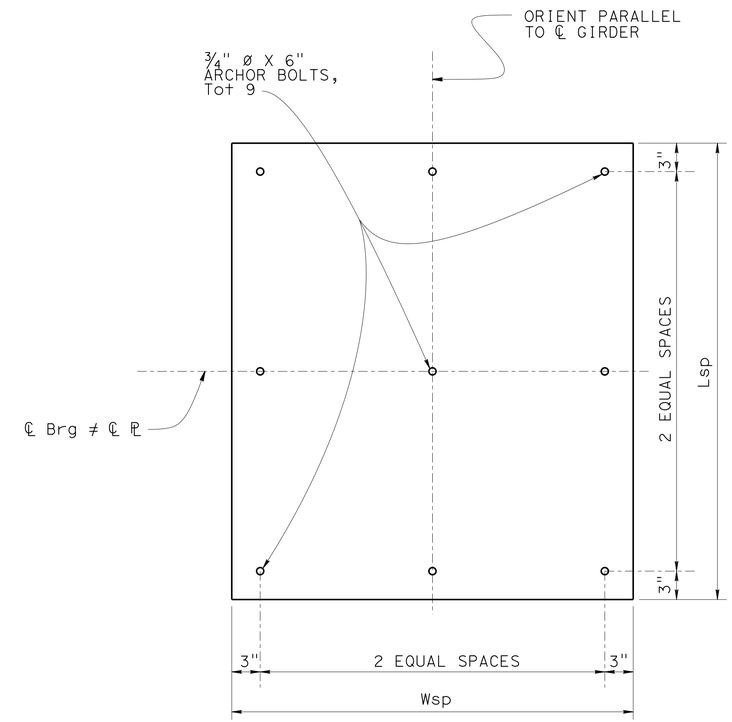

SOLE PLATE
1½" = 1'-0"

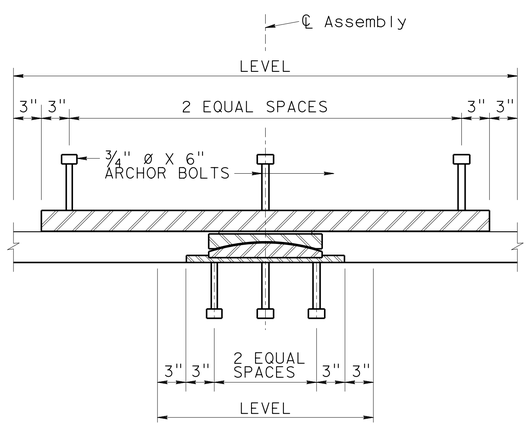

ELEVATION
1½" = 1'-0"

DESIGN	BY P. Norboe	CHECKED R. Candiotti	
DETAILS	BY D. Elliott	CHECKED R. Candiotti	
QUANTITIES	BY P. Norboe	CHECKED R. Candiotti	

STATE OF CALIFORNIA
DEPARTMENT OF TRANSPORTATION

DIVISION OF ENGINEERING SERVICES
STRUCTURE DESIGN
DESIGN BRANCH 9

BRIDGE NO. 54-1220
POST MILE R18.1

DOUBLE DRAIN CREEK BRIDGE
PTFE/SPHERICAL EXPANSION BEARING DETAILS NO. 2

STRUCTURES DESIGN DETAIL SHEET (ENGLISH) (REV. 09-01-10)

ORIGINAL SCALE IN INCHES FOR REDUCED PLANS 0 1 2 3

UNIT: 3594
PROJECT NUMBER & PHASE: 0800020191-1
CONTRACT NO.: 08-003004

DISREGARD PRINTS BEARING EARLIER REVISION DATES
REVISION DATES: 2-6-13 9-11-13 11-19-13

SHEET 19 OF 29

FILE => 54-1220-q-ptfe brg det no. 2-sheet.dgn

USERNAME => s102458 DATE PLOTTED => 16-NOV-2015 TIME PLOTTED => 10:19

DIST	COUNTY	ROUTE	POST MILES TOTAL PROJECT	SHEET No.	TOTAL SHEETS
08	SBd	138	R17.1/R19.2	203	212

REGISTERED CIVIL ENGINEER — DATE 3-5-15

9-11-15
PLANS APPROVAL DATE

The State of California or its officers or agents shall not be responsible for the accuracy or completeness of electronic copies of this plan sheet.

REGISTERED PROFESSIONAL ENGINEER — Peter W. Norboe No. 57519 Exp. 12-31-2015 CIVIL — STATE OF CALIFORNIA

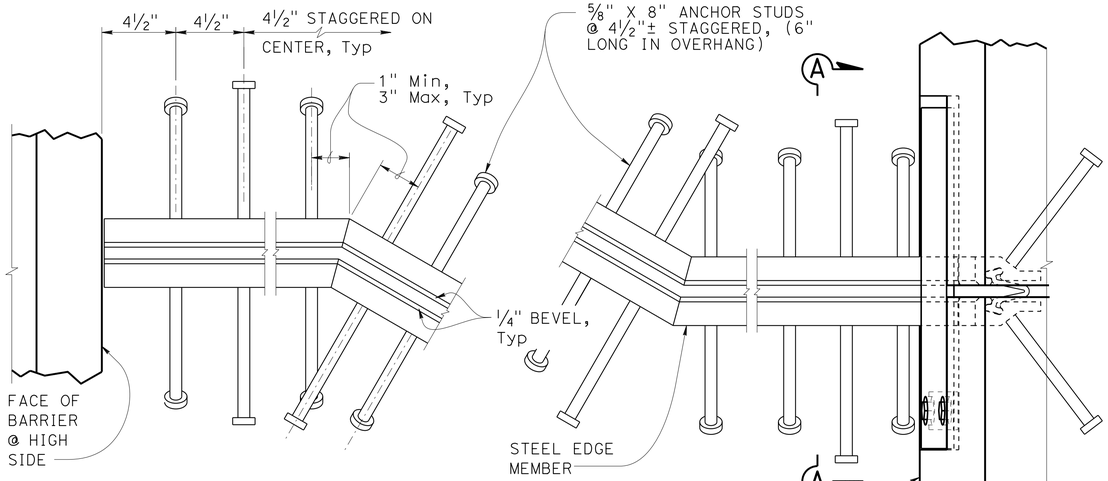

PLAN
SKEW > 20°

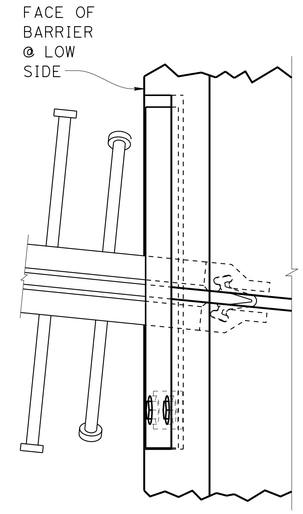

PLAN
SKEW ≤ 20°

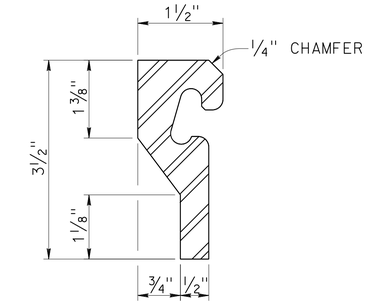

STEEL EDGE MEMBER

NOTES:

1. Alternatively, fillet or full penetration welds may be used at anchor studs.
2. Alternate types of anchor studs may be permitted subject to the approval by the Engineer
3. Joint seal assembly to be used in conjunction with closure pour. (See other sheets for limits). Closure pour must not be placed until final deck surface is within the tolerances specified
4. Use joint at crown of roadway, at any change in traverse slope in deck and at changes in horizontal direction. Place other joints at or near lanes. All metal parts to be painted or galvanized after fabrication
5. Sheet Neoprene must be fabricated in one continuous piece and must be fabricated to bend around corners. Field splices of the neoprene are not allowed.
6. Insert assembly or expansion anchorage for ⅝" x 1¾" bolts. Use installation bolts extended ½" minimum past nut and coat with bond breaker, after concrete has cured, remove installation bolts, install A325 bolts and sheet neoprene
7. Sidewalk Detail similar to Barrier Detail on low side at both sides if the roadway is crowned or if the difference in elevation between the ends of the seal is 0.5′ or less
8. a_c, a_s, are the thermal expansion coefficients for concrete and steel respectively.

JOINT INFORMATION			"a" DIMENSIONS		
LOCATION	MOVEMENT RATING (MR)	SKEW	WINTER	SPRING & FALL	SUMMER
Abut 1	4"	0°	2"	1⅜"	1"
Abut 5	4"	0°	2"	1⅜"	1"

✳ TO SET MINIMUM JOINT OPENING "W"

"W" = ½"+[(Max Str temperature in F°)-(actual Str temperature in F°)]✳(a_c or a_s)(12)(contributory L in feet)

½" Minimum
a_c = 0.0000060
a_s = 0.0000065

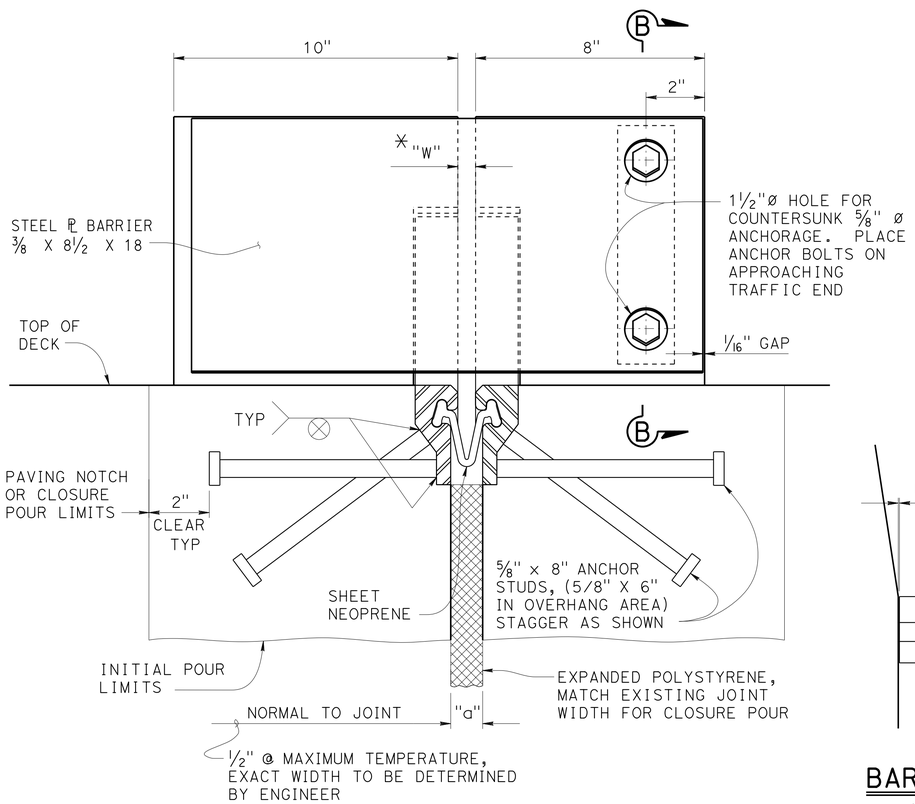

SECTION A-A

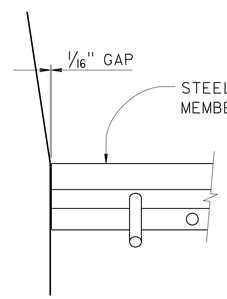

BARRIER DETAIL
HIGH SIDE

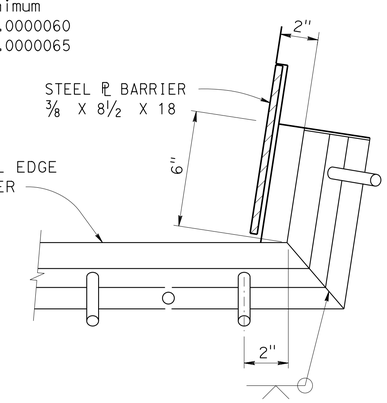

BARRIER DETAIL
LOW SIDE

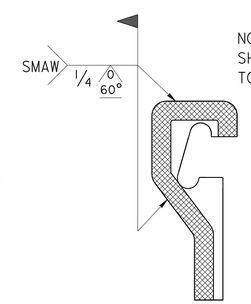

FIELD WELD
DETAIL

NOTE:
SHADED AREAS TO BE WELDED

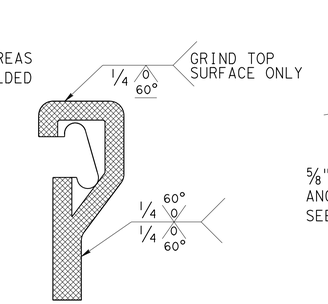

SHOP WELD
DETAIL

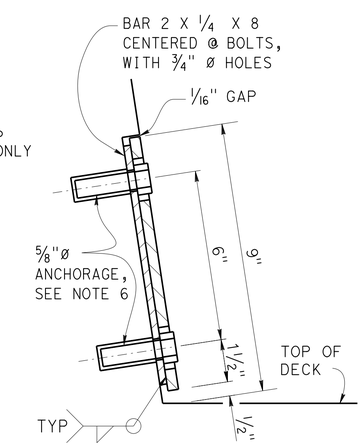

SECTION B-B

NO SCALE

DOUBLE DRAIN CREEK BRIDGE
JOINT SEAL ASSEMBLY
MAXIMUM MOVEMENT RATING = 4"

STANDARD DRAWING
FILE NO. xs8-010
APPROVAL DATE June 2012

STATE OF CALIFORNIA
DEPARTMENT OF TRANSPORTATION

DIVISION OF ENGINEERING SERVICES

BRIDGE NO. 54-1220
POST MILE R18.1

DS OSD 2147A (ENGLISH STANDARD DRAWING "XS" BORDER REV. (02-02-11)

ORIGINAL SCALE IN INCHES FOR REDUCED PLANS 0 1 2 3

UNIT: 3594
PROJECT NUMBER & PHASE: 0800020191-1
CONTRACT NO.: 08-003004

DISREGARD PRINTS BEARING EARLIER REVISION DATES
REVISION DATES: 3-26-13 9-11-13 10-7-14 6-21-12
SHEET 20 OF 29

USERNAME => s102458 DATE PLOTTED => 16-NOV-2015 TIME PLOTTED => 10:19

FILE => 54-1220-xs-jsa.dgn

DIST	COUNTY	ROUTE	POST MILES TOTAL PROJECT	SHEET No.	TOTAL SHEETS
08	SBd	138	R17.1/R19.2	204	212

Peter W. Norboe 3-5-15
REGISTERED CIVIL ENGINEER DATE

9-11-15
PLANS APPROVAL DATE

REGISTERED PROFESSIONAL ENGINEER Peter W. Norboe No. 57519 Exp. 12-31-2015 CIVIL STATE OF CALIFORNIA

The State of California or its officers or agents shall not be responsible for the accuracy or completeness of electronic copies of this plan sheet.

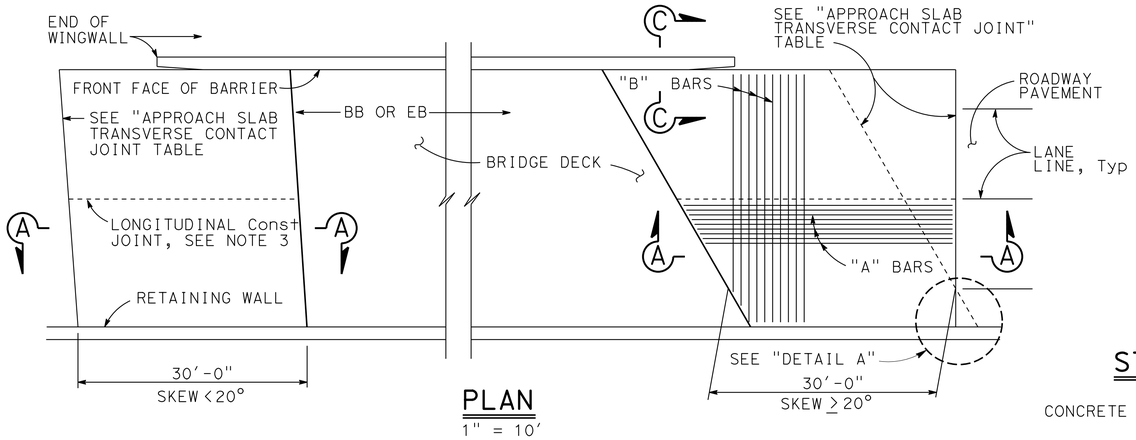

PLAN
1" = 10'

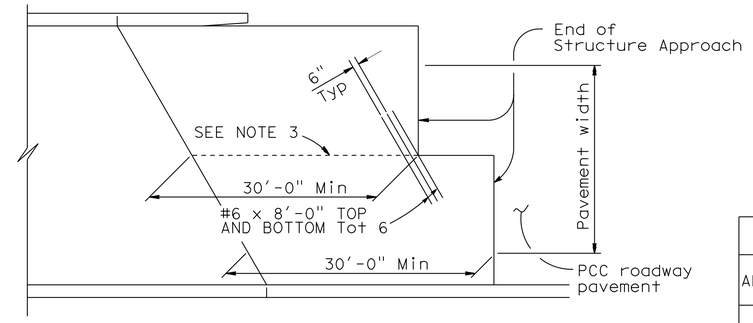

STRUCTURE APPROACH - END STAGGER DETAIL
No Scale

APPROACH SLAB TRANSVERSE CONTACT JOINT		
APPROACH SKEW	WITH AC ROADWAY PAVEMENT	WITH PCC ROADWAY PAVEMENT
< 20°	PARALLEL TO FACE OF PN	PARALLEL TO FACE OF PN
20° - 45°	PARALLEL TO FACE OF PN USE "DETAIL A"	STAGGER LINES 24' TO 36' APART
> 45°	PARALLEL TO FACE OF PN USE "DETAIL A"	STAGGER AT EACH LANE LINE

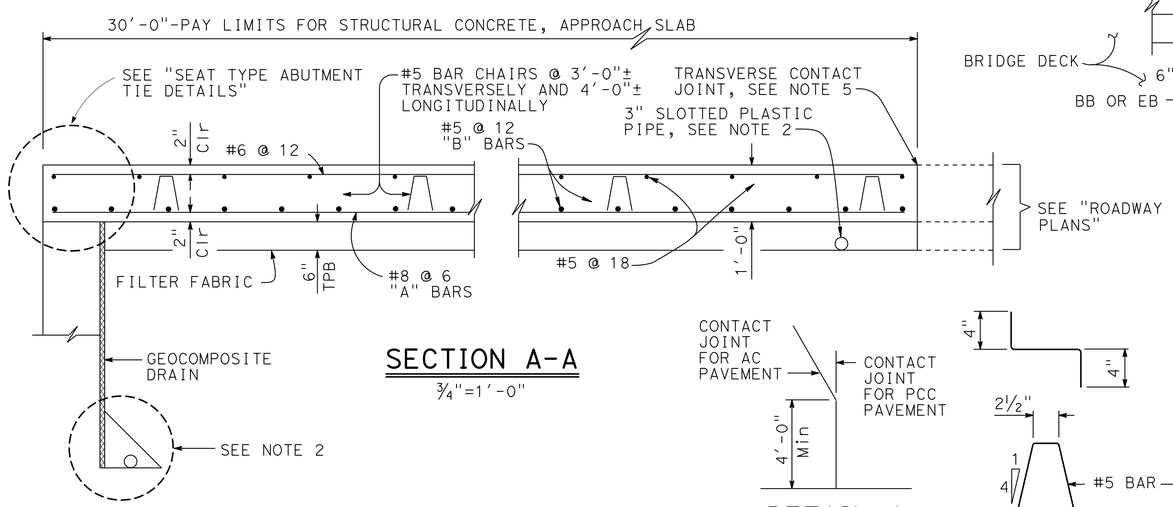

SECTION A-A
¾"=1'-0"

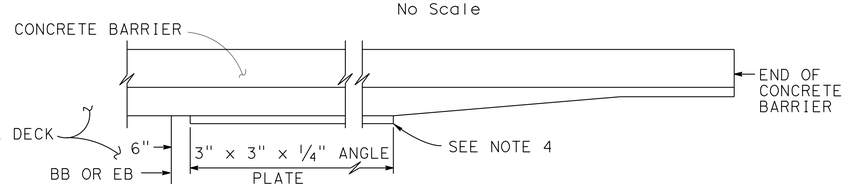

EDGE ANGLE DETAIL
½"=1'-0"

DETAIL A
No Scale

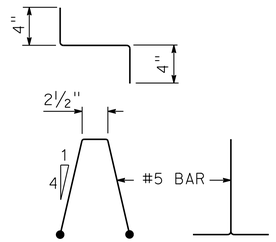

BAR CHAIR DETAIL
1½"=1'-0"

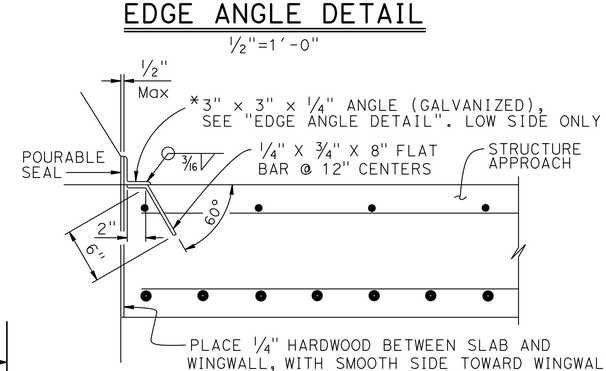

*(TO BE USED WITH CONCRETE BARRIER WITH VERTICAL FACE)

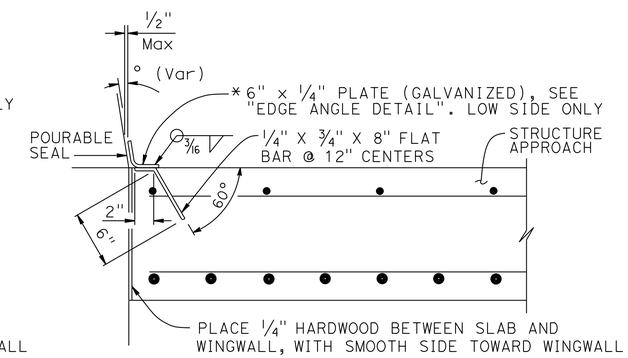

*(TO BE USED WITH CONCRETE BARRIER WITH SLOPING FACE)

DETAIL B
1½" = 1'-0"

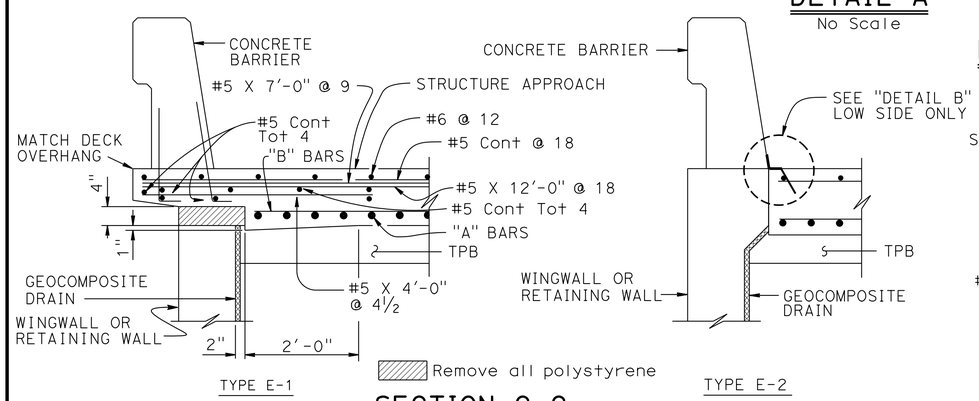

SECTION C-C
¾"=1'-0"

(Type E-1 to be used, unless otherwise shown on plans)

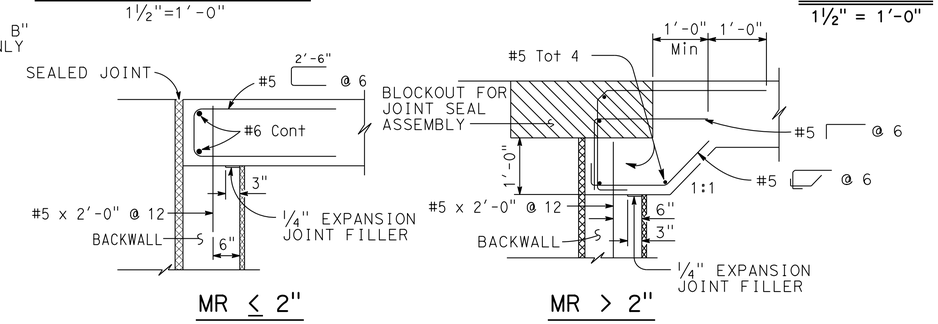

MR ≤ 2" MR > 2"

SEAT TYPE ABUTMENT TIE DETAILS (SEE NOTE 1)
¾"=1'-0"

NOTES:

1. For details not shown, see Structure Plans. For MR ≤ 2", adjust bar reinforcement to clear a sawcut for sealed joint, when required
2. For drainage details, see "STRUCTURE APPROACH DRAINAGE DETAILS" sheet
3. Longitudinal construction joints, when permitted by the Engineer, must be located on lane lines
4. End angle or plate at beginning of barrier transition, end of wingwall or end of structure approach as applicable
5. For transverse contact joint with new PCC paving, refer to Standard Plan P10
6. At the Contractor's option, approach slab transverse reinforcement may be placed parallel to paving notch. Spacing of transverse reinforcement is measured along ℄ roadway
7. All reinforcement must be epoxy coated

STANDARD DRAWING
FILE NO. xs3-120
APPROVAL DATE July 2011

STATE OF CALIFORNIA
DEPARTMENT OF TRANSPORTATION

DIVISION OF ENGINEERING SERVICES

BRIDGE NO. 54-1220
POST MILE R18.1

DOUBLE DRAIN CREEK BRIDGE
STRUCTURE APPROACH TYPE N(30S)

DS OSD 2147A (ENGLISH STANDARD DRAWING "XS" BORDER REV. (02-02-11)

ORIGINAL SCALE IN INCHES FOR REDUCED PLANS 0 1 2 3

UNIT: 3594
PROJECT NUMBER & PHASE: 0800020191-1
CONTRACT NO.: 08-003004

DISREGARD PRINTS BEARING EARLIER REVISION DATES

REVISION DATES: 2-6-13 9-11-13 10-7-14

SHEET 21 OF 29

FILE => 54-1220-xs-sa_n30s.dgn

USERNAME => s102458 DATE PLOTTED => 16-NOV-2015 TIME PLOTTED => 10:13

DIST	COUNTY	ROUTE	POST MILES TOTAL PROJECT	SHEET No.	TOTAL SHEETS
08	SBd	138	R17.1/R19.2	205	212

Peter W. Norboe 3-5-15
REGISTERED CIVIL ENGINEER DATE

9-11-15
PLANS APPROVAL DATE

REGISTERED PROFESSIONAL ENGINEER Peter W. Norboe No. 57519 Exp. 12-31-2015 CIVIL STATE OF CALIFORNIA

The State of California or its officers or agents shall not be responsible for the accuracy or completeness of electronic copies of this plan sheet.

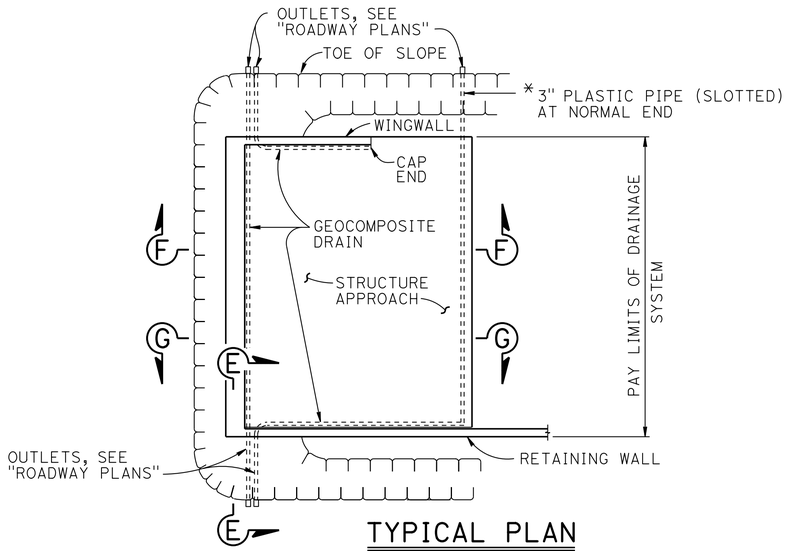

TYPICAL PLAN

1" = 10'

* FOR PIPE LAYOUT AT STAGGERED END, SEE "DETAIL B"

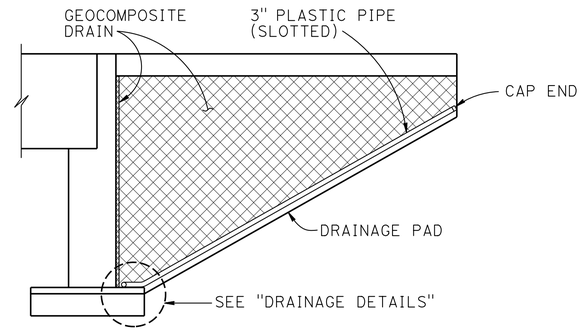

CANTILEVER WINGWALL

SECTION F-F

1/4" = 1'-0"

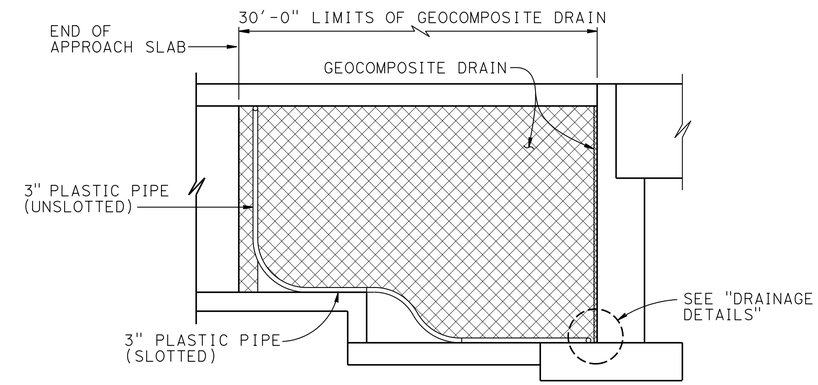

RETAINING WALL WINGWALL DRAINAGE DETAILS

SECTION G-G

1/4" = 1'-0"

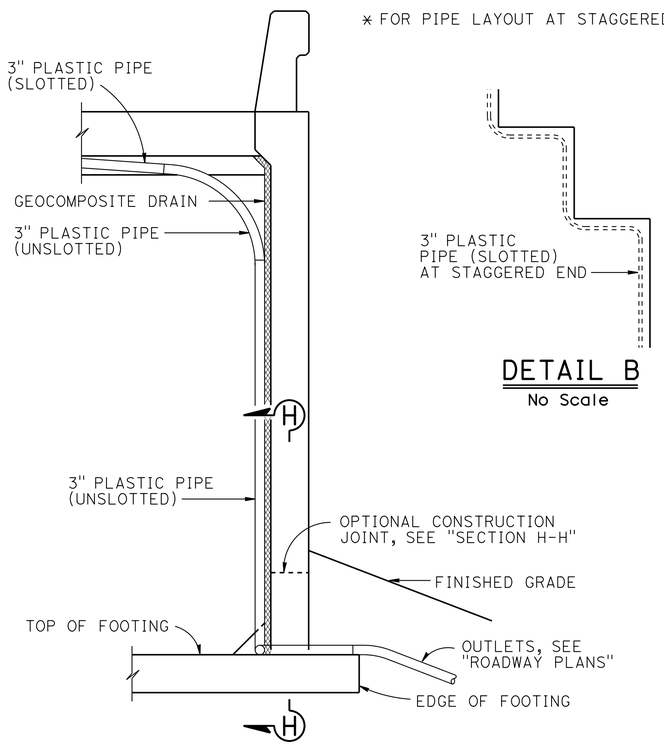

DETAIL B

No Scale

SECTION E-E

1/2" = 1'-0"

NOTE: Bends and junctions in 3" plastic pipe are 30" radius Min

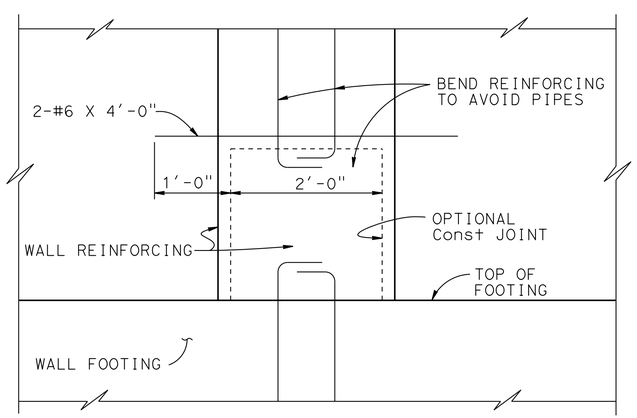

SECTION H-H

1" = 1'-0"

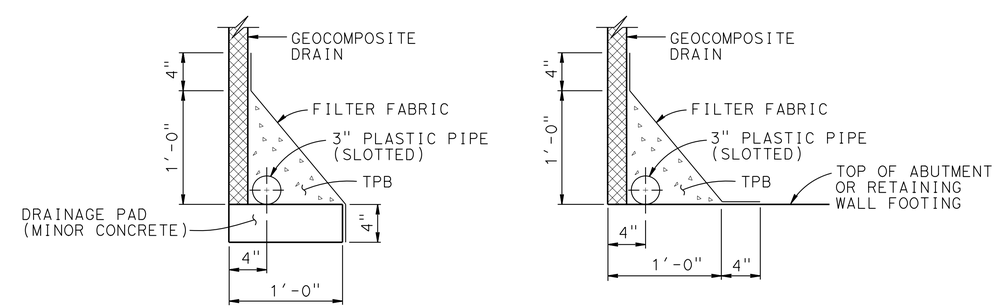

WITHOUT FOOTING

WITH FOOTING

DRAINAGE DETAILS

1 1/2" = 1'-0"

STANDARD DRAWING		STATE OF CALIFORNIA DEPARTMENT OF TRANSPORTATION	DIVISION OF ENGINEERING SERVICES	BRIDGE NO. 54-1220	DOUBLE DRAIN CREEK BRIDGE
FILE NO. xs3-110	APPROVAL DATE July 2011			POST MILE R18.1	STRUCTURE APPROACH DRAINAGE DETAILS

DS OSD 2147A (ENGLISH STANDARD DRAWING "XS" BORDER REV. (02-02-11)

ORIGINAL SCALE IN INCHES FOR REDUCED PLANS 0 1 2 3

UNIT: 3594
PROJECT NUMBER & PHASE: 0800020191-1 CONTRACT NO.: 08-003004

DISREGARD PRINTS BEARING EARLIER REVISION DATES → REVISION DATES 2-5-13 9-11-13 10-7-14

SHEET 22 OF 29

FILE => 54-1220-xs-sadd.dgn

USERNAME => s102458 DATE PLOTTED => 16-NOV-2015 TIME PLOTTED => 10:19

DIVISION OF ENGINEERING SERVICES - MATERIALS AND GEOTECHNICAL SERVICES					
DIST	COUNTY	ROUTE	POST MILE-TOTAL PROJECT	Sheet No.	Total Sheets
08	SBd	138	R17.1/R19.2	206	212

REGISTERED CIVIL ENGINEER — DATE: 10-30-13

DOUBLE DRAIN CREEK BRIDGE

LOG OF TEST BORINGS 1 OF 7

UNIT: 3643	CONTRACT No.	BRIDGE No.
PROJ. No. & PHASE: 0800020191	08-003000	54-1220

Sheet ___ of ___

Note: See the General Plan or Foundation Plan for new English units alignment.

Caltrans Metric

REGISTERED PROFESSIONAL ENGINEER — David T-M Liao — No. C59838 — Exp. 12-31-13 — CIVIL — STATE OF CALIFORNIA

DIST	COUNTY	ROUTE	KILOMETER POST TOTAL PROJECT	SHEET No	TOTAL SHEETS
08	SBd	138			

REGISTERED GEOLOGIST — 8-20-03

PLANS APPROVAL DATE

REGISTERED GEOLOGIST — Muhammad Gabr Ali Lugman — No. 7297 — Exp. 5-31-04 — STATE OF CALIFORNIA

The State of California or its officers or agents shall not be responsible for the accuracy or completeness of electronic copies of this plan sheet.

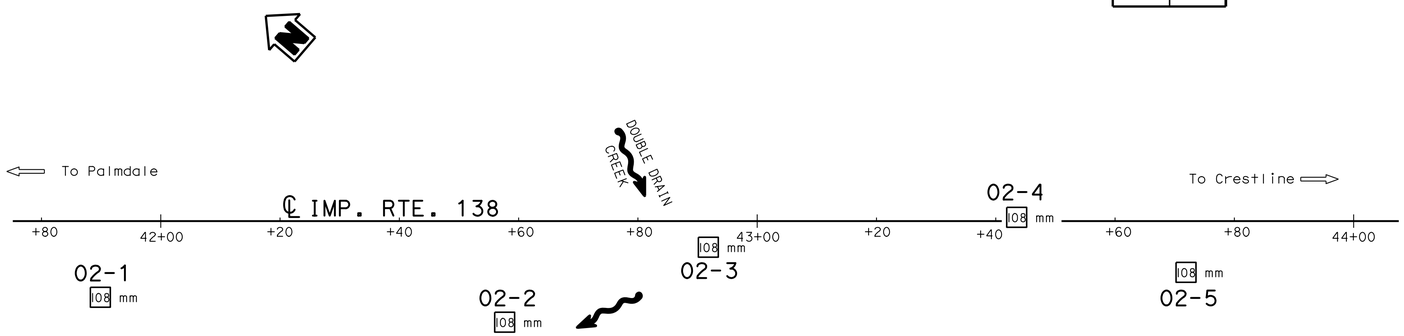

PLAN
1:500

BENCH MARKS

Bridge Site Control Point:

Fnd 25.4 mm IP, down 0.15 m, CT tag stamped "RP 304" on south facing hillside west of ravine; 130 m left of yellow stripe at KP 28.8.
N 592202.439
E 2051441.201
Elevation = 1098.599 m

Bridge Site Control Point:

Fnd 25.4 mm IP, down 0.15 m, CT tag stamped "RP 301" at top of vertical slope on s'ly side of ravine; 25 m NW of SCE transmission tower patrol road; 160 m left of yellow stripe at KP 29.0
N 591997.805
E 2051622.371
Elevation = 1109.247 m

Both Bridge Site Control Points referenced from:

BM 15-B-72
Std CDH brass disk in concrete, down 0.15 m in flowline of small ravine; 14 m left of yellow stripe at KP 29.5.
N 591895.258
E 2051731.340
Elevation = 1108.609 m

NOTES:

1. All test borings were advanced using a self-casing 94 mm wireline drill system.
2. The descriptions and classifications of rock and/or soil, including consistency and relative density descriptors, used by the field and/or office personnel for the exploration boreholes shown on these sheets are based on the "Soil and Rock Logging Classification Manual (Field Guide)," Engineering Service Center, Office of Structural Foundations, August 1996.
3. Soil colors were determined using Munsell Soil Color Charts (1994, Revised Edition). Rock colors were determined using the Geological Society of America rock color charts (1995, revised text).
4. Test borings utilized a CME automatic hammer to advance the sampler using a 63.5 kg hammer with a 762 mm drop. Penetration index values shown on the Log of Test Boring (LOTB) sheets were the actual values recorded in the field. Soil consistencey shown on the LOTB sheets is based on the actual penetration index values recorded in the field.
5. Soil Consistency Classifications for all test borings are based on a conversion factor of 1.5 times the uncorrected blow count.
6. E=Blow count for 0.3 m penetration extrapolated from blow count for less than 0.3 m (due to change in material or hard driving).
7. REF= Refusal. Refusal is defined as blow counts >50 blows for less than 0.03 m penetration of the 0.3 m (due to change in material or hard driving).
8. Classification of earth materials shown on these sheets is based on field visual classification and is not to be construed to imply mechanical and/or laboratory analysis.
9. Ground water was not measured during the field investigation on boring 02-1, 02-3, and 02-4

ALL DIMENSIONS ARE IN METERS UNLESS OTHERWISE SHOWN

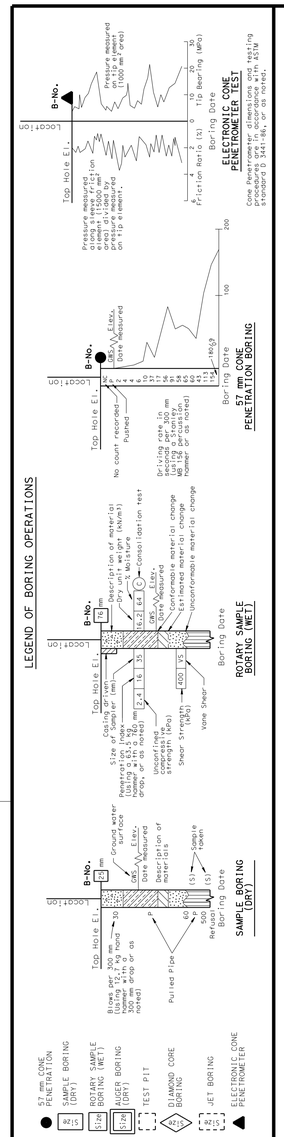

CONSISTENCY CLASSIFICATION FOR SOILS			
According to the Standard Penetration Test			
SPT N-Value (Blows/ 0.3m)	Granular	SPT N-Value (Blows/ 0.3 m)	Cohesive
0-4	Very Loose	<2	Very Soft
5-10	Loose	2-4	Soft
11-30	Medium Dense	5-8	Firm
31-50	Dense	9-15	Stiff
>50	Very Dense	16-30	Very stiff
		>30	Hard

ENGINEERING SERVICES	GEOTECHNICAL SERVICES
DRAWN BY: Irma G-Remmen 1/03	
CHECKED BY: J. Martin	

FIELD INVESTIGATION BY: J. Martin

STATE OF CALIFORNIA DEPARTMENT OF TRANSPORTATION

DIVISION OF STRUCTURES — STRUCTURE DESIGN

BRIDGE NO. 54-1220 — KILOMETER POST 28.6

DOUBLE DRAIN CREEK BRIDGE

LOG OF TEST BORINGS 1 OF 7

CU 08
EA 437001

DISREGARD PRINTS BEARING EARLIER REVISION DATES — REVISION DATES (PRELIMINARY STAGE ONLY): 2-25-03, 4-30-03

SHEET 23 OF 29

ORIGINAL SCALE IN MILLIMETERS FOR REDUCED PLANS: 0 10 20 30 40 50 60 70 80 90 100

OGS GEOLOGIST LOG OF TEST BORINGS SHEET (METRIC) (REV. 3/02)

FILE => 54-1220-z-1tb_1.dgn

USERNAME => s102458 DATE PLOTTED => 16-NOV-2015 TIME PLOTTED => 10:19

DIVISION OF ENGINEERING SERVICES - MATERIALS AND GEOTECHNICAL SERVICES					
DIST	COUNTY	ROUTE	POST MILE-TOTAL PROJECT	Sheet No.	Total Sheets
08	SBd	138	R17.1/R19.2	207	212

REGISTERED CIVIL ENGINEER — DATE 10-30-13

DOUBLE DRAIN CREEK BRIDGE

LOG OF TEST BORINGS 2 OF 7

UNIT: 3643	CONTRACT No.	BRIDGE No.
PROJ. No. & PHASE: 0800020191	08-0Q3000	54-1220
	Sheet	of

REGISTERED PROFESSIONAL ENGINEER — David T-M Liao — No. C59838 — Exp. 12-31-13 — CIVIL — STATE OF CALIFORNIA

Caltrans Metric

DIST	COUNTY	ROUTE	KILOMETER POST TOTAL PROJECT	SHEET No	TOTAL SHEETS
08	SBd	138			

REGISTERED GEOLOGIST — 8-20-03

PLANS APPROVAL DATE

REGISTERED GEOLOGIST — Muhammad Gabr Ali Luqman — No. 7297 — Exp. 5-31-04 — STATE OF CALIFORNIA

The State of California or its officers or agents shall not be responsible for the accuracy or completeness of electronic copies of this plan sheet.

Revisions made to this Log of Test Borings from the original 2002 Log of Test Borings are the addition of the following table and notes:

Boring	Station	Offset from ℄ Imp. Rte 138
02-1	137+47.1	42.0' Right

Notes:

1. See the General Plan or Foundation Plan for new English alignment.
2. Boring stationing and offset are directly converted to English units in the table above.

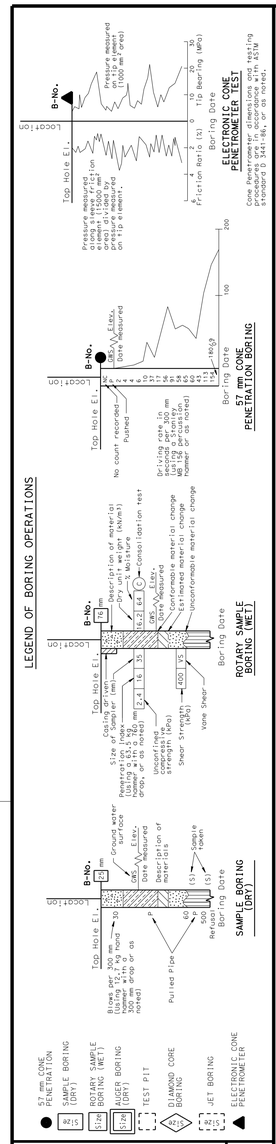

FOR PLAN VIEW, SEE "LOG OF TEST BORINGS" 1 OF 7

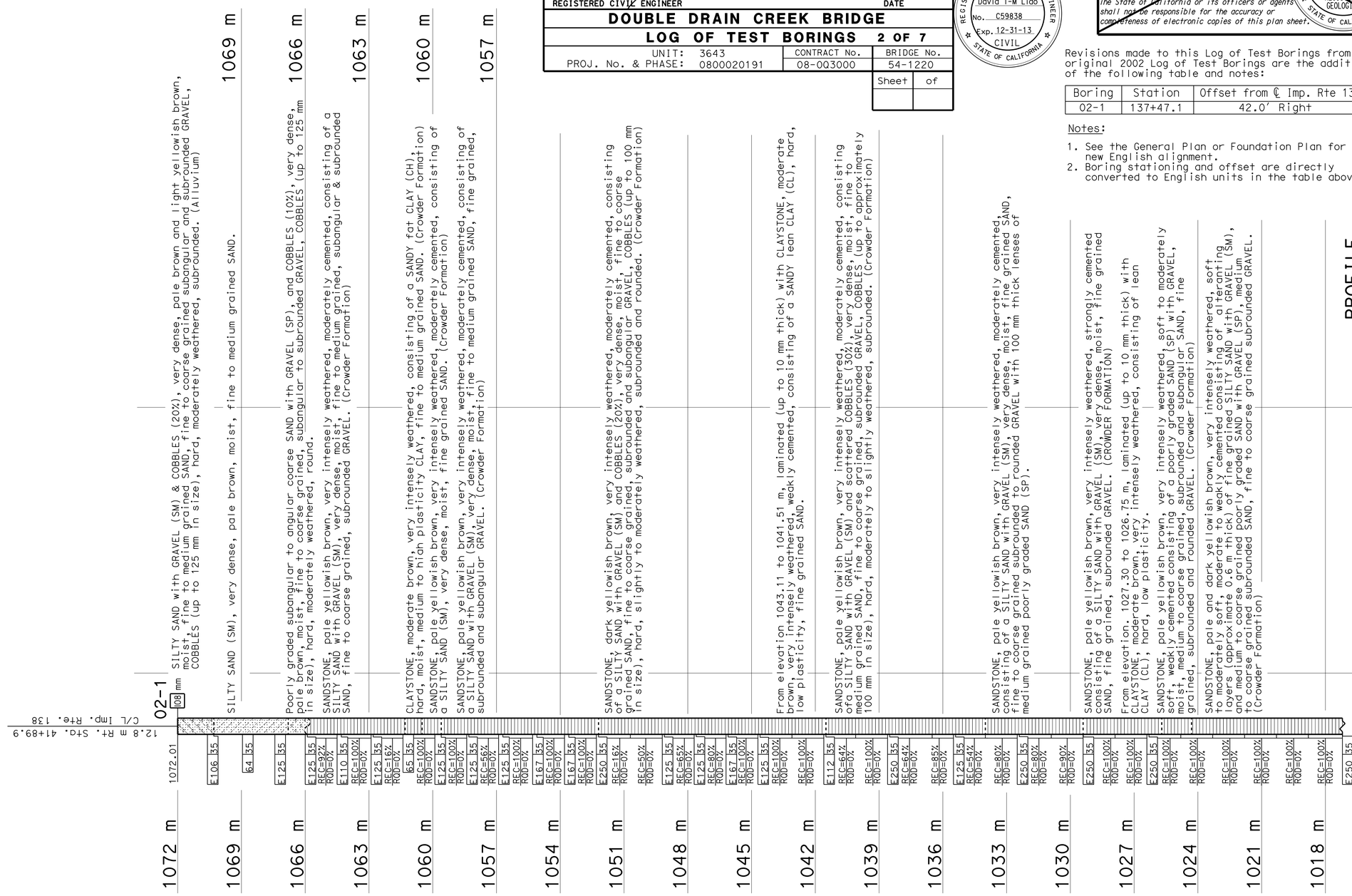

SILTY SAND with GRAVEL (SM) & COBBLES (20%), very dense, pale brown and light yellowish brown, moist, fine to medium grained SAND, fine to coarse grained subangular and subrounded GRAVEL, COBBLES (up to 125 mm in size), hard, moderately weathered, subrounded. (Alluvium)

SILTY SAND (SM), very dense, pale brown, moist, fine to medium grained SAND.

Poorly graded subangular to angular coarse SAND with GRAVEL (SP), and COBBLES (10%), very dense, pale brown, moist, fine to coarse grained, subangular to subrounded GRAVEL, COBBLES (up to 125 mm in size), hard, moderately weathered, round.

SANDSTONE, pale yellowish brown, very intensely weathered, moderately cemented, consisting of a SILTY SAND with GRAVEL (SM), very dense, moist, fine to medium grained, subangular & subrounded SAND, fine to coarse grained, subrounded GRAVEL. (Crowder Formation)

CLAYSTONE, moderate brown, very intensely weathered, consisting of a SANDY fat CLAY (CH), hard, moist, medium to high plasticity CLAY, fine to medium grained SAND. (Crowder Formation)

SANDSTONE, pale yellowish brown, very intensely weathered, moderately cemented, consisting of a SILTY SAND (SM), very dense, moist, fine grained SAND. (Crowder Formation)

SANDSTONE, pale yellowish brown, very intensely weathered, moderately cemented, consisting of a SILTY SAND with GRAVEL (SM), very dense, moist, fine to coarse grained, subrounded and subangular GRAVEL, COBBLES (up to 100 mm in size), hard, moderately weathered, subrounded and rounded. (Crowder Formation)

SANDSTONE, dark yellowish brown, very intensely weathered, moderately cemented, consisting of a SILTY SAND with GRAVEL (SM) and COBBLES (20%), very dense, moist, fine to coarse grained, subrounded and subangular GRAVEL, COBBLES (up to 100 mm in size), hard, slightly to moderately weathered, subrounded. (Crowder Formation)

From elevation 1043.11 to 1041.51 m, laminated (up to 10 mm thick) with CLAYSTONE, moderate brown, very intensely weathered, weakly cemented, consisting of a SANDY lean CLAY (CL), hard, low plasticity, fine grained SAND.

SANDSTONE, pale yellowish brown, very intensely weathered, moderately cemented, consisting of a SILTY SAND with GRAVEL (SM), very dense, moist, fine to coarse grained, subrounded GRAVEL, COBBLES (30%), very dense, moist, fine to medium grained SAND, fine to coarse grained, subrounded GRAVEL, COBBLES (up to approximately 100 mm in size), hard, moderately to slightly weathered, subrounded. (Crowder Formation)

SANDSTONE, pale yellowish brown, very intensely weathered, moderately cemented, consisting of a SILTY SAND with GRAVEL (SM), very dense, moist, fine grained SAND, fine to coarse grained subrounded to rounded GRAVEL with 100 mm thick lenses of medium grained poorly graded SAND (SP).

SANDSTONE, pale yellowish brown, very intensely weathered, strongly cemented consisting of a SILTY SAND with GRAVEL (SM), very dense, moist, fine grained SAND, fine grained subrounded GRAVEL. (CROWDER FORMATION)

From elevation. 1027.30 to 1026.75 m, laminated (up to 10 mm thick) with CLAYSTONE, moderate brown, very intensely weathered, consisting of lean CLAY (CL), hard, low plasticity.

SANDSTONE, pale yellowish brown, very intensely weathered, soft to moderately soft, weakly cemented consisting of a poorly graded SAND (SP) with GRAVEL, moist, medium to coarse grained, subrounded and subangular SAND, fine grained, subrounded and rounded GRAVEL. (Crowder Formation)

SANDSTONE, pale and dark yellowish brown, very intensely weathered, soft to moderately soft, moderate to weakly cemented consisting of interbedded layers (approximate 0.6 m thick) of fine grained SILTY SAND with GRAVEL (SM), and medium to coarse grained poorly graded SAND with GRAVEL (SP), medium to coarse grained subrounded SAND, fine to coarse grained subrounded GRAVEL. (Crowder Formation)

ALL DIMENSIONS ARE IN METERS UNLESS OTHERWISE SHOWN

CONSISTENCY CLASSIFICATION FOR SOILS

According to the Standard Penetration Test

SPT N-Value (Blows/0.3m)	Granular	SPT N-Value (Blows/0.3m)	Cohesive
0-4	Very Loose	<2	Very Soft
5-10	Loose	2-4	Soft
11-30	Medium Dense	5-8	Firm
31-50	Dense	9-15	Stiff
>50	Very Dense	16-30	Very stiff
		>30	Hard

NOTE: Classification of earth material as shown on this sheet is based upon field inspection and is not to be construed to imply mechanical analysis.

LEGEND OF EARTH MATERIALS

GRAVEL, SAND, SILT, CLAY, SANDY CLAY or CLAYEY SAND, SANDY SILT or SILTY SAND, CLAYEY SILT, PEAT and/or ORGANIC MATTER, COBBLES and/or BOULDERS, IGNEOUS ROCK, SEDIMENTARY ROCK, METAMORPHIC ROCK, SILTY CLAY

ENGINEERING SERVICES	GEOTECHNICAL SERVICES
DRAWN BY: Irma G-Remmen 1/03	
CHECKED BY: J. Martin	

FIELD INVESTIGATION BY: J. Martin

STATE OF CALIFORNIA DEPARTMENT OF TRANSPORTATION

DIVISION OF STRUCTURES STRUCTURE DESIGN

BRIDGE NO. 54-1220 — KILOMETER POST 28.6

DOUBLE DRAIN CREEK BRIDGE

LOG OF TEST BORINGS 2 OF 7

CU 08 EA 437001

DISREGARD PRINTS BEARING EARLIER REVISION DATES — REVISION DATES (PRELIMINARY STAGE ONLY): 2-25-03, 4-11-03, 4-30-03, 8-20-03

SHEET 24 OF 29

OGS GEOLOGIST LOG OF TEST BORINGS SHEET (METRIC) (REV. 3/02)

ORIGINAL SCALE IN MILLIMETERS FOR REDUCED PLANS 0 10 20 30 40 50 60 70 80 90 100

FILE => 54-1220-z-1tb_2.dgn

USERNAME => s102458 DATE PLOTTED => 16-NOV-2015 TIME PLOTTED => 10:19

DIST	COUNTY	ROUTE	KILOMETER POST TOTAL PROJECT	SHEET No	TOTAL SHEETS
08	SBd	138			

REGISTERED GEOLOGIST 8-20-03

PLANS APPROVAL DATE

The State of California or its officers or agents shall not be responsible for the accuracy or completeness of electronic copies of this plan sheet.

REGISTERED GEOLOGIST Muhammad Gabr Ali Luqman No. 7297 Exp. 5-31-04 STATE OF CALIFORNIA

Caltrans **Metric**

DIVISION OF ENGINEERING SERVICES - MATERIALS AND GEOTECHNICAL SERVICES					
DIST	COUNTY	ROUTE	POST MILE-TOTAL PROJECT	Sheet No.	Total Sheets
08	SBd	138	R17.1/R19.2	208	212

REGISTERED CIVIL ENGINEER — DATE 10-30-13

REGISTERED PROFESSIONAL ENGINEER David T-M Liao No. C59838 Exp. 12-31-13 CIVIL STATE OF CALIFORNIA

DOUBLE DRAIN CREEK BRIDGE
LOG OF TEST BORINGS 3 OF 7

UNIT: 3643	CONTRACT No.	BRIDGE No.
PROJ. No. & PHASE: 0800020191	08-0Q3000	54-1220
		Sheet / of

Revisions made to this Log of Test Borings from the original 2002 Log of Test Borings are the addition of the following table and notes:

Boring	Station	Offset from ℄ Imp. Rte 138
02-2	139+69.5	55.8′ Right

Notes:
1. See the General Plan or Foundation Plan for new English alignment.
2. Boring stationing and offset are directly converted to English units in the table above.

LEGEND OF BORING OPERATIONS

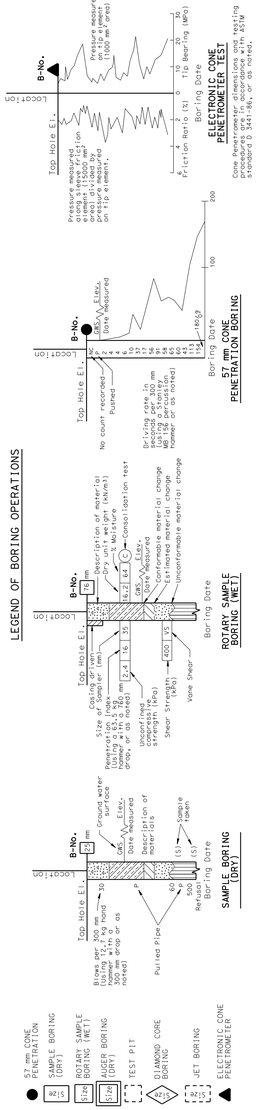

LEGEND OF EARTH MATERIALS

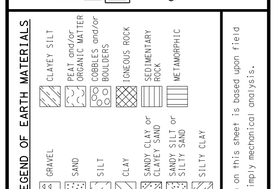

CONSISTENCY CLASSIFICATION FOR SOILS

According to the Standard Penetration Test

SPT N-Value (Blows/0.3 m)	Granular	SPT N-Value (Blows/0.3 m)	Cohesive
0-4	Very Loose	<2	Very Soft
5-10	Loose	2-4	Soft
11-30	Medium Dense	5-8	Firm
31-50	Dense	9-15	Stiff
>50	Very Dense	16-30	Very stiff
		>30	Hard

NOTE: Classification of earth material as shown on this sheet is based upon field inspection and is not to be construed to imply mechanical analysis.

FOR PLAN VIEW, SEE "LOG OF TEST BORINGS" 1 OF 7

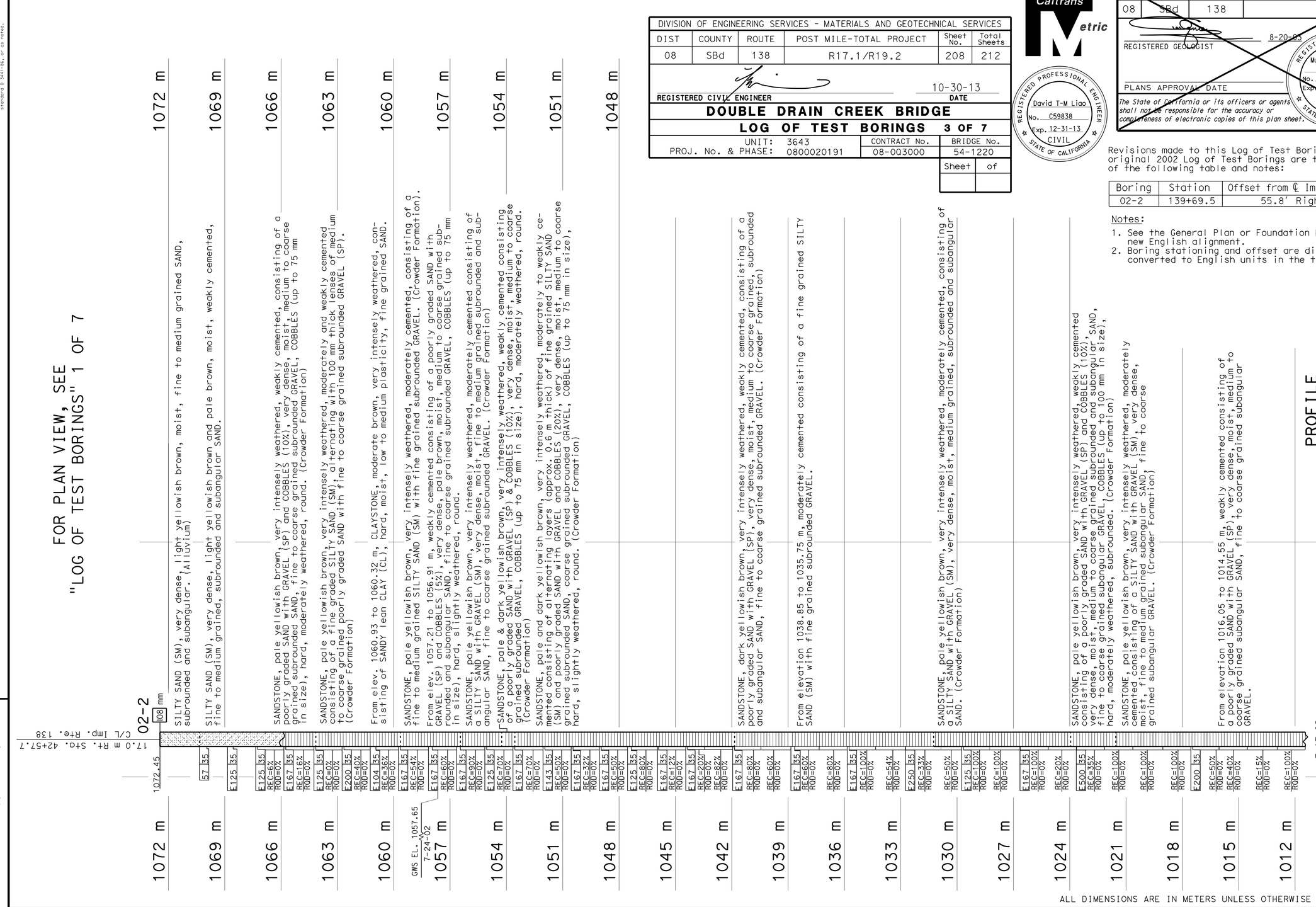

SILTY SAND (SM), very dense, light yellowish brown, moist, fine to medium grained SAND, subrounded and subangular. (Alluvium)

SILTY SAND (SM), very dense, light yellowish brown and pale brown, moist, weakly cemented, fine to medium grained, subrounded and subangular SAND.

SANDSTONE, pale yellowish brown, very intensely weathered, weakly cemented, consisting of a poorly graded SAND with GRAVEL (SP) and COBBLES (10%), very dense, moist, medium to coarse grained subrounded SAND, fine to coarse grained subrounded GRAVEL, COBBLES (up to 75 mm in size), hard, moderately weathered, round. (Crowder Formation)

SANDSTONE, pale yellowish brown, very intensely weathered, moderately and weakly cemented consisting of a fine graded SILTY SAND (SM), alternating with 100 mm thick lenses of medium to coarse grained poorly graded SAND with fine to coarse grained subrounded GRAVEL (SP). (Crowder Formation)

From elev. 1060.93 to 1060.32 m, CLAYSTONE, moderate brown, very intensely weathered, consisting of SANDY lean CLAY (CL), hard, moist, low to medium plasticity, fine grained SAND.

SANDSTONE, pale yellowish brown, very intensely weathered, moderately cemented, consisting of a fine to medium grained SILTY SAND (SM) with fine grained subrounded GRAVEL. (Crowder Formation).

From elev. 1057.21 to 1056.91 m, weakly cemented consisting of a poorly graded SAND with GRAVEL (SP) and COBBLES (5%), very dense, pale brown, moist, medium to coarse grained rounded and subangular SAND, fine to coarse grained subrounded GRAVEL, COBBLES (up to 75 mm in size), hard, slightly weathered, round.

SANDSTONE, pale yellowish brown, very intensely weathered, moderately cemented consisting of a SILTY SAND with GRAVEL (SM), very dense, moist, fine to medium grained subrounded and subangular SAND, fine to coarse grained subrounded GRAVEL. (Crowder Formation)

SANDSTONE, pale & dark yellowish brown, very intensely weathered, weakly cemented consisting of a poorly graded SAND with GRAVEL (SP) & COBBLES (10%), very dense, moist, medium to coarse grained subrounded GRAVEL, COBBLES (up to 75 mm in size), hard, moderately weathered, round. (Crowder Formation)

SANDSTONE, pale and dark yellowish brown, very intensely weathered, moderately to weakly cemented consisting of alternating layers (approx. 0.6 m thick) of fine grained SILTY SAND (SM) and poorly graded SAND with GRAVEL and COBBLES (20%), very dense, moist, medium to coarse grained subrounded SAND, coarse grained subrounded GRAVEL, COBBLES (up to 75 mm in size), hard, slightly weathered, round. (Crowder Formation)

SANDSTONE, dark yellowish brown, very intensely weathered, weakly cemented, consisting of a poorly graded SAND with GRAVEL (SP), very dense, moist, medium to coarse grained, subrounded and subangular SAND, fine to coarse grained subrounded GRAVEL. (Crowder Formation)

From elevation 1038.85 to 1035.75 m, moderately cemented consisting of a fine grained SILTY SAND (SM) with fine grained subrounded GRAVEL.

SANDSTONE, pale yellowish brown, very intensely weathered, moderately cemented, consisting of a SILTY SAND with GRAVEL (SM), very dense, moist, medium grained, subrounded and subangular SAND. (Crowder Formation)

SANDSTONE, pale yellowish brown, very intensely weathered, weakly cemented consisting of a poorly graded SAND with GRAVEL (SP) and COBBLES (10%), very dense, moist, medium to coarse grained subrounded and subangular SAND, fine to coarse grained subangular GRAVEL, COBBLES (up to 100 mm in size), hard, moderately weathered, subrounded. (Crowder Formation)

SANDSTONE, pale yellowish brown, very intensely weathered, moderately cemented consisting of a SILTY SAND with GRAVEL (SM) very dense, moist, fine to medium grained subangular SAND, fine to coarse grained subangular GRAVEL. (Crowder Formation)

From elevation 1016.05 to 1014.55 m, weakly cemented consisting of a poorly graded SAND with GRAVEL (SP), very dense, moist, medium to coarse grained subangular SAND, fine to coarse grained subangular GRAVEL.

ALL DIMENSIONS ARE IN METERS UNLESS OTHERWISE SHOWN

ENGINEERING SERVICES	GEOTECHNICAL SERVICES
DRAWN BY	Irma G-Remmen 1/03
CHECKED BY	J. Martin

FIELD INVESTIGATION BY: J. Martin

STATE OF CALIFORNIA DEPARTMENT OF TRANSPORTATION

DIVISION OF STRUCTURES STRUCTURE DESIGN

CU 08 EA 437001

BRIDGE NO. 54-1220 KILOMETER POST 28.6

DOUBLE DRAIN CREEK BRIDGE
LOG OF TEST BORINGS 3 OF 7

DISREGARD PRINTS BEARING EARLIER REVISION DATES 2-25-03 4-11-03 4-30-03 8-20-03

SHEET 25 OF 29

OGS GEOLOGIST LOG OF TEST BORINGS SHEET (METRIC) (REV. 3/02)

ORIGINAL SCALE IN MILLIMETERS FOR REDUCED PLANS 0 10 20 30 40 50 60 70 80 90 100

FILE => 54-1220-z-ltb_3.dgn

USERNAME => s102458 DATE PLOTTED => 16-NOV-2015 TIME PLOTTED => 10:19

DIVISION OF ENGINEERING SERVICES - MATERIALS AND GEOTECHNICAL SERVICES					
DIST	COUNTY	ROUTE	POST MILE-TOTAL PROJECT	Sheet No.	Total Sheets
08	SBd	138	R17.1/R19.2	209	212

REGISTERED CIVIL ENGINEER — DATE: 10-30-13

DOUBLE DRAIN CREEK BRIDGE

LOG OF TEST BORINGS 4 OF 7

UNIT: 3643	CONTRACT No.	BRIDGE No.
PROJ. No. & PHASE: 0800020191	08-003000	54-1220
	Sheet	of

Caltrans Metric

REGISTERED PROFESSIONAL ENGINEER — David T-M Liao — No. C59838 — Exp. 12-31-13 — CIVIL — STATE OF CALIFORNIA

DIST	COUNTY	ROUTE	KILOMETER POST TOTAL PROJECT	SHEET No	TOTAL SHEETS
08	SBd	138			

REGISTERED GEOLOGIST — 8-20-03

PLANS APPROVAL DATE

REGISTERED GEOLOGIST — Muhammad Gabr Ali Lugman — No. 7297 — Exp. 5-31-04 — STATE OF CALIFORNIA

The State of California or its officers or agents shall not be responsible for the accuracy or completeness of electronic copies of this plan sheet.

Revisions made to this Log of Test Borings from the original 2002 Log of Test Borings are the addition of the following table and notes:

Boring	Station	Offset from ℄ Imp. Rte 138
02-3	140+81.4	14.8′ Right

Notes:

1. See the General Plan or Foundation Plan for new English alignment.
2. Boring stationing and offset are directly converted to English units in the table above.

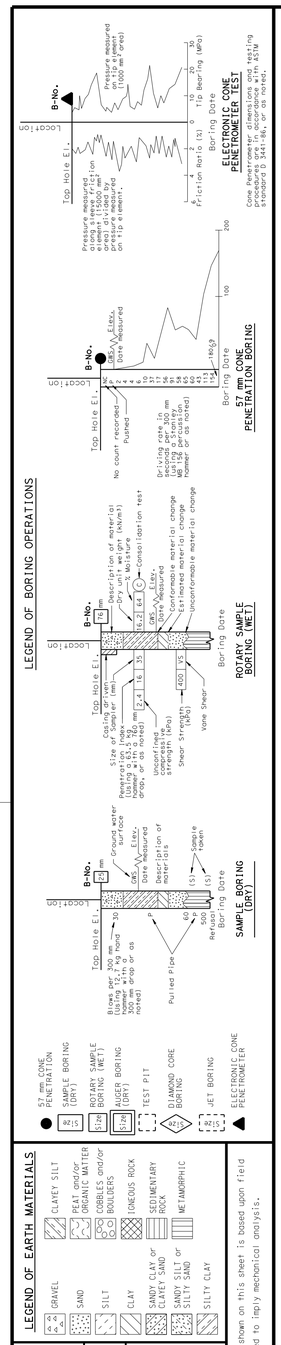

FOR PLAN VIEW, SEE "LOG OF TEST BORINGS" 1 OF 7

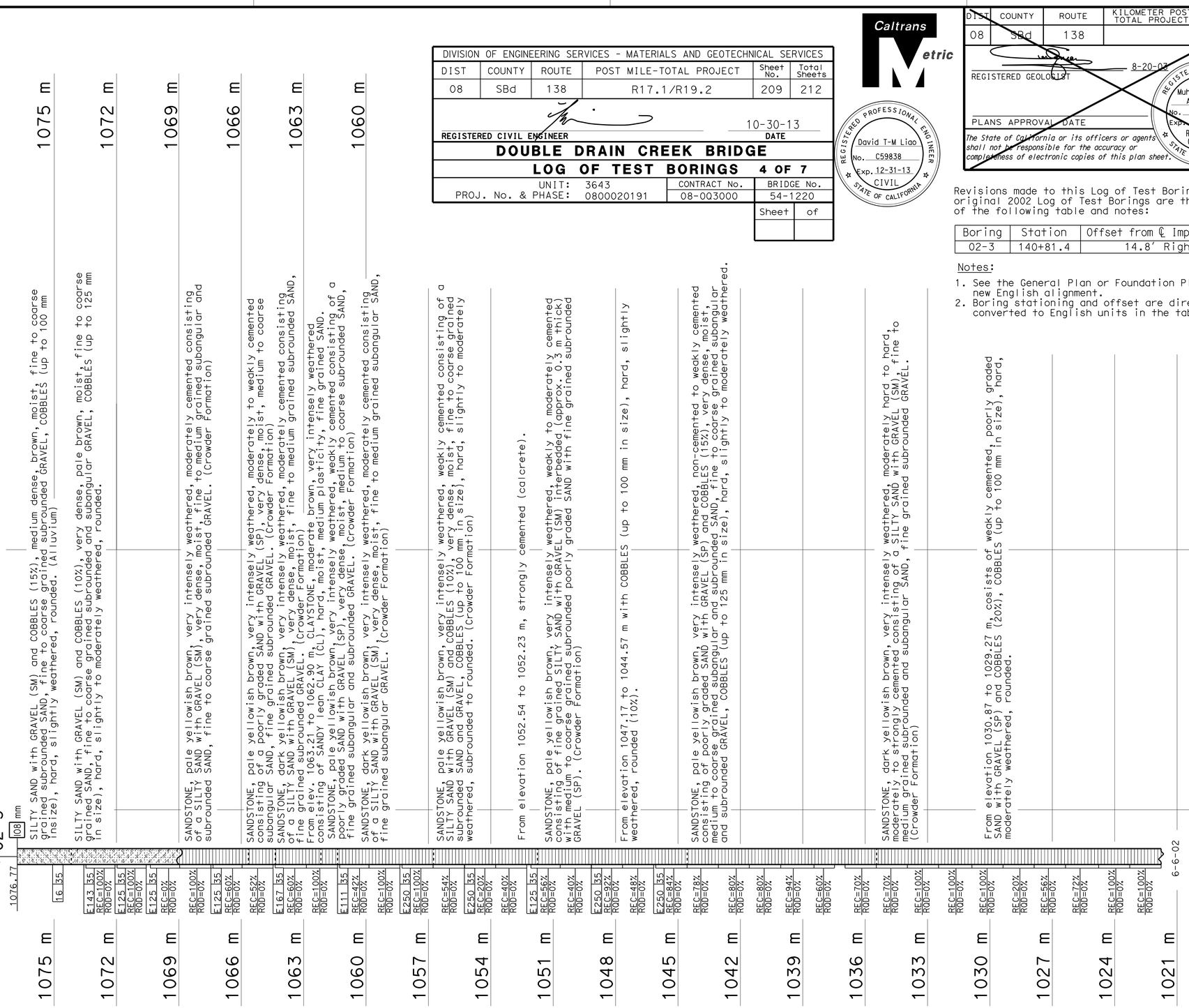

ALL DIMENSIONS ARE IN METERS UNLESS OTHERWISE SHOWN

ENGINEERING SERVICES	GEOTECHNICAL SERVICES
DRAWN BY: Irma G-Remmen 1/03	
CHECKED BY: J. Martin	

FIELD INVESTIGATION BY: J. Martin

STATE OF CALIFORNIA DEPARTMENT OF TRANSPORTATION

DIVISION OF STRUCTURES — STRUCTURE DESIGN

CU 08
EA 437001

BRIDGE NO. 54-1220
KILOMETER POST 28.6

DOUBLE DRAIN CREEK BRIDGE

LOG OF TEST BORINGS 4 OF 7

ORIGINAL SCALE IN MILLIMETERS FOR REDUCED PLANS 0 10 20 30 40 50 60 70 80 90 100

DISREGARD PRINTS BEARING EARLIER REVISION DATES

REVISION DATES (PRELIMINARY STAGE ONLY): 7-25-03 4-30-03 8-20-03

SHEET 26 OF 29

OGS GEOLOGIST LOG OF TEST BORINGS SHEET (METRIC) (REV. 3/02)

FILE => 54-1220-z-1tb_4.dgn

USERNAME => s102458 DATE PLOTTED => 16-NOV-2015 TIME PLOTTED => 10:19

DIVISION OF ENGINEERING SERVICES - MATERIALS AND GEOTECHNICAL SERVICES					
DIST	COUNTY	ROUTE	POST MILE-TOTAL PROJECT	Sheet No.	Total Sheets
08	SBd	138	R17.1/R19.2	210	212

REGISTERED CIVIL ENGINEER — DATE: 10-30-13

DOUBLE DRAIN CREEK BRIDGE

LOG OF TEST BORINGS 5 OF 7

UNIT: 3643	CONTRACT No.	BRIDGE No.
PROJ. No. & PHASE: 0800020191	08-0Q3000	54-1220
	Sheet	of

Caltrans Metric

REGISTERED PROFESSIONAL ENGINEER — David T-M Liao — No. C59838 — Exp. 12-31-13 — CIVIL — STATE OF CALIFORNIA

DIST	COUNTY	ROUTE	KILOMETER POST TOTAL PROJECT	SHEET No	TOTAL SHEETS
08	SBd	138			

REGISTERED GEOLOGIST — 8-20-03

PLANS APPROVAL DATE

REGISTERED GEOLOGIST — Muhammad Gabr Ali Luqman — No. 7297 — Exp. 5-31-04 — STATE OF CALIFORNIA

The State of California or its officers or agents shall not be responsible for the accuracy or completeness of electronic copies of this plan sheet.

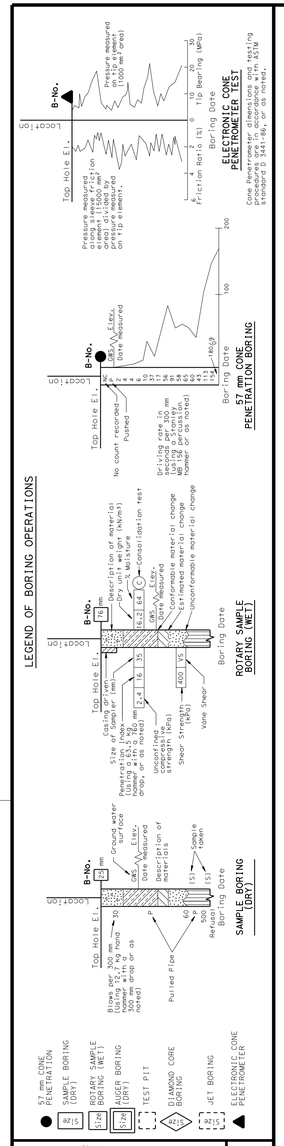

FOR PLAN VIEW, SEE "LOG OF TEST BORINGS" 1 OF 7

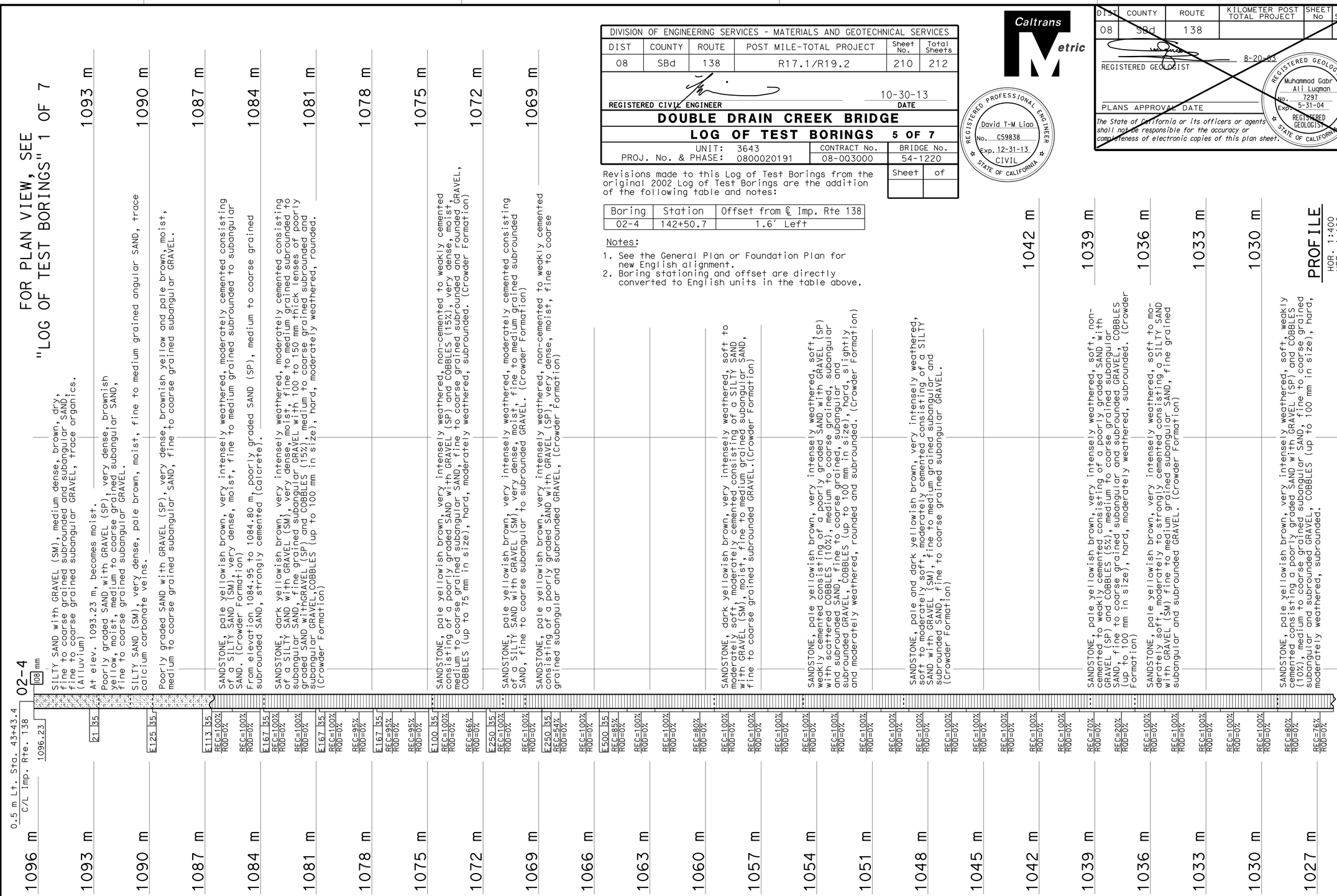

Boring	Station	Offset from ℄ Imp. Rte 138
02-4	142+50.7	1.6′ Left

Notes:

1. See the General Plan or Foundation Plan for new English alignment.
2. Boring stationing and offset are directly converted to English units in the table above.

ALL DIMENSIONS ARE IN METERS UNLESS OTHERWISE SHOWN

CONSISTENCY CLASSIFICATION FOR SOILS

According to the Standard Penetration Test

SPT N-Value (Blows/ 0.3m)	Granular	SPT N-Value (Blows/ 0.3 m)	Cohesive
0-4	Very Loose	<2	Very Soft
5-10	Loose	2-4	Soft
11-30	Medium Dense	5-8	Firm
31-50	Dense	9-15	Stiff
>50	Very Dense	16-30	Very stiff
		>30	Hard

LEGEND OF EARTH MATERIALS

GRAVEL, SAND, SILT, CLAY, CLAYEY SILT, PEAT and/or ORGANIC MATTER, COBBLES and/or BOULDERS, CONCRETE ROCK, SEDIMENTARY ROCK, METAMORPHIC ROCK, SANDY CLAY or CLAYEY SAND, SANDY SILT or SILTY SAND, SILTY CLAY

NOTE: Classification of earth material as shown on this sheet is based upon field inspection and is not to be construed to imply mechanical analysis.

ENGINEERING SERVICES	GEOTECHNICAL SERVICES
DRAWN BY: Irma G-Remmen 1/03	FIELD INVESTIGATION BY: J. Martin
CHECKED BY: J. Martin	

STATE OF CALIFORNIA — DEPARTMENT OF TRANSPORTATION

DIVISION OF STRUCTURES — STRUCTURE DESIGN

CU 08 EA 437001

BRIDGE NO. 54-1220 — KILOMETER POST 28.6

DOUBLE DRAIN CREEK BRIDGE

LOG OF TEST BORINGS 5 OF 7

DISREGARD PRINTS BEARING EARLIER REVISION DATES — REVISION DATES (PRELIMINARY STAGE ONLY): 7-25-03, 8-20-03

SHEET 27 OF 29

OGS GEOLOGIST LOG OF TEST BORINGS SHEET (METRIC) (REV. 3/02)

ORIGINAL SCALE IN MILLIMETERS FOR REDUCED PLANS 0 10 20 30 40 50 60 70 80 90 100

FILE => 54-1220-z-1tb_5.dgn

USERNAME => s102458 DATE PLOTTED => 16-NOV-2015 TIME PLOTTED => 10:13

DIST	COUNTY	ROUTE	KILOMETER POST TOTAL PROJECT	SHEET No	TOTAL SHEETS
08	SBd	138			

REGISTERED GEOLOGIST 8-20-03

PLANS APPROVAL DATE

The State of California or its officers or agents shall not be responsible for the accuracy or completeness of electronic copies of this plan sheet.

REGISTERED GEOLOGIST Muhammad Gabr Ali Lugman No. 7297 Exp. 5-31-04 STATE OF CALIFORNIA

Caltrans Metric

DIVISION OF ENGINEERING SERVICES - MATERIALS AND GEOTECHNICAL SERVICES					
DIST	COUNTY	ROUTE	POST MILE-TOTAL PROJECT	Sheet No.	Total Sheets
08	SBd	138	R17.1/R19.2	211	212

REGISTERED CIVIL ENGINEER 10-30-13 DATE

REGISTERED PROFESSIONAL ENGINEER David T-M Liao No. C59838 Exp. 12-31-13 CIVIL STATE OF CALIFORNIA

DOUBLE DRAIN CREEK BRIDGE

LOG OF TEST BORINGS 6 OF 7

UNIT: 3643	CONTRACT No.	BRIDGE No.
PROJ. No. & PHASE: 0800020191	08-003000	54-1220
	Sheet	of

Revisions made to this Log of Test Borings from the original 2002 Log of Test Borings are the addition of the following table and notes:

Boring	Station	Offset from ℄ Imp. Rte 138
02-5	143+44.2	28.2' Right

Notes:

1. See the General Plan or Foundation Plan for new English alignment.
2. Boring stationing and offset are directly converted to English units in the table above.

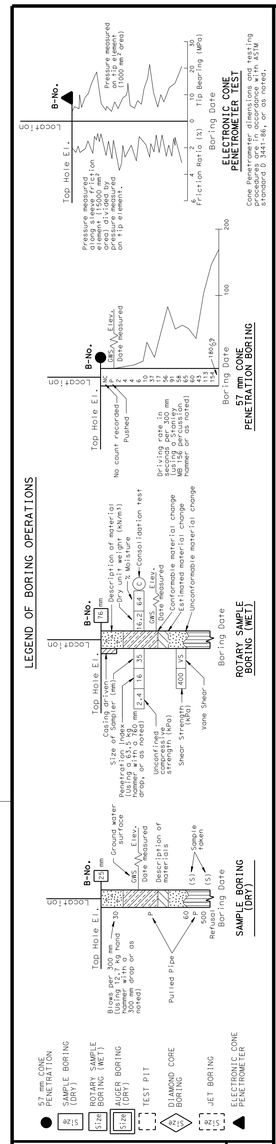

FOR PLAN VIEW, SEE "LOG OF TEST BORINGS" 1 OF 7

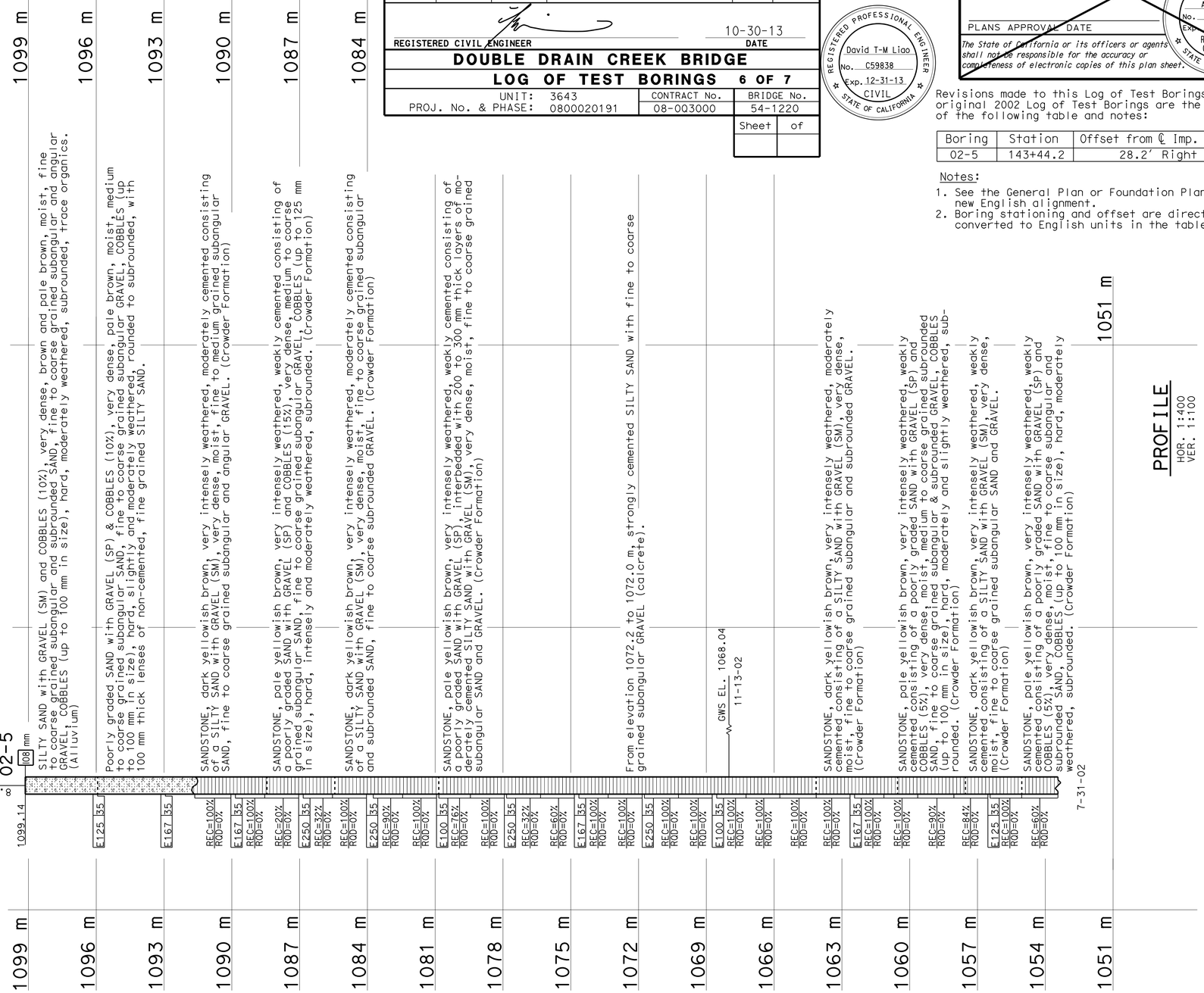

ALL DIMENSIONS ARE IN METERS UNLESS OTHERWISE SHOWN

ENGINEERING SERVICES	GEOTECHNICAL SERVICES
DRAWN BY	Irma G-Remmen 1/03
CHECKED BY	J. Martin

FIELD INVESTIGATION BY: J. Martin

STATE OF CALIFORNIA DEPARTMENT OF TRANSPORTATION

DIVISION OF STRUCTURES STRUCTURE DESIGN

CU 08 EA 437001

BRIDGE NO. 54-1220 KILOMETER POST 28.6

DOUBLE DRAIN CREEK BRIDGE

LOG OF TEST BORINGS 6 OF 7

ORIGINAL SCALE IN MILLIMETERS FOR REDUCED PLANS 0 10 20 30 40 50 60 70 80 90 100

DISREGARD PRINTS BEARING EARLIER REVISION DATES

REVISION DATES (PRELIMINARY STAGE ONLY) 2-25-03 04-11-03 4-30-03 8-20-03

SHEET 28 OF 29

OGS GEOLOGIST LOG OF TEST BORINGS SHEET (METRIC) (REV. 3/02)

FILE => 54-1220-z-lltb_6.dgn

USERNAME => s102458 DATE PLOTTED => 16-NOV-2015 TIME PLOTTED => 10:19

DIVISION OF ENGINEERING SERVICES - MATERIALS AND GEOTECHNICAL SERVICES					
DIST	COUNTY	ROUTE	POST MILE-TOTAL PROJECT	Sheet No.	Total Sheets
08	SBd	138	R17.1/R19.2	212	212

REGISTERED CIVIL ENGINEER — DATE 10-30-13

DOUBLE DRAIN CREEK BRIDGE

LOG OF TEST BORINGS 7 OF 7

UNIT: 3643	CONTRACT No.	BRIDGE No.
PROJ. No. & PHASE: 0800020191	08-0Q3000	54-1220
		Sheet of

Caltrans Metric

REGISTERED PROFESSIONAL ENGINEER — David T-M Liao — No. C59838 — Exp. 12-31-13 — CIVIL — STATE OF CALIFORNIA

DIST	COUNTY	ROUTE	KILOMETER POST TOTAL PROJECT	SHEET No	TOTAL SHEETS
08	SBd	138			

REGISTERED CIVIL ENGINEER 8-20-03

PLANS APPROVAL DATE

REGISTERED GEOLOGIST — Muhammad Gabr Ali Luqman — No. 7297 — Exp. 5-31-04 — REGISTERED GEOLOGIST — STATE OF CALIFORNIA

The State of California or its officers or agents shall not be responsible for the accuracy or completeness of electronic copies of this plan sheet.

WEATHERING DESCRIPTORS

Modified from United States Bureau of Reclamation, Engineering Geology Field Manual.

Descriptors		Diagnostic features					General characteristics (strength, excavation, etc.)§
		Chemical weathering-Discoloration and/or oxidation		Mechanical weathering-Grain boundary conditions (disaggregation) primarily for granitics and some coarse-grained sediments	Texture and solutioning		
Alphanumeric descriptor	Descriptive term	Body of rock	Fracture surfaces†		Texture	Solutioning	
W1	Fresh	No discoloration, not oxidized.	No discoloration or oxidation.	No separation, intact (tight).	No change.	No solutioning.	Hammer rings when crystalline rocks are struck. Almost always rock excavation except for naturally weak or weakly cemented rocks such as siltstones or shales.
W2	Slightly weathered to fresh○						
W3	Slightly weathered	Discoloration or oxidation is limited to surface of, or short distance from, fractures; some feldspar crystals are dull.	Minor to complete discoloration or oxidation of most surfaces.	No visible separation, intact (tight).	Preserved.	Minor leaching of some soluble minerals may be noted.	Hammer rings when crystalline rocks are struck. Body of rock not weakened. With few exceptions, such as siltstones or shales, classified as rock excavation.
W4	Moderately to slightly weathered○						
W5	Moderately weathered	Discoloration or oxidation extends from fractures usually throughout; Fe-Mg minerals are "rusty," feldspar crystals are "cloudy."	All fracture surfaces are discolored or oxidized.	Partial separation of boundaries visible.	Generally preserved.	Soluble minerals may be mostly leached.	Hammer does not ring when rock is struck. Body of rock is slightly weakened. Depending on fracturing,usually is rock excavation except in naturally weak rocks such as siltstones or shales.
W6	Intensely to moderately weathered○						
W7	Intensely weathered	Discoloration or oxidation throughout; all feldspars and Fe-Mg minerals are altered to clay to some extent; or chemical alteration produces in-situ disaggregation, see grain boundary conditions.	All fracture surfaces are discolored or oxidized, surfaces friable.	Partial separation, rock is friable; in semiarid conditions granitics are disaggregated.	Texture altered by chemical disintegration (hydration, argillation).	Leaching of soluble minerals may be complete.	Dull sound when struck with hammer, usually can be broken with moderate to heavy manual pressure or by light hammer blow without reference to planes of weakness such as incipient or hairline fractures, or veinlets. Rock is significantly weakened. Usually common excavation.
W8	Very intensely weathered						
W9	Decomposed	Discolored or oxidized throughout, but resistant minerals such as quartz may be unaltered; all feldspars and Fe-Mg minerals are completely altered to clay.		Complete separation of grain boundaries (disaggregated).	Resembles a soil, partial or complete remnant rock structure may be preserved; leaching of soluble minerals usually complete.		Can be granulated by hand. Always common excavation. Resistant minerals such as quartz may be present as "stringers" or "dikes."

Note: This chart and its horizontal categories are more readily applied to rocks with feldspars and mafic minerals. Weathering in various sedimentary rocks, particularly limestones and poorly indurated sediments, will not always fit the categories established. This chart and weathering categories may have to be modified for particular site conditions or alteration such as hydrothermal effects; however, the basic framework and similar descriptors are to be used.

○ Combination descriptors are permissible where equal distribution of both weathering characteristics are present over significant intervals or where characteristics present are "in between" the diagnostic feature. However, dual descriptors should not be used where significant, identifiable zones can be delineated. When given as a range only two adjacent terms may be combined. "Decomposed to slightly weathered," or "moderately weathered to fresh" are not acceptable.

† Does not include directional weathering along shears or faults and their associated features. For example, a shear zone that carried weathering to great depths into a fresh rock mass would not require the rock mass to be classified as weathered.

§ These are generalizations and should not be used as diagnostic features for weathering or excavation classification. These characteristics vary to a large extent based on naturally weak materials or cementation and type of excavation.

ROCK QUALITY DESIGNATION (RQD) & PERCENT RECOVERY (REC) LOGGING

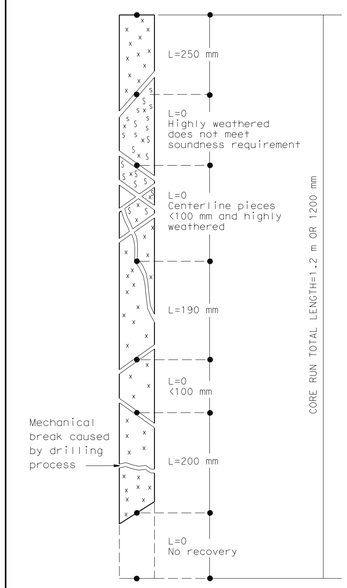

RQD (ROCK QUALITY DESIGNATION)	DESCRIPTION OF ROCK QUALITY
0 - 25%	VERY POOR
25 - 50%	POOR
50 - 75%	FAIR
75 - 90%	GOOD
90 - 100%	EXCELLENT

REC = Percent Core Recovery

$$REC = \frac{\sum \text{Length of all core pieces}}{\text{Total core run length}}$$

$$RQD = \frac{\sum \text{Length of sound core pieces} \geq 100 \text{ mm}}{\text{Total core run length}}$$

$$RQD = \frac{250+190+200}{1200} \times 100\%$$

RQD = 53% (fair)

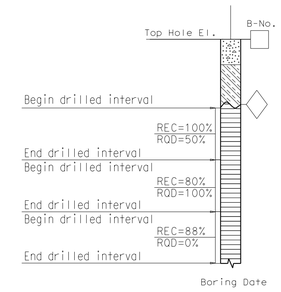

(No Scale)
After Deere & Deere, 1989

FRACTURE DENSITY

Modified from United States Bureau of Reclamation, Engineering Geology Field Manual.

FRACTURE DENSITY- Based on the spacing of all natural fractures in an exposure or core recovery lengths in boreholes; excludes mechanical breaks, shears, and shear zones; however, shear-disturbed zones (fracturing outside the shear) are included. Descriptors for fracture density apply to all rock exposures such as tunnel walls, dozer trenches, outcrops, or foundation cut slopes and inverts, as well as boreholes. Descriptive criteria presented below are based on borehole cores where lengths are measured along the core axis, for other exposures the criteria is distance measured between fractures (size of blocks).

UNFRACTURED (FD0): No fractures.

VERY SLIGHTLY FRACTURED (FD1): Core recovered mostly in lengths greater than 1 m.

SLIGHTLY TO VERY SLIGHTLY FRACTURED (FD2)*

SLIGHTLY FRACTURED (FD3): Core recovered mostly in lengths from 300 to 1000 mm, with few scattered lengths less than 300 mm or greater than 1000 mm.

MODERATELY TO SLIGHTLY FRACTURED (FD4)*

MODERATELY FRACTURED (FD5): Core recovered mostly in 100 to 300 mm lengths with most lengths about 200 mm.

INTENSELY TO MODERATELY FRACTURED (FD6)*

INTENSELY FRACTURED (FD7): Lengths average from 30 to 100 mm with scattered fragmented intervals. Core recovered mostly in lengths less than 100 mm.

VERY INTENSELY TO INTENSELY FRACTURED (FD8)*

VERY INTENSELY FRACTURED (FD9): Core recovered mostly as chips and fragments with a few scattered short core lengths.

* Combinations of fracture densities (e.g. very intensely to intensely fractured, or moderately to slightly fractured) are used where equal distribution of both fracture density characteristics are present over a significant interval or exposure, or where characteristics are "in between" the descriptor definitions.

ROCK HARDNESS DESCRIPTORS

Alphanumeric Descriptor	Descriptor	Criteria
H1	Extremely hard	Core, fragment, or exposure cannot be scratched with knife or sharp pick; can only be chipped with repeated heavy hammer blows.
H2	Very hard	Cannot be scratched with knife of sharp pick. Core or fragment breaks with repeated heavy hammer blows.
H3	Hard	Can be scratched with knife or sharp pick with difficulty (heavy pressure). Heavy hammer blow required to break specimen.
H4	Moderately hard	Can be scratched with knife or sharp pick with light or moderate pressure. Core or fragment breaks with moderate hammer blow.
H5	Moderately soft	Can be grooved 2 mm deep by knife or sharp pick with moderate or heavy pressure. Core or fragment breaks with light hammer blow or heavy manual pressure.
H6	Soft	Can be grooved or gouged easily by knife or sharp pick with light pressure, can be scratched with fingernail. Breaks with light to moderate manual pressure.
H7	Very soft	Can be readily indented, grooved or gouged with fingernail, or carved with a knife. Breaks with light manual pressure.

Any bedrock unit softer than H7, very soft, is to be described using ASTM D-2488 consistency descriptors.

Note: Although "sharp pick" is included in these definitions, descriptions of ability to be scratched, grooved or gouged by a knife is the preferred criteria.

Modified from United States Bureau of Reclamation, Engineering Geology Field Manual.

BEDDING, FOLIATION, OR FLOW TEXTURE DESCRIPTORS

Descriptors	Thickness / Spacing
Massive	Greater than 3 m
Very thickly (bedded, foliated, or banded)	1 to 3 m
Thickly	300 mm to 1 m
Moderately	100 to 300 mm
Thinly	30 to 100 mm
Very thinly	10 to 30 mm
Laminated (intensely foliated or banded)	Less than 10 mm

Modified from United States Bureau of Reclamation, Engineering Geology Field Manual.

ENGINEERING SERVICE CENTER	GEOTECHNICAL SERVICES
DRAWN BY	I.G-Remmen 1/03
CHECKED BY	J. Martin

STATE OF CALIFORNIA DEPARTMENT OF TRANSPORTATION

DIVISION OF STRUCTURES STRUCTURE DESIGN

BRIDGE NO. 54-1220 — KILOMETER POST 28.6

DOUBLE DRAIN CREEK BRIDGE

LOG OF TEST BORINGS 7 OF 7

OSF GEOLOGIST LOG OF TEST BORINGS SHEET (METRIC) (REV. 10/5/2000)

ORIGINAL SCALE IN MILLIMETERS FOR REDUCED PLANS 0 10 20 30 40 50 60 70 80 90 100

CU 08 EA 437001

DISREGARD PRINTS BEARING EARLIER REVISION DATES

REVISION DATES (PRELIMINARY STAGE ONLY) 2-25-03 4-30-03 8-20-03

SHEET 29 OF 29

FILE => 54-1220-z-ltb_7.dgn

USERNAME => s102458 DATE PLOTTED => 16-NOV-2015 TIME PLOTTED => 10:13