Dist	COUNTY	ROUTE	POST MILES TOTAL PROJECT	SHEET No.	TOTAL SHEETS
08	SBd	395	16.2	1	28

STATE OF CALIFORNIA

DEPARTMENT OF TRANSPORTATION

PROJECT PLANS FOR CONSTRUCTION ON

STATE HIGHWAY

IN SAN BERNARDINO COUNTY
IN ADELANTO
AT THE INTERSECTION OF ROUTE 395
AND BARTLETT AVENUE

TO BE SUPPLEMENTED BY STANDARD PLANS DATED MAY 2010

INDEX OF PLANS

SHEET No.	DESCRIPTION
1	TITLE AND LOCATION MAP
2	TYPICAL CROSS SECTION
3	LAYOUT
4	CONSTRUCTION DETAILS
5-7	DRAINAGE PLANS
8	CONSTRUCTION AREA SIGNS
9	PAVEMENT DELINEATION PLANS
10	PAVEMENT DELINEATION QUANTITIES
11	SIGN QUANTITIES
12	SUMMARY OF QUANTITIES
13-20	ELECTRICAL PLANS
21-28	NEW & REVISED STANDARD PLANS

THE STANDARD PLANS LIST APPLICABLE TO THIS CONTRACT IS INCLUDED IN THE NOTICE TO CONTRACTORS AND SPECIAL PROVISIONS BOOK

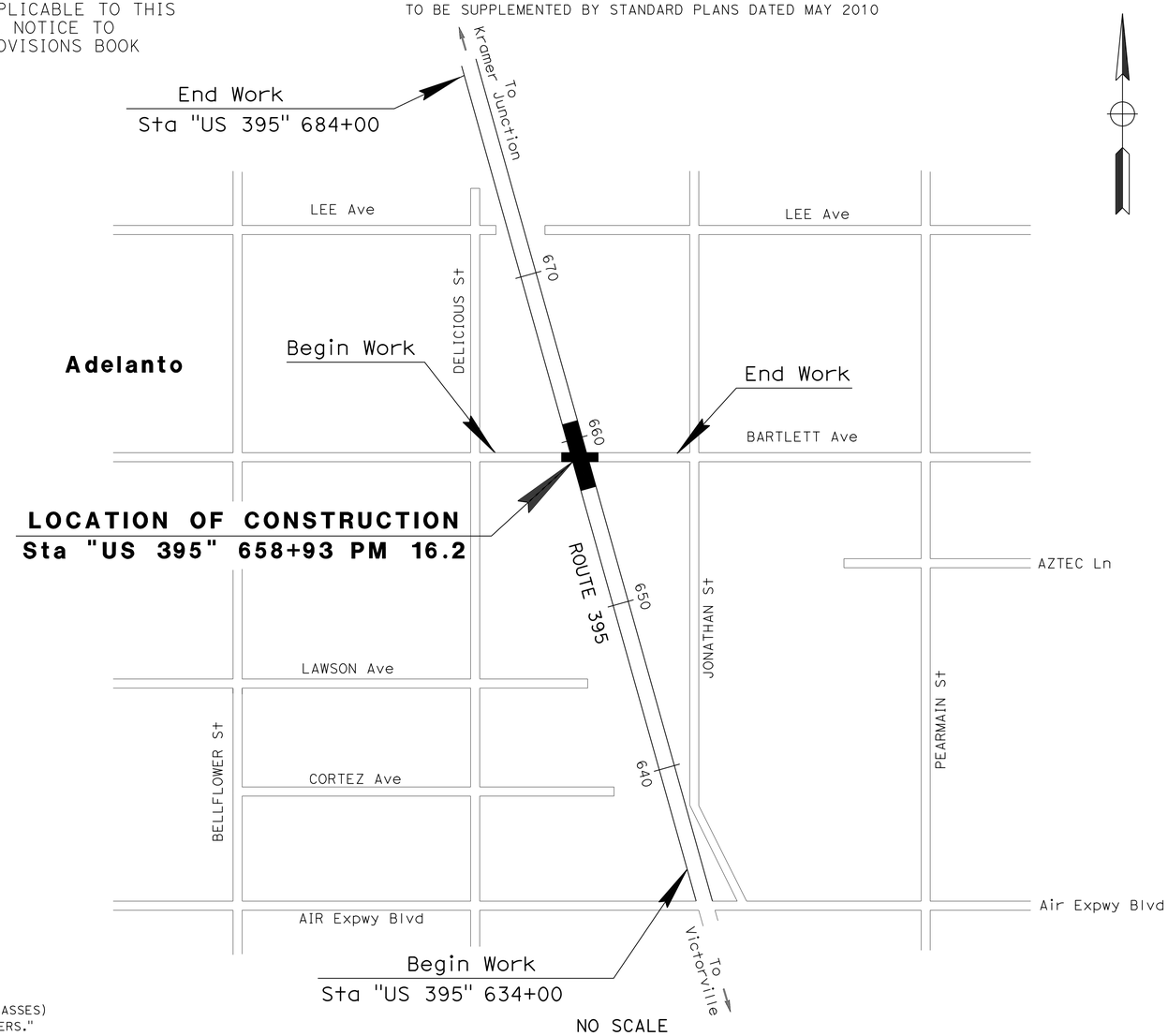

NO SCALE

A Habib 11-12-13
PROJECT ENGINEER DATE
REGISTERED CIVIL ENGINEER

November 12, 2013
PLANS APPROVAL DATE

REGISTERED PROFESSIONAL ENGINEER
AYSHA HABIB
No. C79619
Exp. 9-30-2014
CIVIL
STATE OF CALIFORNIA

THE STATE OF CALIFORNIA OR ITS OFFICERS OR AGENTS SHALL NOT BE RESPONSIBLE FOR THE ACCURACY OR COMPLETENESS OF SCANNED COPIES OF THIS PLAN SHEET.

CONTRACT No.	08-0P3104
PROJECT ID	0800001017

LAST REVISION 11-12-13
DATE PLOTTED => 18-NOV-2013
TIME PLOTTED => 09:51

PROJECT MANAGER CHARLES CHEN
DESIGN ENGINEER AYSHA HABIB

THE CONTRACTOR SHALL POSSESS THE CLASS (OR CLASSES) OF LICENSE AS SPECIFIED IN THE "NOTICE TO BIDDERS."

Dist	COUNTY	ROUTE	POST MILES TOTAL PROJECT	SHEET No.	TOTAL SHEETS
08	SBd	395	16.2	2	28

A Habib 11-12-13
REGISTERED CIVIL ENGINEER DATE

11-12-13
PLANS APPROVAL DATE

REGISTERED PROFESSIONAL ENGINEER AYSHA HABIB No. C79619 Exp. 9-30-2014 CIVIL STATE OF CALIFORNIA

THE STATE OF CALIFORNIA OR ITS OFFICERS OR AGENTS SHALL NOT BE RESPONSIBLE FOR THE ACCURACY OR COMPLETENESS OF SCANNED COPIES OF THIS PLAN SHEET.

LEGEND:

NEW AC & AB

DESIGN DESIGNATION (US 395)

AADT (2012)	3,100
AADT (2032)	5,400
DHV (2032)	374
T (2012)	5%
T (2032)	6%

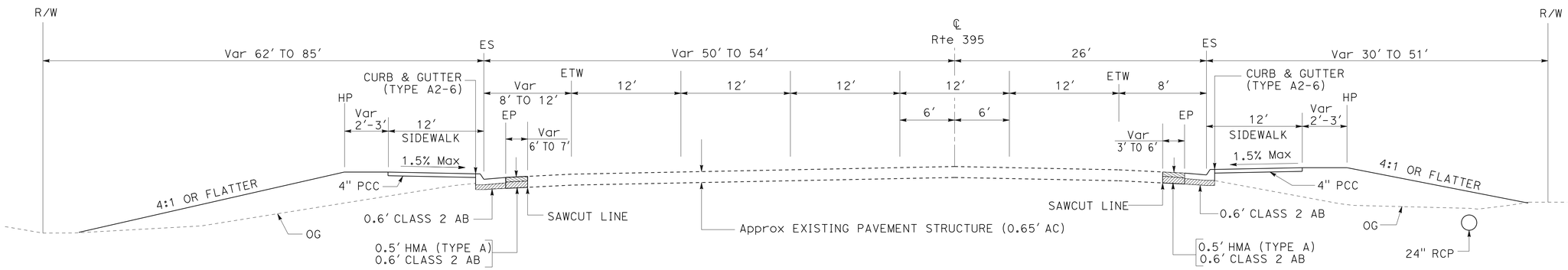

ROUTE 395
STA 657+37 TO STA 660+35

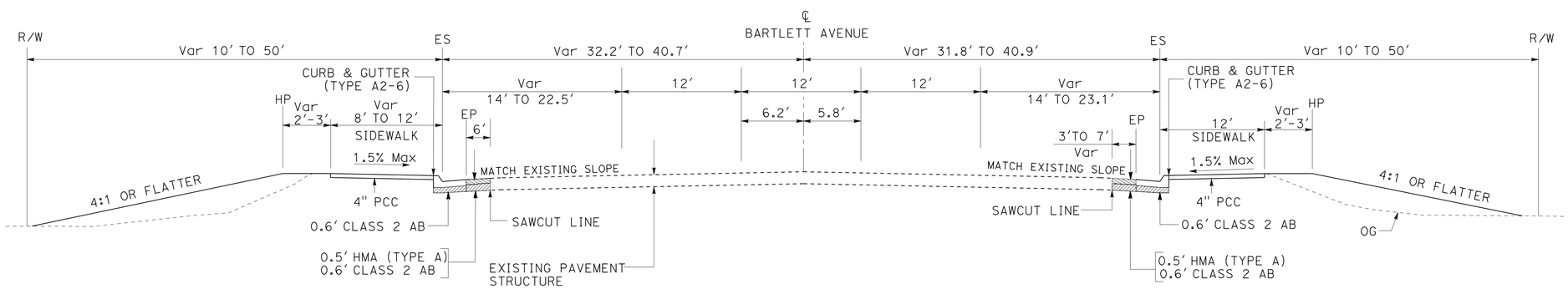

BARTLETT AVENUE
STA 14+65.00 TO STA 17+10.00

TYPICAL CROSS SECTION

NO SCALE **X-1**

STATE OF CALIFORNIA - DEPARTMENT OF TRANSPORTATION
Caltrans® OPERATIONS/SAFETY DESIGN

FUNCTIONAL SUPERVISOR: PATRICK HALLY
CALCULATED-DESIGNED BY: AYSHA HABIB
CHECKED BY: KENT NGUYEN
REVISED BY
DATE REVISED

LAST REVISION 11-12-13 DATE PLOTTED => 18-NOV-2013 TIME PLOTTED => 09:51

Dist	COUNTY	ROUTE	POST MILES TOTAL PROJECT	SHEET No.	TOTAL SHEETS
08	SBd	395	16.2	3	28

A Habib 11-12-13
REGISTERED CIVIL ENGINEER DATE

11-12-13
PLANS APPROVAL DATE

REGISTERED PROFESSIONAL ENGINEER AYSHA HABIB No. C79619 Exp. 9-30-14 CIVIL STATE OF CALIFORNIA

THE STATE OF CALIFORNIA OR ITS OFFICERS OR AGENTS SHALL NOT BE RESPONSIBLE FOR THE ACCURACY OR COMPLETENESS OF SCANNED COPIES OF THIS PLAN SHEET.

NOTES:

1. FOR ACCURATE RIGHT OF WAY ACCESS DATA, CONTACT RIGHT OF WAY ENGINEERING OFFICE AT THE DISTRICT OFFICE.
2. FOR CURB RAMP DETAILS, SEE SHEET C-1
3. FOR DRAINAGE DETAIL, SEE SHEET D-1

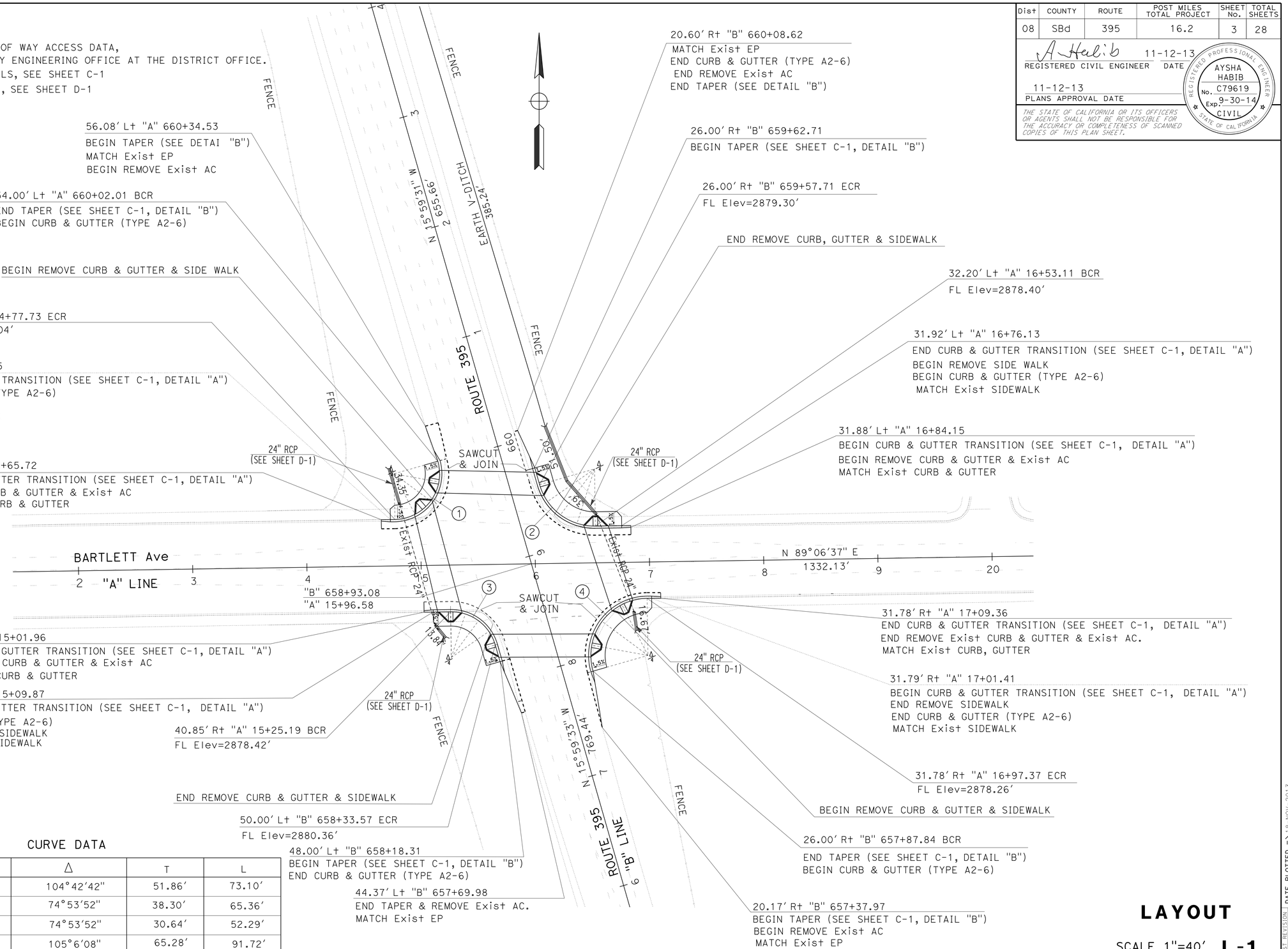

20.60' R+ "B" 660+08.62
MATCH Exist EP
END CURB & GUTTER (TYPE A2-6)
END REMOVE Exist AC
END TAPER (SEE DETAIL "B")

26.00' R+ "B" 659+62.71
BEGIN TAPER (SEE SHEET C-1, DETAIL "B")

26.00' R+ "B" 659+57.71 ECR
FL Elev=2879.30'

END REMOVE CURB, GUTTER & SIDEWALK

32.20' L+ "A" 16+53.11 BCR
FL Elev=2878.40'

31.92' L+ "A" 16+76.13
END CURB & GUTTER TRANSITION (SEE SHEET C-1, DETAIL "A")
BEGIN REMOVE SIDE WALK
BEGIN CURB & GUTTER (TYPE A2-6)
MATCH Exist SIDEWALK

31.88' L+ "A" 16+84.15
BEGIN CURB & GUTTER TRANSITION (SEE SHEET C-1, DETAIL "A")
BEGIN REMOVE CURB & GUTTER & Exist AC
MATCH Exist CURB & GUTTER

56.08' L+ "A" 660+34.53
BEGIN TAPER (SEE DETAI "B")
MATCH Exist EP
BEGIN REMOVE Exist AC

54.00' L+ "A" 660+02.01 BCR
END TAPER (SEE SHEET C-1, DETAIL "B")
BEGIN CURB & GUTTER (TYPE A2-6)

BEGIN REMOVE CURB & GUTTER & SIDE WALK

38.67' L+ "A" 14+77.73 ECR
FL Elev=2877.04'

40.67' L+ "A" 14+73.65
BEGIN CURB & GUTTER TRANSITION (SEE SHEET C-1, DETAIL "A")
END CURB & GUTTER (TYPE A2-6)
END REMOVE SIDEWALK
MATCH Exist SIDEWALK

40.67' L+ "A" 14+65.72
END CURB & GUTTER TRANSITION (SEE SHEET C-1, DETAIL "A")
END REMOVE CURB & GUTTER & Exist AC
MATCH Exist CURB & GUTTER

31.78' R+ "A" 17+09.36
END CURB & GUTTER TRANSITION (SEE SHEET C-1, DETAIL "A")
END REMOVE Exist CURB & GUTTER & Exist AC.
MATCH Exist CURB, GUTTER

40.84' L+ "A" 15+01.96
BEGIN CURB & GUTTER TRANSITION (SEE SHEET C-1, DETAIL "A")
BEGIN REMOVE CURB & GUTTER & Exist AC
MATCH Exist CURB & GUTTER

40.85' R+ "A" 15+09.87
END CURB & GUTTER TRANSITION (SEE SHEET C-1, DETAIL "A")
BEGIN CURB (TYPE A2-6)
BEGIN REMOVE SIDEWALK
MATCH Exist SIDEWALK

40.85' R+ "A" 15+25.19 BCR
FL Elev=2878.42'

31.79' R+ "A" 17+01.41
BEGIN CURB & GUTTER TRANSITION (SEE SHEET C-1, DETAIL "A")
END REMOVE SIDEWALK
END CURB & GUTTER (TYPE A2-6)
MATCH Exist SIDEWALK

31.78' R+ "A" 16+97.37 ECR
FL Elev=2878.26'

BEGIN REMOVE CURB & GUTTER & SIDEWALK

END REMOVE CURB & GUTTER & SIDEWALK

50.00' L+ "B" 658+33.57 ECR
FL Elev=2880.36'

26.00' R+ "B" 657+87.84 BCR
END TAPER (SEE SHEET C-1, DETAIL "B")
BEGIN CURB & GUTTER (TYPE A2-6)

48.00' L+ "B" 658+18.31
BEGIN TAPER (SEE SHEET C-1, DETAIL "B")
END CURB & GUTTER (TYPE A2-6)

44.37' L+ "B" 657+69.98
END TAPER & REMOVE Exist AC.
MATCH Exist EP

20.17' R+ "B" 657+37.97
BEGIN TAPER (SEE SHEET C-1, DETAIL "B")
BEGIN REMOVE Exist AC
MATCH Exist EP

CURVE DATA

No. (#)	R	Δ	T	L
1	40'	104°42'42"	51.86'	73.10'
2	50'	74°53'52"	38.30'	65.36'
3	40'	74°53'52"	30.64'	52.29'
4	50'	105°6'08"	65.28'	91.72'

LAYOUT

SCALE 1"=40' **L-1**

STATE OF CALIFORNIA - DEPARTMENT OF TRANSPORTATION
Caltrans® OPERATIONS DESIGN/SAFETY

FUNCTIONAL SUPERVISOR: PATRICK HALLY
CALCULATED-DESIGNED BY: KENT NGUYEN
CHECKED BY: AYSHA HABIB
REVISED BY / DATE REVISED

LAST REVISION: DATE PLOTTED => 18-NOV-2013 TIME PLOTTED => 09:51
11-12-13

Dist	COUNTY	ROUTE	POST MILES TOTAL PROJECT	SHEET No.	TOTAL SHEETS
08	SBd	395	16.2	4	28

A Habib 11-12-13
REGISTERED CIVIL ENGINEER DATE

11-12-13
PLANS APPROVAL DATE

REGISTERED PROFESSIONAL ENGINEER AYSHA HABIB No. C79619 Exp. 9-30-14 CIVIL STATE OF CALIFORNIA

THE STATE OF CALIFORNIA OR ITS OFFICERS OR AGENTS SHALL NOT BE RESPONSIBLE FOR THE ACCURACY OR COMPLETENESS OF SCANNED COPIES OF THIS PLAN SHEET.

NOTE:

1. THE CROSS SLOPE OF THE CURB RAMP OR ANY ACCESSIBLE ROUTE SHALL NOT EXCEED 2%

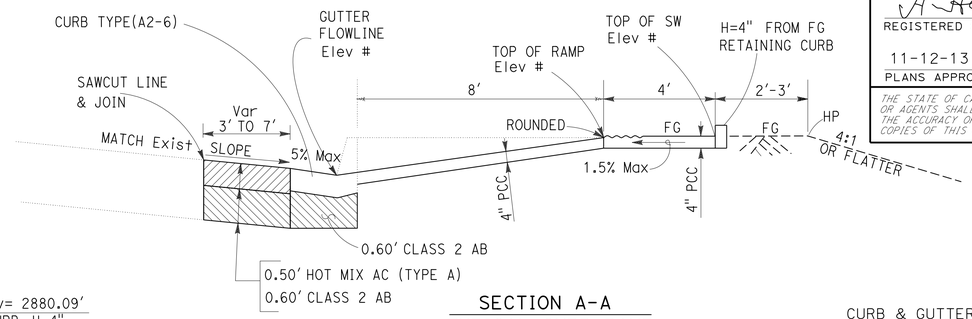

SECTION A-A
TYPICAL CURB RAMP

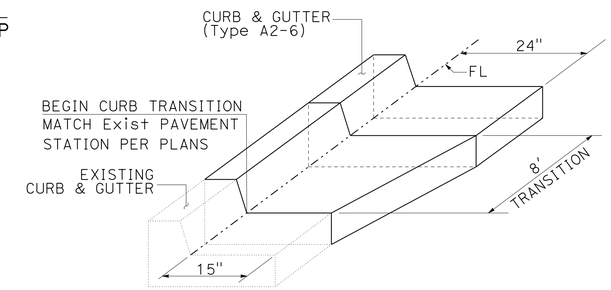

DETAIL A
EXISTING CURB & GUTTER TO CURB & GUTTER (TYPE A2-6) TRANSITION

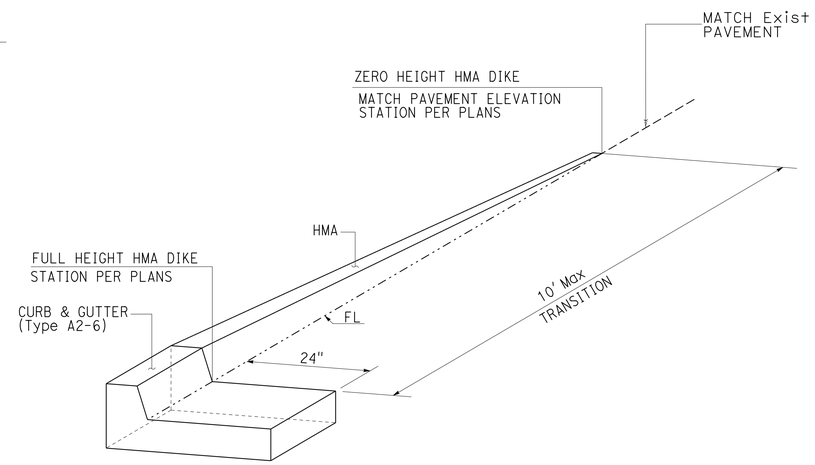

DETAIL B
CURB & GUTTER (TYPE A2-6) TO PAVEMENT TRANSITION

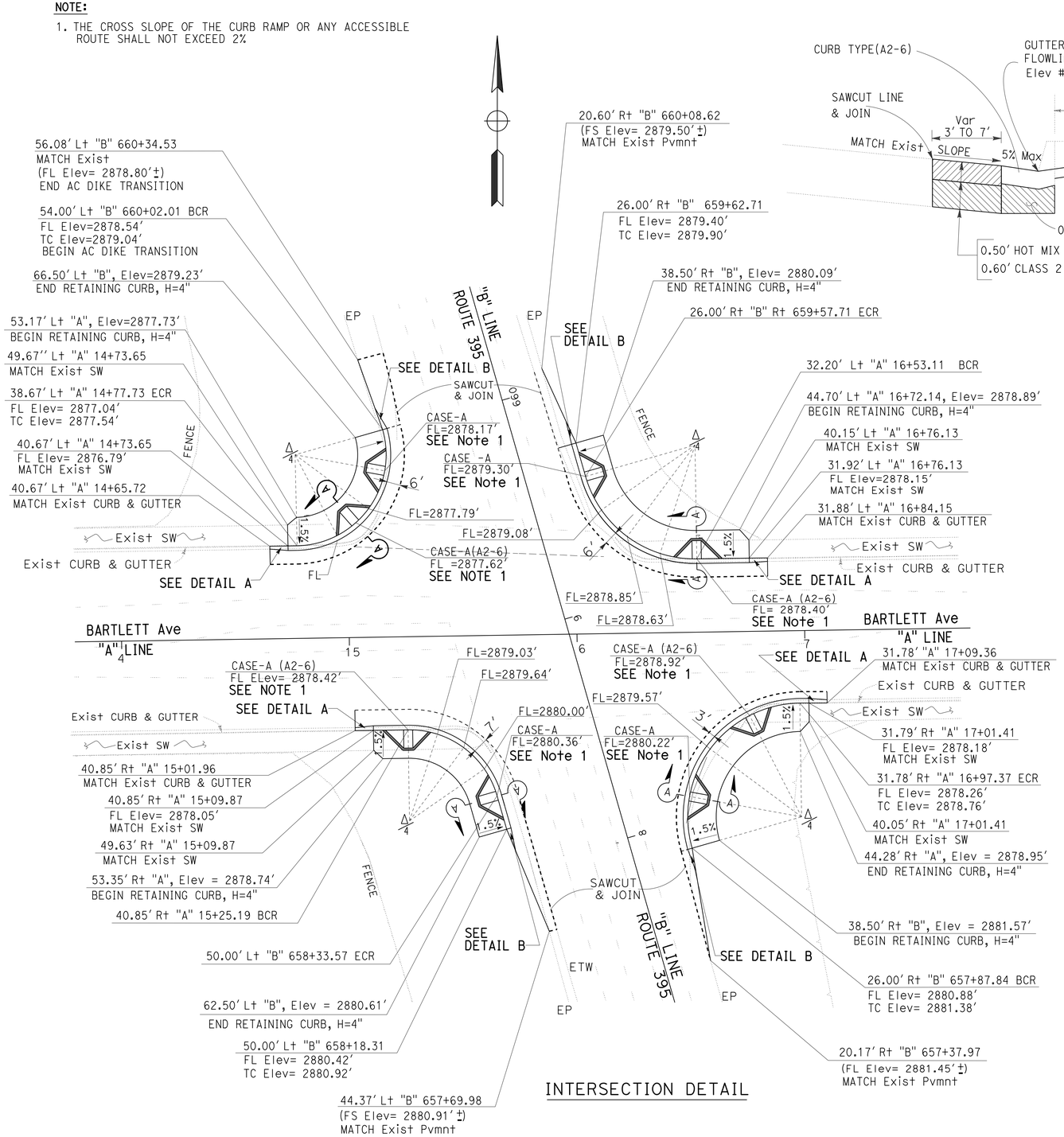

INTERSECTION DETAIL

CONSTRUCTION DETAILS

NO SCALE

C-1

STATE OF CALIFORNIA - DEPARTMENT OF TRANSPORTATION
Caltrans® OPERATIONS/SAFETY DESIGN

FUNCTIONAL SUPERVISOR: PATRICK HALLY
CALCULATED-DESIGNED BY: AYSHA HABIB
CHECKED BY: KENT NGUYEN
REVISED BY / DATE REVISED

LAST REVISION 11-12-13 | DATE PLOTTED => 18-NOV-2013 | TIME PLOTTED => 09:51

Dist	COUNTY	ROUTE	POST MILES TOTAL PROJECT	SHEET No.	TOTAL SHEETS
08	SBd	395	16.2	5	28

A Habib 11-12-13
REGISTERED CIVIL ENGINEER DATE

11-12-13
PLANS APPROVAL DATE

REGISTERED PROFESSIONAL ENGINEER
AYSHA HABIB
No. C79619
Exp. 9-30-14
CIVIL
STATE OF CALIFORNIA

THE STATE OF CALIFORNIA OR ITS OFFICERS OR AGENTS SHALL NOT BE RESPONSIBLE FOR THE ACCURACY OR COMPLETENESS OF SCANNED COPIES OF THIS PLAN SHEET.

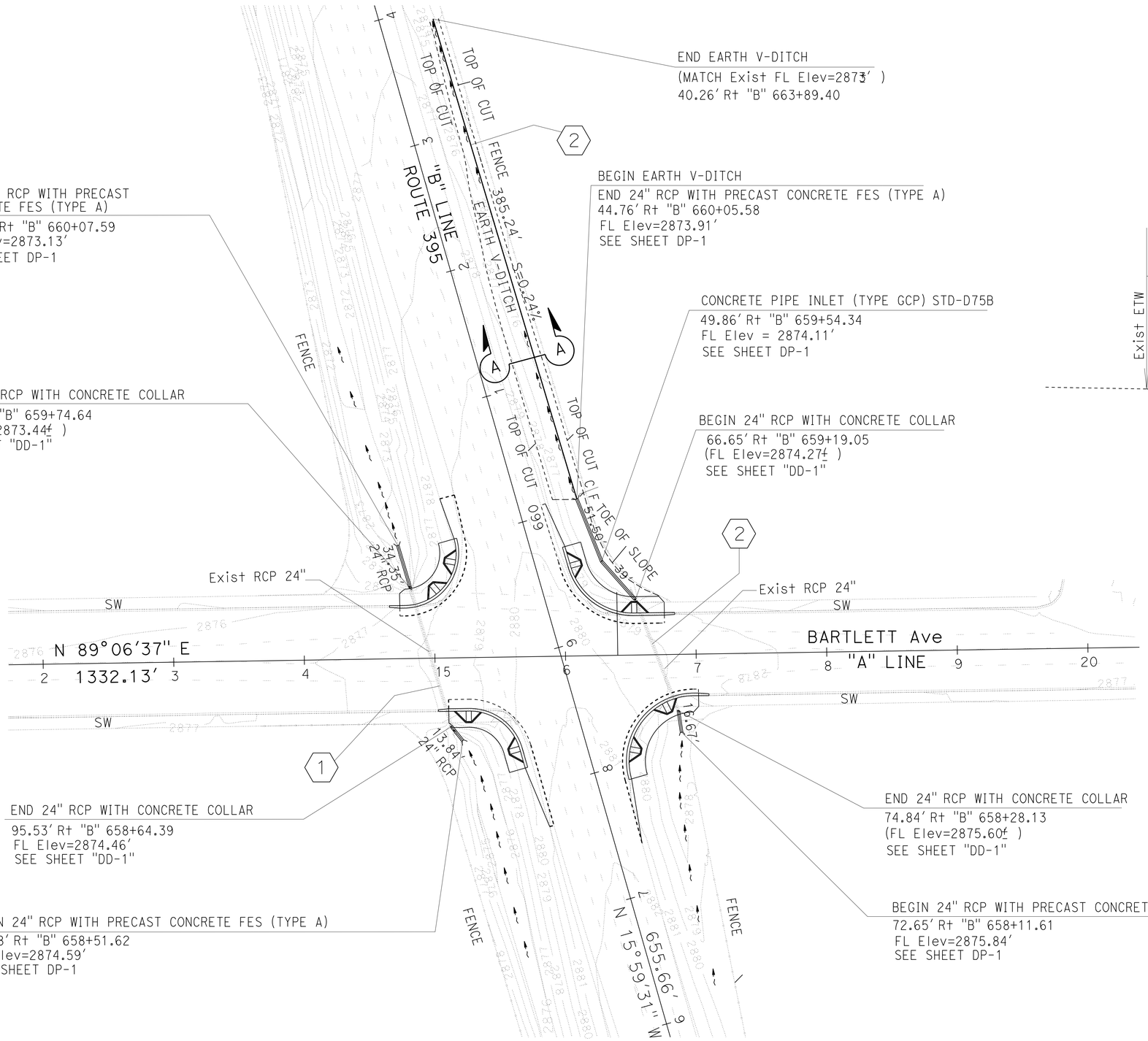

EARTH V-DITCH
TYPICAL SECTION A-A
FROM: STA 660+05.58 TO 663+89.40

DRAINAGE

SCALE" 1"= 40'

D-1

REVISED BY	DATE REVISED
KENT NGUYEN	AYSHA HABIB

CALCULATED-DESIGNED BY / CHECKED BY

FUNCTIONAL SUPERVISOR: PATRICK HALLY

STATE OF CALIFORNIA - DEPARTMENT OF TRANSPORTATION
Caltrans® OPERATIONS DESIGN/SAFETY

LAST REVISION 11-12-13 | DATE PLOTTED => 18-NOV-2013 | TIME PLOTTED => 09:51

Dist	COUNTY	ROUTE	POST MILES TOTAL PROJECT	SHEET No.	TOTAL SHEETS
08	SBd	395	16.2	6	28

REGISTERED CIVIL ENGINEER 11-12-13 DATE

11-12-13
PLANS APPROVAL DATE

REGISTERED PROFESSIONAL ENGINEER AYSHA HABIB No. C79619 Exp. 9-30-2014 CIVIL STATE OF CALIFORNIA

THE STATE OF CALIFORNIA OR ITS OFFICERS OR AGENTS SHALL NOT BE RESPONSIBLE FOR THE ACCURACY OR COMPLETENESS OF SCANNED COPIES OF THIS PLAN SHEET.

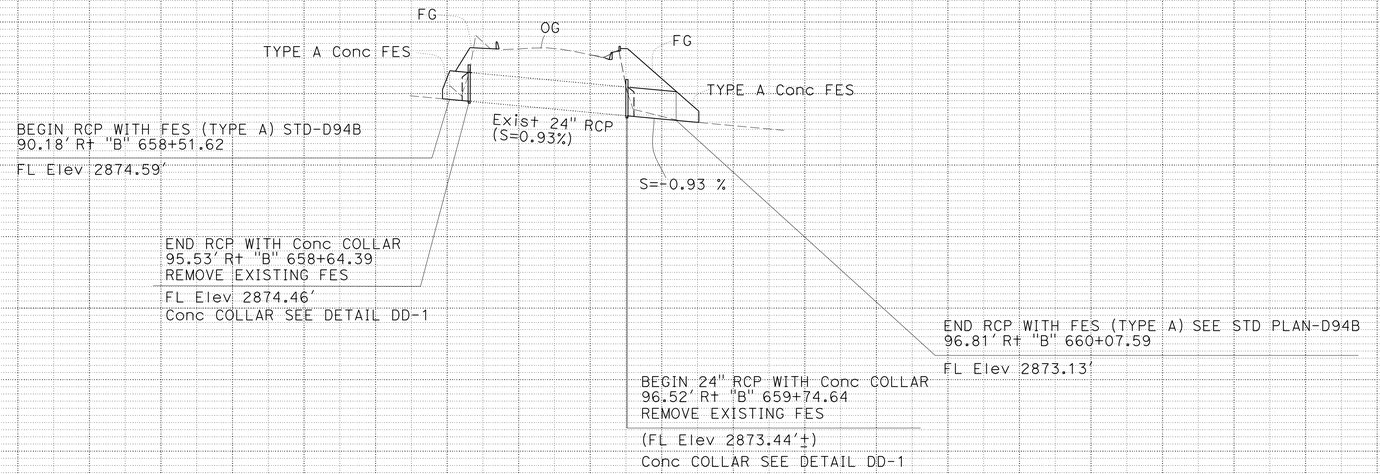

DRAINAGE SYSTEM NO. 1

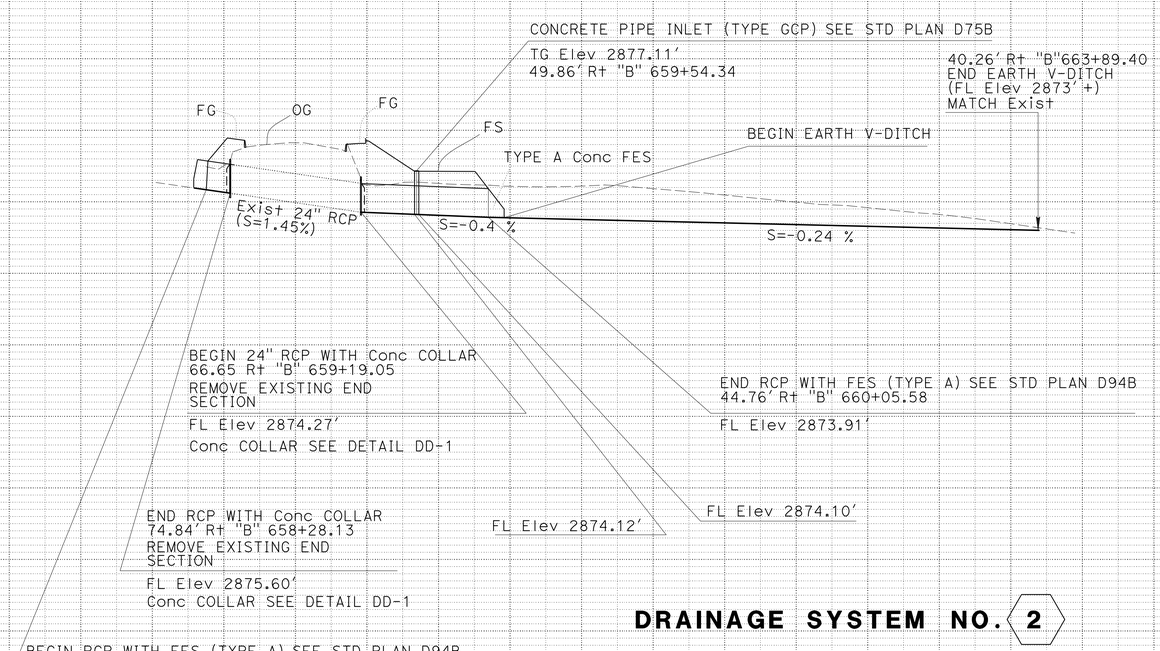

DRAINAGE SYSTEM NO. 2

DRAINAGE PROFILES

SCALE: Horiz 1" = 50'
Vert 1" = 10'

DP-1

REVISED BY | DATE REVISED
AYSHA HABIB | KENT NUGUYEN
CALCULATED-DESIGNED BY | CHECKED BY
FUNCTIONAL SUPERVISOR | PATRICK HALLY

STATE OF CALIFORNIA - DEPARTMENT OF TRANSPORTATION
Caltrans® OPERATIONS/SAFETY DESIGN

LAST REVISION 11-12-13 | DATE PLOTTED => 18-NOV-2013 TIME PLOTTED => 09:51

Dist	COUNTY	ROUTE	POST MILES TOTAL PROJECT	SHEET No.	TOTAL SHEETS
08	SBd	395	16.2	7	28

A Habib 11-12-13
REGISTERED CIVIL ENGINEER DATE

11-12-13
PLANS APPROVAL DATE

REGISTERED PROFESSIONAL ENGINEER
AYSHA HABIB
No. C79619
Exp. 9-30-2014
CIVIL
STATE OF CALIFORNIA

THE STATE OF CALIFORNIA OR ITS OFFICERS OR AGENTS SHALL NOT BE RESPONSIBLE FOR THE ACCURACY OR COMPLETENESS OF SCANNED COPIES OF THIS PLAN SHEET.

NOTES:

1. CONCRETE SHALL BE MINOR CONCRETE, MINOR STRUCTURE.
2. THE DEFLECTION ANGLE BETWEEN THE PIPE JOINT SHALL BE BUILT ACCORDING TO THE DRAINAGE PLAN.

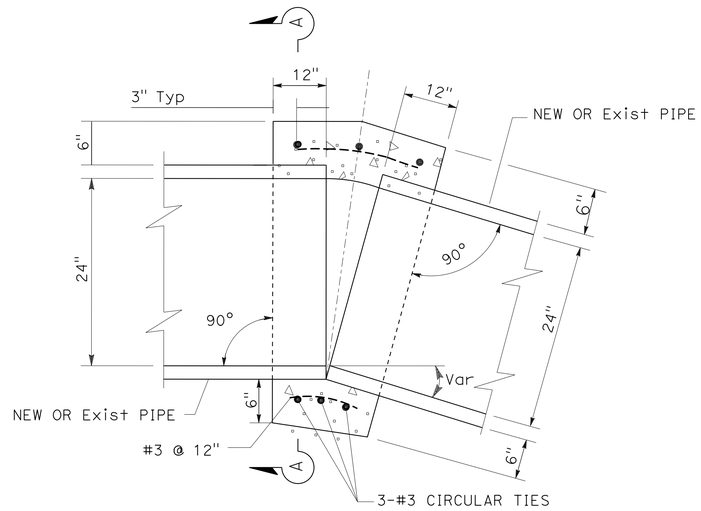

CONCRETE COLLAR (THE SAME PIPE DIAMETER)

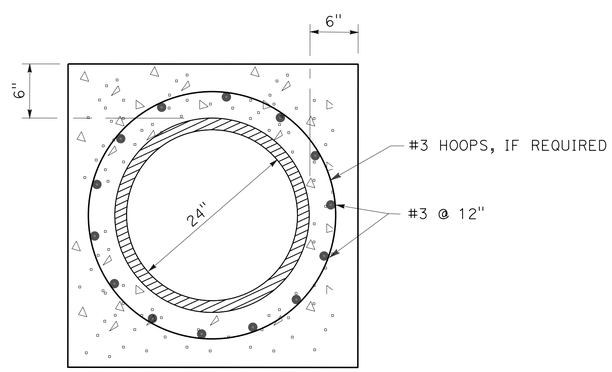

SECTION A-A

DRAINAGE DETAILS

NO SCALE **DD-1**

STATE OF CALIFORNIA - DEPARTMENT OF TRANSPORTATION
Caltrans OPERATIONS/SAFETY DESIGN

FUNCTIONAL SUPERVISOR: PATRICK HALLY
CALCULATED-DESIGNED BY: KENT NGUYEN
CHECKED BY: AYSHA HABIB
REVISED BY
DATE REVISED

LAST REVISION 11-12-13 DATE PLOTTED => 18-NOV-2013 TIME PLOTTED => 09:51

Dist	COUNTY	ROUTE	POST MILES TOTAL PROJECT	SHEET No.	TOTAL SHEETS
08	SBd	395	16.2	8	28

Thanh Trinh 11-12-13
REGISTERED CIVIL ENGINEER DATE

11-12-13
PLANS APPROVAL DATE

REGISTERED PROFESSIONAL ENGINEER T. TRINH No. C41189 Exp. 3-31-15 CIVIL STATE OF CALIFORNIA

THE STATE OF CALIFORNIA OR ITS OFFICERS OR AGENTS SHALL NOT BE RESPONSIBLE FOR THE ACCURACY OR COMPLETENESS OF SCANNED COPIES OF THIS PLAN SHEET.

NOTES:

1. LOCATIONS OF THE CONSTRUCTION AREA SIGNS ARE APPROXIMATE, AND EXACT LOCATIONS SHALL BE DETERMINED BY THE ENGINEER.
2. EXACT LOCATIONS OF THE PORTABLE CHANGEABLE MESSAGE SIGNS SHALL BE DETERMINED BY THE ENGINEER.

LEGEND:

- CONSTRUCTION AREA SIGNS (ONE POST)
- TYPE III BARRICADE
- WORK AREA
- (X) SIGN NUMBER

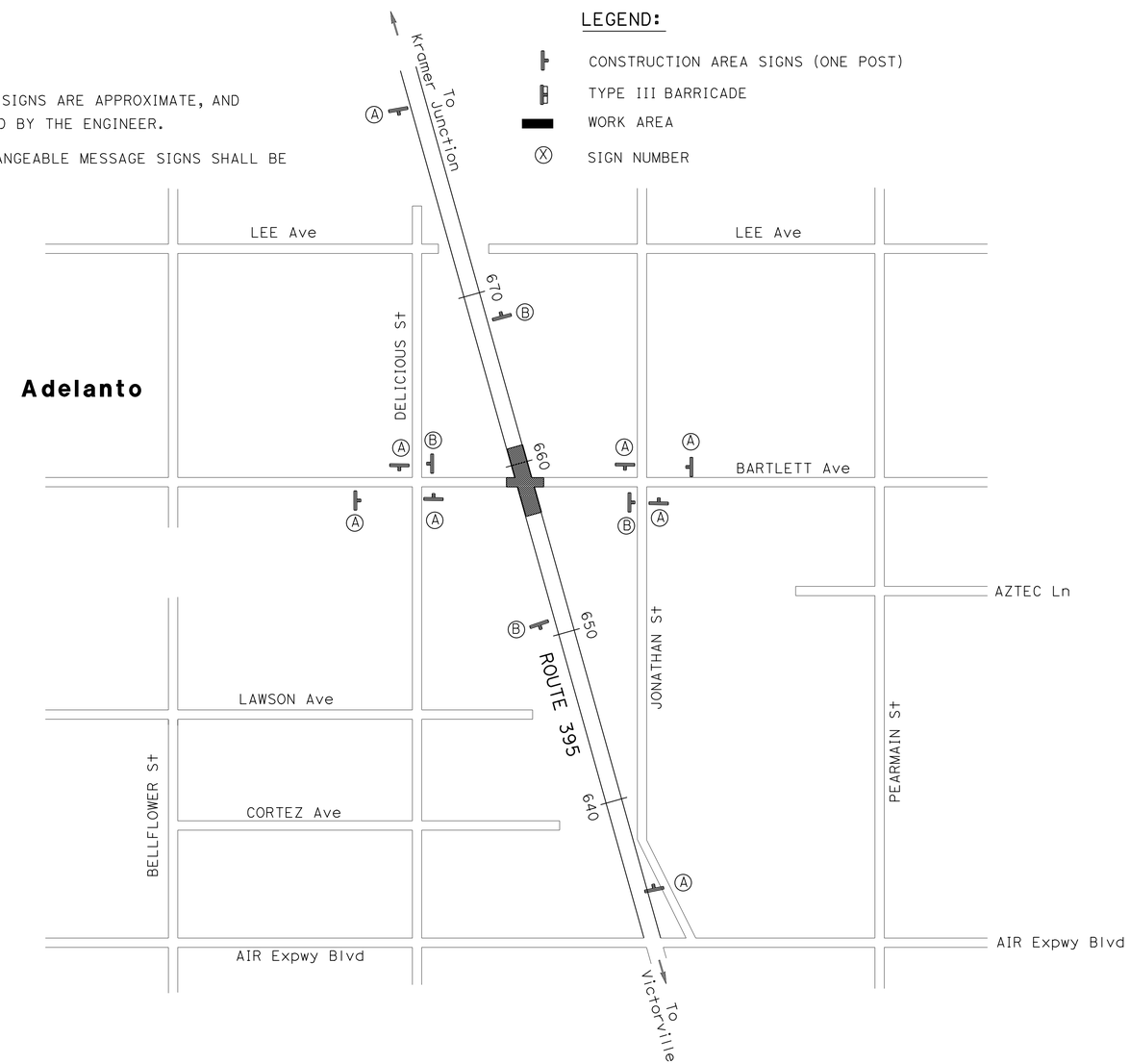

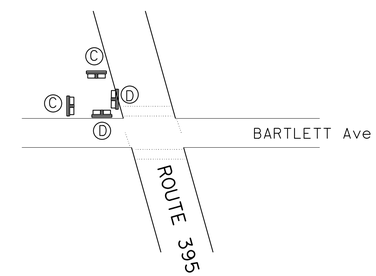

TYPICAL CONSTRUCTION AREA SIGNS AT EACH OF FOUR QUADRANTS AT THE INTERSECTION

CONSTRUCTION AREA SIGNS

SIGN NUMBER (X)	SIGN CODE (FEDERAL)	PANEL SIZE	SIGN MESSAGE	No. OF POST & SIZE	No. OF SIGNS (N)
A	W20-1	48 "x 48"	ROAD WORK AHEAD	1 - 6 " x 6 "	8
B	G20-2	36" x 18"	END ROAD WORK	1 - 4 " x 4 "	4
C	R9-9	30" x 18"	SIDE WALK CLOSED	MOUNTED ON TYPE III BARRICADE	8
D	R9-3a	30 "x 30"	NO PEDESTRIAN CROSSING SYMBOL	MOUNTED ON TYPE III BARRICADE	8

(N) NOT A SEPARATE PAY ITEM, FOR INFORMATION ONLY

PORTABLE CMS, TYPE III BARRICADE

PORTABLE CMS	TYPE III BARRICADE
EA	EA
2	16

APPROVED FOR CONSTRUCTION AREA SIGN WORK ONLY

CONSTRUCTION AREA SIGNS

NO SCALE

CS-1

REVISED BY | DATE REVISED
KEVIN NGUYEN | THANH TRINH
CALCULATED-DESIGNED BY | CHECKED BY
FUNCTIONAL SUPERVISOR
WILLIAM E. WASSER
STATE OF CALIFORNIA - DEPARTMENT OF TRANSPORTATION
Caltrans
TRAFFIC DESIGN

LAST REVISION 11-12-13 | DATE PLOTTED => 18-NOV-2013 | TIME PLOTTED => 09:51

Dist	COUNTY	ROUTE	POST MILES TOTAL PROJECT	SHEET No.	TOTAL SHEETS
8	SBd	395	16.2	9	28

Thanh Trinh 11-12-13
REGISTERED CIVIL ENGINEER DATE

11-12-13
PLANS APPROVAL DATE

REGISTERED PROFESSIONAL ENGINEER
T. TRINH
No. C41189
Exp. 3-31-15
CIVIL
STATE OF CALIFORNIA

THE STATE OF CALIFORNIA OR ITS OFFICERS OR AGENTS SHALL NOT BE RESPONSIBLE FOR THE ACCURACY OR COMPLETENESS OF SCANNED COPIES OF THIS PLAN SHEET.

LEGEND:

- (XX) TRAFFIC STRIPE DETAIL
- TYPE IV (L) ARROW
- TYPE VI (R) ARROW
- DIRECTION OF TRAFFIC
- BEGIN/END OF TRAFFIC STRIPE DETAIL
- REMOVE EXISTING TYPE IV (L) ARROW

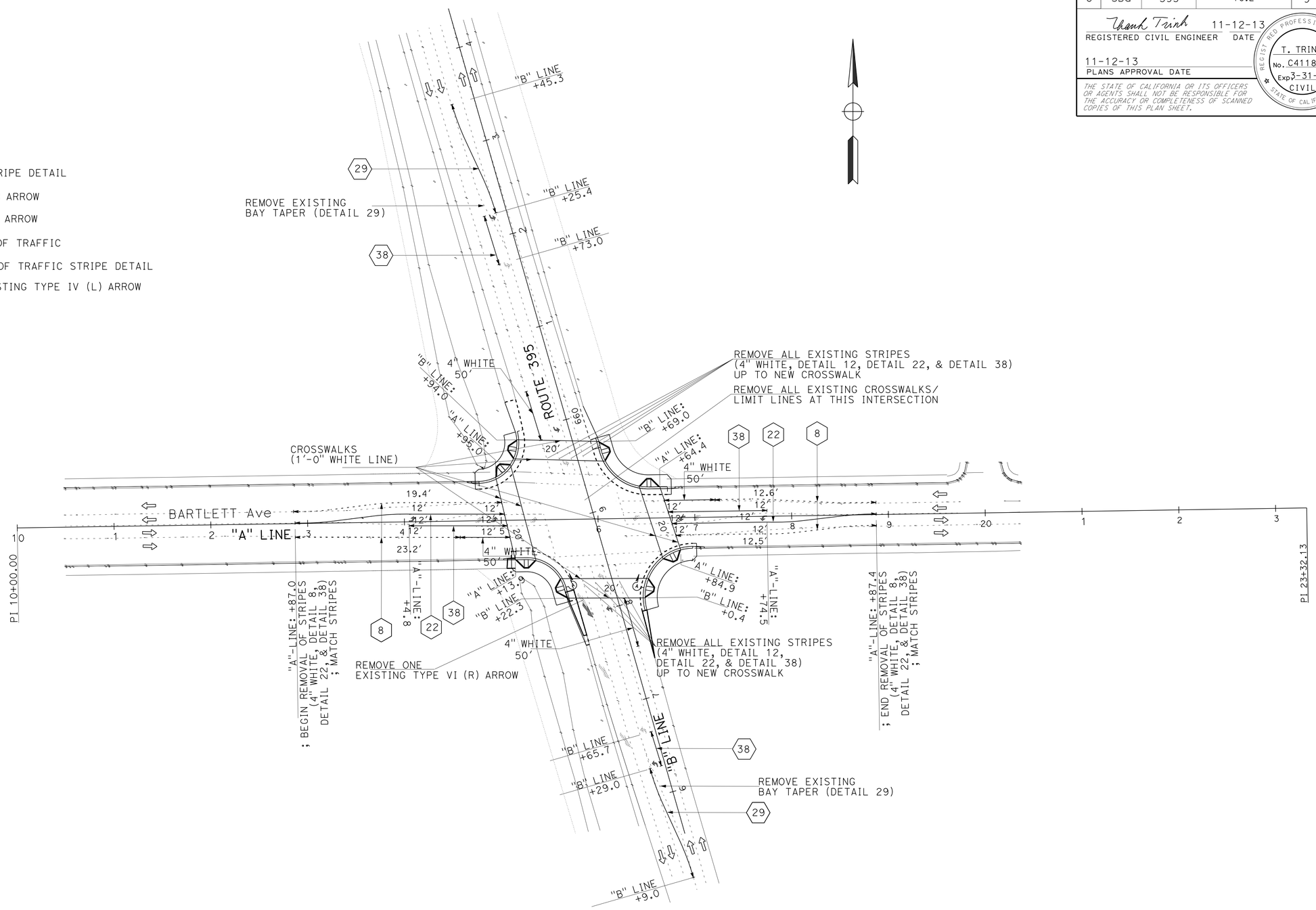

PAVEMENT DELINEATION PLAN

SCALE 1"= 50'

PD-1

APPROVED FOR PAVEMENT DELINEATION WORK ONLY

REVISED BY	DATE REVISED
KEVEN NGUYEN	THANH TRINH

CALCULATED-DESIGNED BY	CHECKED BY

FUNCTIONAL SUPERVISOR: BILL WASSER

STATE OF CALIFORNIA - DEPARTMENT OF TRANSPORTATION
Caltrans®
TRAFFIC DESIGN

LAST REVISION 11-12-13 | DATE PLOTTED => 18-NOV-2013 | TIME PLOTTED => 09:51

Dist	COUNTY	ROUTE	POST MILES TOTAL PROJECT	SHEET No.	TOTAL SHEETS
08	SBd	395	16.2	10	28

Thanh Trinh 11-12-13
REGISTERED CIVIL ENGINEER DATE

11-12-13
PLANS APPROVAL DATE

REGISTERED PROFESSIONAL ENGINEER
T. TRINH
No. C41189
Exp. 3-31-15
CIVIL
STATE OF CALIFORNIA

THE STATE OF CALIFORNIA OR ITS OFFICERS OR AGENTS SHALL NOT BE RESPONSIBLE FOR THE ACCURACY OR COMPLETENESS OF SCANNED COPIES OF THIS PLAN SHEET.

PAVEMENT DELINEATION QUANTITIES

LOCATION	PAVEMENT MARKING/ DETAIL No. DESCRIPTION	REMOVE THERMOPLASTIC PAVEMENT MARKING	THERMOPLASTIC PAVEMENT MARKING	* REMOVE THERMOPLASTIC TRAFFIC STRIPE	THERMOPLASTIC TRAFFIC STRIPE	REMOVE PAVEMENT MARKER (EA)	PAVEMENT MARKER (RETROREFLECTIVE) EA		PAVEMENT MARKER (RETROREFLECTIVE-RECESSED) EA	
		SQFT	SQFT	LF	LF	EA	TYPE D	TYPE G	TYPE D	TYPE G
ON BARLET Ave "A" LINE: STA 12+87.0 TO STA 18+ 87.4	4" WHITE			100	100					
	DETAIL 8			252	764					
	DETAIL 22			1030	430	46	38			
	DETAIL 38			320	205			10		
	CROSSWALK/LIMIT LINE (1'-0" WHITE)	95	339							
	TYPE IV (L) ARROW	60	60							
ON RTE 395 "B" LINE: STA 656+9.0 TO STA 663+ 17.5	4" WHITE			72	100					
	DETAIL 12			18		2				
	DETAIL 22			144		6				
	DETAIL 29			480	240	11			11	
	DETAIL 38			144	90	4				4
	CROSSWALK/LIMIT LINE (1'-0" WHITE)	433	353							
	TYPE IV (L) ARROW	60	60							
	TYPE VI (R) ARROW	42	42							
SUBTOTAL		690	854	2560	1929	69	38	10	11	4
TOTAL		690	854	2560	1929	69	48		15	

*REMOVAL QUANTITY WAS ADJUSTED FOR STRIPE WIDTH, & GAPS IN STRIPING DETAIL

PAVEMENT DELINEATION QUANTITIES

PDQ-1

REVISED BY | DATE REVISED
KEVIN NGUYEN | THANH TRINH
CALCULATED-DESIGNED BY | CHECKED BY
FUNCTIONAL SUPERVISOR
BILL WASSER

STATE OF CALIFORNIA - DEPARTMENT OF TRANSPORTATION
Caltrans® TRAFFIC DESIGN

LAST REVISION 11-12-13 | DATE PLOTTED => 18-NOV-2013 | TIME PLOTTED => 09:51

Dist	COUNTY	ROUTE	POST MILES TOTAL PROJECT	SHEET No.	TOTAL SHEETS
08	SBd	395	16.2	11	28

Thanh Trinh 11-12-13
REGISTERED CIVIL ENGINEER DATE

11-12-13
PLANS APPROVAL DATE

REGISTERED PROFESSIONAL ENGINEER T. TRINH No. C41189 Exp. 3-31-15 CIVIL STATE OF CALIFORNIA

THE STATE OF CALIFORNIA OR ITS OFFICERS OR AGENTS SHALL NOT BE RESPONSIBLE FOR THE ACCURACY OR COMPLETENESS OF SCANNED COPIES OF THIS PLAN SHEET.

ABBREVIATION:

L = LENGTH OF SIGN
D = DEPTH OF SIGN

LEGEND:

×: APPLICABLE
BLACK: B, R: RED, G: GREEN, Y: YELLOW, W: WHITE

SIGN PANEL MATERIAL QUANTITIES

SHEET No.	SIGN CODE		SIGN SIZE L x D	FURNISH SINGLE SHEET ALUMINUM (0.063" UNFRAMED)	FURNISH SINGLE SHEET ALUMINUM (0.080" UNFRAMED)	SINGLE FACED	DOUBLE FACED	BACKGROUND		LEGEND		GRAFFITI FILM		ROADSIDE SINGLE-SHEET UNFRAMED ALUMINUM			REMARKS
	FEDERAL	CALIFORNIA		SQFT				SHEETING COLOR	RETROREFLECTIVE ASTM TYPE	SHEETING COLOR	RETROREFLECTIVE ASTM TYPE	STANDARD	PREMIUM	0.063"	0.080"	0.126"	
ELECTRICAL PLAN E-3	D3(b)		60"x18"		15.0	×		G	3	W					×		QTY: TWO D3(b) SIGN PANELS MOUNTED ON TRAFFIC SIGNAL MAST ARMS (SEE ELECTRICAL PLAN E-3)
	R3-4		30"x30"	26.0		×		W	3	B,R	×			×			QTY: FOUR R3-4 SIGN PANELS MOUNTED ON TRAFFIC SIGNAL MAST ARMS (SEE ELECTRICAL PLAN E-3)
	D3(u)		72"x18"		18.0	×		G	3	W					×		QTY: TWO D3(u) SIGN PANELS MOUNTED ON TRAFFIC SIGNAL MAST ARMS (SEE ELECTRICAL PLAN E-3)
TOTAL				26.0	33.0												

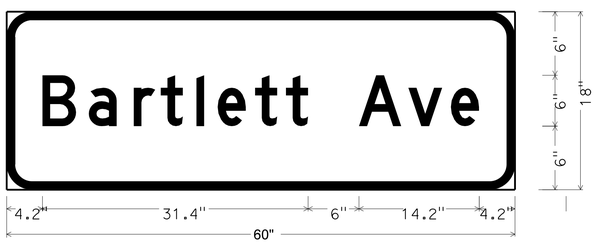

1.5" Radius, 0.5" Border, White on Green; [Bartlett Ave] LETTER SIZE 6D

SIGN PANEL D3(b) DETAIL

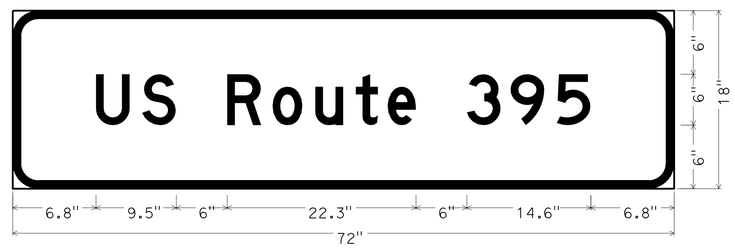

1.5" Radius, 0.5" Border, White on Green; [US Route 395] LETTER SIZE 6D

SIGN PANEL D3(u) DETAIL

APPROVED FOR SIGN QUANTITIES WORK ONLY

SIGN QUANTITIES
SQ-1

STATE OF CALIFORNIA - DEPARTMENT OF TRANSPORTATION
Caltrans® TRAFFIC DESIGN
FUNCTIONAL SUPERVISOR: BILL WASSER
CALCULATED-DESIGNED BY: KEVIN NGUYEN
CHECKED BY: THANH TRINH
REVISED BY
DATE REVISED

LAST REVISION 11-12-13 DATE PLOTTED => 18-NOV-2013 TIME PLOTTED => 09:51

Dist	COUNTY	ROUTE	POST MILES TOTAL PROJECT	SHEET No.	TOTAL SHEETS
08	SBd	395	16.2	12	28

A Habib 11-12-13
REGISTERED CIVIL ENGINEER DATE

11-12-13
PLANS APPROVAL DATE

REGISTERED PROFESSIONAL ENGINEER
AYSHA HABIB
No. C79619
Exp. 9-30-2014
CIVIL
STATE OF CALIFORNIA

THE STATE OF CALIFORNIA OR ITS OFFICERS OR AGENTS SHALL NOT BE RESPONSIBLE FOR THE ACCURACY OR COMPLETENESS OF SCANNED COPIES OF THIS PLAN SHEET.

CURB & GUTTER AND CURB RAMP QUANTITES

LOCATION	STATION	MINOR CONCRETE (CURB & CURB RAMP) CURB RAMP	MINOR CONCRETE (CURB & CURB RAMP) CURB & GUTTER	(N) CURB RAMP DETECTABLE WARNING SURFACE	REMOVE CONCRETE (CURB AND GUTTER)	REMOVE ASPHALT CONCRETE
		CY	CY	SF	CY	SQFT
NORTH-WEST OF US-395 AND BARTLETT Ave	660+02.01 "NB US-395" TO 14+77.73 "BARTLETT AVE"	10.0	5.6	3.0	3.0	767
NORTH-EAST OF US-395 AND BARTLETT Ave	16+72.14 "BARTLETT AVE" TO 659+62.71 "NB US-395"	14.5	6.4	12	5.0	571
SOUTH-WEST OF US-395 AND BARTLETT Ave	15+13.95 "BARTLETT AVE" TO 658+28.57 "SB US-395"	9.7	4.2		5.5	464
SOUTH-EAST OF US-395 AND BARTLETT Ave	16+97.37 "BARTLETT AVE" TO 657+87.84 "SB US-395"	12.8	6.8		2.3	706
	TOTAL	70.0		24	16	2508

(N) NOT A SEPARATE PAY ITEM, FOR INFORMATION ONLY

MISCELLANEOUS FACILITIES

ITEMS	MISCELLANEOUS ITEM	24" RCP
	EA	LF
MINOR CONCRETE (COLLAR)	4	
36" PRECAST Conc PIPE INLET	1	
REMOVE DRAINAGE FACILITY (FLARED END SYSTEM)	4	
PRECAST CONCRETE FES (TYPE A)	4	
24" RCP Loc 1		156
GRATE FRAME Typ GCP	1	
TOTAL	14	156

PAVEMENT STRUCTURE QUANTITIES

LOCATION	HOT MIX ASPHALT (TYPE A)	CLASS 2 AGGREGATE BASE
	TON	CY
NORTH-WEST OF US-395 AND BARTLETT Ave	31.0	22.0
NORTH-EAST OF US-395 AND BARTLETT Ave	32.0	23.0
SOUTH-WEST OF US-395 AND BARTLETT Ave	31.0	22.0
SOUTH-EAST OF US-395 AND BARTLETT Ave	16.0	13.0
TOTAL	110	80.0

EARTHWORK QUANTITIES

ITEMS	DITCH EXCAVATION	(N) EMBANKMENT
	CY	CY
DITCH EXCAVATION	248	
EMBANKMENT		176
TOTAL	248	176

(N) NOT A SEPARATE PAY ITEM, FOR INFORMATION ONLY

SUMMARY OF QUANTITIES

NO SCALE **Q-1**

REVISED BY | DATE REVISED
AYSHA HABIB | KENT NGUYEN
CALCULATED-DESIGNED BY | CHECKED BY
FUNCTIONAL SUPERVISOR: PATRICK HALLY
STATE OF CALIFORNIA - DEPARTMENT OF TRANSPORTATION
Caltrans® OPERATIONS/SAFETY DESIGN

LAST REVISION 11-12-13 | DATE PLOTTED => 18-NOV-2013 | TIME PLOTTED => 09:51

Dist	COUNTY	ROUTE	POST MILES TOTAL PROJECT	SHEET No.	TOTAL SHEETS
08	SBd	395	16.2	13	28

REGISTERED ELECTRICAL ENGINEER — DATE 11-12-13

PLANS APPROVAL DATE 11-12-13

REGISTERED PROFESSIONAL ENGINEER — KATHERINE DINH — No. E17157 — Exp. 9-30-15 — ELECTRICAL — STATE OF CALIFORNIA

THE STATE OF CALIFORNIA OR ITS OFFICERS OR AGENTS SHALL NOT BE RESPONSIBLE FOR THE ACCURACY OR COMPLETENESS OF SCANNED COPIES OF THIS PLAN SHEET.

LEGEND (THIS SHEET ONLY):

1. RS EXISTING TYPE A SERVICE EQUIPMENT ENCLOSURE.
2. RS EXISTING CONTROLLER CABINET.
3. RS EXISTING SIGNAL AND LIGHTING STANDARD.
4. RS EXISTING TYPE 1-A SIGNAL STANDARD.

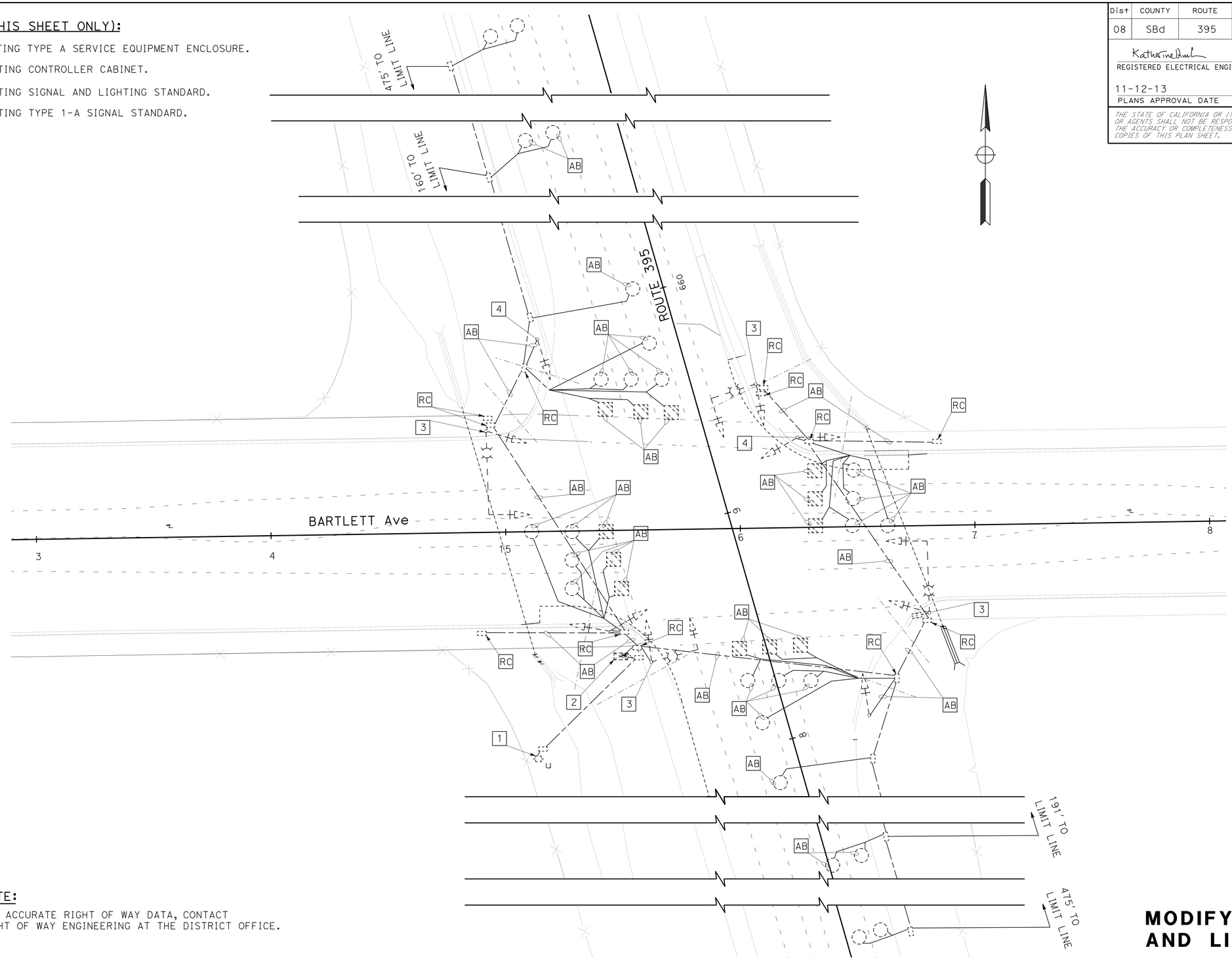

NOTE:

FOR ACCURATE RIGHT OF WAY DATA, CONTACT RIGHT OF WAY ENGINEERING AT THE DISTRICT OFFICE.

APPROVED FOR ELECTRICAL WORK ONLY

MODIFY SIGNAL AND LIGHTING

SCALE 1" = 20' **E-1**

STATE OF CALIFORNIA - DEPARTMENT OF TRANSPORTATION
Caltrans® **ELECTRICAL DESIGN**

FUNCTIONAL SUPERVISOR: KATHERINE DINH
CALCULATED-DESIGNED BY: WALEED ABOUL-HOSN
CHECKED BY: FERDINAND DELA CRUZ
REVISED BY: 7-22-13
DATE REVISED: 7-22-13

LAST REVISION 11-12-13 | DATE PLOTTED => 18-NOV-2013 | TIME PLOTTED => 09:51

Dist	COUNTY	ROUTE	POST MILES TOTAL PROJECT	SHEET No.	TOTAL SHEETS
08	SBd	395	16.2	14	28

REGISTERED ELECTRICAL ENGINEER 11-12-13 DATE

11-12-13
PLANS APPROVAL DATE

REGISTERED PROFESSIONAL ENGINEER KATHERINE DINH No. E17157 Exp. 9-30-15 ELECTRICAL STATE OF CALIFORNIA

THE STATE OF CALIFORNIA OR ITS OFFICERS OR AGENTS SHALL NOT BE RESPONSIBLE FOR THE ACCURACY OR COMPLETENESS OF SCANNED COPIES OF THIS PLAN SHEET.

LEGEND:

1. REFER TO SHEET E-3 FOR PROJECT LEGEND.

NOTES: (THIS SHEET ONLY)

1. FOR ACCURATE RIGHT OF WAY DATA, CONTACT RIGHT OF WAY ENGINEERING AT THE DISTRICT OFFICE.
2. VIDEO DETECTION ZONES MUST BE ESTABLISHED IN THE FIELD BY THE ENGINEER AND THE MANUFACTURER REPRESENTATIVE.

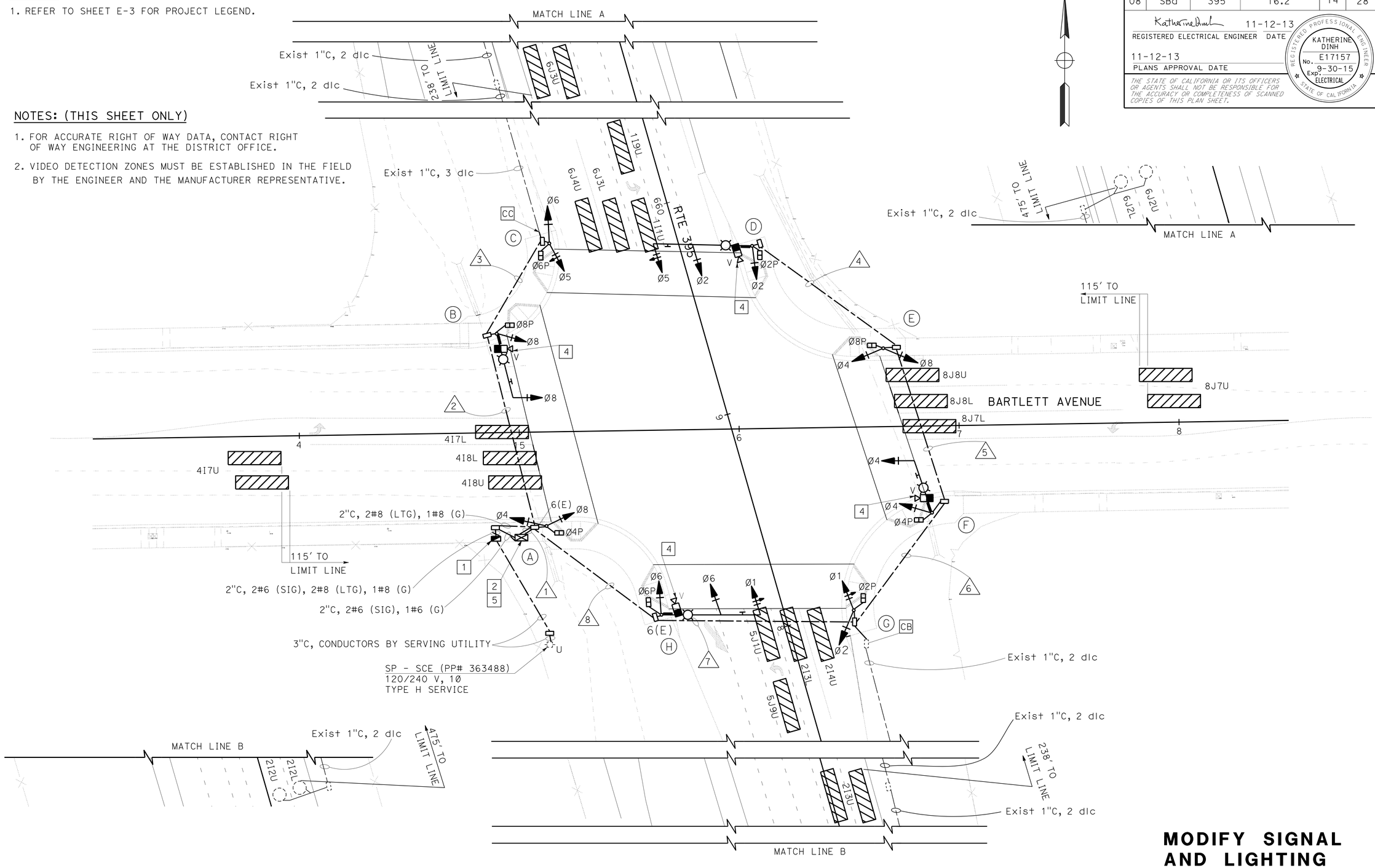

APPROVED FOR ELECTRICAL WORK ONLY

MODIFY SIGNAL AND LIGHTING

SCALE 1" = 20' **E-2**

STATE OF CALIFORNIA - DEPARTMENT OF TRANSPORTATION
Caltrans® ELECTRICAL DESIGN

FUNCTIONAL SUPERVISOR: KATHERINE DINH
CALCULATED-DESIGNED BY: WALEED ABOUL-HOSN
CHECKED BY: FERDINAND DELA CRUZ
REVISED BY: 7-22-13
DATE REVISED: 7-22-13

LAST REVISION DATE PLOTTED => 18-NOV-2013
TIME PLOTTED => 09:51

Dist	COUNTY	ROUTE	POST MILES TOTAL PROJECT	SHEET No.	TOTAL SHEETS
08	SBd	395	16.2	15	28

REGISTERED ELECTRICAL ENGINEER 11-12-13 DATE

11-12-13
PLANS APPROVAL DATE

REGISTERED PROFESSIONAL ENGINEER KATHERINE DINH No. E17157 Exp. 9-30-15 ELECTRICAL STATE OF CALIFORNIA

THE STATE OF CALIFORNIA OR ITS OFFICERS OR AGENTS SHALL NOT BE RESPONSIBLE FOR THE ACCURACY OR COMPLETENESS OF SCANNED COPIES OF THIS PLAN SHEET.

LEGEND (SHEET E-2):

1. INSTALL 120/240 V, 1Ø, 3 WIRE, TYPE III-CF SERVICE EQUIPMENT ENCLOSURE AS PER RSP ES-2C AND PER RSP ES-2F, WITH THE FOLLOWING CIRCUIT BREAKERS:

   CALTRANS ID No. 08-54-395-0-016.009-M
   METER A: 100 A, 240 V, 2P, CB. MAIN BREAKER (TC-1)
   50 A, 120 V, 1P, CB. (SIG)

   CALTRANS ID No. 08-54-395-0-016.010-M
   METER B: 100 A, 240 V, 2P, CB. MAIN BREAKER (LS-3)
   30 A, 240 V, 2P, CB. (LIGHTING)
   15 A, 120 V, 1P, CB. (LTG CONTROL)
   15 A, 120 V, 1P, CB. (LTG TEST SWITCH)

2. INSTALL DEPARTMENT FURNISHED MODEL 2070L CONTROLLER ASSEMBLY AND BATTERY BACKUP SYSTEM ON MODIFIED FOUNDATION AS PER SHEETS E-4, E-5 AND E-6.

3. FOR SIGN DETAILS AND STREET NAME SIGNS, SEE PDQ-1 AND SQ-1 PLAN SHEETS.

4. INSTALL VIVDS CAMRERA PER ES-7R, DETAIL B.

5. INSTALL WIRELESS CDMA MODEM ASSEMBLY.

ABBREVIATIONS:

SCE	-	SOUTHERN CALIFORNIA EDISON
TC-1	-	SCE TRAFFIC CONTROL RATE
LS-3	-	SCE LIGHTING RATE
CDMA	-	CODE DIVISION MULTIPLE ACCESS
APS	-	ACCESSIBLE PEDESTRIAN SIGNAL

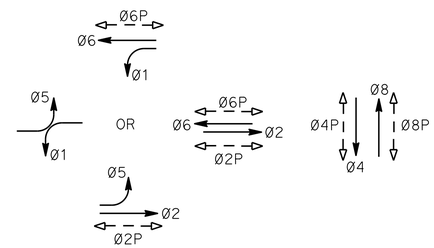

PHASE DIAGRAM
STEADY DEMAND SEQUENCE

CONDUCTOR AND CONDUIT SCHEDULE

CABLE SCHEDULE			CONDUIT RUN AND SIZE							
CABLE TYPE	POLE	PHASE	1	2	3	4	5	6	7	8
VEH-PED 12CSC	Ⓐ	4,8,4P / 6	1 / 1							
	Ⓑ	8,8P / 6	1 / 1	1 / 1						
	Ⓒ	5,6,6P / 8	1 / 1	1 / 1	1 / 1					
	Ⓓ	2,5,2P / 8	1 / 1			1 / 1	1 / 1	1 / 1	1 / 1	1 / 1
	Ⓔ	4,8,8P / 2	1 / 1				1 / 1	1 / 1	1 / 1	1 / 1
	Ⓕ	4,4P / 2	1 / 1					1 / 1	1 / 1	1 / 1
	Ⓖ	1,2,2P / 4	1 / 1						1 / 1	1 / 1
PPB 3CSC	Ⓗ	1,6,6P / 4	1 / 1							1 / 1
		TOTAL	8 / 8	2 / 2	1 / 1	1 / 1	2 / 2	3 / 3	4 / 4	5 / 5
AWG		CIRCUIT								
#8		LIGHTING		2		2	2	2	2	2
#8		GROUND	2	1	1	1	1	1	1	1
VIVID POWER CABLE			4	1		1	1	2	2	3
VIVID VIDEO CABLE			4	1		1	1	2	2	3
DETECTORS-TYPE B DLC										
PHASE										
Ø2			2						2	2
Ø6			2	2	2					
TOTAL			4	2	2				2	2
CONDUIT SIZE			2-4"	4"	3"	3"	4"	4"	4"	4"

POLE and EQUIPMENT SCHEDULE

POLE	STANDARD TYPE	SMA	LMA	VEH SIG MTG MAST ARM	VEH SIG MTG POLE	PED SIG MTG	APS PPB Ø	APS PPB ARROW	LED LUM (W)	POLE LOCATION NORTHING	EASTING	PAD ELEVATION	SPECIAL REQUIREMENTS
Ⓐ	1-A				TV-2-T	SP-1-T	6	→		2,033,639.8526	6,738,567.7082	2878.57′	
Ⓑ	19A-4-100	30′	15′	MAS	SV-1-T	SP-1-T	6	←	235	2,033,727.2968	6,738,545.0295	2877.85′	D3(u) SIGN (US ROUTE 395). R3-4 SIGN. [3]
Ⓒ	1-A				TV-2-T	SP-1-T	8	→		2,033,768.3963	6,738,568.95	2878.97′	
Ⓓ	26A-4-100	45′	15′	MAS MAS	SV-1-T	SP-1-T	8	←	235	2,033,767.2704	6,738,661.1414	2879.68′	D3(b) SIGN (BARTLETT AVE). R3-4 SIGN. F=18 ft [3]
Ⓔ	1-A				TV-2-T	SP-1-T	2	→		2,033,720.6972	6,738,720.778	2878.82′	
Ⓕ	19A-4-100	25′	15′	MAS	SV-1-T	SP-1-T	2	←	235	2,033,645.9060	6,738,742.95	2879.18′	D3(u) SIGN (US ROUTE 395). R3-4 SIGN. [3]
Ⓖ	1-A				TV-2-T	SP-1-T	4	→		2,033,601.5169	6,738,707.3678	2881.15′	
Ⓗ	26A-4-100	45′	15′	MAS MAS	SV-1-T	SP-1-T	4	←	235	2,033,599.4708	6,738,619.9468	2880.97′	D3(b) SIGN (BARTLETT AVE). R3-4 SIGN. F=18 ft [3]

NOTE: ALL POLE LOCATION DATA GIVEN AT CENTER OF THE POLE

APPROVED FOR ELECTRICAL WORK ONLY

MODIFY SIGNAL AND LIGHTING

NO SCALE

E-3

REVISED BY 7-22-13 | DATE REVISED 7-22-13
WALEED ABOUL-HOSN | FERDINAND DELA CRUZ
CALCULATED-DESIGNED BY | CHECKED BY
FUNCTIONAL SUPERVISOR: KATHERINE DINH
STATE OF CALIFORNIA - DEPARTMENT OF TRANSPORTATION
Caltrans® ELECTRICAL DESIGN

LAST REVISION 11-12-13 | DATE PLOTTED => 18-NOV-2013 | TIME PLOTTED => 09:51

Dist	COUNTY	ROUTE	POST MILES TOTAL PROJECT	SHEET No.	TOTAL SHEETS
08	SBd	395	16.2	16	28

Theresa Gabriel 11-12-13
REGISTERED ~~ELECTRICAL~~ ENGINEER DATE

11-12-13
PLANS APPROVAL DATE

REGISTERED PROFESSIONAL ENGINEER THERESA A. GABRIEL No. E15129 Exp. 6-30-14 ELECTRICAL STATE OF CALIFORNIA

THE STATE OF CALIFORNIA OR ITS OFFICERS OR AGENTS SHALL NOT BE RESPONSIBLE FOR THE ACCURACY OR COMPLETENESS OF SCANNED COPIES OF THIS PLAN SHEET.

NOTE:

FOR ACCURATE RIGHT OF WAY DATA, CONTACT RIGHT OF WAY ENGINEERING AT THE DISTRICT OFFICE.

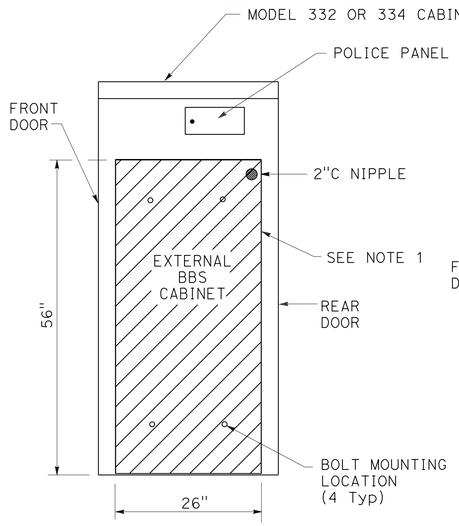

SIDE VIEW

EXTERNAL BBS CABINET MOUNTED TO THE MODEL 332 OR 334 CABINET

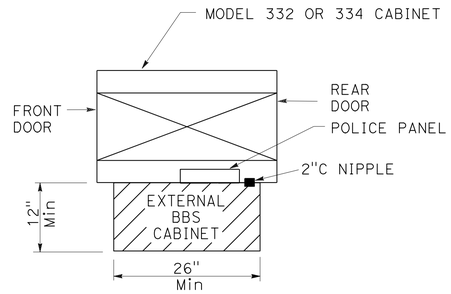

TOP VIEW

NOTES: (THIS SHEET ONLY)

1. THE EXTERNAL BBS CABINET SHALL BE MOUNTED TO THE MODEL 332 OR 334 CABINET WITH FOUR 18-8 STAINLESS STEEL HEX HEAD, FULLY-THREADED, ⅜"-16 X 1" BOLTS; TWO WASHERS PER BOLT, DESIGNED FOR ⅜" BOLTS AND ARE 18-8 STAINLESS STEEL, 1" OUTSIDE DIAMETER, ROUND, AND FLAT; AND ONE K-LOCK NUT PER BOLT THAT IS 18-8 STAINLESS STEEL AND A HEX-NUT. THE ENGINEER WILL HAVE TO APPROVE THE BOLT MOUNTING LOCATION PRIOR TO INSTALLATION.
2. THE ANCHOR BOLTS SHALL BE ¾" Dia X 15" WITH A 2"-90° BEND. THE CABINET MANUFACTURER'S SPECIFICATION SHALL DETERMINE THE LOCATION OF THE ANCHOR BOLTS IN THE FOUNDATION. THE ENGINEER WILL HAVE TO APPROVE THE ANCHOR BOLTS AND ITS LOCATION IN THE FOUNDATION PRIOR TO CONSTRUCTION.
3. THE CONTRACTOR SHALL VERIFY THE DIMENSIONS OF THE BBS CABINET PRIOR TO CONSTRUCTING THE FOUNDATION OF THE MODIFIED PORTION OF THE Std MODEL 332 AND 334 CABINET FOUNDATION. THE ENGINEER WILL HAVE TO APPROVE ANY NECESSARY DEVIATIONS PRIOR TO CONSTRUCTION.
4. ALL DIMENSIONS ARE NOMINAL.

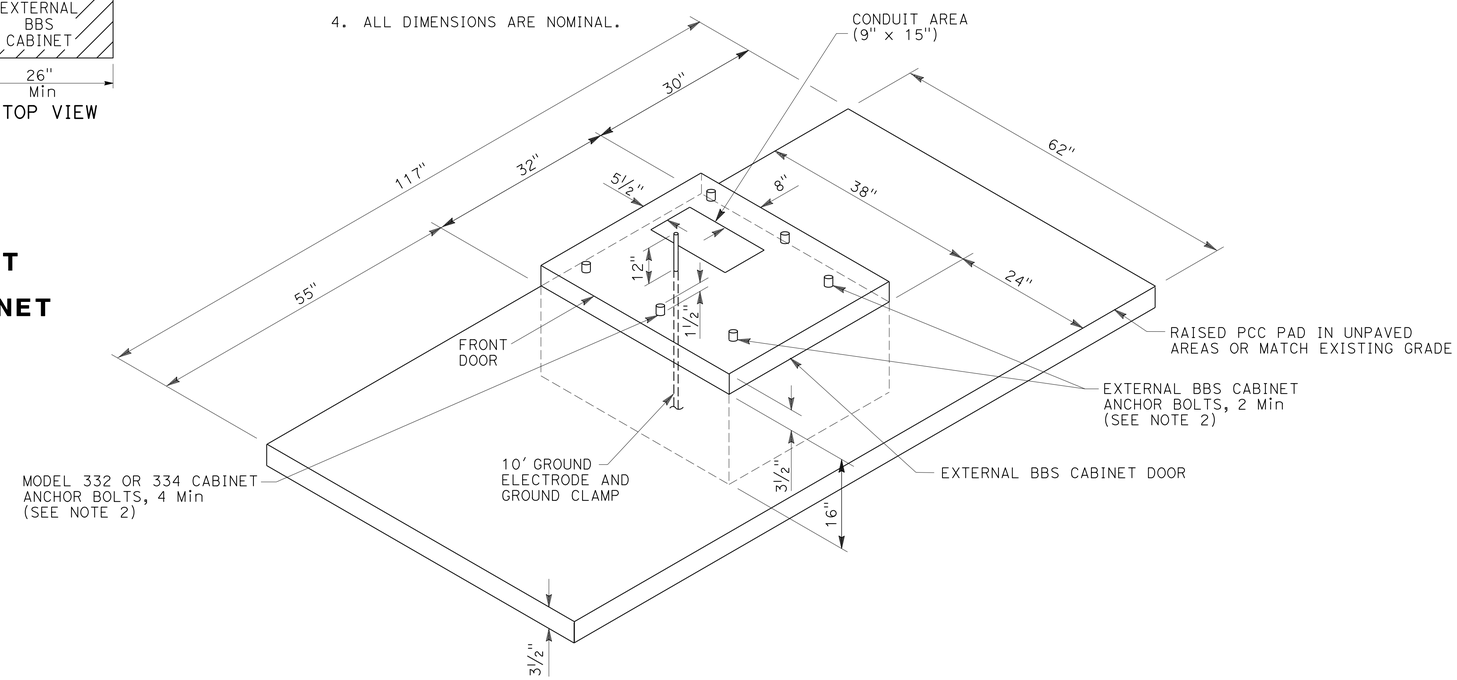

MODIFIED MODEL 332 AND 334 CABINET FOUNDATION DETAIL FOR BATTERY BACKUP SYSTEM (BBS)

(FOR DIMENSIONS AND DETAILS NOT SHOWN AND ADDITIONAL NOTES, SEE SHEET ES-3C OF THE STANDARD PLANS FOR MODEL 332 AND 334 CABINETS)

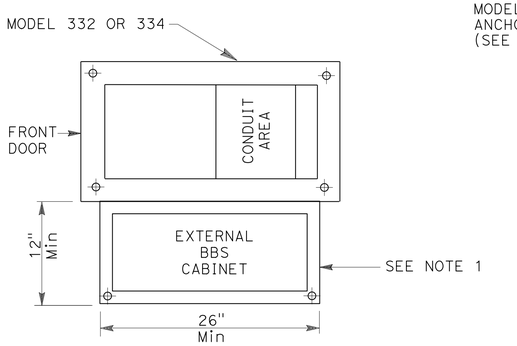

BASE PLAN FOR BBS MOUNTED TO THE MODEL 332 OR 334 CABINET

(FOR DIMENSIONS AND DETAILS NOT SHOWN, SEE SHEET A6-1 TO A6-4, CABINET HOUSING DETAILS OF THE TRANSPORTATION ELECTRICAL EQUIPMENT SPECIFICATION (TEES))

APPROVED FOR ELECTRICAL WORK ONLY

ELECTRICAL DETAILS

NO SCALE **E-4**

STATE OF CALIFORNIA - DEPARTMENT OF TRANSPORTATION
Caltrans® ELECTRICAL DESIGN B

FUNCTIONAL SUPERVISOR: KATHERINE DINH
CALCULATED-DESIGNED BY: THERESA A. GABRIEL
CHECKED BY: WALEED ABOUL-HOSN
REVISED BY / DATE REVISED

LAST REVISION 11-12-13 DATE PLOTTED => 18-NOV-2013 TIME PLOTTED => 09:51

Dist	COUNTY	ROUTE	POST MILES TOTAL PROJECT	SHEET No.	TOTAL SHEETS
08	SBd	395	16.2	17	28

Theresa Gabriel 11-12-13
REGISTERED ~~ELECTRICAL~~ ENGINEER DATE

11-12-13
PLANS APPROVAL DATE

REGISTERED PROFESSIONAL ENGINEER Theresa A. Gabriel No. E15129 Exp. 6-30-14 ELECTRICAL STATE OF CALIFORNIA

THE STATE OF CALIFORNIA OR ITS OFFICERS OR AGENTS SHALL NOT BE RESPONSIBLE FOR THE ACCURACY OR COMPLETENESS OF SCANNED COPIES OF THIS PLAN SHEET.

LEGEND: (THIS SHEET ONLY)

PTS = POWER TRANSFER SWITCH
UPS = UNINTERRUPTIBLE POWER SUPPLY
UPSC = UNINTERRUPTIBLE POWER SUPPLY CONTROLLER
UPSM = UPS MODE
BP = BYPASS
MBPS = MANUAL BYPASS SWITCH
AC+ = UNGROUNDED CONDUCTOR
AC- = GROUNDED CONDUCTOR
C = COMMON
Grn = GREEN
Blk = BLACK
Wht = WHITE
SF = STATE-FURNISHED
Batt = BATTERY
Temp = TEMPERATURE
TB = TERMINAL BOARD
Cntl = CONTROL
Gnd = GROUND

NOTES: (THIS SHEET ONLY)

1. TYPE B REFERS TO THE BBS EQUIPMENT FROM MANUFACTURER B.
2. CASE-1 REFERS TO THE SITUATION WHEN THE ENTIRE BBS EQUIPMENT INCLUDING THE BATTERIES ARE INSTALLED IN THE BBS CABINET.
3. THE LOCATION OF THE 2"C NIPPLE WILL BE DETERMINED BY THE ENGINEER IN THE FIELD.
4. THE CONTRACTOR SHALL FURNISH AND INSTALL A NEMA-1 ENCLOSURE WITH 30 A, 1P, 120/240 VOLTS RATED CIRCUIT BREAKER MANUFACTURED PER UL STANDARD 489.
5. A TEMPERATURE PROBE SHALL BE ATTACHED TO THE BATTERY BY TAPE OR ATTACHED TO THE NEGATIVE TERMINAL OF THE BATTERY.
6. THE ELECTRICAL POWER FOR THE COOLING FAN FOR THE BBS CABINET SHALL BE TAPPED FROM THE BOTTOM OF THE TB IN THE 332 CABINET.
7. THE CONTRACTOR SHALL PROVIDE A 9-WIRE WIRING HARNESS OR BUNDLED 9 MULTICOLOR CONDUCTORS, #18 AWG WIRES FROM THE RELAY ON THE INVERTER/CHARGER UNIT TO THE CONTROLLER. THE ENDS OF THE CONDUCTORS SHALL BE INSULATED WITH TAPE AND A SIX-FOOT COIL ON EACH END.

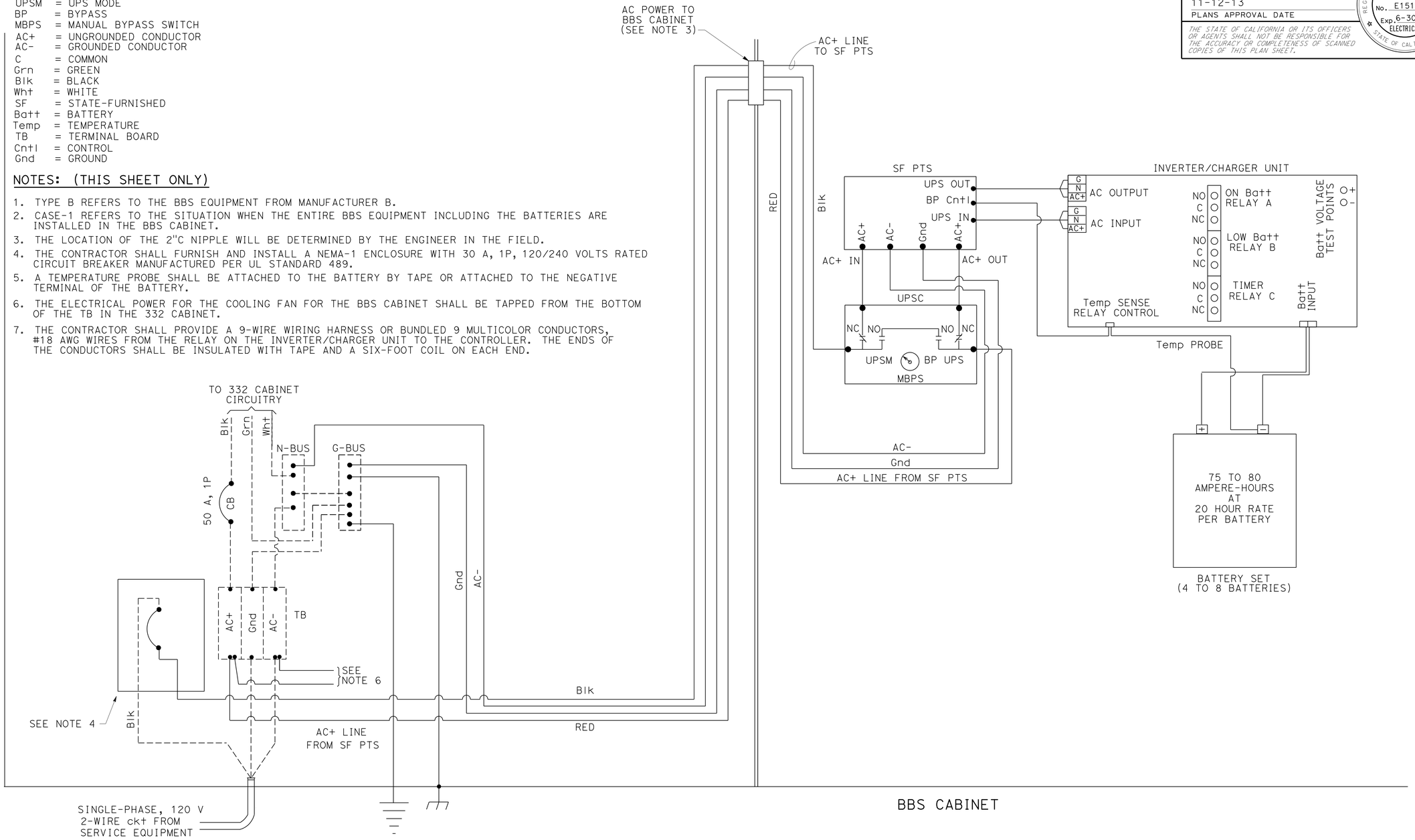

APPROVED FOR ELECTRICAL WORK ONLY

ELECTRICAL DETAILS

NO SCALE **E-5**

STATE OF CALIFORNIA - DEPARTMENT OF TRANSPORTATION
Caltrans ELECTRICAL DESIGN B
FUNCTIONAL SUPERVISOR: KATHERINE DINH
CALCULATED-DESIGNED BY: THERESA A. GABRIEL
CHECKED BY: WALEED ABOUL-HOSN
REVISED BY
DATE REVISED

LAST REVISION 11-12-13
DATE PLOTTED => 18-NOV-2013
TIME PLOTTED => 09:51

Dist	COUNTY	ROUTE	POST MILES TOTAL PROJECT	SHEET No.	TOTAL SHEETS
08	SBd	395	16.2	18	28

Theresa Gabriel 11-12-13
REGISTERED ELECTRICAL ENGINEER DATE

11-12-13
PLANS APPROVAL DATE

REGISTERED PROFESSIONAL ENGINEER Theresa A. Gabriel No. E15129 Exp. 6-30-14 ELECTRICAL STATE OF CALIFORNIA

THE STATE OF CALIFORNIA OR ITS OFFICERS OR AGENTS SHALL NOT BE RESPONSIBLE FOR THE ACCURACY OR COMPLETENESS OF SCANNED COPIES OF THIS PLAN SHEET.

LEGEND: (THIS SHEET ONLY)

PTS = POWER TRANSFER SWITCH
UPS = UNINTERRUPTIBLE POWER SUPPLY
UPSC = UNINTERRUPTIBLE POWER SUPPLY CONTROLLER
UPSM = UPS MODE
BP = BYPASS
MBPS = MANUAL BYPASS SWITCH
AC+ = UNGROUNDED CONDUCTOR
AC- = GROUNDED CONDUCTOR
C = COMMON
Grn = GREEN
Blk = BLACK
Wht = WHITE
SF = STATE-FURNISHED
TB = TERMINAL BOARD
Cntl = CONTROL
Gnd = GROUND
Temp = TEMPERATURE
Batt = BATTERY

NOTES: (THIS SHEET ONLY)

1. TYPE A REFERS TO THE BBS EQUIPMENT FROM MANUFACTURER A.
2. CASE-1 REFERS TO THE SITUATION WHEN THE ENTIRE BBS EQUIPMENT INCLUDING THE BATTERIES ARE INSTALLED IN THE BBS CABINET.
3. THE LOCATION OF THE 2"C NIPPLE WILL BE DETERMINED BY THE ENGINEER IN THE FIELD.
4. THE CONTRACTOR SHALL FURNISH AND INSTALL A NEMA-1 ENCLOSURE WITH 30 A, 1P, 120/240 VOLTS RATED CIRCUIT BREAKER MANUFACTURED PER UL STANDARD 489.
5. A TEMPERATURE PROBE SHALL BE ATTACHED TO THE BATTERY BY TAPE OR ATTACHED TO THE NEGATIVE TERMINAL OF THE BATTERY.
6. THE ELECTRICAL POWER FOR THE COOLING FAN FOR THE BBS CABINET SHALL BE TAPPED FROM THE BOTTOM OF THE TB IN THE 332 CABINET.
7. THE CONTRACTOR SHALL PROVIDE A 9-WIRE WIRING HARNESS OR BUNDLED 9 MULTICOLOR CONDUCTORS, #18 AWG WIRES FROM THE RELAY ON THE INVERTER/CHARGER UNIT TO THE CONTROLLER. THE ENDS OF THE CONDUCTORS SHALL BE INSULATED WITH TAPE AND A SIX-FOOT COIL ON EACH END.

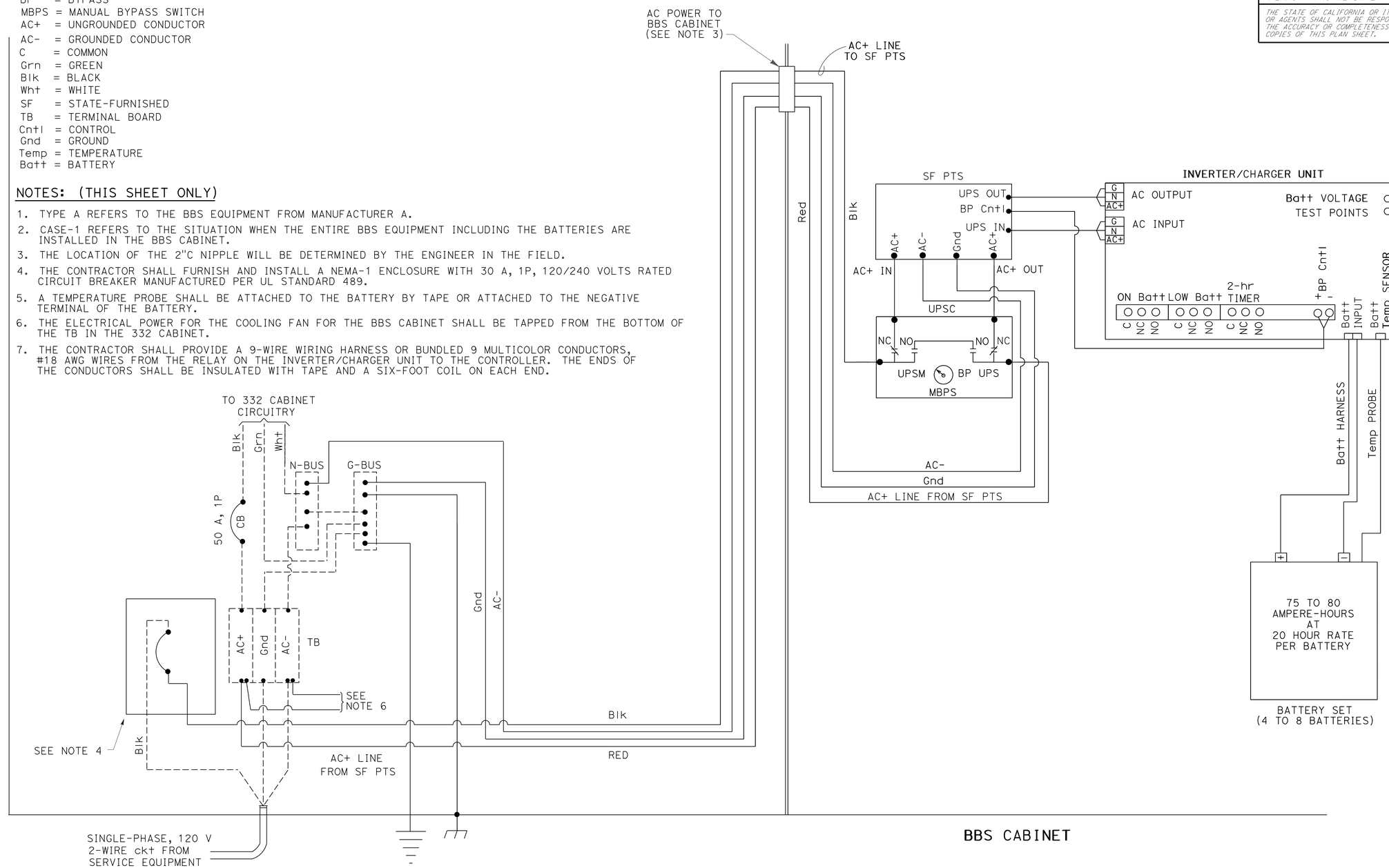

APPROVED FOR ELECTRICAL WORK ONLY

ELECTRICAL DETAILS

NO SCALE

E-6

STATE OF CALIFORNIA - DEPARTMENT OF TRANSPORTATION
Caltrans ELECTRICAL DESIGN B

FUNCTIONAL SUPERVISOR: KATHRINE DINH
CALCULATED-DESIGNED BY: THERESA A. GABRIEL
CHECKED BY: WALEED ABOUL-HOSN
REVISED BY
DATE REVISED

LAST REVISION 11-12-13
DATE PLOTTED => 18-NOV-2013
TIME PLOTTED => 09:51

Dist	COUNTY	ROUTE	POST MILES TOTAL PROJECT	SHEET No.	TOTAL SHEETS
08	SBd	395	16.2	19	28

REGISTERED ELECTRICAL ENGINEER — DATE 11-12-13

PLANS APPROVAL DATE 11-12-13

REGISTERED PROFESSIONAL ENGINEER — KATHERINE DINH — No. E17157 — Exp. 9-30-15 — ELECTRICAL — STATE OF CALIFORNIA

THE STATE OF CALIFORNIA OR ITS OFFICERS OR AGENTS SHALL NOT BE RESPONSIBLE FOR THE ACCURACY OR COMPLETENESS OF SCANNED COPIES OF THIS PLAN SHEET.

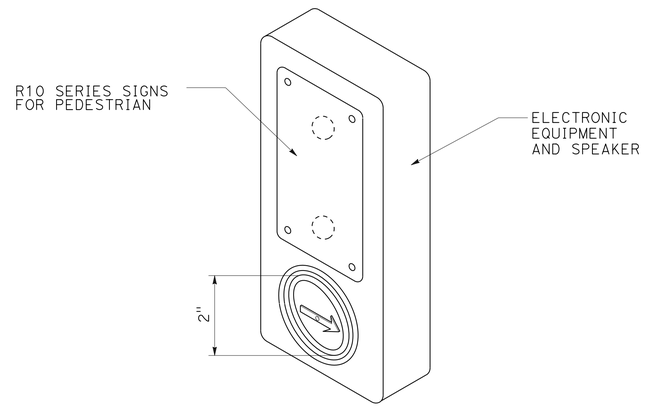

ACCESSIBLE PEDESTRIAN SIGNAL

DETAIL A

PERSON WALKING INTERVAL

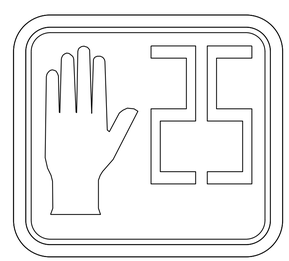

FLASHING UPRAISED HAND INTERVAL

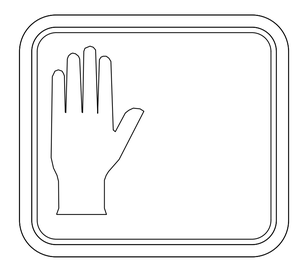

STEADY UPRAISED HAND INTERVAL

PEDESTRIAN SIGNAL MODULE WITH COUNTDOWN

DETAIL B

ELECTRICAL DETAILS

NO SCALE

E-7

STATE OF CALIFORNIA - DEPARTMENT OF TRANSPORTATION

Caltrans® **ELECTRICAL DESIGN B**

FUNCTIONAL SUPERVISOR: KATHERINE DINH

CALCULATED-DESIGNED BY: KATHERINE DINH

CHECKED BY:

REVISED BY:

DATE REVISED:

LAST REVISION 11-12-13 | DATE PLOTTED => 18-NOV-2013 | TIME PLOTTED => 09:51

Dist	COUNTY	ROUTE	POST MILES TOTAL PROJECT	SHEET No.	TOTAL SHEETS
08	SBd	395	16.2	20	28

REGISTERED ELECTRICAL ENGINEER 11-12-13 DATE

11-12-13
PLANS APPROVAL DATE

REGISTERED PROFESSIONAL ENGINEER
KATHERINE DINH
No. E17157
Exp. 9-30-15
ELECTRICAL
STATE OF CALIFORNIA

THE STATE OF CALIFORNIA OR ITS OFFICERS OR AGENTS SHALL NOT BE RESPONSIBLE FOR THE ACCURACY OR COMPLETENESS OF SCANNED COPIES OF THIS PLAN SHEET.

LEGEND:

1. THE QUANTITIES ON THIS SHEET ARE NOT A SEPARATE PAY ITEM AND ARE FOR INFORMATION ONLY.

MODIFY SIGNAL AND LIGHTING

SHEET No.	2 "C TYPE 3	3"C TYPE 3	4"C TYPE 3	No. 5 PB	No. 6 PB	No. 8 (G)	No. 6 CONDUCTOR	No. 8 CONDUCTOR	3 CSC CABLE	12 CSC CABLE	DLC CABLE	VIVIDS POWER CABLE	VIVIDS VIDEO CABLE	TYPE E LOOPS
	LF	LF	LF	EA	EA	LF	LF	LF	LF	LF	LF	LF	LF	EA
E-1	150	250	200	8	2	600	200	1200	1500	1500	3100	550	550	8

SHEET No.	TYPE III-CF SERVICE ENCLOSURE	SERVICE ENCLOSURE FOUNDATION	MODEL 332 CABINET	MODEL 332 CABINET FOUNDATION	1A POLES	19-4-100 POLES	26-4-100 POLES	FOUNDATION 1A	STANDARD FOUNDATION CASE 4	BATTERY BACK-UP SYSTEM				
	EA	EA	EA	EA	EA	EA	EA	EA	EA	EA				
E-1	1	1	1	1	4	2	2	4	4	1				

APPROVED FOR ELECTRICAL WORK ONLY

ELECTRICAL QUANTITIES

SCALE 1": 20'

E-8

CALCULATED-DESIGNED BY Waleed Aboul-Hosn
CHECKED BY Ferdinand Dela Cruz
REVISED BY
DATE REVISED
FUNCTIONAL SUPERVISOR KATHERINE DINH

STATE OF CALIFORNIA - DEPARTMENT OF TRANSPORTATION
Caltrans ELECTRICAL DESIGN B

LAST REVISION 11-12-13 DATE PLOTTED => 18-NOV-2013 TIME PLOTTED => 09:51

DIST	COUNTY	ROUTE	POST MILES TOTAL PROJECT	SHEET NO.	TOTAL SHEETS
08	SBd	395	16.2	21	28

REGISTERED CIVIL ENGINEER

April 20, 2012
PLANS APPROVAL DATE

REGISTERED PROFESSIONAL ENGINEER
Roberta L. McLaughlin
No. C40375
Exp. 3-31-13
CIVIL
STATE OF CALIFORNIA

The State of California or its officers or agents shall not be responsible for the accuracy or completeness of electronic copies of this plan sheet.

To accompany plans dated 11-12-13

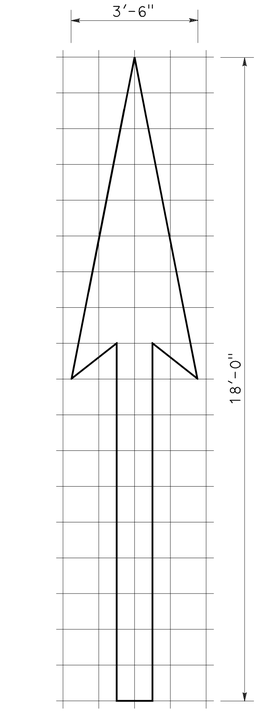

A=25 sq ft

TYPE I 18'-0" ARROW

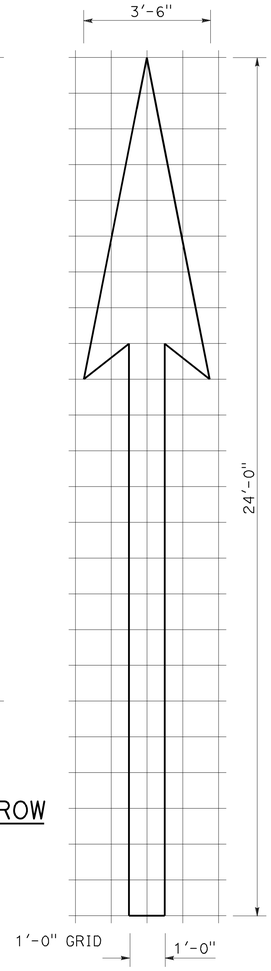

A=31 sq ft

TYPE I 24'-0" ARROW

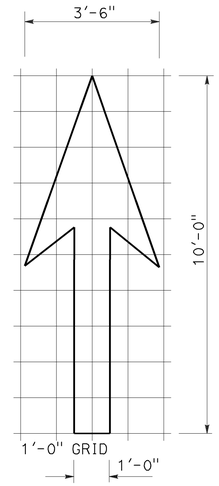

A=14 sq ft

TYPE I 10'-0" ARROW

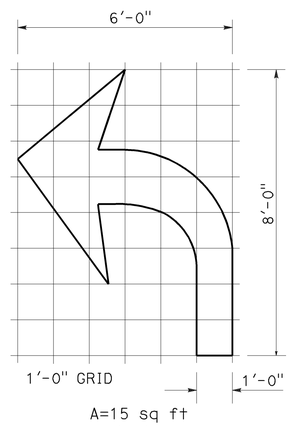

A=15 sq ft

TYPE IV (L) ARROW

(FOR TYPE IV (R) ARROW, USE MIRROR IMAGE)

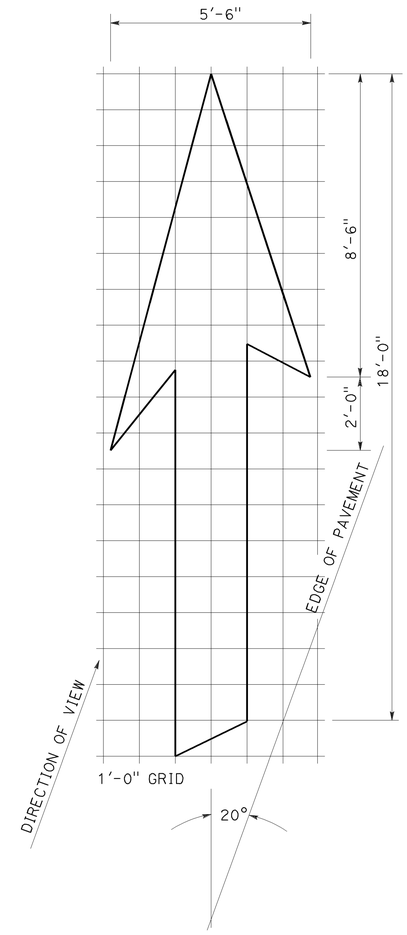

A=42 sq ft

TYPE VI ARROW

RIGHT LANE DROP ARROW (FOR LEFT LANE, USE MIRROR IMAGE)

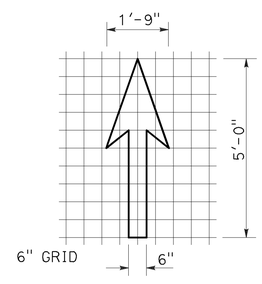

A=3.5 sq ft

BIKE LANE ARROW

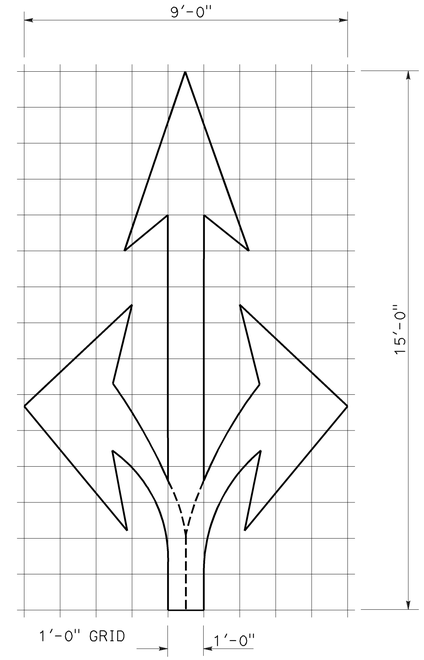

A=36 sq ft

TYPE VIII ARROW

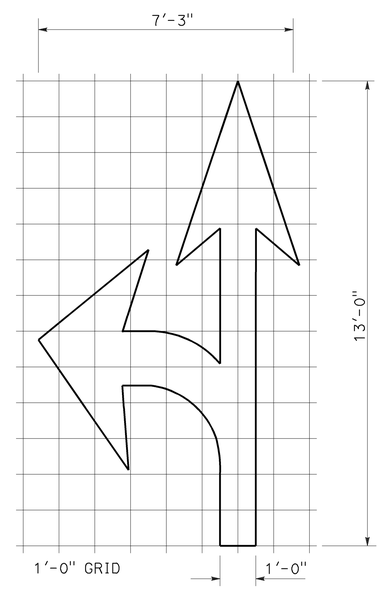

A=27 sq ft

TYPE VII (L) ARROW

(FOR TYPE VII (R) ARROW, USE MIRROR IMAGE)

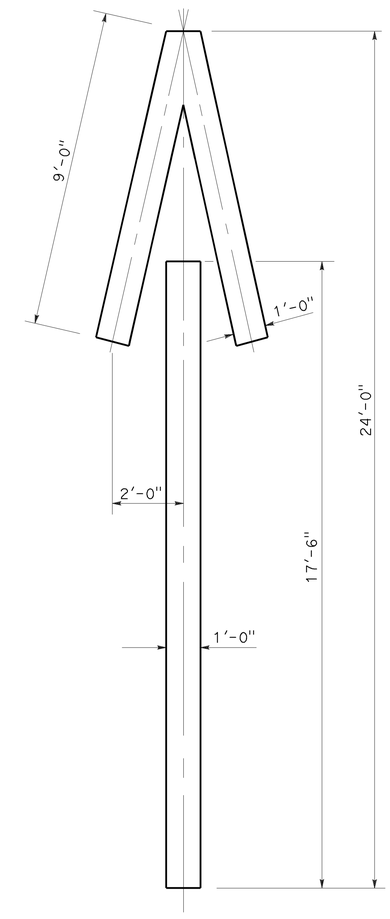

A=33 sq ft

TYPE V ARROW

NOTE:
MINOR VARIATIONS IN DIMENSIONS MAY BE ACCEPTED BY THE ENGINEER.

STATE OF CALIFORNIA
DEPARTMENT OF TRANSPORTATION

PAVEMENT MARKINGS ARROWS

NO SCALE

RSP A24A DATED APRIL 20, 2012 SUPERSEDES STANDARD PLAN A24A DATED MAY 1, 2006 - PAGE 9 OF THE STANDARD PLANS BOOK DATED MAY 2006.

REVISED STANDARD PLAN RSP A24A

2006 REVISED STANDARD PLAN RSP A24A

3-14-12

DIST	COUNTY	ROUTE	POST MILES TOTAL PROJECT	SHEET NO.	TOTAL SHEETS
08	SBd	395	16.2	22	28

REGISTERED CIVIL ENGINEER

July 20, 2012
PLANS APPROVAL DATE

REGISTERED PROFESSIONAL ENGINEER
Roberta L. McLaughlin
No. C40375
Exp. 3-31-13
CIVIL
STATE OF CALIFORNIA

The State of California or its officers or agents shall not be responsible for the accuracy or completeness of electronic copies of this plan sheet.

To accompany plans dated 11-12-13

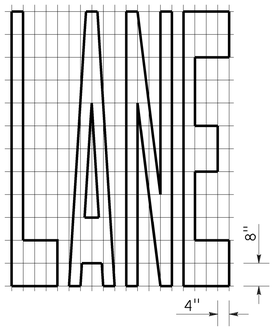

A=24 ft^2

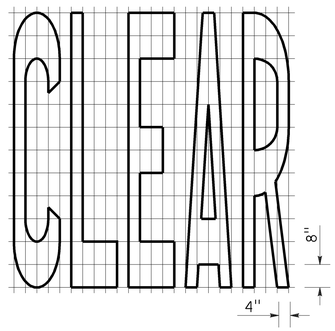

A=27 ft^2

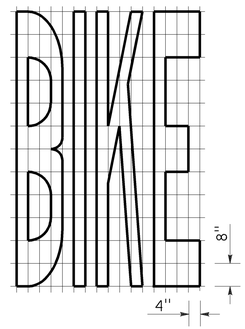

A=21 ft^2

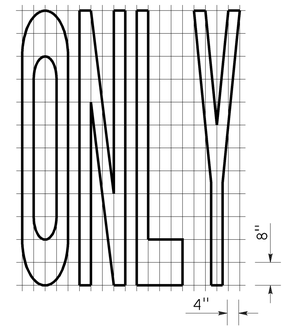

A=22 ft^2

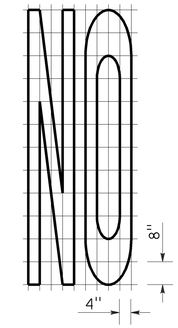

A=14 ft^2

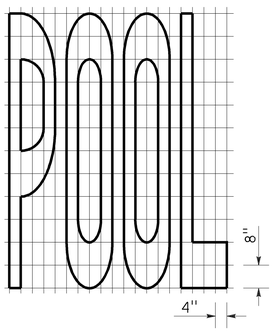

A=23 ft^2

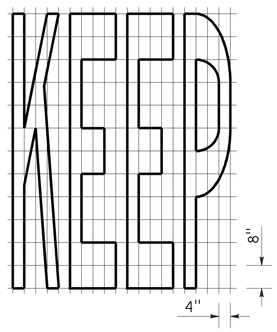

A=24 ft^2

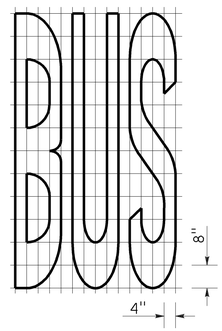

A=20 ft^2

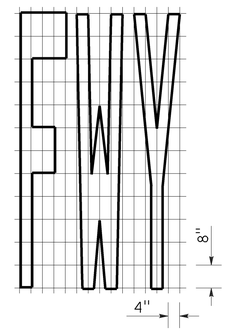

A=16 ft^2

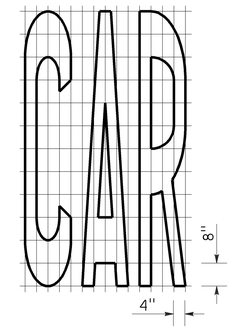

A=17 ft^2

WORD MARKINGS			
ITEM	ft^2	ITEM	ft^2
LANE	24	NO	14
POOL	23	BIKE	21
CAR	17	BUS	20
CLEAR	27	ONLY	22
KEEP	24	FWY	16

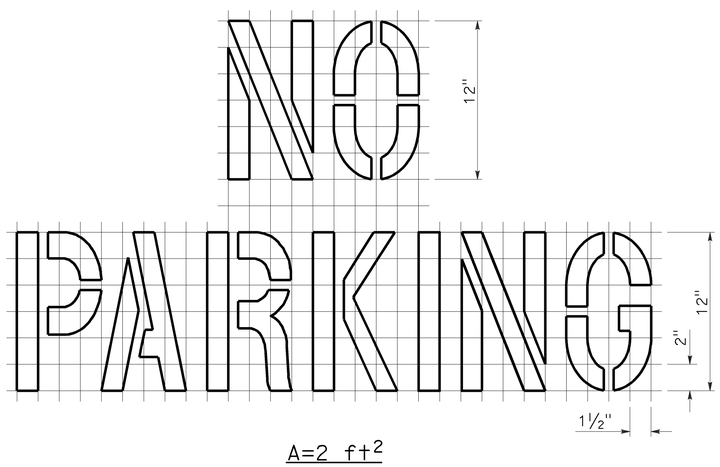

A=2 ft^2
See Notes 6 and 7

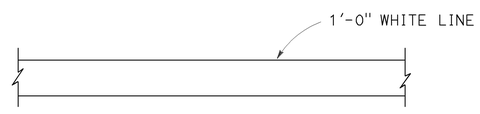

LIMIT LINE (STOP LINE)

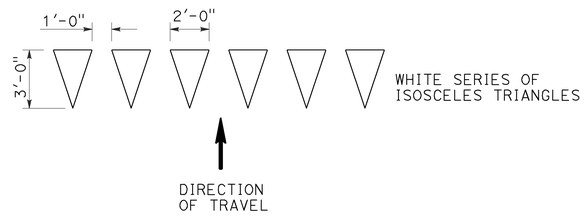

YIELD LINE

1. If a message consists of more than one word, it should read "UP", i.e., the first word should be nearest the driver.
2. The space between words should be at least four times the height of the characters for low speed roads, but not more than ten times the height of the characters. The space may be reduced appropriately where there is limited space because of local conditions.
3. Minor variations in dimensions may be accepted by the Engineer.
4. Portions of a letter, number or symbol may be separated by connecting segments not to exceed 2" in width.
5. The words "NO PARKING" pavement marking is to be used for parking facilities. For typical locations of markings, see Standard Plans A90A and A90B.
6. The words "NO PARKING", shall be painted in white letters no less than 1'-0" high on a contrasting background and located so that it is visible to traffic enforcement officials.

STATE OF CALIFORNIA
DEPARTMENT OF TRANSPORTATION

PAVEMENT MARKINGS WORDS, LIMIT AND YIELD LINES

NO SCALE

RSP A24E DATED JULY 20, 2012 SUPERSEDES STANDARD PLAN A24E
DATED MAY 1, 2006 - PAGE 13 OF THE STANDARD PLANS BOOK DATED MAY 2006.

REVISED STANDARD PLAN RSP A24E

2006 REVISED STANDARD PLAN RSP A24E

6-12-12

Dist	COUNTY	ROUTE	POST MILES TOTAL PROJECT	SHEET No.	TOTAL SHEETS
08	SBd	395	16.2	23	28

REGISTERED CIVIL ENGINEER

July 20, 2012
PLANS APPROVAL DATE

REGISTERED PROFESSIONAL ENGINEER
Roberta L. McLaughlin
No. C40375
Exp. 3-31-13
CIVIL
STATE OF CALIFORNIA

THE STATE OF CALIFORNIA OR ITS OFFICERS OR AGENTS SHALL NOT BE RESPONSIBLE FOR THE ACCURACY OR COMPLETENESS OF SCANNED COPIES OF THIS PLAN SHEET.

TO ACCOMPANY PLANS DATED 11-12-13

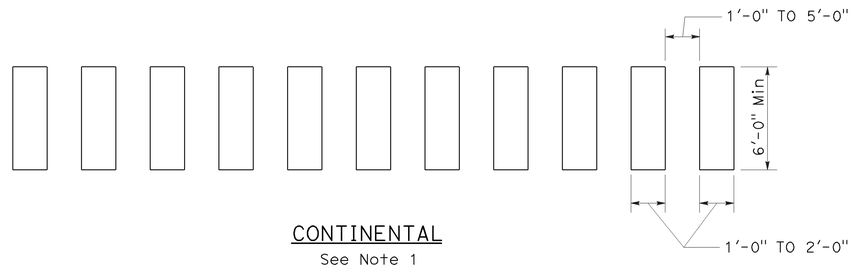

CONTINENTAL
See Note 1

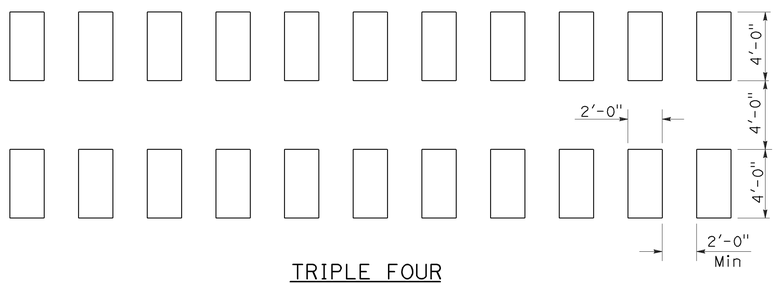

TRIPLE FOUR
See Note 1

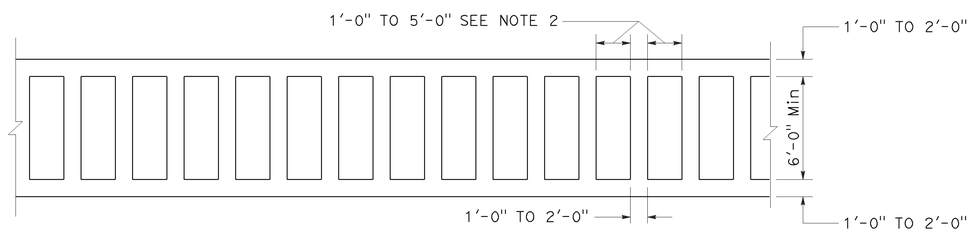

LADDER

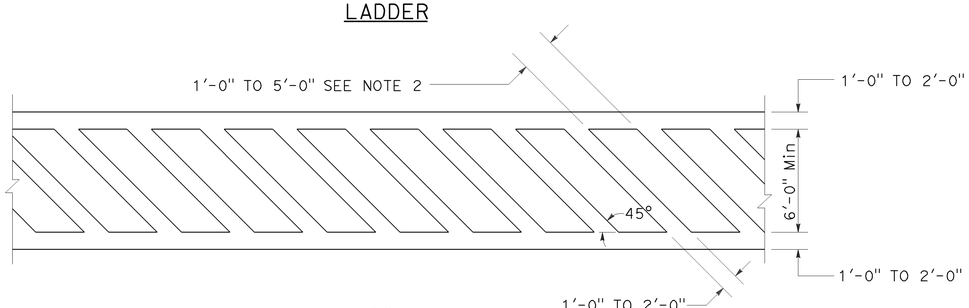

DIAGONAL

HIGHER VISIBILITY CROSSWALKS

NOTES:

1. Spaces between markings should be placed in wheel tracks of each lane.
2. Spacings not to exceed 2.5 times width of longitudinal line.
3. All crosswalk markings must be white except for those near schools must be yellow.

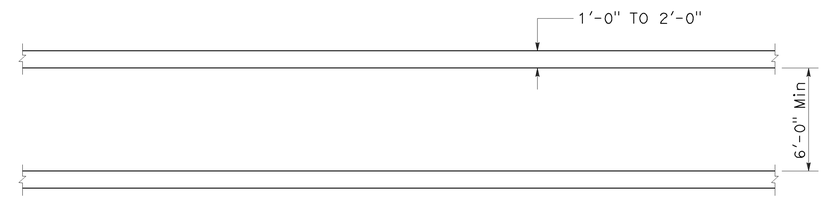

BASIC

STATE OF CALIFORNIA
DEPARTMENT OF TRANSPORTATION

PAVEMENT MARKINGS CROSSWALKS

NO SCALE

RSP A24F DATED JULY 20, 2012 SUPPLEMENTS THE STANDARD PLANS BOOK DATED 2010.

REVISED STANDARD PLAN RSP A24F

2010 REVISED STANDARD PLAN RSP A24F

6-28-12

DIST	COUNTY	ROUTE	POST MILES TOTAL PROJECT	SHEET NO.	TOTAL SHEETS
08	SBd	395	16.2	24	28

REGISTERED CIVIL ENGINEER

November 17, 2006
PLANS APPROVAL DATE

REGISTERED PROFESSIONAL ENGINEER Michael Janzen No. 44788 Exp. 03-31-08 CIVIL STATE OF CALIFORNIA

The State of California or its officers or agents shall not be responsible for the accuracy or completeness of electronic copies of this plan sheet.

To accompany plans dated 11-12-13

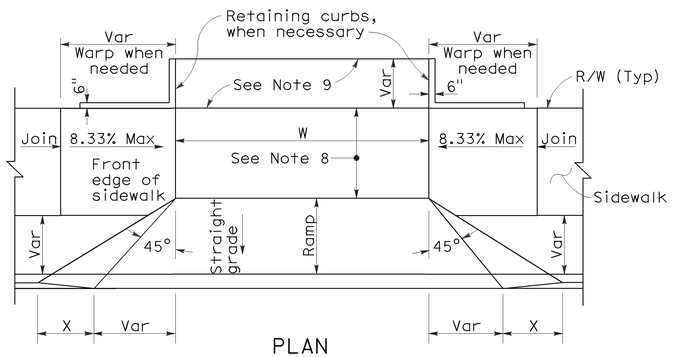

PLAN

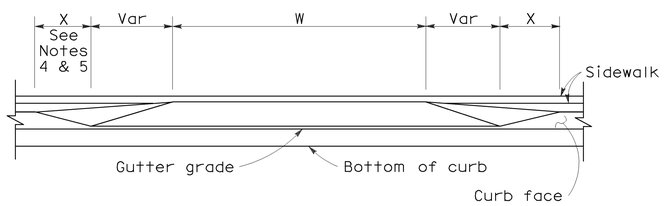

ELEVATION

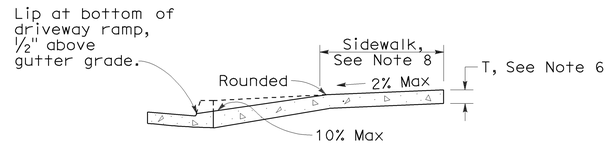

CASE A

Typical driveway, sidewalk not depressed

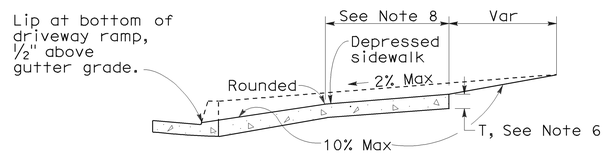

CASE B

Driveway with depressed sidewalk

SECTIONS

CURB QUANTITIES

TYPE	CUBIC YARDS PER LINEAR FOOT
A1-6	0.02585
A1-8	0.03084
A2-6	0.05903
A2-8	0.06379
A3-6	0.01036
A3-8	0.01435
B1-4	0.02185
B1-6	0.02930
B2-4	0.05515
B2-6	0.06171
B3-4	0.00641
B3-6	0.01074
B4	0.05709
D-4	0.04083
D-6	0.06804
E	0.06661

TABLE A

CURB TYPE	DIMENSIONS "H1"	"H2"	"W1"	"W2"
A1-6	1'-2"	6"	7½"	1½"
A1-8	1'-4"	8"	8"	2"
A2-6	1'-0"	6"	2'-7½"	1½"
A2-8	1'-2"	8"	2'-8"	2"
A3-6	6"	5"	7¼"	1¼"
A3-8	8"	7"	7¾"	1¾"
B1-4	1'-0"	4"	7½"	2½"
B1-6	1'-2"	6"	9"	4"
B2-4	10"	4"	2'-7½"	2½"
B2-6	1'-0"	6"	2'-9"	4"
B3-4	4"	3"	7"	2"
B3-6	6"	5"	8½"	3½"
D-4	10"	4"	1'-6"	1'-1"
D-6	1'-0"	6"	2'-2"	1'-8"

DRIVEWAYS

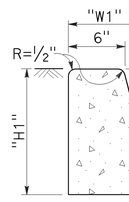

TYPE A1 CURBS

See Table A

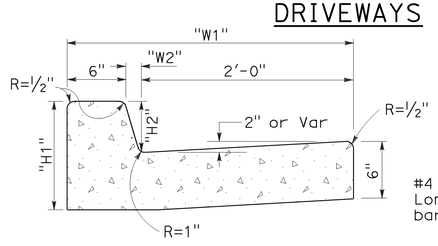

TYPE A2 CURBS

See Table A

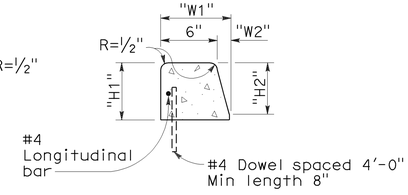

TYPE A3 CURBS

Superimposed on existing pavement
See Table A

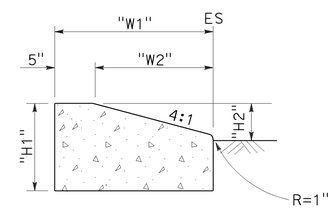

TYPE D CURBS

See Table A

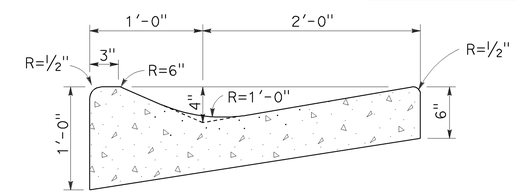

TYPE E CURB

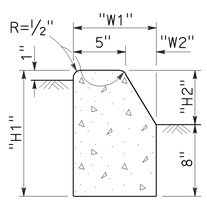

TYPE B1 CURBS

See Table A

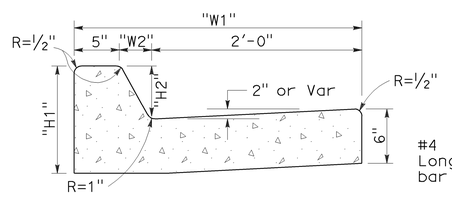

TYPE B2 CURBS

See Table A

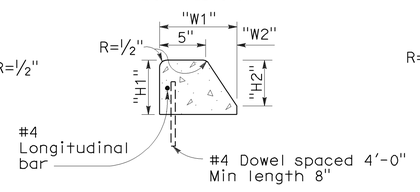

TYPE B3 CURBS

Superimposed on existing pavement
See Table A

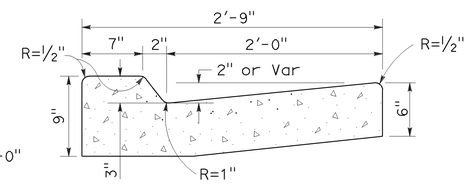

TYPE B4 CURBS

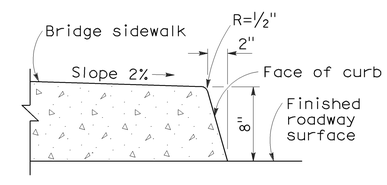

TYPE H CURB

On Bridges

CURBS

NOTES:

1. Case A driveway section typically applies.
2. Use Case B driveway section when ramp slopes would exceed 10% in Case A.
3. Use Case B driveway section when sidewalk cross slope would exceed 2% in Case A.
4. X=3'-0" except for curb heights over 10" where 4:1 slopes shall be used on curb slope.
5. X is a variable when sidewalk is located where wheelchairs may traverse the surface. Slopes shall not exceed 8.33%.
6. Sidewalk and ramp thickness "T" at driveway shall be 4" for residental and 6" for commercial.
7. Difference in slope of the driveway ramp and the slope of a line between the gutter and a point on the roadway 5'-0" from gutter line shall not exceed 15%. Reduce driveway ramp slope, not gutter slope, where required.
8. Minimum width of clear passageway for sidewalk shall be 4'-0".
9. Retaining curbs and acquisition of construction easement may be necessary for narrow sidewalks or curb heights in excess of 6".
10. Across the pedestrian route at curb ramp locations, the gutter pan slope shall not exceed 1" of depth for each 2'-0" of width.

STATE OF CALIFORNIA
DEPARTMENT OF TRANSPORTATION

CURBS AND DRIVEWAYS

NO SCALE

RSP A87A DATED NOVEMBER 17, 2006 SUPERSEDES STANDARD PLAN A87A DATED MAY 1, 2006 - PAGE 113 OF THE STANDARD PLANS BOOK DATED MAY 2006.

REVISED STANDARD PLAN RSP A87A

2006 REVISED STANDARD PLAN RSP A87A

10-25-06

DIST	COUNTY	ROUTE	POST MILES TOTAL PROJECT	SHEET NO.	TOTAL SHEETS
08	SBd	395	16.2	25	28

REGISTERED CIVIL ENGINEER

September 1, 2006
PLANS APPROVAL DATE

REGISTERED PROFESSIONAL ENGINEER Hector David Cordova No. C41957 Exp. 3-31-08 CIVIL STATE OF CALIFORNIA

The State of California or its officers or agents shall not be responsible for the accuracy or completeness of electronic copies of this plan sheet.

To accompany plans dated 11-12-13

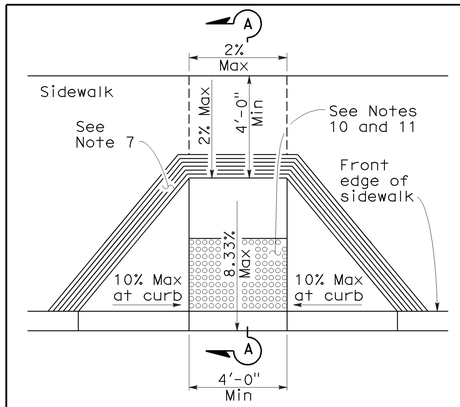

CASE A

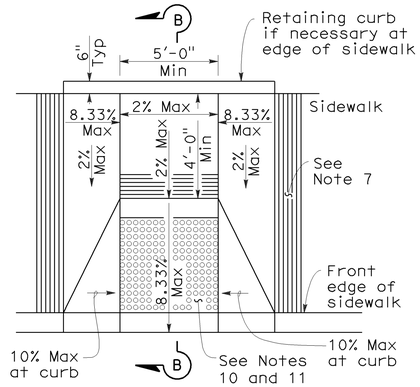

CASE B

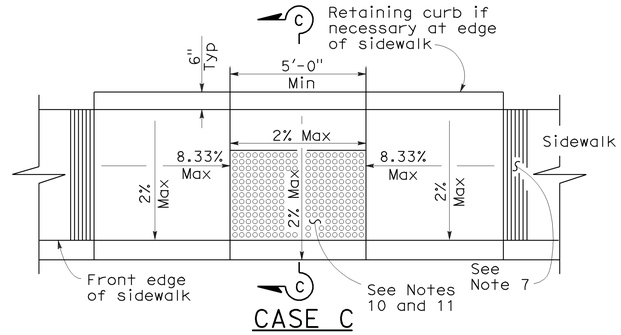

CASE C

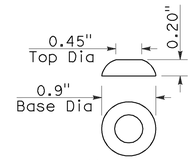

RAISED TRUNCATED DOME

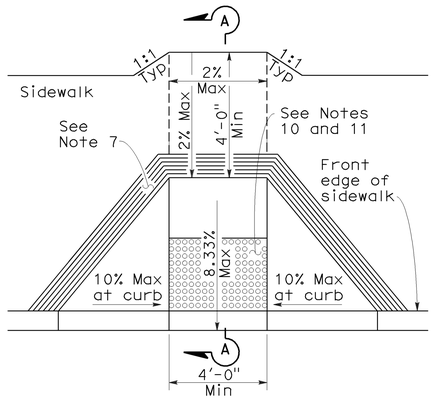

CASE D

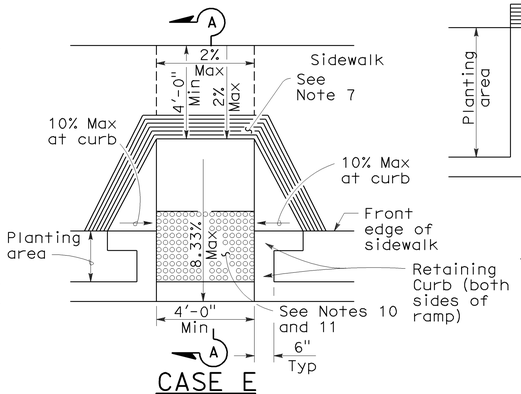

CASE E

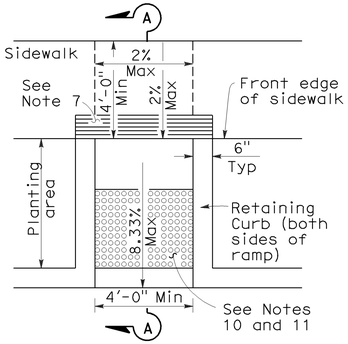

CASE F

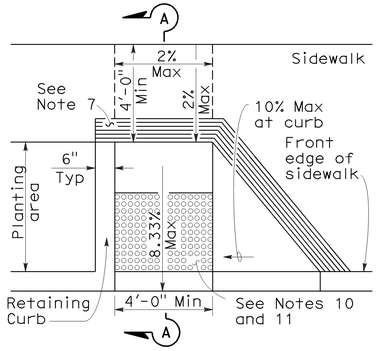

CASE G
See Note 4

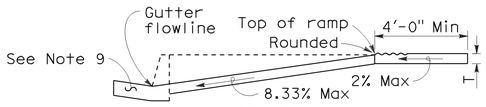

SECTION A-A

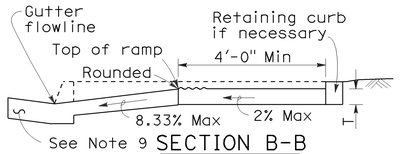

SECTION B-B
Depress entire sidewalk as required

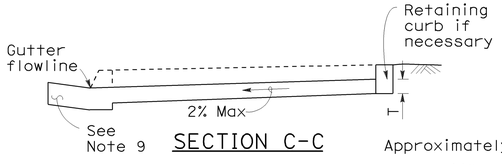

SECTION C-C

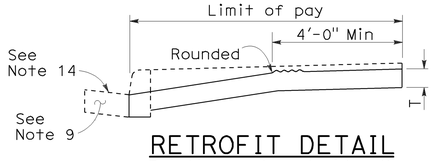

RETROFIT DETAIL
Existing curb and sidewalk

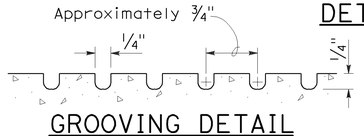

GROOVING DETAIL

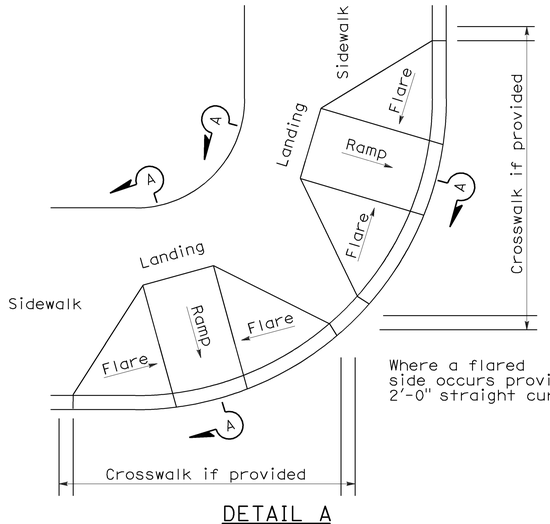

DETAIL A
TYPICAL TWO-RAMP CORNER INSTALLATION
See Note 1

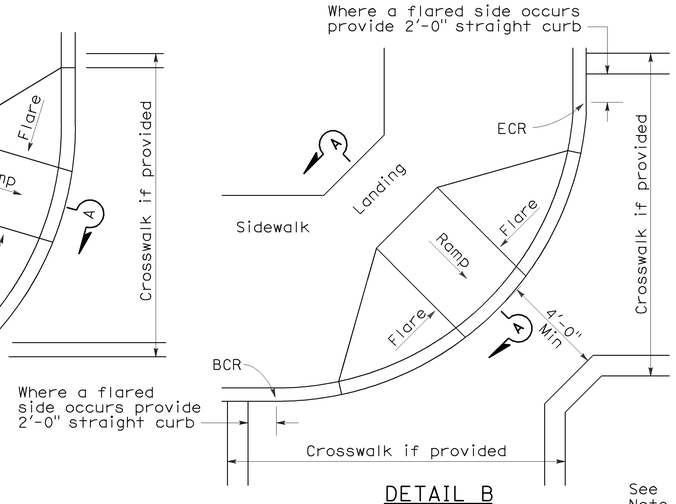

DETAIL B
TYPICAL ONE-RAMP CORNER INSTALLATION
See Notes 1 and 3

NOTES:

1. As site conditions dictate, Case A through Case G curb ramps may be used for corner installations similar to those shown in Detail A and Detail B. The case of curb ramps used in Detail A do not have to be the same. Case A through Case G curb ramps also may be used at mid block locations, as site conditions dictate.
2. If distance from curb to back of sidewalk is too short to accommodate ramp and 4'-0" platform (landing) as shown in Case A, the sidewalk may be depressed longitudinally as in Case B, or C or may be widened as in Case D.
3. When ramp is located in center of curb return, crosswalk configuration must be similar to that shown for Detail B.
4. As site conditions dictate, the retaining curb side and the flared side of the Case G ramp shall be constructed in reversed position.
5. If located on a curve, the sides of the ramp need not be parallel, but the minimum width of the ramp shall be 4'-0".
6. Side slope of ramp flares vary uniformly from a maximum of 10% at curb to conform with longitudinal sidewalk slope adjacent to top of the ramp, except in Case C and Case F.
7. The curb ramp shall be outlined, as shown, with a 1'-0" wide border with 1/4" grooves approximately 3/4" on center. See grooving detail.
8. Transitions from ramps and landing to walks, gutters or streets shall be flush and free of abrupt changes.
9. Maximum slopes of adjoining gutters, the road surface immediately adjacent to the curb ramp or accessible route shall not exceed 5 percent within 4'-0" of the top and bottom of the curb ramp.
10. Curb ramps shall have a detectable warning surface that extends the full width and 3'-0" depth of the ramp. Detectable Warning Surfaces shall conform to the details on this plan and the requirements in the Special Provisions.
11. The edge of the detectable warning surface nearest the street shall be between 6" and 8" from the gutter flowline.
12. Sidewalk and ramp thickness, "T", shall be 3½" minimum.
13. Utility pull boxes, manholes, vaults and all other utility facilities within the boundaries of the curb ramp will be relocated or adjusted to grade by the owner prior to, or in conjunction with, curb ramp construction.
14. For retrofit conditions, removal and replacement of curb apron will be at the Contractor's option, unless otherwise shown on project plans.

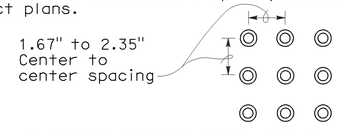

RAISED TRUNCATED DOME PATTERN (IN-LINE)
DETECTABLE WARNING SURFACE
See Note 10

STATE OF CALIFORNIA
DEPARTMENT OF TRANSPORTATION

CURB RAMP DETAILS

NO SCALE

RSP A88A DATED SEPTEMBER 1, 2006 SUPERSEDES STANDARD PLAN A88A
DATED MAY 1, 2006 - PAGE 115 OF THE STANDARD PLANS BOOK DATED MAY 2006.

REVISED STANDARD PLAN RSP A88A

2006 REVISED STANDARD PLAN RSP A88A

8-3-06

DIST	COUNTY	ROUTE	POST MILES TOTAL PROJECT	SHEET NO.	TOTAL SHEETS
08	SBd	395	16.2	26	28

REGISTERED CIVIL ENGINEER

June 6, 2008
PLANS APPROVAL DATE

REGISTERED PROFESSIONAL ENGINEER
Raymond Don Tsztoo
No. C37332
Exp. 6-30-08
CIVIL
STATE OF CALIFORNIA

The State of California or its officers or agents shall not be responsible for the accuracy or completeness of electronic copies of this plan sheet.

To accompany plans dated 11-12-13

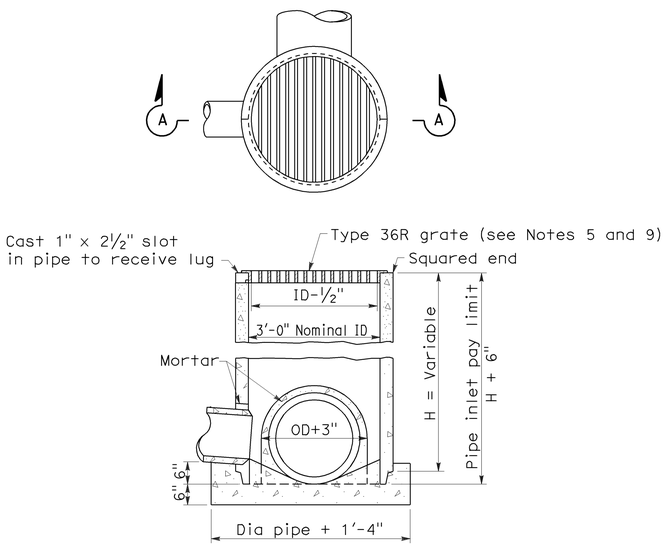

SECTION A-A

TYPE GCP

CONCRETE PIPE INLET WITH GRATE

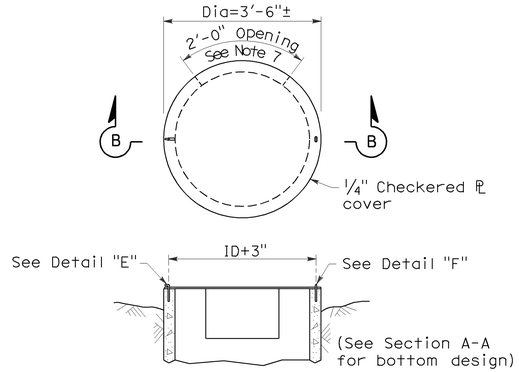

SECTION B-B

TYPE OCP or OCPI

CONCRETE PIPE INLET WITH STEEL COVER
(See Note 6)

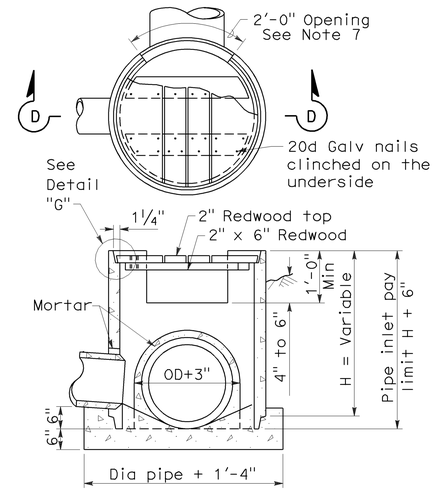

SECTION D-D

TYPE OCP or OCPI

CONCRETE PIPE INLET WITH REDWOOD COVER
(See Notes 6 and 10)

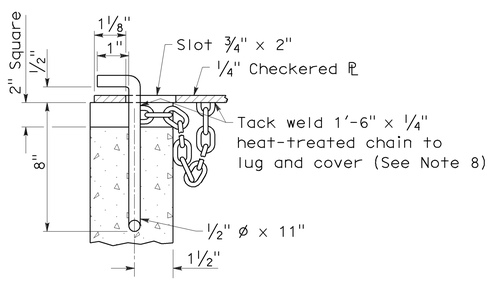

DETAIL "E"

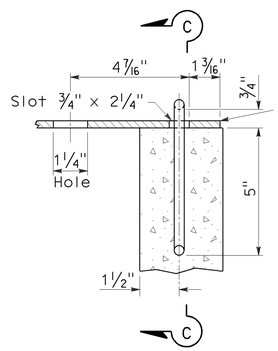

DETAIL "F"

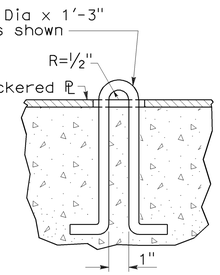

SECTION C-C

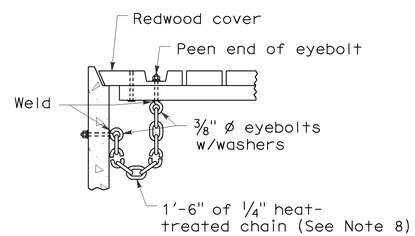

DETAIL "G"

NOTES:

1. For details of steel pipe inlets, see Standard Plan D75A.
2. For details of ladder and steps and when ladder or steps are required, see Standard Plan D75C.
3. Inlet pipes shall not protrude into basin.
4. Except for inlets used for junction boxes, basin floors shall have minimum slope of 4:1 from all directions toward outlet pipe, and a wood trowel finish.
5. See Revised Standard Plan RSP D77A and Standard Plan D77B for Grate and Frame Details and Weights of Miscellaneous Iron and Steel.
6. Designation of Type OCPI pipe inlets on plans indicates trash racks are to be furnished and installed on all side openings. See Standard Plan D75C for Trash Rack details.
7. More than one side opening may be required. Location and number as ordered by the Engineer. Opening may be cast in pipe.
8. Chain to be provided when specified.
9. Place pipe so bars of grate will be parallel with main surface flow.
10. Redwood covers shall only be placed at locations designated on the plans.

STATE OF CALIFORNIA
DEPARTMENT OF TRANSPORTATION

CONCRETE PIPE INLETS

NO SCALE

RSP D75B DATED JUNE 6, 2008 SUPERSEDES STANDARD PLAN D75B
DATED MAY 1, 2006 - PAGE 153 OF THE STANDARD PLANS BOOK DATED MAY 2006.

REVISED STANDARD PLAN RSP D75B

2006 REVISED STANDARD PLAN RSP D75B

5-20-08

DIST	COUNTY	ROUTE	POST MILES TOTAL PROJECT	SHEET NO.	TOTAL SHEETS
08	SBd	395	16.2	27	28

REGISTERED ELECTRICAL ENGINEER

January 20, 2012
PLANS APPROVAL DATE

REGISTERED PROFESSIONAL ENGINEER
Jeffery G. McRae
No. E14512
Exp. 6-30-12
ELECTRICAL
STATE OF CALIFORNIA

THE STATE OF CALIFORNIA OR ITS OFFICERS OR AGENTS SHALL NOT BE RESPONSIBLE FOR THE ACCURACY OR COMPLETENESS OF SCANNED COPIES OF THIS PLAN SHEET.

TO ACCOMPANY PLANS DATED 11-12-13

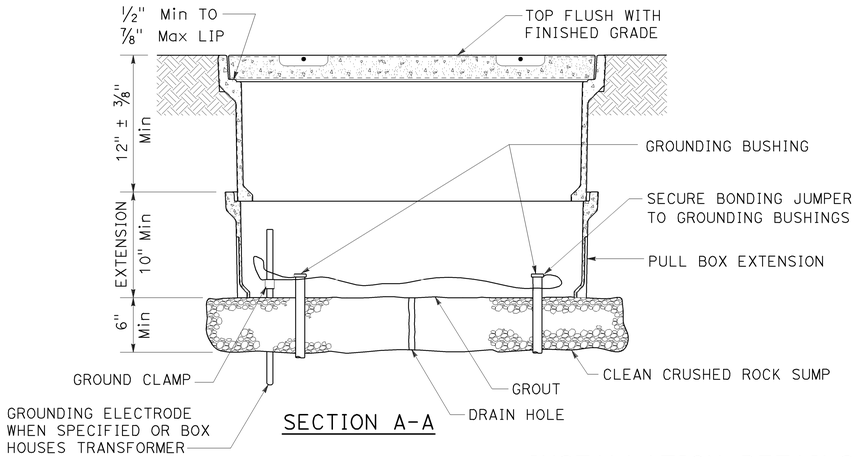

SECTION A-A

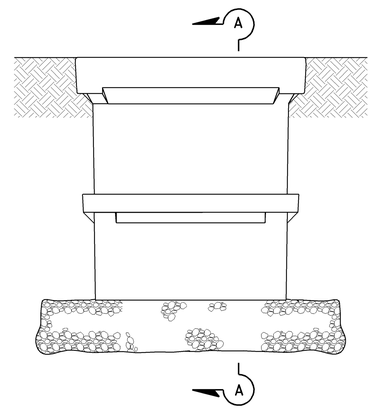

SIDE VIEW

INSTALLATION DETAILS

DETAIL A

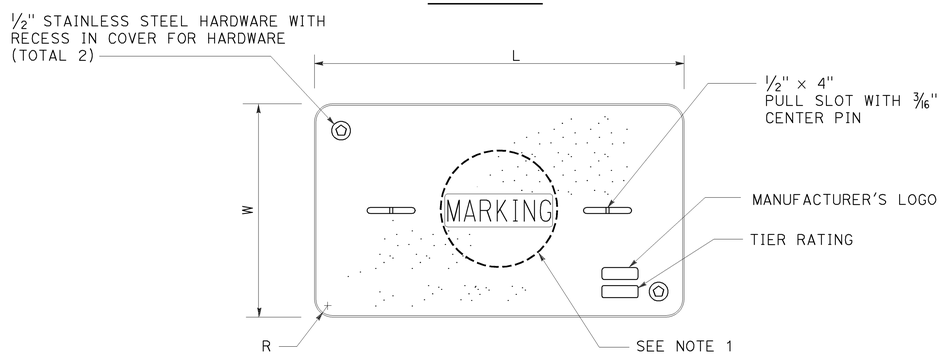

COVER TOP VIEW

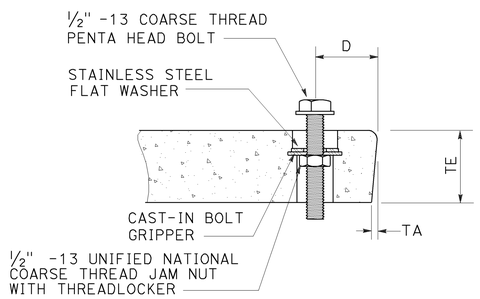

TYPICAL COVER CAPTIVE BOLT

OR SIMILAR

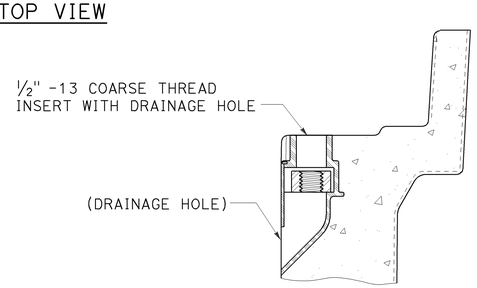

TYPICAL THREADED INSERT

OR SIMILAR

DIMENSION TABLE

PULL BOX	PULL BOX			COVER						
	MINIMUM DEPTH BOX	MINIMUM DEPTH EXTENSION	MAXIMUM WEIGHT	L	W	R	TE	TA	D	MAXIMUM WEIGHT
No. 3½	12"	N/A	40 lb	1' - 3⅜"	10⅛"	1⅜"	2"	⅛"	1¾"	30 lb
No. 5	12"	10"	55 lb	1' - 11¼"	1' - 1¾"	1⅜"	2"	⅛"	1¾"	60 lb
No. 6	12"	10"	70 lb	2' - 6½"	1' - 5½"	1⅜"	2"	⅛"	2"	85 lb

NOTES ON PULL BOXES:

1. Pull box covers must be marked as follows: "SERVICE" Service circuits between service point and service disconnect; "SPRINKLER-CONTROL" sprinkler control circuits, 50 V or less; "CALTRANS" on all pull boxes, except pull boxes marked "SPRINKLER-CONTROL"; and "TELEPHONE" Telephone service;

   A) No. 3½ pull box.

   1) "SIGNAL" - Traffic signal circuits with or without street or sign lighting circuits.

   2) "ST LIGHTING" - Street or sign lighting circuits where voltage is under 600 V.

   B) No. 5, 6, 9 or 9A pull box.

   1) "TRAFFIC SIGNAL" - Traffic signal circuits with or without street or sign lighting circuits.
   2) "STREET LIGHTING" - Street or sign lighting circuits where voltage is under 600 V.
   3) "STREET LIGHTING-HIGH VOLTAGE" - Street or sign lighting circuits where voltage is above 600 V.
   4) "IRRIGATION" - Circuits to irrigation controller 120 V or more.
   5) "RAMP METER" - Ramp meter circuits.
   6) "COUNT STATION" - Count or speed monitor circuits.
   7) "COMMUNICATIONS" - Communication circuits.
   8) "TOS COMMUNICATIONS" - TOS communication line.
   9) "TOS POWER" - TOS power.
   10) "TDC POWER" - Telephone demarcation cabinet power.
   11) "CCTV" - Closed circuit television circuits.
   12) "TMS" - Traffic monitoring station circuits.
   13) "CMS" - Changeable message sign circuits.
   14) "HAR" - Highway advisory radio circuits.

2. The nominal dimensions of the opening in which the cover sets must be the same as the cover dimensions (L and W) plus ⅛" or greater.

3. Covers and boxes must be interchangeable with California Standard. When interchanged with a standard, the top surfaces must be flush within ⅛". Top outside radius of covers and pull boxes must have a ⅛" radius.

4. Pull box extension may be another pull box as long as the bottom edge of the pull box can fit into the cover opening.

STATE OF CALIFORNIA
DEPARTMENT OF TRANSPORTATION

ELECTRICAL SYSTEMS (PULL BOX)

NO SCALE

RSP ES-8A DATED JANUARY 20, 2012 SUPPLEMENTS THE STANDARD PLANS BOOK DATED 2010.

REVISED STANDARD PLAN RSP ES-8A

2010 REVISED STANDARD PLAN RSP ES-8A

01-09-12

Dist	COUNTY	ROUTE	POST MILES TOTAL PROJECT	SHEET No.	TOTAL SHEETS
08	SBd	395	16.2	28	28

REGISTERED ELECTRICAL ENGINEER

July 20, 2012
PLANS APPROVAL DATE

REGISTERED PROFESSIONAL ENGINEER
Jeffery G. McRae
No. E14512
Exp. 6-30-14
ELECTRICAL
STATE OF CALIFORNIA

THE STATE OF CALIFORNIA OR ITS OFFICERS OR AGENTS SHALL NOT BE RESPONSIBLE FOR THE ACCURACY OR COMPLETENESS OF SCANNED COPIES OF THIS PLAN SHEET.

TO ACCOMPANY PLANS DATED 11-12-13

ISOFOOTCANDLE CURVE - MINIMUM

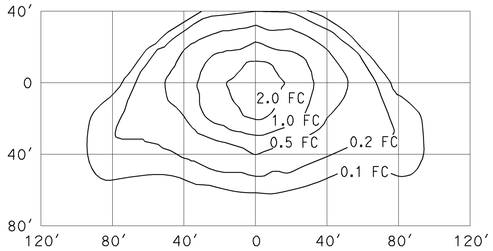

TYPE III MEDIUM CUTOFF

Cutoff Luminaire
34′ Mounting Height
Lamp operated at 22,000 lm
200-W high pressure sodium lamp
ANSI Designation S66

ISOFOOTCANDLE CURVE - MINIMUM

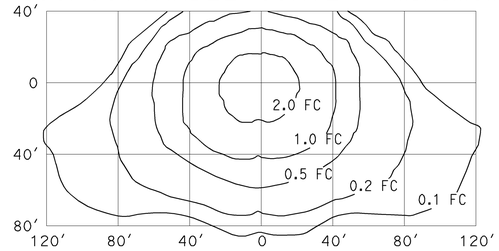

TYPE III MEDIUM CUTOFF

Cutoff Luminaire
40′ Mounting Height
Lamp operated at 37,000 lm
310-W high pressure sodium lamp
ANSI Designation S67

ISOFOOTCANDLE CURVE - MINIMUM

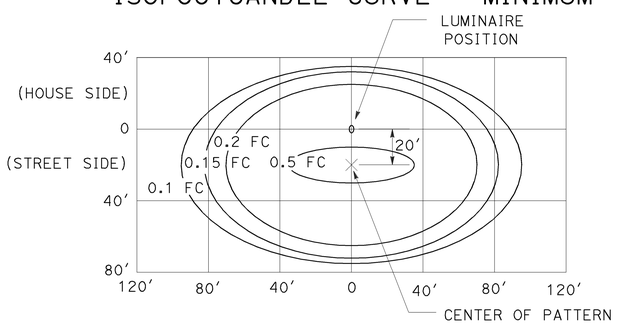

LED LUMINAIRE ROADWAY 1

200-W HPS Equivalent at 34′ Mounting Height

ISOFOOTCANDLE CURVE - MINIMUM

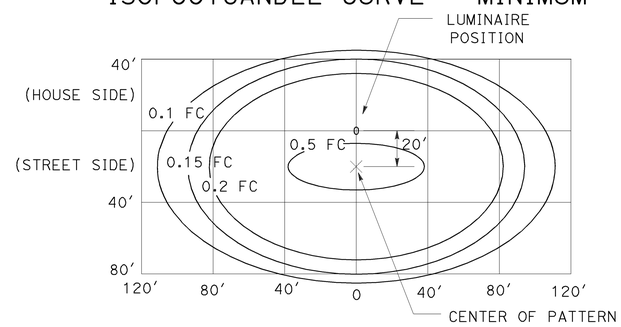

LED LUMINAIRE ROADWAY 2

310-W HPS Equivalent at 40′ Mounting Height

ISOFOOTCANDLE CURVE - MINIMUM

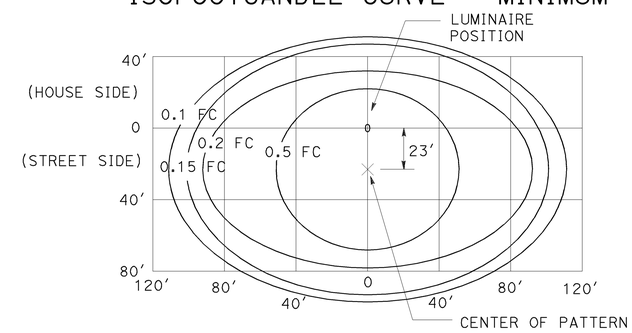

LED LUMINAIRE ROADWAY 4

400-W HPS Equivalent at 40′ Mounting Height

ISOFOOTCANDLE CURVE - MINIMUM

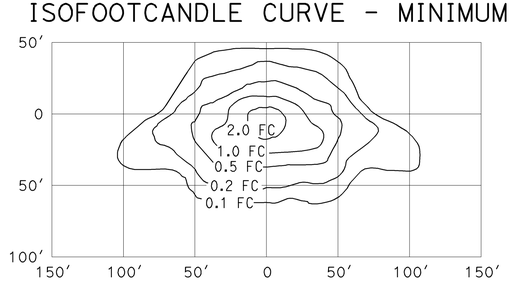

TYPE III MEDIUM CUTOFF

Cutoff Luminaire
30′ Mounting Height
Lamp operated at 16,000 lm
150-W high pressure sodium lamp
ANSI Designation S55

ISOFOOTCANDLE CURVE - MINIMUM

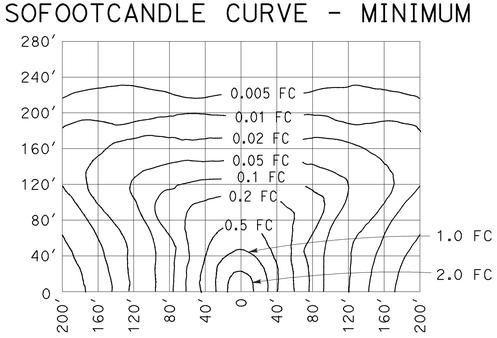

LOW PRESSURE SODIUM LUMINAIRE

40′ Mounting Height
Lamp operated at 33,000 lm
180-W low pressure sodium lamp

STATE OF CALIFORNIA
DEPARTMENT OF TRANSPORTATION

ELECTRICAL SYSTEMS (ISOFOOTCANDLE DIAGRAMS)

NO SCALE

RSP ES-10A DATED JULY 20, 2012 SUPPLEMENTS THE STANDARD PLANS BOOK DATED 2010.

REVISED STANDARD PLAN RSP ES-10A

2010 REVISED STANDARD PLAN RSP ES-10A

2-16-12