DIST	COUNTY	ROUTE	POST MILES TOTAL PROJECT	SHEET No.	TOTAL SHEETS
08	Riv,SBd	91,215	21.5/21.7, 43.2/45.2,0.0/5.1	1301	1743

LICENSED LANDSCAPE ARCHITECT 3-29-12 DATE

4-16-12
PLANS APPROVAL DATE

LICENSED LANDSCAPE ARCHITECT
RAY DESSELLE
No. 2916
Exp. 11-30-13
STATE OF CALIFORNIA

The State of California or its officers or agents shall not be responsible for the accuracy or completeness of electronic copies of this plan sheet.

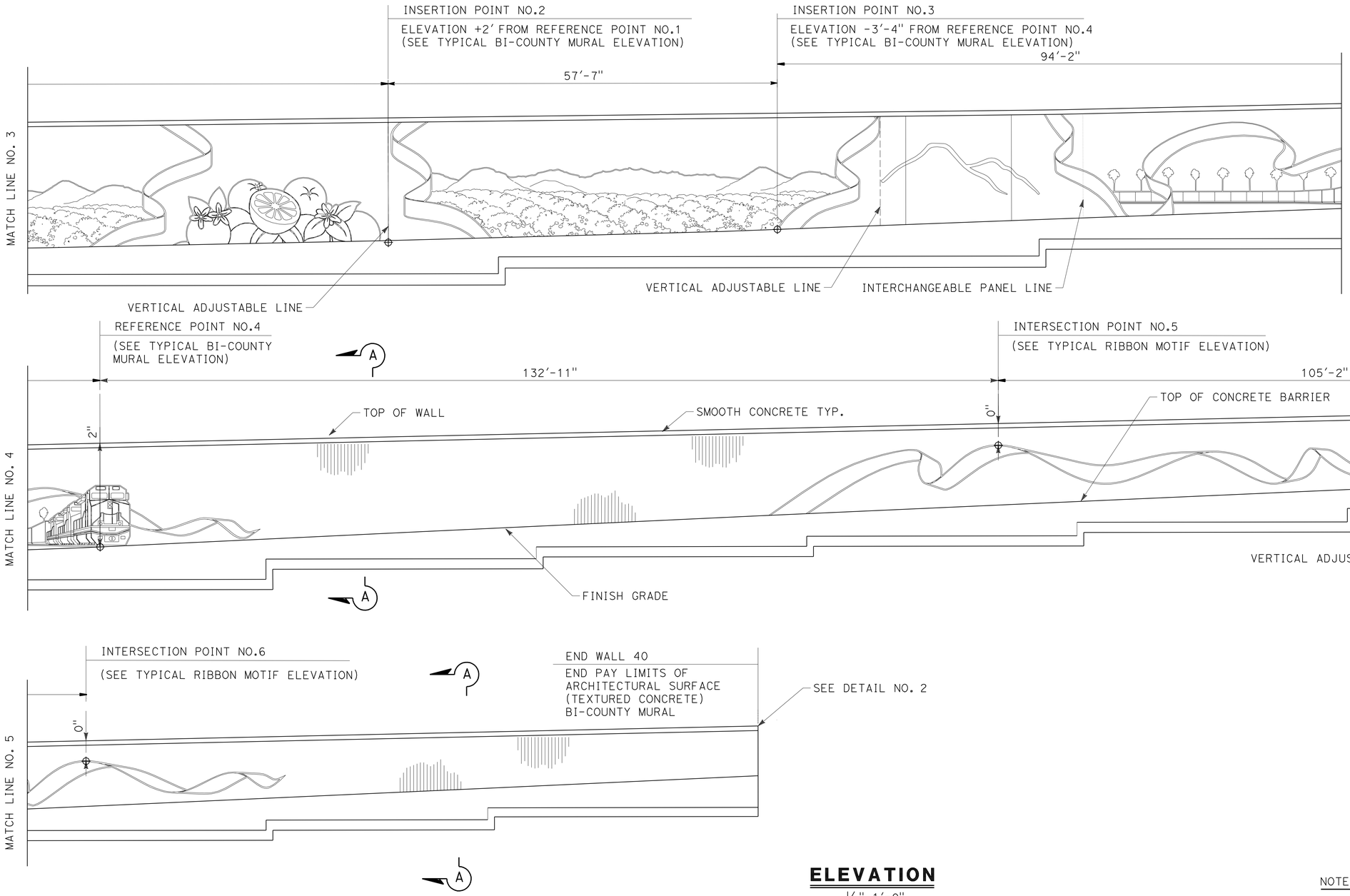

ELEVATION

1/8"=1'-0"

NOTES:

1. For Typical Bi-County Mural Elevation, see "ARCHITECTURAL SURFACE DETAILS NO. 1& NO. 2" sheets.
2. For Section A-A, see "ARCHITECTURAL SURFACE DETAILS NO. 11" sheet.
3. For Detail No. 2, see "ARCHITECTURAL SURFACE DETAILS NO. 13" sheet.
4. For Typical Ribbon Motif Elevation, see "ARCHITECTURAL SURFACE DETAILS NO. 3" sheet.

NOTE:
THE CONTRACTOR SHALL VERIFY ALL CONTROLLING FIELD DIMENSIONS BEFORE ORDERING OR FABRICATING ANY MATERIAL.

THIS PLAN IS ACCURATE FOR ARCHITECTURAL TREATMENT WORK ONLY.

	BY	CHECKED
DESIGN	M. Hall/B. Fleming/B. Strout	M. Bishop
DETAILS	M. Bishop	M. Hall
QUANTITIES	D. Wong	J. Niu

STATE OF CALIFORNIA
DEPARTMENT OF TRANSPORTATION

DIVISION OF ENGINEERING SERVICES
STRUCTURE DESIGN
DESIGN BRANCH 10

BRIDGE NO. 54E0111
POST MILE 0.56

RETAINING WALL NO. 40
ARCHITECTURAL SURFACE LAYOUT NO. 2

STRUCTURES DESIGN DETAIL SHEET (ENGLISH) (REV. 09-01-10)

ORIGINAL SCALE IN INCHES FOR REDUCED PLANS 0 1 2 3

UNIT: 3589
PROJECT NUMBER & PHASE: 08000005061
CONTRACT NO.: 08-0M9401

DISREGARD PRINTS BEARING EARLIER REVISION DATES

REVISION DATES 12-14-11 2-10-12

SHEET 7 OF 26

FILE => 54e0111das0207.dgn

USERNAME => s124496 DATE PLOTTED => 18-APR-2012 TIME PLOTTED => 14:38

DIST	COUNTY	ROUTE	POST MILES TOTAL PROJECT	SHEET No.	TOTAL SHEETS
08	Riv,SBd	91,215	21.5/21.7, 43.2/45.2,0.0/5.1	1302	1743

LICENSED LANDSCAPE ARCHITECT — DATE 3-29-12

4-16-12
PLANS APPROVAL DATE

LICENSED LANDSCAPE ARCHITECT — RAY DESSELLE — No. 2916 — Exp. 11-30-13 — STATE OF CALIFORNIA

The State of California or its officers or agents shall not be responsible for the accuracy or completeness of electronic copies of this plan sheet.

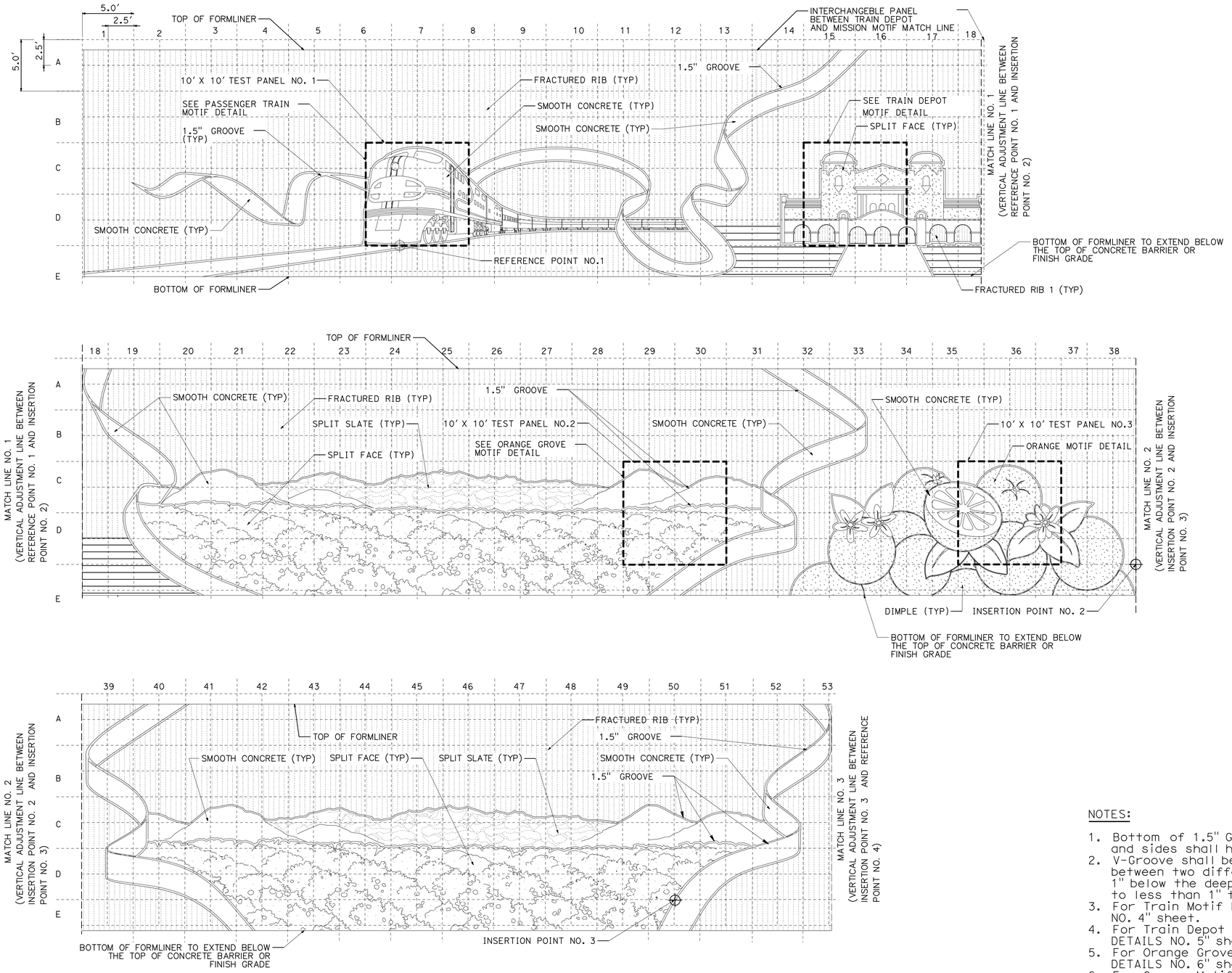

TYPICAL BI-COUNTY MURAL ELEVATION

3/16"=1'-0"

THIS PLAN IS ACCURATE FOR ARCHITECTUAL TREATMENT WORK ONLY.

NOTES:

1. Bottom of 1.5" Groove shall be flushed with structure wall and sides shall have a Min 10 degree bevel.
2. V-Groove shall be a Min of 1" wide unless noted. V-Grooves between two different depth surfaces shall be a Min of 1" below the deeper surface. Depth of Groove may be reduced to less than 1" to clear structure wall face surface.
3. For Train Motif Details, see "ARCHITECTURAL SURFACE DETAILS NO. 4" sheet.
4. For Train Depot Motif Details, see "ARCHITECTURAL SURFACE DETAILS NO. 5" sheet.
5. For Orange Grove Motif Details, see "ARCHITECTURAL SURFACE DETAILS NO. 6" sheet.
6. For Orange Motif Details, see "ARCHITECTURAL SURFACE DETAILS NO. 7" sheet.

	BY	CHECKED
DESIGN	M. Hall/B. Fleming/B. Strout	M. Bishop
DETAILS	M. Bishop	M. Hall
QUANTITIES	D. Wong	J. Niu

STATE OF CALIFORNIA
DEPARTMENT OF TRANSPORTATION

DIVISION OF ENGINEERING SERVICES
STRUCTURE DESIGN
DESIGN BRANCH 10

BRIDGE NO. 54E0111
POST MILE 0.56

RETAINING WALL NO. 40
ARCHITECTURAL SURFACE DETAILS NO. 1

STRUCTURES DESIGN DETAIL SHEET (ENGLISH) (REV. 09-01-10)

ORIGINAL SCALE IN INCHES FOR REDUCED PLANS 0 1 2 3

UNIT: 3589
PROJECT NUMBER & PHASE: 08000005061
CONTRACT NO.: 08-0M9401

DISREGARD PRINTS BEARING EARLIER REVISION DATES 2-10-12

REVISION DATES | SHEET 8 | OF 26

FILE => 54e0111das0308.dgn

USERNAME => s124436 DATE PLOTTED => 18-APR-2012 TIME PLOTTED => 14:39

DIST	COUNTY	ROUTE	POST MILES TOTAL PROJECT	SHEET No.	TOTAL SHEETS
08	Riv,SBd	91,215	21.5/21.7, 43.2/45.2,0.0/5.1	1303	1743

LICENSED LANDSCAPE ARCHITECT 3-29-12 DATE

4-16-12
PLANS APPROVAL DATE

LICENSED LANDSCAPE ARCHITECT RAY DESSELLE No. 2916 Exp. 11-30-13 STATE OF CALIFORNIA

The State of California or its officers or agents shall not be responsible for the accuracy or completeness of electronic copies of this plan sheet.

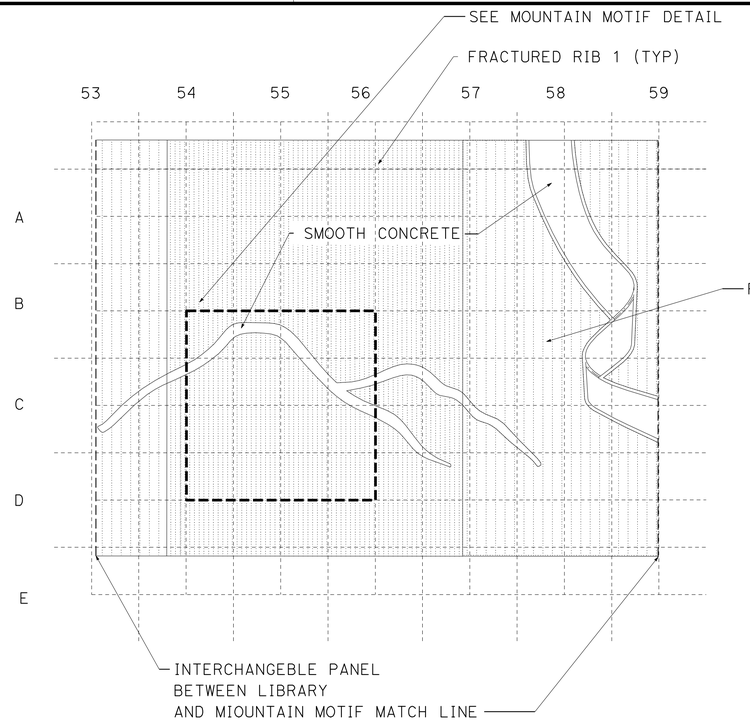

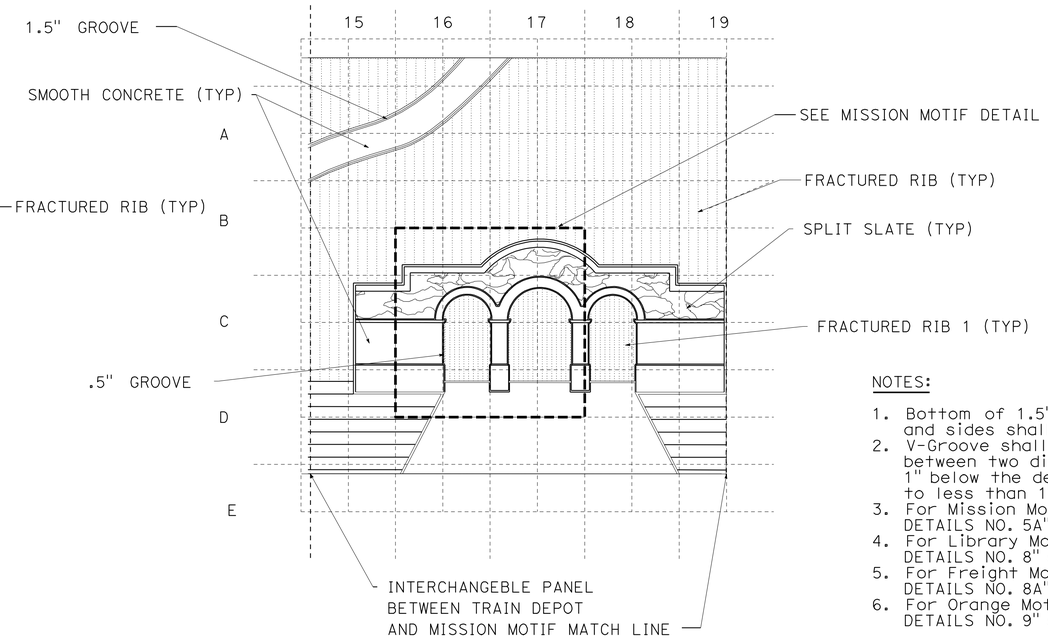

NOTES:

1. Bottom of 1.5" Groove shall be flushed with structure wall and sides shall have a Min 10 degree bevel.
2. V-Groove shall be a Min of 1" wide unless noted. V-Grooves between two different depth surfaces shall be a Min of 1" below the deeper surface. Depth of Groove may be reduced to less than 1" to clear structure wall face surface.
3. For Mission Motif Details, see "ARCHITECTURAL SURFACE DETAILS NO. 5A" sheet.
4. For Library Motif Details, see "ARCHITECTURAL SURFACE DETAILS NO. 8" sheet.
5. For Freight Motif Details, see "ARCHITECTURAL SURFACE DETAILS NO. 8A" sheet.
6. For Orange Motif Details, see "ARCHITECTURAL SURFACE DETAILS NO. 9" sheet.

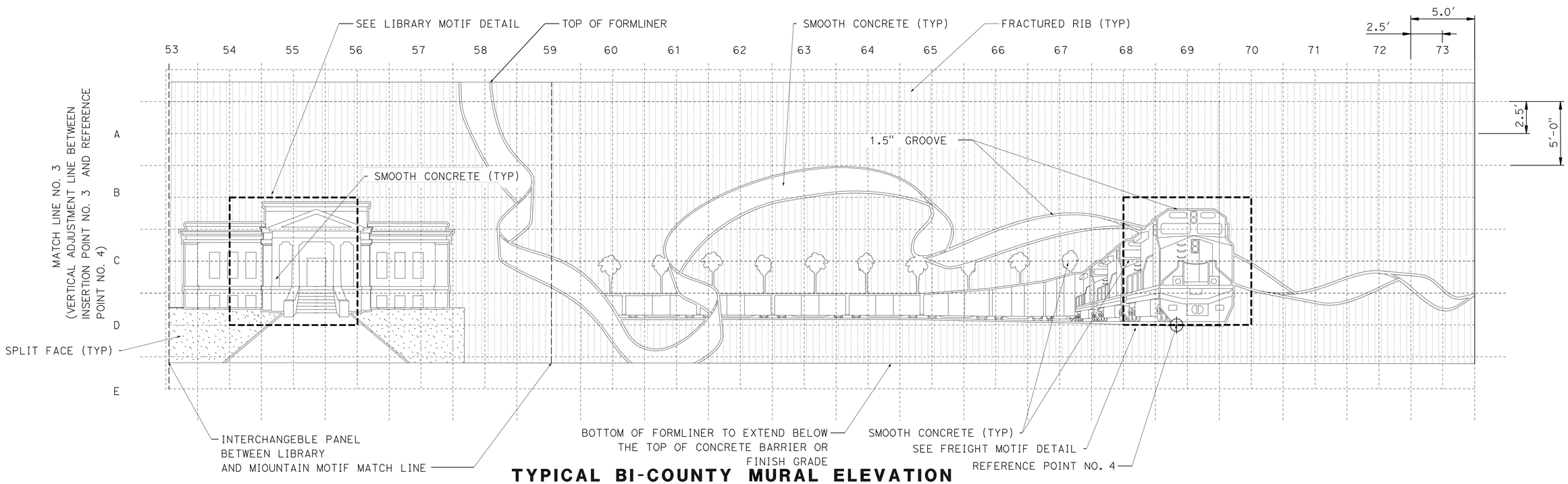

TYPICAL BI-COUNTY MURAL ELEVATION

1/4"=1'-0"

THIS PLAN IS ACCURATE FOR ARCHITECTURAL TREATMENT WORK ONLY.

	BY	CHECKED
DESIGN	M. Hall/B. Fleming/B. Strout	M. Bishop
DETAILS	M. Bishop	M. Hall
QUANTITIES	D. Wong	J. Niu

STATE OF CALIFORNIA
DEPARTMENT OF TRANSPORTATION

DIVISION OF ENGINEERING SERVICES
STRUCTURE DESIGN
DESIGN BRANCH 10

BRIDGE NO. 54E0111
POST MILE 0.56

RETAINING WALL NO. 40
ARCHITECTURAL SURFACE DETAILS NO. 2

STRUCTURES DESIGN DETAIL SHEET (ENGLISH) (REV. 09-01-10)

ORIGINAL SCALE IN INCHES FOR REDUCED PLANS 0 1 2 3

UNIT: 3589
PROJECT NUMBER & PHASE: 08000005061
CONTRACT NO.: 08-0M9401

DISREGARD PRINTS BEARING EARLIER REVISION DATES

REVISION DATES: 2-10-12

SHEET 9 OF 26

FILE => 54e0111das0409.dgn

USERNAME => s124436 DATE PLOTTED => 18-APR-2012 TIME PLOTTED => 14:39

DIST	COUNTY	ROUTE	POST MILES TOTAL PROJECT	SHEET No.	TOTAL SHEETS
08	Riv,SBd	91,215	21.5/21.7, 43.2/45.2,0.0/5.1	1304	1743

LICENSED LANDSCAPE ARCHITECT — DATE 3-29-12

4-16-12
PLANS APPROVAL DATE

LICENSED LANDSCAPE ARCHITECT — RAY DESSELLE — No. 2916 — Exp. 11-30-13 — STATE OF CALIFORNIA

The State of California or its officers or agents shall not be responsible for the accuracy or completeness of electronic copies of this plan sheet.

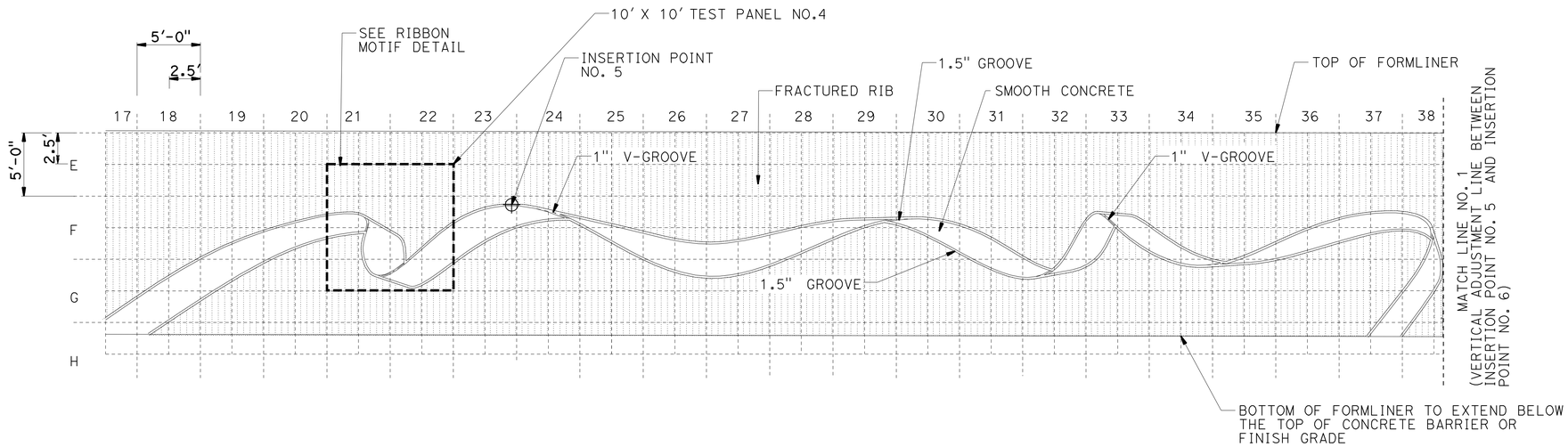

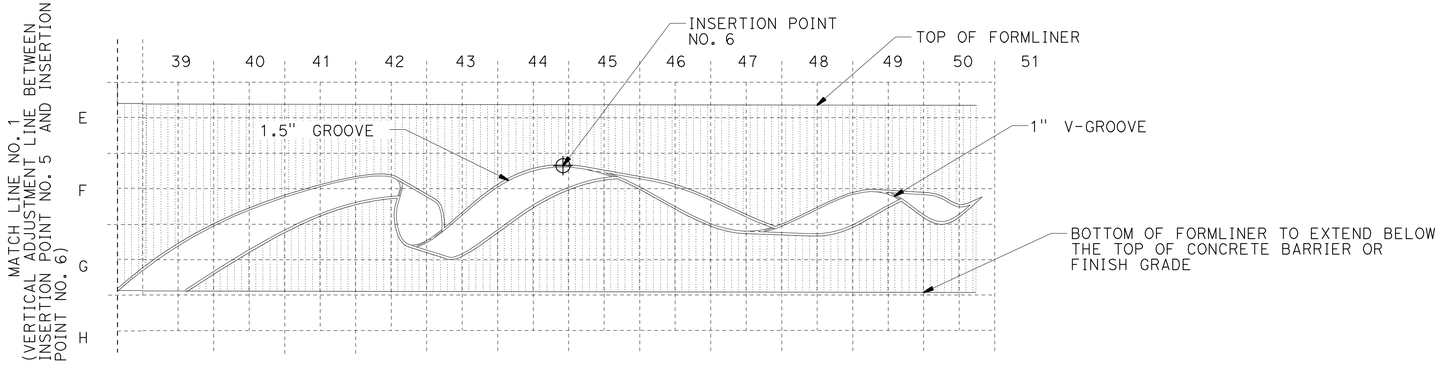

TYPICAL RIBBON MOTIF ELEVATION

3/16"=1'-0"

NOTES:

1. Bottom of 1.5" Groove shall be flushed with structure wall and sides shall have a Min 10 degree bevel.
2. V-Groove shall be a Min of 1" wide unless noted. V-Grooves between two different depth surfaces shall be a Min of 1" below the deeper surface. Depth of Groove may be reduced to less than 1" to clear structure wall face surface.
3. For Ribbon Moti Details, see "ARCHITECTURAL SURFACE DETAILS NO. 10" sheet.

THIS PLAN IS ACCURATE FOR ARCHITECTURAL TREATMENT WORK ONLY.

	BY	CHECKED
DESIGN	M. Hall/B. Fleming/B. Strout	M. Bishop
DETAILS	M. Bishop	M. Hall
QUANTITIES	D. Wong	J. Niu

STATE OF CALIFORNIA
DEPARTMENT OF TRANSPORTATION

DIVISION OF ENGINEERING SERVICES
STRUCTURE DESIGN
DESIGN BRANCH 10

BRIDGE NO. 54E0111
POST MILE 0.56

RETAINING WALL NO. 40
ARCHITECTURAL SURFACE DETAILS NO. 3

STRUCTURES DESIGN DETAIL SHEET (ENGLISH) (REV. 09-01-10)

ORIGINAL SCALE IN INCHES FOR REDUCED PLANS 0 1 2 3

UNIT: 3589
PROJECT NUMBER & PHASE: 08000005061
CONTRACT NO.: 08-0M9401

DISREGARD PRINTS BEARING EARLIER REVISION DATES

REVISION DATES: 2-10-12

SHEET 10 OF 26

FILE => 54e0111das0510.dgn

USERNAME => s124496 DATE PLOTTED => 18-APR-2012 TIME PLOTTED => 14:39

DIST	COUNTY	ROUTE	POST MILES TOTAL PROJECT	SHEET No.	TOTAL SHEETS
08	Riv,SBd	91,215	21.5/21.7, 43.2/45.2,0.0/5.1	1305	1743

LICENSED LANDSCAPE ARCHITECT — DATE 3-29-12

4-16-12
PLANS APPROVAL DATE

LICENSED LANDSCAPE ARCHITECT — RAY DESSELLE — No. 2916 — Exp. 11-30-13 — STATE OF CALIFORNIA

The State of California or its officers or agents shall not be responsible for the accuracy or completeness of electronic copies of this plan sheet.

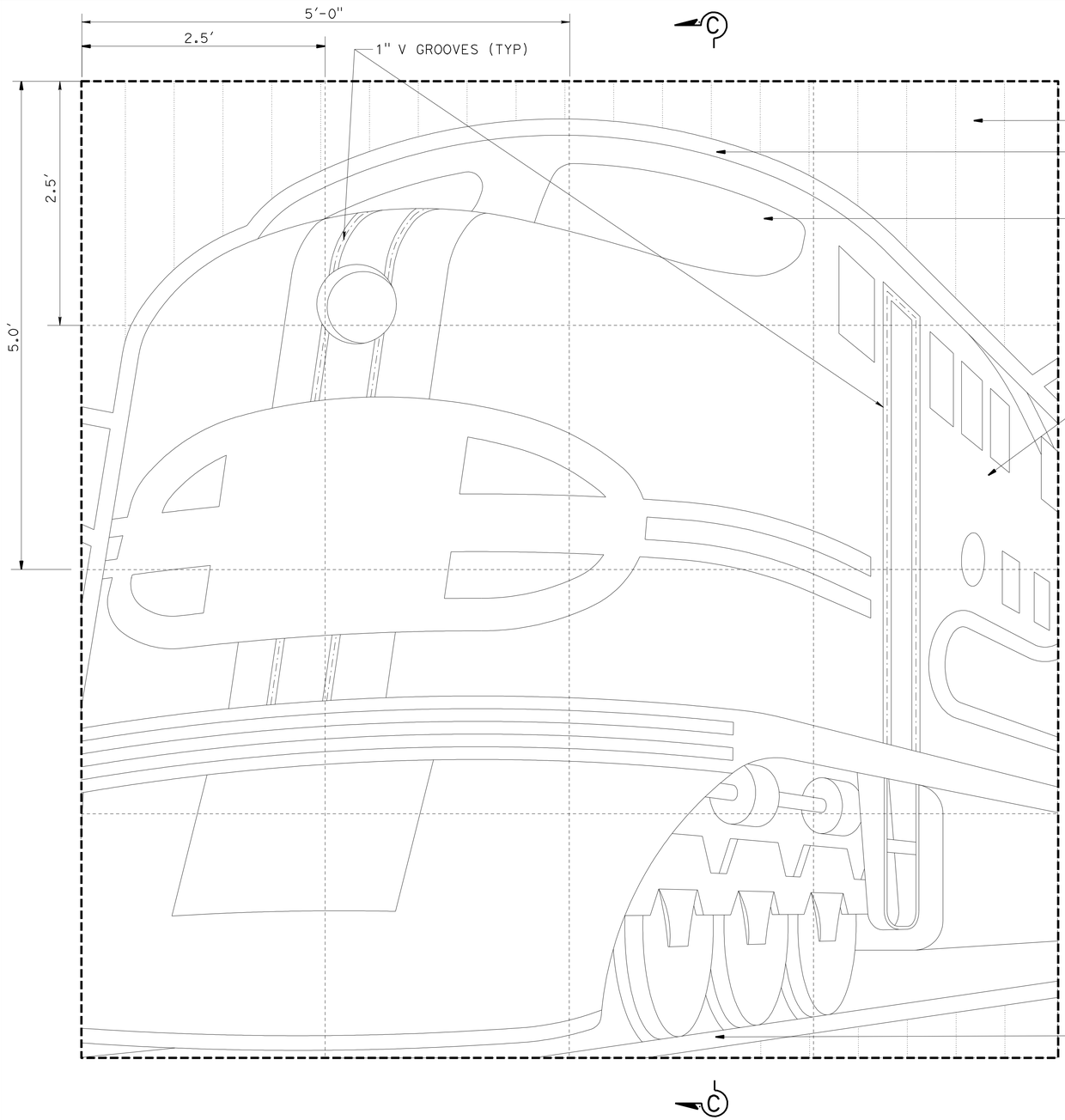

TRAIN MOTIF ELEVATION

1½"=1'-0"

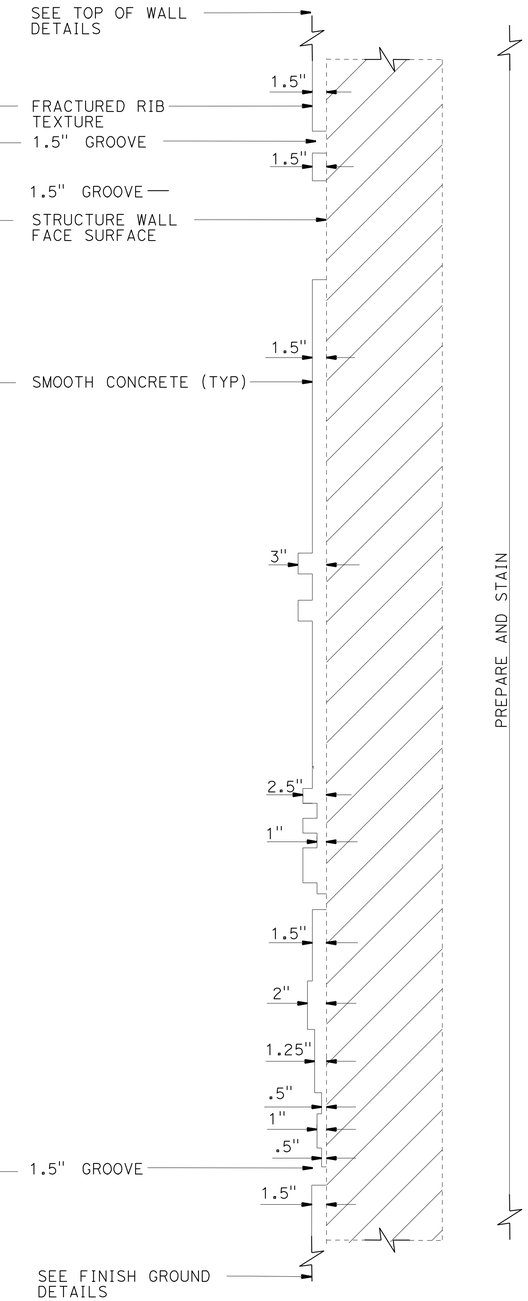

SECTION C-C

1½"=1'-0"

ALL DIMENSIONS ARE IN FEET AND INCHES UNLESS OTHERWISE SHOWN

THIS PLAN IS ACCURATE FOR ARCHITECTURAL TREATMENT WORK ONLY.

	BY	CHECKED
DESIGN	M. Hall/B. Fleming/B. Strout	M. Bishop
DETAILS	M. Bishop	M. Hall
QUANTITIES	D. Wong	J. Niu

STATE OF CALIFORNIA
DEPARTMENT OF TRANSPORTATION

DIVISION OF ENGINEERING SERVICES
STRUCTURE DESIGN
DESIGN BRANCH 10

BRIDGE NO. 54E0111
POST MILE 0.56

RETAINING WALL NO. 40
ARCHITECTURAL SURFACE DETAILS NO. 4

STRUCTURES DESIGN DETAIL SHEET (ENGLISH) (REV. 09-01-10)

ORIGINAL SCALE IN INCHES FOR REDUCED PLANS 0 1 2 3

UNIT: 3589
PROJECT NUMBER & PHASE: 08000005061
CONTRACT NO.: 08-0M9401

DISREGARD PRINTS BEARING EARLIER REVISION DATES

REVISION DATES: 2-10-12

SHEET 11 OF 26

FILE => 54e0111das0611.dgn

USERNAME => s124096 DATE PLOTTED => 18-APR-2012 TIME PLOTTED => 14:39

DIST	COUNTY	ROUTE	POST MILES TOTAL PROJECT	SHEET No.	TOTAL SHEETS
08	Riv,SBd	91,215	21.5/21.7, 43.2/45.2,0.0/5.1	1306	1743

LICENSED LANDSCAPE ARCHITECT — 3-29-12 DATE

4-16-12
PLANS APPROVAL DATE

LICENSED LANDSCAPE ARCHITECT — RAY DESSELLE — No. 2916 — Exp. 11-30-13 — STATE OF CALIFORNIA

The State of California or its officers or agents shall not be responsible for the accuracy or completeness of electronic copies of this plan sheet.

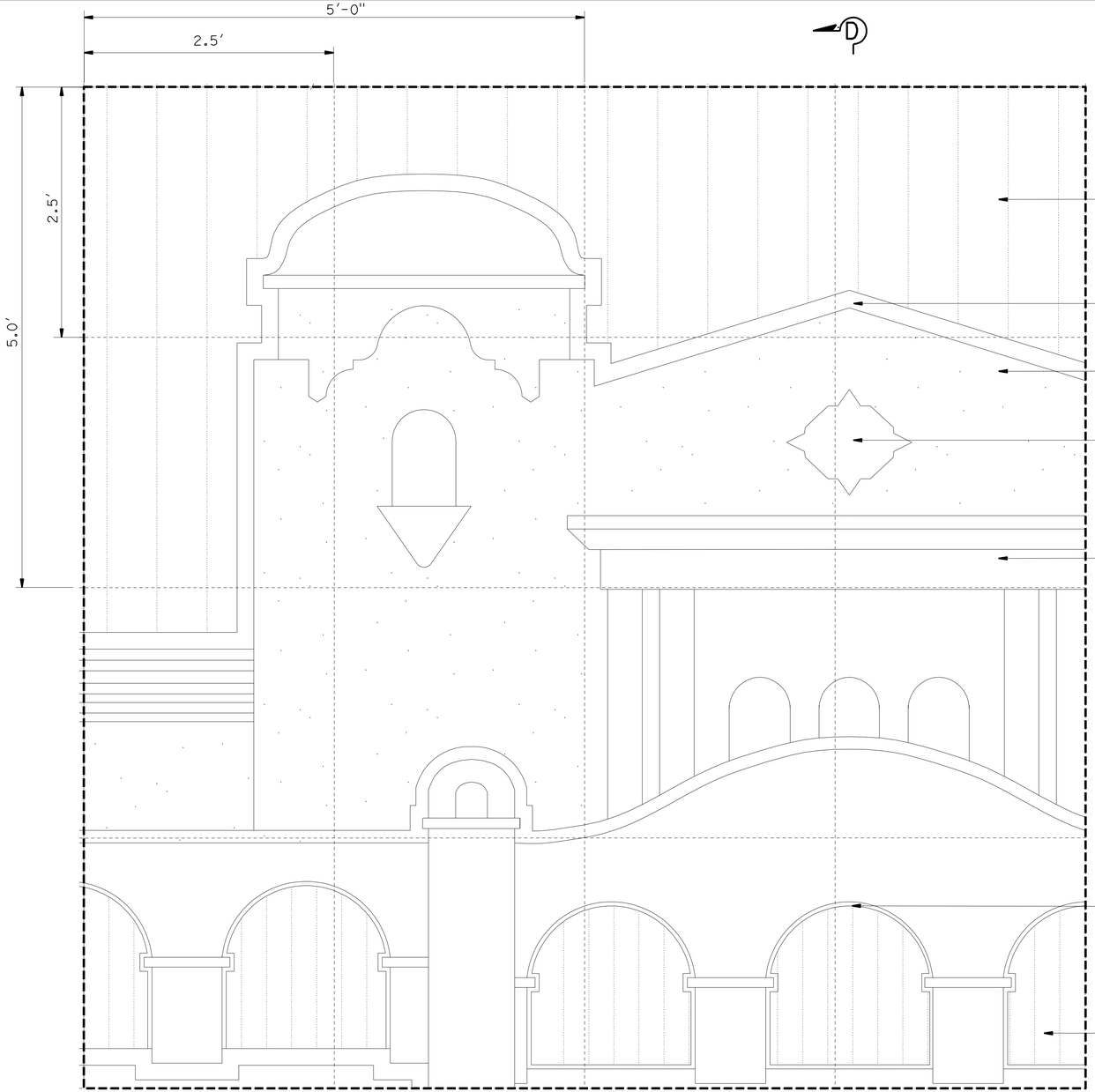

TRAIN DEPOT MOTIF ELEVATION

1½"=1'-0"

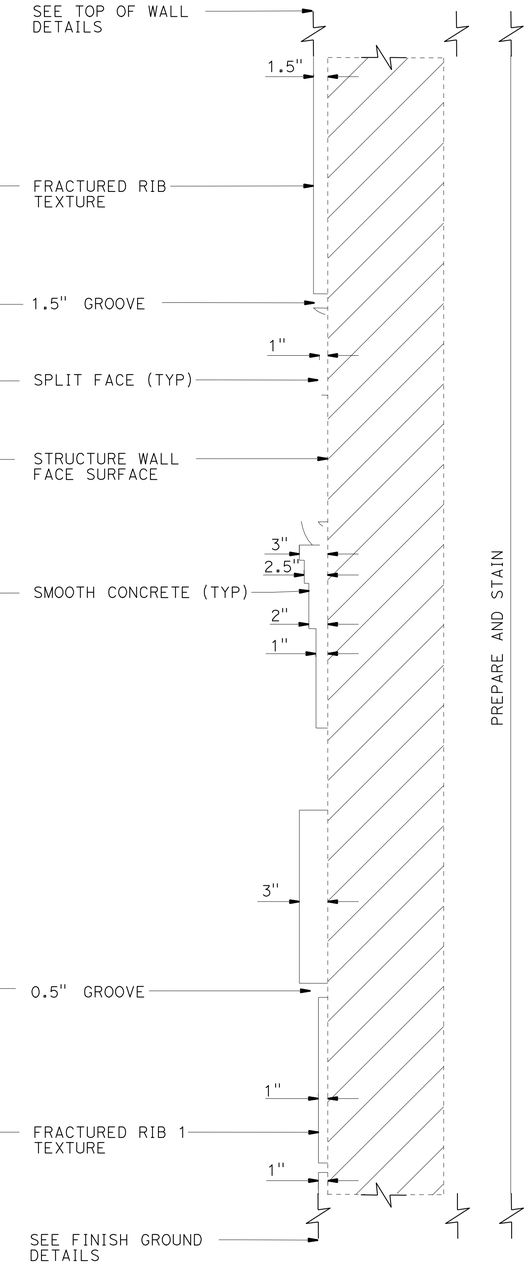

SECTION D-D

1½"=1'-0"

ALL DIMENSIONS ARE IN FEET AND INCHES UNLESS OTHERWISE SHOWN

THIS PLAN IS ACCURATE FOR ARCHITECTURAL TREATMENT WORK ONLY.

	BY	CHECKED
DESIGN	M. Hall/B. Fleming/B. Strout	M. Bishop
DETAILS	M. Bishop	M. Hall
QUANTITIES	D. Wong	J. Niu

STATE OF CALIFORNIA
DEPARTMENT OF TRANSPORTATION

DIVISION OF ENGINEERING SERVICES
STRUCTURE DESIGN
DESIGN BRANCH 10

BRIDGE NO. 54E0111
POST MILE 0.56

RETAINING WALL NO. 40
ARCHITECTURAL SURFACE DETAILS NO. 5

STRUCTURES DESIGN DETAIL SHEET (ENGLISH) (REV. 09-01-10)

ORIGINAL SCALE IN INCHES FOR REDUCED PLANS 0 1 2 3

UNIT: 3589
PROJECT NUMBER & PHASE: 08000005061
CONTRACT NO.: 08-0M9401

DISREGARD PRINTS BEARING EARLIER REVISION DATES

REVISION DATES: 2-10-12

SHEET 12 OF 26

FILE => 54e0111das0712.dgn

USERNAME => s124496 DATE PLOTTED => 18-APR-2012 TIME PLOTTED => 14:39

DIST	COUNTY	ROUTE	POST MILES TOTAL PROJECT	SHEET No.	TOTAL SHEETS
08	Riv,SBd	91,215	21.5/21.7, 43.2/45.2,0.0/5.1	1307	1743

LICENSED LANDSCAPE ARCHITECT 3-29-12 DATE

4-16-12
PLANS APPROVAL DATE

LICENSED LANDSCAPE ARCHITECT
RAY DESSELLE
No. 2916
Exp. 11-30-13
STATE OF CALIFORNIA

The State of California or its officers or agents shall not be responsible for the accuracy or completeness of electronic copies of this plan sheet.

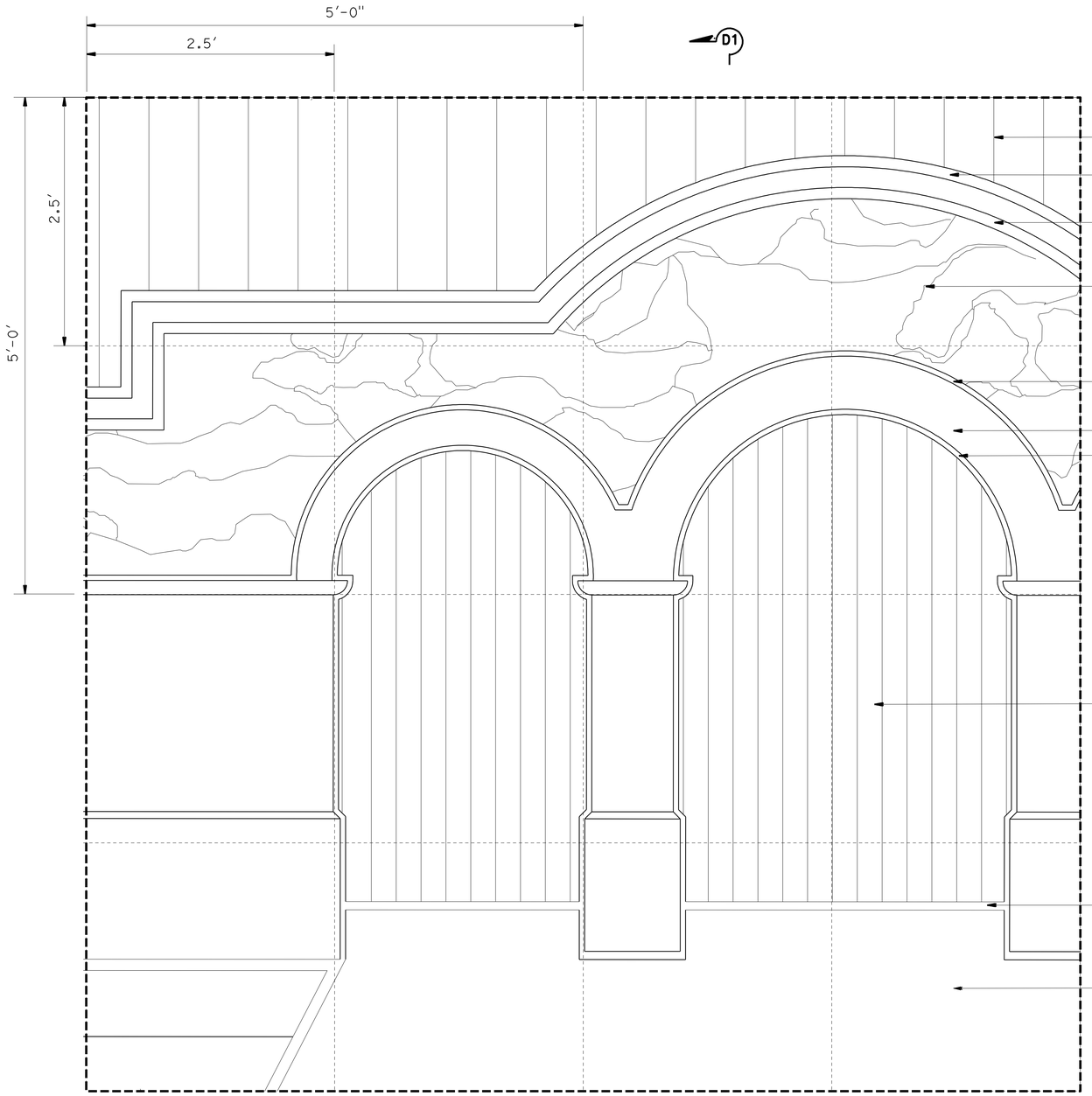

MISSION MOTIF ELEVATION

1 1/2"=1'-0"

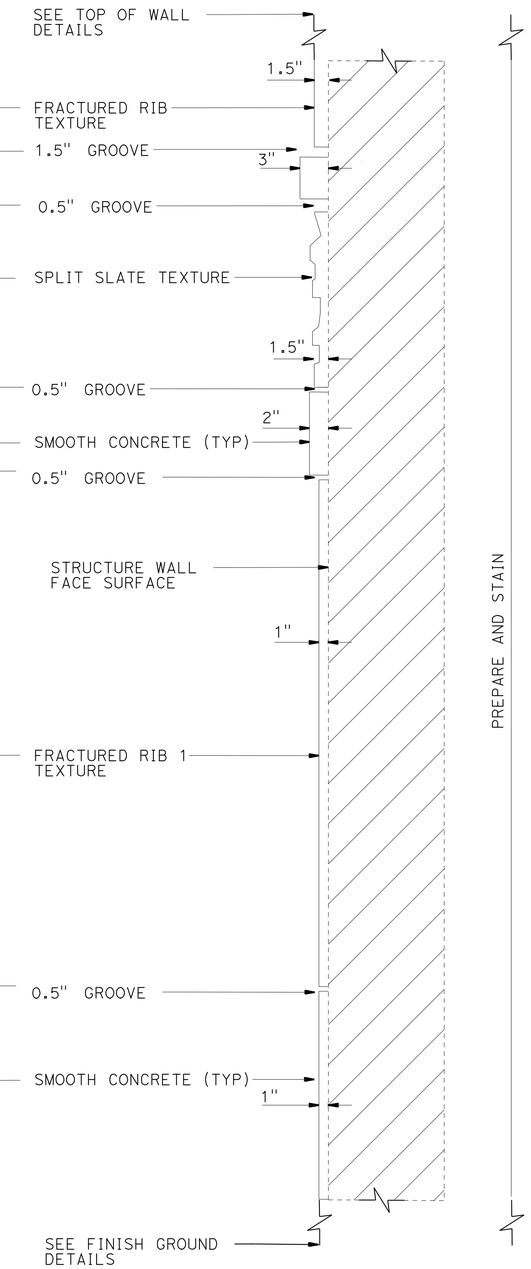

SECTION D1-D1

1 1/2"=1'-0"

ALL DIMENSIONS ARE IN FEET AND INCHES UNLESS OTHERWISE SHOWN

THIS PLAN IS ACCURATE FOR ARCHITECTURAL TREATMENT WORK ONLY.

	BY	CHECKED
DESIGN	M. Hall/B. Fleming/B. Strout	M. Bishop
DETAILS	M. Bishop	M. Hall
QUANTITIES	D. Wong	J. Niu

STATE OF CALIFORNIA
DEPARTMENT OF TRANSPORTATION

DIVISION OF ENGINEERING SERVICES
STRUCTURE DESIGN
DESIGN BRANCH 10

BRIDGE NO. 54E0111
POST MILE 0.56

RETAINING WALL NO. 40
ARCHITECTURAL SURFACE DETAILS NO. 5A

STRUCTURES DESIGN DETAIL SHEET (ENGLISH) (REV. 09-01-10)

ORIGINAL SCALE IN INCHES FOR REDUCED PLANS 0 1 2 3

UNIT: 3589
PROJECT NUMBER & PHASE: 08000005061
CONTRACT NO.: 08-0M9401

DISREGARD PRINTS BEARING EARLIER REVISION DATES

REVISION DATES: 2-10-12

SHEET 13 OF 26

FILE => 54e0111das0813.dgn

USERNAME => s124496 DATE PLOTTED => 18-APR-2012 TIME PLOTTED => 14:39

DIST	COUNTY	ROUTE	POST MILES TOTAL PROJECT	SHEET No.	TOTAL SHEETS
08	Riv,SBd	91,215	21.5/21.7, 43.2/45.2,0.0/5.1	1308	1743

LICENSED LANDSCAPE ARCHITECT 3-29-12 DATE

4-16-12
PLANS APPROVAL DATE

LICENSED LANDSCAPE ARCHITECT
RAY DESSELLE
No. 2916
Exp. 11-30-13
STATE OF CALIFORNIA

The State of California or its officers or agents shall not be responsible for the accuracy or completeness of electronic copies of this plan sheet.

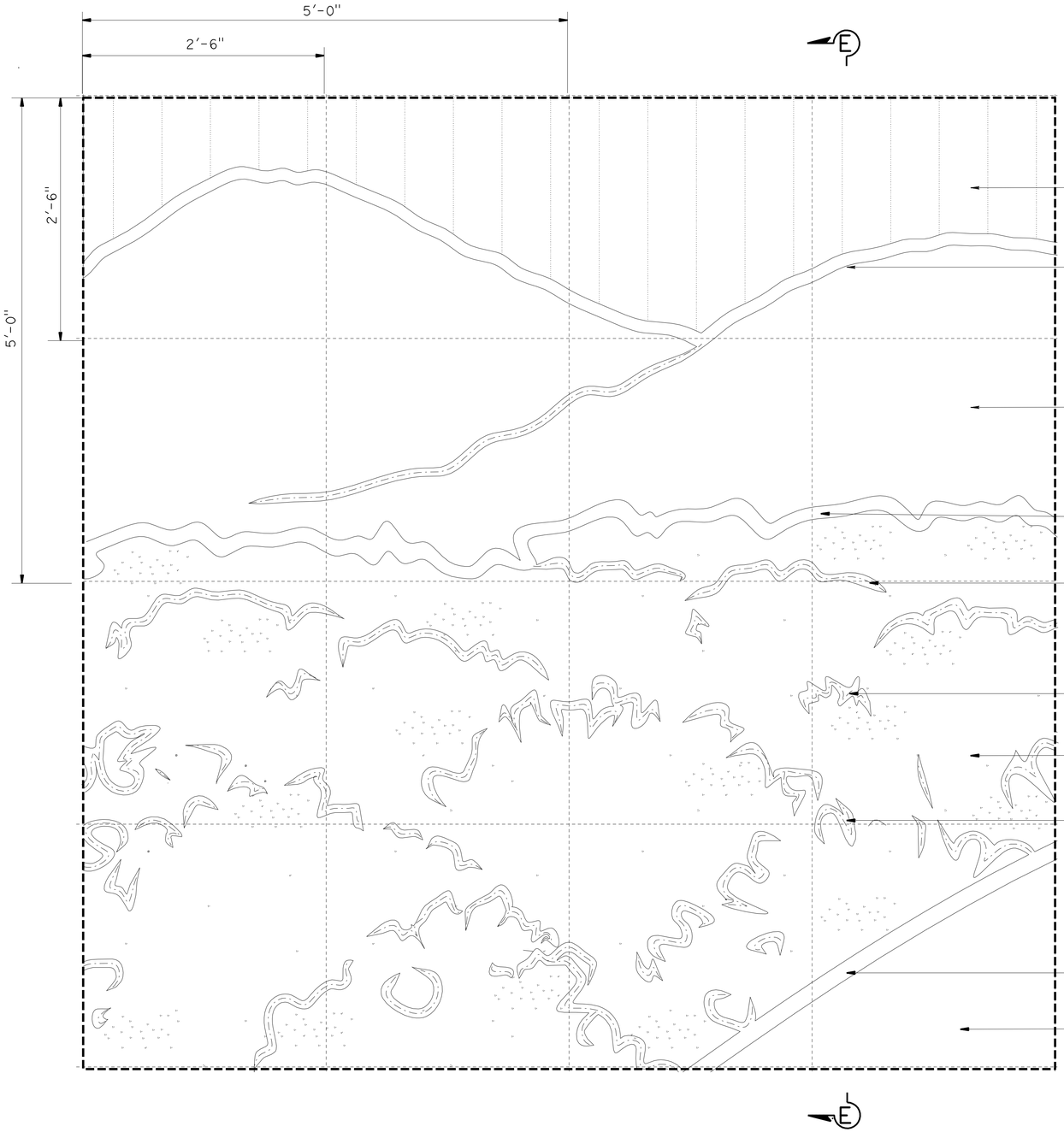

ORANGE GROVE MOTIF ELEVATION

1½"=1'-0"

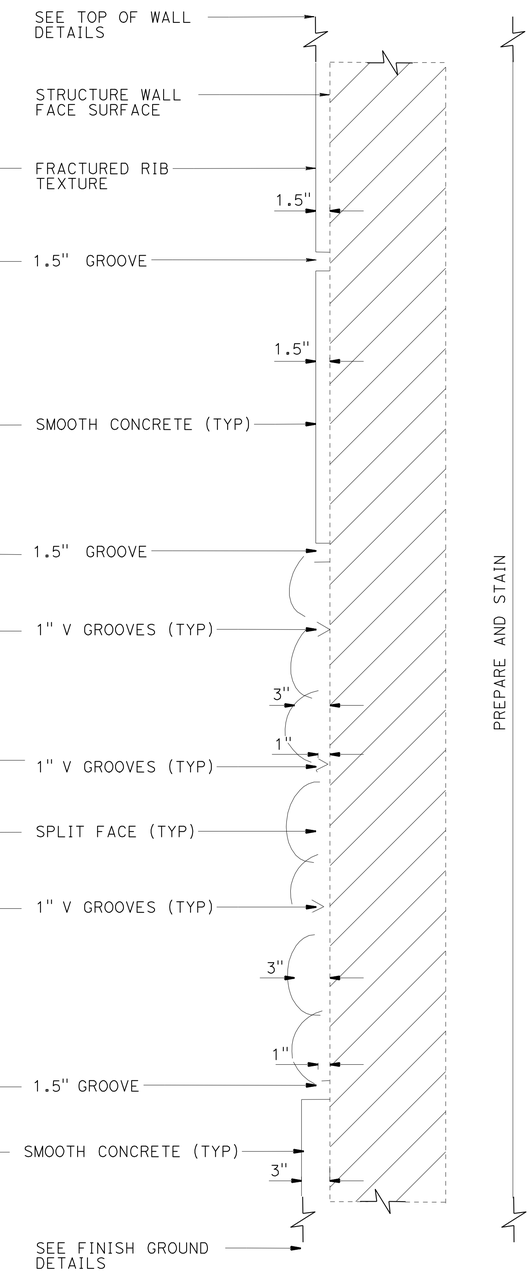

NOTE:
SPLIT FACE TEXTURE SHALL RESEMBLE A TREE SHAPE FORM. EDGES AT 1" AND CENTER AT 3" DEEP.

SECTION E-E

1½"=1'-0"

ALL DIMENSIONS ARE IN FEET AND INCHES UNLESS OTHERWISE SHOWN

THIS PLAN IS ACCURATE FOR ARCHITECTURAL TREATMENT WORK ONLY.

	BY	CHECKED
DESIGN	M. Hall/B. Fleming/B. Strout	M. Bishop
DETAILS	M. Bishop	M. Hall
QUANTITIES	D. Wong	J. Niu

STATE OF CALIFORNIA
DEPARTMENT OF TRANSPORTATION

DIVISION OF ENGINEERING SERVICES
STRUCTURE DESIGN
DESIGN BRANCH 10

BRIDGE NO. 54E0111
POST MILE 0.56

RETAINING WALL NO. 40
ARCHITECTURAL SURFACE DETAILS NO. 6

STRUCTURES DESIGN DETAIL SHEET (ENGLISH) (REV. 09-01-10)

ORIGINAL SCALE IN INCHES FOR REDUCED PLANS 0 1 2 3

UNIT: 3589
PROJECT NUMBER & PHASE: 08000005061
CONTRACT NO.: 08-0M9401

DISREGARD PRINTS BEARING EARLIER REVISION DATES

REVISION DATES: 2-10-12

SHEET 14 OF 26

FILE => 54e0111das0914.dgn

USERNAME => s124496 DATE PLOTTED => 18-APR-2012 TIME PLOTTED => 14:39

DIST	COUNTY	ROUTE	POST MILES TOTAL PROJECT	SHEET No.	TOTAL SHEETS
08	Riv,SBd	91,215	21.5/21.7, 43.2/45.2,0.0/5.1	1309	1743

LICENSED LANDSCAPE ARCHITECT 3-29-12 DATE

4-16-12
PLANS APPROVAL DATE

LICENSED LANDSCAPE ARCHITECT RAY DESSELLE No. 2916 Exp. 11-30-13 STATE OF CALIFORNIA

The State of California or its officers or agents shall not be responsible for the accuracy or completeness of electronic copies of this plan sheet.

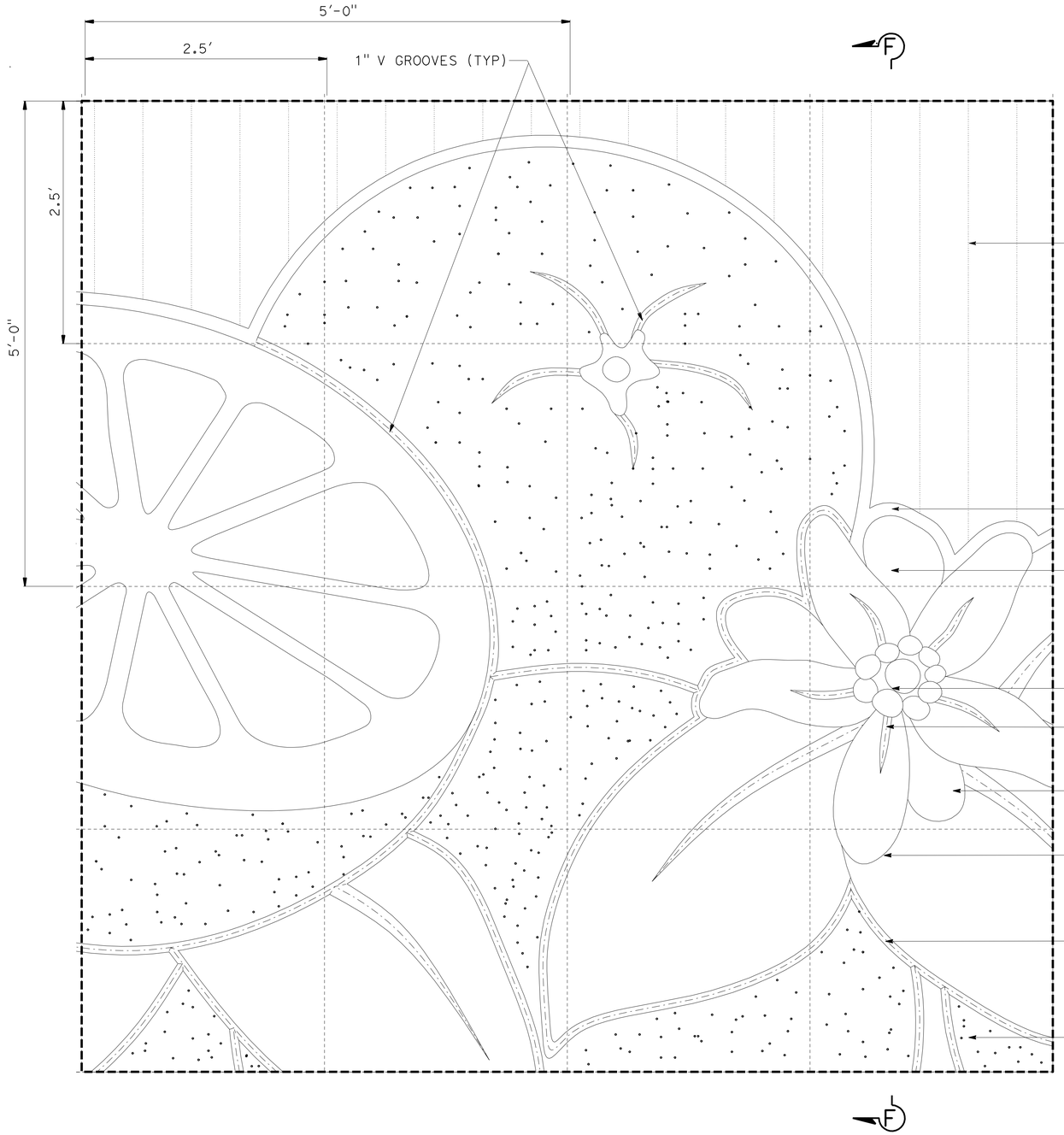

ORANGE MOTIF ELEVATION

1½"=1'-0"

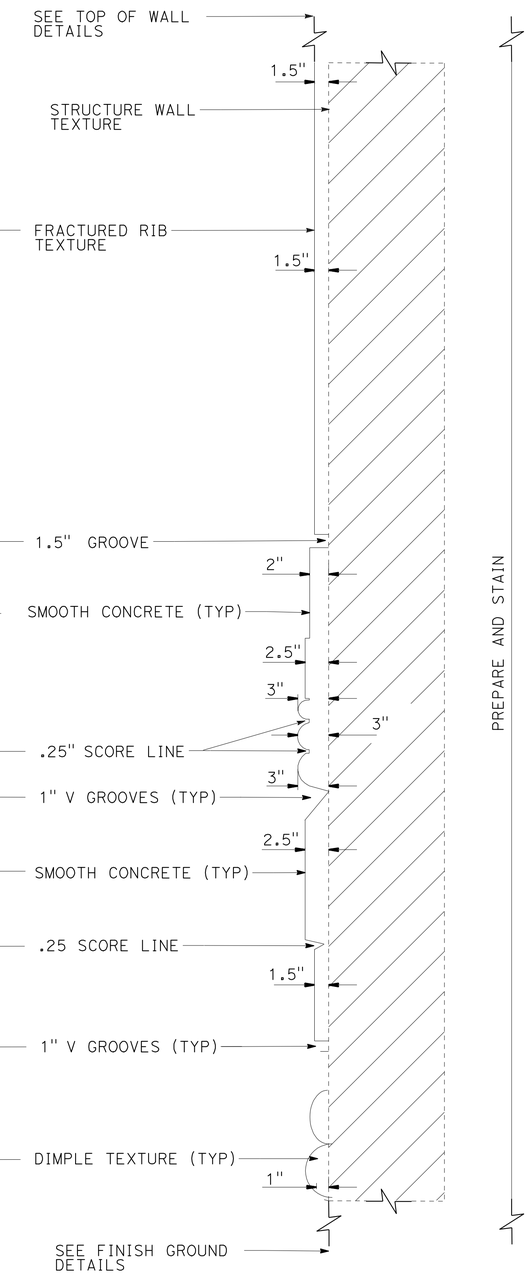

SECTION F-F

1½"=1'-0"

ALL DIMENSIONS ARE IN FEET AND INCHES UNLESS OTHERWISE SHOWN

THIS PLAN IS ACCURATE FOR ARCHITECTURAL TREATMENT WORK ONLY.

	BY	CHECKED
DESIGN	M. Hall/B. Fleming/B. Strout	M. Bishop
DETAILS	M. Bishop	M. Hall
QUANTITIES	D. Wong	J. Niu

STATE OF CALIFORNIA DEPARTMENT OF TRANSPORTATION

DIVISION OF ENGINEERING SERVICES STRUCTURE DESIGN DESIGN BRANCH 10

BRIDGE NO. 54E0111
POST MILE 0.56

RETAINING WALL NO. 40
ARCHITECTURAL SURFACE DETAILS NO. 7

STRUCTURES DESIGN DETAIL SHEET (ENGLISH) (REV. 09-01-10)

ORIGINAL SCALE IN INCHES FOR REDUCED PLANS 0 1 2 3

UNIT: 3589
PROJECT NUMBER & PHASE: 08000005061
CONTRACT NO.: 08-0M9401

DISREGARD PRINTS BEARING EARLIER REVISION DATES → 2-10-12

REVISION DATES

SHEET 15 OF 26

FILE => 54e0111das1015.dgn

USERNAME => s124436 DATE PLOTTED => 18-APR-2012 TIME PLOTTED => 14:39

DIST	COUNTY	ROUTE	POST MILES TOTAL PROJECT	SHEET No.	TOTAL SHEETS
08	Riv,SBd	91,215	21.5/21.7, 43.2/45.2,0.0/5.1	1310	1743

LICENSED LANDSCAPE ARCHITECT — 3-29-12 DATE

4-16-12
PLANS APPROVAL DATE

LICENSED LANDSCAPE ARCHITECT — RAY DESSELLE — No. 2916 — Exp. 11-30-13 — STATE OF CALIFORNIA

The State of California or its officers or agents shall not be responsible for the accuracy or completeness of electronic copies of this plan sheet.

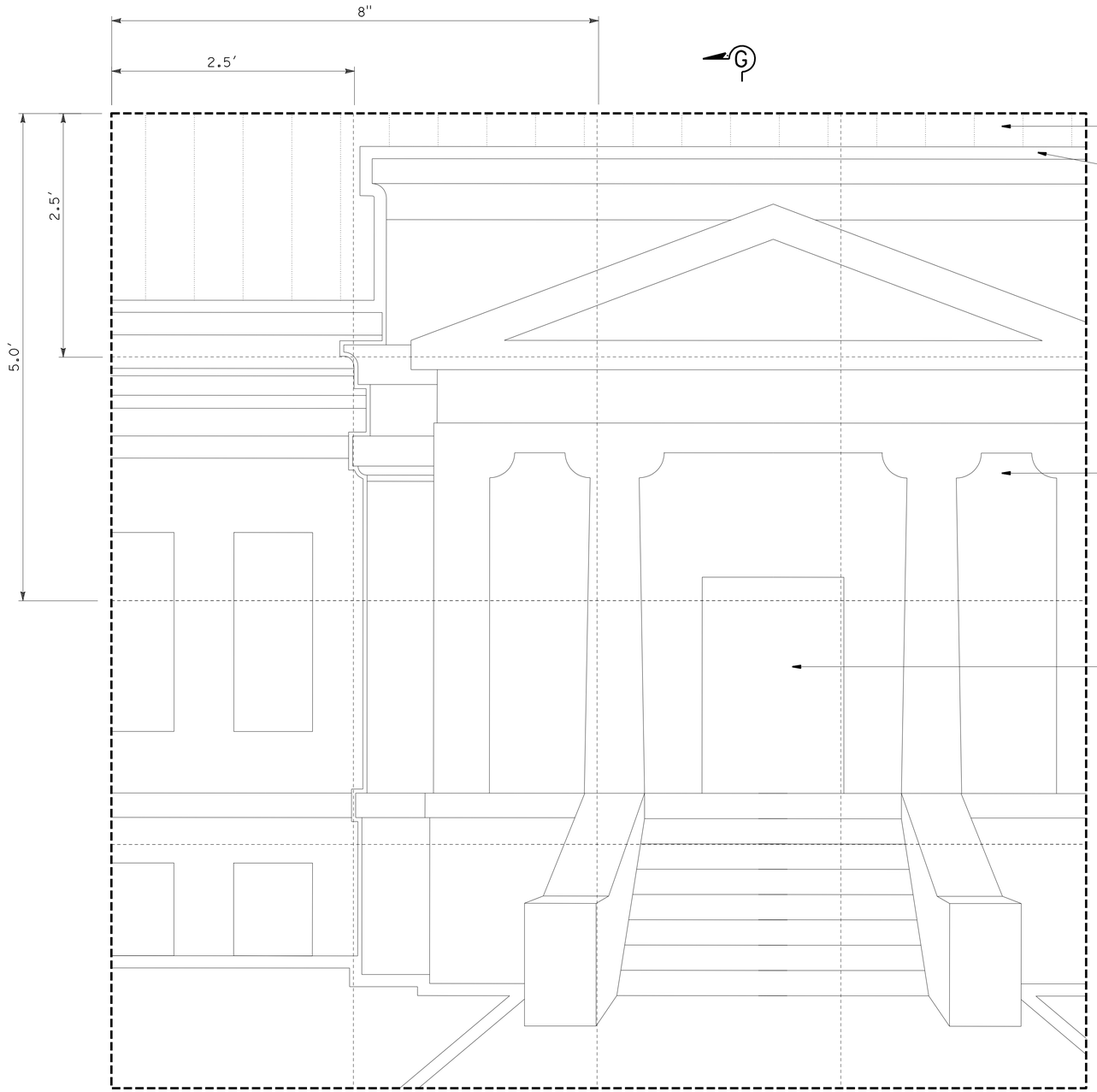

LIBRARY MOTIF ELEVATION

1½"=1'-0"

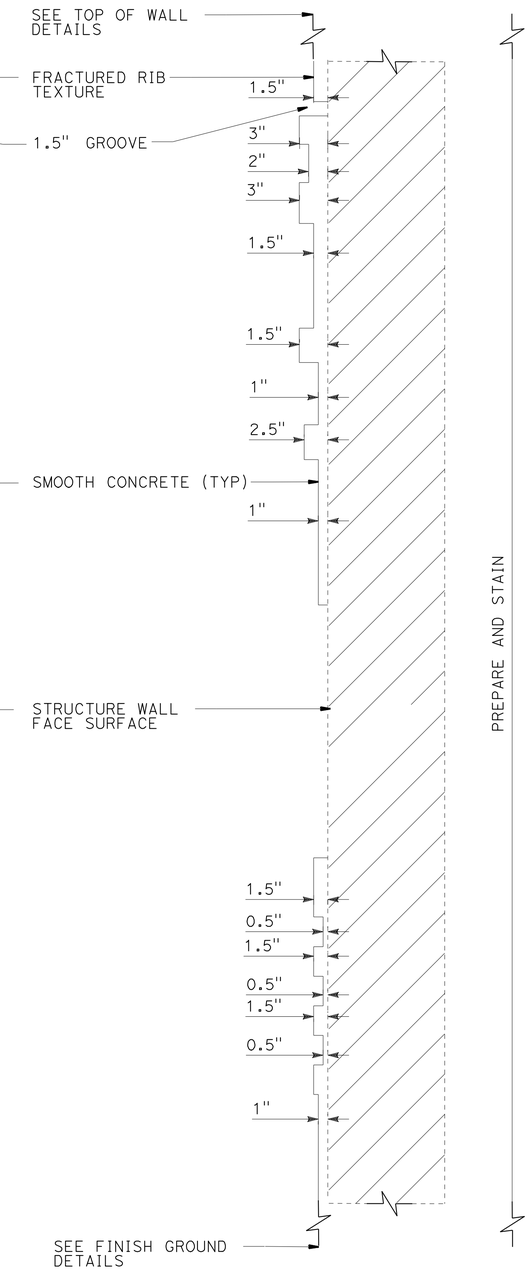

SECTION G-G

1½"=1'-0"

ALL DIMENSIONS ARE IN FEET AND INCHES UNLESS OTHERWISE SHOWN

THIS PLAN IS ACCURATE FOR ARCHITECTURAL TREATMENT WORK ONLY.

	BY	CHECKED
DESIGN	M. Hall/B. Fleming/B. Strout	M. Bishop
DETAILS	M. Bishop	M. Hall
QUANTITIES	D. Wong	J. Niu

STATE OF CALIFORNIA
DEPARTMENT OF TRANSPORTATION

DIVISION OF ENGINEERING SERVICES
STRUCTURE DESIGN
DESIGN BRANCH 10

BRIDGE NO. 54E0111
POST MILE 0.56

RETAINING WALL NO. 40
ARCHITECTURAL SURFACE DETAILS NO. 8

STRUCTURES DESIGN DETAIL SHEET (ENGLISH) (REV. 09-01-10)

ORIGINAL SCALE IN INCHES FOR REDUCED PLANS 0 1 2 3

UNIT: 3589
PROJECT NUMBER & PHASE: 08000005061
CONTRACT NO.: 08-0M9401

DISREGARD PRINTS BEARING EARLIER REVISION DATES

REVISION DATES: 2-10-12

SHEET 16 OF 26

FILE => 54e0111das1116.dgn

USERNAME => s124496 DATE PLOTTED => 18-APR-2012 TIME PLOTTED => 14:39

DIST	COUNTY	ROUTE	POST MILES TOTAL PROJECT	SHEET No.	TOTAL SHEETS
08	Riv,SBd	91,215	21.5/21.7, 43.2/45.2,0.0/5.1	1311	1743

LICENSED LANDSCAPE ARCHITECT — DATE 3-29-12

4-16-12
PLANS APPROVAL DATE

LICENSED LANDSCAPE ARCHITECT — RAY DESSELLE — No. 2916 — Exp. 11-30-13 — STATE OF CALIFORNIA

The State of California or its officers or agents shall not be responsible for the accuracy or completeness of electronic copies of this plan sheet.

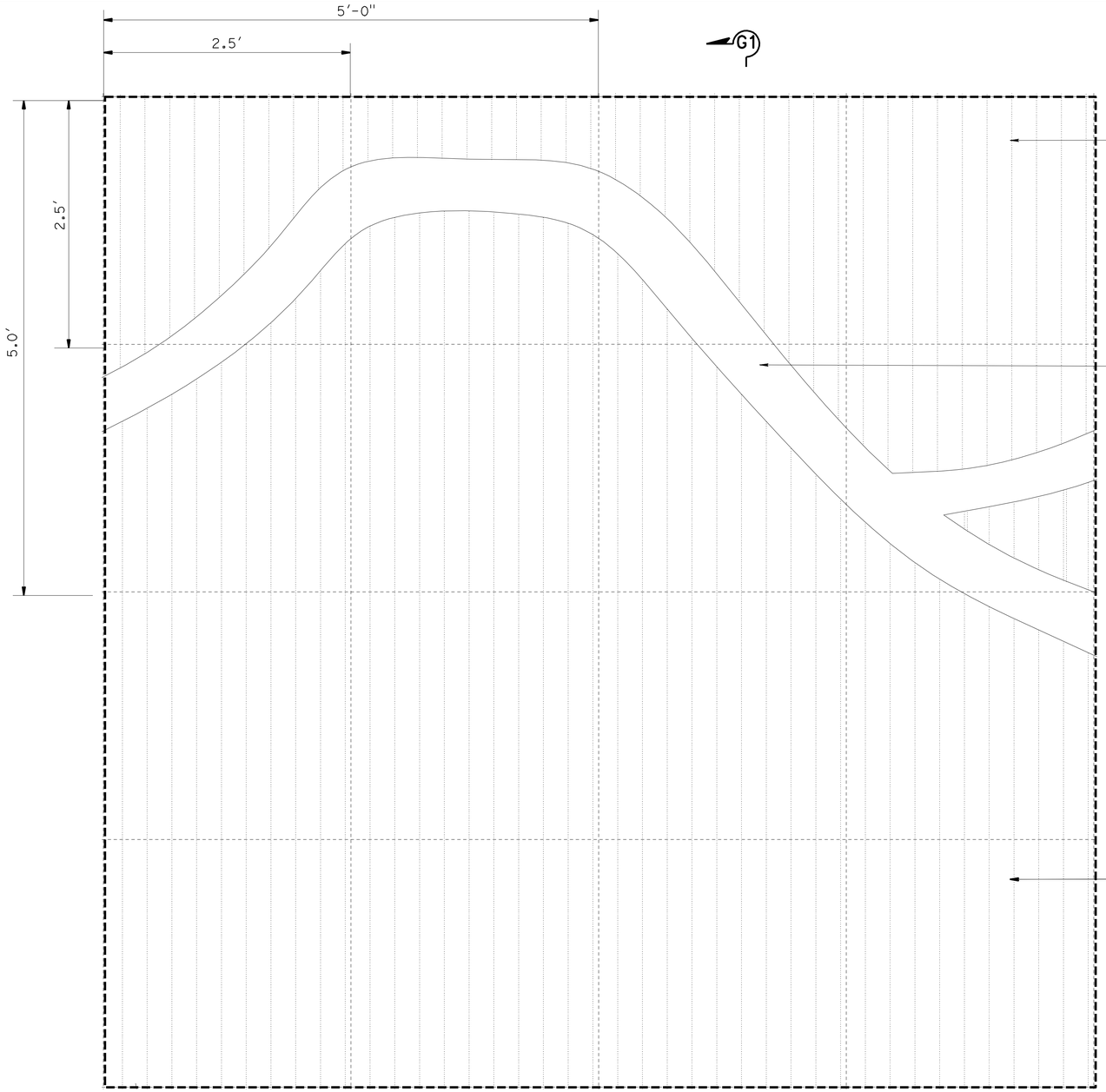

MOUNTAIN MOTIF ELEVATION

1½"=1'-0"

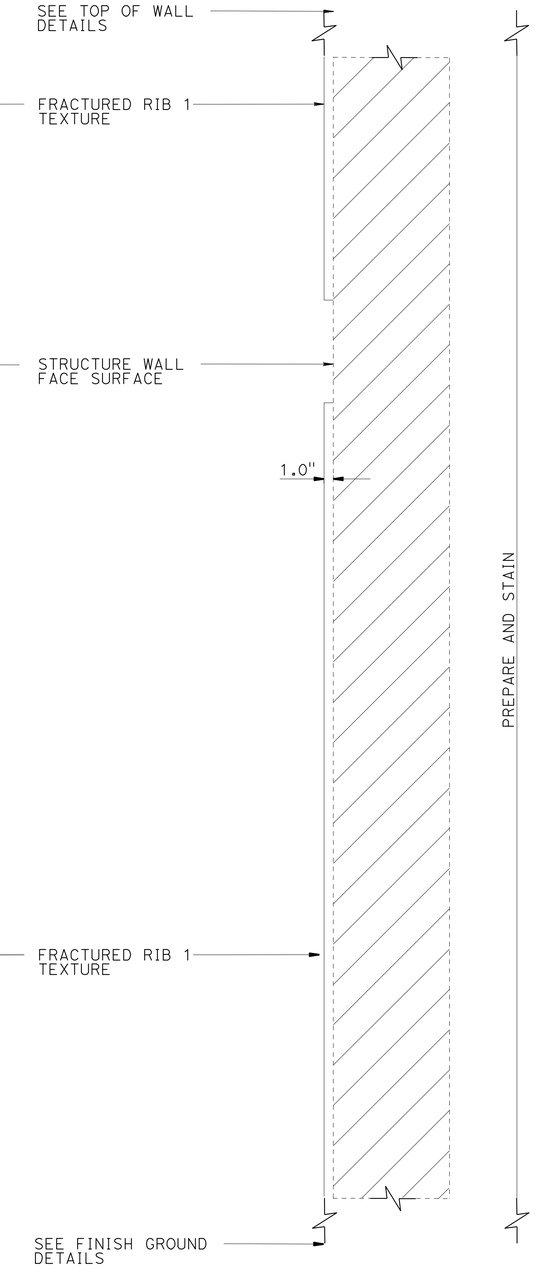

SECTION G1-G1

1½"=1'-0"

ALL DIMENSIONS ARE IN FEET AND INCHES UNLESS OTHERWISE SHOWN

THIS PLAN IS ACCURATE FOR ARCHITECTURAL TREATMENT WORK ONLY.

	BY	CHECKED
DESIGN	M. Hall/B. Fleming/B. Strout	M. Bishop
DETAILS	M. Bishop	M. Hall
QUANTITIES	D. Wong	J. Niu

STATE OF CALIFORNIA
DEPARTMENT OF TRANSPORTATION

DIVISION OF ENGINEERING SERVICES
STRUCTURE DESIGN
DESIGN BRANCH 10

BRIDGE NO. 54E0111
POST MILE 0.56

RETAINING WALL NO. 40

ARCHITECTURAL SURFACE DETAILS NO. 8A

STRUCTURES DESIGN DETAIL SHEET (ENGLISH) (REV. 09-01-10)

ORIGINAL SCALE IN INCHES FOR REDUCED PLANS 0 1 2 3

UNIT: 3589
PROJECT NUMBER & PHASE: 08000005061
CONTRACT NO.: 08-0M9401

DISREGARD PRINTS BEARING EARLIER REVISION DATES

REVISION DATES: 2-10-12

SHEET 17 OF 26

FILE => 54e0111das1217.dgn

USERNAME => s124496 DATE PLOTTED => 18-APR-2012 TIME PLOTTED => 14:39

DIST	COUNTY	ROUTE	POST MILES TOTAL PROJECT	SHEET No.	TOTAL SHEETS
08	Riv,SBd	91,215	21.5/21.7, 43.2/45.2,0.0/5.1	1312	1743

LICENSED LANDSCAPE ARCHITECT 3-29-12 DATE

4-16-12
PLANS APPROVAL DATE

LICENSED LANDSCAPE ARCHITECT
RAY DESSELLE
No. 2916
Exp. 11-30-13
STATE OF CALIFORNIA

The State of California or its officers or agents shall not be responsible for the accuracy or completeness of electronic copies of this plan sheet.

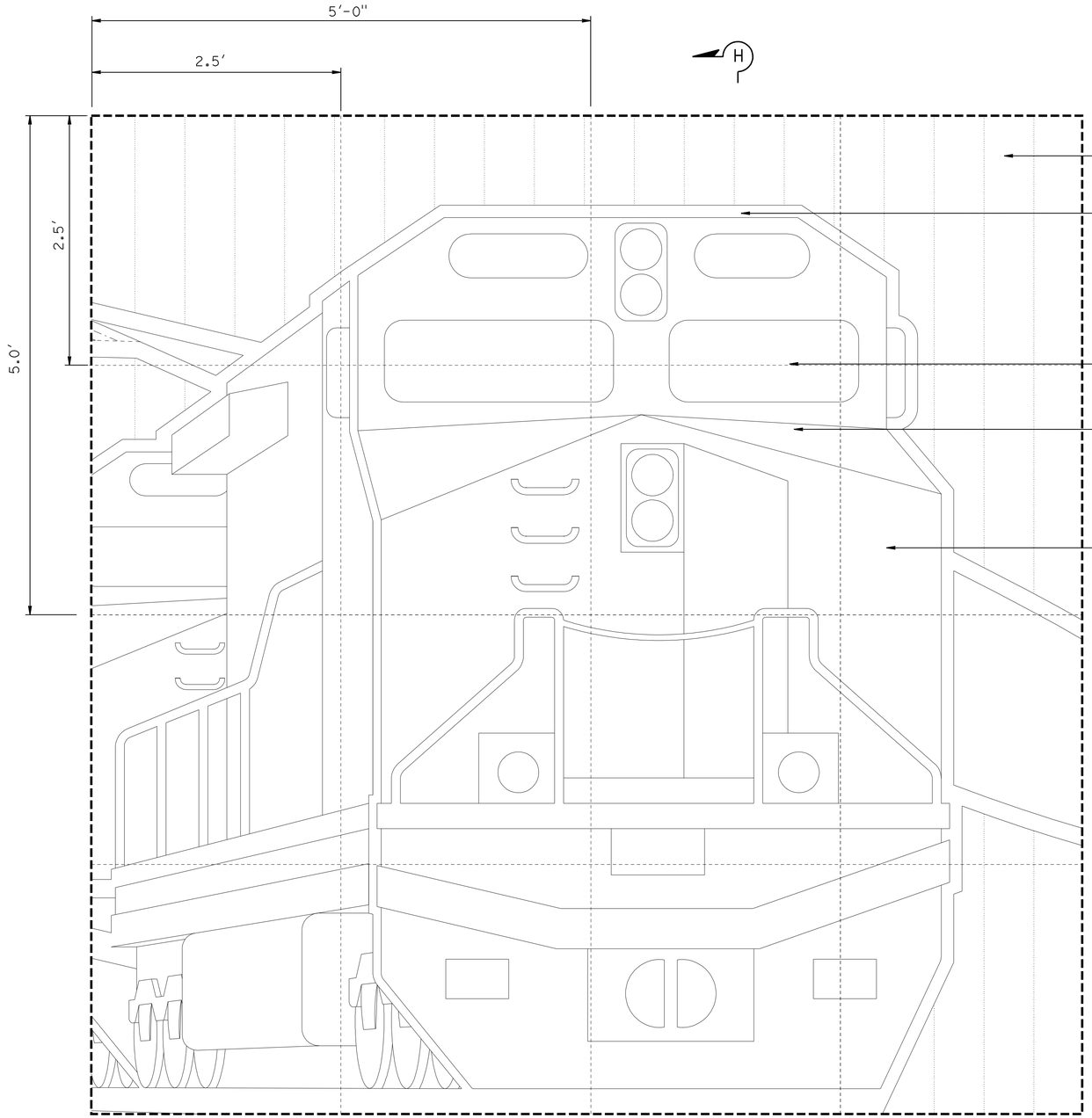

FREIGHT MOTIF ELEVATION

1½"=1'-0"

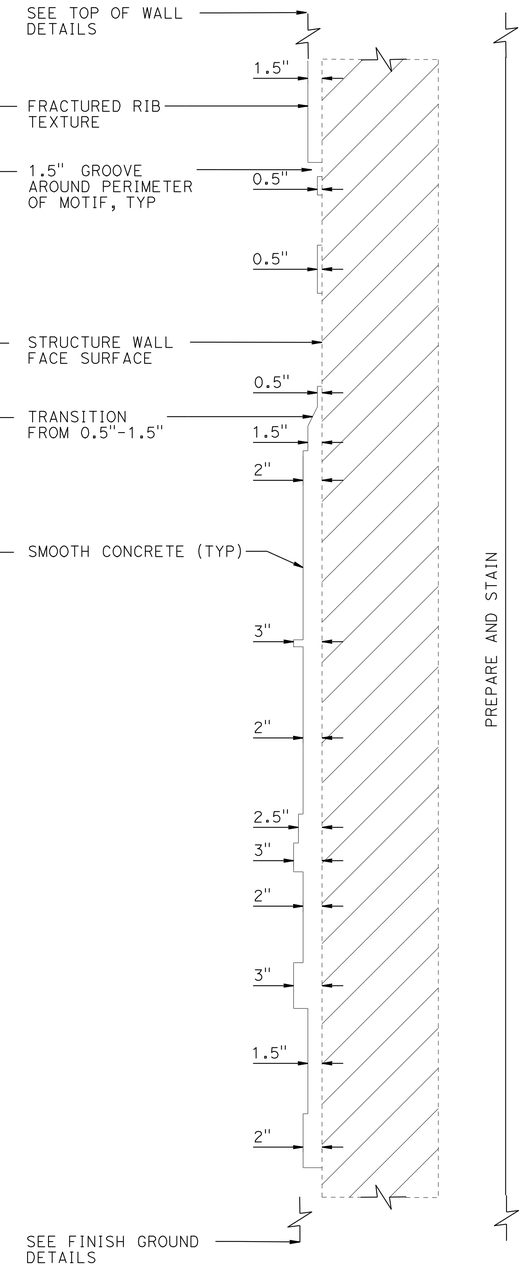

SECTION H-H

1½"=1'-0"

ALL DIMENSIONS ARE IN FEET AND INCHES UNLESS OTHERWISE SHOWN

THIS PLAN IS ACCURATE FOR ARCHITECTURAL TREATMENT WORK ONLY.

	BY	CHECKED
DESIGN	M. Hall/B. Fleming/B. Strout	M. Bishop
DETAILS	M. Bishop	M. Hall
QUANTITIES	D. Wong	J. Niu

STATE OF CALIFORNIA
DEPARTMENT OF TRANSPORTATION

DIVISION OF ENGINEERING SERVICES
STRUCTURE DESIGN
DESIGN BRANCH 10

BRIDGE NO. 54E0111
POST MILE 0.56

RETAINING WALL NO. 40
ARCHITECTURAL SURFACE DETAILS NO. 9

STRUCTURES DESIGN DETAIL SHEET (ENGLISH) (REV. 09-01-10)

ORIGINAL SCALE IN INCHES FOR REDUCED PLANS 0 1 2 3

UNIT: 3589
PROJECT NUMBER & PHASE: 08000005061
CONTRACT NO.: 08-0M9401

DISREGARD PRINTS BEARING EARLIER REVISION DATES

REVISION DATES: 2-10-12

SHEET 18 OF 26

FILE => 54e0111das1318.dgn

USERNAME => s124496 DATE PLOTTED => 18-APR-2012 TIME PLOTTED => 14:39

DIST	COUNTY	ROUTE	POST MILES TOTAL PROJECT	SHEET No.	TOTAL SHEETS
08	Riv,SBd	91,215	21.5/21.7, 43.2/45.2,0.0/5.1	1313	1743

LICENSED LANDSCAPE ARCHITECT 3-29-12 DATE

4-16-12
PLANS APPROVAL DATE

LICENSED LANDSCAPE ARCHITECT
RAY DESSELLE
No. 2916
Exp. 11-30-13
STATE OF CALIFORNIA

The State of California or its officers or agents shall not be responsible for the accuracy or completeness of electronic copies of this plan sheet.

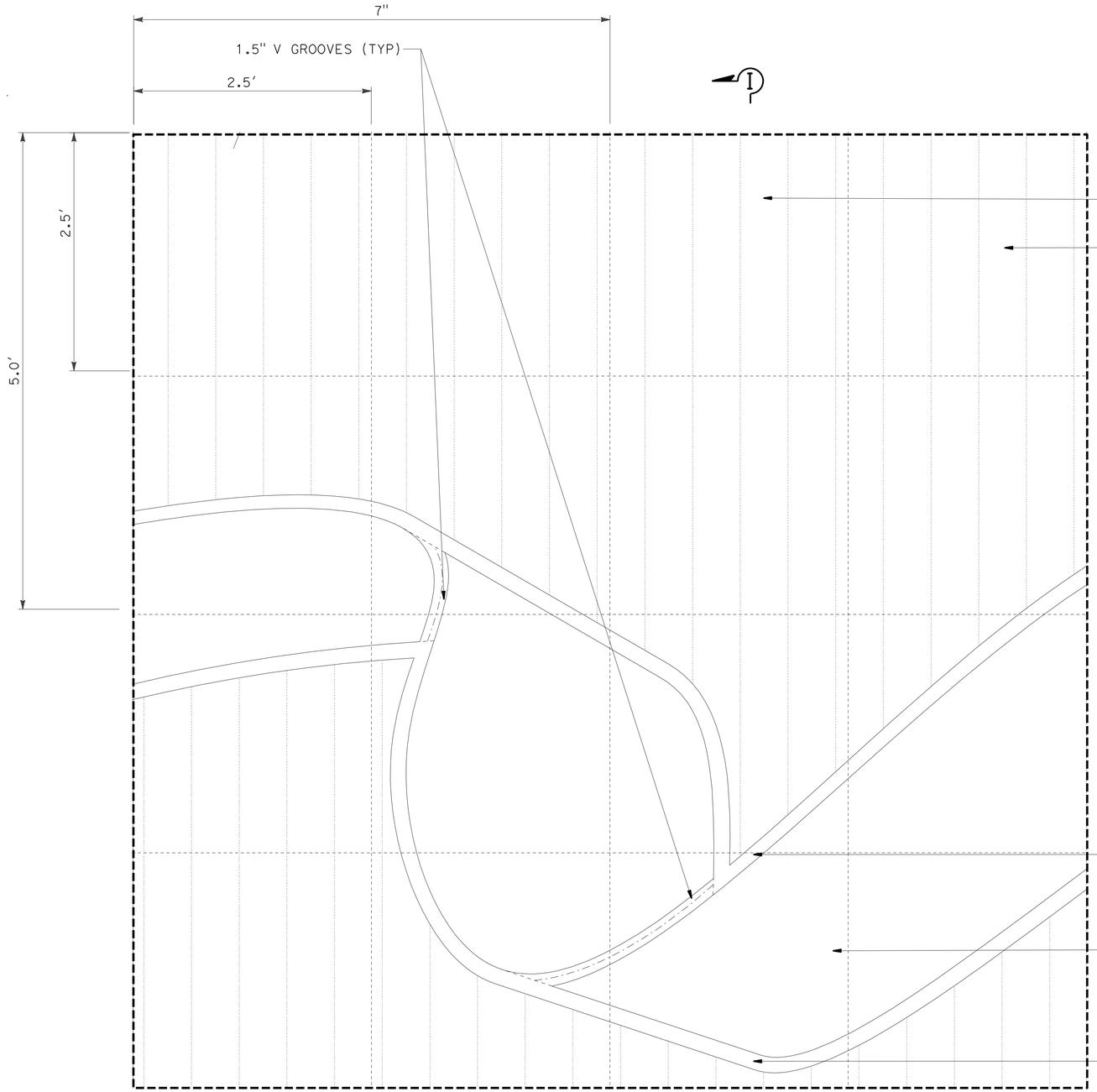

RIBBON MOTIF ELEVATION

1½"=1'-0"

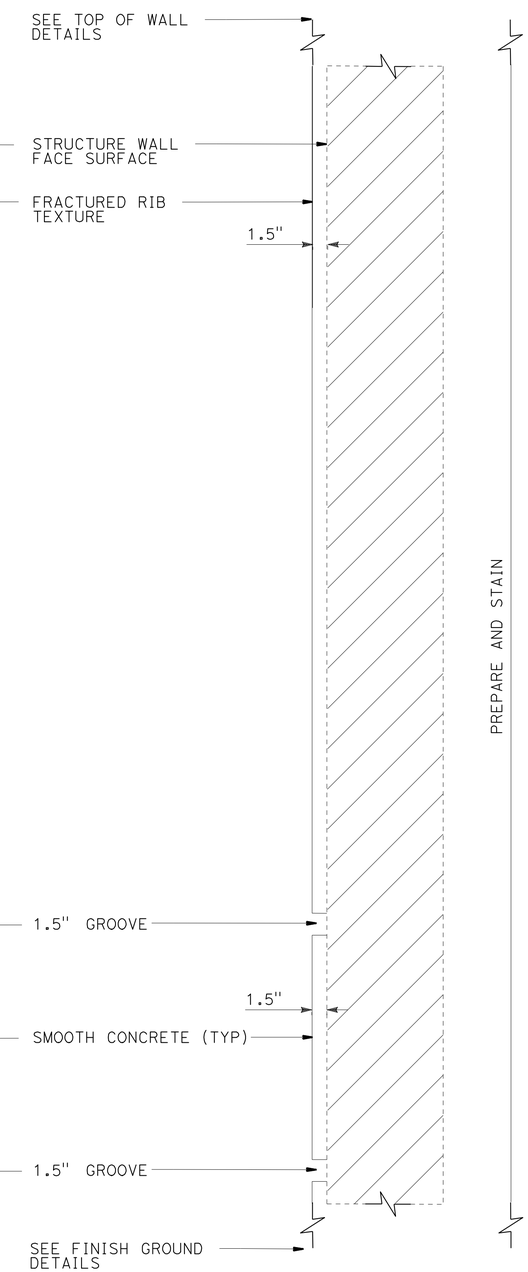

SECTION I-I

1½"=1'-0"

ALL DIMENSIONS ARE IN FEET AND INCHES UNLESS OTHERWISE SHOWN

THIS PLAN IS ACCURATE FOR ARCHITECTURAL TREATMENT WORK ONLY.

	BY	CHECKED
DESIGN	M. Hall/B. Fleming/B. Strout	M. Bishop
DETAILS	M. Bishop	M. Hall
QUANTITIES	D. Wong	J. Niu

STATE OF CALIFORNIA
DEPARTMENT OF TRANSPORTATION

DIVISION OF ENGINEERING SERVICES
STRUCTURE DESIGN
DESIGN BRANCH 10

BRIDGE NO. 54E0111
POST MILE 0.56

RETAINING WALL NO. 40
ARCHITECTURAL SURFACE DETAILS NO. 10

STRUCTURES DESIGN DETAIL SHEET (ENGLISH) (REV. 09-01-10)

ORIGINAL SCALE IN INCHES FOR REDUCED PLANS 0 1 2 3

UNIT: 3589
PROJECT NUMBER & PHASE: 08000005061
CONTRACT NO.: 08-0M9401

DISREGARD PRINTS BEARING EARLIER REVISION DATES

REVISION DATES: 2-10-12

SHEET 19 OF 26

FILE => 54e0111das1419.dgn

USERNAME => s124496 DATE PLOTTED => 18-APR-2012 TIME PLOTTED => 14:39

DIST	COUNTY	ROUTE	POST MILES TOTAL PROJECT	SHEET No.	TOTAL SHEETS
08	Riv,SBd	91,215	21.5/21.7, 43.2/45.2,0.0/5.1	1314	1743

LICENSED LANDSCAPE ARCHITECT — DATE 3-29-12

4-16-12
PLANS APPROVAL DATE

LICENSED LANDSCAPE ARCHITECT — RAY DESSELLE — No. 2916 — Exp. 11-30-13 — STATE OF CALIFORNIA

The State of California or its officers or agents shall not be responsible for the accuracy or completeness of electronic copies of this plan sheet.

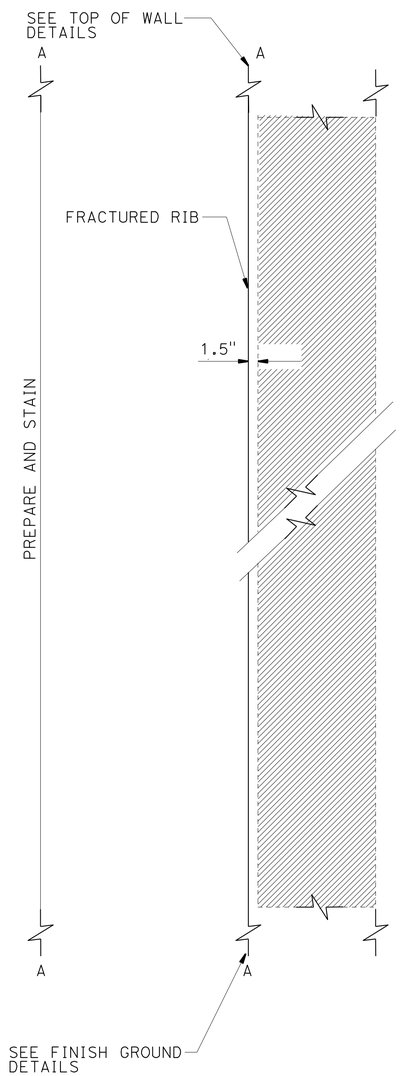

SECTION A-A
NO SCALE

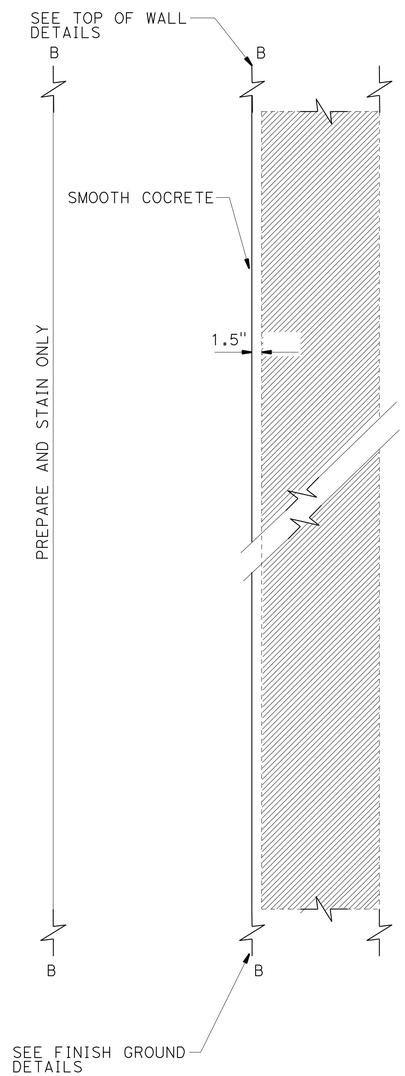

SECTION B-B
NO SCALE

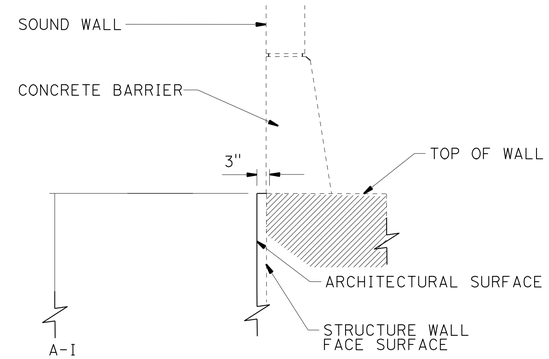

TOP OF WALL DETAIL TYPICAL WITH CONCRETE BARRIER AND SOUND WALL
NO SCALE

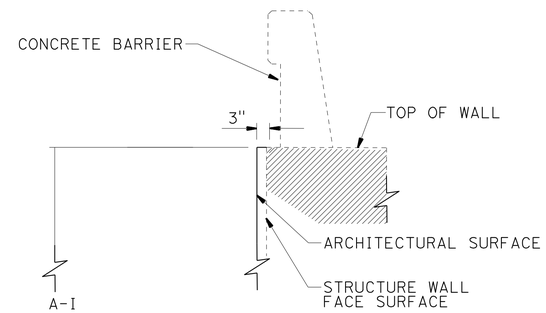

TOP OF WALL DETAIL TYPICAL WITH CONCRETE BARRIER
NO SCALE

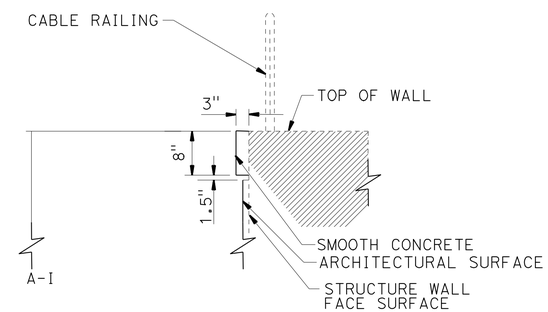

TOP OF WALL DETAIL TYPICAL WITH CABLE RAIL
NO SCALE

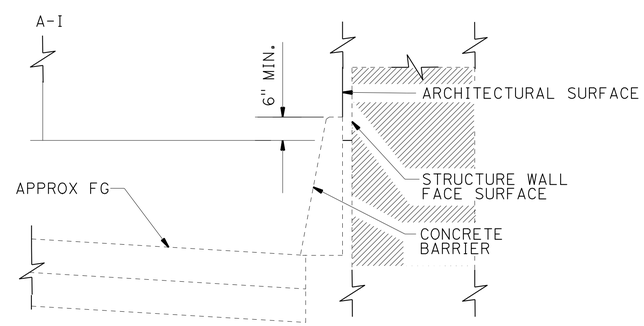

FINISH GROUND DETAIL TYPICAL WITH CONCRETE BARRIER
NO SCALE

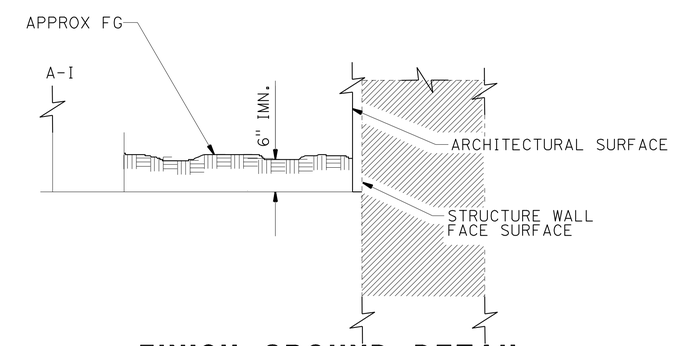

FINISH GROUND DETAIL TYPICAL DETAIL AT FINISH GRADE
NO SCALE

ALL DIMENSIONS ARE IN FEET AND INCHES UNLESS OTHERWISE SHOWN

THIS PLAN IS ACCURATE FOR ARCHITECTURAL TREATMENT WORK ONLY.

	BY	CHECKED
DESIGN	M. Hall/B. Fleming/B. Strout	M. Bishop
DETAILS	M. Bishop	M. Hall
QUANTITIES	D. Wong	J. Niu

STATE OF CALIFORNIA
DEPARTMENT OF TRANSPORTATION

DIVISION OF ENGINEERING SERVICES
STRUCTURE DESIGN
DESIGN BRANCH 10

BRIDGE NO. 54E0111
POST MILE 0.56

RETAINING WALL NO. 40
ARCHITECTURAL SURFACE DETAILS NO. 11

STRUCTURES DESIGN DETAIL SHEET (ENGLISH) (REV. 09-01-10)

ORIGINAL SCALE IN INCHES FOR REDUCED PLANS 0 1 2 3

UNIT: 3589
PROJECT NUMBER & PHASE: 08000005061
CONTRACT NO.: 08-0M9401

DISREGARD PRINTS BEARING EARLIER REVISION DATES

REVISION DATES: 2-10-12

SHEET 20 OF 26

FILE => 54e0111das1520.dgn

USERNAME => s124496 DATE PLOTTED => 18-APR-2012 TIME PLOTTED => 14:40

DIST	COUNTY	ROUTE	POST MILES TOTAL PROJECT	SHEET No.	TOTAL SHEETS
08	Riv,SBd	91,215	21.5/21.7, 43.2/45.2,0.0/5.1	1315	1743

LICENSED LANDSCAPE ARCHITECT 3-29-12 DATE

4-16-12
PLANS APPROVAL DATE

LICENSED LANDSCAPE ARCHITECT RAY DESSELLE No. 2916 Exp. 11-30-13 STATE OF CALIFORNIA

The State of California or its officers or agents shall not be responsible for the accuracy or completeness of electronic copies of this plan sheet.

NOTE "A"
-PERMITTED LOCATION OF WEAKEN PLANE AND EXPANSION JOINTS

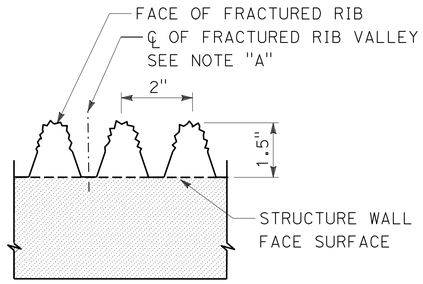

TYPICAL FRACTURED RIB TEXTURE
NO SCALE

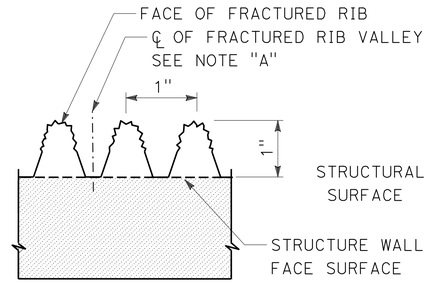

TYPICAL FRACTURED RIB 1 TEXTURE
NO SCALE

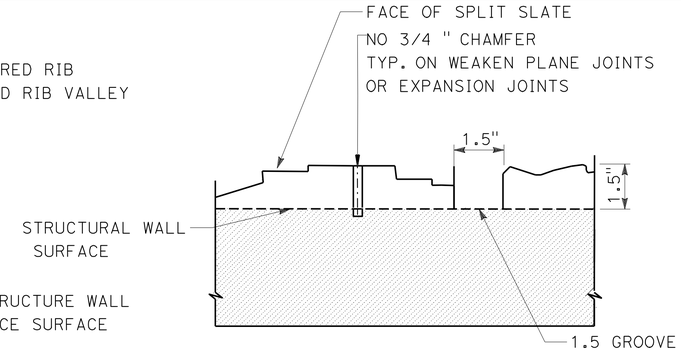

TYPICAL SPLIT SLATE TEXTURE
NO SCALE

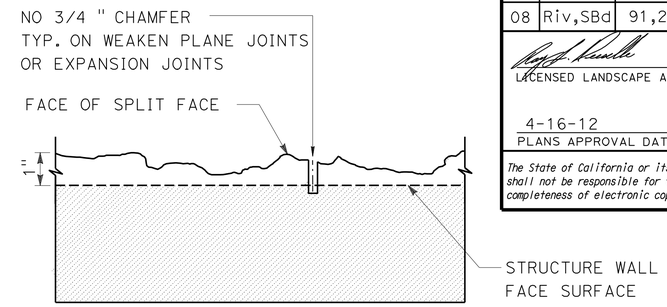

TYPICAL SPLIT FACE TEXTURE
NO SCALE

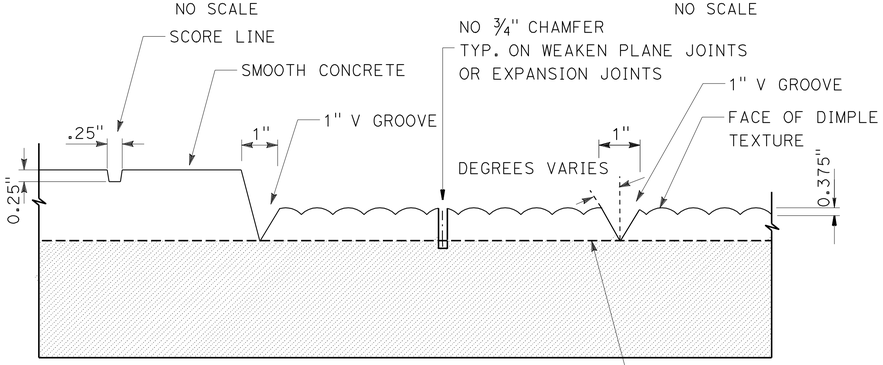

TYPICAL DIMPLE TEXTURE
NO SCALE

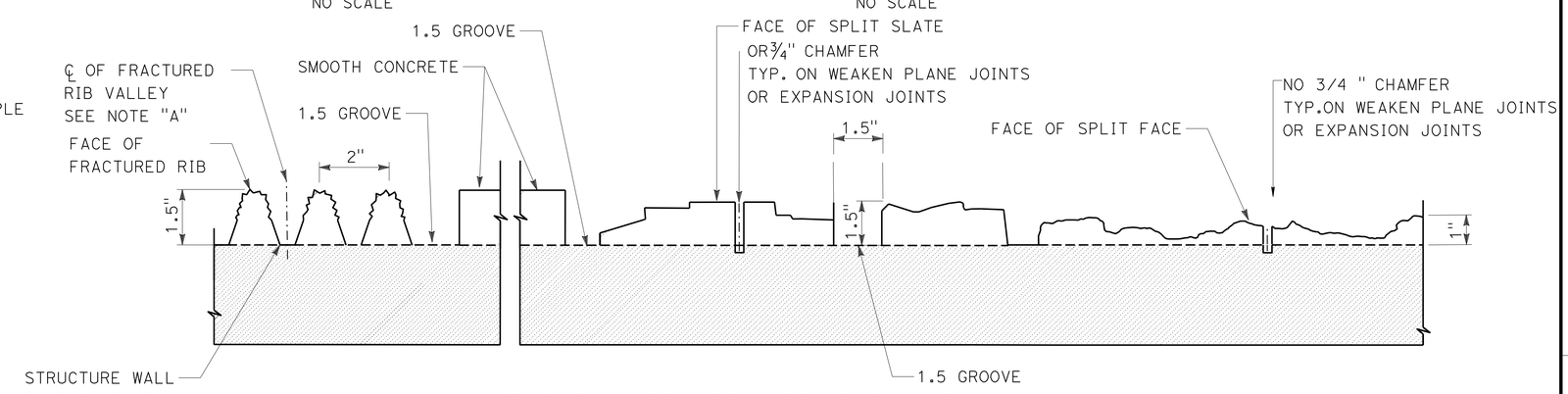

TYPICAL FRACTURED RIB WITH SPLIT SLATE AND SPLIT FACE
NO SCALE

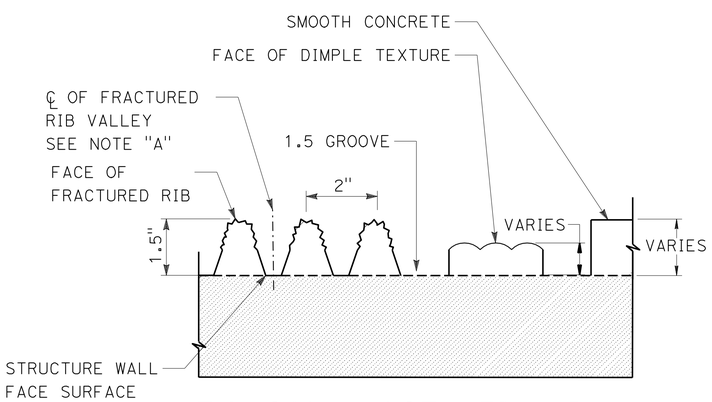

TYPICAL FRACTURED RIB WITH DIMPLE TEXTURE
NO SCALE

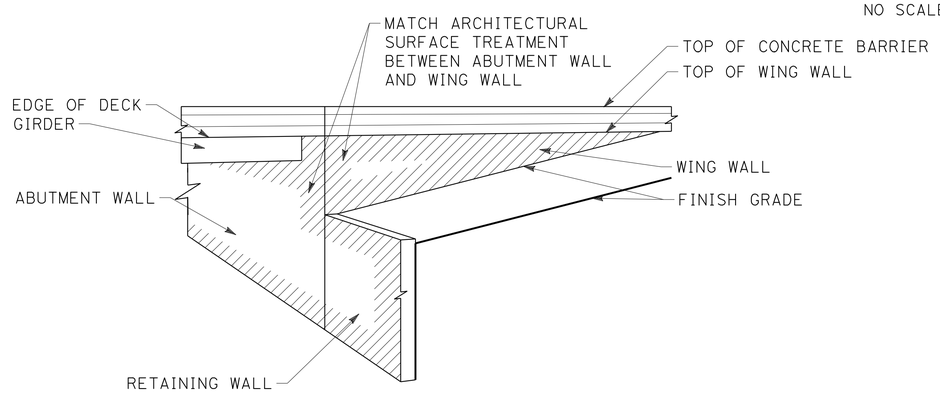

TYPICAL CONTINUATION OF ARCHITECTURAL SURFACE TREATMENT ONTO ABUTMENT WINGWALL
NO SCALE

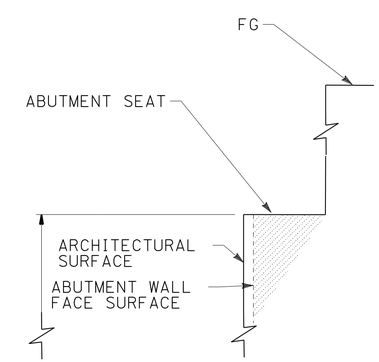

TOP OF BRIDGE ABUTMENT WALL DETAIL TYPICAL BRIDGE SOFFIT
NO SCALE

-ALL DIMENSIONS ARE IN FEET AND INCHES UNLESS OTHERWISE SHOWN

THIS PLAN IS ACCURATE FOR ARCHITECTURAL TREATMENT WORK ONLY.

	BY	CHECKED
DESIGN	M. Hall/B. Fleming/B. Strout	M. Bishop
DETAILS	M. Bishop	M. Hall
QUANTITIES	D. Wong	J. Niu

STATE OF CALIFORNIA
DEPARTMENT OF TRANSPORTATION

DIVISION OF ENGINEERING SERVICES
STRUCTURE DESIGN
DESIGN BRANCH 10

BRIDGE NO. 54E0111
POST MILE 0.56

RETAINING WALL NO. 40
ARCHITECTURAL SURFACE DETAILS NO. 12

STRUCTURES DESIGN DETAIL SHEET (ENGLISH) (REV. 09-01-10)

ORIGINAL SCALE IN INCHES FOR REDUCED PLANS 0 1 2 3

UNIT: 3589
PROJECT NUMBER & PHASE: 08000005061
CONTRACT NO.: 08-0M9401

DISREGARD PRINTS BEARING EARLIER REVISION DATES

REVISION DATES 2-10-12

SHEET 21 OF 26

FILE => 54e0111das1621.dgn

USERNAME => s124496 DATE PLOTTED => 18-APR-2012 TIME PLOTTED => 14:40

DIST	COUNTY	ROUTE	POST MILES TOTAL PROJECT	SHEET No.	TOTAL SHEETS
08	Riv,SBd	91,215	21.5/21.7, 43.2/45.2,0.0/5.1	1316	1743

LICENSED LANDSCAPE ARCHITECT — DATE 3-29-12

4-16-12
PLANS APPROVAL DATE

LICENSED LANDSCAPE ARCHITECT — RAY DESSELLE — No. 2916 — Exp. 11-30-13 — STATE OF CALIFORNIA

The State of California or its officers or agents shall not be responsible for the accuracy or completeness of electronic copies of this plan sheet.

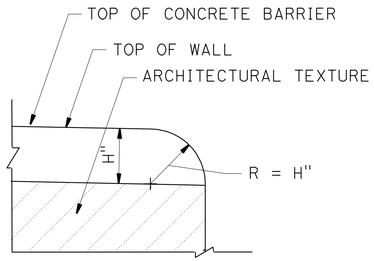

DETAIL NO. 1
TYPICAL END OF WALL WITH CONCRETE BARRIER ON TOP OF WALL DETAIL
NO SCALE

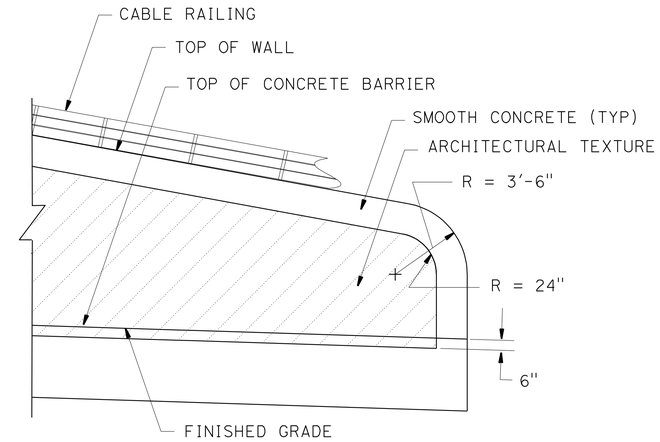

DETAIL NO. 2
TYPICAL END OF WALL
NO SCALE

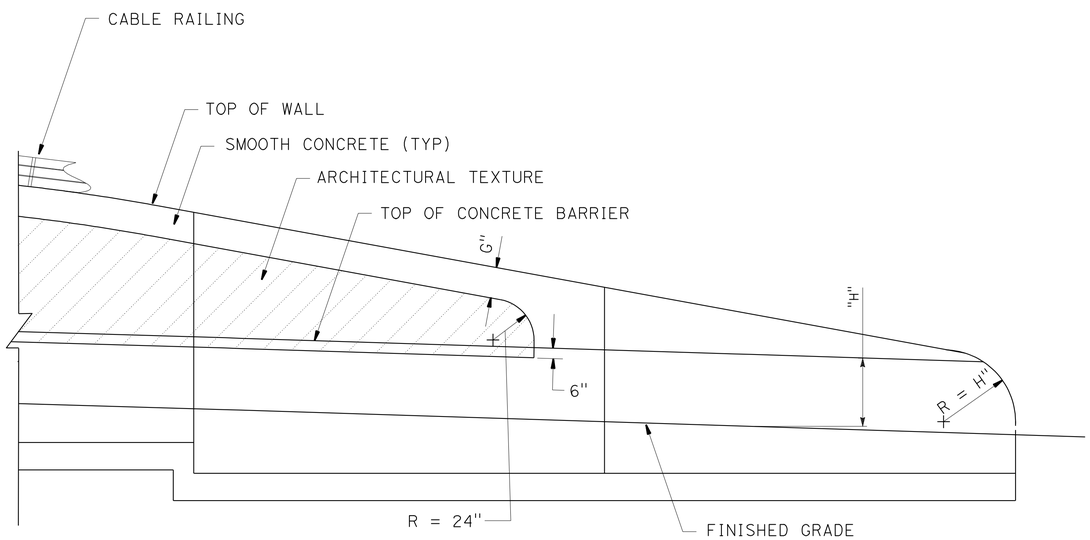

DETAIL NO. 3
TYPICAL END OF WALL WITH TYPE 60D MODIFIED CONCRETE BARRIER
NO SCALE

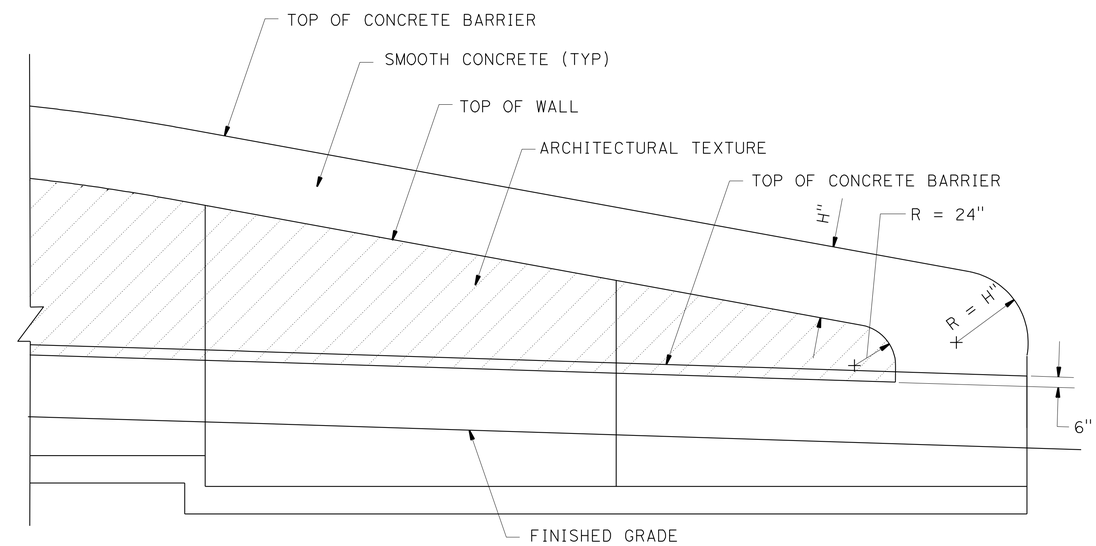

DETAIL NO. 4
TYPICAL END OF WALL WITH CONCRETE BARRIER ON TOP OF WALL AND TYPE 60D MODIFIED CONCRETE BARRIER
NO SCALE

	BY	CHECKED
DESIGN	M. Hall/B. Fleming/B. Strout	M. Bishop
DETAILS	M. Bishop	M. Hall
QUANTITIES	D. Wong	J. Niu

STATE OF CALIFORNIA
DEPARTMENT OF TRANSPORTATION

DIVISION OF ENGINEERING SERVICES
STRUCTURE DESIGN
DESIGN BRANCH 10

BRIDGE NO. 54E0111
POST MILE 0.56

RETAINING WALL NO. 40
ARCHITECTURAL SURFACE DETAILS NO. 13

STRUCTURES DESIGN DETAIL SHEET (ENGLISH) (REV. 09-01-10)

ORIGINAL SCALE IN INCHES FOR REDUCED PLANS 0 1 2 3

UNIT: 3589
PROJECT NUMBER & PHASE: 08000005061
CONTRACT NO.: 08-0M9401

DISREGARD PRINTS BEARING EARLIER REVISION DATES 2-10-12

SHEET 22 OF 12

FILE => 54e0111das1722.dgn

USERNAME => s124496 DATE PLOTTED => 18-APR-2012 TIME PLOTTED => 14:40

DIST	COUNTY	ROUTE	POST MILES TOTAL PROJECT	SHEET No.	TOTAL SHEETS
08	Riv,SBd	91,215	21.5/21.7, 43.2/45.2,0.0/5.1	1317	1743

REGISTERED CIVIL ENGINEER 1-11-12 DATE

4-16-12
PLANS APPROVAL DATE

REGISTERED PROFESSIONAL ENGINEER Brian Gutierrez No. C66258 Exp. 6-30-12 CIVIL STATE OF CALIFORNIA

The State of California or its officers or agents shall not be responsible for the accuracy or completeness of electronic copies of this plan sheet.

This LOTB sheet was prepared in accordance with the Caltrans Soil & Rock Logging, Classification, & Presentation Manual (2010 Edition).

BENCH MARK

BM 048
Set 1" IP W/ALUM PLUG STAMPED "SBD 215 PM 0.48 GPS 2010" TOP SLOPE NB IOWA AVE ON-RAMP; 13' WLY R/W FENCE; 6' WLY CL V-DITCH; 70' NELY RAMP METER SIGNAL.
N 1,832,045.099
E 6,763,416.060
Elev 927.971

NAVD88

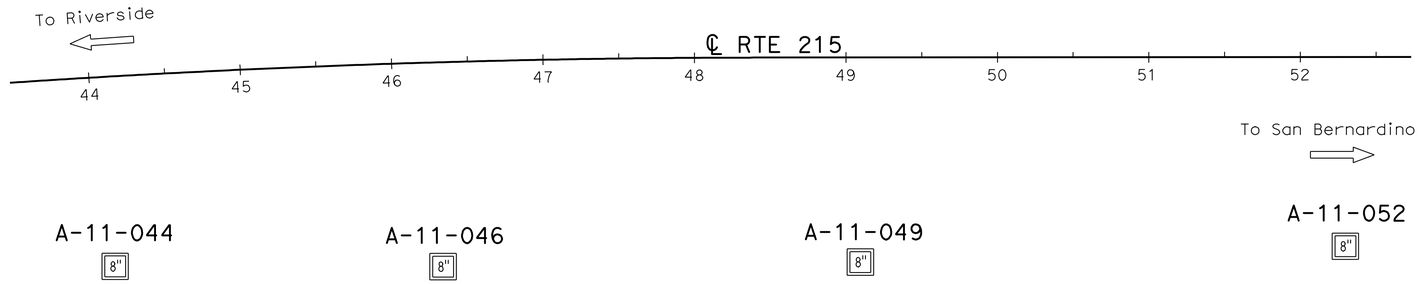

PLAN

1" = 50'

Note: No ground water encountered during field investigation.

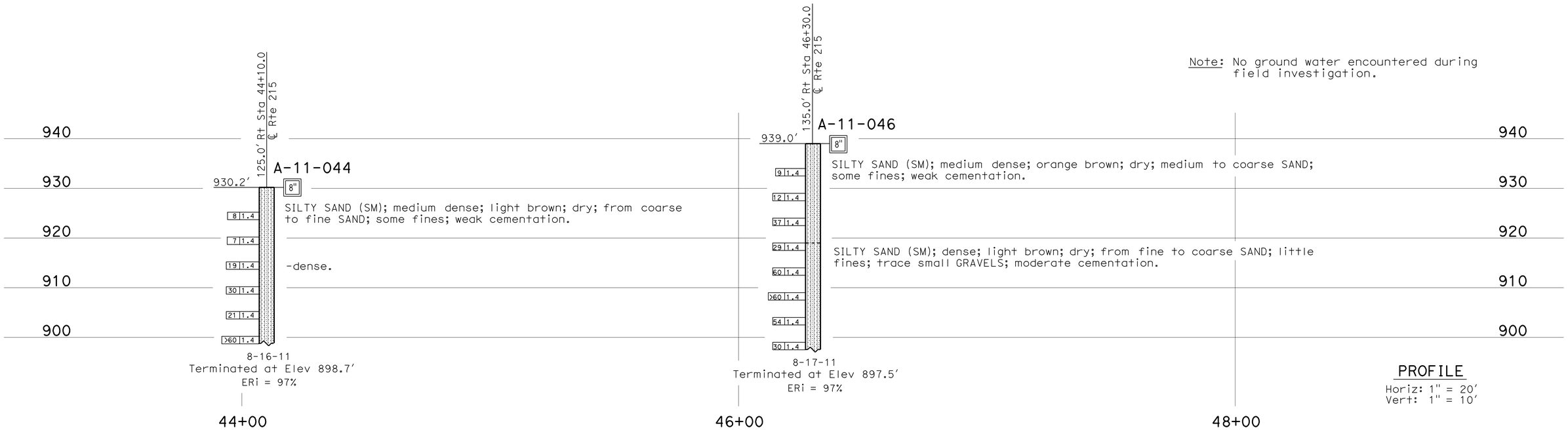

PROFILE

Horiz: 1" = 20'
Vert: 1" = 10'

ENGINEERING SERVICES	MATERIALS AND GEOTECHNICAL SERVICES	STATE OF CALIFORNIA DEPARTMENT OF TRANSPORTATION	DIVISION OF ENGINEERING SERVICES STRUCTURE DESIGN DESIGN BRANCH 10	BRIDGE NO. 54E0111 POST MILE 0.0-5.0	RETAINING WALL NO. 40 LOG OF TEST BORINGS 1 OF 4
FUNCTIONAL SUPERVISOR NAME: S. Wei	DRAWN BY: W. Tang 11/11 CHECKED BY: C. Hoadley	FIELD INVESTIGATION BY: B. Gutierrez			

OGS CIVIL LOG OF TEST BORINGS SHEET

ORIGINAL SCALE IN INCHES FOR REDUCED PLANS 0 1 2 3

UNIT: 3643
PROJECT NUMBER & PHASE: 08000005061 CONTRACT NO.: 08-0M9401

DISREGARD PRINTS BEARING EARLIER REVISION DATES

REVISION DATES 10-12-11 12-21-11 SHEET 23 OF 26

FILE => 54e0111zltb23.dgn

USERNAME => s124496 DATE PLOTTED => 18-APR-2012 TIME PLOTTED => 14:40

DIST	COUNTY	ROUTE	POST MILES TOTAL PROJECT	SHEET No.	TOTAL SHEETS
08	Riv,SBd	91,215	21.5/21.7, 43.2/45.2,0.0/5.1	1318	1743

REGISTERED CIVIL ENGINEER 1-11-12 DATE

4-16-12
PLANS APPROVAL DATE

REGISTERED PROFESSIONAL ENGINEER Brian Gutierrez No. C66258 Exp. 6-30-12 CIVIL STATE OF CALIFORNIA

The State of California or its officers or agents shall not be responsible for the accuracy or completeness of electronic copies of this plan sheet.

This LOTB sheet was prepared in accordance with the Caltrans Soil & Rock Logging, Classification, & Presentation Manual (2010 Edition).

FOR PLAN VIEW, SEE
"LOG OF TEST BORINGS 1 OF 4"

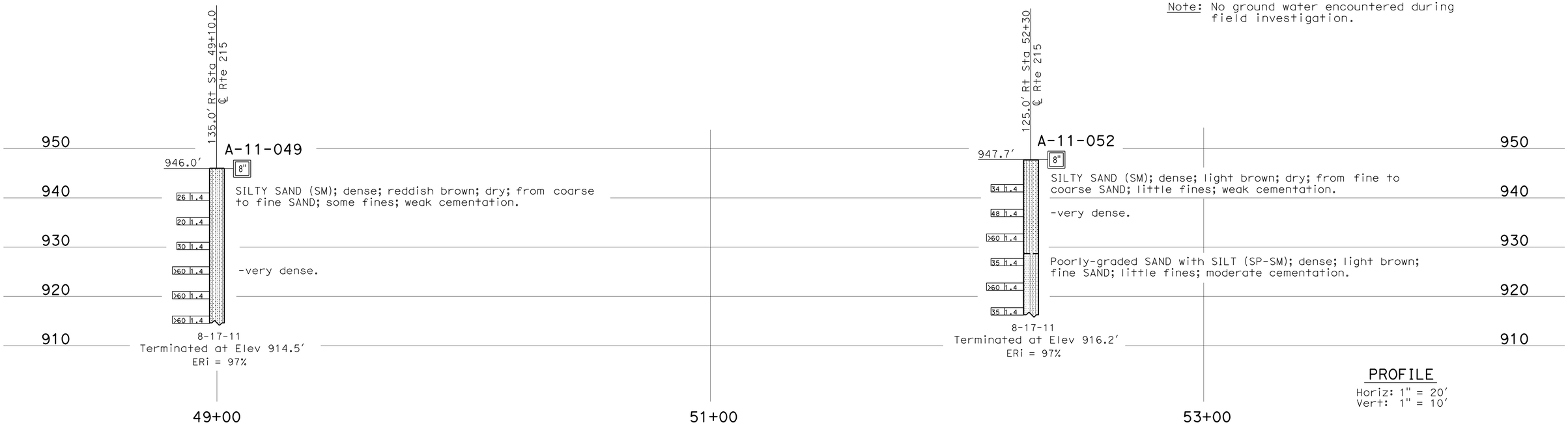

Note: No ground water encountered during field investigation.

PROFILE
Horiz: 1" = 20'
Vert: 1" = 10'

ENGINEERING SERVICES	MATERIALS AND GEOTECHNICAL SERVICES	STATE OF CALIFORNIA DEPARTMENT OF TRANSPORTATION	DIVISION OF ENGINEERING SERVICES STRUCTURE DESIGN DESIGN BRANCH 10	BRIDGE NO. 54E0111 POST MILE 0.0-5.0	RETAINING WALL NO. 40 LOG OF TEST BORINGS 2 OF 4
FUNCTIONAL SUPERVISOR NAME: S. Wei	DRAWN BY: W. Tang 11/11 CHECKED BY: C. Hoadley	FIELD INVESTIGATION BY: B. Gutierrez			

OGS CIVIL LOG OF TEST BORINGS SHEET

ORIGINAL SCALE IN INCHES FOR REDUCED PLANS 0 1 2 3

UNIT: 3643
PROJECT NUMBER & PHASE: 08000005061 CONTRACT NO.: 08-0M9401

DISREGARD PRINTS BEARING EARLIER REVISION DATES

REVISION DATES 10-12-11 12-21-11 SHEET 24 OF 26

FILE => 54e0111zltb24.dgn

USERNAME => s124496 DATE PLOTTED => 18-APR-2012 TIME PLOTTED => 14:40

DIST	COUNTY	ROUTE	POST MILES TOTAL PROJECT	SHEET No.	TOTAL SHEETS
08	Riv,SBd	91,215	21.5/21.7, 43.2/45.2,0.0/5.1	1319	1743

REGISTERED CIVIL ENGINEER 1-11-12 DATE

4-16-12
PLANS APPROVAL DATE

REGISTERED PROFESSIONAL ENGINEER Brian Gutierrez No. C66258 Exp. 6-30-12 CIVIL STATE OF CALIFORNIA

The State of California or its officers or agents shall not be responsible for the accuracy or completeness of electronic copies of this plan sheet.

REFERENCE: CALTRANS SOIL & ROCK LOGGING, CLASSIFICATION, AND PRESENTATION MANUAL (2010)

CEMENTATION

Description	Criteria
Weak	Crumbles or breaks with handling or little finger pressure.
Moderate	Crumbles or breaks with considerable finger pressure.
Strong	Will not crumble or break with finger pressure.

BOREHOLE IDENTIFICATION

Symbol	Hole Type	Description
Size	A	Auger Boring (hollow or solid stem bucket)
Size	R RW RC P	Rotary drilled boring (conventional) Rotary drilled with self-casing wire-line Rotary core with continuously-sampled, self-casing wire-line Rotary percussion boring (air)
Size	R RC	Rotary drilled diamond core Rotary drilled rock core
Size	HD HA	Hand driven (1-inch soil tube) Hand Auger
●	D	Dynamic Cone Penetration Boring
▲	CPT	Cone Penetration Test (ASTM D 5778)
⬚	O	Other (note on LOTB)

Note: Size in inches.

CONSISTENCY OF COHESIVE SOILS

Description	Shear Strength (tsf)	Pocket Penetrometer Measurement, PP, (tsf)	Torvane Measurement, TV, (tsf)	Vane Shear Measurement, VS, (tsf)
Very Soft	Less than 0.12	Less than 0.25	Less than 0.12	Less than 0.12
Soft	0.12 - 0.25	0.25 - 0.5	0.12 - 0.25	0.12 - 0.25
Medium Stiff	0.25 - 0.5	0.5 - 1	0.25 - 0.5	0.25 - 0.5
Stiff	0.5 - 1	1 - 2	0.5 - 1	0.5 - 1
Very Stiff	1 - 2	2 - 4	1 - 2	1 - 2
Hard	Greater than 2	Greater than 4	Greater than 2	Greater than 2

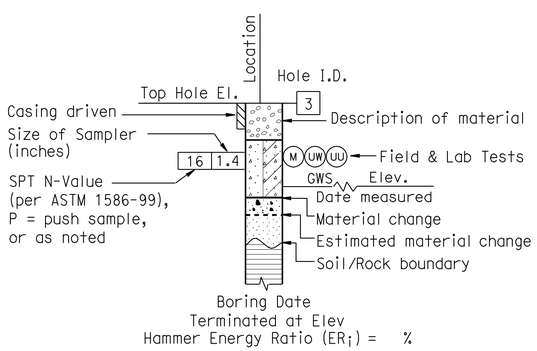

ROTARY BORING

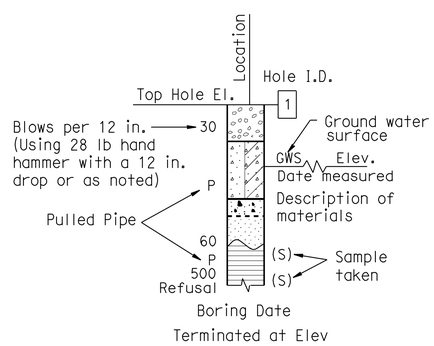

HAND BORING

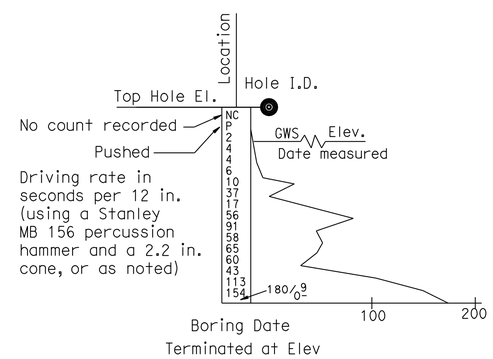

DYNAMIC CONE PENETRATION BORING

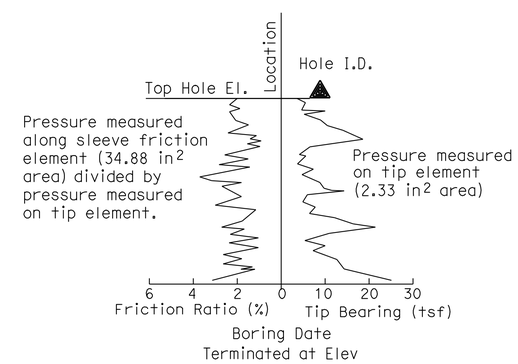

CONE PENETRATION TEST (CPT) BORING

ENGINEERING SERVICES	MATERIALS AND GEOTECHNICAL SERVICES	STATE OF CALIFORNIA DEPARTMENT OF TRANSPORTATION	DIVISION OF ENGINEERING SERVICES STRUCTURE DESIGN DESIGN BRANCH 10	BRIDGE NO. 54E0111 / POST MILE 0.0-5.0	RETAINING WALL NO. 40
	PREPARED BY: I. G-Remmen				LOG OF TEST BORINGS 3 OF 4

GS LOTB SOIL LEGEND

ORIGINAL SCALE IN INCHES FOR REDUCED PLANS 0 1 2 3

UNIT: 3643
PROJECT NUMBER & PHASE: 08000005061 CONTRACT NO.: 08-0M9401

DISREGARD PRINTS BEARING EARLIER REVISION DATES

REVISION DATES

SHEET 25 OF 26

FILE => 54e0111zltb25.dgn

USERNAME => s124496 DATE PLOTTED => 18-APR-2012 TIME PLOTTED => 14:40

REFERENCE: CALTRANS SOIL & ROCK LOGGING, CLASSIFICATION, AND PRESENTATION MANUAL (2010)

DIST	COUNTY	ROUTE	POST MILES TOTAL PROJECT	SHEET No.	TOTAL SHEETS
08	Riv,SBd	91,215	21.5/21.7, 43.2/45.2,0.0/5.1	1320	1743

REGISTERED CIVIL ENGINEER 1-11-12 DATE

4-16-12
PLANS APPROVAL DATE

REGISTERED PROFESSIONAL ENGINEER Brian Gutierrez No. C66258 Exp. 6-30-12 CIVIL STATE OF CALIFORNIA

The State of California or its officers or agents shall not be responsible for the accuracy or completeness of electronic copies of this plan sheet.

GROUP SYMBOLS AND NAMES

Graphic/Symbol	Group Names	Graphic/Symbol	Group Names
GW	Well-graded GRAVEL Well-graded GRAVEL with SAND	CL	Lean CLAY Lean CLAY with SAND Lean CLAY with GRAVEL SANDY lean CLAY SANDY lean CLAY with GRAVEL GRAVELLY lean CLAY GRAVELLY lean CLAY with SAND
GP	Poorly-graded GRAVEL Poorly-graded GRAVEL with SAND		
GW-GM	Well-graded GRAVEL with SILT Well-graded GRAVEL with SILT and SAND	CL-ML	SILTY CLAY SILTY CLAY with SAND SILTY CLAY with GRAVEL SANDY SILTY CLAY SANDY SILTY CLAY with GRAVEL GRAVELLY SILTY CLAY GRAVELLY SILTY CLAY with SAND
GW-GC	Well-graded GRAVEL with CLAY (or SILTY CLAY) Well-graded GRAVEL with CLAY and SAND (or SILTY CLAY and SAND)		
GP-GM	Poorly-graded GRAVEL with SILT Poorly-graded GRAVEL with SILT and SAND	ML	SILT SILT with SAND SILT with GRAVEL SANDY SILT SANDY SILT with GRAVEL GRAVELLY SILT GRAVELLY SILT with SAND
GP-GC	Poorly-graded GRAVEL with CLAY (or SILTY CLAY) Poorly-graded GRAVEL with CLAY and SAND (or SILTY CLAY and SAND)		
GM	SILTY GRAVEL SILTY GRAVEL with SAND	OL	ORGANIC lean CLAY ORGANIC lean CLAY with SAND ORGANIC lean CLAY with GRAVEL SANDY ORGANIC lean CLAY SANDY ORGANIC lean CLAY with GRAVEL GRAVELLY ORGANIC lean CLAY GRAVELLY ORGANIC lean CLAY with SAND
GC	CLAYEY GRAVEL CLAYEY GRAVEL with SAND		
GC-GM	SILTY, CLAYEY GRAVEL SILTY, CLAYEY GRAVEL with SAND	OL	ORGANIC SILT ORGANIC SILT with SAND ORGANIC SILT with GRAVEL SANDY ORGANIC SILT SANDY ORGANIC SILT with GRAVEL GRAVELLY ORGANIC SILT GRAVELLY ORGANIC SILT with SAND
SW	Well-graded SAND Well-graded SAND with GRAVEL		
SP	Poorly-graded SAND Poorly-graded SAND with GRAVEL	CH	Fat CLAY Fat CLAY with SAND Fat CLAY with GRAVEL SANDY fat CLAY SANDY fat CLAY with GRAVEL GRAVELLY fat CLAY GRAVELLY fat CLAY with SAND
SW-SM	Well-graded SAND with SILT Well-graded SAND with SILT and GRAVEL		
SW-SC	Well-graded SAND with CLAY (or SILTY CLAY) Well-graded SAND with CLAY and GRAVEL (or SILTY CLAY and GRAVEL)	MH	Elastic SILT Elastic SILT with SAND Elastic SILT with GRAVEL SANDY elastic SILT SANDY elastic SILT with GRAVEL GRAVELLY elastic SILT GRAVELLY elastic SILT with SAND
SP-SM	Poorly-graded SAND with SILT Poorly-graded SAND with SILT and GRAVEL		
SP-SC	Poorly-graded SAND with CLAY (or SILTY CLAY) Poorly-graded SAND with CLAY and GRAVEL (or SILTY CLAY and GRAVEL)	OH	ORGANIC fat CLAY ORGANIC fat CLAY with SAND ORGANIC fat CLAY with GRAVEL SANDY ORGANIC fat CLAY SANDY ORGANIC fat CLAY with GRAVEL GRAVELLY ORGANIC fat CLAY GRAVELLY ORGANIC fat CLAY with SAND
SM	SILTY SAND SILTY SAND with GRAVEL		
SC	CLAYEY SAND CLAYEY SAND with GRAVEL	OH	ORGANIC elastic SILT ORGANIC elastic SILT with SAND ORGANIC elastic SILT with GRAVEL SANDY ORGANIC elastic SILT SANDY ORGANIC elastic SILT with GRAVEL GRAVELLY ORGANIC elastic SILT GRAVELLY ORGANIC elastic SILT with SAND
SC-SM	SILTY, CLAYEY SAND SILTY, CLAYEY SAND with GRAVEL		
PT	PEAT	OL/OH	ORGANIC SOIL ORGANIC SOIL with SAND ORGANIC SOIL with GRAVEL SANDY ORGANIC SOIL SANDY ORGANIC SOIL with GRAVEL GRAVELLY ORGANIC SOIL GRAVELLY ORGANIC SOIL with SAND
	COBBLES COBBLES and BOULDERS BOULDERS		

FIELD AND LABORATORY TESTING

- (C) Consolidation (ASTM D 2435)
- (CL) Collapse Potential (ASTM D 5333)
- (CP) Compaction Curve (CTM 216)
- (CR) Corrosivity Testing (CTM 643, CTM 422, CTM 417)
- (CU) Consolidated Undrained Triaxial (ASTM D 4767)
- (DS) Direct Shear (ASTM D 3080)
- (EI) Expansion Index (ASTM D 4829)
- (M) Moisture Content (ASTM D 2216)
- (OC) Organic Content-% (ASTM D 2974)
- (P) Permeability (CTM 220)
- (PA) Particle Size Analysis (ASTM D 422)
- (PI) Plasticity Index (AASHTO T 90) Liquid Limit (AASHTO T 89)
- (PL) Point Load Index (ASTM D 5731)
- (PM) Pressure Meter
- (R) R-Value (CTM 301)
- (SE) Sand Equivalent (CTM 217)
- (SG) Specific Gravity (AASHTO T 100)
- (SL) Shrinkage Limit (ASTM D 427)
- (SW) Swell Potential (ASTM D 4546)
- (UC) Unconfined Compression-Soil (ASTM D 2166) Unconfined Compression-Rock (ASTM D 2938)
- (UU) Unconsolidated Undrained Triaxial (ASTM D 2850)
- (UW) Unit Weight (ASTM D 4767)

APPARENT DENSITY OF COHESIONLESS SOILS

Description	SPT N_{60} (Blows / 12 in.)
Very Loose	0 - 5
Loose	5 - 10
Medium Dense	10 - 30
Dense	30 - 50
Very Dense	Greater than 50

MOISTURE

Description	Criteria
Dry	No discernable moisture
Moist	Moisture present, but no free water
Wet	Visible free water

PERCENT OR PROPORTION OF SOILS

Description	Criteria
Trace	Particles are present but estimated to be less than 5%
Few	5% - 10%
Little	15% - 25%
Some	30% - 45%
Mostly	50% - 100%

PARTICLE SIZE

Description		Size (in.)
Boulder		Greater than 12
Cobble		3 - 12
Gravel	Coarse	3/4 - 3
	Fine	1/5 - 3/4
Sand	Coarse	1/16 - 1/5
	Medium	1/64 - 1/16
	Fine	1/300 - 1/64
Silt and Clay		Less than 1/300

ENGINEERING SERVICES

MATERIALS AND GEOTECHNICAL SERVICES

PREPARED BY: I.G-Remmen

STATE OF CALIFORNIA DEPARTMENT OF TRANSPORTATION

DIVISION OF ENGINEERING SERVICES STRUCTURE DESIGN DESIGN BRANCH 10

BRIDGE NO. 54E0111

POST MILE 0.0-5.0

RETAINING WALL NO. 40

LOG OF TEST BORINGS

GS LOTB SOIL LEGEND

ORIGINAL SCALE IN INCHES FOR REDUCED PLANS 0 1 2 3

UNIT: 3643
PROJECT NUMBER & PHASE: 08000005061
CONTRACT NO.: 08-0M9401

DISREGARD PRINTS BEARING EARLIER REVISION DATES

REVISION DATES

FILE => 54e0111zltb26.dgn

USERNAME => s124096 DATE PLOTTED => 18-APR-2012 TIME PLOTTED => 14:40

DIST	COUNTY	ROUTE	POST MILES TOTAL PROJECT	SHEET No.	TOTAL SHEETS
08	Riv,SBd	91,215	21.5/21.7, 43.2/45.2,0.0/5.1	1321	1743

REGISTERED CIVIL ENGINEER — DATE 4-06-12

4-16-12
PLANS APPROVAL DATE

REGISTERED PROFESSIONAL ENGINEER — LARRY WU — No. C57035 — Exp. 6-30-13 — CIVIL — STATE OF CALIFORNIA

The State of California or its officers or agents shall not be responsible for the accuracy or completeness of electronic copies of this plan sheet.

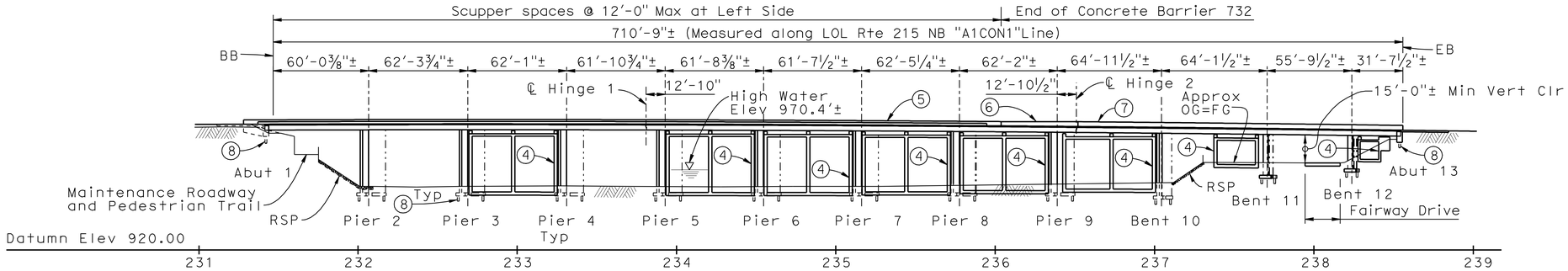

RIGHT BRIDGE MIRROR ELEVATION

1" = 40'

LEGEND:

- Point of Minimum Vertical Clearance
- Indicates existing Bridge removal (Portion)
- Direction of Traffic
- Direction of Flow
- Indicates new construction
- Indicates existing structure

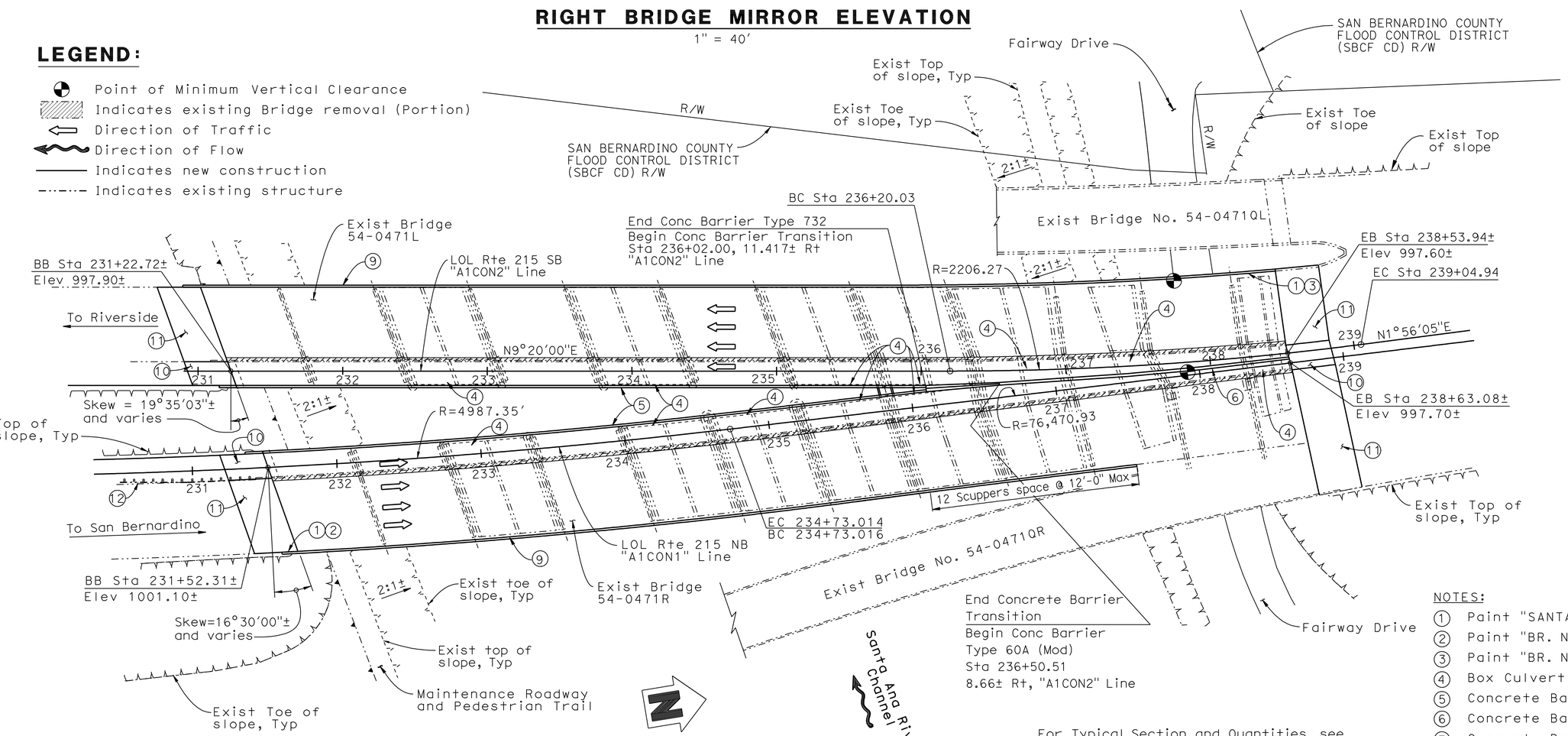

PLAN

1" = 40'

For Typical Section and Quantities, see "GENERAL PLAN NO. 2" sheet.
For General Notes, Index to Plans, Standard Plans, and Pile Data Table, see "INDEX TO PLANS" Sheet.

NOTES:

1. Paint "SANTA ANA RIVER BRIDGE"
2. Paint "BR. NO. 54-0471R"
3. Paint "BR. NO. 54-0471L"
4. Box Culvert Extension
5. Concrete Barrier, Type 732
6. Concrete Barrier Transition
7. Concrete Barrier, Type 60A (Mod)
8. Steel "HP" Piles (All Piles not shown)
9. Concrete Barrier, Type 732 (Mod)
10. Structure Approach, Type N(30D)
11. Structure Approach, Type R(30D)
12. Remove Existing MBGR, see "Roadway Plans"

CURVE DATA:

R = 4987.35'	R = 2206.27'	R = 76,470.93'
Δ = 06°35'09"	Δ = 07°23'56"	Δ = 00°31'46"
T = 286.95'	T = 142.65'	T = 353.28'
L = 573.27'	L = 284.91'	L = 706.54'

NOTE:
THE CONTRACTOR SHALL VERIFY ALL CONTROLLING FIELD DIMENSIONS BEFORE ORDERING OR FABRICATING ANY MATERIAL.

DANIEL T. ADAMS
DESIGN ENGINEER

	BY	CHECKED
DESIGN	F. Chen	R. Anderson
DETAILS	G. Hallstrom	R. Anderson
QUANTITIES	F. Chen	D. Azzam

LOAD & RESISTANCE FACTOR DESIGN — LIVE LOADING: HL93 W/"LOW-BOY": PERMIT DESIGN VEHICLE

	BY	CHECKED
LAYOUT	F. Chen	L. Wu
SPECIFICATIONS	J. Corrado	PLANS AND SPECS COMPARED J. Corrado

ORIGINAL SCALE IN INCHES FOR REDUCED PLANS 0 1 2 3

STATE OF CALIFORNIA
DEPARTMENT OF TRANSPORTATION

DIVISION OF ENGINEERING SERVICES
STRUCTURE DESIGN
DESIGN BRANCH 10

BRIDGE NO. 54-0471RL
POST MILE 4.21

SANTA ANA RIVER BRIDGE (WIDEN)
GENERAL PLAN NO. 1

UNIT: 3589
PROJECT NUMBER & PHASE: 08000005061
CONTRACT NO.: 08-0M9401

DISREGARD PRINTS BEARING EARLIER REVISION DATES → 5-14-10 7-15-11 9-23-11 12-02-11

SHEET 1 OF 66

DIST	COUNTY	ROUTE	POST MILES TOTAL PROJECT	SHEET No.	TOTAL SHEETS
08	Riv,SBd	91,215	21.5/21.7, 43.2/45.2,0.0/5.1	1322	1743

REGISTERED CIVIL ENGINEER — DATE 4-06-12

4-16-12
PLANS APPROVAL DATE

REGISTERED PROFESSIONAL ENGINEER — LARRY WU No. C57035 Exp. 6-30-13 CIVIL — STATE OF CALIFORNIA

The State of California or its officers or agents shall not be responsible for the accuracy or completeness of electronic copies of this plan sheet.

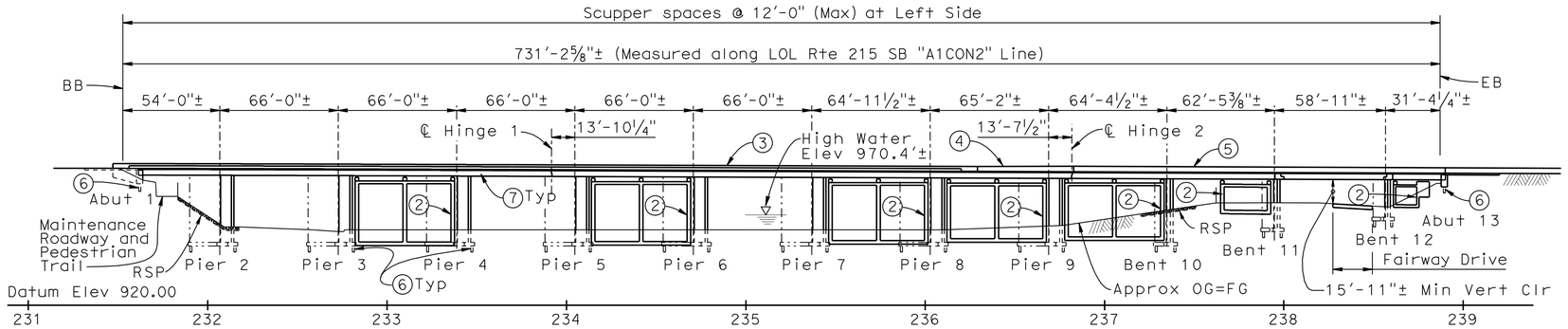

LEFT BRIDGE ELEVATION

1" = 40'

QUANTITIES

BRIDGE REMOVAL (PORTION), LOCATION A	LUMP	SUM
STRUCTURE EXCAVATION (BRIDGE)	619	CY
STRUCTURE BACKFILL (BRIDGE)	184	CY
PERVIOUS BACKFILL MATERIAL	6	CY
AGGREGATE BASE (APPROACH SLAB)	28	CY
FURNISH STEEL PILING (HP 10 X 57)	1,044	LF
DRIVE STEEL PILE (HP 10 X 57)	18	EA
FURNISH STEEL PILING (HP 14 X 89)	5,356	LF
DRIVE STEEL PILE (HP 14 X 89)	122	EA
STRUCTURAL CONCRETE, BRIDGE FOOTING	109	CY
STRUCTURAL CONCRETE, BRIDGE	2,694	CY
STRUCTURAL CONCRETE, APPROACH SLAB (TYPE N)	55	CY
STRUCTURAL CONCRETE, APPROACH SLAB (TYPE R)	277	CY
STRUCTURAL CONCRETE, BOX CULVERT	3,461	CY
DRILL AND BOND DOWEL	949	LF
CLEAN EXPANSION JOINT	214	LF
JOINT SEAL (MR 1")	287	LF
JOINT SEAL (MR 2")	289	LF
BAR REINFORCING STEEL (BRIDGE)	909,612	LB
BAR REINFORCING STEEL (BOX CULVERT)	1,396,030	LB
MINOR CONCRETE (CHANNEL LINING)	149	CY
CONCRETE BARRIER (TYPE 60A MOD)	204	LF
CONCRETE BARRIER (TRANSITION)	50	LF
CONCRETE BARRIER (TYPE 732 MODIFIED)	1,350	LF
CONCRETE BARRIER (TYPE 732)	960	LF

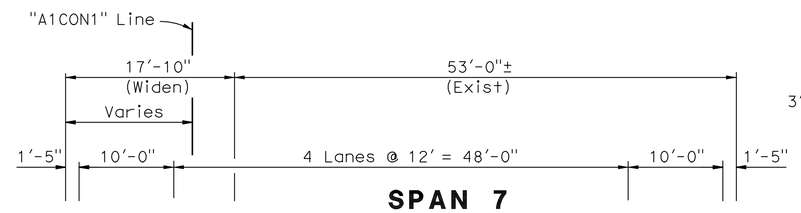

SPAN 7

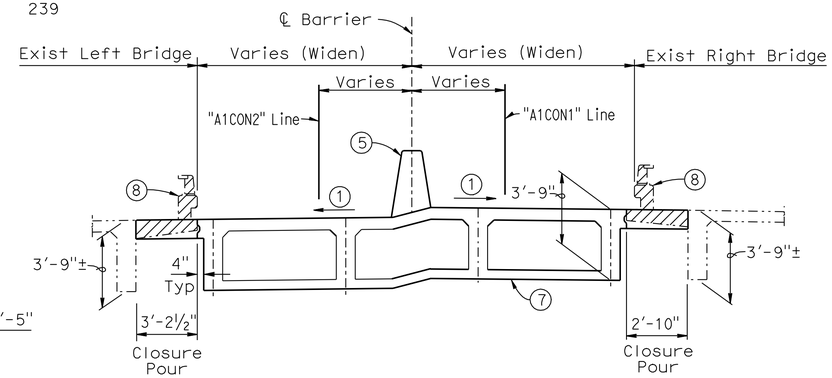

TYPICAL SECTION SPANS 8-12

¼" = 1'-0"

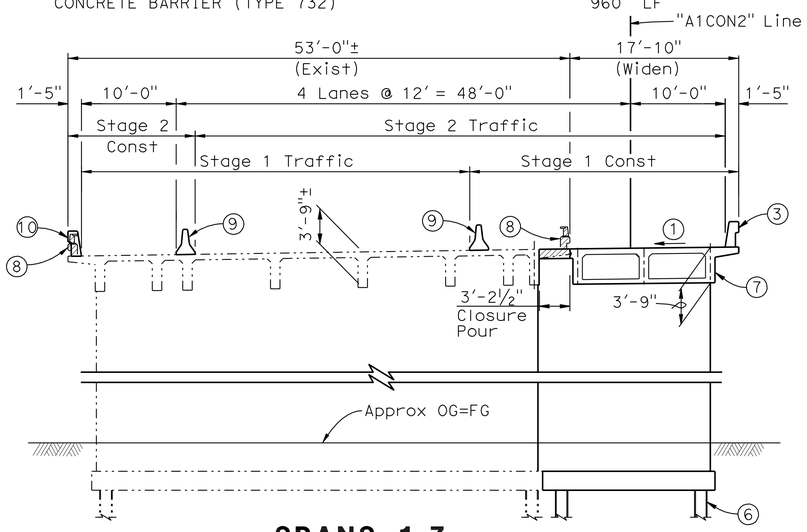

SPANS 1-7

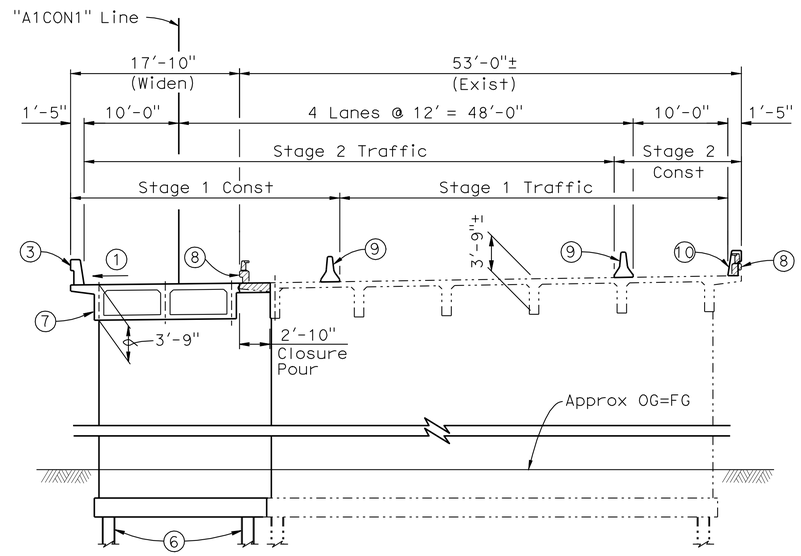

SPANS 1-6

Note: Box Culvert Extensions not shown.

TYPICAL SECTION

⅛" = 1'-0"

NOTE:
THE CONTRACTOR SHALL VERIFY ALL CONTROLLING FIELD DIMENSIONS BEFORE ORDERING OR FABRICATING ANY MATERIAL.

LEGEND:

- Indicates existing bridge removal (Portion)
- Indicates new construction
- Indicates existing structure

NOTES:

1. Match Existing Grade and Cross Slope
2. Box Culvert Extension
3. Concrete Barrier, Type 732
4. Concrete Barrier Transition
5. Concrete Barrier, Type 60A (Mod)
6. Steel "HP" Piles (All piles not shown)
7. CIP RC Box Girder
8. Remove Barrier Railing, Type 9
9. Temporary Railing Type K, see "Roadway Plans"
10. Concrete Barrier, Type 732 (Mod)

DANIEL T. ADAMS
DESIGN ENGINEER

	BY	CHECKED
DESIGN	F. Chen	R. Anderson
DETAILS	G. Hallstrom	R. Anderson
QUANTITIES	F. Chen	D. Azzam

LOAD & RESISTANCE FACTOR DESIGN — LIVE LOADING: HL93 W/"LOW-BOY"; PERMIT DESIGN VEHICLE

	BY	CHECKED
LAYOUT	F. Chen	L. Wu
SPECIFICATIONS	J. Corrado	PLANS AND SPECS COMPARED J. Corrado

ORIGINAL SCALE IN INCHES FOR REDUCED PLANS 0 1 2 3

STATE OF CALIFORNIA
DEPARTMENT OF TRANSPORTATION

DIVISION OF ENGINEERING SERVICES
STRUCTURE DESIGN
DESIGN BRANCH 10

BRIDGE NO. 54-0471RL
POST MILE 4.21

SANTA ANA RIVER BRIDGE (WIDEN)
GENERAL PLAN NO. 2

UNIT: 3589
PROJECT NUMBER & PHASE: 08000005061
CONTRACT NO.: 08-0M9401

DISREGARD PRINTS BEARING EARLIER REVISION DATES

REVISION DATES: 5-13-10 12-02-11 3-28-12

SHEET 2 OF 66

USERNAME => s8124196 DATE PLOTTED => 18-APR-2012 TIME PLOTTED => 14:40

STRUCTURES DESIGN GENERAL PLAN SHEET (ENGLISH) (REV.09-01-10)

FILE => 540471rlagp02.dgn

DIST	COUNTY	ROUTE	POST MILES TOTAL PROJECT	SHEET No.	TOTAL SHEETS
08	Riv,SBd	91,215	21.5/21.7, 43.2/45.2,0.0/5.1	1323	1743

REGISTERED CIVIL ENGINEER 4-06-12 DATE

4-16-12
PLANS APPROVAL DATE

REGISTERED PROFESSIONAL ENGINEER LARRY WU No. C57035 Exp. 6-30-13 CIVIL STATE OF CALIFORNIA

The State of California or its officers or agents shall not be responsible for the accuracy or completeness of electronic copies of this plan sheet.

INDEX TO PLANS

SHEET NO.	TITLE
1	GENERAL PLAN NO. 1
2	GENERAL PLAN NO. 2
3	INDEX TO PLANS
4	FOUNDATION PLAN NO. 1
5	FOUNDATION PLAN NO. 2
6	ABUTMENT 1 LAYOUT
7	ABUTMENT 13 LAYOUT
8	ABUTMENT DETAILS
9	PIER 2-7 LAYOUT LEFT BRIDGE
10	PIER 2-7 LAYOUT RIGHT BRIDGE
11	PIER 8 LAYOUT & DETAILS
12	PIER 9 LAYOUT & DETAILS
13	BENT 10 LAYOUT & DETAILS
14	BENT 11 & 12 LAYOUT & DETAILS
15	TYPICAL SECTION NO. 1
16	TYPICAL SECTION NO. 2
17	TYPICAL SECTION NO. 3
18	TYPICAL SECTION NO. 4
19	GIRDER LAYOUT NO. 1
20	GIRDER LAYOUT NO. 2
21	GIRDER LAYOUT NO. 3
22	GIRDER DETAILS NO. 1
23	GIRDER DETAILS NO. 2
24	GIRDER DETAILS NO. 3
25	GIRDER DETAILS NO. 4
26	HINGE DETAILS NO. 1
27	HINGE DETAILS NO. 2
28	GIRDER REINFORCEMENT NO. 1
29	GIRDER REINFORCEMENT NO. 2
30	GIRDER REINFORCEMENT NO. 3
31	GIRDER REINFORCEMENT NO. 4
32	GIRDER REINFORCEMENT NO. 5
33	CULVERT LAYOUT NO. 1
34	CULVERT LAYOUT NO. 2
35	CULVERT LAYOUT NO. 3
36	CULVERT DETAILS NO.1
37	CULVERT DETAILS NO.2
38	CULVERT DETAILS NO.3
39	CULVERT DETAILS NO.4
40	CULVERT REINFORCING NO. 1
41	CULVERT REINFORCING NO. 2
42	CONCRETE REMOVAL DETAILS NO. 1
43	CONCRETE REMOVAL DETAILS NO. 2
44	STRUCTURE APPROACH TYPE N(30D)
45	STRUCTURE APPROACH TYPE R(30D)
46	STRUCTURE APPROACH DRAINAGE DETAILS
47	LOG OF TEST BORINGS 1 OF 20
48	LOG OF TEST BORINGS 2 OF 20
49	LOG OF TEST BORINGS 3 OF 20
50	LOG OF TEST BORINGS 4 OF 20
51	LOG OF TEST BORINGS 5 OF 20
52	LOG OF TEST BORINGS 6 OF 20
53	LOG OF TEST BORINGS 7 OF 20
54	LOG OF TEST BORINGS 8 OF 20
55	LOG OF TEST BORINGS 9 OF 20
56	LOG OF TEST BORINGS 10 OF 20
57	LOG OF TEST BORINGS 11 OF 20
58	LOG OF TEST BORINGS 12 OF 20
59	LOG OF TEST BORINGS 13 OF 20
60	LOG OF TEST BORINGS 14 OF 20
61	LOG OF TEST BORINGS 15 OF 20
62	LOG OF TEST BORINGS 16 OF 20
63	LOG OF TEST BORINGS 17 OF 20
64	LOG OF TEST BORINGS 18 OF 20
65	LOG OF TEST BORINGS 19 OF 20
66	LOG OF TEST BORINGS 20 OF 20

STANDARD PLANS DATED MAY 2006

A10A	ACRONYMS AND ABBREVIATIONS (SHEET 1 OF 2)
A10B	ACRONYMS AND ABBREVIATIONS (SHEET 2 OF 2)
A10C	SYMBOLS (SHEET 1 OF 2)
A10D	SYMBOLS (SHEET 2 OF 2)
A62C	LIMITS OF PAYMENT FOR EXCAVATION AND BACKFILL-BRIDGE
A76A	CONCRETE BARRIER TYPE 60
BO-1	BRIDGE DETAILS
BO-3	BRIDGE DETAILS
BO-5	BRIDGE DETAILS
B2-5	PILE DETAILS CLASS 90 AND CLASS140
RSP B6-21	JOINT SEALS (MAXIMUM MOVEMENT RATING = 2")
B7-1	BOX GIRDER DETAILS
B7-8	DECK DRAINAGE DETAILS
B11-55	CONCRETE BARRIER TYPE 732

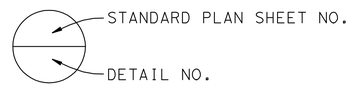

PILE DATA TABLE

Location	Pile Type	Required Nominal Resistance (kips)		Design Tip Elevation (feet)	Specified Tip Elevation (ft)	Nominal Driving Resistance (kips)
		Compression	Tension			
Abutment 1 Lt. & Rt. Bridge	HP 10 x 57 "H"-Piles	220	0	932.0 (a)	932.0	220
Pier 2, 3, 4 Lt. & Rt. Bridge	HP 14 x 89 "H"-Piles	360	0	918.0 (a)	918.0	360
Pier 5 Lt. & Rt. Bridge	HP 14 x 89 "H"-Piles	360	0	915.0 (a)	915.0	360
Pier 6 & 7 Lt. & Rt. Bridge	HP 14 x 89 "H"-Piles	360	0	906.0 (a)	906.0	360
Pier 8 Lt. & Rt. Bridge	HP 14 x 89 "H"-Piles	360	0	917.0 (a)	917.0	360
Pier 9 Lt. & Rt. Bridge	HP 14 x 89 "H"-Piles	400	0	915.0 (a)	915.0	400
Pier 10 Lt. & Rt. Bridge	HP 14 x 89 "H"-Piles	400	0	903.0 (a)	903.0	400
Bent 11 & 12 Lt. & Rt. Bridge	HP 14 x 89 "H"-Piles	400	0	925.0 (a)	925.0	400
Abutment 13 Lt. & Rt. Bridge	HP 10 x 57 "H"-Piles	200	0	938.0 (a)	938.0	200

Notes: 1) Design tip elevations are controlled by: (a) Compression

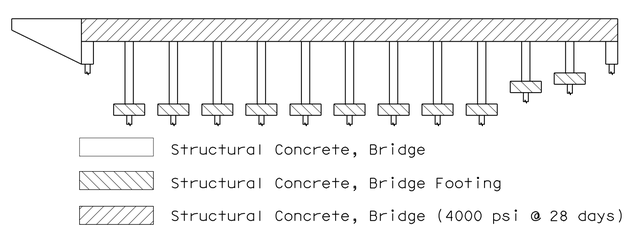

CONCRETE STRENGTH AND TYPE LIMITS

NO SCALE

GENERAL NOTES
LOAD AND RESISTANCE FACTOR DESIGN

DESIGN: AASHTO LRFD BRIDGE DESIGN SPECIFICATIONS, 4th Edition and the California Amendments, preface Sept. 2010.

SEISMIC DESIGN: Caltrans Seismic Design Criteria (SDC) Version 1.6, November, 2010

DEAD LOAD: Includes 35 Psf for future wearing surface.

LIVE LOADING: HL93 and permit design load.

SEISMIC LOADING: Soil Profile: Vs30 = 952 ft/s
Moment Magnitude: Mmax = 7.5
Peak Ground Acceleration: 0.85g

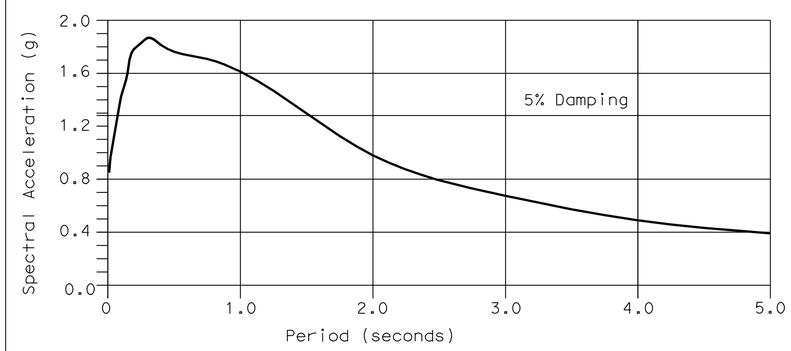

ACCELERATION RESPONSE SPECTRUM

REINFORCED CONCRETE:
f_y = 60 ksi
f'_c = 3600 psi @ 28 Days
n = 8.5

	BY	CHECKED
DESIGN	F. Chen	R. Anderson
DETAILS	G. Hallstrom	R. Anderson
QUANTITIES	F. Chen	D. Azzam

STATE OF CALIFORNIA
DEPARTMENT OF TRANSPORTATION

DIVISION OF ENGINEERING SERVICES
STRUCTURE DESIGN
DESIGN BRANCH 10

BRIDGE NO. 54-0471RL
POST MILE 4.21

SANTA ANA RIVER BRIDGE (WIDEN)
INDEX TO PLANS

STRUCTURES DESIGN DETAIL SHEET (ENGLISH) (REV. 09-01-10)

ORIGINAL SCALE IN INCHES FOR REDUCED PLANS 0 1 2 3

UNIT: 3589
PROJECT NUMBER & PHASE: 08000005061
CONTRACT NO.: 08-0M9401

DISREGARD PRINTS BEARING EARLIER REVISION DATES

REVISION DATES 04-12-11 8-03-11 9-14-11 12-02-11

SHEET 3 OF 66

FILE => 540471rlaltp03.dgn

USERNAME => s124496 DATE PLOTTED => 18-APR-2012 TIME PLOTTED => 14:41

DIST	COUNTY	ROUTE	POST MILES TOTAL PROJECT	SHEET No.	TOTAL SHEETS
08	Riv,SBd	91,215	21.5/21.7, 43.2/45.2,0.0/5.1	1324	1743

REGISTERED CIVIL ENGINEER — DATE 4-06-12

4-16-12
PLANS APPROVAL DATE

REGISTERED PROFESSIONAL ENGINEER — LARRY WU — No. C57035 — Exp. 6-30-13 — CIVIL — STATE OF CALIFORNIA

The State of California or its officers or agents shall not be responsible for the accuracy or completeness of electronic copies of this plan sheet.

Bridge Location

Left Bridge

(1) 68.855 Lt. ℄ SB Rte 215, Sta 230+98.247, Elev 997.001

(2) 7.397Lt. ℄ SB Rte 215, Sta 231+20.078, Elev 997.891

Right Bridge

(5) 7.584 Lt. ℄ NB Rte 215, Sta 231+54.756, Elev 1001.205

(6) 58.461 Rt. ℄ NB Rte 215, Sta 231+69.211, Elev 1002.271

No.	R	Δ	T	L
(10)	4987.353	06°35'09"	286.950	573.268
(11)	76 470.931	00°31'46"	353.275	706.544

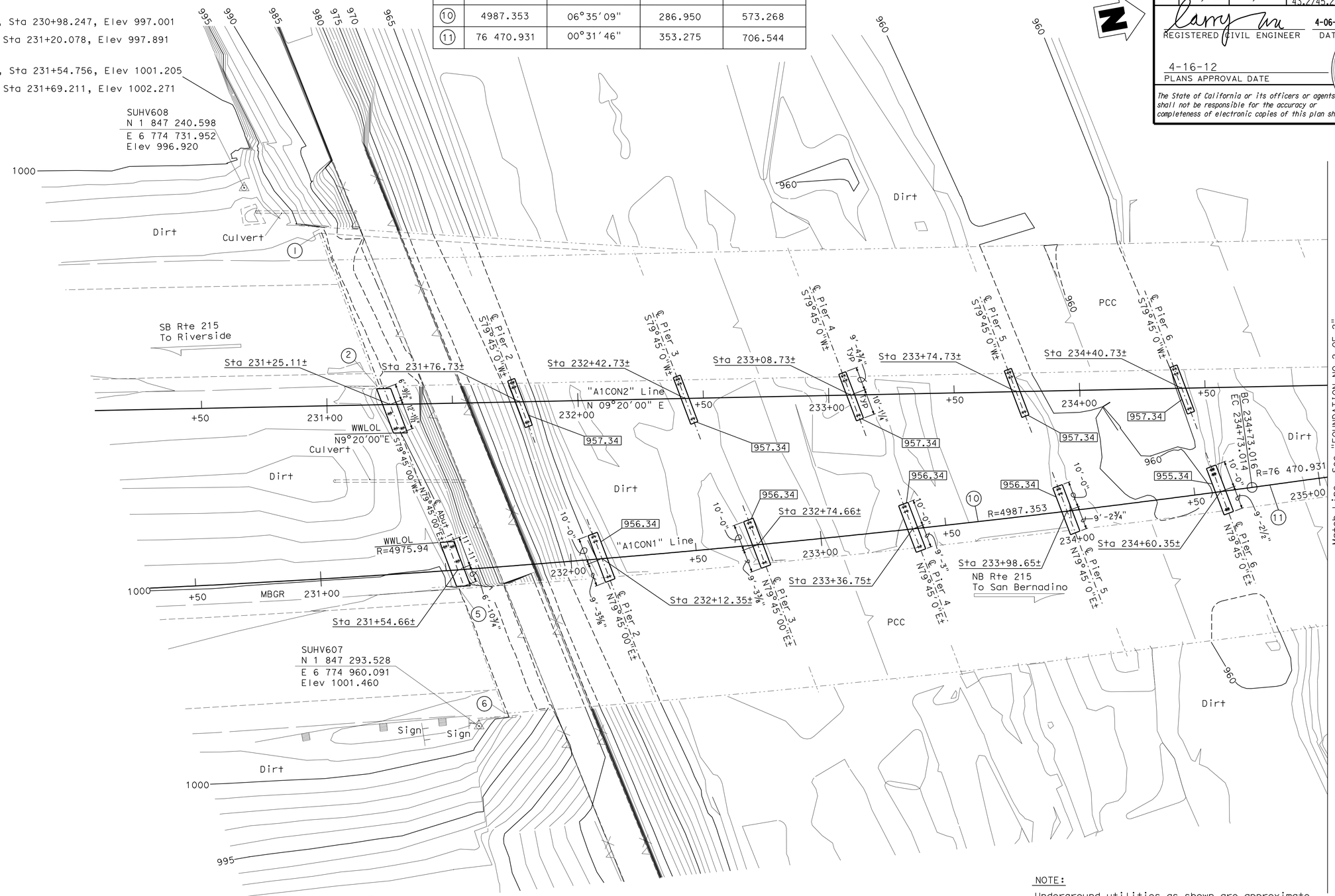

SURVEY CONTROL

SUHV608

Fd: Set 1" IP/ CT Red Plug
87.585 Lt. ℄ SB Rte 215
Sta 230+68.755
N 1 847 240.597
E 6 774 731.952
Elev 996.920

SUHV607

Fd: Set 1" IP/ CT Red Plug
62.756 Rt. ℄ NB Rte 215
Sta 231+58.658
N 1 847 293.528
E 6 774 960.091
Elev 1001.460

NOTE:

Underground utilities as shown are approximate. See District Utility Plans for Details.

Indicates bottom of footing elevation

PRELIMINARY INVESTIGATION SECTION

SCALE 1"=20'	VERT.DATUM NAVD88	PHOTOGRAMMETRY AS OF: X			
	HORZ.DATUM NAD83	SURVEYED	BY D8	CHECKED	BY T. Phung/ C. Stewart
ALIGNMENT TIES Dist. Traverse Sheet		DRAFTED	BY C. Pham	CHECKED	BY E. Vigjar

DESIGN	BY F. Chen	CHECKED	R. Anderson
DETAILS	BY G. Hallstrom	CHECKED	R. Anderson
QUANTITIES	BY F. Chen	CHECKED	D. Azzam

STATE OF CALIFORNIA
DEPARTMENT OF TRANSPORTATION

DIVISION OF ENGINEERING SERVICES
STRUCTURE DESIGN
DESIGN BRANCH 10

BRIDGE NO. 54-0471RL
POST MILE 4.21

SANTA ANA RIVER BRIDGE (WIDEN)
FOUNDATION PLAN NO. 1

STRUCTURES FOUNDATION PLAN SHEET (ENGLISH) (REV. 09-01-10)

ORIGINAL SCALE IN INCHES FOR REDUCED PLANS 0 1 2 3

UNIT: 3589
PROJECT NUMBER & PHASE: 08000005061
CONTRACT NO.: 08-0M9401

DISREGARD PRINTS BEARING EARLIER REVISION DATES

REVISION DATES 06/30/11 07/11/11 09/21/11

SHEET 4 OF 66

FILE => 540471riefdpl04.dgn

USERNAME => s124496 DATE PLOTTED => 18-APR-2012 TIME PLOTTED => 14:41

DIST	COUNTY	ROUTE	POST MILES TOTAL PROJECT	SHEET No.	TOTAL SHEETS
08	Riv,SBd	91,215	21.5/21.7, 43.2/45.2,0.0/5.1	1325	1743

REGISTERED CIVIL ENGINEER — DATE 4-06-12

4-16-12
PLANS APPROVAL DATE

REGISTERED PROFESSIONAL ENGINEER — LARRY WU — No. C57035 — Exp. 6-30-13 — CIVIL — STATE OF CALIFORNIA

The State of California or its officers or agents shall not be responsible for the accuracy or completeness of electronic copies of this plan sheet.

Bridge Location

Left Bridge

(3) 55.609 Lt. ℄ SB Rte 215, Sta 238+49.231, Elev 995.283

(4) 4.605 Lt. ℄ SB Rte 215, Sta 238+53.297, Elev 997.562

Right Bridge

(7) 4.137 Rt. ℄ NB Rte 215, Sta 238+63.618, Elev 997.674

(8) 91.146 Rt. ℄ NB Rte 215, Sta 238+71.765, Elev 995.401

No.	R	Δ	T	L
(9)	2206.268	07°23'56"	142.651	284.905
(11)	76 470.931	00°31'46"	353.275	706.544

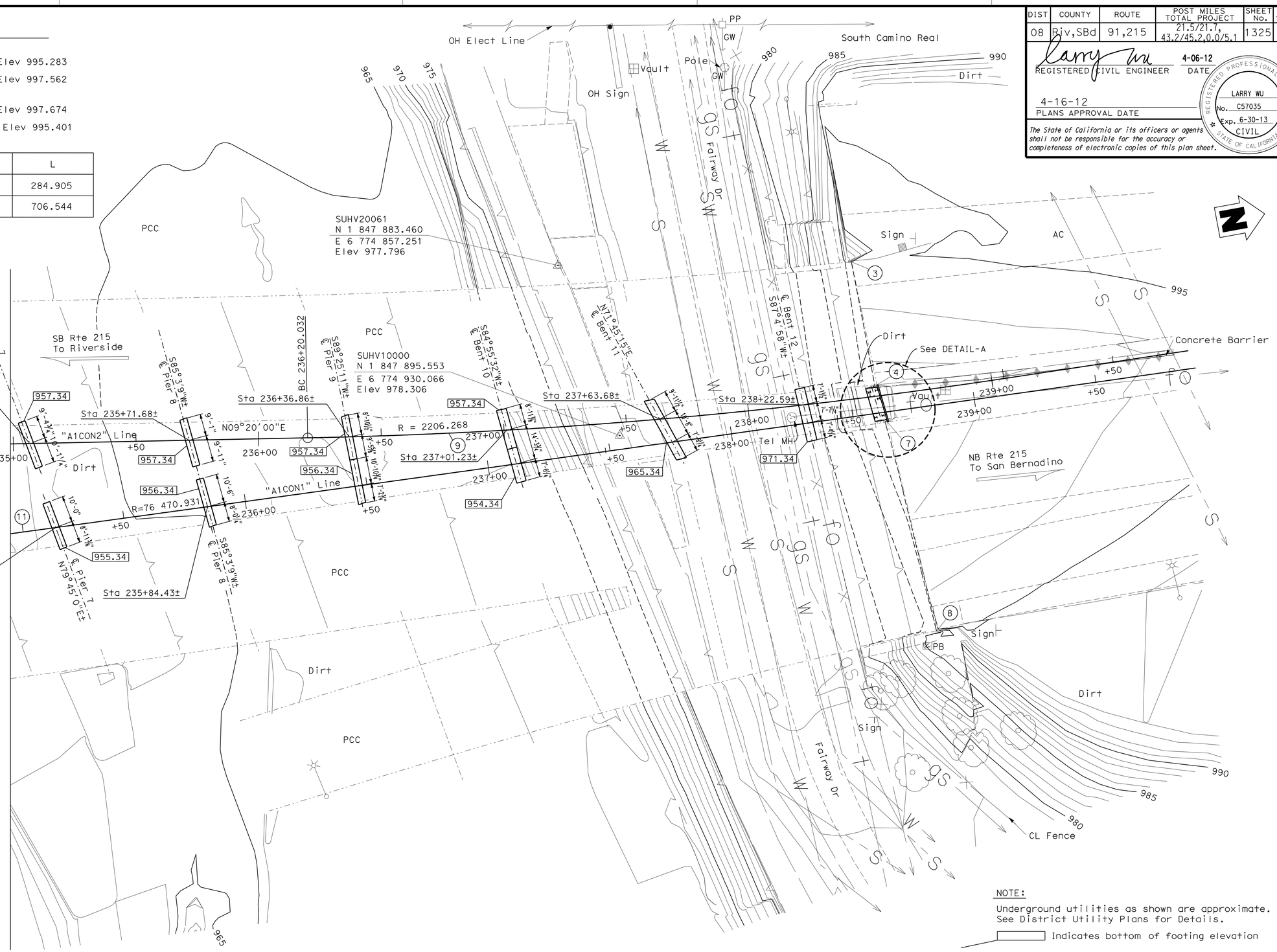

DETAIL A

NO SCALE

SURVEY CONTROL

SUHV20061

PD: PK/Washer
65.704 Lt. ℄ SB Rte 215
Sta 237+26.644
N 1 847 883.460
E 6 774 857.251
Elev 977.796

SUHV10000

Fd: PK/ Washer/ Concrete
5.345 Rt. ℄ SB Rte 215
Sta 237+46.933
N 1 847 895.553
E 6 774 930.066
Elev 978.306

NOTE:

Underground utilities as shown are approximate. See District Utility Plans for Details.

Indicates bottom of footing elevation

PRELIMINARY INVESTIGATION SECTION

SCALE 1"=20'	VERT.DATUM NAVD88	PHOTOGRAMMETRY AS OF: X			
	HORZ.DATUM NAD83	SURVEYED	BY D8	CHECKED	BY T. Phung/ C. Stewart
ALIGNMENT TIES Dist. Traverse Sheet		DRAFTED	BY C. Pham	CHECKED	BY E. Vigjar

DESIGN	BY F. Chen	CHECKED	R. Anderson
DETAILS	BY G. Hallstrom	CHECKED	R. Anderson
QUANTITIES	BY F. Chen	CHECKED	D. Azzam

STATE OF CALIFORNIA
DEPARTMENT OF TRANSPORTATION

DIVISION OF ENGINEERING SERVICES
STRUCTURE DESIGN
DESIGN BRANCH 10

BRIDGE NO. 54-0471RL
POST MILE 4.21

SANTA ANA RIVER BRIDGE (WIDEN)
FOUNDATION PLAN NO. 2

STRUCTURES FOUNDATION PLAN SHEET (ENGLISH) (REV. 09-01-10)

ORIGINAL SCALE IN INCHES FOR REDUCED PLANS 0 1 2 3

UNIT: 3589
PROJECT NUMBER & PHASE: 08000005061
CONTRACT NO.: 08-0M9401

DISREGARD PRINTS BEARING EARLIER REVISION DATES → REVISION DATES 06/30/11 07/14/11 09/21/11

SHEET 5 OF 66

FILE => 540471rlefdpl05.dgn

USERNAME => s124496 DATE PLOTTED => 18-APR-2012 TIME PLOTTED => 14:41

DIST	COUNTY	ROUTE	POST MILES TOTAL PROJECT	SHEET No.	TOTAL SHEETS
08	Riv,SBd	91,215	21.5/21.7, 43.2/45.2,0.0/5.1	1326	1743

REGISTERED CIVIL ENGINEER 4-06-12 DATE

4-16-12
PLANS APPROVAL DATE

REGISTERED PROFESSIONAL ENGINEER LARRY WU No. C57035 Exp. 6-30-13 CIVIL STATE OF CALIFORNIA

The State of California or its officers or agents shall not be responsible for the accuracy or completeness of electronic copies of this plan sheet.

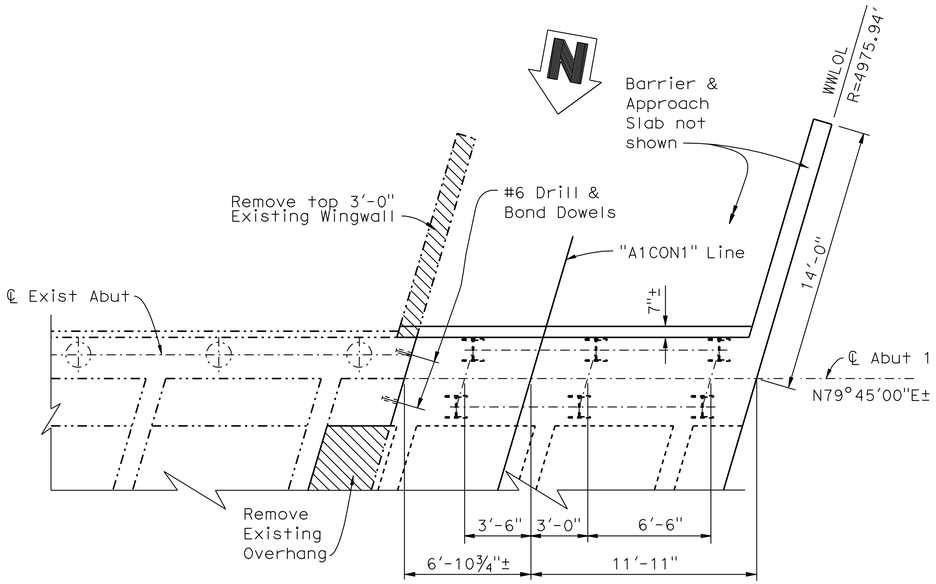

PLAN - RIGHT BRIDGE

1/4" = 1'-0"

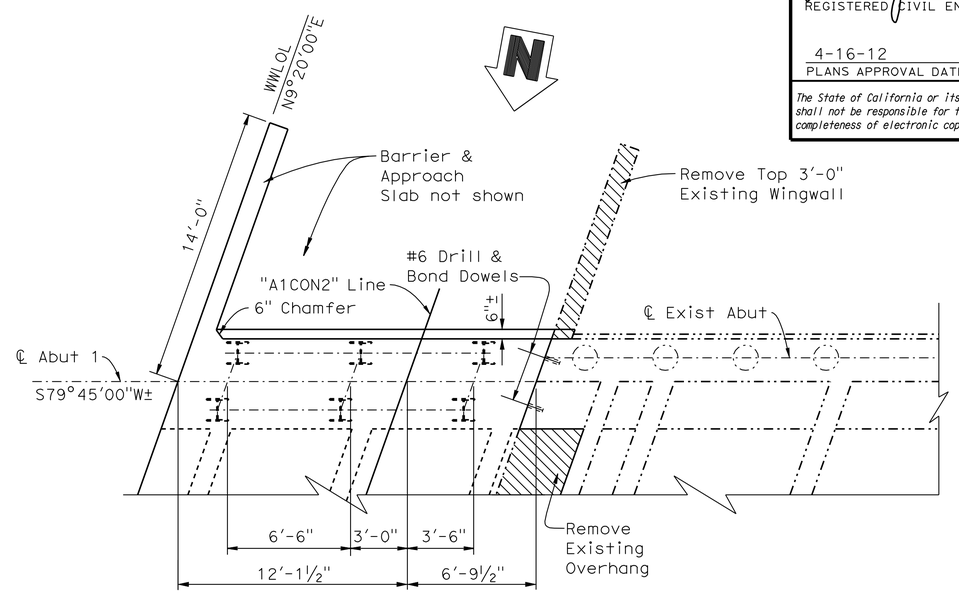

PLAN - LEFT BRIDGE

1/4" = 1'-0"

NOTES:

1. For "Section A-A" and "Section B-B", see "ABUTMENT DETAILS" sheet.
2. For Layout of Drill & Bond Dowels, see "ABUTMENT DETAILS" sheet.

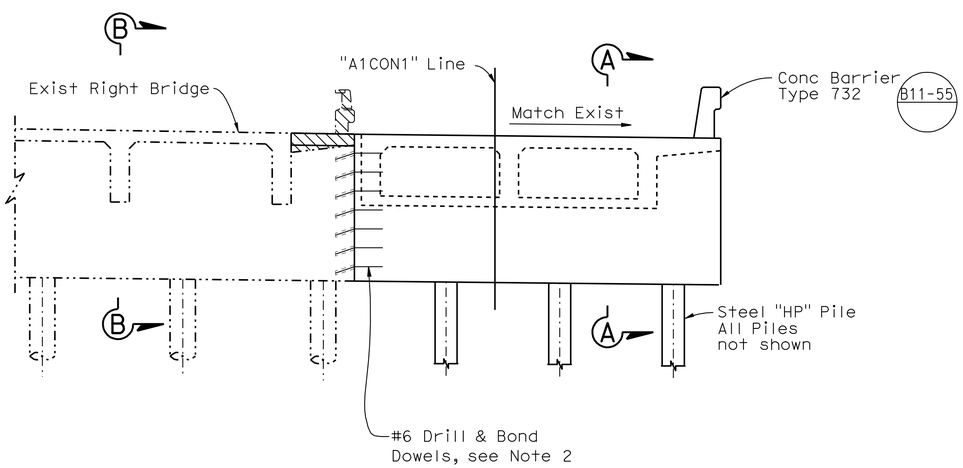

ELEVATION - RIGHT BRIDGE

1/4" = 1'-0"

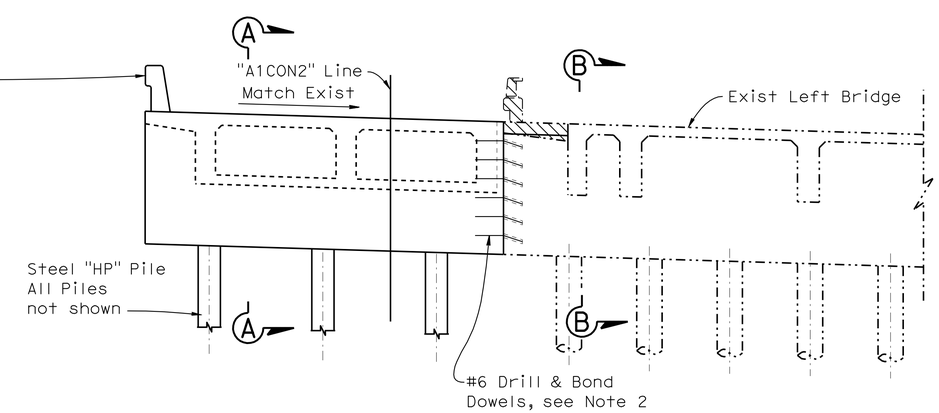

ELEVATION - LEFT BRIDGE

1/4" = 1'-0"

NOTE:
THE CONTRACTOR SHALL VERIFY ALL CONTROLLING FIELD DIMENSIONS BEFORE ORDERING OR FABRICATING ANY MATERIAL.

LEGEND:

- —— Indicates new construction
- —·—· Indicates existing structure
- ▨ Indicates existing bridge removal (Portion)

	BY	CHECKED
DESIGN	F. Chen	R. Anderson
DETAILS	G. Hallstrom	R. Anderson
QUANTITIES	F. Chen	D. Azzam

STATE OF CALIFORNIA
DEPARTMENT OF TRANSPORTATION

DIVISION OF ENGINEERING SERVICES
STRUCTURE DESIGN
DESIGN BRANCH 10

BRIDGE NO. 54-0471RL
POST MILE 4.21

SANTA ANA RIVER BRIDGE (WIDEN)

ABUTMENT 1 LAYOUT

STRUCTURES DESIGN DETAIL SHEET (ENGLISH) (REV. 09-01-10)

ORIGINAL SCALE IN INCHES FOR REDUCED PLANS 0 1 2 3

UNIT: 3589
PROJECT NUMBER & PHASE: 08000005061
CONTRACT NO.: 08-0M9401

DISREGARD PRINTS BEARING EARLIER REVISION DATES

REVISION DATES: 11-18-11 11-18-11 8-25-11

SHEET 6 OF 66

FILE => 540471rlfa_lo06.dgn

USERNAME => s124496 DATE PLOTTED => 18-APR-2012 TIME PLOTTED => 14:41

DIST	COUNTY	ROUTE	POST MILES TOTAL PROJECT	SHEET No.	TOTAL SHEETS
08	Riv,SBd	91,215	21.5/21.7, 43.2/45.2,0.0/5.1	1327	1743

REGISTERED CIVIL ENGINEER 4-06-12 DATE

4-16-12
PLANS APPROVAL DATE

REGISTERED PROFESSIONAL ENGINEER LARRY WU No. C57035 Exp. 6-30-13 CIVIL STATE OF CALIFORNIA

The State of California or its officers or agents shall not be responsible for the accuracy or completeness of electronic copies of this plan sheet.

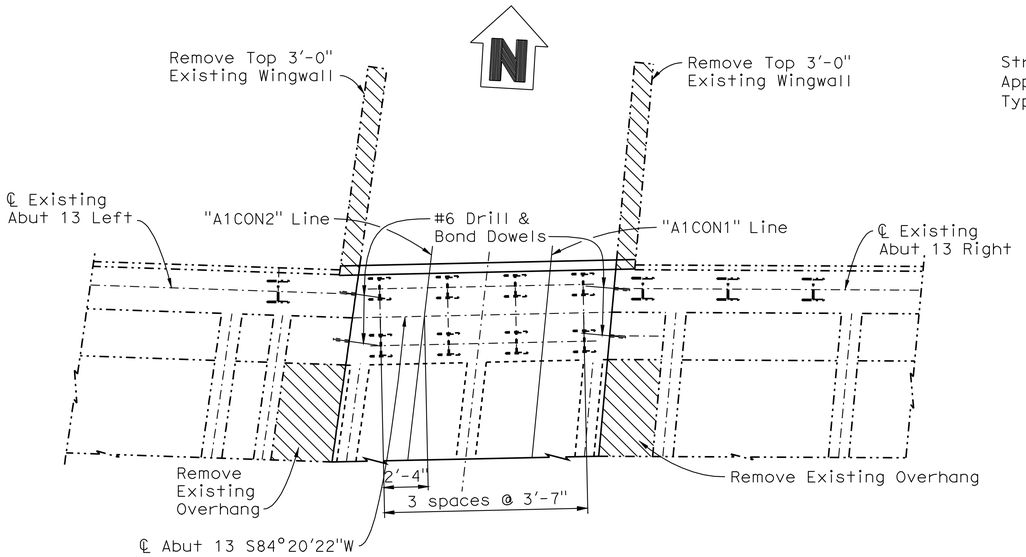

PLAN

1/4" = 1'-0"

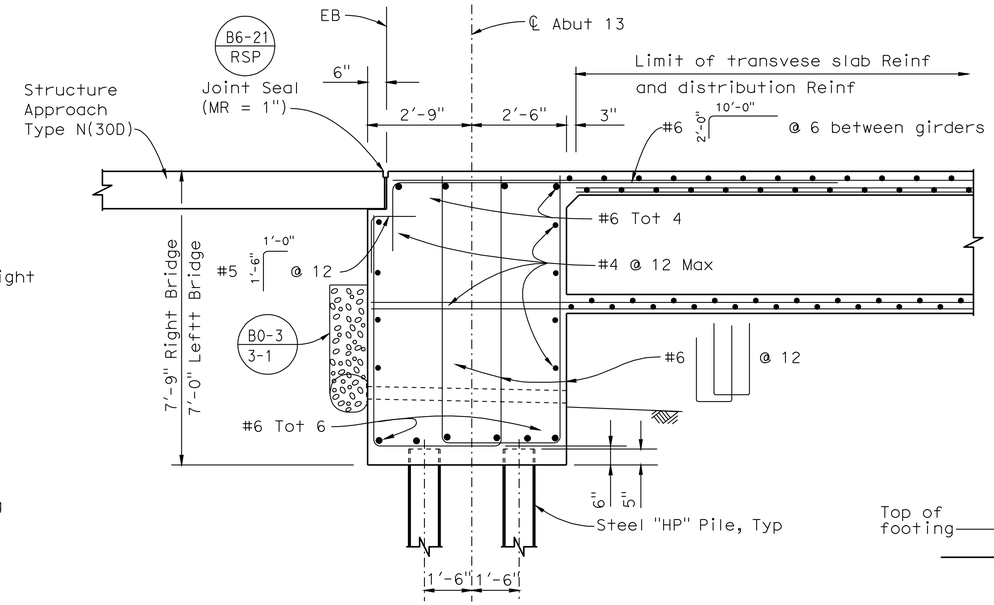

SECTION C-C

1/2" = 1'-0"

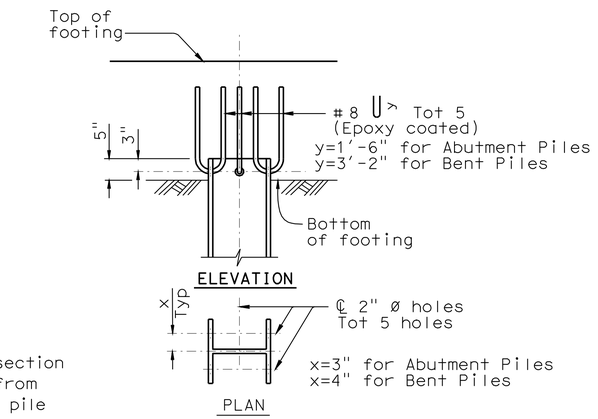

STEEL PILE ANCHOR

NO SCALE

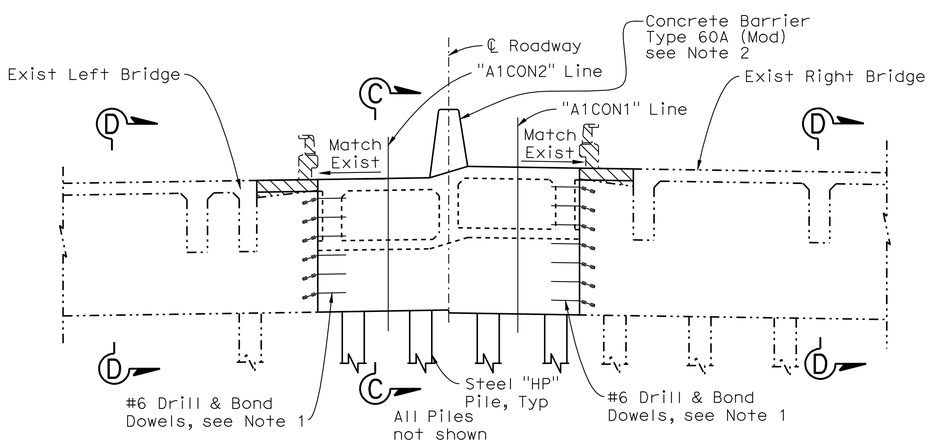

ELEVATION

1/4" = 1'-0"

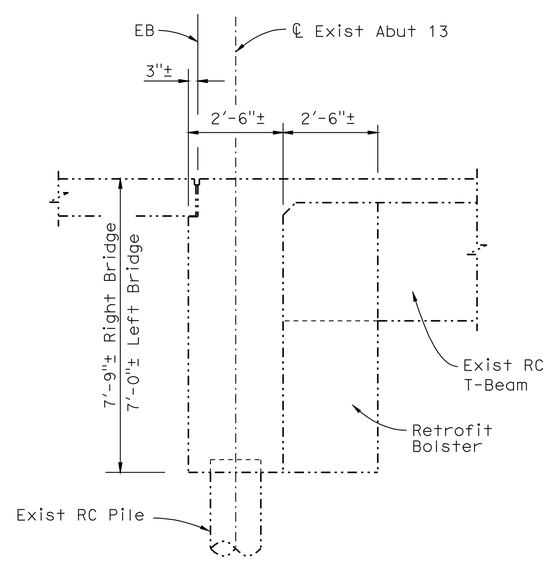

SECTION D-D

1/2" = 1'-0"

NOTE: Right Bridge shown, Left Bridge similar.

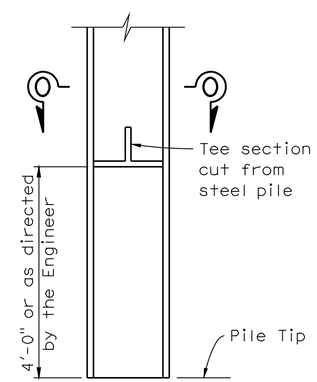

PILE LUG

NO SCALE

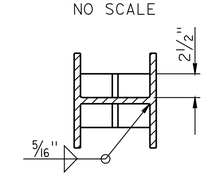

SECTION O-O

NO SCALE

NOTES:

1. For Layout of Drill & Bond dowels, see "ABUTMENT DETAILS" sheet.
2. For Concrete Barrier Type 60A (Mod) details, see "TYPICAL SECTION NO. 3" sheet.

LEGEND:

- —— Indicates new construction
- -·-·- Indicates existing structure
- ▨ Indicates existing bridge removal (Portion)

NOTE:
THE CONTRACTOR SHALL VERIFY ALL CONTROLLING FIELD DIMENSIONS BEFORE ORDERING OR FABRICATING ANY MATERIAL.

	BY	CHECKED
DESIGN	F. Chen	R. Anderson
DETAILS	G. Hallstrom	R. Anderson
QUANTITIES	F. Chen	D. Azzam

STATE OF CALIFORNIA
DEPARTMENT OF TRANSPORTATION

DIVISION OF ENGINEERING SERVICES
STRUCTURE DESIGN
DESIGN BRANCH 10

BRIDGE NO. 54-0471RL
POST MILE 4.21

SANTA ANA RIVER BRIDGE (WIDEN)
ABUTMENT 13 LAYOUT

STRUCTURES DESIGN DETAIL SHEET (ENGLISH) (REV. 09-01-10)

ORIGINAL SCALE IN INCHES FOR REDUCED PLANS 0 1 2 3

UNIT: 3589
PROJECT NUMBER & PHASE: 08000005061
CONTRACT NO.: 08-0M9401

DISREGARD PRINTS BEARING EARLIER REVISION DATES
REVISION DATES 3-04-11 8-04-11 8-25-11 12-02-11

SHEET 7 OF 66

FILE => 540471rifa_1o07.dgn

USERNAME => s124496 DATE PLOTTED => 14-JUN-2012 TIME PLOTTED => 08:52

DIST	COUNTY	ROUTE	POST MILES TOTAL PROJECT	SHEET No.	TOTAL SHEETS
08	Riv,SBd	91,215	21.5/21.7, 43.2/45.2,0.0/5.1	1328	1743

REGISTERED CIVIL ENGINEER — DATE 4-06-12

4-16-12
PLANS APPROVAL DATE

REGISTERED PROFESSIONAL ENGINEER — LARRY WU No. C57035 Exp. 6-30-13 CIVIL — STATE OF CALIFORNIA

The State of California or its officers or agents shall not be responsible for the accuracy or completeness of electronic copies of this plan sheet.

NOTE:
THE CONTRACTOR SHALL VERIFY ALL CONTROLLING FIELD DIMENSIONS BEFORE ORDERING OR FABRICATING ANY MATERIAL.

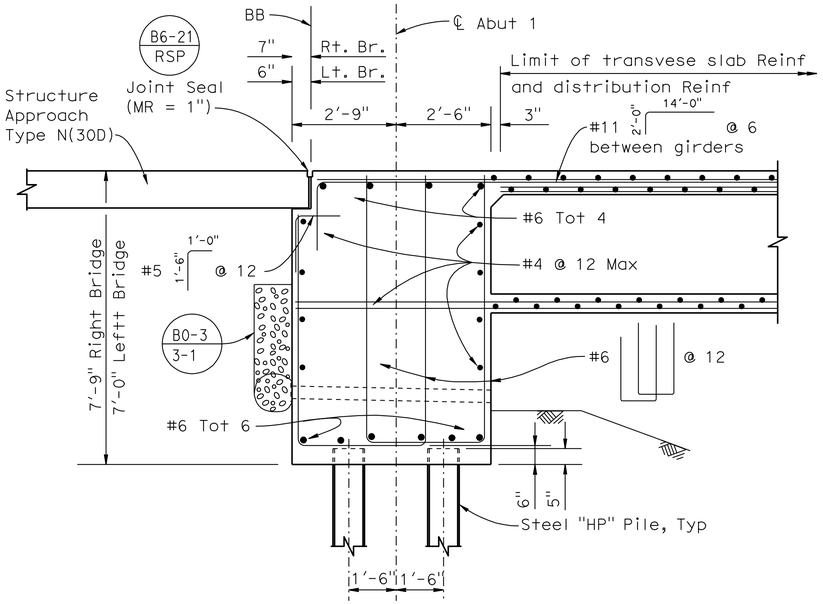

SECTION A-A

½" = 1'-0"

NOTE: Right Bridge shown, Left Bridge similar.

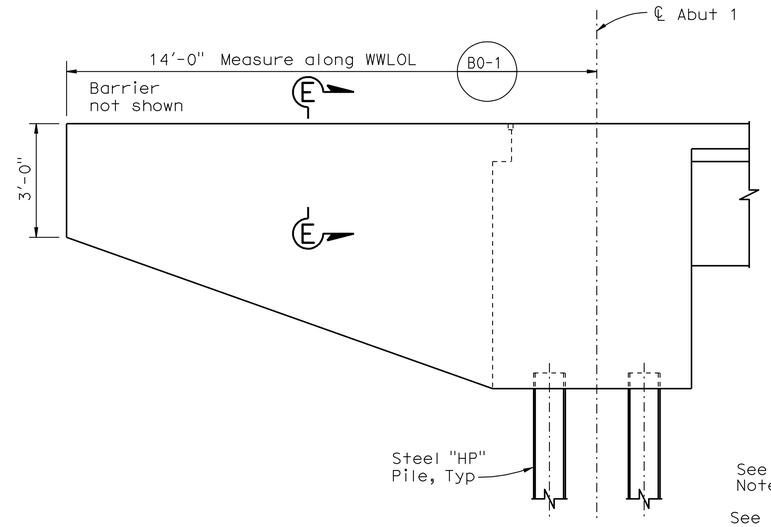

WINGWALL ELEVATION

½" = 1'-0"

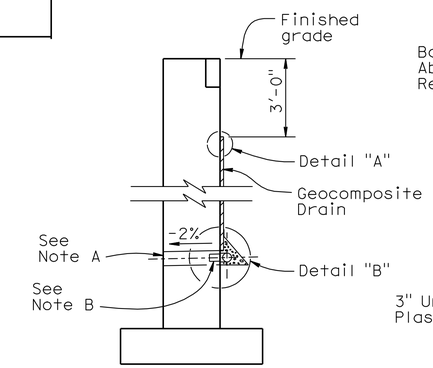

WALL SECTION

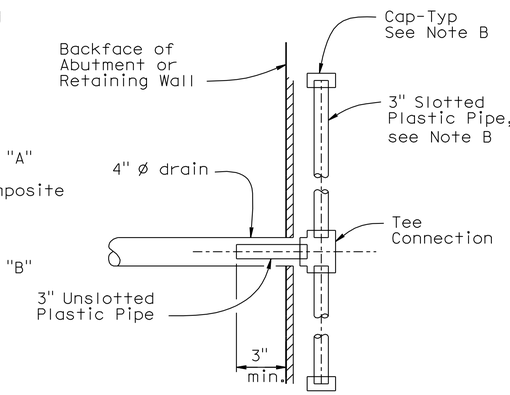

SECTION A-A

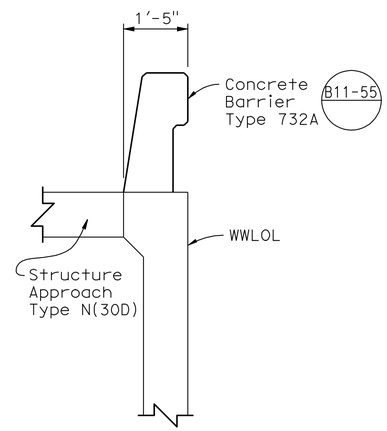

SECTION E-E

NO SCALE

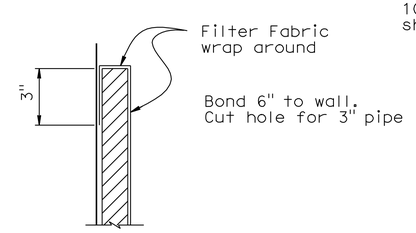

DETAIL "A"

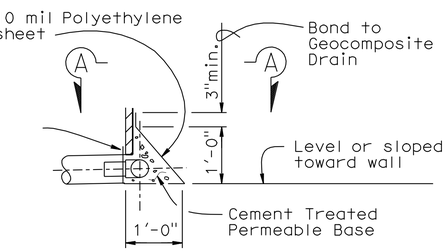

DETAIL "B"

WEEP HOLE AND GEOCOMPOSITE DRAIN

ALTERNATIVE TO BRIDGE DETAIL B0-3 / 3-1

Notes:

A. 4" Ø drains at intermediate sag points and at 25' max center to center (9'-c-c for Type 3 and 9'-3" c-c for Type 4 retaining walls).
For walls adjacent to sidewalks or curbs, provide 4" cast iron or asbestos cement pipe under the sidewalk to discharge through curb face.
Exposed wall drains shall be located 3"± above finished grade.

B. Geocomposite drain, cement treated permeable base, and 3"Ø slotted plastic pipe continuous behind retaining wall or abutment. Cap ends of pipe. Provide "Tee" connection at each 4" Ø drain.

C. Connect the low end of plastic pipe to the main outlet pipe as applicable.

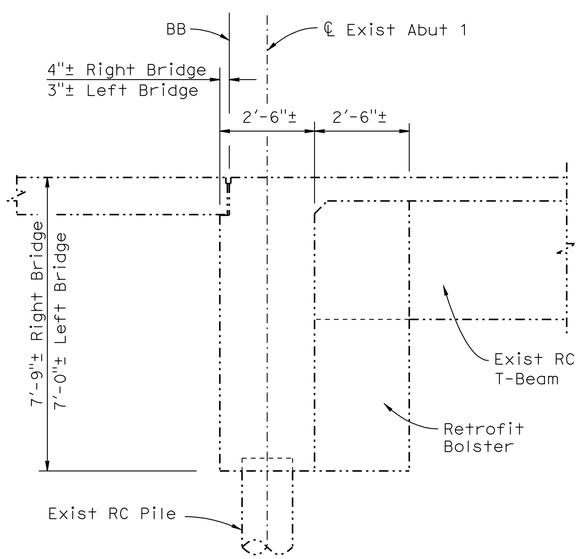

SECTION B-B

½" = 1'-0"

NOTE: Right Bridge shown, Left Bridge similar.

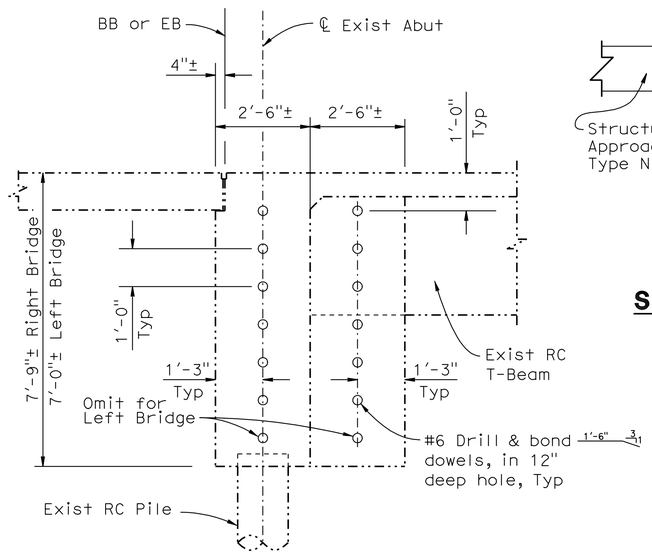

TYP DRILL AND BOND DOWEL LAYOUT

½" = 1'-0"

NOTE: Right Bridge shown, Left Bridge similar.

NOTE: For location of "Section A-A" and "Section B-B", see "ABUTMENT 1 LAYOUT" sheet.

LEGEND:

——— Indicates new construction

-·-·- Indicates existing structure

▨ Indicates existing bridge removal (Portion)

	BY	CHECKED
DESIGN	F. Chen	R. Anderson
DETAILS	G. Hallstrom	R. Anderson
QUANTITIES	F. Chen	D. Azzam

STATE OF CALIFORNIA
DEPARTMENT OF TRANSPORTATION

DIVISION OF ENGINEERING SERVICES
STRUCTURE DESIGN
DESIGN BRANCH 10

BRIDGE NO. 54-0471RL
POST MILE 4.21

SANTA ANA RIVER BRIDGE (WIDEN)

ABUTMENT DETAILS

STRUCTURES DESIGN DETAIL SHEET (ENGLISH) (REV. 09-01-10)

ORIGINAL SCALE IN INCHES FOR REDUCED PLANS 0 1 2 3

UNIT: 3589
PROJECT NUMBER & PHASE: 08000005061
CONTRACT NO.: 08-0M9401

DISREGARD PRINTS BEARING EARLIER REVISION DATES

REVISION DATES: 1-18-11 12-02-11 8-25-11

SHEET 8 OF 66

FILE => 540471rlfdat08.dgn

USERNAME => s124496 DATE PLOTTED => 18-APR-2012 TIME PLOTTED => 14:41

DIST	COUNTY	ROUTE	POST MILES TOTAL PROJECT	SHEET No.	TOTAL SHEETS
08	Riv,SBd	91,215	21.5/21.7, 43.2/45.2,0.0/5.1	1329	1743

REGISTERED CIVIL ENGINEER 4-06-12 DATE

4-16-12
PLANS APPROVAL DATE

REGISTERED PROFESSIONAL ENGINEER LARRY WU No. C57035 Exp. 6-30-13 CIVIL STATE OF CALIFORNIA

The State of California or its officers or agents shall not be responsible for the accuracy or completeness of electronic copies of this plan sheet.

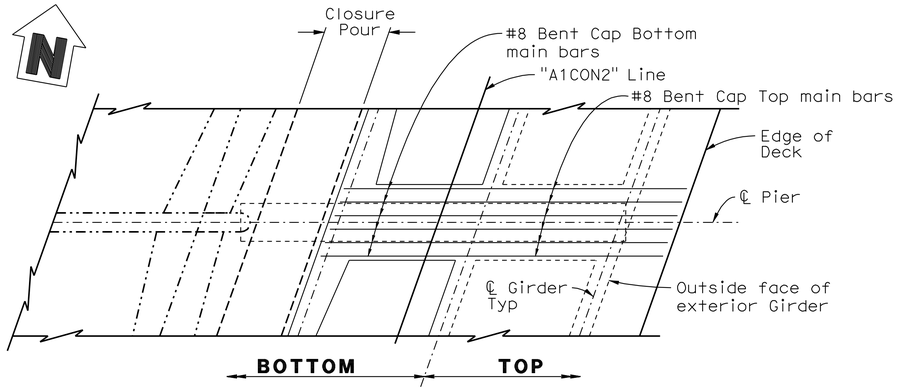

PLAN
1/4"=1'-0"

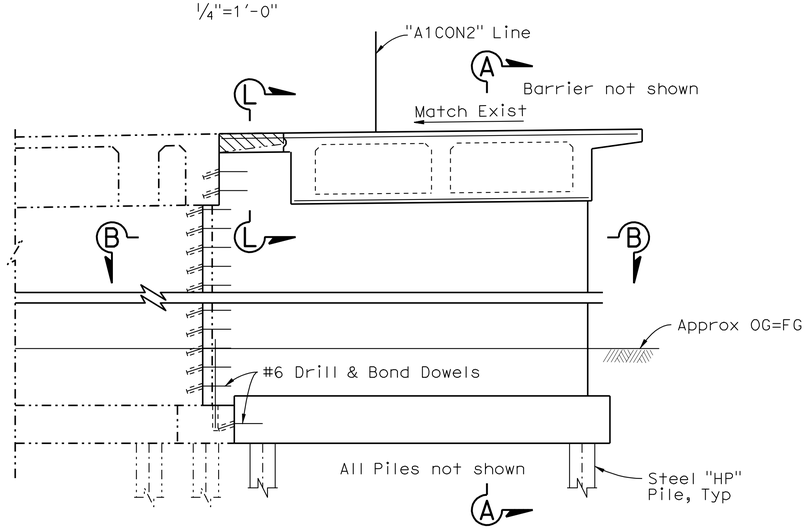

ELEVATION
1/4"=1'-0"

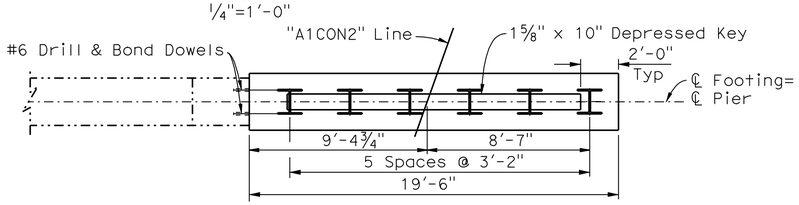

FOOTING PLAN
1/4"=1'-0"

NOTE: Pier 6 shown, Piers 2, 3, 4, 5, and 7 similar.

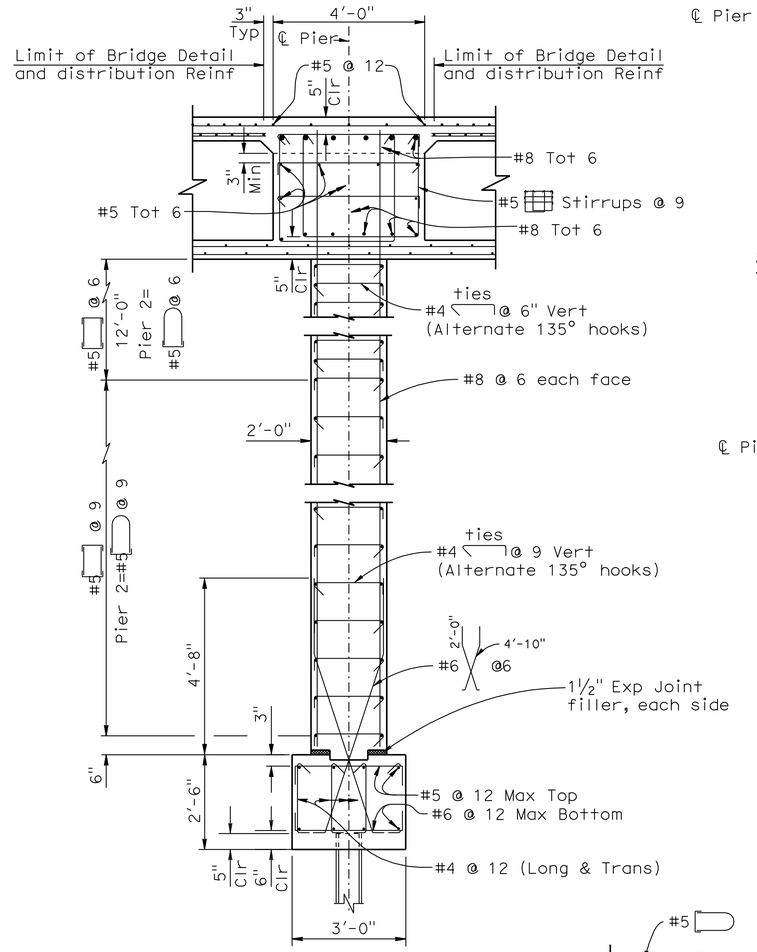

SECTION A-A
1/2"=1'-0"

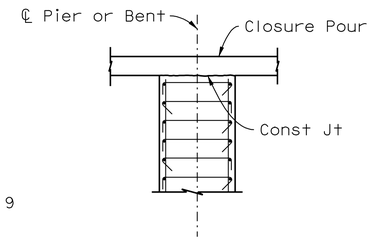

SECTION L-L
1/2"=1'-0"

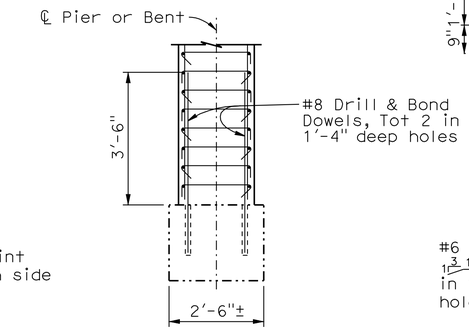

DETAIL AT EXIST FOOTING
1/2"=1'-0"

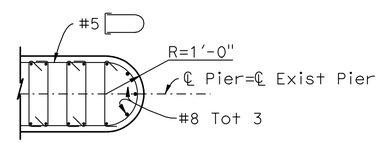

DETAIL FOR PIER 2 ONLY

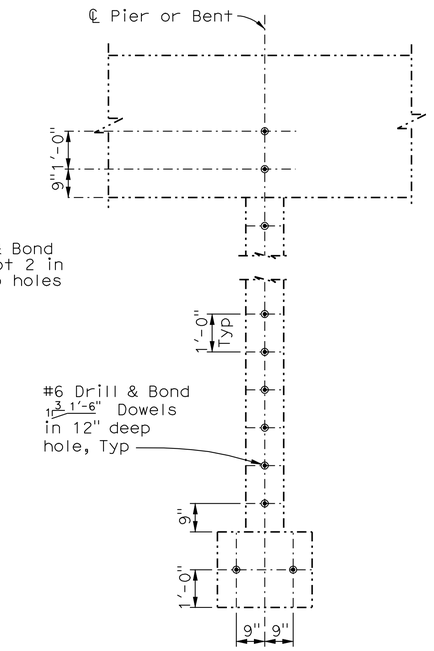

TYPICAL DRILL AND BOND DOWEL LAYOUT
1/2"=1'-0"

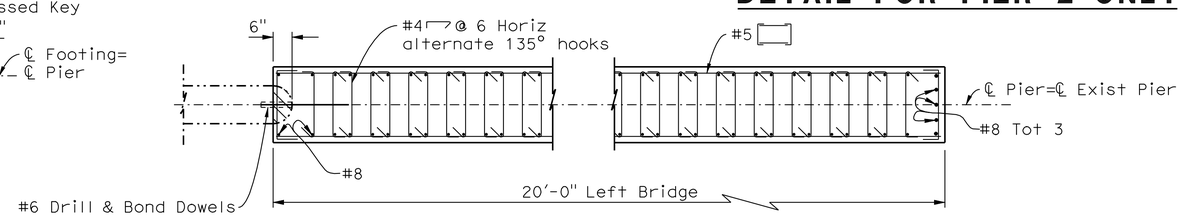

SECTION B-B
1/2"=1'-0"

LEGEND:

- —— Indicates new construction
- -·-·- Indicates existing structure
- ▨ Indicates existing bridge removal (Portion)

NOTE:
THE CONTRACTOR SHALL VERIFY ALL CONTROLLING FIELD DIMENSIONS BEFORE ORDERING OR FABRICATING ANY MATERIAL.

	BY	CHECKED
DESIGN	F. Chen	R. Anderson
DETAILS	G. Hallstrom	R. Anderson
QUANTITIES	F. Chen	D. Azzam

STATE OF CALIFORNIA
DEPARTMENT OF TRANSPORTATION

DIVISION OF ENGINEERING SERVICES
STRUCTURE DESIGN
DESIGN BRANCH 10

BRIDGE NO. 54-0471RL
POST MILE 4.21

SANTA ANA RIVER BRIDGE (WIDEN)
PIER 2-7 LAYOUT LEFT BRIDGE

STRUCTURES DESIGN DETAIL SHEET (ENGLISH) (REV. 09-01-10)

ORIGINAL SCALE IN INCHES FOR REDUCED PLANS 0 1 2 3

UNIT: 3589
PROJECT NUMBER & PHASE: 08000005061
CONTRACT NO.: 08-0M9401

DISREGARD PRINTS BEARING EARLIER REVISION DATES

REVISION DATES 12-20-10 12-02-11 8-25-11

SHEET 9 OF 66

FILE => 540471rlpdtleft9.dgn

USERNAME => s124496 DATE PLOTTED => 18-APR-2012 TIME PLOTTED => 14:41

DIST	COUNTY	ROUTE	POST MILES TOTAL PROJECT	SHEET No.	TOTAL SHEETS
08	Riv,SBd	91,215	21.5/21.7, 43.2/45.2,0.0/5.1	1330	1743

REGISTERED CIVIL ENGINEER 4-06-12 DATE

4-16-12
PLANS APPROVAL DATE

REGISTERED PROFESSIONAL ENGINEER LARRY WU No. C57035 Exp. 6-30-13 CIVIL STATE OF CALIFORNIA

The State of California or its officers or agents shall not be responsible for the accuracy or completeness of electronic copies of this plan sheet.

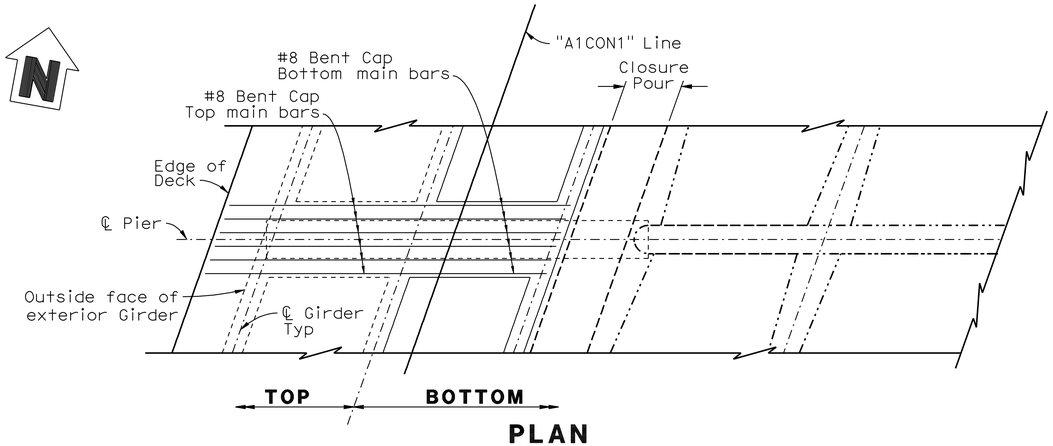

PLAN

1/4"=1'-0"

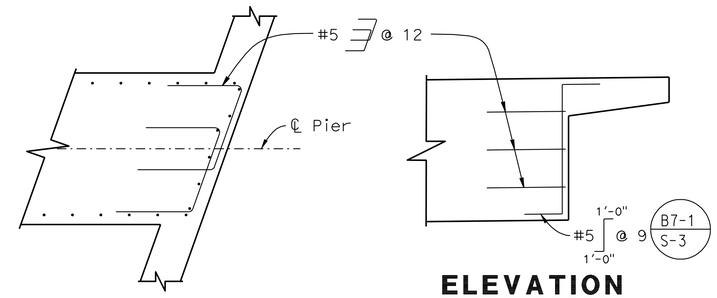

PLAN

1/2"=1'-0"

ELEVATION

1/2"=1'-0"

BENT CAP END REINFORCEMENT

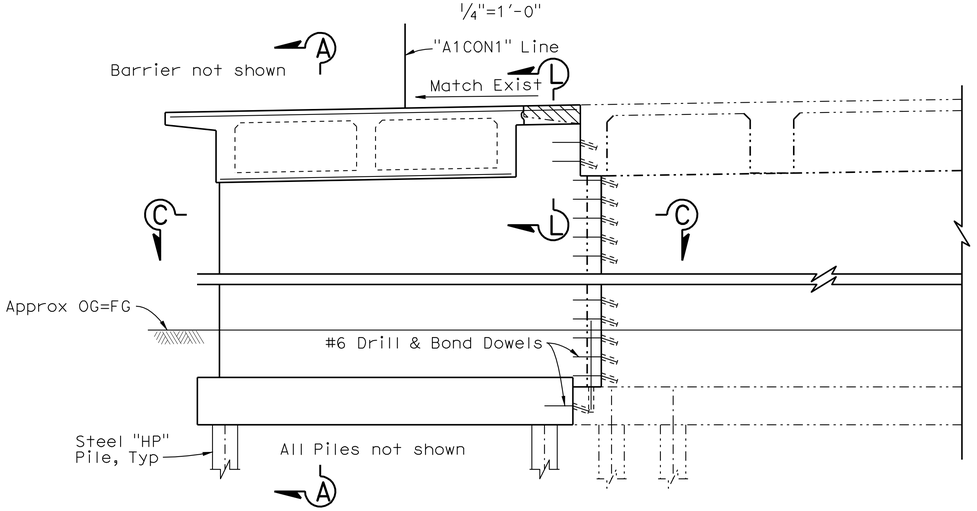

ELEVATION

1/4"=1'-0"

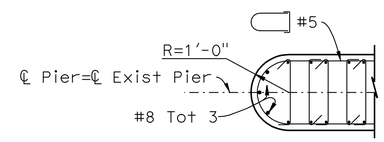

DETAIL FOR PIER 2 ONLY

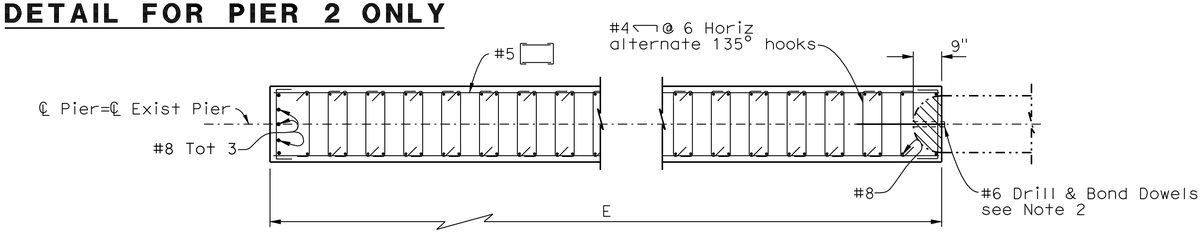

SECTION C-C

1/2"=1'-0"

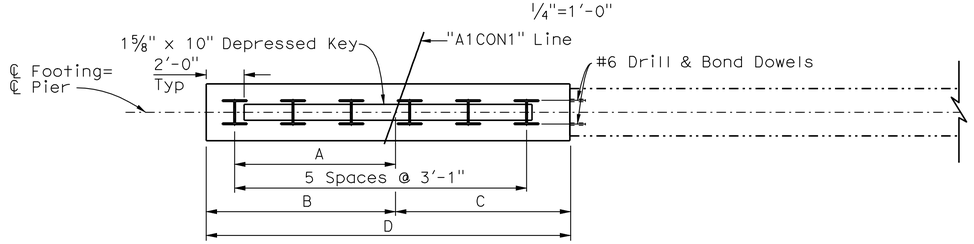

FOOTING PLAN

1/4"=1'-0"

NOTE: Pier 6 shown, Piers 2, 3, 4, 5, and 7 similar.

	DIMENSIONS				
PIER NO.	A	B	C±	D±	E
2	8'-6"	10'-0"	9'-3 5/8"	19'-3 5/8"	19'-7"
3	8'-6"	10'-0"	9'-3 3/8"	19'-3 3/8"	19'-6"
4	8'-6"	10'-0"	9'-3"	19'-3"	19'-6"
5	8'-6"	10'-0"	9'-2 3/4"	19'-2 3/4"	19'-4"
6	8'-6"	10'-0"	9'-2 1/2"	19'-2 1/2"	19'-4"
7	8'-6"	10'-0"	8'-11 3/8"	18'-11 3/8"	19'-1"

NOTES:

1. For Section A-A, and Section L-L, see "PIER 2-7 LAYOUT LEFT BRIDGE" sheet.
2. For layout of Drill & Bond Dowels, see "PIER 2-7 LAYOUT LEFT BRIDGE" sheet.

LEGEND:

—— Indicates new construction
-·-·- Indicates existing structure
▨ Indicates existing bridge removal (Portion)

NOTE:
THE CONTRACTOR SHALL VERIFY ALL CONTROLLING FIELD DIMENSIONS BEFORE ORDERING OR FABRICATING ANY MATERIAL.

	BY	CHECKED
DESIGN	F. Chen	R. Anderson
DETAILS	G. Hallstrom	R. Anderson
QUANTITIES	F. Chen	D. Azzam

STATE OF CALIFORNIA
DEPARTMENT OF TRANSPORTATION

DIVISION OF ENGINEERING SERVICES
STRUCTURE DESIGN
DESIGN BRANCH 10

BRIDGE NO. 54-0471RL
POST MILE 4.21

SANTA ANA RIVER BRIDGE (WIDEN)
PIER 2-7 LAYOUT RIGHT BRIDGE

STRUCTURES DESIGN DETAIL SHEET (ENGLISH) (REV. 09-01-10)

ORIGINAL SCALE IN INCHES FOR REDUCED PLANS 0 1 2 3

UNIT: 3589
PROJECT NUMBER & PHASE: 08000005061
CONTRACT NO.: 08-0M9401

DISREGARD PRINTS BEARING EARLIER REVISION DATES

REVISION DATES: 12-21-10 11-21-11 9-12-11

SHEET 10 OF 66

FILE => 540471rlpdtright10.dgn

USERNAME => s124496 DATE PLOTTED => 18-APR-2012 TIME PLOTTED => 14:41

DIST	COUNTY	ROUTE	POST MILES TOTAL PROJECT	SHEET No.	TOTAL SHEETS
08	Riv,SBd	91,215	21.5/21.7, 43.2/45.2,0.0/5.1	1331	1743

REGISTERED CIVIL ENGINEER — DATE: 4-06-12

4-16-12
PLANS APPROVAL DATE

REGISTERED PROFESSIONAL ENGINEER — LARRY WU No. C57035 Exp. 6-30-13 CIVIL — STATE OF CALIFORNIA

The State of California or its officers or agents shall not be responsible for the accuracy or completeness of electronic copies of this plan sheet.

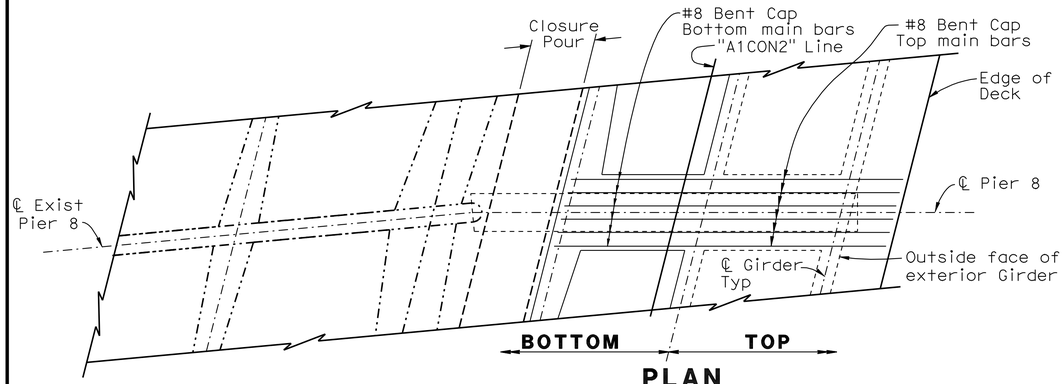

PLAN
1/4"=1'-0"

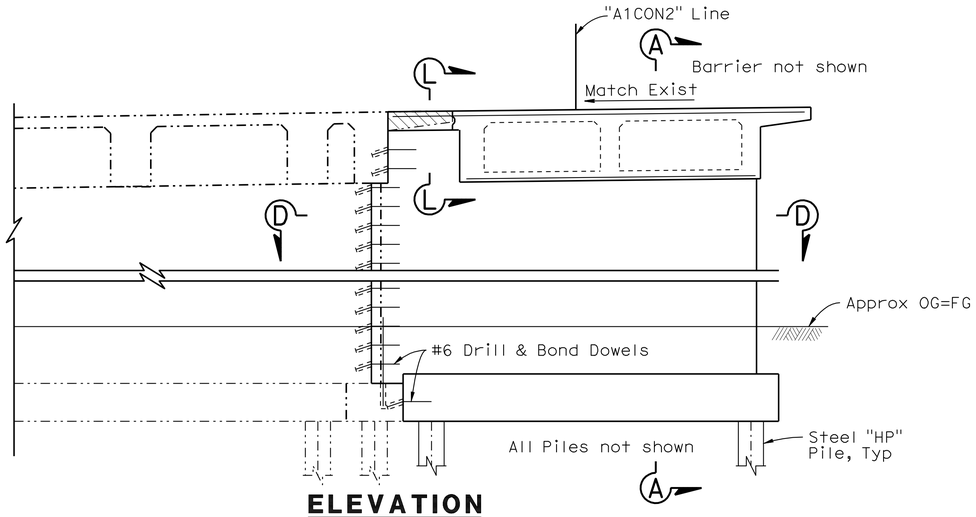

ELEVATION
1/4"=1'-0"

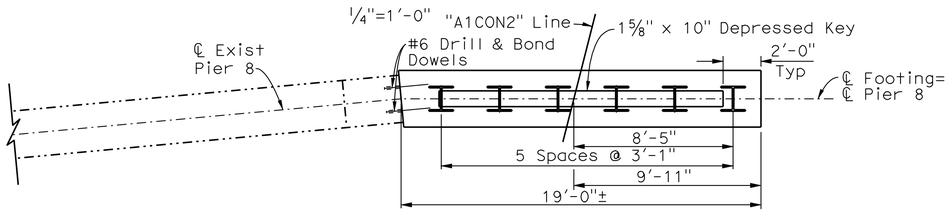

FOOTING PLAN
1/4"=1'-0"

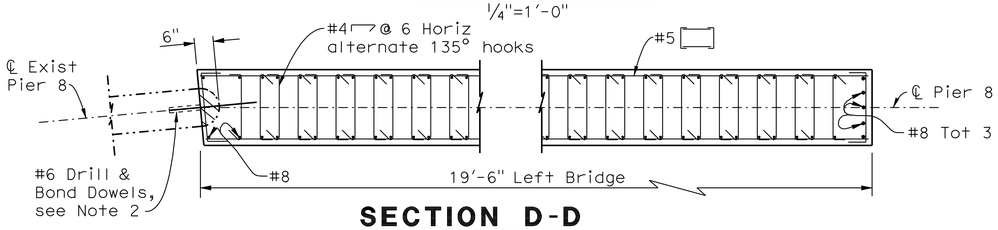

SECTION D-D
1/2"=1'-0" **LEFT BRIDGE**

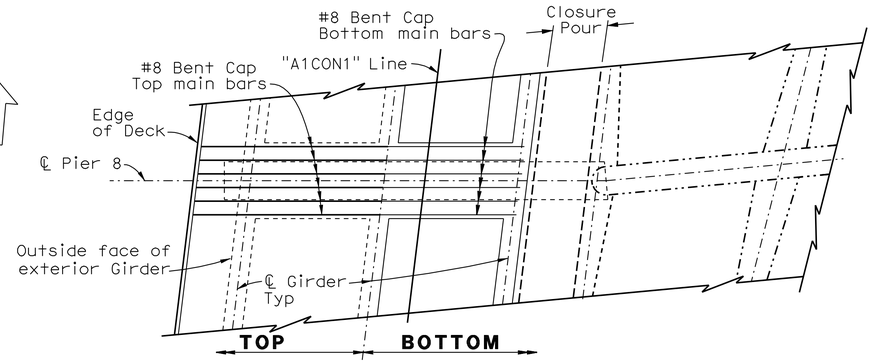

PLAN
1/4"=1'-0"

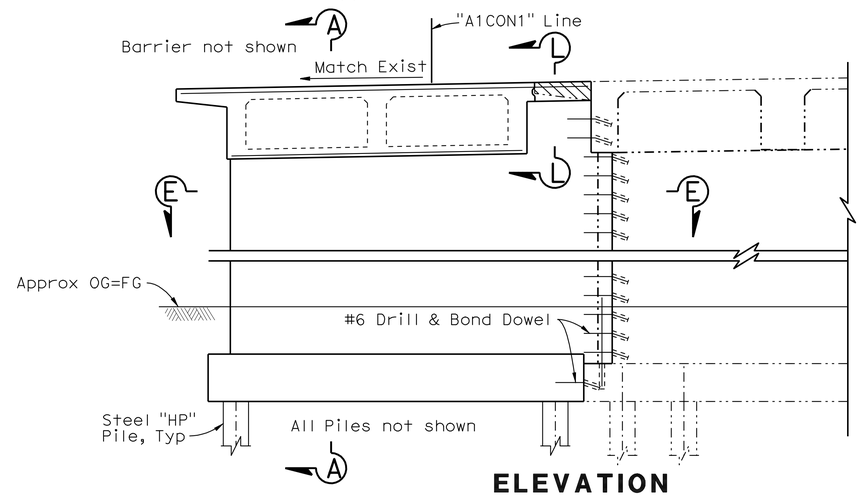

ELEVATION
1/4"=1'-0"

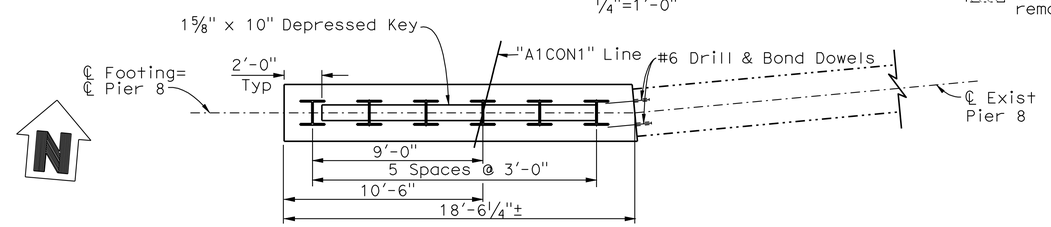

FOOTING PLAN
1/4"=1'-0"

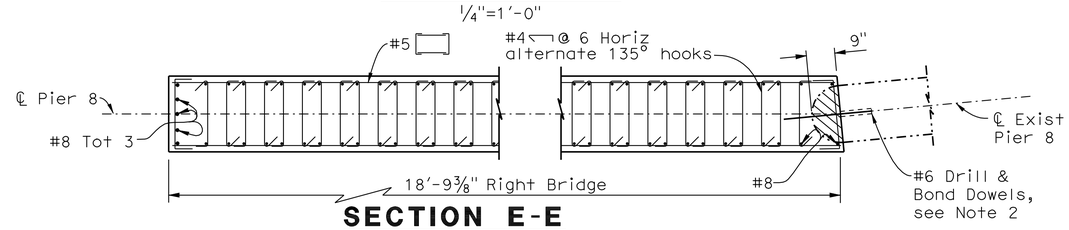

SECTION E-E
1/2"=1'-0" **RIGHT BRIDGE**

NOTE:
THE CONTRACTOR SHALL VERIFY ALL CONTROLLING FIELD DIMENSIONS BEFORE ORDERING OR FABRICATING ANY MATERIAL.

NOTES:

1. For "Section A-A", and "Section L-L", see "PIER 2-7 LAYOUT LEFT BRIDGE" sheet.
2. For layout of Drill & Bond Dowels, see "PIER 2-7 LAYOUT LEFT BRIDGE" sheet.

LEGEND:

- —— Indicates new construction
- -·-·- Indicates existing structure
- ▨ Indicates existing bridge removal (Portion)

	BY	CHECKED
DESIGN	F. Chen	R. Anderson
DETAILS	G. Hallstrom	R. Anderson
QUANTITIES	F. Chen	D. Azzam

STATE OF CALIFORNIA
DEPARTMENT OF TRANSPORTATION

DIVISION OF ENGINEERING SERVICES
STRUCTURE DESIGN
DESIGN BRANCH 10

BRIDGE NO. 54-0471RL
POST MILE 4.21

SANTA ANA RIVER BRIDGE (WIDEN)
PIER 8 LAYOUT & DETAILS

STRUCTURES DESIGN DETAIL SHEET (ENGLISH) (REV. 09-01-10)

ORIGINAL SCALE IN INCHES FOR REDUCED PLANS 0 1 2 3

UNIT: 3589
PROJECT NUMBER & PHASE: 08000005061
CONTRACT NO.: 08-0M9401

DISREGARD PRINTS BEARING EARLIER REVISION DATES

REVISION DATES: 3-28-11 7-29-11 8-29-11 12-02-11

SHEET 11 OF 66

FILE => 540471rlplo11.dgn

USERNAME => s124496 DATE PLOTTED => 18-APR-2012 TIME PLOTTED => 14:42

DIST	COUNTY	ROUTE	POST MILES TOTAL PROJECT	SHEET No.	TOTAL SHEETS
08	Riv,SBd	91,215	21.5/21.7, 43.2/45.2,0.0/5.1	1332	1743

REGISTERED CIVIL ENGINEER — DATE 4-06-12

4-16-12
PLANS APPROVAL DATE

REGISTERED PROFESSIONAL ENGINEER — LARRY WU No. C57035 Exp. 6-30-13 CIVIL — STATE OF CALIFORNIA

The State of California or its officers or agents shall not be responsible for the accuracy or completeness of electronic copies of this plan sheet.

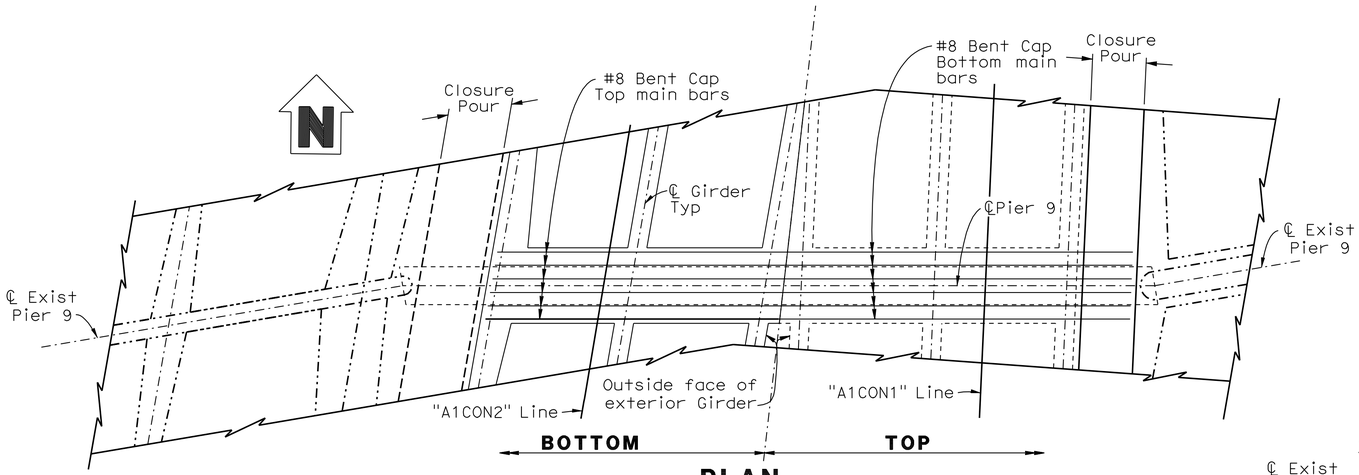

PLAN

1/4"=1'-0"

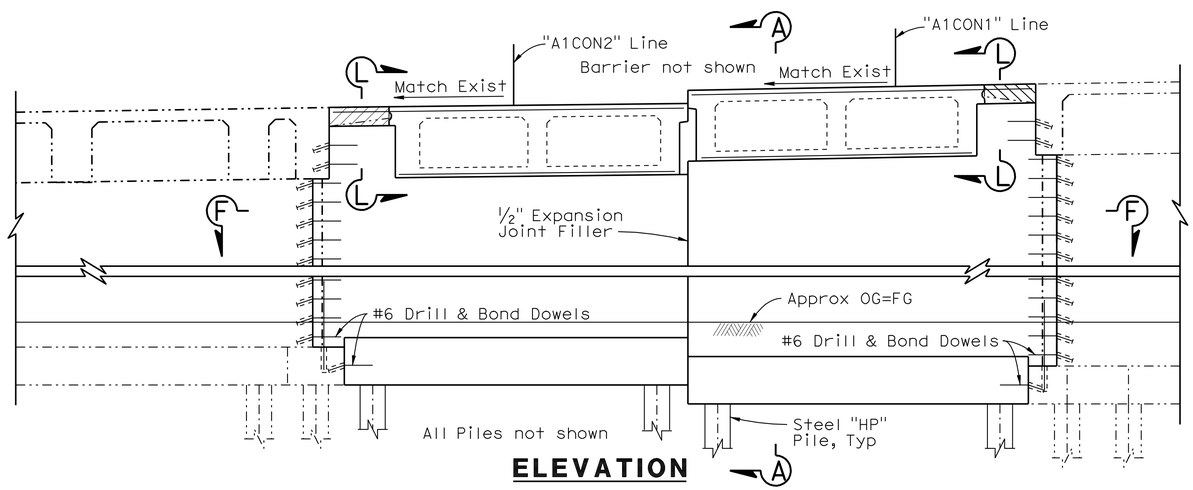

ELEVATION

1/4"=1'-0"

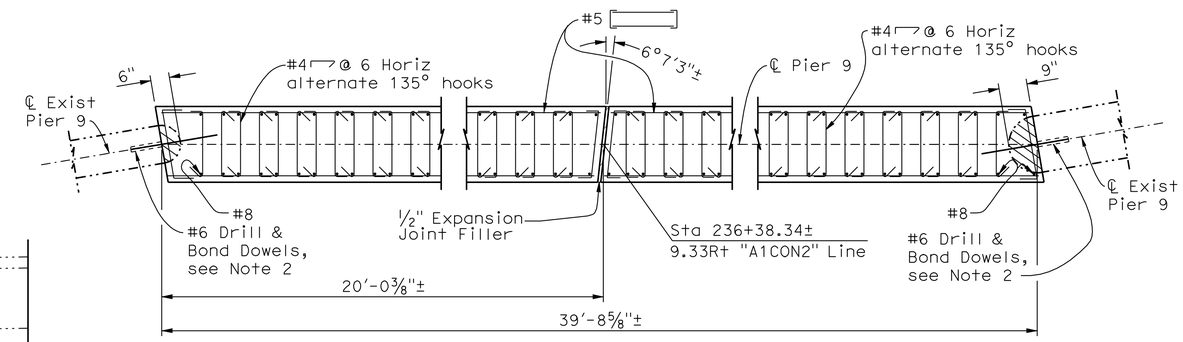

SECTION F-F

1/2"=1'-0"

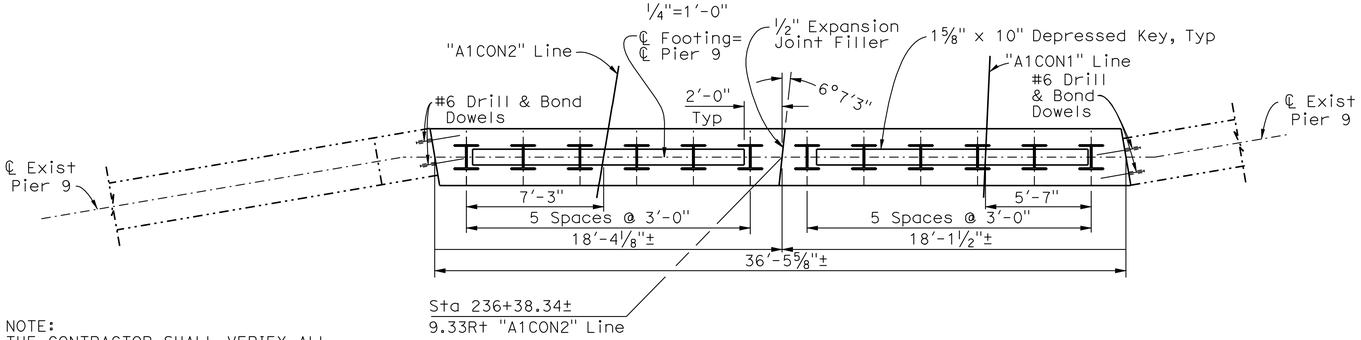

FOOTING PLAN

1/4"=1'-0"

NOTE:
THE CONTRACTOR SHALL VERIFY ALL CONTROLLING FIELD DIMENSIONS BEFORE ORDERING OR FABRICATING ANY MATERIAL.

NOTES:

1. For "Section A-A" and "Section L-L", see "PIER 2-7 LAYOUT LEFT BRIDGE" sheet.
2. For layout of Drill & Bond Dowels, see "PIER 2-7 LAYOUT LEFT BRIDGE" sheet.

LEGEND:

—— Indicates new construction
-·-·- Indicates existing structure
▨ Indicates existing bridge removal (Portion)

	BY	CHECKED
DESIGN	F. Chen	R. Anderson
DETAILS	G. Hallstrom	R. Anderson
QUANTITIES	F. Chen	D. Azzam

STATE OF CALIFORNIA
DEPARTMENT OF TRANSPORTATION

DIVISION OF ENGINEERING SERVICES
STRUCTURE DESIGN
DESIGN BRANCH 10

BRIDGE NO. 54-0471RL
POST MILE 4.21

SANTA ANA RIVER BRIDGE (WIDEN)
PIER 9 LAYOUT & DETAILS

STRUCTURES DESIGN DETAIL SHEET (ENGLISH) (REV. 09-01-10)

ORIGINAL SCALE IN INCHES FOR REDUCED PLANS 0 1 2 3

UNIT: 3589
PROJECT NUMBER & PHASE: 08000005061
CONTRACT NO.: 08-0M9401

DISREGARD PRINTS BEARING EARLIER REVISION DATES

REVISION DATES: 3-24-11 7-29-11 8-29-11 12-02-11

SHEET 12 OF 66

FILE => 540471rilplo12.dgn

USERNAME => s124496 DATE PLOTTED => 18-APR-2012 TIME PLOTTED => 14:42

DIST	COUNTY	ROUTE	POST MILES TOTAL PROJECT	SHEET No.	TOTAL SHEETS
08	Riv,SBd	91,215	21.5/21.7, 43.2/45.2,0.0/5.1	1333	1743

REGISTERED CIVIL ENGINEER — DATE 4-06-12

4-16-12
PLANS APPROVAL DATE

REGISTERED PROFESSIONAL ENGINEER — LARRY WU No. C57035 Exp. 6-30-13 CIVIL — STATE OF CALIFORNIA

The State of California or its officers or agents shall not be responsible for the accuracy or completeness of electronic copies of this plan sheet.

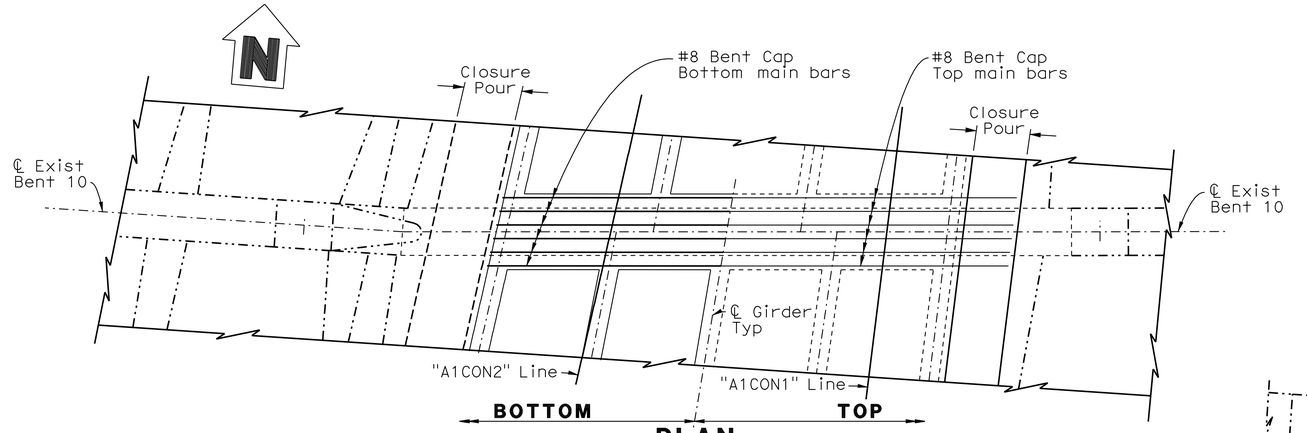

PLAN

1/4"=1'-0"

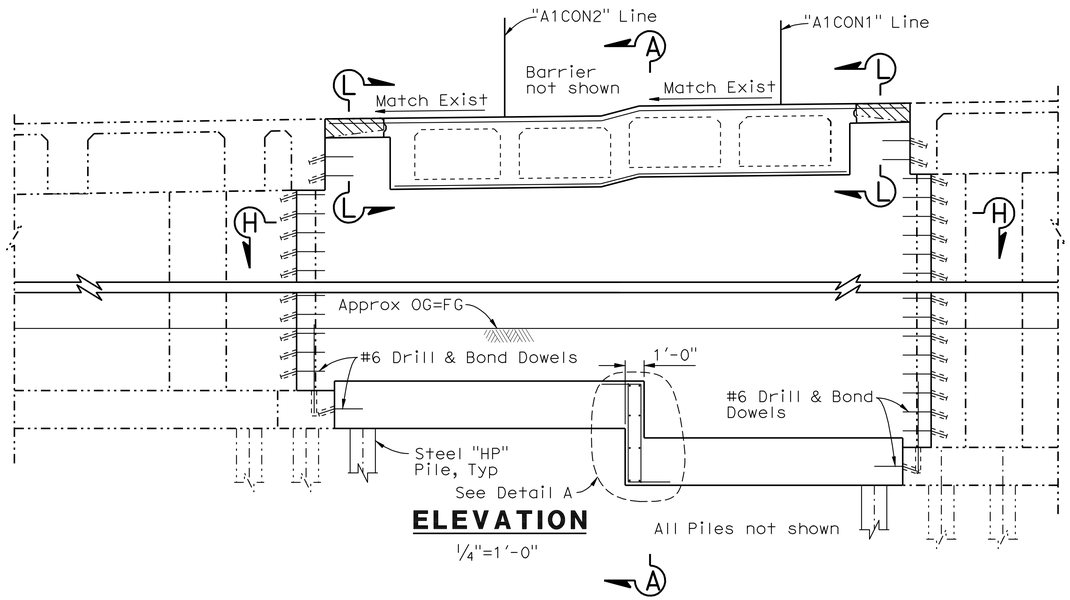

ELEVATION

1/4"=1'-0"

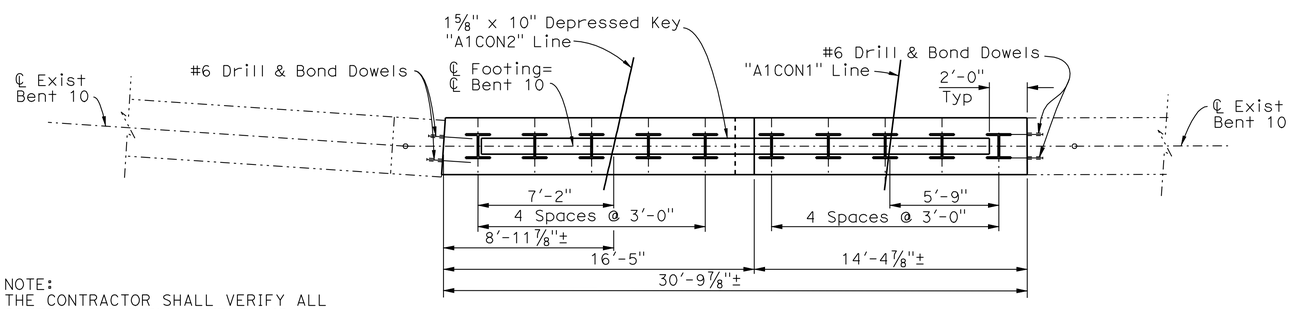

FOOTING PLAN

1/4"=1'-0"

NOTE:
THE CONTRACTOR SHALL VERIFY ALL CONTROLLING FIELD DIMENSIONS BEFORE ORDERING OR FABRICATING ANY MATERIAL.

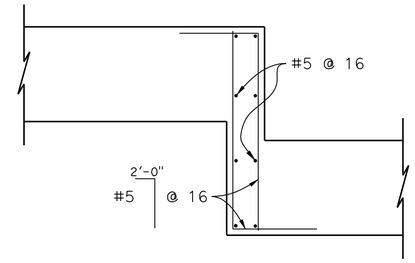

DETAIL A

1/2"=1'-0"

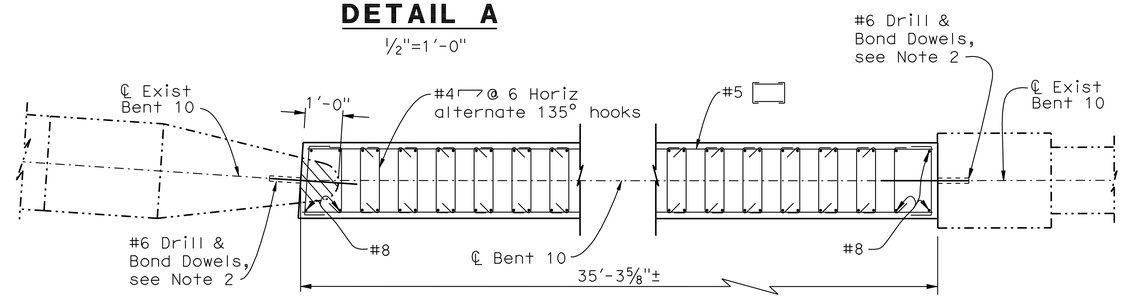

SECTION H-H

1/2"=1'-0"

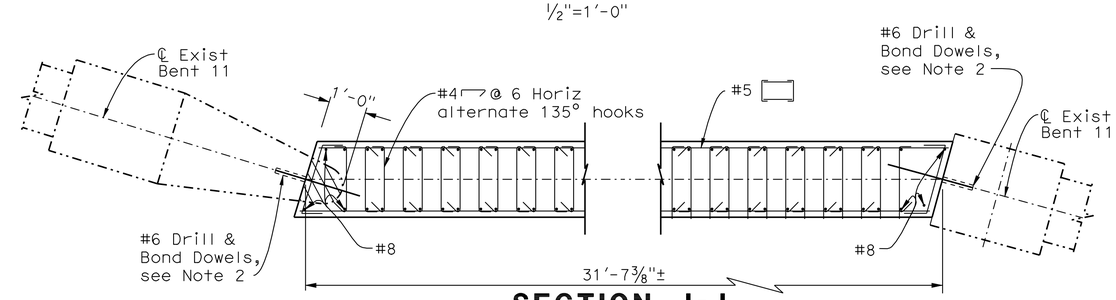

SECTION J-J

1/2"=1'-0"

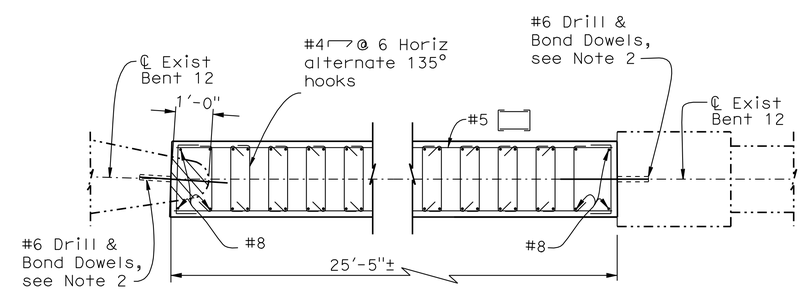

SECTION K-K

1/2"=1'-0"

NOTES:

1. For "Section A-A", and "Section L-L", see "PIER 2-7 LAYOUT LEFT BRIDGE" sheet.
2. For layout of Drill & Bond Dowels, see "PIER 2-7 LAYOUT LEFT BRIDGE" sheet.
3. For location of "Section J-J" and "Section K-K", see "BENT 11 & 12 LAYOUT & DETAILS" sheet.

LEGEND:

- —— Indicates new construction
- -·-·- Indicates existing structure
- ▨ Indicates existing bridge removal (Portion)

DESIGN	BY F. Chen	CHECKED R. Anderson	
DETAILS	BY G. Hallstrom	CHECKED R. Anderson	
QUANTITIES	BY F. Chen	CHECKED D. Azzam	

STATE OF CALIFORNIA
DEPARTMENT OF TRANSPORTATION

DIVISION OF ENGINEERING SERVICES
STRUCTURE DESIGN
DESIGN BRANCH 10

BRIDGE NO. 54-0471RL
POST MILE 4.21

SANTA ANA RIVER BRIDGE (WIDEN)
BENT 10 LAYOUT & DETAILS

STRUCTURES DESIGN DETAIL SHEET (ENGLISH) (REV. 09-01-10)

ORIGINAL SCALE IN INCHES FOR REDUCED PLANS 0 1 2 3

UNIT: 3589
PROJECT NUMBER & PHASE: 08000005061
CONTRACT NO.: 08-0M9401

DISREGARD PRINTS BEARING EARLIER REVISION DATES

REVISION DATES: 3-28-11 7-29-11 9-18-11 12-02-11

SHEET 13 OF 66

FILE => 540471rlplo13.dgn

USERNAME => s124496 DATE PLOTTED => 18-APR-2012 TIME PLOTTED => 14:42

DIST	COUNTY	ROUTE	POST MILES TOTAL PROJECT	SHEET No.	TOTAL SHEETS
08	Riv,SBd	91,215	21.5/21.7, 43.2/45.2,0.0/5.1	1334	1743

REGISTERED CIVIL ENGINEER — DATE: 4-06-12

4-16-12
PLANS APPROVAL DATE

REGISTERED PROFESSIONAL ENGINEER — LARRY WU — No. C57035 — Exp. 6-30-13 — CIVIL — STATE OF CALIFORNIA

The State of California or its officers or agents shall not be responsible for the accuracy or completeness of electronic copies of this plan sheet.

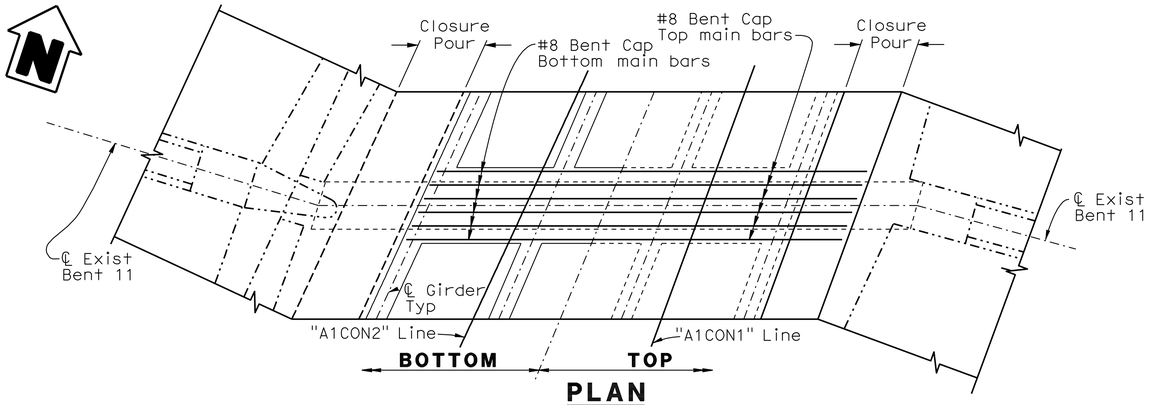

PLAN
1/4"=1'-0"

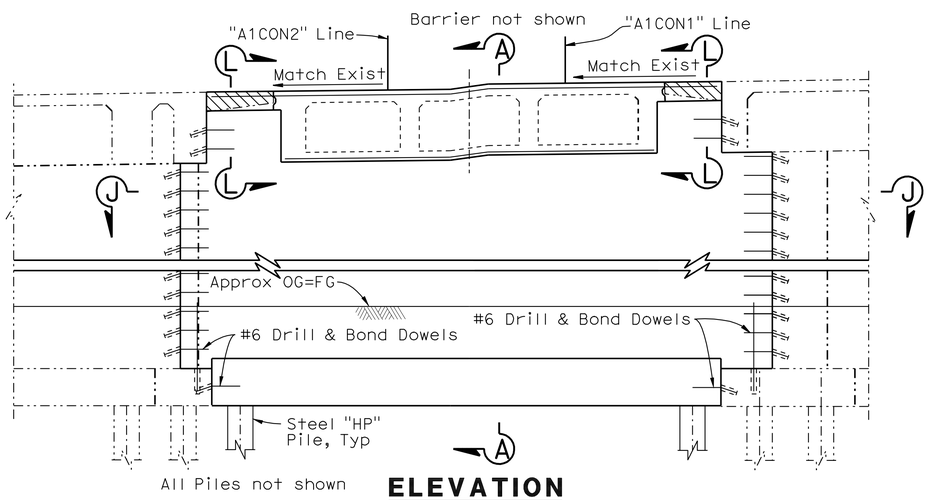

ELEVATION
1/4"=1'-0"

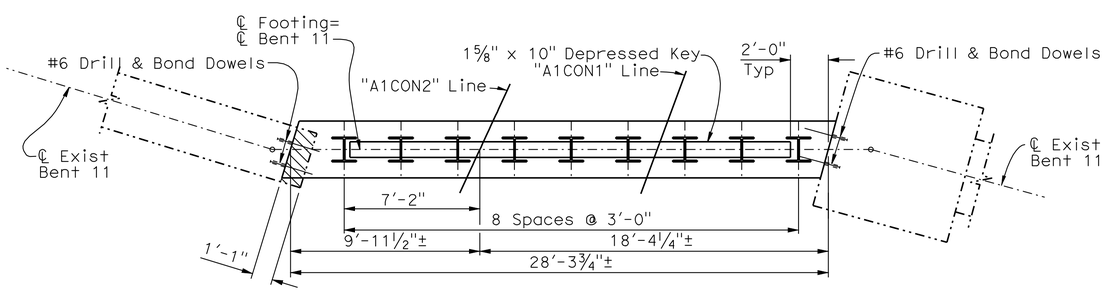

FOOTING PLAN
1/4"=1'-0"

NOTE:
THE CONTRACTOR SHALL VERIFY ALL CONTROLLING FIELD DIMENSIONS BEFORE ORDERING OR FABRICATING ANY MATERIAL.

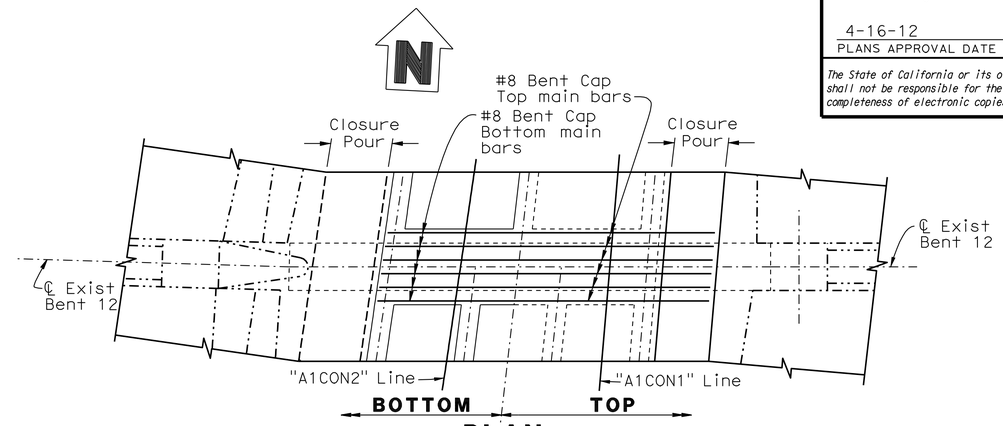

PLAN
1/4"=1'-0"

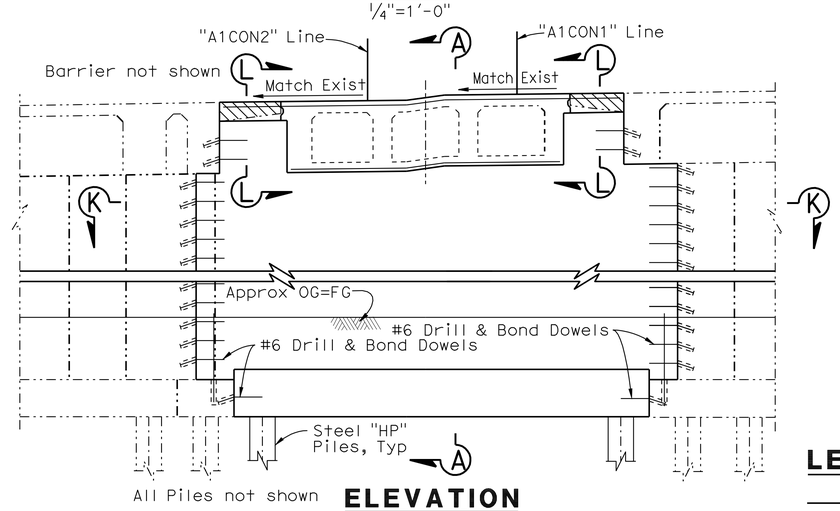

ELEVATION
1/4"=1'-0"

LEGEND:

- Indicates new construction
- Indicates existing structure
- Indicates existing bridge removal (Portion)

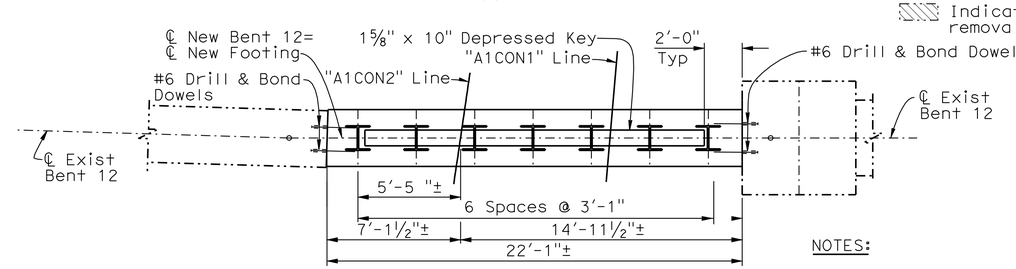

FOOTING PLAN
1/4"=1'-0"

NOTES:

1. For "Section A-A" and "Section L-L", see "PIER 2-7 LAYOUT LEFT BRIDGE" sheet.
2. For "Section J-J" and "Section K-K", see "BENT 10 LAYOUT & DETAILS" sheet.

	BY	CHECKED
DESIGN	F. Chen	R. Anderson
DETAILS	G. Hallstrom	R. Anderson
QUANTITIES	F. Chen	D. Azzam

STATE OF CALIFORNIA
DEPARTMENT OF TRANSPORTATION

DIVISION OF ENGINEERING SERVICES
STRUCTURE DESIGN
DESIGN BRANCH 10

BRIDGE NO. 54-0471RL
POST MILE 4.21

SANTA ANA RIVER BRIDGE (WIDEN)
BENT 11 & 12 LAYOUT & DETAILS

STRUCTURES DESIGN DETAIL SHEET (ENGLISH) (REV. 09-01-10)

ORIGINAL SCALE IN INCHES FOR REDUCED PLANS 0 1 2 3

UNIT: 3589
PROJECT NUMBER & PHASE: 08000005061
CONTRACT NO.: 08-0M9401

DISREGARD PRINTS BEARING EARLIER REVISION DATES

REVISION DATES: 4-06-11 7-29-11 8-31-11 11-28-11

SHEET 14 OF 66

FILE => 540471rllplo14.dgn

USERNAME => s124496 DATE PLOTTED => 18-APR-2012 TIME PLOTTED => 14:42

DIST	COUNTY	ROUTE	POST MILES TOTAL PROJECT	SHEET No.	TOTAL SHEETS
08	Riv,SBd	91,215	21.5/21.7, 43.2/45.2,0.0/5.1	1335	1743

REGISTERED CIVIL ENGINEER — DATE 4-06-12

4-16-12
PLANS APPROVAL DATE

REGISTERED PROFESSIONAL ENGINEER — LARRY WU No. C57035 Exp. 6-31-13 CIVIL — STATE OF CALIFORNIA

The State of California or its officers or agents shall not be responsible for the accuracy or completeness of electronic copies of this plan sheet.

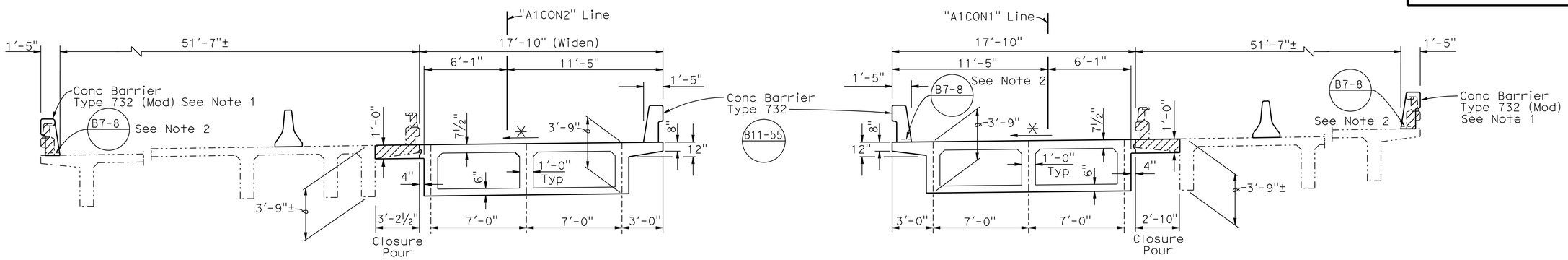

TYPICAL SECTION

¼" = 1'-0"

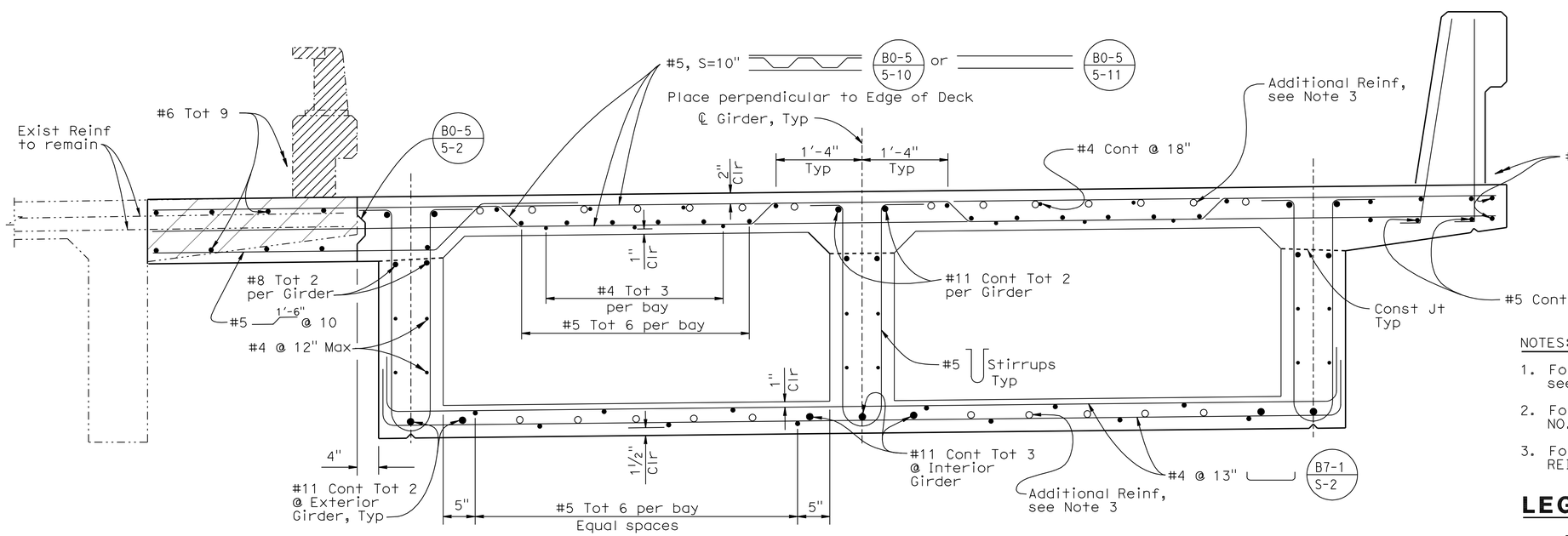

PART TYPICAL SECTION FROM ABUTMENT 1 THRU ℄ SPAN 8

1"= 1'-0"

NOTE: Left Bridge shown, Right Bridge similar.

B0-5 B7-1

NOTES:

1. For Concrete Barrier Type 732 (Mod) details see "TYPICAL SECTION NO. 3" sheet.
2. For Scupper locations, see "GENERAL PLAN NO. 1" and "GENERAL PLAN NO. 2" sheets.
3. For Additional Girder Reinf, see "GIRDER REINFORCEMENT NO. 1,2,3,4" sheets.

LEGEND:

- —— Indicates new construction
- —·—·— Indicates existing structure
- ▨ Indicates existing bridge removal (Portion)
- ✳ Match Existing Grade and Cross Slope

NOTE:
THE CONTRACTOR SHALL VERIFY ALL CONTROLLING FIELD DIMENSIONS BEFORE ORDERING OR FABRICATING ANY MATERIAL.

	BY	CHECKED
DESIGN	F. Chen	R. Anderson
DETAILS	G. Hallstrom	R. Anderson
QUANTITIES	F. Chen	D. Azzam

STATE OF CALIFORNIA
DEPARTMENT OF TRANSPORTATION

DIVISION OF ENGINEERING SERVICES
STRUCTURE DESIGN
DESIGN BRANCH 10

BRIDGE NO. 54-0471RL
POST MILE 4.21

SANTA ANA RIVER BRIDGE (WIDEN)

TYPICAL SECTION NO. 1

STRUCTURES DESIGN DETAIL SHEET (ENGLISH) (REV. 09-01-10)

ORIGINAL SCALE IN INCHES FOR REDUCED PLANS 0 1 2 3

UNIT: 3589
PROJECT NUMBER & PHASE: 08000005061
CONTRACT NO.: 08-0M9401

DISREGARD PRINTS BEARING EARLIER REVISION DATES

REVISION DATES: 1-18-11 12-02-11 9-18-11

SHEET 15 OF 66

FILE => 540471rlkts15.dgn

USERNAME => s124496 DATE PLOTTED => 18-APR-2012 TIME PLOTTED => 14:42

NOTE:
THE CONTRACTOR SHALL VERIFY ALL CONTROLLING FIELD DIMENSIONS BEFORE ORDERING OR FABRICATING ANY MATERIAL.

DIST	COUNTY	ROUTE	POST MILES TOTAL PROJECT	SHEET No.	TOTAL SHEETS
08	Riv,SBd	91,215	21.5/21.7, 43.2/45.2,0.0/5.1	1336	1743

REGISTERED CIVIL ENGINEER — DATE 4-06-12

4-16-12
PLANS APPROVAL DATE

REGISTERED PROFESSIONAL ENGINEER — LARRY WU No. C57035 Exp. 6-30-13 CIVIL — STATE OF CALIFORNIA

The State of California or its officers or agents shall not be responsible for the accuracy or completeness of electronic copies of this plan sheet.

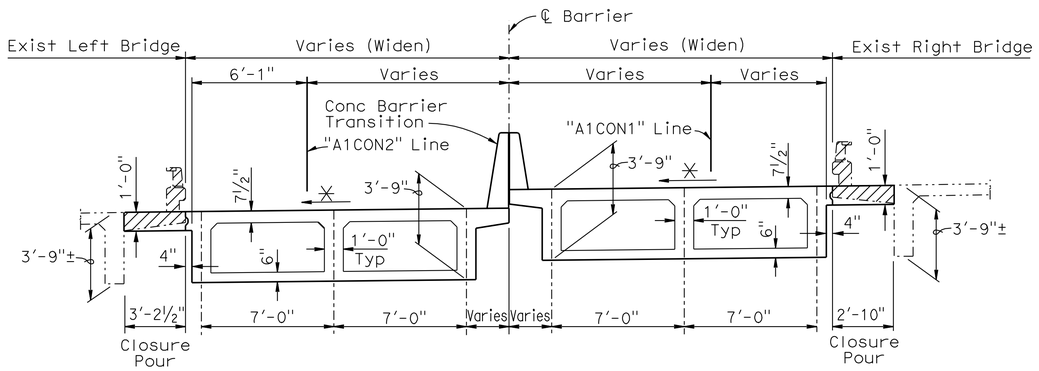

TYPICAL SECTION ℄ SPAN 8 THRU PIER 9

¼" = 1'-0"

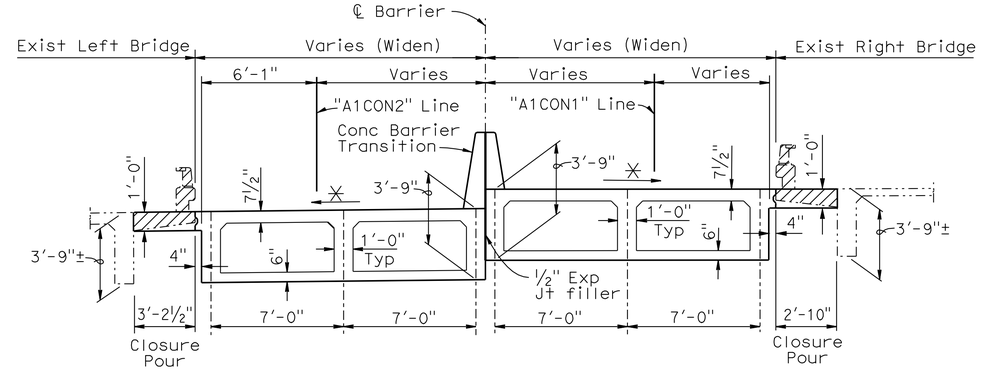

TYPICAL SECTION PIER 9 THRU HINGE 2

¼" = 1'-0"

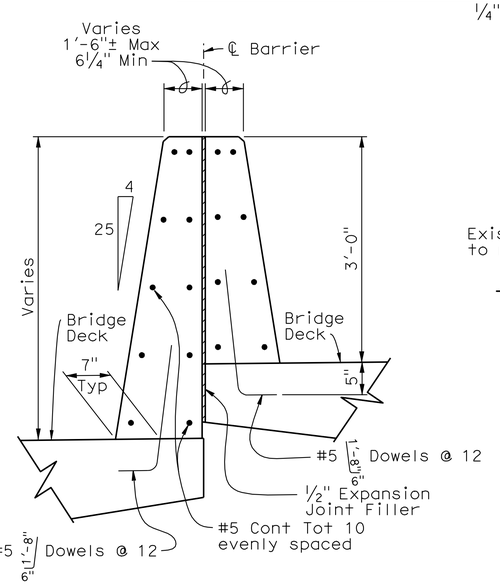

CONCRETE BARRIER TRANSITION

1" = 1'-0"

Details similar to Type 60 except as noted.

For details and notes not shown, see A76A

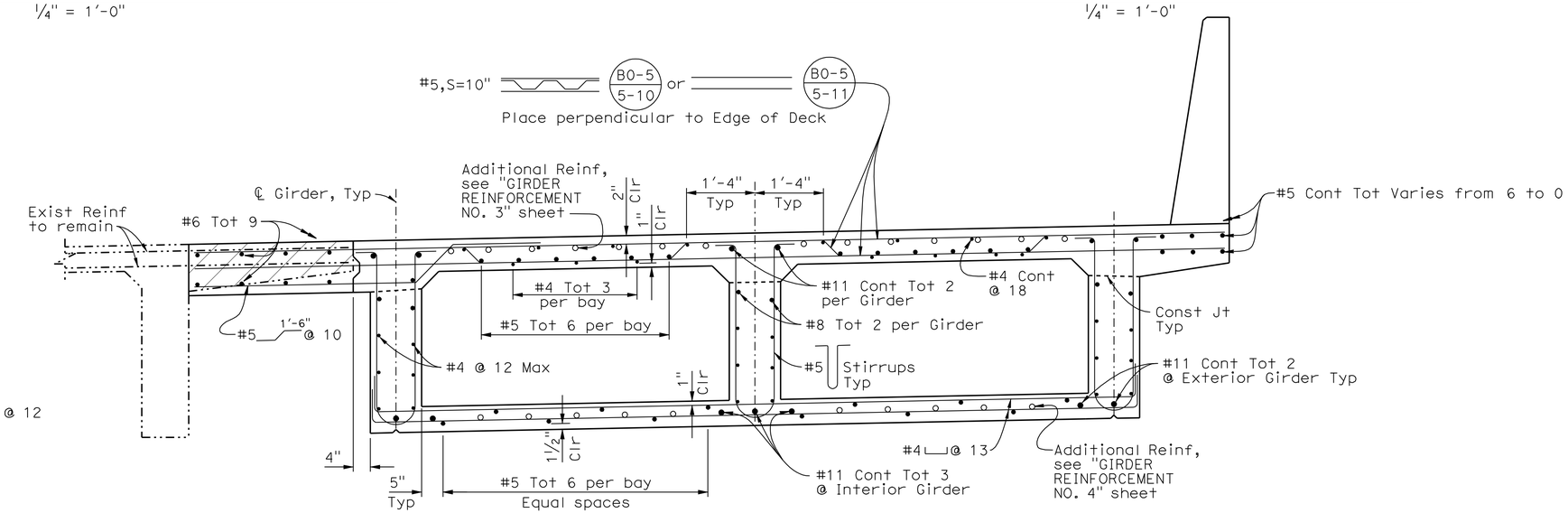

PART TYPICAL SECTION ℄ SPAN 8 THRU HINGE 2

3/4"=1'-0"

B0-5 B7-1

NOTE: Left Bridge shown, Right Bridge similar.

LEGEND:

- Indicates new construction
- Indicates existing structure
- Indicates existing bridge removal (Portion)
- Match existing grade and cross slope

DESIGN	BY F. Chen	CHECKED R. Anderson	
DETAILS	BY G. Hallstrom	CHECKED R. Anderson	
QUANTITIES	BY F. Chen	CHECKED D. Azzam	

STATE OF CALIFORNIA
DEPARTMENT OF TRANSPORTATION

DIVISION OF ENGINEERING SERVICES
STRUCTURE DESIGN
DESIGN BRANCH 10

BRIDGE NO. 54-0471RL
POST MILE 4.21

SANTA ANA RIVER BRIDGE (WIDEN)
TYPICAL SECTION NO. 2

STRUCTURES DESIGN DETAIL SHEET (ENGLISH) (REV. 09-01-10)

ORIGINAL SCALE IN INCHES FOR REDUCED PLANS 0 1 2 3

UNIT: 3589
PROJECT NUMBER & PHASE: 08000005061
CONTRACT NO.: 08-0M9401

DISREGARD PRINTS BEARING EARLIER REVISION DATES

REVISION DATES: 1-18-11 11-28-11 9-19-11

SHEET 16 OF 66

FILE => 540471rlkts16.dgn

USERNAME => s124496 DATE PLOTTED => 18-APR-2012 TIME PLOTTED => 14:42

DIST	COUNTY	ROUTE	POST MILES TOTAL PROJECT	SHEET No.	TOTAL SHEETS
08	Riv,SBd	91,215	21.5/21.7, 43.2/45.2,0.0/5.1	1337	1743

REGISTERED CIVIL ENGINEER — DATE 4-06-12

4-16-12
PLANS APPROVAL DATE

REGISTERED PROFESSIONAL ENGINEER — LARRY WU No. C57035 Exp. 6-31-13 CIVIL — STATE OF CALIFORNIA

The State of California or its officers or agents shall not be responsible for the accuracy or completeness of electronic copies of this plan sheet.

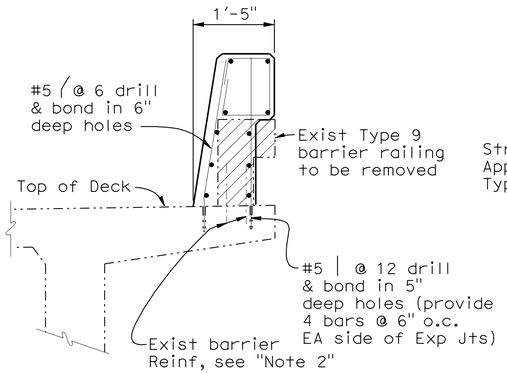

AT BRIDGE DECK

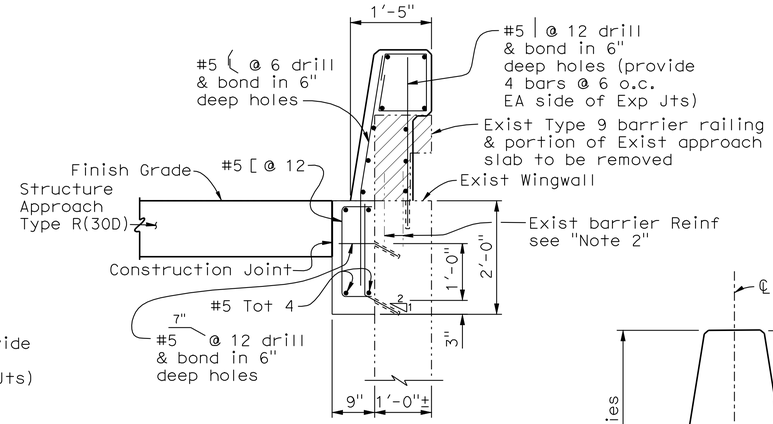

AT WINGWALL

CONCRETE BARRIER TYPE 732(MOD)

NO SCALE

NOTES:

1. For details not shown, see B11-55
2. Where Exist barrier railing reinforcement will have required concrete cover in new barrier, Exist barrier reinforcement may remain; where concrete cover is not available, cut reinforcement 1" below Exist concrete surface and patch with epoxy or grout.
3. Locations of drilled holes shown in the plans are approximate. Prior to placing holes in concrete, the contractor shall locate all reinforcing steel and adjust the location of the holes to clear all reinforcing bars (except as noted). Final hole locations are subject to the approval of the Engineer.

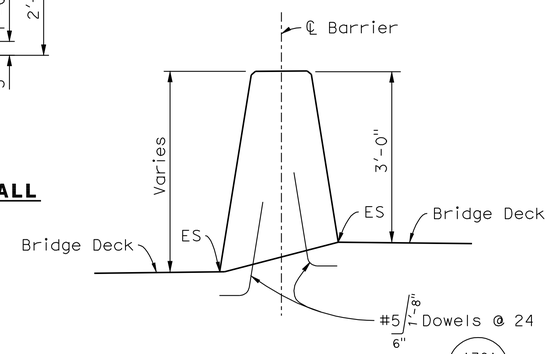

NOTE: For details not shown, see A76A

CONCRETE BARRIER TYPE 60A (MOD)

3/4" = 1'-0"

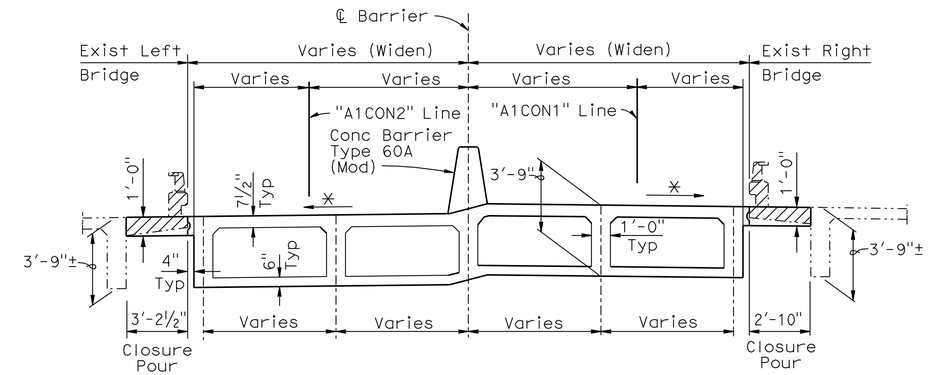

TYPICAL SECTION HINGE 2 THRU BENT 10

1/4" = 1'-0"

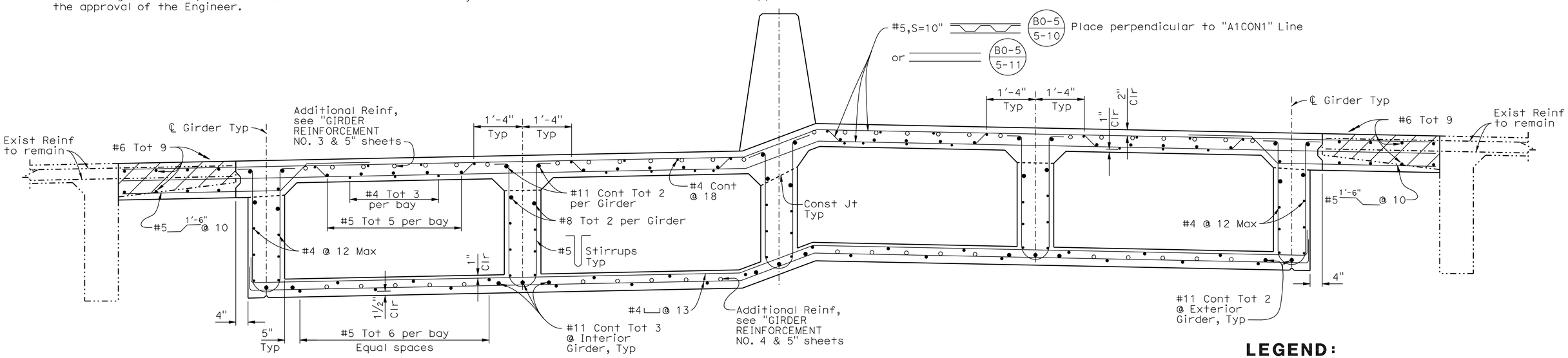

PART TYPICAL SECTION HINGE 2 THRU BENT 10

3/4"=1'-0"

B0-5 B7-1

LEGEND:

- —— Indicates new construction
- -·-·- Indicates existing structure
- ▨ Indicates existing bridge removal (Portion)
- ✳ Match Exist grade and cross slope

NOTE:
THE CONTRACTOR SHALL VERIFY ALL CONTROLLING FIELD DIMENSIONS BEFORE ORDERING OR FABRICATING ANY MATERIAL.

	BY	CHECKED
DESIGN	F. Chen	R. Anderson
DETAILS	G. Hallstrom	R. Anderson
QUANTITIES	F. Chen	D. Azzam

STATE OF CALIFORNIA
DEPARTMENT OF TRANSPORTATION

DIVISION OF ENGINEERING SERVICES
STRUCTURE DESIGN
DESIGN BRANCH 10

BRIDGE NO. 54-0471RL
POST MILE 4.21

SANTA ANA RIVER BRIDGE (WIDEN)
TYPICAL SECTION NO. 3

STRUCTURES DESIGN DETAIL SHEET (ENGLISH) (REV. 09-01-10)

ORIGINAL SCALE IN INCHES FOR REDUCED PLANS 0 1 2 3

UNIT: 3589
PROJECT NUMBER & PHASE: 08000005061
CONTRACT NO.: 08-0M9401

DISREGARD PRINTS BEARING EARLIER REVISION DATES

REVISION DATES: 4-04-11 | 3-06-11 | 12-02-11

SHEET 17 OF 66

USERNAME => s124496 DATE PLOTTED => 6-Feb-2012 TIME PLOTTED => 14:42

FILE => 540471riktsl7.dgn

DIST	COUNTY	ROUTE	POST MILES TOTAL PROJECT	SHEET No.	TOTAL SHEETS
08	Riv,SBd	91,215	21.5/21.7, 43.2/45.2,0.0/5.1	1338	1743

REGISTERED CIVIL ENGINEER 4-06-12 DATE

4-16-12
PLANS APPROVAL DATE

REGISTERED PROFESSIONAL ENGINEER LARRY WU No. C57035 Exp. 6-31-13 CIVIL STATE OF CALIFORNIA

The State of California or its officers or agents shall not be responsible for the accuracy or completeness of electronic copies of this plan sheet.

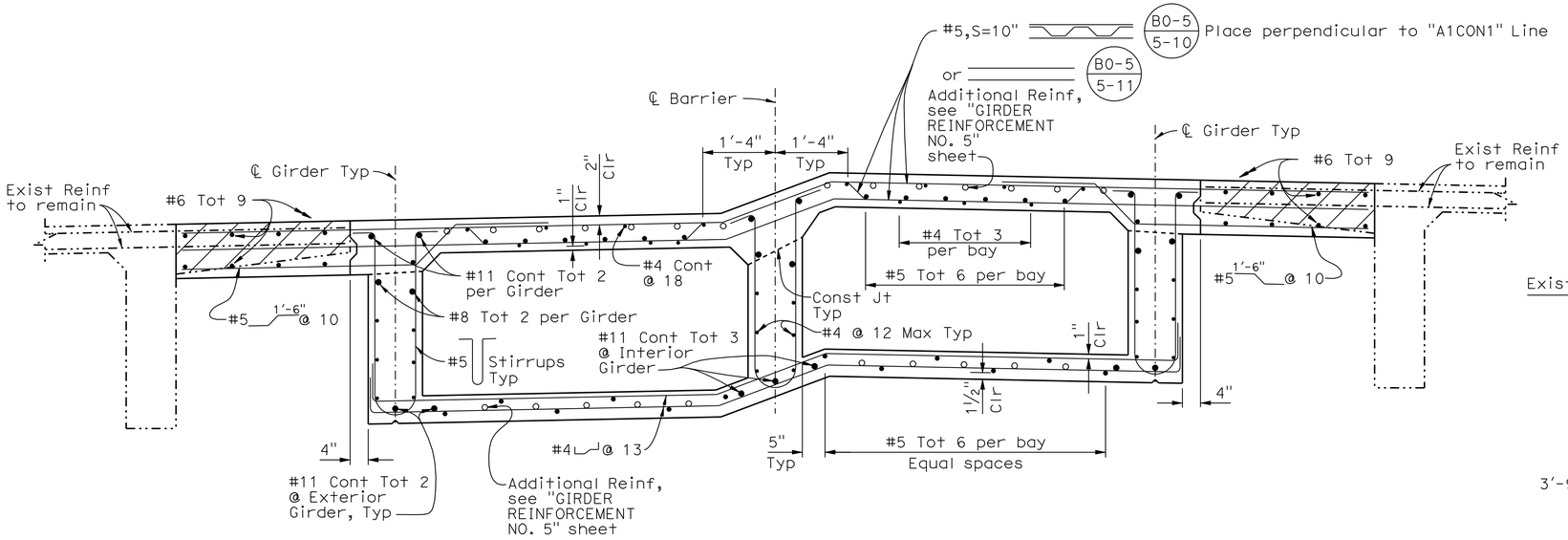

PART TYPICAL SECTION BENT 12 THRU ABUTMENT 13

3/4"=1'-0"

B0-5 B7-1

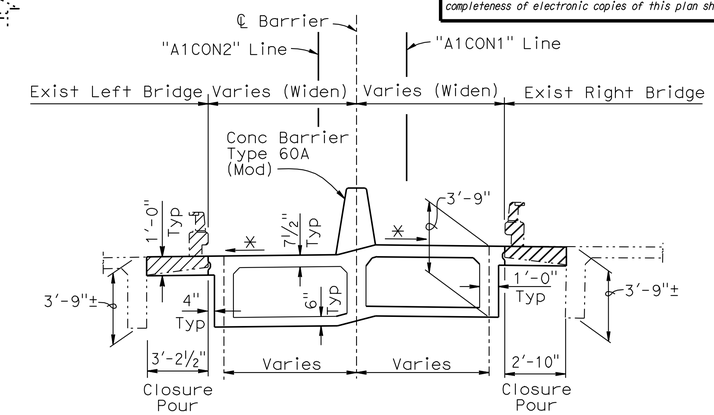

TYPICAL SECTION BENT 12 THRU ABUTMENT 13

¼" = 1'-0"

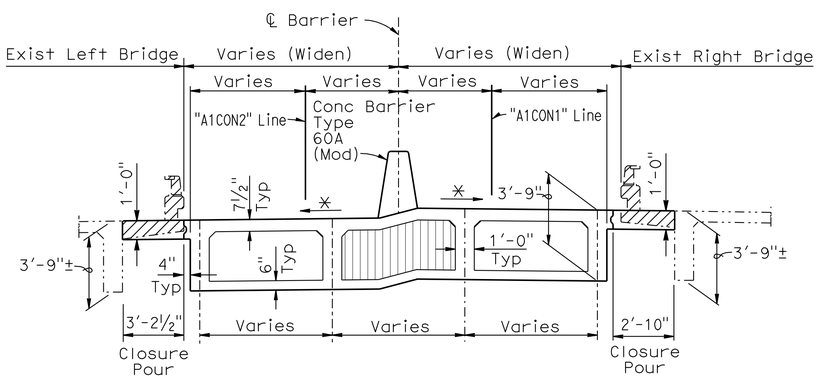

TYPICAL SECTION BENT 10 THRU BENT 12

¼" = 1'-0"

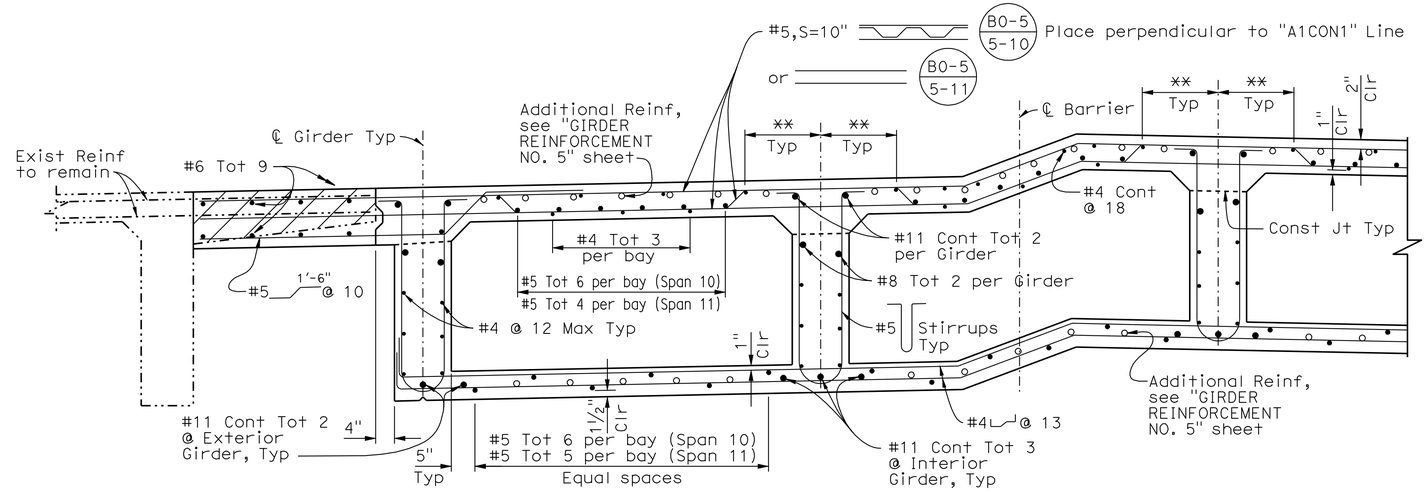

PART TYPICAL SECTION BENT 10 THRU BENT 12

3/4"=1'-0"

B0-5 B7-1

LEGEND:

- —— Indicates new construction
- -·-·- Indicates existing structure
- Indicates existing bridge removal (Portion)
- Indicates intermediate diaphragm, For location of intermediate diaphragm, see "GIRDER LAYOUT NO. 3" sheet.
- ✱ Match Exist grade and cross slope
- ✱✱ 1'-4" for Span 10, 1'-2" for Span 11

NOTE:
THE CONTRACTOR SHALL VERIFY ALL CONTROLLING FIELD DIMENSIONS BEFORE ORDERING OR FABRICATING ANY MATERIAL.

	BY	CHECKED
DESIGN	F. Chen	R. Anderson
DETAILS	G. Hallstrom	R. Anderson
QUANTITIES	F. Chen	D. Azzam

STATE OF CALIFORNIA
DEPARTMENT OF TRANSPORTATION

DIVISION OF ENGINEERING SERVICES
STRUCTURE DESIGN
DESIGN BRANCH 10

BRIDGE NO. 54-0471RL
POST MILE 4.21

SANTA ANA RIVER BRIDGE (WIDEN)

TYPICAL SECTION NO. 4

STRUCTURES DESIGN DETAIL SHEET (ENGLISH) (REV. 09-01-10)

ORIGINAL SCALE IN INCHES FOR REDUCED PLANS 0 1 2 3

UNIT: 3589
PROJECT NUMBER & PHASE: 08000005061
CONTRACT NO.: 08-0M9401

DISREGARD PRINTS BEARING EARLIER REVISION DATES

REVISION DATES 5-18-11 6-09-11 9-06-11 11-29-11

SHEET 18 OF 66

FILE => 540471riktsl8.dgn

USERNAME => s124496 DATE PLOTTED => 18-APR-2012 TIME PLOTTED => 14:42

DIST	COUNTY	ROUTE	POST MILES TOTAL PROJECT	SHEET No.	TOTAL SHEETS
08	Riv,SBd	91,215	21.5/21.7, 43.2/45.2,0.0/5.1	1339	1743

REGISTERED CIVIL ENGINEER 4-06-12 DATE

4-16-12
PLANS APPROVAL DATE

REGISTERED PROFESSIONAL ENGINEER LARRY WU No. C57035 Exp. 6-30-13 CIVIL STATE OF CALIFORNIA

The State of California or its officers or agents shall not be responsible for the accuracy or completeness of electronic copies of this plan sheet.

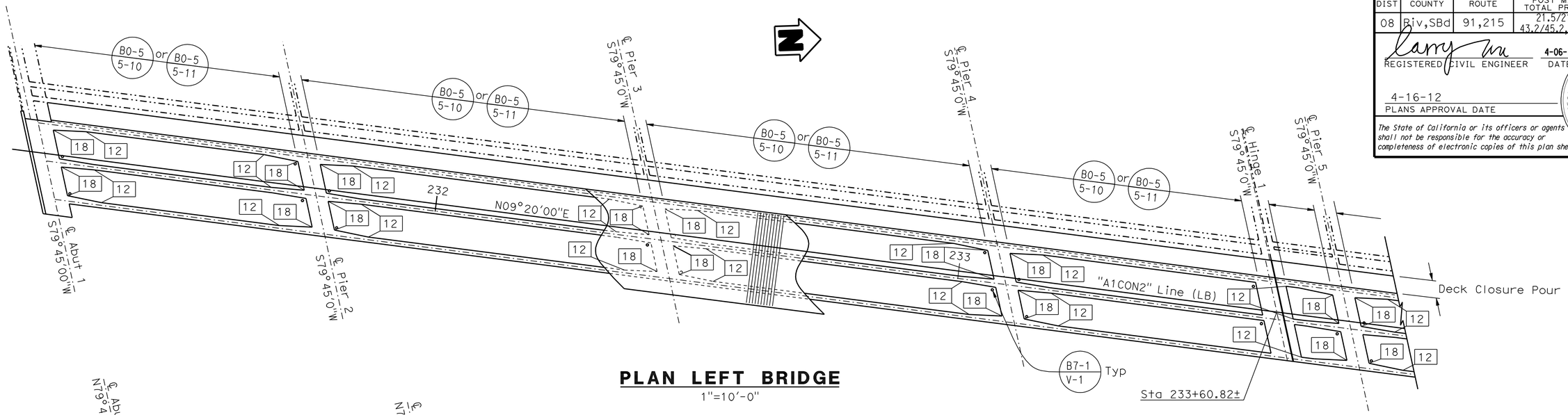

PLAN LEFT BRIDGE

1"=10'-0"

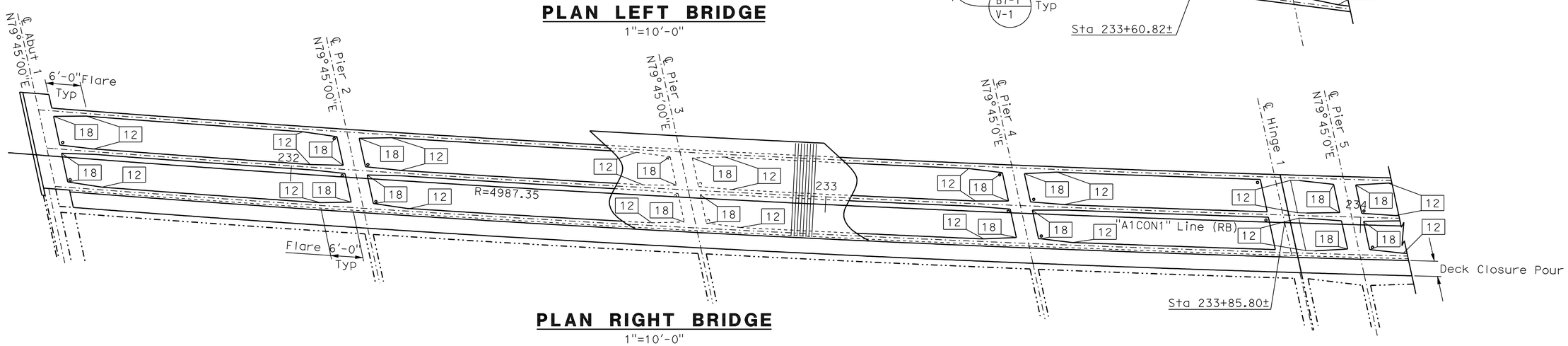

PLAN RIGHT BRIDGE

1"=10'-0"

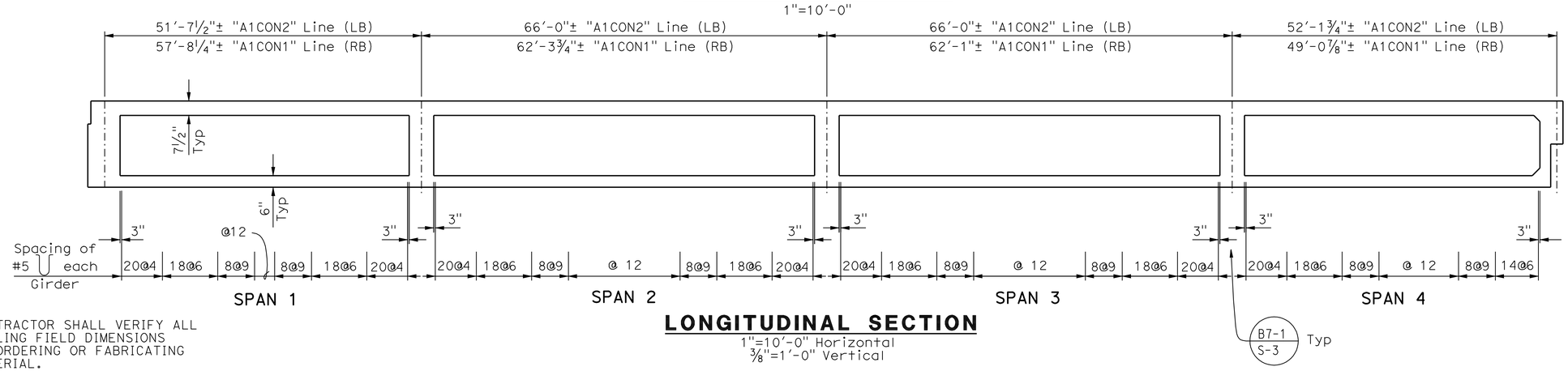

LONGITUDINAL SECTION

1"=10'-0" Horizontal
⅜"=1'-0" Vertical

NOTE:
THE CONTRACTOR SHALL VERIFY ALL CONTROLLING FIELD DIMENSIONS BEFORE ORDERING OR FABRICATING ANY MATERIAL.

LEGEND:

- Indicates Girder Stem thickness in inches
- Indicates new construction
- Indicates existing structure
- LB - Left Bridge
- RB - Right Bridge

	BY	CHECKED
DESIGN	F. Chen	R. Anderson
DETAILS	G. Hallstrom / Y. Tang	R. Anderson
QUANTITIES	F. Chen	D. Azzam

STATE OF CALIFORNIA
DEPARTMENT OF TRANSPORTATION

DIVISION OF ENGINEERING SERVICES
STRUCTURE DESIGN
DESIGN BRANCH 10

BRIDGE NO. 54-0471RL
POST MILE 4.21

SANTA ANA RIVER BRIDGE (WIDEN)

GIRDER LAYOUT NO. 1

STRUCTURES DESIGN DETAIL SHEET (ENGLISH) (REV. 09-01-10)

ORIGINAL SCALE IN INCHES FOR REDUCED PLANS 0 1 2 3

UNIT: 3589
PROJECT NUMBER & PHASE: 08000005061
CONTRACT NO.: 08-0M9401

DISREGARD PRINTS BEARING EARLIER REVISION DATES

REVISION DATES: 3-14-11 1-23-12 2-23-12

SHEET 19 OF 66

FILE => 540471rllg_lo19.dgn

USERNAME => s124496 DATE PLOTTED => 18-APR-2012 TIME PLOTTED => 14:42

DIST	COUNTY	ROUTE	POST MILES TOTAL PROJECT	SHEET No.	TOTAL SHEETS
08	Riv,SBd	91,215	21.5/21.7, 43.2/45.2,0.0/5.1	1340	1743

REGISTERED CIVIL ENGINEER — DATE 4-06-12

4-16-12
PLANS APPROVAL DATE

REGISTERED PROFESSIONAL ENGINEER — LARRY WU No. C57035 Exp. 6-30-13 CIVIL — STATE OF CALIFORNIA

The State of California or its officers or agents shall not be responsible for the accuracy or completeness of electronic copies of this plan sheet.

LEGEND:

- Indicates Girder Stem thickness in inches
- Indicates new construction
- Indicates existing structure
- LB - Left Bridge
- RB - Right Bridge

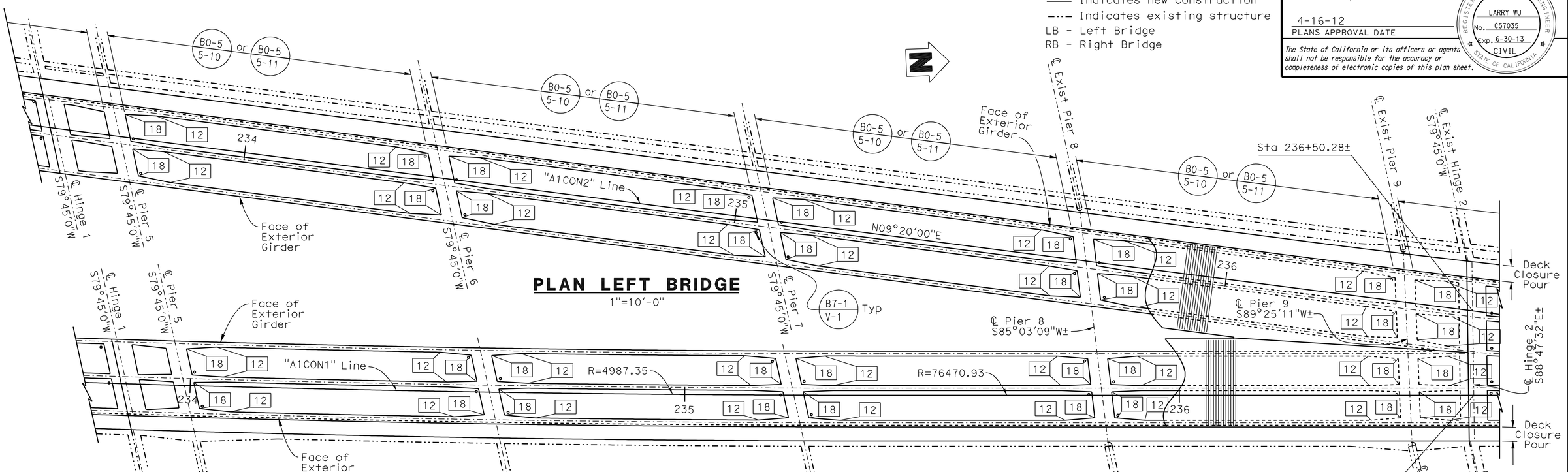

PLAN LEFT BRIDGE

1"=10'-0"

PLAN RIGHT BRIDGE

1"=10'-0"

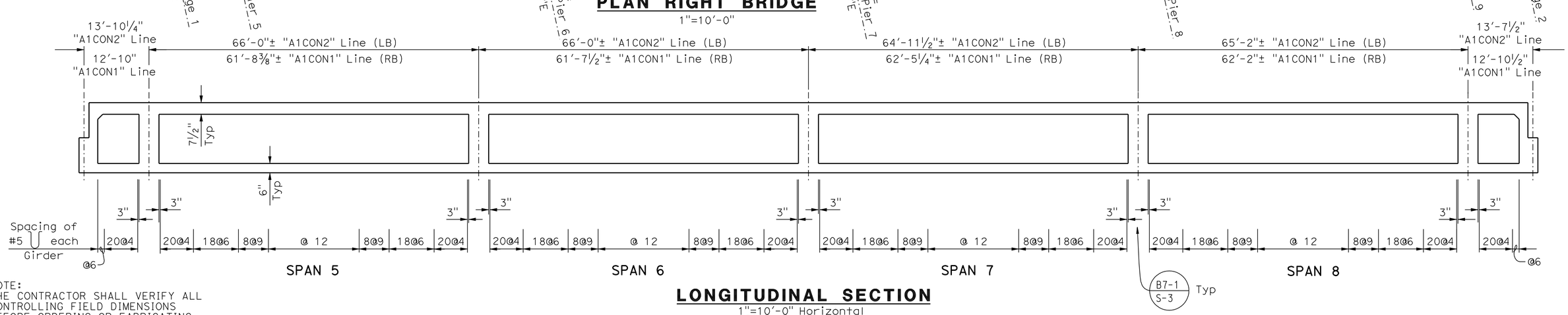

LONGITUDINAL SECTION

1"=10'-0" Horizontal
⅜"=1'-0" Vertical

NOTE:
THE CONTRACTOR SHALL VERIFY ALL CONTROLLING FIELD DIMENSIONS BEFORE ORDERING OR FABRICATING ANY MATERIAL.

	BY	CHECKED
DESIGN	F. Chen	R. Anderson
DETAILS	G. Hallstrom / Y. Tang	R. Anderson
QUANTITIES	F. Chen	D. Azzam

STATE OF CALIFORNIA
DEPARTMENT OF TRANSPORTATION

DIVISION OF ENGINEERING SERVICES
STRUCTURE DESIGN
DESIGN BRANCH 10

BRIDGE NO. 54-0471RL
POST MILE 4.21

SANTA ANA RIVER BRIDGE (WIDEN)
GIRDER LAYOUT NO. 2

STRUCTURES DESIGN DETAIL SHEET (ENGLISH) (REV. 09-01-10)

ORIGINAL SCALE IN INCHES FOR REDUCED PLANS 0 1 2 3

UNIT: 3589
PROJECT NUMBER & PHASE: 08000005061
CONTRACT NO.: 08-0M9401

DISREGARD PRINTS BEARING EARLIER REVISION DATES

REVISION DATES: 3-14-11 1-24-12 11-28-11

SHEET 20 OF 66

FILE => 540471rlig_lo20.dgn

USERNAME => s124496 DATE PLOTTED => 18-APR-2012 TIME PLOTTED => 14:43

DIST	COUNTY	ROUTE	POST MILES TOTAL PROJECT	SHEET No.	TOTAL SHEETS
08	Riv,SBd	91,215	21.5/21.7, 43.2/45.2,0.0/5.1	1341	1743

REGISTERED CIVIL ENGINEER 4-06-12 DATE

4-16-12
PLANS APPROVAL DATE

REGISTERED PROFESSIONAL ENGINEER LARRY WU No. C57035 Exp. 6-30-13 CIVIL STATE OF CALIFORNIA

The State of California or its officers or agents shall not be responsible for the accuracy or completeness of electronic copies of this plan sheet.

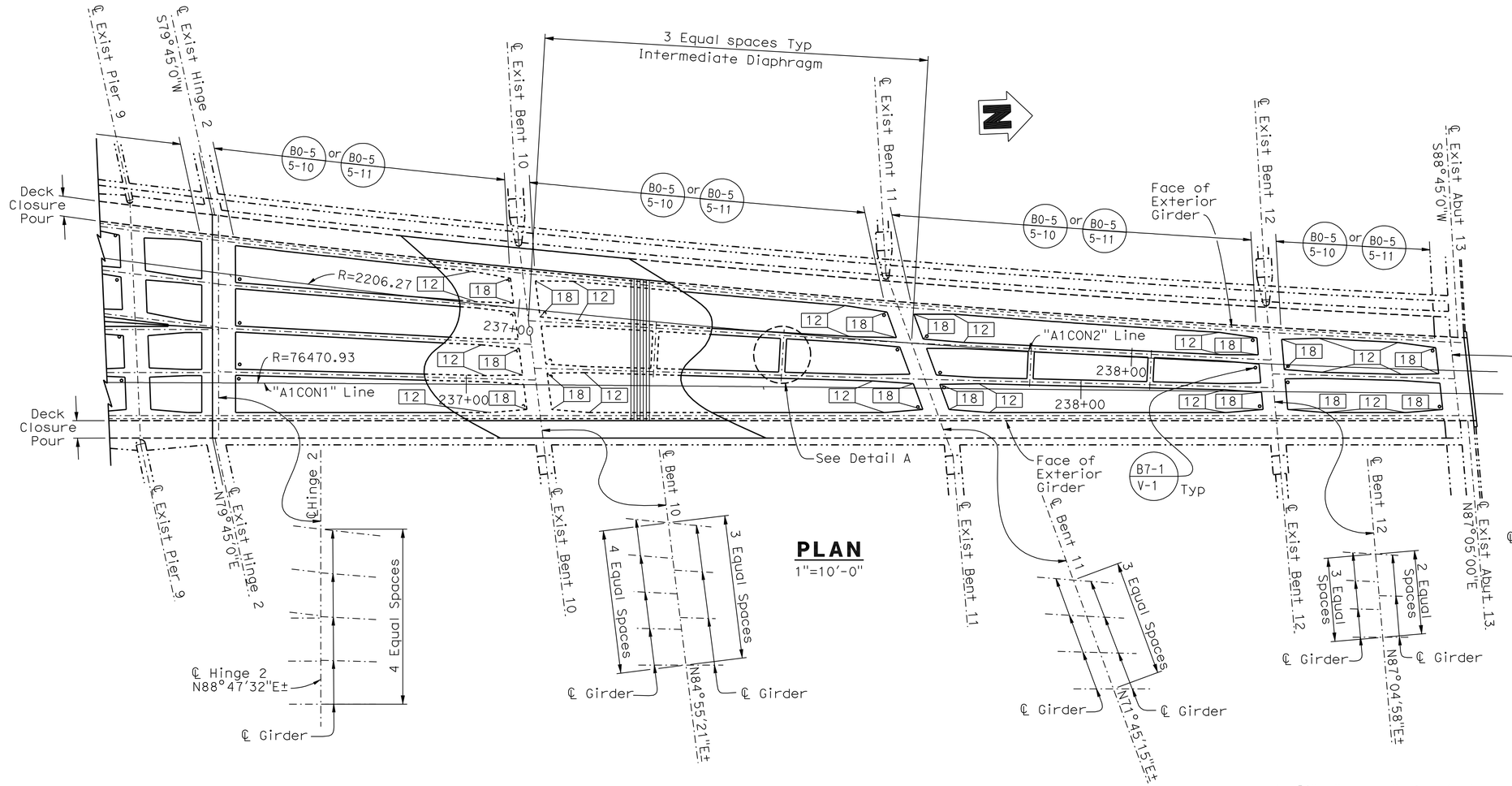

PLAN
1"=10'-0"

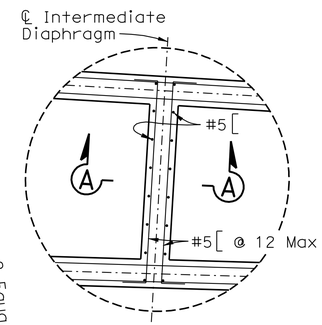

NOTE: Four Intermediate Diaphragms required.

DETAIL A
3/8"=1'-0"

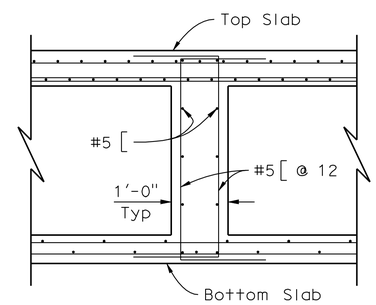

SECTION A-A
3/8"=1'-0"

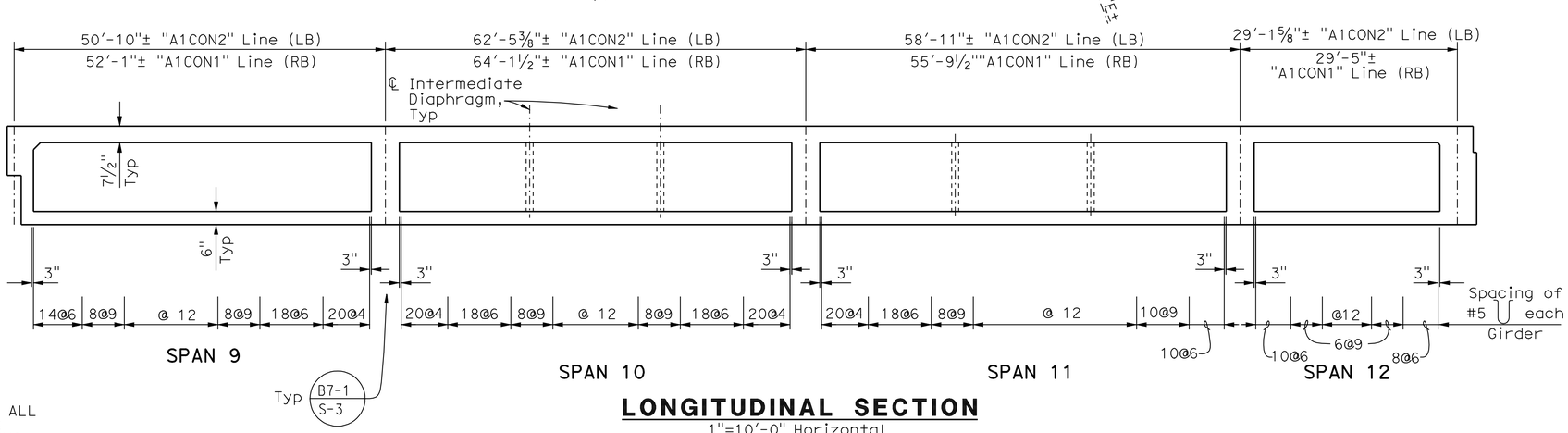

LONGITUDINAL SECTION
1"=10'-0" Horizontal
3/8"=1'-0" Vertical

NOTE:
THE CONTRACTOR SHALL VERIFY ALL CONTROLLING FIELD DIMENSIONS BEFORE ORDERING OR FABRICATING ANY MATERIAL.

LEGEND:

- Indicates Girder Stem thickness in inches
- Indicates new construction
- Indicates existing structure
- LB - Left Bridge
- RB - Right Bridge

	BY	CHECKED
DESIGN	F. Chen	R. Anderson
DETAILS	G. Hallstrom / Y. Tang	R. Anderson
QUANTITIES	F. Chen	D. Azzam

STATE OF CALIFORNIA DEPARTMENT OF TRANSPORTATION

DIVISION OF ENGINEERING SERVICES STRUCTURE DESIGN DESIGN BRANCH 10

BRIDGE NO. 54-0471RL
POST MILE 4.21

SANTA ANA RIVER BRIDGE (WIDEN)
GIRDER LAYOUT NO. 3

STRUCTURES DESIGN DETAIL SHEET (ENGLISH) (REV. 09-01-10)

ORIGINAL SCALE IN INCHES FOR REDUCED PLANS 0 1 2 3

UNIT: 3589
PROJECT NUMBER & PHASE: 08000005061 CONTRACT NO.: 08-0M9401

DISREGARD PRINTS BEARING EARLIER REVISION DATES

REVISION DATES 3-15-11 12-16-11 1-24-12

SHEET 21 OF 66

FILE => 540471rllg_lo21.dgn

USERNAME => s124496 DATE PLOTTED => 18-APR-2012 TIME PLOTTED => 14:43

DIST	COUNTY	ROUTE	POST MILES TOTAL PROJECT	SHEET No.	TOTAL SHEETS
08	Riv,SBd	91,215	21.5/21.7, 43.2/45.2,0.0/5.1	1342	1743

REGISTERED CIVIL ENGINEER — DATE 4-06-12

4-16-12
PLANS APPROVAL DATE

REGISTERED PROFESSIONAL ENGINEER — LARRY WU — No. C57035 — Exp. 6-30-13 — CIVIL — STATE OF CALIFORNIA

The State of California or its officers or agents shall not be responsible for the accuracy or completeness of electronic copies of this plan sheet.

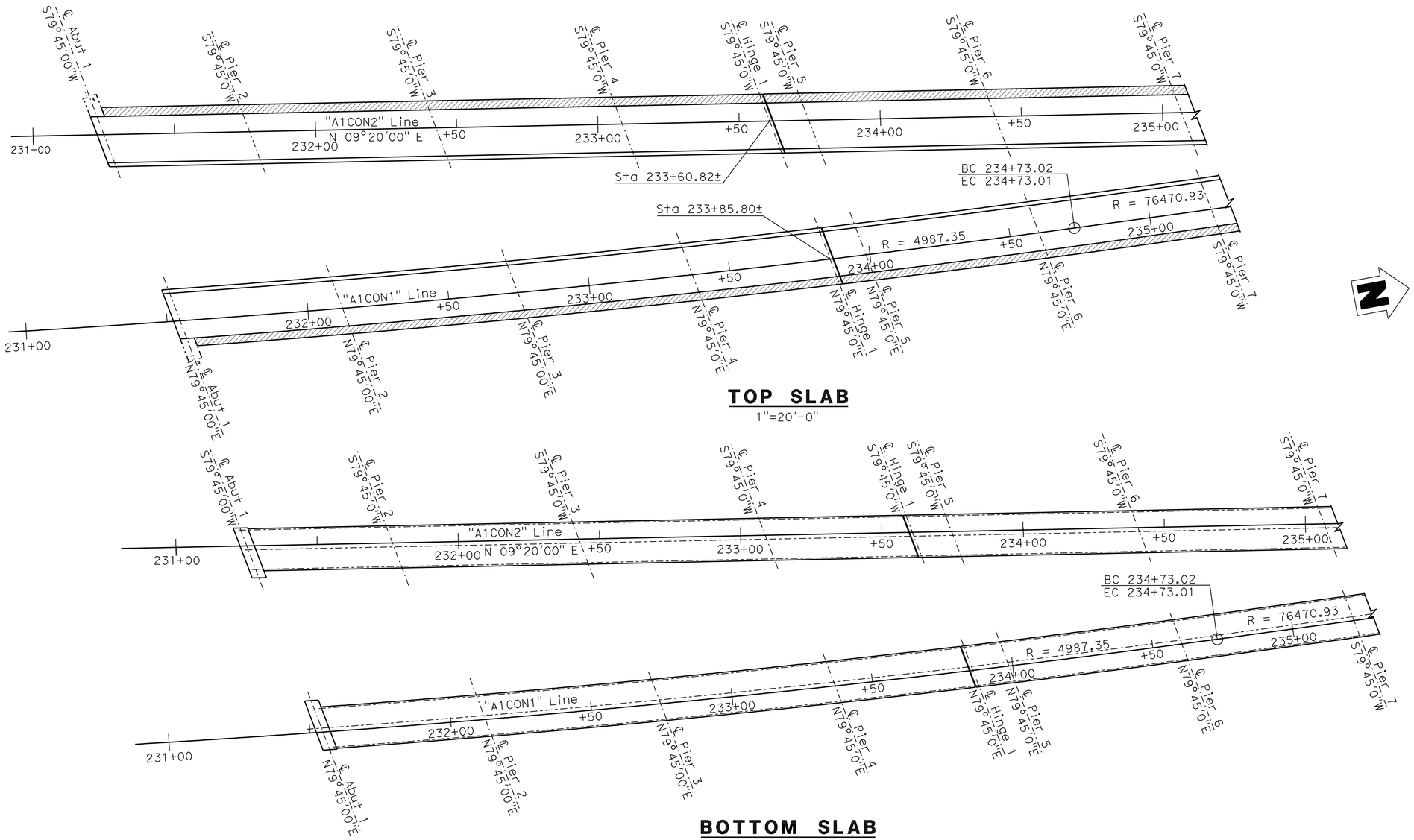

TOP SLAB

1"=20'-0"

BOTTOM SLAB

1"=20'-0"

NOTE:
THE CONTRACTOR SHALL VERIFY ALL CONTROLLING FIELD DIMENSIONS BEFORE ORDERING OR FABRICATING ANY MATERIAL.

LEGEND:

- Indicates new construction
- Indicates existing structure
- Indicates closure pour

	BY	CHECKED
DESIGN	F. Chen	R. Anderson
DETAILS	G. Hallstrom	R. Anderson
QUANTITIES	F. Chen	D. Azzam

STATE OF CALIFORNIA
DEPARTMENT OF TRANSPORTATION

DIVISION OF ENGINEERING SERVICES
STRUCTURE DESIGN
DESIGN BRANCH 10

BRIDGE NO. 54-0471RL
POST MILE 4.21

SANTA ANA RIVER BRIDGE (WIDEN)
GIRDER DETAILS NO. 1

STRUCTURES DESIGN DETAIL SHEET (ENGLISH) (REV. 09-01-10)

ORIGINAL SCALE IN INCHES FOR REDUCED PLANS 0 1 2 3

UNIT:3589
PROJECT NUMBER & PHASE:08000005061
CONTRACT NO.:08-0M9401

DISREGARD PRINTS BEARING EARLIER REVISION DATES

REVISION DATES: 9-08-11 11-29-11

SHEET 22 OF 66

FILE => 540471rllgdt22.dgn

USERNAME => s124496 DATE PLOTTED => 18-APR-2012 TIME PLOTTED => 14:43

DIST	COUNTY	ROUTE	POST MILES TOTAL PROJECT	SHEET No.	TOTAL SHEETS
08	Riv,SBd	91,215	21.5/21.7, 43.2/45.2,0.0/5.1	1343	1743

REGISTERED CIVIL ENGINEER — DATE 4-06-12

4-16-12
PLANS APPROVAL DATE

REGISTERED PROFESSIONAL ENGINEER — LARRY WU No. C57035 Exp. 6-30-13 CIVIL — STATE OF CALIFORNIA

The State of California or its officers or agents shall not be responsible for the accuracy or completeness of electronic copies of this plan sheet.

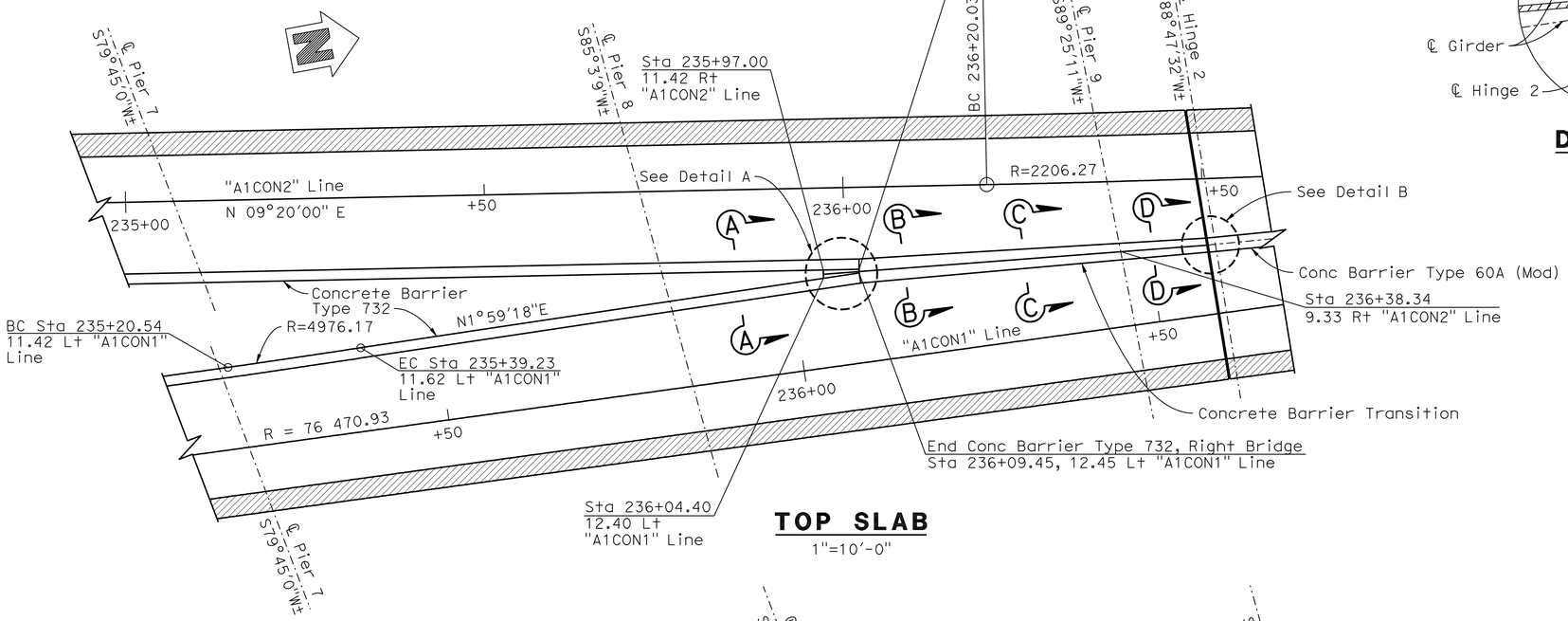

TOP SLAB
1"=10'-0"

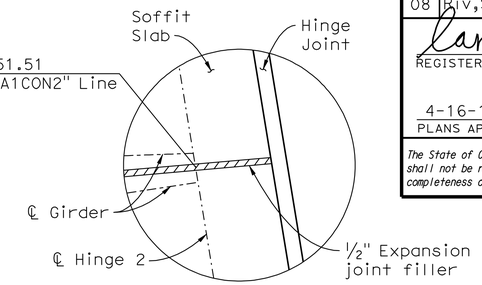

DETAIL C
1"=1'-0"

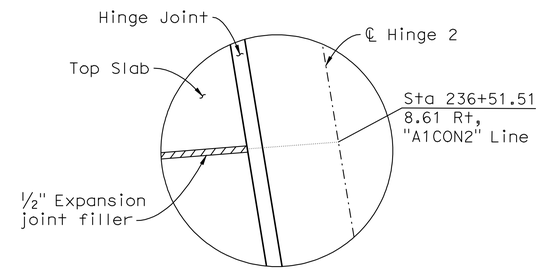

DETAIL B
1"=1'-0"

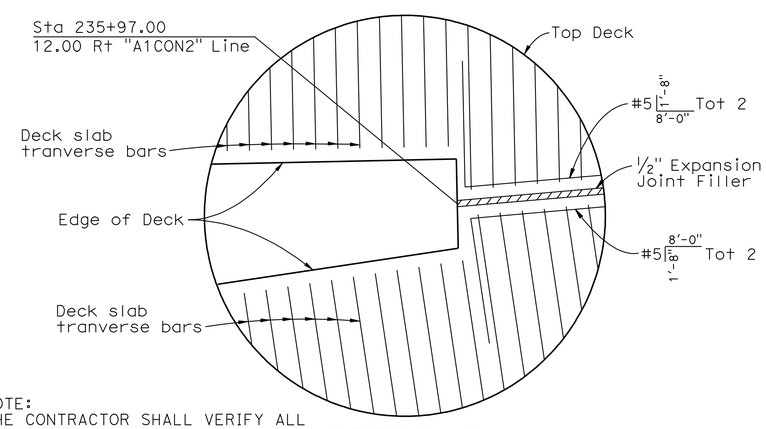

NOTE:
THE CONTRACTOR SHALL VERIFY ALL CONTROLLING FIELD DIMENSIONS BEFORE ORDERING OR FABRICATING ANY MATERIAL.

DETAIL A
1"=1'-0"

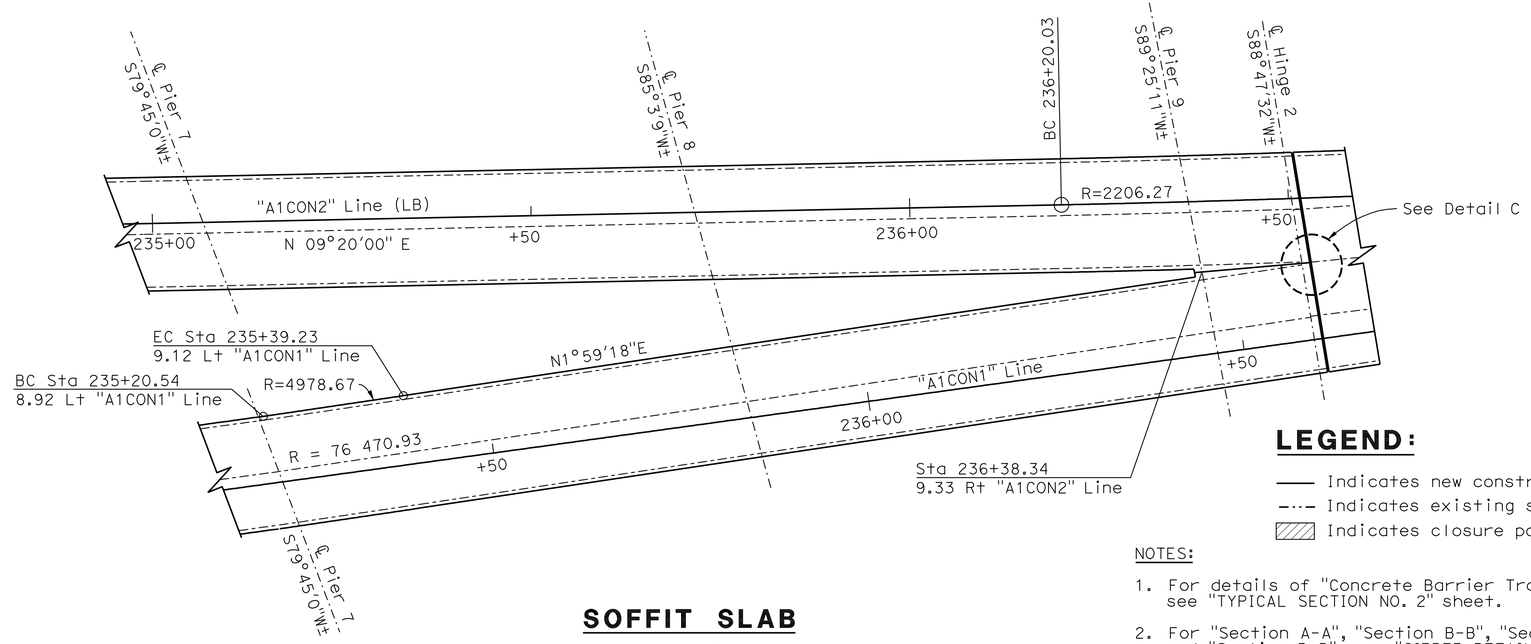

SOFFIT SLAB
1"=10'-0"

LEGEND:

- —— Indicates new construction
- -·-·- Indicates existing structure
- ▨ Indicates closure pour

NOTES:

1. For details of "Concrete Barrier Transition", see "TYPICAL SECTION NO. 2" sheet.
2. For "Section A-A", "Section B-B", "Section C-C", and "Section D-D", see "GIRDER DETAILS NO. 4" sheet.

	BY	CHECKED
DESIGN	F. Chen	R. Anderson
DETAILS	G. Hallstrom	R. Anderson
QUANTITIES	F. Chen	D. Azzam

STATE OF CALIFORNIA
DEPARTMENT OF TRANSPORTATION

DIVISION OF ENGINEERING SERVICES
STRUCTURE DESIGN
DESIGN BRANCH 10

BRIDGE NO. 54-0471RL
POST MILE 4.21

SANTA ANA RIVER BRIDGE (WIDEN)
GIRDER DETAILS NO. 2

STRUCTURES DESIGN DETAIL SHEET (ENGLISH) (REV. 09-01-10)

ORIGINAL SCALE IN INCHES FOR REDUCED PLANS 0 1 2 3

UNIT:3589
PROJECT NUMBER & PHASE:08000005061
CONTRACT NO.:08-0M9401

DISREGARD PRINTS BEARING EARLIER REVISION DATES

REVISION DATES: 5-19-11 6-01-11 9-13-11 11-29-11

SHEET 23 OF 66

FILE => 540471rllgdt23.dgn

USERNAME => s124436 DATE PLOTTED => 18-APR-2012 TIME PLOTTED => 14:43

DIST	COUNTY	ROUTE	POST MILES TOTAL PROJECT	SHEET No.	TOTAL SHEETS
08	Riv,SBd	91,215	21.5/21.7, 43.2/45.2,0.0/5.1	1344	1743

REGISTERED CIVIL ENGINEER 4-06-12 DATE

4-16-12
PLANS APPROVAL DATE

REGISTERED PROFESSIONAL ENGINEER LARRY WU No. C57035 Exp. 6-30-13 CIVIL STATE OF CALIFORNIA

The State of California or its officers or agents shall not be responsible for the accuracy or completeness of electronic copies of this plan sheet.

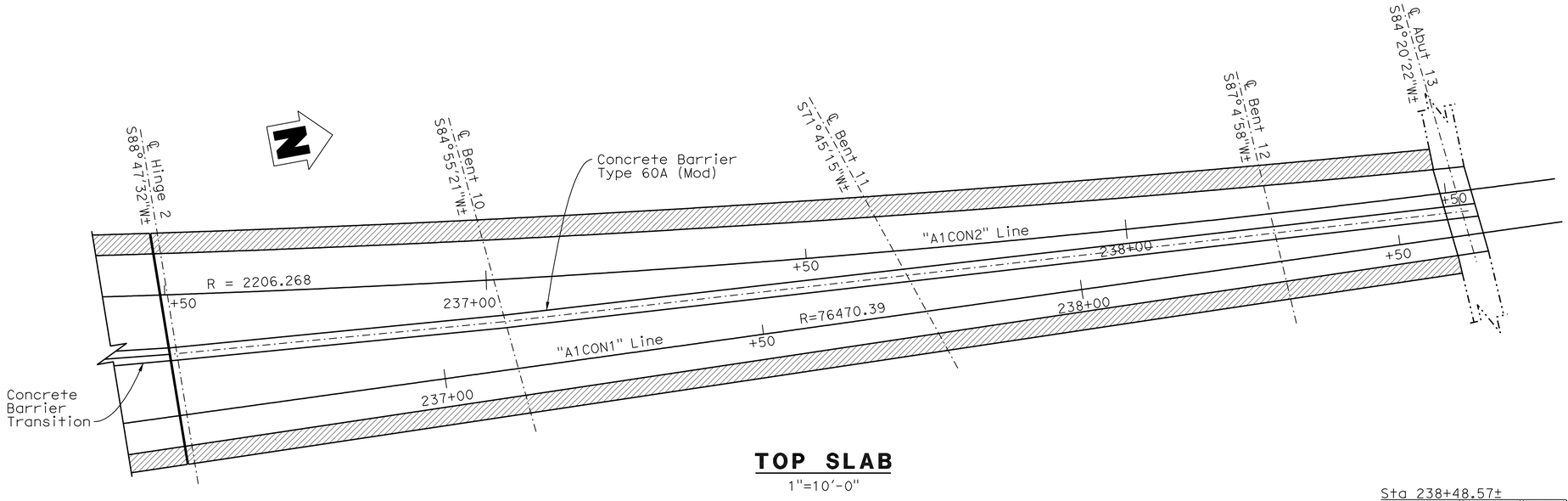

TOP SLAB

1"=10'-0"

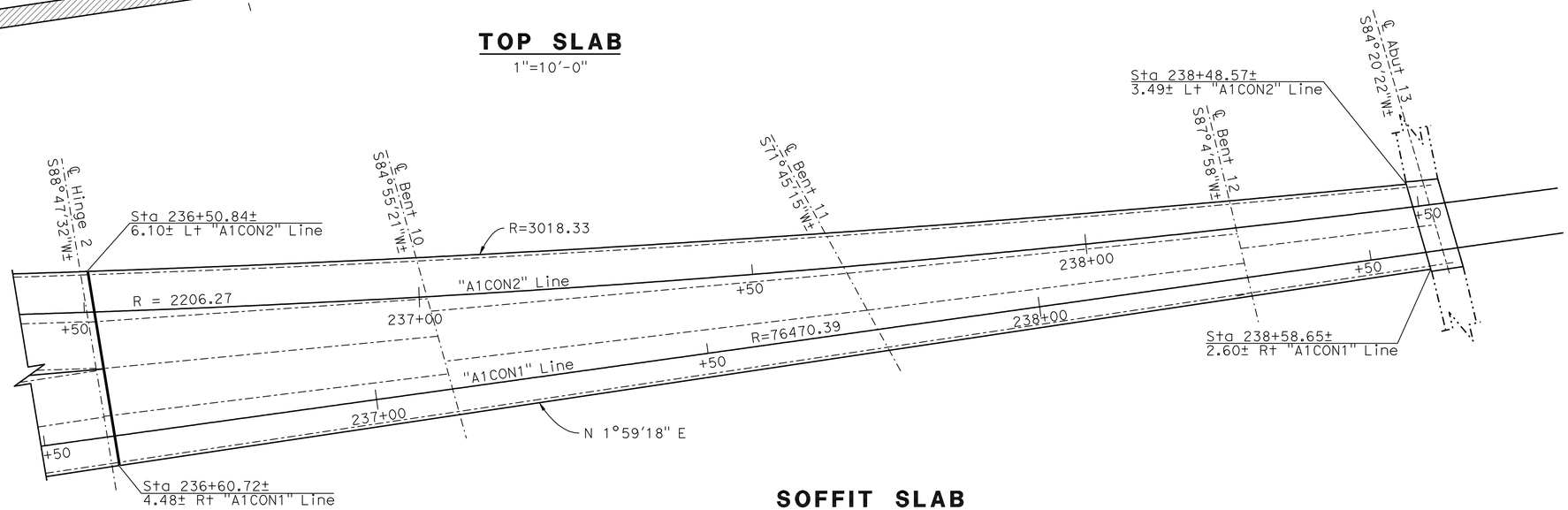

SOFFIT SLAB

1"=10'-0"

LEGEND:

- —— Indicates new construction
- -·-·- Indicates existing structure
- ▨ Indicates closure pour

DESIGN	BY F. Chen	CHECKED R. Anderson	
DETAILS	BY G. Hallstrom	CHECKED R. Anderson	
QUANTITIES	BY F. Chen	CHECKED D. Azzam	

STATE OF CALIFORNIA
DEPARTMENT OF TRANSPORTATION

DIVISION OF ENGINEERING SERVICES
STRUCTURE DESIGN
DESIGN BRANCH 10

BRIDGE NO. 54-0471RL
POST MILE 4.21

SANTA ANA RIVER BRIDGE (WIDEN)
GIRDER DETAILS NO. 3

STRUCTURES DESIGN DETAIL SHEET (ENGLISH) (REV. 09-01-10)

ORIGINAL SCALE IN INCHES FOR REDUCED PLANS 0 1 2 3

UNIT:3589
PROJECT NUMBER & PHASE:08000005061
CONTRACT NO.:08-0M9401

DISREGARD PRINTS BEARING EARLIER REVISION DATES

REVISION DATES: 9-09-11 11-29-11

SHEET 24 OF 66

FILE => 540471rllgdt24.dgn

USERNAME => s124496 DATE PLOTTED => 18-APR-2012 TIME PLOTTED => 14:43

DIST	COUNTY	ROUTE	POST MILES TOTAL PROJECT	SHEET No.	TOTAL SHEETS
08	Riv,SBd	91,215	21.5/21.7, 43.2/45.2,0.0/5.1	1345	1743

REGISTERED CIVIL ENGINEER — DATE 4-06-12

4-16-12
PLANS APPROVAL DATE

REGISTERED PROFESSIONAL ENGINEER — LARRY WU No. C57035 Exp. 6-30-13 CIVIL — STATE OF CALIFORNIA

The State of California or its officers or agents shall not be responsible for the accuracy or completeness of electronic copies of this plan sheet.

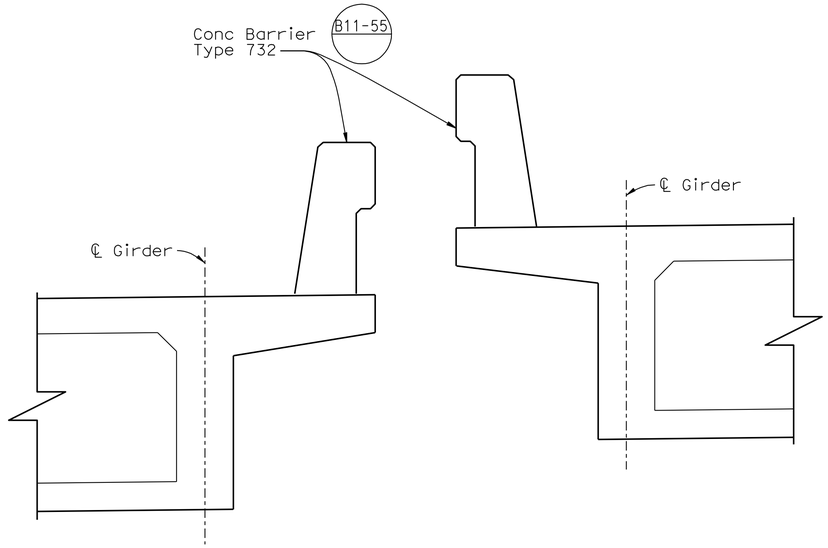

SECTION A-A

3/4"=1'-0"

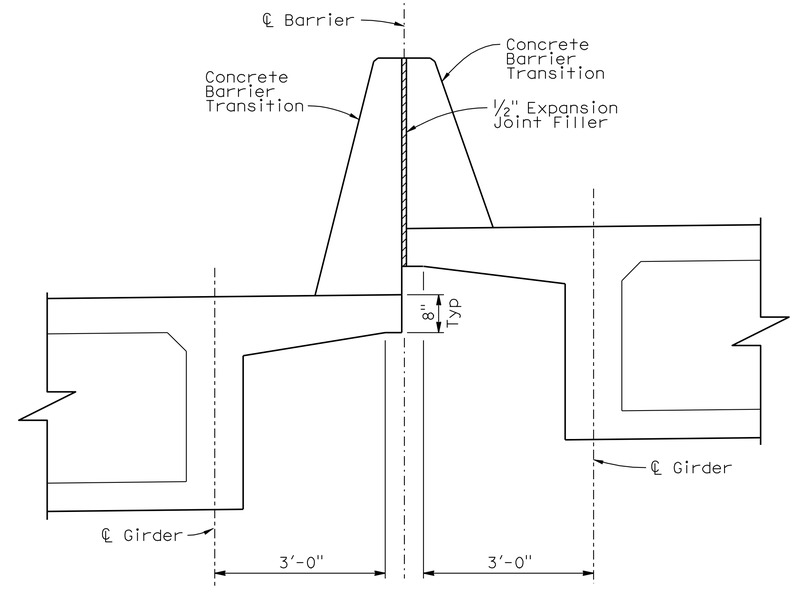

SECTION B-B

3/4"=1'-0"

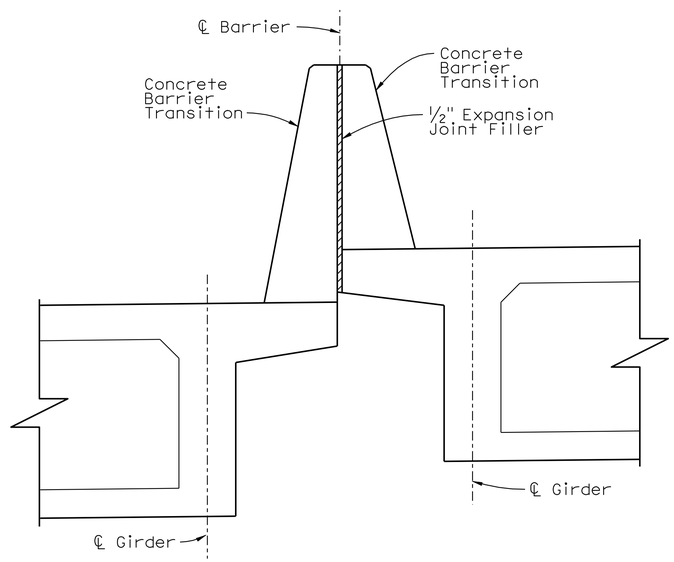

SECTION C-C

3/4"=1'-0"

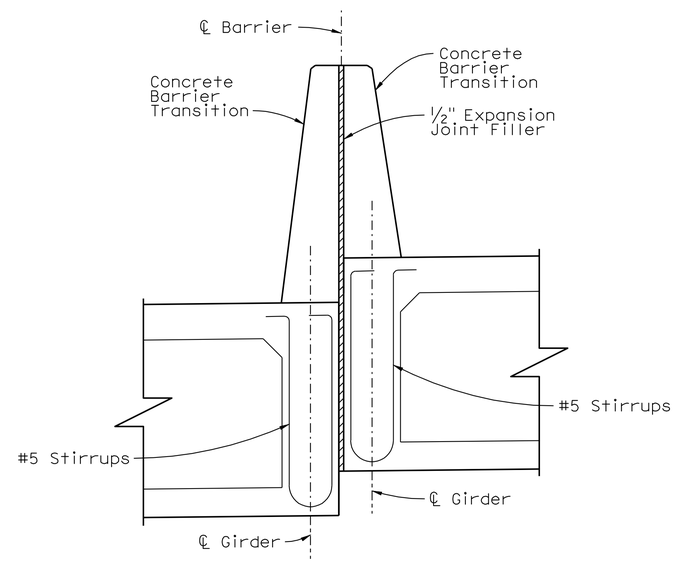

SECTION D-D

3/4"=1'-0"

NOTES:

1. For details of "Concrete Barrier Transition", see "TYPICAL SECTION NO. 2" sheet.
2. For location of "Section A-A", "Section B-B", "Section C-C", and "Section D-D", see "GIRDER DETAILS NO. 2" sheet.

	BY	CHECKED
DESIGN	F. Chen	R. Anderson
DETAILS	G. Hallstrom	R. Anderson
QUANTITIES	F. Chen	D. Azzam

STATE OF CALIFORNIA
DEPARTMENT OF TRANSPORTATION

DIVISION OF ENGINEERING SERVICES
STRUCTURE DESIGN
DESIGN BRANCH 10

BRIDGE NO. 54-0471RL
POST MILE 4.21

SANTA ANA RIVER BRIDGE (WIDEN)

GIRDER DETAILS NO. 4

STRUCTURES DESIGN DETAIL SHEET (ENGLISH) (REV. 09-01-10)

ORIGINAL SCALE IN INCHES FOR REDUCED PLANS 0 1 2 3

UNIT:3589
PROJECT NUMBER & PHASE:08000005061
CONTRACT NO.:08-0M9401

DISREGARD PRINTS BEARING EARLIER REVISION DATES → 5-20-11 6-01-11 9-09-11 11-29-11

SHEET 25 OF 66

FILE => 540471rllgdt25.dgn

USERNAME => s124496 DATE PLOTTED => 18-APR-2012 TIME PLOTTED => 14:43

DIST	COUNTY	ROUTE	POST MILES TOTAL PROJECT	SHEET No.	TOTAL SHEETS
08	Riv,SBd	91,215	21.5/21.7, 43.2/45.2,0.0/5.1	1346	1743

REGISTERED CIVIL ENGINEER 4-06-12 DATE

4-16-12
PLANS APPROVAL DATE

REGISTERED PROFESSIONAL ENGINEER LARRY WU No. C57035 Exp. 6-30-13 CIVIL STATE OF CALIFORNIA

The State of California or its officers or agents shall not be responsible for the accuracy or completeness of electronic copies of this plan sheet.

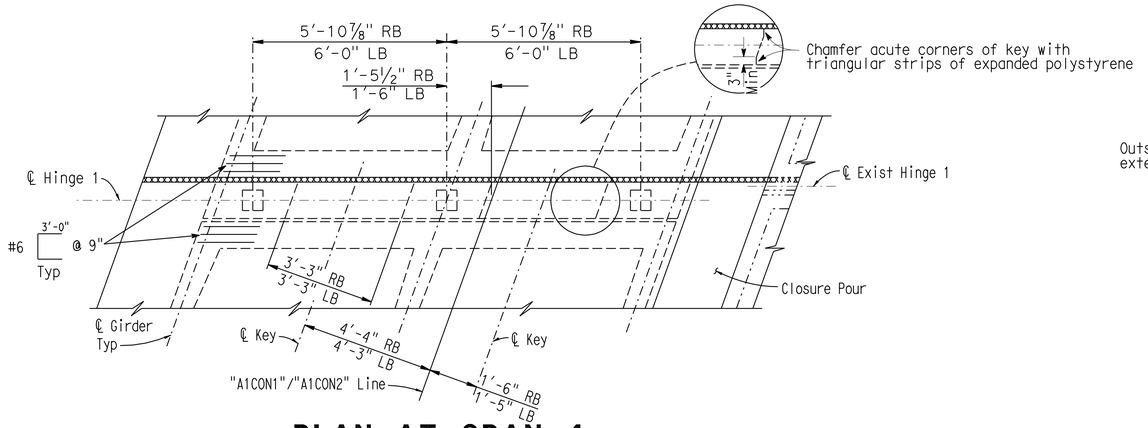

PLAN AT SPAN 4

NO SCALE

NOTE: Right Bridge shown, Left Bridge similar.

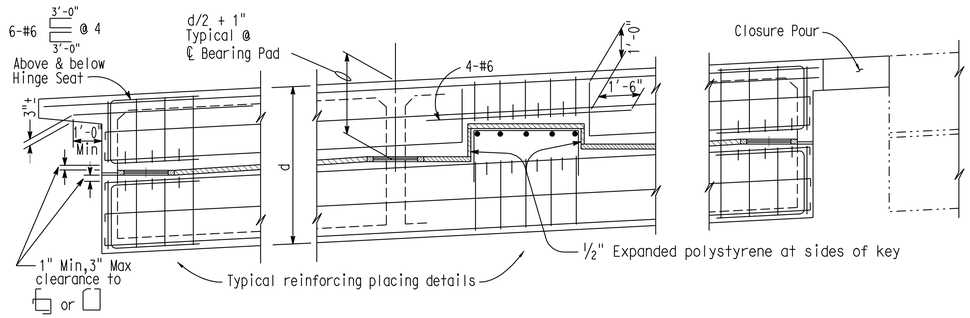

SECTION AT ℄ HINGE AT SPAN 4

NO SCALE

NOTE: Right Bridge shown, Left Bridge similar.

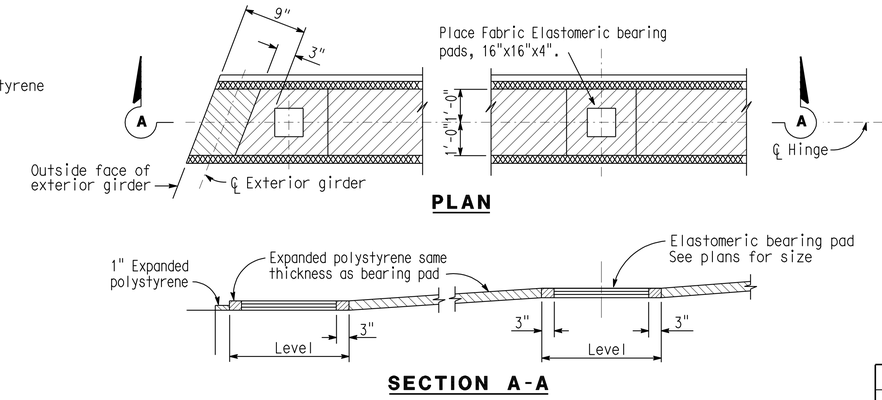

PLAN

SECTION A-A

TYPICAL BEARING DETAIL

NO SCALE

DESIGN LOADING DATA				
Girder Depth	Max Factored Hinge Seat Load (kips/ft)		Key Size and Max Transverse Load	
	Vertical	Longitudinal	Depth	Load/Key
3'-9"	32	6.3	6"	190kips

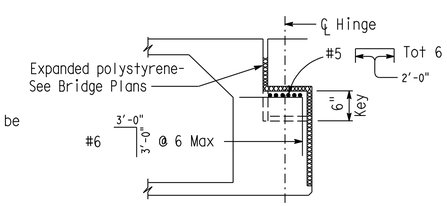

SECTION B-B

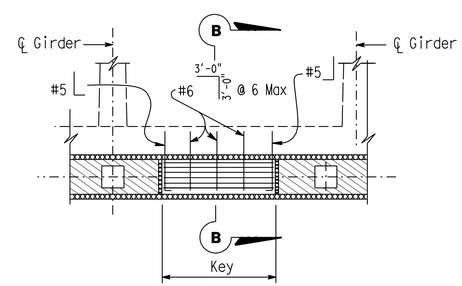

PLAN

KEY DETAIL

NO SCALE

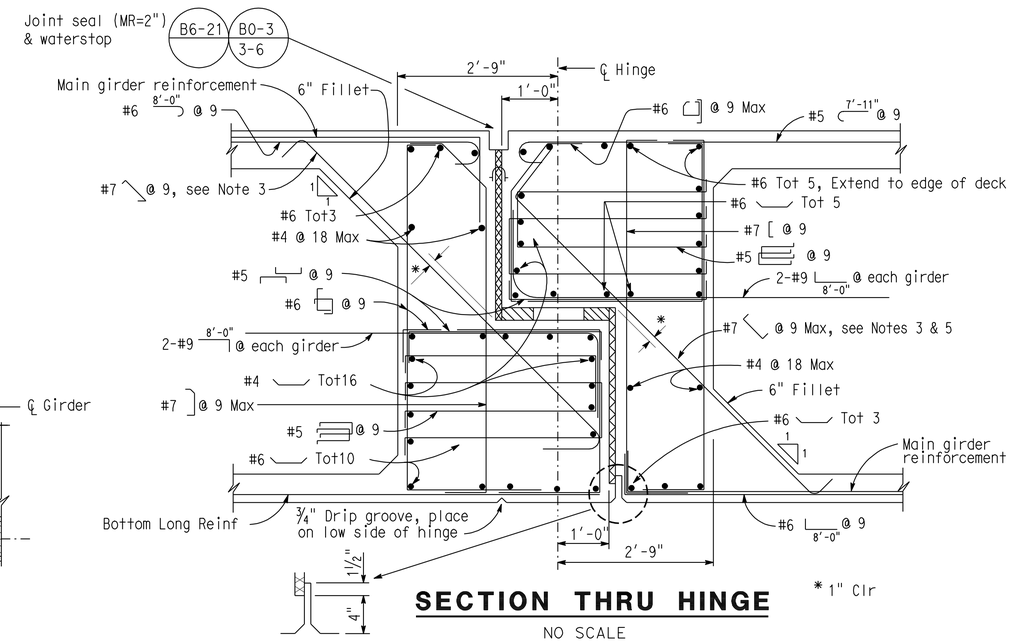

SECTION THRU HINGE

NO SCALE

NOTES:

1. See Standard Plans B0-13 13-1 & B0-13 13-2
2. To provide for free movement of the completed hinge, concrete is to be excluded from the joint by sealing all openings.
3. Bars may be placed with hooks horizontal if required for clearance.
4. RB = Right Bridge
   LB = Left Bridge
5. Adjust angle of bars at key to clear.
6. Reinforcement shall be spaced along ℄ of hinge and placed parallel to ℄ structure.

NOTE:
THE CONTRACTOR SHALL VERIFY ALL CONTROLLING FIELD DIMENSIONS BEFORE ORDERING OR FABRICATING ANY MATERIAL.

LEGEND:

—— Indicates new construction
-·-·- Indicates existing structure

	BY	CHECKED
DESIGN	F. Chen	R. Anderson
DETAILS	G. Hallstrom	R. Anderson
QUANTITIES	F. Chen	D. Azzam

STATE OF CALIFORNIA
DEPARTMENT OF TRANSPORTATION

DIVISION OF ENGINEERING SERVICES
STRUCTURE DESIGN
DESIGN BRANCH 10

BRIDGE NO. 54-0471RL
POST MILE 4.21

SANTA ANA RIVER BRIDGE (WIDEN)
HINGE DETAILS NO. 1

STRUCTURES DESIGN DETAIL SHEET (ENGLISH) (REV. 09-01-10)

ORIGINAL SCALE IN INCHES FOR REDUCED PLANS 0 1 2 3

UNIT: 3589
PROJECT NUMBER & PHASE: 08000005061
CONTRACT NO.: 08-0M9401

DISREGARD PRINTS BEARING EARLIER REVISION DATES 12-07-11

REVISION DATES | SHEET 26 OF 66

FILE => 540471rinhingedt26.dgn

USERNAME => s124496 DATE PLOTTED => 18-APR-2012 TIME PLOTTED => 14:43

DIST	COUNTY	ROUTE	POST MILES TOTAL PROJECT	SHEET No.	TOTAL SHEETS
08	Riv,SBd	91,215	21.5/21.7, 43.2/45.2,0.0/5.1	1347	1743

REGISTERED CIVIL ENGINEER — DATE 4-06-12

4-16-12
PLANS APPROVAL DATE

REGISTERED PROFESSIONAL ENGINEER — LARRY WU No. C57035 Exp. 6-30-13 CIVIL — STATE OF CALIFORNIA

The State of California or its officers or agents shall not be responsible for the accuracy or completeness of electronic copies of this plan sheet.

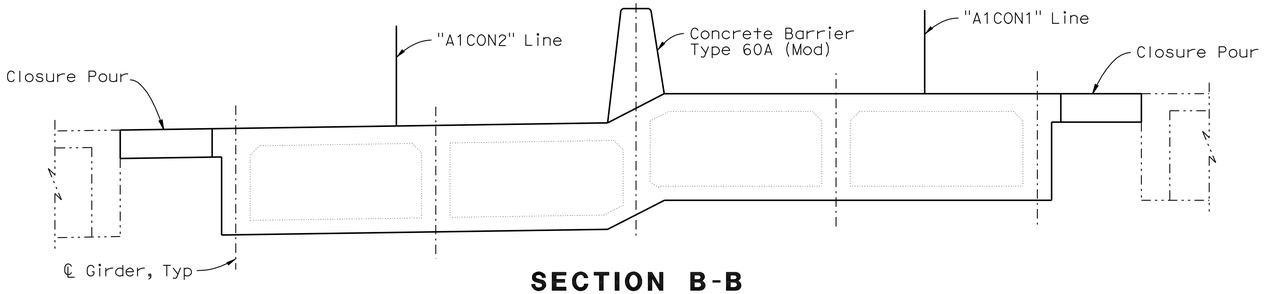

SECTION B-B

3/8"=1'-0"

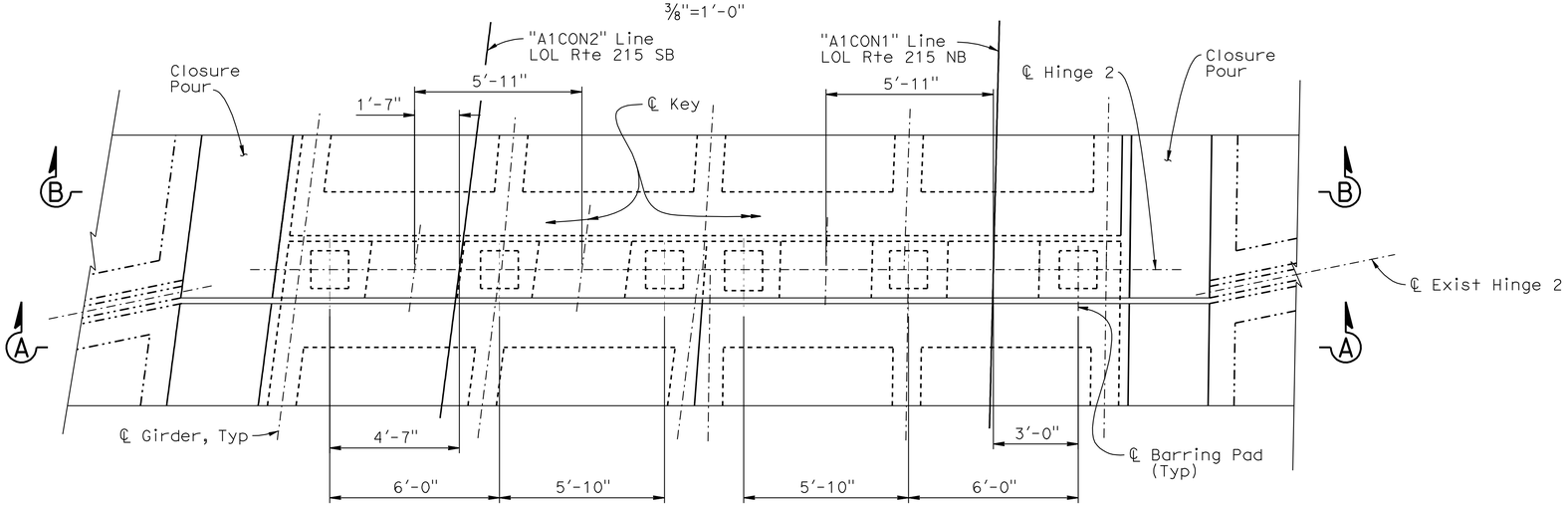

PLAN AT SPAN 9

3/8"=1'-0"

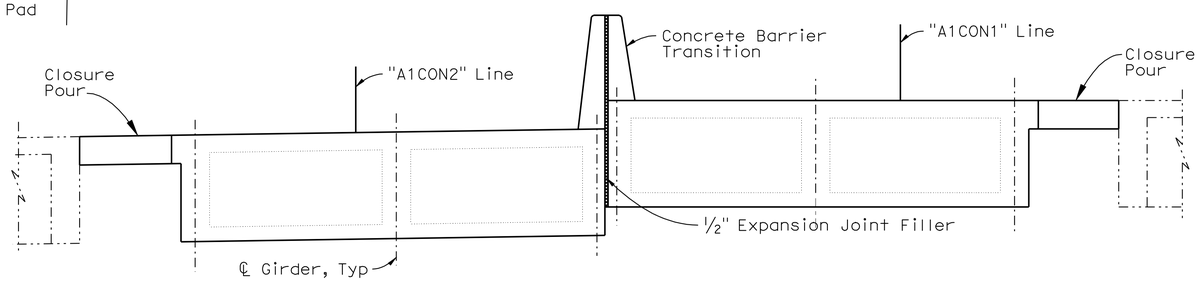

SECTION A-A

3/8"=1'-0"

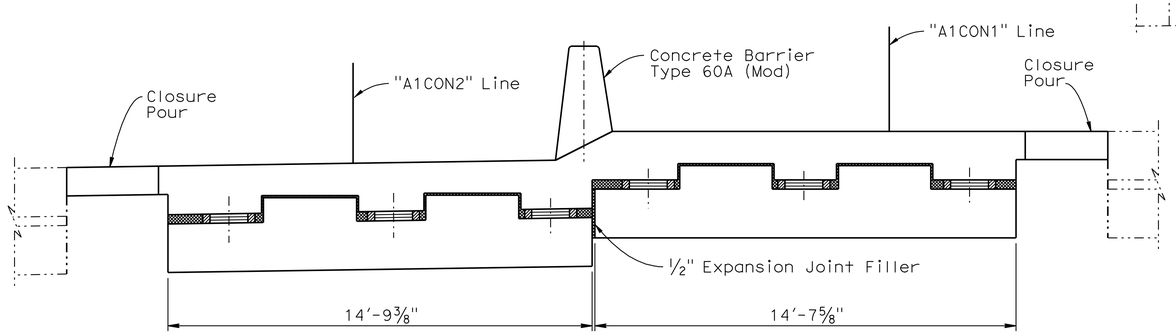

SECTION AT ℄ HINGE 2 AT SPAN 9

3/8"=1'-0"

NOTE: For details not shown, see "Section at ℄ Hinge at Span 4" on "HINGE DETAILS NO.1" sheet.

NOTE:
THE CONTRACTOR SHALL VERIFY ALL CONTROLLING FIELD DIMENSIONS BEFORE ORDERING OR FABRICATING ANY MATERIAL.

LEGEND:

—— Indicates new construction

–·–· Indicates existing structure

	BY	CHECKED
DESIGN	F. Chen	R. Anderson
DETAILS	G. Hallstrom / Y. Tang	R. Anderson
QUANTITIES	F. Chen	D. Azzam

STATE OF CALIFORNIA
DEPARTMENT OF TRANSPORTATION

DIVISION OF ENGINEERING SERVICES
STRUCTURE DESIGN
DESIGN BRANCH 10

BRIDGE NO. 54-0471RL
POST MILE 4.21

SANTA ANA RIVER BRIDGE (WIDEN)

HINGE DETAILS NO. 2

STRUCTURES DESIGN DETAIL SHEET (ENGLISH) (REV. 09-01-10)

ORIGINAL SCALE IN INCHES FOR REDUCED PLANS 0 1 2 3

UNIT:3589
PROJECT NUMBER & PHASE:08000005061
CONTRACT NO.:08-0M9401

DISREGARD PRINTS BEARING EARLIER REVISION DATES

REVISION DATES: 12-02-11 1-19-12

SHEET 27 OF 66

FILE => 540471rinhingedt27.dgn

USERNAME => s124496 DATE PLOTTED => 18-APR-2012 TIME PLOTTED => 14:43

DIST	COUNTY	ROUTE	POST MILES TOTAL PROJECT	SHEET No.	TOTAL SHEETS
08	Riv,SBd	91,215	21.5/21.7, 43.2/45.2,0.0/5.1	1348	1743

REGISTERED CIVIL ENGINEER 4-06-12 DATE

4-16-12
PLANS APPROVAL DATE

REGISTERED PROFESSIONAL ENGINEER LARRY WU No. C57035 Exp. 6-30-13 CIVIL STATE OF CALIFORNIA

The State of California or its officers or agents shall not be responsible for the accuracy or completeness of electronic copies of this plan sheet.

NOTES:

1. All additional bars are #11 and shall be evenly spaced within the limits shown.
2. Numbers at the end of bars indicate length in ft measured from ℄ Bent for top reinforcement or ℄ Span for bottom reinforcement.
3. Only service splice allowed.
4. ⊃⊂ Indicates bundled rebar
5. * Indicates extend bar 10" into Pier Caps.
6. Left Bridge shown, Right Bridge similar before Pier 7.

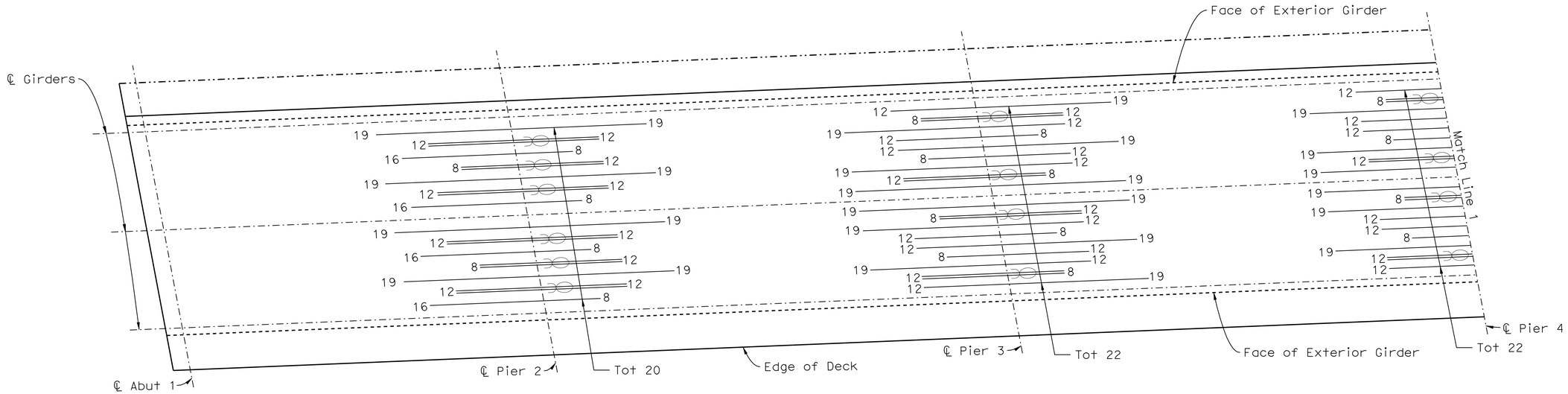

ADDITIONAL TOP REINFORCEMENT (LEFT BRIDGE)

Horiz: 1/8"=1'-0"
Vert: 1/4"=1'-0"

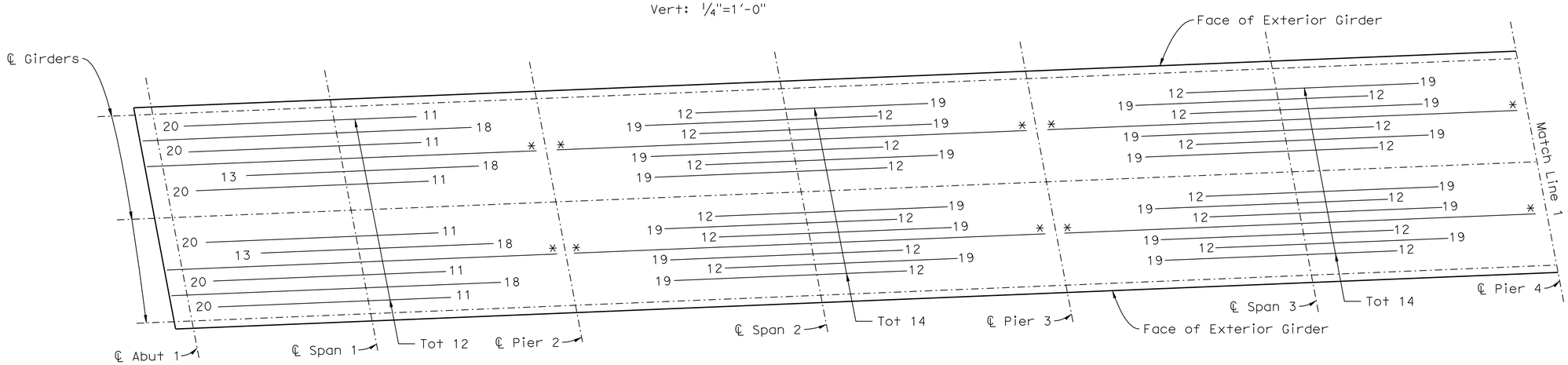

ADDITIONAL BOTTOM REINFORCEMENT (LEFT BRIDGE)

Horiz: 1/8"=1'-0"
Vert: 1/4"=1'-0"

	BY	CHECKED
DESIGN	F. Chen	R. Anderson
DETAILS	G. Hallstrom / Y. Tang	R. Anderson
QUANTITIES	F. Chen	D. Azzam

STATE OF CALIFORNIA
DEPARTMENT OF TRANSPORTATION

DIVISION OF ENGINEERING SERVICES
STRUCTURE DESIGN
DESIGN BRANCH 10

BRIDGE NO. 54-0471RL
POST MILE 4.21

SANTA ANA RIVER BRIDGE (WIDEN)
GIRDER REINFORCEMENT NO. 1

STRUCTURES DESIGN DETAIL SHEET (ENGLISH) (REV. 09-01-10)

ORIGINAL SCALE IN INCHES FOR REDUCED PLANS 0 1 2 3

UNIT: 3589
PROJECT NUMBER & PHASE: 08000005061
CONTRACT NO.: 08-0M9401

DISREGARD PRINTS BEARING EARLIER REVISION DATES

REVISION DATES: 4-26-11 5-12-11 12-02-11 2-23-12

SHEET 28 OF 66

FILE => 540471riogir_rf28.dgn

USERNAME => s124936 DATE PLOTTED => 18-APR-2012 TIME PLOTTED => 14:43

DIST	COUNTY	ROUTE	POST MILES TOTAL PROJECT	SHEET No.	TOTAL SHEETS
08	Riv,SBd	91,215	21.5/21.7, 43.2/45.2,0.0/5.1	1349	1743

REGISTERED CIVIL ENGINEER 4-06-12 DATE

4-16-12
PLANS APPROVAL DATE

REGISTERED PROFESSIONAL ENGINEER LARRY WU No. C57035 Exp. 6-30-13 CIVIL STATE OF CALIFORNIA

The State of California or its officers or agents shall not be responsible for the accuracy or completeness of electronic copies of this plan sheet.

NOTES:

1. All additional bars are #11 and shall be evenly spaced within the limits shown.
2. Numbers at the end of bars indicate length in ft measured from ℄ Bent for top reinforcement or ℄ Span for bottom reinforcement.
3. Only service splice allowed.
4. ⊃⊂ Indicates bundled rebar
5. * Indicates extend bar 10" into Pier Caps.
6. Left Bridge shown, Right Bridge similar before Pier 7.

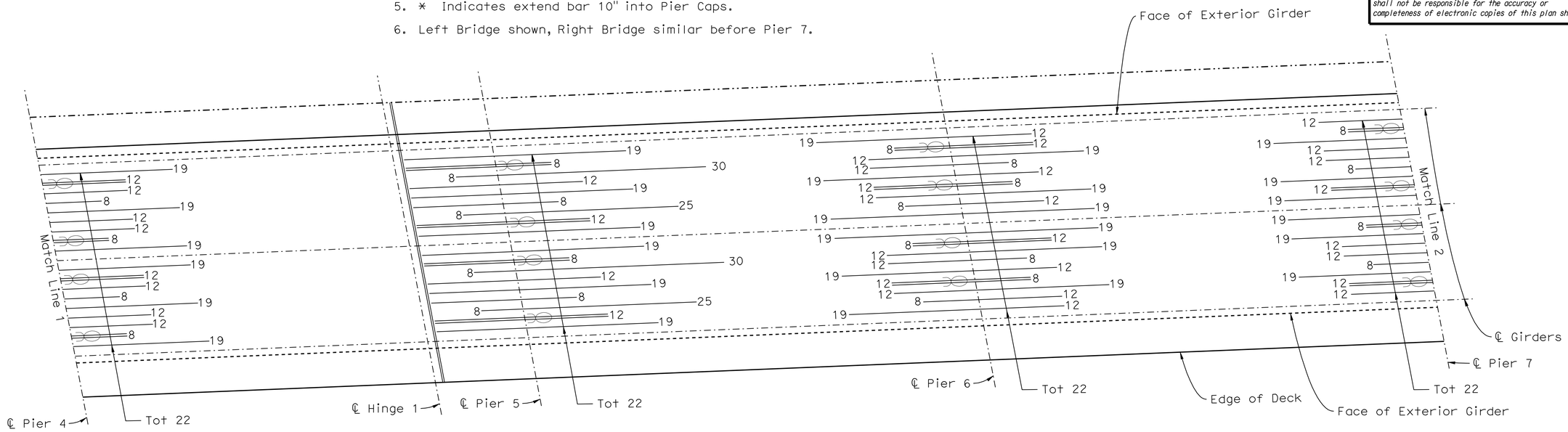

ADDITIONAL TOP REINFORCEMENT (LEFT BRIDGE)

Horiz: 1/8"=1'-0"
Vert: 1/4"=1'-0"

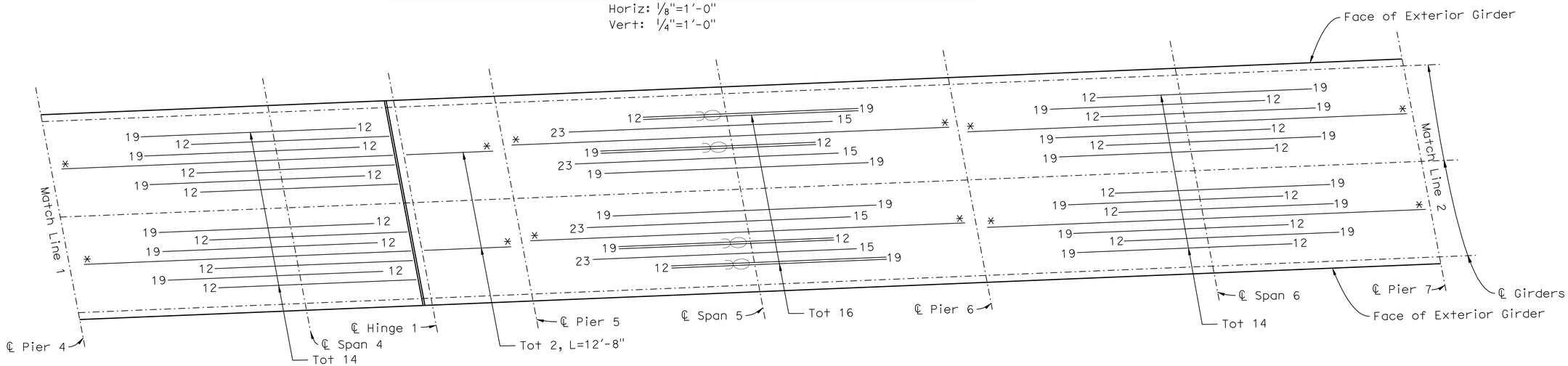

ADDITIONAL BOTTOM REINFORCEMENT (LEFT BRIDGE)

Horiz: 1/8"=1'-0"
Vert: 1/4"=1'-0"

DESIGN	BY F. Chen	CHECKED R. Anderson	
DETAILS	BY G. Hallstrom / Y. Tang	CHECKED R. Anderson	
QUANTITIES	BY F. Chen	CHECKED D. Azzam	

STATE OF CALIFORNIA
DEPARTMENT OF TRANSPORTATION

DIVISION OF ENGINEERING SERVICES
STRUCTURE DESIGN
DESIGN BRANCH 10

BRIDGE NO. 54-0471RL
POST MILE 4.21

SANTA ANA RIVER BRIDGE (WIDEN)
GIRDER REINFORCEMENT NO. 2

STRUCTURES DESIGN DETAIL SHEET (ENGLISH) (REV. 09-01-10)

ORIGINAL SCALE IN INCHES FOR REDUCED PLANS 0 1 2 3

UNIT: 3589
PROJECT NUMBER & PHASE: 08000005061
CONTRACT NO.: 08-0M9401

DISREGARD PRINTS BEARING EARLIER REVISION DATES

REVISION DATES 4-24-11 5-18-11 12-02-11 3-02-12

SHEET 29 OF 66

FILE => 540471rlogir_rf29.dgn

USERNAME => s124496 DATE PLOTTED => 18-APR-2012 TIME PLOTTED => 14:43

DIST	COUNTY	ROUTE	POST MILES TOTAL PROJECT	SHEET No.	TOTAL SHEETS
08	Riv,SBd	91,215	21.5/21.7, 43.2/45.2,0.0/5.1	1350	1743

REGISTERED CIVIL ENGINEER 4-06-12 DATE

4-16-12
PLANS APPROVAL DATE

REGISTERED PROFESSIONAL ENGINEER LARRY WU No. C57035 Exp. 6-30-13 CIVIL STATE OF CALIFORNIA

The State of California or its officers or agents shall not be responsible for the accuracy or completeness of electronic copies of this plan sheet.

NOTES:

1. All additional bars are #11 and shall be evenly spaced within the limits shown.
2. Numbers at the end of bars indicate length in ft measured from ℄ Bent for top reinforcement or ℄ Span for bottom reinforcement.
3. Only service splice allowed.
4. ⊃⊂ Indicates bundled rebar

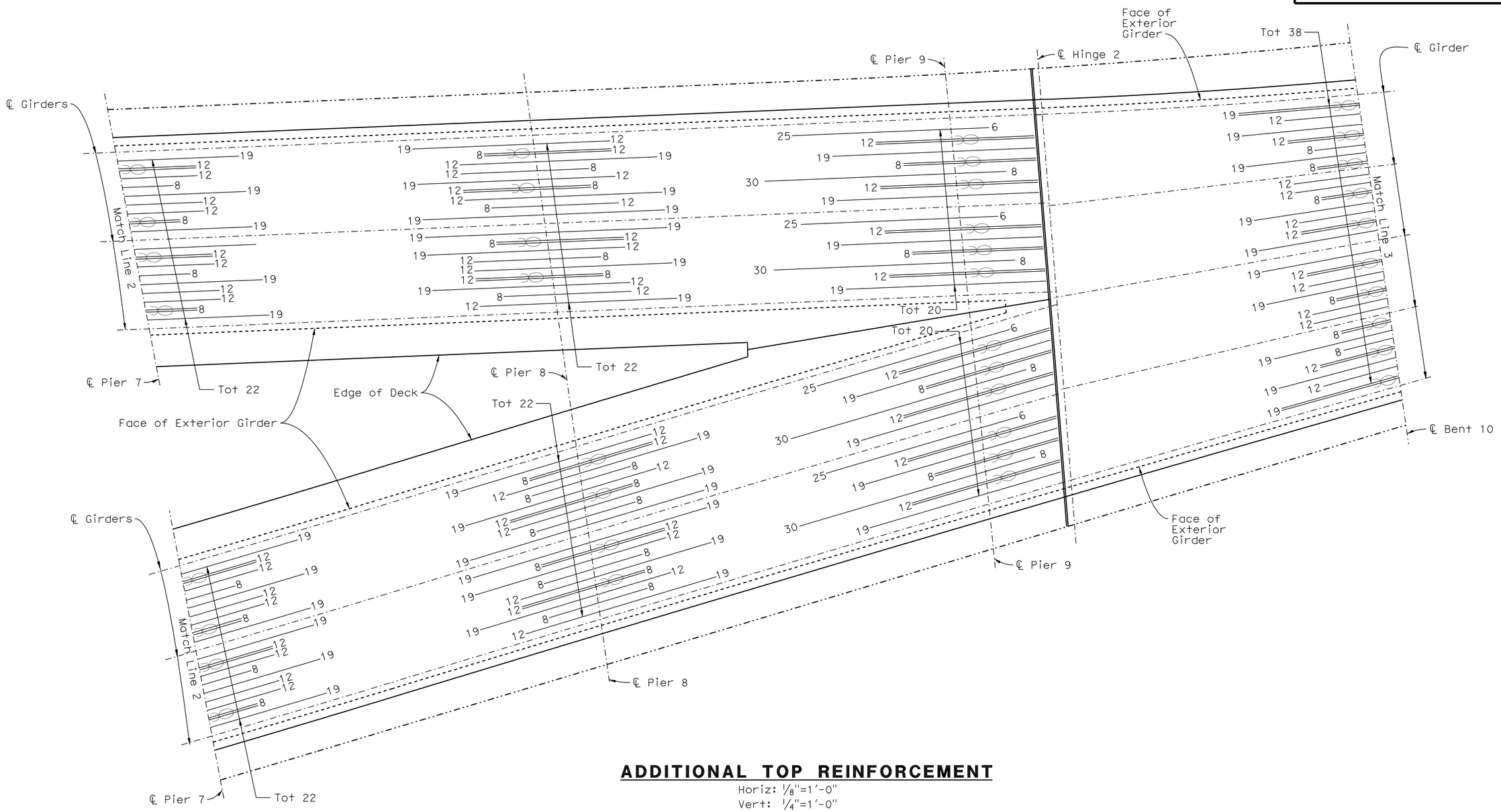

ADDITIONAL TOP REINFORCEMENT

Horiz: 1/8"=1'-0"
Vert: 1/4"=1'-0"

DESIGN	BY F. Chen	CHECKED R. Anderson	
DETAILS	BY G. Hallstrom / Y. Tang	CHECKED R. Anderson	
QUANTITIES	BY F. Chen	CHECKED D. Azzam	

STATE OF CALIFORNIA
DEPARTMENT OF TRANSPORTATION

DIVISION OF ENGINEERING SERVICES
STRUCTURE DESIGN
DESIGN BRANCH 10

BRIDGE NO. 54-0471RL
POST MILE 4.21

SANTA ANA RIVER BRIDGE (WIDEN)
GIRDER REINFORCEMENT NO. 3

STRUCTURES DESIGN DETAIL SHEET (ENGLISH) (REV. 09-01-10)

ORIGINAL SCALE IN INCHES FOR REDUCED PLANS 0 1 2 3

UNIT: 3589
PROJECT NUMBER & PHASE: 08000005061
CONTRACT NO.: 08-0M9401

DISREGARD PRINTS BEARING EARLIER REVISION DATES

REVISION DATES 4-28-11 11-30-11 3-02-12

SHEET 30 OF 66

FILE => 540471riogir_rf30.dgn

USERNAME => s124496 DATE PLOTTED => 18-APR-2012 TIME PLOTTED => 14:43

DIST	COUNTY	ROUTE	POST MILES TOTAL PROJECT	SHEET No.	TOTAL SHEETS
08	Riv,SBd	91,215	21.5/21.7, 43.2/45.2,0.0/5.1	1351	1743

REGISTERED CIVIL ENGINEER — DATE 4-06-12

4-16-12
PLANS APPROVAL DATE

REGISTERED PROFESSIONAL ENGINEER — LARRY WU No. C57035 Exp. 6-30-13 CIVIL — STATE OF CALIFORNIA

The State of California or its officers or agents shall not be responsible for the accuracy or completeness of electronic copies of this plan sheet.

NOTES:

1. All additional bars are #11 and shall be evenly spaced within the limits shown.
2. Numbers at the end of bars indicate length in ft measured from ℄ Bent for top reinforcement or ℄ Span for bottom reinforcement.
3. Only service splice allowed.
4. * Incicates extend 10" into Pier or Bent Caps.

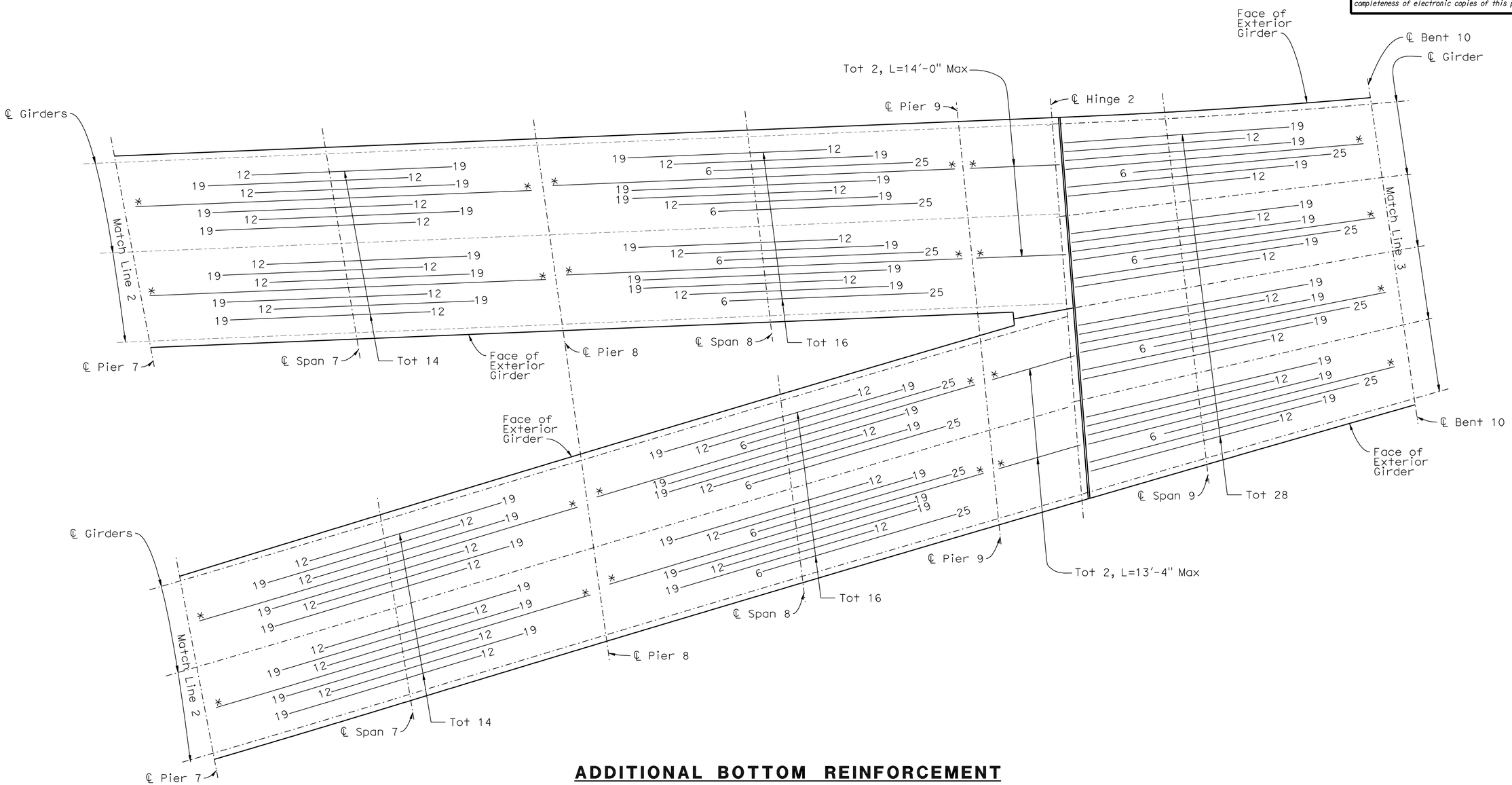

ADDITIONAL BOTTOM REINFORCEMENT

Horiz: 1/8"=1'-0"
Vert: 1/4"=1'-0"

DESIGN	BY F. Chen	CHECKED R. Anderson	
DETAILS	BY G. Hallstrom / Y. Tang	CHECKED R. Anderson	
QUANTITIES	BY F. Chen	CHECKED D. Azzam	

STATE OF CALIFORNIA
DEPARTMENT OF TRANSPORTATION

DIVISION OF ENGINEERING SERVICES
STRUCTURE DESIGN
DESIGN BRANCH 10

BRIDGE NO. 54-0471RL
POST MILE 4.21

SANTA ANA RIVER BRIDGE (WIDEN)
GIRDER REINFORCEMENT NO. 4

STRUCTURES DESIGN DETAIL SHEET (ENGLISH) (REV. 09-01-10)

ORIGINAL SCALE IN INCHES FOR REDUCED PLANS 0 1 2 3

UNIT: 3589
PROJECT NUMBER & PHASE: 08000005061
CONTRACT NO.: 08-0M9401

DISREGARD PRINTS BEARING EARLIER REVISION DATES

REVISION DATES: 4-28-11 | 3-02-12 | 11-30-11

SHEET 31 OF 66

FILE => 540471rlogir_rf31.dgn

USERNAME => s124496 DATE PLOTTED => 18-APR-2012 TIME PLOTTED => 15:18

DIST	COUNTY	ROUTE	POST MILES TOTAL PROJECT	SHEET No.	TOTAL SHEETS
08	Riv,SBd	91,215	21.5/21.7, 43.2/45.2,0.0/5.1	1352	1743

REGISTERED CIVIL ENGINEER — DATE 4-06-12

4-16-12
PLANS APPROVAL DATE

REGISTERED PROFESSIONAL ENGINEER — LARRY WU — No. C57035 — Exp. 6-30-13 — CIVIL — STATE OF CALIFORNIA

The State of California or its officers or agents shall not be responsible for the accuracy or completeness of electronic copies of this plan sheet.

NOTES:

1. All additional bars are #11 and shall be evenly spaced within the limits shown.
2. Numbers at the end of bars indicate length in ft measured from ℄ Bent for top reinforcement or ℄ Span for bottom reinforcement.
3. Only service splice allowed.
4. ⊃⊂ Indicates bundled rebar
5. * Indicates extend bar 10" into Bent caps.

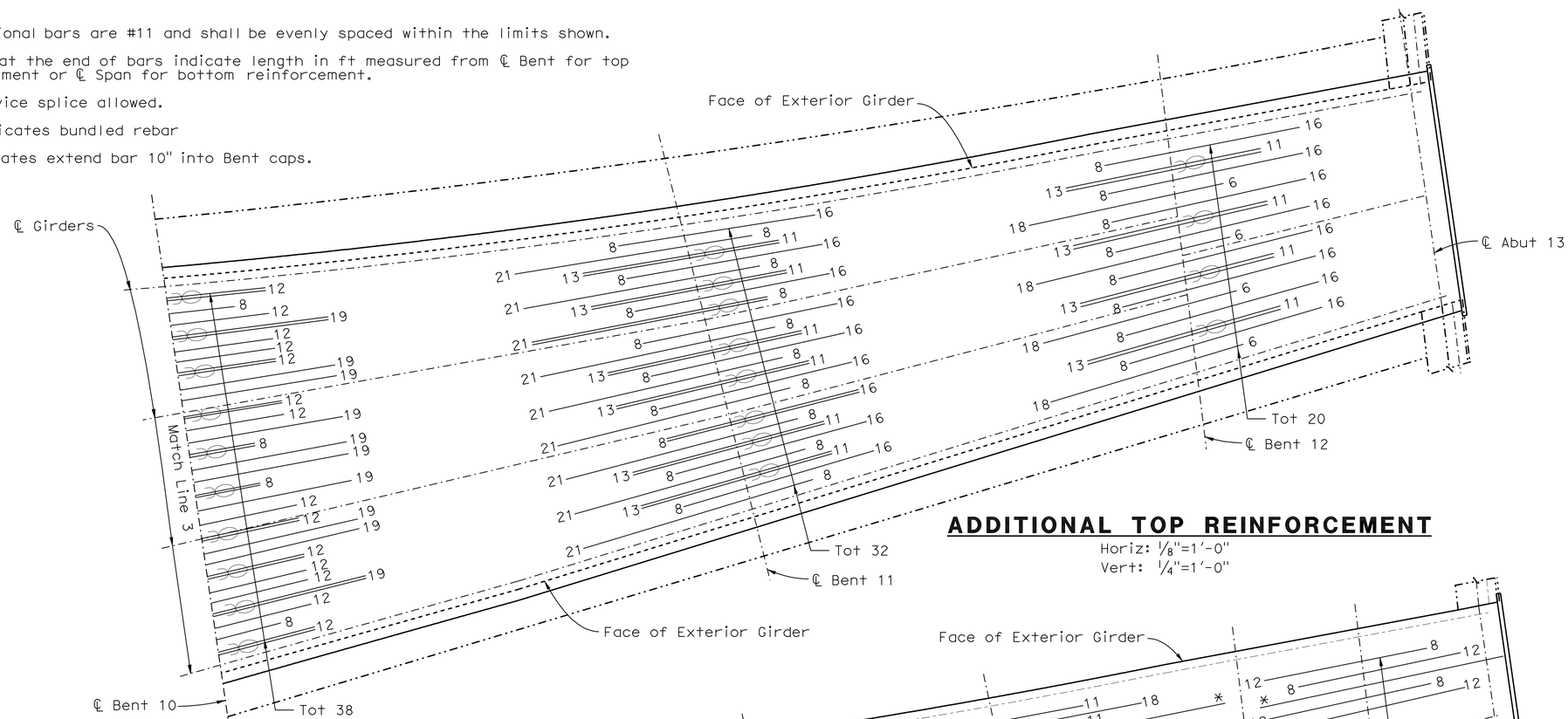

ADDITIONAL TOP REINFORCEMENT

Horiz: 1/8"=1'-0"
Vert: 1/4"=1'-0"

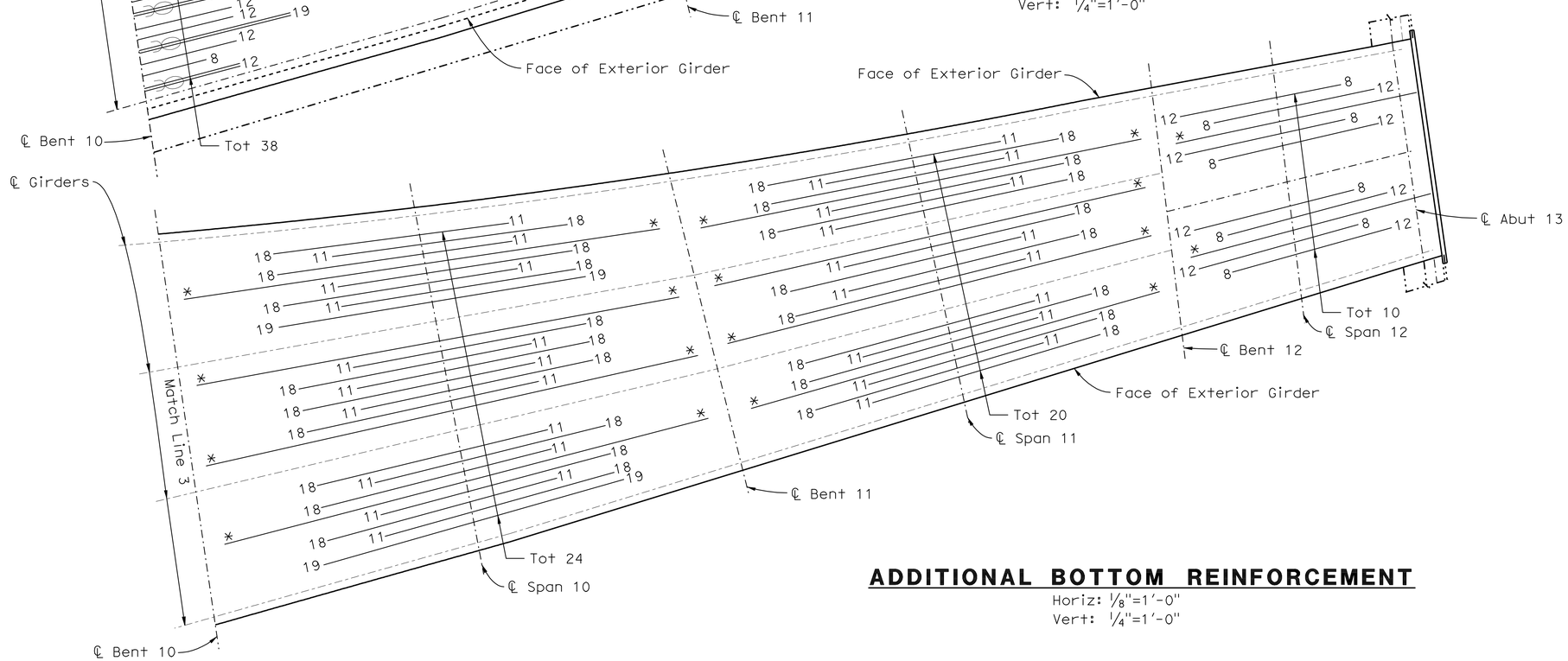

ADDITIONAL BOTTOM REINFORCEMENT

Horiz: 1/8"=1'-0"
Vert: 1/4"=1'-0"

	BY	CHECKED
DESIGN	F. Chen	R. Anderson
DETAILS	G. Hallstrom / Y. Tang	R. Anderson
QUANTITIES	F. Chen	D. Azzam

STATE OF CALIFORNIA
DEPARTMENT OF TRANSPORTATION

DIVISION OF ENGINEERING SERVICES
STRUCTURE DESIGN
DESIGN BRANCH 10

BRIDGE NO. 54-0471RL
POST MILE 4.21

SANTA ANA RIVER BRIDGE (WIDEN)
GIRDER REINFORCEMENT NO. 5

STRUCTURES DESIGN DETAIL SHEET (ENGLISH) (REV. 09-01-10)

ORIGINAL SCALE IN INCHES FOR REDUCED PLANS 0 1 2 3

UNIT:3589
PROJECT NUMBER & PHASE:08000005061
CONTRACT NO.:08-0M9401

DISREGARD PRINTS BEARING EARLIER REVISION DATES

REVISION DATES: 4-29-11 | 3-02-12 | 11-30-11

SHEET 32 OF 66

FILE => 540471riogir_rf32.dgn

USERNAME => s124496 DATE PLOTTED => 18-APR-2012 TIME PLOTTED => 15:18

NOTE:
THE CONTRACTOR SHALL VERIFY ALL CONTROLLING FIELD DIMENSIONS BEFORE ORDERING OR FABRICATING ANY MATERIAL.

DIST	COUNTY	ROUTE	POST MILES TOTAL PROJECT	SHEET No.	TOTAL SHEETS
08	Riv,SBd	91,215	21.5/21.7, 43.2/45.2,0.0/5.1	1353	1743

REGISTERED CIVIL ENGINEER — DATE 4-06-12

4-16-12
PLANS APPROVAL DATE

REGISTERED PROFESSIONAL ENGINEER — LARRY WU No. C57035 Exp. 6-30-13 CIVIL — STATE OF CALIFORNIA

The State of California or its officers or agents shall not be responsible for the accuracy or completeness of electronic copies of this plan sheet.

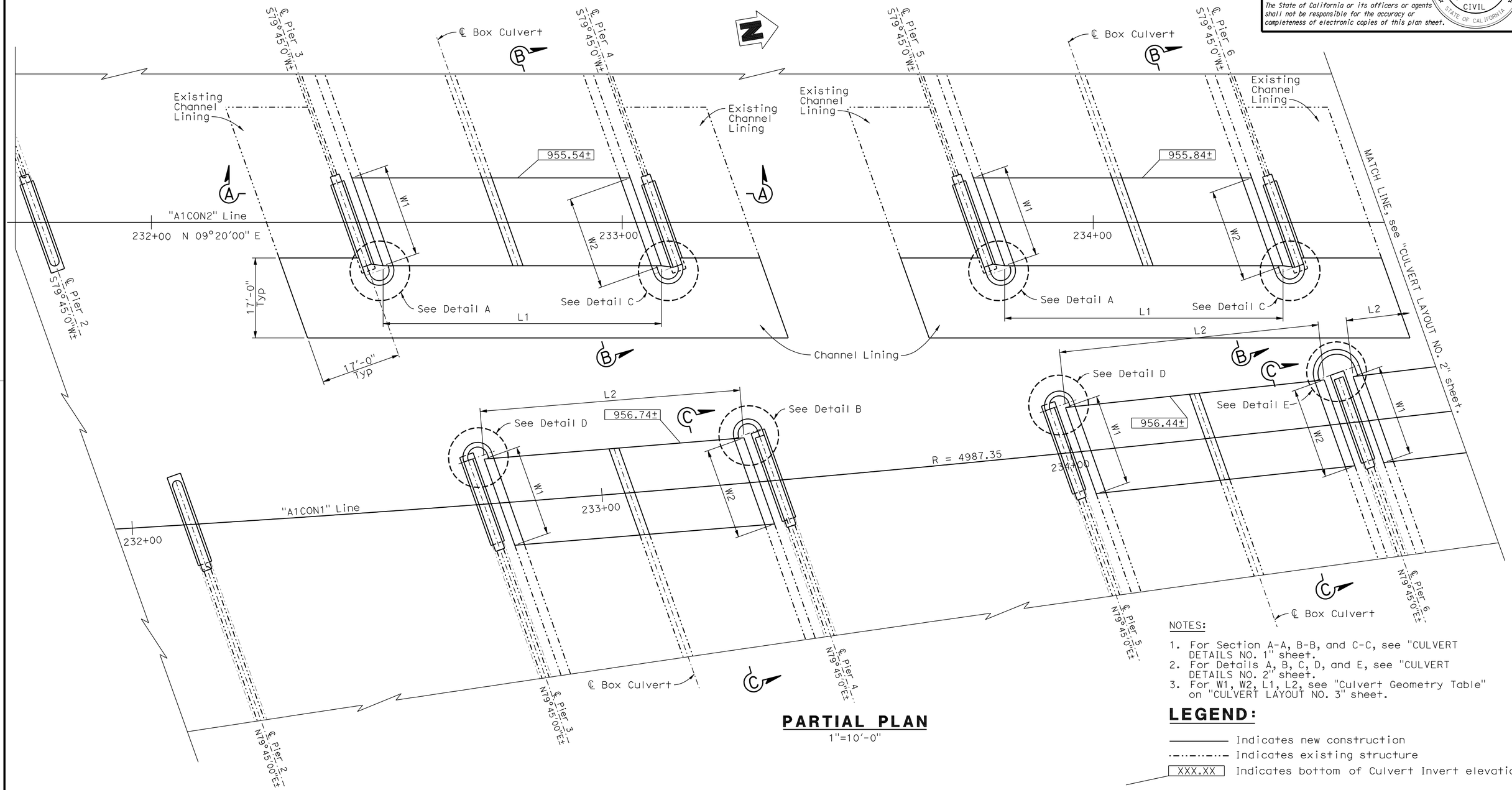

PARTIAL PLAN

1"=10'-0"

NOTES:

1. For Section A-A, B-B, and C-C, see "CULVERT DETAILS NO. 1" sheet.
2. For Details A, B, C, D, and E, see "CULVERT DETAILS NO. 2" sheet.
3. For W1, W2, L1, L2, see "Culvert Geometry Table" on "CULVERT LAYOUT NO. 3" sheet.

LEGEND:

——— Indicates new construction
—·—·— Indicates existing structure
[XXX.XX] Indicates bottom of Culvert Invert elevation

	BY	CHECKED
DESIGN	F. Chen	R. Anderson
DETAILS	G. Hallstrom	R. Anderson
QUANTITIES	F. Chen	D. Azzam

STATE OF CALIFORNIA
DEPARTMENT OF TRANSPORTATION

DIVISION OF ENGINEERING SERVICES
STRUCTURE DESIGN
DESIGN BRANCH 10

BRIDGE NO. 54-0471RL
POST MILE 4.21

SANTA ANA RIVER BRIDGE (WIDEN)

CULVERT LAYOUT NO. 1

STRUCTURES DESIGN DETAIL SHEET (ENGLISH) (REV. 09-01-10)

ORIGINAL SCALE IN INCHES FOR REDUCED PLANS 0 1 2 3

UNIT: 3589
PROJECT NUMBER & PHASE: 08000005061
CONTRACT NO.: 08-0M9401

DISREGARD PRINTS BEARING EARLIER REVISION DATES

REVISION DATES: 4-14-11 8-04-11 9-13-11 12-01-11

SHEET 33 OF 66

FILE => 540471rltc_lo33.dgn

USERNAME => s124436 DATE PLOTTED => 18-APR-2012 TIME PLOTTED => 15:19

DIST	COUNTY	ROUTE	POST MILES TOTAL PROJECT	SHEET No.	TOTAL SHEETS
08	Riv,SBd	91,215	21.5/21.7, 43.2/45.2,0.0/5.1	1354	1743

REGISTERED CIVIL ENGINEER — DATE 4-06-12

4-16-12
PLANS APPROVAL DATE

REGISTERED PROFESSIONAL ENGINEER — LARRY WU — No. C57035 — Exp. 6-30-13 — CIVIL — STATE OF CALIFORNIA

The State of California or its officers or agents shall not be responsible for the accuracy or completeness of electronic copies of this plan sheet.

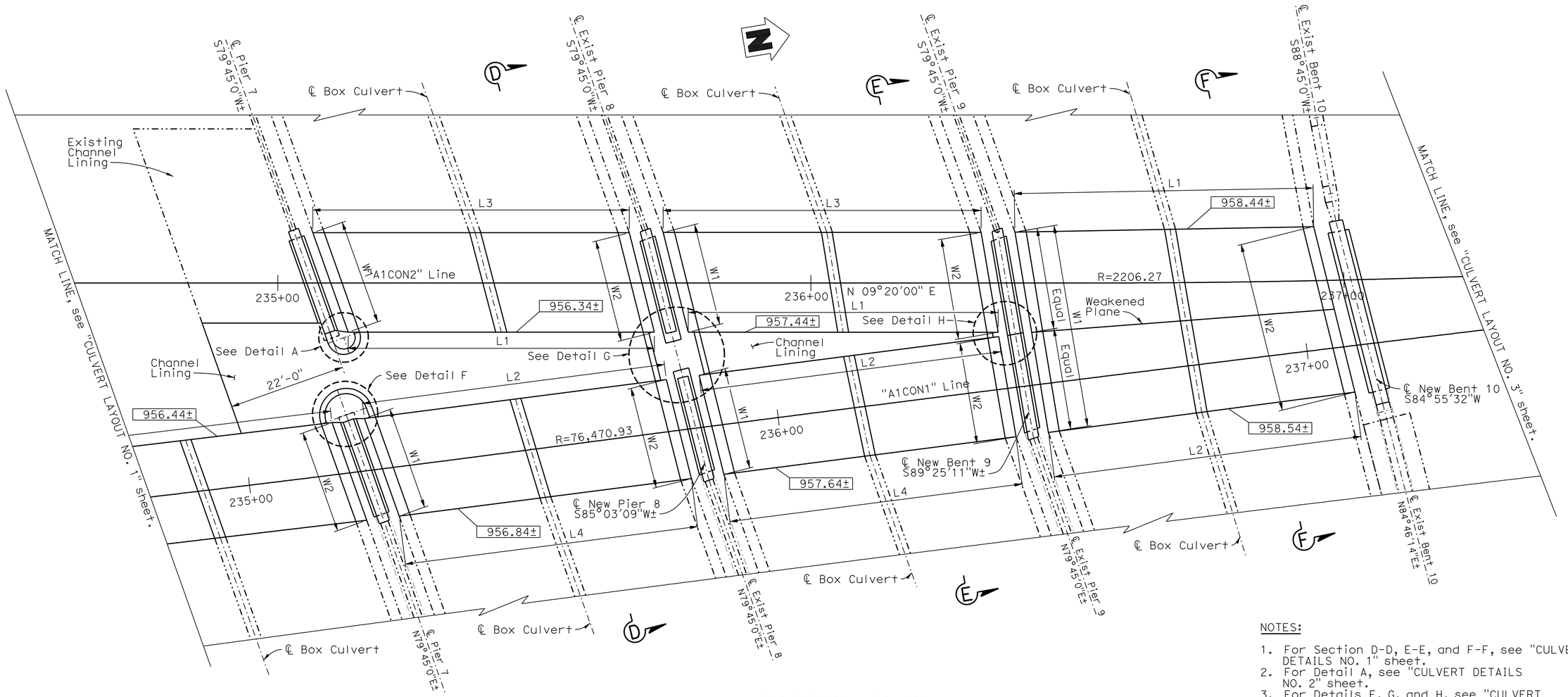

PARTIAL PLAN

1"=10'-0"

NOTES:

1. For Section D-D, E-E, and F-F, see "CULVERT DETAILS NO. 1" sheet.
2. For Detail A, see "CULVERT DETAILS NO. 2" sheet.
3. For Details F, G, and H, see "CULVERT DETAILS NO. 3" sheet.
4. For W1, W2, L1, L2, L3, and L4, see "Culvert Geometry Table" on "CULVERT LAYOUT NO. 3" sheet.

LEGEND:

——— Indicates new construction

-·-·-·- Indicates existing structure

XXX.XX Indicates bottom of Culvert Invert elevation

NOTE:
THE CONTRACTOR SHALL VERIFY ALL CONTROLLING FIELD DIMENSIONS BEFORE ORDERING OR FABRICATING ANY MATERIAL.

	BY	CHECKED
DESIGN	F. Chen	R. Anderson
DETAILS	G. Hallstrom	R. Anderson
QUANTITIES	F. Chen	D. Azzam

STATE OF CALIFORNIA
DEPARTMENT OF TRANSPORTATION

DIVISION OF ENGINEERING SERVICES
STRUCTURE DESIGN
DESIGN BRANCH 10

BRIDGE NO. 54-0471RL
POST MILE 4.21

SANTA ANA RIVER BRIDGE (WIDEN)
CULVERT LAYOUT NO. 2

STRUCTURES DESIGN DETAIL SHEET (ENGLISH) (REV. 09-01-10)

ORIGINAL SCALE IN INCHES FOR REDUCED PLANS 0 1 2 3

UNIT: 3589
PROJECT NUMBER & PHASE: 08000005061
CONTRACT NO.: 08-0M9401

DISREGARD PRINTS BEARING EARLIER REVISION DATES

REVISION DATES: 4-15-11 8-26-11 9-21-11 12-01-11

SHEET 34 OF 66

FILE => 540471rltc_lo34.dgn

USERNAME => s124496 DATE PLOTTED => 18-APR-2012 TIME PLOTTED => 15:19

DIST	COUNTY	ROUTE	POST MILES TOTAL PROJECT	SHEET No.	TOTAL SHEETS
08	Riv,SBd	91,215	21.5/21.7, 43.2/45.2,0.0/5.1	1355	1743

REGISTERED CIVIL ENGINEER 4-06-12 DATE

4-16-12
PLANS APPROVAL DATE

REGISTERED PROFESSIONAL ENGINEER LARRY WU No. C57035 Exp. 6-30-13 CIVIL STATE OF CALIFORNIA

The State of California or its officers or agents shall not be responsible for the accuracy or completeness of electronic copies of this plan sheet.

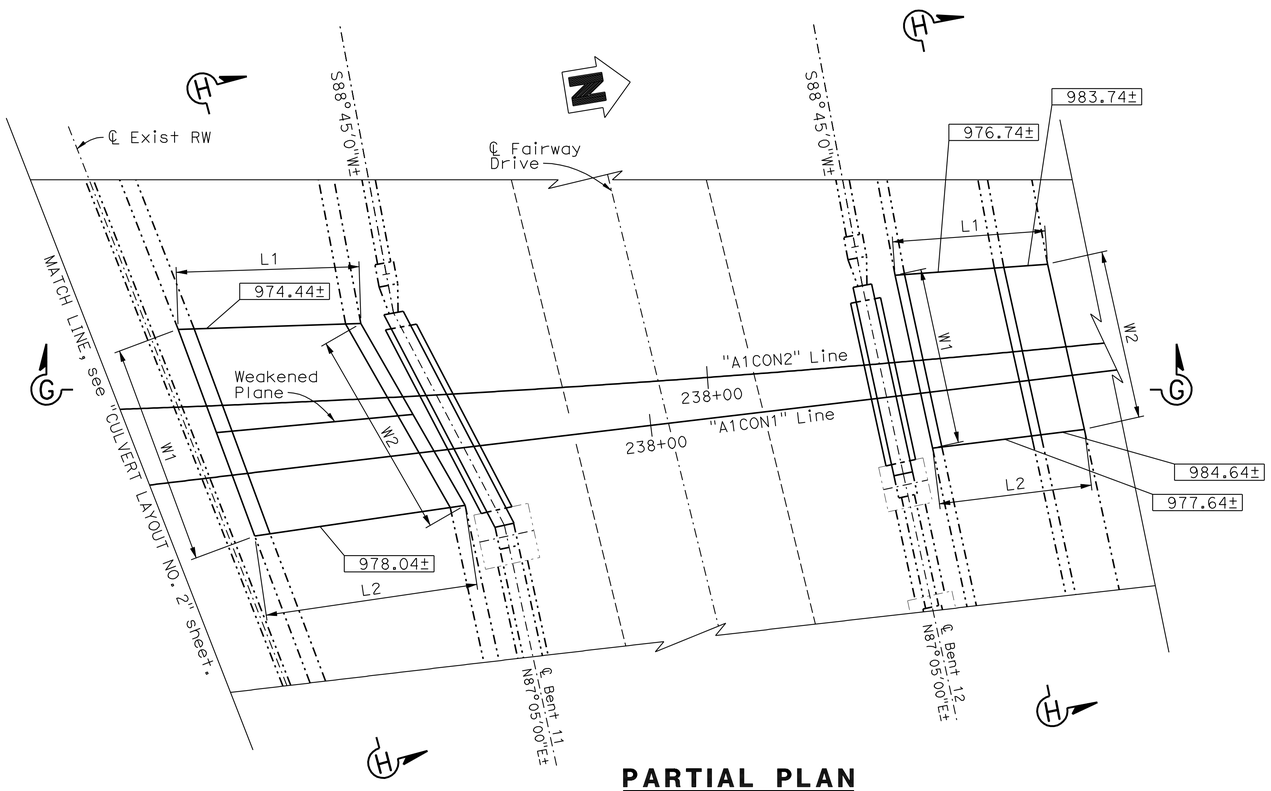

PARTIAL PLAN

1"=10'-0"

CULVERT GEOMETRY TABLE												
	LEFT BRIDGE						RIGHT BRIDGE					
SPAN	LENGTH (ft)		WIDTH (ft)		Avg HEIGHT (ft)		LENGTH (ft)		WIDTH (ft)		Avg HEIGHT (ft)	
	L1±	L3±	W1±	W2±	H1±	H2±	L2±	L4±	W1±	W2±	H1±	H2±
3	59.10		19.66	19.66	37.77	37.67	55.37		19.04	18.98	39.98	39.91
5	59.10		19.66	19.66	37.23	37.29	55.28		18.92	18.87	40.09	39.85
6							55.42		18.87	18.64	39.85	39.59
7	57.42	59.33	19.66	19.43	36.64	36.52	57.04	55.00	18.87	18.64	39.19	38.81
8	58.11	60.00	19.10	18.80	35.42	35.60	56.67	55.55	18.29	18.18	38.01	37.55
COMBINED WITH LEFT AND RIGHT BRIDGE												
9	56.02		37.53	31.56	34.60	34.59	58.04		37.53	31.56	36.91	36.25
10	24.02		28.75	28.08	18.21	17.55	28.12		28.75	28.08	16.55	18.55
12	20.18		21.07	20.08	16.71		20.20		21.07	20.08	15.96	

NOTE: Above dimensions may be adjusted by the Engineer

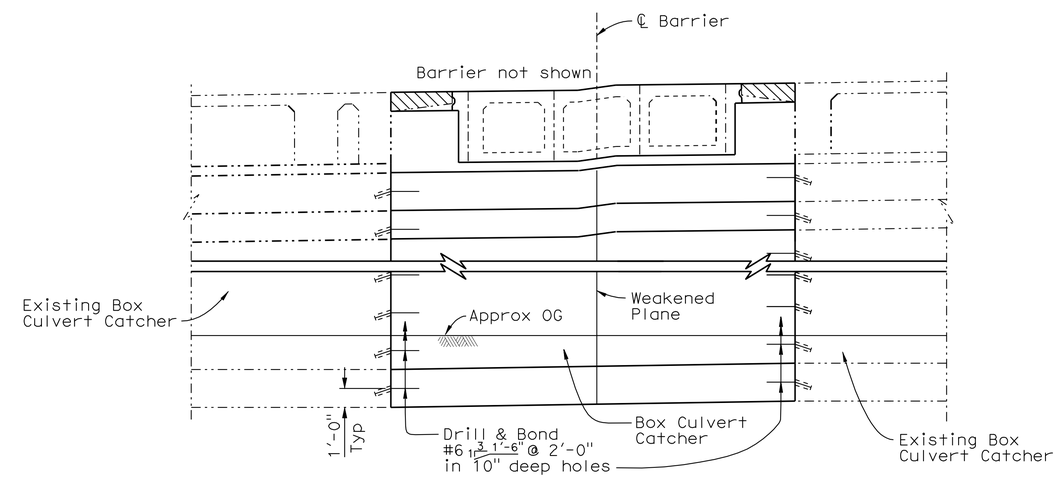

NOTE: For Span 12, the weakened plane is not needed.

SECTION H-H

1/4"=1'-0"

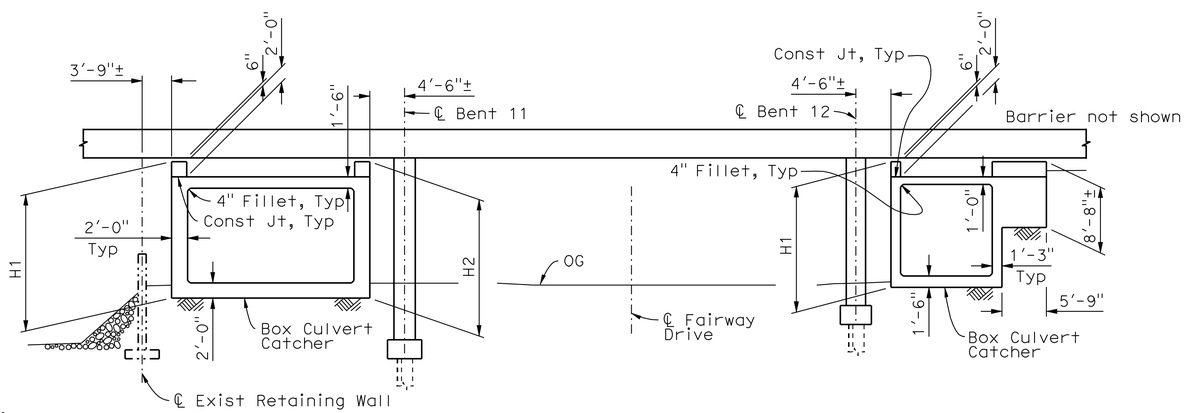

NOTE:
THE CONTRACTOR SHALL VERIFY ALL CONTROLLING FIELD DIMENSIONS BEFORE ORDERING OR FABRICATING ANY MATERIAL.

SECTION G-G

1"=10'-0"

LEGEND:

- Indicates new construction
- Indicates existing structure
- Indicates existing Bridge removal (Portion)
- XXX.XX Indicates bottom of Culvert Invert elevation

DESIGN	BY F. Chen	CHECKED R. Anderson	
DETAILS	BY G. Hallstrom	CHECKED R. Anderson	
QUANTITIES	BY F. Chen	CHECKED D. Azzam	

STATE OF CALIFORNIA
DEPARTMENT OF TRANSPORTATION

DIVISION OF ENGINEERING SERVICES
STRUCTURE DESIGN
DESIGN BRANCH 10

BRIDGE NO. 54-0471RL
POST MILE 4.21

SANTA ANA RIVER BRIDGE (WIDEN)
CULVERT LAYOUT NO. 3

STRUCTURES DESIGN DETAIL SHEET (ENGLISH) (REV. 09-01-10)

ORIGINAL SCALE IN INCHES FOR REDUCED PLANS 0 1 2 3

UNIT: 3589
PROJECT NUMBER & PHASE: 08000005061
CONTRACT NO.: 08-0M9401

DISREGARD PRINTS BEARING EARLIER REVISION DATES

REVISION DATES: 4-15-11 8-02-11 9-23-11 12-01-11

SHEET 35 OF 66

FILE => 540471rltc_lo35.dgn

USERNAME => s124496 DATE PLOTTED => 18-APR-2012 TIME PLOTTED => 15:19

NOTE:
THE CONTRACTOR SHALL VERIFY ALL CONTROLLING FIELD DIMENSIONS BEFORE ORDERING OR FABRICATING ANY MATERIAL.

DIST	COUNTY	ROUTE	POST MILES TOTAL PROJECT	SHEET No.	TOTAL SHEETS
08	Riv,SBd	91,215	21.5/21.7, 43.2/45.2,0.0/5.1	1356	1743

REGISTERED CIVIL ENGINEER — DATE 4-06-12

4-16-12
PLANS APPROVAL DATE

REGISTERED PROFESSIONAL ENGINEER — LARRY WU — No. C57035 — Exp. 6-30-13 — CIVIL — STATE OF CALIFORNIA

The State of California or its officers or agents shall not be responsible for the accuracy or completeness of electronic copies of this plan sheet.

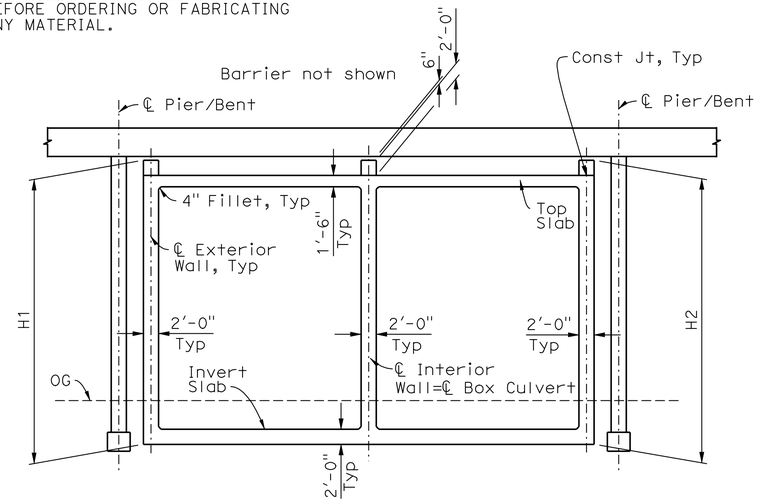

SECTION A-A
1"=10'-0"

NOTES:

1. "Section A-A" is typical for Left Bridge spans 3, 5, 7, 8, and 9.
2. "Section A-A" is typical for Right Bridge spans 3, 5, 6, 7, 8, and 9.
3. Exterior walls and interior walls are parallel to the ℄ Pier or ℄ Bent.
4. For H1 and H2 values, see "Culvert Geometry Table" on "CULVERT LAYOUT NO. 3" sheet.

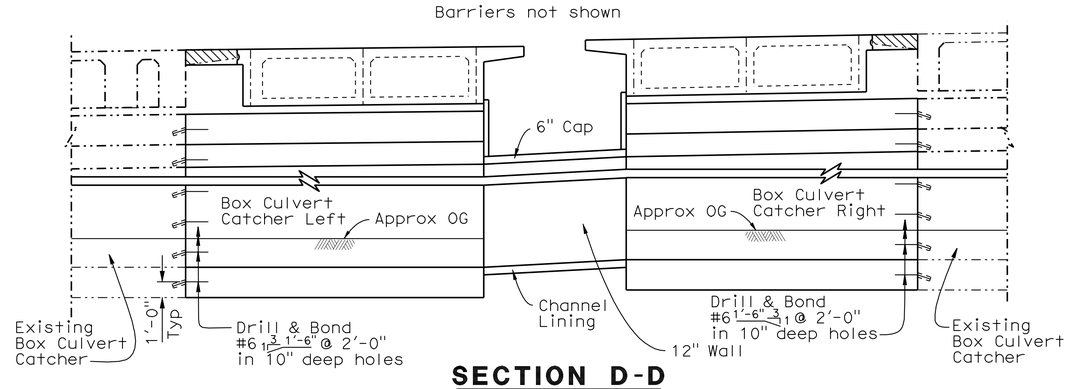

SECTION D-D
1"=5'-0"

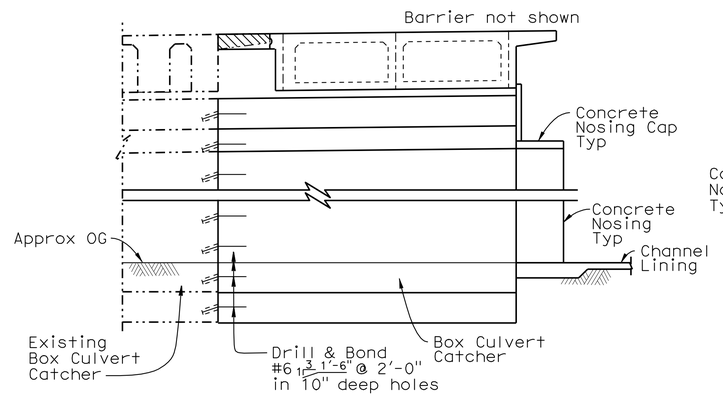

SECTION B-B
1"=5'-0"

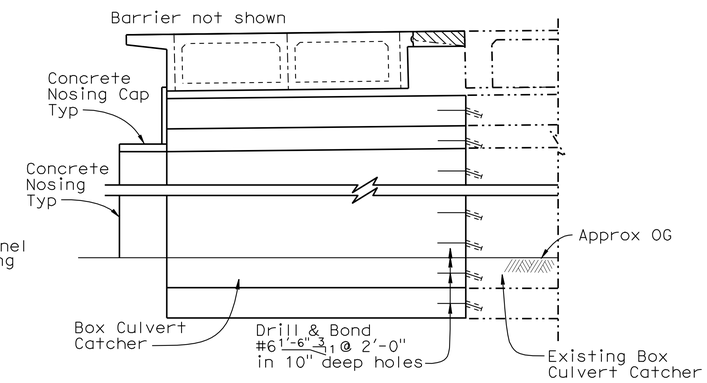

SECTION C-C
1"=5'-0"

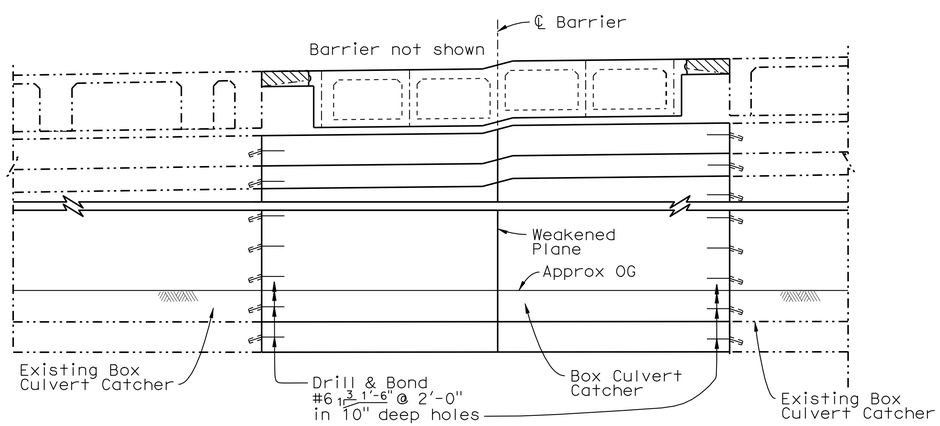

SECTION F-F
1"=5'-0"

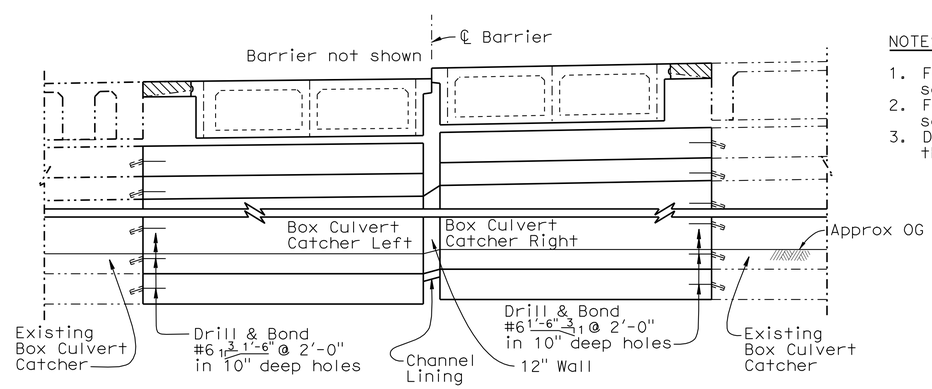

SECTION E-E
1"=5'-0"

NOTES:

1. For location of Section A-A, B-B, and C-C, see "CULVERT LAYOUT NO. 1" sheet.
2. For location of Section D-D, E-E, and F-F, see "CULVERT LAYOUT NO. 2" sheet.
3. Drill and Bond #6 bars are to be located on the exterior walls and the interior walls only.

LEGEND:

- Indicates new construction
- Indicates existing structure
- Indicates concrete removal

	BY	CHECKED
DESIGN	F. Chen	R. Anderson
DETAILS	G. Hallstrom	R. Anderson
QUANTITIES	F. Chen	D.Azzam

STATE OF CALIFORNIA
DEPARTMENT OF TRANSPORTATION

DIVISION OF ENGINEERING SERVICES
STRUCTURE DESIGN
DESIGN BRANCH 10

BRIDGE NO. 54-0471RL
POST MILE 4.21

SANTA ANA RIVER BRIDGE (WIDEN)
CULVERT DETAILS NO. 1

STRUCTURES DESIGN DETAIL SHEET (ENGLISH) (REV. 09-01-10)

ORIGINAL SCALE IN INCHES FOR REDUCED PLANS 0 1 2 3

UNIT: 3589
PROJECT NUMBER & PHASE: 08000005061
CONTRACT NO.: 08-0M9401

DISREGARD PRINTS BEARING EARLIER REVISION DATES

REVISION DATES: 4-13-11 8-08-11 9-13-11 12-01-11

SHEET 36 OF 66

FILE => 540471rltcdt36.dgn

USERNAME => s124496 DATE PLOTTED => 18-APR-2012 TIME PLOTTED => 15:19

DIST	COUNTY	ROUTE	POST MILES TOTAL PROJECT	SHEET No.	TOTAL SHEETS
08	Riv,SBd	91,215	21.5/21.7, 43.2/45.2,0.0/5.1	1357	1743

REGISTERED CIVIL ENGINEER — DATE 4-06-12

4-16-12
PLANS APPROVAL DATE

REGISTERED PROFESSIONAL ENGINEER — LARRY WU No. C57035 Exp. 6-30-13 CIVIL — STATE OF CALIFORNIA

The State of California or its officers or agents shall not be responsible for the accuracy or completeness of electronic copies of this plan sheet.

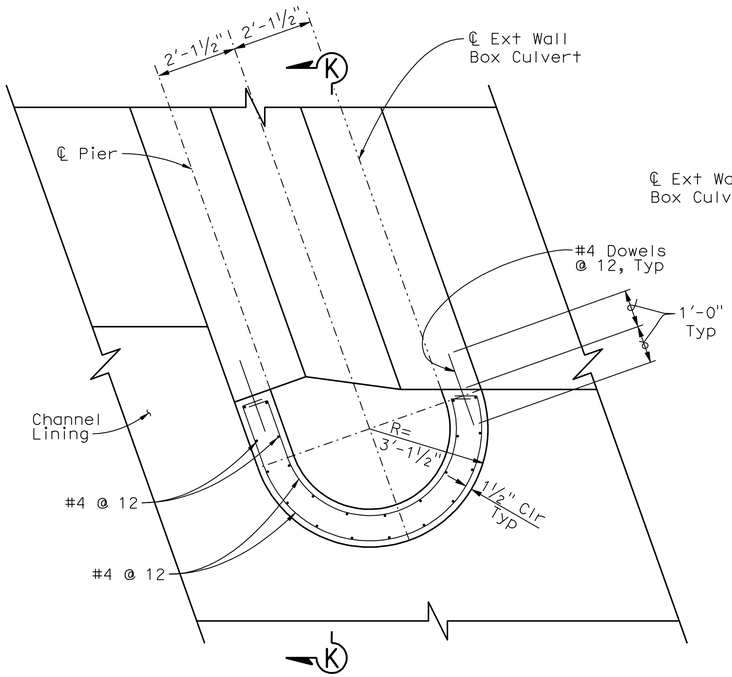

DETAIL A
½"=1'-0"

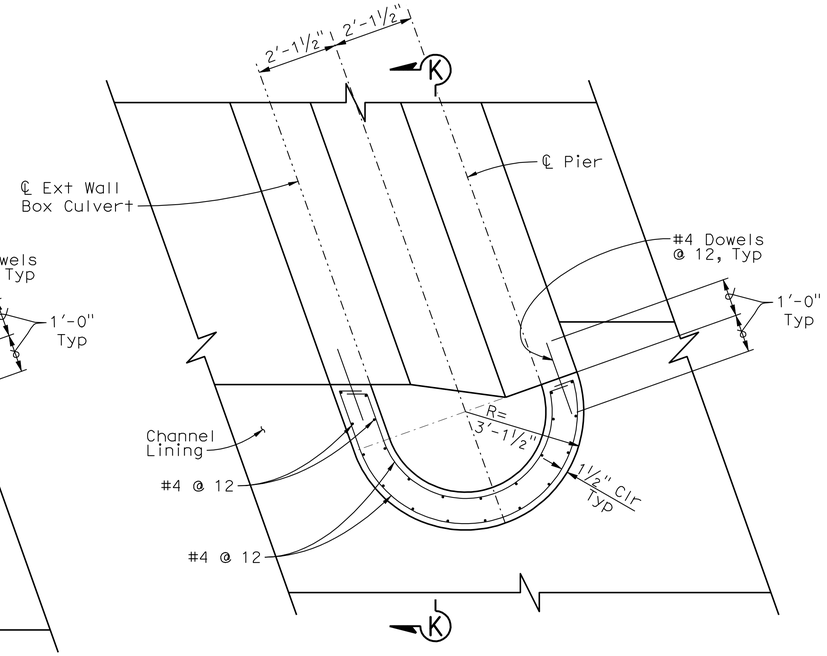

DETAIL C
½"=1'-0"

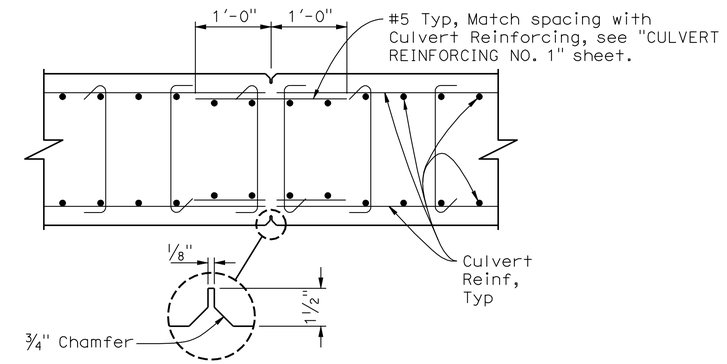

SECTION - WEAKENED PLANE
NO SCALE

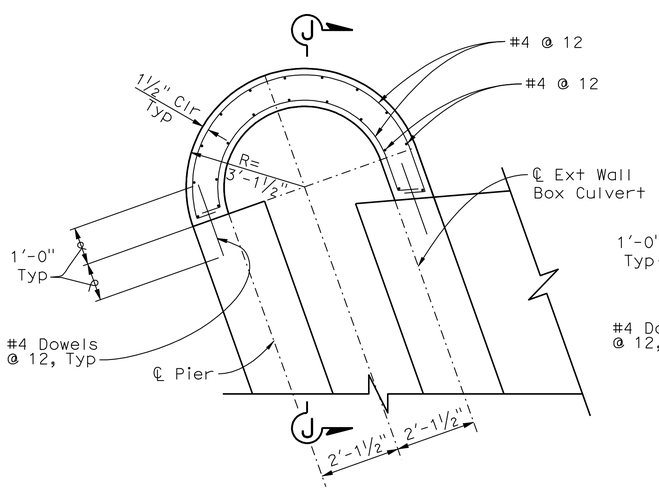

DETAIL D
½"=1'-0"

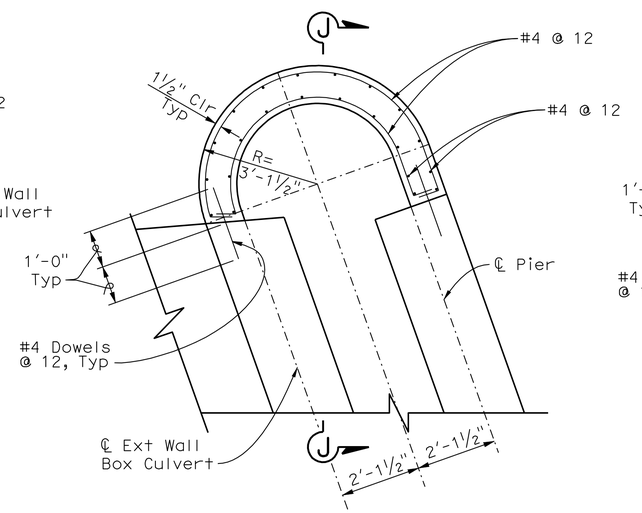

DETAIL B
½"=1'-0"

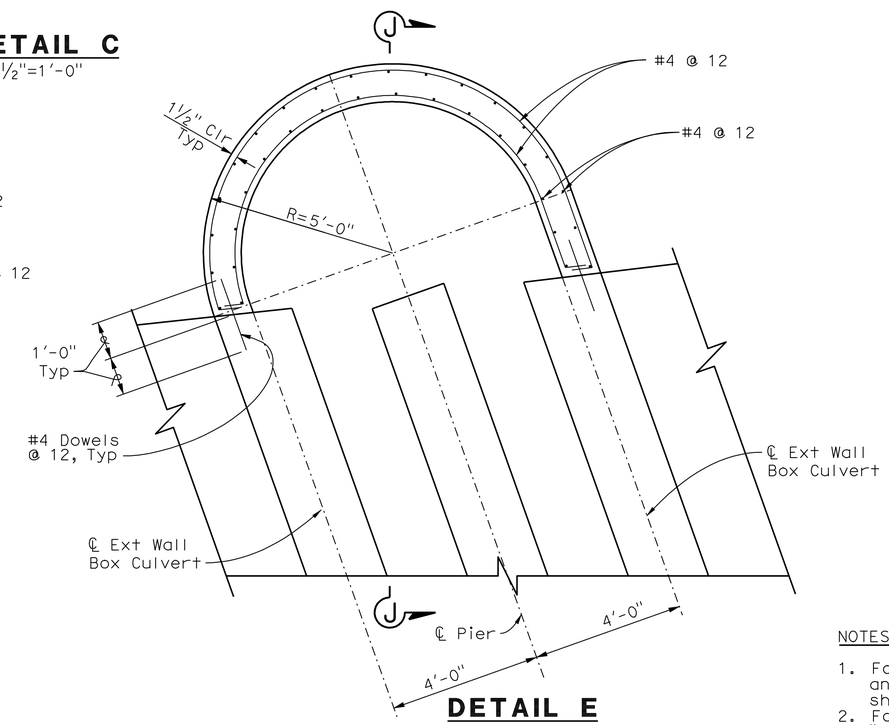

DETAIL E
½"=1'-0"

NOTES:

1. For location of Details A, B, C, D, and E, see "CULVERT LAYOUT NO. 1" sheet.
2. For Section J-J, and K-K, see "CULVERT DETAILS NO. 4" sheet.

NOTE:
THE CONTRACTOR SHALL VERIFY ALL CONTROLLING FIELD DIMENSIONS BEFORE ORDERING OR FABRICATING ANY MATERIAL.

	BY	CHECKED
DESIGN	F. Chen	R. Anderson
DETAILS	G. Hallstrom	R. Anderson
QUANTITIES	F. Chen	D. Azzam

STATE OF CALIFORNIA
DEPARTMENT OF TRANSPORTATION

DIVISION OF ENGINEERING SERVICES
STRUCTURE DESIGN
DESIGN BRANCH 10

BRIDGE NO. 54-0471RL
POST MILE 4.21

SANTA ANA RIVER BRIDGE (WIDEN)
CULVERT DETAILS NO. 2

STRUCTURES DESIGN DETAIL SHEET (ENGLISH) (REV. 09-01-10)

ORIGINAL SCALE IN INCHES FOR REDUCED PLANS 0 1 2 3

UNIT: 3589
PROJECT NUMBER & PHASE: 08000005061
CONTRACT NO.: 08-0M9401

DISREGARD PRINTS BEARING EARLIER REVISION DATES

REVISION DATES: 4-26-11 8-08-11 12-01-11

SHEET 37 OF 66

FILE => 540471rltcdt37.dgn

USERNAME => s124036 DATE PLOTTED => 18-APR-2012 TIME PLOTTED => 15:19

DIST	COUNTY	ROUTE	POST MILES TOTAL PROJECT	SHEET No.	TOTAL SHEETS
08	Riv,SBd	91,215	21.5/21.7, 43.2/45.2,0.0/5.1	1358	1743

REGISTERED CIVIL ENGINEER — DATE 4-06-12

4-16-12
PLANS APPROVAL DATE

REGISTERED PROFESSIONAL ENGINEER — LARRY WU No. C57035 Exp. 6-30-13 CIVIL — STATE OF CALIFORNIA

The State of California or its officers or agents shall not be responsible for the accuracy or completeness of electronic copies of this plan sheet.

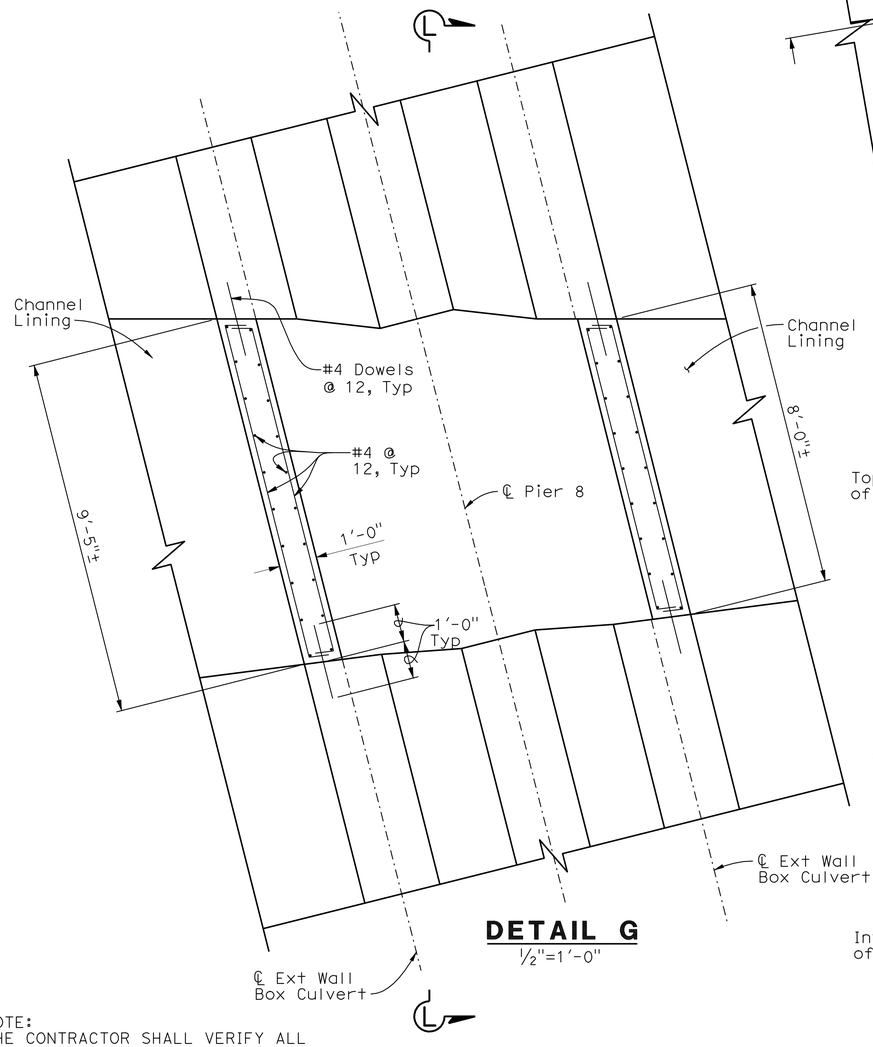

DETAIL G
1/2"=1'-0"

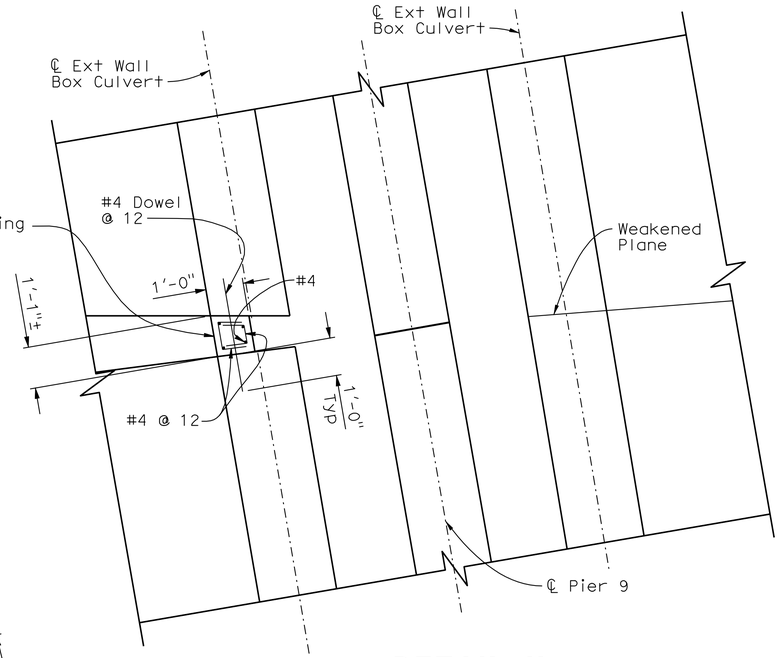

DETAIL H
1/2"=1'-0"

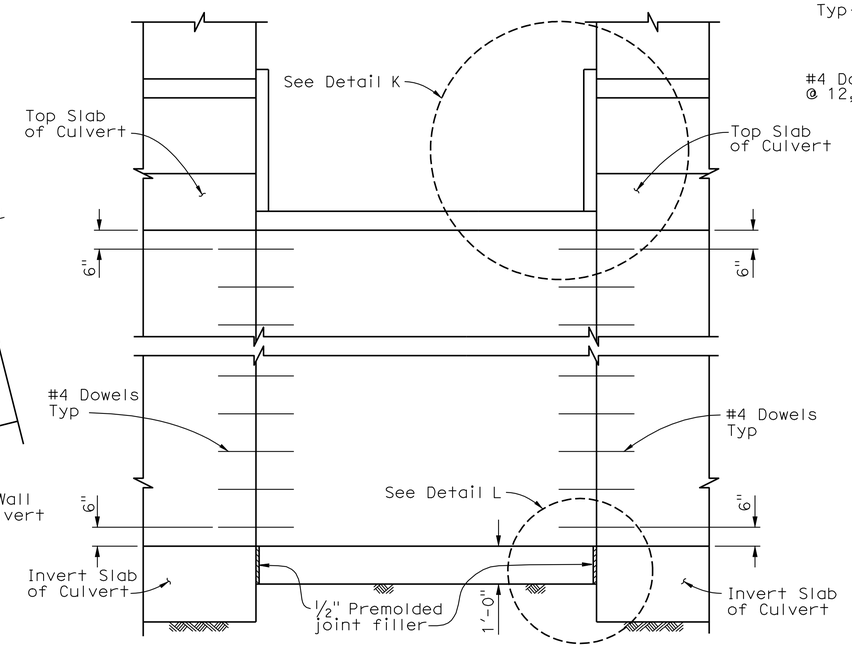

SECTION L-L
1/2"=1'-0"

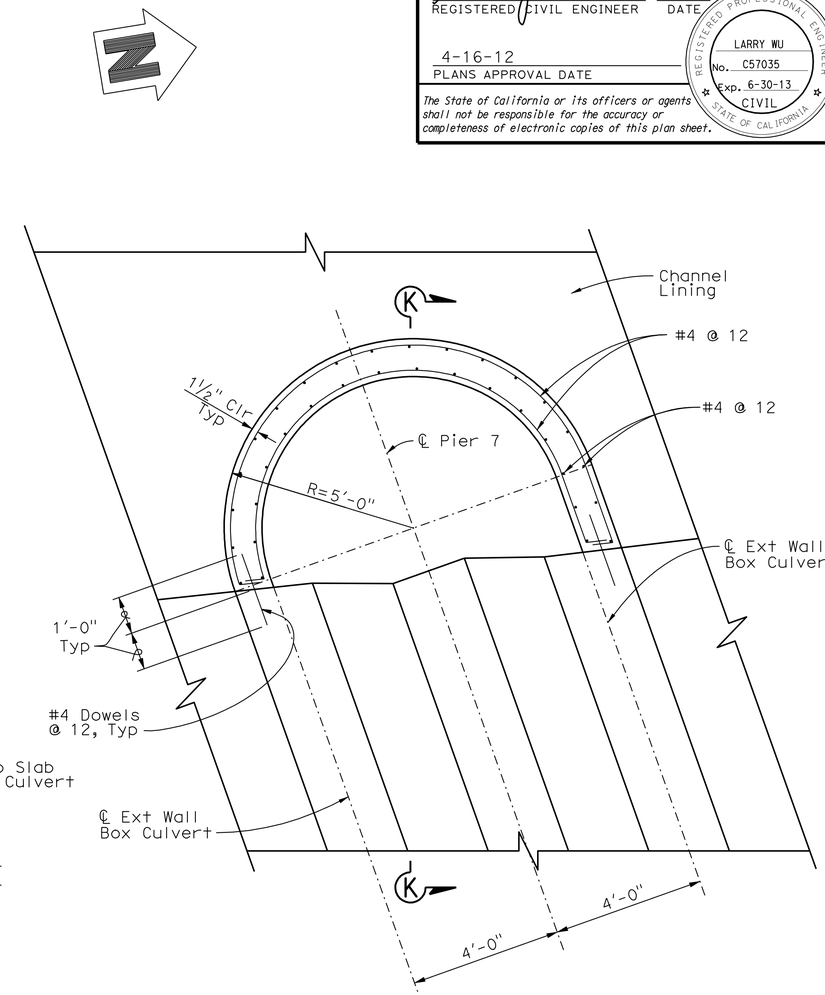

DETAIL F
1/2"=1'-0"

NOTES:

1. For location of "Detail F", "Detail G", and "Detail H", see "CULVERT LAYOUT NO. 2" sheet.
2. For "Detail K", "Detail L", and "Section K-K", see "CULVERT DETAILS NO. 4" sheet.

NOTE:
THE CONTRACTOR SHALL VERIFY ALL CONTROLLING FIELD DIMENSIONS BEFORE ORDERING OR FABRICATING ANY MATERIAL.

	BY	CHECKED
DESIGN	F. Chen	R. Anderson
DETAILS	G. Hallstrom	R. Anderson
QUANTITIES	F. Chen	D. Azzam

STATE OF CALIFORNIA
DEPARTMENT OF TRANSPORTATION

DIVISION OF ENGINEERING SERVICES
STRUCTURE DESIGN
DESIGN BRANCH 10

BRIDGE NO. 54-0471RL
POST MILE 4.21

SANTA ANA RIVER BRIDGE (WIDEN)
CULVERT DETAILS NO. 3

STRUCTURES DESIGN DETAIL SHEET (ENGLISH) (REV. 09-01-10)

ORIGINAL SCALE IN INCHES FOR REDUCED PLANS 0 1 2 3

UNIT: 3589
PROJECT NUMBER & PHASE: 08000005061
CONTRACT NO.: 08-0M9401

DISREGARD PRINTS BEARING EARLIER REVISION DATES

REVISION DATES: ~~4-23-11~~ 12-01-11

SHEET 38 OF 66

FILE => 540471rltcdt38.dgn

USERNAME => s124496 DATE PLOTTED => 18-APR-2012 TIME PLOTTED => 15:19

DIST	COUNTY	ROUTE	POST MILES TOTAL PROJECT	SHEET No.	TOTAL SHEETS
08	Riv,SBd	91,215	21.5/21.7, 43.2/45.2,0.0/5.1	1359	1743

REGISTERED CIVIL ENGINEER — DATE 4-06-12

4-16-12
PLANS APPROVAL DATE

REGISTERED PROFESSIONAL ENGINEER — LARRY WU No. C57035 Exp. 6-30-13 CIVIL — STATE OF CALIFORNIA

The State of California or its officers or agents shall not be responsible for the accuracy or completeness of electronic copies of this plan sheet.

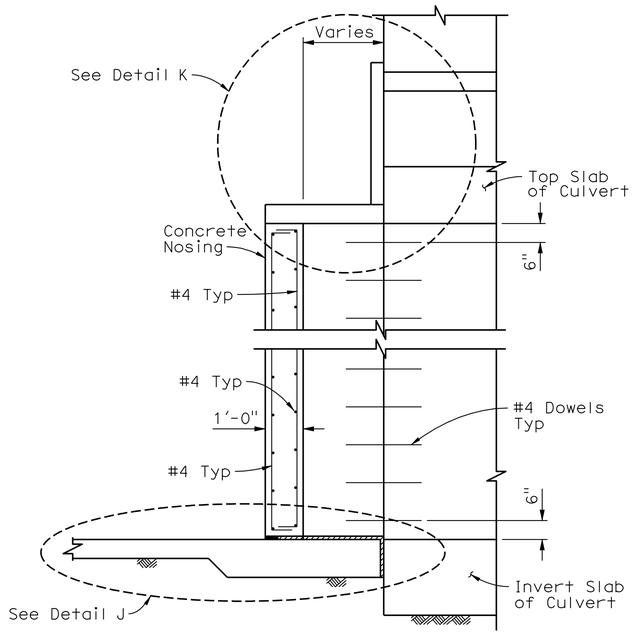

SECTION K-K
½"=1'-0"

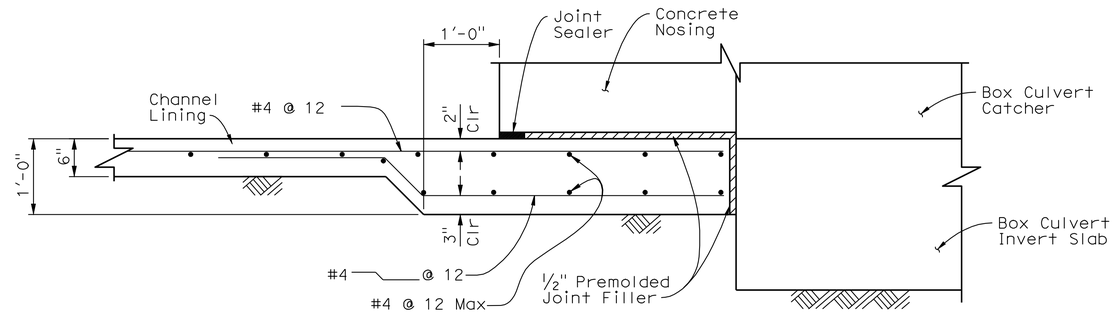

DETAIL J
1"=1'-0"

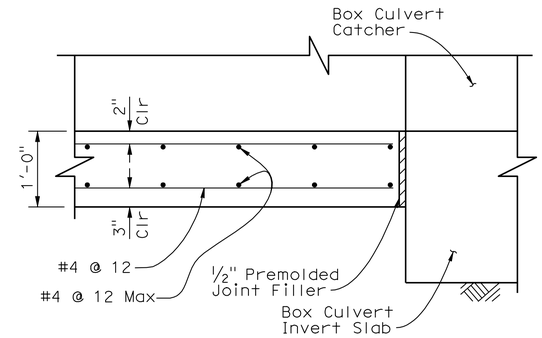

DETAIL L
1"=1'-0"

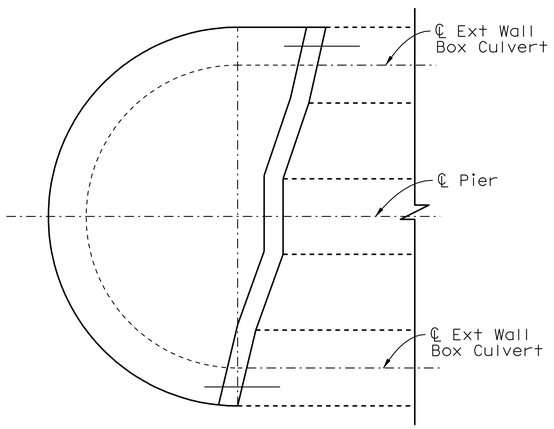

SECTION N-N
½"=1'-0"

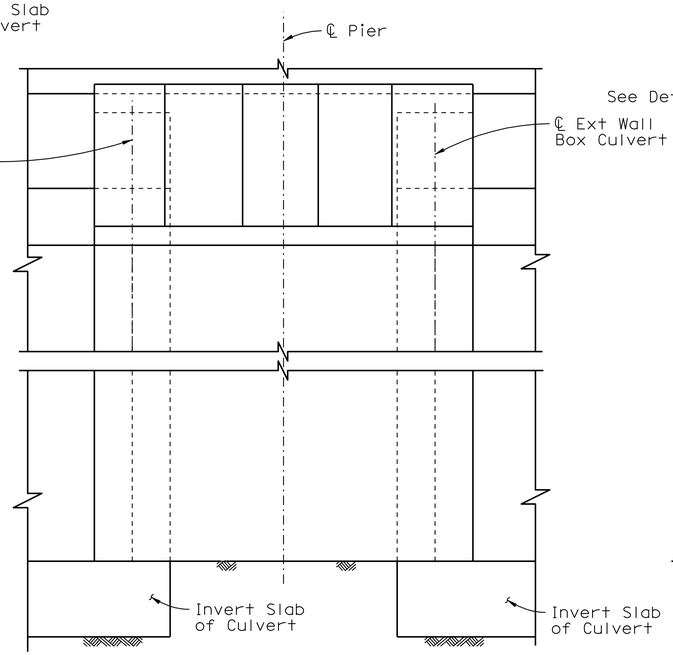

SECTION M-M
½"=1'-0"

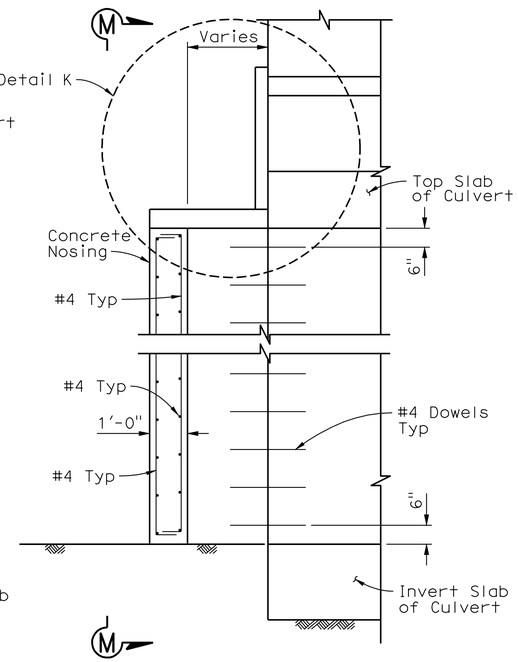

SECTION J-J
½"=1'-0"

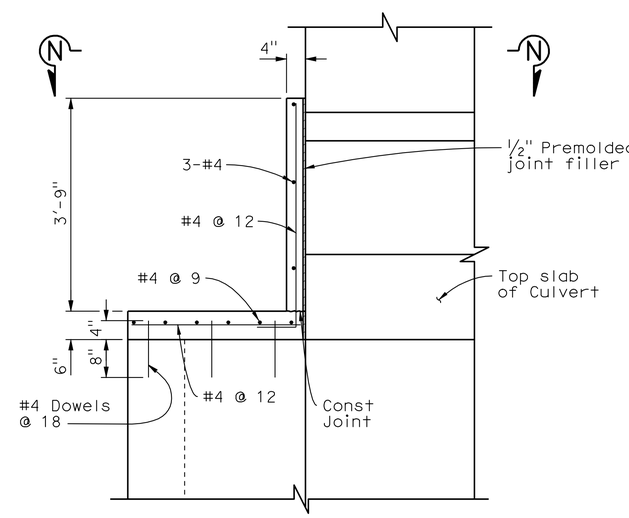

DETAIL K
¾"=1'-0"

NOTES:

1. For location of "Section J-J", see "CULVERT DETAILS NO. 2" sheet.
2. For location of "Section K-K", see "CULVERT DETAILS NO. 2" and "CULVERT DETAILS NO. 3" sheets.
3. For location of "Detail L", see "CULVERT DETAILS NO. 3" sheet.

NOTE:
THE CONTRACTOR SHALL VERIFY ALL CONTROLLING FIELD DIMENSIONS BEFORE ORDERING OR FABRICATING ANY MATERIAL.

	BY	CHECKED
DESIGN	F. Chen	R. Anderson
DETAILS	G. Hallstrom	R. Anderson
QUANTITIES	F. Chen	D. Azzam

STATE OF CALIFORNIA
DEPARTMENT OF TRANSPORTATION

DIVISION OF ENGINEERING SERVICES
STRUCTURE DESIGN
DESIGN BRANCH 10

BRIDGE NO. 54-0471RL
POST MILE 4.21

SANTA ANA RIVER BRIDGE (WIDEN)
CULVERT DETAILS NO. 4

STRUCTURES DESIGN DETAIL SHEET (ENGLISH) (REV. 09-01-10)

ORIGINAL SCALE IN INCHES FOR REDUCED PLANS 0 1 2 3

UNIT: 3589
PROJECT NUMBER & PHASE: 08000005061
CONTRACT NO.: 08-0M9401

DISREGARD PRINTS BEARING EARLIER REVISION DATES

REVISION DATES: 4-28-11 12-01-11

SHEET 39 OF 66

FILE => 540471rltcdt39.dgn

USERNAME => s124496 DATE PLOTTED => 18-APR-2012 TIME PLOTTED => 15:19

DIST	COUNTY	ROUTE	POST MILES TOTAL PROJECT	SHEET No.	TOTAL SHEETS
08	Riv,SBd	91,215	21.5/21.7, 43.2/45.2,0.0/5.1	1360	1743

REGISTERED CIVIL ENGINEER 4-06-12 DATE

4-16-12
PLANS APPROVAL DATE

REGISTERED PROFESSIONAL ENGINEER LARRY WU No. C57035 Exp. 6-30-13 CIVIL STATE OF CALIFORNIA

The State of California or its officers or agents shall not be responsible for the accuracy or completeness of electronic copies of this plan sheet.

NOTE:
THE CONTRACTOR SHALL VERIFY ALL CONTROLLING FIELD DIMENSIONS BEFORE ORDERING OR FABRICATING ANY MATERIAL.

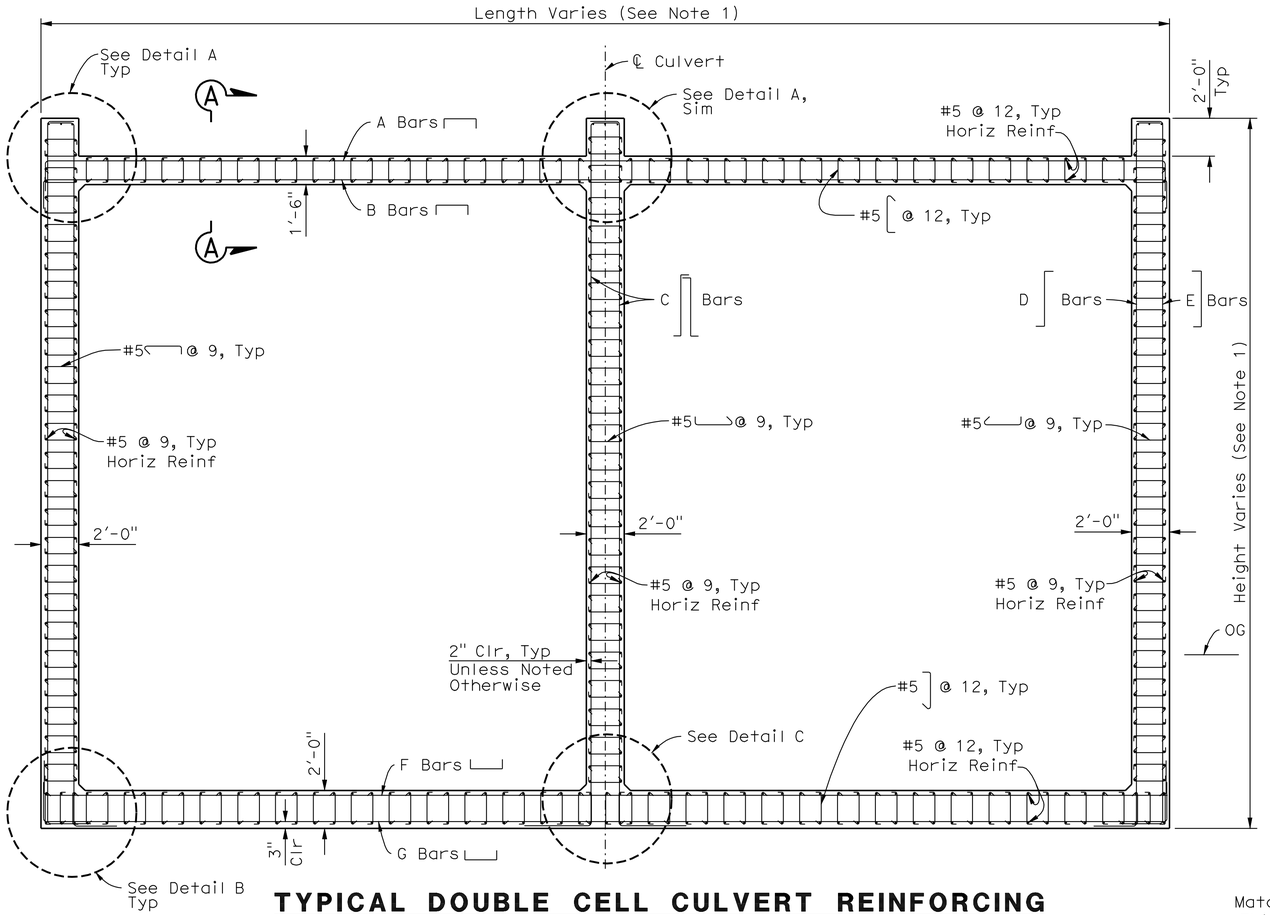

TYPICAL DOUBLE CELL CULVERT REINFORCING

NO SCALE

LEFT BRIDGE REINFORCEMENT

	Top Slab (Top)	Top Slab (Bottom)	Interior Wall (Left & Right)	Exterior Wall (Inside)	Exterior Wall (Outside)	Invert Slab (Top)	Invert Slab (Bottom)
Span	A Bars	B Bars	C Bars	D Bars	E Bars	F Bars	G Bars
3	#8 Bundled @ 6	#10 @ 6	#9 Bundled @ 6	#9 @ 6	#8 Bundled @ 6	#10 Bundled @ 6	#9 Bundled @ 6
5	#8 Bundled @ 6	#10 @ 6	#9 Bundled @ 6	#9 @ 6	#8 Bundled @ 6	#10 Bundled @ 6	#9 Bundled @ 6
7	#10 @ 6	#7 @ 6	#10 @ 6	#6 @ 6	#9 @ 6	#9 Bundled @ 6	#10 @ 6
8	#9 @ 6	#8 @ 6	#10 @ 6	#8 @ 6	#9 @ 6	#10 @ 6	#9 @ 6
9**	#9 @ 6	#8 @ 6	#10 @ 6	#7 @ 6	#9 @ 6	#10 @ 6	#10 @ 6

** Combination Culvert Left and Right

RIGHT BRIDGE REINFORCEMENT

	Top Slab (Top)	Top Slab (Bottom)	Interior Wall (Left & Right)	Exterior Wall (Inside)	Exterior Wall (Outside)	Invert Slab (Top)	Invert Slab (Bottom)
Span	A Bars	B Bars	C Bars	D Bars	E Bars	F Bars	G Bars
3	#8 Bundled @ 6	#10 @ 6	#9 Bundled @ 6	#9 @ 6	#8 Bundled @ 6	#10 Bundled @ 6	#9 Bundled @ 6
5	#10 @ 6	#9 @ 6	#8 Bundled @ 6	#8 @ 6	#9 @ 6	#10 Bundled @ 6	#10 @ 6
6	#9 @ 6	#8 @ 6	#10 @ 6	#8 @ 6	#9 @ 6	#10 @ 6	#9 @ 6
7	#9 @ 6	#8 @ 6	#10 @ 6	#7 @ 6	#9 @ 6	#10 @ 6	#10 @ 6
8	#9 @ 6	#8 @ 6	#10 @ 6	#8 @ 6	#9 @ 6	#10 @ 6	#9 @ 6

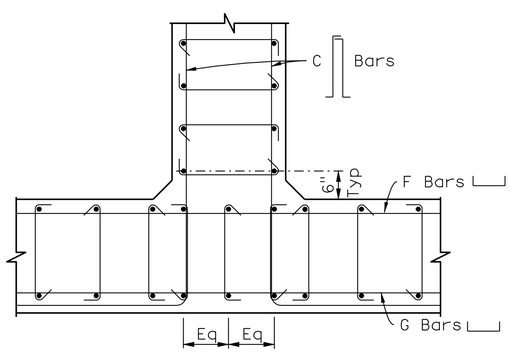

DETAIL C

3/4"=1'-0"

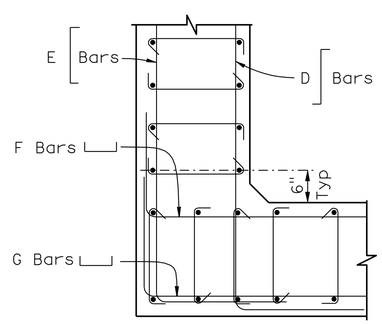

DETAIL B

3/4"=1'-0"

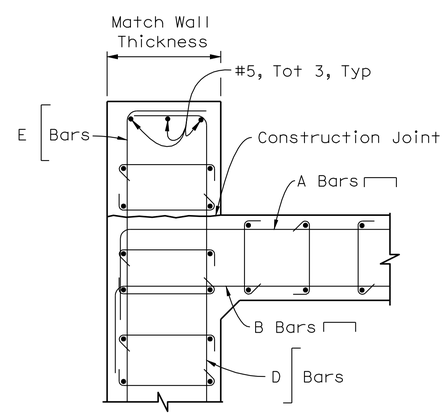

DETAIL A

3/4"=1'-0"

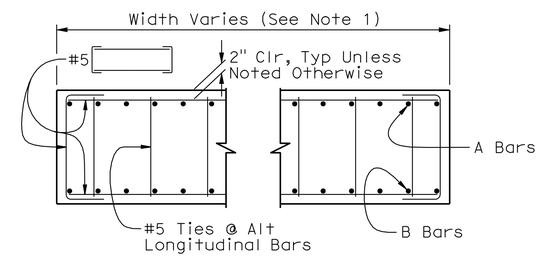

SECTION A-A (WALL AND SLAB SIMILAR)

3/4"=1'-0"

NOTES:

1. For dimensions of culvert, see "CULVERT LAYOUT NO. 3", sheet.
2. No splices are allowed in Wall main reinforcement. Top and Invert Slab main reinforcement may be spliced once through the length of the Culvert. Splices in these bars shall occur at mid span of cells and shall alternate between South and North cells.

	BY	CHECKED
DESIGN	F. Chen	R. Anderson
DETAILS	G. Hallstrom	R. Anderson
QUANTITIES	F. Chen	D. Azzam

STATE OF CALIFORNIA
DEPARTMENT OF TRANSPORTATION

DIVISION OF ENGINEERING SERVICES
STRUCTURE DESIGN
DESIGN BRANCH 10

BRIDGE NO. 54-0471RL
POST MILE 4.21

SANTA ANA RIVER BRIDGE (WIDEN)
CULVERT REINFORCING NO. 1

STRUCTURES DESIGN DETAIL SHEET (ENGLISH) (REV. 09-01-10)

ORIGINAL SCALE IN INCHES FOR REDUCED PLANS 0 1 2 3

UNIT: 3589
PROJECT NUMBER & PHASE: 08000005061
CONTRACT NO.: 08-0M9401

DISREGARD PRINTS BEARING EARLIER REVISION DATES

REVISION DATES 12-28-10 8-08-11 9-13-11 12-02-11

SHEET 40 OF 66

FILE => 540471rltcr40.dgn

USERNAME => s124436 DATE PLOTTED => 18-APR-2012 TIME PLOTTED => 15:19

DIST	COUNTY	ROUTE	POST MILES TOTAL PROJECT	SHEET No.	TOTAL SHEETS
08	Riv,SBd	91,215	21.5/21.7, 43.2/45.2,0.0/5.1	1361	1743

REGISTERED CIVIL ENGINEER 4-06-12 DATE

4-16-12
PLANS APPROVAL DATE

REGISTERED PROFESSIONAL ENGINEER LARRY WU No. C57035 Exp. 6-30-13 CIVIL STATE OF CALIFORNIA

The State of California or its officers or agents shall not be responsible for the accuracy or completeness of electronic copies of this plan sheet.

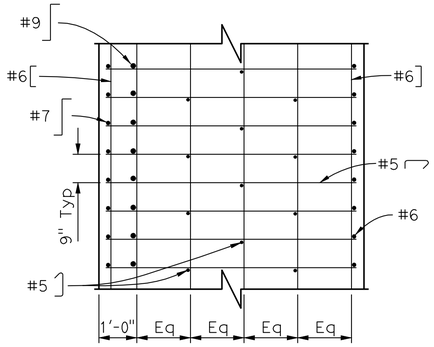

SECTION B-B

1/2"=1'-0"

NOTES:

1. For dimensions not shown, see "CULVERT LAYOUT NO. 3" sheet.
2. For Section A-A, and Details A & B, see "CULVERT REINFORCING NO. 1" sheet.

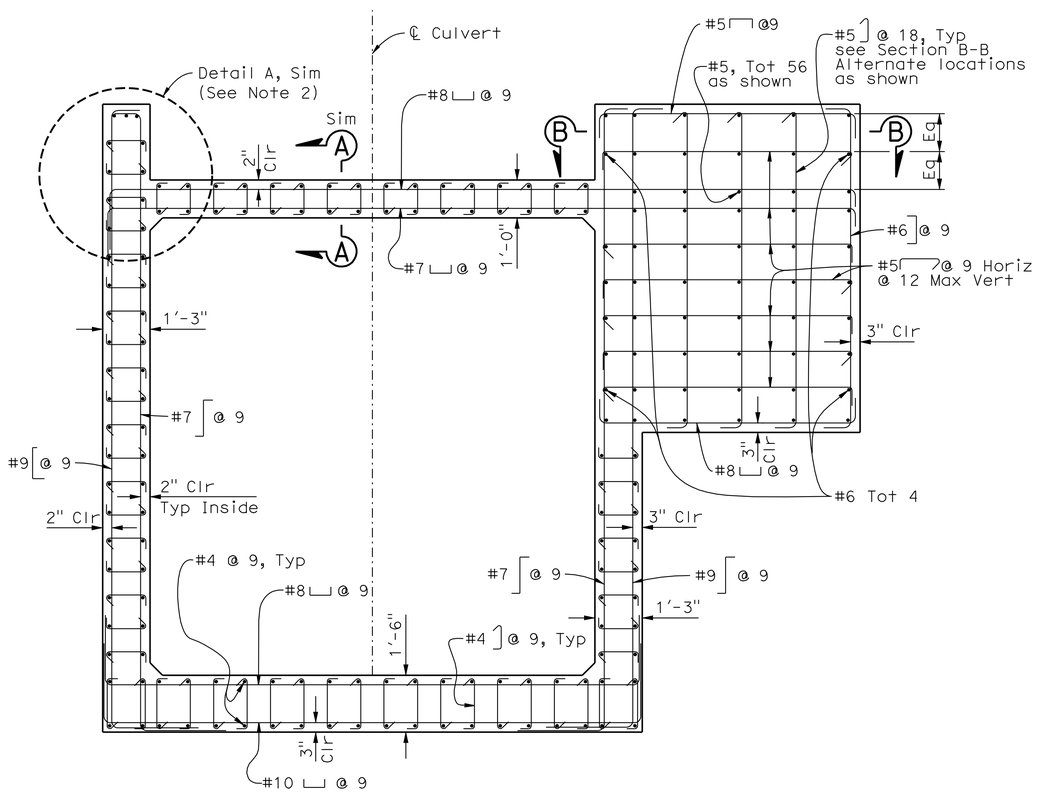

CULVERT DETAIL (SPAN 12)

1/2"=1'-0"

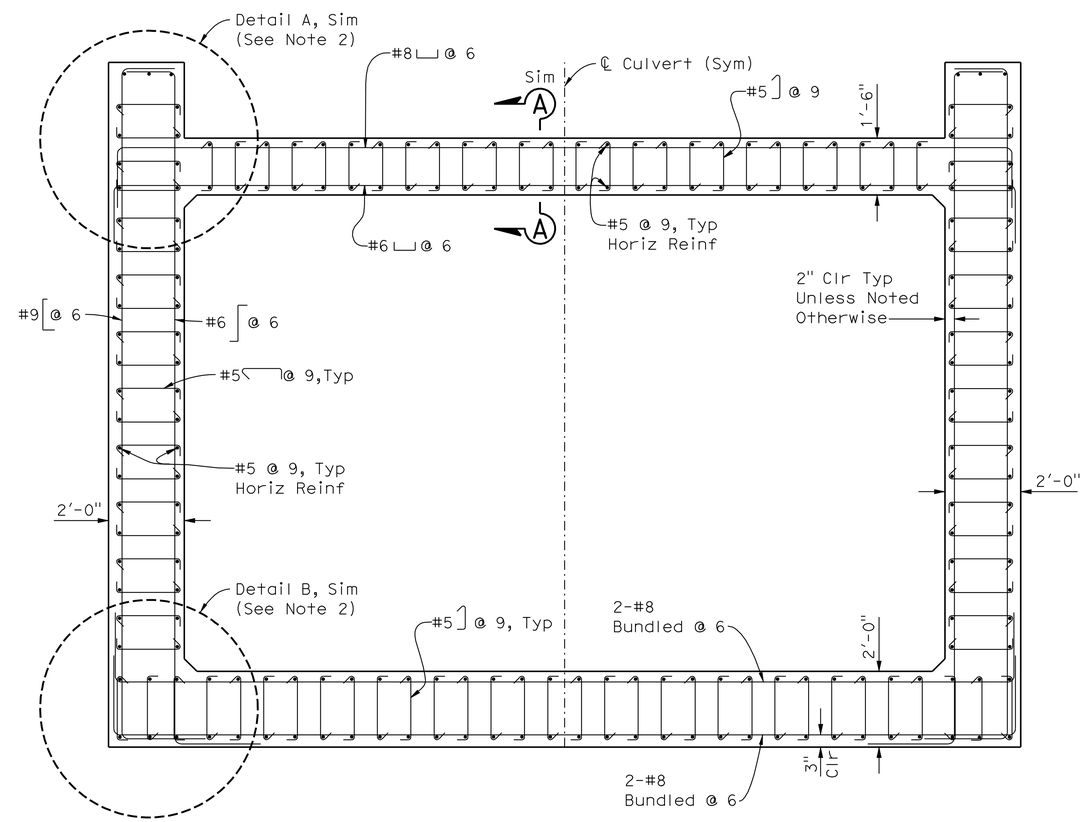

CULVERT DETAIL (SPAN 10)

1/2"=1'-0"

NOTE:
THE CONTRACTOR SHALL VERIFY ALL CONTROLLING FIELD DIMENSIONS BEFORE ORDERING OR FABRICATING ANY MATERIAL.

	BY	CHECKED
DESIGN	F. Chen	R. Anderson
DETAILS	G. Hallstrom	R. Anderson
QUANTITIES	F. Chen	D. Azzam

STATE OF CALIFORNIA
DEPARTMENT OF TRANSPORTATION

DIVISION OF ENGINEERING SERVICES
STRUCTURE DESIGN
DESIGN BRANCH 10

BRIDGE NO. 54-0471RL
POST MILE 4.21

SANTA ANA RIVER BRIDGE (WIDEN)
CULVERT REINFORCING NO. 2

STRUCTURES DESIGN DETAIL SHEET (ENGLISH) (REV. 09-01-10)

ORIGINAL SCALE IN INCHES FOR REDUCED PLANS 0 1 2 3

UNIT: 3589
PROJECT NUMBER & PHASE: 08000005061
CONTRACT NO.: 08-0M9401

DISREGARD PRINTS BEARING EARLIER REVISION DATES

REVISION DATES 1-04-11 8-08-11 12-02-11

SHEET 41 OF 66

FILE => 540471ritcr41.dgn

USERNAME => s124496 DATE PLOTTED => 18-APR-2012 TIME PLOTTED => 15:19

DIST	COUNTY	ROUTE	POST MILES TOTAL PROJECT	SHEET No.	TOTAL SHEETS
08	Riv,SBd	91,215	21.5/21.7, 43.2/45.2,0.0/5.1	1362	1743

REGISTERED CIVIL ENGINEER — DATE: 4-06-12

4-16-12
PLANS APPROVAL DATE

REGISTERED PROFESSIONAL ENGINEER — LARRY WU — No. C57035 — Exp. 6-30-13 — CIVIL — STATE OF CALIFORNIA

The State of California or its officers or agents shall not be responsible for the accuracy or completeness of electronic copies of this plan sheet.

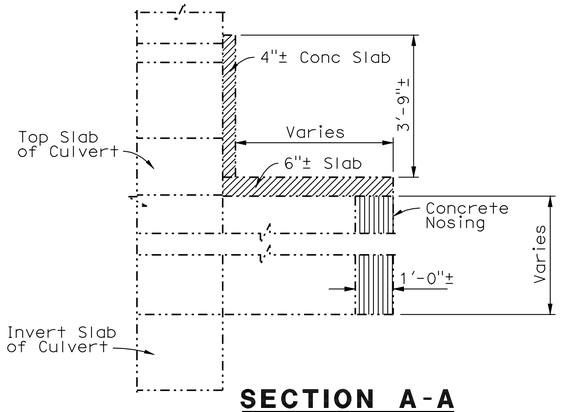

SECTION A-A

1/2"=1'-0"

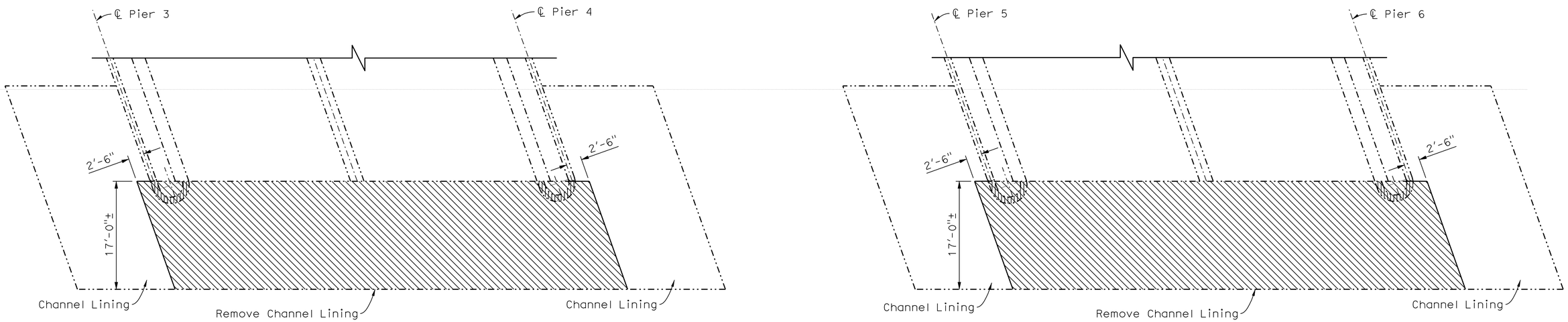

PART PLAN LEFT BRIDGE

1/8"=1'-0"

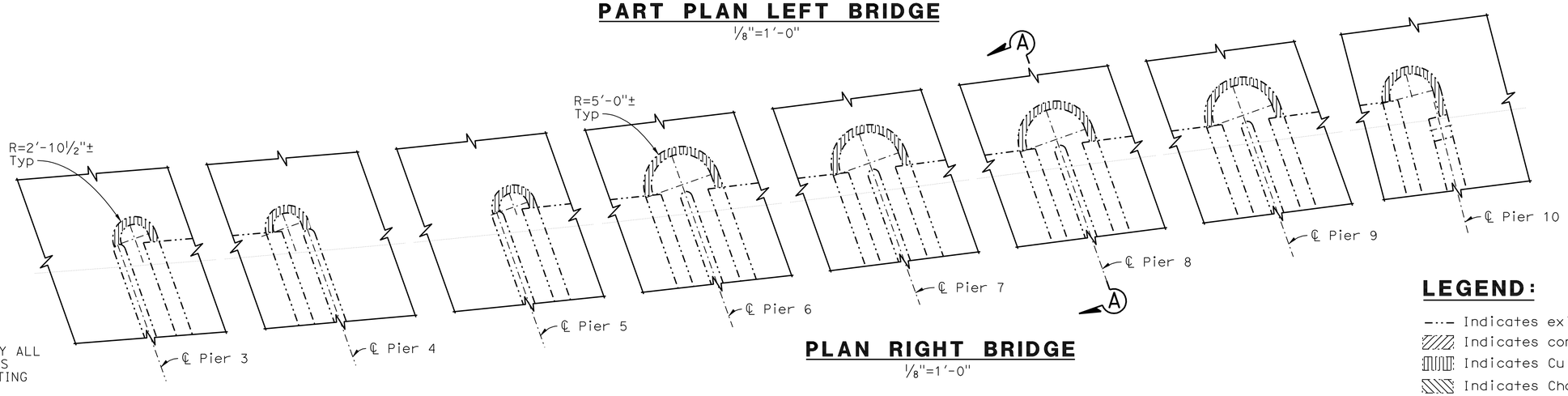

PLAN RIGHT BRIDGE

1/8"=1'-0"

NOTE:
THE CONTRACTOR SHALL VERIFY ALL CONTROLLING FIELD DIMENSIONS BEFORE ORDERING OR FABRICATING ANY MATERIAL.

LEGEND:

- Indicates existing structure
- Indicates concrete removal
- Indicates Culvert Nosing removal
- Indicates Channel Lining removal

	BY	CHECKED
DESIGN	F. Chen	R. Anderson
DETAILS	G. Hallstrom	R. Anderson
QUANTITIES	F. Chen	D. Azzam

STATE OF CALIFORNIA
DEPARTMENT OF TRANSPORTATION

DIVISION OF ENGINEERING SERVICES
STRUCTURE DESIGN
DESIGN BRANCH 10

BRIDGE NO. 54-0471RL
POST MILE 4.21

SANTA ANA RIVER BRIDGE (WIDEN)
CONCRETE REMOVAL DETAILS NO. 1

STRUCTURES DESIGN DETAIL SHEET (ENGLISH) (REV. 09-01-10)

ORIGINAL SCALE IN INCHES FOR REDUCED PLANS 0 1 2 3

UNIT: 3589
PROJECT NUMBER & PHASE: 08000005061
CONTRACT NO.: 08-0M9401

DISREGARD PRINTS BEARING EARLIER REVISION DATES

REVISION DATES: 1-14-11 8-02-11

SHEET 42 OF 66

FILE => 540471rlucrm42.dgn

USERNAME => s124436 DATE PLOTTED => 18-APR-2012 TIME PLOTTED => 15:19

DIST	COUNTY	ROUTE	POST MILES TOTAL PROJECT	SHEET No.	TOTAL SHEETS
08	Riv,SBd	91,215	21.5/21.7, 43.2/45.2,0.0/5.1	1363	1743

REGISTERED CIVIL ENGINEER — DATE 4-06-12

4-16-12
PLANS APPROVAL DATE

REGISTERED PROFESSIONAL ENGINEER — LARRY WU No. C57035 Exp. 6-30-13 CIVIL — STATE OF CALIFORNIA

The State of California or its officers or agents shall not be responsible for the accuracy or completeness of electronic copies of this plan sheet.

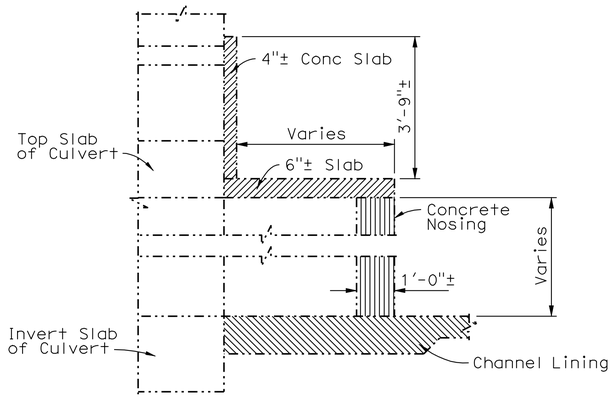

SECTION B-B

1/2"=1'-0"

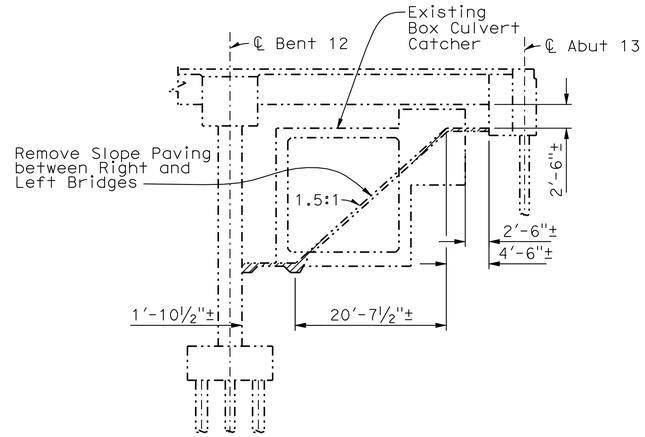

SECTION BETWEEN BRIDGES

NO SCALE

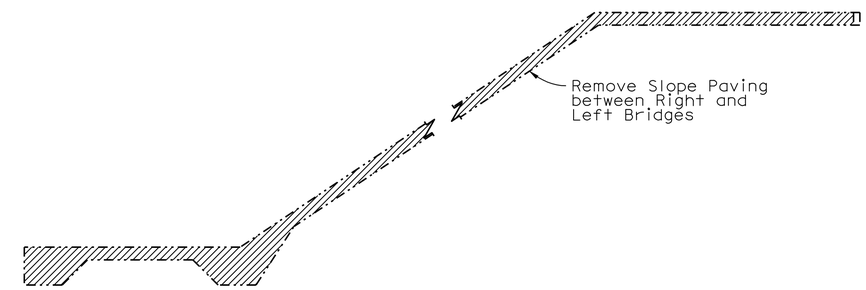

TYPICAL REMOVE SLOPE PAVING

1/2"=1'-0"

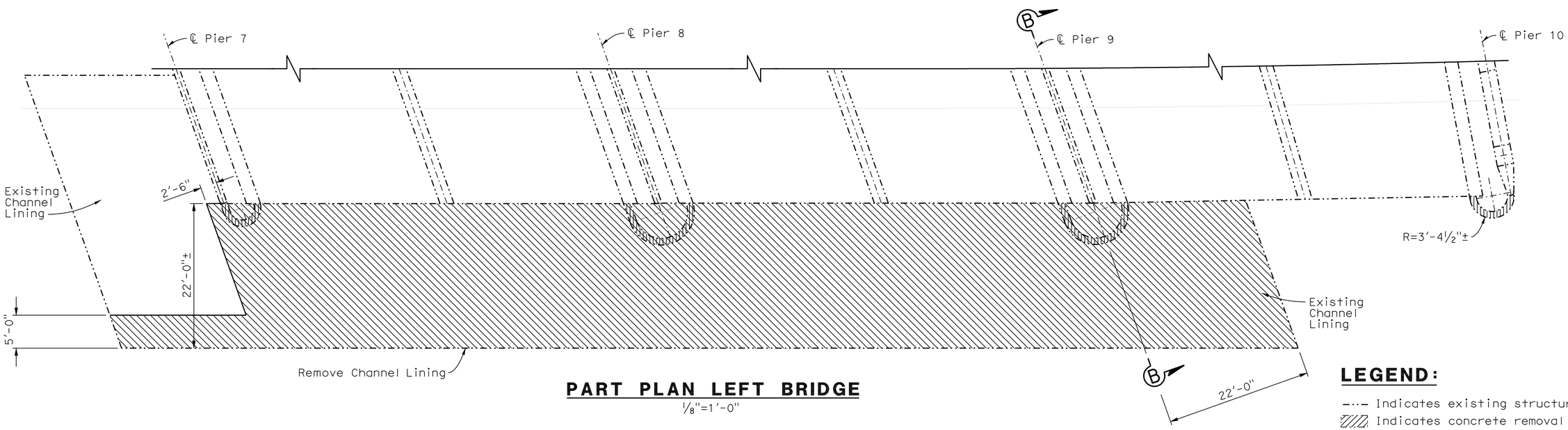

PART PLAN LEFT BRIDGE

⅛"=1'-0"

LEGEND:

- Indicates existing structure
- Indicates concrete removal
- Indicates Culvert Nosing removal
- Indicates Channel Lining removal

NOTE:
THE CONTRACTOR SHALL VERIFY ALL CONTROLLING FIELD DIMENSIONS BEFORE ORDERING OR FABRICATING ANY MATERIAL.

	BY	CHECKED
DESIGN	F. Chen	R. Anderson
DETAILS	G. Hallstrom	R. Anderson
QUANTITIES	F. Chen	D. Azzam

STATE OF CALIFORNIA
DEPARTMENT OF TRANSPORTATION

DIVISION OF ENGINEERING SERVICES
STRUCTURE DESIGN
DESIGN BRANCH 10

BRIDGE NO. 54-0471RL
POST MILE 4.21

SANTA ANA RIVER BRIDGE (WIDEN)
CONCRETE REMOVAL DETAILS NO. 2

STRUCTURES DESIGN DETAIL SHEET (ENGLISH) (REV. 09-01-10)

ORIGINAL SCALE IN INCHES FOR REDUCED PLANS 0 1 2 3

UNIT: 3589
PROJECT NUMBER & PHASE: 08000005061
CONTRACT NO.: 08-0M9401

DISREGARD PRINTS BEARING EARLIER REVISION DATES

REVISION DATES: 1-19-11 8-02-11

SHEET 43 OF 66

FILE => 540471riucrm43.dgn

USERNAME => s124496 DATE PLOTTED => 18-APR-2012 TIME PLOTTED => 15:19

DIST	COUNTY	ROUTE	POST MILES TOTAL PROJECT	SHEET No.	TOTAL SHEETS
08	Riv,SBd	91,215	21.5/21.7, 43.2/45.2,0.0/5.1	1364	1743

REGISTERED CIVIL ENGINEER — DATE 4-06-12

4-16-12
PLANS APPROVAL DATE

REGISTERED PROFESSIONAL ENGINEER — LARRY WU No. C57035 Exp. 6-30-13 CIVIL — STATE OF CALIFORNIA

The State of California or its officers or agents shall not be responsible for the accuracy or completeness of electronic copies of this plan sheet.

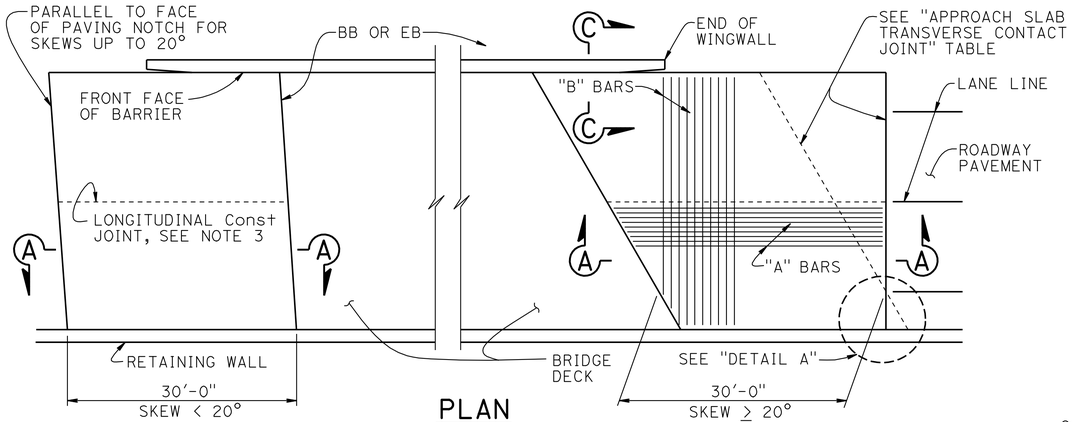

PLAN
1" = 10'

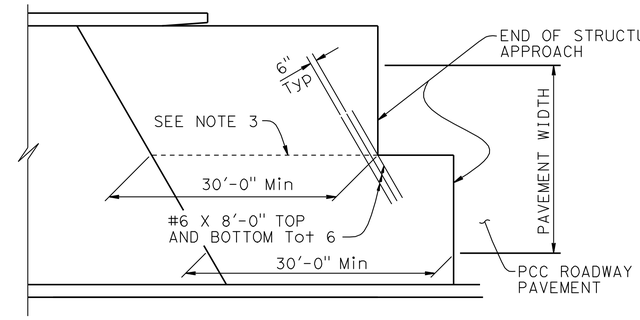

STRUCTURE APPROACH - END STAGGER DETAIL
NO SCALE

APPROACH SLAB TRANSVERSE CONTACT JOINT		
APPROACH SKEW	WITH AC ROADWAY PAVEMENT	WITH PCC ROADWAY PAVEMENT
< 20°	PARALLEL TO FACE OF PN	PARALLEL TO FACE OF PN
20° - 45°	PARALLEL TO FACE OF PN USE "DETAIL A"	STAGGER LINES 24' TO 36' APART
> 45°	PARALLEL TO FACE OF PN USE "DETAIL A"	STAGGER AT EACH LANE LINE

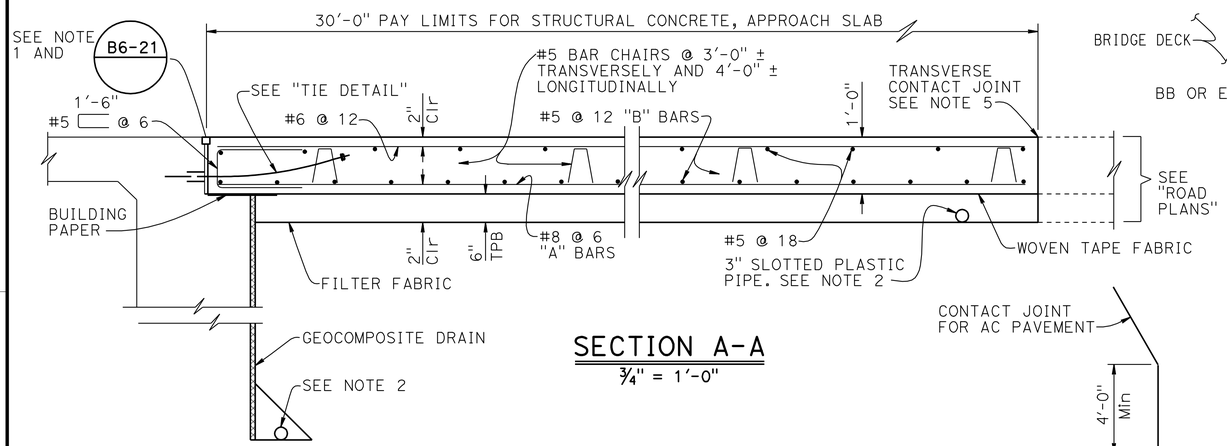

SECTION A-A
¾" = 1'-0"

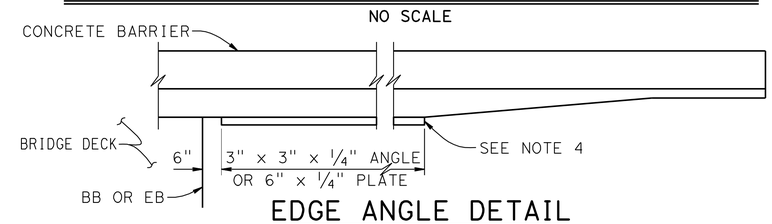

EDGE ANGLE DETAIL
½" = 1'-0"

DETAIL A
NO SCALE

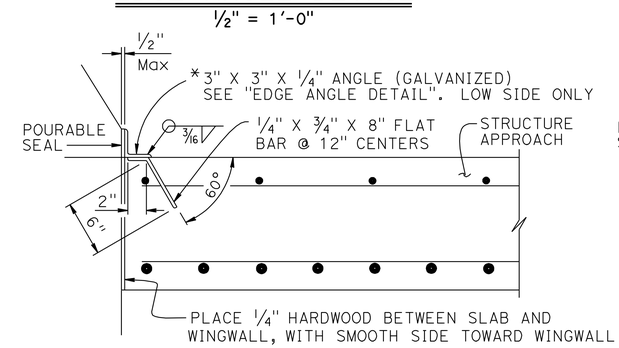

*(TO BE USED WITH CONCRETE BARRIER WITH VERTICAL FACE)

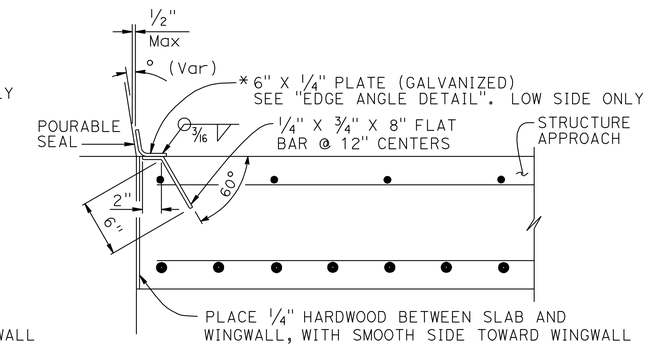

*(TO BE USED WITH CONCRETE BARRIER WITH SLOPING FACE)

DETAIL B
1½" = 1'-0"

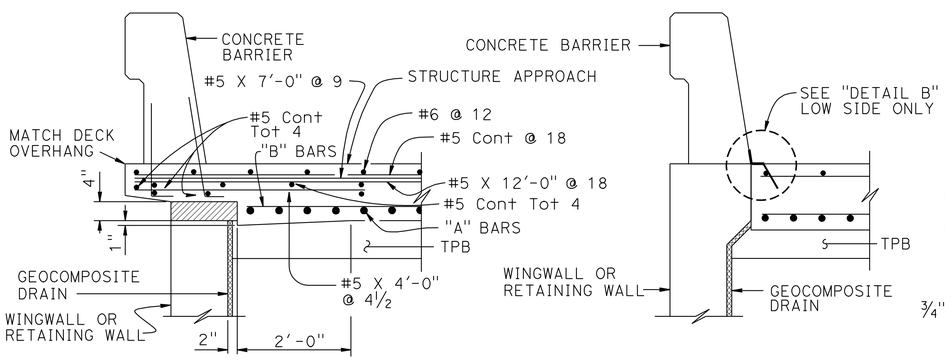

SECTION C-C
¾" = 1'-0"
(Type E-1 to be used, unless otherwise shown on plans)

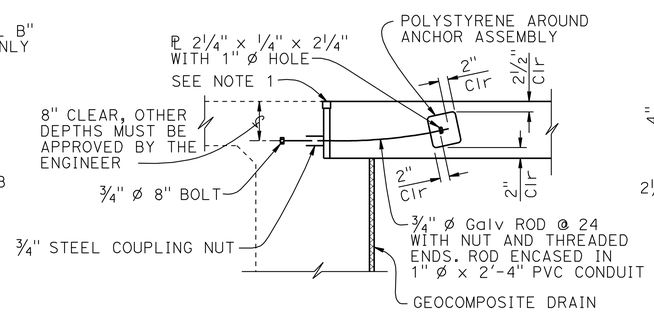

TIE DETAIL
¾" = 1'-0"

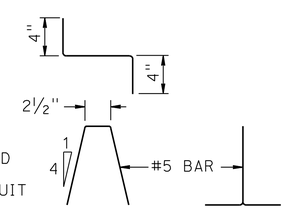

BAR CHAIR DETAIL
1½" = 1'-0"

NOTES:
1. For details not noted or shown, see Structure Plans
2. For drainage details, see "STRUCTURE APPROACH DRAINAGE DETAILS" sheet
3. Longitudinal construction joints, when permitted by the Engineer, shall be located on lane lines
4. End angle or plate at beginning of barrier transition, end of wingwall or end of structure approach, as applicable
5. For transverse contact joint with new PCC paving, refer to Standard Plan P10
6. At the contractor's option, approach slab transverse reinforcement may be placed parallel to paving notch. Spacing of transverse reinforcement is measured along ℄ roadway

STANDARD DRAWING
FILE NO. xs3-140
APPROVAL DATE July 2011

STATE OF CALIFORNIA
DEPARTMENT OF TRANSPORTATION

DIVISION OF ENGINEERING SERVICES

BRIDGE NO. 54-0471RL
POST MILE 4.21

SANTA ANA RIVER BRIDGE (WIDEN)
STRUCTURE APPROACH TYPE N(30D)

DS OSD 2147A (ENGLISH STANDARD DRAWING "XS" BORDER REV. (02-02-11))

ORIGINAL SCALE IN INCHES FOR REDUCED PLANS 0 1 2 3

UNIT: 3589
PROJECT NUMBER & PHASE: 08000005061
CONTRACT NO.: 08-0M9401

DISREGARD PRINTS BEARING EARLIER REVISION DATES

REVISION DATES

SHEET 44 OF 66

FILE => 540471rivsa44.dgn

USERNAME => s124436 DATE PLOTTED => 18-APR-2012 TIME PLOTTED => 15:20

DIST	COUNTY	ROUTE	POST MILES TOTAL PROJECT	SHEET No.	TOTAL SHEETS
08	Riv,SBd	91,215	21.5/21.7, 43.2/45.2,0.0/5.1	1365	1743

REGISTERED CIVIL ENGINEER — DATE 4-06-12

4-16-12
PLANS APPROVAL DATE

REGISTERED PROFESSIONAL ENGINEER — LARRY WU No. C57035 Exp. 6-30-13 CIVIL — STATE OF CALIFORNIA

The State of California or its officers or agents shall not be responsible for the accuracy or completeness of electronic copies of this plan sheet.

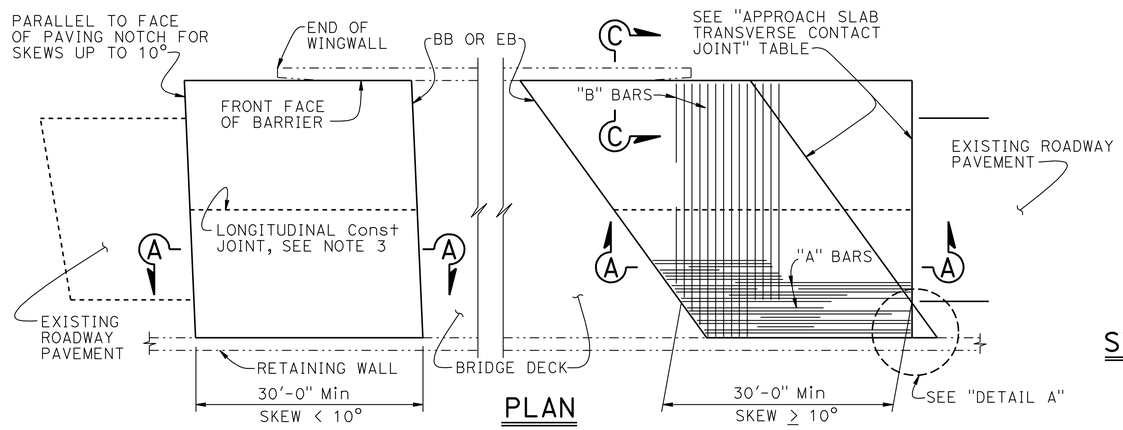

PLAN
1" = 10'

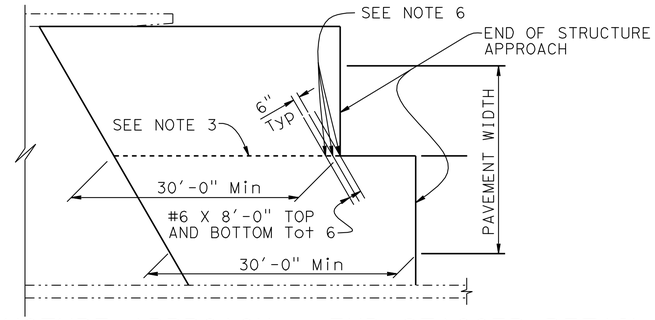

STRUCTURE APPROACH - END STAGGER DETAIL
NO SCALE

APPROACH SLAB TRANSVERSE CONTACT JOINT		
APPROACH SKEW	WITH AC ROADWAY PAVEMENT	WITH PCC ROADWAY PAVEMENT
< 10°	PARALLEL TO FACE OF PN	PARALLEL TO FACE OF PAVING NOTCH
10° - 45°	PARALLEL TO FACE OF PN USE "DETAIL A"	STAGGER LINES 24' TO 36' APART
> 45°	PARALLEL TO FACE OF PN USE "DETAIL A"	STAGGER AT EACH LANE LINE

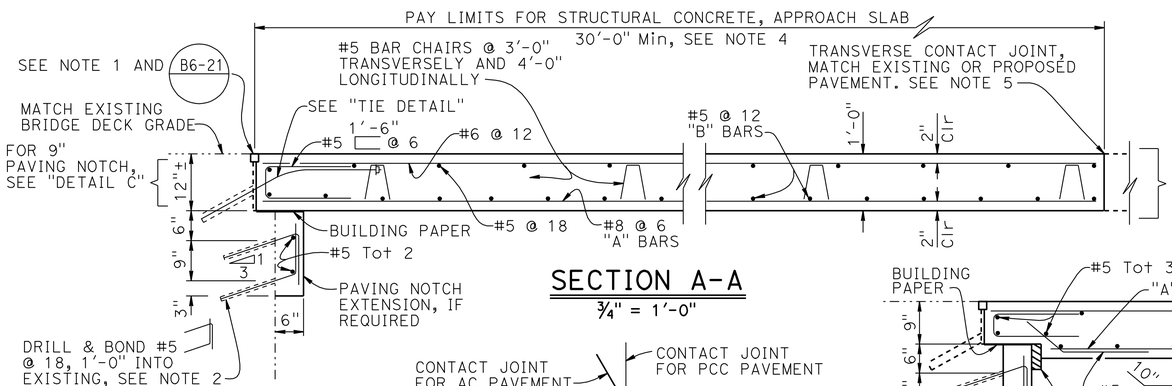

SECTION A-A
¾" = 1'-0"

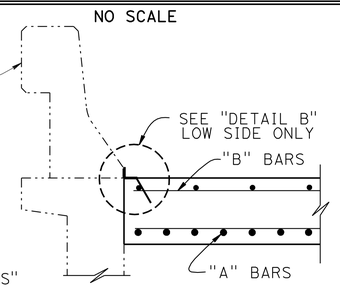

SECTION C-C
¾" = 1'-0"

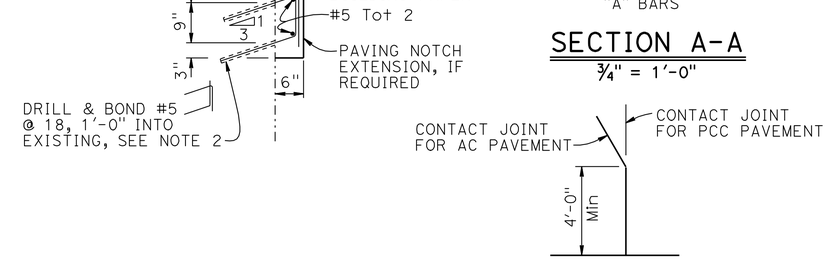

DETAIL A
No Scale

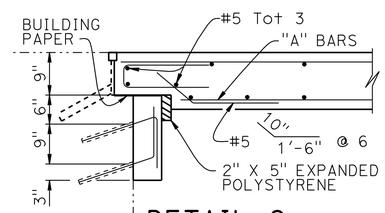

DETAIL C
¾" = 1'-0"

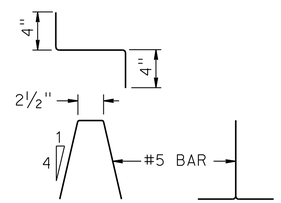

BAR CHAIR DETAIL
1½" = 1'-0"

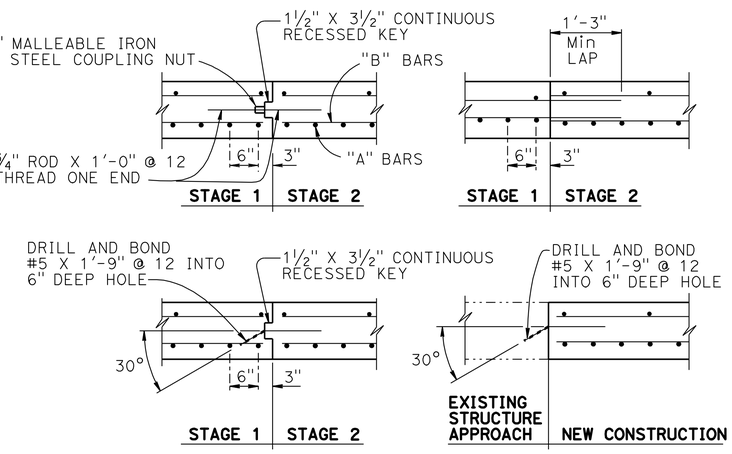

LONGITUDINAL CONSTRUCTION JOINT ALTERNATIVES
¾" = 1'-0"

NOTES:
1. For details not shown or noted, see Structure Plans. Adjust bar reinforcement to clear a sawcut for sealed joint, when required
2. Space to avoid existing prestress anchorages and main reinforcement
3. Longitudinal construction joints, when permitted by the Engineer, shall be located on lane lines
4. Transverse contact joint shall be a minimum of 5'-0" from an existing or constructed weakened plane joint
5. For transverse contact joint with new PCC paving. refer to Standard Plan P10
6. Couplers are required for stage construction
7. End angle or plate at beginning of barrier transition, end of wingwall or end of structure approach as applicable

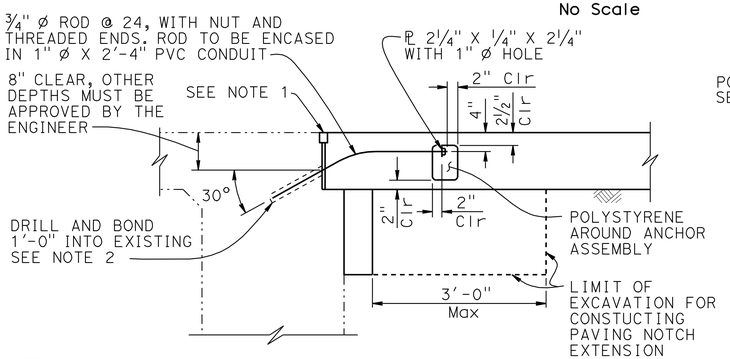

NOTE:
THE CONTRACTOR SHALL VERIFY ALL CONTROLLING FIELD DIMENSIONS BEFORE ORDERING OR FABRICATING ANY MATERIAL.

TIE DETAIL
¾" = 1'-0"

NOTE: For details not shown, see "SECTION A-A"

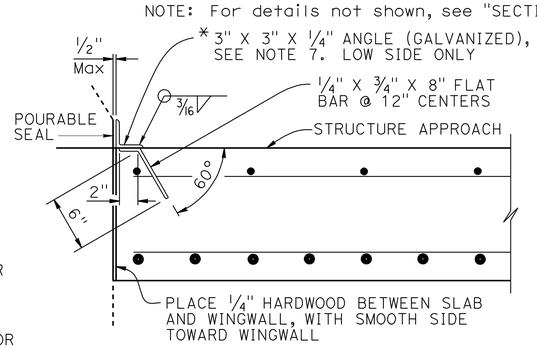

*(TO BE USED WITH CONCRETE BARRIER WITH VERTICAL FACE)

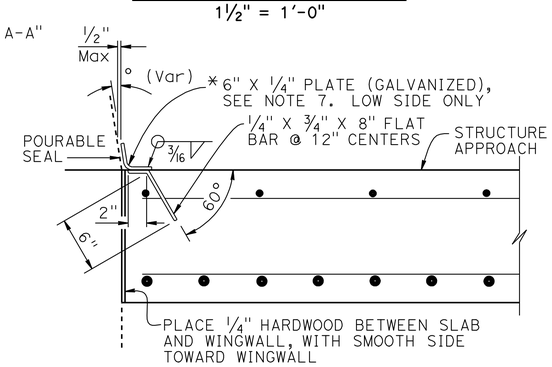

*(TO BE USED WITH CONCRETE BARRIER WITH SLOPING FACE)

DETAIL B
1½" = 1'-0"

STANDARD DRAWING
FILE NO. xs3-150 — APPROVAL DATE July 2011

STATE OF CALIFORNIA DEPARTMENT OF TRANSPORTATION — DIVISION OF ENGINEERING SERVICES

BRIDGE NO. 54-0471RL — POST MILE 4.21

SANTA ANA RIVER BRIDGE (WIDEN)
STRUCTURE APPROACH TYPE R(30D)

DS OSD 2147A (ENGLISH STANDARD DRAWING "XS" BORDER REV. (02-02-11)

ORIGINAL SCALE IN INCHES FOR REDUCED PLANS 0 1 2 3

UNIT: 3589
PROJECT NUMBER & PHASE: 08000005061 — CONTRACT NO.: 08-0M9401

DISREGARD PRINTS BEARING EARLIER REVISION DATES — REVISION DATES

SHEET 45 OF 66

FILE => 540471rivsa45.dgn

USERNAME => s124436 DATE PLOTTED => 18-APR-2012 TIME PLOTTED => 15:20

DIST	COUNTY	ROUTE	POST MILES TOTAL PROJECT	SHEET No.	TOTAL SHEETS
08	Riv,SBd	91,215	21.5/21.7, 43.2/45.2,0.0/5.1	1366	1743

REGISTERED CIVIL ENGINEER 4-06-12 DATE

4-16-12
PLANS APPROVAL DATE

REGISTERED PROFESSIONAL ENGINEER LARRY WU No. C57035 Exp. 6-30-13 CIVIL STATE OF CALIFORNIA

The State of California or its officers or agents shall not be responsible for the accuracy or completeness of electronic copies of this plan sheet.

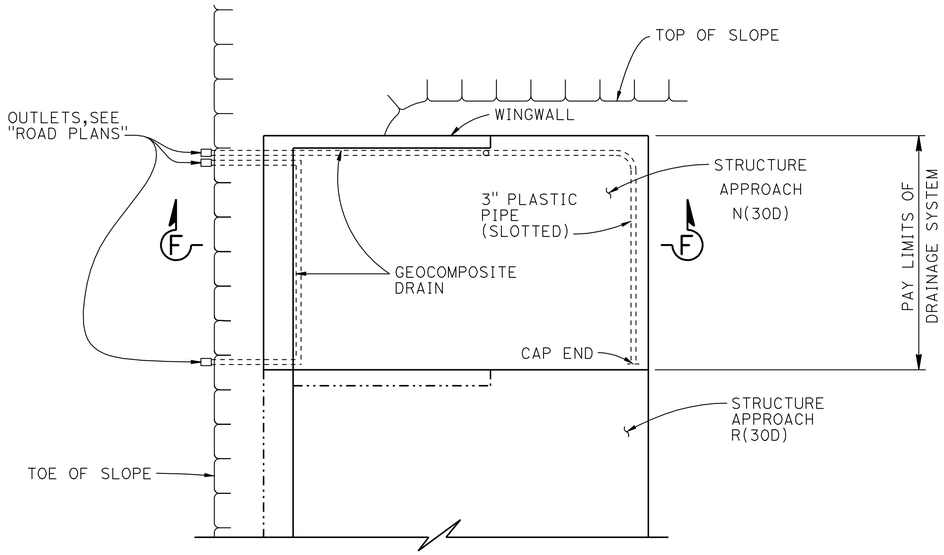

TYPICAL PLAN AT ABUT 1

NO SCALE

NOTE: Right Bridge shown, Left Bridge similar.

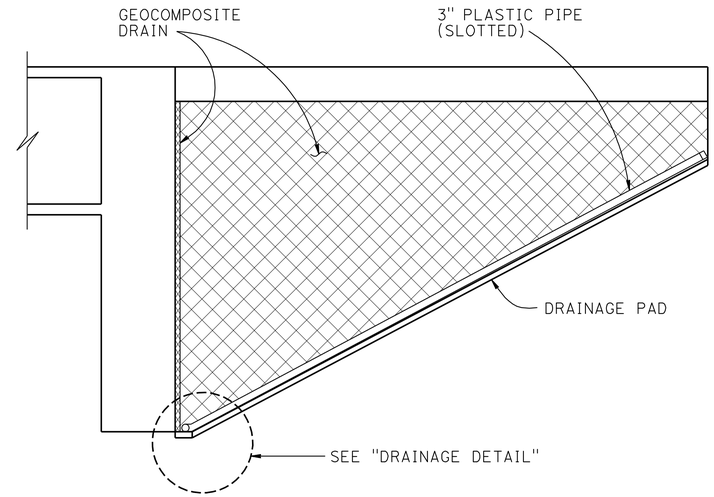

CANTILEVER WINGWALL

SECTION F-F

NO SCALE

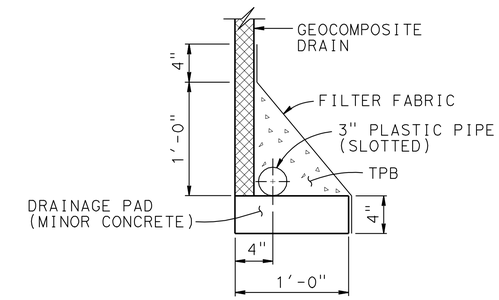

DRAINAGE DETAIL

$1\frac{1}{2}$" = 1'-0"

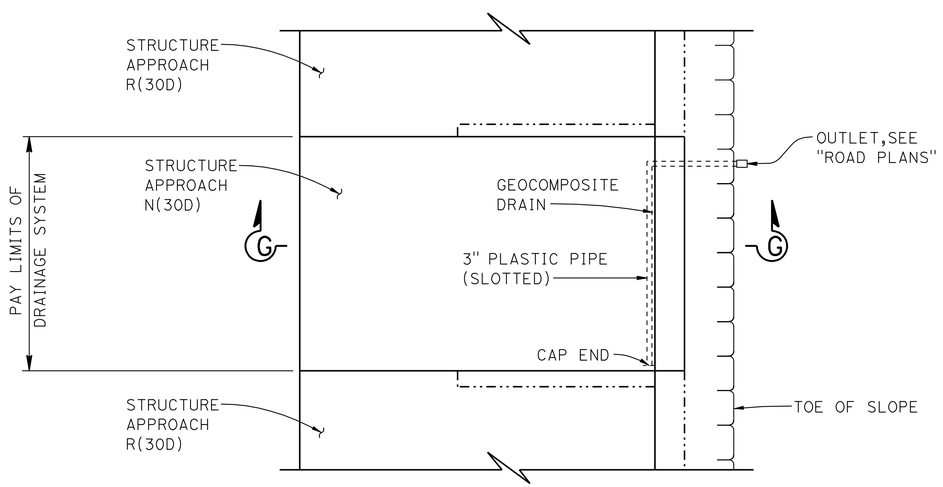

TYPICAL PLAN AT ABUT 13

NO SCALE

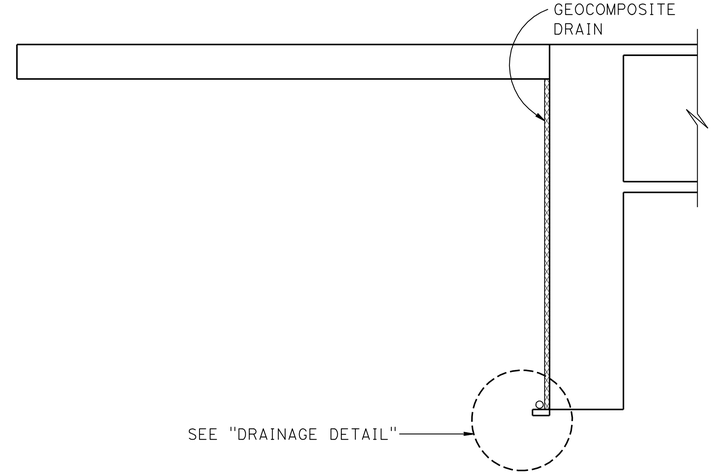

SECTION G-G

NO SCALE

NOTE:
THE CONTRACTOR SHALL VERIFY ALL CONTROLLING FIELD DIMENSIONS BEFORE ORDERING OR FABRICATING ANY MATERIAL.

NOTE: Bends and junctions in 3" plastic pipe are 30" radius Min

	BY	CHECKED
DESIGN	F. Chen	R. Anderson
DETAILS	G. Hallstrom	R. Anderson
QUANTITIES	F. Chen	D. Azzam

STATE OF CALIFORNIA
DEPARTMENT OF TRANSPORTATION

DIVISION OF ENGINEERING SERVICES
STRUCTURE DESIGN
DESIGN BRANCH 10

BRIDGE NO. 54-0471RL
POST MILE 4.21

SANTA ANA RIVER BRIDGE (WIDEN)
STRUCTURE APPROACH DRAINAGE DETAILS

STRUCTURES DESIGN DETAIL SHEET (ENGLISH) (REV. 09-01-10)

ORIGINAL SCALE IN INCHES FOR REDUCED PLANS 0 1 2 3

UNIT: 3589
PROJECT NUMBER & PHASE: 08000005061
CONTRACT NO.: 08-0M9401

DISREGARD PRINTS BEARING EARLIER REVISION DATES → 12-05-11

REVISION DATES

SHEET 46 OF 66

FILE => 540471rlvsadd46.dgn

USERNAME => s124436 DATE PLOTTED => 18-APR-2012 TIME PLOTTED => 15:20

DIST	COUNTY	ROUTE	POST MILES TOTAL PROJECT	SHEET No.	TOTAL SHEETS
08	Riv,SBd	91,215	21.5/21.7, 43.2/45.2,0.0/5.1	1367	1743

PROFESSIONAL GEOLOGIST 12-22-11 DATE

4-16-12
PLANS APPROVAL DATE

PROFESSIONAL GEOLOGIST Hector Valencia No. 7776 Exp. 2/29/12 STATE OF CALIFORNIA

The State of California or its officers or agents shall not be responsible for the accuracy or completeness of electronic copies of this plan sheet.

This LOTB sheet was prepared in accordance with the Caltrans Soil & Rock Logging, Classification, & Presentation Manual (2010 Edition).

BENCH MARK

SUHV607
Fd: Set 1" IP/ CT Red Plug
141.450 Rt. ℄ WB Rte 215
Sta 231+08.819
N 1 847 293.528
E 6 774 960.091
Elev 1001.460
NAVD88

SUHV10000
Fd: PK/ Washer/ Concrete
17.218 Rt. ℄ WB Rte 215
Sta 236+97.279
N 1 847 895.553
E 6 774 930.066
Elev 978.306
NAVD88

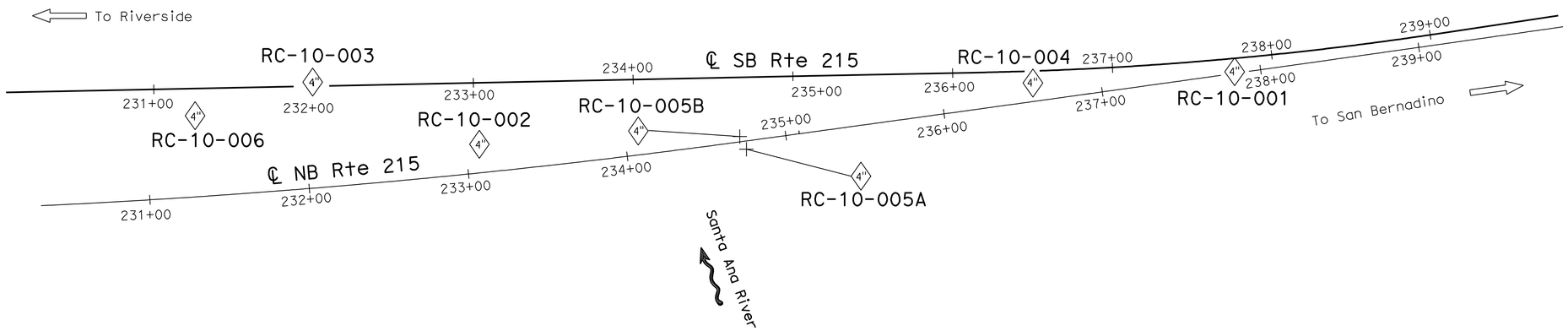

PLAN
1" = 40'

Note:

1. Groundwater was measured in Borings RC-10-001, RC-10-002, RC-10-004, RC-10-006 during the 2010 subsurface investigation.
2. Groundwater was encountered but not measured in all other borings drilled during the 2010 subsurface investigation.
3. Additional subsurface information and groundwater information is available in the attached As-Built LOTB sheets.

ENGINEERING SERVICES	MATERIALS AND GEOTECHNICAL SERVICES	STATE OF CALIFORNIA DEPARTMENT OF TRANSPORTATION	DIVISION OF ENGINEERING SERVICES STRUCTURE DESIGN DESIGN BRANCH 10	BRIDGE NO. 54-0471 R/L POST MILE 4.21	SANTA ANA RIVER BRIDGE (WIDEN) LOG OF TEST BORINGS 1 OF 20
FUNCTIONAL SUPERVISOR NAME: M. DeSalvatore	DRAWN BY: C. Christian/ F. Nguyen 9/11 CHECKED BY: B. Levine	FIELD INVESTIGATION BY: J. Klamecki, H. Valencia			

OGS CIVIL LOG OF TEST BORINGS SHEET

ORIGINAL SCALE IN INCHES FOR REDUCED PLANS 0 1 2 3

UNIT: 3643
PROJECT NUMBER & PHASE: 08000005061 CONTRACT NO.: 08-0M9401

DISREGARD PRINTS BEARING EARLIER REVISION DATES → REVISION DATES ~~12-28-11~~ 12-22-11 SHEET 47 OF 66

FILE => 540471rlzltb47.dgn

USERNAME => s124436 DATE PLOTTED => 18-APR-2012 TIME PLOTTED => 16:18

DIST	COUNTY	ROUTE	POST MILES TOTAL PROJECT	SHEET No.	TOTAL SHEETS
08	Riv,SBd	91,215	21.5/21.7, 43.2/45.2,0.0/5.1	1368	1743

PROFESSIONAL GEOLOGIST 12-22-11 DATE

4-16-12
PLANS APPROVAL DATE

PROFESSIONAL GEOLOGIST Hector Valencia No. 7776 Exp. 2/29/12 STATE OF CALIFORNIA

The State of California or its officers or agents shall not be responsible for the accuracy or completeness of electronic copies of this plan sheet.

This LOTB sheet was prepared in accordance with the Caltrans Soil & Rock Logging, Classification, & Presentation Manual (2010 Edition).

FOR PLAN VIEW, SEE
"LOG OF TEST BORINGS" 1 OF 20

ENGINEERING SERVICES	MATERIALS AND GEOTECHNICAL SERVICES	STATE OF CALIFORNIA DEPARTMENT OF TRANSPORTATION	DIVISION OF ENGINEERING SERVICES STRUCTURE DESIGN DESIGN BRANCH 10	BRIDGE NO. 54-0471 R/L POST MILE 4.21	SANTA ANA RIVER BRIDGE (WIDEN) LOG OF TEST BORINGS 2 OF 20
FUNCTIONAL SUPERVISOR NAME: M. DeSalvatore	DRAWN BY: C. Christian/ F. Nguyen 9/11 CHECKED BY: B. Levine	FIELD INVESTIGATION BY: J. Klamecki			

OGS CIVIL LOG OF TEST BORINGS SHEET

ORIGINAL SCALE IN INCHES FOR REDUCED PLANS 0 1 2 3

UNIT: 3643
PROJECT NUMBER & PHASE: 08000005061 CONTRACT NO.: 08-0M9401

DISREGARD PRINTS BEARING EARLIER REVISION DATES

REVISION DATES ~~12-20-11~~ 12-22-11 SHEET 48 OF 66

FILE => 540471rlzltb48.dgn

USERNAME => s124196 DATE PLOTTED => 18-APR-2012 TIME PLOTTED => 16:18

DIST	COUNTY	ROUTE	POST MILES TOTAL PROJECT	SHEET No.	TOTAL SHEETS
08	Riv,SBd	91,215	21.5/21.7, 43.2/45.2,0.0/5.1	1369	1743

PROFESSIONAL GEOLOGIST — DATE 12-22-11

4-16-12
PLANS APPROVAL DATE

PROFESSIONAL GEOLOGIST — Hector Valencia — No. 7776 — Exp. 2/29/12 — STATE OF CALIFORNIA

The State of California or its officers or agents shall not be responsible for the accuracy or completeness of electronic copies of this plan sheet.

This LOTB sheet was prepared in accordance with the Caltrans Soil & Rock Logging, Classification, & Presentation Manual (2010 Edition).

FOR PLAN VIEW, SEE
"LOG OF TEST BORINGS" 1 OF 20

PROFILE
Horiz: 1" = 40'
Vert: 1" = 10'

ENGINEERING SERVICES	MATERIALS AND GEOTECHNICAL SERVICES	STATE OF CALIFORNIA DEPARTMENT OF TRANSPORTATION	DIVISION OF ENGINEERING SERVICES STRUCTURE DESIGN DESIGN BRANCH 10	BRIDGE NO. 54-0471 R/L POST MILE 4.21	SANTA ANA RIVER BRIDGE (WIDEN) LOG OF TEST BORINGS 3 OF 20
FUNCTIONAL SUPERVISOR NAME: M. DeSalvatore	DRAWN BY: C. Christian/ F. Nguyen 9/11 CHECKED BY: B. Levine	FIELD INVESTIGATION BY: J. Klamecki			

OGS CIVIL LOG OF TEST BORINGS SHEET — ORIGINAL SCALE IN INCHES FOR REDUCED PLANS 0 1 2 3 — UNIT: 3643 PROJECT NUMBER & PHASE: 08000005061 CONTRACT NO.: 08-0M9401 — DISREGARD PRINTS BEARING EARLIER REVISION DATES → REVISION DATES 12-20-11 12-22-11 — SHEET 49 OF 66

FILE => 540471rizltb49.dgn

USERNAME => s124496 DATE PLOTTED => 18-APR-2012 TIME PLOTTED => 16:19

DIST	COUNTY	ROUTE	POST MILES TOTAL PROJECT	SHEET No.	TOTAL SHEETS
08	Riv,SBd	91,215	21.5/21.7, 43.2/45.2,0.0/5.1	1370	1743

PROFESSIONAL GEOLOGIST — 12-22-11 DATE

4-16-12
PLANS APPROVAL DATE

PROFESSIONAL GEOLOGIST — Hector Valencia No. 7776 Exp. 2/29/12 — STATE OF CALIFORNIA

The State of California or its officers or agents shall not be responsible for the accuracy or completeness of electronic copies of this plan sheet.

This LOTB sheet was prepared in accordance with the Caltrans Soil & Rock Logging, Classification, & Presentation Manual (2010 Edition).

FOR PLAN VIEW, SEE
"LOG OF TEST BORINGS" 1 OF 20

38.5' Rt Sta 233+03.0
"SB Rte 215" Line

RC-10-002

961.3'

960 — 950 — 940 — 930 — 920 — 910 — 900 — 890 — 880 — 870 — 860

6 1.4 (4")
7 1.4
22 1.4 (PA)
50 1.4
39 1.4 (CR)
61 1.4
67 1.4
60 1.4
GWS Elev 922.2'
10-01-10
10/6,16/6 1.4
26 1.4 (PA)
21 1.4
48 1.4 (CR)
16 1.4
27 1.4
9/6,16/6 1.4
10/6,8/6 1.4
51/6 1.4
37 1.4 (CR)
28 1.4
39 1.4
35 1.4

Poorly-graded SAND with SILT (SP-SM); loose; olive brown; dry to depth of 6" then moist; fine SAND; few fine and coarse GRAVEL.
Poorly-graded SAND with SILT, GRAVEL and COBBLES (SP-SM); loose; olive brown; moist; fine and medium SAND; some fine and coarse, subangular GRAVEL; 30% IGNEOUS COBBLES, 4", very hard.
SILTY SAND (SM) moderately bedded with thin interbeds (10%) of fat CLAY with SAND (CH); SAND (SM); olive brown; moist; fine SAND little fines. CLAY (CL); olive brown; moist; little SAND.
SILTY SAND (SM); medium dense; olive brown; moist; fine SAND; little fines.
Elastic SILT (MH); stiff; olive brown; moist; PP= 1.5 tsf.
Poorly graded SAND with SILT (SP-SM); very dense; light olive brown; moist; fine and medium SAND; few subangular fine and coarse GRAVEL.
-little subangular; fine and coarse GRAVEL.
Poorly graded SAND (SP); very dense; light yellowish brown; moist; fine SAND; trace fine GRAVEL.
Well-graded SAND with GRAVEL and COBBLES (SW); very dense; light olive brown; wet; some fine and coarse GRAVEL; 10% IGNEOUS COBBLES, 3"; very hard.
-with 20% IGNEOUS COBBLES, 4", very hard.
Elastic SILT with SAND (MH); greenish gray; wet; little fine SAND.
SILTY SAND (SM) thickly bedded with thin interbeds (20%) of Elastic SILT with SAND (MH). SAND (SM); dense; greenish gray; wet; fine SAND; some fines. SILT (MH); dark greenish gray; wet; fine SAND.
-1' thick interbed of Fat CLAY (CH); very stiff; dark greenish gray; moist; PP=3.5 tsf.
Fat CLAY (CH) thickly bedded with thin interbeds (30%) of SANDY SILT (ML). CLAY (CH); very stiff; dark greenish gray; moist; PP=4.0 tsf. SILT (ML); dense; greenish gray; wet; some fine SAND.
SILTY SAND (SM); very dense; greenish gray; wet; fine SAND; some fines; few fine GRAVEL.
Fat CLAY (CH) thickly bedded with thin interbeds (20%) of SILT (ML). CLAY (CH); very stiff; greenish gray; moist; sheared with discontinuous slickensided planes; PP=3.5 tsf. SILT (ML);medium dense; greenish gray; moist.
Elastic SILT with SAND (MH) thickly bedded with thin interbeds (20%) of SILTY SAND (SM); SILT (MH); dark greenish gray; wet; fine SAND. SAND (SM); dense; dark greenish gray; wet; fine SAND; little fines.
Fat CLAY (CH); very stiff; greenish gray; moist; sheared with discontinuous, slickensided planes; PP=3.0 tsf.
SILTY SAND (SM) thickly bedded with thin interbeds of Fat CLAY (CH). SAND (SM); dense; greenish gray; wet; fine SAND; some fines. CLAY (CH); very stiff; dark greenish gray; moist; PP=3.0 tsf.
-medium dense; little fines.
-2' thick interbed of Fat CLAY (CH); very stiff; dark greenish gray; moist; PP=3.0 tsf.
-1' thick interbed of Elastic SILT (MH); dark greenish gray; moist.
Well-graded SAND with SILT (SW-SM); very dense; greenish gray; wet; few fine GRAVEL.
SILT with SAND (ML); dense; greenish gray; wet; fine SAND.
-1' thick interbed of Elastic SILT (MH); dark greenish gray; wet.
-1.3' thick interbed of Fat CLAY (CH) very stiff; dark greenish gray; moist; PP=3.5 tsf.
Fat CLAY (CH); hard; olive gray; moist; PP> 4.5 tsf.
-slickensided surfaces with 30° dip.
SILT with SAND (ML); very dense; greenish gray; wet; fine SAND.
Fat CLAY (CH); hard; dark olive gray; moist; PP=4.0 tsf.
-0.5' thick interbed of Elastic SILT (MH); dark greenish gray; wet; few fine SAND.
-very stiff; PP=3.0 tsf.

9-29-10
Terminated at Elev 859.8'
ERi = 80%

232+50 — 233+50 — 234+50

PROFILE
Horiz: 1" = 10'
Vert: 1" = 10'

ENGINEERING SERVICES	MATERIALS AND GEOTECHNICAL SERVICES	STATE OF CALIFORNIA DEPARTMENT OF TRANSPORTATION	DIVISION OF ENGINEERING SERVICES STRUCTURE DESIGN DESIGN BRANCH 10	BRIDGE NO. 54-0471 R/L	SANTA ANA RIVER BRIDGE (WIDEN)
FUNCTIONAL SUPERVISOR	DRAWN BY: C. Christian/ F. Nguyen 9/11	FIELD INVESTIGATION BY:		POST MILE 4.21	LOG OF TEST BORINGS 4 OF 20
NAME: M. DeSalvatore	CHECKED BY: B. Levine	H. Valencia			

OGS CIVIL LOG OF TEST BORINGS SHEET — ORIGINAL SCALE IN INCHES FOR REDUCED PLANS 0 1 2 3 — UNIT: 3643 — PROJECT NUMBER & PHASE: 08000005061 — CONTRACT NO.: 08-0M9401 — DISREGARD PRINTS BEARING EARLIER REVISION DATES — REVISION DATES 12-20-11 12-22-11 — SHEET 50 OF 66

FILE => 540471rizltb50.dgn

USERNAME => s124496 DATE PLOTTED => 18-APR-2012 TIME PLOTTED => 16:19

DIST	COUNTY	ROUTE	POST MILES TOTAL PROJECT	SHEET No.	TOTAL SHEETS
08	Riv,SBd	91,215	21.5/21.7, 43.2/45.2,0.0/5.1	1371	1743

PROFESSIONAL GEOLOGIST — DATE 12-22-11

4-16-12
PLANS APPROVAL DATE

PROFESSIONAL GEOLOGIST — Hector Valencia No. 7776 Exp. 2/29/12 — STATE OF CALIFORNIA

The State of California or its officers or agents shall not be responsible for the accuracy or completeness of electronic copies of this plan sheet.

This LOTB sheet was prepared in accordance with the Caltrans Soil & Rock Logging, Classification, & Presentation Manual (2010 Edition).

FOR PLAN VIEW, SEE
"LOG OF TEST BORINGS" 1 OF 20

37.0' Rt Sta 234+66.0
"SB Rte 215" Line

RC-10-005B
963.3'
4"

960 — Soil not logged, from Elev 963.3' to Elev 937.6'; refer to boring RC-10-005A for soil descriptions.

950

940 — CR

50/6"-REF 1.4

930 — Well-graded SAND with GRAVEL (SW); very dense; olive brown; moist; little fine and coarse, subangular and subrounded GRAVEL.

REF 1.4

92 1.4 — -some fine and coarse, from rounded to subangular GRAVEL.

920 — Fat CLAY (CH); very stiff; olive; moist; few fine, rounded GRAVEL.

19 1.4 — -dark greenish gray, no GRAVEL.
-moderately spaced slickensides; PP=3.0 tsf.

23 1.4 — Elastic SILT (MH); very stiff; olive gray; moist; PP=3.5 tsf.

910 — Fat CLAY (CH); very stiff; olive gray; moist; PP=3.5 tsf.

35 1.4 — Elastic SILT (MH); hard; dark gray; moist; trace fine SAND; weakly cemented; PP=4.5 tsf.

61 1.4 — -moderately cemented.

900 — -weakly cemented.

83 1.4 — SILT with SAND (ML); dark gray; wet; little fine SAND; trace coarse SAND; trace fine GRAVEL.

55/4 1.4

890 — Poorly graded SAND with SILT (SP-SM); very dense; light brownish gray; wet; mostly fine SAND; few medium SAND; trace coarse SAND; trace fine, subangular GRAVEL.

63 1.4

84 1.4 — SILT with SAND (ML); very dense; olive gray; wet; little fine SAND.

880 — Poorly graded SAND with SILT (SP-SM); very dense; light brownish gray; wet; mostly fine SAND; few medium SAND; trace coarse SAND; trace coarse GRAVEL.

55/6"-REF 1.4 — -little medium SAND; few fine GRAVEL.

REF 1.4 — Well-graded SAND (SW); very dense; light brownish gray; wet; few fine, subangular GRAVEL; trace coarse GRAVEL.

870 — SILT with SAND (ML); very dense; olive gray; wet; little fine SAND.

73 1.4 — Elastic SILT (MH); very stiff; dark gray; moist; PP=3.5 tsf.

35/5"-REF 1.4 — SILT with SAND (ML); very dense; gray; wet; little fine SAND.

860

REF 1.4

10-01-10
Terminated at Elev 862.3'
ERi = 81%

234+00 236+00 238+00

PROFILE
Horiz: 1" = 20'
Vert: 1" = 10'

ENGINEERING SERVICES	MATERIALS AND GEOTECHNICAL SERVICES	STATE OF CALIFORNIA DEPARTMENT OF TRANSPORTATION	DIVISION OF ENGINEERING SERVICES STRUCTURE DESIGN DESIGN BRANCH 10	BRIDGE NO. 54-0471 R/L POST MILE 4.21	SANTA ANA RIVER BRIDGE (WIDEN) LOG OF TEST BORINGS 5 OF 20
FUNCTIONAL SUPERVISOR NAME: M. DeSalvatore	DRAWN BY: C. Christian/ F. Nguyen 9/11 CHECKED BY: B. Levine	FIELD INVESTIGATION BY: J. Klamecki			

OGS CIVIL LOG OF TEST BORINGS SHEET — ORIGINAL SCALE IN INCHES FOR REDUCED PLANS 0 1 2 3

UNIT: 3643
PROJECT NUMBER & PHASE: 08000005061 CONTRACT NO.: 08-0M9401

DISREGARD PRINTS BEARING EARLIER REVISION DATES → REVISION DATES ~~12-20-11~~ 12-22-11 SHEET 51 OF 66

FILE => 540471rizltb51.dgn

USERNAME => s124496 DATE PLOTTED => 18-APR-2012 TIME PLOTTED => 16:19

DIST	COUNTY	ROUTE	POST MILES TOTAL PROJECT	SHEET No.	TOTAL SHEETS
08	Riv,SBd	91,215	21.5/21.7, 43.2/45.2,0.0/5.1	1372	1743

PROFESSIONAL GEOLOGIST — DATE 12-22-11

4-16-12
PLANS APPROVAL DATE

PROFESSIONAL GEOLOGIST — Hector Valencia — No. 7776 — Exp. 2/29/12 — STATE OF CALIFORNIA

The State of California or its officers or agents shall not be responsible for the accuracy or completeness of electronic copies of this plan sheet.

This LOTB sheet was prepared in accordance with the Caltrans Soil & Rock Logging, Classification, & Presentation Manual (2010 Edition).

FOR PLAN VIEW, SEE
"LOG OF TEST BORINGS" 1 OF 20

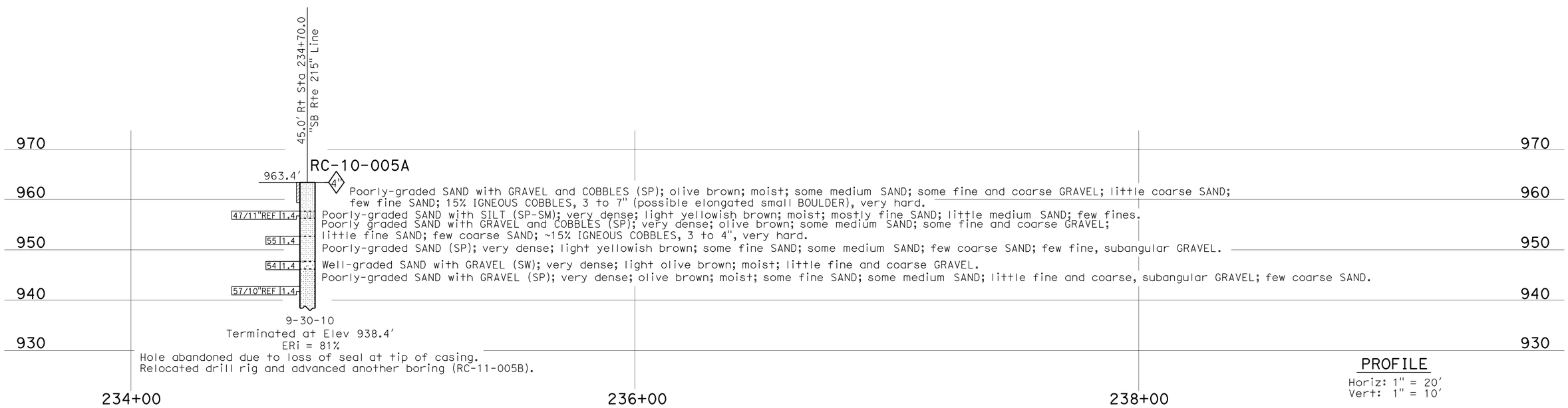

PROFILE
Horiz: 1" = 20'
Vert: 1" = 10'

ENGINEERING SERVICES	MATERIALS AND GEOTECHNICAL SERVICES	STATE OF CALIFORNIA DEPARTMENT OF TRANSPORTATION	DIVISION OF ENGINEERING SERVICES STRUCTURE DESIGN DESIGN BRANCH 10	BRIDGE NO. 54-0471 R/L POST MILE 4.21	SANTA ANA RIVER BRIDGE (WIDEN)
FUNCTIONAL SUPERVISOR NAME: M. DeSalvatore	DRAWN BY: C. Christian/ F. Nguyen 9/11 CHECKED BY: B. Levine	FIELD INVESTIGATION BY: J. Klamecki			LOG OF TEST BORINGS 6 OF 20

OGS CIVIL LOG OF TEST BORINGS SHEET

ORIGINAL SCALE IN INCHES FOR REDUCED PLANS 0 1 2 3

UNIT: 3643
PROJECT NUMBER & PHASE: 08000005061 CONTRACT NO.: 08-0M9401

DISREGARD PRINTS BEARING EARLIER REVISION DATES → 12-20-11 12-22-11

SHEET 52 OF 66

FILE => 540471rlzltb52.dgn

USERNAME => s124936 DATE PLOTTED => 18-APR-2012 TIME PLOTTED => 16:19

DIST	COUNTY	ROUTE	POST MILES TOTAL PROJECT	SHEET No.	TOTAL SHEETS
08	Riv,SBd	91,215	21.5/21.7, 43.2/45.2,0.0/5.1	1373	1743

PROFESSIONAL GEOLOGIST — DATE 12-22-11

4-16-12
PLANS APPROVAL DATE

PROFESSIONAL GEOLOGIST Hector Valencia No. 7776 Exp. 2/29/12 STATE OF CALIFORNIA

The State of California or its officers or agents shall not be responsible for the accuracy or completeness of electronic copies of this plan sheet.

This LOTB sheet was prepared in accordance with the Caltrans Soil & Rock Logging, Classification, & Presentation Manual (2010 Edition).

FOR PLAN VIEW, SEE
"LOG OF TEST BORINGS" 1 OF 20

ENGINEERING SERVICES	MATERIALS AND GEOTECHNICAL SERVICES	STATE OF CALIFORNIA DEPARTMENT OF TRANSPORTATION	DIVISION OF ENGINEERING SERVICES STRUCTURE DESIGN DESIGN BRANCH 10	BRIDGE NO. 54-0471 R/L POST MILE 4.21	SANTA ANA RIVER BRIDGE (WIDEN)
FUNCTIONAL SUPERVISOR NAME: M. DeSalvatore	DRAWN BY: C. Christian/ F. Nguyen 9/11 CHECKED BY: B. Levine	FIELD INVESTIGATION BY: H. Valencia			LOG OF TEST BORINGS 7 OF 20

OGS CIVIL LOG OF TEST BORINGS SHEET — ORIGINAL SCALE IN INCHES FOR REDUCED PLANS 0 1 2 3

UNIT: 3643
PROJECT NUMBER & PHASE: 08000005061 CONTRACT NO.: 08-0M9401

DISREGARD PRINTS BEARING EARLIER REVISION DATES → REVISION DATES 12-20-11 12-22-11 — SHEET 53 OF 66

FILE => 540471rlzltb53.dgn

USERNAME => s124496 DATE PLOTTED => 18-APR-2012 TIME PLOTTED => 16:19

DIST	COUNTY	ROUTE	POST MILES TOTAL PROJECT	SHEET No.	TOTAL SHEETS
08	Riv,SBd	91,215	21.5/21.7, 43.2/45.2,0.0/5.1	1374	1743

PROFESSIONAL GEOLOGIST — DATE 12-22-11

4-16-12
PLANS APPROVAL DATE

PROFESSIONAL GEOLOGIST — Hector Valencia No. 7776 Exp. 2/29/12 — STATE OF CALIFORNIA

The State of California or its officers or agents shall not be responsible for the accuracy or completeness of electronic copies of this plan sheet.

This LOTB sheet was prepared in accordance with the Caltrans Soil & Rock Logging, Classification, & Presentation Manual (2010 Edition).

FOR PLAN VIEW, SEE
"LOG OF TEST BORINGS" 1 OF 20

8.5' Rt Sta 237+76.0
"SB Rte 215" Line

RC-10-001

975.1'

Elev	Blows/Penetration	Sample
970	35 | 1.4	
	5 | 1.4	
960	27 | 1.4	PA
	35 | 1.4	PA, CR
950	38 | 1.4	
	50 | 1.4	
940	50/4 | 1.4	
	58 | 1.4	
930	55/6 | 1.4	
	56 | 1.4	
920	83 | 1.4	CR
	40/9"-REF | 1.4	
910	REF | 1.4	
	REF | 1.4	
900	36 | 1.4	
	49 | 1.4	
890	46 | 1.4	
	44 | 1.4	CR
880	33 | 1.4	
	43 | 1.4	
870	28 | 1.4	
	38 | 1.4	
860	44 | 1.4	
	36 | 1.4	
850	38 | 1.4	

4.3

GWS Elev 941.0'
11-18-10

9-01-10
Terminated at Elev 853.6'
ERi = 68%

980 — 4.3

SILTY SAND (SM); dense; light olive brown; moist; fine SAND; some fines; few fine and coarse GRAVEL.
-loose; little fines.

970 — SILTY SAND (SM); dense; olive; moist; fine SAND; some fines.

960 — -0.8' thick interbed of SANDY SILT (ML); olive; moist; some fine SAND.
-0.8' thick interbed of SANDY SILT (ML); olive; moist; some fine SAND.
Poorly-graded SAND with GRAVEL (SP); very dense; light olive brown; moist; fine and medium SAND; little fine and coarse, subangular GRAVEL.

950 — -0.7' thick interbed of SANDY SILT (ML); olive; moist; some fine SAND.
-1.5' thick interbed of Well-graded GRAVEL with SAND (GW); light olive brown; some from fine to coarse SAND.

940 — Poorly-graded SAND with GRAVEL (SP); very dense; light olive brown; moist; fine and medium SAND; some fine and coarse, subrounded to subangular GRAVEL.

930 — -little fine and coarse GRAVEL.
Well-graded SAND with GRAVEL (SW); very dense; light olive brown; wet; some fine and coarse, subangular GRAVEL.
-10% IGNEOUS COBBLES, 4"; hard.

920 — Well-graded SAND with GRAVEL and COBBLES (SW); very dense; light olive brown; wet; little fine and coarse GRAVEL, 20% IGNEOUS COBBLES, 3 to 4", varies from very hard to moderately hard.
-0.6' thick interbed of Elastic SILT with SAND (MH); dark greenish gray; little from fine to coarse SAND; few fine GRAVEL.

910 — Lean CLAY (CL); very stiff; dark greenish gray; moist; few fine SAND; scattered slickensided planes with near vertical dip; PP=2.0 tsf.

900 — Fat CLAY (CH); hard; dark greenish gray and olive gray; moist; few fine SAND; scattered sheared, discontinuous, slickensided planes with near vertical dip; PP> 4.5 tsf.
-trace fine SAND.

890 — -with scattered (15%) thin interbeds of lean CLAY with SAND (CL) and SILT with SAND (ML). SILT (ML); olive gray; moist; fine SAND. CLAY (CL); hard; dark greenish gray; moist; fine SAND; PP> 4.5 tsf.

880 — Fat CLAY (CH); hard; olive gray and dark greenish gray; moist; trace fine SAND; scattered sheared, slickensided planes with primarily near vertical dip; PP> 4.5 tsf.
-PP= 4.0 tsf.
-PP> 4.5 tsf.

870 — Fat CLAY (CH) very thickly bedded with thin interbeds (10 to 20%) of SILT with SAND (ML). CLAY (CH); very stiff; olive gray; moist; PP=3.0 tsf. SILT (ML); dense; very dark greenish gray; moist; little fine SAND; scattered sheared, discontinuous slickensided planes with primarily near vertical dip.
-PP= 4.0 tsf.

860 — -PP≥ 4.5 tsf.
Fat CLAY (CH) very thickly bedded with thin interbeds (40%) of SILT with SAND (ML). CLAY (CH); very stiff; olive gray; moist; PP= 3.8 tsf. SILT (ML); dense; dark greenish gray; moist; fine SAND; scattered sheared discontinuous slickensided planes with near vertical dip.
-hard; PP= 4.0 tsf.

850 — -with thin interbeds (10%) of Elastic SILT (ML); hard; olive gray; PP≥ 4.5 tsf.

237+00 — 239+00 — 241+00

PROFILE
Horiz: 1" = 20'
Vert: 1" = 10'

ENGINEERING SERVICES	MATERIALS AND GEOTECHNICAL SERVICES	STATE OF CALIFORNIA DEPARTMENT OF TRANSPORTATION	DIVISION OF ENGINEERING SERVICES STRUCTURE DESIGN DESIGN BRANCH 10	BRIDGE NO. 54-0471 R/L POST MILE 4.21	SANTA ANA RIVER BRIDGE (WIDEN) LOG OF TEST BORINGS 8 OF 20
FUNCTIONAL SUPERVISOR NAME: M. DeSalvatore	DRAWN BY: C. Christian/ F. Nguyen 9/11 CHECKED BY: B. Levine	FIELD INVESTIGATION BY: H. Valencia			

OGS CIVIL LOG OF TEST BORINGS SHEET — ORIGINAL SCALE IN INCHES FOR REDUCED PLANS 0 1 2 3

UNIT: 3643
PROJECT NUMBER & PHASE: 08000005061 — CONTRACT NO.: 08-0M9401

DISREGARD PRINTS BEARING EARLIER REVISION DATES → 12-22-11 12-22-11

SHEET 54 OF 66

FILE => 540471r1z1tb54.dgn

USERNAME => s124996 DATE PLOTTED => 18-APR-2012 TIME PLOTTED => 16:19

DIST	COUNTY	ROUTE	POST MILES TOTAL PROJECT	SHEET No.	TOTAL SHEETS
08	Riv,SBd	91,215	21.5/21.7, 43.2/45.2,0.0/5.1	1375	1743

PROFESSIONAL GEOLOGIST — 12-22-11 DATE

4-16-12
PLANS APPROVAL DATE

PROFESSIONAL GEOLOGIST — Hector Valencia No. 7776 Exp. 2/29/12 — STATE OF CALIFORNIA

The State of California or its officers or agents shall not be responsible for the accuracy or completeness of electronic copies of this plan sheet.

REFERENCE: CALTRANS SOIL & ROCK LOGGING, CLASSIFICATION, AND PRESENTATION MANUAL (2010)

CEMENTATION

Description	Criteria
Weak	Crumbles or breaks with handling or little finger pressure.
Moderate	Crumbles or breaks with considerable finger pressure.
Strong	Will not crumble or break with finger pressure.

BOREHOLE IDENTIFICATION

Symbol	Hole Type	Description
Size	A	Auger Boring (hollow or solid stem bucket)
Size	R RW RC P	Rotary drilled boring (conventional) Rotary drilled with self-casing wire-line Rotary core with continuously-sampled, self-casing wire-line Rotary percussion boring (air)
Size	R RC	Rotary drilled diamond core Rotary drilled rock core
Size	HD HA	Hand driven (1-inch soil tube) Hand Auger
●	D	Dynamic Cone Penetration Boring
▲	CPT	Cone Penetration Test (ASTM D 5778)
⬚	O	Other (note on LOTB)

Note: Size in inches.

CONSISTENCY OF COHESIVE SOILS

Description	Shear Strength (tsf)	Pocket Penetrometer Measurement, PP, (tsf)	Torvane Measurement, TV, (tsf)	Vane Shear Measurement, VS, (tsf)
Very Soft	Less than 0.12	Less than 0.25	Less than 0.12	Less than 0.12
Soft	0.12 - 0.25	0.25 - 0.5	0.12 - 0.25	0.12 - 0.25
Medium Stiff	0.25 - 0.5	0.5 - 1	0.25 - 0.5	0.25 - 0.5
Stiff	0.5 - 1	1 - 2	0.5 - 1	0.5 - 1
Very Stiff	1 - 2	2 - 4	1 - 2	1 - 2
Hard	Greater than 2	Greater than 4	Greater than 2	Greater than 2

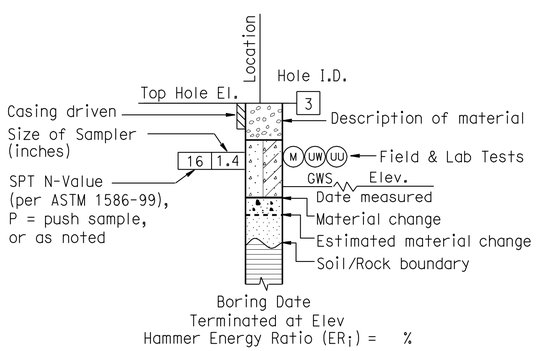

ROTARY BORING

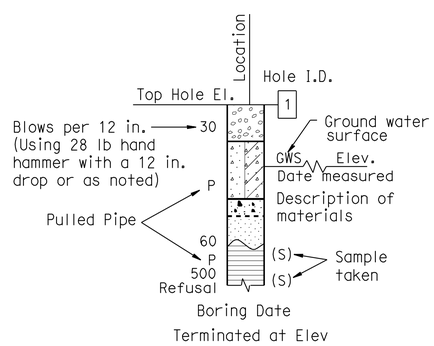

HAND BORING

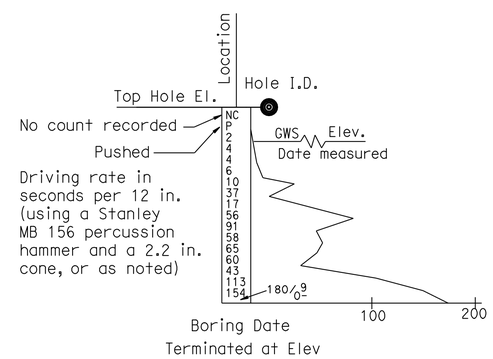

DYNAMIC CONE PENETRATION BORING

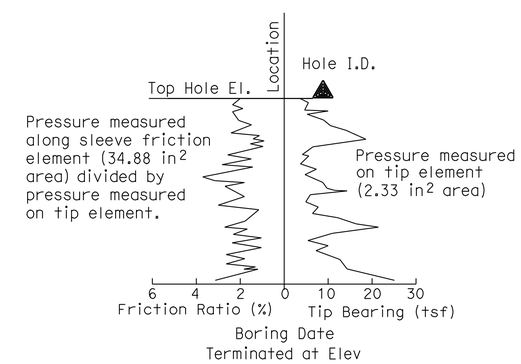

CONE PENETRATION TEST (CPT) BORING

ENGINEERING SERVICES	MATERIALS AND GEOTECHNICAL SERVICES	STATE OF CALIFORNIA DEPARTMENT OF TRANSPORTATION	DIVISION OF ENGINEERING SERVICES STRUCTURE DESIGN DESIGN BRANCH 10	BRIDGE NO. 54-0471 R/L POST MILE 4.21	SANTA ANA RIVER BRIDGE (WIDEN) LOG OF TEST BORINGS 9 OF 20
	PREPARED BY: F. Nguyen 9/11				

GS LOTB SOIL LEGEND

ORIGINAL SCALE IN INCHES FOR REDUCED PLANS 0 1 2 3

UNIT: 3643
PROJECT NUMBER & PHASE: 08000005061 CONTRACT NO.: 08-0M9401

DISREGARD PRINTS BEARING EARLIER REVISION DATES → 12-22-11

SHEET 55 OF 66

FILE => 540471rizltb55.dgn

USERNAME => s124496 DATE PLOTTED => 18-APR-2012 TIME PLOTTED => 16:19

REFERENCE: CALTRANS SOIL & ROCK LOGGING, CLASSIFICATION, AND PRESENTATION MANUAL (2010)

DIST	COUNTY	ROUTE	POST MILES TOTAL PROJECT	SHEET No.	TOTAL SHEETS
08	Riv,SBd	91,215	21.5/21.7, 43.2/45.2,0.0/5.1	1376	1743

PROFESSIONAL GEOLOGIST — DATE 12-22-11

4-16-12
PLANS APPROVAL DATE

PROFESSIONAL GEOLOGIST — Hector Valencia No. 7776 Exp. 2/29/12 — STATE OF CALIFORNIA

The State of California or its officers or agents shall not be responsible for the accuracy or completeness of electronic copies of this plan sheet.

GROUP SYMBOLS AND NAMES

Graphic/Symbol	Group Names	Graphic/Symbol	Group Names
GW	Well-graded GRAVEL Well-graded GRAVEL with SAND	CL	Lean CLAY Lean CLAY with SAND Lean CLAY with GRAVEL SANDY lean CLAY SANDY lean CLAY with GRAVEL GRAVELLY lean CLAY GRAVELLY lean CLAY with SAND
GP	Poorly-graded GRAVEL Poorly-graded GRAVEL with SAND		
GW-GM	Well-graded GRAVEL with SILT Well-graded GRAVEL with SILT and SAND	CL-ML	SILTY CLAY SILTY CLAY with SAND SILTY CLAY with GRAVEL SANDY SILTY CLAY SANDY SILTY CLAY with GRAVEL GRAVELLY SILTY CLAY GRAVELLY SILTY CLAY with SAND
GW-GC	Well-graded GRAVEL with CLAY (or SILTY CLAY) Well-graded GRAVEL with CLAY and SAND (or SILTY CLAY and SAND)		
GP-GM	Poorly-graded GRAVEL with SILT Poorly-graded GRAVEL with SILT and SAND	ML	SILT SILT with SAND SILT with GRAVEL SANDY SILT SANDY SILT with GRAVEL GRAVELLY SILT GRAVELLY SILT with SAND
GP-GC	Poorly-graded GRAVEL with CLAY (or SILTY CLAY) Poorly-graded GRAVEL with CLAY and SAND (or SILTY CLAY and SAND)		
GM	SILTY GRAVEL SILTY GRAVEL with SAND	OL	ORGANIC lean CLAY ORGANIC lean CLAY with SAND ORGANIC lean CLAY with GRAVEL SANDY ORGANIC lean CLAY SANDY ORGANIC lean CLAY with GRAVEL GRAVELLY ORGANIC lean CLAY GRAVELLY ORGANIC lean CLAY with SAND
GC	CLAYEY GRAVEL CLAYEY GRAVEL with SAND		
GC-GM	SILTY, CLAYEY GRAVEL SILTY, CLAYEY GRAVEL with SAND	OL	ORGANIC SILT ORGANIC SILT with SAND ORGANIC SILT with GRAVEL SANDY ORGANIC SILT SANDY ORGANIC SILT with GRAVEL GRAVELLY ORGANIC SILT GRAVELLY ORGANIC SILT with SAND
SW	Well-graded SAND Well-graded SAND with GRAVEL		
SP	Poorly-graded SAND Poorly-graded SAND with GRAVEL	CH	Fat CLAY Fat CLAY with SAND Fat CLAY with GRAVEL SANDY fat CLAY SANDY fat CLAY with GRAVEL GRAVELLY fat CLAY GRAVELLY fat CLAY with SAND
SW-SM	Well-graded SAND with SILT Well-graded SAND with SILT and GRAVEL		
SW-SC	Well-graded SAND with CLAY (or SILTY CLAY) Well-graded SAND with CLAY and GRAVEL (or SILTY CLAY and GRAVEL)	MH	Elastic SILT Elastic SILT with SAND Elastic SILT with GRAVEL SANDY elastic SILT SANDY elastic SILT with GRAVEL GRAVELLY elastic SILT GRAVELLY elastic SILT with SAND
SP-SM	Poorly-graded SAND with SILT Poorly-graded SAND with SILT and GRAVEL		
SP-SC	Poorly-graded SAND with CLAY (or SILTY CLAY) Poorly-graded SAND with CLAY and GRAVEL (or SILTY CLAY and GRAVEL)	OH	ORGANIC fat CLAY ORGANIC fat CLAY with SAND ORGANIC fat CLAY with GRAVEL SANDY ORGANIC fat CLAY SANDY ORGANIC fat CLAY with GRAVEL GRAVELLY ORGANIC fat CLAY GRAVELLY ORGANIC fat CLAY with SAND
SM	SILTY SAND SILTY SAND with GRAVEL		
SC	CLAYEY SAND CLAYEY SAND with GRAVEL	OH	ORGANIC elastic SILT ORGANIC elastic SILT with SAND ORGANIC elastic SILT with GRAVEL SANDY ORGANIC elastic SILT SANDY ORGANIC elastic SILT with GRAVEL GRAVELLY ORGANIC elastic SILT GRAVELLY ORGANIC elastic SILT with SAND
SC-SM	SILTY, CLAYEY SAND SILTY, CLAYEY SAND with GRAVEL		
PT	PEAT	OL/OH	ORGANIC SOIL ORGANIC SOIL with SAND ORGANIC SOIL with GRAVEL SANDY ORGANIC SOIL SANDY ORGANIC SOIL with GRAVEL GRAVELLY ORGANIC SOIL GRAVELLY ORGANIC SOIL with SAND
	COBBLES COBBLES and BOULDERS BOULDERS		

FIELD AND LABORATORY TESTING

- (C) Consolidation (ASTM D 2435)
- (CL) Collapse Potential (ASTM D 5333)
- (CP) Compaction Curve (CTM 216)
- (CR) Corrosivity Testing (CTM 643, CTM 422, CTM 417)
- (CU) Consolidated Undrained Triaxial (ASTM D 4767)
- (DS) Direct Shear (ASTM D 3080)
- (EI) Expansion Index (ASTM D 4829)
- (M) Moisture Content (ASTM D 2216)
- (OC) Organic Content-% (ASTM D 2974)
- (P) Permeability (CTM 220)
- (PA) Particle Size Analysis (ASTM D 422)
- (PI) Plasticity Index (AASHTO T 90) Liquid Limit (AASHTO T 89)
- (PL) Point Load Index (ASTM D 5731)
- (PM) Pressure Meter
- (R) R-Value (CTM 301)
- (SE) Sand Equivalent (CTM 217)
- (SG) Specific Gravity (AASHTO T 100)
- (SL) Shrinkage Limit (ASTM D 427)
- (SW) Swell Potential (ASTM D 4546)
- (UC) Unconfined Compression-Soil (ASTM D 2166) Unconfined Compression-Rock (ASTM D 2938)
- (UU) Unconsolidated Undrained Triaxial (ASTM D 2850)
- (UW) Unit Weight (ASTM D 4767)

APPARENT DENSITY OF COHESIONLESS SOILS

Description	SPT N_{60} (Blows / 12 in.)
Very Loose	0 - 5
Loose	5 - 10
Medium Dense	10 - 30
Dense	30 - 50
Very Dense	Greater than 50

MOISTURE

Description	Criteria
Dry	No discernable moisture
Moist	Moisture present, but no free water
Wet	Visible free water

PERCENT OR PROPORTION OF SOILS

Description	Criteria
Trace	Particles are present but estimated to be less than 5%
Few	5% - 10%
Little	15% - 25%
Some	30% - 45%
Mostly	50% - 100%

PARTICLE SIZE

Description		Size (in.)
Boulder		Greater than 12
Cobble		3 - 12
Gravel	Coarse	3/4 - 3
	Fine	1/5 - 3/4
Sand	Coarse	1/16 - 1/5
	Medium	1/64 - 1/16
	Fine	1/300 - 1/64
Silt and Clay		Less than 1/300

ENGINEERING SERVICES

MATERIALS AND GEOTECHNICAL SERVICES

PREPARED BY: F. Nguyen 9/11

STATE OF CALIFORNIA DEPARTMENT OF TRANSPORTATION

DIVISION OF ENGINEERING SERVICES STRUCTURE DESIGN DESIGN BRANCH 10

BRIDGE NO. 54-0471 R/L

POST MILE 4.21

SANTA ANA RIVER BRIDGE (WIDEN)

LOG OF TEST BORINGS 10 OF 20

GS LOTB SOIL LEGEND

ORIGINAL SCALE IN INCHES FOR REDUCED PLANS 0 1 2 3

UNIT: 3643
PROJECT NUMBER & PHASE: 08000005061
CONTRACT NO.: 08-0M9401

DISREGARD PRINTS BEARING EARLIER REVISION DATES

REVISION DATES 12-22-11

SHEET 56 OF 66

FILE => 540471rlzltb56.dgn

USERNAME => s124096 DATE PLOTTED => 18-APR-2012 TIME PLOTTED => 16:19

DIST	COUNTY	ROUTE	POST MILES TOTAL PROJECT	SHEET NO.	TOTAL SHEETS
08	SBd	10			

W. C. Cain 7-3-
CERTIFIED ENGINEERING GEOLOGIST

REGISTERED GEOLOGIST W.C.CAIN No 2497 CERTIFIED ENGINEERING GEOLOGIST STATE OF CALIFORNIA

PLANS APPROVAL DATE

BENCH MARK

TBM # 8 ELEV. 983.23

Set Chis. X MK TOP N.E'ly anchor bolt Electrolier.

Photo Pt.	ELEV.
1-3	995.56
1-4	994.87
1-5	972.99

"C" nail in photo pt.

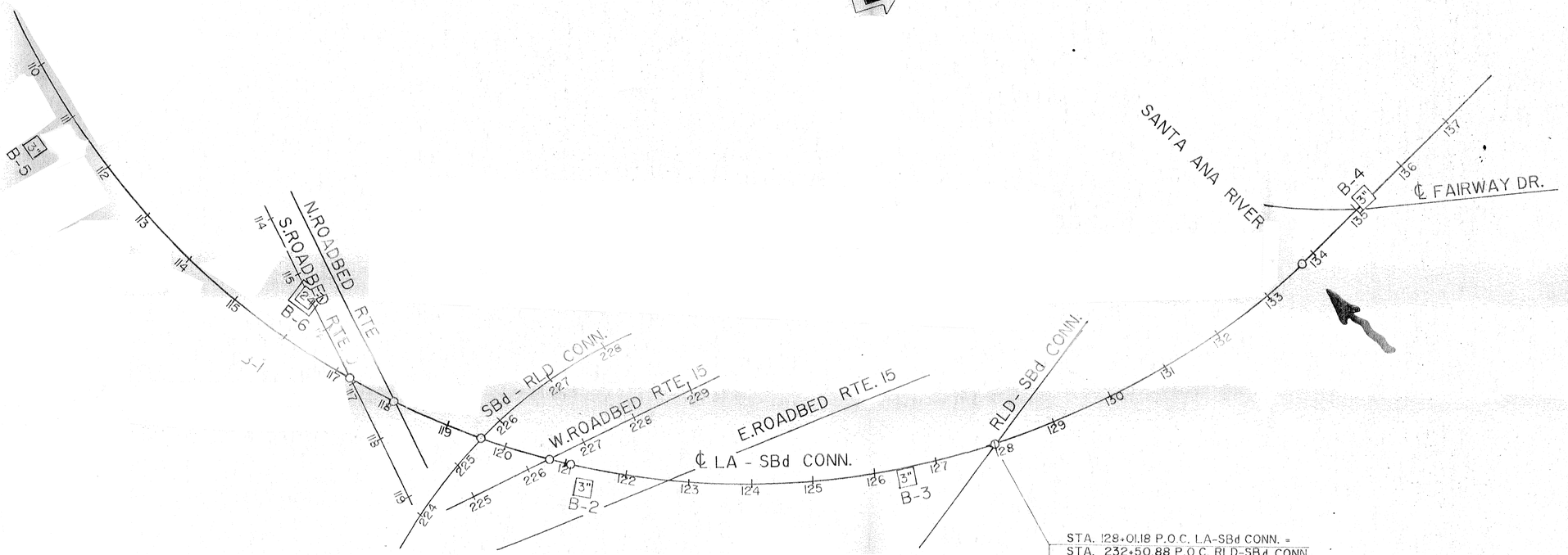

STA. 128+01.18 P.O.C. LA-SBd CONN. =
STA. 232+50.88 P.O.C. RLD-SBd CONN.

N 206,879.198
E 213,710.206

TO ACCOMPANY PLANS DATED 4-16-12

DIVISION OF ENGINEERING SERVICES - MATERIALS AND GEOTECHNICAL SERVICES

As-Built Log of Test Borings sheet is considered an informational document only. As such, the State of California registration seal with signature, license number and registration certificate expiration date confirm that this is a true and accurate copy of the original document. It does not attest to the accuracy or validity of the information contained in the original document. This drawing is available and presented only for the convenience of any bidder, contractor or other interested party.

DIST.	COUNTY	ROUTE	POST MILE-TOTAL PROJECT	Sheet No.	Total Sheets
08	Riv,SBd	91,215	21.5/21.7,43.2/45.2,0.0/5.1	1377	1743

PROFESSIONAL GEOLOGIST 12-11-11 DATE

PROFESSIONAL GEOLOGIST Hector Valencia No. 7776 Exp. 2-29-12 STATE OF CALIFORNIA

SANTA ANA RIVER BRIDGE (WIDEN)

LOG OF TEST BORINGS 11 OF 20

UNIT: 3643	CONTRACT No.	BRIDGE No.
PROJ. No. & PHASE: 08000005061	08-0M9401	54-0471R/L
VERT DATUM: NGVD29 CONVERSION: NAVD88 = NGVD29 + 2.3 ft	Sheet 57	of 66

NOTE: This As-Built Log of Test Boring (LOTB) sheet was included due to the close proximity of the borings to the project site. Other As-Built LOTBs exist which include borings that are further away from the project and were not included in this current LOTB package. To determine the number of original As-Built LOTBs, refer to the original As-Built LOTB numbering (e.g. Sheet 1 of 8). A copy of the entire As-Built LOTB package is available at either: (1) the Office of Structure Maintenance and investigations, Sacramento, CA or (2) the Transportation Laboratory, Geotechnical Services Project Archive, Sacramento, CA.

PLAN
1" = 100'

Office Transportation Laboratory
JAN 29 1990
Geotechnical Branch – L. A.

PHASE II RETROFIT PROJECT # 7

SHEET 1 OF 8

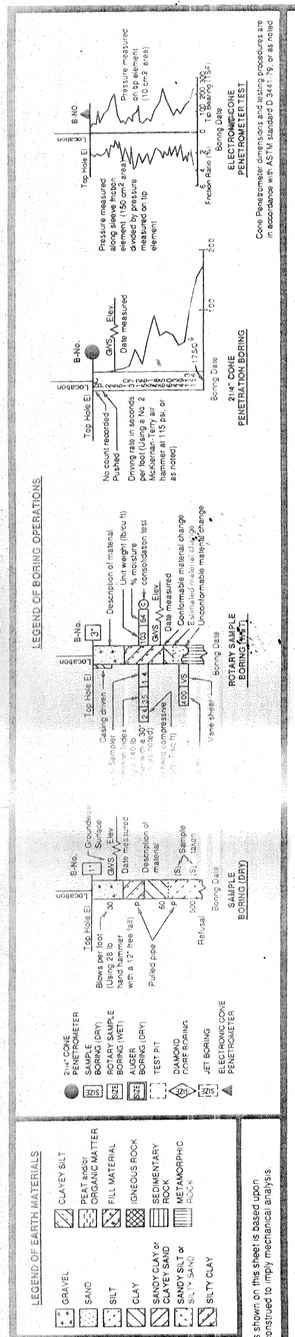

ENGINEERING GEOLOGY BRANCH - TRANSPORTATION LABORATORY		
DRAWN BY	FERNANDO J. ANDRES & VICTOR SESTOKAS	12/89
CHECKED BY	ROBERT CARL DORIA	12/20/89

PROJECT ENGINEER

State of CALIFORNIA DEPARTMENT OF TRANSPORTATION

DIVISION OF STRUCTURES STRUCTURE DESIGN

BRIDGE NO. 54-0823G
POST MILE 24.19

NORTHWEST CONNECTOR OVERCROSSING

LOG OF TEST BORINGS

ORIGINAL SCALE IN INCHES FOR REDUCED PLANS 0 1 2 3

CU 08202
EA 349301

DISREGARD PRINTS BEARING EARLIER REVISION DATES

REVISION DATES (PRELIMINARY STAGE ONLY) SHEET OF

TL 6051 REV. 4/89

DIST	COUNTY	ROUTE	POST MILES TOTAL PROJECT	SHEET NO.	TOTAL SHEETS
08	SBd	10			

W. C. Cain 732
CERTIFIED ENGINEERING GEOLOGIST

REGISTERED GEOLOGIST W.C.CAIN No 2497 CERTIFIED ENGINEERING GEOLOGIST STATE OF CALIFORNIA

PLANS APPROVAL DATE

FOR BENCH MARK SEE
LOG OF TEST BORINGS 1 OF 8

FOR PLAN VIEW SEE
LOG OF TEST BORINGS 1 OF 8

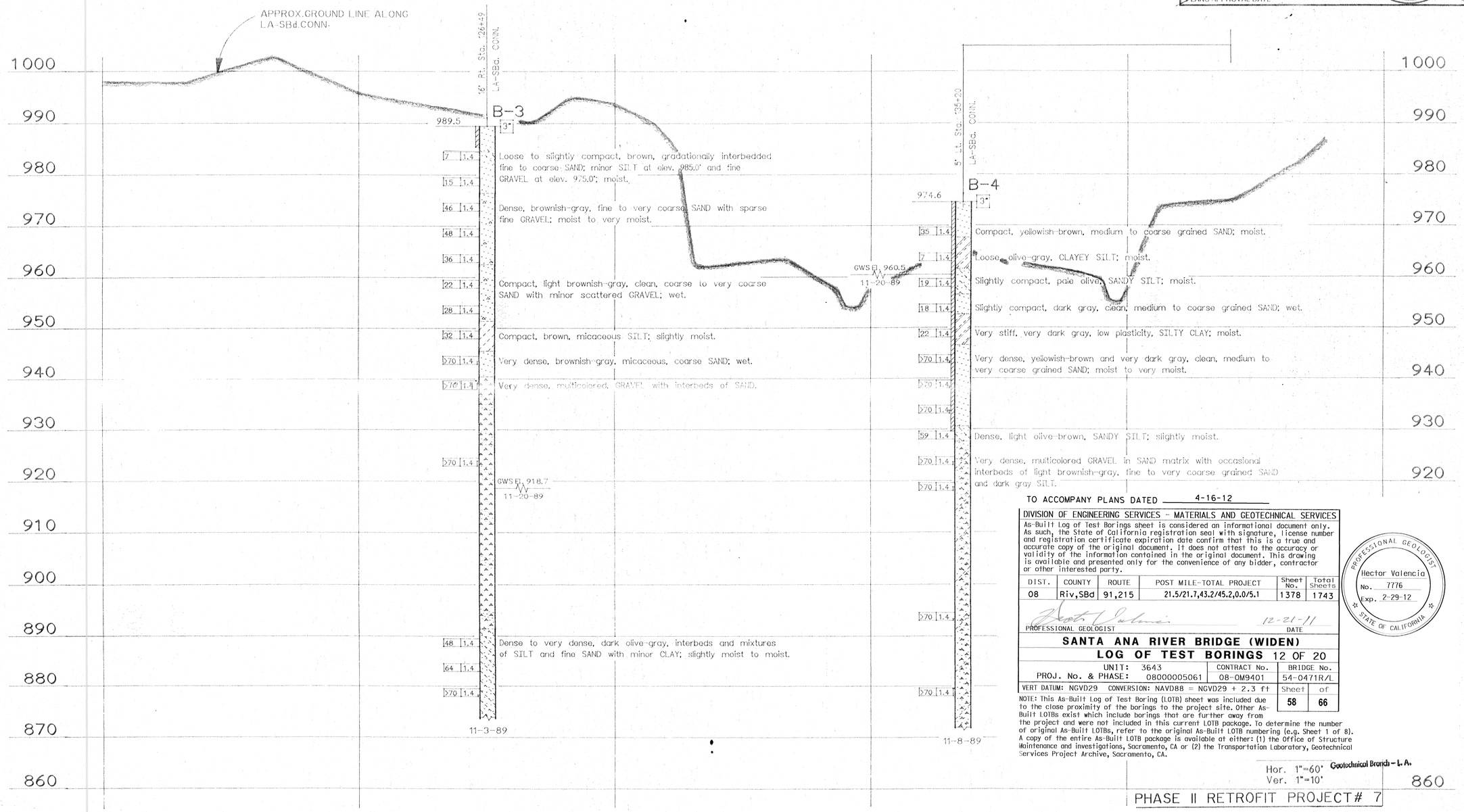

TO ACCOMPANY PLANS DATED 4-16-12

DIVISION OF ENGINEERING SERVICES - MATERIALS AND GEOTECHNICAL SERVICES

As-Built Log of Test Borings sheet is considered an informational document only. As such, the State of California registration seal with signature, license number and registration certificate expiration date confirm that this is a true and accurate copy of the original document. It does not attest to the accuracy or validity of the information contained in the original document. This drawing is available and presented only for the convenience of any bidder, contractor or other interested party.

DIST.	COUNTY	ROUTE	POST MILE-TOTAL PROJECT	Sheet No.	Total Sheets
08	Riv,SBd	91,215	21.5/21.7,43.2/45.2,0.0/5.1	1378	1743

Hector Valencia 12-21-11
PROFESSIONAL GEOLOGIST DATE

PROFESSIONAL GEOLOGIST Hector Valencia No. 7776 Exp. 2-29-12 STATE OF CALIFORNIA

SANTA ANA RIVER BRIDGE (WIDEN)

LOG OF TEST BORINGS 12 OF 20

UNIT: 3643	CONTRACT No.	BRIDGE No.
PROJ. No. & PHASE: 08000005061	08-0M9401	54-0471R/L

VERT DATUM: NGVD29 CONVERSION: NAVD88 = NGVD29 + 2.3 ft | Sheet 58 of 66

NOTE: This As-Built Log of Test Boring (LOTB) sheet was included due to the close proximity of the borings to the project site. Other As-Built LOTBs exist which include borings that are further away from the project and were not included in this current LOTB package. To determine the number of original As-Built LOTBs, refer to the original As-Built LOTB numbering (e.g. Sheet 1 of 8). A copy of the entire As-Built LOTB package is available at either: (1) the Office of Structure Maintenance and Investigations, Sacramento, CA or (2) the Transportation Laboratory, Geotechnical Services Project Archive, Sacramento, CA.

Hor. 1"=60'
Ver. 1"=10'

Geotechnical Branch - L. A.

PHASE II RETROFIT PROJECT# 7

SHEET 3 OF 8

LEGEND OF BORING OPERATIONS

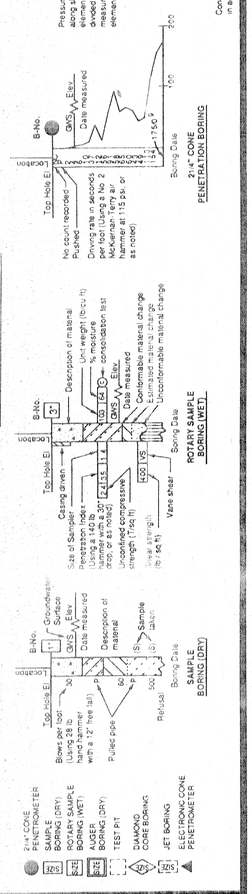

LEGEND OF EARTH MATERIALS

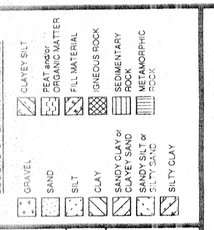

CONSISTENCY CLASSIFICATION FOR SOILS

According to the Standard Penetration Test

Penetration Index (Blows / Ft)	Granular	Cohesive
0-4	Very loose	Very soft
5-9	Loose	Soft
10-19	Slightly compact	Stiff
20-34	Compact	Very stiff
35-69	Dense	Hard
>70	Very dense	Very hard

NOTE: Classification of earth material as shown on this sheet is based upon visual inspection and is not to be construed to imply mechanical analysis.

ENGINEERING GEOLOGY BRANCH - TRANSPORTATION LABORATORY		
DRAWN BY	FERNANDO J. ANDRES & VICTOR SESTOKAS	12/89
CHECKED BY	ROBERT CARL DORIA	12/20/89

PROJECT ENGINEER

State of CALIFORNIA DEPARTMENT OF TRANSPORTATION

DIVISION OF STRUCTURES
STRUCTURE DESIGN

BRIDGE NO. 54-0823G
POST MILE 24.19

NORTHWEST CONNECTOR OVERCROSSING

LOG OF TEST BORINGS

ORIGINAL SCALE IN INCHES FOR REDUCED PLANS 0 1 2 3

CU 08202
EA 349301

DISREGARD PRINTS BEARING EARLIER REVISION DATES

REVISION DATES (PRELIMINARY STAGE ONLY) SHEET OF

TL 6051 REV 4/89

DIST.	COUNTY	ROUTE	POST MILES—TOTAL PROJECT	SHEET NO.	TOTAL SHEETS
08	SBD	010			

BRIDGE ENGINEER REGISTERED CIVIL ENGINEER NO. 5687

DATE APPROVED

BENCH MARK

Refer to sheet 1 of 5.

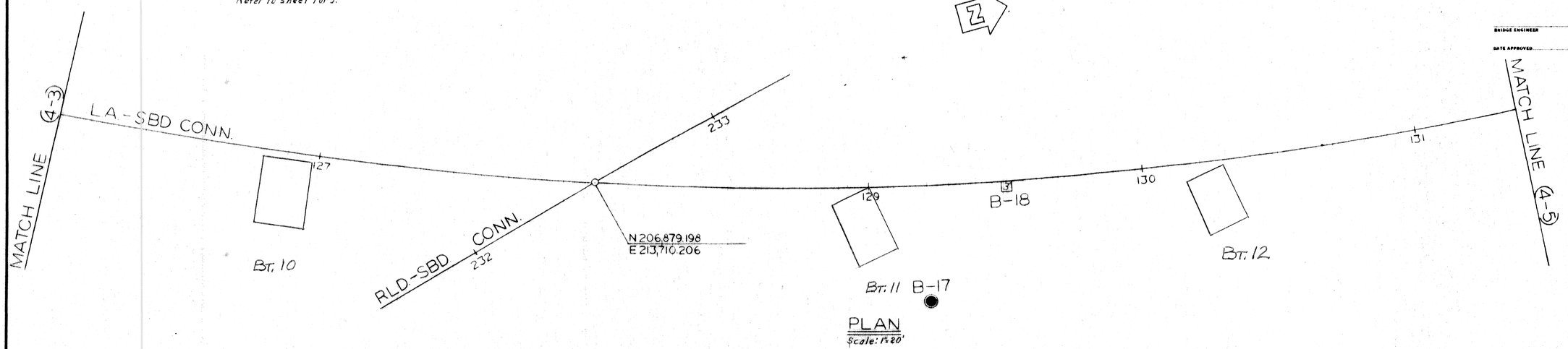

PLAN

Scale: 1"=20'

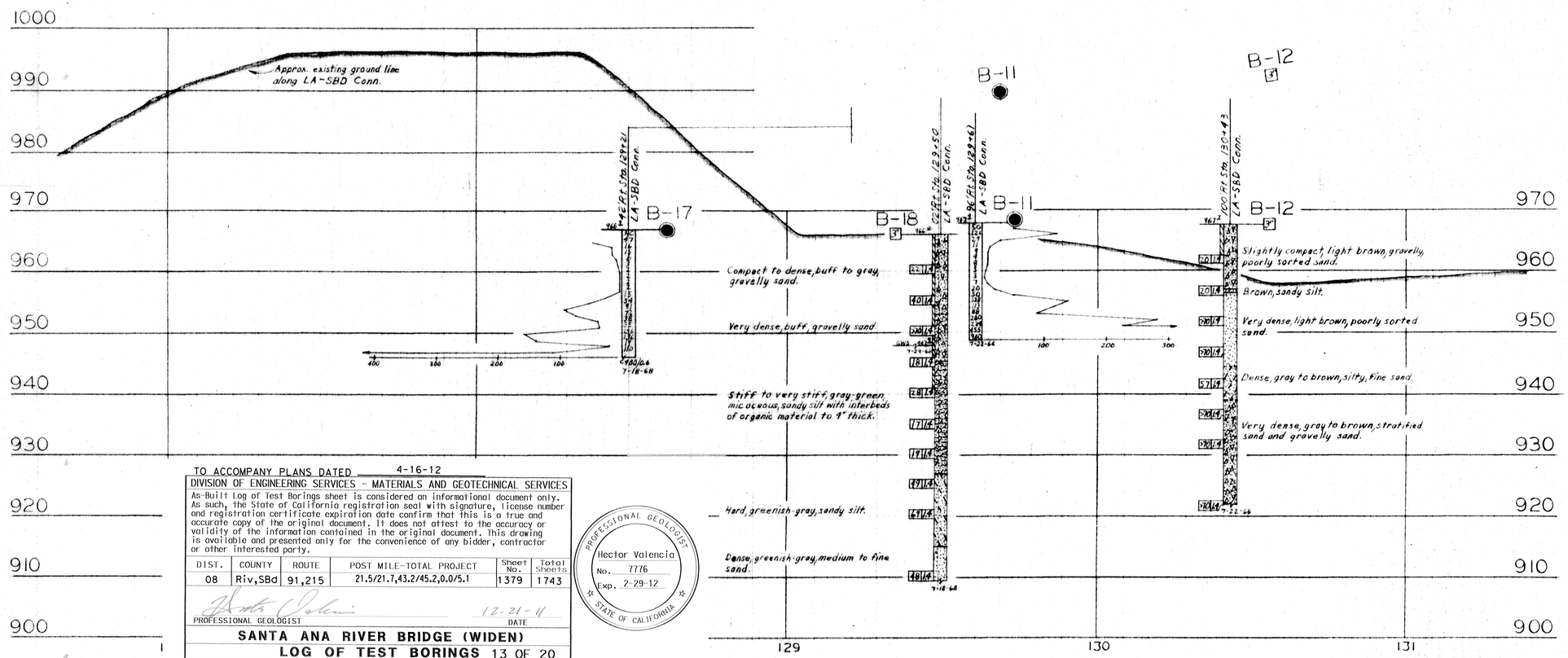

PROFILE

Scale: Vert. 1"=10'
Horiz. 1"=20'

LEGEND OF BORING OPERATIONS

PENETROMETER: 2¼" CONE PENETROMETER; SAMPLER BORING (DRY); ROTARY BORING (WET); AUGER BORING (DRY); JET BORING; CORE BORING; TEST PIT

LEGEND OF EARTH MATERIALS

GRAVEL; SAND; SILT; CLAY; SILTY CLAY OR CLAYEY SILT; PEAT AND ORGANIC MATTER; FILL MATERIAL; IGNEOUS ROCK; SEDIMENTARY ROCK; METAMORPHIC ROCK; SANDY CLAY OR CLAYEY SAND; SANDY SILT OR SILTY SAND

CLASSIFICATION OF MATERIAL BASED ON STANDARD GRADE SIZE LIMITS

DIAGRAM SHOWING THE BASIS FOR ESTIMATES OF GRADE SIZE DISTRIBUTION USED IN DETERMINATION OF CLASS NAMES. IF GRAVEL IS PRESENT IN APPRECIABLE AMOUNTS, THE TERM "GRAVELLY" MAY BE ADDED TO THE CLASS NAME. THE TERMS "GRAVELLY SAND", THE TERMS "COARSE", "MEDIUM" AND "FINE" WHEN USED TO DESCRIBE SAND, SHALL BE ASSUMED TO CONFORM TO STANDARD GRADE SIZE LIMITS.

NOTE: Classification of earth material as shown on this sheet is based upon field inspection and is not to be construed to imply mechanical analysis.

DRAWN
CHECKED
APPROVAL RECOMMENDED
Engineering Geologist

BRIDGE DEPARTMENT
ENGINEERING GEOLOGY SECTION

TO ACCOMPANY PLANS DATED 4-16-12

DIVISION OF ENGINEERING SERVICES - MATERIALS AND GEOTECHNICAL SERVICES

As-Built Log of Test Borings sheet is considered an informational document only. As such, the State of California registration seal with signature, license number and registration certificate expiration date confirm that this is a true and accurate copy of the original document. It does not attest to the accuracy or validity of the information contained in the original document. This drawing is available and presented only for the convenience of any bidder, contractor or other interested party.

DIST.	COUNTY	ROUTE	POST MILE-TOTAL PROJECT	Sheet No.	Total Sheets
08	Riv,SBd	91,215	21.5/21.7,43.2/45.2,0.0/5.1	1379	1743

PROFESSIONAL GEOLOGIST — DATE 12-21-11

PROFESSIONAL GEOLOGIST Hector Valencia No. 7776 Exp. 2-29-12 STATE OF CALIFORNIA

SANTA ANA RIVER BRIDGE (WIDEN)

LOG OF TEST BORINGS 13 OF 20

UNIT: 3643	CONTRACT No.	BRIDGE No.
PROJ. No. & PHASE: 08000005061	08-0M9401	54-0471R/L

VERT DATUM: NGVD29 CONVERSION: NAVD88 = NGVD29 + 2.3 ft — Sheet 59 of 66

NOTE: This As-Built Log of Test Boring (LOTB) sheet was included due to the close proximity of the borings to the project site. Other As-Built LOTBs exist which include borings that are further away from the project and were not included in this current LOTB package. To determine the number of original As-Built LOTBs, refer to the original As-Built LOTB numbering (e.g. Sheet 1 of 8). A copy of the entire As-Built LOTB package is available at either: (1) the Office of Structure Maintenance and Investigations, Sacramento, CA or (2) the Transportation Laboratory, Geotechnical Services Project Archive, Sacramento, CA.

STATE OF CALIFORNIA
TRANSPORTATION AGENCY
DEPARTMENT OF PUBLIC WORKS
DIVISION OF HIGHWAYS

SHEET 4 OF 5

RESIDENT ENGINEER

NORTWEAST CONNECTOR OVERCROSSING

LOG OF TEST BORINGS

BRIDGE NO.	POST MILE	DRAWING NO.	SHEET	OF
54-823	24.2			

REVISION DATES (PRELIMINARY STAGE ONLY)

WO 096501
CU 08201

Disregard prints bearing earlier revision dates

DIST.	COUNTY	ROUTE	POST MILES—TOTAL PROJECT	SHEET No.	Total Sheets
08	SBD	10			

BRIDGE ENGINEER ____ REGISTERED CIVIL ENGINEER NO. 55567

DATE APPROVED ____

BENCH MARK

Refer to sheet 1 of 5.

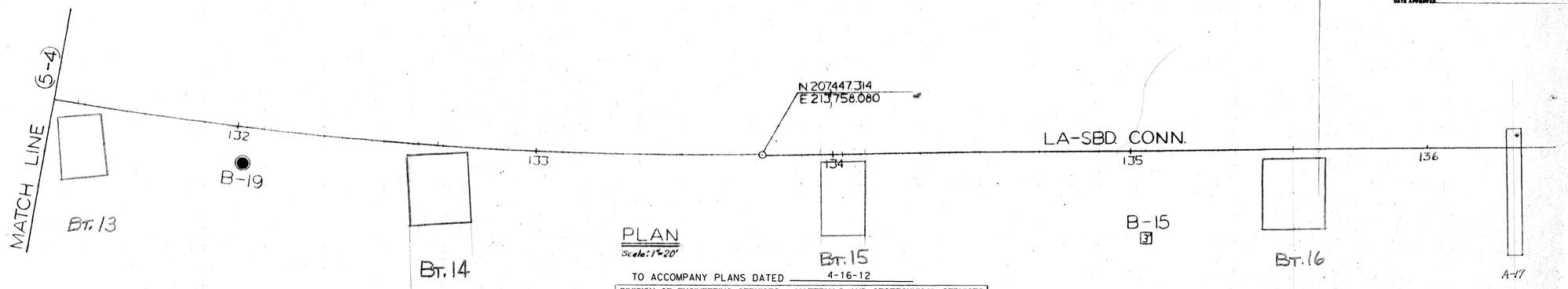

PLAN

Scale: 1"=20'

TO ACCOMPANY PLANS DATED 4-16-12

DIVISION OF ENGINEERING SERVICES - MATERIALS AND GEOTECHNICAL SERVICES

As-Built Log of Test Borings sheet is considered an informational document only. As such, the State of California registration seal with signature, license number and registration certificate expiration date confirm that this is a true and accurate copy of the original document. It does not attest to the accuracy or validity of the information contained in the original document. This drawing is available and presented only for the convenience of any bidder, contractor or other interested party.

DIST.	COUNTY	ROUTE	POST MILE-TOTAL PROJECT	Sheet No.	Total Sheets
08	Riv,SBd	91,215	21.5/21.7,43.2/45.2,0.0/5.1	1380	1743

Hector Valencia 12-21-11
PROFESSIONAL GEOLOGIST DATE

PROFESSIONAL GEOLOGIST Hector Valencia No. 7776 Exp. 2-29-12 STATE OF CALIFORNIA

SANTA ANA RIVER BRIDGE (WIDEN)

LOG OF TEST BORINGS 14 OF 20

UNIT: 3643	CONTRACT No.	BRIDGE No.
PROJ. No. & PHASE: 08000005061	08-0M9401	54-0471R/L

VERT DATUM: NGVD29 CONVERSION: NAVD88 = NGVD29 + 2.3 ft Sheet 60 of 66

NOTE: This As-Built Log of Test Boring (LOTB) sheet was included due to the close proximity of the borings to the project site. Other As-Built LOTBs exist which include borings that are further away from the project and were not included in this current LOTB package. To determine the number of original As-Built LOTBs, refer to the original As-Built LOTB numbering (e.g. Sheet 1 of 8). A copy of the entire As-Built LOTB package is available at either: (1) the Office of Structure Maintenance and Investigations, Sacramento, CA or (2) the Transportation Laboratory, Geotechnical Services Project Archive, Sacramento, CA.

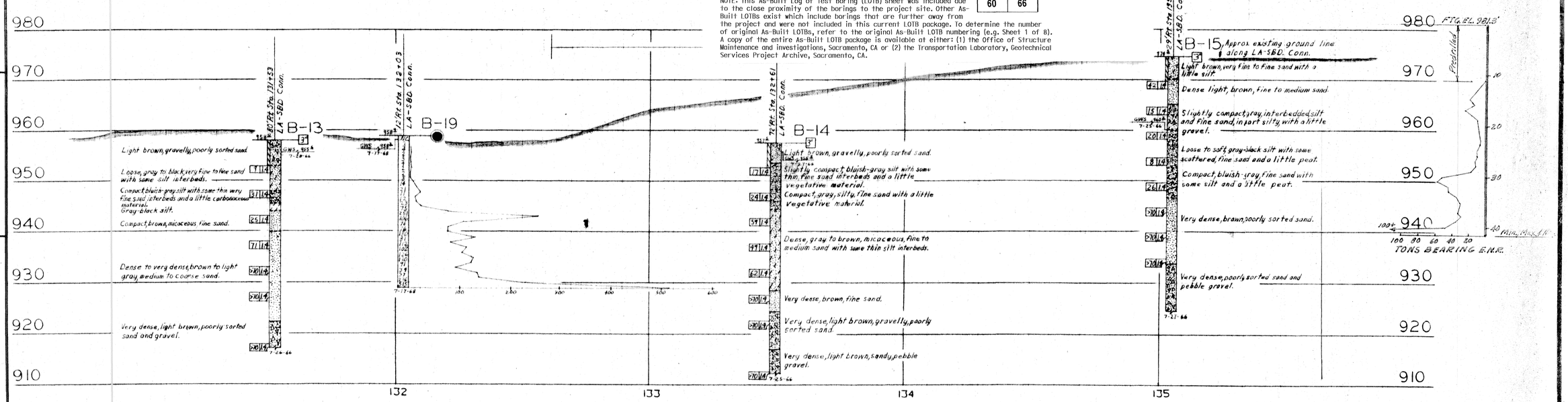

PROFILE

Scale: Vert. 1"=10' Horiz. 1"=20'

LEGEND OF BORING OPERATIONS

Penetrometer; 2¼" Cone Penetrometer; Sampler Boring (Dry); Rotary Boring (Wet); Auger Boring (Dry); Jet Boring; Cone Boring; Test Pit

Penetration Boring; Rotary Boring; 1" Soil Tube

LEGEND OF EARTH MATERIALS

Gravel; Sand; Silt; Clay; Sandy Clay or Clayey Sand; Silty Clay or Clayey Silt; Peat and Organic Matter; Fill Material; Igneous Rock; Sedimentary Rock; Metamorphic Rock; Sandy Silt or Silty Sand

CLASSIFICATION OF MATERIAL BASED ON STANDARD GRADE SIZE LIMITS

Diagram showing the basis for estimates of grade size distribution used in determination of class names. If grading is specified, a modifier may be added to the class name, viz. "gravelly sand". The terms "coarse", "medium" and "fine" modify sand, "coarse" and "fine" modify silt and gravel. Refer to standard grade size limits.

NOTE: Classification of earth material as shown on this sheet is based upon field inspection and is not to be construed to imply mechanical analysis.

BRIDGE DEPARTMENT
ENGINEERING GEOLOGY SECTION

FIELD STUDY: Date ____ By ____
DRAWN: Date ____ By ____
CHECKED: Date ____ By ____
Approval Recommended by ____ Engineering Geologist

STATE OF CALIFORNIA
TRANSPORTATION AGENCY SHEET 5 OF 5
DEPARTMENT OF PUBLIC WORKS
DIVISION OF HIGHWAYS
RESIDENT ENGINEER'S NAME

NORTHWEST CONNECTOR OVERCROSSING

LOG OF TEST BORINGS

BRIDGE NO.	POST MILE	DRAWING NO.	SHEET	OF
54-823	24.2			

REVISION DATES (PRELIMINARY STAGE ONLY)

WO 096501
CU 08201

Disregard prints bearing earlier revision dates

DIST.	COUNTY	ROUTE	POST MILES—TOTAL PROJECT	SHEET NO.	TOTAL SHEETS
08	SBd	15			

BRIDGE ENGINEER ____ REGISTERED CIVIL ENGINEER NO. ____

DATE APPROVED ____

LEGEND OF BORING OPERATIONS

PENETROMETER:
- PENETROMETER
- 2¼" CORE PENETROMETER
- BORING (DRY)
- SAMPLER BORING (WET)
- BORING (DRY)
- ROTARY BORING (WET)
- AUGER BORING (DRY)
- JET BORING
- CORE BORING
- TEST PIT

PENETRATION BORING

ROTARY BORING

1" SOIL TUBE

LEGEND OF EARTH MATERIALS

- GRAVEL
- SILTY CLAY OR CLAYEY SILT
- SAND
- PEAT AND ORGANIC MATTER
- SILT
- FILL MATERIAL
- CLAY
- IGNEOUS ROCK
- SANDY CLAY OR CLAYEY SAND
- SEDIMENTARY ROCK
- SANDY SILT OR SILTY SAND
- METAMORPHIC ROCK

CLASSIFICATION OF MATERIAL BASED ON STANDARD GRADE SIZE LIMITS

DIAGRAM SHOWING THE BASIS FOR ESTIMATES OF PERMEABILITY, USED IN DETERMINATION OF CLASS NAMES.

IF GRAVEL IS PRESENT IN APPRECIABLE AMOUNTS THE TERM "GRAVELLY" MAY BE ADDED TO THE CLASS NAME, E.G. "GRAVELLY SAND". THE TERMS "COARSE", "MEDIUM" AND "FINE" WHEN USED TO DESCRIBE SAND, SILT AND GRAVEL, REFER TO STANDARD GRADE SIZE LIMITS.

NOTE: Classification of earth material as shown on this sheet is based upon field inspection and is not to be construed to imply mechanical analysis.

FIELD STUDY By: ____
DRAWN By: ____
CHECKED By: ____
Approval Recommended by: ____ Engineering Geologist

BRIDGE DEPARTMENT
ENGINEERING GEOLOGY SECTION

BENCH MARK

B.M. 13-A-50 Elev 974.81
Chiz. X on S. corner PCC endwall 35' Lt. Sta. 125+60
± Imp. S. RJBd

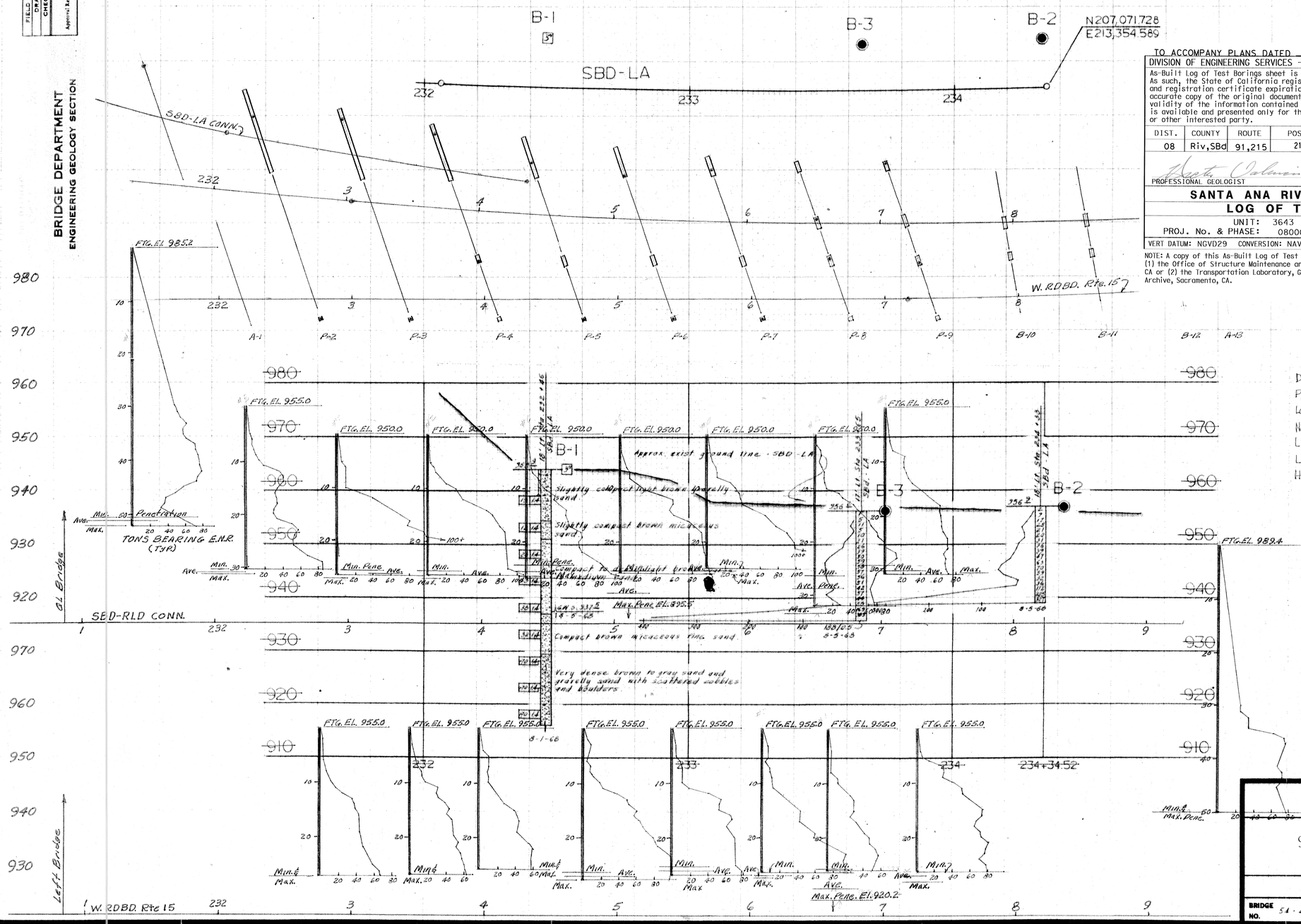

TO ACCOMPANY PLANS DATED 4-16-12

DIVISION OF ENGINEERING SERVICES - MATERIALS AND GEOTECHNICAL SERVICES

As-Built Log of Test Borings sheet is considered an informational document only. As such, the State of California registration seal with signature, license number and registration certificate expiration date confirm that this is a true and accurate copy of the original document. It does not attest to the accuracy or validity of the information contained in the original document. This drawing is available and presented only for the convenience of any bidder, contractor or other interested party.

DIST.	COUNTY	ROUTE	POST MILE-TOTAL PROJECT	Sheet No.	Total Sheets
08	Riv,SBd	91,215	21.5/21.7,43.2/45.2,0.0/5.1	1381	1743

PROFESSIONAL GEOLOGIST — DATE 12-21-11

PROFESSIONAL GEOLOGIST — Hector Valencia — No. 7776 — Exp. 2-29-12 — STATE OF CALIFORNIA

SANTA ANA RIVER BRIDGE (WIDEN)

LOG OF TEST BORINGS 15 OF 20

UNIT: 3643	CONTRACT No.	BRIDGE No.
PROJ. No. & PHASE: 08000005061	08-0M9401	54-0471R/L

VERT DATUM: NGVD29 CONVERSION: NAVD88 = NGVD29 + 2.3 ft — Sheet 61 of 66

NOTE: A copy of this As-Built Log of Test Boring is available at either: (1) the Office of Structure Maintenance and investigations, Sacramento, CA or (2) the Transportation Laboratory, Geotechnical Services Project Archive, Sacramento, CA.

Design Pile Loading	45 T	70 T
Pile type	8H40	10BP57
Locations	Lt. Br. #19 QL Br.	QL Br.
No. of Piles	31	92
LF (Plans)	930	2910
LF (As Built)	920	2815
Hammer	Vulcan 0 Vulcan 50C Kobe K-22	Vulcan 0 Vulcan 50C Kobe K-22

STATE OF CALIFORNIA
TRANSPORTATION AGENCY
DEPARTMENT OF PUBLIC WORKS
DIVISION OF HIGHWAYS

SANTA ANA RIVER BRIDGE

LOG OF TEST BORINGS

BRIDGE NO.	POST MILE	DRAWING NO.	SHEET	OF
54-471 QL&L	0.2L		1	

REVISION DATES (PRELIMINARY STAGE ONLY)

WO 096501
CU 08201

Disregard prints bearing earlier revision dates

DIST.	COUNTY	ROUTE	POST MILES—TOTAL PROJECT	SHEET NO.	TOTAL SHEETS
08	SBd	15			

BRIDGE ENGINEER REGISTERED CIVIL ENGINEER NO. 55861

DATE APPROVED

TO ACCOMPANY PLANS DATED 4-16-12

DIVISION OF ENGINEERING SERVICES - MATERIALS AND GEOTECHNICAL SERVICES

As-Built Log of Test Borings sheet is considered an informational document only. As such, the State of California registration seal with signature, license number and registration certificate expiration date confirm that this is a true and accurate copy of the original document. It does not attest to the accuracy or validity of the information contained in the original document. This drawing is available and presented only for the convenience of any bidder, contractor or other interested party.

DIST.	COUNTY	ROUTE	POST MILE-TOTAL PROJECT	Sheet No.	Total Sheets
08	Riv,SBd	91,215	21.5/21.7,43.2/45.2,0.0/5.1	1382	1743

PROFESSIONAL GEOLOGIST — DATE 12-21-11

PROFESSIONAL GEOLOGIST — Hector Valencia — No. 7776 — Exp. 2-29-12 — STATE OF CALIFORNIA

SANTA ANA RIVER BRIDGE (WIDEN)

LOG OF TEST BORINGS 16 OF 20

UNIT: 3643	CONTRACT No.	BRIDGE No.
PROJ. No. & PHASE: 08000005061	08-0M9401	54-0471R/L

VERT DATUM: NGVD29 CONVERSION: NAVD88 = NGVD29 + 2.3 ft — Sheet 62 of 66

NOTE: A copy of this As-Built Log of Test Boring is available at either: (1) the Office of Structure Maintenance and Investigations, Sacramento, CA or (2) the Transportation Laboratory, Geotechnical Services Project Archive, Sacramento, CA.

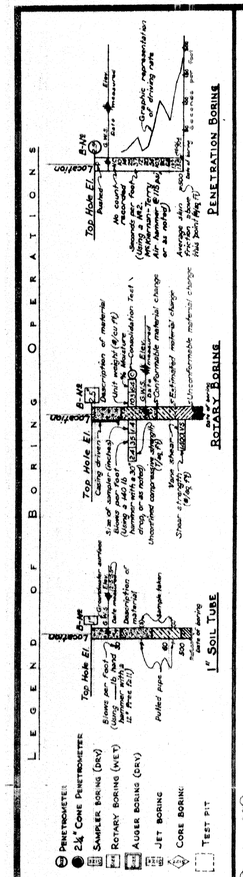

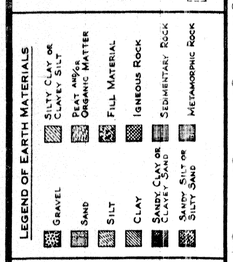

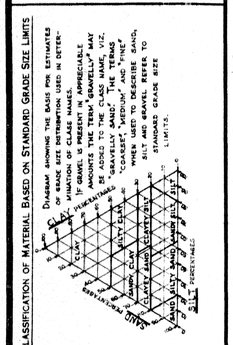

NOTE: Classification of earth material as shown on this sheet is based upon field inspection and is not to be construed to imply mechanical analysis.

BENCH MARK

BM 13 A-58 Elev. 974.87
Chiz. A on S corner PCC endwall 35' Lt. Sta. 125+62
E Imp. 3 Rdbd.

PLAN

Scale 1" = 20'

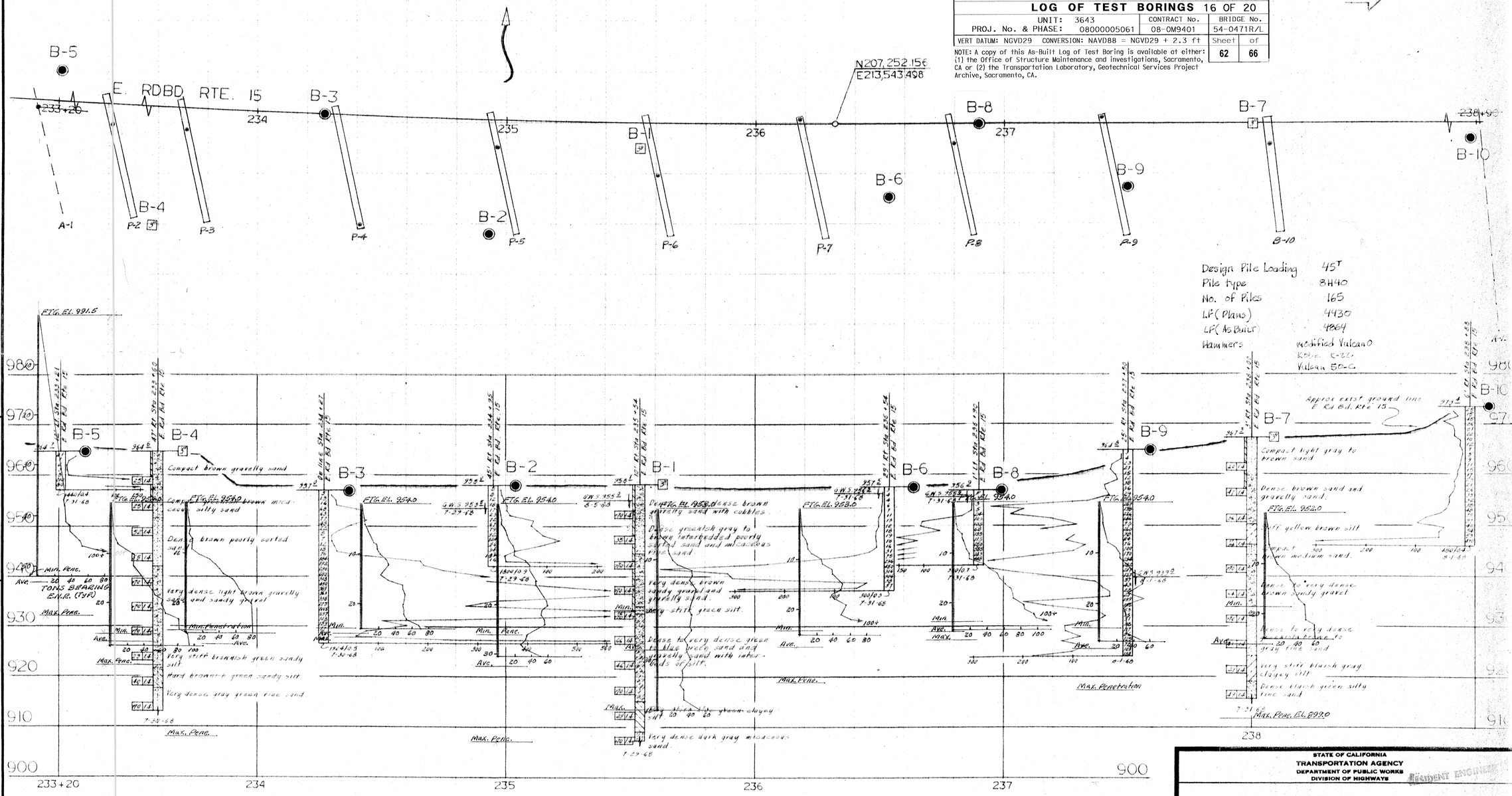

Design Pile Loading	45T
Pile type	8H40
No. of Piles	165
LF (Plans)	4430
LF (As Built)	4864
Hammers	modified Vulcan 0 Kobe K-22 Vulcan 50-C

FIELD STUDY	By R. Corbytey 8-1-68
DRAWN	By J. Lam 8-16-68
CHECKED	By W. Cain 8-19-68

Approval Recommended by — Engineering Geologist

BRIDGE DEPARTMENT
ENGINEERING GEOLOGY SECTION

STATE OF CALIFORNIA
TRANSPORTATION AGENCY
DEPARTMENT OF PUBLIC WORKS
DIVISION OF HIGHWAYS

RESIDENT ENGINEER

SANTA ANA RIVER BRIDGE

LOG OF TEST BORINGS

BRIDGE NO.	POST MILE	DRAWING NO.	SHEET	OF
54-471R	0.24		1	

WO 096501
CU 08201

Disregard prints bearing earlier revision dates

REVISION DATES (PRELIMINARY STAGE ONLY)

DIST.	COUNTY	ROUTE	POST MILES—TOTAL PROJECT	SHEET NO.	TOTAL SHEETS
08	SBd	10,15	22.3/22.6,22.7/22.5	239	450

DESIGN SECTION SUPERVISOR REGISTERED CIVIL ENGINEER, NO. 11421

DATE APPROVED November 24, 1959

BENCH MARK

B.M. 15-A-36 Elev. 37.827
Chis N on S corner PCC endwall 35' Rt. Sta. 125+60
El. Imp S Side

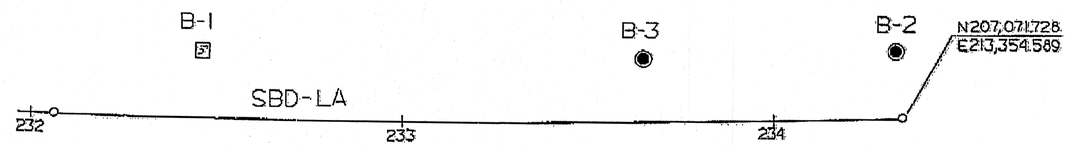

PLAN

Scale: 1" = 20'

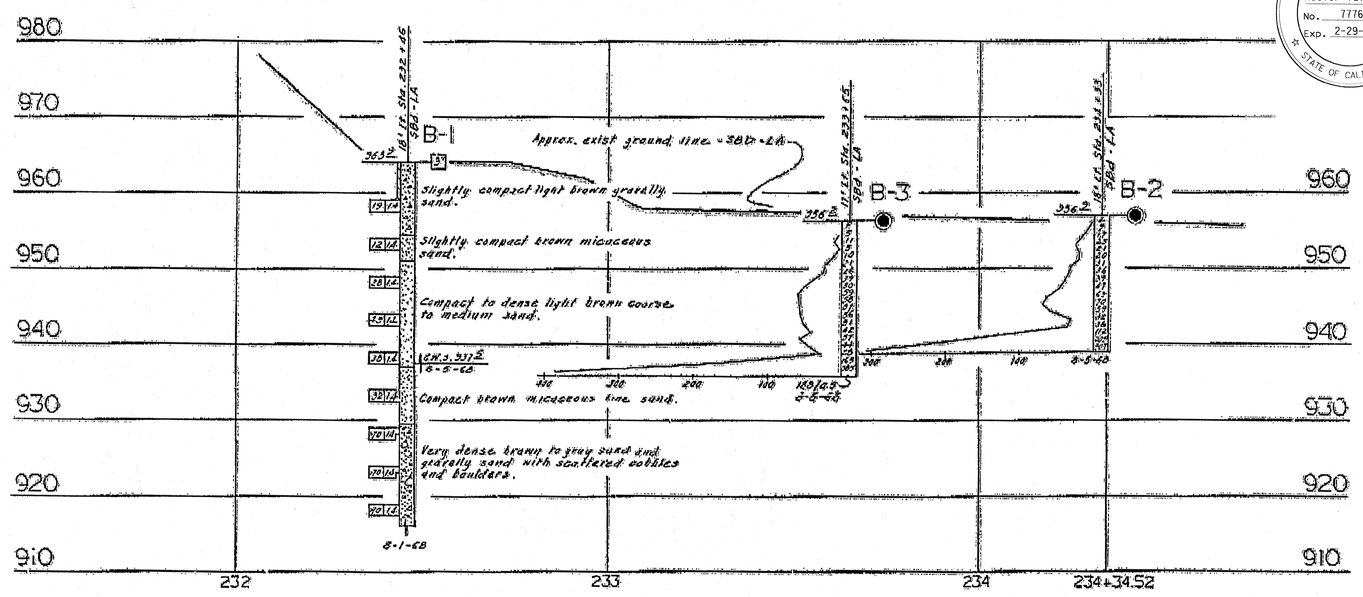

PROFILE

Scale: Vert 1" = 10'
Horiz 1" = 20'

TO ACCOMPANY PLANS DATED 4-16-12

PROFESSIONAL GEOLOGIST
Hector Valencia
No. 7776
Exp. 2-29-12
STATE OF CALIFORNIA

DIVISION OF ENGINEERING SERVICES - MATERIALS AND GEOTECHNICAL SERVICES

As-Built Log of Test Borings sheet is considered an informational document only. As such, the State of California registration seal with signature, license number and registration certificate expiration date confirm that this is a true and accurate copy of the original document. It does not attest to the accuracy or validity of the information contained in the original document. This drawing is available and presented only for the convenience of any bidder, contractor or other interested party.

DIST.	COUNTY	ROUTE	POST MILE-TOTAL PROJECT	Sheet No.	Total Sheets
08	Riv,SBd	91,215	21.5/21.7,43.2/45.2,0.0/5.1	1383	1743

PROFESSIONAL GEOLOGIST — DATE 12-21-11

SANTA ANA RIVER BRIDGE (WIDEN)

LOG OF TEST BORINGS 17 OF 20

UNIT: 3643	CONTRACT No.	BRIDGE No.
PROJ. No. & PHASE: 08000005061	08-0M9401	54-0471R/L
VERT DATUM: NGVD29 CONVERSION: NAVD88 = NGVD29 + 2.3 ft	Sheet	of
	63	66

NOTE: A copy of this As-Built Log of Test Boring is available at either: (1) the Office of Structure Maintenance and Investigations, Sacramento, CA or (2) the Transportation Laboratory, Geotechnical Services Project Archive, Sacramento, CA.

INFORMATION ON ACTUAL FOUNDATION CONDITIONS ENCOUNTERED IS ON FILE IN BRIDGE GEOLOGY SECTION

LEGEND OF BORING OPERATIONS

- Penetrometer
- 2½" Cone Penetrometer
- Sampler Boring (Dry)
- Rotary Boring (Wet)
- Auger Boring (Dry)
- Jet Boring
- Core Boring
- Test Pit

LEGEND OF EARTH MATERIALS

- Gravel
- Silty Clay or Clayey Silt
- Sand
- Peat and Organic Matter
- Silt
- Fill Material
- Clay
- Igneous Rock
- Sandy Clay or Clayey Sand
- Sedimentary Rock
- Sandy Silt or Silty Sand
- Metamorphic Rock

CLASSIFICATION OF MATERIAL BASED ON STANDARD GRADE SIZE LIMITS

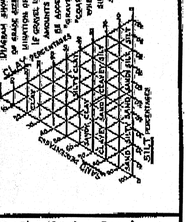

NOTE: Classification of earth material as shown on this sheet is based upon field inspection and is not to be construed to imply mechanical analysis.

BRIDGE DEPARTMENT
ENGINEERING GEOLOGY SECTION

Original Drawings revised by [illegible] Engineering Geologist

AS BUILT PLANS
Contract No. 08-096504
Date Completed 4-2-73
Document No. 2299

STATE OF CALIFORNIA
TRANSPORTATION AGENCY
DEPARTMENT OF PUBLIC WORKS
DIVISION OF HIGHWAYS

SANTA ANA RIVER BRIDGE

LOG OF TEST BORINGS

BRIDGE No.	POST MILE	DRAWING No.	SHEET	OF
54 47, 9L	22L		26	26

WO 096501
CU 08271

Disregard prints bearing earlier revision dates →

REVISION DATES (PRELIMINARY STAGE ONLY)

TO ACCOMPANY PLANS DATED 4-16-12

DIVISION OF ENGINEERING SERVICES - MATERIALS AND GEOTECHNICAL SERVICES

As-Built Log of Test Borings sheet is considered an informational document only. As such, the State of California registration seal with signature, license number and registration certificate expiration date confirm that this is a true and accurate copy of the original document. It does not attest to the accuracy or validity of the information contained in the original document. This drawing is available and presented only for the convenience of any bidder, contractor or other interested party.

DIST.	COUNTY	ROUTE	POST MILE-TOTAL PROJECT	Sheet No.	Total Sheets
08	Riv,SBd	91,215	21.5/21.7,43.2/45.2,0.0/5.1	1384	1743

PROFESSIONAL GEOLOGIST — DATE 12-21-11

PROFESSIONAL GEOLOGIST — Hector Valencia — No. 7776 — Exp. 2-29-12 — STATE OF CALIFORNIA

SANTA ANA RIVER BRIDGE (WIDEN)

LOG OF TEST BORINGS 18 OF 20

UNIT: 3643	CONTRACT No.	BRIDGE No.
PROJ. No. & PHASE: 08000005061	08-0M9401	54-0471R/L

VERT DATUM: NGVD29 CONVERSION: NAVD88 = NGVD29 + 2.3 ft	Sheet	of
	64	66

NOTE: A copy of this As-Built Log of Test Boring is available at either: (1) the Office of Structure Maintenance and investigations, Sacramento, CA or (2) the Transportation Laboratory, Geotechnical Services Project Archive, Sacramento, CA.

DIST.	COUNTY	ROUTE	POST MILES—TOTAL PROJECT	SHEET NO.	TOTAL SHEETS
08	SBd	10,15	22.3/22.6,22.7/E.5	260	490

DESIGN SECTION SUPERVISOR, REGISTERED CIVIL ENGINEER No. 11428

DATE APPROVED November 20, 1969

BENCH MARK

B.M. 15-A-56 Elev. 971.57
Chis X on S corner PCC endwall 35' Lt. Sta 125+60 E Imp. S. Rdbd.

PLAN

Scale: 1" = 20'

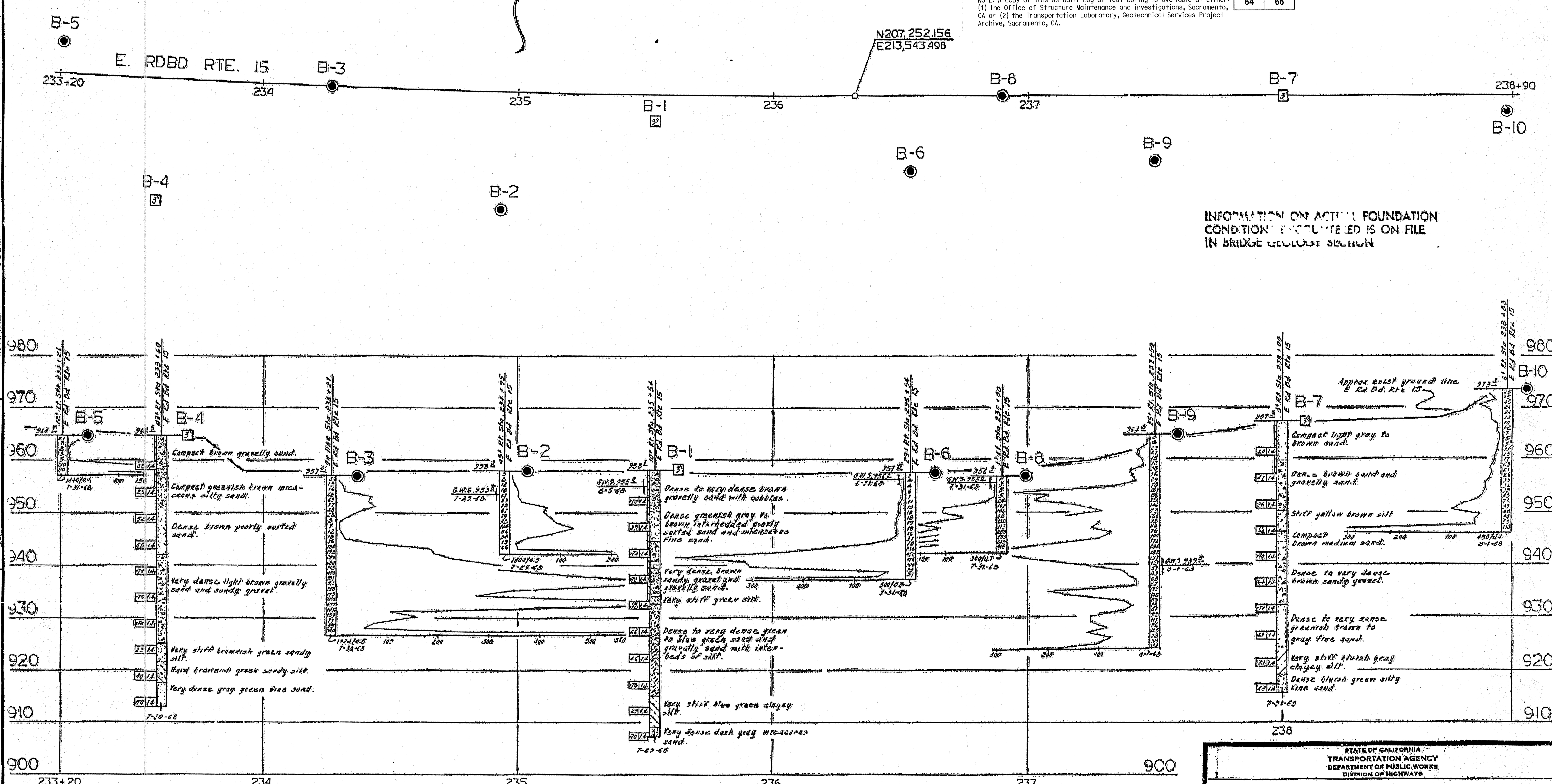

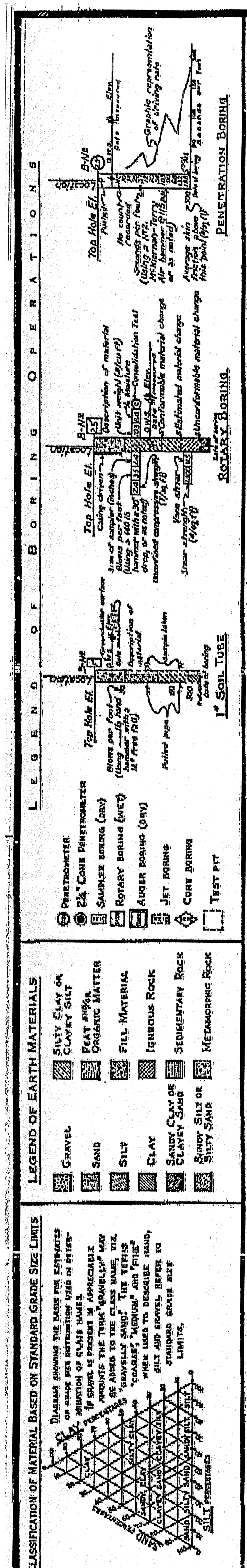

NOTE: Classification of earth material as shown on this sheet is based upon field inspection and is not to be construed to imply mechanical analysis.

AS BUILT PLANS
Contract No. 08-096504
Date Completed 4-2-73
Document No. 2299

BRIDGE DEPARTMENT
ENGINEERING GEOLOGY SECTION

CHECKED
Approval Recommended by — Engineering Geologist

WO 096501
CU 08201

STATE OF CALIFORNIA
TRANSPORTATION AGENCY
DEPARTMENT OF PUBLIC WORKS
DIVISION OF HIGHWAYS

SANTA ANA RIVER BRIDGE

LOG OF TEST BORINGS

BRIDGE NO.	POST MILE	DRAWING NO.	SHEET	OF
54-471 R/QR	024		21	21

Disregard prints bearing earlier revision dates → REVISION DATES (PRELIMINARY STAGE ONLY)

FED. ROAD DIST. NO.	STATE	PROJ. NO.	FISCAL YEAR	SHEET NO.	TOTAL SHEETS
7	CAL.			127	174

DIST.	COUNTY	ROUTE	SECTION	SHEET NO.	TOTAL SHEETS
VIII	SBd	43	F	-20	21

DATE APPROVED MARCH 12, 1956

B.M.# P^{52}-3A-53
Sp.Hd. nail in 2"x2" Rwd. hub buried 1.8', 32'Lt. 230+55 P.O.C. ℄ Imp. East Rdbd. Elev. 968.50'

B.M.# P^{53}-3B-53
Sp.Hd. nail in 2"x2" Rwd. hub buried 1.7', 20'Lt. 238+00 P.O.C. ℄ Imp. West Rdbd. Elev. 966.99'

B.M.# P^{52}-4A-53
Sp. Hd. nail in lead in P.C.C. W.W. at NWly. corner Bridge #54-06; 40.5' Rt. 238+00 P.O.C. ℄ Imp. East Rdbd. Elev. 977.43'

DRAWN	M. BROMBERG 1-10-55
CHECKED	R. Jackson 1-10-55

Approved Recommended by: Assistant Engineer (Bridges); Bridge Engineer

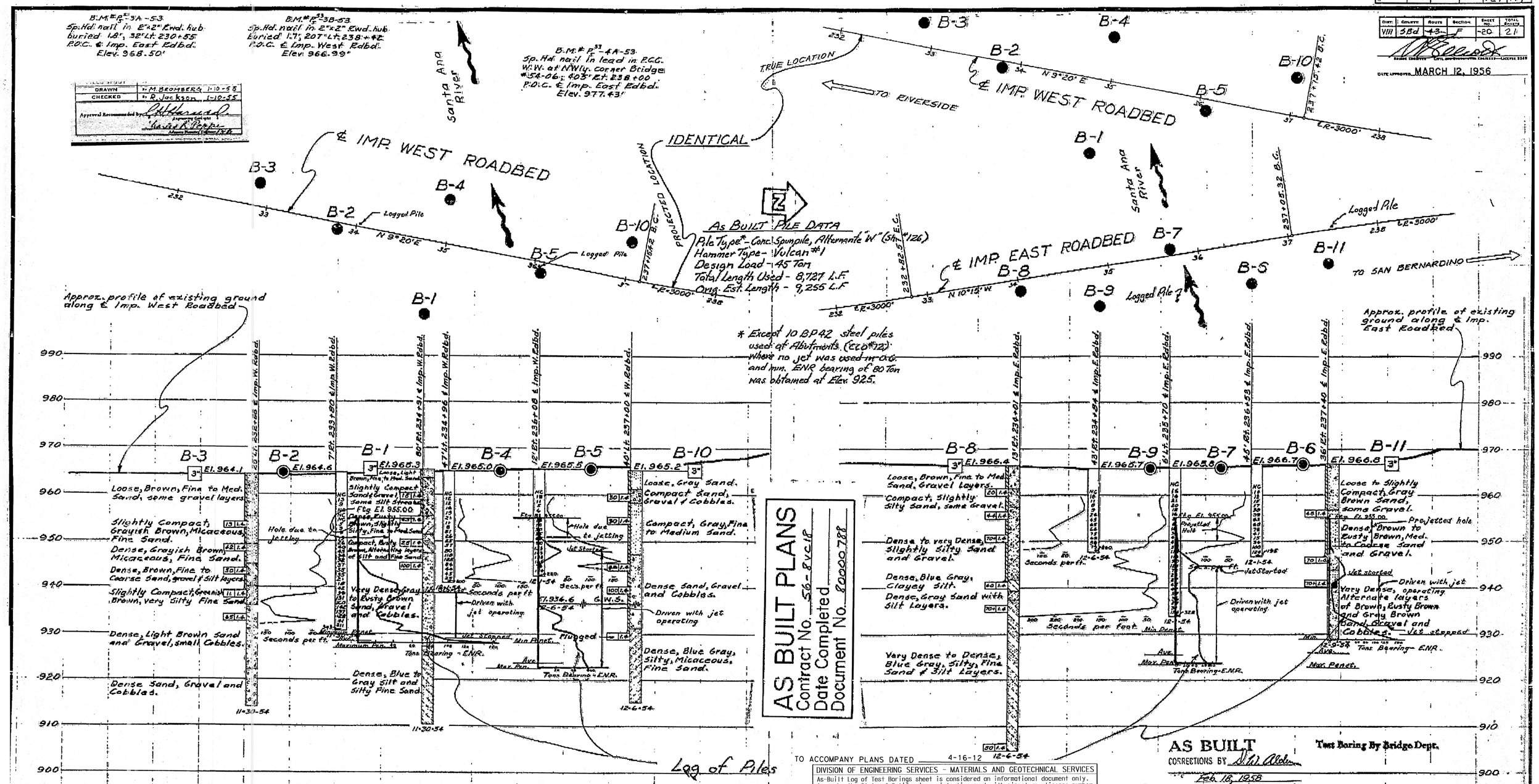

As Built Pile Data

Pile Type* - Conc. Spunpile, Alternate "W" (Sht. #126)
Hammer Type - Vulcan #1
Design Load - 45 Ton
Total Length Used - 8,727 L.F.
Orig. Est. Length - 9,255 L.F.

* Except 10 BP42 steel piles used at Abutments (EEO #12) where no jet was used in O.G. and min. ENR bearing of 80 Ton was obtained at Elev. 925.

AS BUILT PLANS
Contract No. 56-8VC18
Date Completed
Document No. 80000788

AS BUILT
CORRECTIONS BY
Feb. 16, 1958

Test Boring By Bridge Dept.

TO ACCOMPANYING PLANS DATED 4-16-12

DIVISION OF ENGINEERING SERVICES - MATERIALS AND GEOTECHNICAL SERVICES

As-Built Log of Test Borings sheet is considered an informational document only. As such, the State of California registration seal with signature, license number and registration certificate expiration date confirm that this is a true and accurate copy of the original document. It does not attest to the accuracy or validity of the information contained in the original document. This drawing is available and presented only for the convenience of any bidder, contractor or other interested party.

DIST.	COUNTY	ROUTE	POST MILE-TOTAL PROJECT	Sheet No.	Total Sheets
08	Riv,SBd	91,215	21.5/21.7,43.2/45.2,0.0/5.1	1385	1743

PROFESSIONAL GEOLOGIST — DATE 12-21-11

PROFESSIONAL GEOLOGIST
Hector Valencia
No. 7776
Exp. 2-29-12
STATE OF CALIFORNIA

SANTA ANA RIVER BRIDGE (WIDEN)

LOG OF TEST BORINGS 19 OF 20

UNIT: 3643	CONTRACT No.	BRIDGE No.
PROJ. No. & PHASE: 08000005061	08-0M9401	54-0471R/L

VERT DATUM: NGVD29 CONVERSION: NAVD88 = NGVD29 + 2.3 ft — Sheet 65 of 66

NOTE: A copy of this As-Built Log of Test Boring is available at either: (1) the Office of Structure Maintenance and Investigations, Sacramento, CA or (2) the Transportation Laboratory, Geotechnical Services Project Archive, Sacramento, CA.

Classification of Material Based on Standard Grade Size Limits

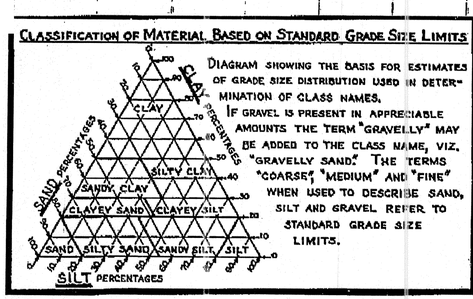

Diagram showing the basis for estimates of grade size distribution used in determination of class names. If gravel is present in appreciable amounts the term "gravelly" may be added to the class name, viz. "gravelly sand". The terms "coarse", "medium" and "fine" when used to describe sand, silt and gravel refer to standard grade size limits.

Legend of Earth Materials

- Gravel
- Sand
- Silt
- Clay
- Sandy Clay or Clayey Sand
- Sandy Silt or Silty Sand
- Silty Clay or Clayey Silt
- Peat and/or Organic Matter
- Fill Material
- Igneous Rock
- Sedimentary Rock
- Metamorphic Rock

Legend of

- Plan of any boring
- Penetrometer
- 2¼" Cone Penetrometer
- Sampler boring (DRY)
- Rotary boring (WET)
- Auger boring (DRY)
- Jet boring
- Core boring
- Test pit

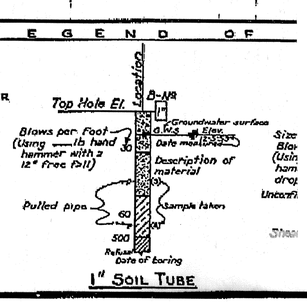

Notes

The contractor's attention is directed to Section 2, Article (c) of the Standard Specifications and to the Special Provisions accompanying this set of plans.

Classification of earth material as shown on this sheet is based upon field inspection and is not to be construed to imply mechanical analysis.

STATE OF CALIFORNIA
DEPARTMENT OF PUBLIC WORKS
DIVISION OF HIGHWAYS

SANTA ANA RIVER BRIDGES

LOG OF TEST BORINGS (1 of 2)

Horiz. 1"=50' Vert. 1"=10'	Bridge 54-471 R&L	File E-54	Drawing 4012-20

PREL. DRAWING No. P-4012-54

FED. ROAD. DIV. No.	STATE	PROJ. No.	FISCAL YEAR	SHEET No.	TOTAL SHEETS
7	CAL.			128	174

DIST.	COUNTY	ROUTE	SECTION	SHEET No.	TOTAL SHEETS
VIII	SBd	43	F	21	21

15

CHIEF ENGINEER — CIVIL ENGINEERING CERTIFICATE — LICENSE 8888

DATE APPROVED MARCH 12, 1956

TO ACCOMPANY PLANS DATED 4-16-12

DIVISION OF ENGINEERING SERVICES - MATERIALS AND GEOTECHNICAL SERVICES

As-Built Log of Test Borings sheet is considered an informational document only. As such, the State of California registration seal with signature, license number and registration certificate expiration date confirm that this is a true and accurate copy of the original document. It does not attest to the accuracy or validity of the information contained in the original document. This drawing is available and presented only for the convenience of any bidder, contractor or other interested party.

DIST.	COUNTY	ROUTE	POST MILE-TOTAL PROJECT	Sheet No.	Total Sheets
08	Riv,SBd	91,215	21.5/21.7,43.2/45.2,0.0/5.1	1386	1743

PROFESSIONAL GEOLOGIST — DATE 12-21-11

PROFESSIONAL GEOLOGIST — Hector Valencia — No. 7776 — Exp. 2-29-12 — STATE OF CALIFORNIA

SANTA ANA RIVER BRIDGE (WIDEN)

LOG OF TEST BORINGS 20 OF 20

UNIT: 3643	CONTRACT No.	BRIDGE No.
PROJ. No. & PHASE: 08000005061	08-0M9401	54-0471R/L

VERT DATUM: NGVD29 CONVERSION: NAVD88 = NGVD29 + 2.3 ft — Sheet 66 of 66

NOTE: A copy of this As-Built Log of Test Boring is available at either: (1) the Office of Structure Maintenance and Investigations, Sacramento, CA or (2) the Transportation Laboratory, Geotechnical Services Project Archive, Sacramento, CA.

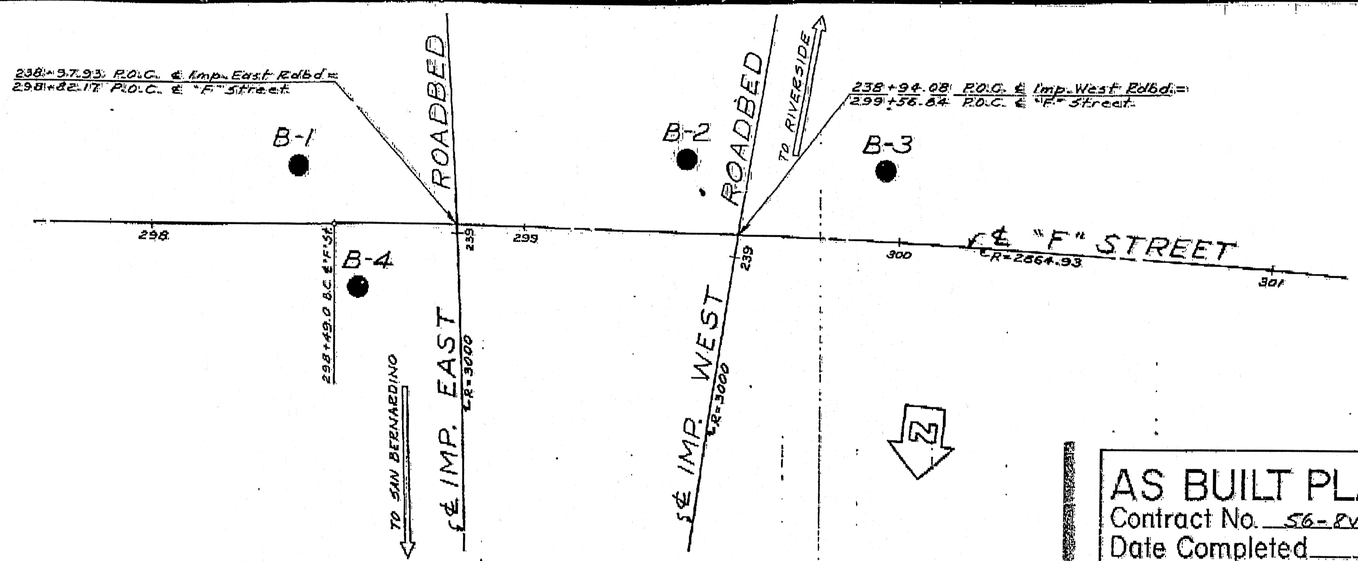

AS BUILT PLANS
Contract No. 56-8vc18
Date Completed
Document No. 80000788

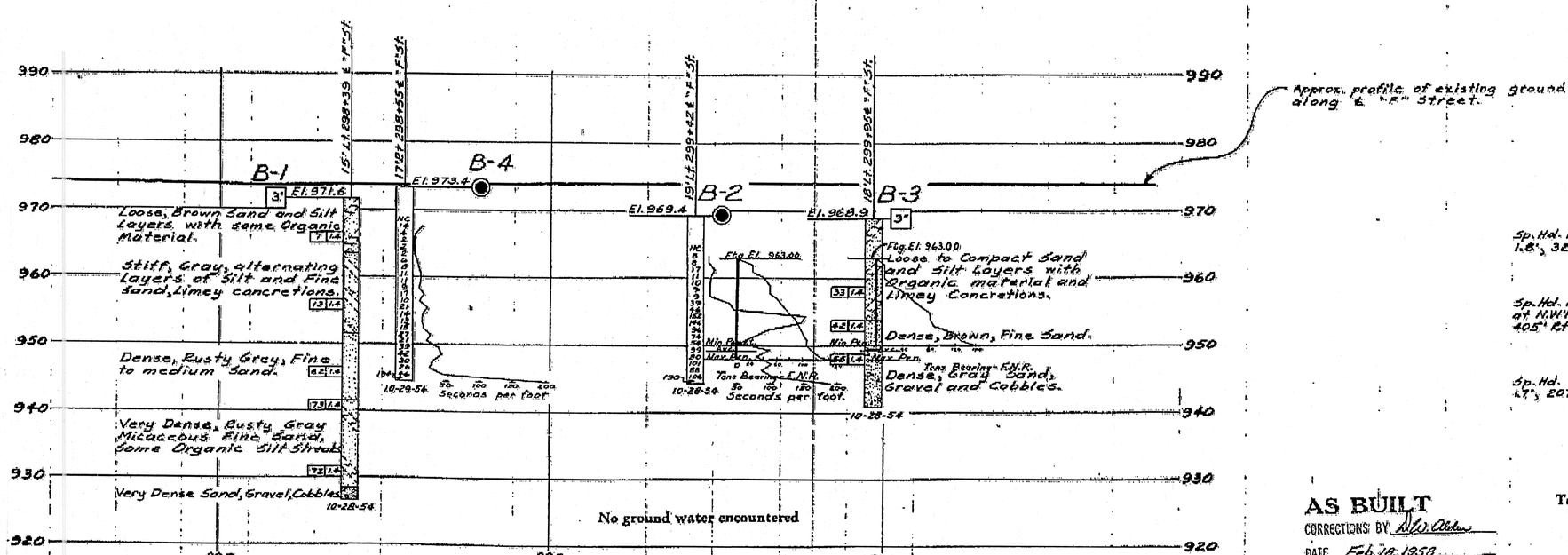

B.M. # R53-3A-53
Sp. Hd. nail in 2"x2" Rwd. hub buried 1.8', 32' Lt. 230+55 P.O.C. ℄ Imp. E. Rdbd.
Elev. 963.50'

B.M. # R53-4A-53
Sp. Hd. nail in lead in P.C.C. W.W. at N.W'ly. corner Bridge # 54-06, 405' Rt. 238+00 P.O.C. ℄ Imp. E. Rdbd.
Elev. 977.43'

B.M. # R53-38-53
Sp. Hd. nail in 2"x2" Rwd. hub buried 1.7', 207' Lt. 238+42 P.O.C. ℄ Imp. W. Rdbd.
Elev. 966.99'

AS BUILT
CORRECTIONS BY
DATE Feb. 18, 1958

Test Boring By Bridge Dept.

CLASSIFICATION OF MATERIAL BASED ON STANDARD GRADE SIZE LIMITS

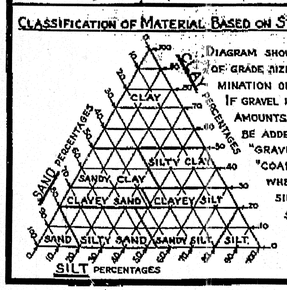

DIAGRAM SHOWING THE BASIS FOR ESTIMATES OF GRADE SIZE DISTRIBUTION USED IN DETERMINATION OF CLASS NAMES.

IF GRAVEL IS PRESENT IN APPRECIABLE AMOUNTS THE TERM "GRAVELLY" MAY BE ADDED TO THE CLASS NAME, VIZ. "GRAVELLY SAND." THE TERMS "COARSE", "MEDIUM" AND "FINE" WHEN USED TO DESCRIBE SAND, SILT AND GRAVEL REFER TO STANDARD GRADE SIZE LIMITS.

LEGEND OF EARTH MATERIALS

- GRAVEL
- SAND
- SILT
- CLAY
- SANDY CLAY OR CLAYEY SAND
- SANDY SILT OR SILTY SAND
- SILTY CLAY OR CLAYEY SILT
- PEAT AND/OR ORGANIC MATTER
- FILL MATERIAL
- IGNEOUS ROCK
- SEDIMENTARY ROCK
- METAMORPHIC ROCK

LEGEND OF BORING OPERATIONS

- PLAN OF ANY BORING
- PENETROMETER
- 2½" CONE PENETROMETER
- SAMPLER BORING (DRY)
- ROTARY BORING (WET)
- AUGER BORING (DRY)
- JET BORING
- CORE BORING
- TEST PIT

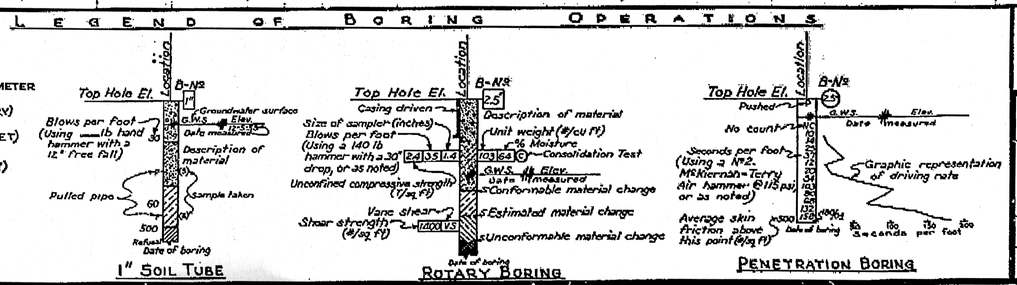

NOTES

The contractor's attention is directed to Section 2, Article (c) of the Standard Specifications and to the Special Provisions accompanying this set of plans.

Classification of earth material as shown on this sheet is based upon field inspection and is not to be construed to imply mechanical analysis.

STATE OF CALIFORNIA
DEPARTMENT OF PUBLIC WORKS
DIVISION OF HIGHWAYS

SANTA ANA RIVER BRIDGES

LOG OF TEST BORINGS (2 of 2)

SCALE	BRIDGE	FILE	DRAWING
HORIZ. 1"=20' VERT. 1"=10'	54-471R&L	E-34	B-4012-21

PREL. DRAWING NO. P-4012 33

DIST	COUNTY	ROUTE	POST MILES TOTAL PROJECT	SHEET No.	TOTAL SHEETS
08	Riv,SBd	91,215	21.5/21.7, 43.2/45.2,0.0/5.1	1387	1743

REGISTERED CIVIL ENGINEER — DATE 4-06-12

4-16-12
PLANS APPROVAL DATE

REGISTERED PROFESSIONAL ENGINEER — LARRY WU No. C57035 Exp. 6-30-13 CIVIL — STATE OF CALIFORNIA

The State of California or its officers or agents shall not be responsible for the accuracy or completeness of electronic copies of this plan sheet.

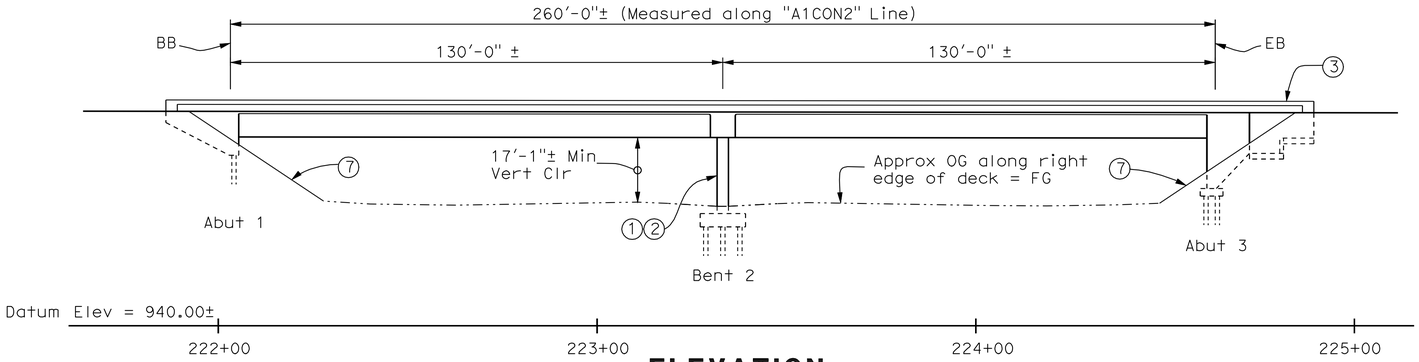

ELEVATION

1" = 20'

NOTES:

1. Paint "Br No 54-0479L"
2. Paint "Interstate 215/10 Sep"
3. Conc Barrier, Type 732
4. Temporary Railing Type K, see "Road Plans"
5. Remove Existing Type 9 Barrier Railing
6. Remove Existing Overhang
7. Slope Paving
8. Structure Approach, Type N(30D)
9. Structure Approach, Type R(30D)
10. Conc Barrier, Type 732 (Mod)
11. Existing MBGR, see "Road Plans"
12. Remove Existing MBGR, see "Road Plans"
13. MBGR, see "Road Plans"
14. Match Existing Cross Slope
15. New & Replaced Joint Seal (MR=1")

LEGEND

- Point of Minimum Vertical Clearance
- Direction of Traffic
- Indicates New Construction
- Indicates Existing Structure
- Indicates Existing Bridge Removal (Portion)
- Indicates Closure Pour
- Indicates Limits of Clean & Treat Bridge Deck with Methacrylate

RETROFIT CODE

- (A) Bent Cap/Girder Retrofit (FRP)
- (B) Column Retrofit (FRP)

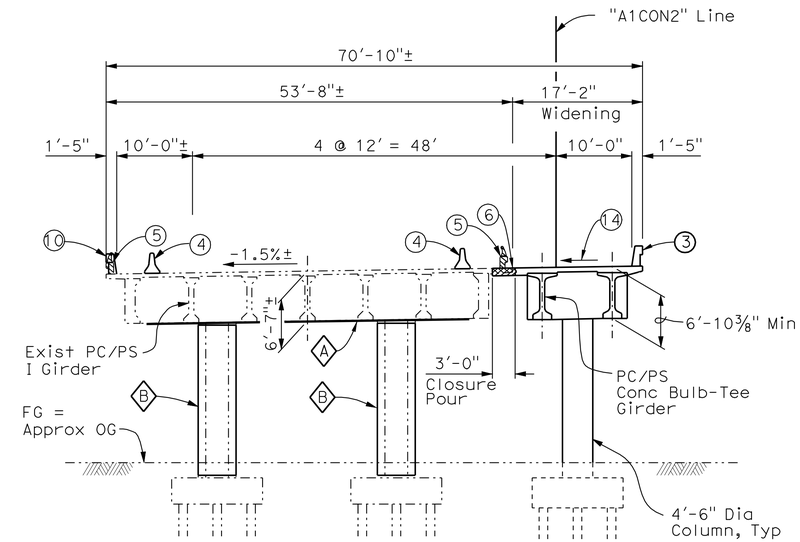

TYPICAL SECTION

1" = 10'

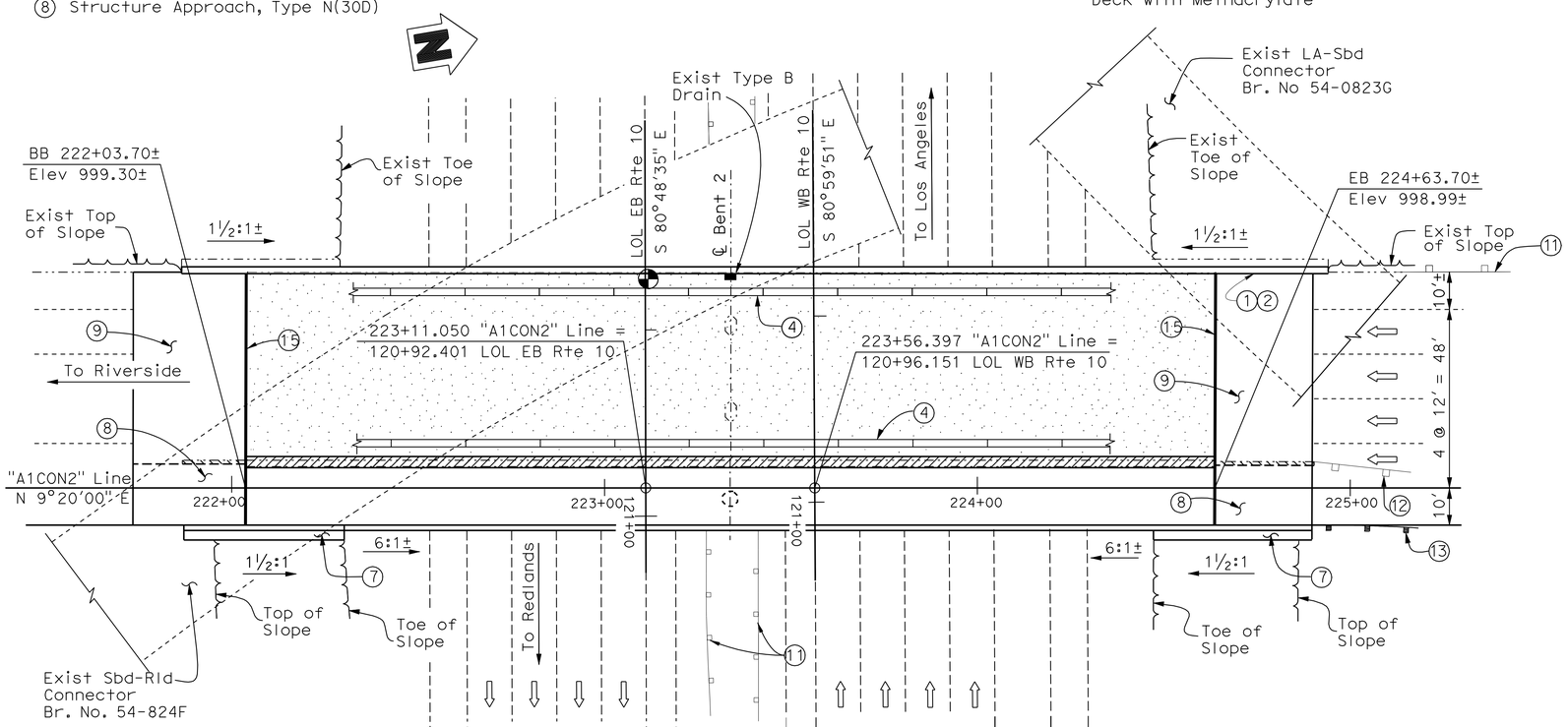

NOTE:
THE CONTRACTOR SHALL VERIFY ALL CONTROLLING FIELD DIMENSIONS BEFORE ORDERING OR FABRICATING ANY MATERIAL.

PLAN

1" = 20'

For General Notes, Index to Plans and Pile Data Table, see "INDEX TO PLANS" sheet

QUANTITIES

PREPARE CONCRETE BRIDGE DECK SURFACE	12,588	SQFT
BRIDGE REMOVAL (PORTION), LOCATION B	LUMP	SUM
STRUCTURE EXCAVATION (BRIDGE)	149	CY
STRUCTURE BACKFILL (BRIDGE)	115	CY
AGGREGATE BASE (APPROACH SLAB)	12	CY
FURNISH STEEL PILING (HP 10 X 57)	403	LF
DRIVE STEEL PILE (HP 10 X 57)	10	EA
FURNISH STEEL PILING (HP 14 X 89)	556	LF
DRIVE STEEL PILE (HP 14 X 89)	13	EA
STRUCTURAL CONCRETE, BRIDGE FOOTING	45	CY
STRUCTURAL CONCRETE, BRIDGE	244	CY
STRUCTURAL CONCRETE, APPROACH SLAB (TYPE N)	38	CY
STRUCTURAL CONCRETE, APPROACH SLAB (TYPE R)	119	CY
DRILL AND BOND DOWEL	13	LF
FURNISH PRECAST PRESTRESSED CONCRETE BULB-TEE GIRDER (120'-130')	4	EA
ERECT PRECAST PRESTRESSED CONCRETE GIRDER	4	EA
JOINT SEAL (MR 1")	142	LF
BAR REINFORCING STEEL (BRIDGE)	69,620	LB
TREAT BRIDGE DECK	12,588	SQFT
FURNISH BRIDGE DECK TREATMENT MATERIAL	126	GAL
COMPOSITE COLUMN CASING	572	SQFT
FIBER REINFORCED POLYMER STRIP	1,084	SQFT
SLOPE PAVING (CONCRETE)	19	CY
CONCRETE BARRIER (TYPE 732 MODIFIED)	305	LF
CONCRETE BARRIER (TYPE 732)	305	LF

Daniel T. Adams
DESIGN ENGINEER

	BY	CHECKED
DESIGN	L. Wu/A. McPhee	C. Duan
DETAILS	D. Wooten/Y. Tang	C. Duan
QUANTITIES	A. McPhee	F. Chen

LOAD & RESISTANCE FACTOR DESIGN — LIVE LOADING: HL93 W/"LOW-BOY"; PERMIT DESIGN VEHICLE

	BY	CHECKED
LAYOUT	A. McPhee	C. Duan
SPECIFICATIONS	J. Corrado	PLANS AND SPECS COMPARED J. Corrado

ORIGINAL SCALE IN INCHES FOR REDUCED PLANS 0 1 2 3

STATE OF CALIFORNIA
DEPARTMENT OF TRANSPORTATION

DIVISION OF ENGINEERING SERVICES
STRUCTURE DESIGN
DESIGN BRANCH 10

BRIDGE NO. 54-0479L
POST MILE 4.03

I-215/I-10 SEPARATION LT (WIDEN)
GENERAL PLAN

UNIT: 3589
PROJECT NUMBER & PHASE: 08000005061
CONTRACT NO.: 08-0M9401

DISREGARD PRINTS BEARING EARLIER REVISION DATES

REVISION DATES: 06-02-10 | 11-04-11 | 3-28-12

SHEET 1 OF 28

USERNAME => s124436 DATE PLOTTED => 18-APR-2012 TIME PLOTTED => 16:20

STRUCTURES DESIGN GENERAL PLAN SHEET (ENGLISH) (REV.09-01-10)

FILE => 540479lagp01.dgn

DIST	COUNTY	ROUTE	POST MILES TOTAL PROJECT	SHEET No.	TOTAL SHEETS
08	Riv,SBd	91,215	21.5/21.7, 43.2/45.2,0.0/5.1	1388	1743

REGISTERED CIVIL ENGINEER — DATE 4-06-12

4-16-12
PLANS APPROVAL DATE

REGISTERED PROFESSIONAL ENGINEER — LARRY WU — No. C57035 — Exp. 6-30-13 — CIVIL — STATE OF CALIFORNIA

The State of California or its officers or agents shall not be responsible for the accuracy or completeness of electronic copies of this plan sheet.

INDEX TO PLANS

Sheet No.	Title
1	GENERAL PLAN
2	INDEX TO PLANS
3	FOUNDATION PLAN
4	ABUTMENT 1 LAYOUT
5	ABUTMENT 3 LAYOUT
6	ABUTMENT DETAILS NO. 1
7	ABUTMENT DETAILS NO. 2
8	BENT LAYOUT
9	BENT DETAILS
10	BENT CAP / GIRDER RETROFIT DETAILS
11	COLUMN RETROFIT DETAILS
12	TYPICAL SECTION
13	GIRDER LAYOUT
14	PC/PS BULB-TEE GIRDER DETAILS NO. 1
15	PC/PS BULB-TEE GIRDER DETAILS NO. 2
16	CONCRETE BARRIER TYPE 732 (MOD)
17	SLOPE PAVING - FULL SLOPE
18	STRUCTURE APPROACH TYPE N (30D)
19	STRUCTURE APPROACH TYPE R (30D)
20	LOG OF TEST BORINGS (1 OF 9)
21	LOG OF TEST BORINGS (2 OF 9)
22	LOG OF TEST BORINGS (3 OF 9)
23	LOG OF TEST BORINGS (4 OF 9)
24	LOG OF TEST BORINGS (5 OF 9)
25	LOG OF TEST BORINGS (6 OF 9)
26	LOG OF TEST BORINGS (7 OF 9)
27	LOG OF TEST BORINGS (8 OF 9)
28	LOG OF TEST BORINGS (9 OF 9)

STANDARD PLANS DATED MAY 2006

A10A	ACRONYMS AND ABBREVIATIONS (SHEET 1 OF 2)
A10B	ACRONYMS AND ABBREVIATIONS (SHEET 2 OF 2)
A10C	SYMBOLS (SHEET 1 OF 2)
A10D	SYMBOLS (SHEET 2 OF 2)
A62-C	LIMITS OF PAYMENT FOR EXCAVATION AND BACKFILL - BRIDGE
BO-1	BRIDGE DETAILS
BO-3	BRIDGE DETAILS
BO-5	BRIDGE DETAILS
B3-1	RETAINING WALL TYPE 1 H=4' THROUGH 30'
B3-8	RETAINING WALL DETAILS No. 1
RSP B6-21	JOINT SEALS (MAXIMUM MOVEMENT RATING = 2")
B11-55	CONCRETE BARRIER TYPE 732

STANDARD PLAN SHEET NO.

DETAIL NO.

GENERAL NOTES
LOAD AND RESISTANCE FACTOR DESIGN

DESIGN: AASHTO LRFD BRIDGE DESIGN SPECIFICATIONS, 4th Edition with California Amendments, Preface dated Sept. 2010

SEISMIC DESIGN: Caltrans Seismic Design Criteria (SDC) Version 1.6, November, 2010.

DEAD LOAD: Includes 35 Psf for future wearing surface.

LIVE LOADING: HL93 and permit design load.

SEISMIC LOADING: Soil Profile: V_{S30} = 919 ft/s
Moment Magnitude: M_{max} =7.5
Peak Ground Acceleration: 0.83g

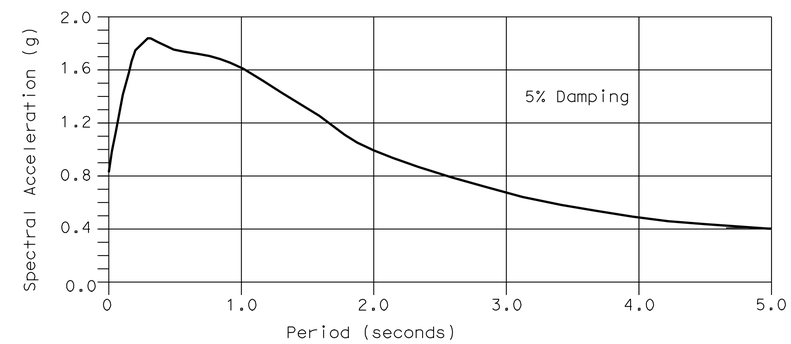

ACCELERATION RESPONSE SPECTRUM

PILE DATA TABLE

Locations	Pile Type	Required Nominal Resistance (kips)		Design Tip Elevation (ft)	Specidied Tip Elevation (ft)	Nominal Driving Resistance (kips)
		Compression	Tension			
Abutment 1	HP 10X57 "H"-Piles	280	0	946.0 (a)	946.0	280
Bent 2	HP 14x89 "H"-Piles	360	185	925.0 (a) 930.0 (b)	925.0	360
Abutment 3	HP 10X57 "H"-Piles	280	0	942.0 (a)	942.0	280

NOTE: Design Tip Elevations is controlled by: (a) Compression, (b) Tension

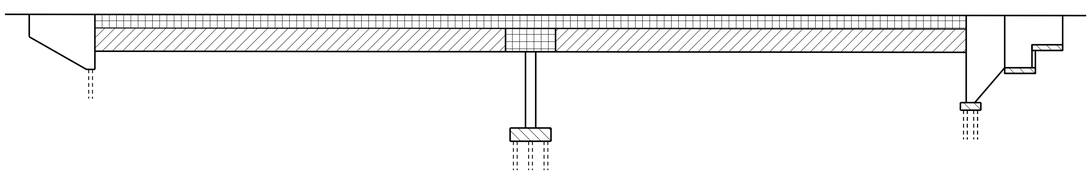

Structural Concrete, Bridge

Structural Concrete, Bridge Footing

PC/PS Bulb-Tee Girders, see "PC/PS BULB-TEE GIRDER DETAILS NO. 1" sheet.

Structural Concrete, Bridge (Deck, Bent Cap, End Diaphragm and Intermediate Diphragms f'_c = 5000 psi @ 28 days).

CONCRETE STRENGTH AND TYPE LIMITS

NO SCALE

REINFORCED CONCRETE: f_y = 60 ksi
f'_c = 4000 psi, unless otherwise noted
n = 9

PRESTRESSED CONCRETE: See "Prestressing Notes" on "PC/PS BULB-TEE GIRDER DETAILS NO. 1" sheet.

	BY	CHECKED
DESIGN	A. McPhee	C. Duan
DETAILS	Y. Tang	C. Duan
QUANTITIES	A. McPhee	F. Chen

STATE OF CALIFORNIA
DEPARTMENT OF TRANSPORTATION

DIVISION OF ENGINEERING SERVICES
STRUCTURE DESIGN
DESIGN BRANCH 10

BRIDGE NO. 54-0479L
POST MILE 4.03

I-215/I-10 SEPARATION LT (WIDEN)
INDEX TO PLANS

STRUCTURES DESIGN DETAIL SHEET (ENGLISH) (REV. 09-01-10)

ORIGINAL SCALE IN INCHES FOR REDUCED PLANS 0 1 2 3

UNIT: 3589
PROJECT NUMBER & PHASE: 08000005061
CONTRACT NO.: 08-0M9401

DISREGARD PRINTS BEARING EARLIER REVISION DATES

REVISION DATES 12-22-10 9-01-11 11-4-11

SHEET 2 OF 28

FILE => 540479laltp02.dgn

USERNAME => s124496 DATE PLOTTED => 18-APR-2012 TIME PLOTTED => 16:20

DIST	COUNTY	ROUTE	POST MILES TOTAL PROJECT	SHEET No.	TOTAL SHEETS
08	Riv,SBd	91,215	21.5/21.7, 43.2/45.2,0.0/5.1	1389	1743

REGISTERED CIVIL ENGINEER — DATE 4-06-12

4-16-12
PLANS APPROVAL DATE

REGISTERED PROFESSIONAL ENGINEER — LARRY WU No. C57035 Exp. 6-30-13 CIVIL — STATE OF CALIFORNIA

The State of California or its officers or agents shall not be responsible for the accuracy or completeness of electronic copies of this plan sheet.

Bridge Location

Left Bridge

1. 58.413 Lt. LOL SB Rte 215, Sta 222+03.805, Elev 998.417
2. 7.906 Lt. LOL SB Rte 215, Sta 222+03.722, Elev 999.120
3. 58.264 Lt. LOL SB Rte 215, Sta 224+63.473, Elev 998.174
4. 7.583 Lt. LOL SB Rte 215, Sta 224+63.879, Elev 998.841

Right Bridge

5. 7.836 Rt. LOL NB Rte 215, Sta 222+07.763, Elev 1001.816
6. 84.307 Rt. LOL NB Rte 215, Sta 222+07.744, Elev 1000.732
7. 7.830 Rt. LOL NB Rte 215, Sta 224+67.582, Elev 1000.838
8. 61.670 Rt. LOL NB Rte 215, Sta 224+67.461, Elev 1000.125
9. 106.556 Rt. LOL NB Rte 215, Sta 224+67.803, Elev 999.350

A. 223+11.050 LOL SB Rte 215 = 120+92.401 LOL EB Rte 10

B. 223+56.397 LOL SB Rte 215 = 120+96.151 LOL WB Rte 10

C. 223+15.046 LOL NB Rte 215 = 121+65.397 LOL EB Rte 10

D. 223+60.632 LOL NB Rte 215 = 121+69.149 LOL WB Rte 10

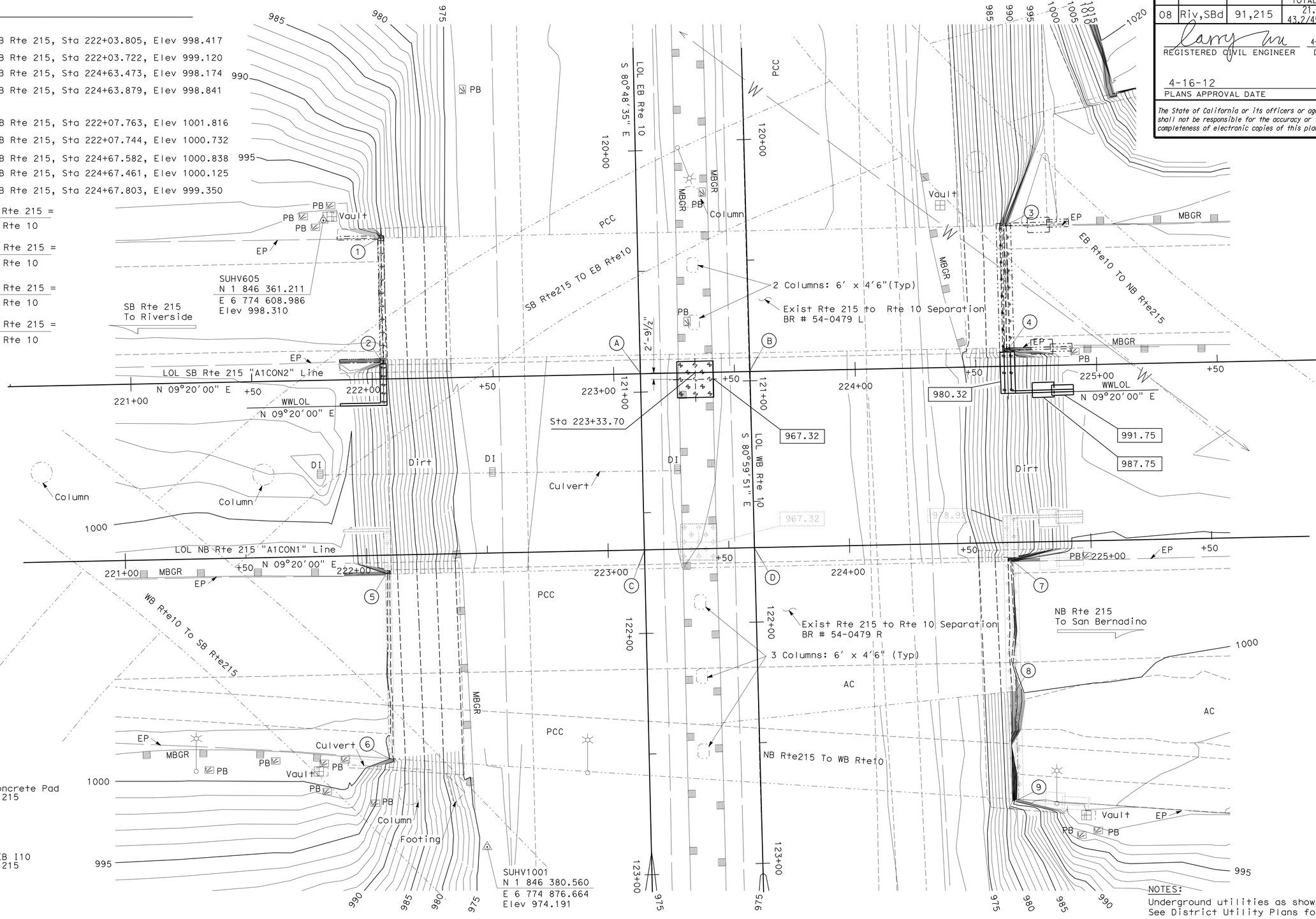

SURVEY CONTROL

SUHV605

Fd: PK/CT Washer/ Concrete Pad
139.302 Lt. ℄ NB Rte 215
Sta 221+84.882
N 1 846 361.211
E 6 774 608.986
Elev 998.310

SUHV1001

Fd: PK/AC Shoulder EB I10
121.694 Rt. ℄ NB Rte 215
Sta 222+47.387
N 1 846 380.560
E 6 774 876.664
Elev 974.191

NOTES:
Underground utilities as shown are approximate.
See District Utility Plans for Details.

PRELIMINARY INVESTIGATION SECTION					
SCALE 1"=20'	VERT.DATUM NAVD88	PHOTOGRAMMETRY AS OF: X			
	HORZ.DATUM NAD83	SURVEYED	BY D8	CHECKED	BY T. Phung/ C. Stewart
ALIGNMENT TIES Dist. Traverse Sheet		DRAFTED	BY C. Pham	CHECKED	BY E. Vigjar

DESIGN	BY A. McPhee	CHECKED C. Duan
DETAILS	BY Y. Tang	CHECKED C. Duan
QUANTITIES	BY A. McPhee	CHECKED F. Chen

STATE OF CALIFORNIA
DEPARTMENT OF TRANSPORTATION

DIVISION OF ENGINEERING SERVICES
STRUCTURE DESIGN
DESIGN BRANCH 10

BRIDGE NO. 54-0479RL
POST MILE 4.03

I-215/I-10 SEPARATION LT (WIDEN)
FOUNDATION PLAN

STRUCTURES FOUNDATION PLAN SHEET (ENGLISH) (REV. 09-01-10)

ORIGINAL SCALE IN INCHES FOR REDUCED PLANS 0 1 2 3

UNIT: 3589
PROJECT NUMBER & PHASE: 08 000005061
CONTRACT NO.: 08-0M9401

DISREGARD PRINTS BEARING EARLIER REVISION DATES

REVISION DATES 06/13/11

SHEET 3 OF 28

FILE => 540479lefdp03.dgn

USERNAME => s124496 DATE PLOTTED => 18-APR-2012 TIME PLOTTED => 16:20

DIST	COUNTY	ROUTE	POST MILES TOTAL PROJECT	SHEET No.	TOTAL SHEETS
08	Riv,SBd	91,215	21.5/21.7, 43.2/45.2,0.0/5.1	1390	1743

REGISTERED CIVIL ENGINEER 4-06-12 DATE

4-16-12
PLANS APPROVAL DATE

REGISTERED PROFESSIONAL ENGINEER LARRY WU No. C57035 Exp. 6-30-13 CIVIL STATE OF CALIFORNIA

The State of California or its officers or agents shall not be responsible for the accuracy or completeness of electronic copies of this plan sheet.

NOTES:

1. For Wingwall Details, see "ABUTMENT DETAILS NO. 1" sheet.
2. For Barrier Details, see "CONCRETE BARRIER TYPE 732 (MOD)" sheet.
3. For Dowel arrangement, see "ABUTMENT DETAILS NO. 1" sheet.
4. For Geocomposite Drain details, see "ABUTMENT DETAILS NO. 2" sheet.

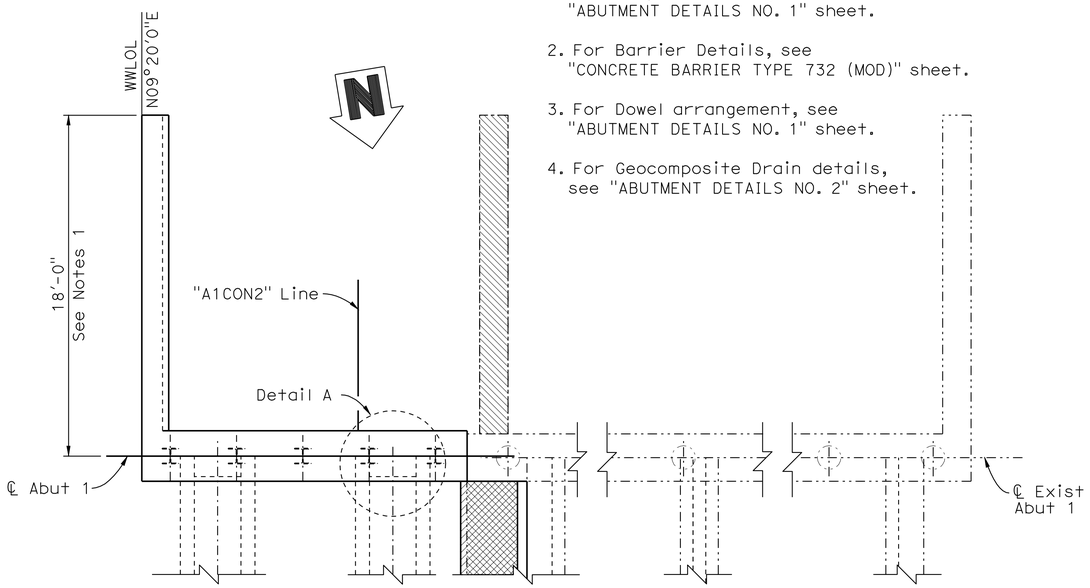

PLAN

1/4" = 1'-0"

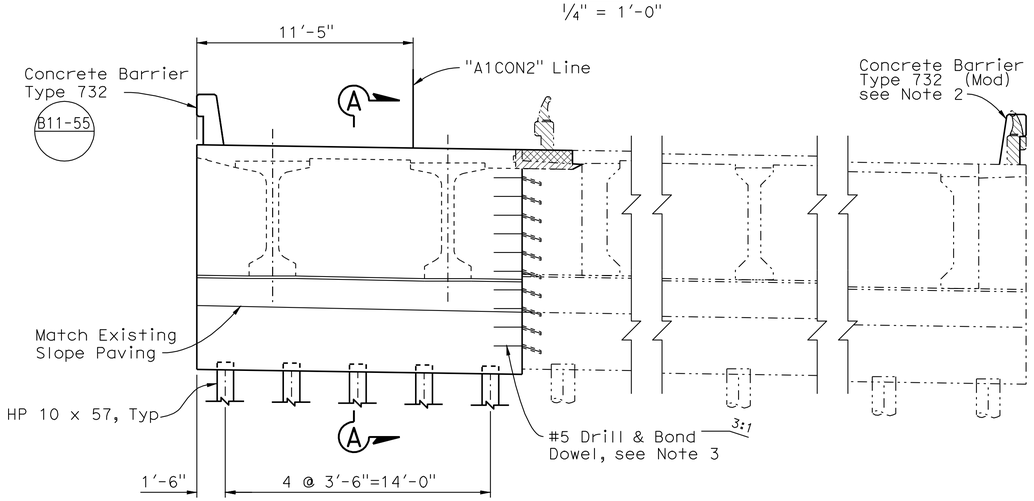

ELEVATION

1/4" = 1'-0"

LEGEND

- Indicates New Construction
- Indicates Existing Structure
- Indicates Existing Bridge Removal
- Indicates Deck Closure Pour
- Indicates Expanded Polystyrene

NOTE:
THE CONTRACTOR SHALL VERIFY ALL CONTROLLING FIELD DIMENSIONS BEFORE ORDERING OR FABRICATING ANY MATERIAL.

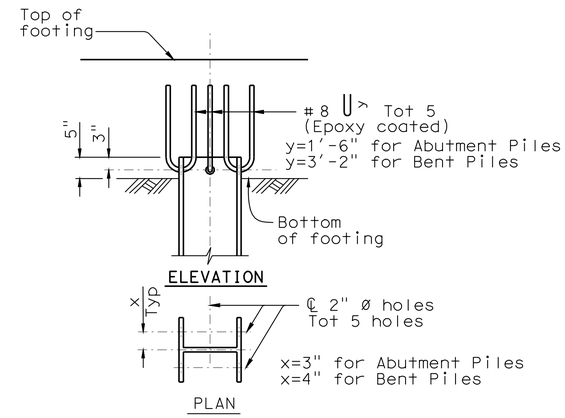

STEEL PILE ANCHOR

NO SCALE

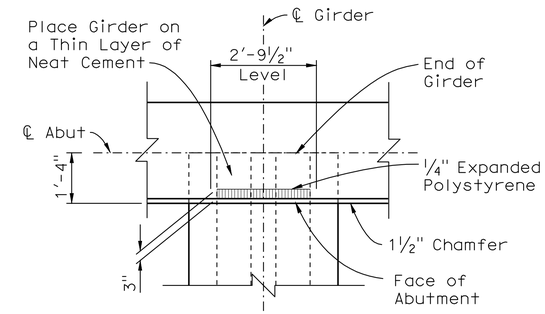

DETAIL A

1/2" = 1'-0"

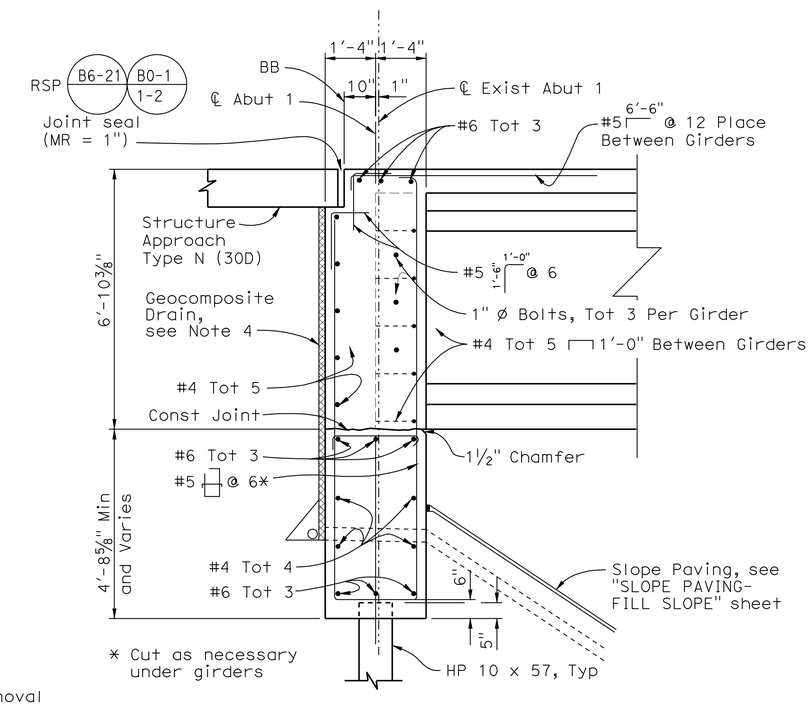

SECTION A-A

1/2" = 1'-0"

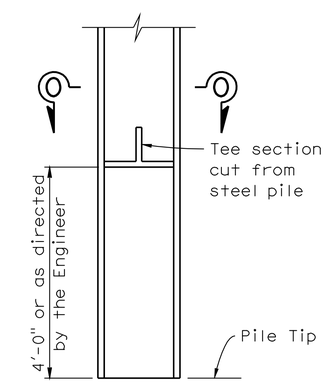

PILE LUG (At Abutment only)

NO SCALE

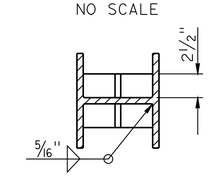

SECTION O-O

NO SCALE

DESIGN	BY A. McPhee	CHECKED C. Duan	
DETAILS	BY Y. Tang	CHECKED C. Duan	
QUANTITIES	BY A. McPhee	CHECKED F. Chen	

STATE OF CALIFORNIA
DEPARTMENT OF TRANSPORTATION

DIVISION OF ENGINEERING SERVICES
STRUCTURE DESIGN
DESIGN BRANCH 10

BRIDGE NO. 54-0479L
POST MILE 4.03

I-215/I-10 SEPARATION LT (WIDEN)

ABUTMENT 1 LAYOUT

STRUCTURES DESIGN DETAIL SHEET (ENGLISH) (REV. 09-01-10)

ORIGINAL SCALE IN INCHES FOR REDUCED PLANS 0 1 2 3

UNIT: 3589
PROJECT NUMBER & PHASE: 08000005061
CONTRACT NO.: 08-0M9401

DISREGARD PRINTS BEARING EARLIER REVISION DATES

REVISION DATES 2-08-11 12-08-11 02-08-12

SHEET 4 OF 28

FILE => 540479lfa_011o04.dgn

USERNAME => s124496 DATE PLOTTED => 14-JUN-2012 TIME PLOTTED => 05:52

DIST	COUNTY	ROUTE	POST MILES TOTAL PROJECT	SHEET No.	TOTAL SHEETS
08	Riv,SBd	91,215	21.5/21.7, 43.2/45.2,0.0/5.1	1391	1743

REGISTERED CIVIL ENGINEER 4-06-12 DATE

4-16-12
PLANS APPROVAL DATE

REGISTERED PROFESSIONAL ENGINEER LARRY WU No. C57035 Exp. 6-30-13 CIVIL STATE OF CALIFORNIA

The State of California or its officers or agents shall not be responsible for the accuracy or completeness of electronic copies of this plan sheet.

LEGEND

- Indicates New Construction
- Indicates Existing Structure
- Indicates Existing Bridge Removal
- Indicates Closure Pour

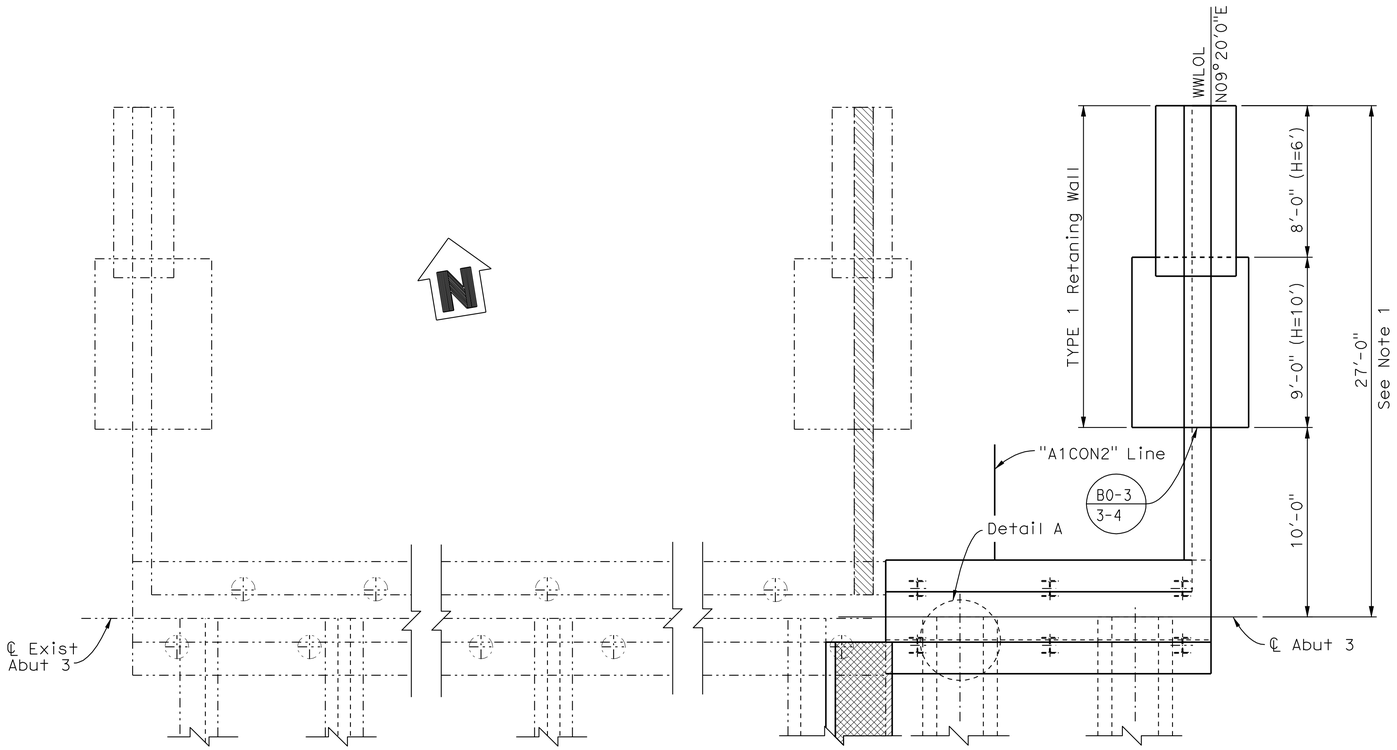

ABUTMENT 3 PLAN

1/4" = 1'-0"

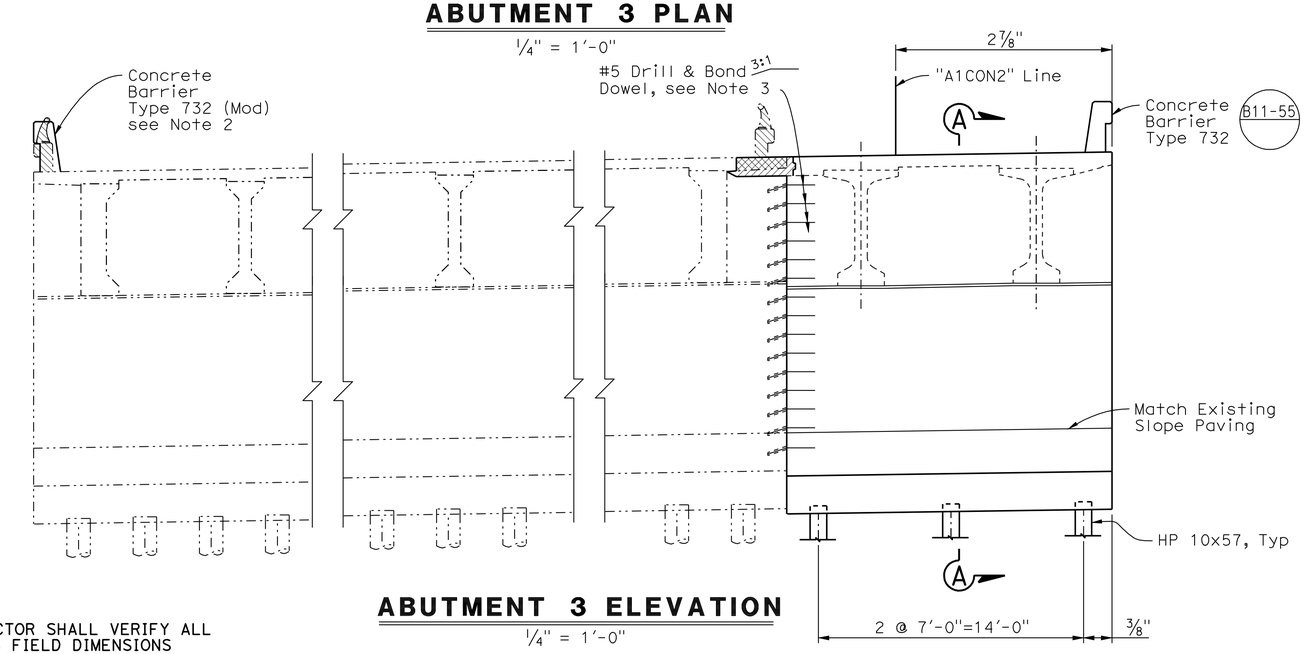

ABUTMENT 3 ELEVATION

1/4" = 1'-0"

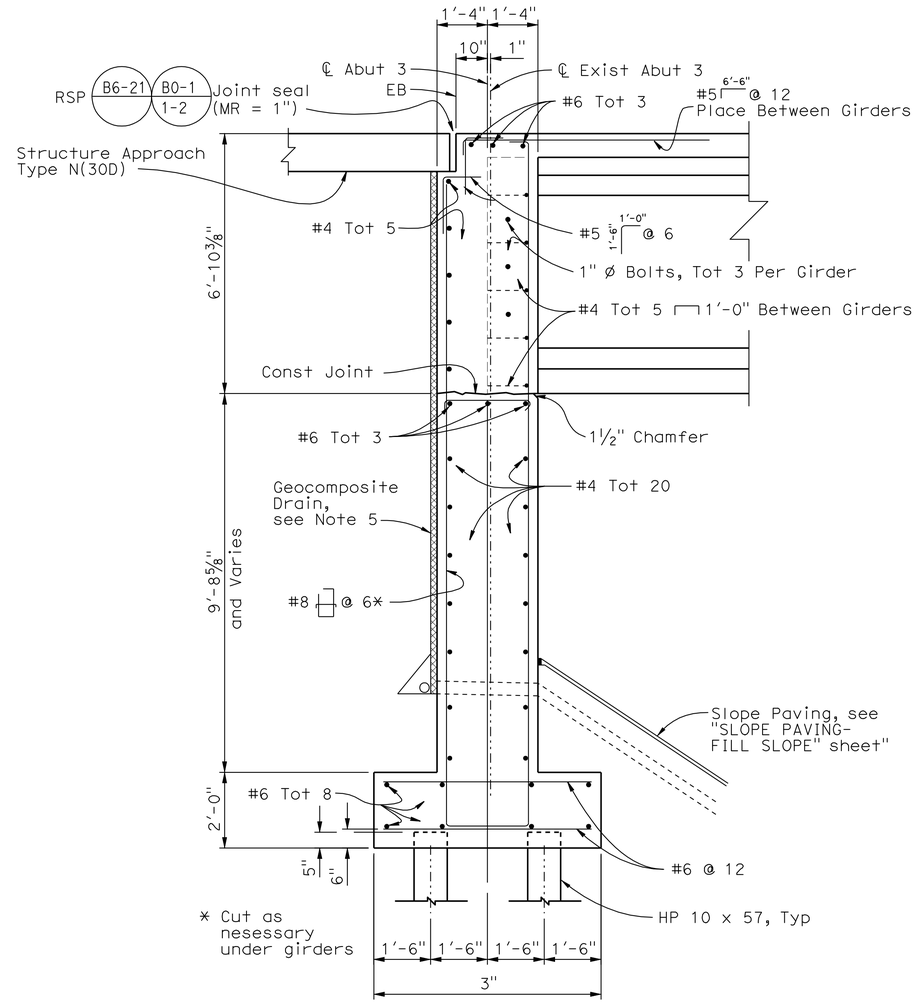

SECTION A-A

1/2" = 1'-0"

NOTES:

1. For Wingwall/ Retaining Wall details, see "ABUTMENT DETAILS NO. 1" sheet.
2. For Barrier details, see " CONCRETE BARRIER TYPE 732 (MOD)" sheet.
3. For Drill and Bond Dowel Arrangement, see ABUTMENT DETAILS NO. 2" sheet.
4. For Detail A and Steel Pile Anchor details, see "ABUTMENT 1 LAYOUT" sheet.
5. For Geocomposite Drain details, see "ABUTMENT DETAILS NO. 2" sheet.

NOTE:
THE CONTRACTOR SHALL VERIFY ALL CONTROLLING FIELD DIMENSIONS BEFORE ORDERING OR FABRICATING ANY MATERIAL.

	BY	CHECKED
DESIGN	A. McPhee	C. Duan
DETAILS	Y. Tang	C. Duan
QUANTITIES	A McPhee	F. Chen

STATE OF CALIFORNIA
DEPARTMENT OF TRANSPORTATION

DIVISION OF ENGINEERING SERVICES
STRUCTURE DESIGN
DESIGN BRANCH 10

BRIDGE NO. 54-0479L
POST MILE 4.03

I-215/I-10 SEPARATION LT (WIDEN)

ABUTMENT 3 LAYOUT

STRUCTURES DESIGN DETAIL SHEET (ENGLISH) (REV. 09-01-10)

ORIGINAL SCALE IN INCHES FOR REDUCED PLANS 0 1 2 3

UNIT: 3589
PROJECT NUMBER & PHASE: 08000005061
CONTRACT NO.: 08-0M9401

DISREGARD PRINTS BEARING EARLIER REVISION DATES

REVISION DATES 2-04-11 02-08-12 12-04-11

SHEET 5 OF 28

FILE => 5404791fa_031o05.dgn

USERNAME => s124496 DATE PLOTTED => 18-APR-2012 TIME PLOTTED => 16:20

DIST	COUNTY	ROUTE	POST MILES TOTAL PROJECT	SHEET No.	TOTAL SHEETS
08	Riv,SBd	91,215	21.5/21.7, 43.2/45.2,0.0/5.1	1392	1743

REGISTERED CIVIL ENGINEER — DATE 4-06-12

4-16-12
PLANS APPROVAL DATE

REGISTERED PROFESSIONAL ENGINEER — LARRY WU No. C57035 Exp. 6-30-13 CIVIL — STATE OF CALIFORNIA

The State of California or its officers or agents shall not be responsible for the accuracy or completeness of electronic copies of this plan sheet.

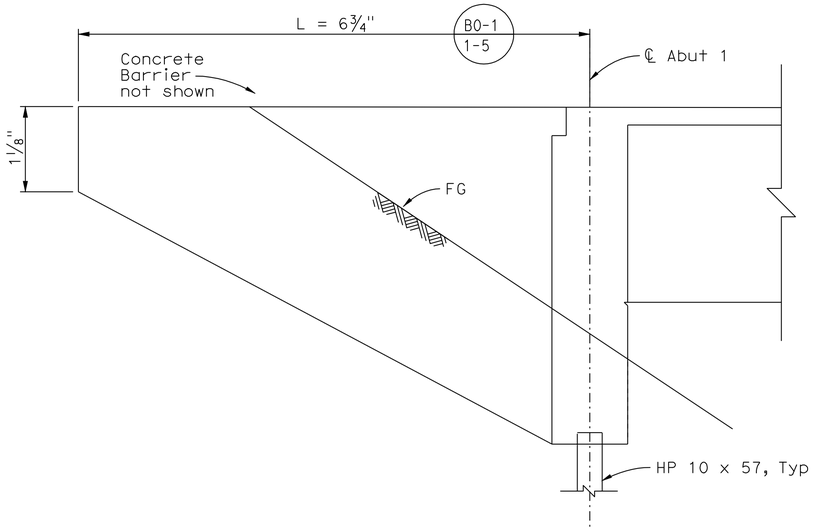

ABUTMENT 1 WINGWALL

⅜" = 1'-0"

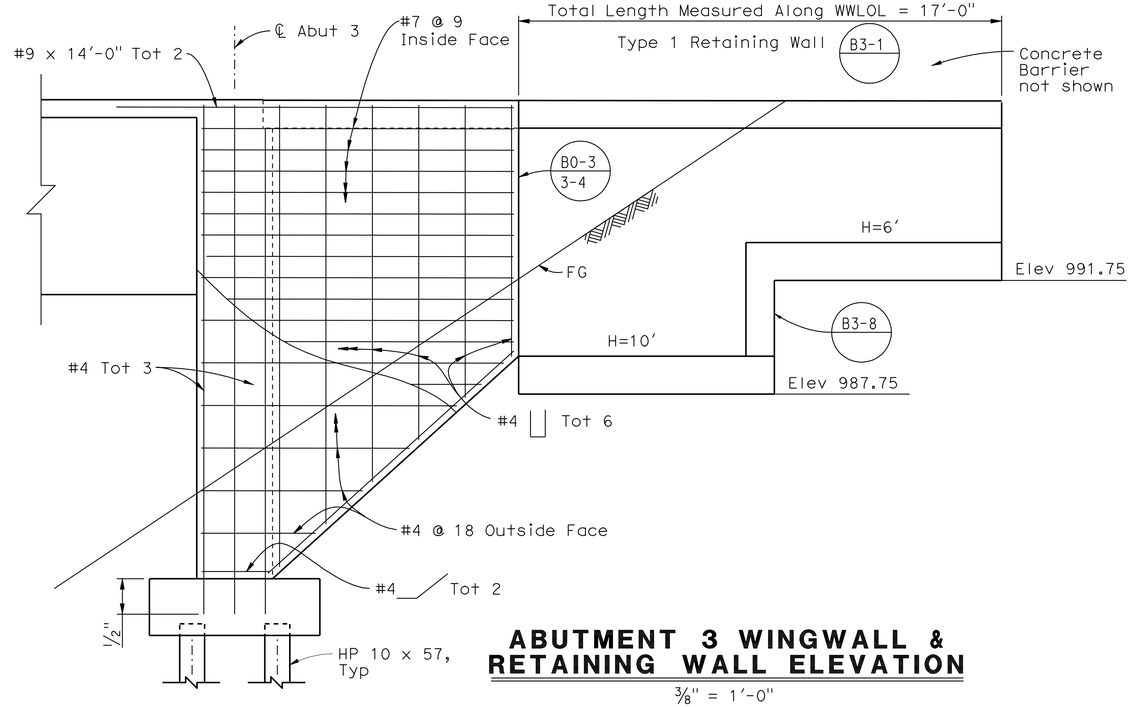

ABUTMENT 3 WINGWALL & RETAINING WALL ELEVATION

⅜" = 1'-0"

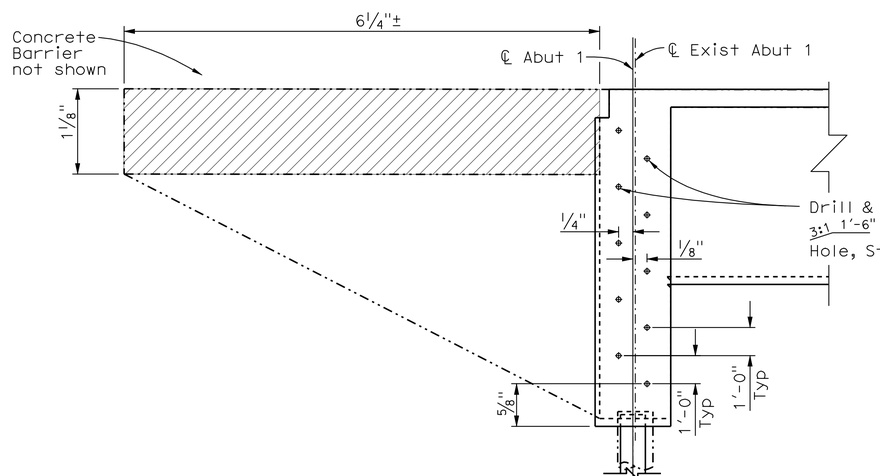

ABUTMENT 1 DRILL & BOND DOWEL ARRANGEMENT

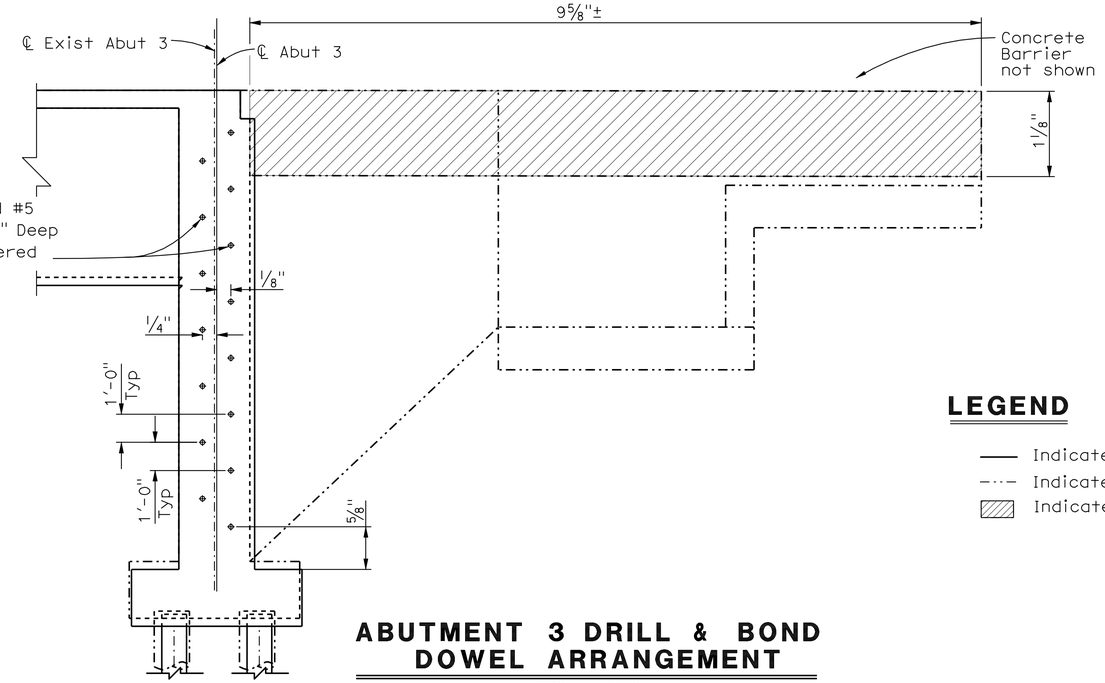

ABUTMENT 3 DRILL & BOND DOWEL ARRANGEMENT

⅜" = 1'-0"

LEGEND

- Indicates New Construction
- Indicates Existing Structure
- Indicates Limits of Bridge Removal

NOTE:
THE CONTRACTOR SHALL VERIFY ALL CONTROLLING FIELD DIMENSIONS BEFORE ORDERING OR FABRICATING ANY MATERIAL.

	BY	CHECKED
DESIGN	A. McPhee	C. Duan
DETAILS	Y. Tang	C. Duan
QUANTITIES	A. McPhee	F. Chen

STATE OF CALIFORNIA
DEPARTMENT OF TRANSPORTATION

DIVISION OF ENGINEERING SERVICES
STRUCTURE DESIGN
DESIGN BRANCH 10

BRIDGE NO. 54-0479L
POST MILE 4.03

I-215/I-10 SEPARATION LT (WIDEN)

ABUTMENT DETAILS NO. 1

STRUCTURES DESIGN DETAIL SHEET (ENGLISH) (REV. 09-01-10)

ORIGINAL SCALE IN INCHES FOR REDUCED PLANS 0 1 2 3

UNIT: 3589
PROJECT NUMBER & PHASE: 08000005061
CONTRACT NO.: 08-0M9401

DISREGARD PRINTS BEARING EARLIER REVISION DATES

REVISION DATES: 2-16-11 11-04-11

SHEET 6 OF 28

FILE => 540479lfadt06.dgn

USERNAME => s124496 DATE PLOTTED => 18-APR-2012 TIME PLOTTED => 16:20

DIST	COUNTY	ROUTE	POST MILES TOTAL PROJECT	SHEET No.	TOTAL SHEETS
08	Riv,SBd	91,215	21.5/21.7, 43.2/45.2,0.0/5.1	1393	1743

REGISTERED CIVIL ENGINEER — DATE 4-06-12

4-16-12
PLANS APPROVAL DATE

REGISTERED PROFESSIONAL ENGINEER — LARRY WU No. C57035 Exp. 6-30-13 CIVIL — STATE OF CALIFORNIA

The State of California or its officers or agents shall not be responsible for the accuracy or completeness of electronic copies of this plan sheet.

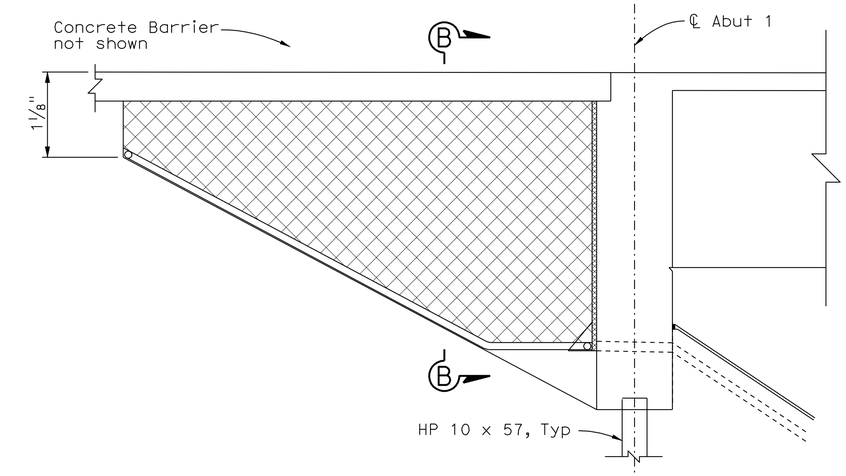

GEOCOMPOSITE DRAIN-ABUTMENT 1

3/8" = 1'-0"

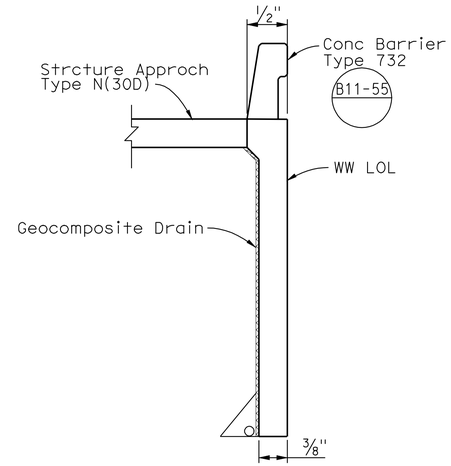

SECTION B-B

3/8" = 1'-0"

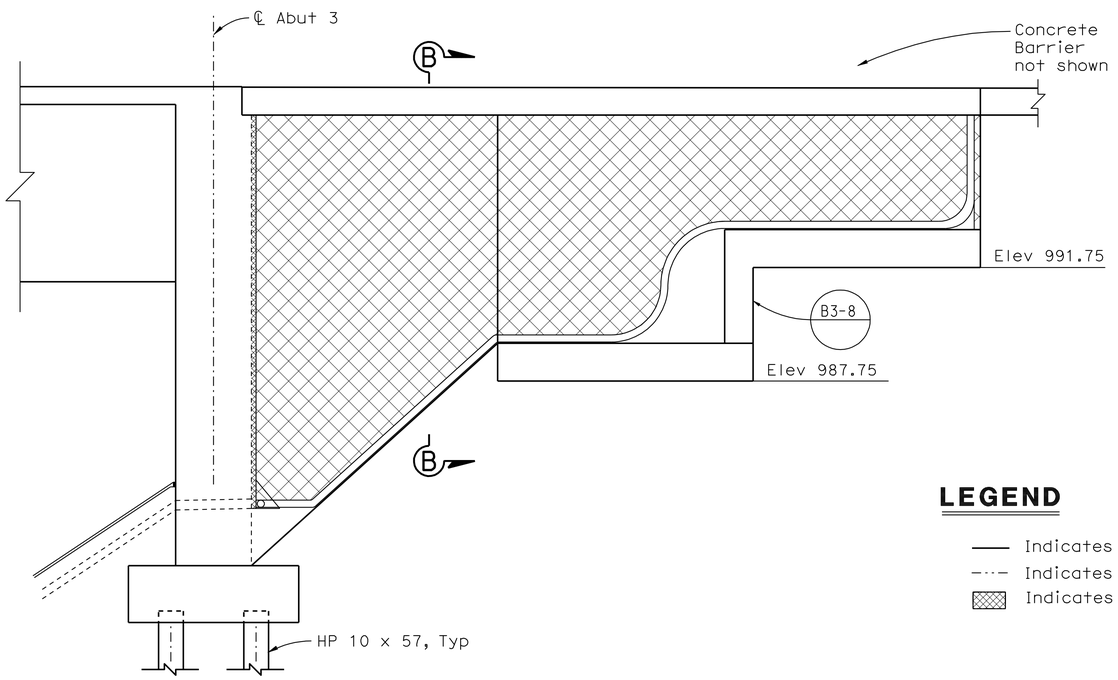

GEOCOMPOSITE DRAIN-ABUTMENT 3

3/8" = 1'-0"

LEGEND

- —— Indicates New Construction
- —·—·— Indicates Existing Structure
- ▨ Indicates Geocomposite Drain

NOTE:
THE CONTRACTOR SHALL VERIFY ALL CONTROLLING FIELD DIMENSIONS BEFORE ORDERING OR FABRICATING ANY MATERIAL.

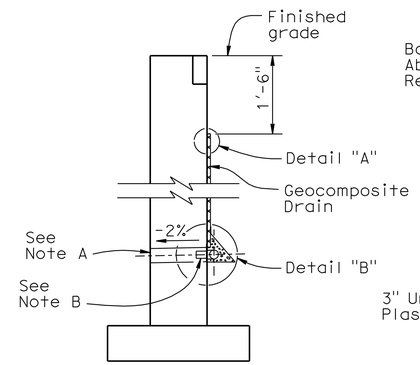

WALL SECTION

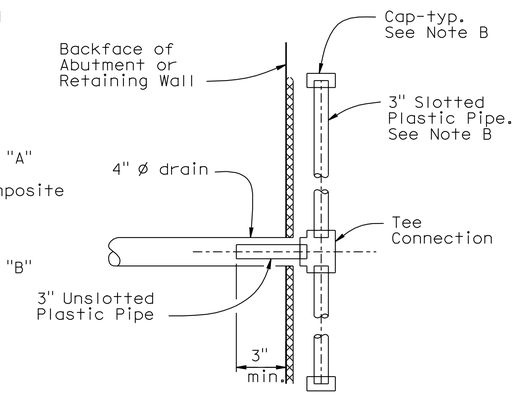

SECTION A-A

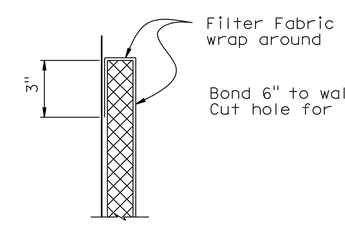

DETAIL "A"

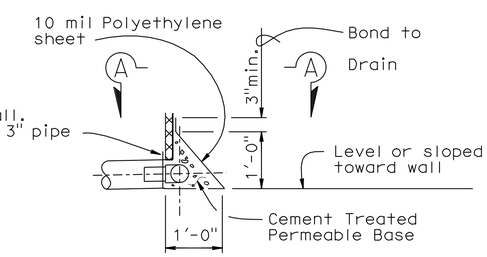

DETAIL "B"

WEEP HOLE AND GEOCOMPOSITE DRAIN

ALTERNATIVE TO BRIDGE DETAIL B0-3 / 3-1

NOTES:

A. 4" ø drains at intermediate sag points and at 25' max center to center.
Exposed wall drains shall be located 3"± above finished grade.

B. Geocomposite drain, cement treated permeable base, and 3"ø slotted plastic pipe continuous behind retaining wall or abutment. Cap ends of pipe. Provide "Tee" connection at each 4" ø drain.

C. Connect the low end of plastic pipe to the main outlet pipe as apprlicable.

	BY	CHECKED
DESIGN	A. McPhee	C. Duan
DETAILS	Y. Tang	C. Duan
QUANTITIES	A. McPhee	F. Chen

STATE OF CALIFORNIA
DEPARTMENT OF TRANSPORTATION

DIVISION OF ENGINEERING SERVICES
STRUCTURE DESIGN
DESIGN BRANCH 10

BRIDGE NO. 54-0479L
POST MILE 4.03

I-215/I/10 SEPARATION LT (WIDEN)

ABUTMENT DETAILS NO. 2

STRUCTURES DESIGN DETAIL SHEET (ENGLISH) (REV. 09-01-10)

ORIGINAL SCALE IN INCHES FOR REDUCED PLANS 0 1 2 3

UNIT: 3589
PROJECT NUMBER & PHASE: 08000005061
CONTRACT NO.: 08-0M9401

DISREGARD PRINTS BEARING EARLIER REVISION DATES

REVISION DATES 4-13-11 11-04-11

SHEET 7 OF 28

FILE => 540479lfadt07.dgn

USERNAME => s124496 DATE PLOTTED => 18-APR-2012 TIME PLOTTED => 16:20

DIST	COUNTY	ROUTE	POST MILES TOTAL PROJECT	SHEET No.	TOTAL SHEETS
08	Riv,SBd	91,215	21.5/21.7, 43.2/45.2,0.0/5.1	1394	1743

REGISTERED CIVIL ENGINEER — DATE 4-06-12

4-16-12
PLANS APPROVAL DATE

REGISTERED PROFESSIONAL ENGINEER — LARRY WU — No. C57035 — Exp. 6-30-13 — CIVIL — STATE OF CALIFORNIA

The State of California or its officers or agents shall not be responsible for the accuracy or completeness of electronic copies of this plan sheet.

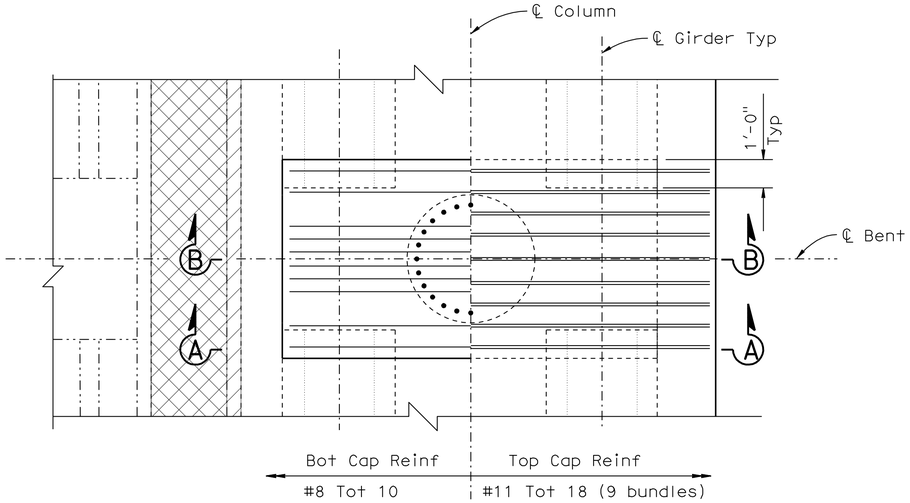

PLAN
3/8" = 1'-0"

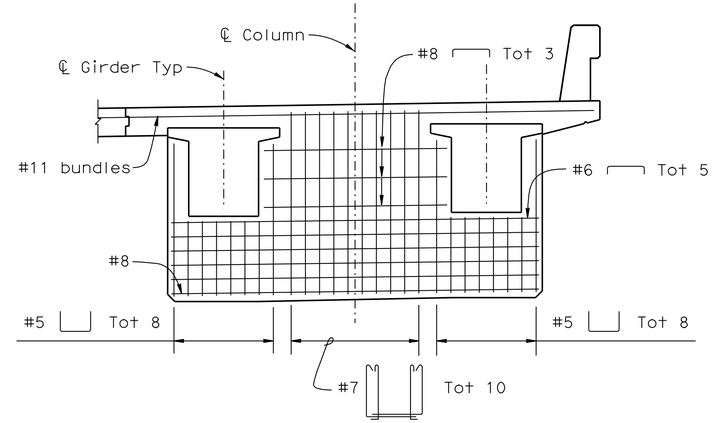

SECTION A-A
3/8" = 1'-0"

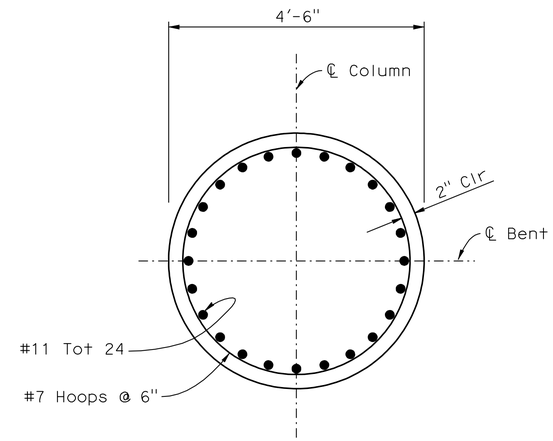

SECTION C-C
3/4" = 1'-0"

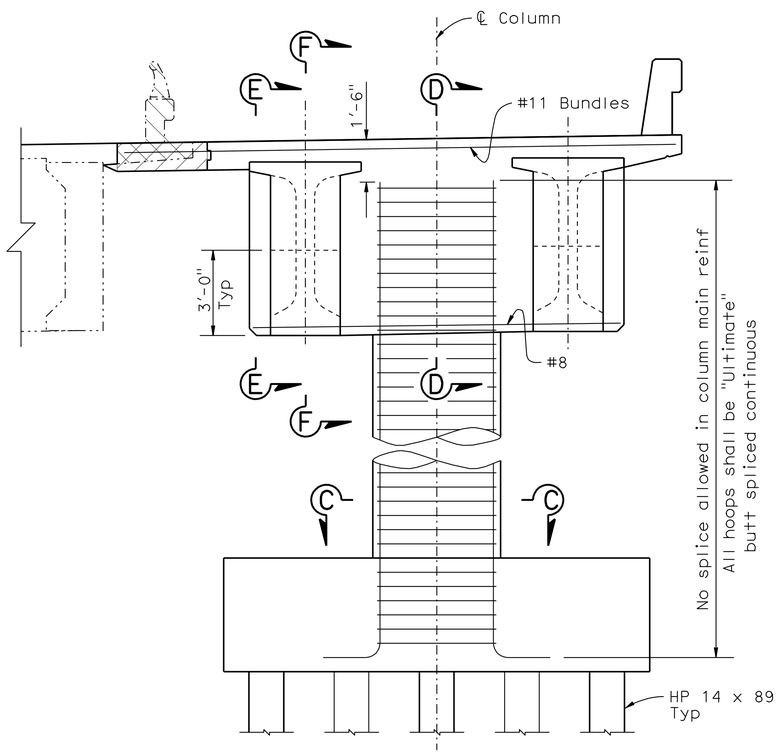

ELEVATION
3/8" = 1'-0"

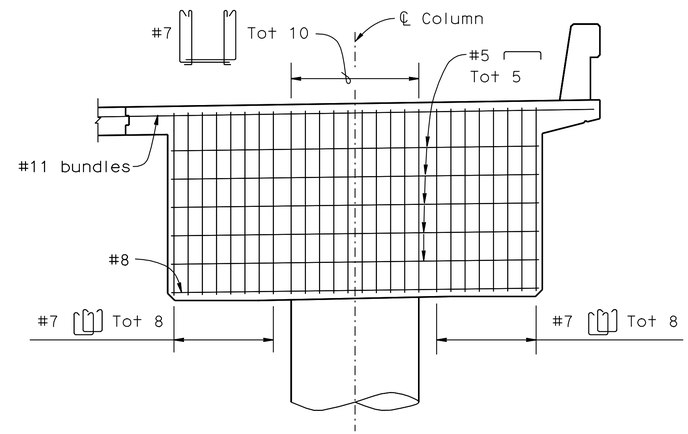

SECTION B-B
3/8" = 1'-0"

LEGEND

- Indicates New Constructure
- Indicates Existing Structure
- Indicates Bridge Removal
- Indicates Closure Pour

NOTE:
THE CONTRACTOR SHALL VERIFY ALL CONTROLLING FIELD DIMENSIONS BEFORE ORDERING OR FABRICATING ANY MATERIAL.

	BY	CHECKED
DESIGN	A. McPhee	C. Duan
DETAILS	Y. Tang	C. Duan
QUANTITIES	A. McPhee	F. Chen

STATE OF CALIFORNIA
DEPARTMENT OF TRANSPORTATION

DIVISION OF ENGINEERING SERVICES
STRUCTURE DESIGN
DESIGN BRANCH 10

BRIDGE NO. 54-0479L
POST MILE 4.03

I-215/I-10 SEPARATION LT (WIDEN)
BENT LAYOUT

STRUCTURES DESIGN DETAIL SHEET (ENGLISH) (REV. 09-01-10)

ORIGINAL SCALE IN INCHES FOR REDUCED PLANS 0 1 2 3

UNIT: 3589
PROJECT NUMBER & PHASE: 08000005061
CONTRACT NO.: 08-0M9401

DISREGARD PRINTS BEARING EARLIER REVISION DATES

REVISION DATES: 3-14-11 10-28-11 11-14-11

SHEET 8 OF 28

FILE => 540479lhb_lo08.dgn

USERNAME => s124496 DATE PLOTTED => 18-APR-2012 TIME PLOTTED => 16:20

DIST	COUNTY	ROUTE	POST MILES TOTAL PROJECT	SHEET No.	TOTAL SHEETS
08	Riv,SBd	91,215	21.5/21.7, 43.2/45.2,0.0/5.1	1395	1743

REGISTERED CIVIL ENGINEER — DATE 4-06-12

4-16-12
PLANS APPROVAL DATE

REGISTERED PROFESSIONAL ENGINEER — LARRY WU No. C57035 Exp. 6-30-13 CIVIL — STATE OF CALIFORNIA

The State of California or its officers or agents shall not be responsible for the accuracy or completeness of electronic copies of this plan sheet.

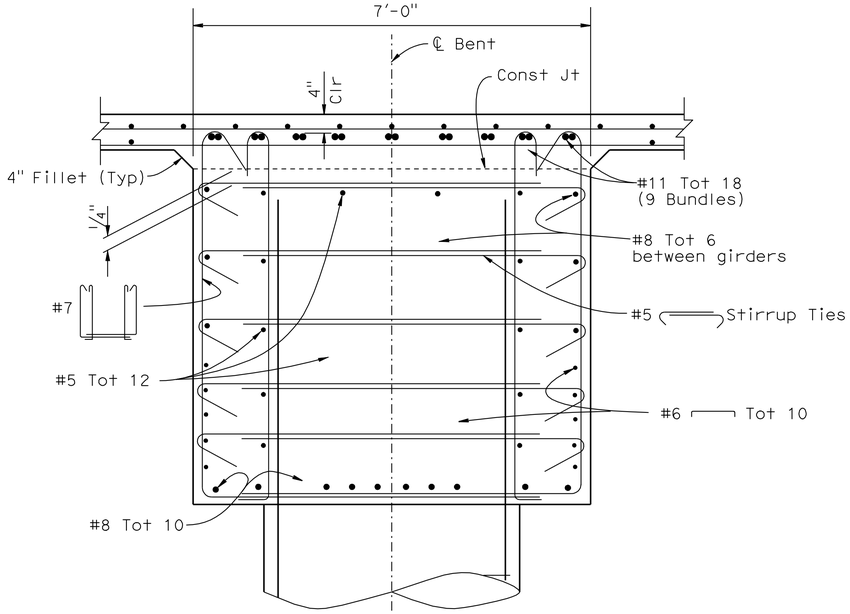

SECTION D-D

3/4" = 1'-0"

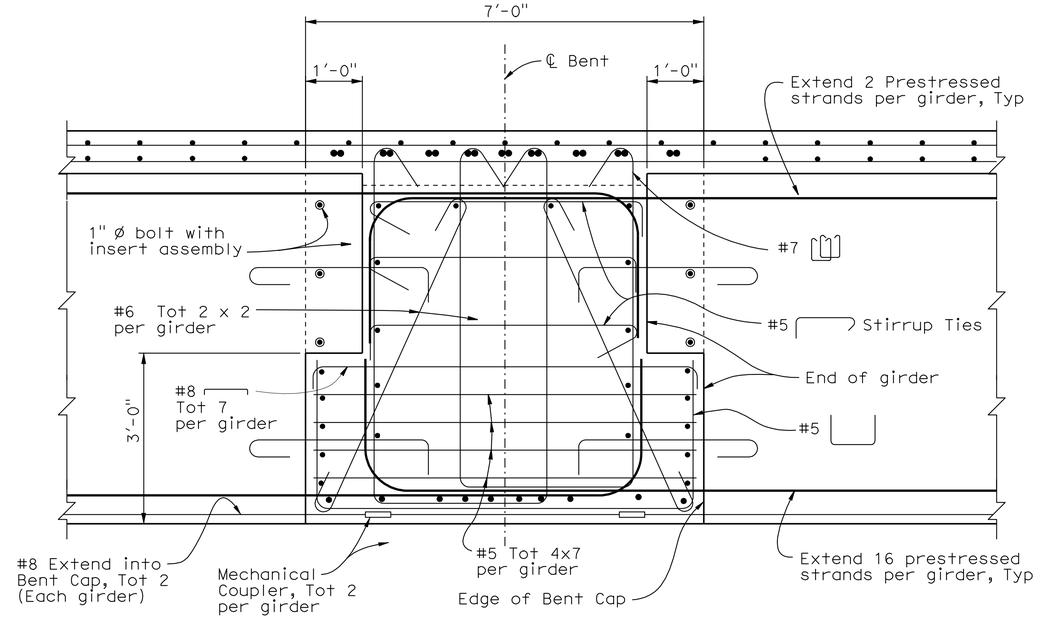

SECTION F-F

3/4" = 1'-0"

NOTE: For details shown but not noted, see "Section D-D".

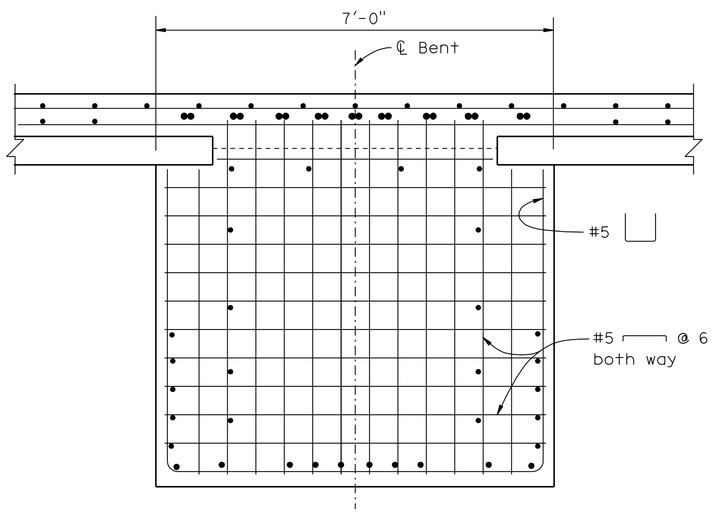

SECTION E-E

3/4" = 1'-0"

NOTE: For details shown but not noted, see "Section D-D".

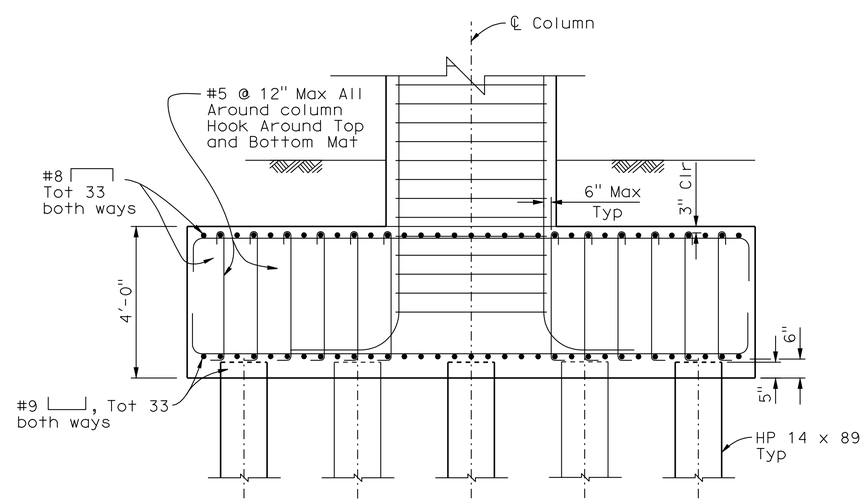

FOOTING SECTION

1/2" = 1'-0"

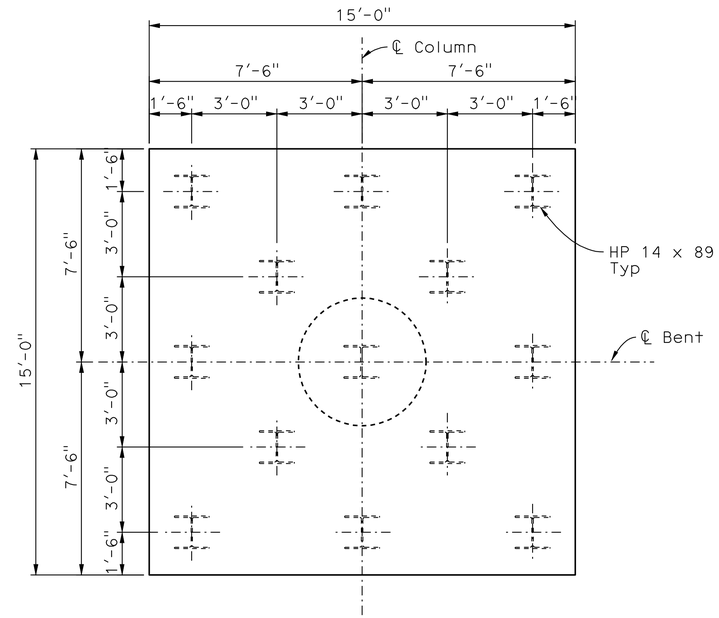

FOOTING PLAN

3/8 " = 1'-0"

NOTE:
THE CONTRACTOR SHALL VERIFY ALL
CONTROLLING FIELD DIMENSIONS
BEFORE ORDERING OR FABRICATING
ANY MATERIAL.

	BY	CHECKED
DESIGN	A. Mcphee	C. Duan
DETAILS	Y. Tang	C. Duan
QUANTITIES	A. McPhee	X

STATE OF CALIFORNIA
DEPARTMENT OF TRANSPORTATION

DIVISION OF ENGINEERING SERVICES
STRUCTURE DESIGN
DESIGN BRANCH 10

BRIDGE NO. 54-0479L
POST MILE 4.03

I-215/I-10 SEPARATION LT (WIDEN)

BENT DETAILS

STRUCTURES DESIGN DETAIL SHEET (ENGLISH) (REV. 09-01-10)

ORIGINAL SCALE IN INCHES FOR REDUCED PLANS 0 1 2 3

UNIT: 3589
PROJECT NUMBER & PHASE: 0800000506
CONTRACT NO.: 08-0M9401

DISREGARD PRINTS BEARING EARLIER REVISION DATES

REVISION DATES: 2-24-11 11-16-11

SHEET 9 OF 28

FILE => 540479lnbdt9.dgn

USERNAME => s124496 DATE PLOTTED => 18-APR-2012 TIME PLOTTED => 16:20

DIST	COUNTY	ROUTE	POST MILES TOTAL PROJECT	SHEET No.	TOTAL SHEETS
08	Riv,SBd	91,215	21.5/21.7, 43.2/45.2,0.0/5.1	1396	1743

REGISTERED CIVIL ENGINEER — DATE 4-06-12

4-16-12
PLANS APPROVAL DATE

REGISTERED PROFESSIONAL ENGINEER — LARRY WU No. C57035 Exp. 6-30-13 CIVIL — STATE OF CALIFORNIA

The State of California or its officers or agents shall not be responsible for the accuracy or completeness of electronic copies of this plan sheet.

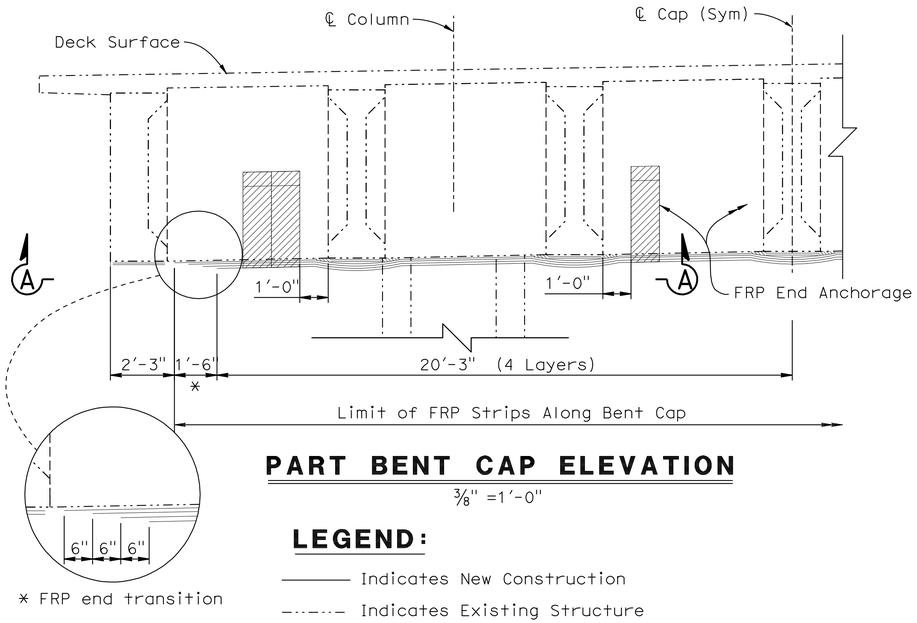

PART BENT CAP ELEVATION

3/8" =1'-0"

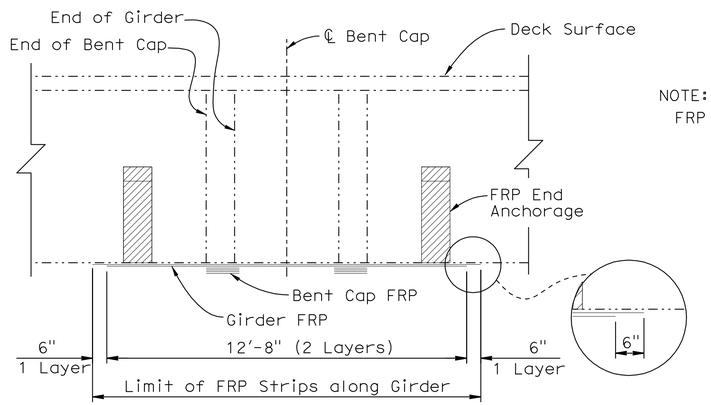

PART GIRDER ELEVATION

3/8" =1'-0"

NOTE:
FRP = Fiber Reinforced Polymer

LEGEND:

- Indicates New Construction
- Indicates Existing Structure
- Indicate FRP Layers Unidirectional
- Indicates FRP End Anchorage Carbon
- Indicates Thickened Epoxy Filler

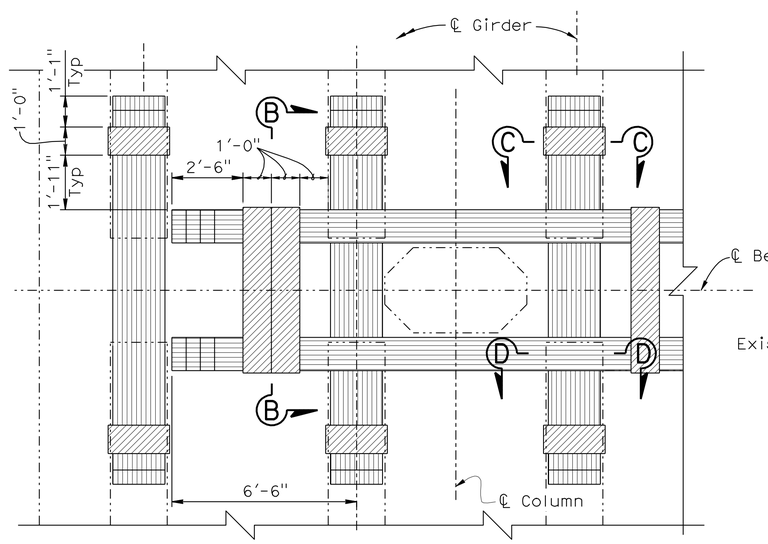

VIEW A-A

3/8" =1'-0"

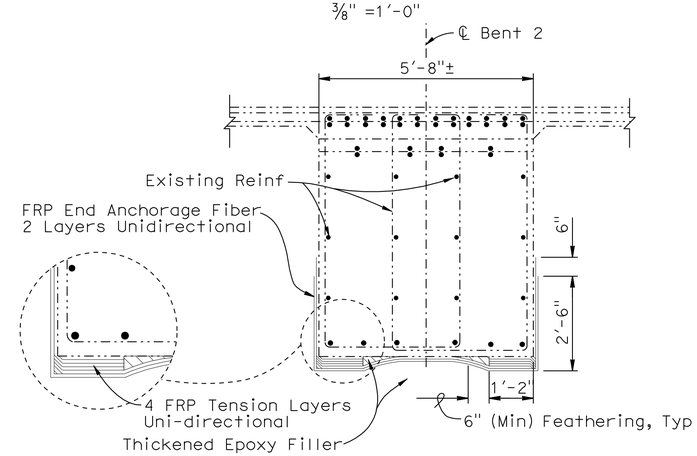

SECTION B-B

1/2" =1'-0"

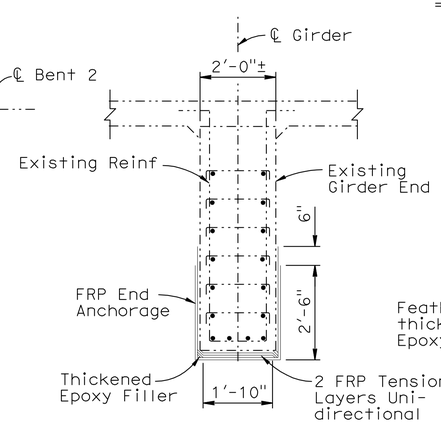

SECTION C-C

1/2" =1'-0"

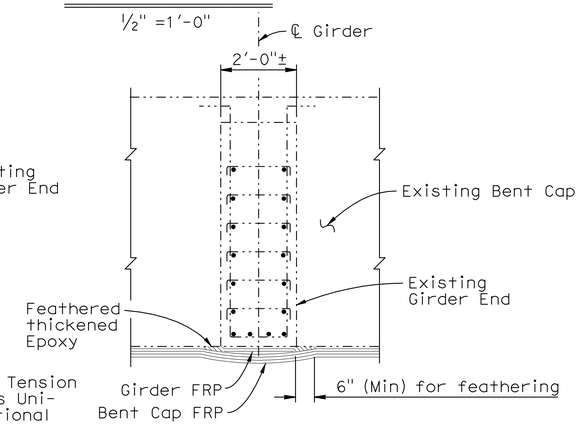

SECTION D-D

1/2" =1'-0"

CARBON FRP NOTES:

1. For all subsequent notes, surfaces shall be defined as the surface to receive the composite. Fabric refers to the unidirectional or bi-directional fiber. Fiber Reinforced Polymer (FRP) composite is Carbon fiber and Epoxy resin
2. All surfaces shall be prepared for bonding by means of abrasive blasting or grinding
3. All surfaces shall be cleaned by hand or by oil- free compressed air. All surfaces shall be free of moisture, oils, loose material, debris, or dust
4. All cutting of fabrics, mixing of epoxy, and wetting out of fabric and handling, shall be done in a manner to ensure that the composite materials are free of moisture, oils, debris or dust
5. For all corners where composite will bend around, remove any sharp corners/edges to a 1 1/2 " radius minimum
6. A primer coat of epoxy shall be applied to the surface and allowed to cure for a minimum of one hour
7. Surfaces shall be free of voids, protrusions, and sharp edges. Any voids or uneven surfaces shall be filled with a thickened epoxy
8. Carbon composite system used shall be selected from a list of Caltrans Pre qualified composite systems
9. Fabric shall be completely saturated prior to application to the surface. Excess resin shall be squeezed out. No dry fiber placement is allowed, unless fabric used has removable backing or procedure has been approved by pre qualification
10. The composite shall adhere firmly to the existing surfaces
11. Detail/feather all fabric edges, including termination points, edges and seams with a thickened epoxy. Detailing/feathering shall extend a minimum of 6"
12. Splices shall overlap a minimum of 1'-0". Subsequent spliced layers shall be staggered a minimum of 3' apart. No splices are allowed within 1' of an anchorage, or cross over FRP. No splice is allowed on anchor cross over, or on girder continuously FRP.
13. Effective stiffness of FRP is 0.34×10^3 kip/in per unit width. Effective layer thickness is 0.04"
14. Pull test shall be conducted in zone beyond anchorage detail per Engineer's directive.

INSTALLATION SEQUENCE:

1. Apply girder FRP reinforcement first using Wet Lay-up method
2. Feather in thickened epoxy (1'-2" wide) on both sides of girder FRP where bent cap FRP will be applied.
3. Apply bent cap FRP reinforcement using Wet Lay-up method

NOTE:
THE CONTRACTOR SHALL VERIFY ALL CONTROLLING FIELD DIMENSIONS BEFORE ORDERING OR FABRICATING ANY MATERIAL.

	BY	CHECKED
DESIGN	C.Duan	A. Mcphee
DETAILS	Y. Tang	A. Mcphee
QUANTITIES	A. Mcphee	F. Chen

STATE OF CALIFORNIA
DEPARTMENT OF TRANSPORTATION

DIVISION OF ENGINEERING SERVICES
STRUCTURE DESIGN
DESIGN BRANCH 10

BRIDGE NO. 54-0479L
POST MILE 4.03

I-215/I-10 SEPARATION LT (WIDEN)
BENT CAP/GIRDER RETROFIT DETAILS

STRUCTURES DESIGN DETAIL SHEET (ENGLISH) (REV. 09-01-10)

ORIGINAL SCALE IN INCHES FOR REDUCED PLANS 0 1 2 3

UNIT: 3589
PROJECT NUMBER & PHASE: 08000005061
CONTRACT NO.: 08-0M9401

DISREGARD PRINTS BEARING EARLIER REVISION DATES

REVISION DATES: 9-22-11 11-16-11

SHEET 10 OF 28

FILE => 540479lnbr_bgdt10.dgn

USERNAME => s124496 DATE PLOTTED => 18-APR-2012 TIME PLOTTED => 16:20

DIST	COUNTY	ROUTE	POST MILES TOTAL PROJECT	SHEET No.	TOTAL SHEETS
08	Riv,SBd	91,215	21.5/21.7, 43.2/45.2,0.0/5.1	1397	1743

REGISTERED CIVIL ENGINEER 4-06-12 DATE

4-16-12
PLANS APPROVAL DATE

REGISTERED PROFESSIONAL ENGINEER LARRY WU No. C57035 Exp. 6-30-13 CIVIL STATE OF CALIFORNIA

The State of California or its officers or agents shall not be responsible for the accuracy or completeness of electronic copies of this plan sheet.

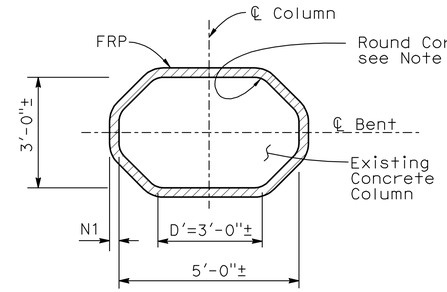

SECTION A-A

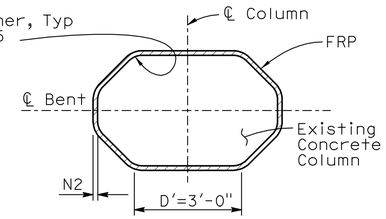

SECTION B-B

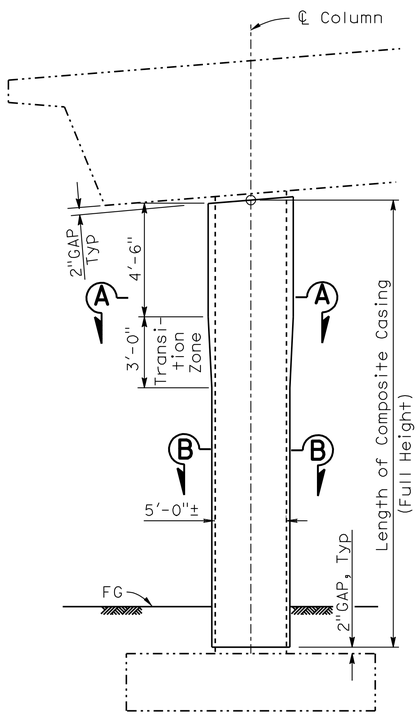

COLUMN RETROFIT

CARBON FRP SYSTEM 5, 8		
RECTANGULAR COLUMN, NUMBER OF LAYERS (Min)		
COLUMN WIDTH = D'	N1	N2
36"	12	6

CARBON FRP SYSTEM 9		
RECTANGULAR COLUMN, NUMBER OF LAYERS (Min)		
COLUMN WIDTH = D'	N1	N2
36"	8	4

LEGEND:

-·-·-·- Indicates existing structure

——— Indicates new construction

N1,N2 Denotes minimum number of layers inside the plastic hinge zone and outside the plastic hinge zone

CARBON FRP SYSTEM NOTES:

1. For all subsequent notes, surfaces shall be defined as the surface to receive the composite. Fabric refers to the unidirectional or bi-directional fiber. Fiber Reinforced Polymer (FRP) composite is Carbon fiber and Epoxy resin
2. All surfaces shall be prepared for bonding by means of abrasive blasting or grinding
3. All surfaces shall be cleaned by hand or by oil-free compressed air. All surfaces shall be free of moisture, oils, loose material, debris, or dust
4. All cutting of fabrics, mixing of epoxy, and wetting out of fabric and handling, shall be done in a manner to ensure that the composite materials are free of moisture, oils, debris or dust
5. For non-circular columns remove any sharp corners/edges to a 1½" radius minimum
6. A primer coat of epoxy shall be applied to the surface and allowed to cure for a minimum of one hour
7. Surfaces shall be free of voids, protrusions, and sharp edges. Any voids or uneven surfaces shall be filled with a thickened epoxy
8. Carbon composite system used shall be selected from a list of Caltrans Prequalified composite systems
9. Fabric shall be completely saturated prior to application to the surface. Excess resin shall be remoned No dry fiber placement is allowed, unless fabric used has removable backing or procedure has been approved by prequalification
10. The composite casing shall adhere firmly to the existing column surfaces
11. Detail/feather all fabric edges, including termination points, edges and seams with a thickened epoxy. Detailing/feathering shall extend a minimum of 6"
12. Each composite section shall be wrapped using continuous fabric not less than 2'-0" in height. All wraps of continuous weave shall be terminated a minimum of 12" past the starting point of the initial wrap. Subsequent wraps shall be started (butted) at the ending point of the last wrap
13. The casing thickness shall taper evenly over the full length of the transition zone
14. For non-circular columns use number of layers specified in the "RECTANGULAR COLUMN" table
15. Existing non-circular column surfaces shall be straight or slightly convexed outward at all areas, otherwise, the surface shall be filled with thickened epoxy
16. Minimum number of layers for Carbon System is based on minimum effective fiber layer thickness of 0.0065 inches for Carbon FRP System 5 and 8. Fewer number of layers can be installed as shown in Carbon FRP System 9 for effectively thicker (fiber) layers provided that on equivalent stiffness is maintained to match those of Carbon FRP System 5 and 8.

NOTE:
THE CONTRACTOR SHALL VERIFY ALL CONTROLLING FIELD DIMENSIONS BEFORE ORDERING OR FABRICATING ANY MATERIAL.

	BY	CHECKED
DESIGN	A. McPhee	C. Duan
DETAILS	Y. Tang	C. Duan
QUANTITIES	A. McPhee	F. Chen

STATE OF CALIFORNIA
DEPARTMENT OF TRANSPORTATION

DIVISION OF ENGINEERING SERVICES
STRUCTURE DESIGN
DESIGN BRANCH 10

BRIDGE NO. 54-0479L
POST MILE 4.03

I-215/I-10 SEPARATION LT (WIDEN)
COLUMN RETROFIT DETAILS

STRUCTURES DESIGN DETAIL SHEET (ENGLISH) (REV. 09-01-10)

ORIGINAL SCALE IN INCHES FOR REDUCED PLANS 0 1 2 3

UNIT: 3589
PROJECT NUMBER & PHASE: 08000005061
CONTRACT NO.: 08-0M9401

DISREGARD PRINTS BEARING EARLIER REVISION DATES

REVISION DATES: 9-29-11 11-16-11

SHEET 11 OF 28

FILE => 540479lnbr_cdt11.dgn

USERNAME => s124496 DATE PLOTTED => 18-APR-2012 TIME PLOTTED => 16:21

DIST	COUNTY	ROUTE	POST MILES TOTAL PROJECT	SHEET No.	TOTAL SHEETS
08	Riv,SBd	91,215	21.5/21.7, 43.2/45.2,0.0/5.1	1398	1743

REGISTERED CIVIL ENGINEER 4-06-12 DATE

4-16-12
PLANS APPROVAL DATE

REGISTERED PROFESSIONAL ENGINEER LARRY WU No. C57035 Exp. 6-30-13 CIVIL STATE OF CALIFORNIA

The State of California or its officers or agents shall not be responsible for the accuracy or completeness of electronic copies of this plan sheet.

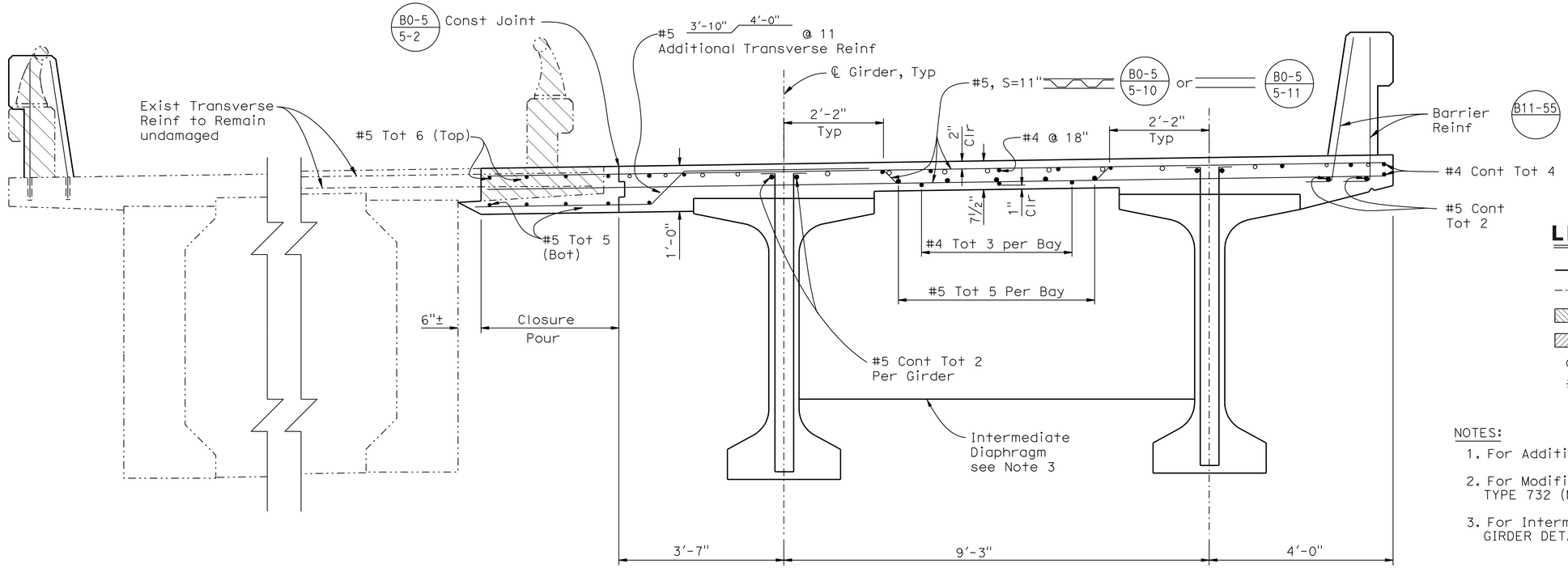

PART TYPICAL SECTION

B0-5

¾" = 1'-0"

LEGEND

- Indicates New Construction
- Indicates Existing Structure
- Indicates Existing Bridge Removal
- Indicates Closure Pour
- ○ Indicates Additional Deck Reinf, see Note 1
- ✱ Match Existing Cross Slope

NOTES:

1. For Additional Deck Reinf, see "GIRDER LAYOUT" sheet.
2. For Modified Barrier Details, see "CONCRETE BARRIER TYPE 732 (MOD)" sheet.
3. For Intermediate Diaphragm Details, see " PC/PS BULB-TEE GIRDER DETAILS NO. 2" sheet.

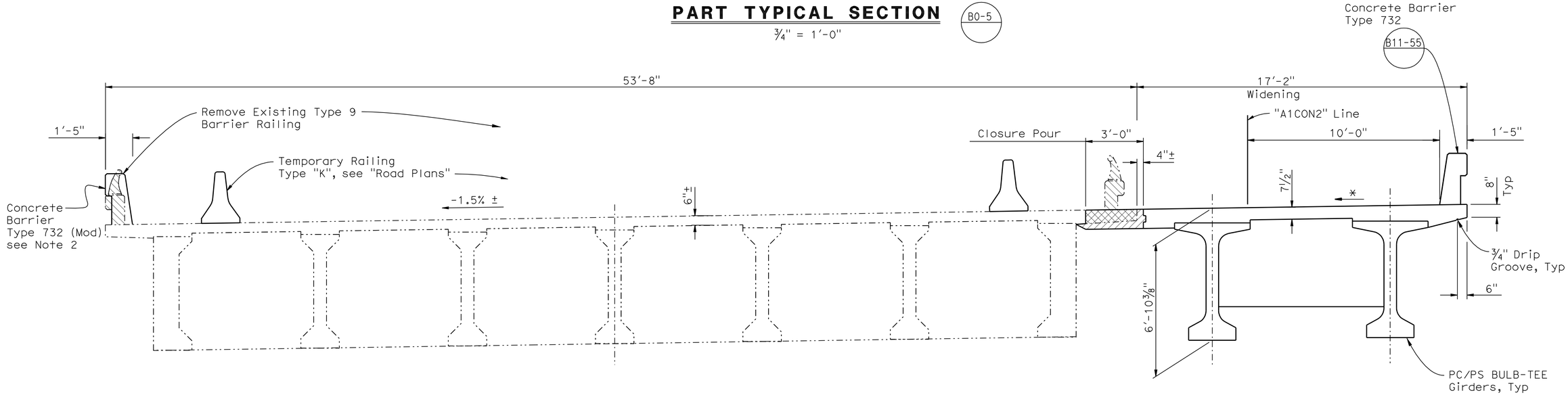

TYPICAL SECTION

⅜" = 1'-0"

NOTE:
THE CONTRACTOR SHALL VERIFY ALL CONTROLLING FIELD DIMENSIONS BEFORE ORDERING OR FABRICATING ANY MATERIAL.

	BY	CHECKED
DESIGN	A. McPhee	C. Duan
DETAILS	Y. Tang	C. Duan
QUANTITIES	A. McPhee	F. Chen

STATE OF CALIFORNIA
DEPARTMENT OF TRANSPORTATION

DIVISION OF ENGINEERING SERVICES
STRUCTURE DESIGN
DESIGN BRANCH 10

BRIDGE NO. 54-0479L
POST MILE 4.03

I-215/I-10 SEPARATION LT (WIDEN)

TYPICAL SECTION

STRUCTURES DESIGN DETAIL SHEET (ENGLISH) (REV. 09-01-10)

ORIGINAL SCALE IN INCHES FOR REDUCED PLANS 0 1 2 3

UNIT: 3589
PROJECT NUMBER & PHASE: 08000005061
CONTRACT NO.: 08-0M9401

DISREGARD PRINTS BEARING EARLIER REVISION DATES

REVISION DATES: 12-09-10 12-01-11 11-12-11

SHEET 12 OF 28

FILE => 540479lkts12.dgn

USERNAME => s124496 DATE PLOTTED => 18-APR-2012 TIME PLOTTED => 16:21

DIST	COUNTY	ROUTE	POST MILES TOTAL PROJECT	SHEET No.	TOTAL SHEETS
08	Riv,SBd	91,215	21.5/21.7, 43.2/45.2,0.0/5.1	1399	1743

Larry Wu 4-06-12
REGISTERED CIVIL ENGINEER DATE

4-16-12
PLANS APPROVAL DATE

REGISTERED PROFESSIONAL ENGINEER LARRY WU No. C57035 Exp. 6-30-13 CIVIL STATE OF CALIFORNIA

The State of California or its officers or agents shall not be responsible for the accuracy or completeness of electronic copies of this plan sheet.

LEGEND

—— Indicates New Construction
—·—·— Indicates Existing Structure
▨ Indicates Closure Pour

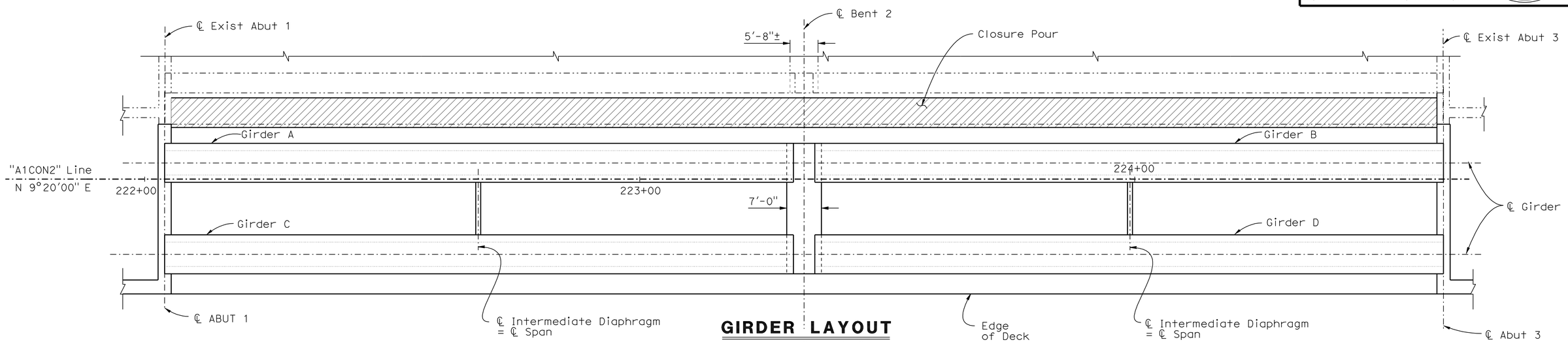

GIRDER LAYOUT

Horiz 1" = 10'-0"
Vert 1" = 5'-0"

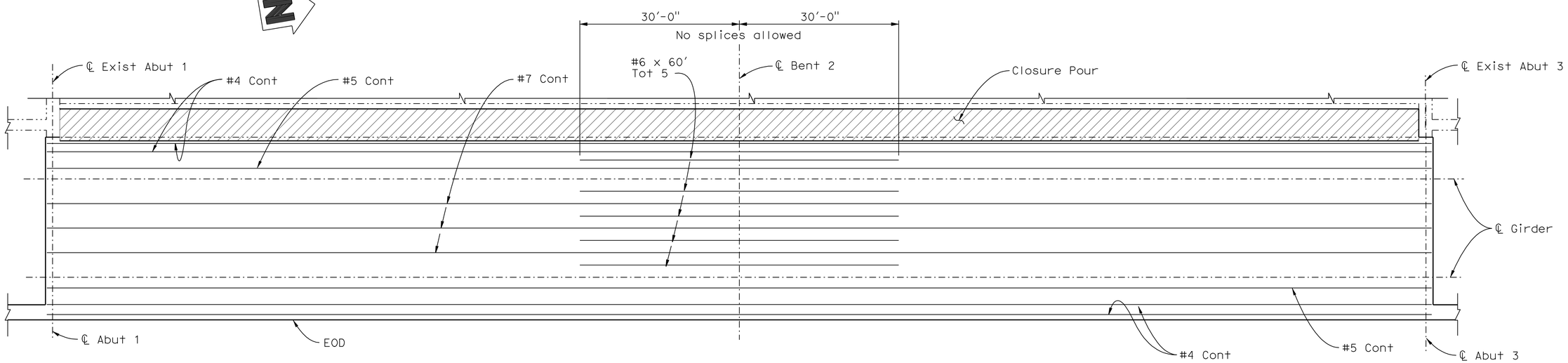

ADDITIONAL TOP DECK REINFORCEMENT

Horiz 1" = 10'-0"
Vert 1" = 5'-0"

NOTE:
THE CONTRACTOR SHALL VERIFY ALL CONTROLLING FIELD DIMENSIONS BEFORE ORDERING OR FABRICATING ANY MATERIAL.

	BY	CHECKED
DESIGN	A. McPhee	C. Duan
DETAILS	Y. Tang	C. Duan
QUANTITIES	A. McPhee	F. Chen

STATE OF CALIFORNIA
DEPARTMENT OF TRANSPORTATION

DIVISION OF ENGINEERING SERVICES
STRUCTURE DESIGN
DESIGN BRANCH 10

BRIDGE NO. 54-0479L
POST MILE 4.03

I-215/I-10 SEPARATION LT (WIDEN)
GIRDER LAYOUT

STRUCTURES DESIGN DETAIL SHEET (ENGLISH) (REV. 09-01-10)

ORIGINAL SCALE IN INCHES FOR REDUCED PLANS 0 1 2 3

UNIT: 3589
PROJECT NUMBER & PHASE: 08000005061
CONTRACT NO.: 08-0M9401

DISREGARD PRINTS BEARING EARLIER REVISION DATES

REVISION DATES: 2-28-11 11-17-11 10-22-11

SHEET 13 OF 28

FILE => 5404791lg_1o13.dgn

USERNAME => s124496 DATE PLOTTED => 18-APR-2012 TIME PLOTTED => 16:21

DIST	COUNTY	ROUTE	POST MILES TOTAL PROJECT	SHEET No.	TOTAL SHEETS
08	Riv,SBd	91,215	21.5/21.7, 43.2/45.2,0.0/5.1	1400	1743

REGISTERED CIVIL ENGINEER 4-06-12 DATE

4-16-12
PLANS APPROVAL DATE

REGISTERED PROFESSIONAL ENGINEER LARRY WU No. C57035 Exp. 6-30-13 CIVIL STATE OF CALIFORNIA

The State of California or its officers or agents shall not be responsible for the accuracy or completeness of electronic copies of this plan sheet.

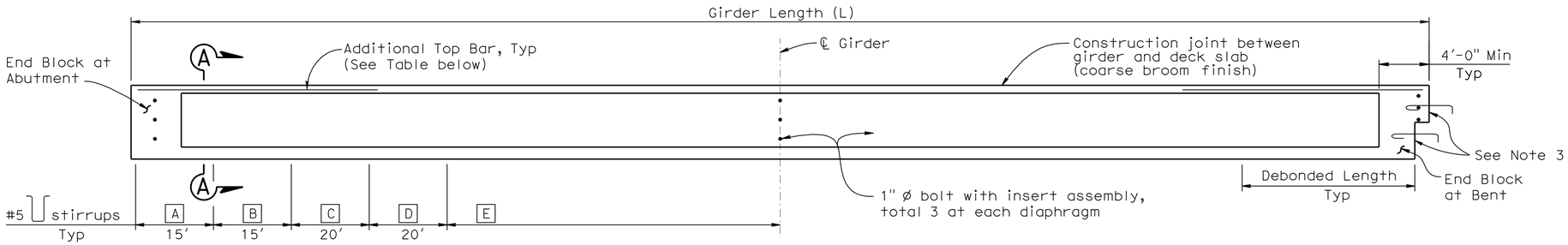

Location	A	B	C	D	E
Girder A, B C and D	#5 @ 6"	#5 @ 9"	#5 @ 9"	#5 @ 9"	#5 @ 12"

GIRDER ELEVATION

NOTES

1. For End Bloack details, see "PC/PS BULB-TEE GIRDER DETAILS NO.2" sheet.
2. Girder ends to be cast such that a level surface is provided at bearing pads.
3. Roughen surface by on amplitude of 1/4"

Location	Girder Length (L)	Girder Depth (D)	Number of 0.6" ø Strands	Jacking Force (P) (44 kips/strand)	Concrete Strength (ksi)		Midspan Dead Load Deflection (in)		Additional Top Bar (each end)
					f'ci	f'c	Deck	Rail	
Girders A, B, C and D	126'-8"	6'-7/8"	36	1584 kips	4.5	6.0	1.45	0.06	#8 x 25' tot. 8

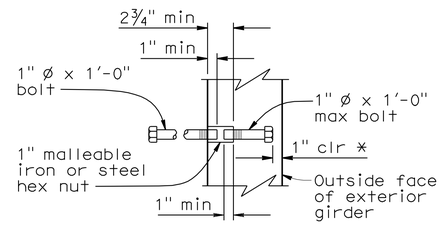

* Dimension may be increased when insert assembly is used at end block

INSERT ASSEMBLY

PRESTRESSING NOTES

1. The Jacking Force (P) is the jacking force required at the point of control along the span. The jacking force does not include any fabrication specific losses.
2. The maximum tensile stress in the prestressing steel upon release shall not exceed 75 percent of the specified minimum ultimate tensile strength of the prestressing steel.
3. The maximum temporary tensile stress (jacking stress) in the prestressing steel shall not exceed 80 percent of the specified minimum ultimate tensile strength of the prestressing steel.
4. Concrete strength:
   f'ci is at time of initial stressing.
   f'c is at 28 days.
5. Deflection components are informational and will be used to set screed line elevations.
6. Screed line elevations for deck concrete will be determined by the Engineer.
7. Prestressing strand shall be 270 ksi low relaxation.

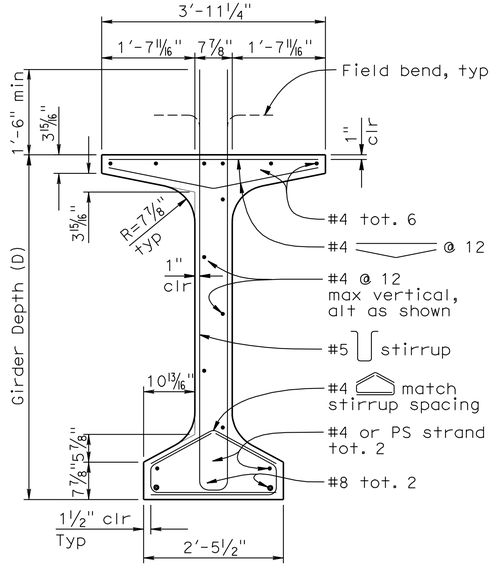

TYPICAL GIRDER SECTION

NOTE:
For "Welded Wire Reinforcement (WWR) Alternative", see "PC/PS BULB-TEE GIRDER DETAILS NO. 2" sheet.

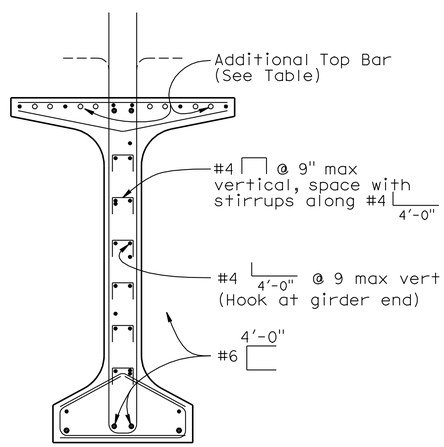

SECTION A-A

NOTE:
For details shown but not noted, see "Typical Girder Section" detail.

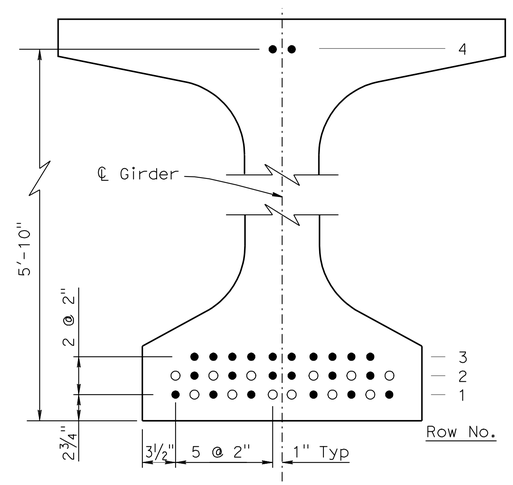

STRAND TEMPLATE & DEBONDING PATTERN

Girders A, B, C and D			
Row No.	Total No. of Strands	No. of Debonded Strands	Debonded Length
4	2	0	0
3	10	0	0
2	12	6	5'
1	12	6	2 x 20' 2 x 15' 2 x 10'

● Denotes continuously bonded strand location

○ Denotes allowable debonded strand location

PRESSTRESS STRAND NOTES

1. Strands shall be placed as low as possible in the strand template and symmetrical about ℄ Girder.
2. No more than 33% of the total number of strands or 50% of the strands per horizontal row may be debonded.
3. Strand locations may be adjusted as approved by the Engineer.

NO SCALE

	BY	CHECKED
DESIGN	A. McPhee	C. Duan
DETAILS	Y Tang	C. Duan
QUANTITIES	A. McPhee	F. Chen

STATE OF CALIFORNIA
DEPARTMENT OF TRANSPORTATION

DIVISION OF ENGINEERING SERVICES
STRUCTURE DESIGN
DESIGN BRANCH 10

BRIDGE NO. 54-0479L
POST MILE 4.03

I-215/I-10 SEPARATION LT (WIDEN)
PC/PS BULB-TEE GIRDER DETAILS NO. 1

STRUCTURES DESIGN DETAIL SHEET (ENGLISH) (REV. 09-01-10)

ORIGINAL SCALE IN INCHES FOR REDUCED PLANS 0 1 2 3

UNIT: 3596
PROJECT NUMBER & PHASE: 08000005061
CONTRACT NO.: 08-0M9401

DISREGARD PRINTS BEARING EARLIER REVISION DATES

REVISION DATES 10-20-11 11-02-11 02-10-12

SHEET 14 OF 28

FILE => 5404791lgdt14.dgn

USERNAME => s124496 DATE PLOTTED => 18-APR-2012 TIME PLOTTED => 11:50