Dist	COUNTY	ROUTE	POST MILES TOTAL PROJECT	SHEET No.	TOTAL SHEETS
08	Riv	86S	R4.4	1	26

INDEX OF PLANS

SHEET No.	DESCRIPTION
1	TITLE AND LOCATION MAP
2	CONSTRUCTION DETAILS
3	CONSTRUCTION AREA SIGNS
4-11	TRAFFIC HANDLING PLANS
12	PAVEMENT DELINEATION PLANS
13-16	REVISED STANDARD PLANS

STRUCTURE PLANS

17-26	KINGS STORMDRAIN CHANNEL BRIDGE Br No. 56-0778R

THE STANDARD PLANS LIST APPLICABLE TO THIS CONTRACT IS INCLUDED IN THE NOTICE TO BIDDERS AND SPECIAL PROVISIONS BOOK.

STATE OF CALIFORNIA

DEPARTMENT OF TRANSPORTATION

PROJECT PLANS FOR CONSTRUCTION ON

STATE HIGHWAY

IN RIVERSIDE COUNTY NEAR COAHELLA AT KINGS STORMWATER CHANNEL

TO BE SUPPLEMENTED BY STANDARD PLANS DATED MAY 2006

LOCATION MAP

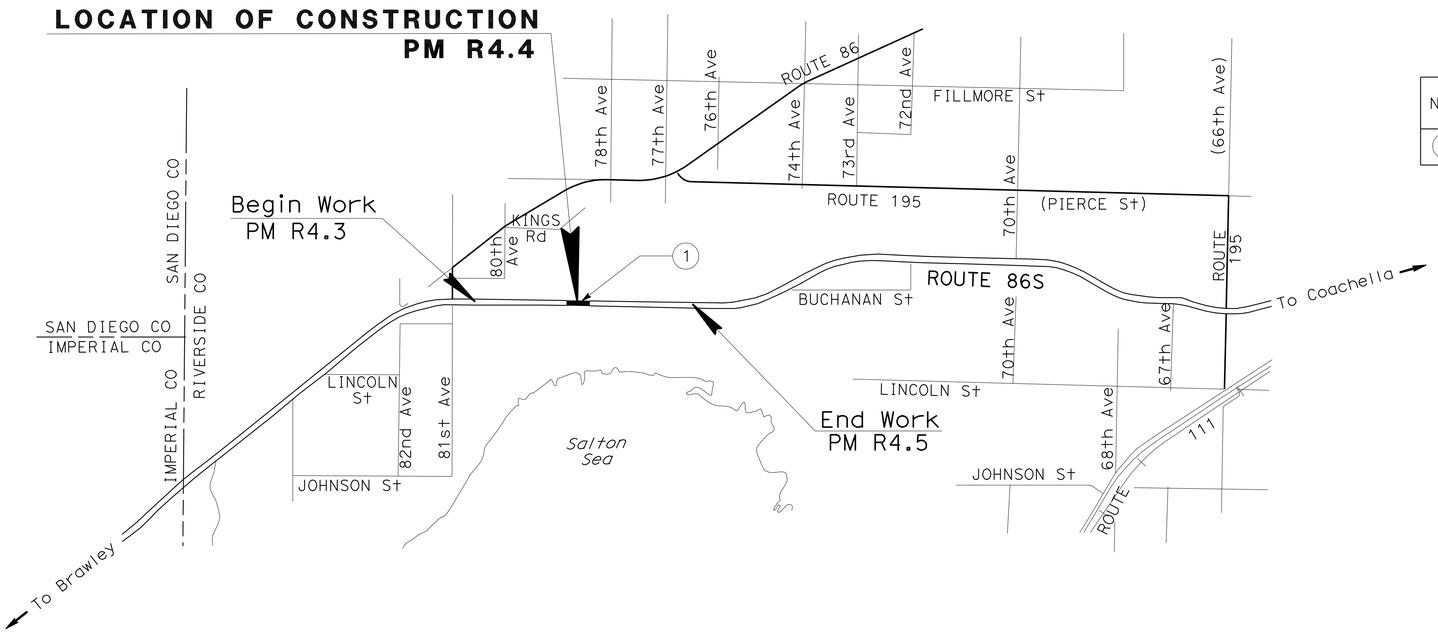

No.	BRIDGE NUMBER	BRIDGE NAME	PM
1	56-0778R	KINGS STORMWATER CHANNEL	R4.41

NO SCALE

PROJECT MANAGER: MEARDEY TIM

DESIGN ENGINEER: WILLIAM AMBROSE

1-23-10

PROJECT ENGINEER REGISTERED CIVIL ENGINEER — DATE

March 8, 2010

PLANS APPROVAL DATE

REGISTERED PROFESSIONAL ENGINEER — WILLIAM AMBROSE No. 72098 Exp. 06-30-10 CIVIL — STATE OF CALIFORNIA

THE STATE OF CALIFORNIA OR ITS OFFICERS OR AGENTS SHALL NOT BE RESPONSIBLE FOR THE ACCURACY OR COMPLETENESS OF SCANNED COPIES OF THIS PLAN SHEET.

THE CONTRACTOR SHALL POSSESS THE CLASS (OR CLASSES) OF LICENSE AS SPECIFIED IN THE "NOTICE TO BIDDERS."

CONTRACT No. **08-0M8104**

LAST REVISION 01-20-10 — DATE PLOTTED => 09-MAR-2010 — TIME PLOTTED => 10:43

Dist	COUNTY	ROUTE	POST MILES TOTAL PROJECT	SHEET No.	TOTAL SHEETS
08	Riv	86S	R4.4	2	26

REGISTERED CIVIL ENGINEER 1-23-10 DATE

3-8-10
PLANS APPROVAL DATE

REGISTERED PROFESSIONAL ENGINEER William Ambrose No. C72098 Exp. 06/30/10 CIVIL STATE OF CALIFORNIA

THE STATE OF CALIFORNIA OR ITS OFFICERS OR AGENTS SHALL NOT BE RESPONSIBLE FOR THE ACCURACY OR COMPLETENESS OF SCANNED COPIES OF THIS PLAN SHEET.

NOTES:

COLD PLANE AND PLACE HMA-A SHALL BE COMPLETED BEFORE DETOUR IS CREATED. INSTALL RUMBLE STRIP AFTER BRIDGE WORK IS FINISHED AND DETOUR HAS ENDED.

LEGEND:

COLD PLANE 0.2' AND PLACE HMA-A 0.2'. INSTALL RUMBLE STRIP PER STANDARD PLAN A40B.

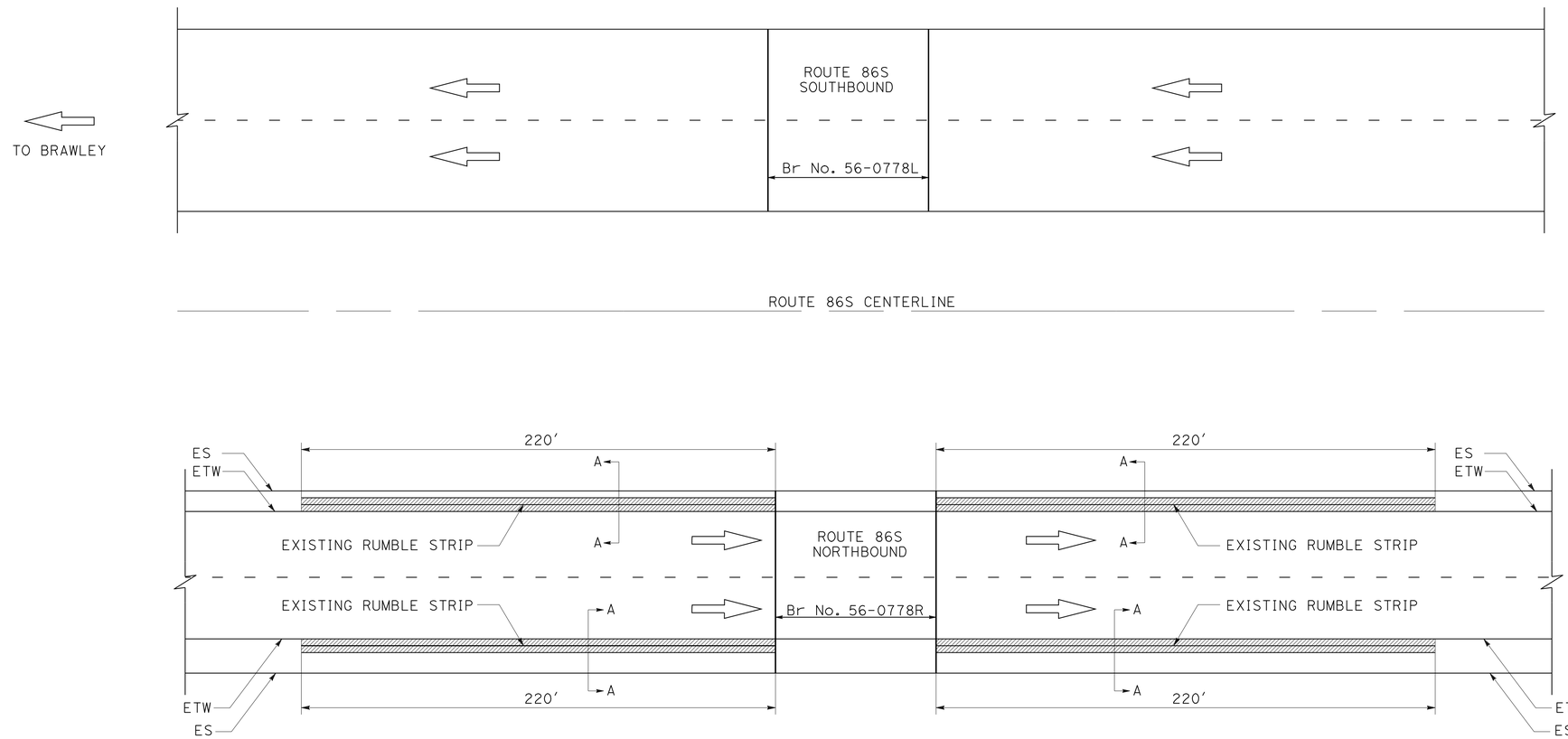

LIMITS OF COLD PLANE HMA-A, AND RUMBLE STRIP

QUANTITIES

RHMA-A TONS	COLD PLANE SQYD	RUMBLE STRIP LF
25	199.5	880

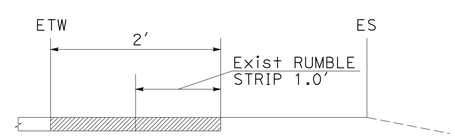

A-A

THIS PLAN ACCURATE FOR CONSTRUCTION AREA SIGN WORK ONLY.

CONSTRUCTION DETAILS
NO SCALE

C-1

STATE OF CALIFORNIA - DEPARTMENT OF TRANSPORTATION
Caltrans
MAINTENANCE DESIGN

FUNCTIONAL SUPERVISOR: KUANG CHEN
CALCULATED-DESIGNED BY: WILLIAM AMBROSE
CHECKED BY: KUANG H. CHEN
REVISED BY
DATE REVISED

LAST REVISION 1-13-10
DATE PLOTTED => 09-MAR-2010
TIME PLOTTED => 10:37

Dist	COUNTY	ROUTE	POST MILES TOTAL PROJECT	SHEET No.	TOTAL SHEETS
08	Riv	86S	R4.4	3	26

Thanh Trinh 1-23-10
REGISTERED CIVIL ENGINEER DATE

3-8-10
PLANS APPROVAL DATE

REGISTERED PROFESSIONAL ENGINEER
THANH TRINH
No. 41189
Exp. 3-31-11
CIVIL
STATE OF CALIFORNIA

THE STATE OF CALIFORNIA OR ITS OFFICERS OR AGENTS SHALL NOT BE RESPONSIBLE FOR THE ACCURACY OR COMPLETENESS OF SCANNED COPIES OF THIS PLAN SHEET.

NOTE:

1. LOCATION AND MESSAGE ON THE PCMS WILL BE DETERMINED BY THE ENGINEER.

LEGEND:

- WORK AREA
- ROADSIDE AREA SIGN (ONE POST)
- ROADSIDE AREA SIGN (TWO POSTS)
- (X) ROADSIDE SIGN No.
- * PORTABLE FLASHING BEACON

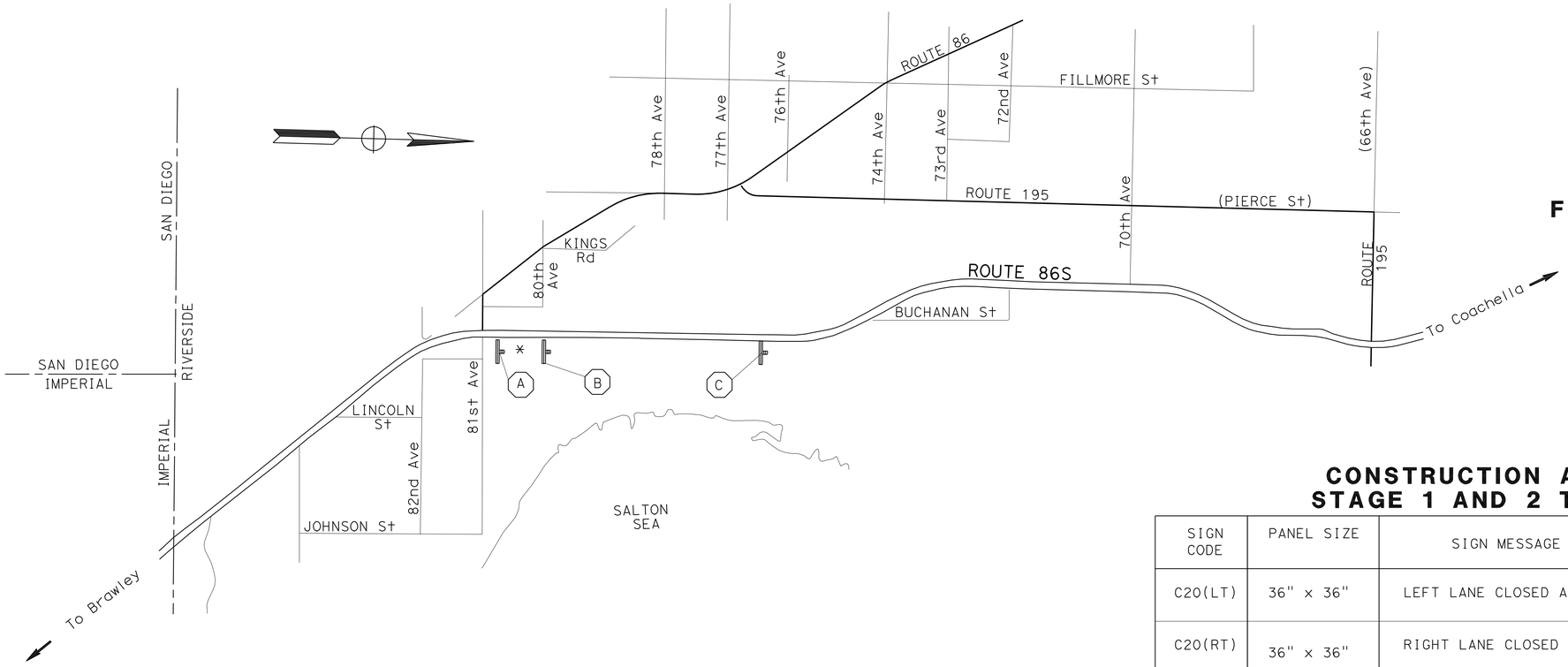

FLASHING BEACON (PORTABLE)

QUANTITY	1 EACH

TYPE III BARRICADE

QUANTITY	2 EACH

CONSTRUCTION AREA SIGNS ON STAGE 1 AND 2 TRAFFIC HANDLING

SIGN CODE	PANEL SIZE	SIGN MESSAGE	No. OF POST AND SIZE	No. OF SIGNS	REMARK
C20(LT)	36" x 36"	LEFT LANE CLOSED AHEAD	1- 4" x 6"	4	
C20(RT)	36" x 36"	RIGHT LANE CLOSED AHEAD	1- 4" x 6"	4	
C30	30" x 30"	LANE CLOSED		2	MOUNTED ON BARRICADE
C30(CA)	36" x 36"	SHOULDER CLOSED	1- 4" x 6"	4	

CONSTRUCTION AREA SIGNS (STATIONARY)

SIGN No.	SIGN CODE	PANEL SIZE	POST NUMBER AND SIZE	SIGN MESSAGE	No. OF SIGNS
(A)	W20-1	48" X 48"	1-6" X 6"	ROAD WORK AHEAD	1
(B)	C40A (CA)	48" X 48"	1-6" X 6"	TRAFFIC FINES DOUBLED IN WORK ZONES	1
(C)	G20-2	36" X 12"	1-4" X 4"	END ROAD WORK	1

THIS PLAN ACCURATE FOR CONSTRUCTION AREA SIGN WORK ONLY.

CONSTRUCTION AREA SIGNS

NO SCALE

CS-1

STATE OF CALIFORNIA - DEPARTMENT OF TRANSPORTATION
Caltrans TRAFFIC DESIGN

FUNCTIONAL SUPERVISOR: BILL WASSER
CALCULATED-DESIGNED BY: SHEILAH F NEFF
CHECKED BY: THANH TRINH
REVISED BY: SN
DATE REVISED: 1/20/10

LAST REVISION 01-20-10 | DATE PLOTTED => 10-MAR-2010 | TIME PLOTTED => 07:15

Dist	COUNTY	ROUTE	POST MILES TOTAL PROJECT	SHEET No.	TOTAL SHEETS
08	Riv	86S	R4.4	4	26

Thanh Trinh 1-23-10
REGISTERED CIVIL ENGINEER DATE

3-8-10
PLANS APPROVAL DATE

REGISTERED PROFESSIONAL ENGINEER
THANH TRINH
No. 41189
Exp. 3-31-11
CIVIL
STATE OF CALIFORNIA

THE STATE OF CALIFORNIA OR ITS OFFICERS OR AGENTS SHALL NOT BE RESPONSIBLE FOR THE ACCURACY OR COMPLETENESS OF SCANNED COPIES OF THIS PLAN SHEET.

LEGEND:

- XX CONSTRUCTION AREA SIGN
- DIRECTION OF TRAFFIC
- TEMPORARY TYPE VI ARROW @ 200' O/C
- WORK AREA
- ROADSIDE AREA SIGN (ONE POST)
- CHANNELIZERS @ 50' O/C
- FLASHING ARROW SIGN
- BT (XX) BEGIN TEMPORARY PAVEMENT DELINEATION
- ET (XX) END TEMPORARY PAVEMENT DELINEATION
- BR (XX) BEGIN REMOVE PAVEMENT DELINEATION
- ER (XX) END REMOVE PAVEMENT DELINEATION
- (13M) INDICATES COMBINATION STRIPE OF DETAIL 12 AND DETAIL 13

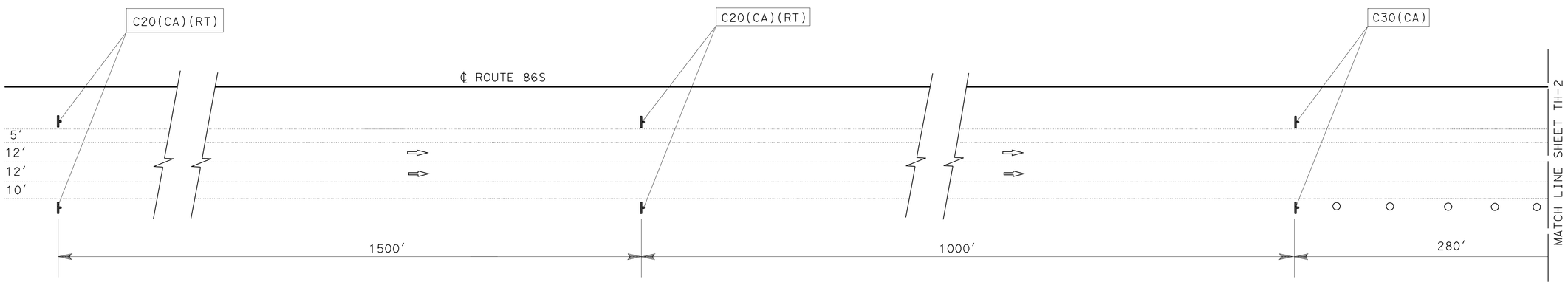

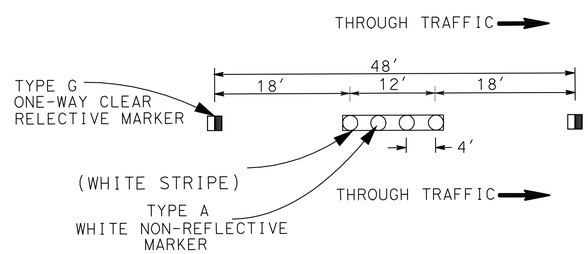

DETAIL 13 MODIFIED (13M)

NOTE: PAVEMENT MARKER THEN 4" WHITE STRIPE

TRAFFIC HANDLING PLAN

STAGE 1

NO SCALE

TH-1

STATE OF CALIFORNIA - DEPARTMENT OF TRANSPORTATION
Caltrans® **TRAFFIC DESIGN**

FUNCTIONAL SUPERVISOR: BILL WASSER
CALCULATED-DESIGNED BY: SHEILAH F NEFF
CHECKED BY: THANH TRINH
REVISED BY: SN
DATE REVISED: 1/20/10

LAST REVISION 01-20-10 | DATE PLOTTED => 09-MAR-2010 | TIME PLOTTED => 10:37

Dist	COUNTY	ROUTE	POST MILES TOTAL PROJECT	SHEET No.	TOTAL SHEETS
08	Riv	86S	R4.4	5	26

Thanh Trinh 1-23-10
REGISTERED CIVIL ENGINEER DATE

3-8-10
PLANS APPROVAL DATE

REGISTERED PROFESSIONAL ENGINEER
THANH TRINH
No. 41189
Exp. 3-31-11
CIVIL
STATE OF CALIFORNIA

THE STATE OF CALIFORNIA OR ITS OFFICERS OR AGENTS SHALL NOT BE RESPONSIBLE FOR THE ACCURACY OR COMPLETENESS OF SCANNED COPIES OF THIS PLAN SHEET.

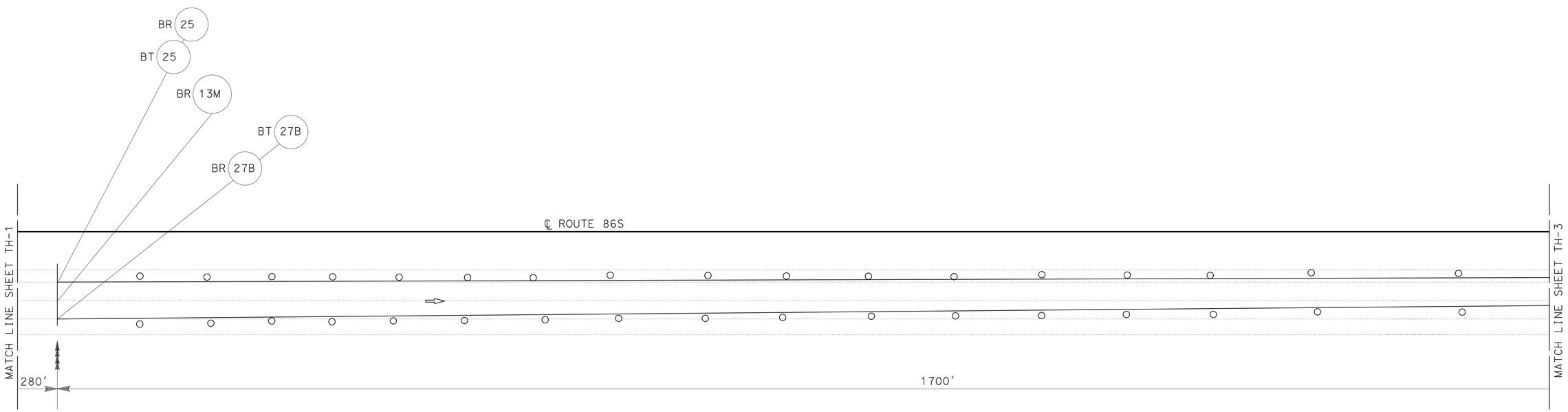

TRAFFIC HANDLING PLAN
STAGE 1
NO SCALE

TH-2

STATE OF CALIFORNIA - DEPARTMENT OF TRANSPORTATION
Caltrans® **TRAFFIC DESIGN**

FUNCTIONAL SUPERVISOR: BILL WASSER
CALCULATED-DESIGNED BY: SHEILAH F NEFF
CHECKED BY: THANH TRINH
REVISED BY: SN
DATE REVISED: 1/20/10

LAST REVISION 01-20-10 | DATE PLOTTED => 09-MAR-2010 | TIME PLOTTED => 10:37

Dist	COUNTY	ROUTE	POST MILES TOTAL PROJECT	SHEET No.	TOTAL SHEETS
08	Riv	86S	R4.4	6	26

Thanh Trinh 1-23-10
REGISTERED CIVIL ENGINEER DATE

3-8-10
PLANS APPROVAL DATE

REGISTERED PROFESSIONAL ENGINEER
THANH TRINH
No. 41189
Exp. 3-31-11
CIVIL
STATE OF CALIFORNIA

THE STATE OF CALIFORNIA OR ITS OFFICERS OR AGENTS SHALL NOT BE RESPONSIBLE FOR THE ACCURACY OR COMPLETENESS OF SCANNED COPIES OF THIS PLAN SHEET.

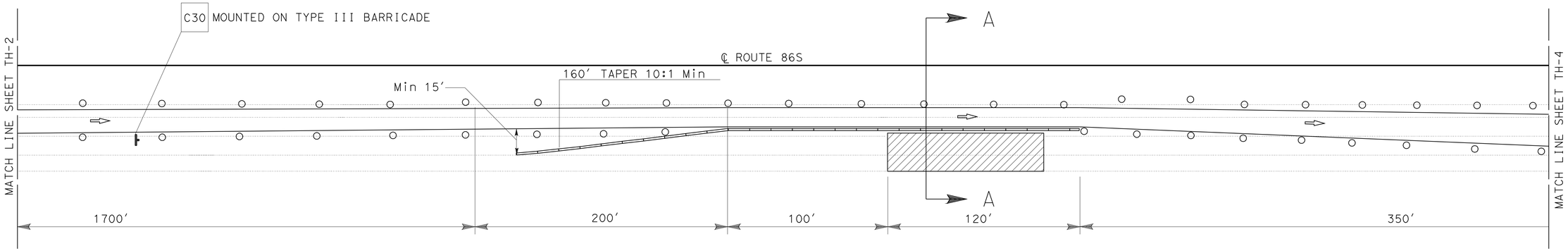

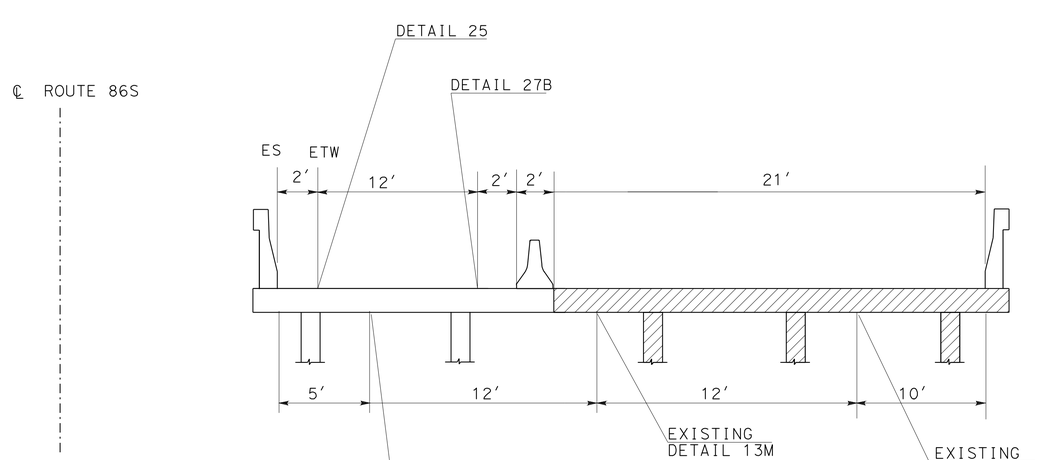

SECTION A - A

TRAFFIC HANDLING PLAN
STAGE 1
NO SCALE

TH-3

STATE OF CALIFORNIA - DEPARTMENT OF TRANSPORTATION
Caltrans® **TRAFFIC DESIGN**

FUNCTIONAL SUPERVISOR: BILL WASSER
CALCULATED-DESIGNED BY: SHEILAH F NEFF
CHECKED BY: THANH TRINH
REVISED BY: SN
DATE REVISED: 1/20/10

LAST REVISION 01-20-10 | DATE PLOTTED => 09-MAR-2010 | TIME PLOTTED => 10:38

BORDER LAST REVISED 4/11/2008 | RELATIVE BORDER SCALE IS IN INCHES 0 1 2 3 | USERNAME => trmikesl | DGN FILE => 80m810md003.dgn | CU 08380 | EA 0M8101

Dist	COUNTY	ROUTE	POST MILES TOTAL PROJECT	SHEET No.	TOTAL SHEETS
08	Riv	86S	R4.4	7	26

Thanh Trinh 1-23-10
REGISTERED CIVIL ENGINEER DATE

3-8-10
PLANS APPROVAL DATE

REGISTERED PROFESSIONAL ENGINEER
THANH TRINH
No. 41189
Exp. 3-31-11
CIVIL
STATE OF CALIFORNIA

THE STATE OF CALIFORNIA OR ITS OFFICERS OR AGENTS SHALL NOT BE RESPONSIBLE FOR THE ACCURACY OR COMPLETENESS OF SCANNED COPIES OF THIS PLAN SHEET.

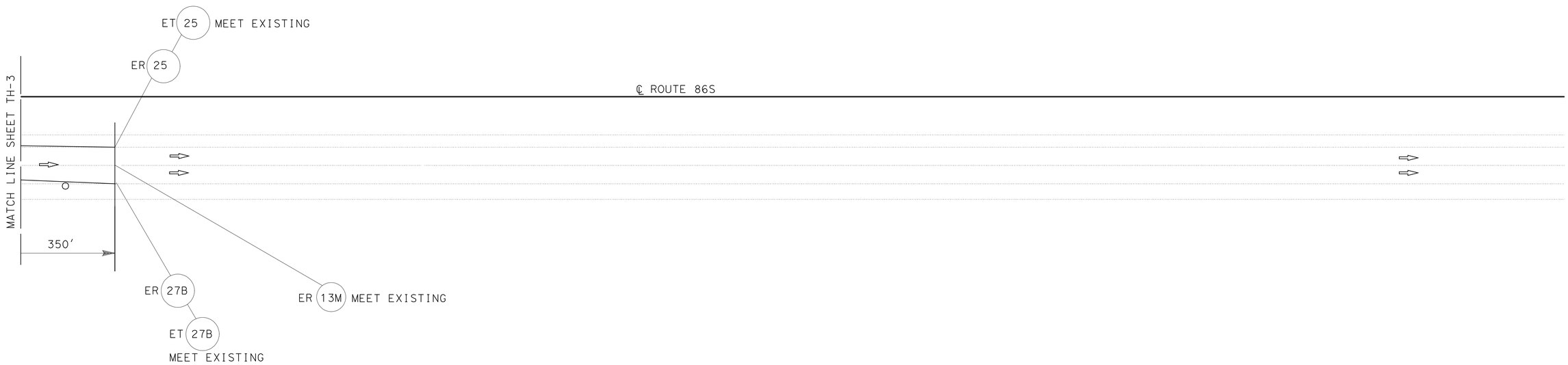

TRAFFIC HANDLING PLAN
STAGE 1
NO SCALE

TH-4

STATE OF CALIFORNIA - DEPARTMENT OF TRANSPORTATION
Caltrans® **TRAFFIC DESIGN**

FUNCTIONAL SUPERVISOR: BILL WASSER
CALCULATED-DESIGNED BY: SHEILAH F NEFF
CHECKED BY: THANH TRINH
REVISED BY
DATE REVISED: 9/2009

LAST REVISION 01-13-10 | DATE PLOTTED => 09-MAR-2010 | TIME PLOTTED => 10:38

Dist	COUNTY	ROUTE	POST MILES TOTAL PROJECT	SHEET No.	TOTAL SHEETS
08	Riv	86S	R4.4	8	26

Thanh Trinh 1-23-10
REGISTERED CIVIL ENGINEER DATE

3-8-10
PLANS APPROVAL DATE

REGISTERED PROFESSIONAL ENGINEER
THANH TRINH
No. 41189
Exp. 3-31-11
CIVIL
STATE OF CALIFORNIA

THE STATE OF CALIFORNIA OR ITS OFFICERS OR AGENTS SHALL NOT BE RESPONSIBLE FOR THE ACCURACY OR COMPLETENESS OF SCANNED COPIES OF THIS PLAN SHEET.

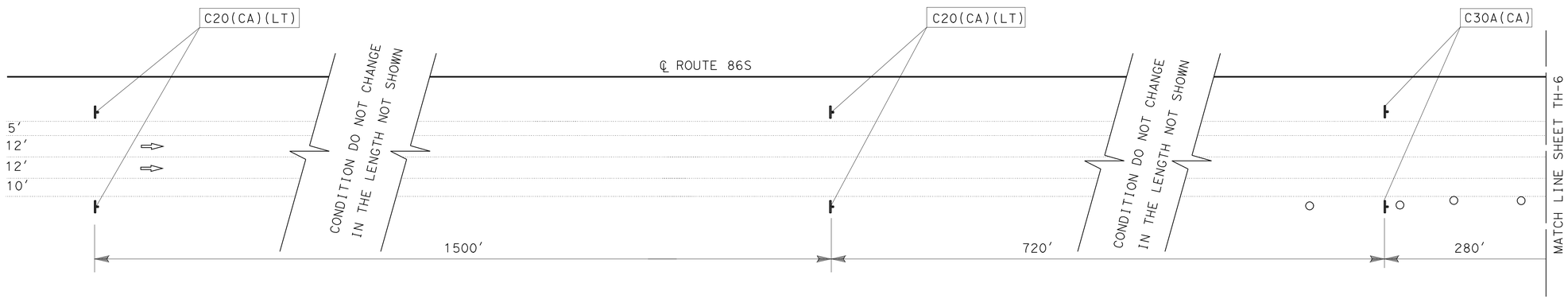

TRAFFIC HANDLING PLAN
STAGE 2
NO SCALE

TH-5

STATE OF CALIFORNIA - DEPARTMENT OF TRANSPORTATION
Caltrans® **TRAFFIC DESIGN**

FUNCTIONAL SUPERVISOR: BILL WASSER
CALCULATED-DESIGNED BY: SHEILAH F NEFF
CHECKED BY: THANH TRINH
REVISED BY: SN
DATE REVISED: 1/20/10

LAST REVISION 01-20-10 | DATE PLOTTED => 09-MAR-2010 | TIME PLOTTED => 10:38

Dist	COUNTY	ROUTE	POST MILES TOTAL PROJECT	SHEET No.	TOTAL SHEETS
08	Riv	86S	R4.4	9	26

Thanh Trinh 1-23-10
REGISTERED CIVIL ENGINEER DATE

3-8-10
PLANS APPROVAL DATE

REGISTERED PROFESSIONAL ENGINEER
THANH TRINH
No. 41189
Exp. 3-31-11
CIVIL
STATE OF CALIFORNIA

THE STATE OF CALIFORNIA OR ITS OFFICERS OR AGENTS SHALL NOT BE RESPONSIBLE FOR THE ACCURACY OR COMPLETENESS OF SCANNED COPIES OF THIS PLAN SHEET.

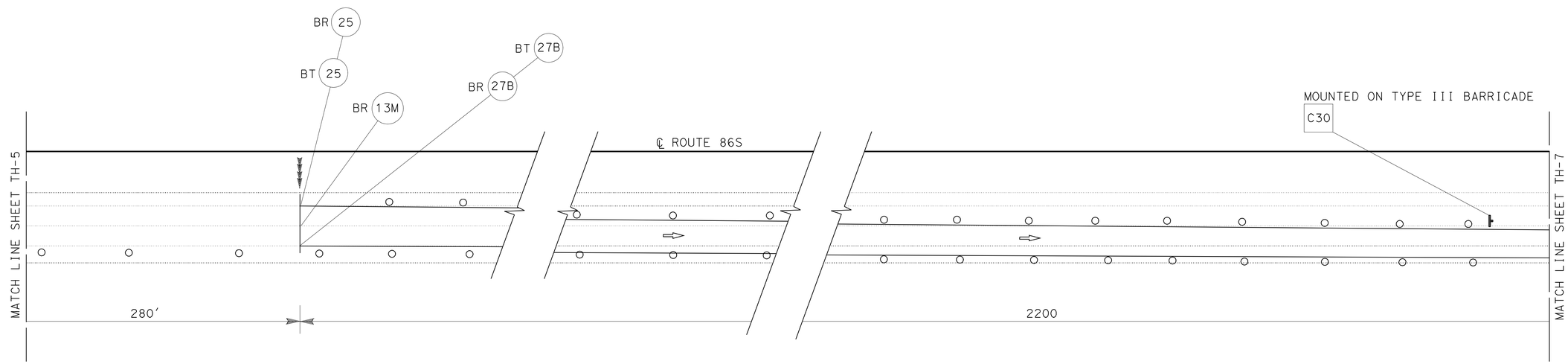

TRAFFIC HANDLING PLAN
STAGE 2
NO SCALE

TH-6

STATE OF CALIFORNIA - DEPARTMENT OF TRANSPORTATION
Caltrans® **TRAFFIC DESIGN**

FUNCTIONAL SUPERVISOR: BILL WASSER
CALCULATED-DESIGNED BY: SHEILAH F NEFF
CHECKED BY: THANH TRINH
REVISED BY: SN
DATE REVISED: 1/20/10

LAST REVISION 01-20-10 | DATE PLOTTED => 09-MAR-2010 | TIME PLOTTED => 10:38

Dist	COUNTY	ROUTE	POST MILES TOTAL PROJECT	SHEET No.	TOTAL SHEETS
08	Riv	86S	R4.4	10	26

Thanh Trinh 1-23-10
REGISTERED CIVIL ENGINEER DATE

3-8-10
PLANS APPROVAL DATE

REGISTERED PROFESSIONAL ENGINEER
THANH TRINH
No. 41189
Exp. 3-31-11
CIVIL
STATE OF CALIFORNIA

THE STATE OF CALIFORNIA OR ITS OFFICERS OR AGENTS SHALL NOT BE RESPONSIBLE FOR THE ACCURACY OR COMPLETENESS OF SCANNED COPIES OF THIS PLAN SHEET.

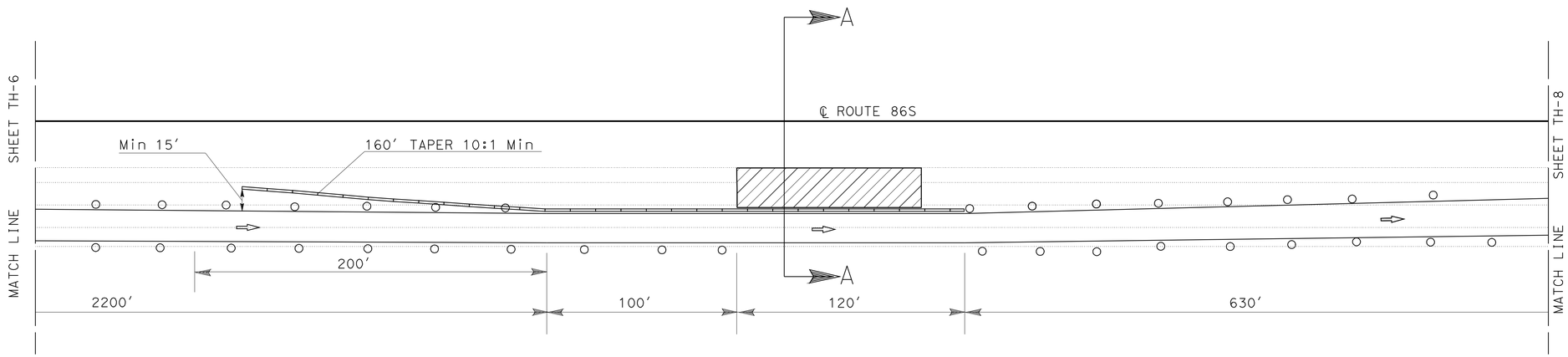

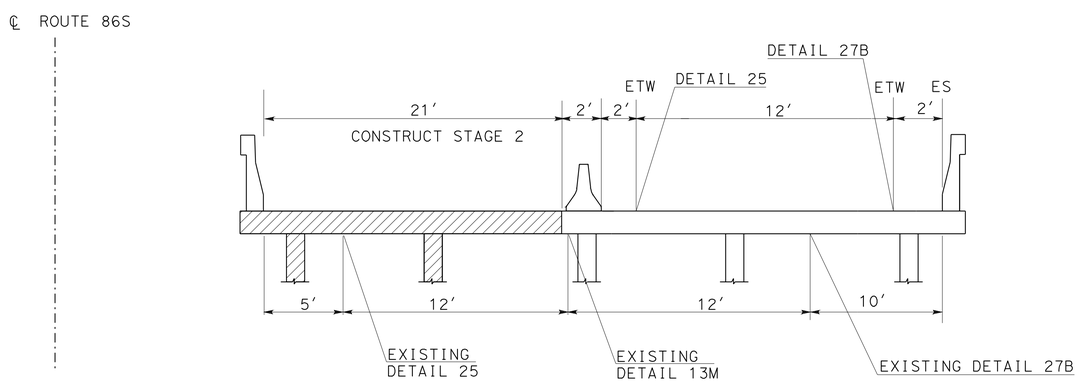

SECTION A-A

TRAFFIC HANDLING PLAN
STAGE 2
NO SCALE

TH-7

STATE OF CALIFORNIA - DEPARTMENT OF TRANSPORTATION
Caltrans® **TRAFFIC DESIGN**

FUNCTIONAL SUPERVISOR: BILL WASSER
CALCULATED-DESIGNED BY: SHEILAH F NEFF
CHECKED BY: THANH TRINH
REVISED BY
DATE REVISED: 9/2009

LAST REVISION 01-13-10
DATE PLOTTED => 10-MAR-2010
TIME PLOTTED => 07:15

Dist	COUNTY	ROUTE	POST MILES TOTAL PROJECT	SHEET No.	TOTAL SHEETS
08	Riv	86S	R4.4	11	26

Thanh Trinh 1-23-10
REGISTERED CIVIL ENGINEER DATE

3-8-10
PLANS APPROVAL DATE

REGISTERED PROFESSIONAL ENGINEER
THANH TRINH
No. 41189
Exp. 3-31-11
CIVIL
STATE OF CALIFORNIA

THE STATE OF CALIFORNIA OR ITS OFFICERS OR AGENTS SHALL NOT BE RESPONSIBLE FOR THE ACCURACY OR COMPLETENESS OF SCANNED COPIES OF THIS PLAN SHEET.

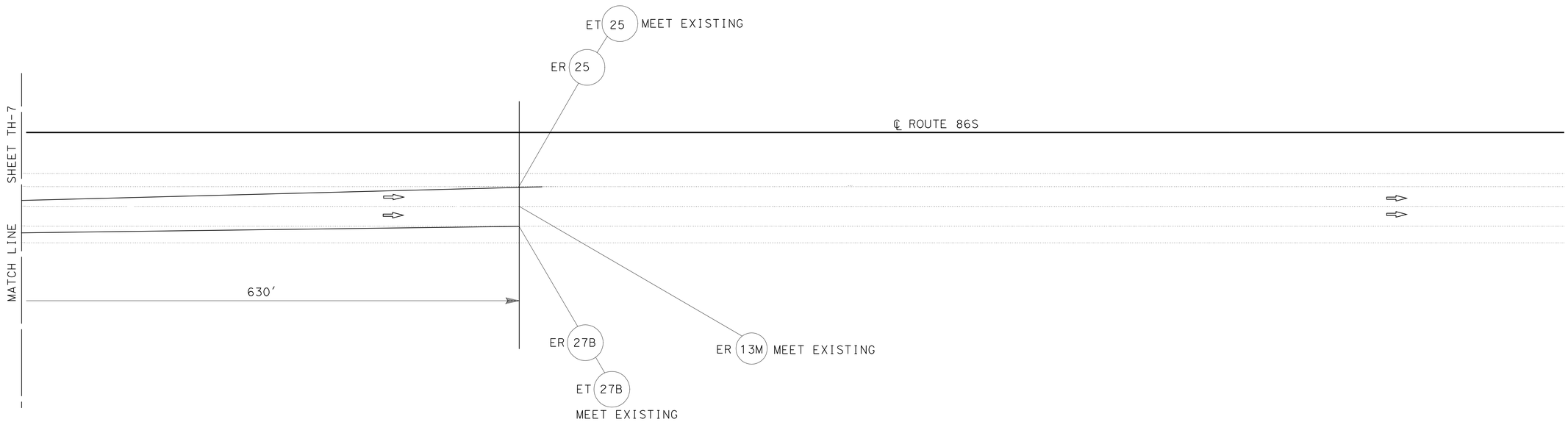

TRAFFIC HANDLING PLAN
STAGE 2
NO SCALE

TH-8

STATE OF CALIFORNIA - DEPARTMENT OF TRANSPORTATION
Caltrans® **TRAFFIC DESIGN**

FUNCTIONAL SUPERVISOR: BILL WASSER
CALCULATED-DESIGNED BY: SHEILAH F NEFF
CHECKED BY: THANH TRINH
REVISED BY
DATE REVISED: 9/2009

LAST REVISION 01-13-10
DATE PLOTTED => 09-MAR-2010
TIME PLOTTED => 10:38

Dist	COUNTY	ROUTE	POST MILES TOTAL PROJECT	SHEET No.	TOTAL SHEETS
08	Riv	86S	R4.4	12	26

Thanh Trinh 1-23-10
REGISTERED CIVIL ENGINEER DATE

3-8-10
PLANS APPROVAL DATE

REGISTERED PROFESSIONAL ENGINEER
THANH TRINH
No. 41189
Exp. 3-31-11
CIVIL
STATE OF CALIFORNIA

THE STATE OF CALIFORNIA OR ITS OFFICERS OR AGENTS SHALL NOT BE RESPONSIBLE FOR THE ACCURACY OR COMPLETENESS OF SCANNED COPIES OF THIS PLAN SHEET.

PAVEMENT DELINEATION

LOCATION	DETAIL No.	REMOVE PAVEMENT MARKER	REMOVE THERMOPLASTIC TRAFFIC STRIPE		PAVEMENT MARKER			THERMOPLASTIC TRAFFIC STRIPE (SPRAYABLE)	
					RETRO REFLECTIVE		NON REFLECTIVE		
			WHITE	YELLOW	TYPE G	TYPE H	TYPE A	4" WHITE	4" YELLOW
KINGS STORMWATER CHANNEL BRIDGE PM R4.4 BRIDGE 56-0778R		EA	LF	LF	EA	EA	EA	LF	LF
	13M	325	760		65		260	3050	
	25	65		3050		65			3050
	27B		3050					3050	
SUBTOTAL		390	3810	3050	65	65	260	6100	3050
TOTAL		390	3810	3050	130		260	9150	

TEMPORARY PAVEMENT DELINEATION

LOCATION	DETAIL No. OR PAVEMENT MARKING	PAVEMENT MARKER	TRAFFIC STRIPE (TAPE)	
			4" WHITE	4" YELLOW
KINGS STORMWATER CHANNEL BRIDGE PM R4.4 BRIDGE 56-0778R		TYPE H		
		EA	LF	LF
	25	120		5520
	27B		5520	
SUBTOTAL		120	5520	5520
TOTAL		120	11040	

TEMPORARY TRAFFIC ITEMS

ITEMS	QUANTITY	
	FT	EA
CHANNELIZERS (SURFACE MOUNTED)		240
TEMPORARY RAILING (TYPE K)	760	
FLASHING ARROW SIGN		2
PORTABLE CMS		1

PAVEMENT DELINEATION QUANTITIES
PDQ-1

REVISED BY	DATE REVISED
SN	1/20/10

SHEILAH F NEFF — CALCULATED-DESIGNED BY
THANH TRINH — CHECKED BY
BILL WASSER — FUNCTIONAL SUPERVISOR

STATE OF CALIFORNIA - DEPARTMENT OF TRANSPORTATION
Caltrans® TRAFFIC DESIGN

LAST REVISION 01-20-10 | DATE PLOTTED => 09-MAR-2010 | TIME PLOTTED => 10:38

DIST	COUNTY	ROUTE	POST MILES TOTAL PROJECT	SHEET NO.	TOTAL SHEETS
08	Riv	86S	R4.4	13	26

Randell D. Hiatt
REGISTERED CIVIL ENGINEER

June 6, 2008
PLANS APPROVAL DATE

REGISTERED PROFESSIONAL ENGINEER
Randell D. Hiatt
No. C50200
Exp. 6-30-09
CIVIL
STATE OF CALIFORNIA

The State of California or its officers or agents shall not be responsible for the accuracy or completeness of electronic copies of this plan sheet.

To accompany plans dated 3-8-10

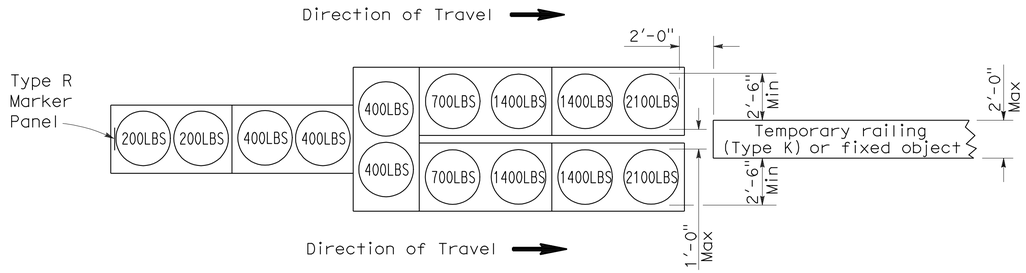

ARRAY 'TU14'

Approach speed 45 mph or more

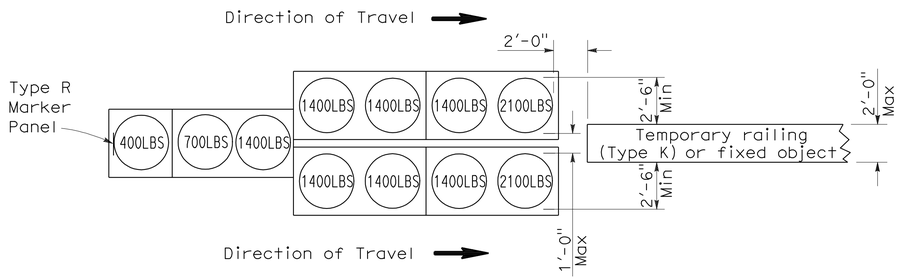

ARRAY 'TU11'

Approach speed less than 45 mph

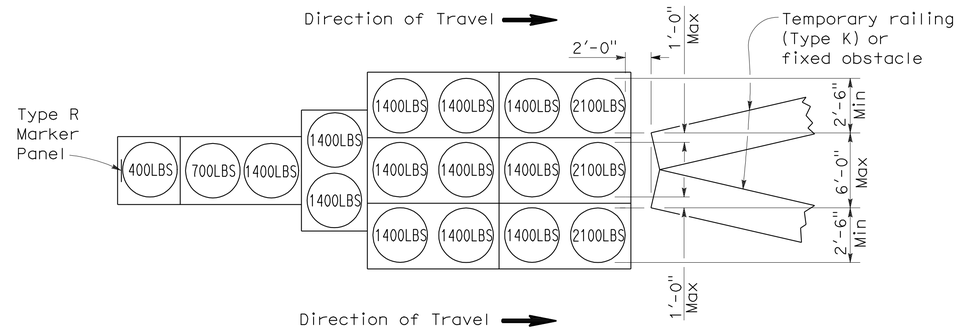

ARRAY 'TU17'

Approach speed less than 45 mph

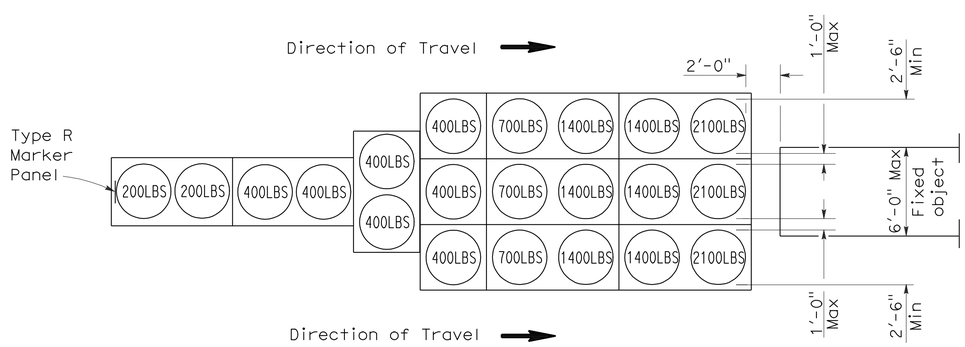

ARRAY 'TU21'

Approach speed 45 mph or more

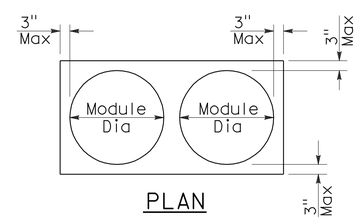

PLAN

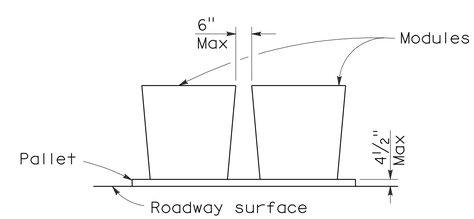

ELEVATION

CRASH CUSHION PALLET DETAIL

See Note 7

NOTES:

1. (XXX) Indicates sand filled module location and weight of sand in pounds for each module. Module spacing is based on the greater diameter of the module.
2. All sand weights are nominal.
3. Temporary crash cushion arrays shall not encroach on the traveled way.
4. Place the top of Type R marker panel 1" below the module lid.
5. Refer to Standard Plan A73B for marker details.
6. Approach speeds indicated conform to NCHRP 350 Report criteria.
7. Use of pallets is optional.

STATE OF CALIFORNIA
DEPARTMENT OF TRANSPORTATION

TEMPORARY CRASH CUSHION, SAND FILLED (UNIDIRECTIONAL)

NO SCALE

RSP T1A DATED JUNE 6, 2008 SUPERSEDES STANDARD PLAN T1A
DATED MAY 1, 2006 - PAGE 211 OF THE STANDARD PLANS BOOK DATED MAY 2006.

REVISED STANDARD PLAN RSP T1A

2006 REVISED STANDARD PLAN RSP T1A

DIST	COUNTY	ROUTE	POST MILES TOTAL PROJECT	SHEET NO.	TOTAL SHEETS
08	Riv	86S	R4.4	14	26

Randell D. Hiatt
REGISTERED CIVIL ENGINEER

June 6, 2008
PLANS APPROVAL DATE

REGISTERED PROFESSIONAL ENGINEER
Randell D. Hiatt
No. C50200
Exp. 6-30-09
CIVIL
STATE OF CALIFORNIA

The State of California or its officers or agents shall not be responsible for the accuracy or completeness of electronic copies of this plan sheet.

To accompany plans dated 3-8-10

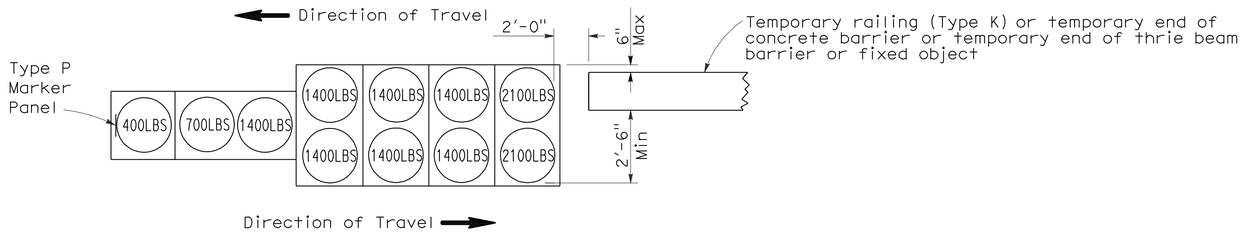

ARRAY 'TB11'

Approach speed less than 45 mph

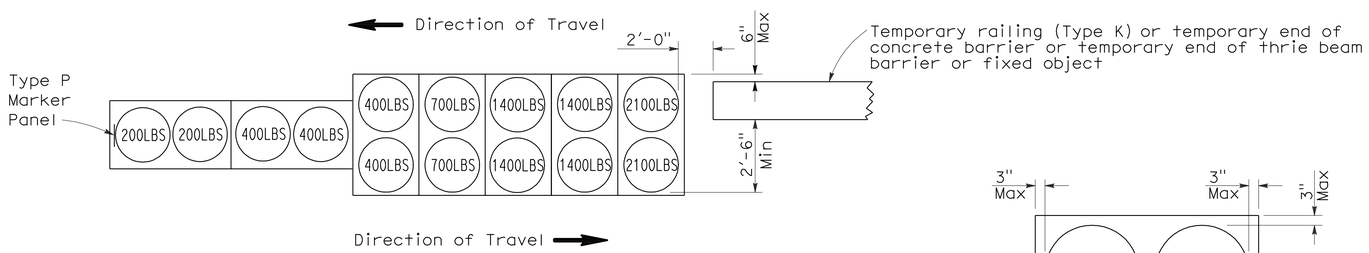

ARRAY 'TB14'

Approach speed 45 mph or more

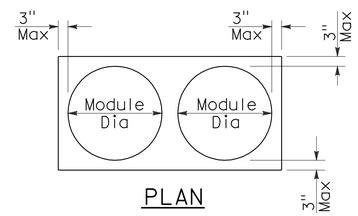

PLAN

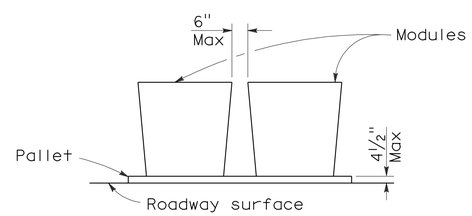

ELEVATION

CRASH CUSHION PALLET DETAIL

See Note 7

NOTES:

1. (XXX) Indicates sand filled module location and weight of sand in pounds for each module. Module spacing is based on the greater diameter of the module.
2. All sand weights are nominal.
3. Temporary crash cushion arrays shall not encroach on the traveled way.
4. Place the Type P marker panel so that the bottom of the panel rests upon the pallet.
5. Refer to Standard Plan A73B for marker details.
6. Approach speeds indicated conform to NCHRP 350 Report criteria.
7. Use of pallets is optional.

STATE OF CALIFORNIA
DEPARTMENT OF TRANSPORTATION

TEMPORARY CRASH CUSHION, SAND FILLED (BIDIRECTIONAL)

NO SCALE

RSP T1B DATED JUNE 6, 2008 SUPERSEDES STANDARD PLAN T1B
DATED MAY 1, 2006 - PAGE 212 OF THE STANDARD PLANS BOOK DATED MAY 2006.

REVISED STANDARD PLAN RSP T1B

2006 REVISED STANDARD PLAN RSP T1B

5-15-08

DIST	COUNTY	ROUTE	POST MILES TOTAL PROJECT	SHEET NO.	TOTAL SHEETS
08	Riv	86S	R4.4	15	26

Randell D. Hiatt
REGISTERED CIVIL ENGINEER

June 6, 2008
PLANS APPROVAL DATE

REGISTERED PROFESSIONAL ENGINEER
Randell D. Hiatt
No. C50200
Exp. 6-30-09
CIVIL
STATE OF CALIFORNIA

The State of California or its officers or agents shall not be responsible for the accuracy or completeness of electronic copies of this plan sheet.

To accompany plans dated 3-8-10

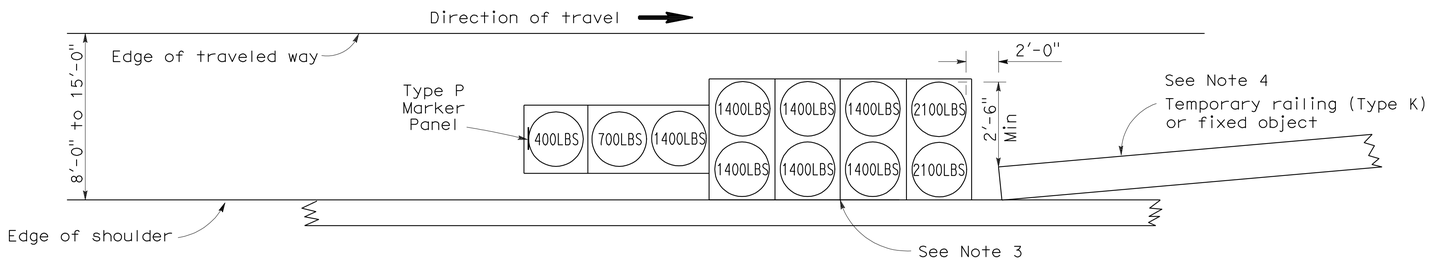

ARRAY 'TS11'

Approach speed less than 45 mph
See Note 9

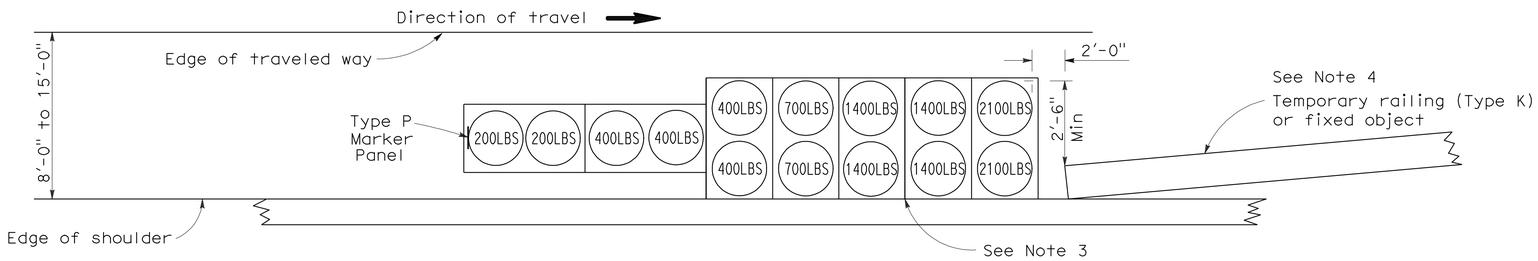

ARRAY 'TS14'

Approach speed 45 mph or more
See Note 9

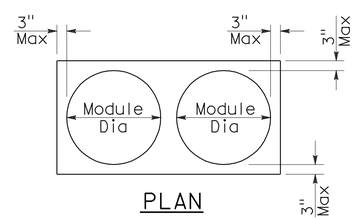

PLAN

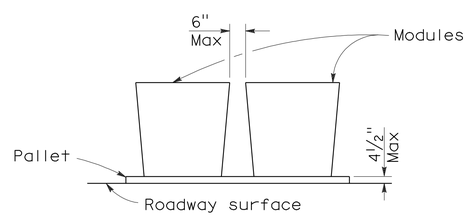

ELEVATION

CRASH CUSHION PALLET DETAIL

See Note 11

NOTES:

1. (XXX) Indicates sand filled module location and weight of sand in pounds for each module. Module spacing is based on the greater diameter of the module.
2. All sand weights are nominal.
3. The temporary crash cushion arrays shown on this plan shall be used only in locations where there will be traffic on one side of the temporary crash cushion array.
4. If the fixed object or approach end of the temporary railing is less than 15'-0" from the edge of traveled way, a temporary crash cushion is required in a construction or work zone.
5. Temporary crash cushion arrays shall not encroach on the traveled way.
6. Arrays for median shoulders shall conform to details shown on this plan for outside shoulders.
7. Place the Type P marker panel so that the bottom of the panel rests upon the pallet and faces traffic.
8. Refer to Standard Plan A73B for marker details.
9. For shoulder widths less than 8'-0", appropriate approved crash cushion protection, other than sand filled modules, shall be provided at fixed objects and at approach ends of temporary railing. The specific type of crash cushion shall be as shown on the project plans or as specified in the Special Provisions, or if not shown on the project plans or specified in the Special Provisions, shall be as approved by the Engineer.
10. Approach speeds indicated conform to NCHRP 350 Report criteria.
11. Use of pallets is optional.

STATE OF CALIFORNIA
DEPARTMENT OF TRANSPORTATION

TEMPORARY CRASH CUSHION, SAND FILLED (SHOULDER INSTALLATIONS)

NO SCALE

RSP T2 DATED JUNE 6, 2008 SUPERSEDES STANDARD PLAN T2
DATED MAY 1, 2006 - PAGE 213 OF THE STANDARD PLANS BOOK DATED MAY 2006.

REVISED STANDARD PLAN RSP T2

2006 REVISED STANDARD PLAN RSP T2

5-15-08

DIST	COUNTY	ROUTE	POST MILES TOTAL PROJECT	SHEET NO.	TOTAL SHEETS
08	Riv	86S	R4.4	16	26

REGISTERED CIVIL ENGINEER

October 5, 2007
PLANS APPROVAL DATE

REGISTERED PROFESSIONAL ENGINEER Efthymios Delis No. C51434 Exp. 6-30-08 CIVIL STATE OF CALIFORNIA

The State of California or its officers or agents shall not be responsible for the accuracy or completeness of electronic copies of this plan sheet.

To accompany plans dated 3-8-10

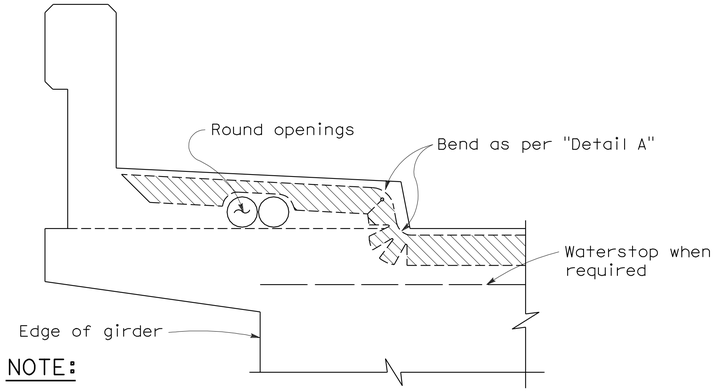

NOTE:

Type "B" seal shown. Type "A" seals to comform to the general path of seal shown, cuts for bending not required. Bend Type "A" seals 3" up into curb or barrier rail on only the low end of the seal.

CONCRETE BARRIER AND SIDEWALK

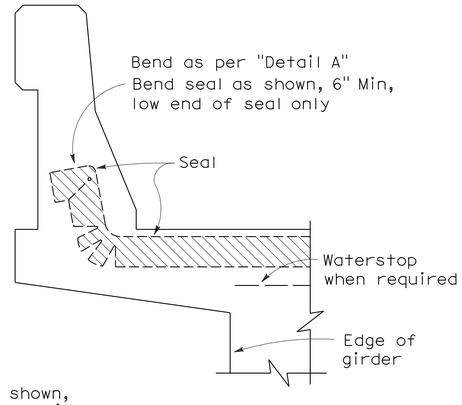

CONCRETE BARRIER

JOINT SEALS DETAILS

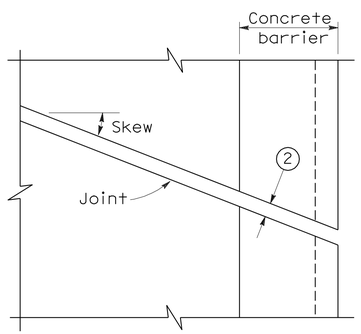

PLAN OF JOINT (SKEW ≤ 20°)

Min ℄ radius to be 4 times uncompressed width of seal or as recommended by the manufacturer, whichever is greater

In lieu of saw cutting, this area may be blocked out and reconstructed to match saw cutting on both sides.

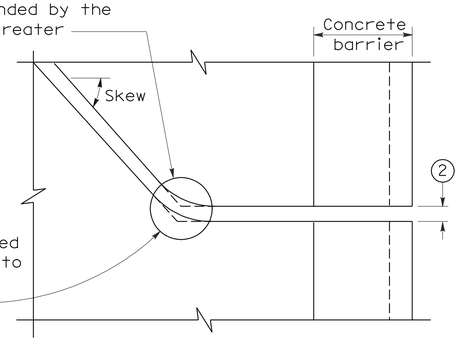

PLAN OF JOINT (SKEW > 20°)

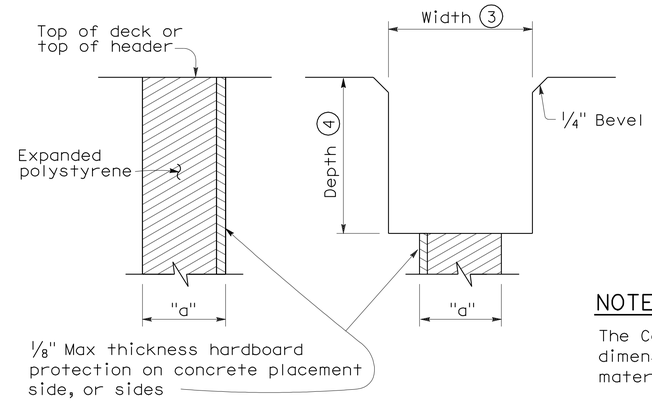

FORMING DETAIL SAWCUT DETAIL

NOTE:

The Contractor shall verify all controlling field dimensions before ordering or fabricatiing any material.

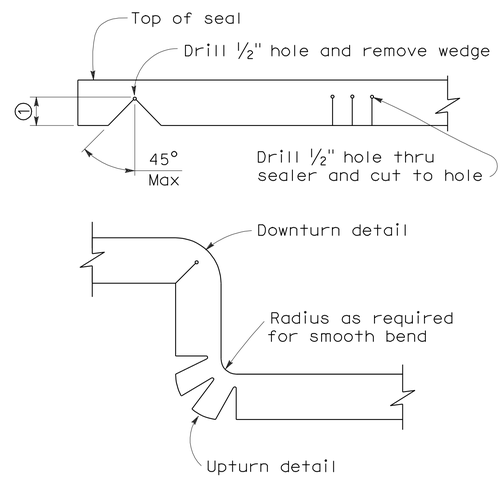

DETAIL A

NOTES:

1. Make smooth cuts from the bottom of seal to 1½" clear of top leaving at least one complete cell between the top of the cut and top of the seal. When necessary cut back of seal to clear conduit and round openings.
2. Opening in barrier to match width of sawn deck joint.
3. Sawcut groove widths shall be as ordered by the Engineer.
4. Depth of sawcut: Type A - Depth to be 2" minimum.
   Type B - Depth to be equal to or greater than the depth of seal measured along the contact surface, when compressed to minimum width position (W_2) plus dimensions shown.
5. MR (movement rating) as shown on other plan sheets.
6. Other depths must be approved by the Engineer.

DIMENSIONS "a" OF JOINT REQUIRED

Movement Rating (MR) 5	Bridge Type	"a" Dimension Deck Concrete Placed		
		Winter	Fall-Spring	Summer
2"	All except CIP/PS	1½"	1¼"	¾"
	CIP/PS	1¼"	1"	½"
1½"	All except CIP/PS	1¼"	1"	½"
	CIP/PS	1"	¾"	½"
1"	All except CIP/PS	1"	¾"	½"
	CIP/PS	¾"	½"	½"
½"	All except CIP/PS	¾"	¾"	½"
	CIP/PS	½"	½"	½"

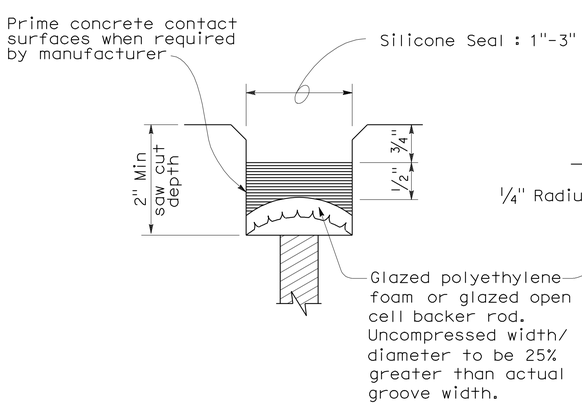

TYPE A SEAL

Movement rating : Silicone = 1" Max

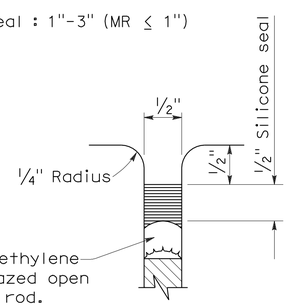

TYPE AL SEAL

Longitudinal joints only

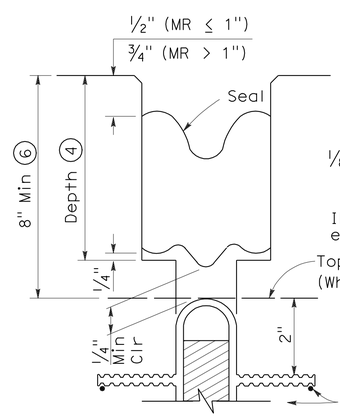

TYPE B JOINT SEAL IN MINIMUM WIDTH POSITION (W_2)

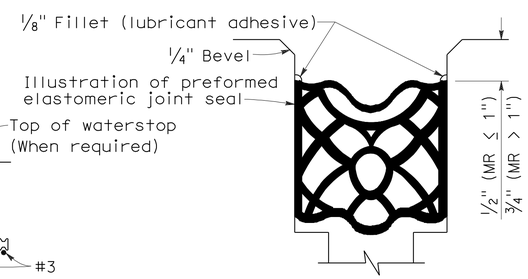

TYPE B SEAL

Movement Rating ≤ 2"

STATE OF CALIFORNIA
DEPARTMENT OF TRANSPORTATION

JOINT SEALS (MAXIMUM MOVEMENT RATING = 2")

NO SCALE

RSP B6-21 DATED OCTOBER 5, 2007 SUPERSEDES STANDARD PLAN B6-21 DATED MAY 1, 2006 - PAGE 258 OF THE STANDARD PLANS BOOK DATED MAY 2006.

REVISED STANDARD PLAN RSP B6-21

2006 REVISED STANDARD PLAN RSP B6-21

5-8-07

DIST	COUNTY	ROUTE	POST MILES TOTAL PROJECT	SHEET No	TOTAL SHEETS
08	Riv	86S	R4.4	17	26

REGISTERED CIVIL ENGINEER 11/19/09 DATE

3-8-10
PLANS APPROVAL DATE

The State of California or its officers or agents shall not be responsible for the accuracy or completeness of electronic copies of this plan sheet.

REGISTERED PROFESSIONAL ENGINEER GERALD D. JOO No. C65380 Exp. 09/30/11 CIVIL STATE OF CALIFORNIA

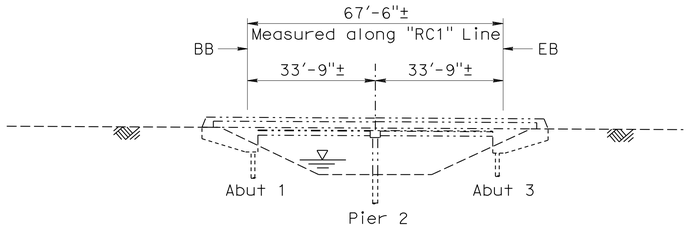

ELEVATION

1' = 20'

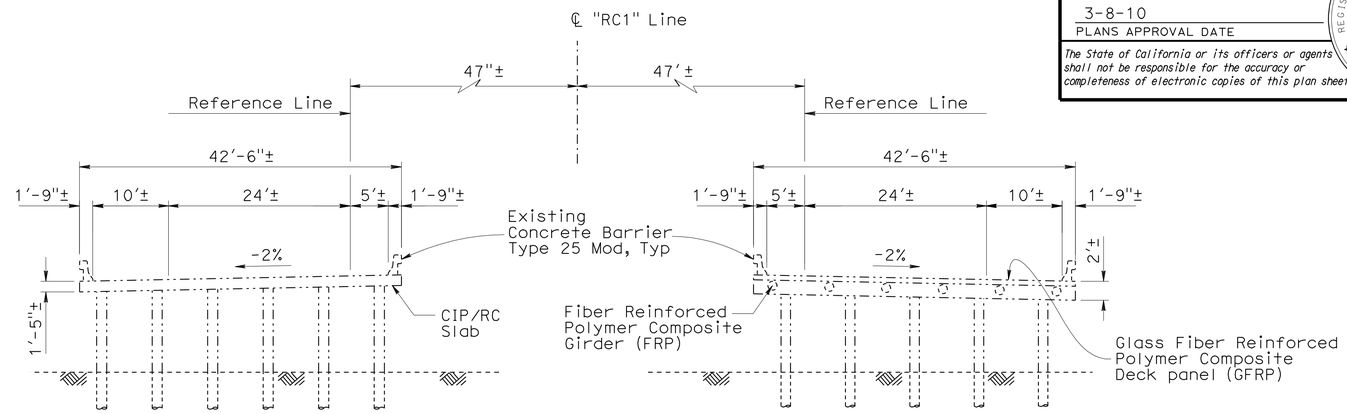

TYPICAL SECTION

1' = 10'

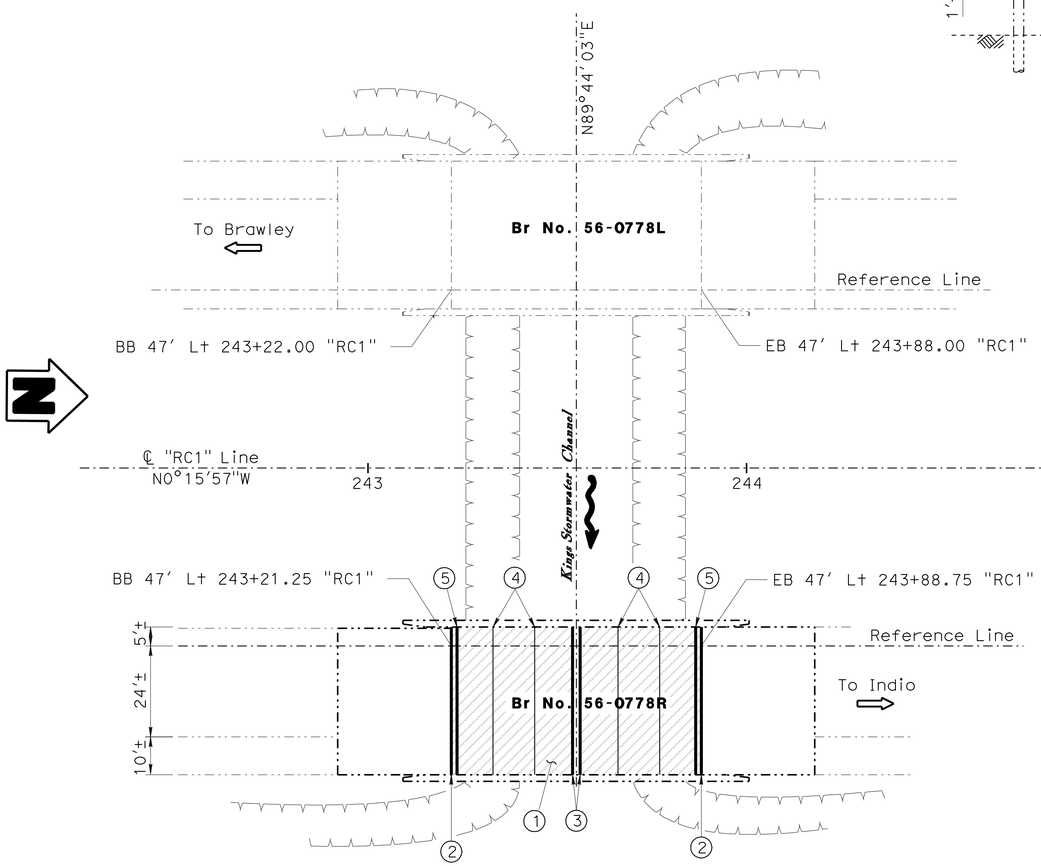

PLAN

1' = 20'

NOTE:
THE CONTRACTOR SHALL VERIFY ALL CONTROLLING FIELD DIMENSIONS BEFORE ORDERING OR FABRICATING ANY MATERIAL. EXISTING UTILITY FACILITIES HAVE NOT BEEN PLOTTED ON THESE PLANS.

INDEX TO PLANS

SHEET NO.	TITLE
1	GENERAL PLAN
2	TYPICAL SECTION
3	STAGING PLAN
4	ABUTMENT DETAILS NO. 1
5	ABUTMENT DETAILS NO. 2
6	PIER DETAILS NO. 1
7	PIER DETAILS NO. 2
8	PIER DETAILS NO. 3
9	DECK JOINT DETAILS NO. 1
10	DECK JOINT DETAILS NO. 2

QUANTITIES

REMOVE POLYESTER CONCRETE OVERLAY	2,633	SQFT
REMOVE UNSOUND CONCRETE	3	CF
PREPARE BRIDGE DECK SURFACE	2,633	SQFT
BRIDGE REMOVAL (PORTION)	LUMP	SUM
NON-SHRINK GROUT	80	CF
CLEAN EXPANSION JOINT	312	LF
RAPID SETTING CONCRETE (PATCH)	3	CF
INJECT CRACK (EPOXY)	156	LF
FURNISH POLYESTER CONCRETE OVERLAY	165	CF
PLACE POLYESTER CONCRETE OVERLAY	2,633	SQFT
JOINT SEAL (MR 1/2")	78	LF
JOINT SEAL (MR 1")	312	LF
WET LAY-UP GFRP COMPOSITE	1,650	SQFT
GFRP REPAIR (EPOXY INJECTION)	50	SQFT
STRUCTURAL STEEL (BRIDGE)	3,600	LB
MISCELLANEOUS METAL (BRIDGE)	2,300	LB

LEGEND:

- Indicates existing.
- Indicates direction of traffic.
- Indicates location of existing joint seal removal and placement of new joint seal. Prior to placement of new joint seal repair joint spalls.
- Indicates limit of remove existing ¾" Polyester Concrete overlay and prepare concrete bridge deck surface. Place Finish and place new ¾" minimum Polyester Concrete overlay.

SCOPE OF WORK

1. Remove existing Polyester concrete overlay.
2. Repair abutment, see "ABUTMENT DETAILS" sheets.
3. Repair pier cap, see "PIER DETAILS" sheets.
4. Repair deck joint, see "DECK JOINT DETAILS" sheets.
5. Place new joint seal, see "ABUTMENT DETAILS" sheets.

STANDARD PLANS DATED MAY 2006

SHEET NO.	TITLE
A10A	ACRONYMS AND ABBREVIATIONS (SHEET 1 OF 2)
A10B	ACRONYMS AND ABBREVIATIONS (SHEET 2 OF 2)
A10C	SYMBOLS (SHEET 1 OF 2)
A10D	SYMBOLS (SHEET 2 OF 2)

STANDARD PLAN SHEET NO.

DETAIL NO.

TONY D. BRAKE
DESIGN ENGINEER

	BY	CHECKED
DESIGN	Gerald Joo	Tony Brake
DETAILS	Tom Dang	Gerald Joo
QUANTITIES	Gerald Joo	Tony Brake

	BY		
LOAD FACTOR DESIGN	LIVE LOADING: HS20-44 AND ALTERNATIVE AND PERMIT DESIGN LOAD		
LAYOUT	Tom Dang	CHECKED	Gerald Joo
SPECIFICATIONS	Kevin Ellingson	PLANS AND SPECS COMPARED	Kevin Ellingson

STATE OF CALIFORNIA
DEPARTMENT OF TRANSPORTATION

DIVISION OF MAINTENANCE
STRUCTURE MAINTENANCE DESIGN

BRIDGE NO. 56-0778R
POST MILE R4.41

KINGS STORMWATER CHANNEL BRIDGE
GENERAL PLAN

STRUCTURES MAINTENANCE GENERAL PLAN SHEET (ENGLISH) (REV. 10/25/05)

ORIGINAL SCALE IN INCHES FOR REDUCED PLANS 0 1 2 3

CU 08
EA 0M8101

DISREGARD PRINTS BEARING EARLIER REVISION DATES

REVISION DATES: 3-01-09 7-14-09 7-28-09 7-28-09 8-26-09 10-13-09 10-22-09 11-18-09

SHEET 01 OF 10

FILE => 08-0m8101-a-gp.dgn

USERNAME => trmikesi DATE PLOTTED => 09-MAR-2010 TIME PLOTTED => 10:38

DIST	COUNTY	ROUTE	POST MILES TOTAL PROJECT	SHEET No	TOTAL SHEETS
08	Riv	86S	R4.4	18	26

REGISTERED CIVIL ENGINEER 11/19/09 DATE

3-8-10
PLANS APPROVAL DATE

REGISTERED PROFESSIONAL ENGINEER GERALD D. JOO No. C65380 Exp. 09/30/11 CIVIL STATE OF CALIFORNIA

The State of California or its officers or agents shall not be responsible for the accuracy or completeness of electronic copies of this plan sheet.

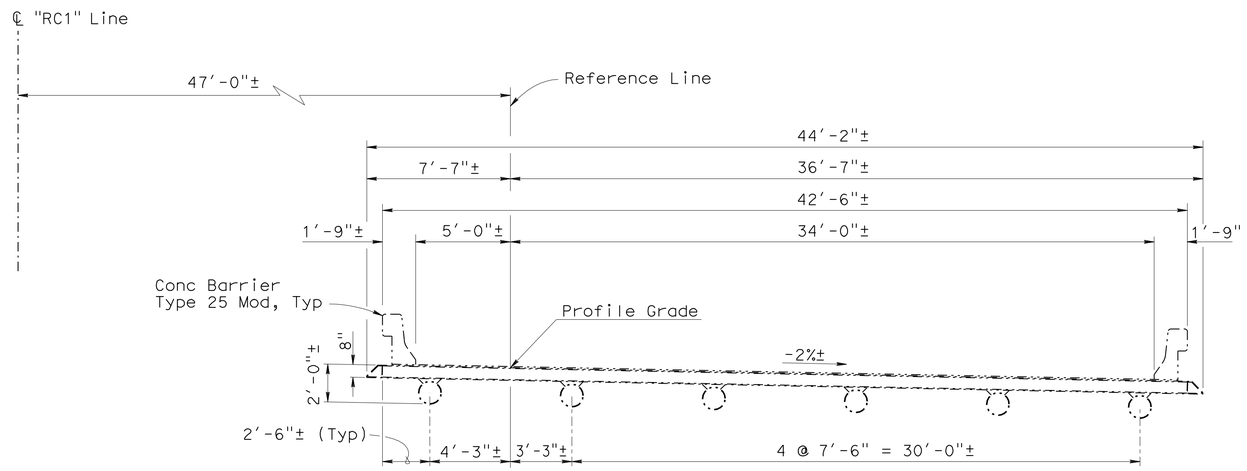

TYPICAL SECTION

1/4' = 1'-0"

NOTE: NOT ALL DETAILS SHOWN FOR CLARITY

LEGEND:

-·-·-·-·- Indicates existing.

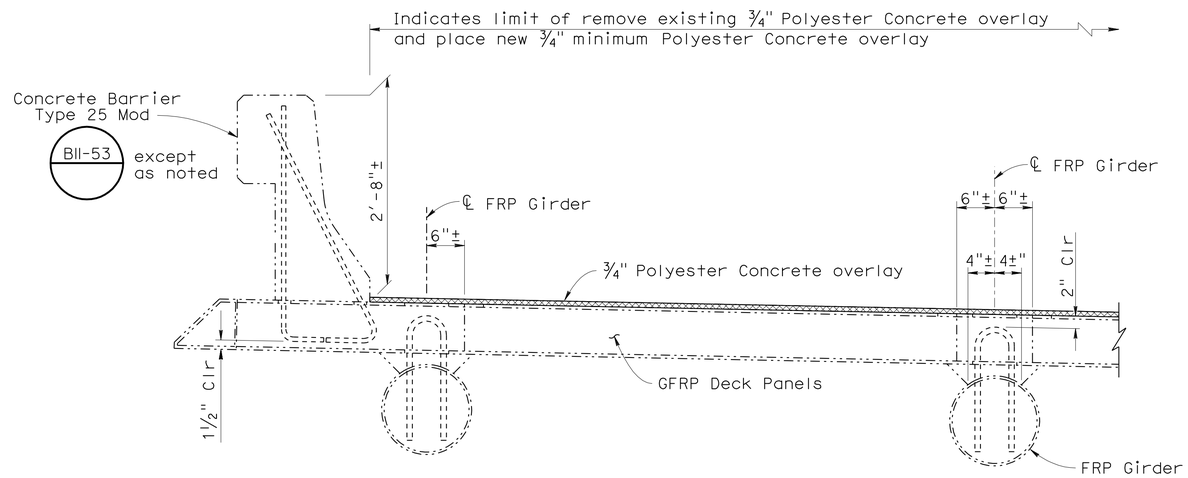

PART TYPICAL SECTION

1' = 1'-0"

NOTE: NOT ALL DETAILS SHOWN FOR CLARITY

NOTE:
THE CONTRACTOR SHALL VERIFY ALL CONTROLLING FIELD DIMENSIONS BEFORE ORDERING OR FABRICATING ANY MATERIAL. EXISTING UTILITY FACILITIES HAVE NOT BEEN PLOTTED ON THESE PLANS.

	BY	CHECKED
DESIGN	Gerald Joo	Tony Brake
DETAILS	Tom Dang/others	Gerald Joo
QUANTITIES	Gerald Joo	Tony Brake

STATE OF CALIFORNIA
DEPARTMENT OF TRANSPORTATION

DIVISION OF MAINTENANCE
STRUCTURE MAINTENANCE DESIGN

BRIDGE NO. 56-0778R
POST MILE R4.41

KINGS STORMWATER CHANNEL BRIDGE
TYPICAL SECTION

STRUCTURES MAINTENANCE DETAIL SHEET (ENGLISH) (REV. 10/25/05)

ORIGINAL SCALE IN INCHES FOR REDUCED PLANS 0 1 2 3

CU 08
EA 0M8101

DISREGARD PRINTS BEARING EARLIER REVISION DATES

REVISION DATES: 3-31-09 7-14-09 7-23-09 7-28-09 10-13-09

SHEET 02 OF 10

FILE => 08-0m8101-b-typ.dgn

USERNAME => trmikesl DATE PLOTTED => 09-MAR-2010 TIME PLOTTED => 10:39

DIST	COUNTY	ROUTE	POST MILES TOTAL PROJECT	SHEET No	TOTAL SHEETS
08	Riv	86S	R4.4	19	26

REGISTERED CIVIL ENGINEER 11/19/09 DATE

3-8-10
PLANS APPROVAL DATE

REGISTERED PROFESSIONAL ENGINEER GERALD D. JOO No. C65380 Exp. 09/30/11 CIVIL STATE OF CALIFORNIA

The State of California or its officers or agents shall not be responsible for the accuracy or completeness of electronic copies of this plan sheet.

LEGEND:

-·-·-·- Indicates existing.

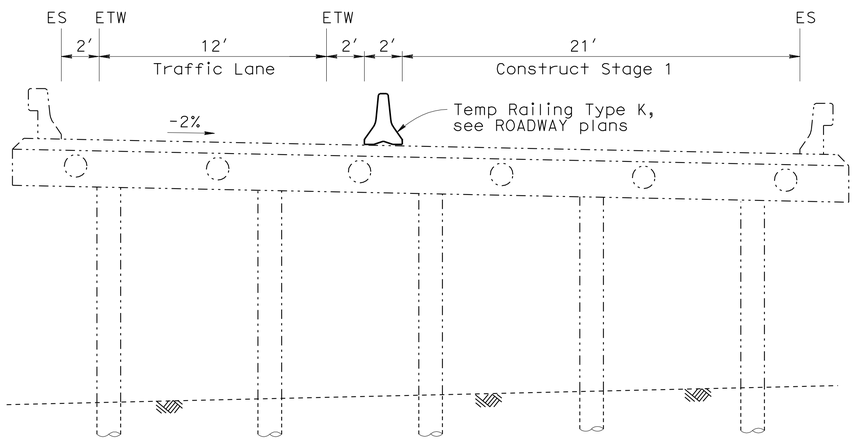

STAGE 1 - CONSTRUCT LANE 2

1/4"= 1′-0"

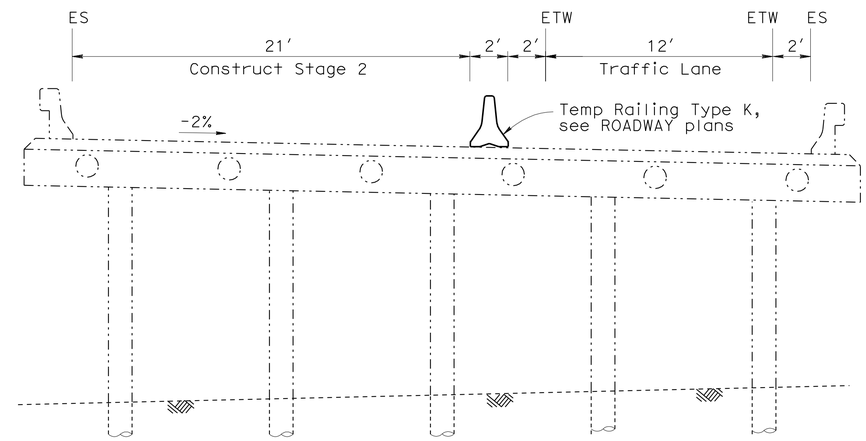

STAGE 2 - CONSTRUCT LANE 1

1/4"= 1′-0"

NOTE:
THE CONTRACTOR SHALL VERIFY ALL CONTROLLING FIELD DIMENSIONS BEFORE ORDERING OR FABRICATING ANY MATERIAL. EXISTING UTILITY FACILITIES HAVE NOT BEEN PLOTTED ON THESE PLANS.

	BY	CHECKED
DESIGN	Gerald Joo	Tony Brake
DETAILS	Tom Dang/others	Gerald Joo
QUANTITIES	Gerald Joo	Tony Brake

STATE OF CALIFORNIA
DEPARTMENT OF TRANSPORTATION

DIVISION OF MAINTENANCE
STRUCTURE MAINTENANCE DESIGN

BRIDGE NO. 56-0778R
POST MILE R4.41

KINGS STORMWATER CHANNEL BRIDGE
STAGING PLAN

STRUCTURES MAINTENANCE DETAIL SHEET (ENGLISH) (REV. 10/25/05)

ORIGINAL SCALE IN INCHES FOR REDUCED PLANS 0 1 2 3

CU 08
EA 0M8101

DISREGARD PRINTS BEARING EARLIER REVISION DATES

REVISION DATES: 3-04-09 7-14-09 7-23-09 7-28-09 10-05-09

SHEET 03 OF 10

FILE => 08-0m8101-c-staging.dgn

USERNAME => trmikesl DATE PLOTTED => 09-MAR-2010 TIME PLOTTED => 10:39

DIST	COUNTY	ROUTE	POST MILES TOTAL PROJECT	SHEET No	TOTAL SHEETS
08	Riv	86S	R4.4	20	26

REGISTERED CIVIL ENGINEER 11/19/09 DATE

3-8-10
PLANS APPROVAL DATE

REGISTERED PROFESSIONAL ENGINEER GERALD D. JOO No. C65380 Exp. 09/30/11 CIVIL STATE OF CALIFORNIA

The State of California or its officers or agents shall not be responsible for the accuracy or completeness of electronic copies of this plan sheet.

LEGEND:

-·-·-·-·- Indicates existing.

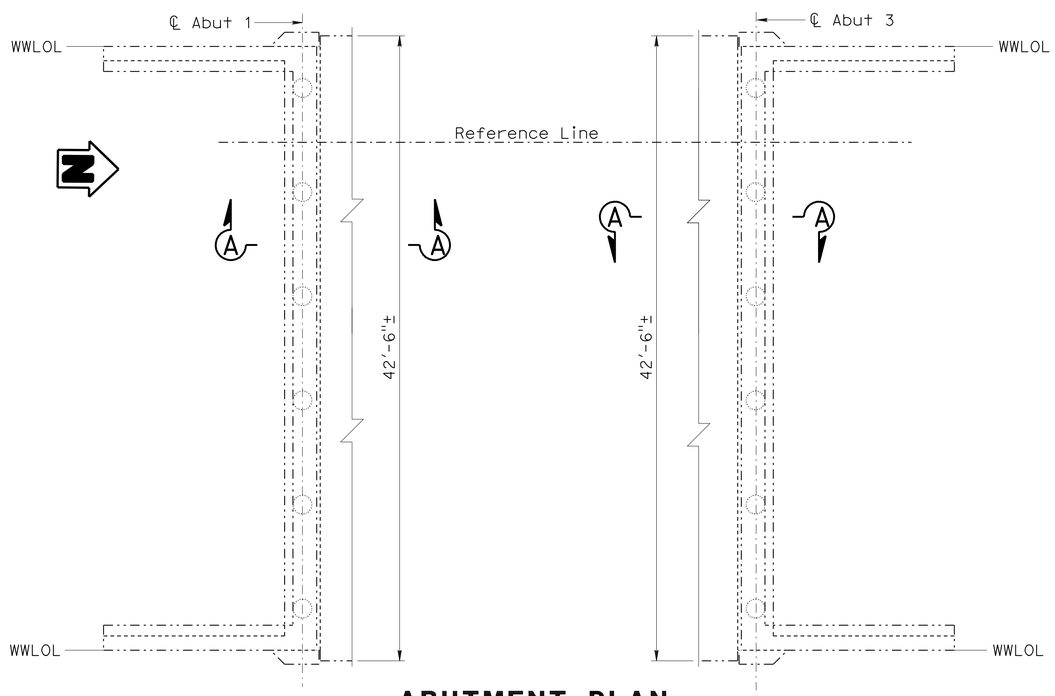

ABUTMENT PLAN

NO SCALE
NOTE: NOT ALL DETAILS SHOWN FOR CLARITY

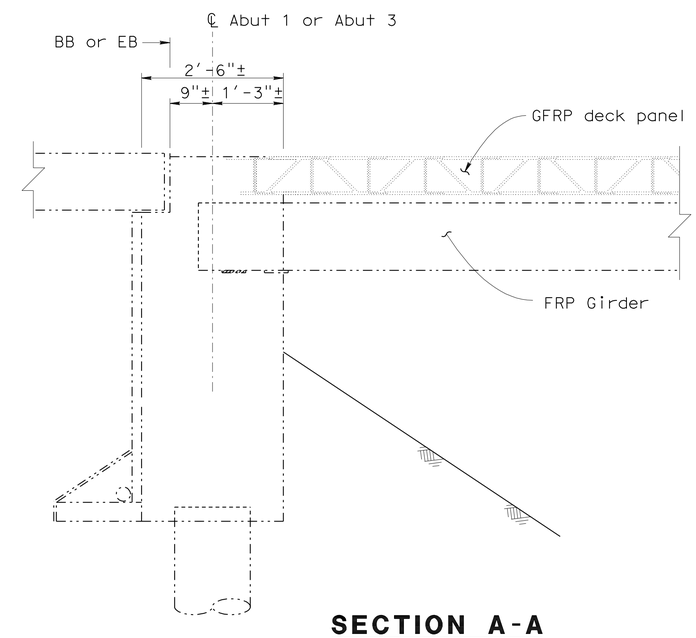

SECTION A-A

3/4" = 1'-0"

NOTE:
THE CONTRACTOR SHALL VERIFY ALL CONTROLLING FIELD DIMENSIONS BEFORE ORDERING OR FABRICATING ANY MATERIAL. EXISTING UTILITY FACILITIES HAVE NOT BEEN PLOTTED ON THESE PLANS.

	BY	CHECKED
DESIGN	Gerald Joo	Tony Brake
DETAILS	Tom Dang/others	Gerald Joo
QUANTITIES	Gerald Joo	Tony Brake

STATE OF CALIFORNIA
DEPARTMENT OF TRANSPORTATION

DIVISION OF MAINTENANCE
STRUCTURE MAINTENANCE DESIGN

BRIDGE NO. 56-0778R
POST MILE R4.41

KINGS STORMWATER CHANNEL BRIDGE
ABUTMENT DETAILS NO. 1

STRUCTURES MAINTENANCE DETAIL SHEET (ENGLISH) (REV. 10/25/05)

ORIGINAL SCALE IN INCHES FOR REDUCED PLANS 0 1 2 3

CU 08
EA 0M8101

DISREGARD PRINTS BEARING EARLIER REVISION DATES

REVISION DATES: 3-04-09 7-14-09 7-23-09 7-28-09

SHEET 04 OF 10

FILE => 08-0m8101-d-abutdtls01.dgn

USERNAME => trmikesi DATE PLOTTED => 09-MAR-2010 TIME PLOTTED => 10:39

DIST	COUNTY	ROUTE	POST MILES TOTAL PROJECT	SHEET No	TOTAL SHEETS
08	Riv	86S	R4.4	21	26

REGISTERED CIVIL ENGINEER 1/19/09 DATE

3-8-10
PLANS APPROVAL DATE

REGISTERED PROFESSIONAL ENGINEER GERALD D. JOO No. C65380 Exp. 09/30/11 CIVIL STATE OF CALIFORNIA

The State of California or its officers or agents shall not be responsible for the accuracy or completeness of electronic copies of this plan sheet.

LEGEND:

- Indicates existing.
- (X) Indicates construction sequence.
- Indicates limits of remove polyester concrete bridge deck overlay.
- Indicates GFRP removal.
- Indicates Non-shrink grout.

NOTES:

1. The existing wear surface shall be completely removed and free of dirt, grease and debris. Blast clean surface and chemically clean.
2. Reinforcement may be encountered during concrete removal and is to remain undamaged.
3. The GFRP shall consist of triaxial fabric with the primary fiber oriented in the transverse direction of the bridge.
4. The Non-Shrink Grout concrete shall be placed by coring through the deck top flange with 3" ø access holes at 4' on center as directed by the Engineer. Place full width of bridge.
5. Not all details shown for clarity.
6. Prior to placing new joint seal, remove all unsound concrete and patch with rapid setting concrete (patch).

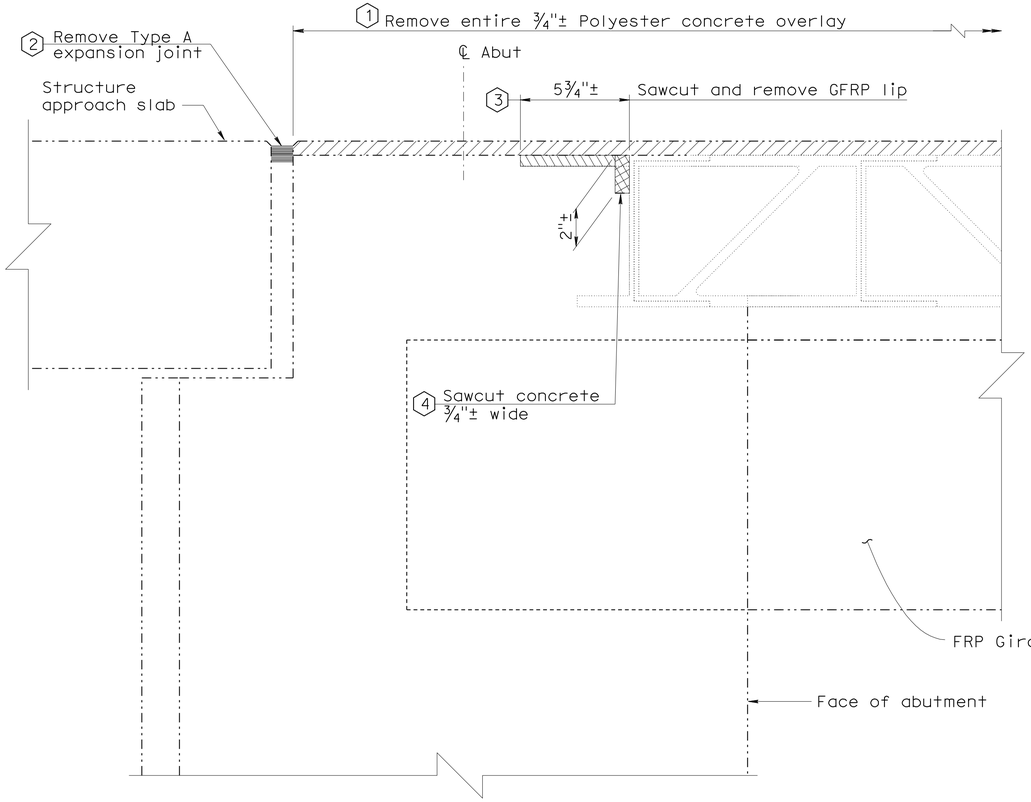

REMOVAL

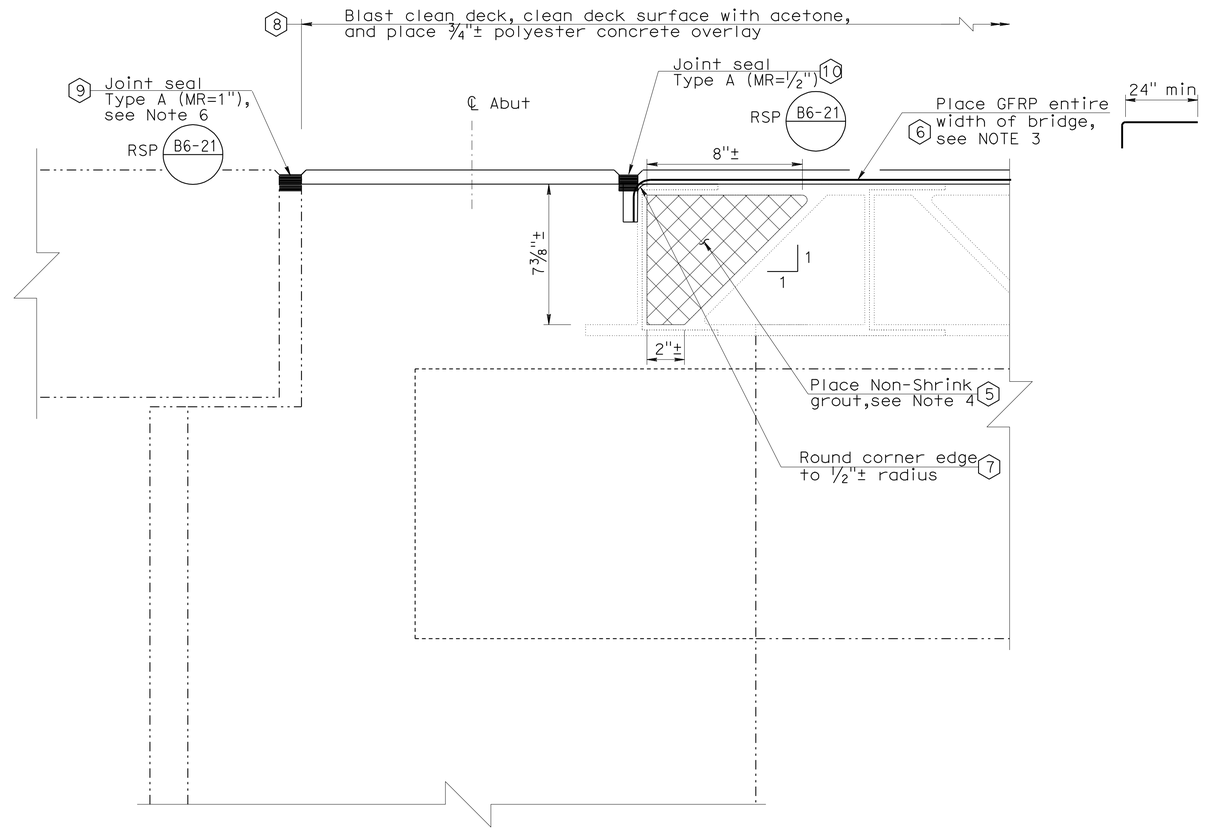

RECONSTRUCT

NOTE:
THE CONTRACTOR SHALL VERIFY ALL CONTROLLING FIELD DIMENSIONS BEFORE ORDERING OR FABRICATING ANY MATERIAL. EXISTING UTILITY FACILITIES HAVE NOT BEEN PLOTTED ON THESE PLANS.

PART - SECTION A-A

3" = 1'-0"

	BY	CHECKED
DESIGN	Gerald Joo	Tony Brake
DETAILS	Tom Dang/others	Gerald Joo
QUANTITIES	Gerald Joo	Tony Brake

STATE OF CALIFORNIA
DEPARTMENT OF TRANSPORTATION

DIVISION OF MAINTENANCE
STRUCTURE MAINTENANCE DESIGN

BRIDGE NO. 56-0778R
POST MILE R4.41

KINGS STORMWATER CHANNEL BRIDGE
ABUTMENT DETAILS NO. 2

STRUCTURES MAINTENANCE DETAIL SHEET (ENGLISH) (REV. 10/25/05)

ORIGINAL SCALE IN INCHES FOR REDUCED PLANS 0 1 2 3

CU 08
EA 0M8101

DISREGARD PRINTS BEARING EARLIER REVISION DATES

REVISION DATES: 3-04-09 7-14-09 7-23-09 7-28-09 8-26-09 9-04-09 10-13-09 11-18-09

SHEET 05 OF 10

FILE => 08-0m8101-d-abutdtls02.dgn

USERNAME => trmikest DATE PLOTTED => 09-MAR-2010 TIME PLOTTED => 10:39

DIST	COUNTY	ROUTE	POST MILES TOTAL PROJECT	SHEET No	TOTAL SHEETS
08	Riv	86S	R4.4	22	26

REGISTERED CIVIL ENGINEER 11/19/09 DATE

3-8-10
PLANS APPROVAL DATE

REGISTERED PROFESSIONAL ENGINEER GERALD D. JOO No. C65380 Exp. 09/30/11 CIVIL STATE OF CALIFORNIA

The State of California or its officers or agents shall not be responsible for the accuracy or completeness of electronic copies of this plan sheet.

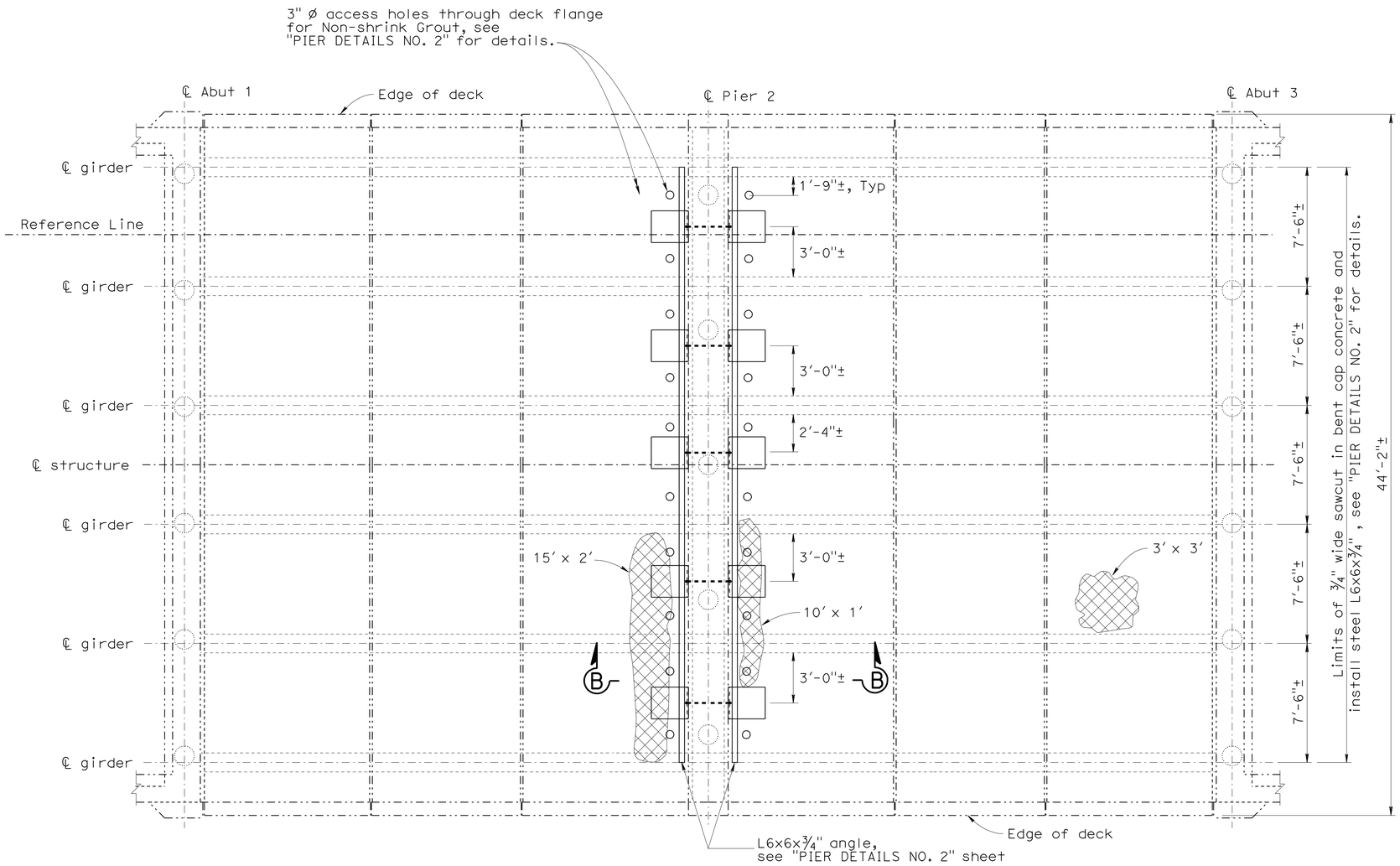

PLAN

¼" = 1'-0"

NOTE: NOT ALL DETAILS SHOWN FOR CLARITY

LEGEND:

Indicates existing.

Indicates steel brackets, see "BRACKET DETAILS" on "PIER DETAILS NO. 3" sheet.

Approximate area of repair of GFRP deck panel by epoxy injection. Area to be repaired as directed by Engineer. Holes drilled for epoxy injection to be plugged with self-drilling stainless steel #14 x 2" screws.

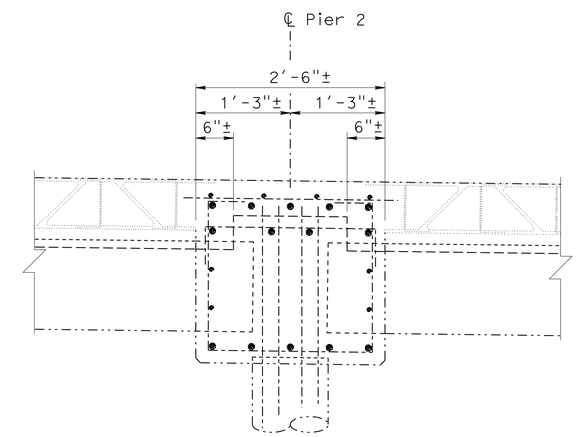

SECTION B-B

1" = 1'-0"
(Brackets Not Shown)

NOTE:
THE CONTRACTOR SHALL VERIFY ALL CONTROLLING FIELD DIMENSIONS BEFORE ORDERING OR FABRICATING ANY MATERIAL. EXISTING UTILITY FACILITIES HAVE NOT BEEN PLOTTED ON THESE PLANS.

	BY	CHECKED
DESIGN	Gerald Joo	Tony Brake
DETAILS	Tom Dang	Gerald Joo
QUANTITIES	Gerald Joo	Tony Brake

STATE OF CALIFORNIA
DEPARTMENT OF TRANSPORTATION

DIVISION OF MAINTENANCE
STRUCTURE MAINTENANCE DESIGN

BRIDGE NO. 56-0778R
POST MILE R4.41

KINGS STORMWATER CHANNEL BRIDGE
PIER DETAILS NO. 1

STRUCTURES MAINTENANCE DETAIL SHEET (ENGLISH) (REV. 10/25/05)

ORIGINAL SCALE IN INCHES FOR REDUCED PLANS 0 1 2 3

CU 08
EA 0M8101

DISREGARD PRINTS BEARING EARLIER REVISION DATES

REVISION DATES: 3-01-09 7-14-09 7-23-09 7-28-09 10-13-09

SHEET 06 OF 10

FILE => 08-0m8101-e-pierdtls01.dgn

USERNAME => trmikesi DATE PLOTTED => 09-MAR-2010 TIME PLOTTED => 10:39

DIST	COUNTY	ROUTE	POST MILES TOTAL PROJECT	SHEET No	TOTAL SHEETS
08	Riv	86S	R4.4	23	26

REGISTERED CIVIL ENGINEER 11/19/09 DATE

3-8-10
PLANS APPROVAL DATE

REGISTERED PROFESSIONAL ENGINEER GERALD D. JOO No. C65380 Exp. 09/30/11 CIVIL STATE OF CALIFORNIA

The State of California or its officers or agents shall not be responsible for the accuracy or completeness of electronic copies of this plan sheet.

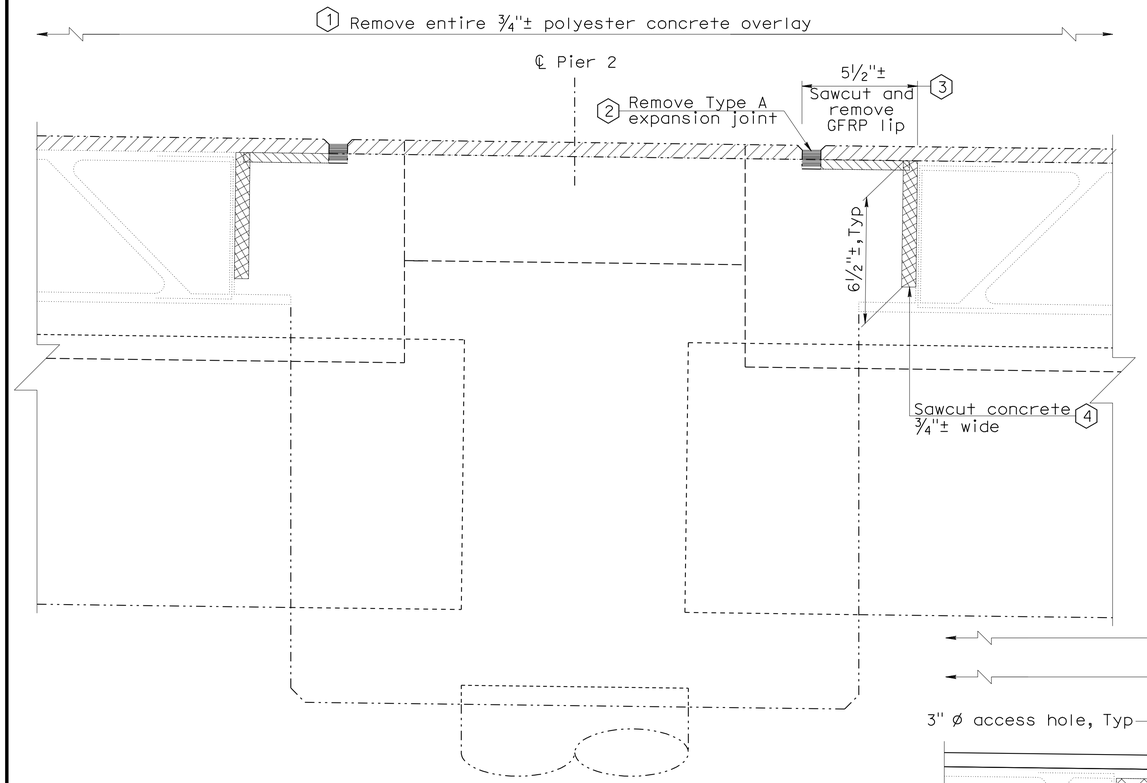

REMOVAL

NOTES:

1. The existing wear surface shall be completely removed and free of dirt, grease and debris. Blast clean surface and chemically clean.
2. Reinforcement may be encountered during concrete removal and is to remain undamaged.
3. The GFRP shall consist of triaxial fabric with the primary fiber oriented in the transverse direction of the bridge.
4. The Non-shrink Grout shall be placed by coring through the deck top flange with a 3" Ø access hole at areas indicates on "PIER DETAILS NO. 1" sheet. Patch holes with 2 layers wet lay-up GFRP extending 8" beyond edge of holes.
5. Not all details shown for clarity.
6. Prior to placing new joint seal, remove all unsound concrete and patch with rapid setting concrete (patch).

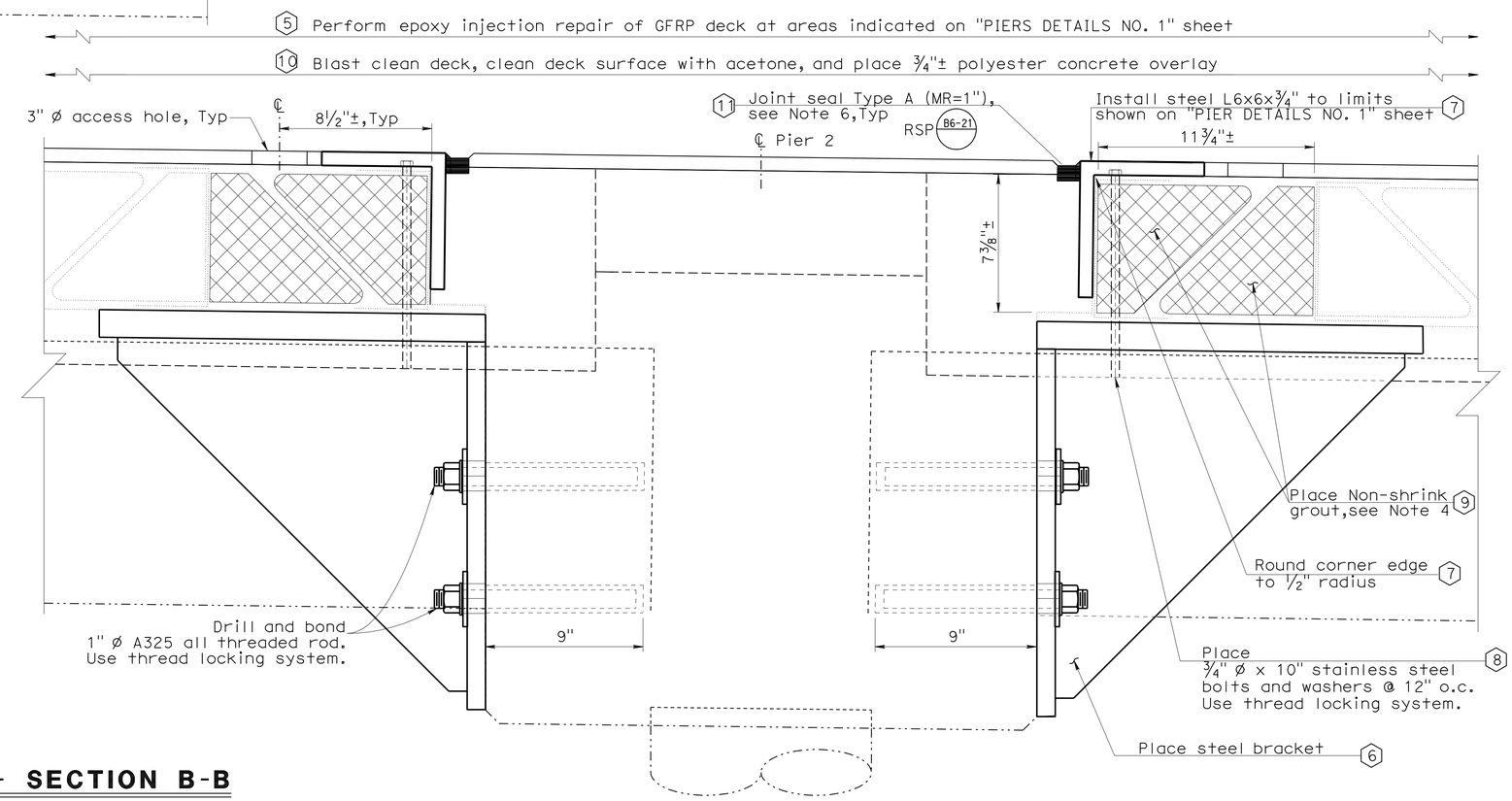

RECONSTRUCT

LEGEND:

-·-·-·-·-	Indicates existing.
(X)	Indicates construction sequence.
	Indicates limits of remove polyester concrete bridge deck overlay.
	Indicates GFRP removal.
	Indicates Non-shrink grout.

NOTE:
THE CONTRACTOR SHALL VERIFY ALL CONTROLLING FIELD DIMENSIONS BEFORE ORDERING OR FABRICATING ANY MATERIAL. EXISTING UTILITY FACILITIES HAVE NOT BEEN PLOTTED ON THESE PLANS.

PART - SECTION B-B

3" = 1'-0"

	BY	CHECKED
DESIGN	Gerald Joo	Tony Brake
DETAILS	Tom Dang	Gerald Joo
QUANTITIES	Gerald Joo	Tony Brake

STATE OF CALIFORNIA
DEPARTMENT OF TRANSPORTATION

DIVISION OF MAINTENANCE
STRUCTURE MAINTENANCE DESIGN

BRIDGE NO. 56-0778R
POST MILE R4.41

KINGS STORMWATER CHANNEL BRIDGE
PIER DETAILS NO. 2

STRUCTURES MAINTENANCE DETAIL SHEET (ENGLISH) (REV. 10/25/05)

ORIGINAL SCALE IN INCHES FOR REDUCED PLANS 0 1 2 3

CU 08
EA 0M8101

DISREGARD PRINTS BEARING EARLIER REVISION DATES

REVISION DATES: 3-08-09 | 7-14-09 | 7-24-09 | 7-28-09 | 8-26-09 | 9-04-09 | 10-15-09 | 11-18-09

SHEET 07 OF 10

FILE => 08-0m8101-e-pierdtls02.dgn

USERNAME => trmikest DATE PLOTTED => 09-MAR-2010 TIME PLOTTED => 10:39

DIST	COUNTY	ROUTE	POST MILES TOTAL PROJECT	SHEET No	TOTAL SHEETS
08	Riv	86S	R4.4	24	26

REGISTERED CIVIL ENGINEER 11/19/09 DATE

3-8-10
PLANS APPROVAL DATE

REGISTERED PROFESSIONAL ENGINEER GERALD D. JOO No. C65380 Exp. 09/30/11 CIVIL STATE OF CALIFORNIA

The State of California or its officers or agents shall not be responsible for the accuracy or completeness of electronic copies of this plan sheet.

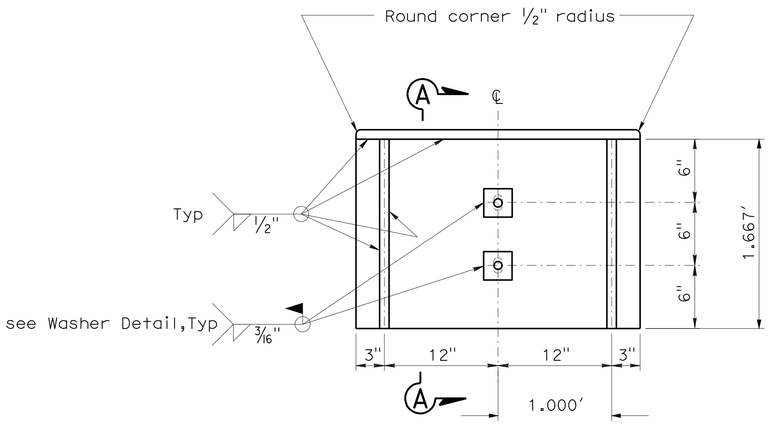

ELEVATION VIEW

NOTE: ALL DETAILS SYMMETRICAL ABOUT ℄

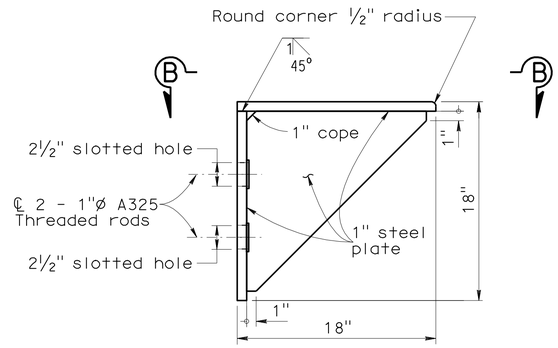

SECTION A-A

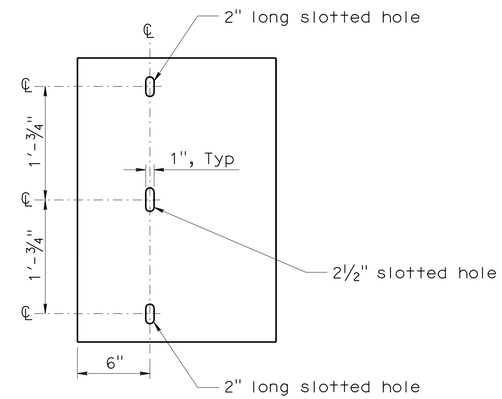

SECTION B-B

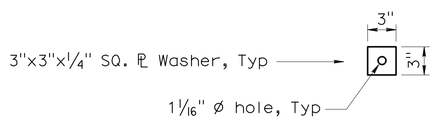

WASHER DETAIL

BRACKET DETAILS

NO SCALE

NOTES:

1. All welds shall conform to AWS D1.1
2. All steel shall be GRADE A36.
3. All steel to be galvanized.
4. Threaded rods shall have a minimum protrusion of 2 full threads beyond the face of the nut.

NOTE:
THE CONTRACTOR SHALL VERIFY ALL CONTROLLING FIELD DIMENSIONS BEFORE ORDERING OR FABRICATING ANY MATERIAL. EXISTING UTILITY FACILITIES HAVE NOT BEEN PLOTTED ON THESE PLANS.

	BY	CHECKED
DESIGN	Gerald Joo	Tony Brake
DETAILS	Tom Dang	Gerald Joo
QUANTITIES	Gerald Joo	Tony Brake

STATE OF CALIFORNIA
DEPARTMENT OF TRANSPORTATION

DIVISION OF MAINTENANCE
STRUCTURE MAINTENANCE DESIGN

BRIDGE NO. 56-0778R
POST MILE R4.41

KINGS STORMWATER CHANNEL BRIDGE
PIER DETAILS NO. 3

STRUCTURES MAINTENANCE DETAIL SHEET (ENGLISH) (REV. 10/25/05)

ORIGINAL SCALE IN INCHES FOR REDUCED PLANS 0 1 2 3

CU 08
EA 0M8101

DISREGARD PRINTS BEARING EARLIER REVISION DATES

REVISION DATES: 3-04-09 7-14-09 7-23-09 7-28-09 10-13-09

SHEET 08 OF 10

FILE => 08-0m8101-e-pierdtls03.dgn

USERNAME => trmikesl DATE PLOTTED => 09-MAR-2010 TIME PLOTTED => 10:39

DIST	COUNTY	ROUTE	POST MILES TOTAL PROJECT	SHEET No	TOTAL SHEETS
08	Riv	86S	R4.4	25	26

REGISTERED CIVIL ENGINEER 11/19/09 DATE

3-8-10
PLANS APPROVAL DATE

REGISTERED PROFESSIONAL ENGINEER GERALD D. JOO No. C65380 Exp. 09/30/11 CIVIL STATE OF CALIFORNIA

The State of California or its officers or agents shall not be responsible for the accuracy or completeness of electronic copies of this plan sheet.

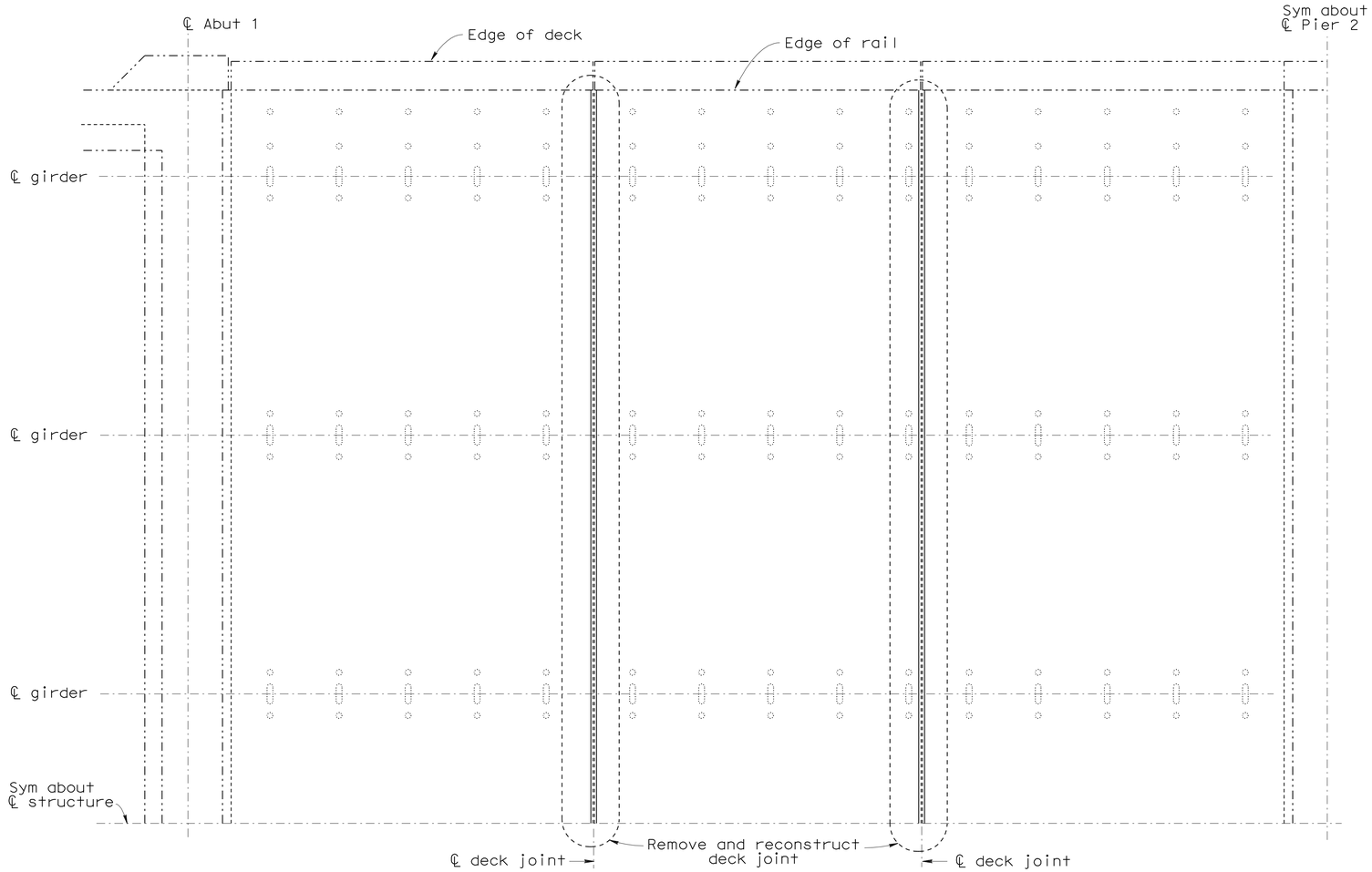

PLAN

1/4" = 1'-0"

NOTE: NOT ALL DETAILS SHOWN FOR CLARITY

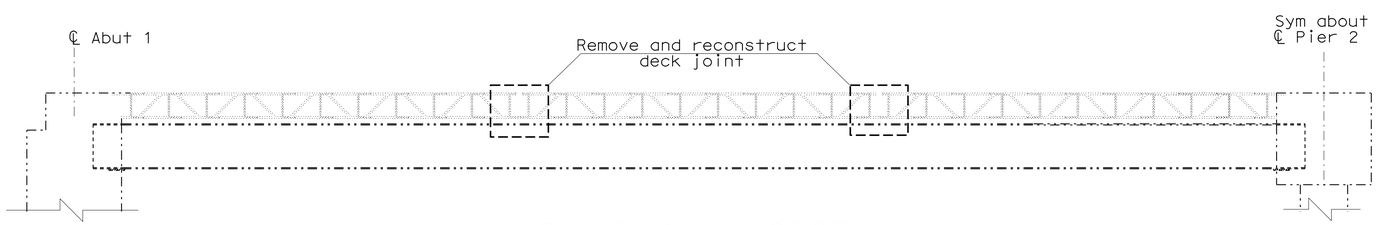

LONGITUDINAL SECTION

1/2" = 1'-0"

NOTE:
THE CONTRACTOR SHALL VERIFY ALL CONTROLLING FIELD DIMENSIONS BEFORE ORDERING OR FABRICATING ANY MATERIAL. EXISTING UTILITY FACILITIES HAVE NOT BEEN PLOTTED ON THESE PLANS.

LEGEND:

-·-·-·- Indicates existing.

NOTES:

1. For details not shown, see "DECK JOINT DETAILS NO. 2" sheet.

	BY	CHECKED
DESIGN	Gerald Joo	Tony Brake
DETAILS	Tom Dang	Gerald Joo
QUANTITIES	Gerald Joo	Tony Brake

STATE OF CALIFORNIA
DEPARTMENT OF TRANSPORTATION

DIVISION OF MAINTENANCE
STRUCTURE MAINTENANCE DESIGN

BRIDGE NO. 56-0778R
POST MILE R4.41

KINGS STORMWATER CHANNEL BRIDGE
DECK JOINT DETAILS NO. 1

STRUCTURES MAINTENANCE DETAIL SHEET (ENGLISH) (REV. 10/25/05)

ORIGINAL SCALE IN INCHES FOR REDUCED PLANS 0 1 2 3

CU 08
EA 0M8101

DISREGARD PRINTS BEARING EARLIER REVISION DATES

REVISION DATES: 3-04-09 7-14-09 7-23-09 7-28-09

SHEET 09 OF 10

FILE => 08-0m8101-f-deckjtdtls01.dgn

USERNAME => trmikesl DATE PLOTTED => 09-MAR-2010 TIME PLOTTED => 10:40

DIST	COUNTY	ROUTE	POST MILES TOTAL PROJECT	SHEET No	TOTAL SHEETS
08	Riv	86S	R4.4	26	26

REGISTERED CIVIL ENGINEER 11/19/09 DATE

3-8-10
PLANS APPROVAL DATE

REGISTERED PROFESSIONAL ENGINEER GERALD D. JOO No. C65380 Exp. 09/30/11 CIVIL STATE OF CALIFORNIA

The State of California or its officers or agents shall not be responsible for the accuracy or completeness of electronic copies of this plan sheet.

LEGEND:

Indicates existing.

(X) Indicates construction sequence.

Indicates limits of remove polyester concrete bridge deck overlay.

NOTES:

1. This detail is applicable to all deck joints.
2. The GFRP shall consist of triaxial fabric with the primary fiber oriented in the transverse direction of the bridge.
3. If any gap exists between ends of existing GFRP deck panels, build up to surface of existing GFRP deck panels with wet lay-up GFRP.
4. After cleaning, surface of existing GFRP deck panels must be exposed to provide bond with wet lay-up GFRP. Remove any existing paint or coating that would prevent bond.

(2) Remove existing Type A joint.

(3) Inspect joint for damaged polymer concrete.

(4) Perform epoxy injection at damaged locations to repair polymer concrete.

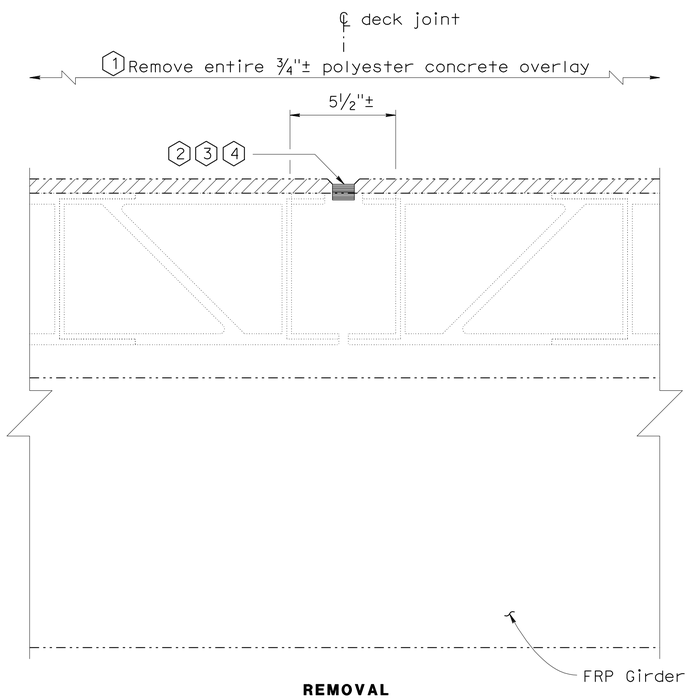

REMOVAL

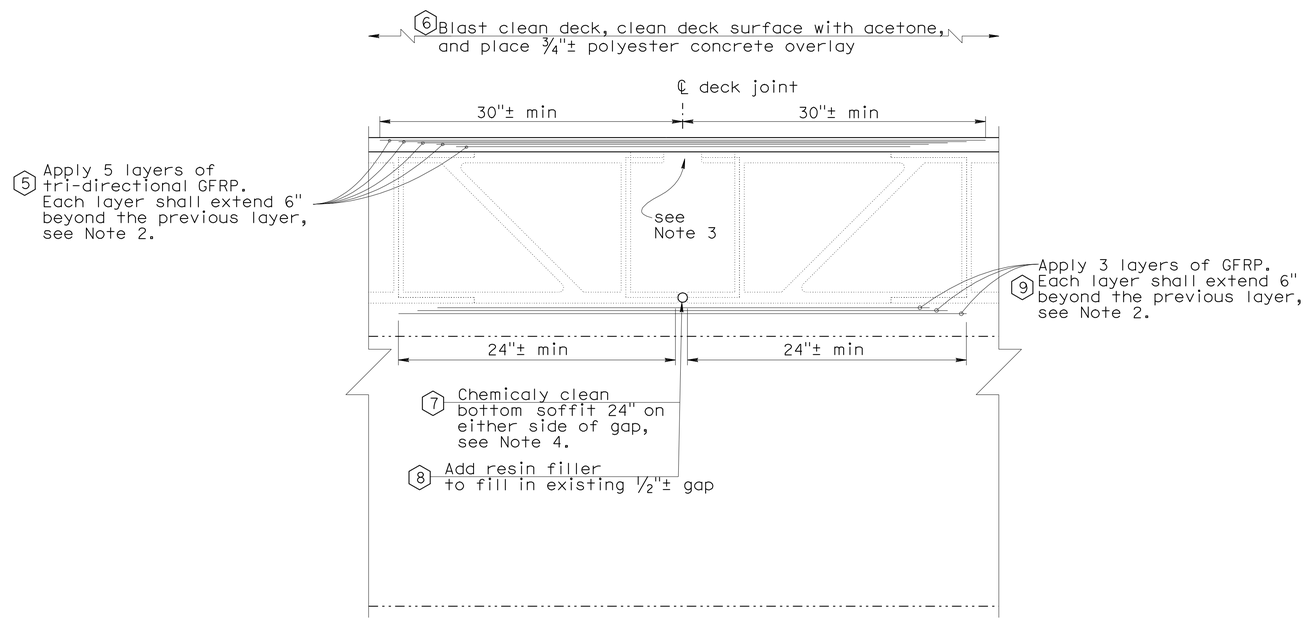

RECONSTRUCT

PART - LONGITUDINAL SECTION

NO SCALE

NOTE:
THE CONTRACTOR SHALL VERIFY ALL CONTROLLING FIELD DIMENSIONS BEFORE ORDERING OR FABRICATING ANY MATERIAL. EXISTING UTILITY FACILITIES HAVE NOT BEEN PLOTTED ON THESE PLANS.

	BY	CHECKED
DESIGN	Gerald Joo	Tony Brake
DETAILS	Tom Dang	Gerald Joo
QUANTITIES	Gerald Joo	Tony Brake

STATE OF CALIFORNIA
DEPARTMENT OF TRANSPORTATION

DIVISION OF MAINTENANCE
STRUCTURE MAINTENANCE DESIGN

BRIDGE NO. 56-0778R
POST MILE R4.41

KINGS STORMWATER CHANNEL BRIDGE
DECK JOINT DETAILS NO. 2

STRUCTURES MAINTENANCE DETAIL SHEET (ENGLISH) (REV. 10/25/05)

ORIGINAL SCALE IN INCHES FOR REDUCED PLANS 0 1 2 3

CU 08
EA 0M8101

DISREGARD PRINTS BEARING EARLIER REVISION DATES

REVISION DATES: 3-01-09, 7-14-09, 7-23-09, 7-28-09, 9-02-09, 10-13-09, 11-18-09

SHEET 10 OF 10

FILE => 08-0m8101-f-deckjtdtls02.dgn

USERNAME => trmikesi DATE PLOTTED => 09-MAR-2010 TIME PLOTTED => 10:40