Dist	COUNTY	ROUTE	POST MILES TOTAL PROJECT	SHEET No.	TOTAL SHEETS
08	SBd	10	20.0/R24.5	1	56

STATE OF CALIFORNIA

DEPARTMENT OF TRANSPORTATION

ACHSIMG-010-2(257)E

PROJECT PLANS FOR CONSTRUCTION ON

STATE HIGHWAY

IN SAN BERNARDINO COUNTY
IN COLTON
FROM RIVERSIDE AVENUE OVERCROSSING
TO 0.3 MILE EAST OF 10/215 SEPARATION

TO BE SUPPLEMENTED BY STANDARD PLANS DATED MAY 2006

INDEX OF PLANS

SHEET No.	DESCRIPTION
1	TITLE AND LOCATION MAP
2	TYPICAL CROSS SECTIONS
3-6	CONSTRUCTION DETAILS
7-9	UTILITY PLANS
10	CONSTRUCTION AREA SIGNS
11-16	TRAFFIC HANDLING PLANS AND QUANTITIES
17-38	DETOUR PLANS
39	PAVEMENT DELINEATION QUANTITIES
40	SUMMARY OF QUANTITIES
41-42	ELECTRICAL PLANS
43-56	REVISED AND NEW STANDARD PLANS

THE STANDARD PLANS LIST APPLICABLE TO THIS CONTRACT IS INCLUDED IN THE NOTICE TO BIDDERS AND SPECIAL PROVISIONS BOOK.

LOCATION MAP

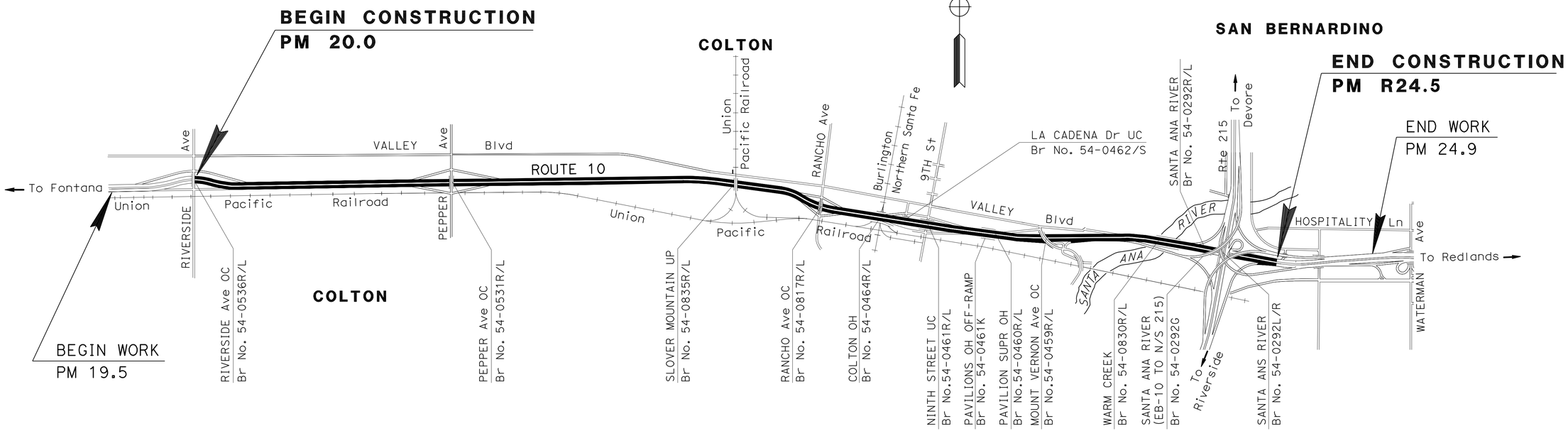

NO SCALE

THE CONTRACTOR SHALL POSSESS THE CLASS (OR CLASSES) OF LICENSE AS SPECIFIED IN THE "NOTICE TO BIDDERS."

PROJECT MANAGER: XIAO ZHANG

DESIGN ENGINEER: REZA TOOTOONCHI

1-07-11
PROJECT ENGINEER REGISTERED CIVIL ENGINEER — DATE

February 28, 2011
PLANS APPROVAL DATE

REGISTERED PROFESSIONAL ENGINEER — MOHAMMAD OMIDI — No. C49518 — Exp. 9/30/12 — CIVIL — STATE OF CALIFORNIA

THE STATE OF CALIFORNIA OR ITS OFFICERS OR AGENTS SHALL NOT BE RESPONSIBLE FOR THE ACCURACY OR COMPLETENESS OF SCANNED COPIES OF THIS PLAN SHEET.

CONTRACT No.	08-0M3504
PROJECT ID	0800000477

LAST REVISION 01-07-11

DATE PLOTTED => 24-MAR-2011
TIME PLOTTED => 13:32

Dist	COUNTY	ROUTE	POST MILES TOTAL PROJECT	SHEET No.	TOTAL SHEETS
08	SBd	10	20.0/R24.5	2	56

REGISTERED CIVIL ENGINEER 1-07-11 DATE

2-28-11
PLANS APPROVAL DATE

REGISTERED PROFESSIONAL ENGINEER MOHAMMAD OMIDI No. C49518 Exp. 9/30/12 CIVIL STATE OF CALIFORNIA

THE STATE OF CALIFORNIA OR ITS OFFICERS OR AGENTS SHALL NOT BE RESPONSIBLE FOR THE ACCURACY OR COMPLETENESS OF SCANNED COPIES OF THIS PLAN SHEET.

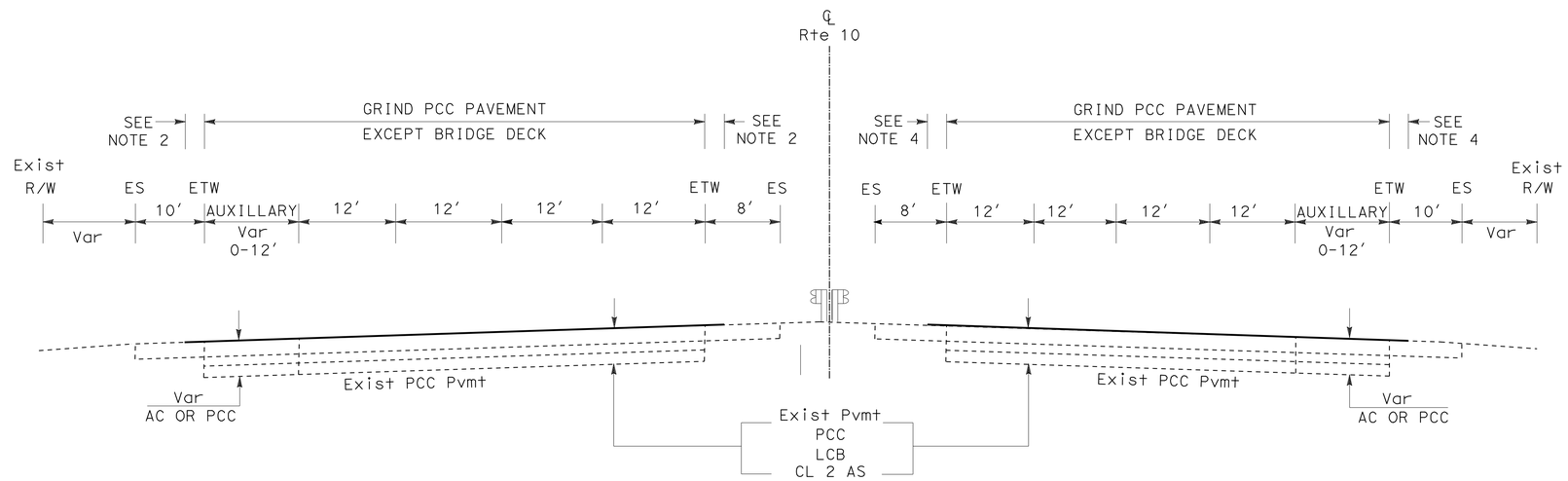

WESTBOUND NOTES

1. AUXILLARY LANE:
   NO GRINDING FROM MOUNT VERNON Ave
   ENTRANCE RAMP TO NINTH St EXIT RAMP.
2. GRIND ±2′ WIDE STRIP FROM ETW INSIDE
   AND OUTSIDE SHOULDERS. FOG SEAL
   ENTIRE SHOULDERS.

ROUTE 110

PM 20.0 TO R24.5

EASTBOUND NOTES

3. AUXILLARY LANE:
   NO GRINDING FROM NINTH STREET
   ENTRANCE RAMP TO MOUNT VERNON Ave
   EXIT RAMP.
4. GRIND ±2′ WIDE STRIP FROM ETW INSIDE
   AND OUTSIDE SHOULDERS. FOG SEAL
   ENTIRE SHOULDERS.

TYPICAL CROSS SECTIONS

NO SCALE

X-1

STATE OF CALIFORNIA - DEPARTMENT OF TRANSPORTATION
Caltrans® DESIGN

FUNCTIONAL SUPERVISOR: SERGIO AVILA
CALCULATED-DESIGNED BY: REZA TOOTOONCHI
CHECKED BY: MOHAMMAD OMIDI
REVISED BY
DATE REVISED

LAST REVISION 01-06-11
DATE PLOTTED => 03-MAR-2011
TIME PLOTTED => 15:20

Dist	COUNTY	ROUTE	POST MILES TOTAL PROJECT	SHEET No.	TOTAL SHEETS
08	SBd	10	20.0/R24.5	3	56

REGISTERED CIVIL ENGINEER 1-07-11 DATE

2-28-11
PLANS APPROVAL DATE

REGISTERED PROFESSIONAL ENGINEER MOHAMMAD OMIDI No. C49518 Exp. 9/30/12 CIVIL STATE OF CALIFORNIA

THE STATE OF CALIFORNIA OR ITS OFFICERS OR AGENTS SHALL NOT BE RESPONSIBLE FOR THE ACCURACY OR COMPLETENESS OF SCANNED COPIES OF THIS PLAN SHEET.

NOTES:

1. FOR BRIDGE LOCATION SEE PLAN SHEET (Q-1).
2. DO NOT INSTALL LAST SECTION (6.25′) OF TRANSITION RAILING (TYPE WB) AT THE BRIDGES MARKED WITH * ON PLAN SHEET (Q-1).
3. FOR DETAILS NOT SHOWN, SEE STANDARD PLANS.
4. DIMENSIONS WILL BE VERIFIED IN THE FIELD BEFORE FABRICATING ANY END CONNECTION TO CONFORM WITH EXISTING PAVED CONDITIONS.
5. FOR TRANSITION RAILING CONNECTION, SEE STANDARD PLANS (A77J4).
6. ALL PLATES AND BOLTS ARE GALVANIZED.
7. CUT AND REMOVE PORTION OF TYPE 9 AND BAGR AS REQUIRED.
8. IF RAIL IS NOT CONTINUOUS OVER 2 POSTS, USE SPLICE AT EXPANSION JOINT.
9. EXTERIOR SPLICE BOLT HOLES SHALL BE THE STANDARD 7/8" x 1 1/8" SLOT SIZE FOR RAIL SPLICES AT POST # T4 AND THE CONNECTION TO THE CONCRETE BARRIER OR RAILING. INTERIOR SPLICE BOLT HOLES MAY BE INCREASED UP TO 1 1/8" Dia. WASHERS SHALL BE USED WITH SPLICE BOLTS ON BACK SIDE OF RAIL ELEMENT AT POST # T4 AND CONNECTION TO THE CONCRETE BARRIER OR RAILING.

LEGEND

- DIRECTION OF TRAFFIC
- EXISTING MBGR
- METAL BEAM GUARD RAILING
- SINGLE THRIE BEAM BARRIER
- No. BRIDGE COLUMN
- DIRECTION OF FLOW
- CONCRETE BLOCK

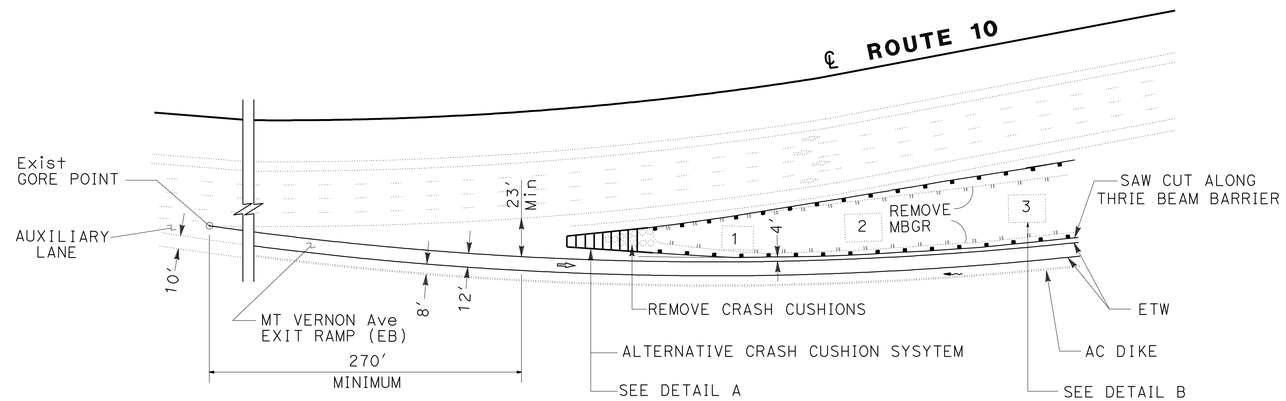

MT VERNON Ave EXIT RAMP (EB)

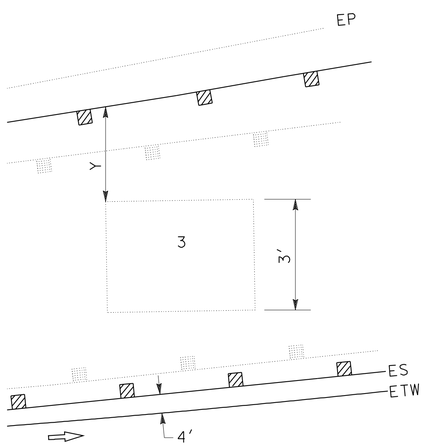

DETAIL B

STRENGTHENED RAILING SECTIONS FOR FIX OBJECTS
(SEE STANDARD PLAN A77G2)
Y = 2.25′ MINIMUM

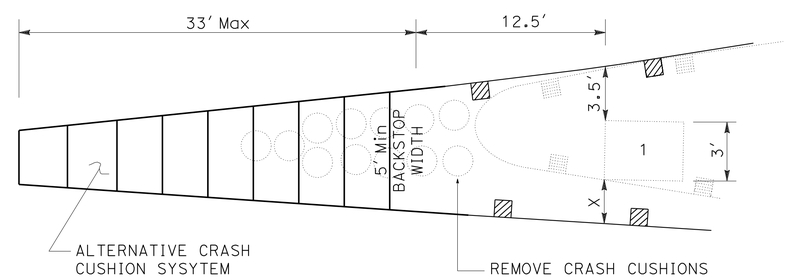

DETAIL A

STRENGTHENED RAILING SECTIONS FOR FIX OBJECTS
(SEE STANDARD PLAN A77G2)
X = 2.25′ MINIMUM

CONSTRUCTION DETAILS

NO SCALE

C-1

STATE OF CALIFORNIA - DEPARTMENT OF TRANSPORTATION
Caltrans DESIGN
FUNCTIONAL SUPERVISOR: SERGIO AVILA
CALCULATED-DESIGNED BY: MOHAMMAD OMIDI
CHECKED BY: SERGIO AVILA
REVISED BY / DATE REVISED

LAST REVISION 01-06-11 | DATE PLOTTED => 07-MAR-2011 | TIME PLOTTED => 12:19

Dist	COUNTY	ROUTE	POST MILES TOTAL PROJECT	SHEET No.	TOTAL SHEETS
08	SBd	10	20.0/R24.5	4	56

REGISTERED CIVIL ENGINEER 1-07-11 DATE

2-28-11
PLANS APPROVAL DATE

REGISTERED PROFESSIONAL ENGINEER MOHAMMAD OMIDI No. C49518 Exp. 9/30/12 CIVIL STATE OF CALIFORNIA

THE STATE OF CALIFORNIA OR ITS OFFICERS OR AGENTS SHALL NOT BE RESPONSIBLE FOR THE ACCURACY OR COMPLETENESS OF SCANNED COPIES OF THIS PLAN SHEET.

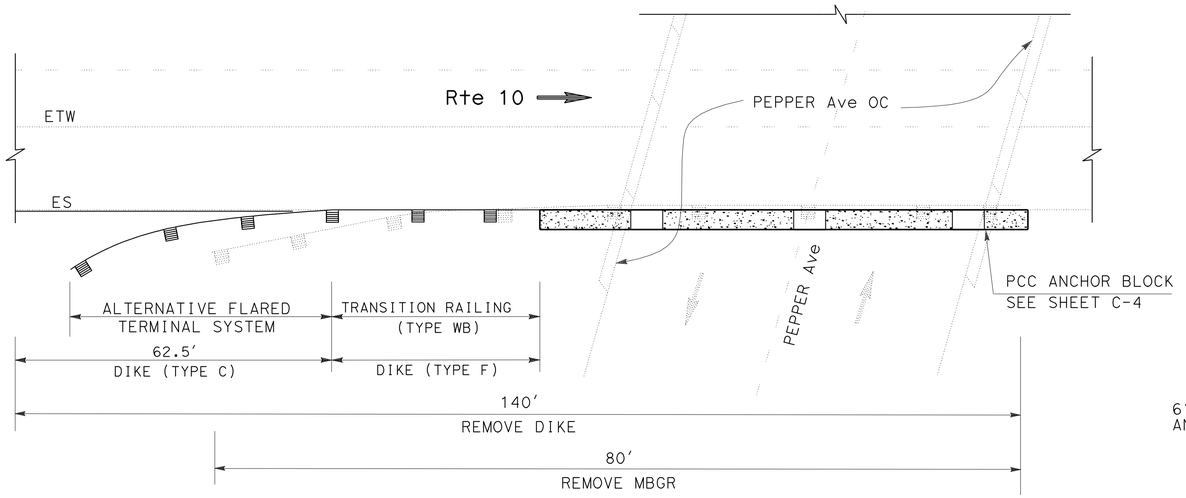

PEPPER Ave OC
WB AND EB

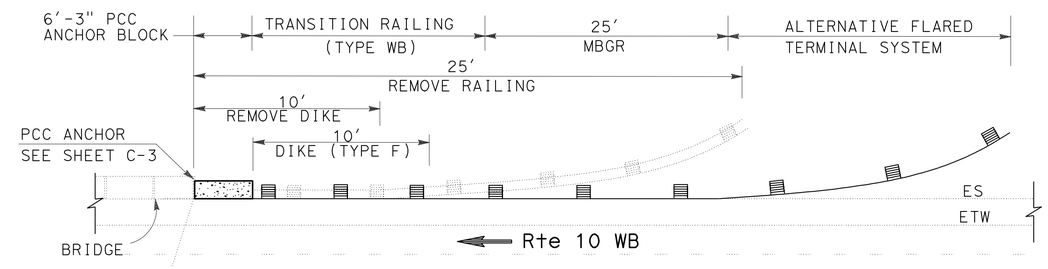

SANTA ANA RIVER WB

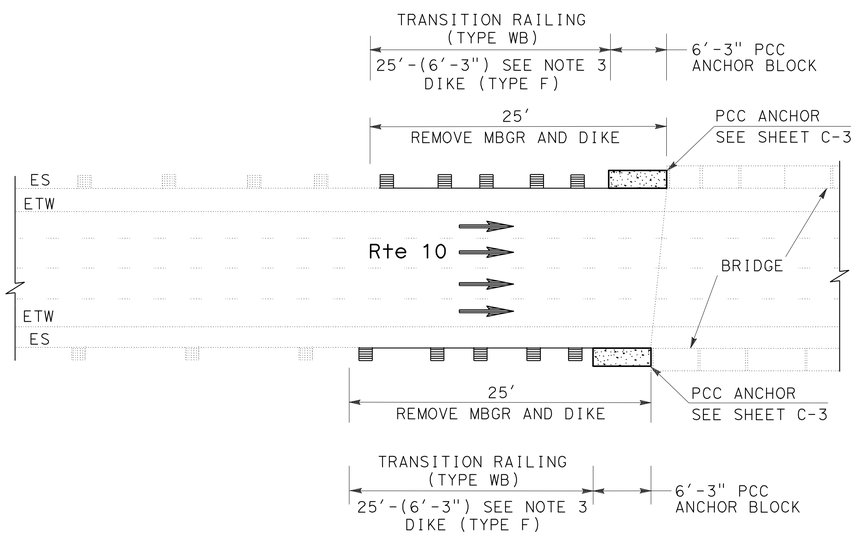

TYPICAL MBGR-BRIDGE CONNECTION

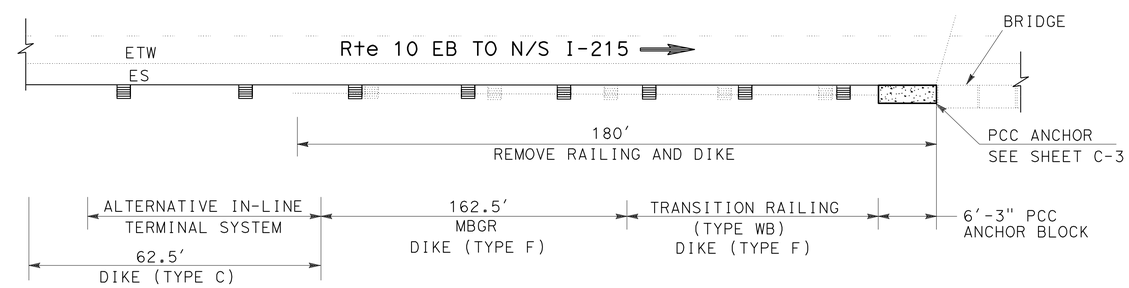

SANTA ANA RIVER EB

CONSTRUCTION DETAILS

NO SCALE

C-2

STATE OF CALIFORNIA - DEPARTMENT OF TRANSPORTATION
Caltrans® DESIGN
FUNCTIONAL SUPERVISOR: SERGIO AVILA
CALCULATED-DESIGNED BY: REZA TOOTOONCHI
CHECKED BY: MOHAMMAD OMIDI
REVISED BY
DATE REVISED

LAST REVISION 01-06-11
DATE PLOTTED => 03-MAR-2011
TIME PLOTTED => 15:20

Dist	COUNTY	ROUTE	POST MILES TOTAL PROJECT	SHEET No.	TOTAL SHEETS
08	SBd	10	20.0/R24.5	5	56

REGISTERED CIVIL ENGINEER 1-07-11 DATE

2-28-11
PLANS APPROVAL DATE

REGISTERED PROFESSIONAL ENGINEER MOHAMMAD OMIDI No. C49518 Exp. 9/30/12 CIVIL STATE OF CALIFORNIA

THE STATE OF CALIFORNIA OR ITS OFFICERS OR AGENTS SHALL NOT BE RESPONSIBLE FOR THE ACCURACY OR COMPLETENESS OF SCANNED COPIES OF THIS PLAN SHEET.

PCC ANCHORAGE TO EXISTING BARRIER RAILING (TYPE 9)

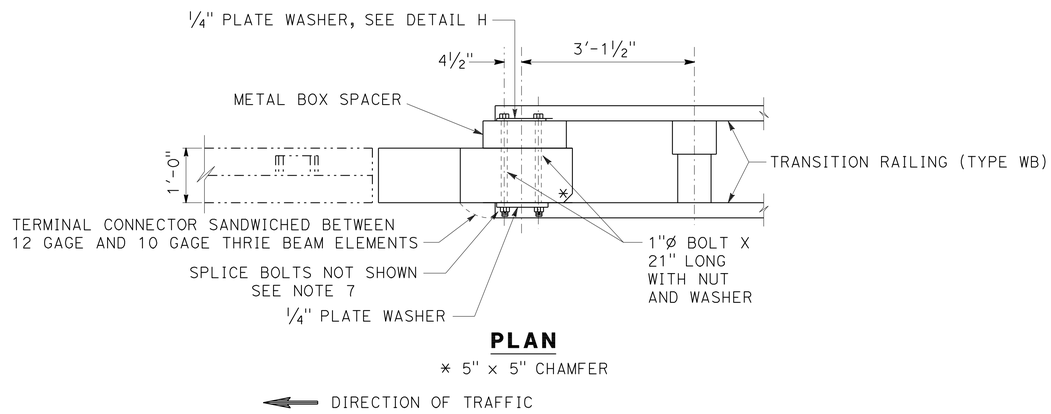

PLAN

* 5" x 5" CHAMFER

DIRECTION OF TRAFFIC

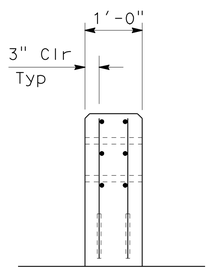

SECTION A-A

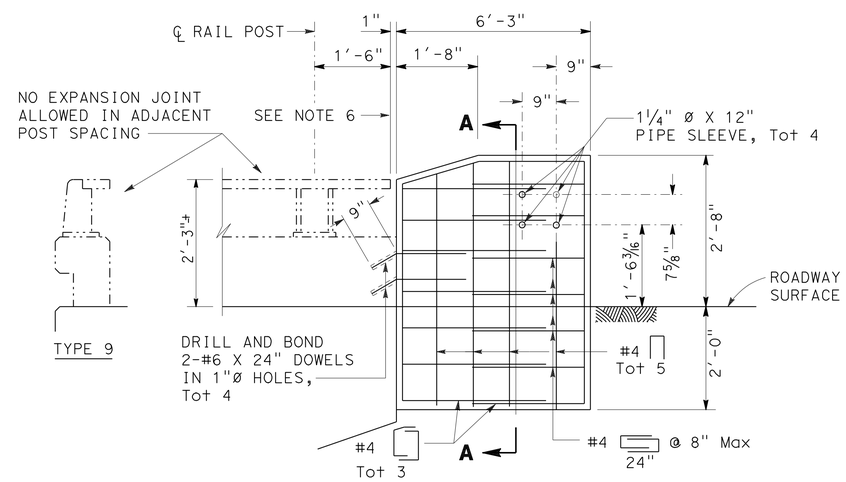

ELEVATION

CONSTRUCTION DETAILS

NO SCALE

C-3

STATE OF CALIFORNIA - DEPARTMENT OF TRANSPORTATION
Caltrans
DESIGN

FUNCTIONAL SUPERVISOR: SERGIO AVILA
CALCULATED-DESIGNED BY: REZA TOOTOONCHI
CHECKED BY: MOHAMMAD OMIDI
REVISED BY
DATE REVISED

LAST REVISION 01-06-11
DATE PLOTTED => 03-MAR-2011
TIME PLOTTED => 15:20

Dist	COUNTY	ROUTE	POST MILES TOTAL PROJECT	SHEET No.	TOTAL SHEETS
08	SBd	10	20.0/R24.5	6	56

REGISTERED CIVIL ENGINEER 1-07-11 DATE

2-28-11
PLANS APPROVAL DATE

REGISTERED PROFESSIONAL ENGINEER MOHAMMAD OMIDI No. C49518 Exp. 9/30/12 CIVIL STATE OF CALIFORNIA

THE STATE OF CALIFORNIA OR ITS OFFICERS OR AGENTS SHALL NOT BE RESPONSIBLE FOR THE ACCURACY OR COMPLETENESS OF SCANNED COPIES OF THIS PLAN SHEET.

PEPPER Ave OC, EB AND WB
PCC ANCHOR BLOCK DETAIL

NOTES:

1. RESIN CAPSULE ANCHORAGE IS SUBJECT TO APPROVAL OF THE ENGINEER. INSTALLATION PROCEDURES SHALL COMPLY WITH MANUFACTURER'S INSTRUCTIONS.
2. DETAIL B IS SIMILAR TO DETAIL A EXCEPT FOR ANCHORAGE DEVICES.
3. THE CONTRACTOR SHALL VERIFY ALL CONTROLLED FIELD DIMENSIONS BEFORE ORDERING OR FABRICATING ANY MATERIALS.

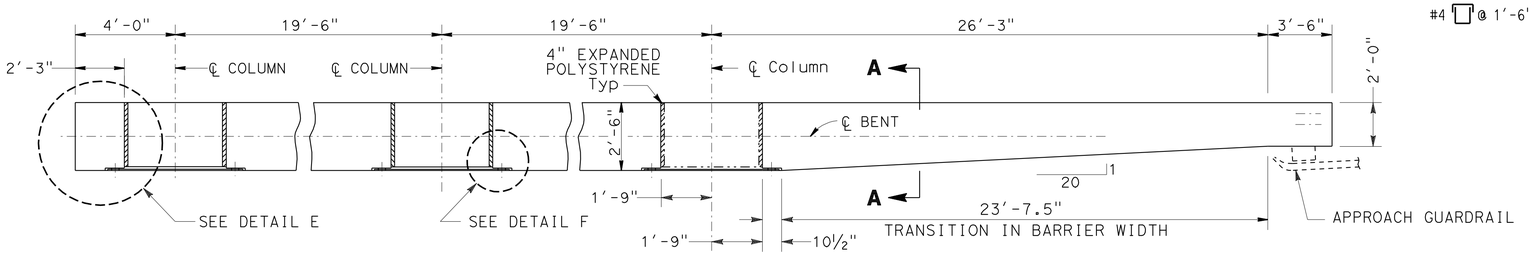

PLAN

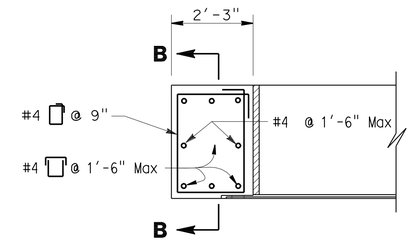

DETAIL E

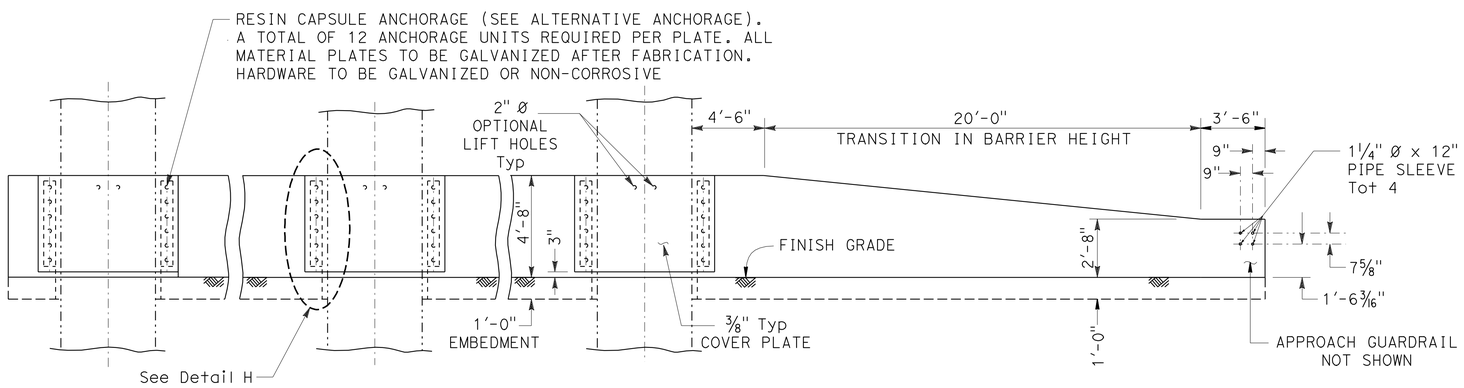

ELEVATION

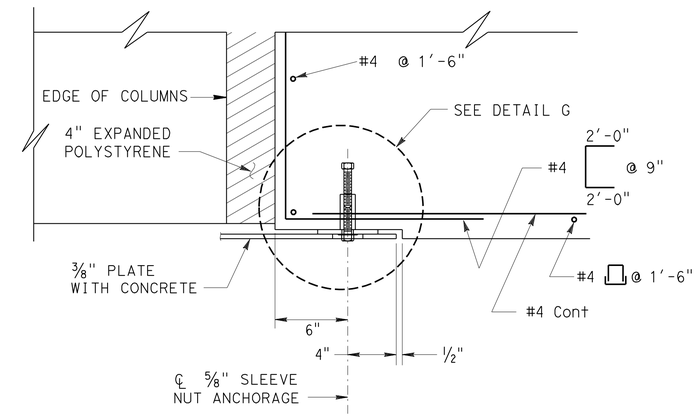

DETAIL F

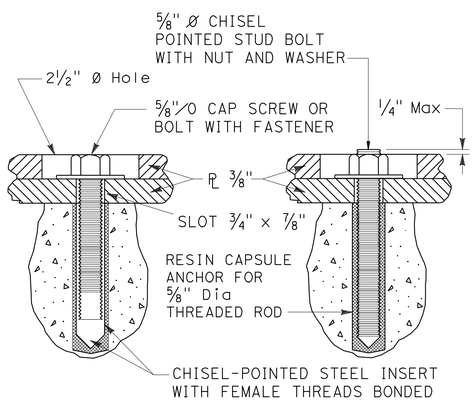

DETAIL A

DETAIL B

ALTERNATIVE ANCHORAGE

SEE NOTES 1 AND 2

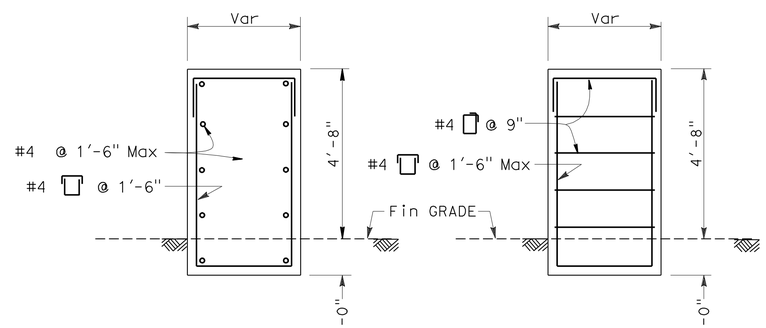

SECTION A-A

SECTION B-B

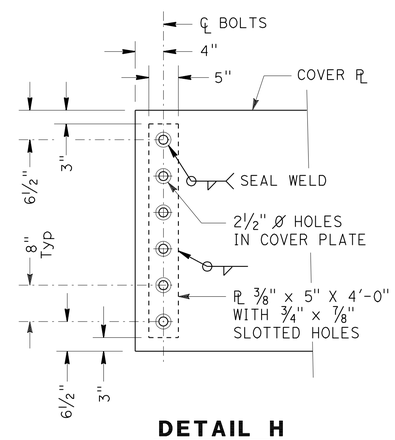

DETAIL H

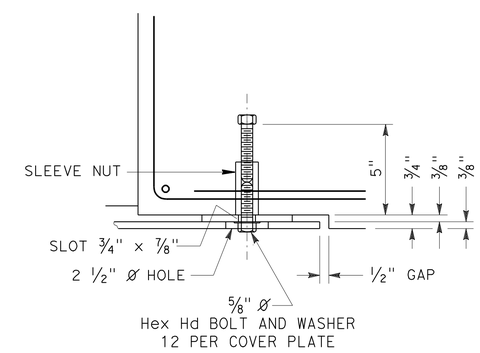

DETAIL G

CONSTRUCTION DETAILS

NO SCALE

C-4

STATE OF CALIFORNIA - DEPARTMENT OF TRANSPORTATION
Caltrans
DESIGN

FUNCTIONAL SUPERVISOR: SERGIO AVILA
CALCULATED-DESIGNED BY: REZA TOOTOONCHI
CHECKED BY: MOHAMMAD OMIDI
REVISED BY
DATE REVISED

LAST REVISION 01-06-11
DATE PLOTTED => 03-MAR-2011
TIME PLOTTED => 15:20

Dist	COUNTY	ROUTE	POST MILES TOTAL PROJECT	SHEET No.	TOTAL SHEETS
08	SBd	10	20.0/R24.5	7	56

REGISTERED CIVIL ENGINEER 1-07-11 DATE

2-28-11
PLANS APPROVAL DATE

REGISTERED PROFESSIONAL ENGINEER MOHAMMAD OMIDI No. C49518 Exp. 9/30/12 CIVIL STATE OF CALIFORNIA

THE STATE OF CALIFORNIA OR ITS OFFICERS OR AGENTS SHALL NOT BE RESPONSIBLE FOR THE ACCURACY OR COMPLETENESS OF SCANNED COPIES OF THIS PLAN SHEET.

NOTES:

1. LOCATION OF UTILITY FACILITIES SHOWN ON THIS PLAN ARE APPROXIMATE AND SHALL BE VERIFIED BY THE CONTRACTOR PRIOR TO CONSTRUCTION.
2. UTILITY OWNERSHIP ON THIS PROJECT:

   ELECTRIC - SOUTHERN CALIFORNIA EDISON (SCE)
   WATER - CITY OF COLTON PUBLIC WORK DEPARTMENT (CCPWD)
   GAS - CALIFORNIA & NEVADA (CAL-NEV)
   SOUTHERN CALIFORNIA GAS (SCG)
   SOUTHERN PACIFIC RAILROAD (SPR)
   SWER - CITY OF COLTON PUBLIC WORK DEPARTMENT (CCPWD)
   TELEPHONE - PACIFIC TELEPHONE & TELEGRAPH (PACBEL)

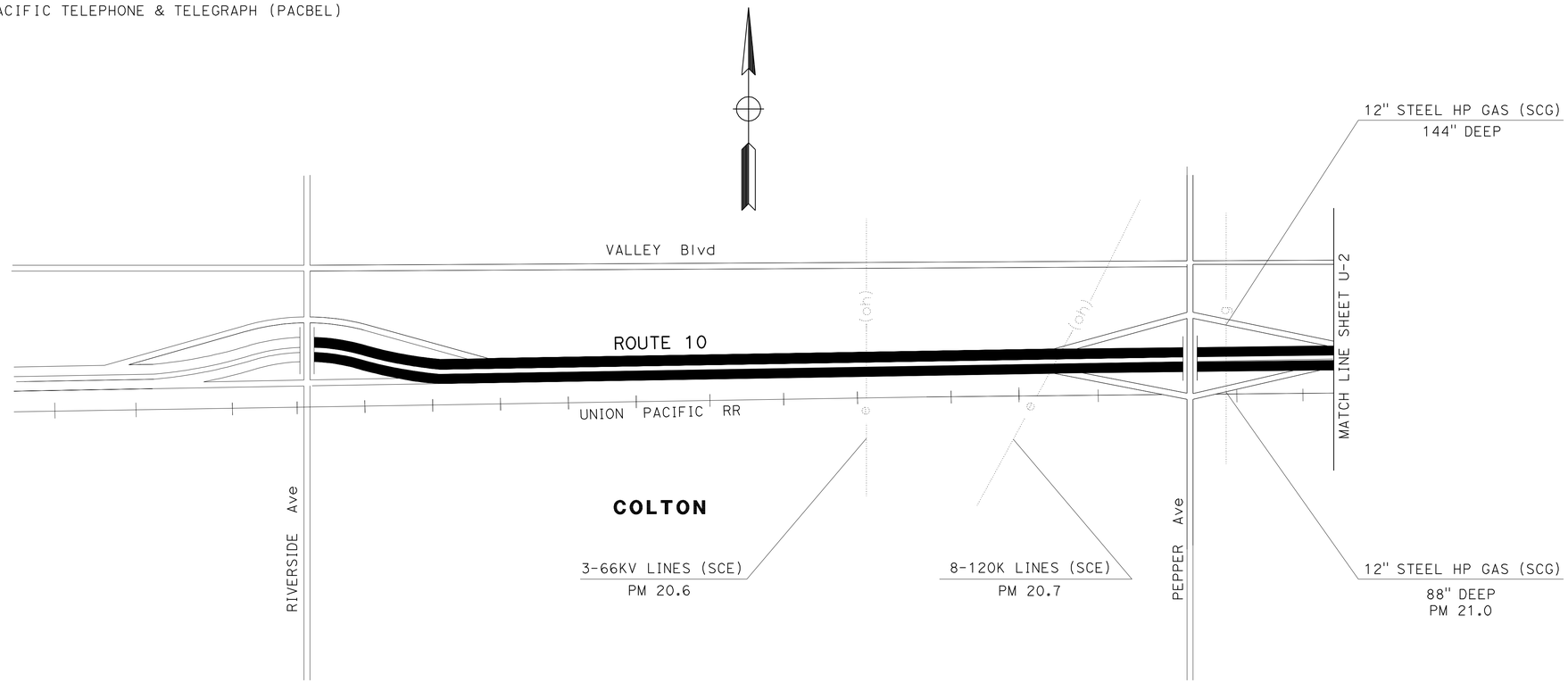

THIS PLAN ACCURATE FOR UTILITIES INFORMATION ONLY

UTILITY PLAN

NO SCALE

U-1

STATE OF CALIFORNIA - DEPARTMENT OF TRANSPORTATION
Caltrans DESIGN

FUNCTIONAL SUPERVISOR: SERGIO AVILA
CALCULATED-DESIGNED BY: REZA TOOTOONCHI
CHECKED BY: SERGIO AVILA
REVISED BY
DATE REVISED

LAST REVISION 01-06-11
DATE PLOTTED => 07-MAR-2011
TIME PLOTTED => 12:20

Dist	COUNTY	ROUTE	POST MILES TOTAL PROJECT	SHEET No.	TOTAL SHEETS
08	SBd	10	20.0/R24.5	8	56

REGISTERED CIVIL ENGINEER 1-07-11 DATE

2-28-11
PLANS APPROVAL DATE

REGISTERED PROFESSIONAL ENGINEER
MOHAMMAD OMIDI
No. C49518
Exp. 9/30/12
CIVIL
STATE OF CALIFORNIA

THE STATE OF CALIFORNIA OR ITS OFFICERS OR AGENTS SHALL NOT BE RESPONSIBLE FOR THE ACCURACY OR COMPLETENESS OF SCANNED COPIES OF THIS PLAN SHEET.

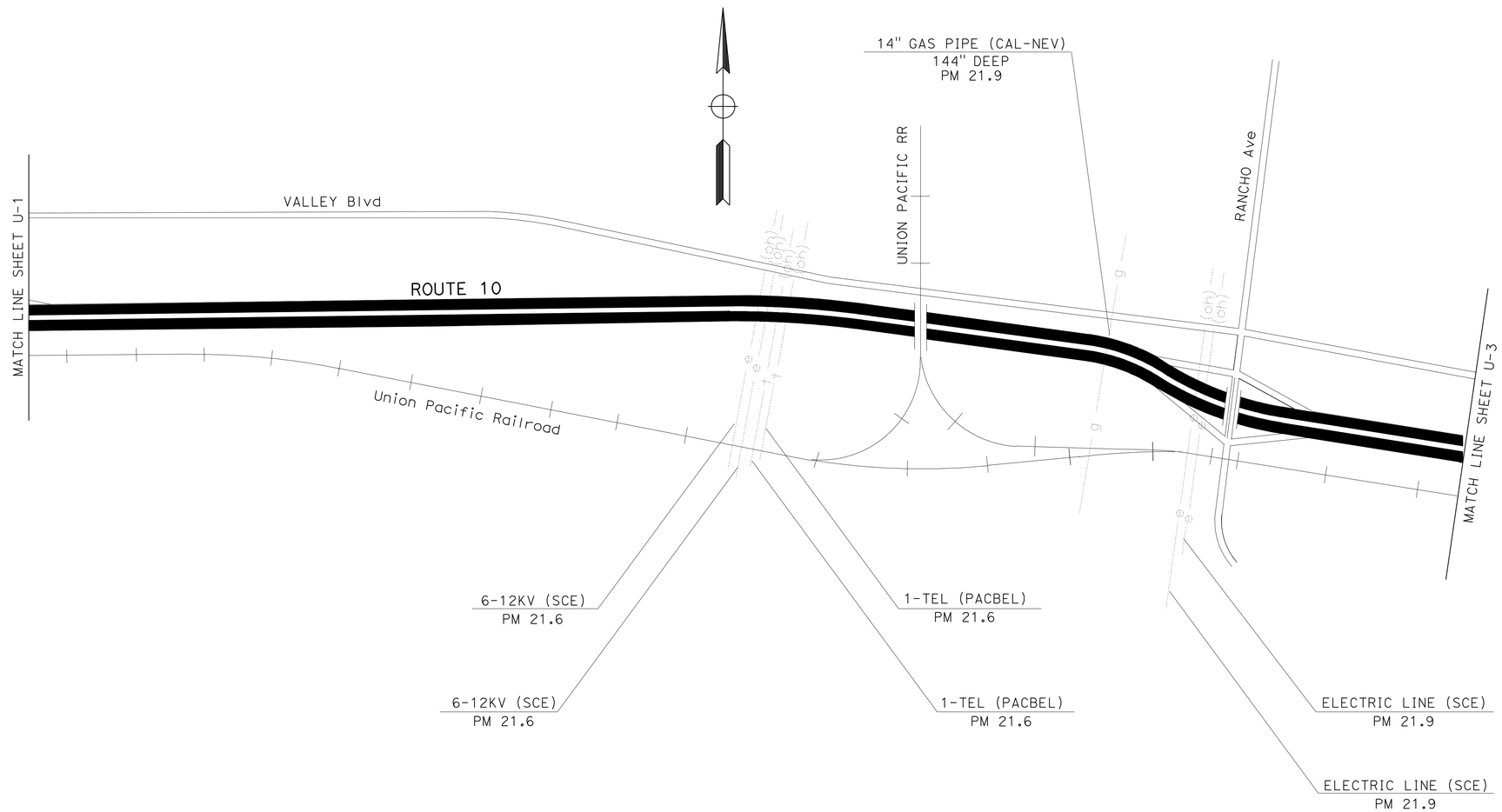

THIS PLAN ACCURATE FOR UTILITIES INFORMATION ONLY

UTILITY PLAN

NO SCALE

U-2

STATE OF CALIFORNIA - DEPARTMENT OF TRANSPORTATION
Caltrans
DESIGN

FUNCTIONAL SUPERVISOR: SERGIO AVILA
CALCULATED-DESIGNED BY: REZA TOOTOONCHI
CHECKED BY: SERGIO AVILA
REVISED BY
DATE REVISED

LAST REVISION 01-06-11
DATE PLOTTED => 07-MAR-2011
TIME PLOTTED => 12:20

Dist	COUNTY	ROUTE	POST MILES TOTAL PROJECT	SHEET No.	TOTAL SHEETS
08	SBd	10	20.0/R24.5	9	56

REGISTERED CIVIL ENGINEER 1-07-11 DATE

2-28-11
PLANS APPROVAL DATE

REGISTERED PROFESSIONAL ENGINEER MOHAMMAD OMIDI No. C49518 Exp. 9/30/12 CIVIL STATE OF CALIFORNIA

THE STATE OF CALIFORNIA OR ITS OFFICERS OR AGENTS SHALL NOT BE RESPONSIBLE FOR THE ACCURACY OR COMPLETENESS OF SCANNED COPIES OF THIS PLAN SHEET.

REVISED BY | DATE REVISED
REZA TOOTOONCHI | SERGIO AVILA
CALCULATED-DESIGNED BY | CHECKED BY
FUNCTIONAL SUPERVISOR
SERGIO AVILA

STATE OF CALIFORNIA - DEPARTMENT OF TRANSPORTATION
Caltrans
DESIGN

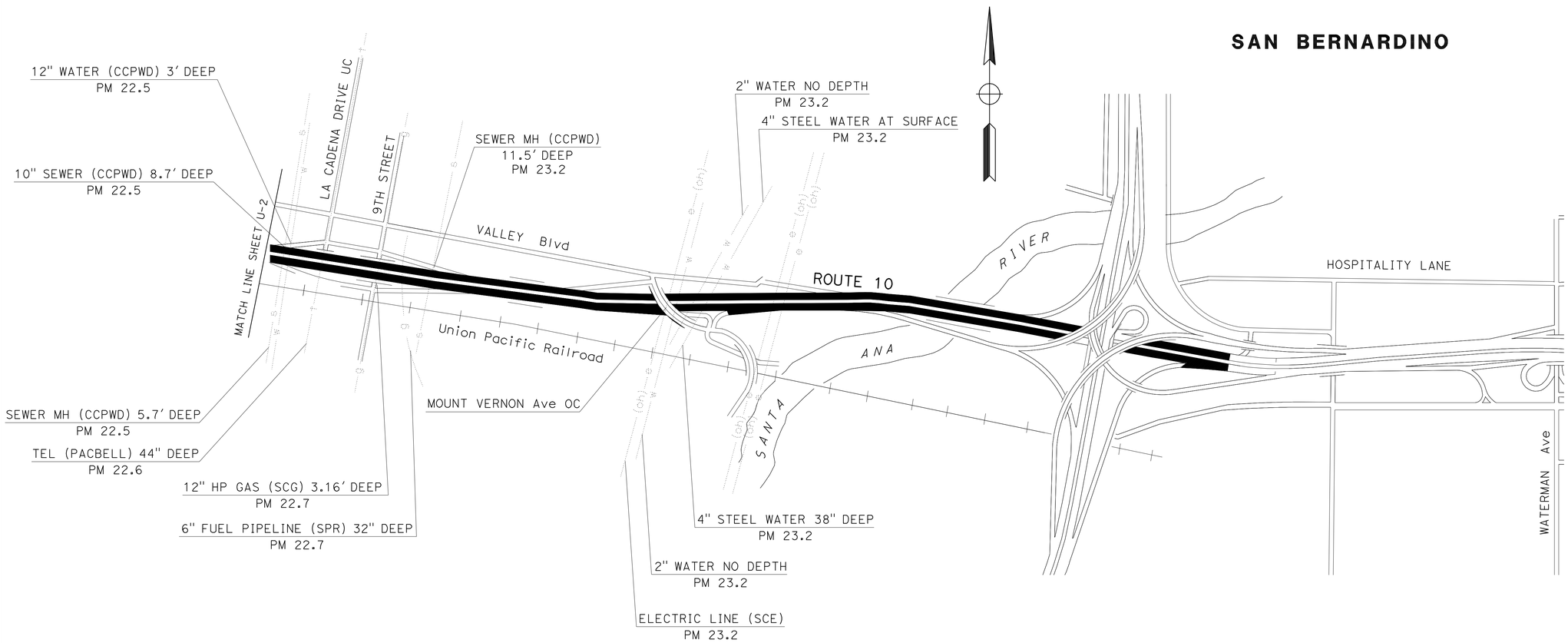

UTILITY PLAN

NO SCALE

THIS PLAN ACCURATE FOR UTILITIES INFORMATION ONLY

U-3

LAST REVISION 01-06-11 | DATE PLOTTED => 07-MAR-2011 | TIME PLOTTED => 12:20

Dist	COUNTY	ROUTE	POST MILES TOTAL PROJECT	SHEET No.	TOTAL SHEETS
08	SBd	10	20.0/R24.5	10	56

Thanh Trinh 1-07-11
REGISTERED CIVIL ENGINEER DATE

2-28-11
PLANS APPROVAL DATE

REGISTERED PROFESSIONAL ENGINEER THANH TRINH No. C41189 Exp. 3/31/11 CIVIL STATE OF CALIFORNIA

THE STATE OF CALIFORNIA OR ITS OFFICERS OR AGENTS SHALL NOT BE RESPONSIBLE FOR THE ACCURACY OR COMPLETENESS OF SCANNED COPIES OF THIS PLAN SHEET.

NOTES:

1. CONSTRUCTION AREA SIGN LOCATIONS SHOWN ARE APPROXIMATE. EXACT LOCATIONS WILL BE DETERMINED BY THE ENGINEER.
2. REFER TO STANDARD PLAN T10 & T14 FOR TRAFFIC CONTROL REQUIREMENT.
3. EXACT PORTABLE CHANGE MESSAGE SIGN (PCMS) LOCATIONS WILL BE DETERMINED BY THE ENGINEER.

LEGEND:

- ONE POST SIGN
- TWO POST SIGN
- WORK AREA
- (X) CONSTRUCTION AREA SIGN CODE

PORTABLE CHANGEABLE MESSAGE SIGN (PCMS)
(EA)
4

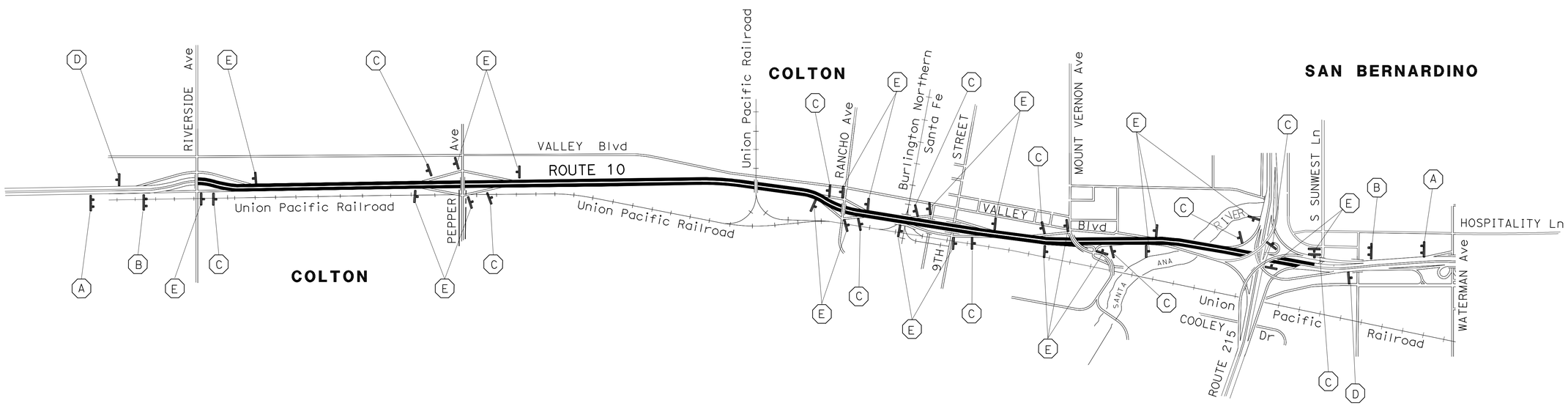

STATIONARY MOUNTED CONSTRUCTION AREA SIGNS

SIGN SYMBOL (X)	SIGN CODE FED	SIGN CODE CA	PANEL SIZE	SIGN MESSAGE	No. OF POST(S) AND SIZE	(N) No. OF SIGNS (EA)
A		C40	144" x 60"	TRAFFIC FINES DOUBLED IN WORK ZONES	2 - 6" x 8"	2
B		C11	90" x 48"	ROAD WORK NEXT 5 MILES	2 - 6" x 6"	2
C	W20-1		48" x 48"	ROAD WORK AHEAD	1 - 6" x 6"	12
D	G20-2		48" x 18"	END ROAD WORK	1 - 4" x 4"	2
E		SC6-4	48" x 60"	RAMP CLOSED DATE/TIME	1 - 6" x 6"	22

(N) NOT A SEPARATE PAY ITEM, FOR INFORMATION ONLY.

THIS PLAN ACCURATE FOR CONSTRUCTION AREA SIGN WORK ONLY.

CONSTRUCTION AREA SIGNS

NO SCALE

CS-1

STATE OF CALIFORNIA - DEPARTMENT OF TRANSPORTATION
Caltrans TRAFFIC DESIGN A

FUNCTIONAL SUPERVISOR: BILL WASSER
CALCULATED-DESIGNED BY: TRI TRAN
CHECKED BY: THANH TRINH
REVISED BY
DATE REVISED

LAST REVISION 01-06-11
DATE PLOTTED => 04-MAR-2011
TIME PLOTTED => 06:09

Dist	COUNTY	ROUTE	POST MILES TOTAL PROJECT	SHEET No.	TOTAL SHEETS
08	SBd	10	20.0/R24.5	11	56

Thanh Trinh 1-07-11
REGISTERED CIVIL ENGINEER DATE

2-28-11
PLANS APPROVAL DATE

REGISTERED PROFESSIONAL ENGINEER
THANH TRINH
No. C41189
Exp. 3/31/11
CIVIL
STATE OF CALIFORNIA

THE STATE OF CALIFORNIA OR ITS OFFICERS OR AGENTS SHALL NOT BE RESPONSIBLE FOR THE ACCURACY OR COMPLETENESS OF SCANNED COPIES OF THIS PLAN SHEET.

NOTES:

1. LEFT AND RIGHT SHOULDER SHALL NOT BE CLOSED SIMULTANEOUSLY.
2. PLAN SHEET TH-1 TO BE USED AT COLTON OH, WARM SCREEK, AND SANTA ANA RIVER (LEFT BRIDGE).

LEGEND:

- ONE POST CONSTRUCTION AREA SIGN
- TEMPORARY RAILING (TYPE K)
- DIRECTION OF TRAFFIC
- WORK AREA
- TEMPORARY CRASH CUSHION (TS14)

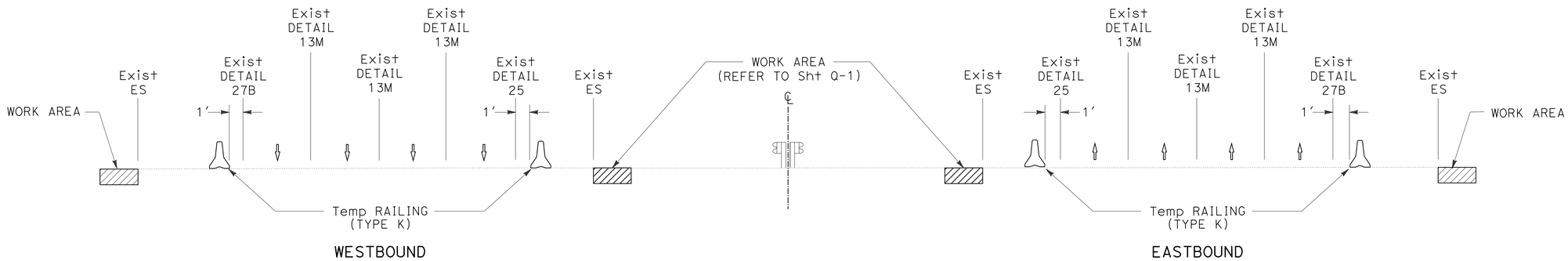

SECTION A-A

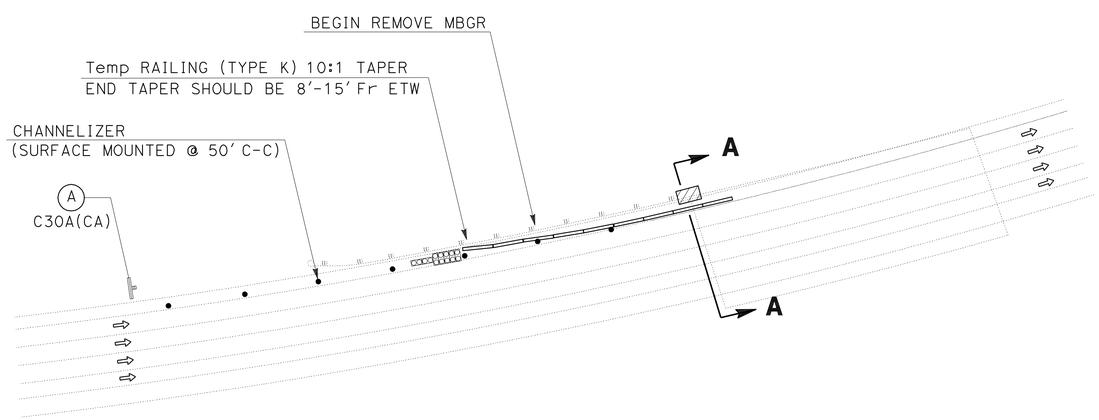

TYPICAL LEFT SHOULDER CLOSURE

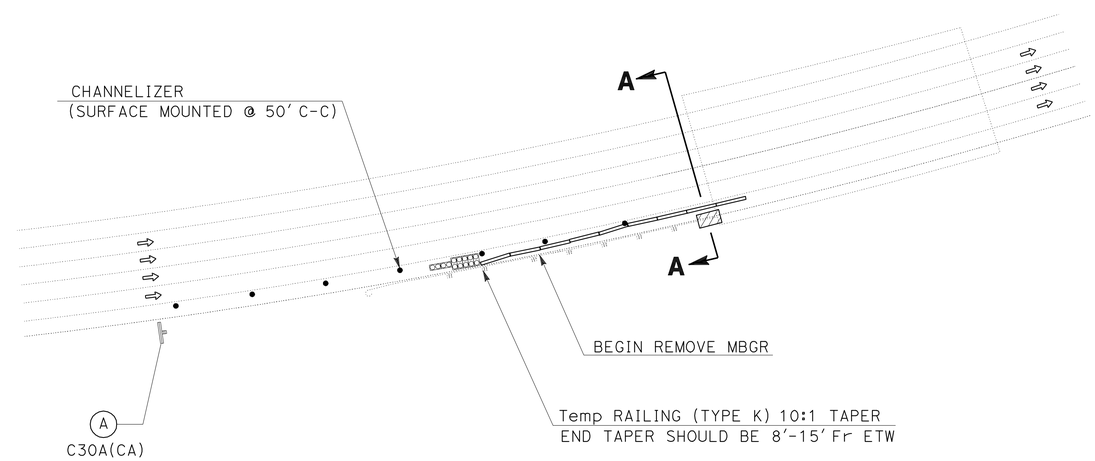

TYPICAL RIGHT SHOULDER CLOSURE

TRAFFIC HANDLING PLAN

NO SCALE

THIS PLAN ACCURATE FOR TRAFFIC HANDLING WORK ONLY.

TH-1

STATE OF CALIFORNIA - DEPARTMENT OF TRANSPORTATION
Caltrans TRAFFIC DESIGN A

FUNCTIONAL SUPERVISOR: BILL WASSER
CALCULATED-DESIGNED BY: TRI TRAN
CHECKED BY: THANH TRINH
REVISED BY
DATE REVISED

LAST REVISION 01-07-11
DATE PLOTTED => 03-MAR-2011
TIME PLOTTED => 17:54

Dist	COUNTY	ROUTE	POST MILES TOTAL PROJECT	SHEET No.	TOTAL SHEETS
08	SBd	10	20.0/R24.5	12	56

Thanh Trinh 1-07-11
REGISTERED CIVIL ENGINEER DATE

2-28-11
PLANS APPROVAL DATE

REGISTERED PROFESSIONAL ENGINEER
THANH TRINH
No. C41189
Exp. 3/31/11
CIVIL
STATE OF CALIFORNIA

THE STATE OF CALIFORNIA OR ITS OFFICERS OR AGENTS SHALL NOT BE RESPONSIBLE FOR THE ACCURACY OR COMPLETENESS OF SCANNED COPIES OF THIS PLAN SHEET.

NOTES:

1. LEFT AND RIGHT SHOULDER SHALL NOT BE CLOSED SIMULTANEOUSLY.
2. PLAN SHEET TH-2 TO BE USED AT LA CADENA Dr UC, NINTH St UC, PAVILLION SPUR OH, AND SANTA ANA RIVER (EB TO NORTH/SOUTH 215).

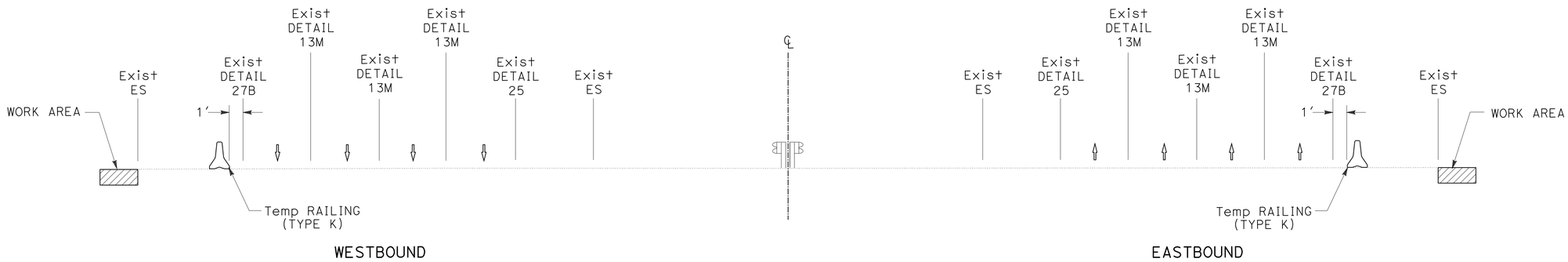

SECTION A-A

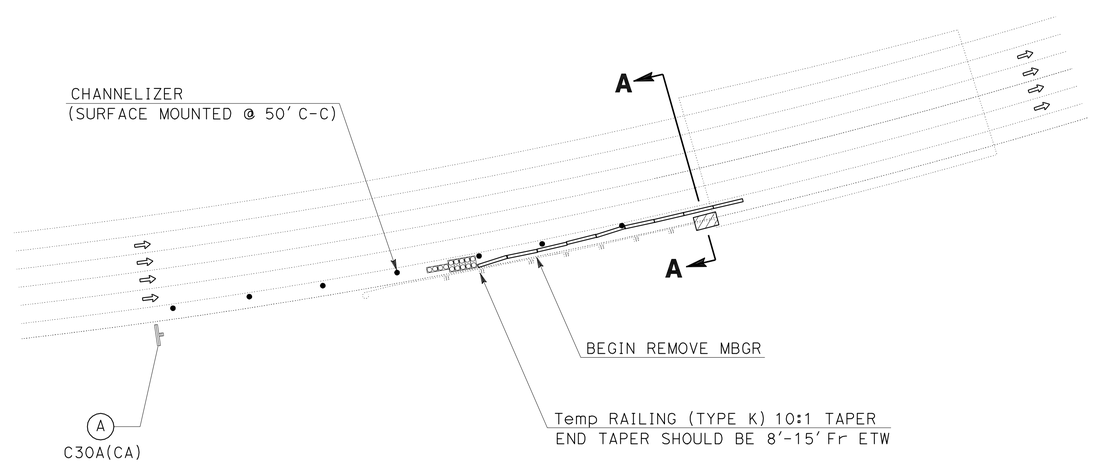

TYPICAL RIGHT SHOULDER CLOSURE

THIS PLAN ACCURATE FOR TRAFFIC HANDLING WORK ONLY.

TRAFFIC HANDLING PLAN

NO SCALE

TH-2

STATE OF CALIFORNIA - DEPARTMENT OF TRANSPORTATION
Caltrans TRAFFIC DESIGN A

FUNCTIONAL SUPERVISOR: BILL WASSER
CALCULATED-DESIGNED BY: TRI TRAN
CHECKED BY: THANH TRINH
REVISED BY
DATE REVISED

LAST REVISION 01-07-11
DATE PLOTTED => 03-MAR-2011
TIME PLOTTED => 17:54

Dist	COUNTY	ROUTE	POST MILES TOTAL PROJECT	SHEET No.	TOTAL SHEETS
08	SBd	10	20.0/R24.5	13	56

Thanh Trinh 1-07-11
REGISTERED CIVIL ENGINEER DATE

2-28-11
PLANS APPROVAL DATE

REGISTERED PROFESSIONAL ENGINEER
THANH TRINH
No. C41189
Exp. 3/31/11
CIVIL
STATE OF CALIFORNIA

THE STATE OF CALIFORNIA OR ITS OFFICERS OR AGENTS SHALL NOT BE RESPONSIBLE FOR THE ACCURACY OR COMPLETENESS OF SCANNED COPIES OF THIS PLAN SHEET.

NOTES:

1. LEFT AND RIGHT SHOULDER SHALL NOT BE CLOSED SIMULTANEOUSLY.
2. PLAN SHEET TH-3 TO BE USED AT SANTA ANA RIVER (LT-INSIDE ONLY).

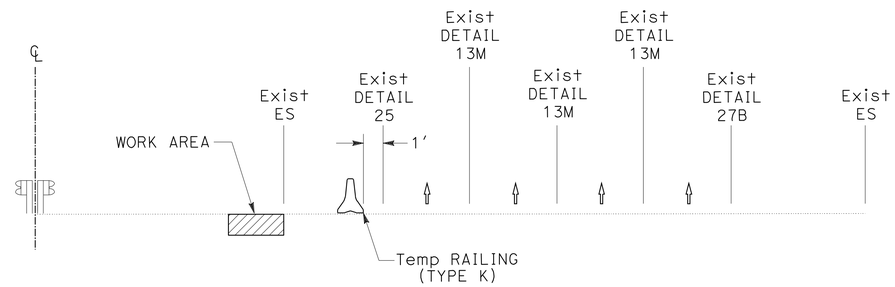

EASTBOUND

SECTION A-A

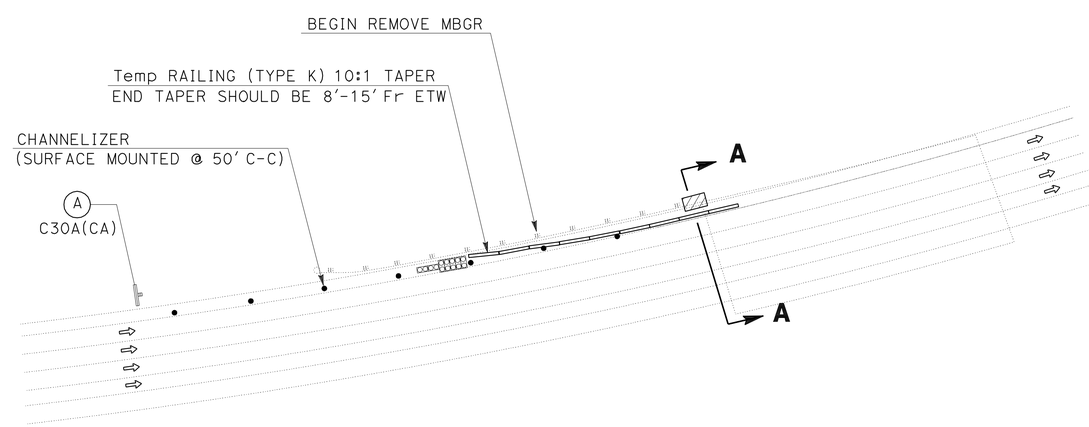

TYPICAL LEFT SHOULDER CLOSURE

THIS PLAN ACCURATE FOR TRAFFIC HANDLING WORK ONLY.

TRAFFIC HANDLING PLAN

NO SCALE

TH-3

STATE OF CALIFORNIA - DEPARTMENT OF TRANSPORTATION
Caltrans TRAFFIC DESIGN A

FUNCTIONAL SUPERVISOR: BILL WASSER
CALCULATED-DESIGNED BY: TRI TRAN
CHECKED BY: THANH TRINH
REVISED BY
DATE REVISED

LAST REVISION 01-07-11
DATE PLOTTED => 03-MAR-2011
TIME PLOTTED => 17:54

Dist	COUNTY	ROUTE	POST MILES TOTAL PROJECT	SHEET No.	TOTAL SHEETS
08	SBd	10	20.0/R24.5	14	56

Thanh Trinh 1-07-11
REGISTERED CIVIL ENGINEER DATE

2-28-11
PLANS APPROVAL DATE

REGISTERED PROFESSIONAL ENGINEER
THANH TRINH
No. C41189
Exp. 3/31/11
CIVIL
STATE OF CALIFORNIA

THE STATE OF CALIFORNIA OR ITS OFFICERS OR AGENTS SHALL NOT BE RESPONSIBLE FOR THE ACCURACY OR COMPLETENESS OF SCANNED COPIES OF THIS PLAN SHEET.

NOTE:

PLAN SHEET TH-4 TO BE AT MOUNT VERNON Ave OC RIGHT- OUTSIDE SHOULDER ON FREEWAY AND INSIDE SHOULDER OF THE EB TO MOUNT VERNON AVENUE OFF-RAMP.

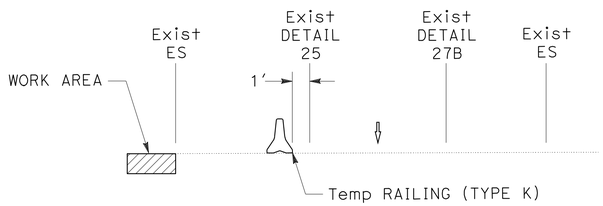

EB OFF-RAMP TO Mt VERNON Ave

SECTION B-B

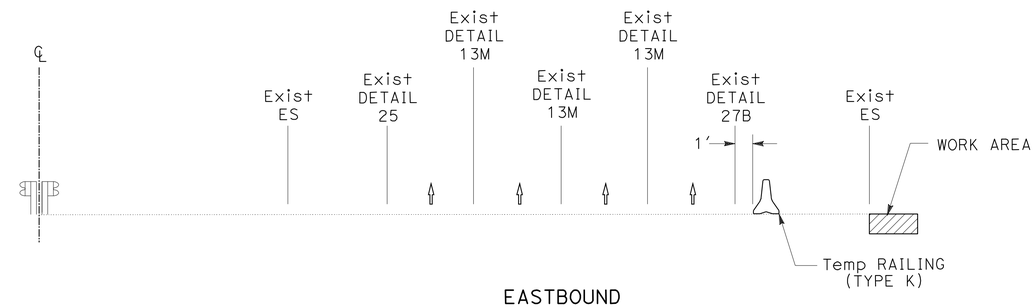

EASTBOUND

SECTION A-A

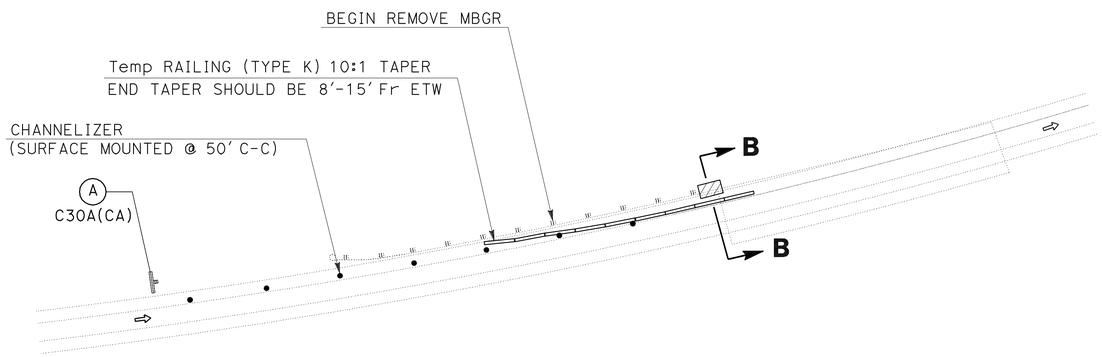

TYPICAL LEFT SHOULDER CLOSURE FOR OFF-RAMP

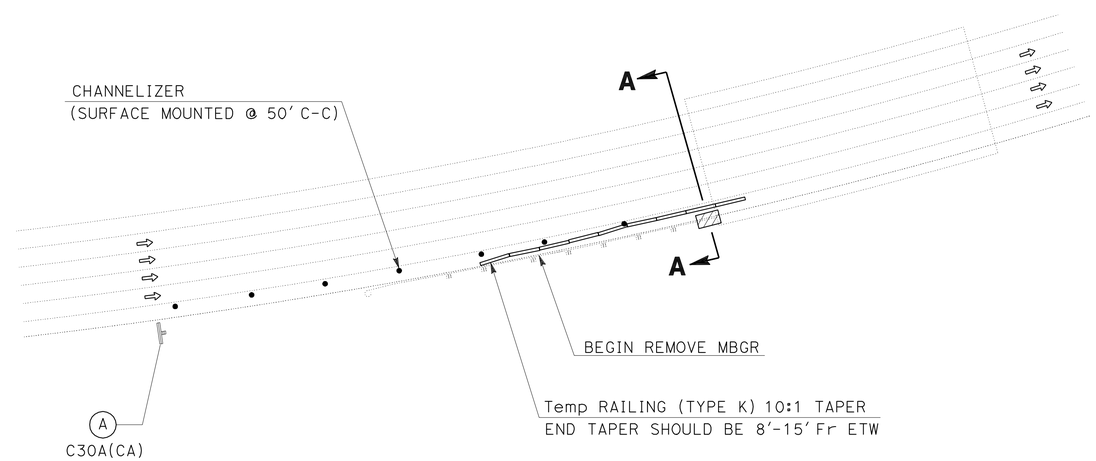

TYPICAL RIGHT SHOULDER CLOSURE

TRAFFIC HANDLING PLAN

NO SCALE

TH-4

THIS PLAN ACCURATE FOR TRAFFIC HANDLING WORK ONLY.

STATE OF CALIFORNIA - DEPARTMENT OF TRANSPORTATION
Caltrans TRAFFIC DESIGN A

FUNCTIONAL SUPERVISOR: BILL WASSER
CALCULATED-DESIGNED BY: TRI TRAN
CHECKED BY: THANH TRINH
REVISED BY
DATE REVISED

LAST REVISION 01-07-11
DATE PLOTTED => 03-MAR-2011
TIME PLOTTED => 17:54

Dist	COUNTY	ROUTE	POST MILES TOTAL PROJECT	SHEET No.	TOTAL SHEETS
08	SBd	10	20.0/R24.5	15	56

Thanh Trinh 1-07-11
REGISTERED CIVIL ENGINEER DATE

2-28-11
PLANS APPROVAL DATE

REGISTERED PROFESSIONAL ENGINEER THANH TRINH No. C41189 Exp. 3/31/11 CIVIL STATE OF CALIFORNIA

THE STATE OF CALIFORNIA OR ITS OFFICERS OR AGENTS SHALL NOT BE RESPONSIBLE FOR THE ACCURACY OR COMPLETENESS OF SCANNED COPIES OF THIS PLAN SHEET.

NOTES:

1. LEFT AND RIGHT SHOULDER SHALL NOT BE CLOSED SIMULTANEOUSLY.
2. PLAN SHEET TH-2 TO BE USED AT PEPPER Ave OC (OUTSIDE SHOULDER ONLY).

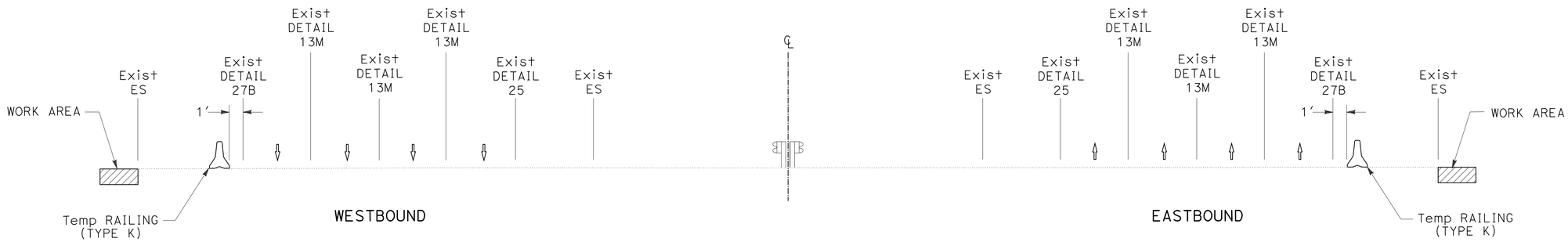

SECTION A-A

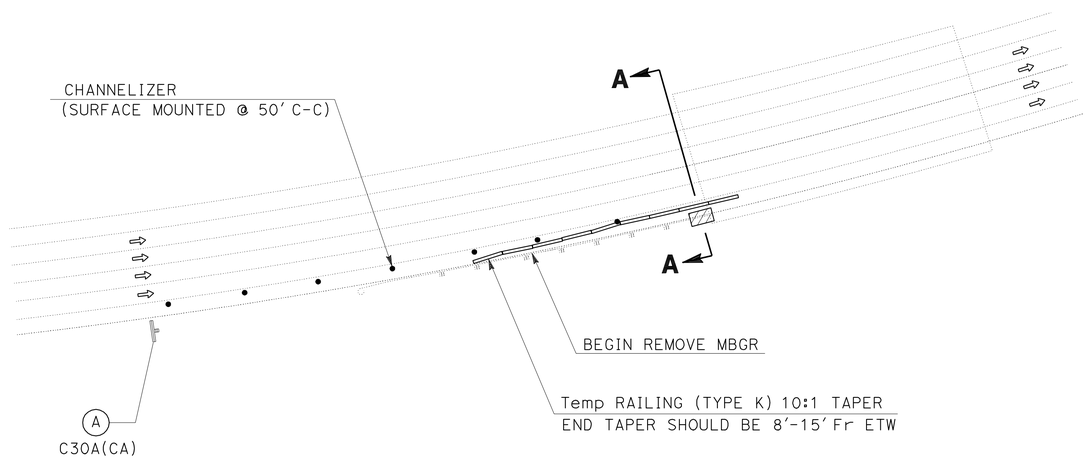

TYPICAL RIGHT SHOULDER CLOSURE

THIS PLAN ACCURATE FOR TRAFFIC HANDLING WORK ONLY.

TRAFFIC HANDLING PLAN

NO SCALE

TH-5

STATE OF CALIFORNIA - DEPARTMENT OF TRANSPORTATION
Caltrans TRAFFIC DESIGN A

FUNCTIONAL SUPERVISOR: BILL WASSER
CALCULATED-DESIGNED BY: TR1 TRAN
CHECKED BY: THANH TRINH
REVISED BY
DATE REVISED

LAST REVISION 01-07-11
DATE PLOTTED => 03-MAR-2011
TIME PLOTTED => 17:54

Dist	COUNTY	ROUTE	POST MILES TOTAL PROJECT	SHEET No.	TOTAL SHEETS
08	SBd	10	20.0/R24.5	16	56

Thanh Trinh 1-07-11
REGISTERED CIVIL ENGINEER DATE

2-28-11
PLANS APPROVAL DATE

REGISTERED PROFESSIONAL ENGINEER THANH TRINH No. C41189 Exp. 3/31/11 CIVIL STATE OF CALIFORNIA

THE STATE OF CALIFORNIA OR ITS OFFICERS OR AGENTS SHALL NOT BE RESPONSIBLE FOR THE ACCURACY OR COMPLETENESS OF SCANNED COPIES OF THIS PLAN SHEET.

CONSTRUCTION AREA SIGNS

SIGN No.	SIGN No.	SIGN CODE FED	SIGN CODE CA	PANEL SIZE	SIGN MESSAGE	No. OF POST(S) AND SIZE	(N) No. OF SIGNS (EA)
TH-1	(A)		C30A	48" x 48"	SHOULDER CLOSED	1 - 6" x 6"	10
TH-1	(A)		C30A	48" x 48"	SHOULDER CLOSED	1 - 6" x 6"	7
TH-1	(A)		C30A	48" x 48"	SHOULDER CLOSED	1 - 6" x 6"	1
TH-1	(A)		C30A	48" x 48"	SHOULDER CLOSED	1 - 6" x 6"	2
TH-1	(A)		C30A	48" x 48"	SHOULDER CLOSED	1 - 6" x 6"	2

(N) NOT A SEPARATE PAY ITEM, FOR INFORMATION ONLY.
ADDITIONAL CONSTRUCTION AREA SIGNS QUANTITY IS SHOWN IN PLAN SHEET CS-1.

TRAFFIC HANDLING QUANTITIES

SHEET	LOCATION PM	TEMPORARY RAILING (TYPE K) (LF)	TEMPORARY CRASH CUSHION MODULE (EA)	CHANNELIZER (SURFACE MOUNTED) (EA)
TH-1	COLTON OH 54-464 AT PM R22.364 (Lt & Rt)	720	56	28
	WARM Cr Br 54-830 AT PM R23.597 (Lt & Rt)	720	56	28
	SANTA ANA RIVER 54-292 AT PM R23.830 (Lt)	360	28	14
TH-2	LA CADENA Dr UC 54-462 AT PM R22.616 (Lt & Rt)	360	14 (LEFT BRIDGE ONLY)	14
	NINTH St UC 54-461 AT PM R22.705 (Lt & Rt)	360	28	14
	PAVILLION SPUR OH 54-460 AT PM R22.859 (Lt & Rt)	360	14 (LEFT BRIDGE ONLY)	14
	SANTA ANA RIVER (EB TO Rte 215 AT PM 23.800)	180	14	7
TH-3	SANTA ANA RIVER 54-292 AT PM R23.820 (Rt-INSIDE)	180	14	7
TH-4	MT VERNON Ave OC 54-459 AT PM R23.250 (Rt-OUTSIDE)	360		14
TH-5	PEPPER Ave OC 54-531 AT PM 20.965 (Lt & Rt)	400	28	14
	TOTAL	4000	252	154

TRAFFIC HANDLING QUANTITIES

THQ-1

STATE OF CALIFORNIA - DEPARTMENT OF TRANSPORTATION
Caltrans TRAFFIC DESIGN A

FUNCTIONAL SUPERVISOR: BILL WASSER
CALCULATED-DESIGNED BY: TRI TRAN
CHECKED BY: THANH TRINH
REVISED BY
DATE REVISED

LAST REVISION 01-06-11
DATE PLOTTED => 03-MAR-2011
TIME PLOTTED => 17:54

Dist	COUNTY	ROUTE	POST MILES TOTAL PROJECT	SHEET No.	TOTAL SHEETS
08	SBd	10	20.0/R24.5	17	56

Thanh Trinh 1-07-11
REGISTERED CIVIL ENGINEER DATE

2-28-11
PLANS APPROVAL DATE

REGISTERED PROFESSIONAL ENGINEER
THANH TRINH
No. C41189
Exp. 3/31/11
CIVIL
STATE OF CALIFORNIA

THE STATE OF CALIFORNIA OR ITS OFFICERS OR AGENTS SHALL NOT BE RESPONSIBLE FOR THE ACCURACY OR COMPLETENESS OF SCANNED COPIES OF THIS PLAN SHEET.

LEGEND

- ONE POST CONSTRUCTION AREA SIGN
- (X) CONSTRUCTION AREA SIGN LETTER
- CLOSURE AREA

DETOUR DURING CLOSURE OF EXIT RAMP FROM ROUTE 10 EAST TO PEPPER Ave

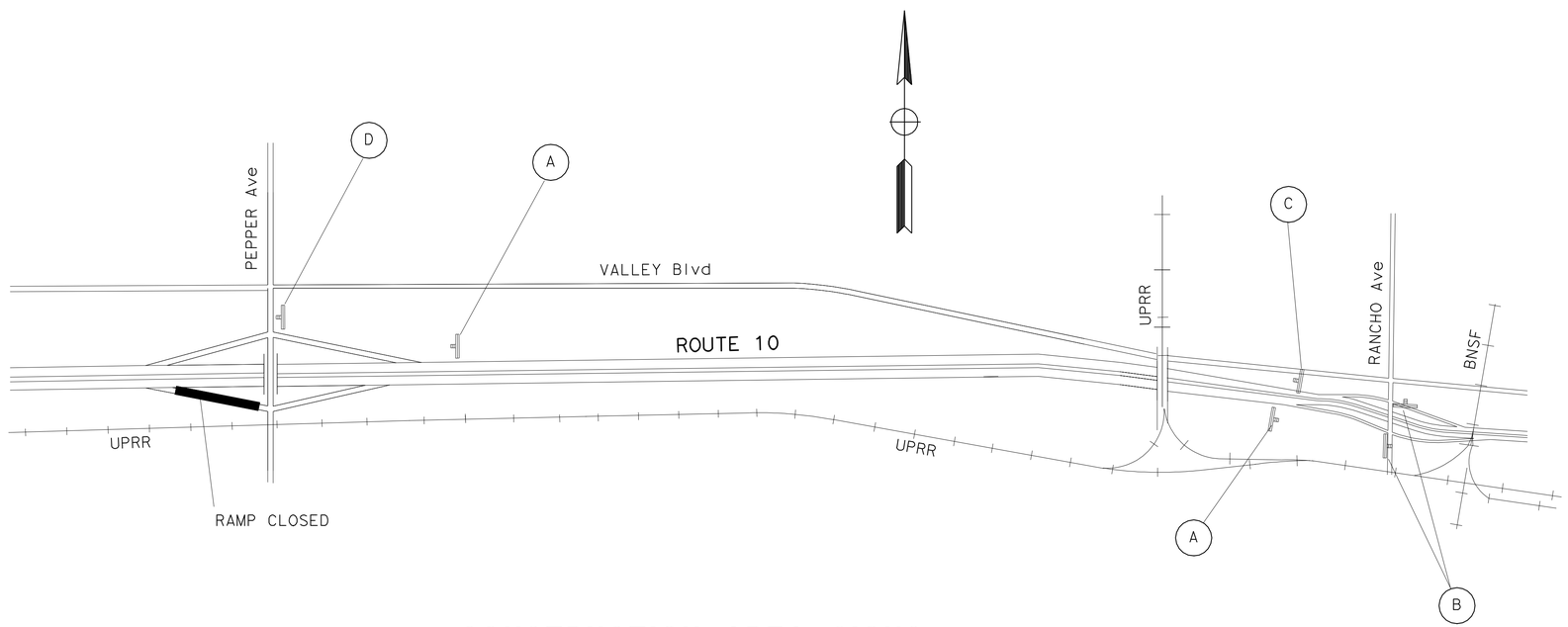

CONSTRUCTION AREA SIGNS (MOUNTED ON BARRICADES)

SIGN No.	SIGN CODE		PANEL SIZE	SIGN MESSAGE	TYPE III BARRICADE
	FED	CA			(EA)
A	M4-10(RT)		48" X 36"	DETOUR (RT)	2
B	M4-10(LT)		48" X 36"	DETOUR (LT)	2
C		SC3	48" X 36"	STRAIGHT DETOUR	1
D	M4-8a		24" X 18"	END DETOUR	1
				TOTAL	6

THIS PLAN ACCURATE FOR DETOUR CONSTRUCTION WORK ONLY.

DETOUR PLAN

NO SCALE

DE-1

STATE OF CALIFORNIA - DEPARTMENT OF TRANSPORTATION
Caltrans TRAFFIC DESIGN A

FUNCTIONAL SUPERVISOR: BILL WASSER
CALCULATED-DESIGNED BY: TRI TRAN
CHECKED BY: THANH TRINH
REVISED BY
DATE REVISED

LAST REVISION 01-06-11
DATE PLOTTED => 03-MAR-2011
TIME PLOTTED => 17:54

Dist	COUNTY	ROUTE	POST MILES TOTAL PROJECT	SHEET No.	TOTAL SHEETS
08	SBd	10	20.0/R24.5	18	56

Thanh Trinh 1-07-11
REGISTERED CIVIL ENGINEER DATE

2-28-11
PLANS APPROVAL DATE

REGISTERED PROFESSIONAL ENGINEER
THANH TRINH
No. C41189
Exp. 3/31/11
CIVIL
STATE OF CALIFORNIA

THE STATE OF CALIFORNIA OR ITS OFFICERS OR AGENTS SHALL NOT BE RESPONSIBLE FOR THE ACCURACY OR COMPLETENESS OF SCANNED COPIES OF THIS PLAN SHEET.

DETOUR DURING CLOSURE OF EXIT RAMP FROM ROUTE 10 EAST TO RANCHO Ave

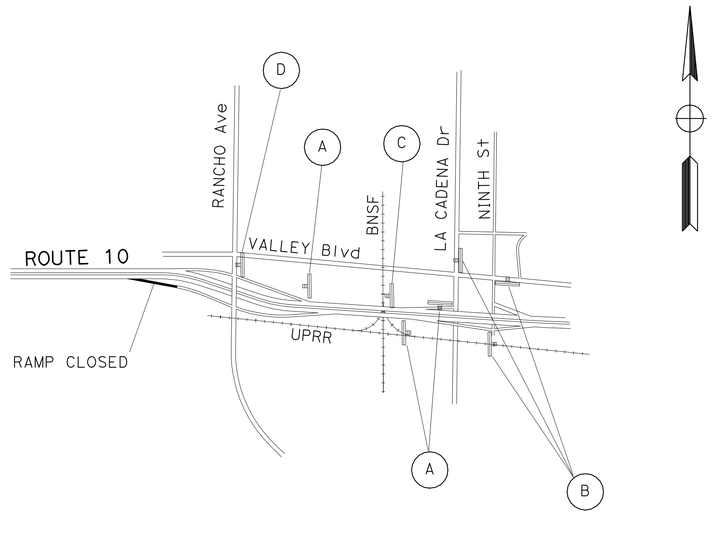

CONSTRUCTION AREA SIGNS (MOUNTED ON BARRICADES)

SIGN No.	SIGN CODE		PANEL SIZE	SIGN MESSAGE	TYPE III BARRICADE
	FED	CA			(EA)
A	M4-10(RT)		48" X 36"	DETOUR (RT)	3
B	M4-10(LT)		48" X 36"	DETOUR (LT)	3
C		SC3	48" X 36"	STRAIGHT DETOUR	1
D	M4-8a		24" X 18"	END DETOUR	1
				TOTAL	8

THIS PLAN ACCURATE FOR DETOUR CONSTRUCTION WORK ONLY.

DETOUR PLAN

NO SCALE

DE-2

STATE OF CALIFORNIA - DEPARTMENT OF TRANSPORTATION
Caltrans TRAFFIC DESIGN A

FUNCTIONAL SUPERVISOR: BILL WASSER
CALCULATED-DESIGNED BY: TRI TRAN
CHECKED BY: THANH TRINH
REVISED BY
DATE REVISED

LAST REVISION 01-06-11
DATE PLOTTED => 03-MAR-2011
TIME PLOTTED => 17:55

Dist	COUNTY	ROUTE	POST MILES TOTAL PROJECT	SHEET No.	TOTAL SHEETS
08	SBd	10	20.0/R24.5	19	56

Thanh Trinh 1-07-11
REGISTERED CIVIL ENGINEER DATE

2-28-11
PLANS APPROVAL DATE

REGISTERED PROFESSIONAL ENGINEER
THANH TRINH
No. C41189
Exp. 3/31/11
CIVIL
STATE OF CALIFORNIA

THE STATE OF CALIFORNIA OR ITS OFFICERS OR AGENTS SHALL NOT BE RESPONSIBLE FOR THE ACCURACY OR COMPLETENESS OF SCANNED COPIES OF THIS PLAN SHEET.

DETOUR DURING CLOSURE OF OFF-RAMP FROM ROUTE 10 EASTBOUND TO NINTH St

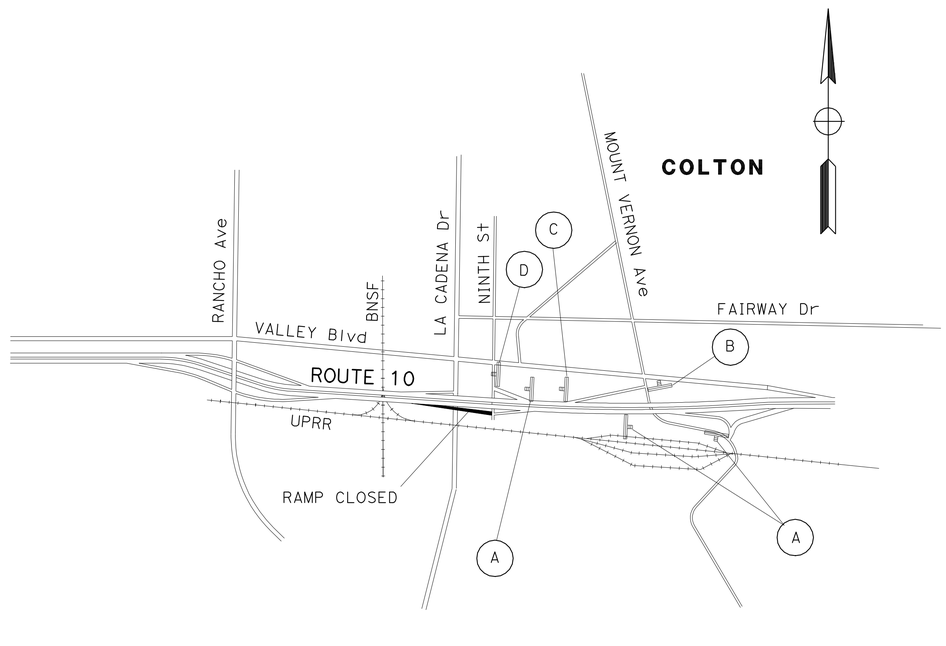

CONSTRUCTION AREA SIGNS (MOUNTED ON BARRICADES)

SIGN No.	SIGN CODE		PANEL SIZE	SIGN MESSAGE	TYPE III BARRICADE
	FED	CA			(EA)
A	M4-10(RT)		48" X 36"	DETOUR (RT)	3
B	M4-10(LT)		48" X 36"	DETOUR (LT)	1
C		SC3	48" X 36"	STRAIGHT DETOUR	1
D	M4-8a		24" X 18"	END DETOUR	1
				TOTAL	6

THIS PLAN ACCURATE FOR DETOUR CONSTRUCTION WORK ONLY.

DETOUR PLAN

NO SCALE

DE-3

STATE OF CALIFORNIA - DEPARTMENT OF TRANSPORTATION
Caltrans TRAFFIC DESIGN A

FUNCTIONAL SUPERVISOR: BILL WASSER
CALCULATED-DESIGNED BY: TRI TRAN
CHECKED BY: THANH TRINH
REVISED BY
DATE REVISED

LAST REVISION 01-06-11
DATE PLOTTED => 03-MAR-2011
TIME PLOTTED => 17:55

Dist	COUNTY	ROUTE	POST MILES TOTAL PROJECT	SHEET No.	TOTAL SHEETS
08	SBd	10	20.0/R24.5	20	56

Thanh Trinh 1-07-11
REGISTERED CIVIL ENGINEER DATE

2-28-11
PLANS APPROVAL DATE

REGISTERED PROFESSIONAL ENGINEER
THANH TRINH
No. C41189
Exp. 3/31/11
CIVIL
STATE OF CALIFORNIA

THE STATE OF CALIFORNIA OR ITS OFFICERS OR AGENTS SHALL NOT BE RESPONSIBLE FOR THE ACCURACY OR COMPLETENESS OF SCANNED COPIES OF THIS PLAN SHEET.

DETOUR DURING CLOSURE OF EXIT RAMP FROM ROUTE 10 EASTBOUND TO MOUNT VERNON Ave

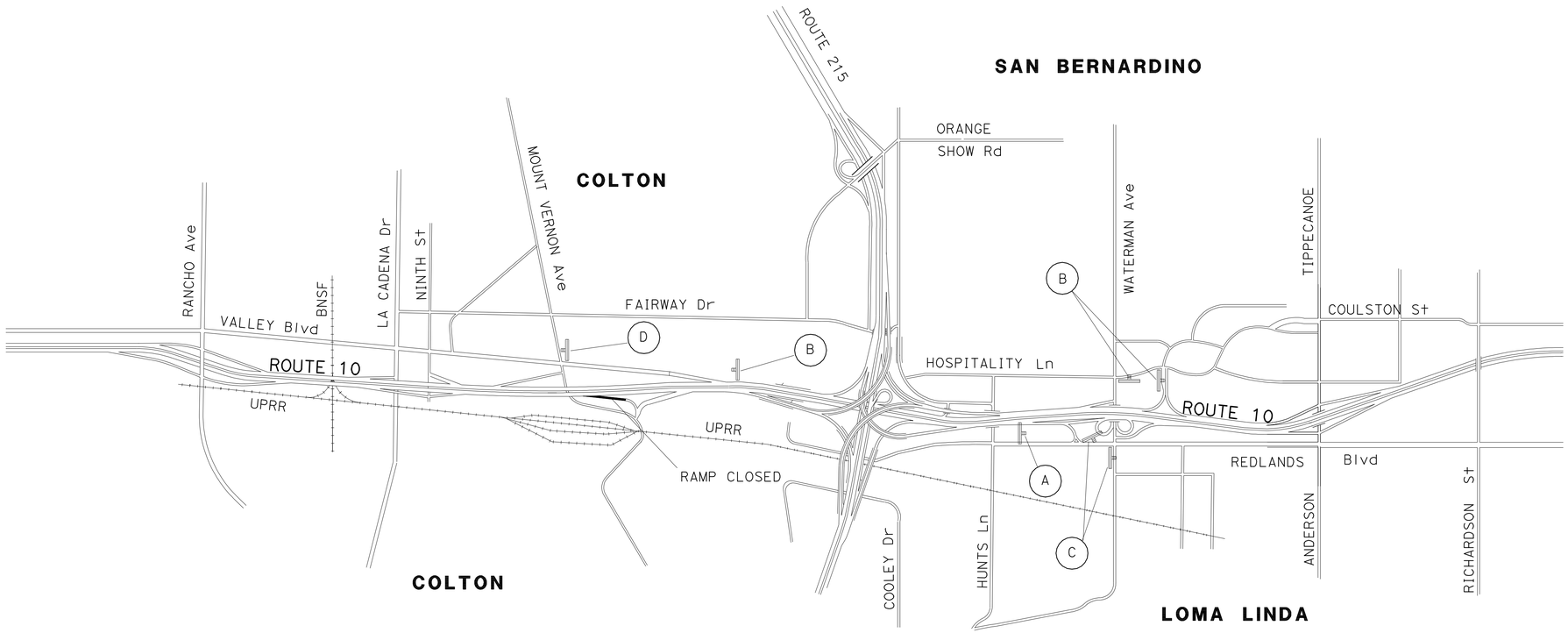

CONSTRUCTION AREA SIGNS

SIGN No.	SIGN CODE FED	SIGN CODE CA	PANEL SIZE	SIGN MESSAGE	No. OF POST(S) AND SIZE	No. OF SIGNS (N) (EA)	TYPE III BARRICADE (EA)
A		G7	102" X 24"	Mt VERNON Ave	1 - 4" X 6"	1	
	M4-10(RT)		48" X 36"	DETOUR (RT)			
B	M4-10(RT)		48" X 36"	DETOUR (RT)	ON TYPE III BARRICADE		3
C	M4-10(LT)		48" X 36"	DETOUR (LT)	ON TYPE III BARRICADE		2
D	M4-8a		24" X 18"	END DETOUR	ON TYPE III BARRICADE		1
					TOTAL	1	6

(N) - NOT A SEPARATE PAY ITEM, FOR INFORMATION ONLY.

G7-2(CA)

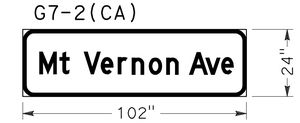

THIS PLAN ACCURATE FOR DETOUR CONSTRUCTION WORK ONLY.

DETOUR PLAN

NO SCALE

DE-4

REVISED BY | DATE REVISED
TRI TRAN | THANH TRINH
CALCULATED-DESIGNED BY | CHECKED BY
FUNCTIONAL SUPERVISOR
BILL WASSER

STATE OF CALIFORNIA - DEPARTMENT OF TRANSPORTATION
Caltrans TRAFFIC DESIGN A

LAST REVISION 01-06-11 | DATE PLOTTED => 03-MAR-2011 | TIME PLOTTED => 17:55

Dist	COUNTY	ROUTE	POST MILES TOTAL PROJECT	SHEET No.	TOTAL SHEETS
08	SBd	10	20.0/R24.5	21	56

Thanh Trinh 1-07-11
REGISTERED CIVIL ENGINEER DATE

2-28-11
PLANS APPROVAL DATE

REGISTERED PROFESSIONAL ENGINEER THANH TRINH No. C41189 Exp. 3/31/11 CIVIL STATE OF CALIFORNIA

THE STATE OF CALIFORNIA OR ITS OFFICERS OR AGENTS SHALL NOT BE RESPONSIBLE FOR THE ACCURACY OR COMPLETENESS OF SCANNED COPIES OF THIS PLAN SHEET.

DETOUR DURING CLOSURE OF CONNECTOR FROM ROUTE 10 EAST TO ROUTE 215

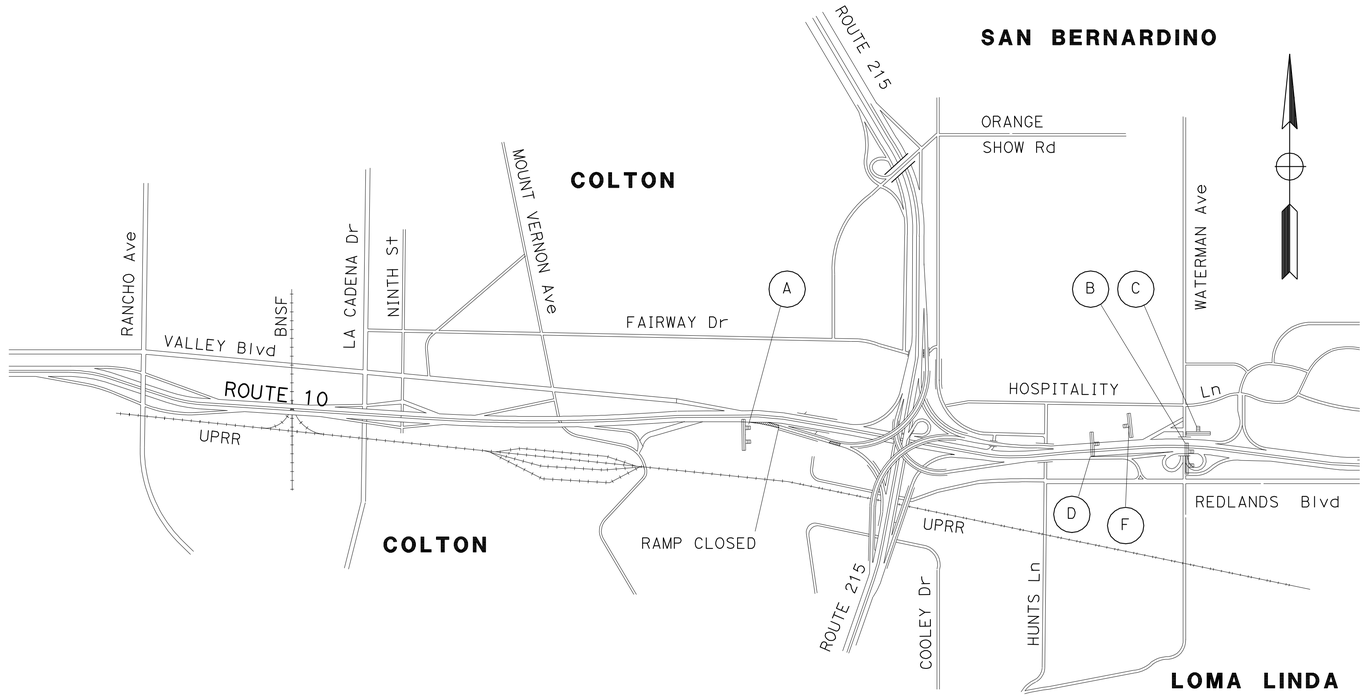

SPECIAL 1

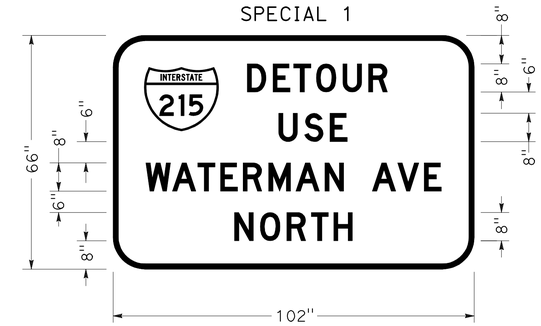

SPECIAL 2

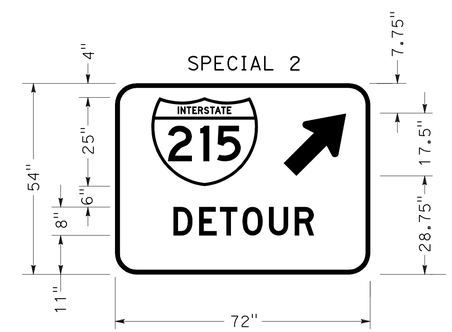

ALL SIGNS ARE CAPITAL LETTER SIZE 8D, BLACK ON ORANGE.

CONSTRUCTION AREA SIGNS

SIGN No.	SIGN CODE FED	SIGN CODE CA	PANEL SIZE	SIGN MESSAGE	No. OF POST(S) AND SIZE	No. OF SIGNS (N) (EA)	TYPE III BARRICADE (EA)
A	SPECIAL 1		102" X 66"	INTERSTATE 215 DETOUR USE WATERMAN AVE NORTH	2 - 6" X 6"	1	
B	SPECIAL 2		72" X 54"	INTERSTATE 215 DETOUR	2 - 6" X 6"	1	
C	M4-10(LT)		48" X 36"	LEFT ARROW DETOUR	ON TYPE III BARRICADE		1
D		SC3	48" X 36"	STRAIGHT ARROW DETOUR	ON TYPE III BARRICADE		1
E	M4-8a		24" X 18"	END DETOUR	ON TYPE III BARRICADE		1
					TOTAL	2	3

(N) - NOT A SEPARATE PAY ITEM, FOR INFORMATION ONLY.

THIS PLAN ACCURATE FOR DETOUR CONSTRUCTION WORK ONLY.

DETOUR PLAN

NO SCALE

DE-5

REVISED BY	DATE REVISED

CALCULATED-DESIGNED BY	CHECKED BY
TRI TRAN	THANH TRINH

FUNCTIONAL SUPERVISOR: BILL WASSER

STATE OF CALIFORNIA - DEPARTMENT OF TRANSPORTATION
Caltrans TRAFFIC DESIGN A

LAST REVISION 01-06-11 | DATE PLOTTED => 03-MAR-2011 | TIME PLOTTED => 17:55

Dist	COUNTY	ROUTE	POST MILES TOTAL PROJECT	SHEET No.	TOTAL SHEETS
08	SBd	10	20.0/R24.5	22	56

Thanh Trinh 1-07-11
REGISTERED CIVIL ENGINEER DATE

2-28-11
PLANS APPROVAL DATE

REGISTERED PROFESSIONAL ENGINEER
THANH TRINH
No. C41189
Exp. 3/31/11
CIVIL
STATE OF CALIFORNIA

THE STATE OF CALIFORNIA OR ITS OFFICERS OR AGENTS SHALL NOT BE RESPONSIBLE FOR THE ACCURACY OR COMPLETENESS OF SCANNED COPIES OF THIS PLAN SHEET.

DETOUR DURING CLOSURE OF ON-RAMP FROM RIVERSIDE Ave TO ROUTE 10 EASTBOUND

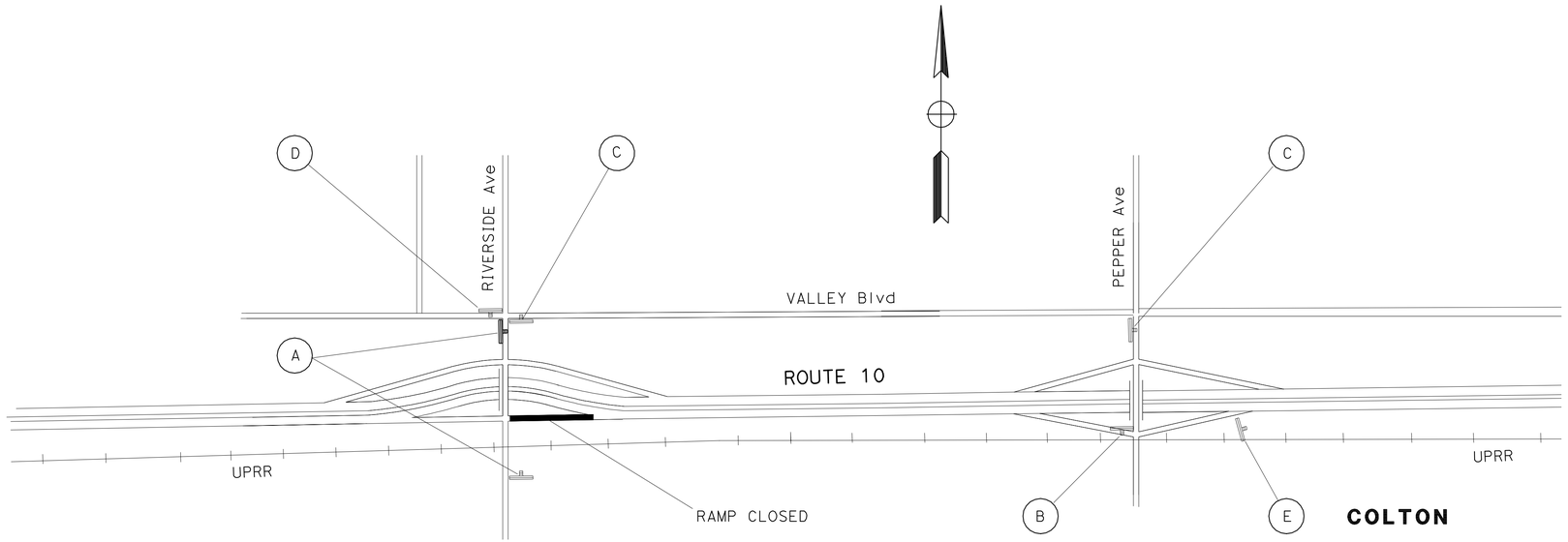

CONSTRUCTION AREA SIGNS

SIGN No.	SIGN CODE FED	SIGN CODE CA	PANEL SIZE	SIGN MESSAGE	No. OF POST(S) AND SIZE	No. OF SIGNS (N) (EA)	TYPE III BARRICADE (EA)
A		SC3	48" X 36"	STRAIGHT DETOUR	1 - 4" X 6"	2	
		G27-2	24" X 24"	INTERSTATE ROUTE 10			
	M3-2		26" X 12"	EAST			
B	M4-10(LT)		48" X 36"	DETOUR (LT)	ON TYPE III BARRICADE		1
C	M4-10(RT)		48" X 36"	DETOUR (RT)	ON TYPE III BARRICADE		2
D	M4-10(LT)		48" X 36"	DETOUR (LT)	1 - 4" X 6"	1	
		G27-2	24" X 24"	INTERSTATE ROUTE 10			
	M3-2		26" X 12"	EAST			
E	M4-8a		24" X 18"	END DETOUR	ON TYPE III BARRICADE		1
					TOTAL	3	4

(N) - NOT A SEPARATE PAY ITEM, FOR INFORMATION ONLY.

THIS PLAN ACCURATE FOR DETOUR CONSTRUCTION WORK ONLY.

DETOUR PLAN

NO SCALE

DE-6

REVISED BY | DATE REVISED
TRI TRAN | THANH TRINH
CALCULATED-DESIGNED BY | CHECKED BY
FUNCTIONAL SUPERVISOR
BILL WASSER

STATE OF CALIFORNIA - DEPARTMENT OF TRANSPORTATION
Caltrans TRAFFIC DESIGN A

LAST REVISION 01-06-11 | DATE PLOTTED => 03-MAR-2011 | TIME PLOTTED => 17:55

Dist	COUNTY	ROUTE	POST MILES TOTAL PROJECT	SHEET No.	TOTAL SHEETS
08	SBd	10	20.0/R24.5	23	56

Thanh Trinh 1-07-11
REGISTERED CIVIL ENGINEER DATE

2-28-11
PLANS APPROVAL DATE

REGISTERED PROFESSIONAL ENGINEER THANH TRINH No. C41189 Exp. 3/31/11 CIVIL STATE OF CALIFORNIA

THE STATE OF CALIFORNIA OR ITS OFFICERS OR AGENTS SHALL NOT BE RESPONSIBLE FOR THE ACCURACY OR COMPLETENESS OF SCANNED COPIES OF THIS PLAN SHEET.

DETOUR DURING CLOSURE OF ON-RAMP FROM PEPPER Ave TO ROUTE 10 EASTBOUND

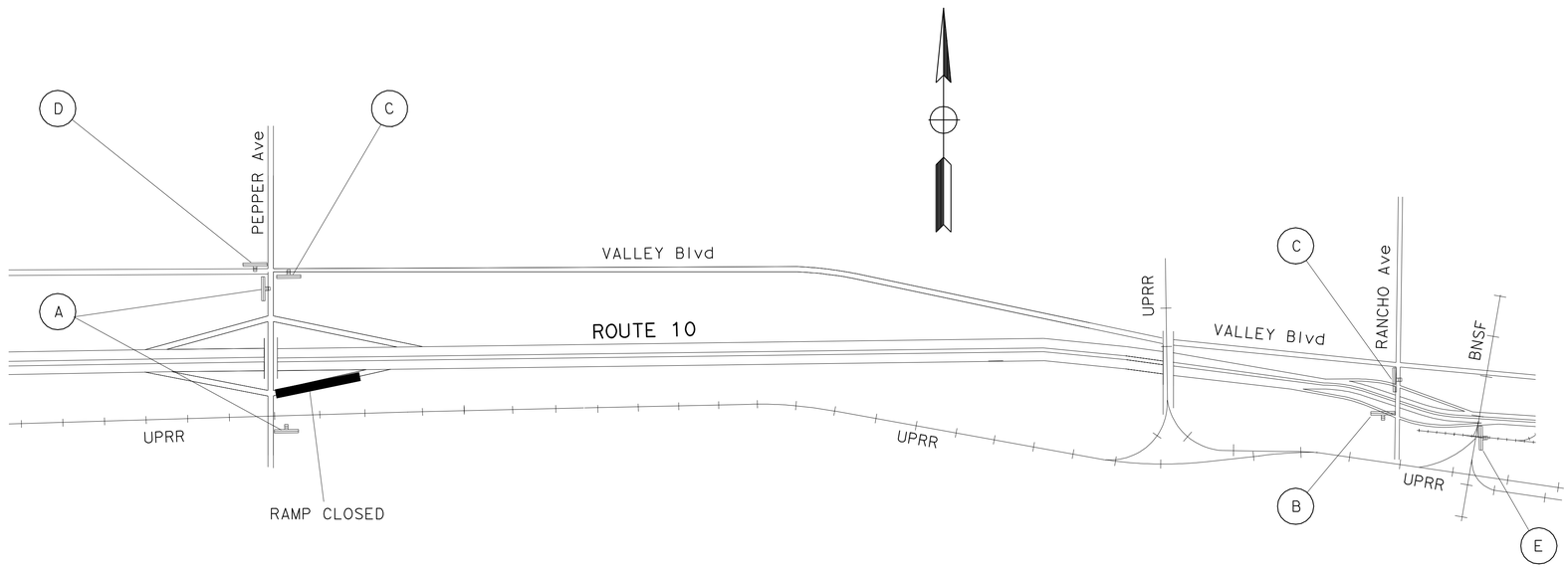

CONSTRUCTION AREA SIGNS

SIGN No.	SIGN CODE FED	SIGN CODE CA	PANEL SIZE	SIGN MESSAGE	No. OF POST(S) AND SIZE	No. OF SIGNS (N) (EA)	TYPE III BARRICADE (EA)
A		SC3	48" X 36"	STRAIGHT DETOUR	1 - 4" X 6"	2	
		G27-2	24" X 24"	INTERSTATE ROUTE 10			
	M3-2		26" X 12"	EAST			
B	M4-10(LT)		48" X 36"	DETOUR (LT)	ON TYPE III BARRICADE		1
C	M4-10(RT)		48" X 36"	DETOUR (RT)	ON TYPE III BARRICADE		2
D	M4-10(LT)		48" X 36"	DETOUR (LT)	1 - 4" X 6"	1	
		G27-2	24" X 24"	INTERSTATE ROUTE 10			
	M3-2		26" X 12"	EAST			
E	M4-8a		24" X 18"	END DETOUR	ON TYPE III BARRICADE		1
					TOTAL	3	4

(N) - NOT A SEPARATE PAY ITEM, FOR INFORMATION ONLY.

THIS PLAN ACCURATE FOR DETOUR CONSTRUCTION WORK ONLY.

DETOUR PLAN

NO SCALE

DE-7

STATE OF CALIFORNIA - DEPARTMENT OF TRANSPORTATION
Caltrans TRAFFIC DESIGN A

FUNCTIONAL SUPERVISOR: BILL WASSER
CALCULATED-DESIGNED BY: TRI TRAN
CHECKED BY: THANH TRINH
REVISED BY
DATE REVISED

LAST REVISION 01-06-11
DATE PLOTTED => 03-MAR-2011
TIME PLOTTED => 17:55

Dist	COUNTY	ROUTE	POST MILES TOTAL PROJECT	SHEET No.	TOTAL SHEETS
08	SBd	10	20.0/R24.5	24	56

Thanh Trinh 1-07-11
REGISTERED CIVIL ENGINEER DATE

2-28-11
PLANS APPROVAL DATE

REGISTERED PROFESSIONAL ENGINEER
THANH TRINH
No. C41189
Exp. 3/31/11
CIVIL
STATE OF CALIFORNIA

THE STATE OF CALIFORNIA OR ITS OFFICERS OR AGENTS SHALL NOT BE RESPONSIBLE FOR THE ACCURACY OR COMPLETENESS OF SCANNED COPIES OF THIS PLAN SHEET.

DETOUR DURING CLOSURE OF ON-RAMP FROM RANCHO Ave TO ROUTE 10 EASTBOUND

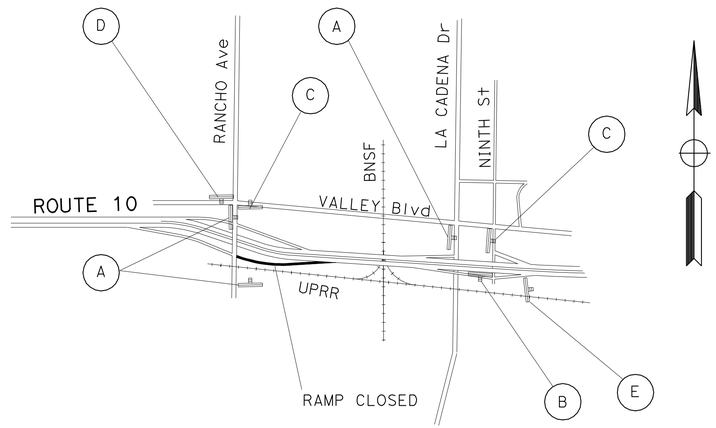

CONSTRUCTION AREA SIGNS

SIGN No.	SIGN CODE FED	SIGN CODE CA	PANEL SIZE	SIGN MESSAGE	No. OF POST(S) AND SIZE	No. OF SIGNS (N) (EA)	TYPE III BARRICADE (EA)
A		SC3	48" X 36"	STRAIGHT DETOUR	1 - 4" X 6"	3	
		G27-2	24" X 24"	INTERSTATE ROUTE 10			
	M3-2		26" X 12"	EAST			
B	M4-10(LT)		48" X 36"	DETOUR (LT)	ON TYPE III BARRICADE		1
C	M4-10(RT)		48" X 36"	DETOUR (RT)	ON TYPE III BARRICADE		2
D	M4-10(LT)		48" X 36"	DETOUR (LT)	1 - 4" X 6"	1	
		G27-2	24" X 24"	INTERSTATE ROUTE 10			
	M3-2		26" X 12"	EAST			
E	M4-8a		24" X 18"	END DETOUR	ON TYPE III BARRICADE		1
					TOTAL	4	4

(N) - NOT A SEPARATE PAY ITEM, FOR INFORMATION ONLY.

THIS PLAN ACCURATE FOR DETOUR CONSTRUCTION WORK ONLY.

DETOUR PLAN

NO SCALE

DE-8

STATE OF CALIFORNIA - DEPARTMENT OF TRANSPORTATION
Caltrans TRAFFIC DESIGN A

FUNCTIONAL SUPERVISOR: BILL WASSER
CALCULATED-DESIGNED BY: TRI TRAN
CHECKED BY: THANH TRINH
REVISED BY
DATE REVISED

LAST REVISION 01-06-11
DATE PLOTTED => 03-MAR-2011
TIME PLOTTED => 17:55

Dist	COUNTY	ROUTE	POST MILES TOTAL PROJECT	SHEET No.	TOTAL SHEETS
08	SBd	10	20.0/R24.5	25	56

Thanh Trinh 1-07-11
REGISTERED CIVIL ENGINEER DATE

2-28-11
PLANS APPROVAL DATE

REGISTERED PROFESSIONAL ENGINEER
THANH TRINH
No. C41189
Exp. 3/31/11
CIVIL
STATE OF CALIFORNIA

THE STATE OF CALIFORNIA OR ITS OFFICERS OR AGENTS SHALL NOT BE RESPONSIBLE FOR THE ACCURACY OR COMPLETENESS OF SCANNED COPIES OF THIS PLAN SHEET.

DETOUR DURING CLOSURE OF ON-RAMP FROM NINTH St TO ROUTE 10 EASTBOUND

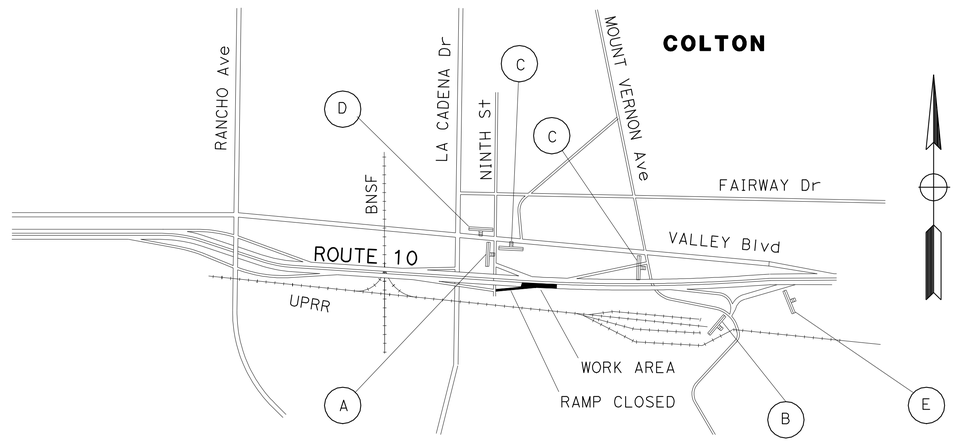

CONSTRUCTION AREA SIGNS

SIGN No.	SIGN CODE FED	SIGN CODE CA	PANEL SIZE	SIGN MESSAGE	No. OF POST(S) AND SIZE	No. OF SIGNS (N) (EA)	TYPE III BARRICADE (EA)
A		SC3	48" X 36"	STRAIGHT DETOUR	1 - 4" X 6"	1	
		G27-2	24" X 24"	INTERSTATE ROUTE 10			
	M3-2		26" X 12"	EAST			
B	M4-10(LT)		48" X 36"	DETOUR (LT)	ON TYPE III BARRICADE		1
C	M4-10(RT)		48" X 36"	DETOUR (RT)	ON TYPE III BARRICADE		2
D	M4-10(LT)		48" X 36"	DETOUR (LT)	1 - 4" X 6"	1	
		G27-2	24" X 24"	INTERSTATE ROUTE 10			
	M3-2		26" X 12"	EAST			
E	M4-8a		24" X 18"	END DETOUR	ON TYPE III BARRICADE		1
					TOTAL	2	4

(N) - NOT A SEPARATE PAY ITEM, FOR INFORMATION ONLY.

THIS PLAN ACCURATE FOR DETOUR CONSTRUCTION WORK ONLY.

DETOUR PLAN

NO SCALE

DE-9

STATE OF CALIFORNIA - DEPARTMENT OF TRANSPORTATION
Caltrans TRAFFIC DESIGN A

FUNCTIONAL SUPERVISOR: BILL WASSER
CALCULATED-DESIGNED BY: TRI TRAN
CHECKED BY: THANH TRINH
REVISED BY
DATE REVISED

LAST REVISION 01-06-11
DATE PLOTTED => 03-MAR-2011
TIME PLOTTED => 17:55

Dist	COUNTY	ROUTE	POST MILES TOTAL PROJECT	SHEET No.	TOTAL SHEETS
08	SBd	10	20.0/R24.5	26	56

Thanh Trinh 1-07-11
REGISTERED CIVIL ENGINEER DATE

2-28-11
PLANS APPROVAL DATE

REGISTERED PROFESSIONAL ENGINEER
THANH TRINH
No. C41189
Exp. 3/31/11
CIVIL
STATE OF CALIFORNIA

THE STATE OF CALIFORNIA OR ITS OFFICERS OR AGENTS SHALL NOT BE RESPONSIBLE FOR THE ACCURACY OR COMPLETENESS OF SCANNED COPIES OF THIS PLAN SHEET.

DETOUR DURING CLOSURE OF ON-RAMP FROM MOUNT VERNON Ave TO ROUTE 10 EASTBOUND

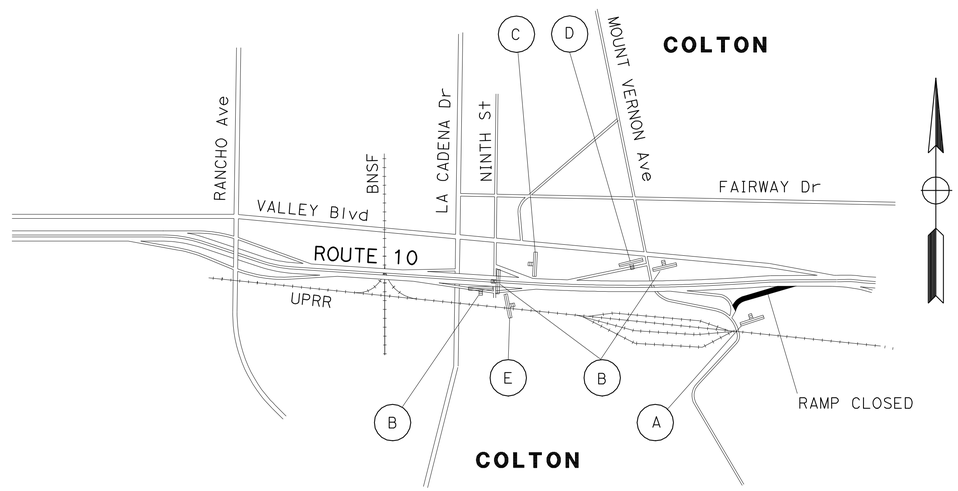

CONSTRUCTION AREA SIGNS

SIGN No.	SIGN CODE FED	SIGN CODE CA	PANEL SIZE	SIGN MESSAGE	No. OF POST(S) AND SIZE	No. OF SIGNS (N) (EA)	TYPE III BARRICADE (EA)
A		SC3	48" X 36"	STRAIGHT DETOUR	1 - 4" X 6"	1	
		G27-2	24" X 24"	INTERSTATE ROUTE 10			
	M3-2		26" X 12"	EAST			
B	M4-10(LT)		48" X 36"	DETOUR (LT)	ON TYPE III BARRICADE		3
C	M4-10(RT)		48" X 36"	DETOUR (RT)	ON TYPE III BARRICADE		1
D	M4-10(RT)		48" X 36"	DETOUR (RT)	1 - 4" X 6"	1	
		G27-2	24" X 24"	INTERSTATE ROUTE 10			
	M3-2		26" X 12"	EAST			
E	M4-8a		24" X 18"	END DETOUR	ON TYPE III BARRICADE		1
					TOTAL	2	5

(N) - NOT A SEPARATE PAY ITEM, FOR INFORMATION ONLY.

THIS PLAN ACCURATE FOR DETOUR CONSTRUCTION WORK ONLY.

DETOUR PLAN

NO SCALE

DE-10

STATE OF CALIFORNIA - DEPARTMENT OF TRANSPORTATION
Caltrans TRAFFIC DESIGN A

FUNCTIONAL SUPERVISOR: BILL WASSER
CALCULATED-DESIGNED BY: TRI TRAN
CHECKED BY: THANH TRINH
REVISED BY
DATE REVISED

LAST REVISION 01-06-11
DATE PLOTTED => 03-MAR-2011
TIME PLOTTED => 16:04

Dist	COUNTY	ROUTE	POST MILES TOTAL PROJECT	SHEET No.	TOTAL SHEETS
08	SBd	10	20.0/R24.5	27	56

Thanh Trinh 1-07-11
REGISTERED CIVIL ENGINEER DATE

2-28-11
PLANS APPROVAL DATE

REGISTERED PROFESSIONAL ENGINEER
THANH TRINH
No. C41189
Exp. 3/31/11
CIVIL
STATE OF CALIFORNIA

THE STATE OF CALIFORNIA OR ITS OFFICERS OR AGENTS SHALL NOT BE RESPONSIBLE FOR THE ACCURACY OR COMPLETENESS OF SCANNED COPIES OF THIS PLAN SHEET.

DETOUR DURING CLOSURE OF ON-RAMP FROM S SUNWEST Ln TO ROUTE 10 WESTBOUND

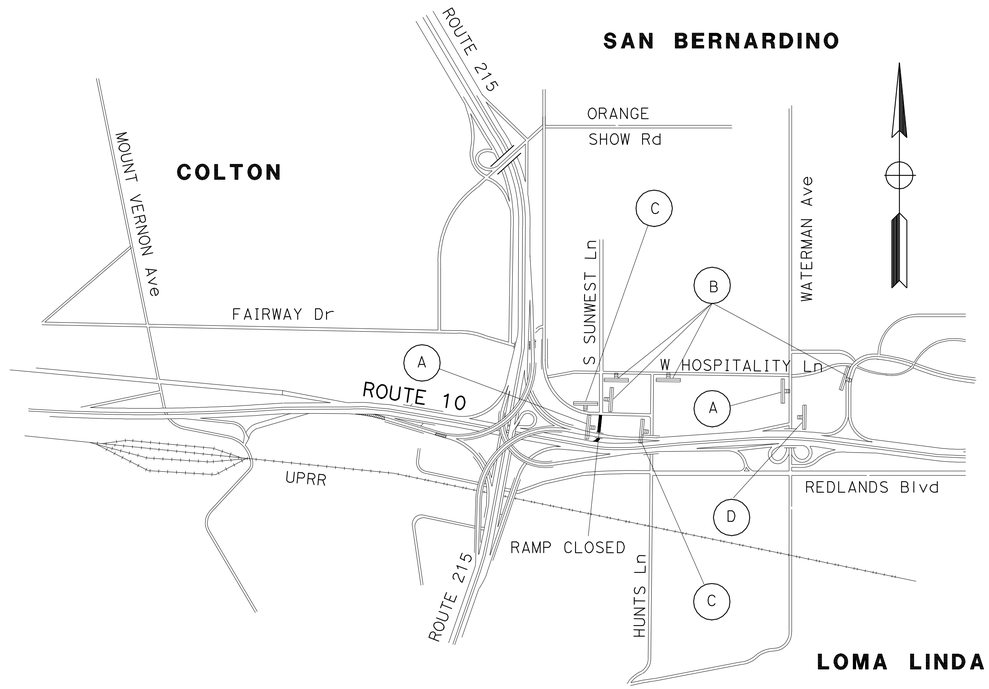

CONSTRUCTION AREA SIGNS

SIGN No.	SIGN CODE FED	SIGN CODE CA	PANEL SIZE	SIGN MESSAGE	No. OF POST(S) AND SIZE	No. OF SIGNS (N) (EA)	TYPE III BARRICADE (EA)
A		SC3	48" X 36"	STRAIGHT DETOUR	1 - 4" X 6"	2	
		G27-2	24" X 24"	INTERSTATE ROUTE 10			
	M3-4		26" X 12"	WEST			
B	M4-10(RT)		48" X 36"	DETOUR (RT)	ON TYPE III BARRICADE		4
C	M4-10(LT)		48" X 36"	DETOUR (LT)	1 - 4" X 6"	2	
		G27-2	24" X 24"	INTERSTATE ROUTE 10			
	M3-4		26" X 12"	WEST			
D	M4-8a		24" X 18"	END DETOUR	ON TYPE III BARRICADE		1
					TOTAL	4	5

(N) - NOT A SEPARATE PAY ITEM, FOR INFORMATION ONLY.

THIS PLAN ACCURATE FOR DETOUR CONSTRUCTION WORK ONLY.

DETOUR PLAN

NO SCALE

DE-11

STATE OF CALIFORNIA - DEPARTMENT OF TRANSPORTATION
Caltrans TRAFFIC DESIGN A

FUNCTIONAL SUPERVISOR: BILL WASSER
CALCULATED-DESIGNED BY: TRI TRAN
CHECKED BY: THANH TRINH
REVISED BY
DATE REVISED

LAST REVISION 01-06-11
DATE PLOTTED => 03-MAR-2011
TIME PLOTTED => 16:04

Dist	COUNTY	ROUTE	POST MILES TOTAL PROJECT	SHEET No.	TOTAL SHEETS
08	SBd	10	20.0/R24.5	28	56

Thanh Trinh 1-07-11
REGISTERED CIVIL ENGINEER DATE

2-28-11
PLANS APPROVAL DATE

REGISTERED PROFESSIONAL ENGINEER THANH TRINH No. C41189 Exp. 3/31/11 CIVIL STATE OF CALIFORNIA

THE STATE OF CALIFORNIA OR ITS OFFICERS OR AGENTS SHALL NOT BE RESPONSIBLE FOR THE ACCURACY OR COMPLETENESS OF SCANNED COPIES OF THIS PLAN SHEET.

DETOUR DURING CLOSURE OF CONNECTOR FROM ROUTE 215 SOUTH TO ROUTE 10 WEST

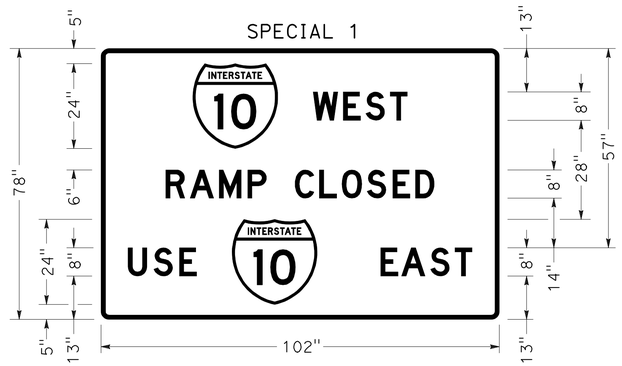

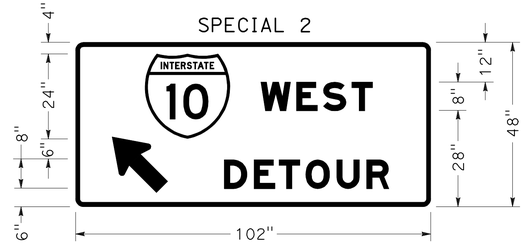

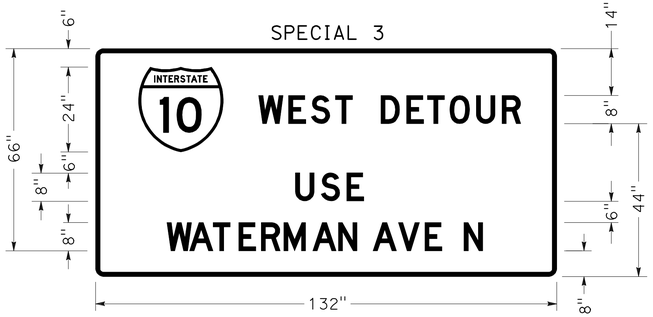

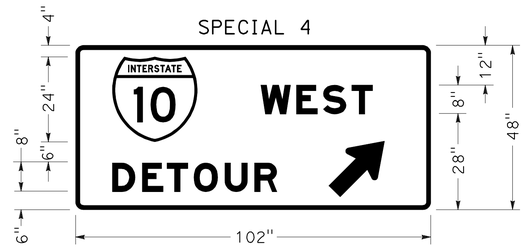

ALL SIGNS ARE CAPITAL LETTER SIZE 8D, BLACK ON ORANGE.

SAN BERNARDINO

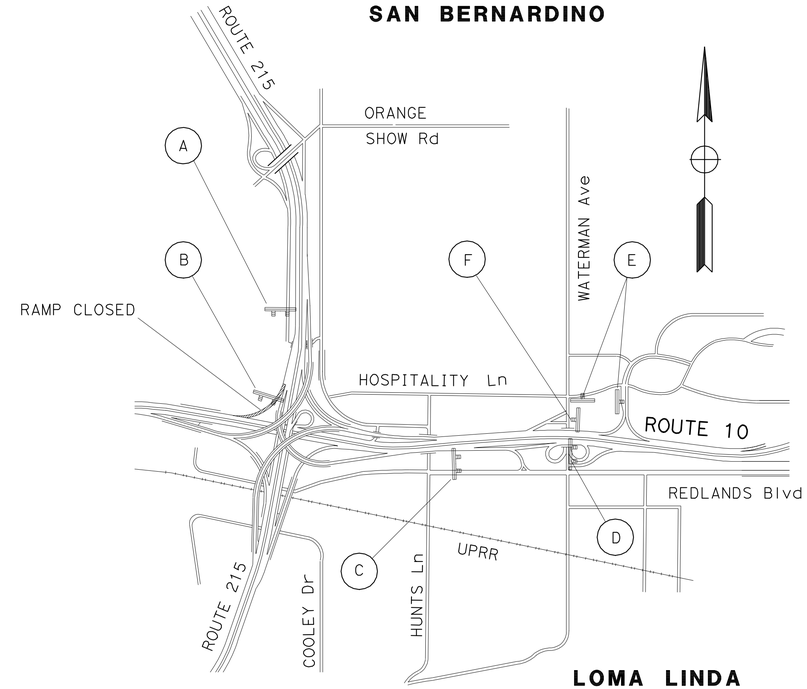

CONSTRUCTION AREA SIGNS

SIGN No.	SIGN CODE FED	SIGN CODE CA	PANEL SIZE	SIGN MESSAGE	No. OF POST(S) AND SIZE	No. OF SIGNS (N) (EA)	TYPE III BARRICADE (EA)
A	SPECIAL 1		114" X 78"	INTERSTATE 10 WEST RAMP CLOSED USE INTERSTATE 10 EAST	2 - 6" X 6"	1	
B	SPECIAL 2		102" X 48"	INTERSTATE 10 WEST DETOUR	2 - 6" X 6"	1	
C	SPECIAL 3		132" X 66"	INTERSTATE 10 WEST DETOUR USE WATERMAN AVE N	2 - 6" X 6"	1	
D	SPECIAL 4		102" X 48"	INTERSTATE 10 WEST DETOUR	2 - 6" X 6"	1	
E	M4-10(RT)		48" X 36"	RIGHT ARROW DETOUR	ON TYPE III BARRICADE		2
E	M4-8a		24" X 18"	END DETOUR	ON TYPE III BARRICADE		1
					TOTAL	4	3

(N) - NOT A SEPARATE PAY ITEM, FOR INFORMATION ONLY.

THIS PLAN ACCURATE FOR DETOUR CONSTRUCTION WORK ONLY.

DETOUR PLAN

NO SCALE

DE-12

STATE OF CALIFORNIA - DEPARTMENT OF TRANSPORTATION
Caltrans TRAFFIC DESIGN A
FUNCTIONAL SUPERVISOR: BILL WASSER
CALCULATED-DESIGNED BY: TRI TRAN
CHECKED BY: THANH TRINH
REVISED BY
DATE REVISED

LAST REVISION 01-06-11
DATE PLOTTED => 03-MAR-2011
TIME PLOTTED => 16:04

Dist	COUNTY	ROUTE	POST MILES TOTAL PROJECT	SHEET No.	TOTAL SHEETS
08	SBd	10	20.0/R24.5	29	56

Thanh Trinh 1-07-11
REGISTERED CIVIL ENGINEER DATE

2-28-11
PLANS APPROVAL DATE

REGISTERED PROFESSIONAL ENGINEER THANH TRINH No. C41189 Exp. 3/31/11 CIVIL STATE OF CALIFORNIA

THE STATE OF CALIFORNIA OR ITS OFFICERS OR AGENTS SHALL NOT BE RESPONSIBLE FOR THE ACCURACY OR COMPLETENESS OF SCANNED COPIES OF THIS PLAN SHEET.

DETOUR DURING CLOSURE OF THE LOOP RAMP FROM ROUTE 215 NB TO ROUTE 10 WEST

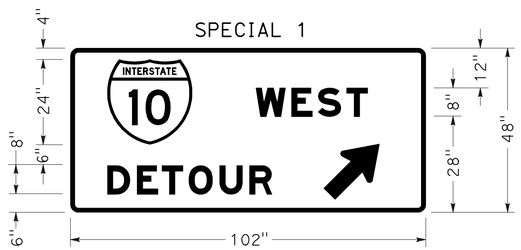

ALL SIGNS ARE CAPITAL LETTER SIZE 8D, BLACK ON ORANGE.

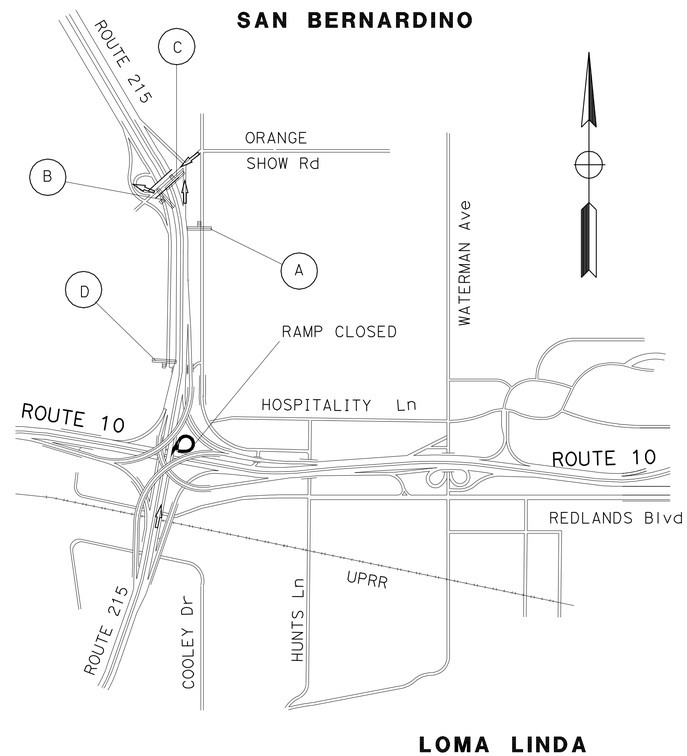

CONSTRUCTION AREA SIGNS

SIGN No.	SIGN CODE FED	SIGN CODE CA	PANEL SIZE	SIGN MESSAGE	No. OF POST(S) AND SIZE	No. OF SIGNS (N) (EA)	TYPE III BARRICADE (EA)
A	SPECIAL 1		102" X 48"	INTERSTATE 10 WEST DETOUR	2 - 6" X 6"	1	
B	M4-10(RT)		48" X 36"	RIGHT ARROW DETOUR	ON TYPE III BARRICADE		1
C	M4-10(LT)		48" X 36"	LEFT ARROW DETOUR	ON TYPE III BARRICADE		1
D	M4-8a		24" X 18"	END DETOUR	ON TYPE III BARRICADE		1
				TOTAL		1	3

(N) - NOT A SEPARATE PAY ITEM, FOR INFORMATION ONLY.

THIS PLAN ACCURATE FOR DETOUR CONSTRUCTION WORK ONLY.

DETOUR PLAN

NO SCALE

DE-13

STATE OF CALIFORNIA - DEPARTMENT OF TRANSPORTATION
Caltrans TRAFFIC DESIGN A

FUNCTIONAL SUPERVISOR: BILL WASSER
CALCULATED-DESIGNED BY: TRI TRAN
CHECKED BY: THANH TRINH
REVISED BY
DATE REVISED

LAST REVISION 01-06-11
DATE PLOTTED => 03-MAR-2011
TIME PLOTTED => 16:04

Dist	COUNTY	ROUTE	POST MILES TOTAL PROJECT	SHEET No.	TOTAL SHEETS
08	SBd	10	20.0/R24.5	30	56

Thanh Trinh 1-07-11
REGISTERED CIVIL ENGINEER DATE

2-28-11
PLANS APPROVAL DATE

REGISTERED PROFESSIONAL ENGINEER
THANH TRINH
No. C41189
Exp. 3/31/11
CIVIL
STATE OF CALIFORNIA

THE STATE OF CALIFORNIA OR ITS OFFICERS OR AGENTS SHALL NOT BE RESPONSIBLE FOR THE ACCURACY OR COMPLETENESS OF SCANNED COPIES OF THIS PLAN SHEET.

DETOUR DURING CLOSURE OF THE OFF-RAMP FROM ROUTE 10 WESTBOUND TO MOUNT VERNON Ave

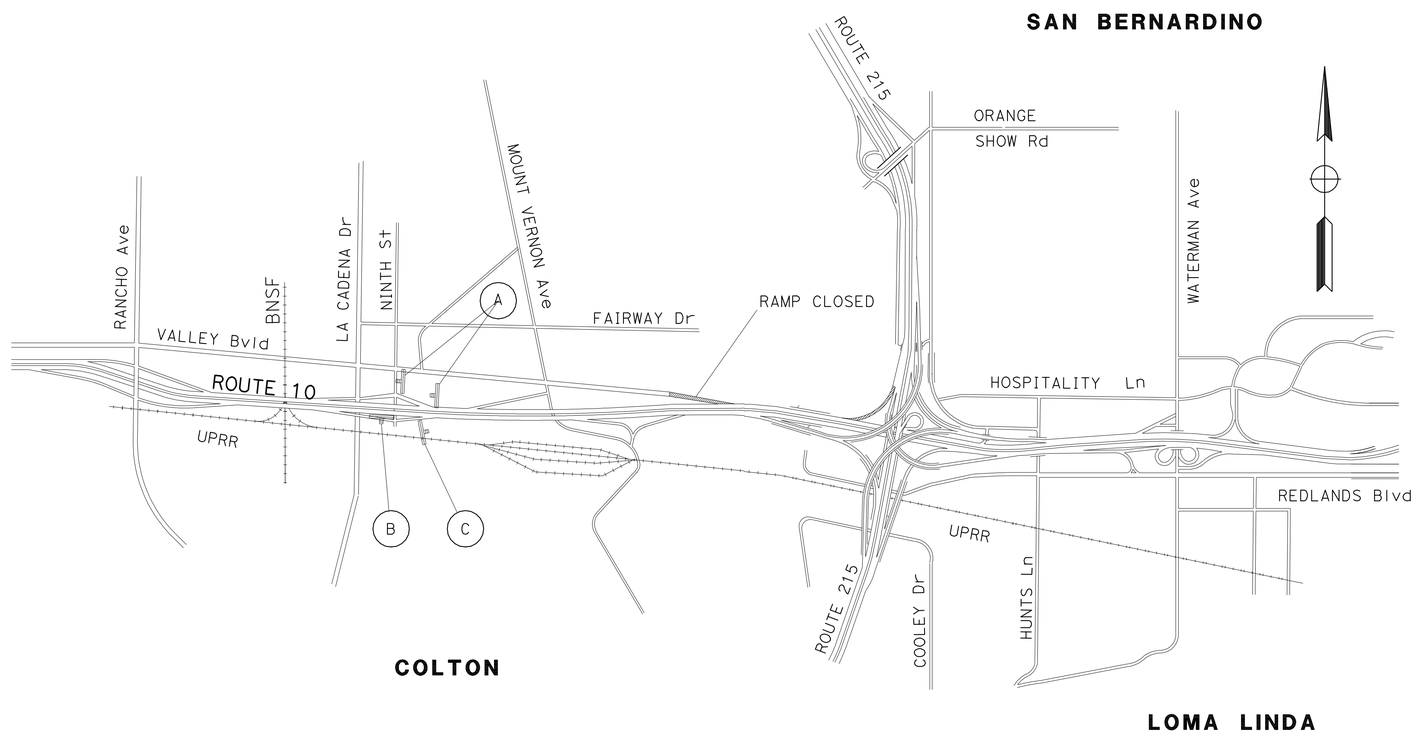

CONSTRUCTION AREA SIGNS (MOUNTED ON BARRICADES)

SIGN No.	SIGN CODE		PANEL SIZE	SIGN MESSAGE	TYPE III BARRICADE
	FED	CA			(EA)
A	M4-10(RT)		48" X 36"	RIGHT ARROW DETOUR	2
B	M4-10(LT)		48" X 36"	LEFT ARROW DETOUR	1
C	M4-8a		24" X 18"	END DETOUR	1
				TOTAL	4

THIS PLAN ACCURATE FOR DETOUR CONSTRUCTION WORK ONLY.

DETOUR PLAN

NO SCALE

DE-14

STATE OF CALIFORNIA - DEPARTMENT OF TRANSPORTATION
Caltrans TRAFFIC DESIGN A

FUNCTIONAL SUPERVISOR: BILL WASSER
CALCULATED-DESIGNED BY: TRI TRAN
CHECKED BY: THANH TRINH
REVISED BY
DATE REVISED

LAST REVISION 01-06-11
DATE PLOTTED => 03-MAR-2011
TIME PLOTTED => 16:04

Dist	COUNTY	ROUTE	POST MILES TOTAL PROJECT	SHEET No.	TOTAL SHEETS
08	SBd	10	20.0/R24.5	31	56

Thanh Trinh 1-07-11
REGISTERED CIVIL ENGINEER DATE

2-28-11
PLANS APPROVAL DATE

REGISTERED PROFESSIONAL ENGINEER
THANH TRINH
No. C41189
Exp. 3/31/11
CIVIL
STATE OF CALIFORNIA

THE STATE OF CALIFORNIA OR ITS OFFICERS OR AGENTS SHALL NOT BE RESPONSIBLE FOR THE ACCURACY OR COMPLETENESS OF SCANNED COPIES OF THIS PLAN SHEET.

DETOUR DURING CLOSURE OF THE ON-RAMP FROM MOUNT VERNON Ave TO ROUTE 10 WEST

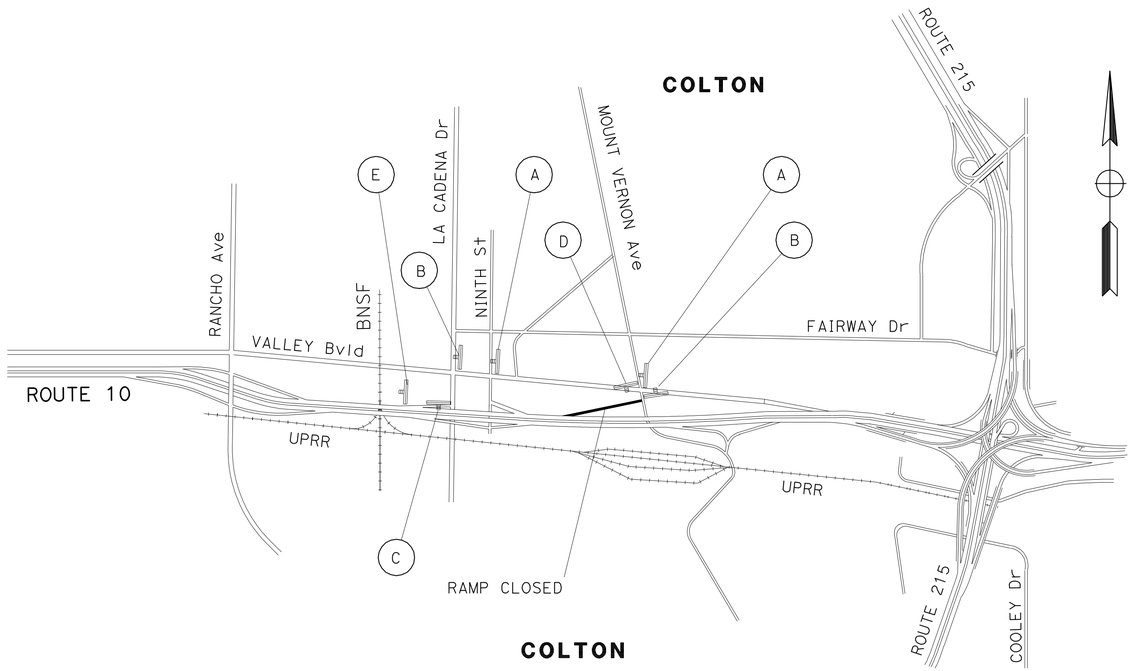

CONSTRUCTION AREA SIGNS

SIGN No.	SIGN CODE FED	SIGN CODE CA	PANEL SIZE	SIGN MESSAGE	No. OF POST(S) AND SIZE	No. OF SIGNS (N) (EA)	TYPE III BARRICADE (EA)
A		SC3	48" X 36"	STRAIGHT DETOUR	1 - 4" X 6"	2	
		G27-2	24" X 24"	INTERSTATE ROUTE 10			
	M3-4		26" X 12"	WEST			
B	M4-10(LT)		48" X 36"	DETOUR (LT)	ON TYPE III BARRICADE		2
C	M4-10(RT)		48" X 36"	DETOUR (RT)	ON TYPE III BARRICADE		1
D	M4-10(RT)		48" X 36"	DETOUR (RT)	1 - 4" X 6"	1	
		G27-2	24" X 24"	INTERSTATE ROUTE 10			
	M3-4		26" X 12"	WEST			
E	M4-8a		24" X 18"	END DETOUR	ON TYPE III BARRICADE		1
					TOTAL	3	4

(N) - NOT A SEPARATE PAY ITEM, FOR INFORMATION ONLY.

THIS PLAN ACCURATE FOR DETOUR CONSTRUCTION WORK ONLY.

DETOUR PLAN

NO SCALE

DE-15

STATE OF CALIFORNIA - DEPARTMENT OF TRANSPORTATION
Caltrans TRAFFIC DESIGN A

FUNCTIONAL SUPERVISOR: BILL WASSER
CALCULATED-DESIGNED BY: TRI TRAN
CHECKED BY: THANH TRINH
REVISED BY
DATE REVISED

LAST REVISION 01-06-11
DATE PLOTTED => 03-MAR-2011
TIME PLOTTED => 16:05

Dist	COUNTY	ROUTE	POST MILES TOTAL PROJECT	SHEET No.	TOTAL SHEETS
08	SBd	10	20.0/R24.5	32	56

Thanh Trinh 1-07-11
REGISTERED CIVIL ENGINEER DATE

2-28-11
PLANS APPROVAL DATE

REGISTERED PROFESSIONAL ENGINEER THANH TRINH No. C41189 Exp. 3/31/11 CIVIL STATE OF CALIFORNIA

THE STATE OF CALIFORNIA OR ITS OFFICERS OR AGENTS SHALL NOT BE RESPONSIBLE FOR THE ACCURACY OR COMPLETENESS OF SCANNED COPIES OF THIS PLAN SHEET.

DETOUR DURING CLOSURE OF THE OFF-RAMP FROM ROUTE 10 WESTBOUND TO NINTH STREET

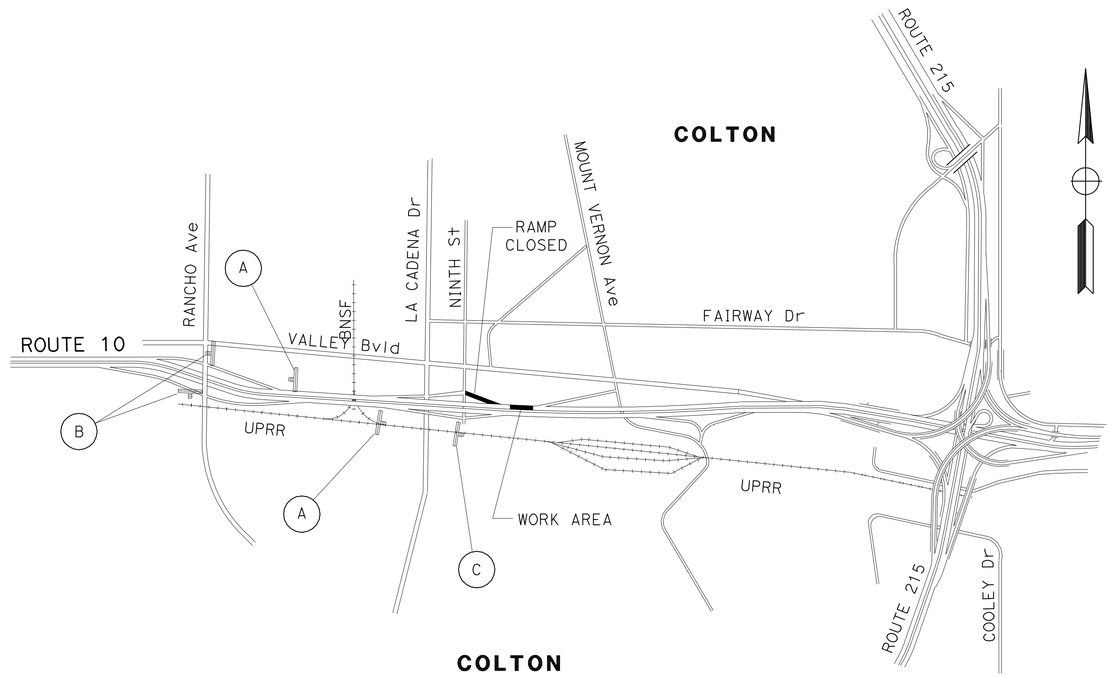

CONSTRUCTION AREA SIGNS (MOUNTED ON BARRICADES)

SIGN No.	SIGN CODE		PANEL SIZE	SIGN MESSAGE	TYPE III BARRICADE
	FED	CA			(EA)
A	M4-10(RT)		48" X 36"	DETOUR (RT)	2
B	M4-10(LT)		48" X 36"	DETOUR (LT)	2
C	M4-8a		24" X 18"	END DETOUR	1
				TOTAL	5

THIS PLAN ACCURATE FOR DETOUR CONSTRUCTION WORK ONLY.

DETOUR PLAN

NO SCALE

DE-16

STATE OF CALIFORNIA - DEPARTMENT OF TRANSPORTATION
Caltrans TRAFFIC DESIGN A

FUNCTIONAL SUPERVISOR: BILL WASSER
CALCULATED-DESIGNED BY: TRI TRAN
CHECKED BY: THANH TRINH
REVISED BY
DATE REVISED

LAST REVISION 01-06-11
DATE PLOTTED => 03-MAR-2011
TIME PLOTTED => 16:05

Dist	COUNTY	ROUTE	POST MILES TOTAL PROJECT	SHEET No.	TOTAL SHEETS
08	SBd	10	20.0/R24.5	33	56

Thanh Trinh 1-07-11
REGISTERED CIVIL ENGINEER DATE

2-28-11
PLANS APPROVAL DATE

REGISTERED PROFESSIONAL ENGINEER THANH TRINH No. C41189 Exp. 3/31/11 CIVIL STATE OF CALIFORNIA

THE STATE OF CALIFORNIA OR ITS OFFICERS OR AGENTS SHALL NOT BE RESPONSIBLE FOR THE ACCURACY OR COMPLETENESS OF SCANNED COPIES OF THIS PLAN SHEET.

DETOUR DURING CLOSURE OF THE ON-RAMP FROM LA CADENA Dr TO ROUTE 10 WESTBOUND

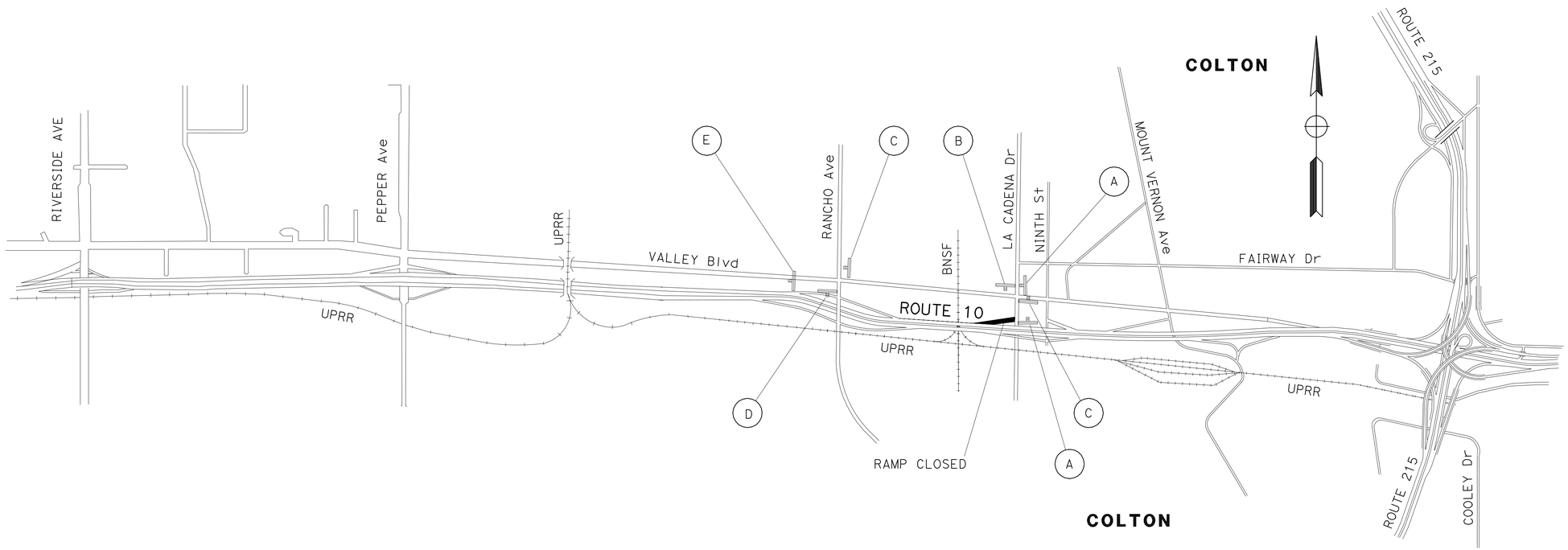

CONSTRUCTION AREA SIGNS

SIGN No.	SIGN CODE FED	SIGN CODE CA	PANEL SIZE	SIGN MESSAGE	No. OF POST(S) AND SIZE	No. OF SIGNS (N) (EA)	TYPE III BARRICADE (EA)
A		SC3	48" X 36"	STRAIGHT DETOUR	1 - 4" X 6"	2	
		G27-2	24" X 24"	INTERSTATE ROUTE 10			
	M3-4		26" X 12"	WEST			
B	M4-10(RT)		48" X 36"	DETOUR (RT)	1 - 4" X 6"	1	
		G27-2	24" X 24"	INTERSTATE ROUTE 10			
	M3-4		26" X 12"	WEST			
C	M4-10(LT)		48" X 36"	DETOUR (LT)	ON TYPE III BARRICADE		2
D	M4-10(RT)		48" X 36"	DETOUR (RT)	ON TYPE III BARRICADE		1
E	M4-8a		24" X 18"	END DETOUR	ON TYPE III BARRICADE		1
					TOTAL	3	4

(N) - NOT A SEPARATE PAY ITEM, FOR INFORMATION ONLY.

THIS PLAN ACCURATE FOR DETOUR CONSTRUCTION WORK ONLY.

DETOUR PLAN

NO SCALE

DE-17

REVISED BY	DATE REVISED
TRI TRAN	THANH TRINH

CALCULATED-DESIGNED BY	CHECKED BY

FUNCTIONAL SUPERVISOR: BILL WASSER

STATE OF CALIFORNIA - DEPARTMENT OF TRANSPORTATION
Caltrans TRAFFIC DESIGN A

LAST REVISION 01-06-11 | DATE PLOTTED => 03-MAR-2011 | TIME PLOTTED => 16:05

Dist	COUNTY	ROUTE	POST MILES TOTAL PROJECT	SHEET No.	TOTAL SHEETS
08	SBd	10	20.0/R24.5	34	56

Thanh Trinh 1-07-11
REGISTERED CIVIL ENGINEER DATE

2-28-11
PLANS APPROVAL DATE

REGISTERED PROFESSIONAL ENGINEER THANH TRINH No. C41189 Exp. 3/31/11 CIVIL STATE OF CALIFORNIA

THE STATE OF CALIFORNIA OR ITS OFFICERS OR AGENTS SHALL NOT BE RESPONSIBLE FOR THE ACCURACY OR COMPLETENESS OF SCANNED COPIES OF THIS PLAN SHEET.

DETOUR DURING CLOSURE OF THE OFF-RAMP FROM ROUTE 10 WESTBOUND TO RANCHO Ave

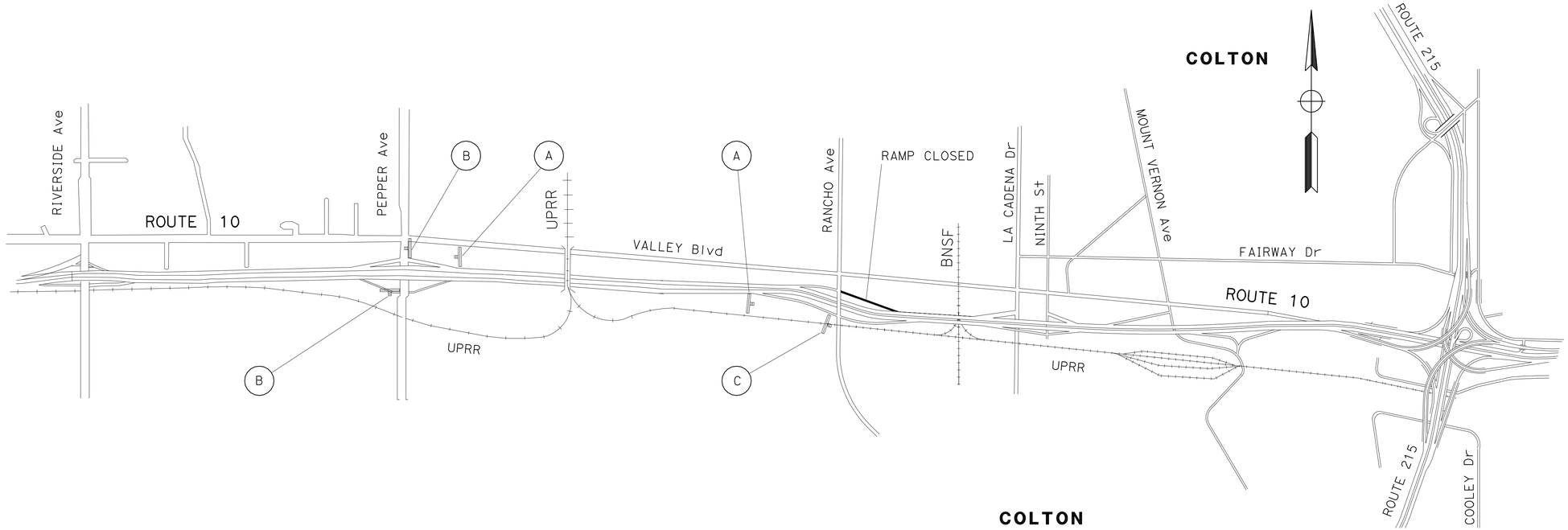

CONSTRUCTION AREA SIGNS (MOUNTED ON BARRICADES)

SIGN No.	SIGN CODE		PANEL SIZE	SIGN MESSAGE	TYPE III BARRICADE
	FED	CA			(EA)
A	M4-10(RT)		48" X 36"	DETOUR (RT)	2
B	M4-10(LT)		48" X 36"	DETOUR (LT)	2
C	M4-8a		24" X 18"	END DETOUR	1
				TOTAL	5

THIS PLAN ACCURATE FOR DETOUR CONSTRUCTION WORK ONLY.

DETOUR PLAN

NO SCALE

DE-18

STATE OF CALIFORNIA - DEPARTMENT OF TRANSPORTATION
Caltrans TRAFFIC DESIGN A

FUNCTIONAL SUPERVISOR: BILL WASSER
CALCULATED-DESIGNED BY: TRI TRAN
CHECKED BY: THANH TRINH
REVISED BY
DATE REVISED

LAST REVISION 01-06-11
DATE PLOTTED => 03-MAR-2011
TIME PLOTTED => 16:05

Dist	COUNTY	ROUTE	POST MILES TOTAL PROJECT	SHEET No.	TOTAL SHEETS
08	SBd	10	20.0/R24.5	35	56

Thanh Trinh 1-07-11
REGISTERED CIVIL ENGINEER DATE

2-28-11
PLANS APPROVAL DATE

REGISTERED PROFESSIONAL ENGINEER THANH TRINH No. C41189 Exp. 3/31/11 CIVIL STATE OF CALIFORNIA

THE STATE OF CALIFORNIA OR ITS OFFICERS OR AGENTS SHALL NOT BE RESPONSIBLE FOR THE ACCURACY OR COMPLETENESS OF SCANNED COPIES OF THIS PLAN SHEET.

DETOUR DURING CLOSURE OF THE ON-RAMP FROM RANCHO Ave TO ROUTE 10 WESTBOUND

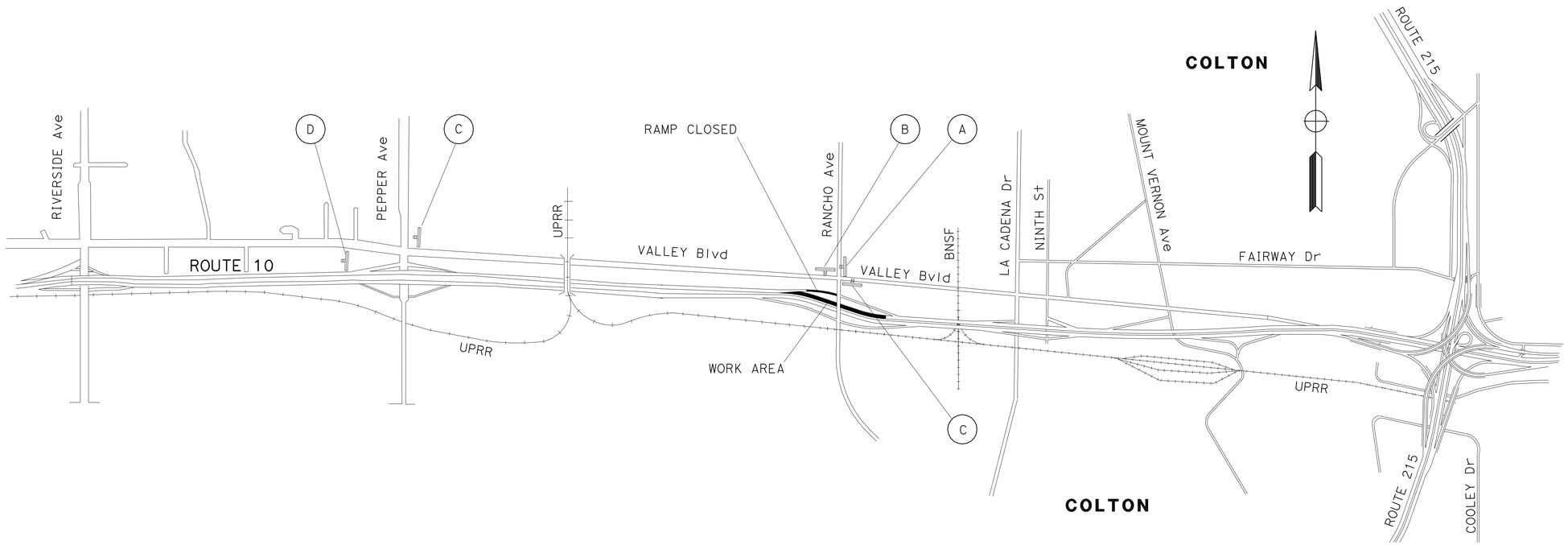

CONSTRUCTION AREA SIGNS

SIGN No.	SIGN CODE FED	SIGN CODE CA	PANEL SIZE	SIGN MESSAGE	No. OF POST(S) AND SIZE	No. OF SIGNS (N) (EA)	TYPE III BARRICADE (EA)
A		SC3	48" X 36"	STRAIGHT DETOUR	1 - 4" X 6"	1	
		G27-2	24" X 24"	INTERSTATE ROUTE 10			
	M3-4		26" X 12"	WEST			
B	M4-10(RT)		48" X 36"	DETOUR (RT)	1 - 4" X 6"	1	
		G27-2	24" X 24"	INTERSTATE ROUTE 10			
	M3-4		26" X 12"	WEST			
C	M4-10(LT)		48" X 36"	DETOUR (LT)	ON TYPE III BARRICADE		2
D	M4-8a		24" X 18"	END DETOUR	ON TYPE III BARRICADE		1
					TOTAL	2	3

(N) - NOT A SEPARATE PAY ITEM, FOR INFORMATION ONLY.

THIS PLAN ACCURATE FOR DETOUR CONSTRUCTION WORK ONLY.

DETOUR PLAN

NO SCALE

DE-19

STATE OF CALIFORNIA - DEPARTMENT OF TRANSPORTATION
Caltrans TRAFFIC DESIGN A

FUNCTIONAL SUPERVISOR: BILL WASSER
CALCULATED-DESIGNED BY: TRI TRAN
CHECKED BY: THANH TRINH
REVISED BY
DATE REVISED

LAST REVISION 01-06-11
DATE PLOTTED => 03-MAR-2011
TIME PLOTTED => 16:05

Dist	COUNTY	ROUTE	POST MILES TOTAL PROJECT	SHEET No.	TOTAL SHEETS
08	SBd	10	20.0/R24.5	36	56

Thanh Trinh 1-07-11
REGISTERED CIVIL ENGINEER DATE

2-28-11
PLANS APPROVAL DATE

REGISTERED PROFESSIONAL ENGINEER
THANH TRINH
No. C41189
Exp. 3/31/11
CIVIL
STATE OF CALIFORNIA

THE STATE OF CALIFORNIA OR ITS OFFICERS OR AGENTS SHALL NOT BE RESPONSIBLE FOR THE ACCURACY OR COMPLETENESS OF SCANNED COPIES OF THIS PLAN SHEET.

DETOUR DURING CLOSURE OF THE OFF-RAMP FROM ROUTE 10 WESTBOUND TO PEPPER Ave

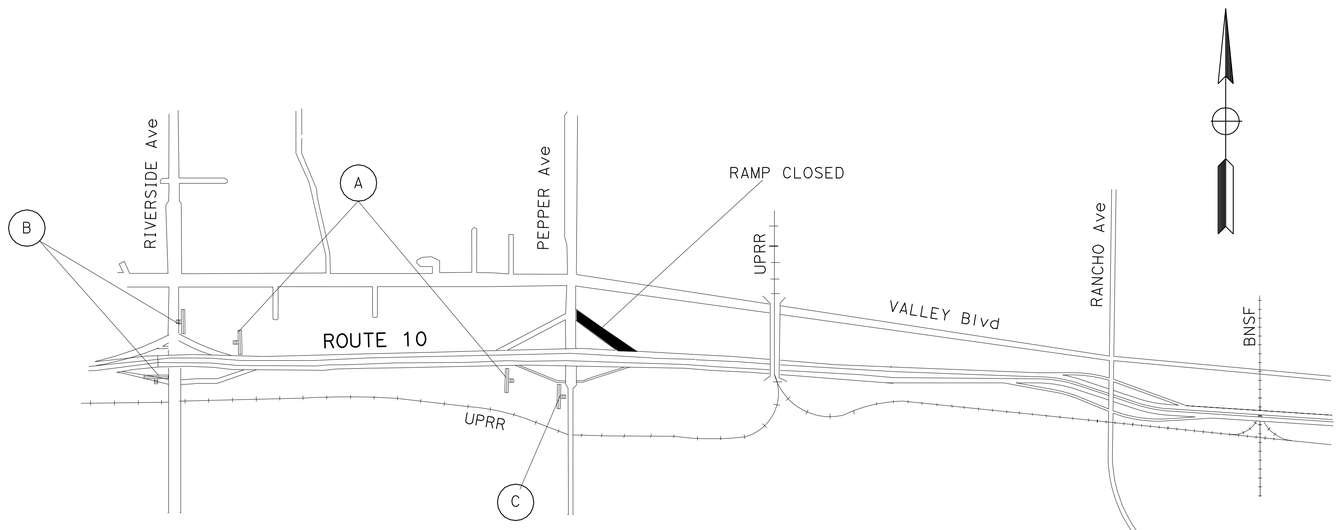

CONSTRUCTION AREA SIGNS (MOUNTED ON BARRICADES)

SIGN No.	SIGN CODE		PANEL SIZE	SIGN MESSAGE	TYPE III BARRICADE
	FED	CA			(EA)
A	M4-10(RT)		48" X 36"	DETOUR (RT)	2
B	M4-10(LT)		48" X 36"	DETOUR (LT)	2
C	M4-8a		24" X 18"	END DETOUR	1
				TOTAL	5

THIS PLAN ACCURATE FOR DETOUR CONSTRUCTION WORK ONLY.

DETOUR PLAN

NO SCALE

DE-20

STATE OF CALIFORNIA - DEPARTMENT OF TRANSPORTATION
Caltrans TRAFFIC DESIGN A

FUNCTIONAL SUPERVISOR: BILL WASSER
CALCULATED-DESIGNED BY: TRI TRAN
CHECKED BY: THANH TRINH
REVISED BY
DATE REVISED

LAST REVISION 01-06-11
DATE PLOTTED => 03-MAR-2011
TIME PLOTTED => 16:05

Dist	COUNTY	ROUTE	POST MILES TOTAL PROJECT	SHEET No.	TOTAL SHEETS
08	SBd	10	20.0/R24.5	37	56

Thanh Trinh 1-07-11
REGISTERED CIVIL ENGINEER DATE

2-28-11
PLANS APPROVAL DATE

REGISTERED PROFESSIONAL ENGINEER THANH TRINH No. C41189 Exp. 3/31/11 CIVIL STATE OF CALIFORNIA

THE STATE OF CALIFORNIA OR ITS OFFICERS OR AGENTS SHALL NOT BE RESPONSIBLE FOR THE ACCURACY OR COMPLETENESS OF SCANNED COPIES OF THIS PLAN SHEET.

DETOUR DURING CLOSURE OF THE ON-RAMP FROM PEPPER Ave TO ROUTE 10 WESTBOUND

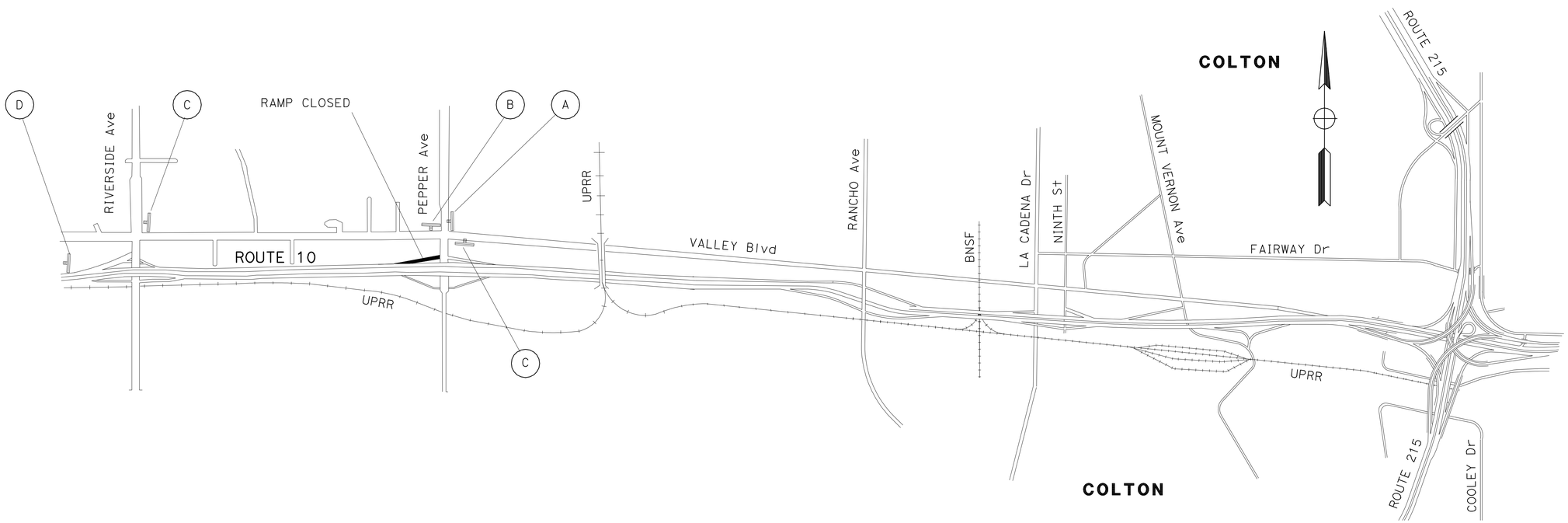

CONSTRUCTION AREA SIGNS

SIGN No.	SIGN CODE FED	SIGN CODE CA	PANEL SIZE	SIGN MESSAGE	No. OF POST(S) AND SIZE	No. OF SIGNS (N) (EA)	TYPE III BARRICADE (EA)
A		SC3	48" X 36"	STRAIGHT DETOUR	1 - 4" X 6"	1	
		G27-2	24" X 24"	INTERSTATE ROUTE 10			
	M3-4		26" X 12"	WEST			
B	M4-10(RT)		48" X 36"	DETOUR (RT)	1 - 4" X 6"	1	
		G27-2	24" X 24"	INTERSTATE ROUTE 10			
	M3-4		26" X 12"	WEST			
C	M4-10(LT)		48" X 36"	DETOUR (LT)	ON TYPE III BARRICADE		2
D	M4-8a		24" X 18"	END DETOUR	ON TYPE III BARRICADE		1
					TOTAL	2	3

(N) - NOT A SEPARATE PAY ITEM, FOR INFORMATION ONLY.

THIS PLAN ACCURATE FOR DETOUR CONSTRUCTION WORK ONLY.

DETOUR PLAN

NO SCALE

DE-21

STATE OF CALIFORNIA - DEPARTMENT OF TRANSPORTATION
Caltrans TRAFFIC DESIGN A

FUNCTIONAL SUPERVISOR: BILL WASSER
CALCULATED-DESIGNED BY: TRI TRAN
CHECKED BY: THANH TRINH
REVISED BY
DATE REVISED

LAST REVISION 01-06-11
DATE PLOTTED => 03-MAR-2011
TIME PLOTTED => 16:05

Dist	COUNTY	ROUTE	POST MILES TOTAL PROJECT	SHEET No.	TOTAL SHEETS
08	SBd	10	20.0/R24.5	38	56

Thanh Trinh 1-07-11
REGISTERED CIVIL ENGINEER DATE

2-28-11
PLANS APPROVAL DATE

REGISTERED PROFESSIONAL ENGINEER
THANH TRINH
No. C41189
Exp. 3/31/11
CIVIL
STATE OF CALIFORNIA

THE STATE OF CALIFORNIA OR ITS OFFICERS OR AGENTS SHALL NOT BE RESPONSIBLE FOR THE ACCURACY OR COMPLETENESS OF SCANNED COPIES OF THIS PLAN SHEET.

DETOUR DURING CLOSURE OF THE OFF-RAMP FROM ROUTE 10 WEST TO RIVERSIDE Ave

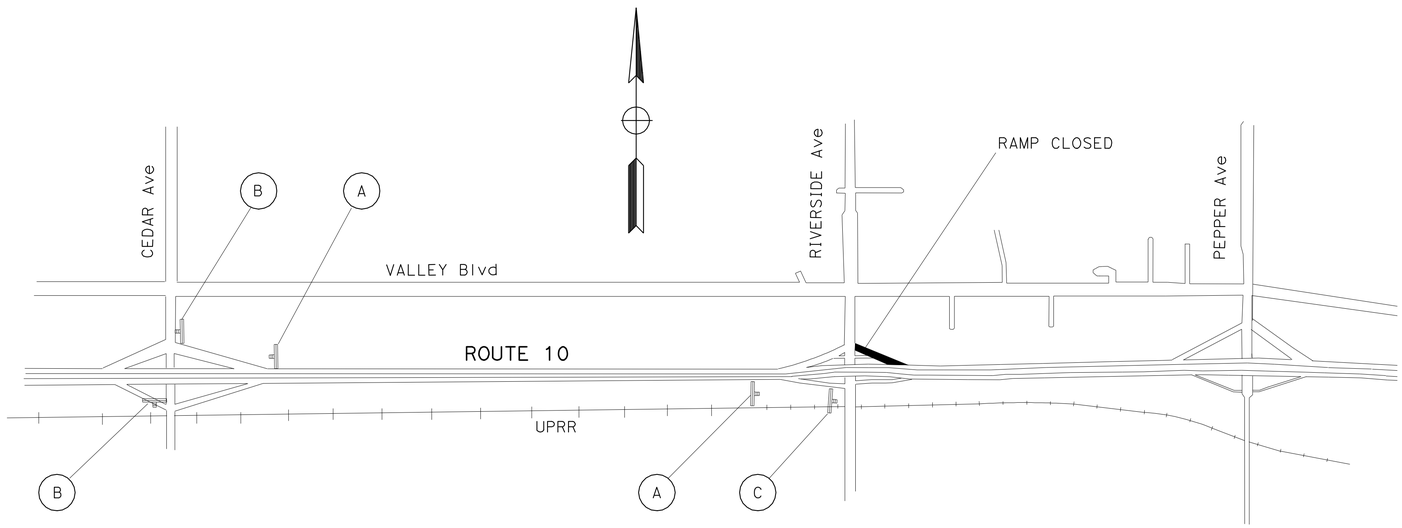

CONSTRUCTION AREA SIGNS (MOUNTED ON BARRICADES)

SIGN No.	SIGN CODE		PANEL SIZE	SIGN MESSAGE	TYPE III BARRICADE
	FED	CA			(EA)
A	M4-10(RT)		48" X 36"	DETOUR (RT)	2
B	M4-10(LT)		48" X 36"	DETOUR (LT)	2
C	M4-8a		24" X 18"	END DETOUR	1
				TOTAL	5

THIS PLAN ACCURATE FOR DETOUR CONSTRUCTION WORK ONLY.

DETOUR PLAN

NO SCALE

DE-22

STATE OF CALIFORNIA - DEPARTMENT OF TRANSPORTATION
Caltrans TRAFFIC DESIGN A

FUNCTIONAL SUPERVISOR: BILL WASSER
CALCULATED-DESIGNED BY: TRI TRAN
CHECKED BY: THANH TRINH
REVISED BY
DATE REVISED

LAST REVISION 01-06-11
DATE PLOTTED => 03-MAR-2011
TIME PLOTTED => 16:05

Dist	COUNTY	ROUTE	POST MILES TOTAL PROJECT	SHEET No.	TOTAL SHEETS
08	SBd	10	20.0/R24.5	39	56

Thanh Trinh 1-07-11
REGISTERED CIVIL ENGINEER DATE

2-28-11
PLANS APPROVAL DATE

REGISTERED PROFESSIONAL ENGINEER THANH TRINH No. C41189 Exp. 3/31/11 CIVIL STATE OF CALIFORNIA

THE STATE OF CALIFORNIA OR ITS OFFICERS OR AGENTS SHALL NOT BE RESPONSIBLE FOR THE ACCURACY OR COMPLETENESS OF SCANNED COPIES OF THIS PLAN SHEET.

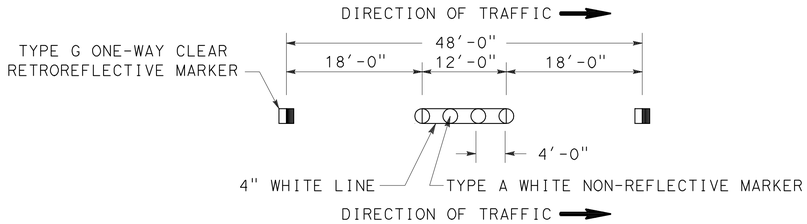

DETAIL 13M

NOTE:

1. MARKERS SHALL BE INSTALLED BEFORE TRAFFIC STRIPES.

PAVEMENT DELINEATION QUANTITIES

LOCATION	DETAIL No.	REMOVE PAVEMENT MARKER	PAVEMENT MARKER				THERMOPLASTIC TRAFFIC STRIPE (SPRAYABLE)			THERMOPLASTIC PAVEMENT MARKING	REMARKS
			NON REFLECTIVE	RETROREFLECTIVE							
			TYPE A	TYPE C	TYPE G	TYPE H	4INCH YELLOW	4INCH WHITE	8INCH WHITE		
		EA	EA				LF			SQFT	
ROUTE 10 EASTBOUND (NO GRINDING ON Aux LANE FROM 9TH St ON-RAMP TO MOUNT VERNON Ave OFF-RAMP)	13M		6000		1500			70500			PLEASE REFER TO Std PLAN A20A FOR TYPICAL LANE LINE DELINEATION IN ADVANCE OF EXIT RAMP FOR INSTALLATION OF DETAIL 14M
	14M	720	540	180				4500			
	25	500				500	24000				
	27B							23000			
	36	80			80				1680		
	36A	35			35			1235	720		
	37	226		8	218				3150		
MOUNT VERNON Ave OFF-RAMP ON EASTBOUND	25A	41				41	1000				
	27B							1000			
ROUTE 10 WESTBOUND (NO GRINDING ON Aux LANE FROM 9TH St ON-RAMP TO MOUNT VERNON Ave OFF-RAMP)	13M	7500	6000		1500			70500			
	14M	720	540	180				4500			
	25	500				500	24000				
	27B							23000			
	36	80			80				1680		
	36A	42			42			1338	720		
	37	226		8	218				2800		
	TYPE VI ARROW									168	
SUBTOTAL		18129	13080	376	3673	1041	49000	199273	10750	168	
TOTAL		18170	13080	5090			49000	210023		168	

PAVEMENT DELINEATION QUANTITIES

PDQ-1

STATE OF CALIFORNIA - DEPARTMENT OF TRANSPORTATION
Caltrans TRAFFIC DESIGN A

FUNCTIONAL SUPERVISOR: BILL WASSER
CALCULATED-DESIGNED BY: TRI TRAN
CHECKED BY: THANH TRINH
REVISED BY
DATE REVISED

LAST REVISION 01-06-11 | DATE PLOTTED => 03-MAR-2011 | TIME PLOTTED => 16:06

Dist	COUNTY	ROUTE	POST MILES TOTAL PROJECT	SHEET No.	TOTAL SHEETS
08	SBd	10	20.0/R24.5	40	56

REGISTERED CIVIL ENGINEER 1-07-11 DATE

2-28-11
PLANS APPROVAL DATE

REGISTERED PROFESSIONAL ENGINEER MOHAMMAD OMIDI No. C49518 Exp. 9/30/12 CIVIL STATE OF CALIFORNIA

THE STATE OF CALIFORNIA OR ITS OFFICERS OR AGENTS SHALL NOT BE RESPONSIBLE FOR THE ACCURACY OR COMPLETENESS OF SCANNED COPIES OF THIS PLAN SHEET.

ROADWAY QUANTITIES

POST MILE	WORK DESCRIPTION	SQYD	TON	CY
20.0 TO R24.5	GRINDING EXISTING CONCRETE PAVEMENT	272,000		
20.0 TO R24.5	ASPHALT EMULSION (FOG SEALCOAT)		40	
R23.25	REMOVE BASE AND SURFACING			10
TOTAL		272,000	40	10

METAL BEAM GUARD RAIL

POST MILE	BRIDGE No.	BRIDGE NAME	DIRECTION	BRIDGE RAILING TYPE	PCC ANCHORAGE ALTERNATIVE No.	INSIDE(I) / OUTSIDE(O)	REMOVE MBGR	REMOVE RAILING	TRANSITION RAILING (TYPE WB)	ALTERNATIVE FLARED TERMINAL SYSTEM	ALTERNATIVE IN-LINE TERMINAL SYSTEM	METAL BEAM GUARD RAIL (WOOD POST)	REMOVE CRASH CUSHION (SAND FILLED)	ALTERNATIVE CRASH CUSHION SYSTEM	SINGLE THRIE BEAM BARRIER (WOOD POST)	MINOR CONCRETE (MINOR STRUCTURE)	REMOVE ASPHALT CONCRETE DIKE	HMA DIKE (TYPE C)	HMA DIKE (TYPE F)	MINOR HOT MIX ASPHALT
			WB/EB		No.	O/I	LF	LF	EA	EA	EA	LF	EA	EA	LF	CY	LF	LF	LF	TON
R20.70	54-0531	PEPPER AVENUE OC	EB	NA	2	O	80		1	1						29.5	140	62.5	25	
R20.70	54-0531	PEPPER AVENUE OC	WB	NA	2	O	80		1	1						29.5	140	62.5	25	
R22.36	54-0464R	COLTON OH	EB	9	1	O	25		1 *							1.1				
R22.38	54-0464L	COLTON OH	EB	9	1	I	25		1 *							1.1				
R22.38	54-0464L	COLTON OH	WB	9	1	O	25		1 *							1.1				
R22.38	54-0464L	COLTON OH	WB	9	1	I	25		1 *							1.1				
R22.62	54-0462	LA CADENA DRIVE UC	EB	9	1	O	25		1 *							1.1	25		25	
R22.62	54-0462S	LA CADENA DRIVE UC	WB	9	1	O	25		1 *							1.1	25		25	
R22.71	54-0461	NINTH STREET UC	EB	9	1	O	25		1 *							1.1	25		25	
R22.71	54-0461	NINTH STREET UC	WB	9	1	O	25		1 *							1.1	25		25	
R22.86	54-0460	PAVILLION SPUR OH (9TH St ENTRANCE RAMP)	EB	9	1	O	25		1 *							1.1	25		25	
R22.86	54-0460	PAVILLION SPUR OH (9TH St EXIT RAMP)	WB	9	1	O	25		1 *							1.1	25		25	
R23.25	54-0459	MOUNT VERNON Ave OC (EXIT RAMP #71)	EB			O	130						12	1	150					
R23.60	54-0830L	WARM CREEK	WB	9	1	O	25		1 *							1.1				
R23.60	54-0830L	WARM CREEK	WB	9	1	I	25		1 *							1.1				
R23.60	54-0830R	WARM CREEK	EB	9	1	O	25		1 *							1.1				
R23.60	54-0830R	WARM CREEK	EB	9	1	I	25		1 *							1.1				
R23.80	54-0292G	SANTA ANA RIVER (EB TO NORTH/SOUTH I-215)	EB	9	1	O		180	1		1	162.5				1.1	205	75	187.5	3
R23.82	54-0292R	SANTA ANA RIVER	EB	9	1	I	25		1 *							1.1				
R23.83	54-0464L	SANTA ANA RIVER	WB	9	1	O		25	1	1		25				1.1	15		15	1
R23.83	54-0464L	SANTA ANA RIVER	WB	9	1	I	25		1 *							1.1				
TOTAL							690	205	20	3	1	187.5	12	1	150	80	650	200	402.5	4

* DO NOT INSTALL LAST SECTION (6.25') OF TRANSITION RAILING (TYPE WB)

SUMMARY OF QUANTITIES

Q-1

REZA TOOTOONCHI — REVISED BY
MOHAMMAD OMIDI — DATE REVISED
CALCULATED-DESIGNED BY
CHECKED BY
FUNCTIONAL SUPERVISOR
SERGIO AVILA

STATE OF CALIFORNIA - DEPARTMENT OF TRANSPORTATION
Caltrans
DESIGN

LAST REVISION 01-07-11
DATE PLOTTED => 03-MAR-2011
TIME PLOTTED => 16:06

Dist	COUNTY	ROUTE	POST MILES TOTAL PROJECT	SHEET No.	TOTAL SHEETS
08	SBd	10	20.0/R24.5	41	56

REGISTERED ELECTRICAL ENGINEER 1-07-11 DATE

2-28-11
PLANS APPROVAL DATE

REGISTERED PROFESSIONAL ENGINEER FERDINAND DE LA CRUZ No. E-17215 Exp. 6/30/12 ELECTRICAL STATE OF CALIFORNIA

THE STATE OF CALIFORNIA OR ITS OFFICERS OR AGENTS SHALL NOT BE RESPONSIBLE FOR THE ACCURACY OR COMPLETENESS OF SCANNED COPIES OF THIS PLAN SHEET.

NOTE: (THIS SHEET ONLY)

1. POST MILE LOCATIONS ARE APPROXIMATE. PRIOR TO CONSTRUCTION, THE CONTRACTOR SHALL VERIFY ALL VEHICLE SENSOR NODE LOCATIONS.

PROJECT NOTE:

1 RS Exist VSN SHOWN AS PER MANUFACTURER'S INSTRUCTION.

ABBREVIATION:

VSN - VEHICLE SENSOR NODE

LEGEND:

EXISTING VSN

AP EXISTING POLE MOUNTED ACCESS POINT

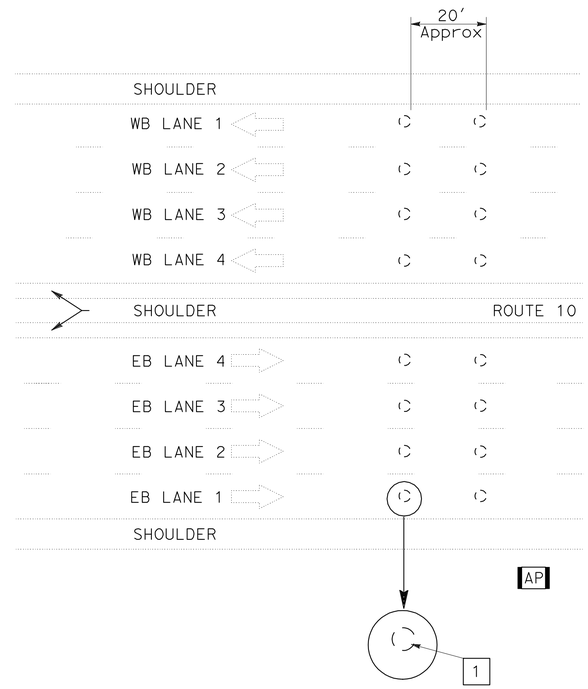

TYPICAL LAYOUT FOR LOCATIONS 1 - 9

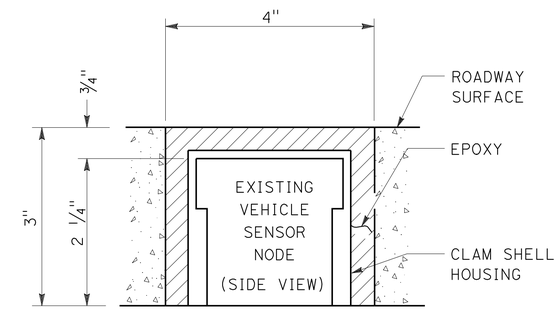

DETAIL A

REMOVE EXISTING VEHICLE SENSOR NODE AND BACKFILL WITH CONCRETE
NOTE: DIMENSIONS SHOWN ABOVE ARE TYPICAL

LOCATIONS OF VEHICLE SENSOR NODES

LOCATION	COUNTY	ROUTE	POST MILE	APPROXIMATE LOCATION	DIRECTION AND NUMBER OF LANES	QUANTITY OF VSN TO BE RS
1	SBd	10	R20.1	RIVERSIDE AVENUE	EB, LANE 1-4	16
2			R21.1	PEPPER AVENUE	EB, LANE 1-4	16
3			R22.1	RANCHO AVENUE	EB, LANE 1-4	16
4			R22.8	9TH STREET	EB, LANE 1-4	16
5			R23.4	MOUNT VERNON AVENUE	EB, LANE 1-4	16
6			R20.8	PEPPER AVENUE	WB, LANE 1-4	16
7			R21.8	RANCHO AVENUE	WB, LANE 1-4	16
8			R22.4	9TH STREET ENTRANCE RAMP	WB, LANE 1-4	16
9			R23.1	MOUNT VERNON AVENUE	WB, LANE 1-4	16
					TOTAL	144

REMOVE VEHICLE SENSOR NODE

NO SCALE

THIS PLAN IS ACCURATE FOR ELECTRICAL WORK ONLY.

E-1

STATE OF CALIFORNIA - DEPARTMENT OF TRANSPORTATION
Caltrans® ELECTRICAL DESIGN B

FUNCTIONAL SUPERVISOR: FERDINAND DE LA CRUZ
CALCULATED-DESIGNED BY: LUIS PENALOZA
CHECKED BY: FERDINAND DE LA CRUZ
REVISED BY: L.P.J.
DATE REVISED: 12-10-10

LAST REVISION 01-06-11
DATE PLOTTED => 24-MAR-2011
TIME PLOTTED => 13:39

Dist	COUNTY	ROUTE	POST MILES TOTAL PROJECT	SHEET No.	TOTAL SHEETS
08	SBd	10	20.0/R24.5	42	56

REGISTERED ELECTRICAL ENGINEER 1-07-11 DATE

2-28-11
PLANS APPROVAL DATE

REGISTERED PROFESSIONAL ENGINEER FERDINAND DE LA CRUZ No. E-17215 Exp. 6/30/12 ELECTRICAL STATE OF CALIFORNIA

THE STATE OF CALIFORNIA OR ITS OFFICERS OR AGENTS SHALL NOT BE RESPONSIBLE FOR THE ACCURACY OR COMPLETENESS OF SCANNED COPIES OF THIS PLAN SHEET.

NOTES:

1. THE CONTRACTOR SHALL CONTACT THE ENGINEER THREE WORKING DAYS PRIOR TO INSTALLING DETECTOR LOOPS.
2. AB EXISTING INDUCTIVE LOOP DETECTORS SHOWN TO BE REPLACED.
3. LABEL CONDUCTOR ENDS AS PER STANDARD PLAN ES-13B.

LOCATION 1

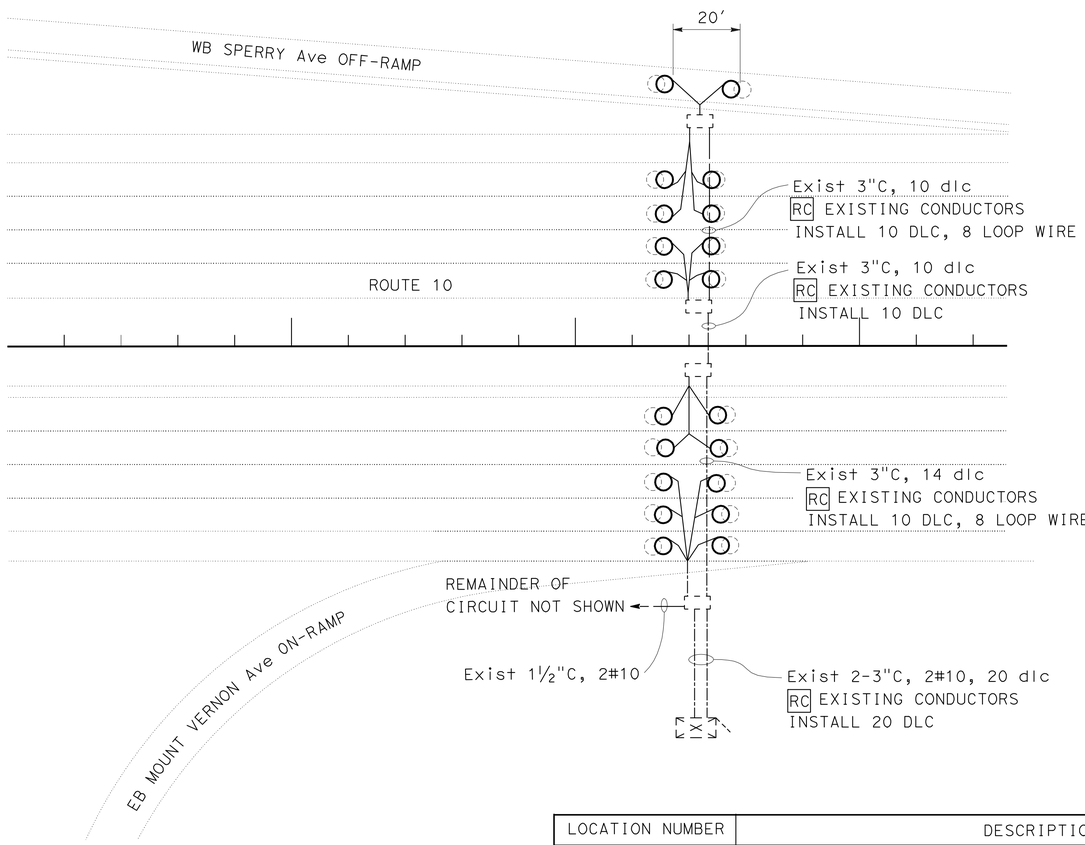

LOCATION 2

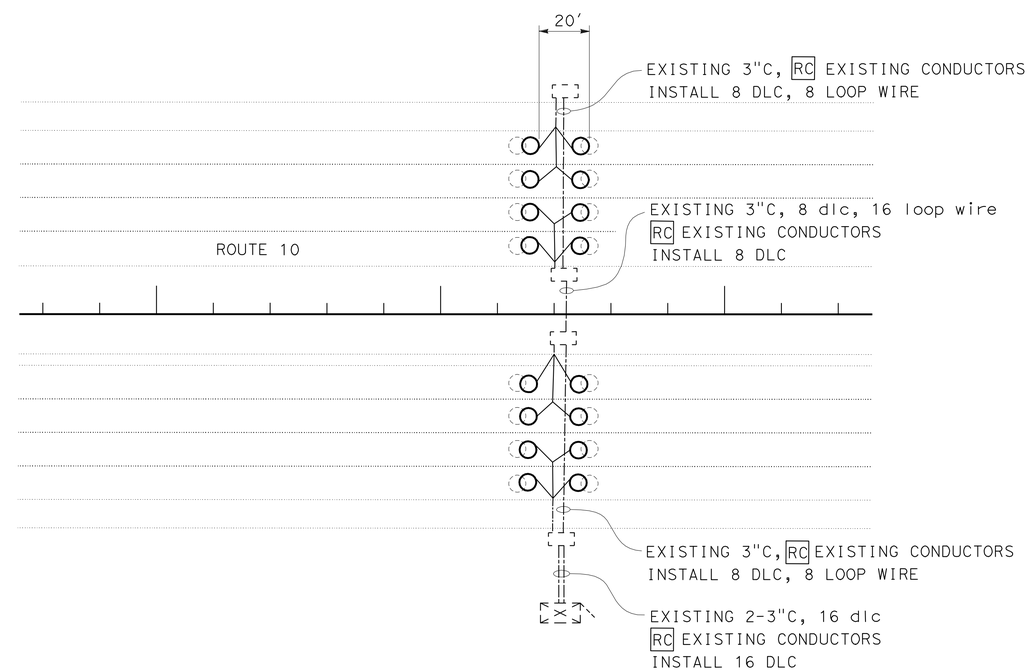

LOCATION NUMBER	DESCRIPTION	APPROXIMATE PM	QUANTITY
1	EAST OF MOUNT VERNON Ave OFF-RAMP, VDS CENSUS STATION	R23.5	20
2	EAST OF ROUTE 10/I-215 SB CONNECTOR, VDS STATION	R24.1	16
		TOTAL	36

INDUCTIVE LOOP DETECTOR

NO SCALE

THIS PLAN IS ACCURATE FOR ELECTRICAL WORK ONLY.

E-2

STATE OF CALIFORNIA - DEPARTMENT OF TRANSPORTATION
Caltrans® ELECTRICAL DESIGN B

FUNCTIONAL SUPERVISOR: FERDINAND DE LA CRUZ
CALCULATED-DESIGNED BY: LUIS PENALOZA
CHECKED BY: FERDINAND DE LA CRUZ
REVISED BY: L.P.J.
DATE REVISED: 09-09-10

LAST REVISION 01-06-11
DATE PLOTTED => 07-MAR-2011
TIME PLOTTED => 09:56

DIST	COUNTY	ROUTE	POST MILES TOTAL PROJECT	SHEET NO.	TOTAL SHEETS
08	SBd	10	20.0/R24.5	43	56

Randell D. Hiatt
REGISTERED CIVIL ENGINEER

June 6, 2008
PLANS APPROVAL DATE

REGISTERED PROFESSIONAL ENGINEER
Randell D. Hiatt
No. C50200
Exp. 6-30-09
CIVIL
STATE OF CALIFORNIA

The State of California or its officers or agents shall not be responsible for the accuracy or completeness of electronic copies of this plan sheet.

To accompany plans dated 2-28-11

NOTES:

1. When necessary to place dike in front of face of guard railing, only Type C dike may be used. For dike details, see Standard Plan A87B.
2. For standard railing post embedment, see Standard Plans A77C3.
3. Guard railing delineation to be used where shown on the Project Plans.
4. When dike or curb is placed under guard railing, the maximum height of the dike or curb shall be 4". Mountable dike should not be used. For dike and curb details, see Revised Standard Plans RSP A87A and Standard Plan A87B.
5. For details of typical distance between the face of rail and hinge point, see Standard Plan A77C3.

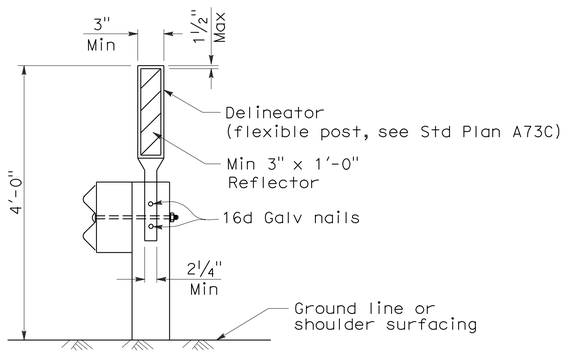

GUARD RAILING DELINEATION

See Note 3

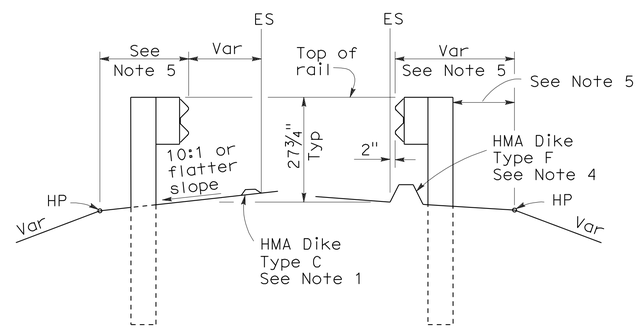

DIKE POSITIONING

See Note 1

STATE OF CALIFORNIA
DEPARTMENT OF TRANSPORTATION

METAL BEAM GUARD RAILING TYPICAL RAILING DELINEATION AND DIKE POSITIONING DETAILS

NO SCALE

RSP A77C4 DATED JUNE 6, 2008 SUPERSEDES STANDARD PLAN A77C4
DATED MAY 1, 2006 - PAGE 47 OF THE STANDARD PLANS BOOK DATED MAY 2006.

REVISED STANDARD PLAN RSP A77C4

2006 REVISED STANDARD PLAN RSP A77C4

12-10-07

DIST	COUNTY	ROUTE	POST MILES TOTAL PROJECT	SHEET NO.	TOTAL SHEETS
08	SBd	10	20.0/R24.5	44	56

Randell D. Hiatt
REGISTERED CIVIL ENGINEER

June 6, 2008
PLANS APPROVAL DATE

REGISTERED PROFESSIONAL ENGINEER Randell D. Hiatt No. C50200 Exp. 6-30-09 CIVIL STATE OF CALIFORNIA

The State of California or its officers or agents shall not be responsible for the accuracy or completeness of electronic copies of this plan sheet.

To accompany plans dated 2-28-11

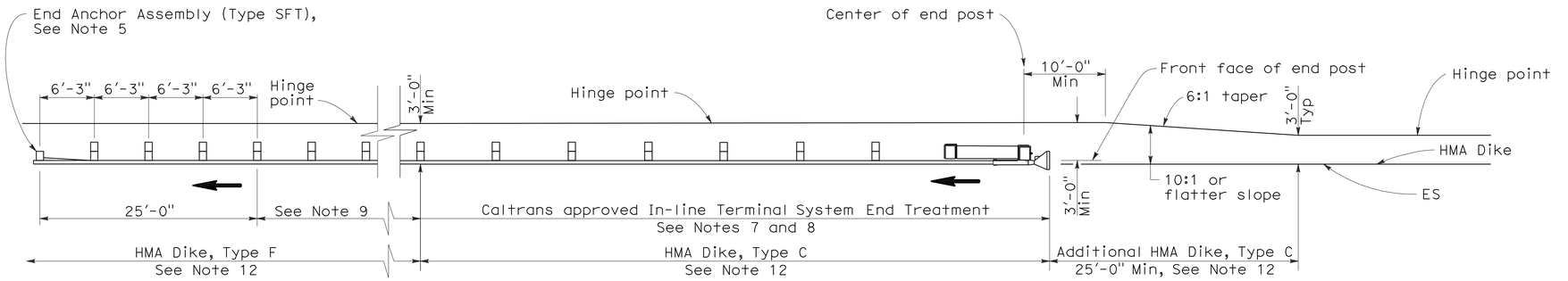

TYPE 11A LAYOUT

(EMBANKMENT GUARD INSTALLATION WITH IN-LINE END TREATMENT AT TRAFFIC APPROACH END OF RAILING)
See Note 6

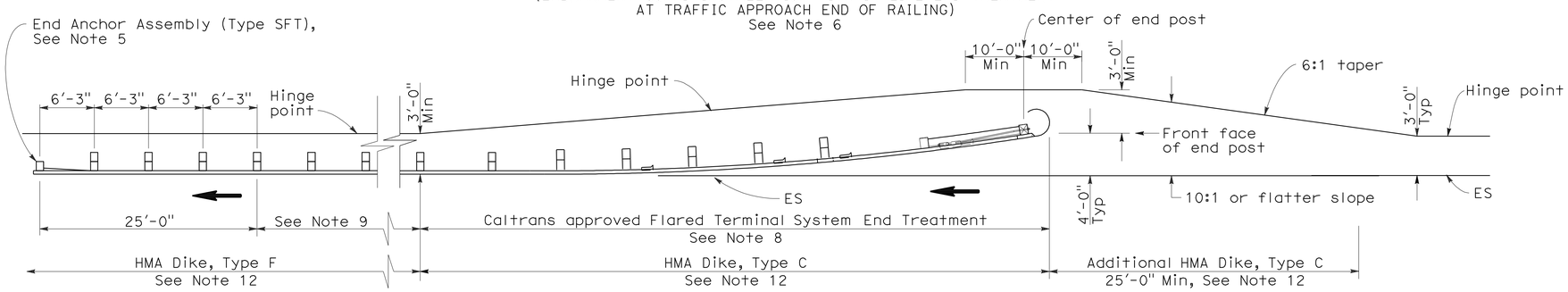

TYPE 11B LAYOUT

(EMBANKMENT GUARD RAILING INSTALLATION WITH FLARED END TREATMENT AT TRAFFIC APPROACH END OF RAILING)
See Note 6

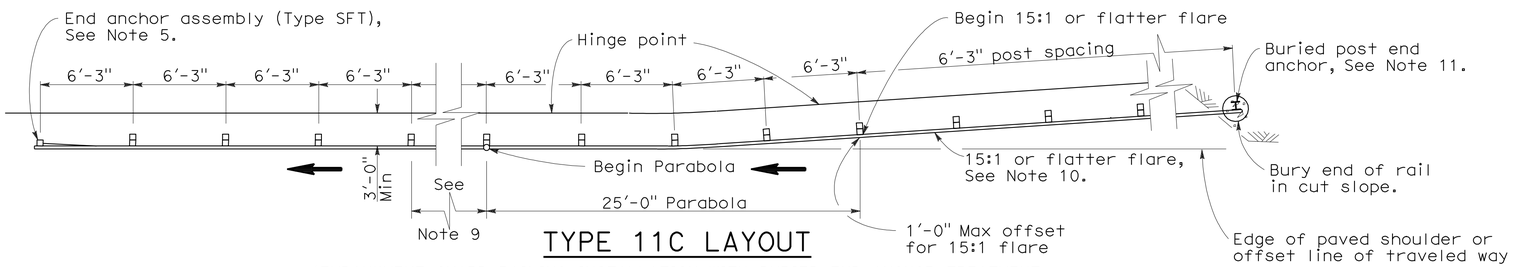

TYPE 11C LAYOUT

(EMBANKMENT GUARD RAILING INSTALLATION WITH BURIED END ANCHOR TREATMENT AT TRAFFIC APPROACH END OF RAILING)
See Notes 6 and 12

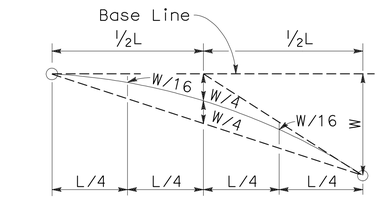

TYPICAL PARABOLIC LAYOUT

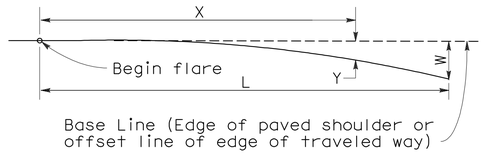

$$Y = \frac{WX^2}{L^2}$$

Y = Offset from base line
W = Maximum offset
X = Distance along base line
L = Length of flare

PARABOLIC FLARE OFFSETS

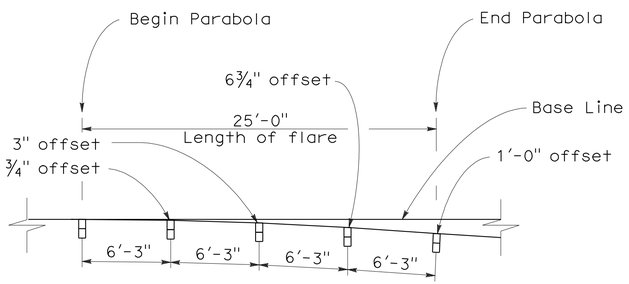

TYPICAL FLARE OFFSETS FOR 1 FOOT MAX END OFFSET

NOTES:

1. Line post, blocks and hardware to be used are shown on Standard Plans A77A1, A77A2, A77B1, A77C1, and A77C2.
2. Guard rail post spacing to be 6'-3" center to center, except as otherwise noted.
3. Except as noted, line posts are 6" x 8" x 6'-0" wood with 6" x 8" x 1'-2" wood blocks. W6 x 9 steel posts, 6'-0" in length, with 6" x 8" x 1'-2" notched wood blocks or recycled plastic blocks may be used for 6" x 8" x 6'-0" wood post with 6" x 8" x 1'-2" wood blocks where applicable and when specified.
4. Direction of adjacent traffic indicated by ⟶.
5. For End Anchor Assembly (Type SFT) details, see Standard Plan A77H1.
6. Layout Types 11A, 11B or 11C are typically used where guard railing is recommended to shield embankment slopes and a crashworthy end treatment is required for only one direction of traffic.
7. In-line Terminal System End Treatments are used where site conditions will not accommodate a flared end treatment.
8. The type of terminal system end treatment to be used will be shown on the Project Plans.
9. Dependent on site conditions (embankment height and side slope), construction of additional guard railing (length equal to multiples of 12'-6" with 6'-3" post spacing) may be advisable.
10. The 15:1 or flatter flare used with buried end anchors is based on the edge of the paved shoulder or offset line of edge of the traveled way. The length of guard railing within the 15:1 or flatter flare is based on site conditions and should be a length equal to multiples of 12'-6".
11. For details of the buried post end anchor used with Type 11C Layout, see Standard Plan A77I2.
12. Where placement of dike is required with guard railing installations, see Revised Standard Plan RSP A77C4 for dike positioning details.

STATE OF CALIFORNIA
DEPARTMENT OF TRANSPORTATION

METAL BEAM GUARD RAILING TYPICAL LAYOUTS FOR EMBANKMENTS

NO SCALE

RSP A77E1 DATED JUNE 6, 2008 SUPERSEDES STANDARD PLAN A77E1
DATED MAY 1, 2006 - PAGE 48 OF THE STANDARD PLANS BOOK DATED MAY 2006.

REVISED STANDARD PLAN RSP A77E1

2006 REVISED STANDARD PLAN RSP A77E1

12-10-07

DIST	COUNTY	ROUTE	POST MILES TOTAL PROJECT	SHEET NO.	TOTAL SHEETS
08	SBd	10	20.0/R24.5	45	56

Randell D. Hiatt
REGISTERED CIVIL ENGINEER

June 6, 2008
PLANS APPROVAL DATE

REGISTERED PROFESSIONAL ENGINEER
Randell D. Hiatt
No. C50200
Exp. 6-30-09
CIVIL
STATE OF CALIFORNIA

The State of California or its officers or agents shall not be responsible for the accuracy or completeness of electronic copies of this plan sheet.

To accompany plans dated 2-28-11

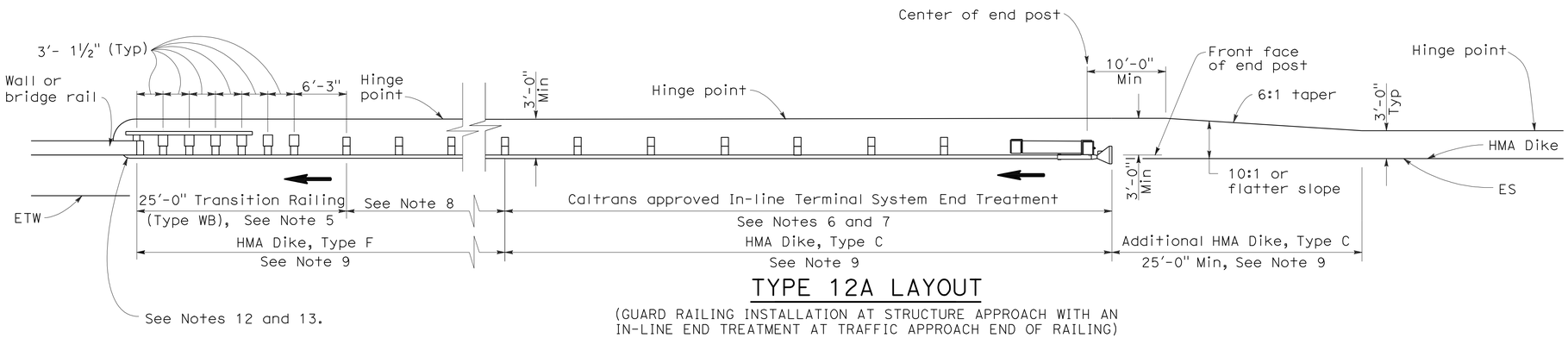

TYPE 12A LAYOUT

(GUARD RAILING INSTALLATION AT STRUCTURE APPROACH WITH AN IN-LINE END TREATMENT AT TRAFFIC APPROACH END OF RAILING)
See Notes 10

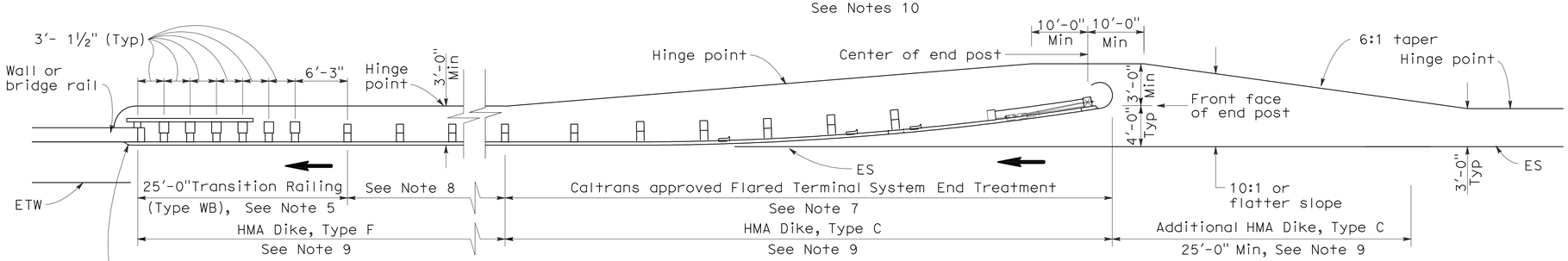

TYPE 12B LAYOUT

(GUARD RAILING INSTALLATION AT STRUCTURE APPROACH WITH A FLARED END TREATMENT AT TRAFFIC APPROACH END OF RAILING)
See Notes 10

NOTES:

1. Line post, blocks and hardware to be used are shown on Standard Plans A77A1, A77A2, A77B1, A77C1 and A77C2.
2. Guard rail post spacing to be 6'-3" center to center, except as otherwise noted.
3. Except as noted, line posts are 6" x 8" x 6'-0" wood with 6" x 8" x 1'-2" wood blocks. W6 x 9 steel posts, 6'-0" in length, with 6" x 8" x 1'-2" notched wood blocks or plastic blocks may be used for 6" x 8" x 6'-0" wood posts with 6" x 8" x 1'-2" wood blocks where applicable and when specified.
4. Direction of adjacent traffic indicated by ➡.
5. For Transition Railing (Type WB) details for Types 12A and 12B Layouts, see Standard Plan A77J4.
6. In-line Terminal System End Treatments are used where site conditions will not accommodate a flared end treatment.
7. The type of terminal system end treatment to be used will be shown on the Project Plans.
8. Dependent on site conditions (embankment height, side slopes, or other fixed objects), it may be advisable to construct additional guard railing (a length equal to multiples of 12'-6" with 6'-3" post spacing) between the transition railing and end treatment.
9. Where placement of dike is required with guard railing installations, see Revised Standard Plan RSP A77C4 for dike positioning details.
10. Type 12A or Type 12B Layouts are typically used:
    a. To the right of approaching traffic, at the end of a structure, on two-lane conventional highway where the roadbed width across the structure is less than 40 feet.
    b. To the left of approaching traffic, at the end of a structure, on two-lane conventional highway where the roadbed width across the structure is less than 40 feet.
    c. To the right of approaching traffic at the end of each structure on multilane freeways or expressways with separate adjacent or parallel bridges.
    d. To the right of approaching traffic at the end of the structure on multilane freeways or expressways with decked median on the bridge.
11. See Revised Standard Plan RSP A77F3 for typical layout used left of approaching traffic at the ends of each structure on multilane freeways or expressways with separate adjacent or parallel bridges.
12. For additional details of typical connections to bridge rail, see Connection Detail AA on Revised Standard Plans RSP A77J1 and RSP A77J2 and Connection Detail FF on Standard Plans A77K1 and A77K2.
13. For additional details of a typical connection to walls or abutments, see Standard Plan A77J3.

STATE OF CALIFORNIA
DEPARTMENT OF TRANSPORTATION

METAL BEAM GUARD RAILING TYPICAL LAYOUTS FOR STRUCTURE APPROACH

NO SCALE

RSP A77F1 DATED JUNE 6, 2008 SUPERSEDES STANDARD PLAN A77F1
DATED MAY 1, 2006 - PAGE 54 OF THE STANDARD PLANS BOOK DATED MAY 2006.

REVISED STANDARD PLAN RSP A77F1

2006 REVISED STANDARD PLAN RSP A77F1

DIST	COUNTY	ROUTE	POST MILES TOTAL PROJECT	SHEET NO.	TOTAL SHEETS
08	SBd	10	20.0/R24.5	46	56

Randell D. Hiatt
REGISTERED CIVIL ENGINEER

June 6, 2008
PLANS APPROVAL DATE

REGISTERED PROFESSIONAL ENGINEER
Randell D. Hiatt
No. C50200
Exp. 6-30-09
CIVIL
STATE OF CALIFORNIA

The State of California or its officers or agents shall not be responsible for the accuracy or completeness of electronic copies of this plan sheet.

To accompany plans dated 2-28-11

NOTES:

1. Line post, blocks and hardware to be used are shown on Standard Plans A77A1, A77A2, A77B1, A77C1 and A77C2.
2. Guard railing post spacing to be 6′-3″ center to center, except as otherwise noted.
3. Except as noted, line posts are 6″ x 8″ x 6′-0″ wood with 6″ x 8″ x 1′-2″ wood blocks. W6 x 9 steel posts, 6′-0″ in length, with 6″ x 8″ x 1′-2″ notched wood blocks or notched recycled plastic blocks may be used for 6″ x 8″ x 6′-0″ wood line posts with 6″ x 8″ x 1′-2″ wood blocks where applicable and when specified.
4. A 4′-0″ minimum clearance is required between the face of the railing and the face of a fixed object located directly behind standard guard railing section with post spacing of 6′-3″. Construct guard railing as shown in the detail "Strengthened Railing Sections for Fixed Objects" on this plan, where the clearance between the face of the railing and the face of a fixed object is less than 4′-0″, but not less than 2′-3″. Where the clearance is less than 2′-3″, a concrete wall or barrier should be constructed to shield the fixed object(s).
5. Direction of adjacent traffic indicated by ➡.
6. For End Anchor Assembly (Type SFT) details, see Standard Plan A77H1.
7. Type of crash cushion to be used will be shown on the Project Plans.
8. Type 15A layout is typically used on multilane freeways or expressways to shield fixed objects in the area between separated one-way roadbeds.
9. For typical flare offsets for 25′-0″ length parabola with maximum offset of 1′-0″, see Revised Standard Plan RSP A77E1.
10. The 15:1 or flatter flare is measured off of the edge of the traveled way.
11. W6 x 15 steel post, 8′-0″ in length, with 8″ x 8″ x 1′-2″ notched wood block or notched recycled plastic blocks may be used in place of the 10″ x 10″ x 8′-0″ wood post with 8″ x 8″ x 1′-2″ wood block shown in the "Strengthened Railing Sections Detail".

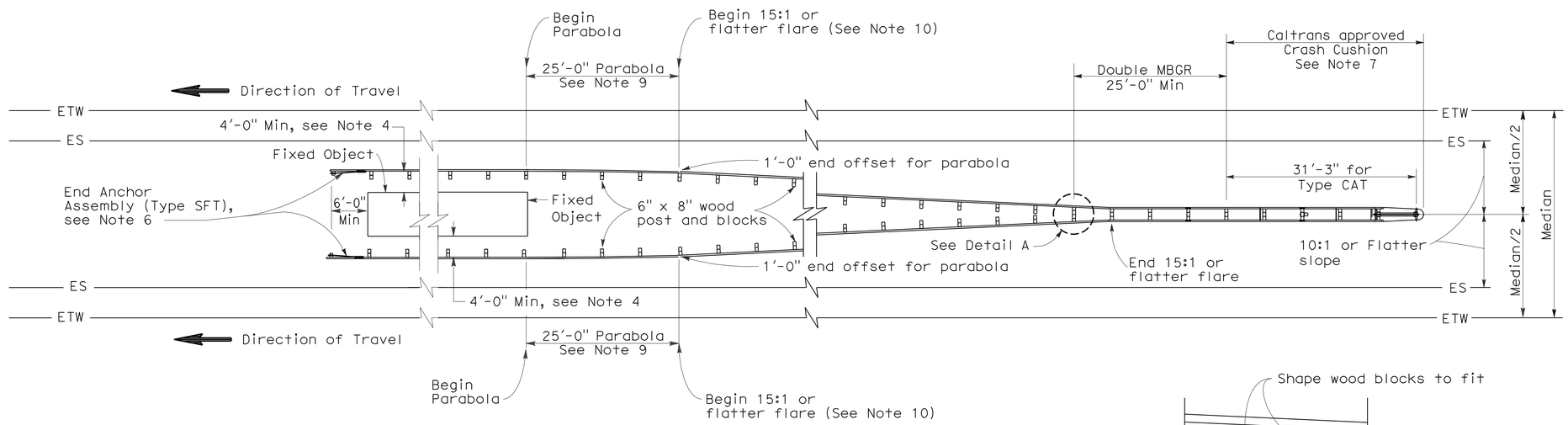

TYPE 15A LAYOUT

See Note 9

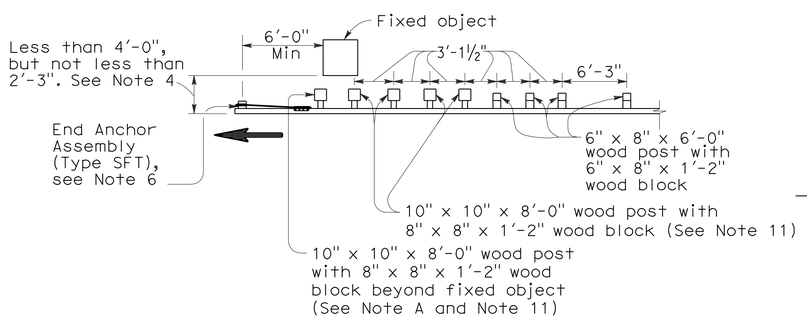

NOTE A: For a series of fixed objects (bridge columns, overhead sign supports, etc.) additional 10″ x 10″ x 8′-0″ wood post with 8″ x 8″ x 1′-2″ wood blocks at 3′-1½″ center to center spacing are to be used between fixed objects.

STRENGTHENED RAILING SECTIONS FOR FIXED OBJECT

Use strengthened railing sections with Type 15A layout where minimum clearance between the face of the guard railing and the fixed object(s) is less than 4′-0″, but not less than 2′-3″. See Note 4.

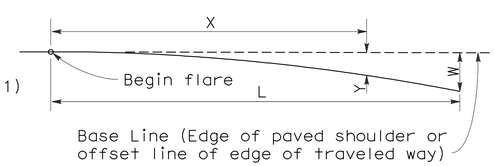

$$Y = \frac{WX^2}{L^2}$$

Y = Offset from base line
W = Maximum offset
X = Distance along base line
L = Length of flare

PARABOLIC FLARE OFFSETS

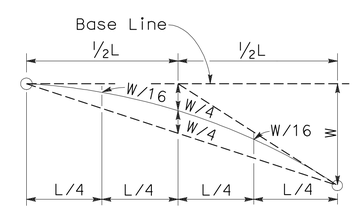

TYPICAL PARABOLIC LAYOUT

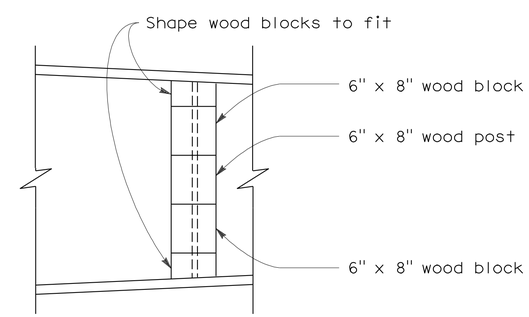

DETAIL A

STATE OF CALIFORNIA
DEPARTMENT OF TRANSPORTATION

METAL BEAM GUARD RAILING TYPICAL LAYOUTS FOR FIXED OBJECTS BETWEEN SEPARATE ROADBEDS (ONE-WAY TRAFFIC)

NO SCALE

RSP A77G2 DATED JUNE 6, 2008 SUPERSEDES STANDARD PLAN A77G2
DATED MAY 1, 2006 - PAGE 60 OF THE STANDARD PLANS BOOK DATED MAY 2006.

REVISED STANDARD PLAN RSP A77G2

2006 REVISED STANDARD PLAN RSP A77G2

12-10-07

DIST	COUNTY	ROUTE	POST MILES TOTAL PROJECT	SHEET NO.	TOTAL SHEETS
08	SBd	10	20.0/R24.5	47	56

Randell D. Hiatt
REGISTERED CIVIL ENGINEER

June 6, 2008
PLANS APPROVAL DATE

REGISTERED PROFESSIONAL ENGINEER
Randell D. Hiatt
No. C50200
Exp. 6-30-09
CIVIL
STATE OF CALIFORNIA

The State of California or its officers or agents shall not be responsible for the accuracy or completeness of electronic copies of this plan sheet.

To accompany plans dated 2-28-11

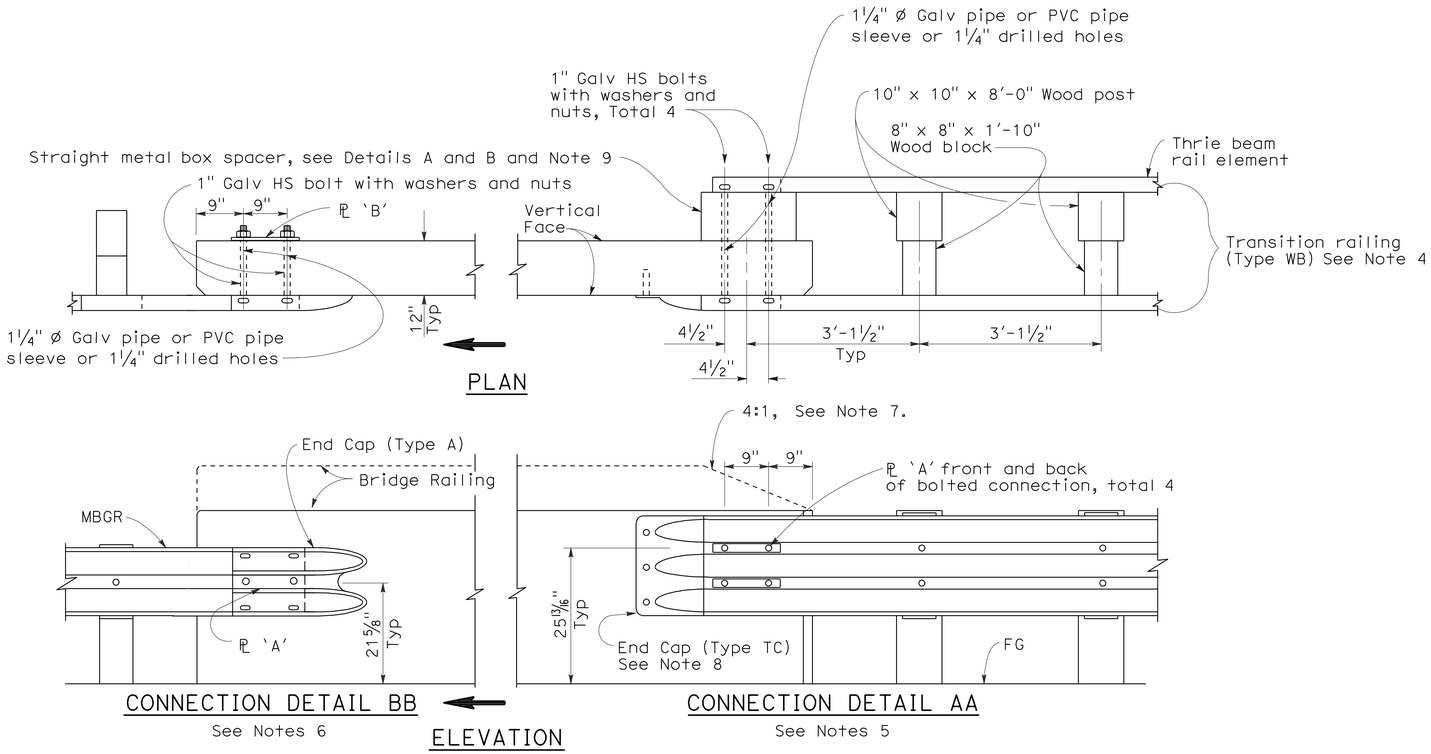

GUARD RAILING CONNECTION TO BRIDGE RAILING WITHOUT SIDEWALK

NOTES:

1. See Revised Standard Plan RSP A77J2 for additional connection details to bridges without sidewalks.
2. Additional details of posts, blocks and hardware are shown on Standard Plan A77B1, A77C1 and A77C2.
3. Direction of adjacent traffic indicated by ➡.
4. For additional details of Transition Railing (Type WB), see Standard Plan A77J4. Transition Railing (Type WB) transitions the 12 gage w-beam standard railing section of guard railing to a heavier gage nested thrie beam railing section which is connected to the concrete bridge railing.
5. For typical use of Connection Detail AA, see Layout Types 12A and 12B on Revised Standard Plan RSP A77F1, Layout Types 12C and 12D on Standard Plan A77F2, and Layout Type 12E on Revised Standard Plan RSP A77F3.
6. For typical use of Connection Detail BB, see Layout Type 12D (structure departure railing connection) on Standard Plan A77F2 and Layout Type 12DD on Standard Plan A77F5.
7. Where the height of the bridge railing exceeds the height of the thrie beam railing by more than 1" at Connection Detail AA, taper the top of the end of the bridge railing at 4:1 to match the top elevation of the thrie beam rail.
8. For details of End Cap (Type TC), see Standard Plan A77J4.
9. See Standard Plan A77J4 for additional details regarding depth dimension for straight metal box spacer.

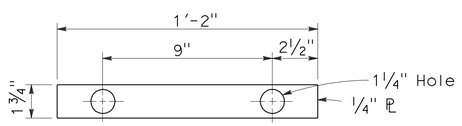

PLATE 'A'

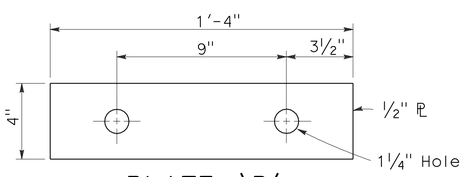

PLATE 'B'
(For backside of connection BB)

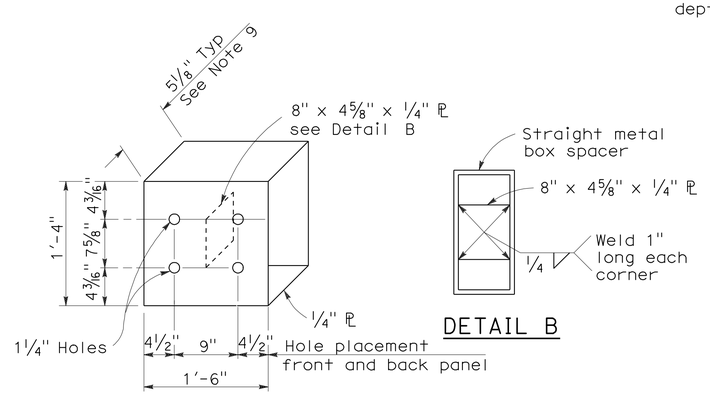

DETAIL A

DETAIL B

STRAIGHT METAL BOX SPACER

STATE OF CALIFORNIA
DEPARTMENT OF TRANSPORTATION

METAL BEAM GUARD RAILING CONNECTIONS TO BRIDGE RAILINGS WITHOUT SIDEWALKS DETAILS No.1

NO SCALE

RSP A77J1 DATED JUNE 6, 2008 SUPERSEDES STANDARD PLAN A77J1
DATED MAY 1, 2006 - PAGE 72 OF THE STANDARD PLANS BOOK DATED MAY 2006.

REVISED STANDARD PLAN RSP A77J1

2006 REVISED STANDARD PLAN RSP A77J1

12-10-07

DIST	COUNTY	ROUTE	POST MILES TOTAL PROJECT	SHEET NO.	TOTAL SHEETS
08	SBd	10	20.0/R24.5	48	56

Randell D. Hiatt
REGISTERED CIVIL ENGINEER

June 5, 2009
PLANS APPROVAL DATE

REGISTERED PROFESSIONAL ENGINEER
Randell D. Hiatt
No. C50200
Exp. 6-30-09
CIVIL
STATE OF CALIFORNIA

The State of California or its officers or agents shall not be responsible for the accuracy or completeness of electronic copies of this plan sheet.

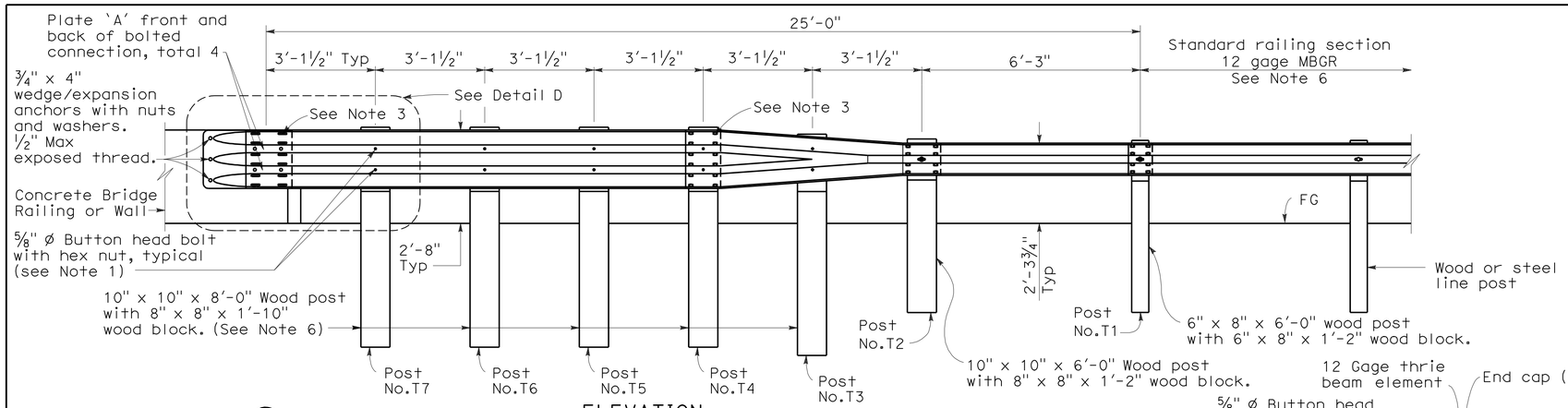

ELEVATION

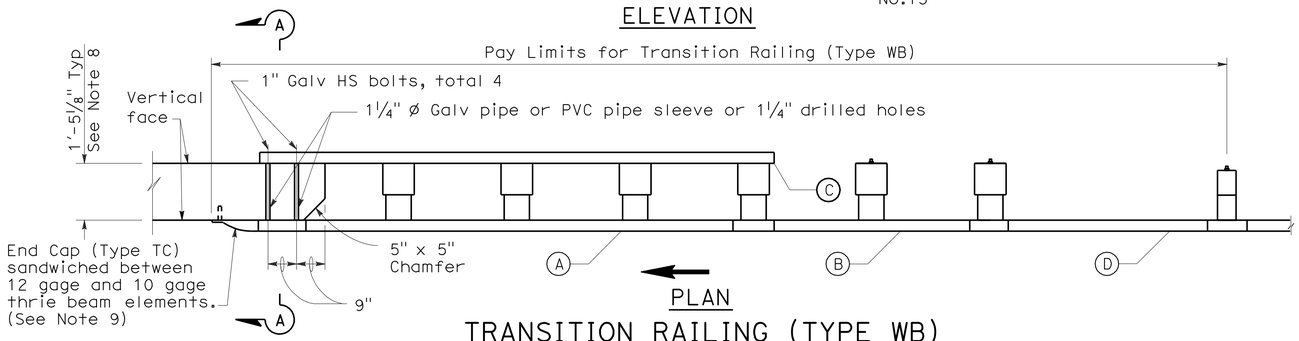

PLAN

TRANSITION RAILING (TYPE WB)

(No Blockout Attachment)

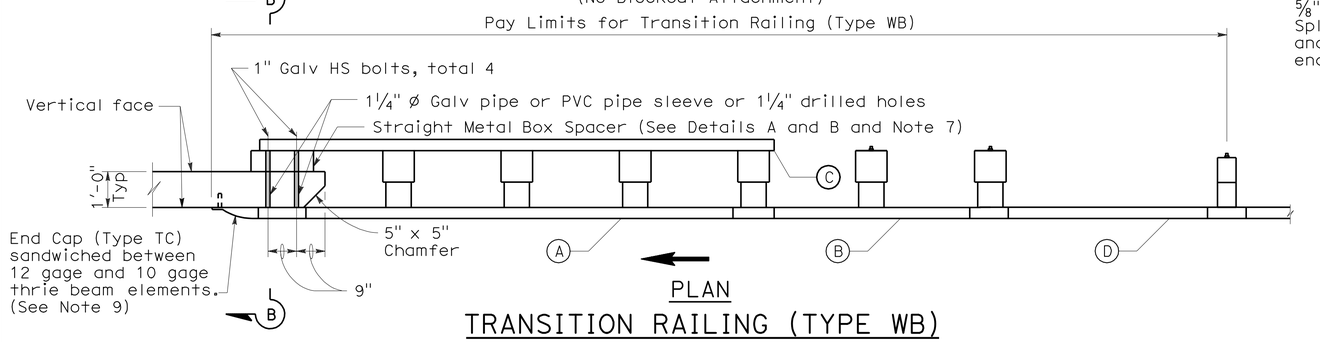

PLAN

TRANSITION RAILING (TYPE WB)

(Blockout Attachment)

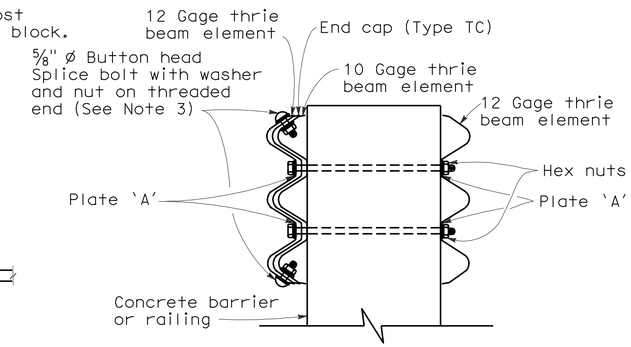

SECTION A-A

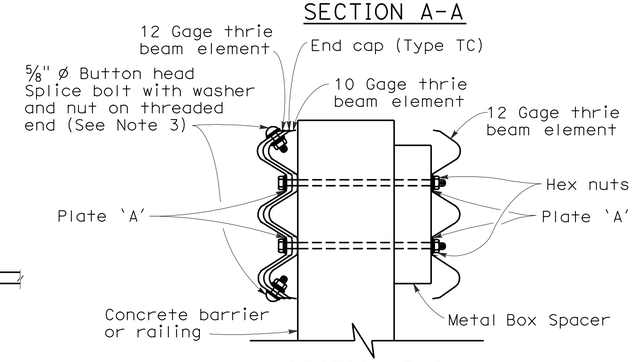

SECTION B-B

NOTES:

To accompany plans dated 2-28-11

1. Use 5/8 " ø Button head bolts and hex nuts for connections to posts. No washer on rail face for bolted connections to post.
2. The nested rail elements, end cap, and 'W' beam to thrie beam element may be spliced together prior to bolting the elements to the wood post and concrete barrier or railing.
3. Exterior splice bolt holes for rail element splices at Post No.T4 and the connection to the concrete barrier or railing shall be the standard 29/32 " x 1 1/8 " slot size. Interior splice bolt holes at these locations may be increased up to 1 1/4 " ø. Only the top 2 and the bottom 2 splice bolts with washers and nuts are required for rail splices at Post No.T4 and the connection to the concrete barrier or railing.
4. Direction of adjacent traffic indicated by →.
5. The top elevation of Post Nos.T2 through T7 shall not project more than 1" above the top elevation of the rail element.
6. Typically, the railing connected to Transition Railing (Type WB) will be either standard railing section of metal beam guard railing or an approved Caltrans end treatment attached to Post No.T1.
7. The depth of the metal box spacer varies from the 5 1/8 " to 1 1/2 " and is dependent on the width of the concrete railing or wall. The combined dimension for the depth of the metal box spacer plus the width of railing or wall is typically 17 1/8 ". Where the space between the backside of the concrete railing or wall and the rear thrie beam element is less than 1 1/2 ", metal plates similar to Plate 'A' are to be used as spacers.
8. Where the width of the concrete railing or wall is greater than 17 1/8 ", wood blocks are to be used to fill the space created between the backside of Posts No.4 through No.7 and the rear thrie beam element. These wood blocks shall be 8" in width and 1'-2" in length. The dimension between the front thrie beam element and the rear thrie beam element is to match the width of the concrete railing or wall.
9. End cap may be installed over 12 gage and 10 gage thrie beam elements where transition railing is installed on the departure end of bridge railing.

LEGEND

(A) Nested thrie beam elements (one 12 gage element nested over one 10 gage element).

(B) One 10 gage "W" beam to thrie beam element.

(C) One 12 gage thrie beam element.

(D) One 10 gage "W" beam rail element (7'-3½" length)

10 gage = 0.135" thick

12 gage = 0.108" thick

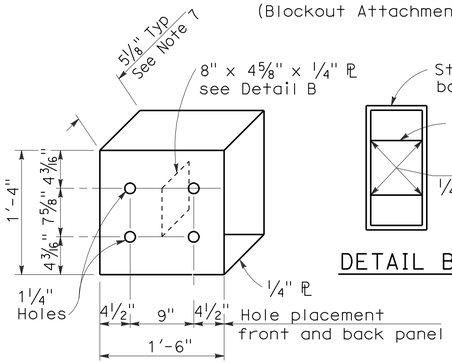

DETAIL A

STRAIGHT METAL BOX SPACER

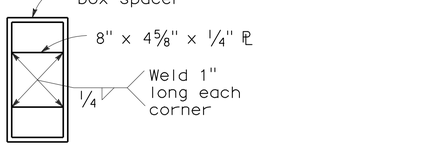

DETAIL B

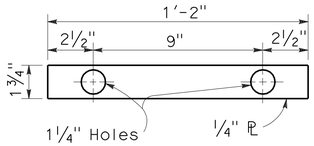

DETAIL C

PLATE 'A'

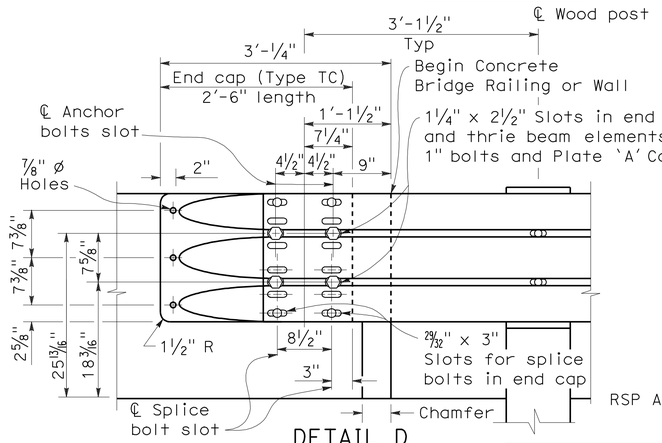

DETAIL D

STATE OF CALIFORNIA
DEPARTMENT OF TRANSPORTATION

METAL BEAM GUARD RAILING TRANSITION RAILING (TYPE WB)

NO SCALE

RSP A77J4 DATED JUNE 5, 2009 SUPERSEDES RSP A77J4 DATED JUNE 6, 2008 AND STANDARD PLAN A77J4 DATED MAY 1, 2006 - PAGE 75 OF THE STANDARD PLANS BOOK DATED MAY 2006.

REVISED STANDARD PLAN RSP A77J4

2006 REVISED STANDARD PLAN RSP A77J4

DIST	COUNTY	ROUTE	POST MILES TOTAL PROJECT	SHEET NO.	TOTAL SHEETS
08	SBd	10	20.0/R24.5	49	56

Randell D. Hiatt
REGISTERED CIVIL ENGINEER

June 6, 2008
PLANS APPROVAL DATE

REGISTERED PROFESSIONAL ENGINEER
Randell D. Hiatt
No. C50200
Exp. 6-30-09
CIVIL
STATE OF CALIFORNIA

The State of California or its officers or agents shall not be responsible for the accuracy or completeness of electronic copies of this plan sheet.

To accompany plans dated 2-28-11

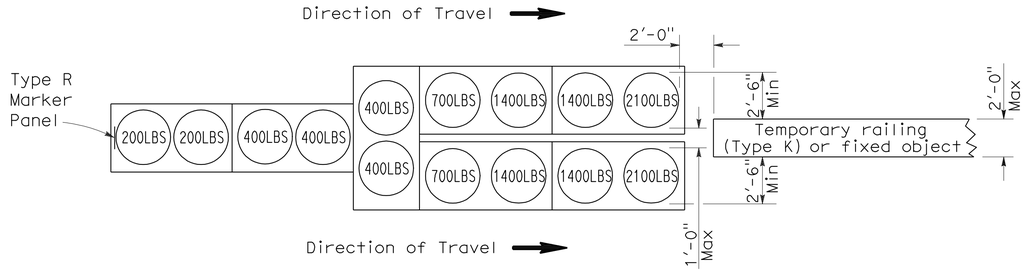

ARRAY 'TU14'

Approach speed 45 mph or more

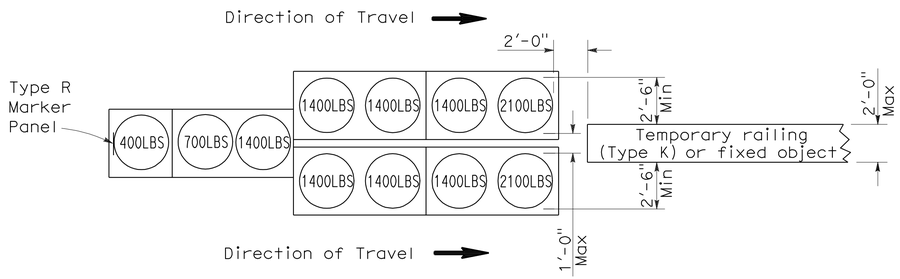

ARRAY 'TU11'

Approach speed less than 45 mph

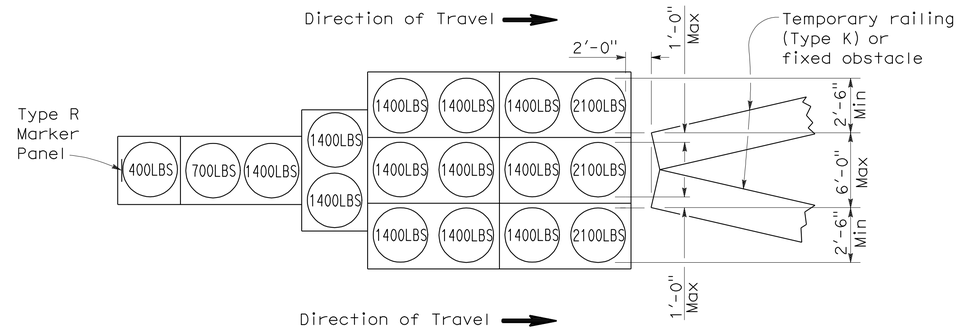

ARRAY 'TU17'

Approach speed less than 45 mph

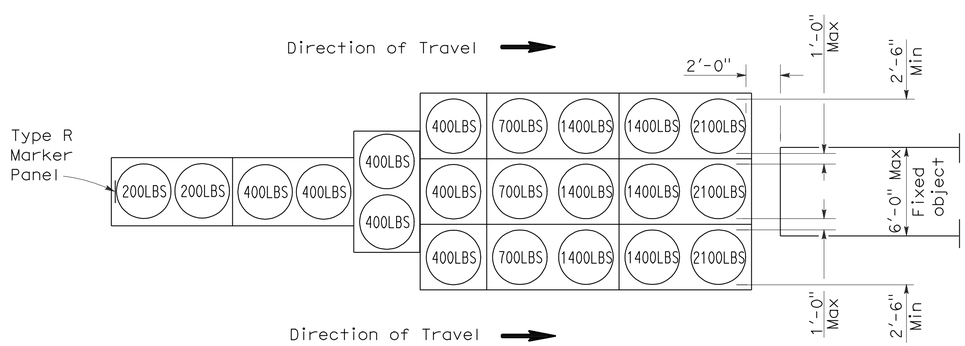

ARRAY 'TU21'

Approach speed 45 mph or more

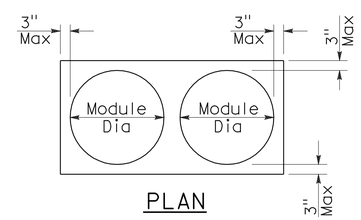

PLAN

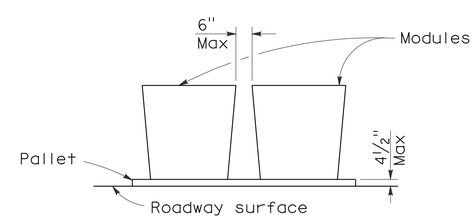

ELEVATION

CRASH CUSHION PALLET DETAIL

See Note 7

NOTES:

1. (XXX) Indicates sand filled module location and weight of sand in pounds for each module. Module spacing is based on the greater diameter of the module.
2. All sand weights are nominal.
3. Temporary crash cushion arrays shall not encroach on the traveled way.
4. Place the top of Type R marker panel 1" below the module lid.
5. Refer to Standard Plan A73B for marker details.
6. Approach speeds indicated conform to NCHRP 350 Report criteria.
7. Use of pallets is optional.

STATE OF CALIFORNIA
DEPARTMENT OF TRANSPORTATION

TEMPORARY CRASH CUSHION, SAND FILLED (UNIDIRECTIONAL)

NO SCALE

RSP T1A DATED JUNE 6, 2008 SUPERSEDES STANDARD PLAN T1A
DATED MAY 1, 2006 - PAGE 211 OF THE STANDARD PLANS BOOK DATED MAY 2006.

REVISED STANDARD PLAN RSP T1A

2006 REVISED STANDARD PLAN RSP T1A

DIST	COUNTY	ROUTE	POST MILES TOTAL PROJECT	SHEET NO.	TOTAL SHEETS
08	SBd	10	20.0/R24.5	50	56

Randell D. Hiatt
REGISTERED CIVIL ENGINEER

June 6, 2008
PLANS APPROVAL DATE

REGISTERED PROFESSIONAL ENGINEER
Randell D. Hiatt
No. C50200
Exp. 6-30-09
CIVIL
STATE OF CALIFORNIA

The State of California or its officers or agents shall not be responsible for the accuracy or completeness of electronic copies of this plan sheet.

To accompany plans dated 2-28-11

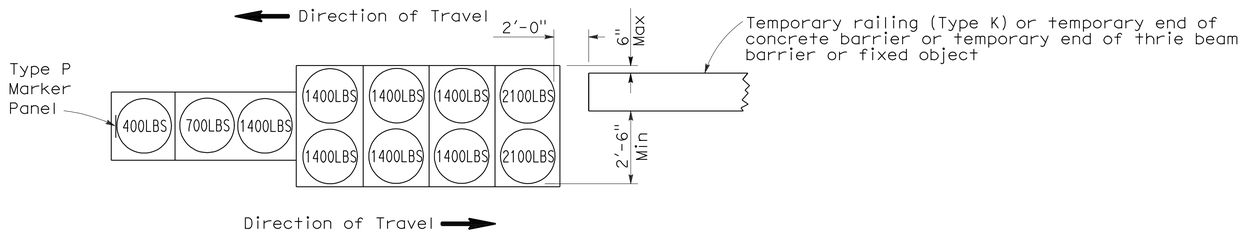

ARRAY 'TB11'

Approach speed less than 45 mph

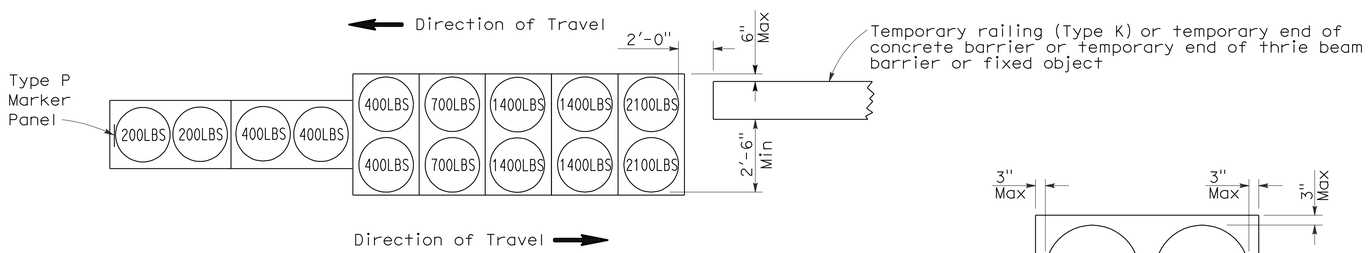

ARRAY 'TB14'

Approach speed 45 mph or more

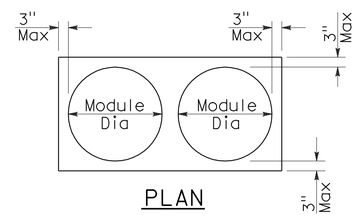

PLAN

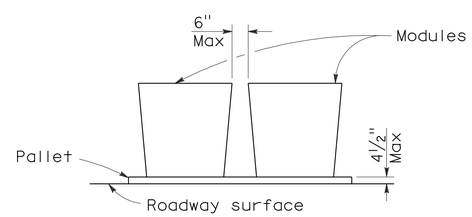

ELEVATION

CRASH CUSHION PALLET DETAIL

See Note 7

NOTES:

1. (XXX) Indicates sand filled module location and weight of sand in pounds for each module. Module spacing is based on the greater diameter of the module.
2. All sand weights are nominal.
3. Temporary crash cushion arrays shall not encroach on the traveled way.
4. Place the Type P marker panel so that the bottom of the panel rests upon the pallet.
5. Refer to Standard Plan A73B for marker details.
6. Approach speeds indicated conform to NCHRP 350 Report criteria.
7. Use of pallets is optional.

STATE OF CALIFORNIA
DEPARTMENT OF TRANSPORTATION

TEMPORARY CRASH CUSHION, SAND FILLED (BIDIRECTIONAL)

NO SCALE

RSP T1B DATED JUNE 6, 2008 SUPERSEDES STANDARD PLAN T1B
DATED MAY 1, 2006 - PAGE 212 OF THE STANDARD PLANS BOOK DATED MAY 2006.

REVISED STANDARD PLAN RSP T1B

2006 REVISED STANDARD PLAN RSP T1B

5-15-08

DIST	COUNTY	ROUTE	POST MILES TOTAL PROJECT	SHEET NO.	TOTAL SHEETS
08	SBd	10	20.0/R24.5	51	56

Randell D. Hiatt
REGISTERED CIVIL ENGINEER

June 6, 2008
PLANS APPROVAL DATE

REGISTERED PROFESSIONAL ENGINEER
Randell D. Hiatt
No. C50200
Exp. 6-30-09
CIVIL
STATE OF CALIFORNIA

The State of California or its officers or agents shall not be responsible for the accuracy or completeness of electronic copies of this plan sheet.

To accompany plans dated 2-28-11

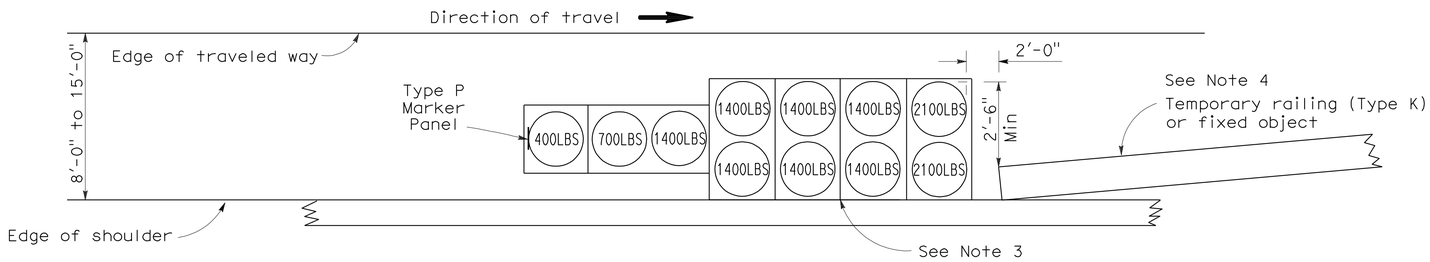

ARRAY 'TS11'

Approach speed less than 45 mph
See Note 9

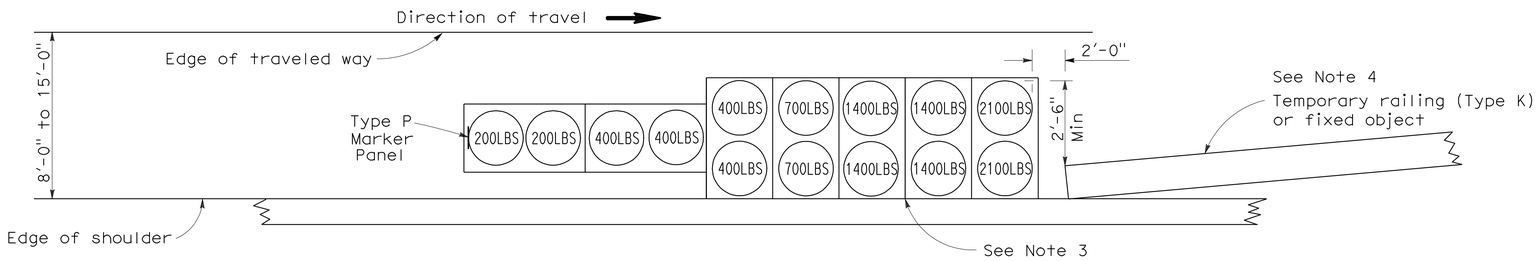

ARRAY 'TS14'

Approach speed 45 mph or more
See Note 9

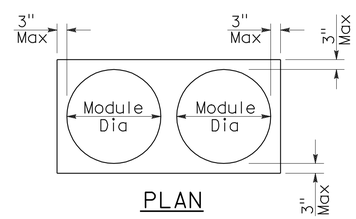

PLAN

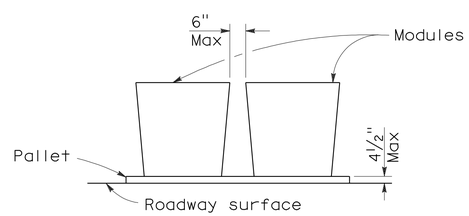

ELEVATION

CRASH CUSHION PALLET DETAIL

See Note 11

NOTES:

1. (XXX) Indicates sand filled module location and weight of sand in pounds for each module. Module spacing is based on the greater diameter of the module.
2. All sand weights are nominal.
3. The temporary crash cushion arrays shown on this plan shall be used only in locations where there will be traffic on one side of the temporary crash cushion array.
4. If the fixed object or approach end of the temporary railing is less than 15'-0" from the edge of traveled way, a temporary crash cushion is required in a construction or work zone.
5. Temporary crash cushion arrays shall not encroach on the traveled way.
6. Arrays for median shoulders shall conform to details shown on this plan for outside shoulders.
7. Place the Type P marker panel so that the bottom of the panel rests upon the pallet and faces traffic.
8. Refer to Standard Plan A73B for marker details.
9. For shoulder widths less than 8'-0", appropriate approved crash cushion protection, other than sand filled modules, shall be provided at fixed objects and at approach ends of temporary railing. The specific type of crash cushion shall be as shown on the project plans or as specified in the Special Provisions, or if not shown on the project plans or specified in the Special Provisions, shall be as approved by the Engineer.
10. Approach speeds indicated conform to NCHRP 350 Report criteria.
11. Use of pallets is optional.

STATE OF CALIFORNIA
DEPARTMENT OF TRANSPORTATION

TEMPORARY CRASH CUSHION, SAND FILLED (SHOULDER INSTALLATIONS)

NO SCALE

RSP T2 DATED JUNE 6, 2008 SUPERSEDES STANDARD PLAN T2
DATED MAY 1, 2006 - PAGE 213 OF THE STANDARD PLANS BOOK DATED MAY 2006.

REVISED STANDARD PLAN RSP T2

2006 REVISED STANDARD PLAN RSP T2

DIST	COUNTY	ROUTE	POST MILES TOTAL PROJECT	SHEET NO.	TOTAL SHEETS
08	SBd	10	20.0/R24.5	52	56

LICENSED LANDSCAPE ARCHITECT

August 15, 2008
PLANS APPROVAL DATE

LICENSED LANDSCAPE ARCHITECT Robert B. Schott 3625 Signature 11-04-08 Renewal Date 08-11-08 Date STATE OF CALIFORNIA

The State of California or its officers or agents shall not be responsible for the accuracy or completeness of electronic copies of this plan sheet.

To accompany plans dated 2-28-11

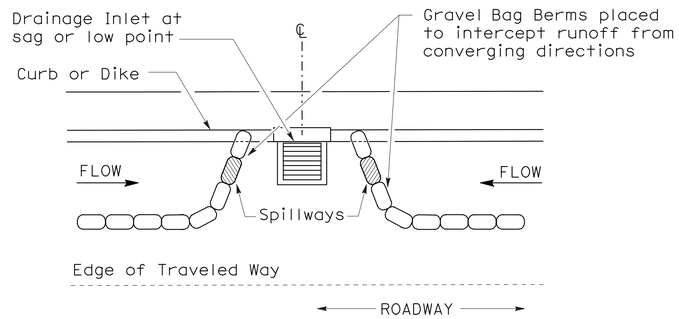

PLAN

CONFIGURATION FOR SAG POINT INLET (GRAVEL BAG BERM)

GRAVEL BAG BERM (TYPE 3A) SPACING TABLE

SLOPE OF ROADWAY (PERCENT)	1 to 3.9	4 to 5.9	6 to 7.9	8 to 10	10+
INTERVAL BETWEEN BERM	100′	75′	50′	25′	12′

For slope of less than 1%, install barriers only if erosion/sediment is prevalent

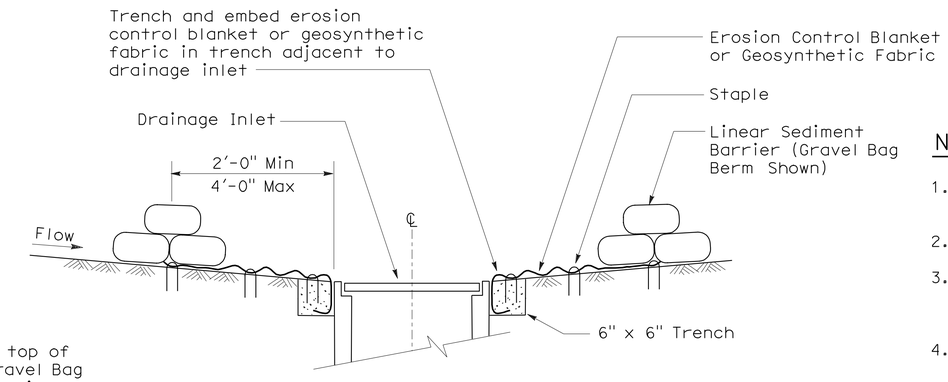

SECTION A-A

NOTES:

1. Place safety cones adjacent to drainage inlet protection.
2. Dimensions may vary to fit field conditions.
3. Install a minimum of 3 gravel bag berms upstream of each drainage inlet to be protected.
4. Position erosion control blanket or geosynthetic fabric at edge of concrete apron and secure in trench.
5. Erosion control blanket or geosynthetic fabric is not required if the area adjacent to the drainage inlet is vegetated or paved.

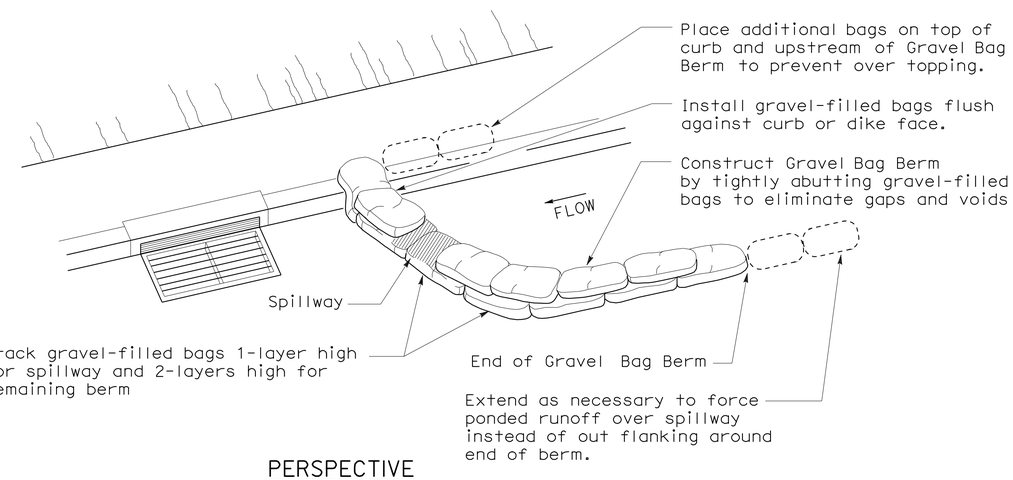

PERSPECTIVE

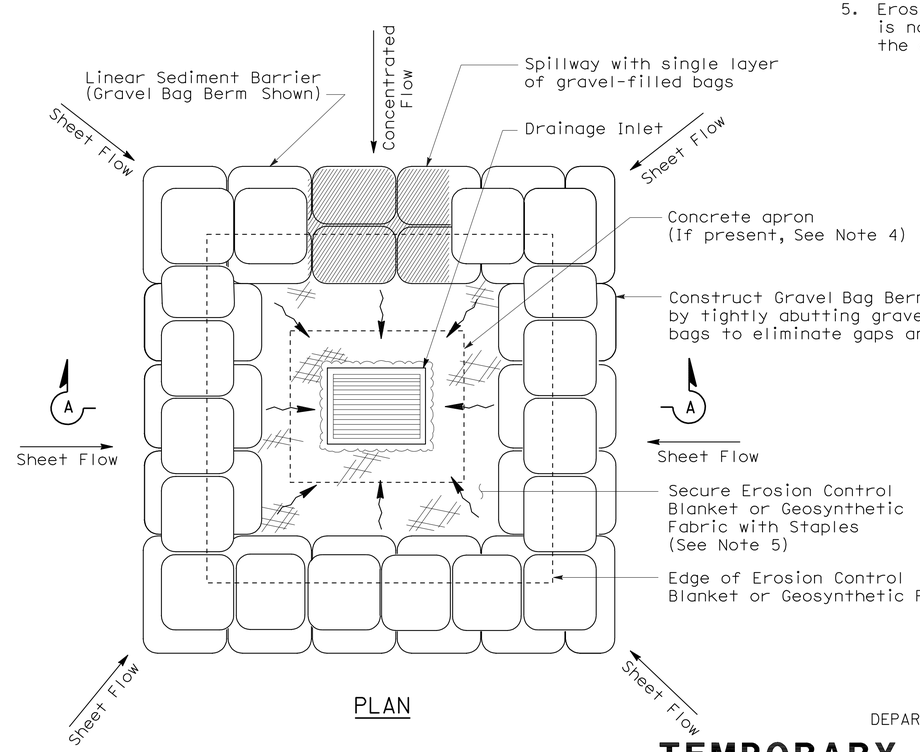

PLAN

TEMPORARY DRAINAGE INLET PROTECTION (TYPE 3B)

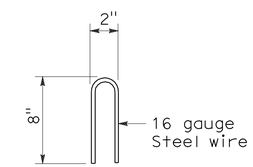

STAPLE DETAIL

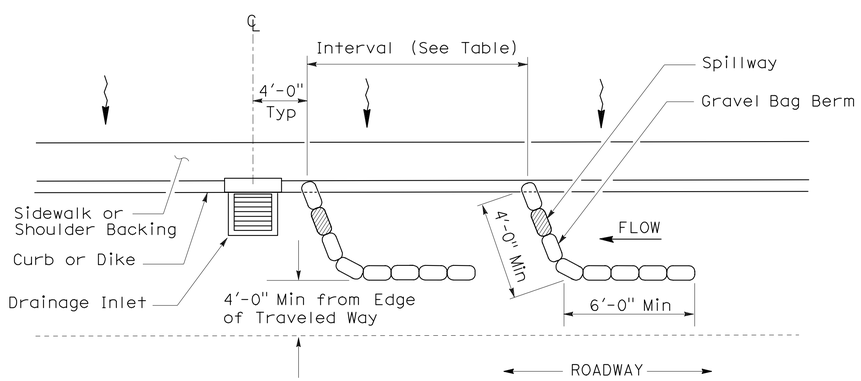

PLAN

TEMPORARY DRAINAGE INLET PROTECTION (TYPE 3A) (GRAVEL BAG BERM)

STATE OF CALIFORNIA
DEPARTMENT OF TRANSPORTATION

TEMPORARY WATER POLLUTION CONTROL DETAILS (TEMPORARY DRAINAGE INLET PROTECTION)

NO SCALE

NSP T62 DATED AUGUST 15, 2008 SUPPLEMENTS THE STANDARD PLANS BOOK DATED MAY 2006.

NEW STANDARD PLAN NSP T62

2006 NEW STANDARD PLAN NSP T62

7-11-08

DIST	COUNTY	ROUTE	POST MILES TOTAL PROJECT	SHEET NO.	TOTAL SHEETS
08	SBd	10	20.0/R24.5	53	56

REGISTERED ELECTRICAL ENGINEER

October 5, 2007
PLANS APPROVAL DATE

REGISTERED PROFESSIONAL ENGINEER Jeffery G. McRae No. E14512 Exp. 6-30-08 ELECTRICAL STATE OF CALIFORNIA

The State of California or its officers or agents shall not be responsible for the accuracy or completeness of electronic copies of this plan sheet.

To accompany plans dated 2-28-11

ELECTROLIERS

STANDARD TYPES
15, 15D
15 STRUCTURE
21, 21D STRUCTURE
30
31
32
35
36-20A

High mast light pole

Double Arm lighting standard

Existing electrolier

Electrolier foundation (Future installation)

NOTES:

1. Luminaires shall be 310 W HPS when installed on Type 21, 21D, 30, 31, 32, 35 and 36-20A Standards, unless otherwise specified. Luminaires shall be 200 W HPS when installed on other type standards or poles, unless otherwise specified.
2. Luminaires shall be the cutoff type, ANSI Type Ⅲ medium cutoff lighting distribution, unless otherwise specified.
3. Variations noted adjacent to symbol on project plans.

Electrolier (see project notes or project plans)

Luminaire on wood pole

STANDARD NOTES:

- AB — Abandon. If applied to conduit, remove conductors.
- BC — Install pull box in existing conduit run.
- BP — Pedestrian barricade, type as indicated on plan.
- CB — Install conduit into existing pull box.
- CC — Connect new and existing conduit. Remove existing conductors and install conductors as indicated.
- CF — Conduit to remain for future use. Remove conductors. Install pull wire or rope.
- DH — Detector handhole.
- FA — Foundation to be abandoned.
- IS — Install sign on signal mast arm.
- NS — No slip base on standard.
- PEC — Photoelectric control.
- PEU — Photoelectric unit.
- RC — Equipment or material to be removed and become the property of the Contractor.
- RE — Remove electrolier, fuses and ballast. Tape ends of conductors.
- RL — Relocate equipment.
- RR — Remove and reuse equipment.
- RS — Remove and salvage equipment.
- SC — Splice new to existing conductors.
- SD — Service disconnect.
- SF — Standard to remain for future use. Remove luminaire, pole conductors, fuses and ballast.
- TSP — Telephone service point.

ABBREVIATIONS AND EQUIPMENT DESIGNATIONS

PROPOSED	EXISTING	
BBS	bbs	Battery backup system
BC	bc	Bolt circle
C	C	Conduit
CCTV	cctv	Closed circuit television
CKT	ckt	Circuit
CMS	cms	Changeable message sign
DLC	dlc	Loop detector lead-in cable
EMS	ems	Extinguishable message sign
EVC	evc	Emergency vehicle cable
EVD	evd	Emergency vehicle detector
FB	fb	Flashing beacon
FBCA	fbca	Flashing beacon control assembly
FBS	fbs	Flashing beacon with slip base
FO	fo	Fiber optic
G	G	Ground (Equipment Grounding Conductor)
GFCI	GFCI	Ground fault circuit interrupt
HAR	har	Highway advisory radio
HEX	hex	Hexagonal
HPS	hps	High pressure sodium
IISNS	iisns	Internally illuminated street name sign
ISL	isl	Induction sign lighting
LED	led	Light emitting diode
LMA	lma	Luminaire mast arm
LPS	lps	Low pressure sodium
LTG	ltg	Lighting
LUM	lum	Luminaire
MAT	mat	Mast arm mounting vehicle signal faces, top attachment
MAS	mas	Mast arm mounting vehicle signal faces, side attachment
MAS-4A	mas-4A	Mast arm mounting vehicle signal faces, side attachment - 4 signal section
MAS-4B	mas-4B	
MAS-4C	mas-4C	
MAS-5A	mas-5A	Mast arm mounting vehicle signal faces, side attachment - 5 signal section
MAS-5B	mas-5B	
MC	mc	Mercury contactor
M/M	m/m	Multiple to multiple transformer
MT	mt	Conduit with pull wire or rope only
MTG	mtg	Mounting
	mv	Mercury vapor lighting fixture
N	N	Neutral (Grounded Conductor)
NC	NC	Normally closed
NO	NO	Normally open
PB	pb	Pull box
PEC	pec	Photoelectric control (Type Ⅰ, Ⅱ, Ⅲ, Ⅳ or Ⅴ as shown)
PED	ped	Pedestrian
PEU	peu	Photoelectric unit
PPB	ppb	Pedestrian push button
RL		Relocated equipment
RM	rm	Ramp metering
SB	sb	Slip base
SIC	sic	Signal interconnect cable
SIG	sig	Signal
SMA	sma	Signal mast arm
SNS	sns	Street name sign
SP	sp	Service point
TDC	tdc	Telephone demarcation cabinet
TMS	tms	Traffic monitoring station
TOS	tos	Traffic Operations System
VEH	veh	Vehicle
XFMR	xfmr	Transformer
COMM	comm	Communication
RWIS	rwis	Roadway weather information system

SOFFIT AND WALL MOUNTED LUMINAIRES

Pendant, 70 W HPS unless otherwise specified.

Flush, 70 W HPS unless otherwise specified.

Wall surface, 70 W HPS unless otherwise specified.

Existing soffit or wall luminaire to remain unmodified.

Existing soffit or wall luminaire to be modified as specified.

NOTE:

Arrow indicates "street side" of luminaire.

STATE OF CALIFORNIA
DEPARTMENT OF TRANSPORTATION

ELECTRICAL SYSTEMS (SYMBOLS AND ABBREVIATIONS)

NO SCALE

RSP ES-1A DATED OCTOBER 5, 2007 SUPERSEDES STANDARD PLAN ES-1A DATED MAY 1, 2006 - PAGE 400 OF THE STANDARD PLANS BOOK DATED MAY 2006.

REVISED STANDARD PLAN RSP ES-1A

2006 REVISED STANDARD PLAN RSP ES-1A

DIST	COUNTY	ROUTE	POST MILES TOTAL PROJECT	SHEET NO.	TOTAL SHEETS
08	SBd	10	20.0/R24.5	54	56

REGISTERED ELECTRICAL ENGINEER

October 5, 2007
PLANS APPROVAL DATE

REGISTERED PROFESSIONAL ENGINEER Jeffery G. McRae No. E14512 Exp. 6-30-08 ELECTRICAL STATE OF CALIFORNIA

The State of California or its officers or agents shall not be responsible for the accuracy or completeness of electronic copies of this plan sheet.

To accompany plans dated 2-28-11

CONDUIT

PROPOSED	EXISTING	
		Lighting Conduit, unless otherwise indicated or noted
		Traffic signal conduit
C	c	Communication conduit
T	t	Telephone conduit
F	f	Fire alarm conduit
FO	fo	Fiber optic conduit
		Conduit termination (RSP ES-9A C)
R	r	Conduit riser in/on structure or service pole

SERVICE EQUIPMENT

PROPOSED	EXISTING	
OH	oh	Overhead lines
U	U	Wood pole "U" indicates utility owned
		Pole guy with anchor
		Utility transformer - ground mounted
III		Service equipment enclosure type
		Service equipment enclosure door indicates front of enclosure
T	t	Telephone demarcation cabinet

POLE-MOUNTED SERVICE DESIGNATION

Type of installation

TYPE H SERVICE - 28'-10" ← Pole height above grade

ILLUMINATED OVERHEAD SIGN

PROPOSED	EXISTING	
		Overhead sign - Single post
		Overhead sign - Two post
		Overhead sign - Mounted on structure
		Overhead sign with electrolier

SIGNAL EQUIPMENT

PROPOSED	EXISTING	
		Pedestrian signal face
		Pedestrian push button post
		Pedestrian barricade
		Vehicle signal face (with backplate, 3-Section: red, yellow and green)
		Vehicle signal face with angle visors
PV	PV	Modifications of basic symbols: "L" indicates all non-arrow sections louvered "LG" indicates louvered green section only "PV" indicates 12" programmed visibility sections "8" indicates all 8" sections (only when specified)
		Type 15TS and Vehicle signal face
		Vehicle signal face with red, yellow and green left arrow sections
		Vehicle signal face with red and yellow sections and up green arrow
		Vehicle signal face (5 Section) with red, yellow and green sections and yellow and green right arrows
		Type 1 Standard and attached vehicle signal faces
		Standard with signal mast arm only and attached vehicle signal faces and internally illuminated street name sign
		Type 33 Standard, Left-turn vehicle signal face and sign
		Standard with luminaire and signal mast arms and attached vehicle signal faces
		Cantilever flashing beacon Type 9 Frame, with a sign unless otherwise specified or indicated
		Type 15-FBS Standard with two vehicle signal face sections with lens, backplate and visor with a sign
R	Y	Flashing beacon. One vehicle signal face section with lens, backplate and visor. "R" indicates red indication, "Y" indicates yellow indication
		Controller assembly. Door indicates front of cabinet

SIGNAL EQUIPMENT Cont

PROPOSED	EXISTING	
		Guard post
		Type 1 Standard with "Meter On" sign
		Emergency Vehicle detector

NOTES:

1. All signal sections shall be 12" unless shown otherwise.
2. Signal heads shall be provided with backplates unless shown otherwise.
3. Signal indication shall be LED.

STATE OF CALIFORNIA
DEPARTMENT OF TRANSPORTATION

ELECTRICAL SYSTEMS (SYMBOLS AND ABBREVIATIONS)

NO SCALE

RSP ES-1B DATED OCTOBER 5, 2007 SUPERCEDES STANDARD PLAN ES-1B DATED MAY 1, 2006 - PAGE 401 OF THE STANDARD PLANS BOOK DATED MAY 2006.

REVISED STANDARD PLAN RSP ES-1B

2006 REVISED STANDARD PLAN RSP ES-1B

DIST	COUNTY	ROUTE	POST MILES TOTAL PROJECT	SHEET NO.	TOTAL SHEETS
08	SBd	10	20.0/R24.5	55	56

REGISTERED ELECTRICAL ENGINEER

October 5, 2007
PLANS APPROVAL DATE

REGISTERED PROFESSIONAL ENGINEER Jeffery G. McRae No. E14512 Exp. 6-30-08 ELECTRICAL STATE OF CALIFORNIA

The State of California or its officers or agents shall not be responsible for the accuracy or completeness of electronic copies of this plan sheet.

To accompany plans dated 2-28-11

EQUIPMENT IDENTIFICATION

ILLUMINATED SIGN IDENTIFICATION NUMBER:

Sign No. 12345

10 ISL SCI 1.0

- Sign number - Place on post or structure
- Transformer rating (kVA)
- Lighting control type
- Number and type of fixtures

Do NOT place on standard or structure

ELECTROLIER OR EQUIPMENT IDENTIFICATION NUMBER:

12345 - 15'-0"

- Mast arm length, if shown. Do not place on standard or structure.
- Equipment number - Place on standard or structure. Existing equipment numbers are shown in parenthesis

CONDUIT AND CONDUCTOR IDENTIFICATION:

1½"C, 2#10, 15#14, 2 DLC

- Number and size of conductors and cables
- Size of conduit in inches

Ø1, Ø2, Ø2P, etc.	Traffic phase identification for signal faces, detectors and phase diagrams
1 2 3	Project note numbers
A B C	Equipment description, installation or item numbers
1 2 3	Conduit run numbers

SIGNAL AND LIGHTING STANDARD (TYPICAL DESIGNATION):

19A - 3 - 100

- Wind velocity = 100 mph
- Case 3 arm loading
- Standard type
- Standard Plan sheet number
- Detail number or letter

MISCELLANEOUS EQUIPMENT

PROPOSED	EXISTING	
CMS	cms	Changeable message sign
		Closed circuit television camera
		Highway advisory radio pole and antenna
EMS	ems	Extinguishable message sign
M V	m v	Detection device M = Microwave sensor V = Video image sensor

WIRING DIAGRAM LEGEND

P	Pole
CB	Circuit breaker
A	Ampere
V	Volt
M	Metered
UM	Unmetered
NB	Neutral bus
GB	Ground bus
G	Equipment grounding conductor
N	Grounded conductor (Neutral)

- External conductor
- Conductor or bus
- Tie point
- Contactor coil
- Contactor, Contact NO
- Terminal blocks
- Contactor, Contact NC
- Enclosure bond
- Grounding electrode
- Circuit breaker
- Receptacle

PULL BOXES

PROPOSED EXISTING

Pull box-No. 5 unless otherwise indicated or noted.

3 9A(21)

Pull box-Additional designations or descriptions

3	= No. 3½ pull box
5	= No. 5 pull box
6	= No. 6 pull box
7	= No. 7 (Ceiling pull box)
8	= No. 8 (Pendant soffit pull box)
9	= No. 9 pull box
9A	= No. 9A pull box

(C) = Communications pull box
(E) = Pull box with extension
(S) = Sprinkler control pull box
(21) = Anchor bolts and conduit for future installation of Type 21 Standard
(T) = Traffic pull box

VEHICLE DETECTORS

5 J 9 U

- U = Upper
- L = Lower
- Slot number in input file
- Input file (I or J)
- Phase

PROPOSED EXISTING

	Type A detector loop. Outline of sawcut shown.
	Type B detector loop. Outline of sawcut shown.
	Type C detector loop. Outline of sawcut shown.
	Type D detector loop. Outline of sawcut shown.
	Type E detector loop. Outline of sawcut shown.
	Type Q detector loop. Outline of sawcut shown.
	Magnetic detector
DH dh	Detector handhole
	Microwave or video detection zone

STATE OF CALIFORNIA
DEPARTMENT OF TRANSPORTATION

ELECTRICAL SYSTEMS (SYMBOLS AND ABBREVIATIONS)

NO SCALE

RSP ES-1C DATED OCTOBER 5, 2007 SUPERCEDES STANDARD PLAN ES-1C DATED MAY 1, 2006 - PAGE 402 OF THE STANDARD PLANS BOOK DATED MAY 2006.

REVISED STANDARD PLAN RSP ES-1C

2006 REVISED STANDARD PLAN RSP ES-1C

7-10-07

DIST	COUNTY	ROUTE	POST MILES TOTAL PROJECT	SHEET NO.	TOTAL SHEETS
08	SBd	10	20.0/R24.5	56	56

REGISTERED ELECTRICAL ENGINEER

October 5, 2007
PLANS APPROVAL DATE

REGISTERED PROFESSIONAL ENGINEER Jeffery G. McRae No. E14512 Exp. 6-30-08 ELECTRICAL STATE OF CALIFORNIA

The State of California or its officers or agents shall not be responsible for the accuracy or completeness of electronic copies of this plan sheet.

To accompany plans dated 2-28-11

LOOP INSTALLATION PROCEDURE

1. Loops shall be centered in lanes.
2. Saw slots in pavement for loop conductors as shown in details.
3. Distance between side of loop and a lead-in saw cut from adjacent detectors shall be 2'-0" minimum. Distance between lead-in saw cuts shall be 6" minimum.
4. Bottom of saw slot shall be smooth with no sharp edges.
5. Slots shall be washed until clean, blown out and thoroughly dried before installing loop conductors.
6. Adjacent loops on the same sensor unit channel shall be wound in opposite directions.
7. Identify and tag loop circuit pairs in the pull box with loop number, start (S) and finish (F) of conductor. Identify and tag lead-in-cable with sensor number and phase.
8. Install loop conductor in slot using a 3/16" to 1/4" thick wood paddle. Hold loop conductors with wood paddles (at the bottom of the sawed slot) during sealant placement.
9. No more than 2 twisted pairs shall be installed in one sawed slot.
10. Allow additional 5'-0" of slack length of conductor for the lead-in run to pull box.
11. The additional length of each conductor for each loop shall be twisted together into a pair (6 turns per 3'-4" minimum) before being placed in the slot and conduit leading to pull box.
12. Test each loop circuit for continuity, circuit resistance and insulation resistance at the pull box before filling slots.
13. Fill slots as shown in details.
14. Splice loop conductors to lead-in-cable. Splices shall be soldered.
15. End of lead-in-cable and Type 2 loop conductor shall be waterproofed prior to installing in conduit to prevent moisture from entering the cable.
16. Lead-in-cable shall not be spliced between the pull box and the controller cabinet terminals.
17. Test each loop circuit for continuity, circuit resistance and insulation resistance at the controller cabinet location.
18. Where loop conductors are not to be spliced to a lead-in-cable, the ends of the conductors shall be taped and waterproofed with electrical insulating coating.

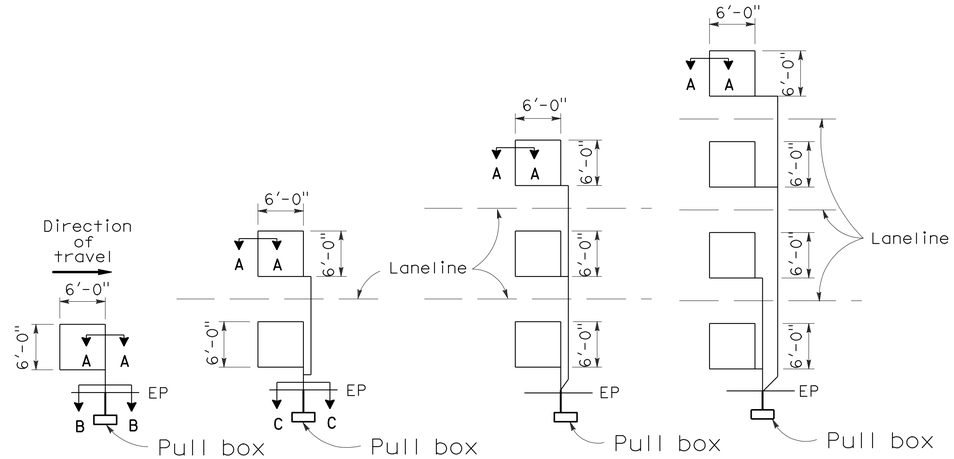

TYPE 1A INSTALLATION | TYPE 2A INSTALLATION | TYPE 3A INSTALLATION | TYPE 4A INSTALLATION

SAWCUT DETAILS

(Type A loop detector configurations illustrated)

1. 1A thru 4A = 1 Type A loop configuration in each lane.
2. 1B thru 4B = 1 Type B loop configuration in each lane.
3. 1C = 1 Type C loop configuration entering lanes as required.
4. 1D thru 4D = 1 Type D loop configuration in each lane.
5. 1E thru 4E = 1 Type E loop configuration in each lane.
6. 1Q thru 4Q = 1 Type Q loop configuration in each lane. (Use Type A, B, C, D, E or Q loop detector configurations only when specified or shown on plans)

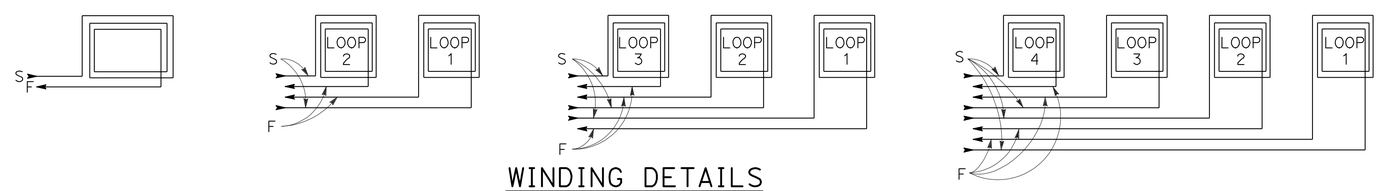

WINDING DETAILS

See Notes 6 and 7

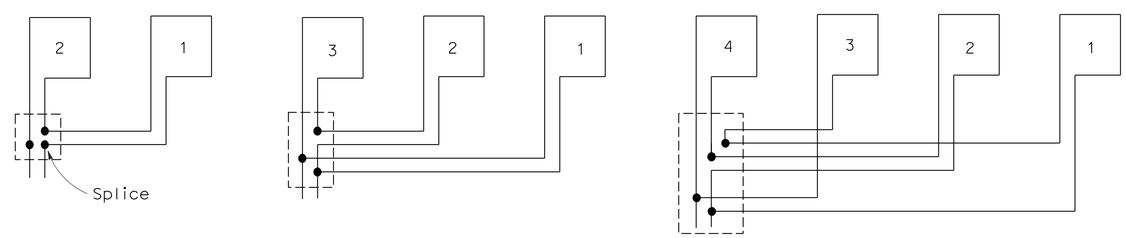

TYPICAL LOOP CONNECTIONS

(Dashed lines represent the pull box)

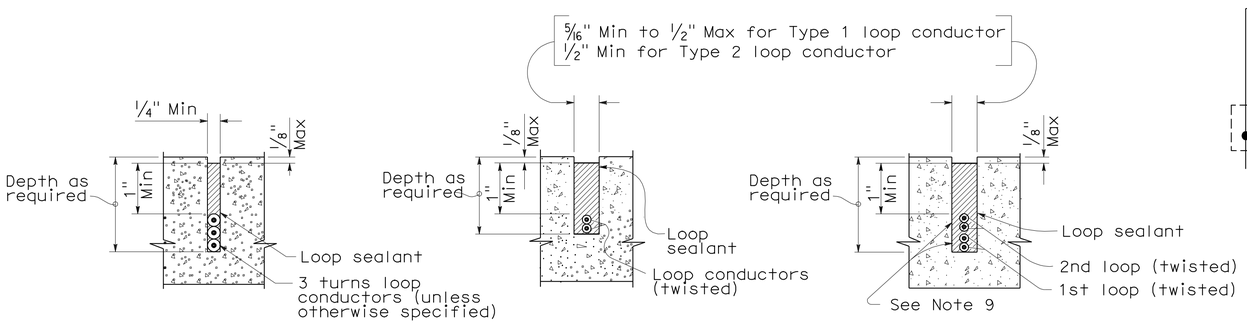

SECTION A-A | SECTION B-B | SECTION C-C

SLOT DETAILS - TYPE 1 AND TYPE 2 LOOP CONDUCTOR

STATE OF CALIFORNIA
DEPARTMENT OF TRANSPORTATION

ELECTRICAL SYSTEMS (DETECTORS)

NO SCALE

RSP ES-5A DATED OCTOBER 5, 2007 SUPERCEDES STANDARD PLAN ES-5A DATED MAY 1, 2006 - PAGE 423 OF THE STANDARD PLANS BOOK DATED MAY 2006.

REVISED STANDARD PLAN RSP ES-5A

2006 REVISED STANDARD PLAN RSP ES-5A