Dist	COUNTY	ROUTE	POST MILES TOTAL PROJECT	SHEET No.	TOTAL SHEETS
08	SBd	60	R4.8	1	55

STATE OF CALIFORNIA

DEPARTMENT OF TRANSPORTATION

PROJECT PLANS FOR CONSTRUCTION ON

STATE HIGHWAY

IN SAN BERNARDINO COUNTY
IN ONTARIO
AT EUCLID AVENUE UNDERCROSSING

TO BE SUPPLEMENTED BY STANDARD PLANS DATED MAY 2006

INDEX OF PLANS

SHEET No.	DESCRIPTION
1	TITLE AND LOCATION MAP
2	TYPICAL CROSS SECTIONS
3	LAYOUT PLANS
4-5	CONSTRUCTION DETAILS
6	TEMPORARY WATER POLLUTION CONTROL QUANTITIES
7	CONTOUR GRADING PLAN
8	UTILITY PLAN
9	UTILITY DETAILS
11-13	TRAFFIC HANDLING PLANS
14	TRAFFIC HANDLING QUANTITIES
15-16	PAVEMENT DELINEATION PLANS
17	PAVEMENT DELINEATION QUANTITIES
18	SIGN DETAILS
19-20	SIGN QUANTITIES
21	SUMMARY OF QUANTITIES
22	PLANT LIST
23	PLANTING PLAN
24	IRRIGATION PLAN
25	LANDSCAPE DETAILS
26-29	ELECTRICAL PLANS
30-55	NEW AND REVISED STANDARD PLANS

THE STANDARD PLANS LIST APPLICABLE TO THIS CONTRACT IS INCLUDED IN THE NOTICE TO BIDDERS AND SPECIAL PROVISIONS BOOK

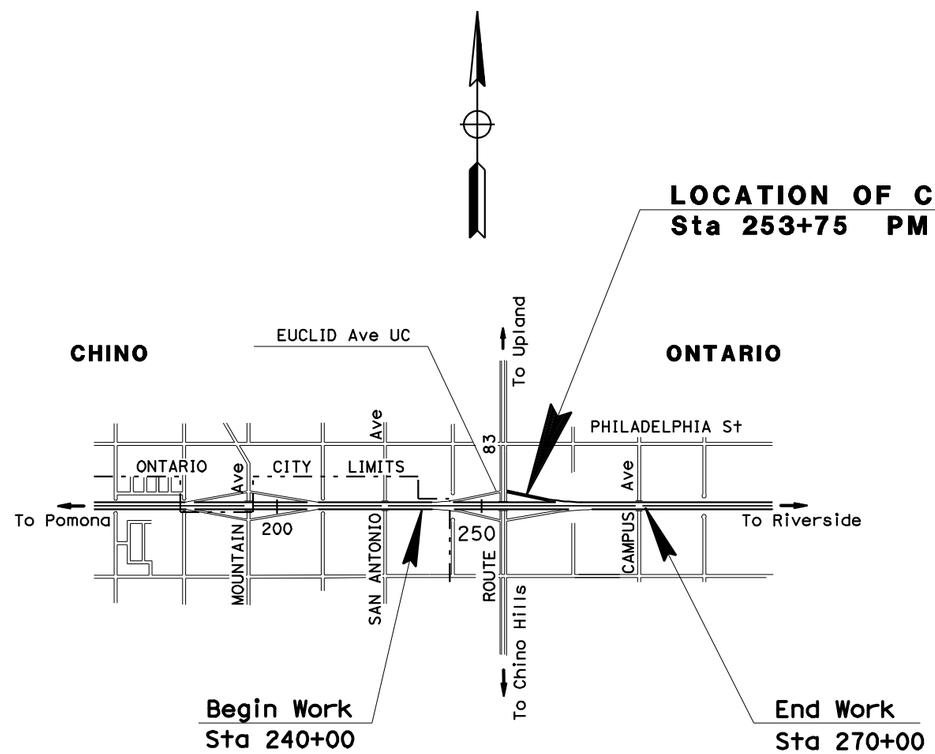

NO SCALE

THE CONTRACTOR SHALL POSSESS THE CLASS (OR CLASSES) OF LICENSE AS SPECIFIED IN THE "NOTICE TO BIDDERS."

PROJECT ENGINEER REGISTERED CIVIL ENGINEER — DATE 3-07-11

March 07, 2011
PLANS APPROVAL DATE

REGISTERED PROFESSIONAL ENGINEER — DUNG HUY PHAN — No. C 73061 — Exp. 12/30/12 — CIVIL — STATE OF CALIFORNIA

THE STATE OF CALIFORNIA OR ITS OFFICERS OR AGENTS SHALL NOT BE RESPONSIBLE FOR THE ACCURACY OR COMPLETENESS OF SCANNED COPIES OF THIS PLAN SHEET.

CONTRACT No.	08-0L0404
PROJECT ID	0800000388

PROJECT MANAGER: MLAALI
DESIGN ENGINEER: DUNG HUY PHAN

LAST REVISION 03-07-11 — DATE PLOTTED => 24-MAR-2011 — TIME PLOTTED => 12:50

Dist	COUNTY	ROUTE	POST MILES TOTAL PROJECT	SHEET No.	TOTAL SHEETS
08	SBd	60	R4.8	2	55

REGISTERED CIVIL ENGINEER 3-07-11 DATE

03-07-11
PLANS APPROVAL DATE

REGISTERED PROFESSIONAL ENGINEER DUNG HUY PHAN No. C 73061 Exp. 12/30/12 CIVIL STATE OF CALIFORNIA

THE STATE OF CALIFORNIA OR ITS OFFICERS OR AGENTS SHALL NOT BE RESPONSIBLE FOR THE ACCURACY OR COMPLETENESS OF SCANNED COPIES OF THIS PLAN SHEET.

NOTES:

1. DIMENSIONS OF THE STRUCTURAL SECTIONS ARE SUBJECT TO TOLERANCES SPECIFIED IN THE STANDARD SPECIFICATIONS.
2. SUPERELEVATION AS SHOWN OR AS DIRECTED BY THE ENGINEER.
3. FOR CONCRETE PAVEMENT AT RAMP TERMINI DETAILS, SEE SHEET C-2.

DESIGN DESIGNATION (ROUTE 60)

ADT (2028)	=	12,560	D	=	55%
ADT (2048)	=	15,480	T	=	6%
DHV	=	1130	V	=	65 MPH
ESAL	=	6,600,000	TI	=	11.5

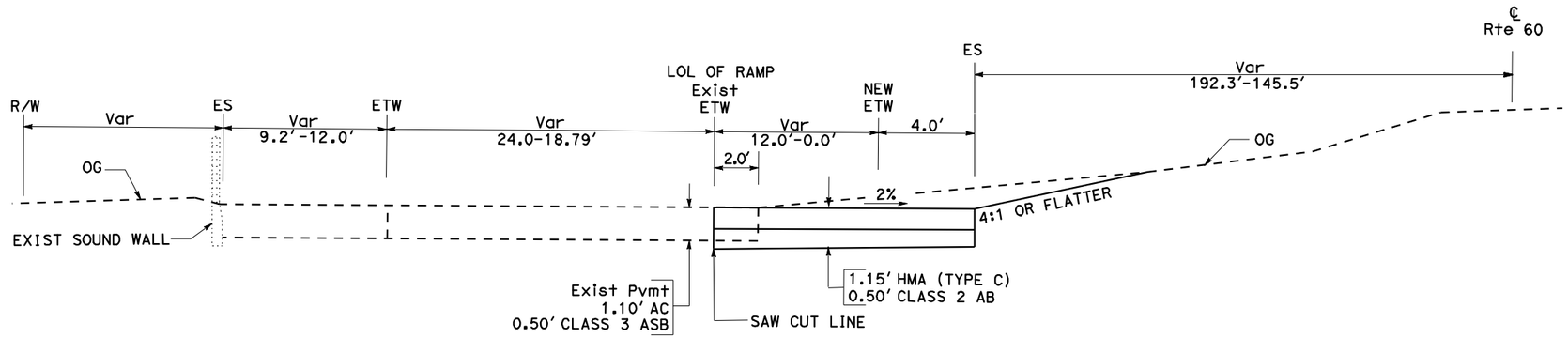

STA 244+24.970 TO STA 248+12.435
TO EUCLID AVENUE WB OFF-RAMP

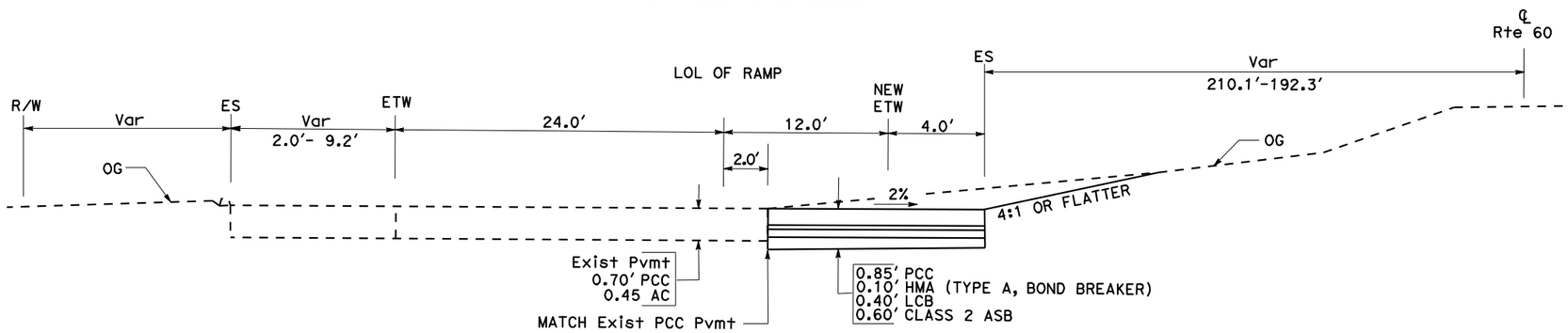

STA 243+08.46 TO STA 244+24.970
TO EUCLID AVENUE WB OFF-RAMP

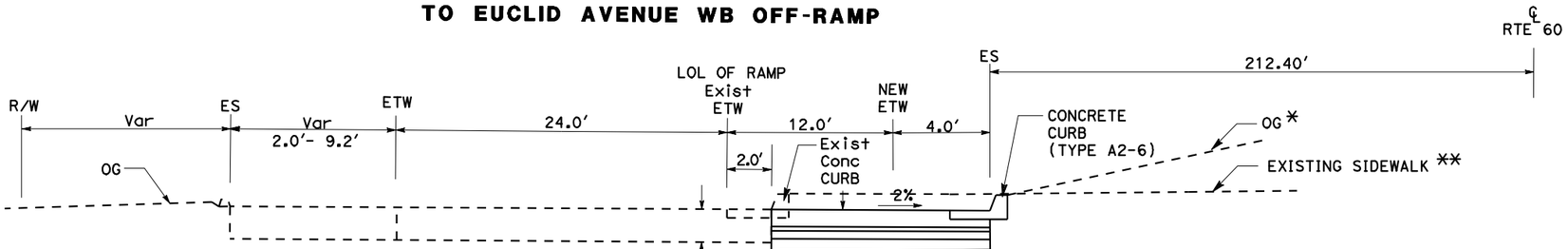

STA 242+76.290 TO STA 243+08.46
TO EUCLID AVENUE WB OFF-RAMP

* EXISTING SIDEWALK ENDS AT STA 242+95.17
** OG FROM STA 242+95.17 TO STA 243+08.46

TYPICAL CROSS SECTIONS

NO SCALE

X-1

REVISED BY	DATE REVISED

CALCULATED-DESIGNED BY: DUNG HUY PHAN
CHECKED BY: RENEE SASSE
FUNCTIONAL SUPERVISOR: RENEE SASSE

STATE OF CALIFORNIA - DEPARTMENT OF TRANSPORTATION
Caltrans
DESIGN

LAST REVISION 03-07-11 | DATE PLOTTED => 24-MAR-2011 | TIME PLOTTED => 12:50

Dist	COUNTY	ROUTE	POST MILES TOTAL PROJECT	SHEET No.	TOTAL SHEETS
08	SBd	60	R4.8	3	55

REGISTERED CIVIL ENGINEER 3-07-11 DATE

03-07-11
PLANS APPROVAL DATE

REGISTERED PROFESSIONAL ENGINEER DUNG HUY PHAN No. C 73061 Exp. 12/30/12 CIVIL STATE OF CALIFORNIA

THE STATE OF CALIFORNIA OR ITS OFFICERS OR AGENTS SHALL NOT BE RESPONSIBLE FOR THE ACCURACY OR COMPLETENESS OF SCANNED COPIES OF THIS PLAN SHEET.

NOTES:

1. FOR COMPLETE RIGHT OF WAY AND ACCURATE ACCESS DATA, SEE RIGHT OF WAY RECORD MAPS AT DISTRICT OFFICE.
2. SEE SHEET C-1 FOR CURB, CURB RAMP, AND STRUCTURAL SECTION DETAILS.
3. SEE CONSTRUCTION DETAILS SHEET C-2 FOR RAMP TERMINI DETAILS.

LEGEND

- REMOVE AC AND PLACE HMA (TYPE A) PAVEMENT
- PCC PAVEMENT
- HMA (TYPE C) PAVEMENT

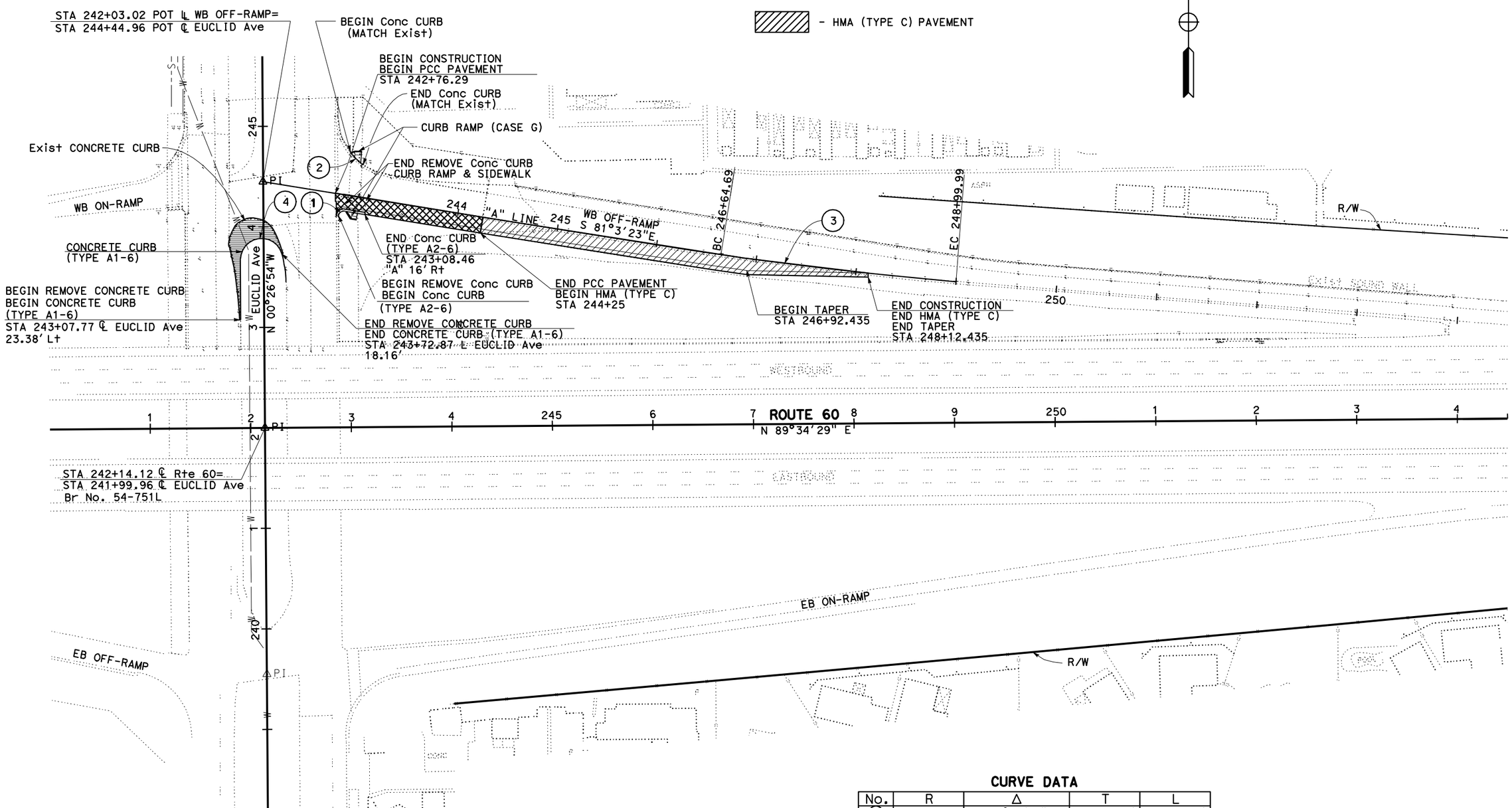

CURVE DATA

No.	R	Δ	T	L
1	5.00'	99°10'41"	5.87'	8.65'
2	50.00'	21°8'23"	9.33'	18.44'
3	2999.97'	4°29'38"	117.71'	235.30'
4	21.00'	165°2'32"	159.97'	60.49'

LAYOUT

SCALE: 1"=50'

L-1

REVISED BY	DATE REVISED
DUNG HUY PHAN	RENEE SASSE
CALCULATED-DESIGNED BY	CHECKED BY
FUNCTIONAL SUPERVISOR	RENEE SASSE

STATE OF CALIFORNIA - DEPARTMENT OF TRANSPORTATION
Caltrans
DESIGN

LAST REVISION 03-07-11 DATE PLOTTED => 24-MAR-2011 TIME PLOTTED => 12:51

Dist	COUNTY	ROUTE	POST MILES TOTAL PROJECT	SHEET No.	TOTAL SHEETS
08	SBd	60	R4.8	4	55

REGISTERED CIVIL ENGINEER 3-07-11 DATE

03-07-11
PLANS APPROVAL DATE

REGISTERED PROFESSIONAL ENGINEER DUNG HUY PHAN No. C 73061 Exp. 12/30/12 CIVIL STATE OF CALIFORNIA

THE STATE OF CALIFORNIA OR ITS OFFICERS OR AGENTS SHALL NOT BE RESPONSIBLE FOR THE ACCURACY OR COMPLETENESS OF SCANNED COPIES OF THIS PLAN SHEET.

NOTES:

1. FOR CURB RAMP DETAILS, SEE 2006 STD PLAN A88A.
2. FOR CONCRETE CURB DETAILS, SEE 2006 STD PLAN RSP A87A.
3. DETECTABLE WARNING SURFACE SHALL BE CONCRETE BLOCKS CAST-IN-PLACE.

LEGEND

HMA (TYPE A) PAVEMENT

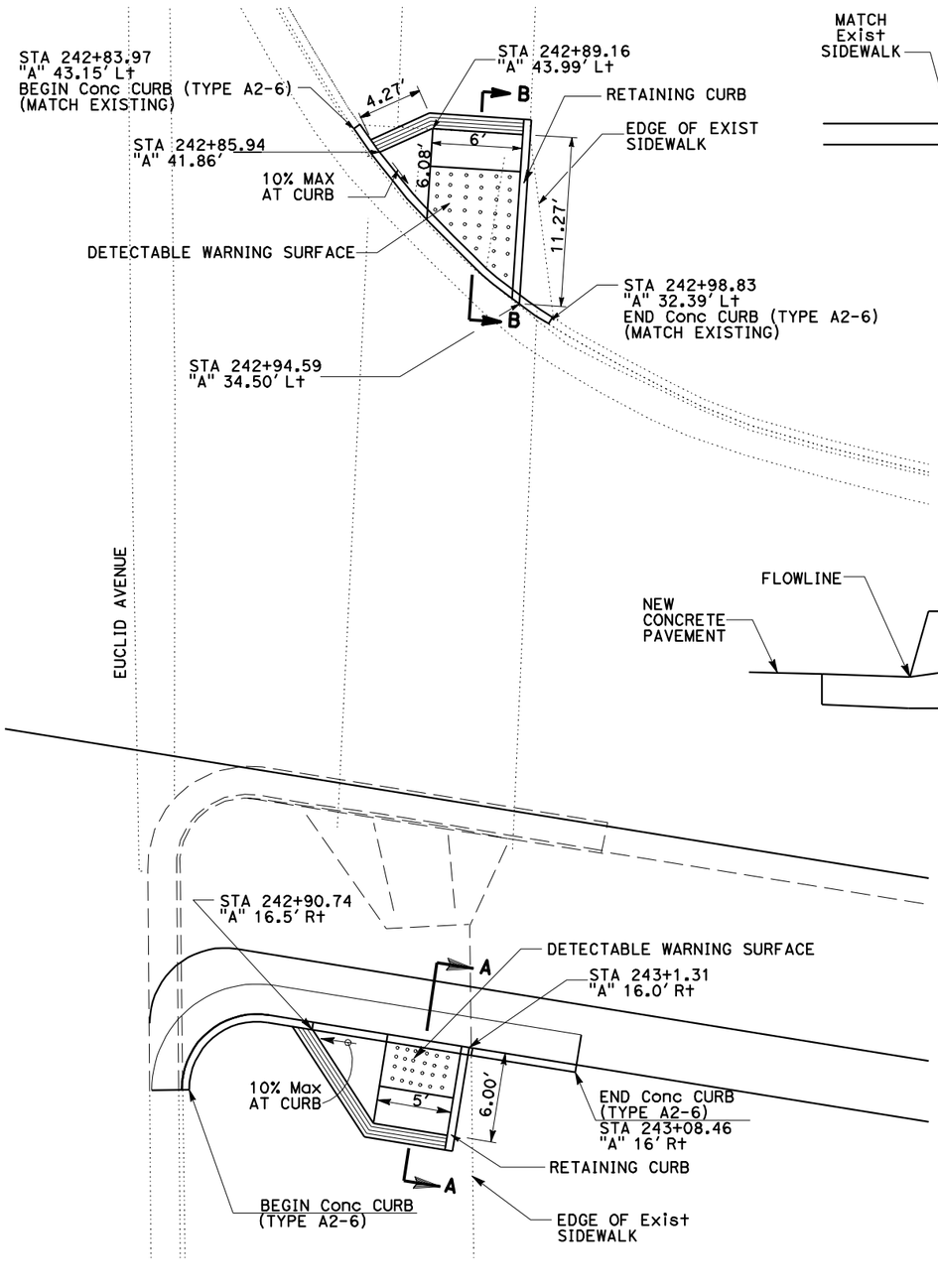

PLAN

CURB RAMPS (CASE G)

SCALE: 1"=5'

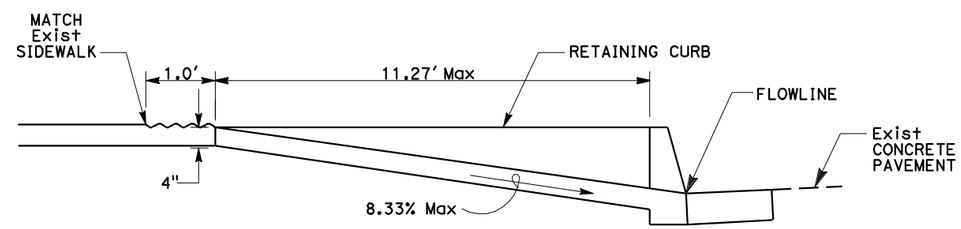

SECTION B-B

NO SCALE

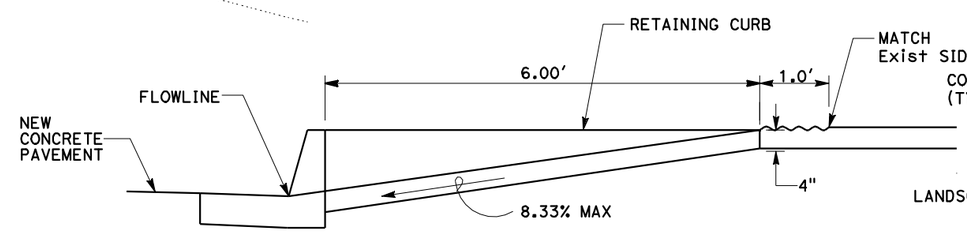

SECTION A-A

NO SCALE

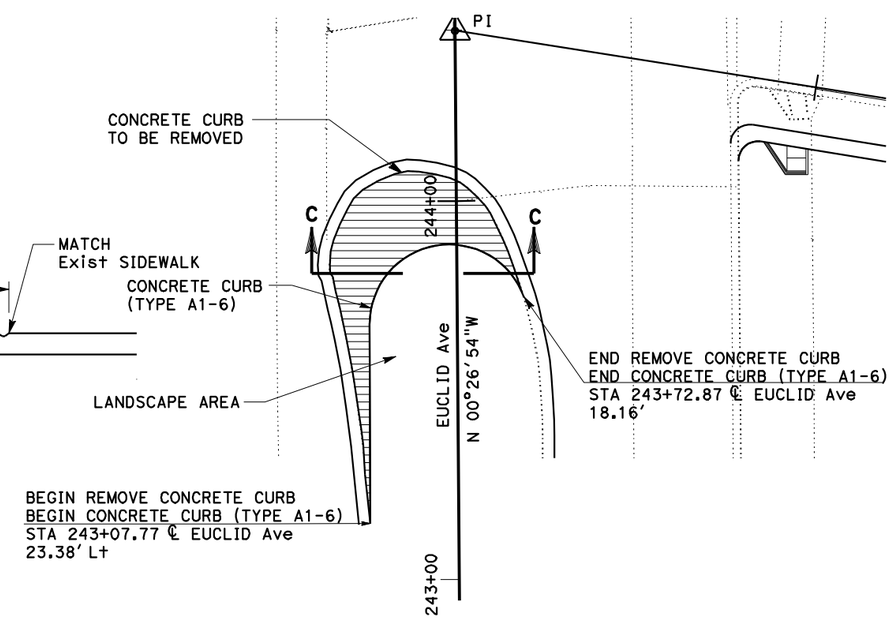

PLAN

SCALE: 1"=20'

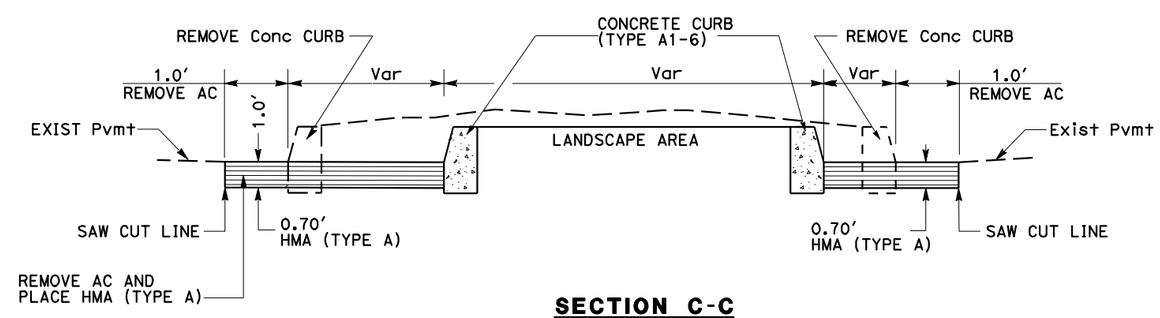

SECTION C-C

NO SCALE

CONSTRUCTION DETAILS

SCALE AS SHOWN

C-1

STATE OF CALIFORNIA - DEPARTMENT OF TRANSPORTATION
Caltrans
DESIGN

FUNCTIONAL SUPERVISOR: RENEE SASSE
CALCULATED-DESIGNED BY: DUNG HUY PHAN
CHECKED BY: RENEE SASSE
REVISED BY
DATE REVISED

LAST REVISION 03-07-11
DATE PLOTTED => 24-MAR-2011
TIME PLOTTED => 12:51

Dist	COUNTY	ROUTE	POST MILES TOTAL PROJECT	SHEET No.	TOTAL SHEETS
08	SBd	60	R4.8	5	55

REGISTERED CIVIL ENGINEER 3-07-11 DATE

03-07-11
PLANS APPROVAL DATE

REGISTERED PROFESSIONAL ENGINEER DUNG HUY PHAN No. C 73061 Exp. 12/30/12 CIVIL STATE OF CALIFORNIA

THE STATE OF CALIFORNIA OR ITS OFFICERS OR AGENTS SHALL NOT BE RESPONSIBLE FOR THE ACCURACY OR COMPLETENESS OF SCANNED COPIES OF THIS PLAN SHEET.

NOTES:

1. FOR CONCRETE PAVEMENT END PANNEL DETAILS SEE 2006 STD PLAN RSP P-30.
2. FOR JOINT DETAILS SEE 2006 REVISED STD PLAN RSP P-18.

LEGEND

PCC PAVEMENT

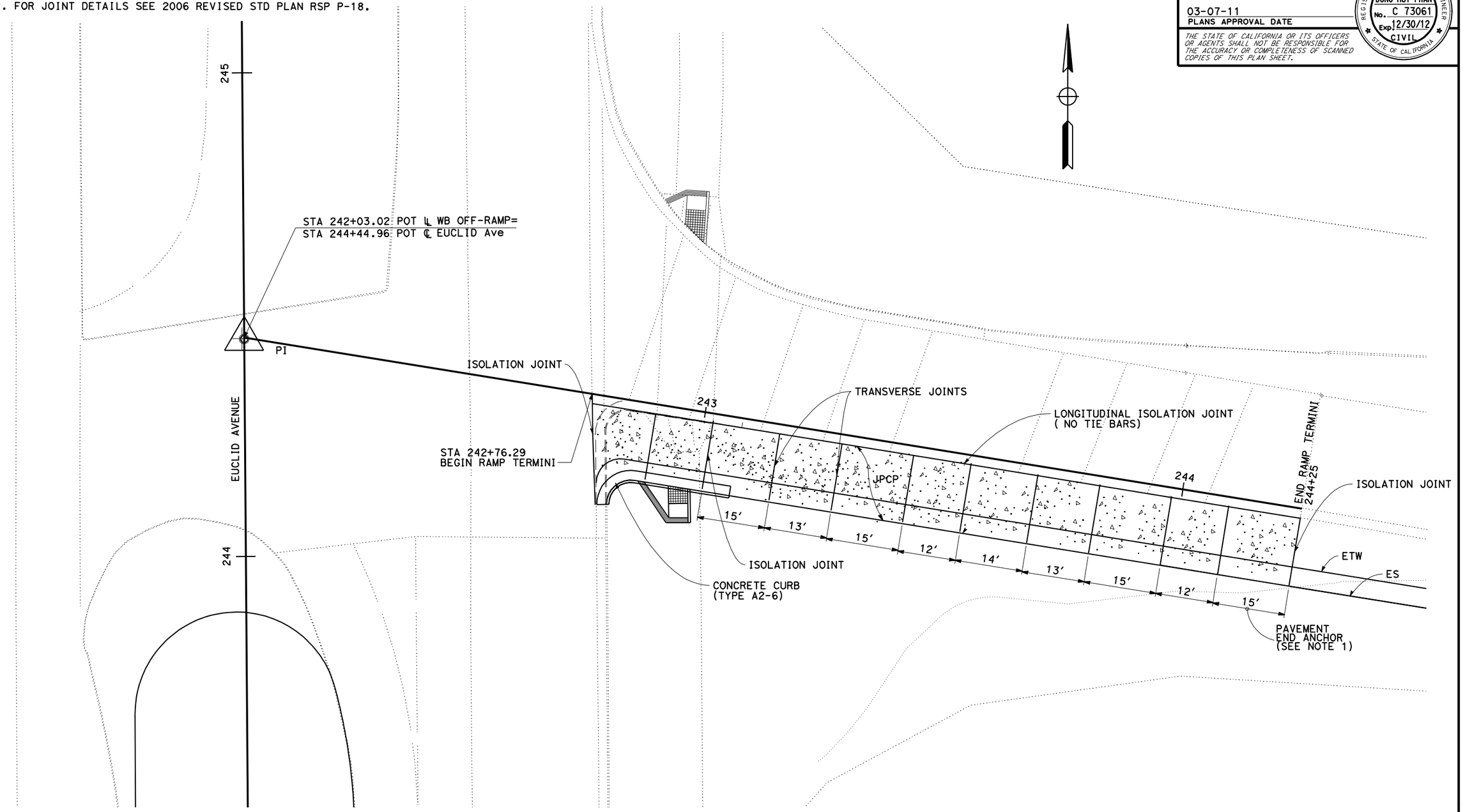

PCC PAVEMENT AT ROUTE 60 EXIT RAMP TO EUCLID AVENUE

CONSTRUCTION DETAILS

SCALE: 1"=10′

C-2

STATE OF CALIFORNIA - DEPARTMENT OF TRANSPORTATION
Caltrans
DESIGN

FUNCTIONAL SUPERVISOR: RENEE SASSE
CALCULATED-DESIGNED BY: DUNG HUY PHAN
CHECKED BY: RENEE SASSE
REVISED BY
DATE REVISED

LAST REVISION 03-07-11
DATE PLOTTED => 24-MAR-2011
TIME PLOTTED => 12:51

Dist	COUNTY	ROUTE	POST MILES TOTAL PROJECT	SHEET No.	TOTAL SHEETS
08	SBd	60	R4.8	6	55

REGISTERED CIVIL ENGINEER 3-07-11 DATE

03-07-11
PLANS APPROVAL DATE

REGISTERED PROFESSIONAL ENGINEER RAJNIKANT PATEL No. 46082 Exp. 12/31/12 CIVIL STATE OF CALIFORNIA

THE STATE OF CALIFORNIA OR ITS OFFICERS OR AGENTS SHALL NOT BE RESPONSIBLE FOR THE ACCURACY OR COMPLETENESS OF SCANNED COPIES OF THIS PLAN SHEET.

NOTES:

1. THE TEMPORARY WATER POLLUTION CONTROL QUANTITIES SHOWN ON THIS SHEET ARE INTENDED TO BE USED AS GUIDE LINES ONLY TO INSTALL TEMPORARY WATER POLLUTION CONTROL. THEIR FIELD CONDITION MAY NECESSITATE MODIFICATION OR RELOCATION OF TEMPORARY WATER POLLUTION ITEMS AND THEIR QUANTITIES AS PER INSTRUCTION OF THE ENGINEER.

2. FOR INSTALLATION OF TEMPORARY WATER POLLUTION CONTROL, SEE STANDARD PLANS DETAIL SHEETS.

TEMPORARY CONSTRUCTION BMPs

DESCRIPTION	UNIT	QUANTITY
TEMPORARY SOIL BINDER	SQYD	2200
TEMPORARY FIBER ROLL	LF	1100
TEMPORARY DRAINAGE INLET PROTECTION	EA	2
DRAINAGE INLET MARKER	EA	1

THIS PLAN ACCURATE FOR WATER POLLUTION CONTROL WORK ONLY.

TEMPORARY WATER POLLUTION CONTROL QUANTITIES

WPCQ-1

STATE OF CALIFORNIA - DEPARTMENT OF TRANSPORTATION
Caltrans
DESIGN

FUNCTIONAL SUPERVISOR: PAUL LAMBERT
CALCULATED-DESIGNED BY: RAJNIKANT PATEL
CHECKED BY: PAUL LAMBERT
REVISED BY
DATE REVISED

LAST REVISION 03-07-11 | DATE PLOTTED => 24-MAR-2011 | TIME PLOTTED => 12:51

Dist	COUNTY	ROUTE	POST MILES TOTAL PROJECT	SHEET No.	TOTAL SHEETS
08	SBd	60	R4.8	7	55

REGISTERED CIVIL ENGINEER 3-07-11 DATE

03-07-11
PLANS APPROVAL DATE

REGISTERED PROFESSIONAL ENGINEER DUNG HUY PHAN No. C 73061 Exp. 12/30/12 CIVIL STATE OF CALIFORNIA

THE STATE OF CALIFORNIA OR ITS OFFICERS OR AGENTS SHALL NOT BE RESPONSIBLE FOR THE ACCURACY OR COMPLETENESS OF SCANNED COPIES OF THIS PLAN SHEET.

NOTE:

1. FOR COMPLETE RIGHT OF WAY AND ACCURATE ACCESS DATA, SEE RIGHT OF WAY RECORD MAPS AT DISTRICT OFFICE.

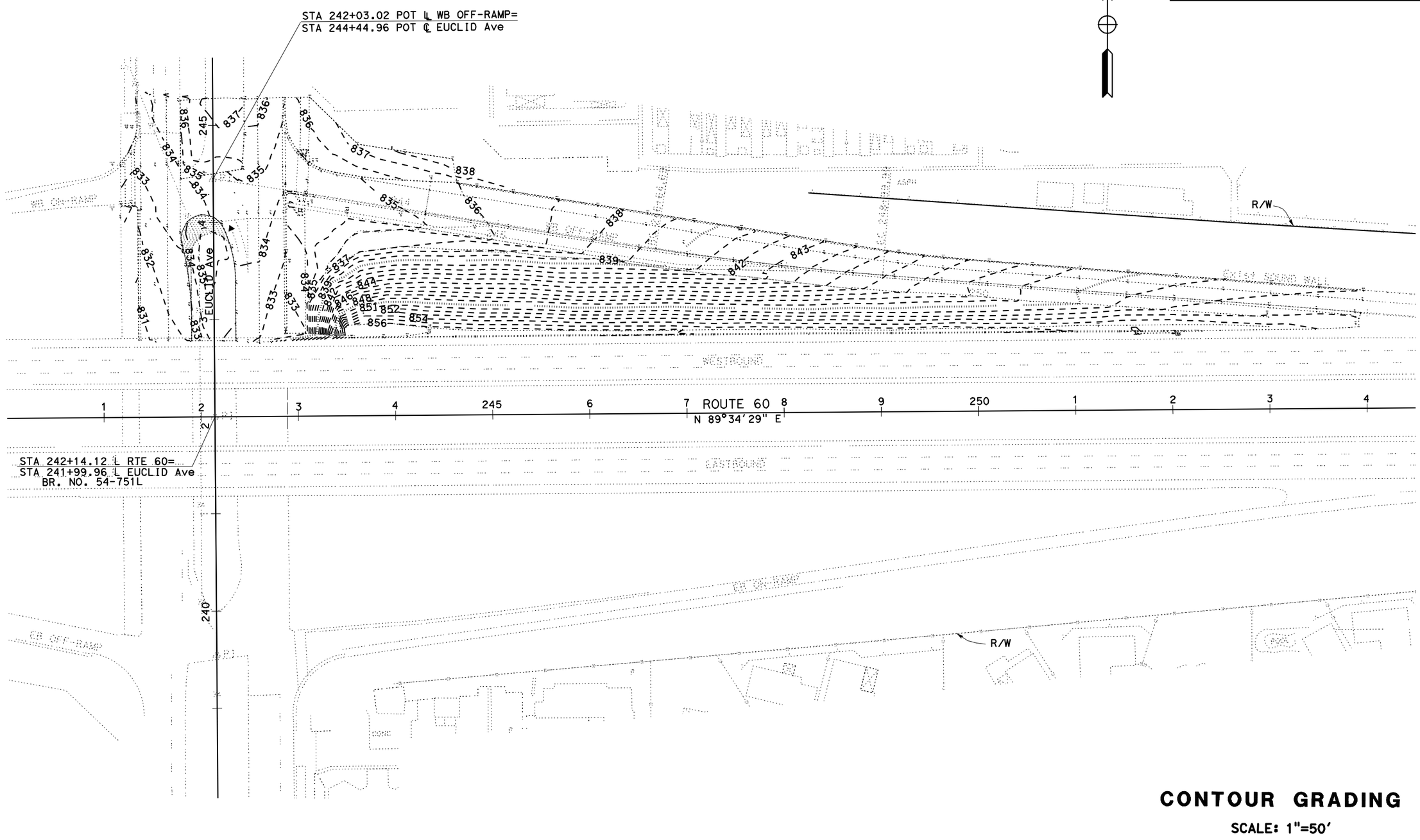

CONTOUR GRADING

SCALE: 1"=50'

THIS PLAN IS ACCURATE FOR CONTOUR GRADING WORK ONLY

G-1

REVISED BY | DATE REVISED
DUNG HUY PHAN | RENEE SASSE
CALCULATED-DESIGNED BY | CHECKED BY
FUNCTIONAL SUPERVISOR | RENEE SASSE
STATE OF CALIFORNIA - DEPARTMENT OF TRANSPORTATION
Caltrans
DESIGN

LAST REVISION 03-07-11 | DATE PLOTTED => 24-MAR-2011 | TIME PLOTTED => 12:51

Dist	COUNTY	ROUTE	POST MILES TOTAL PROJECT	SHEET No.	TOTAL SHEETS
08	SBd	60	R4.8	8	55

REGISTERED CIVIL ENGINEER 3-07-11 DATE

03-07-11
PLANS APPROVAL DATE

REGISTERED PROFESSIONAL ENGINEER DUNG HUY PHAN No. C 73061 Exp. 12/30/12 CIVIL STATE OF CALIFORNIA

THE STATE OF CALIFORNIA OR ITS OFFICERS OR AGENTS SHALL NOT BE RESPONSIBLE FOR THE ACCURACY OR COMPLETENESS OF SCANNED COPIES OF THIS PLAN SHEET.

NOTES:

1. LOCATION OF UTILITY FACILITIES SHOWN ON THIS PLAN WERE OBTAINED FROM OWNERS RECORDS AND/OR FROM STATE SURVEYS. THEY ARE APPROXIMATE AND SHALL BE VERIFIED BY THE CONTRACTOR PRIOR TO CONSTRUCTION.
2. UTILITY OWNERSHIP ON THIS PLAN: SOUTHERN CALIFORNIA EDISON, VERIZON, TIME WARNER CABLE, SOUTHERN CALIFORNIA GAS, CITY OF ONTARIO, INLAND EMPIRE UTILITES AGENCY.
3. UPON REQUEST, AT LEAST TWO (2) WORKING DAYS PRIOR TO THE START OF CONSTRUCTION, THE SOUTHERN CALIFORNIA GAS COMPANY WILL LOCATE AND MARK THE ACTIVE UNDERGROUND FACILITIES FOR CONTRACTOR AT NO COST. PLEASE CALL UNDERGOUND SERVICE ALERT (USA) AT (800) 422-4133.
4. CONSIDERATION SHALL BE GIVEN TO THE SAFETY OF THE PIPELINE DURING THE DESIGN AND CONSTRUCTION STAGE.
5. FOR COMPLETE RIGHT OF WAY AND ACCURATE ACCESS DATA, SEE RIGHT OF WAY RECORD MAPS AT DISTRICT OFFICE.

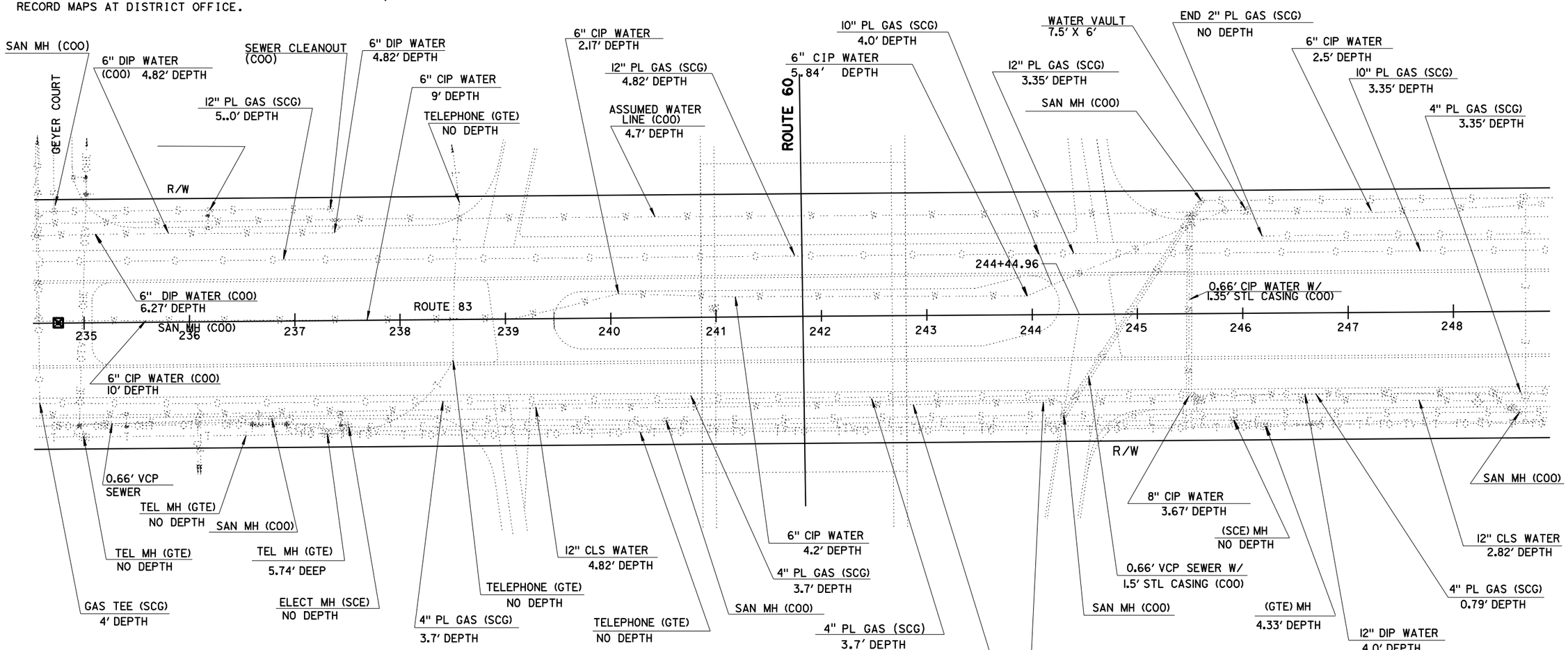

UTILITY PLAN

SCALE: 1"=50'

THIS PLAN ACCURATE FOR UTILITY WORK ONLY

U-1

STATE OF CALIFORNIA - DEPARTMENT OF TRANSPORTATION
Caltrans
DESIGN
FUNCTIONAL SUPERVISOR: RENEE SASSE
CALCULATED-DESIGNED BY: DUNG HUY PHAN
CHECKED BY: RENEE SASSE
REVISED BY
DATE REVISED

LAST REVISION 03-07-11
DATE PLOTTED => 24-MAR-2011
TIME PLOTTED => 12:51

Dist	COUNTY	ROUTE	POST MILES TOTAL PROJECT	SHEET No.	TOTAL SHEETS
08	SBd	60	R4.8	9	55

REGISTERED CIVIL ENGINEER 3-07-11 DATE

03-07-11
PLANS APPROVAL DATE

REGISTERED PROFESSIONAL ENGINEER DUNG HUY PHAN No. C 73061 Exp. 12/30/12 CIVIL STATE OF CALIFORNIA

THE STATE OF CALIFORNIA OR ITS OFFICERS OR AGENTS SHALL NOT BE RESPONSIBLE FOR THE ACCURACY OR COMPLETENESS OF SCANNED COPIES OF THIS PLAN SHEET.

NOTES:

1. LOCATION OF UTILITY FACILITIES SHOWN ON THIS PLAN WERE OBTAINED FROM OWNERS RECORDS AND/OR FROM STATE SURVEYS
2. LOCATIONS OF UTILITY FACILITIES SHOWN ON THIS PLAN ARE APPROXIMATE AND SHALL BE VERIFIED BY THE CONTRACTOR PRIOR TO CONSTRUCTION.
3. UTILITY OWNERSHIP ON THIS PLAN: SOUTHERN CALIFORNIA EDISON, VERIZON, TIME WARNER CABLE, SOUTHERN CALIFORNIA GAS, CITY OF ONTARIO, INLAND EMPIRE UTILITES AGENCY.
4. UPON REQUEST, AT LEAST TWO (2) WORKING DAYS PRIOR TO THE START OF CONSTRUCTION, THE SOUTHERN CALIFORNIA GAS COMPANY WILL LOCATE AND MARK THE ACTIVE UNDERGROUND FACILITIES FOR CONTRACTOR AT NO COST. PLEASE CALL UNDERGOUND SERVICE ALERT (USA) AT (800) 422-4133.
5. CONSIDERATION SHALL BE GIVEN TO THE SAFETY OF THE PIPELINE DURING THE DESIGN AND CONSTRUCTION STAGE.
6. FOR COMPLETE RIGHT OF WAY AND ACCURATE ACCESS DATA, SEE RIGHT OF WAY RECORD MAPS AT DISTRICT OFFICE.

POTHOLE TABLE

No.	STATION	OFFSET FROM CL ROUTE 83	DEPTH (FT)	DESCRIPTION	OWNER
PH1	244++66.0	91.50′ RT	5.10′	FIBER OPTIC	VERIZON
PH2	243+80.63	92.00′ RT	6.25′	FIBER OPTIC	VERIZON
PH3	243+91.42	88.92′ RT	3.25′	TELEVISION	TIME WARNER CABLE
PH4	244+55.65	89.20′ RT	2.10′	TELEVISION	TIME WARNER CABLE
PH5	244+03.51	64.42′ RT	3.00′	GAS	GAS COMPANY
PH6	244+70.90	64.96′ RT	3.30′	GAS	GAS COMPANY
PH7	243+84.29	84.95′ RT	4.00′	ELECTRICAL	SCE
PH8	244+09.70	80.10′ LT	3.10′	WATER	CITY OF ONTARIO
PH9	244+93.35	81.52′ LT	2.90′	WATER	CITY OF ONTARIO
PH10	243+72.35	17.60′ LT	5.10′	WATER	CITY OF ONTARIO
PH11	245+50.45	102.33′ LT	3.50′	GAS	GAS COMPANY

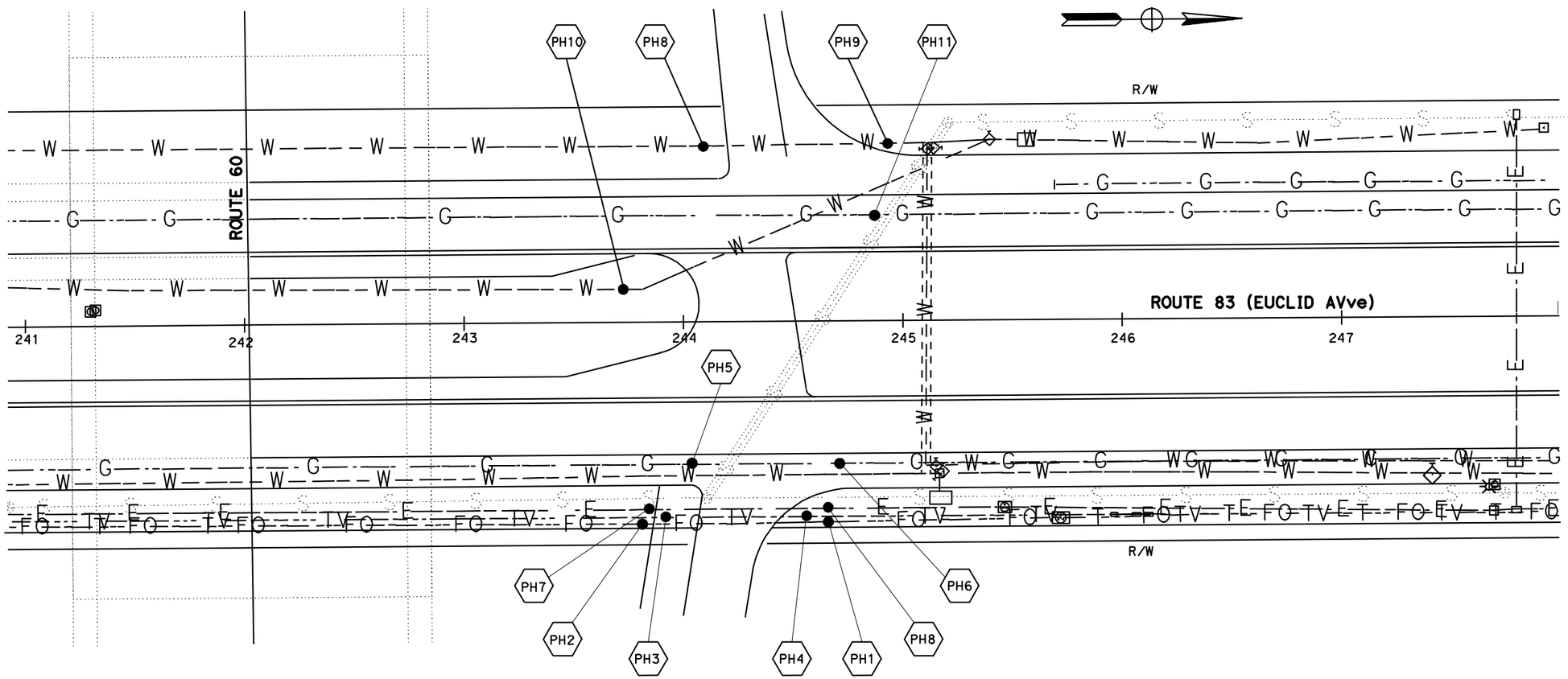

UTILITY POTHOLE PLAN

SCALE: 1"=50′

UD-1

THIS PLAN ACCURATE FOR UTILITY WORK ONLY

STATE OF CALIFORNIA - DEPARTMENT OF TRANSPORTATION
DESIGN
FUNCTIONAL SUPERVISOR: RENEE SASSE
CALCULATED-DESIGNED BY: DUNG HUY PHAN
CHECKED BY: RENEE SASSE
REVISED BY
DATE REVISED

LAST REVISION 03-07-11
DATE PLOTTED => 24-MAR-2011
TIME PLOTTED => 12:51

Dist	COUNTY	ROUTE	POST MILES TOTAL PROJECT	SHEET No.	TOTAL SHEETS
08	SBd	60	R4.8	10	55

REGISTERED CIVIL ENGINEER 3-07-11 DATE

03-07-11
PLANS APPROVAL DATE

REGISTERED PROFESSIONAL ENGINEER CHRIS HARDIMON No. C 66092 Exp. 6/30/12 CIVIL STATE OF CALIFORNIA

THE STATE OF CALIFORNIA OR ITS OFFICERS OR AGENTS SHALL NOT BE RESPONSIBLE FOR THE ACCURACY OR COMPLETENESS OF SCANNED COPIES OF THIS PLAN SHEET.

NOTES:

1. LOCATIONS OF PORTABLE CHANGEABLE MESSAGE SIGN SHALL BE DETERMINED BY THE ENGINEER.
2. EXACT SIGN LOCATION TO BE DETERMINED BY THE ENGINEER.
3. REFER TO SHEETS TH-1, TH-2 & TH-3 FOR TRAFFIC CONTROL REQUIREMENTS.
4. TEMPORARY TRAFFIC CONTROL SIGN COLORS: LEGEND - BLACK; BACKGROUND - ORANGE (RETROREFLECTIVE) SIGN PANELS ARE SINGLE FACED 0.08 in ALUMINUM FOR SIGNS (A), (B), (D), (E), (F), (G), (H). (SEE TH-1, TH-2 & TH-3 FOR SIGNS (D), (E), (F), (G), (H))
5. TEMPORARY TRAFFIC CONTROL SIGN COLORS: LEGEND - BLACK; BACKGROUND - WHITE RETROREFLECTIVE) SIGN PANELS ARE SINGLE FACED 0.08 in ALUMINUM FOR SIGN (C).
6. CALIFORNIA SIGN CODES ARE DESIGNATED BY (CA); OTHERWISE, FEDERAL SIGN CODES ARE SHOWN.

LEGEND

- LOCATION OF WORK
- ONE POST SIGN
- (X) CONSTRUCTION AREA SIGN NO.
- TYPE II BARRICADE

STATIONARY MOUNTED CONSTRUCTION AREA SIGNS

SIGN No.	SIGN CODE FED	SIGN CODE CA	PANEL SIZE	SIGN MESSAGE	No. OF POST(S) AND SIZE	No. OF SIGNS (N) (EA)
(A)	W20-1		36" X 36"	ROAD WORK AHEAD	1 - 4" X 6"	5*
(B)		C14	48" X 24"	END ROAD WORK	1 - 4" X 6"	4
(C)	R9-9		24" X 12"	SIDEWALK CLOSED	MOUNTED ON TYPE II BARRICADE	2
(I)	R9-11		24" X 12"	SIDEWALK CLOSED AHEAD CROSS HERE	MOUNTED ON TYPE II BARRICADE	2

(N) - NOT A SEPARATE PAY ITEM, FOR INFORMATION ONLY.
* - TWO W20-1 SIGNS ARE SHOWN ON SHEET TH-3.

PORTABLE CHANGEABLE MESSAGE SIGN (PCMS)
(EA)
2

TYPE II BARRICADE
MOUNTED WITH R9-9 AND R9-11 SIGNS
(EA)
4

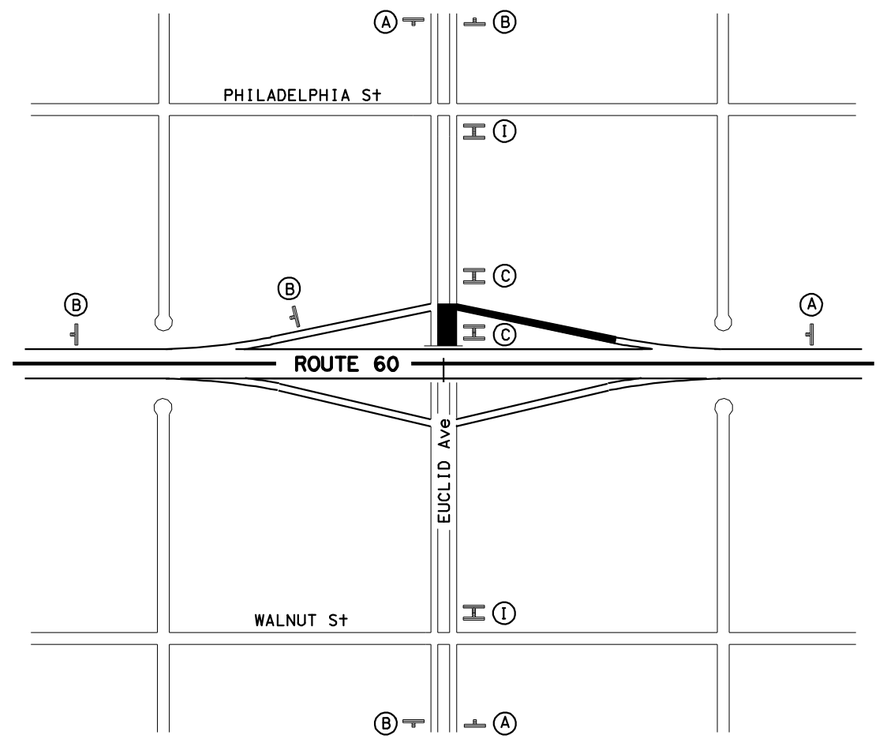

THIS PLAN ACCURATE FOR CONSTRUCTION AREA SIGN WORK ONLY.

CONSTRUCTION AREA SIGNS

NO SCALE

CS-1

STATE OF CALIFORNIA - DEPARTMENT OF TRANSPORTATION
Caltrans TRAFFIC DESIGN B

FUNCTIONAL SUPERVISOR: LARRY SARTORI
CALCULATED-DESIGNED BY: CHRIS HARDIMON
CHECKED BY: LARRY SARTORI
REVISED BY
DATE REVISED

LAST REVISION 03-07-11
DATE PLOTTED => 24-MAR-2011
TIME PLOTTED => 12:51

Dist	COUNTY	ROUTE	POST MILES TOTAL PROJECT	SHEET No.	TOTAL SHEETS
08	SBd	60	R4.8	11	55

REGISTERED CIVIL ENGINEER 3-07-11 DATE

03-07-11
PLANS APPROVAL DATE

REGISTERED PROFESSIONAL ENGINEER CHRIS HARDIMON No. C 66092 Exp. 6/30/12 CIVIL STATE OF CALIFORNIA

THE STATE OF CALIFORNIA OR ITS OFFICERS OR AGENTS SHALL NOT BE RESPONSIBLE FOR THE ACCURACY OR COMPLETENESS OF SCANNED COPIES OF THIS PLAN SHEET.

LEGEND

- (XX) Temp TRAFFIC STRIPE DETAIL (2-COAT PAINT)
- DIRECTION OF TRAFFIC
- WORK AREA
- CONSTRUCTION AREA SIGN (1-POST)
- TEMPORARY CHANNELIZER (25′ SPACING)
- TEMPORARY RAILING (TYPE K)
- Temp CRASH CUSHION ARRAY TS14
- Temp CRASH CUSHION ARRAY TS11
- TYPE V ARROW (PAINT)
- TYPE III (B) ARROW (PAINT)
- TYPE III (L) ARROW (PAINT)
- TYPE VII (L) ARROW (PAINT)
- TYPE VI ARROW (PAINT)
- (X) CONSTRUCTION AREA SIGN No.
- PORTABLE CHANGEABLE MESSAGE SIGN
- TYPE III BARRICADE

NOTES:

1. REMOVE ALL CONFLICTING PAVEMENT DELINEATION.
2. TEMPORARY RAILING (TYPE K) SHALL BE PINNED PER STANDARD PLAN T3.
3. LOCATIONS OF CONSTRUCTION AREA SIGNS AND PORTABLE CHANGEABLE MESSAGE SIGNS SHOWN ARE APPROXIMATE. EXACT LOCATIONS WILL BE DETERMINED BY THE ENGINEER.
4. TEMPORARY LIMIT LINE ON WB EXIT RAMP SHALL BE AN EXTENSION OF THE EXISTING CROSSWALK LINE AS SHOWN ON SHEET TH-2.
5. TEMPORARY CHANNELIZERS SHALL BE ORANGE POST WITH YELLOW RETROREFLECTIVE SHEETING PER STANDARD PLAN A73C NOTE 5 & 6.
6. FLAGGERS SHALL BE PRESENT AT THE EXIT RAMP TERMINI TO DIRECT PEDESTRIANS ACROSS THE CROSSWALK DURING CONSTRUCTION.
7. TEMPORARY CHANNELIZER SPACING SHALL BE PLACED AT 5′ SPACING AROUND CONTRUCTION AREA AND AT 25′ SPACING ELSEWHERE.
8. CALIFORNIA SIGN CODES ARE DESIGNATED BY (CA); OTHERWISE, FEDERAL SIGN CODES ARE SHOWN
9. CONSTRUCTION OF RAMP TERMINI SHALL BE STAGED IN A MANNER TO MINIMIZE CLOSURE OF THE CROSSWALK.

TYPE III BARRICADE
MOUNTED WITH C30 (CA) SIGN
(EA)
7

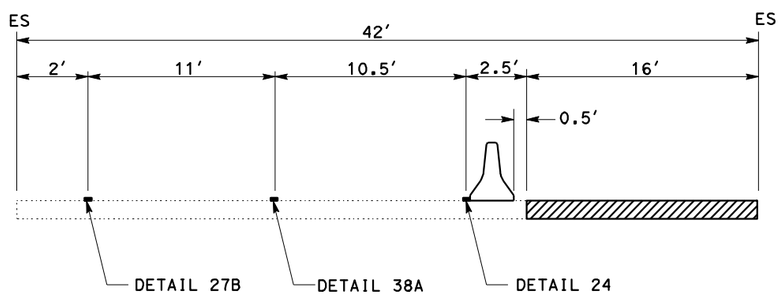

SECTION A-A
STA 243+00 TO STA 244+25
SEE SHEET TH-2

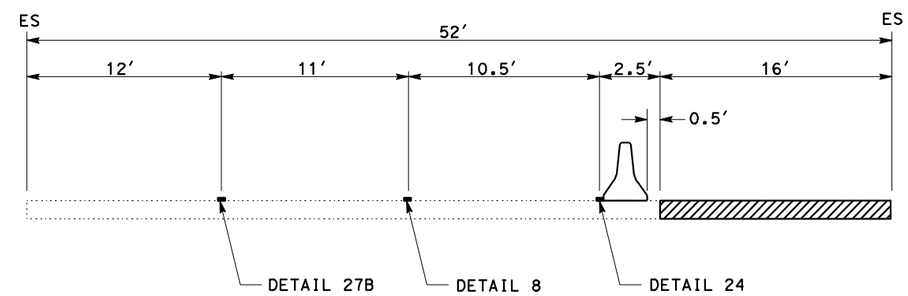

SECTION B-B
STA 244+25 TO STA 248+12.5
SEE SHEET TH-2

CONSTRUCTION AREA SIGNS (SEE SHEETS TH-2 AND TH-3)

SIGN No.	SIGN CODE FED	SIGN CODE CA	PANEL SIZE	SIGN MESSAGE	No. OF POST(S) AND SIZE	No. OF SIGNS (N) (EA)
(D)		C23 (RAMP)	48" X 24"	ROAD WORK AHEAD	2 - 4" X 6"	1
(E)*		C30A	48" X 48"	SHOULDER CLOSED	2 - 4" X 6"	2
(F)*		C20 LT	36" X 36"	LEFT LANE CLOSED AHEAD	1 - 4" X 4"	1
(G)*	W4-2L		36" X 18"	LANE DROP SYMBOL	1 - 4" X 4"	1
(H)		C30	36" X 36"	LANE CLOSED	MOUNTED ON TYPE III BARRICADE	7

(N)- NOT A SEPARATE PAY ITEM, FOR INFORMATION ONLY.
* - SIGNS MAY BE PORTABLE

THIS PLAN ACCURATE FOR TRAFFIC HANDLING WORK ONLY.

TRAFFIC HANDLING PLAN

NO SCALE

TH-1

REVISED BY | DATE REVISED
CHRIS HARDIMON | LARRY SARTORI
CALCULATED-DESIGNED BY | CHECKED BY
FUNCTIONAL SUPERVISOR
LARRY SARTORI

STATE OF CALIFORNIA - DEPARTMENT OF TRANSPORTATION
Caltrans TRAFFIC DESIGN B

LAST REVISION 03-07-11 | DATE PLOTTED => 24-MAR-2011 | TIME PLOTTED => 12:51

Dist	COUNTY	ROUTE	POST MILES TOTAL PROJECT	SHEET No.	TOTAL SHEETS
08	SBd	60	R4.8	12	55

REGISTERED CIVIL ENGINEER 3-07-11 DATE

03-07-11
PLANS APPROVAL DATE

REGISTERED PROFESSIONAL ENGINEER CHRIS HARDIMON No. C 66092 Exp 6/30/12 CIVIL STATE OF CALIFORNIA

THE STATE OF CALIFORNIA OR ITS OFFICERS OR AGENTS SHALL NOT BE RESPONSIBLE FOR THE ACCURACY OR COMPLETENESS OF SCANNED COPIES OF THIS PLAN SHEET.

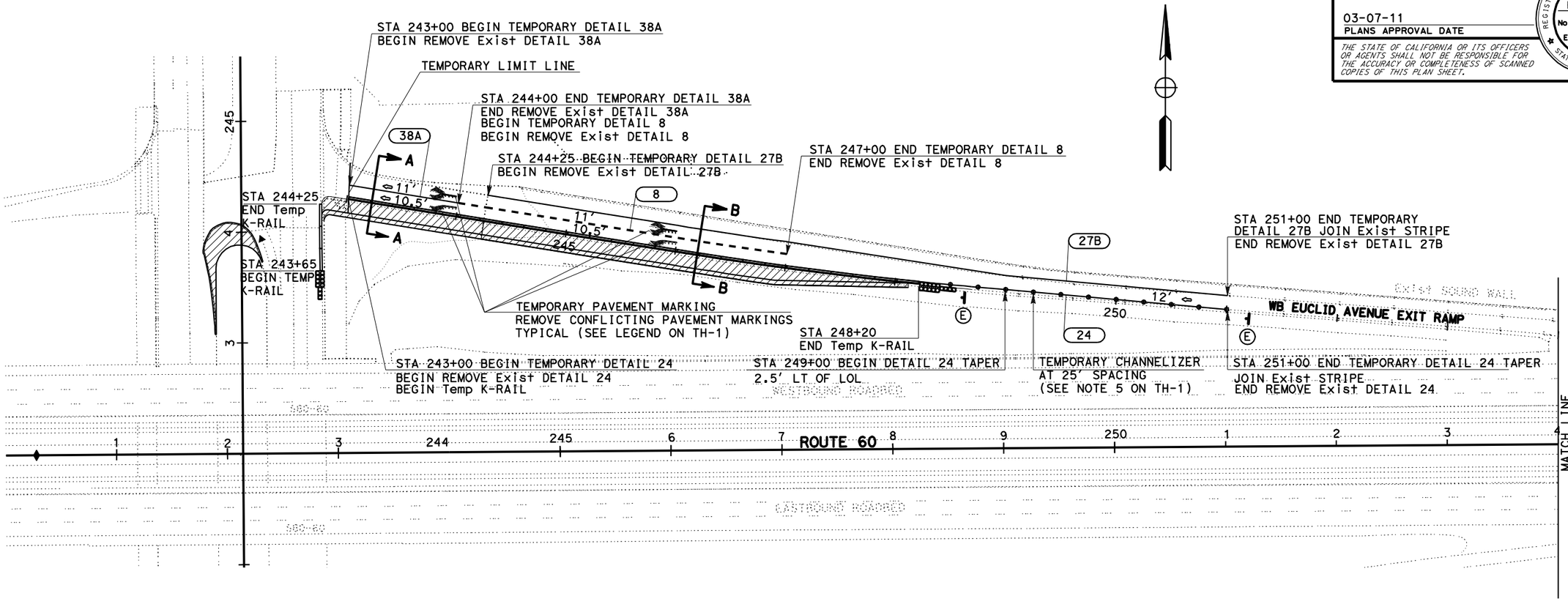

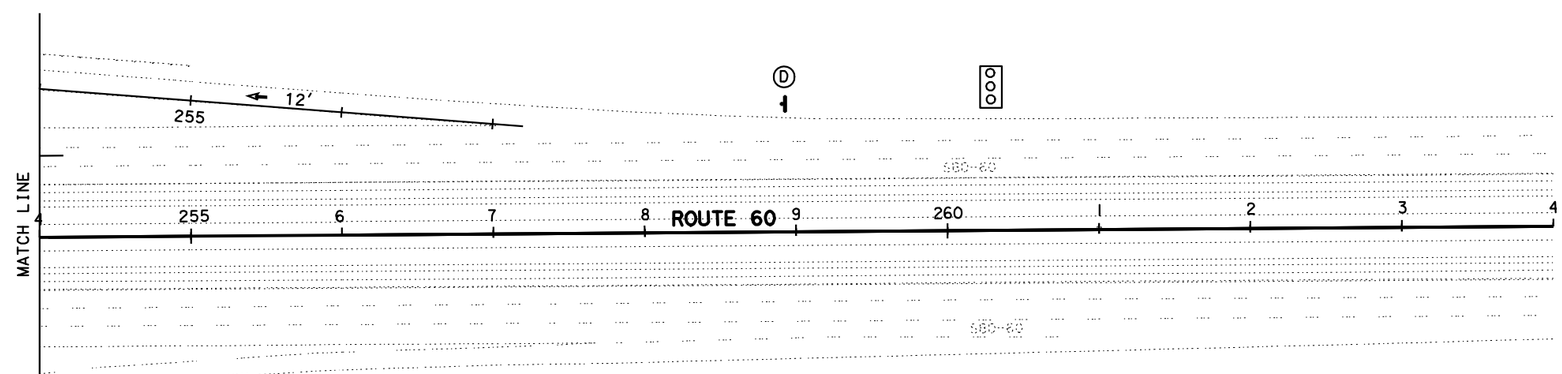

TRAFFIC HANDLING PLAN

SCALE: 1"=50'

THIS PLAN ACCURATE FOR TRAFFIC HANDLING WORK ONLY.

TH-2

STATE OF CALIFORNIA - DEPARTMENT OF TRANSPORTATION
Caltrans TRAFFIC DESIGN B

FUNCTIONAL SUPERVISOR: LARRY SARTORI
CALCULATED-DESIGNED BY: CHRIS HARDIMON
CHECKED BY: LARRY SARTORI
REVISED BY
DATE REVISED

LAST REVISION 03-07-11
DATE PLOTTED => 24-MAR-2011
TIME PLOTTED => 12:51

Dist	COUNTY	ROUTE	POST MILES TOTAL PROJECT	SHEET No.	TOTAL SHEETS
08	SBd	60	R4.8	13	55

REGISTERED CIVIL ENGINEER 3-07-11 DATE

03-07-11
PLANS APPROVAL DATE

REGISTERED PROFESSIONAL ENGINEER CHRIS HARDIMON No. C 66092 Exp. 6/30/12 CIVIL STATE OF CALIFORNIA

THE STATE OF CALIFORNIA OR ITS OFFICERS OR AGENTS SHALL NOT BE RESPONSIBLE FOR THE ACCURACY OR COMPLETENESS OF SCANNED COPIES OF THIS PLAN SHEET.

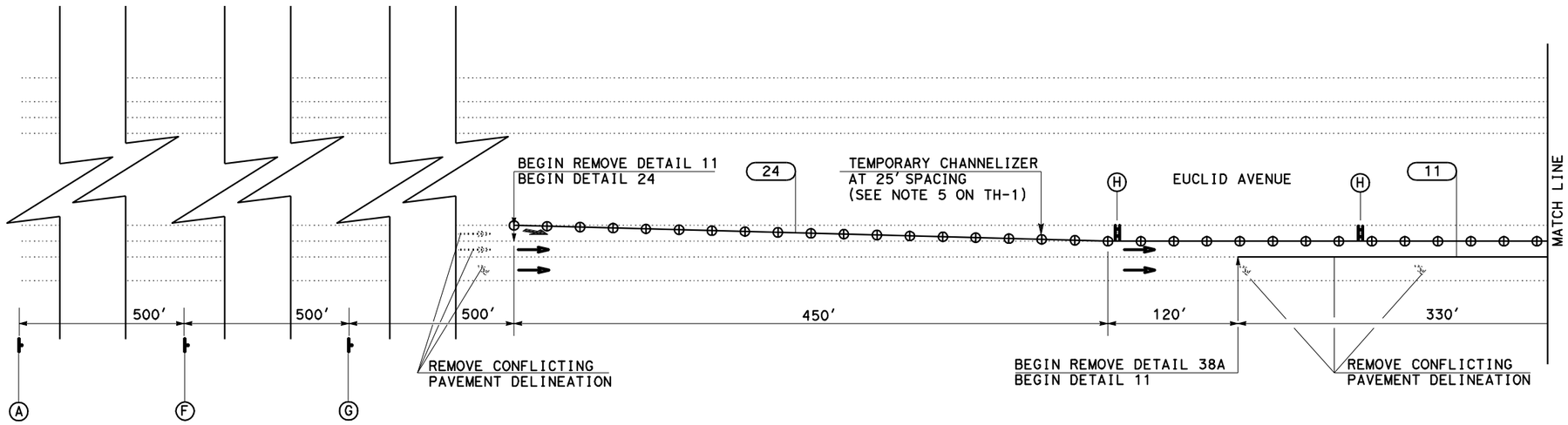

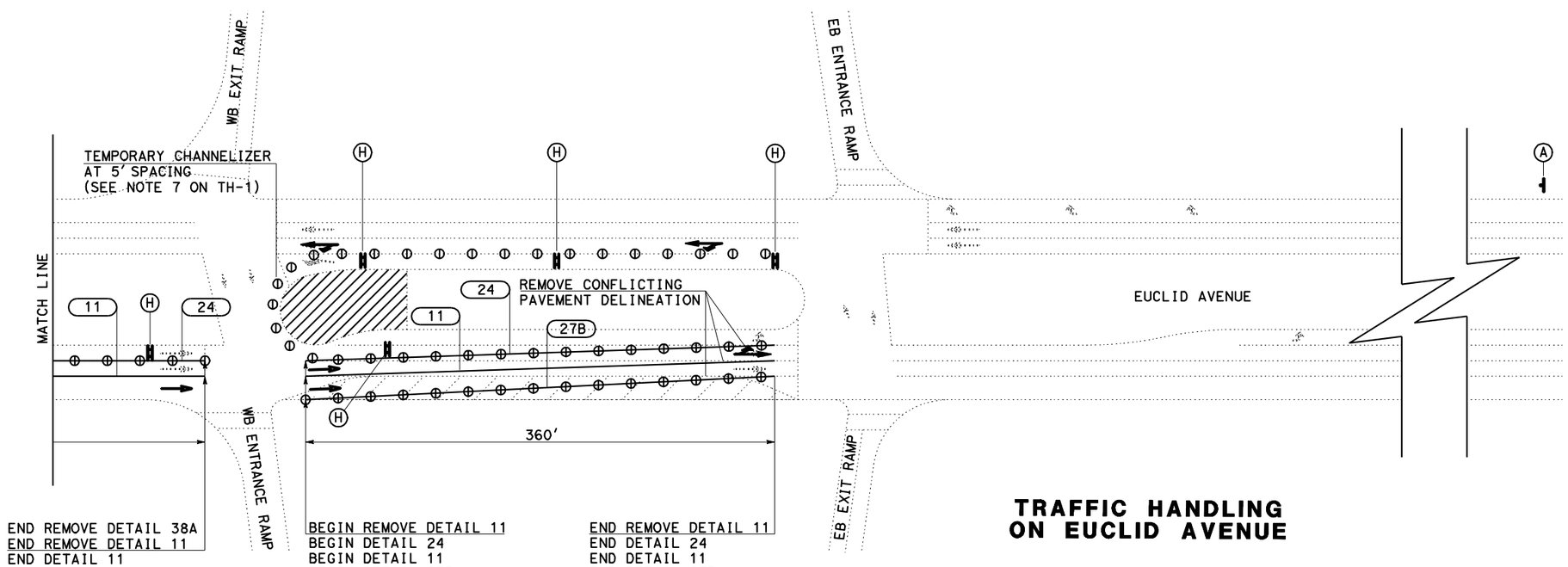

TRAFFIC HANDLING ON EUCLID AVENUE

TRAFFIC HANDLING PLAN

NO SCALE

TH-3

THIS PLAN ACCURATE FOR TRAFFIC HANDLING WORK ONLY.

STATE OF CALIFORNIA - DEPARTMENT OF TRANSPORTATION
Caltrans® TRAFFIC DESIGN B

FUNCTIONAL SUPERVISOR: LARRY SARTORI
CALCULATED-DESIGNED BY: CHRIS HARDIMON
CHECKED BY: LARRY SARTORI
REVISED BY
DATE REVISED

LAST REVISION 03-07-11
DATE PLOTTED => 24-MAR-2011
TIME PLOTTED => 12:51

Dist	COUNTY	ROUTE	POST MILES TOTAL PROJECT	SHEET No.	TOTAL SHEETS
08	SBd	60	R4.8	14	55

REGISTERED CIVIL ENGINEER 3-07-11 DATE

03-07-11
PLANS APPROVAL DATE

REGISTERED PROFESSIONAL ENGINEER CHRIS HARDIMON No. C 66092 Exp. 6/30/12 CIVIL STATE OF CALIFORNIA

THE STATE OF CALIFORNIA OR ITS OFFICERS OR AGENTS SHALL NOT BE RESPONSIBLE FOR THE ACCURACY OR COMPLETENESS OF SCANNED COPIES OF THIS PLAN SHEET.

TEMPORARY PAVEMENT DELINEATION QUANTITIES

SHEET No.	LOCATION	DETAIL No. OR PAVEMENT MARKING	TEMPORARY TRAFFIC STRIPE (PAINT)				TEMPORARY PAVEMENT MARKING PAINT (2-COAT)	TEMPORARY CRASH CUSHION MODULE	TEMPORARY RAILING (TYPE-K)	CHANNELIZER (SURFACE MOUNTED)
			4 INCH YELLOW	4 INCH WHITE	6 INCH WHITE	8 INCH WHITE				
			LF				SQFT	EA	LF	EA
TH-2	EUCLID WB EXIT RAMP	8	-	300	-	-	-	-	-	-
TH-2	EUCLID WB EXIT RAMP	24	800	-	-	-	-	-	-	-
TH-2	EUCLID WB EXIT RAMP	27B	-	675	-	-	-	-	-	-
TH-2	EUCLID WB EXIT RAMP	38A	-	-	-	100	-	-	-	-
TH-2	EUCLID WB EXIT RAMP	CHANNELIZERS	-	-	-	-	-	-	-	12
TH-2	EUCLID WB EXIT RAMP	TYPE III(B) ARROW	-	-	-	-	146	-	-	-
TH-2	EUCLID WB EXIT RAMP	TYPE III(L) ARROW	-	-	-	-	84	-	-	-
TH-2	EUCLID WB EXIT RAMP	LIMIT LINE	-	-	-	-	43	-	-	-
TH-2	EUCLID WB EXIT RAMP	-	-	-	-	-	-	14	-	-
TH-2	EUCLID AVENUE	-	-	-	-	-	-	11	-	-
TH-2	EUCLID WB EXIT RAMP	-	-	-	-	-	-	-	520	-
TH-2	EUCLID AVENUE	-	-	-	-	-	-	-	60	-
TH-3	EUCLID AVENUE	TYPE V ARROW	-	-	-	-	231	-	-	-
TH-3	EUCLID AVENUE	TYPE VI ARROW	-	-	-	-	42	-	-	-
TH-3	EUCLID AVENUE	TYPE VII(L) ARROW	-	-	-	-	81	-	-	-
TH-3	EUCLID AVENUE	CHANNELIZERS	-	-	-	-	-	-	-	118
TH-3	EUCLID AVENUE	11	-	690	-	-	-	-	-	-
TH-3	EUCLID AVENUE	27B	-	360	-	-	-	-	-	-
TH-3	EUCLID AVENUE	24	1260	-	-	-	-	-	-	-
SUBTOTAL			2060	2025	-	100	-	-	-	-
TOTAL			4185				627	25	580	130

TRAFFIC HANDLING QUANTITIES

THQ-1

STATE OF CALIFORNIA - DEPARTMENT OF TRANSPORTATION
Caltrans TRAFFIC DESIGN B

FUNCTIONAL SUPERVISOR: LARRY SARTORI
CALCULATED-DESIGNED BY: CHRIS HARDIMON
CHECKED BY: LARRY SARTORI
REVISED BY
DATE REVISED

LAST REVISION 03-07-11
DATE PLOTTED => 24-MAR-2011
TIME PLOTTED => 12:52

Dist	COUNTY	ROUTE	POST MILES TOTAL PROJECT	SHEET No.	TOTAL SHEETS
08	SBd	60	R4.8	15	55

REGISTERED CIVIL ENGINEER 3-07-11 DATE

03-07-11
PLANS APPROVAL DATE

REGISTERED PROFESSIONAL ENGINEER CHRIS HARDIMON No. C 66092 Exp. 6/30/12 CIVIL STATE OF CALIFORNIA

THE STATE OF CALIFORNIA OR ITS OFFICERS OR AGENTS SHALL NOT BE RESPONSIBLE FOR THE ACCURACY OR COMPLETENESS OF SCANNED COPIES OF THIS PLAN SHEET.

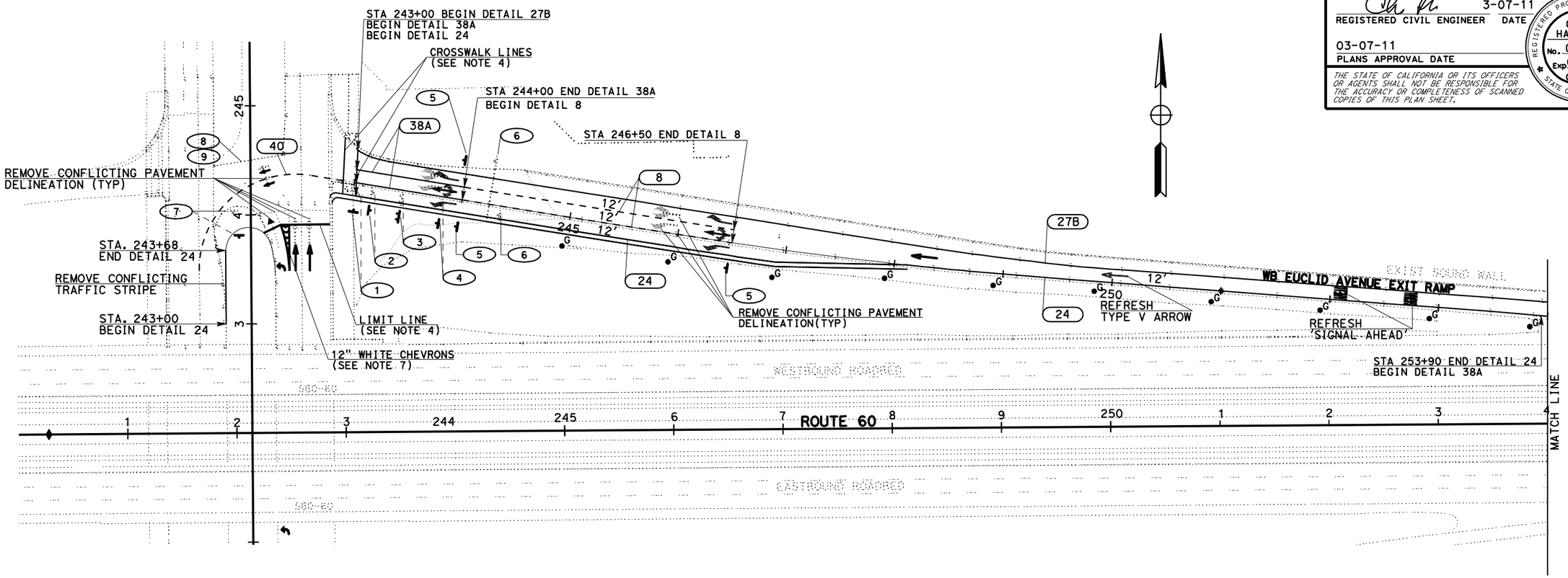

LEGEND

- (XX) TRAFFIC STRIPE DETAIL
- LOCATION OF WORK
- •X DELINEATOR (CLASS 1, FLEXIBLE POST)
- ROADSIDE SIGN - ONE POST
- ROADSIDE SIGN - TWO POST
- (X) ROADSIDE SIGN (SEE NOTE 5)
- TYPE IV (R) ARROW
- TYPE IV (L) ARROW
- TYPE III (L) ARROW
- TYPE II (B) ARROW
- TYPE III (R) ARROW
- TYPE V ARROW
- TYPE I (10') ARROW
- REMOVE TYPE III (L) ARROW
- REMOVE TYPE III (B) ARROW
- REMOVE TYPE V ARROW
- REMOVE TYPE I (10') ARROW

NOTES:

1. ALL PAVEMENT MARKINGS SHALL BE THERMOPLASTIC.
2. EXISTING SIGN LOCATIONS SHOWN ARE APPROXIMATE.
3. NEW SIGN LOCATIONS SHOWN ARE APPROXIMATE AND THE EXACT SIGN LOCATIONS WILL BE DETERMINED BY THE ENGINEER.
4. LIMIT LINES AND CROSSWALK LINES ARE 12" WHITE THERMOPLASTIC.
5. FOR ROADSIDE SIGN DESCRIPTIONS, SEE SHEETS SQ-1 AND SQ-2.
6. REMOVE CONFLICTING TRAFFIC STRIPING, PAVEMENT MARKINGS AND LIMIT LINES ON WB EXIT RAMP AND ON EUCLID AVENUE.
7. CHEVRONS SHALL BE 12" WHITE AT 5' SPACING.
8. PROPOSED LIMIT LINE ON EUCLID AVENUE SHALL HAVE THE SAME SKEW AS THE EXISTING LIMIT LINE.

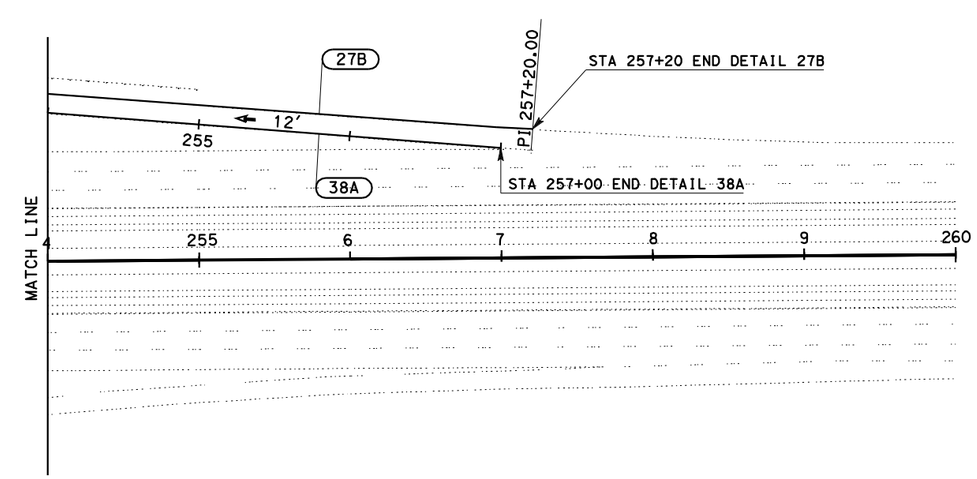

PAVEMENT DELINEATION AND SIGN PLAN

SCALE: 1"=50'

THIS PLAN ACCURATE FOR PAVEMENT DELINEATION AND SIGN WORK ONLY.

PD-1

REVISED BY	DATE REVISED

CHRIS HARDIMON — LARRY SARTORI
CALCULATED-DESIGNED BY — CHECKED BY
FUNCTIONAL SUPERVISOR — LARRY SARTORI

STATE OF CALIFORNIA - DEPARTMENT OF TRANSPORTATION
Caltrans TRAFFIC DESIGN B

LAST REVISION 03-07-11 | DATE PLOTTED => 24-MAR-2011 | TIME PLOTTED => 12:52

Dist	COUNTY	ROUTE	POST MILES TOTAL PROJECT	SHEET No.	TOTAL SHEETS
08	SBd	60	R4.8	16	55

REGISTERED CIVIL ENGINEER 3-07-11 DATE

03-07-11
PLANS APPROVAL DATE

REGISTERED PROFESSIONAL ENGINEER CHRIS HARDIMON No. C 66092 Exp. 6/30/12 CIVIL STATE OF CALIFORNIA

THE STATE OF CALIFORNIA OR ITS OFFICERS OR AGENTS SHALL NOT BE RESPONSIBLE FOR THE ACCURACY OR COMPLETENESS OF SCANNED COPIES OF THIS PLAN SHEET.

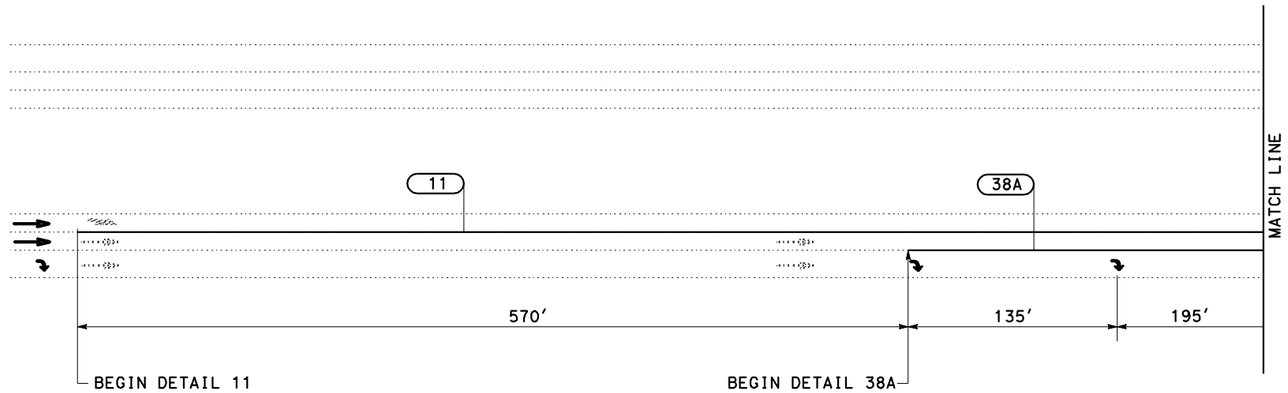

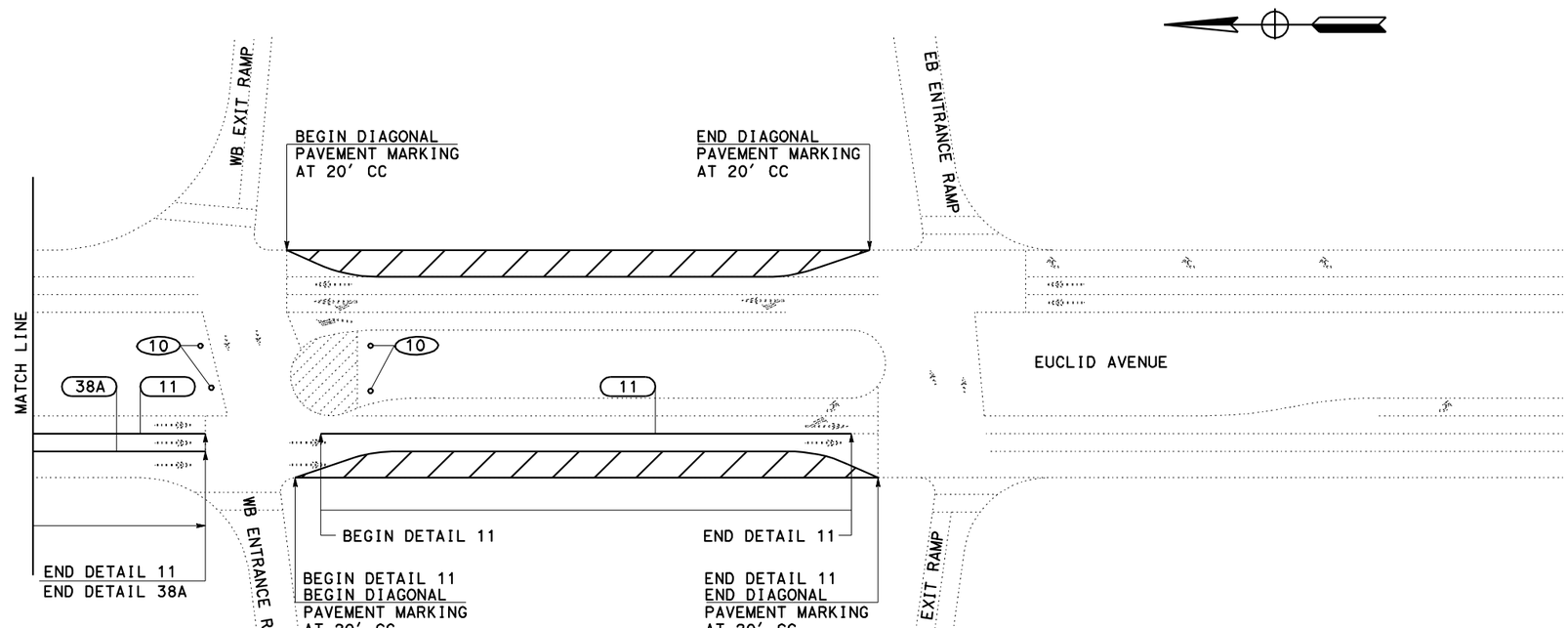

PAVEMENT DELINEATION AND SIGN PLAN

NO SCALE

THIS PLAN ACCURATE FOR PAVEMENT DELINEATION AND SIGN WORK ONLY.

PD-2

REVISED BY	DATE REVISED
CHRIS HARDIMON	LARRY SARTORI

CALCULATED-DESIGNED BY	CHECKED BY

FUNCTIONAL SUPERVISOR: LARRY SARTORI

STATE OF CALIFORNIA - DEPARTMENT OF TRANSPORTATION
Caltrans® TRAFFIC DESIGN B

LAST REVISION 03-07-11 | DATE PLOTTED => 24-MAR-2011 | TIME PLOTTED => 12:52

Dist	COUNTY	ROUTE	POST MILES TOTAL PROJECT	SHEET No.	TOTAL SHEETS
08	SBd	60	R4.8	17	55

REGISTERED CIVIL ENGINEER 3-07-11 DATE

03-07-11
PLANS APPROVAL DATE

REGISTERED PROFESSIONAL ENGINEER CHRIS HARDIMON No. C 66092 Exp 6/30/12 CIVIL STATE OF CALIFORNIA

THE STATE OF CALIFORNIA OR ITS OFFICERS OR AGENTS SHALL NOT BE RESPONSIBLE FOR THE ACCURACY OR COMPLETENESS OF SCANNED COPIES OF THIS PLAN SHEET.

NOTE:

1. REFER TO STD PLAN A88A FOR CROSSWALK REQUIREMENTS.

PAVEMENT DELINEATION QUANTITIES

SHEET No.	LOCATION	DETAIL No. OR PAVEMENT MARKING	REMOVE THERMOPLASTIC PAVEMENT MARKING	REMOVE THERMOPLASTIC TRAFFIC STRIPE			DELINEATOR (CLASS I)	THERMOPLASTIC TRAFFIC STRIPE (SPRAYABLE)			THERMOPLASTIC PAVEMENT MARKING
				YELLOW	WHITE						
			WHITE	4 INCH	4 INCH	8 INCH	TYPE G	4 INCH YELLOW	4 INCH WHITE	8 INCH WHITE	
			SQFT	LF	LF		EA	LF			SQFT
PD-1	WB EXIT RAMP	"SIGNAL"	-	-	-	-	-	-	-	-	32
PD-1	WB EXIT RAMP	"AHEAD"	-	-	-	-	-	-	-	-	31
PD-1	EUCLID AVENUE	LIMIT LINE 12" WHITE	72	-	-	-	-	-	-	-	63
PD-1	WB EXIT RAMP	CROSSWALK 12" WHITE	-	-	-	-	-	-	-	-	95
PD-1	EUCLID AVENUE	TYPE IV(L) ARROWS	15	-	-	-	-	-	-	-	30
PD-1	WB EXIT RAMP	TYPE III(R) ARROWS	-	-	-	-	-	-	-	-	84
PD-1	WB EXIT RAMP	TYPE III(B) ARROWS	146	-	-	-	-	-	-	-	-
PD-1	WB EXIT RAMP	TYPE III(L) ARROWS	84	-	-	-	-	-	-	-	84
PD-1	EUCLID AVENUE	TYPE I(10') ARROWS	28	-	-	-	-	-	-	-	28
PD-1	WB EXIT RAMP	TYPE V ARROWS	66	-	-	-	-	-	-	-	132
PD-1	WB EXIT RAMP	TYPE II(B) ARROWS	-	-	-	-	-	-	-	-	118
PB-1	WB EXIT RAMP	DELINEATOR (CLASS I)	-	-	-	-	10	-	-	-	-
PD-1	WB EXIT RAMP	DETAIL 8	-	-	300	-	-	-	500	-	-
PD-1	WB EXIT RAMP	DETAIL 24	-	800	-	-	-	1090	-	-	-
PD-1	EUCLID AVENUE	DETAIL 24	-	91	-	-	-	68	-	-	-
PD-1	WB EXIT RAMP	DETAIL 27B	-	-	675	-	-	-	1420	-	-
PD-1	WB EXIT RAMP	DETAIL 38A	-	-	-	200	-	-	-	510	-
PD-1	EUCLID AVENUE	DETAIL 40	-	-	-	-	-	-	184	-	-
PD-1	EUCLID AVENUE	12" WHITE CHEVRON	-	-	-	-	-	-	-	-	146
PD-2	EUCLID AVENUE	12" WHITE DIAGONAL	900	-	-	-	-	-	-	-	1800
PD-2	EUCLID AVENUE	TYPE V ARROWS	66	-	-	-	-	-	-	-	66
PD-2	EUCLID AVENUE	DETAIL 38A	-	-	-	330	-	-	-	330	-
PD-2	EUCLID AVENUE	TYPE IV(R) ARROWS	45	-	-	-	-	-	-	-	45
PD-2	EUCLID AVENUE	DETAIL 11	-	-	1260	-	-	-	1260	-	-
SUBTOTAL			-	-	2235	530	10	1158	3364	840	-
TOTAL			1422	891	2765		10	5362			2754

PAVEMENT DELINEATION QUANTITIES

PDQ-1

STATE OF CALIFORNIA - DEPARTMENT OF TRANSPORTATION
Caltrans TRAFFIC DESIGN B

FUNCTIONAL SUPERVISOR: LARRY SARTORI
CALCULATED-DESIGNED BY: CHRIS HARDIMON
CHECKED BY: LARRY SARTORI
REVISED BY
DATE REVISED

LAST REVISION 03-07-11
DATE PLOTTED => 24-MAR-2011
TIME PLOTTED => 12:52

Dist	COUNTY	ROUTE	POST MILES TOTAL PROJECT	SHEET No.	TOTAL SHEETS
08	SBd	60	R4.8	18	55

REGISTERED CIVIL ENGINEER 3-07-11 DATE

03-07-11
PLANS APPROVAL DATE

REGISTERED PROFESSIONAL ENGINEER
CHRIS HARDIMON
No. C 66092
Exp. 6/30/12
CIVIL
STATE OF CALIFORNIA

THE STATE OF CALIFORNIA OR ITS OFFICERS OR AGENTS SHALL NOT BE RESPONSIBLE FOR THE ACCURACY OR COMPLETENESS OF SCANNED COPIES OF THIS PLAN SHEET.

(8)

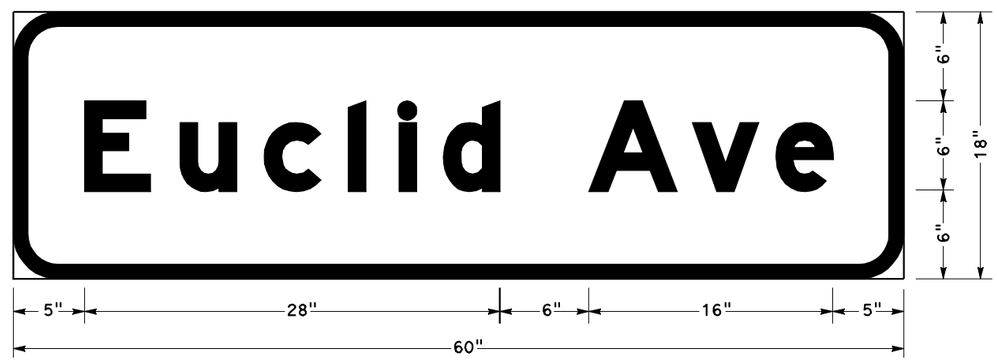

3.0" Radius, 1.0" Border, White on Green;
[Euclid Ave] E Mod;

G7-1(CA)

THIS PLAN ACCURATE FOR SIGN WORK ONLY.

SIGN DETAILS

NO SCALE

SD-1

STATE OF CALIFORNIA - DEPARTMENT OF TRANSPORTATION
Caltrans TRAFFIC DESIGN B

FUNCTIONAL SUPERVISOR: LARRY SARTORI
CALCULATED-DESIGNED BY: CHRIS HARDIMON
CHECKED BY: LARRY SARTORI
REVISED BY
DATE REVISED

LAST REVISION 03-07-11 | DATE PLOTTED => 24-MAR-2011 | TIME PLOTTED => 12:52

Dist	COUNTY	ROUTE	POST MILES TOTAL PROJECT	SHEET No.	TOTAL SHEETS
08	SBd	60	R4.8	19	55

REGISTERED CIVIL ENGINEER 3-07-11 DATE

03-07-11
PLANS APPROVAL DATE

REGISTERED PROFESSIONAL ENGINEER CHRIS HARDIMON No. C 66092 Exp. 6/30/12 CIVIL STATE OF CALIFORNIA

THE STATE OF CALIFORNIA OR ITS OFFICERS OR AGENTS SHALL NOT BE RESPONSIBLE FOR THE ACCURACY OR COMPLETENESS OF SCANNED COPIES OF THIS PLAN SHEET.

SIGN PANEL MATERIAL SUMMARY

SIGN No.	SIGN CODE	SIGN SIZE L x D (in x in)	No. OF SIGNS	SIGN AREA (SQFT)	SINGLE FACED	DOUBLE FACED	BACKGROUND SHEETING COLOR	BACKGROUND RETRO-REFLECTIVE ASTM TYPE	LEGEND SHEETING COLOR	LEGEND RETRO-REFLECTIVE ASTM TYPE	GRAFFITI FILM PREMIUM	ROADSIDE SINGLE-SHEET UNFRAMED ALUMINUM 0.063 INCH (SQFT)	ROADSIDE SINGLE-SHEET UNFRAMED ALUMINUM 0.080 INCH (SQFT)	REMARKS
5	R61-26 (CA)	48 x 30	3	10.0	X	-	WHITE	IV	BLACK	-	X	30	-	-
8	G7-1 (CA)	60 x 18	1	7.5	-	X	GREEN	III	WHITE	IV	X	-	7.5	-
9	SR39A(U) (CA)	42 x 24	1	7.0	X	-	WHITE	IV	BLACK	-	X	7	-	STRAP AND SADDLE BRACKET METHOD ON SIGNAL POST
10	R9-3a	18 x 18	4	2.25	X	-	WHITE	IV	BLACK	-	X	9	-	-
TOTAL												46	7.5	

NOTE: CALIFORNIA SIGN CODES ARE DESIGNATED BY (CA); OTHERWISE, FEDERAL SIGN CODES ARE SHOWN

CONTRACTOR FURNISHED SIGN QUANTITIES

SQ-1

REVISED BY | DATE REVISED
CHRIS HARDIMON | LARRY SARTORI
CALCULATED-DESIGNED BY | CHECKED BY
FUNCTIONAL SUPERVISOR: LARRY SARTORI

STATE OF CALIFORNIA - DEPARTMENT OF TRANSPORTATION
Caltrans TRAFFIC DESIGN B

LAST REVISION 03-07-11 | DATE PLOTTED => 24-MAR-2011 | TIME PLOTTED => 12:52

Dist	COUNTY	ROUTE	POST MILES TOTAL PROJECT	SHEET No.	TOTAL SHEETS
08	SBd	60	R4.8	20	55

REGISTERED CIVIL ENGINEER 3-07-11 DATE

03-07-11
PLANS APPROVAL DATE

REGISTERED PROFESSIONAL ENGINEER CHRIS HARDIMON No. C 66092 Exp. 6/30/12 CIVIL STATE OF CALIFORNIA

THE STATE OF CALIFORNIA OR ITS OFFICERS OR AGENTS SHALL NOT BE RESPONSIBLE FOR THE ACCURACY OR COMPLETENESS OF SCANNED COPIES OF THIS PLAN SHEET.

NOTES:

1. EXACT LOCATION & POSITION OF ROADSIDE SIGNS TO BE DETERMINED BY THE ENGINEER.
2. POST LENGTHS GIVEN ARE APPROXIMATE. EXACT LENGTH TO BE DETERMINED BY THE ENGINEER.
3. CALIFORNIA SIGN CODES ARE DESIGNATED BY (CA); OTHERWISE, FEDERAL SIGN CODES ARE SHOWN

ROADSIDE SIGN QUANTITIES

SIGN No.	SIGN CODE	POST LENGTH	POST SIZE	ROADSIDE SIGN			REMARKS
			4" x 6"	ONE POST	REMOVE	RELOCATE	
		R†					
		LF	In x In	EA	EA	EA	
1	R6-1	-	-	-	-	1	ONE WAY ARROW
2	R11 (CA); R11A (CA)	-	-	-	-	1	DO NOT ENTER; WRONG WAY
3	G8-4 (CA); G78 (CA)	-	-	-	-	1	ROUTE 83 SHIELD/ONTARIO/ARROW; ARROW/CHINO/AIRPORT
4	G66-56 (CA); M6-4 (CA)	-	-	-	-	1	TRUCK SYMBOL; ARROW
5	R61-26 (CA)	14	X	3	-	-	LEFT ONLY ARROW/LEFT, RIGHT ARROW/RIGHT ONLY ARROW
6	R61-9 (CA)	-	-	-	2	-	LEFT ONLY ARROW/LEFT, RIGHT ARROW
7	CITY SIGN	-	-	-	-	1	CITY OF ONTARIO, WATER CONSERVATION LANDSCAPE GARDEN
8	G7-1 (CA)	-	-	-	-	-	NOT A SEPARATE PAY ITEM; FOR REFERENCE ONLY. SEE ELECTRICAL PLANS
9	SR39A(U) (CA)	-	-	-	-	-	NOT A SEPARATE PAY ITEM; FOR REFERENCE ONLY. SEE ELECTRICAL PLANS
10	R9-3a	-	-	-	-	-	NOT A SEPARATE PAY ITEM; FOR REFERENCE ONLY. SEE ELECTRICAL PLANS
TOTAL				3	2	5	-

(N) NOT A SEPARATE PAY ITEM, FOR INFORMATION ONLY.

SIGN QUANTITIES

SQ-2

REVISED BY | DATE REVISED

CHRIS HARDIMON | LARRY SARTORI

CALCULATED-DESIGNED BY | CHECKED BY

FUNCTIONAL SUPERVISOR: LARRY SARTORI

STATE OF CALIFORNIA - DEPARTMENT OF TRANSPORTATION
Caltrans TRAFFIC DESIGN B

LAST REVISION 03-07-11 | DATE PLOTTED => 24-MAR-2011 | TIME PLOTTED => 12:52

Dist	COUNTY	ROUTE	POST MILES TOTAL PROJECT	SHEET No.	TOTAL SHEETS
08	SBd	60	R4.8	21	55

REGISTERED CIVIL ENGINEER 3-07-11 DATE

03-07-11
PLANS APPROVAL DATE

REGISTERED PROFESSIONAL ENGINEER DUNG HUY PHAN No. C 73061 Exp. 12/30/12 CIVIL STATE OF CALIFORNIA

THE STATE OF CALIFORNIA OR ITS OFFICERS OR AGENTS SHALL NOT BE RESPONSIBLE FOR THE ACCURACY OR COMPLETENESS OF SCANNED COPIES OF THIS PLAN SHEET.

ROADWAY QUANTITIES

STATION	ROADWAY EXCAVATION	AGGREGATE SUBBASE (CLASS 2)	LEAN CONCRETE BASE	AGGREGATE BASE (CLASS 2)	HOT MIX ASPHALT (TYPE C)	HOT MIX ASPHALT (TYPE A)	TACK COAT	CONCRETE PAVEMENT (RAMP TERMINI)	REMOVE CONCRETE (CURB, GUTTER AND SIDEWALK)	MINOR CONCRETE (CURB, GUTTER AND SIDEWALK)	SEAL PAVEMENT JOINT	SEAL ISOLATION JOINT	NOTES
	CY				TON			CY			LF		
242+76.29 - 248+12.43	610	52	35	103	464	91	1.3	73	14.5	8.6	140	180	
TOTAL	610	52	35	103	464	91	1.3	73	14.5	8.6	140	180	

SUMMARY OF QUANTITIES

Q-1

STATE OF CALIFORNIA - DEPARTMENT OF TRANSPORTATION
DESIGN

FUNCTIONAL SUPERVISOR: RENEE SASSE
CALCULATED-DESIGNED BY: DUNG HUY PHAN
CHECKED BY: RENEE SASSE
REVISED BY
DATE REVISED

LAST REVISION 03-07-11
DATE PLOTTED => 24-MAR-2011
TIME PLOTTED => 12:52

Dist	COUNTY	ROUTE	POST MILES TOTAL PROJECT	SHEET No.	TOTAL SHEETS
08	SBd	60	R4.8	22	55

3-07-11
LICENSED LANDSCAPE ARCHITECT

03-07-11
PLANS APPROVAL DATE

LICENSED LANDSCAPE ARCHITECT
Matthew Perry Hall No. 5555
Signature
10/31/2011
Renewal Date
3/07/2011
Date
STATE OF CALIFORNIA

THE STATE OF CALIFORNIA OR ITS OFFICERS OR AGENTS SHALL NOT BE RESPONSIBLE FOR THE ACCURACY OR COMPLETENESS OF SCANNED COPIES OF THIS PLAN SHEET.

PLANT LIST AND PLANTING SPECIFICATIONS

PLANT GROUP	PLANT No.	SYMBOL	BOTANICAL NAME	COMMON NAME	SIZE	QUANTITY EACH	HOLE SIZE (INCH) Dia	HOLE SIZE (INCH) DEPTH	BASIN TYPE	IRON SULFATE	SOIL AMEND	COMMERCIAL FERTILIZER PLANTING (Oz)	COMMERCIAL FERTILIZER PLT ESTB (Oz)	BASIN MULCH (CF) ①	STAKING	PLANTING LIMITS MINIMUM DISTANCE (Ft) FROM TRVD WAY	PVMT	FENCE	WALL	PAVED DITCH	EARTH DITCH	ON CENTER (Ft)	REMARKS
H	1		CARPOBROTUS EDULIS	ICE PLANT	CUTTING	10,502	⑧	⑧	–	–	–	–	–	–	--	--	6	-	6	-	-	1.0	USE CUTTINGS FROM EXISTING PLANTS
	2																						
T	3		TURF (SOD)	TALL FESCUE	TURF (SOD)	410	⑧	⑧	–	–	–	–	–	--	--	--	--	-	--	-	-	--	TURF (SOD)
	4																						
	5																						
	6																						
	7																						

APPLICABLE WHEN CIRCLED:

① - Quantities shown are "per plant" unless shown as SQFT or SQYD application rates.
② - Sufficient to receive root ball.
3 - Does not apply to mulch areas.
4 - As shown on plans.
5 - Unless otherwise shown on plans.
6 - See detail.
⑦ - See Special Provisions.
⑧ - See Standard Plans and Specifications.
9 - Per application.
10 - Planting hole diameter is 2x root ball diameter.
11 - Planting hole depth is same as root ball depth.

LEGEND:

EXISTING TREES TO REMAIN

EXISTING TREE TO BE PRUNED

EXISTING GROUND COVER

NOTE:

Underlined portions of botanical name indicate abbreviations used on Planting Plans.

ABBREVIATIONS

AMEND — amendment
B & B — balled and burlapped
Dia — diameter
EA — each
LB — pound
Oz — ounce
Ft — foot/feet
SQFT — square feet
SQYD — square yard
CF — cubic feet
Max — maximum
Min — minimum
NCN — no common name
No. — number
Pkt — packet
PLT ESTB- plant establishment
Pvmt — pavement
R/W — right of way
SF — state furnished
TRVD — traveled

THIS PLAN IS ACCURATE FOR LANDSCAPE WORK ONLY.

PLANT LIST

PL-1

REVISED BY | DATE REVISED
LORENA SALVADOR | MATTHEW HALL
CALCULATED-DESIGNED BY | CHECKED BY
SENIOR LANDSCAPE ARCHITECT | BYRON STROUT
STATE OF CALIFORNIA - DEPARTMENT OF TRANSPORTATION
Caltrans LANDSCAPE ARCHITECTURE

LAST REVISION 03-07-11
DATE PLOTTED => 24-MAR-2011
TIME PLOTTED => 12:52

Dist	COUNTY	ROUTE	POST MILES TOTAL PROJECT	SHEET No.	TOTAL SHEETS
08	SBd	60	R4.8	23	55

3-07-11
LICENSED LANDSCAPE ARCHITECT

03-07-11
PLANS APPROVAL DATE

LICENSED LANDSCAPE ARCHITECT
Matthew Perry Hall
No. 5004
Signature
10/31/2011
Renewal Date
3/07/2011
Date
STATE OF CALIFORNIA

THE STATE OF CALIFORNIA OR ITS OFFICERS OR AGENTS SHALL NOT BE RESPONSIBLE FOR THE ACCURACY OR COMPLETENESS OF SCANNED COPIES OF THIS PLAN SHEET.

NOTE:

1. FOR COMPLETE RIGHT OF WAY AND ACCURATE ACCESS DATA, SEE RIGHT OF WAY RECORD MAPS AT DISTRICT OFFICE.

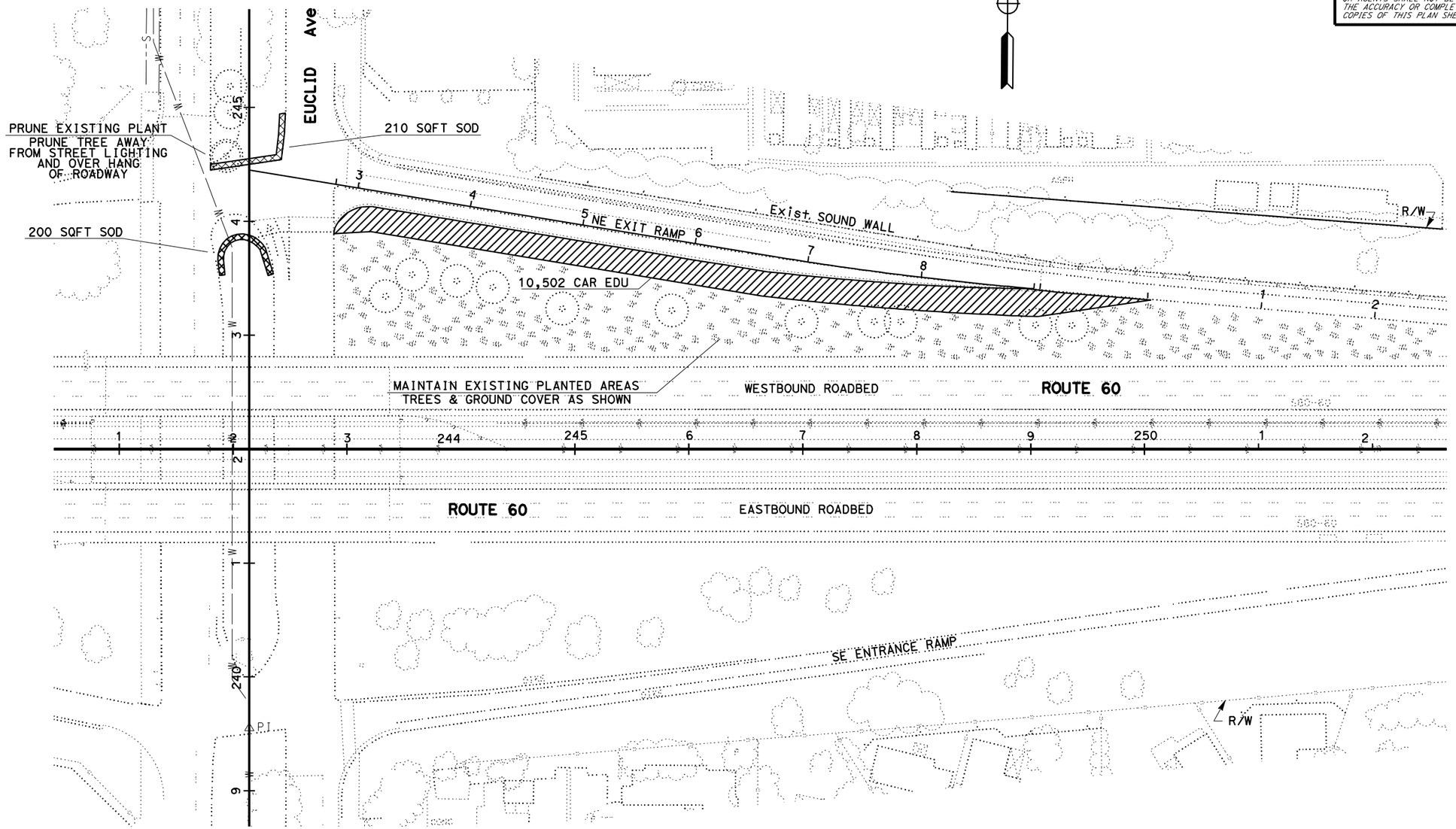

PLANTING PLAN

SCALE: 1"=50'

THIS PLAN IS ACCURATE FOR LANDSCAPE WORK ONLY.

PP-1

STATE OF CALIFORNIA - DEPARTMENT OF TRANSPORTATION
Caltrans LANDSCAPE ARCHITECTURE

SENIOR LANDSCAPE ARCHITECT: BYRON STROUT
CALCULATED-DESIGNED BY: LORENA SALVADOR
CHECKED BY: MATTHEW HALL
REVISED BY
DATE REVISED

LAST REVISION 03-07-11
DATE PLOTTED => 24-MAR-2011
TIME PLOTTED => 12:52

Dist	COUNTY	ROUTE	POST MILES TOTAL PROJECT	SHEET No.	TOTAL SHEETS
08	SBd	60	R4.8	24	55

LICENSED LANDSCAPE ARCHITECT 3-07-11

03-07-11
PLANS APPROVAL DATE

LICENSED LANDSCAPE ARCHITECT
Matthew Paul Hall
Signature
10/31/2011
Renewal Date
3/07/2011
Date
STATE OF CALIFORNIA

THE STATE OF CALIFORNIA OR ITS OFFICERS OR AGENTS SHALL NOT BE RESPONSIBLE FOR THE ACCURACY OR COMPLETENESS OF SCANNED COPIES OF THIS PLAN SHEET.

NOTES:

1. FOR COMPLETE RIGHT OF WAY AND ACCURATE ACCESS DATA, SEE RIGHT OF WAY RECORD MAPS AT DISTRICT OFFICE.
2. CONTROL AND NEUTYRAL CONDUCTORS ROUTING SHALL BE AS THE IRRIGATION SYSTEMS MAILINES UNLESS OTHERWISE SHOWN.
3. ALL PLASTIC PIPE SHALL BE SCH 40 MINIMUM.

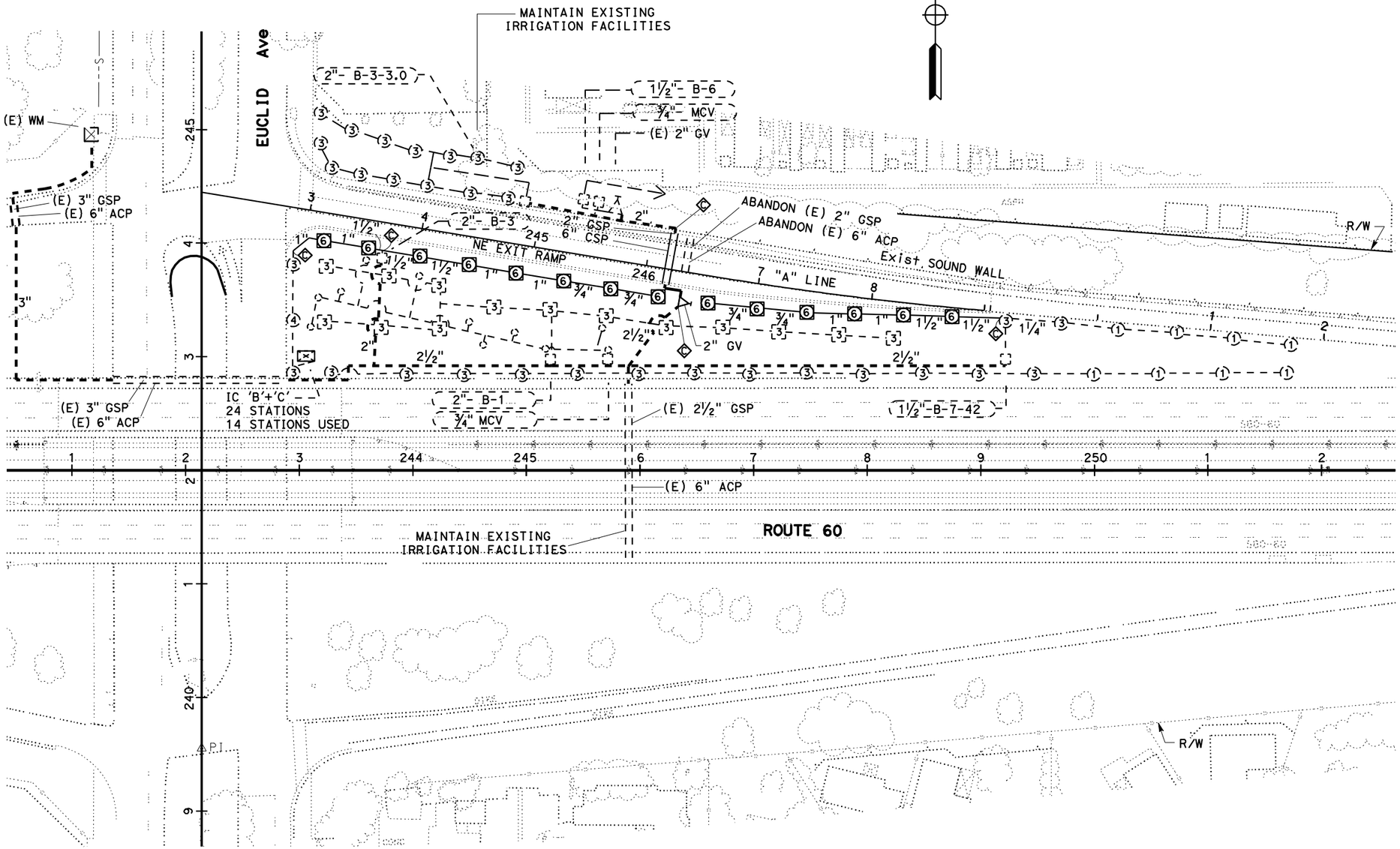

IRRIGATION PLAN

SCALE: 1"=50'

THIS PLAN IS ACCURATE FOR IRRIGATION WORK ONLY.

IP-1

STATE OF CALIFORNIA - DEPARTMENT OF TRANSPORTATION
LANDSCAPE ARCHITECTURE
SENIOR LANDSCAPE ARCHITECT: BYRON STROUT
CALCULATED-DESIGNED BY: LORENA SALVADOR
CHECKED BY: MATTHEW HALL
REVISED BY
DATE REVISED

LAST REVISION 03-07-11
DATE PLOTTED => 24-MAR-2011
TIME PLOTTED => 12:52

Dist	COUNTY	ROUTE	POST MILES TOTAL PROJECT	SHEET No.	TOTAL SHEETS
08	SBd	60	R4.8	25	55

LICENSED LANDSCAPE ARCHITECT 3-07-11

03-07-11
PLANS APPROVAL DATE

LICENSED LANDSCAPE ARCHITECT Matthew Hall No. 4772 Signature 10/31/2011 Renewal Date 3/07/2011 Date STATE OF CALIFORNIA

THE STATE OF CALIFORNIA OR ITS OFFICERS OR AGENTS SHALL NOT BE RESPONSIBLE FOR THE ACCURACY OR COMPLETENESS OF SCANNED COPIES OF THIS PLAN SHEET.

IRRIGATION CROSSOVERS

LOCATION		SIDE		CONDUIT TYPE ②		(N) WATER LINE CROSSOVER	(N) SPRINKLER CONTROL CROSSOVER
				SIZE (INCH)			
LINE	STATION	L†	R†	6		SIZE (INCH)	SIZE (INCH)
				LENGTH (LF)			
A	246+20			50		2	1
TOTAL							

(N) - NOT A SEPARATE PAY ITEM FOR INFORMATION ONLY
X - DENOTES REQUIREMENT

CONDUIT TYPE:

(APPLICABLE WHEN CIRCLED BELOW AND SHOWN UNDER THE 'CONDUIT TYPE' COLUMN HEADING)

1 BITUMINOUS COATED CORRUGATED STEEL PIPE (0.064 INCH THICK)
② CORRUGATED STEEL PIPE (0.064 INCH THICK)
3 CORRUGATED HIGH DENSITY POLYETHYLENE PIPE
4 ALTERNATIVE CONDUIT
5 WELDED STEEL PIPE

SPRINKLER SCHEDULE

SYMBOL	TYPE	DESCRIPTION	SPRAY PATTERN	OPERATING PRESSURE (PSI)	PRESSURE COMPENSATING	PLUS/MINUS 5% ② DISCHARGE: GALLONS PER MINUTE (GPM)	DISCHARGE: GALLONS PER HOUR (GPH)	RADIUS (Ft)	WIDTH x LENGTH (Ft)	MATERIAL	INLET CONNECTION (NPT INCH)	POSITIVE-LOCKING ADJ ARC STOP	BACKSPLASH PREVENTER	DIFFUSER PIN	DISTANCE CONTROL FLAP	ADJ DISCHARGE	RISER: TYPE	RISER: MATERIAL: PLASTIC	RISER: MATERIAL: GALVANIZED	RISER: SIZE (IPS INCH)	RISER: HEIGHT (INCH)	RISER: FLOW SHUTOFF DEVICE	⑤ SWING JOINT (TYPE)	RISER SUPPORT	SPRINKLER PROTECTOR (TYPE)	REMARKS
⑥	A-6	GEAR DRIVEN POP UP	P	40	X	2.9	-	41	-	PL	¾	-	-	-	-	X	-	X	-	¾	-	⑥	I	-	X	12" Pop Up with Sprinkler Protector

X IN BOX DENOTES REQUIREMENT

APPLICABLE WHEN CIRCLED BELOW:

1 - See Special Provisions.
2 - If a pressure compensating device is specified, the discharge and radii shown reflect its use.
3 - Arc Stop shall be fitted with a nut and bolt.
4 - Vinyl-coated cast iron housing.
⑤ - Swing Joints required adjacent to shoulders, curbs, sidewalks, and dikes.
⑥ - Flow Shutt off device shall be located 2" below bottom of head.

ABBREVIATIONS

F — full circle
P — part circle
F/P — full/part circle
Q — quarter circle
T — third circle
H — half circle
TT — two third circle
TQ — three quarter circle
CST — center strip
SST — side strip
EST — end strip
Ft — feet/foot
GPM — gallons per minute
GPH — gallons per hour
Adj — adjustable
PL — plastic
B/B — brass/bronze
B/PL — brass/plastic
B/B/PL — brass/bronze/plastic
NPT — national pipe thread
IPS — iron pipe size
PSI — pounds per square inch

LANDSCAPE DETAILS

LD-1

LAST REVISION 03-07-11 | DATE PLOTTED => 24-MAR-2011 | TIME PLOTTED => 12:52

STATE OF CALIFORNIA - DEPARTMENT OF TRANSPORTATION
Caltrans LANDSCAPE ARCHITECTURE

SENIOR LANDSCAPE ARCHITECT: BYRON STROUT
CALCULATED-DESIGNED BY: LORENA SALVADOR
CHECKED BY: MATTHEW HALL
REVISED BY
DATE REVISED

Dist	COUNTY	ROUTE	POST MILES TOTAL PROJECT	SHEET No.	TOTAL SHEETS
08	SBd	60	R4.8	26	55

REGISTERED ELECTRICAL ENGINEER 3-07-11 DATE

03-07-11
PLANS APPROVAL DATE

REGISTERED PROFESSIONAL ENGINEER KATHERINE DINH No. E-17157 Exp. 9-30-11 ELECTRICAL STATE OF CALIFORNIA

THE STATE OF CALIFORNIA OR ITS OFFICERS OR AGENTS SHALL NOT BE RESPONSIBLE FOR THE ACCURACY OR COMPLETENESS OF SCANNED COPIES OF THIS PLAN SHEET.

NOTE:

1. FOR COMPLETE RIGHT OF WAY AND ACCURATE ACCESS DATA, SEE RIGHT OF WAY RECORD MAPS AT DISTRICT OFFICE.

ABBREVIATIONS:

TC-1 - SCE TRAFFIC CONTROL RATE
LS-3 - SCE LIGHTING RATE
SCE - SOUTHERN CALIFORNIA EDISON

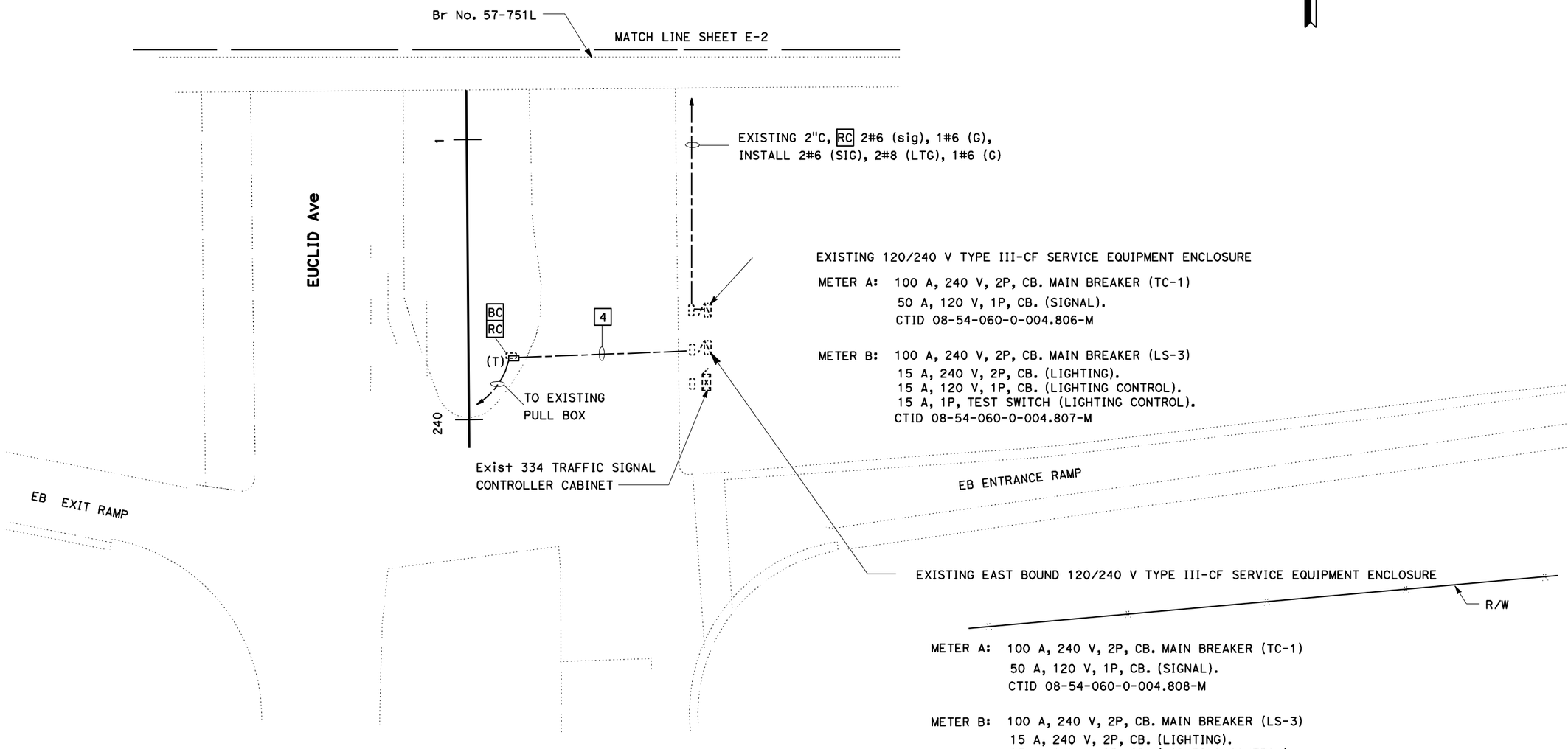

EXISTING 120/240 V TYPE III-CF SERVICE EQUIPMENT ENCLOSURE

METER A: 100 A, 240 V, 2P, CB. MAIN BREAKER (TC-1)
50 A, 120 V, 1P, CB. (SIGNAL).
CTID 08-54-060-0-004.806-M

METER B: 100 A, 240 V, 2P, CB. MAIN BREAKER (LS-3)
15 A, 240 V, 2P, CB. (LIGHTING).
15 A, 120 V, 1P, CB. (LIGHTING CONTROL).
15 A, 1P, TEST SWITCH (LIGHTING CONTROL).
CTID 08-54-060-0-004.807-M

METER A: 100 A, 240 V, 2P, CB. MAIN BREAKER (TC-1)
50 A, 120 V, 1P, CB. (SIGNAL).
CTID 08-54-060-0-004.808-M

METER B: 100 A, 240 V, 2P, CB. MAIN BREAKER (LS-3)
15 A, 240 V, 2P, CB. (LIGHTING).
15 A, 120 V, 1P, CB. (LIGHTING CONTROL).
15 A, 1P, TEST SWITCH (LIGHTING CONTROL).
CTID 08-54-060-0-004.809-M

MODIFY SIGNAL AND LIGHTING
(EAST BOUND RAMP)
(LOCATION 1)

SCALE 1"=20'

THIS PLAN IS ACCURATE FOR ELECTRICAL WORK ONLY.

E-1

REVISED BY	ME
DATE REVISED	12-30-10
CALCULATED-DESIGNED BY	MOHAMMED ELEIWAT
CHECKED BY	KATHERINE DINH
FUNCTIONAL SUPERVISOR	FERDINAND DE LA CRUZ

STATE OF CALIFORNIA - DEPARTMENT OF TRANSPORTATION
Caltrans® ELECTRICAL DESIGN B

LAST REVISION 03-07-11 | DATE PLOTTED => 24-MAR-2011 | TIME PLOTTED => 12:53

Dist	COUNTY	ROUTE	POST MILES TOTAL PROJECT	SHEET No.	TOTAL SHEETS
08	SBd	60	R4.8	27	55

REGISTERED ELECTRICAL ENGINEER 3-07-11 DATE

03-07-11
PLANS APPROVAL DATE

REGISTERED PROFESSIONAL ENGINEER KATHERINE DINH No. E-17157 Exp. 9-30-11 ELECTRICAL STATE OF CALIFORNIA

THE STATE OF CALIFORNIA OR ITS OFFICERS OR AGENTS SHALL NOT BE RESPONSIBLE FOR THE ACCURACY OR COMPLETENESS OF SCANNED COPIES OF THIS PLAN SHEET.

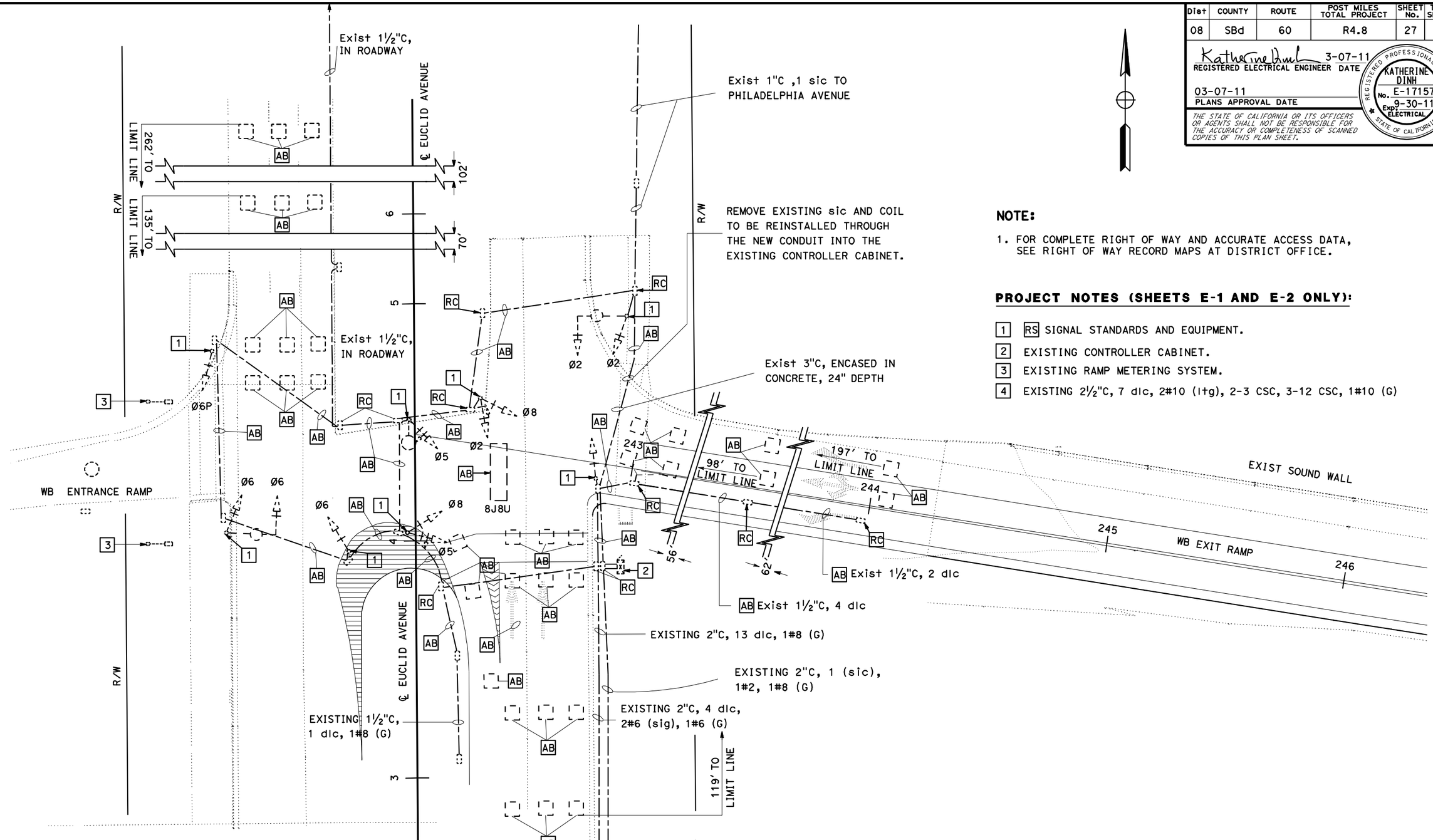

NOTE:

1. FOR COMPLETE RIGHT OF WAY AND ACCURATE ACCESS DATA, SEE RIGHT OF WAY RECORD MAPS AT DISTRICT OFFICE.

PROJECT NOTES (SHEETS E-1 AND E-2 ONLY):

1. RS SIGNAL STANDARDS AND EQUIPMENT.
2. EXISTING CONTROLLER CABINET.
3. EXISTING RAMP METERING SYSTEM.
4. EXISTING 2½"C, 7 dlc, 2#10 (l+g), 2-3 CSC, 3-12 CSC, 1#10 (G)

MODIFY SIGNAL AND LIGHTING
(WEST BOUND RAMP)
(EXISTING LOCATION 2)

SCALE 1"=20'

THIS PLAN IS ACCURATE FOR ELECTRICAL WORK ONLY.

E-2

STATE OF CALIFORNIA - DEPARTMENT OF TRANSPORTATION
ELECTRICAL DESIGN B

FUNCTIONAL SUPERVISOR: FERDINAND DE LA CRUZ

CALCULATED-DESIGNED BY: MOHAMMED ELEIWAT
CHECKED BY: KATHERINE DINH

REVISED BY: ME
DATE REVISED: 12-30-10

LAST REVISION 03-07-11
DATE PLOTTED => 24-MAR-2011
TIME PLOTTED => 12:53

Dist	COUNTY	ROUTE	POST MILES TOTAL PROJECT	SHEET No.	TOTAL SHEETS
08	SBd	60	R4.8	28	55

REGISTERED ELECTRICAL ENGINEER 3-07-11 DATE

03-07-11
PLANS APPROVAL DATE

REGISTERED PROFESSIONAL ENGINEER KATHERINE DINH No. E-17157 Exp. 9-30-11 ELECTRICAL STATE OF CALIFORNIA

THE STATE OF CALIFORNIA OR ITS OFFICERS OR AGENTS SHALL NOT BE RESPONSIBLE FOR THE ACCURACY OR COMPLETENESS OF SCANNED COPIES OF THIS PLAN SHEET.

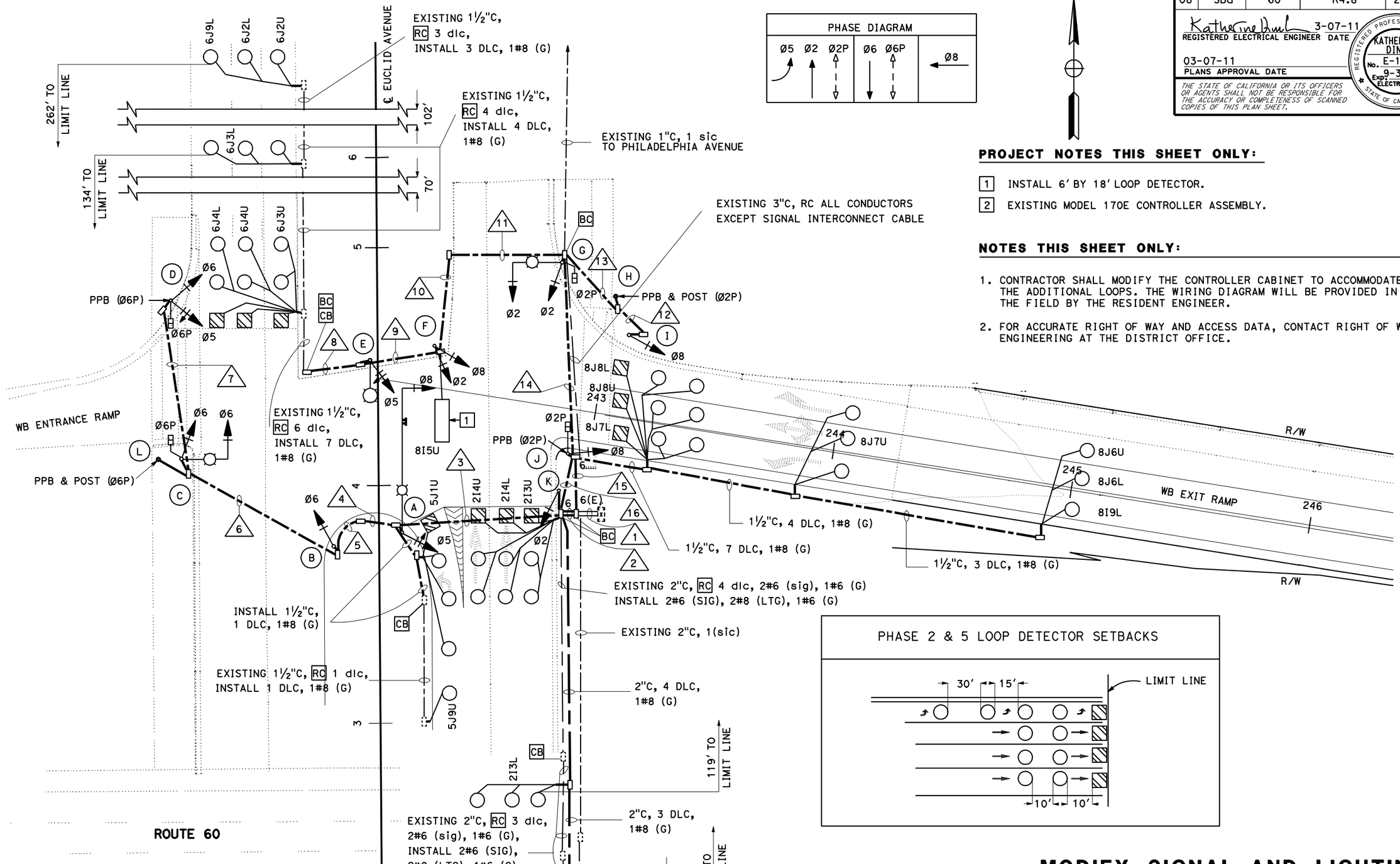

PROJECT NOTES THIS SHEET ONLY:

1. INSTALL 6' BY 18' LOOP DETECTOR.
2. EXISTING MODEL 170E CONTROLLER ASSEMBLY.

NOTES THIS SHEET ONLY:

1. CONTRACTOR SHALL MODIFY THE CONTROLLER CABINET TO ACCOMMODATE THE ADDITIONAL LOOPS. THE WIRING DIAGRAM WILL BE PROVIDED IN THE FIELD BY THE RESIDENT ENGINEER.
2. FOR ACCURATE RIGHT OF WAY AND ACCESS DATA, CONTACT RIGHT OF WAY ENGINEERING AT THE DISTRICT OFFICE.

THIS PLAN IS ACCURATE FOR ELECTRICAL WORK ONLY.

MODIFY SIGNAL AND LIGHTING
(WEST BOUND RAMP)
(LOCATION 2)

SCALE 1"=20'

E-3

REVISED BY	ME
DATE REVISED	12-30-10
CALCULATED-DESIGNED BY	MOHAMMED ELEIWAT
CHECKED BY	KATHERINE DINH
FUNCTIONAL SUPERVISOR	FERDINAND DE LA CRUZ

STATE OF CALIFORNIA - DEPARTMENT OF TRANSPORTATION
Caltrans ELECTRICAL DESIGN B

LAST REVISION 03-07-11 | DATE PLOTTED => 24-MAR-2011 | TIME PLOTTED => 12:53

Dist	COUNTY	ROUTE	POST MILES TOTAL PROJECT	SHEET No.	TOTAL SHEETS
08	SBd	60	R4.8	29	55

REGISTERED ELECTRICAL ENGINEER 3-07-11 DATE

03-07-11
PLANS APPROVAL DATE

REGISTERED PROFESSIONAL ENGINEER KATHERINE DINH No. E-17157 Exp. 9-30-11 ELECTRICAL STATE OF CALIFORNIA

THE STATE OF CALIFORNIA OR ITS OFFICERS OR AGENTS SHALL NOT BE RESPONSIBLE FOR THE ACCURACY OR COMPLETENESS OF SCANNED COPIES OF THIS PLAN SHEET.

CONDUCTOR AND CONDUIT SCHEDULE

CABLE SCHEDULE			CONDUIT RUN AND SIZE															
CABLE TYPE	STD	PHASE	*1	2	3	4	5	6	7	8	9	10	11	12	13	14	15	16
CONDUIT SIZE (IN)			*2-4"	2-4"	4"	4"	3"	3"	2"	2"	3"	3"	4"	4"	2"	4"	4"	4"
VEH-PED 12CSC	Ⓐ	5,8	1	1	1													
	Ⓑ	6	1	1	1	1	1											
	Ⓒ	6,6P Ø6	1 1	1 1	1 1	1 1	1 1	1 1										
	Ⓓ	5,6,6P Ø6	1 1	1 1	1 1	1 1	1 1	1 1	1 1									
	Ⓔ	5	1								1	1	1			1	1	
	Ⓕ	2,8	1									1	1			1	1	
	Ⓖ	2,2P	1													1	1	
	Ⓗ	Ø2	1												1	1	1	
	Ⓘ	8	1											1	1	1	1	
PPB 3CSC	Ⓙ	8,2P Ø2	1 1														1 1	
	Ⓚ	2	1	1														
	Ⓛ	Ø6	1	1	1	1	1	1										
TOTAL CABLES 12/3 CONDUCTORS			10/5	5/3	4/3	3/3	3/3	2/3	1/1		1	2	2	1	1/1	4/1	5/2	
AWG		CIRCUIT																
#8		LIGHTING			2	2	2	2			2	2	2			2		2
#8		GROUND	2	2	1	1	1	1	1	1	1	1	1	1	1	1	1	1
#6		SERVICE	1	1														
#6		SERVICE GROUND	1	1														
*SIC			*2													*1	*1	
LOOP DETECTORS																		
TYPE B DLC		Ø2	7	7														
		Ø5	2	2	2													
		Ø6	7	7						7	7	7	7			7		7
		Ø8	8	8								1	1			1		8
TOTAL DLCs PER RUN			24	24	2					7	7	8	8			8		15

* EXISTING EQUIPMENT

POLE AND EQUIPMENT SCHEDULE

	STANDARD			VEH SIG MTG		PED SIGNAL	PPB		HPS	SPECIAL
No.	Type	S.M.A	L.M.A	MTG	Pole (TYPE)	MTG	Ø	ARROW	LUMINAIRE	REQUIREMENTS
Ⓐ	61-2-100	60′	15′	MAS	SV-1-T				200W	1 3
Ⓑ	1-A				TV-1-T					3
Ⓒ	17-2-100	20′	12′	MAS	SV-1-T	SP-1-T			200W	
Ⓓ	1-A				TV-2-T	SP-1-T	6	←		
Ⓔ	15TS		12′		SV-1-T				200W	2 3
Ⓕ	1-A				TV-2-T					3
Ⓖ	17-2-100	20′	12′	MAS	SV-1-T	SP-1-T			200W	
Ⓗ	PPB POST						2	←		
Ⓘ	1-A				TV-1-T					
Ⓙ	1-A				TV-1-T	SP-1-T	2	→		
Ⓚ	1-A				TV-1-T					
Ⓛ	PPB POST						6	→		

PROJECT NOTES (SHEET E-4 ONLY):

1. INSTALL RETROFLECTIVE G7-1 (CA) SIGN "EUCLID AVE".
2. INSTALL RETROFLECTIVE SR39A(U) (CA) SIGN.
3. INSTALL RETROFLECTIVE R9-3a SIGN.
4. FOR SIGN DETAILS SEE SHEET SQ-1

MODIFY SIGNAL AND LIGHTING
(WEST BOUND RAMP)

E-4

MOHAMMED ELEIWAT	KATHERINE DINH	ME	09-13-10
		ME	12-30-10
REVISED BY	DATE REVISED		
CALCULATED-DESIGNED BY	CHECKED BY		
FUNCTIONAL SUPERVISOR	FERDINAND DE LA CRUZ		

STATE OF CALIFORNIA - DEPARTMENT OF TRANSPORTATION
Caltrans ELECTRICAL DESIGN B

LAST REVISION 03-07-11 | DATE PLOTTED => 24-MAR-2011 | TIME PLOTTED => 12:53

DIST	COUNTY	ROUTE	POST MILES TOTAL PROJECT	SHEET NO.	TOTAL SHEETS
08	SBd	60	R4.8	30	55

LICENSED LANDSCAPE ARCHITECT

April 3, 2009
PLANS APPROVAL DATE

The State of California or its officers or agents shall not be responsible for the accuracy or completeness of electronic copies of this plan sheet.

LICENSED LANDSCAPE ARCHITECT — Robert B. Schott — Signature — 11-30-10 Renewal Date — 2-25-09 Date — STATE OF CALIFORNIA

To accompany plans dated March 07, 2011

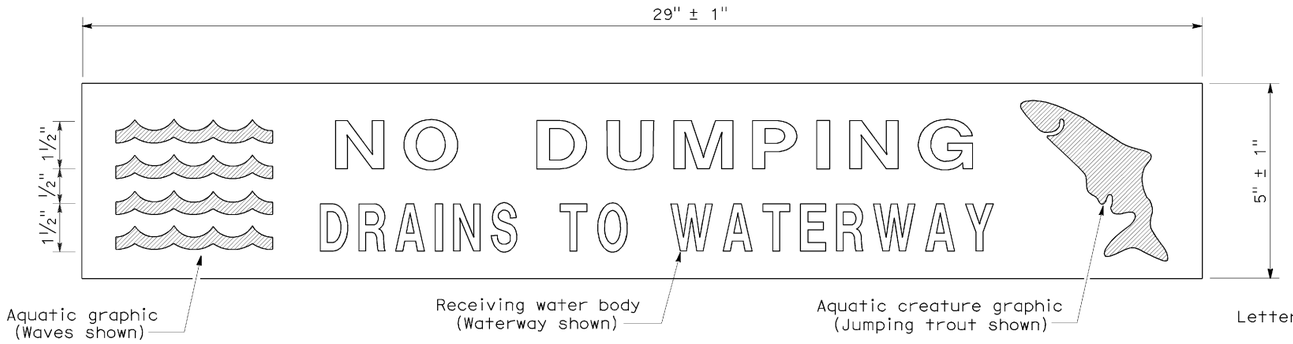

PLAN
DRAINAGE INLET MARKER
(PREFABRICATED THERMOPLASTIC)

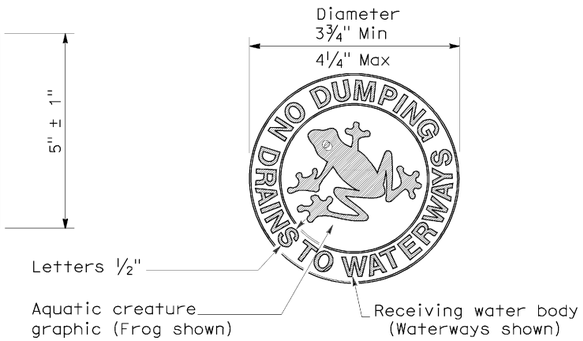

PLAN
DRAINAGE INLET MARKER
(MEDALLION)

PLAN
DRAINAGE INLET MARKER
(STAMPED CONCRETE IMPRINT)

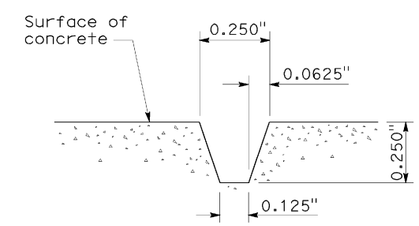

SECTION A-A
STAMPED CONCRETE
IMPRINT DETAIL

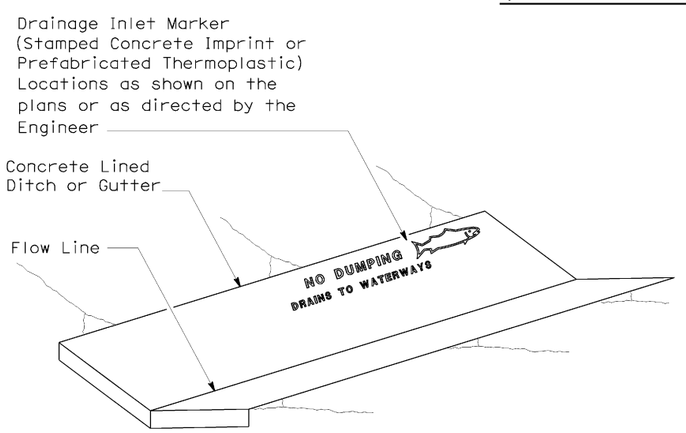

PERSPECTIVE
DRAINAGE INLET MARKER ON
CONCRETE LINED DITCH

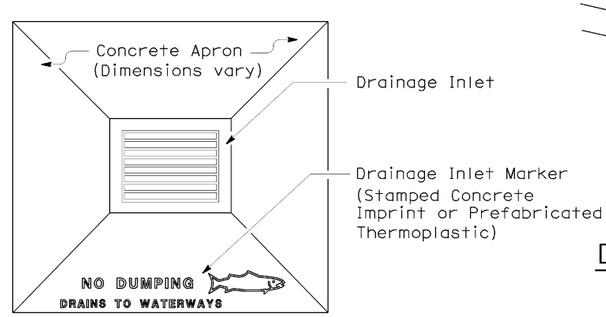

PLAN
DRAINAGE INLET MARKER ON
DRAINAGE INLET APRON

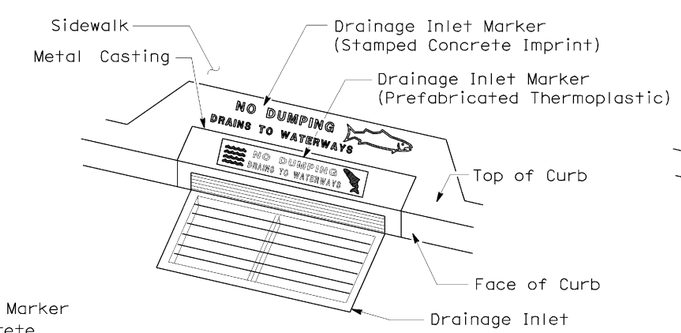

PERSPECTIVE
DRAINAGE INLET MARKER ON
DRAINAGE INLET

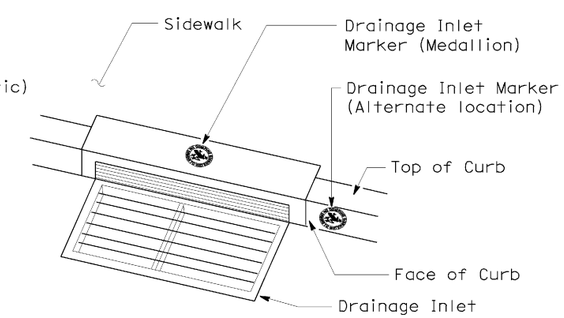

PERSPECTIVE
DRAINAGE INLET MARKER (MEDALLION)
ON DRAINAGE INLET

STATE OF CALIFORNIA
DEPARTMENT OF TRANSPORTATION

DRAINAGE INLET MARKERS

NO SCALE

NSP D71 DATED APRIL 3, 2009 SUPPLEMENTS
THE STANDARD PLANS BOOK DATED MAY 2006.

NEW STANDARD PLAN NSP D71

2006 NEW STANDARD PLAN NSP D71

7-24-08

DIST	COUNTY	ROUTE	POST MILES TOTAL PROJECT	SHEET NO.	TOTAL SHEETS
08	SBd	60	R4.8	31	55

LICENSED LANDSCAPE ARCHITECT

August 15, 2008
PLANS Approval DATE

LICENSED LANDSCAPE ARCHITECT
Robert B. Schott 3635
Signature
11-04-08
Renewal Date
08-11-08
Date
STATE OF CALIFORNIA

The State of California or its officers or agents shall not be responsible for the accuracy or completeness of electronic copies of this plan sheet.

To accompany plans dated March 07, 2011

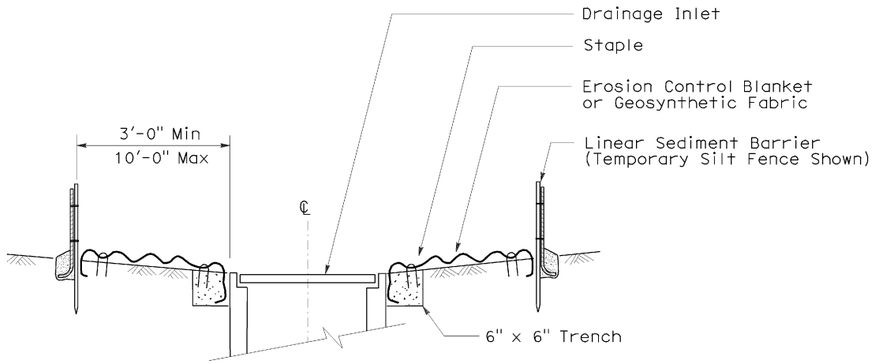

SECTION A-A

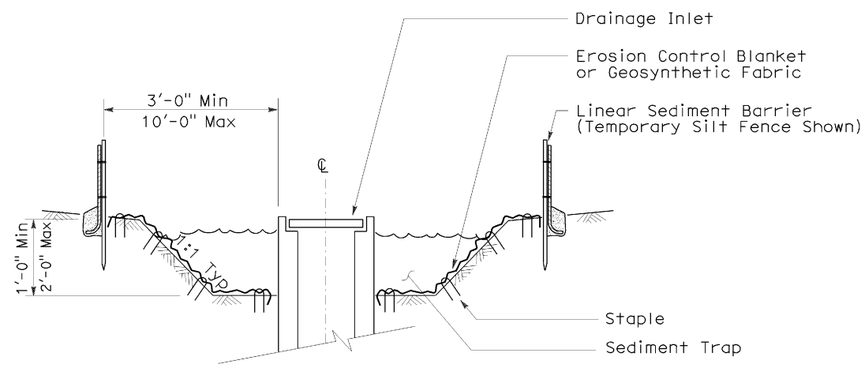

SECTION B-B

NOTES:

1. See Standard Plan T51 for Temporary Silt Fence.
2. Dimensions may vary to fit field conditions.

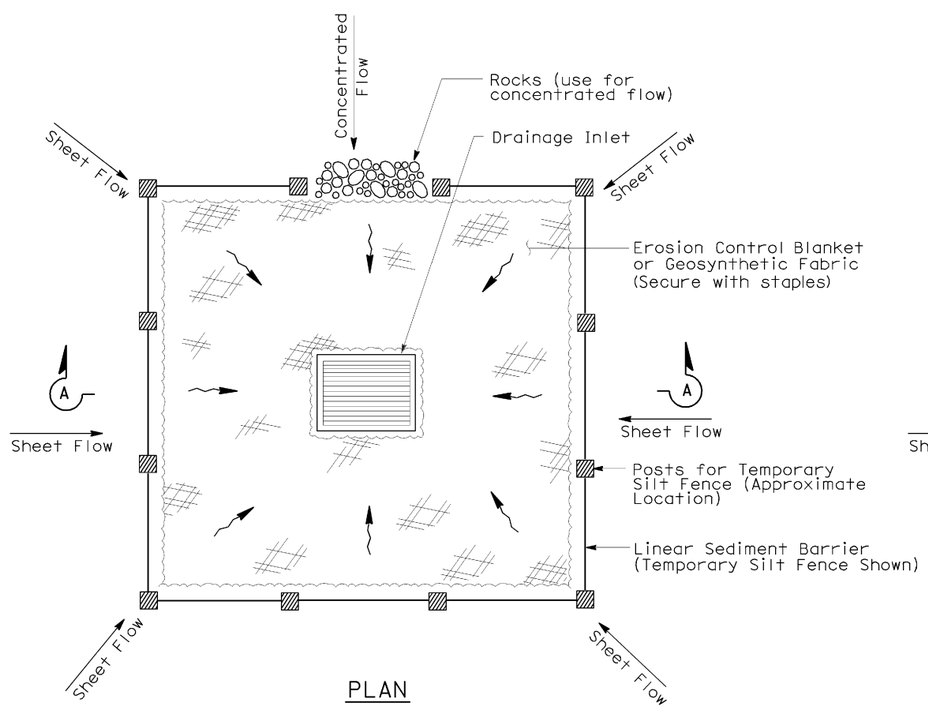

PLAN

TEMPORARY DRAINAGE INLET PROTECTION (TYPE 1)

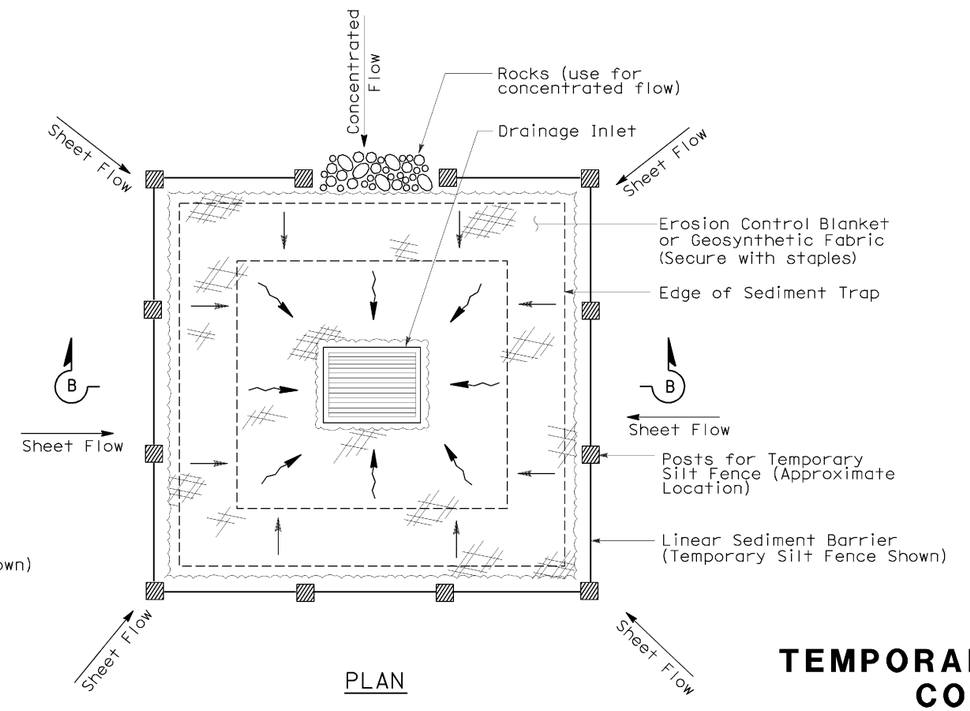

PLAN

TEMPORARY DRAINAGE INLET PROTECTION (TYPE 2) (EXCAVATED SEDIMENT TRAP)

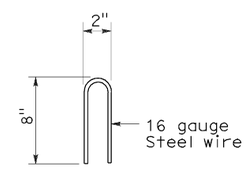

STAPLE DETAIL

STATE OF CALIFORNIA
DEPARTMENT OF TRANSPORTATION

TEMPORARY WATER POLLUTION CONTROL DETAILS (TEMPORARY DRAINAGE INLET PROTECTION)

NO SCALE

Nsp t61 dated august 15, 2008 supplements the standard plans book dated may 2006.

NEW STANDARD PLAN NSP T61

2006 NEW STANDARD PLAN NSP T61

7-11-08

DIST	COUNTY	ROUTE	POST MILES TOTAL PROJECT	SHEET NO.	TOTAL SHEETS
08	SBd	60	R4.8	32	55

LICENSED LANDSCAPE ARCHITECT

August 15, 2008
PLANS APPROVAL DATE

The State of California or its officers or agents shall not be responsible for the accuracy or completeness of electronic copies of this plan sheet.

LICENSED LANDSCAPE ARCHITECT — Robert B. Schott 3625 — Signature — 11-04-08 Renewal Date — 08-11-08 Date — STATE OF CALIFORNIA

To accompany plans dated March 07, 2011

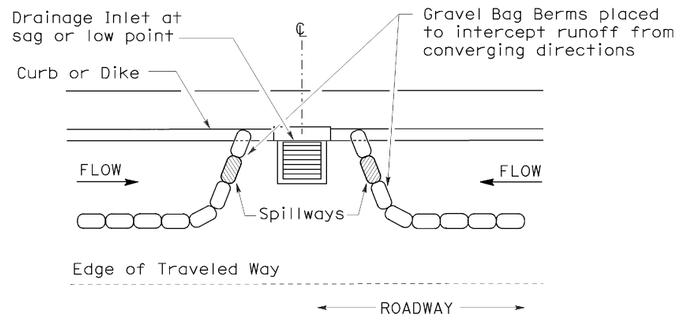

PLAN

CONFIGURATION FOR SAG POINT INLET (GRAVEL BAG BERM)

GRAVEL BAG BERM (TYPE 3A) SPACING TABLE

SLOPE OF ROADWAY (PERCENT)	1 to 3.9	4 to 5.9	6 to 7.9	8 to 10	10+
INTERVAL BETWEEN BERM	100′	75′	50′	25′	12′

For slope of less than 1%, install barriers only if erosion/sediment is prevalent

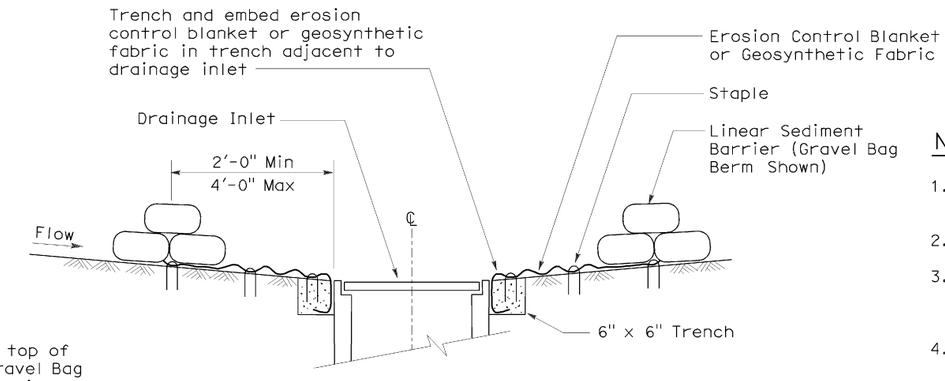

SECTION A-A

NOTES:

1. Place safety cones adjacent to drainage inlet protection.
2. Dimensions may vary to fit field conditions.
3. Install a minimum of 3 gravel bag berms upstream of each drainage inlet to be protected.
4. Position erosion control blanket or geosynthetic fabric at edge of concrete apron and secure in trench.
5. Erosion control blanket or geosynthetic fabric is not required if the area adjacent to the drainage inlet is vegetated or paved.

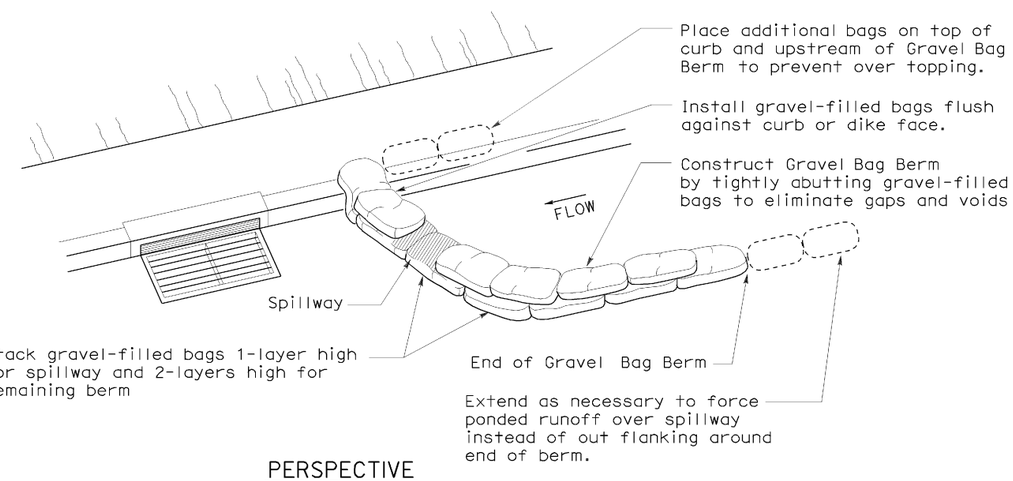

PERSPECTIVE

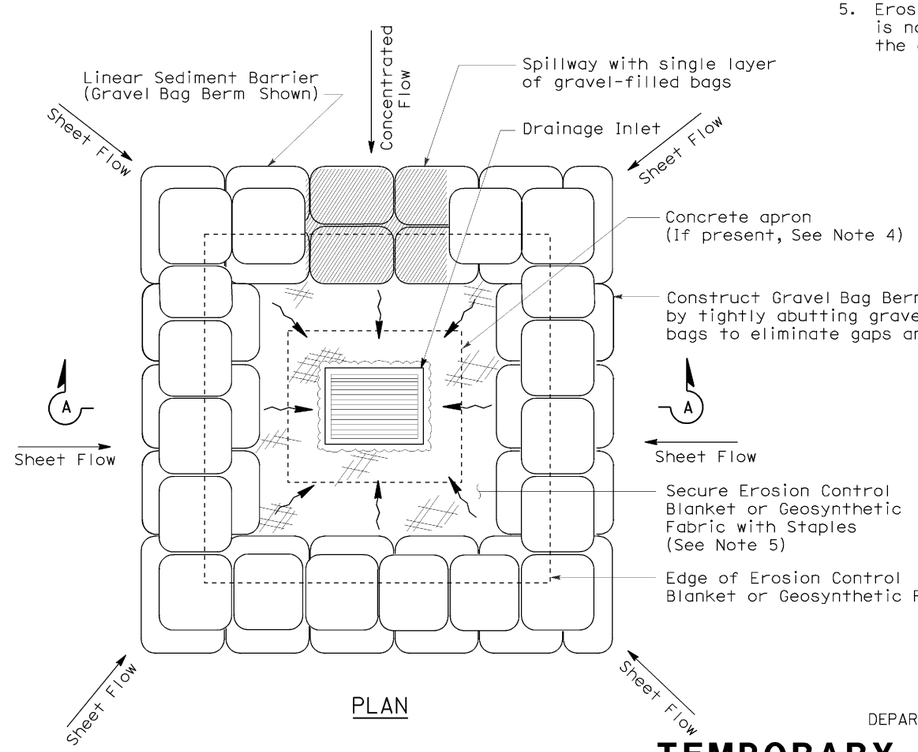

PLAN

TEMPORARY DRAINAGE INLET PROTECTION (TYPE 3B)

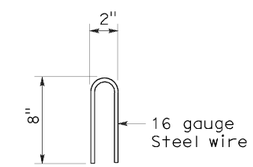

STAPLE DETAIL

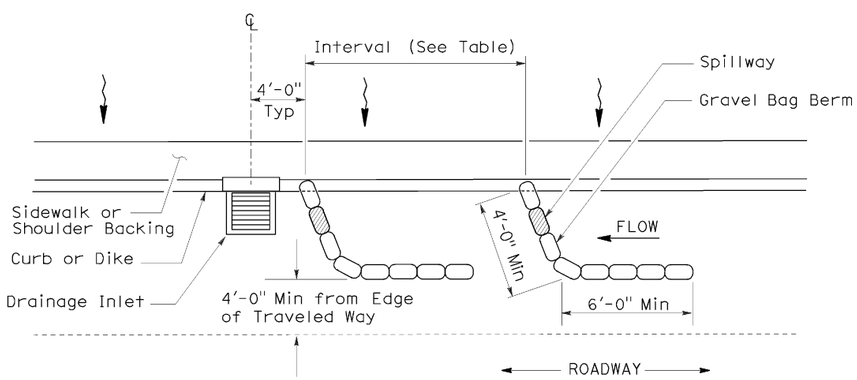

PLAN

TEMPORARY DRAINAGE INLET PROTECTION (TYPE 3A) (GRAVEL BAG BERM)

STATE OF CALIFORNIA
DEPARTMENT OF TRANSPORTATION

TEMPORARY WATER POLLUTION CONTROL DETAILS (TEMPORARY DRAINAGE INLET PROTECTION)

NO SCALE

NSP T62 DATED AUGUST 15, 2008 SUPPLEMENTS THE STANDARD PLANS BOOK DATED MAY 2006.

NEW STANDARD PLAN NSP T62

2006 NEW STANDARD PLAN NSP T62

7-11-08

DIST	COUNTY	ROUTE	POST MILES TOTAL PROJECT	SHEET NO.	TOTAL SHEETS
08	SBd	60	R4.8	33	55

LICENSED LANDSCAPE ARCHITECT

August 15, 2008
PLANS APPROVAL DATE

The State of California or its officers or agents shall not be responsible for the accuracy or completeness of electronic copies of this plan sheet.

LICENSED LANDSCAPE ARCHITECT — Robert B. Schott 3625 — Registered Expires 11-04-08 Renewal Date — 08-11-08 Date — STATE OF CALIFORNIA

To accompany plans dated March 07, 2011

FLEXIBLE SEDIMENT BARRIER SPACING TABLE

SLOPE OF ROADWAY (PERCENT)	0 to 0.9	1 to 1.9	2 to 2.9	3 to 4	5+
INTERVAL BETWEEN BARRIERS	50′	35′	30′	25′	20′
ANGLE FROM FACE OF CURB	70°	70°	70°	45°	45°
SUGGESTED BARRIER LENGTH	6′	6′	6′	6′	6′

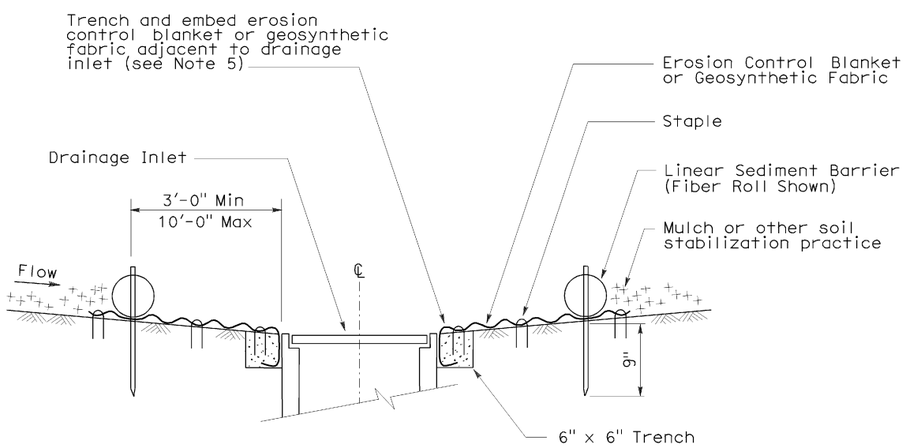

SECTION A-A

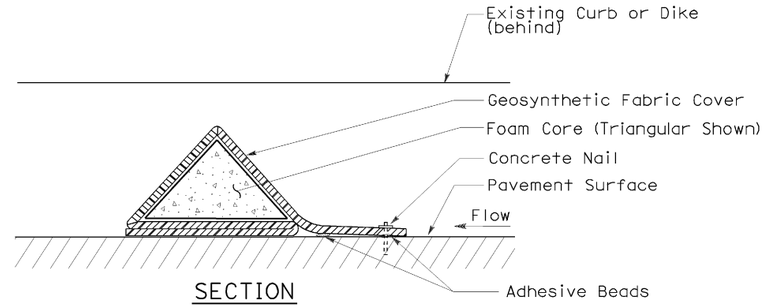

SECTION

FLEXIBLE SEDIMENT BARRIER DETAIL (FOAM BARRIER SHOWN)

NOTES:

1. See Standard Plan T51 for Temporary Silt Fence.
2. Dimensions may vary to fit field conditions.
3. Install a minimum of 3 flexible sediment barriers upstream of each drainage inlet to be protected.
4. Position erosion control blanket or geosynthetic fabric at edge of concrete apron and secure in trench.
5. Erosion control blanket or geosynthetic fabric is not required if the area adjacent to the drainage inlet is vegetated.

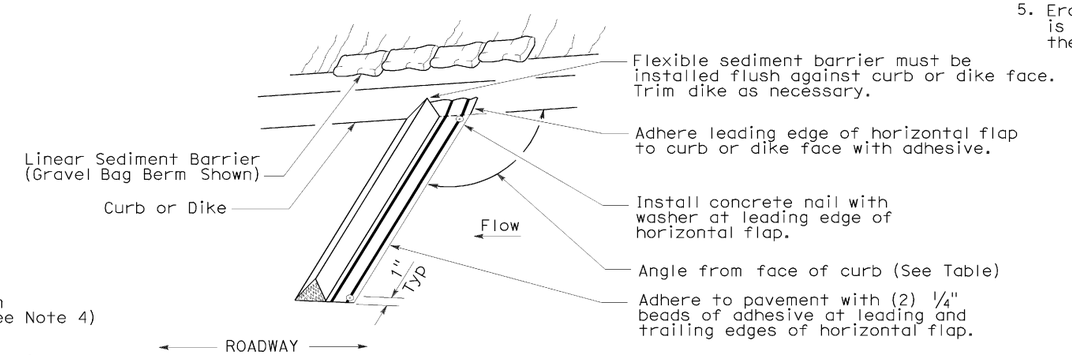

PERSPECTIVE

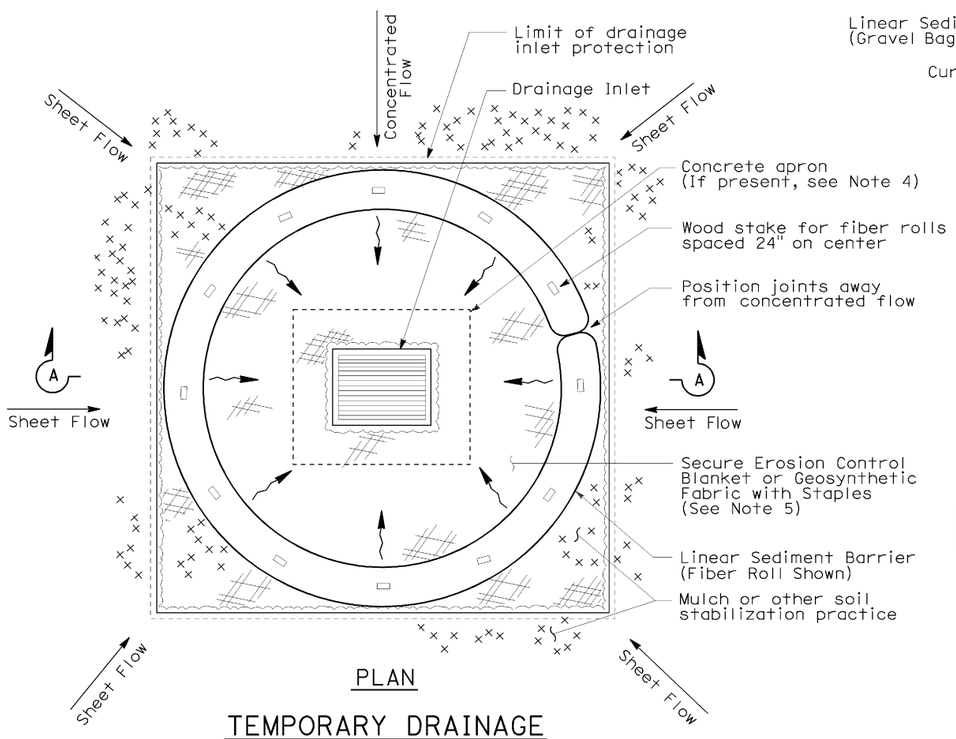

PLAN

TEMPORARY DRAINAGE INLET PROTECTION (TYPE 4A)

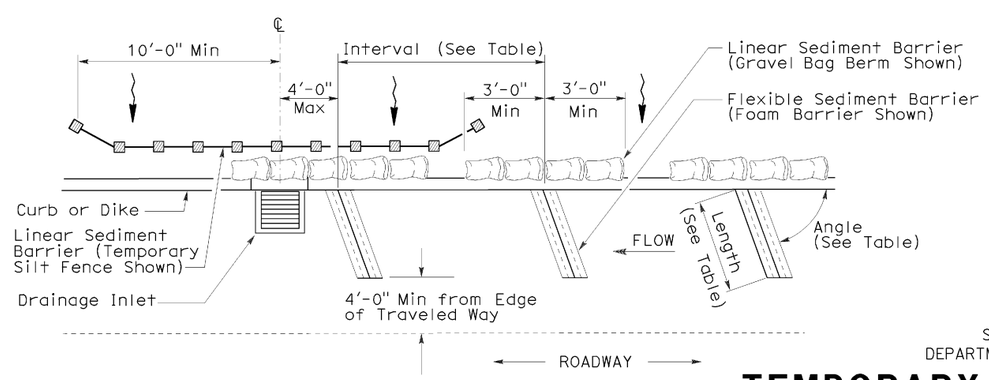

PLAN

TEMPORARY DRAINAGE INLET PROTECTION (TYPE 4B) FLEXIBLE SEDIMENT BARRIER

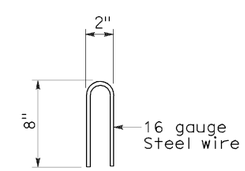

STAPLE DETAIL

STATE OF CALIFORNIA
DEPARTMENT OF TRANSPORTATION

TEMPORARY WATER POLLUTION CONTROL DETAILS (TEMPORARY DRAINAGE INLET PROTECTION)

NO SCALE

NSP T63 DATED AUGUST 15, 2008 SUPPLEMENTS THE STANDARD PLANS BOOK DATED MAY 2006.

NEW STANDARD PLAN NSP T63

2006 NEW STANDARD PLAN NSP T63

7-11-08

DIST	COUNTY	ROUTE	POST MILES TOTAL PROJECT	SHEET NO.	TOTAL SHEETS
08	SBd	60	R4.8	34	55

LICENSED LANDSCAPE ARCHITECT

August 15, 2008
PLANS APPROVAL DATE

The State of California or its officers or agents shall not be responsible for the accuracy or completeness of electronic copies of this plan sheet.

LICENSED LANDSCAPE ARCHITECT — Robert B. Schott 3625 — Signature — 11-04-08 Renewal Date — 08-11-08 Date — STATE OF CALIFORNIA

To accompany plans dated March 07, 2011

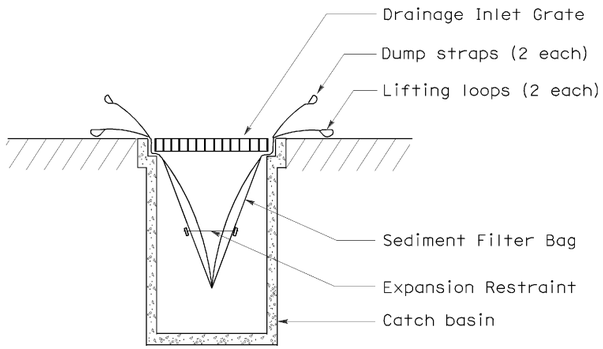

SECTION B-B

SEDIMENT FILTER BAG DETAIL

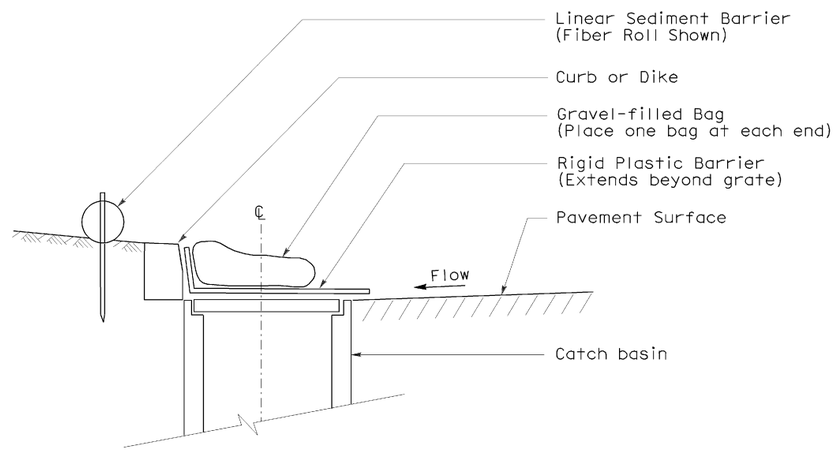

SECTION

TEMPORARY DRAINAGE INLET PROTECTION (TYPE 6A) (CATCH BASIN WITH GRATE)

NOTES:

1. See Standard Plan T51 for Temporary Silt Fence.
2. Dimensions may vary to fit field conditions.

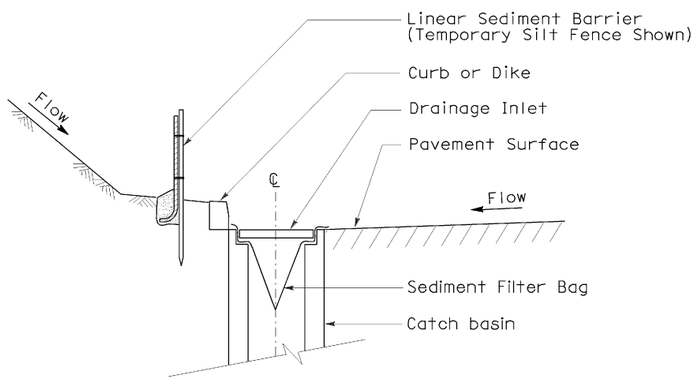

SECTION A-A

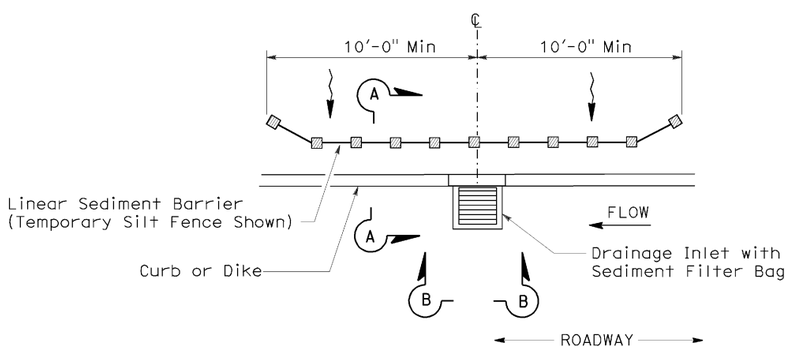

PLAN

TEMPORARY DRAINAGE INLET PROTECTION (TYPE 5) (SEDIMENT FILTER BAG)

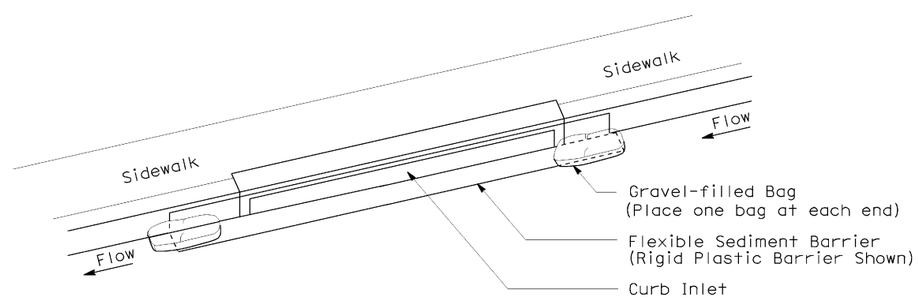

PERSPECTIVE

TEMPORARY DRAINAGE INLET PROTECTION (TYPE 6B) (CURB INLET WITHOUT GRATE)

STATE OF CALIFORNIA
DEPARTMENT OF TRANSPORTATION

TEMPORARY WATER POLLUTION CONTROL DETAILS (TEMPORARY DRAINAGE INLET PROTECTION)

NO SCALE

NSP T64 DATED AUGUST 15, 2008 SUPPLEMENTS
THE STANDARD PLANS BOOK DATED MAY 2006.

NEW STANDARD PLAN NSP T64

2006 NEW STANDARD PLAN NSP T64

7-11-08

DIST	COUNTY	ROUTE	POST MILES TOTAL PROJECT	SHEET NO.	TOTAL SHEETS
08	SBd	60	R4.8	35	55

REGISTERED CIVIL ENGINEER

November 17, 2006
PLANS APPROVAL DATE

REGISTERED PROFESSIONAL ENGINEER Michael Janzen No. 44788 Exp. 03-31-08 CIVIL STATE OF CALIFORNIA

The State of California or its officers or agents shall not be responsible for the accuracy or completeness of electronic copies of this plan sheet.

To accompany plans dated March 07, 2011

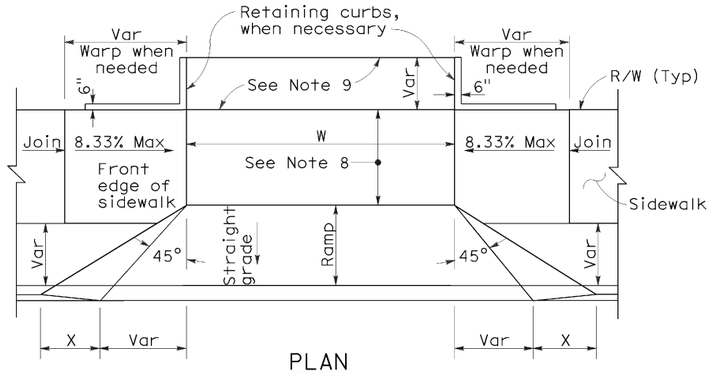

PLAN

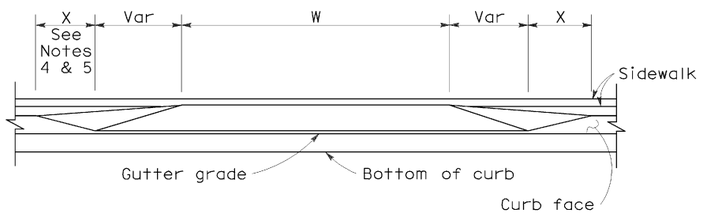

ELEVATION

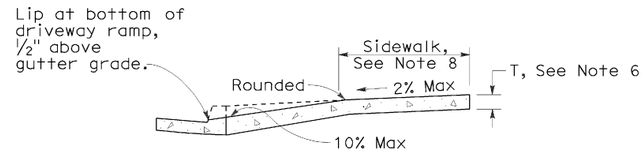

CASE A

Typical driveway, sidewalk not depressed

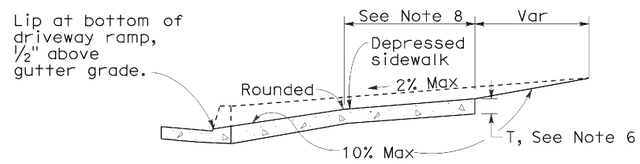

CASE B

Driveway with depressed sidewalk

SECTIONS

CURB QUANTITIES

TYPE	CUBIC YARDS PER LINEAR FOOT
A1-6	0.02585
A1-8	0.03084
A2-6	0.05903
A2-8	0.06379
A3-6	0.01036
A3-8	0.01435
B1-4	0.02185
B1-6	0.02930
B2-4	0.05515
B2-6	0.06171
B3-4	0.00641
B3-6	0.01074
B4	0.05709
D-4	0.04083
D-6	0.06804
E	0.06661

TABLE A

CURB TYPE	DIMENSIONS "H1"	"H2"	"W1"	"W2"
A1-6	1'-2"	6"	7½"	1½"
A1-8	1'-4"	8"	8"	2"
A2-6	1'-0"	6"	2'-7½"	1½"
A2-8	1'-2"	8"	2'-8"	2"
A3-6	6"	5"	7¼"	1¼"
A3-8	8"	7"	7¾"	1¾"
B1-4	1'-0"	4"	7½"	2½"
B1-6	1'-2"	6"	9"	4"
B2-4	10"	4"	2'-7½"	2½"
B2-6	1'-0"	6"	2'-9"	4"
B3-4	4"	3"	7"	2"
B3-6	6"	5"	8½"	3½"
D-4	10"	4"	1'-6"	1'-1"
D-6	1'-0"	6"	2'-2"	1'-8"

DRIVEWAYS

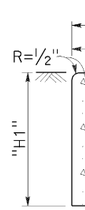

TYPE A1 CURBS

See Table A

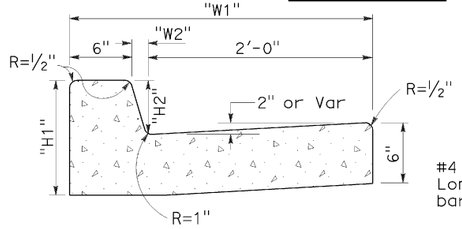

TYPE A2 CURBS

See Table A

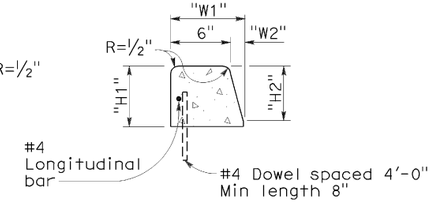

TYPE A3 CURBS

Superimposed on existing pavement
See Table A

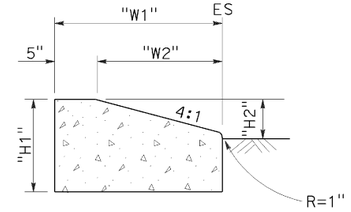

TYPE D CURBS

See Table A

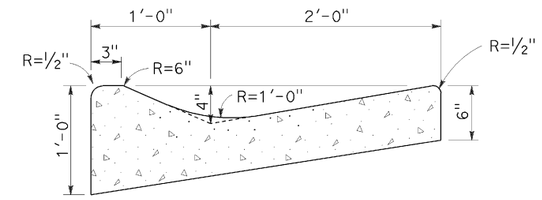

TYPE E CURB

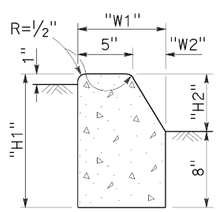

TYPE B1 CURBS

See Table A

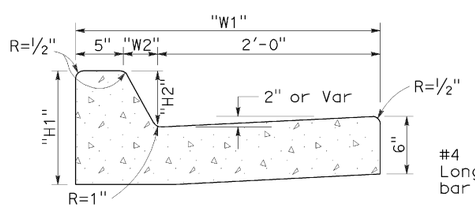

TYPE B2 CURBS

See Table A

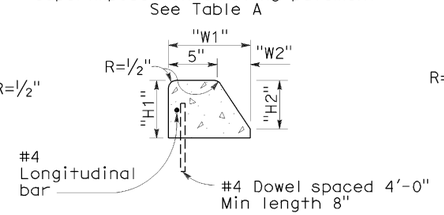

TYPE B3 CURBS

Superimposed on existing pavement
See Table A

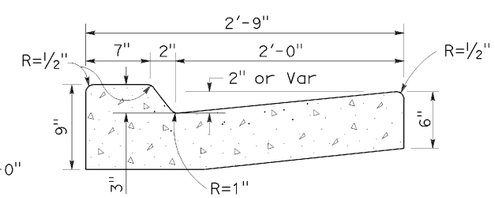

TYPE B4 CURBS

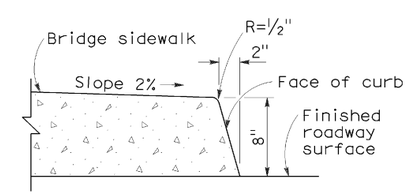

TYPE H CURB

On Bridges

CURBS

NOTES:

1. Case A driveway section typically applies.
2. Use Case B driveway section when ramp slopes would exceed 10% in Case A.
3. Use Case B driveway section when sidewalk cross slope would exceed 2% in Case A.
4. X=3'-0" except for curb heights over 10" where 4:1 slopes shall be used on curb slope.
5. X is a variable when sidewalk is located where wheelchairs may traverse the surface. Slopes shall not exceed 8.33%.
6. Sidewalk and ramp thickness "T" at driveway shall be 4" for residental and 6" for commercial.
7. Difference in slope of the driveway ramp and the slope of a line between the gutter and a point on the roadway 5'-0" from gutter line shall not exceed 15%. Reduce driveway ramp slope, not gutter slope, where required.
8. Minimum width of clear passageway for sidewalk shall be 4'-0".
9. Retaining curbs and acquisition of construction easement may be necessary for narrow sidewalks or curb heights in excess of 6".
10. Across the pedestrian route at curb ramp locations, the gutter pan slope shall not exceed 1" of depth for each 2'-0" of width.

STATE OF CALIFORNIA
DEPARTMENT OF TRANSPORTATION

CURBS AND DRIVEWAYS

NO SCALE

RSP A87A DATED NOVEMBER 17, 2006 SUPERSEDES STANDARD PLAN A87A DATED MAY 1, 2006 - PAGE 113 OF THE STANDARD PLANS BOOK DATED MAY 2006.

REVISED STANDARD PLAN RSP A87A

2006 REVISED STANDARD PLAN RSP A87A

10-25-06

DIST	COUNTY	ROUTE	POST MILES TOTAL PROJECT	SHEET NO.	TOTAL SHEETS
08	SBd	60	R4.8	36	55

REGISTERED CIVIL ENGINEER

September 1, 2006
PLANS APPROVAL DATE

REGISTERED PROFESSIONAL ENGINEER Hector David Cordova No. C41957 Exp. 3-31-08 CIVIL STATE OF CALIFORNIA

The State of California or its officers or agents shall not be responsible for the accuracy or completeness of electronic copies of this plan sheet.

To accompany plans dated March 07, 2011

2006 REVISED STANDARD PLAN RSP A88A

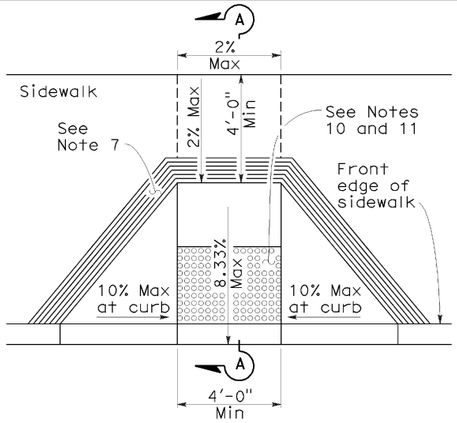

CASE A

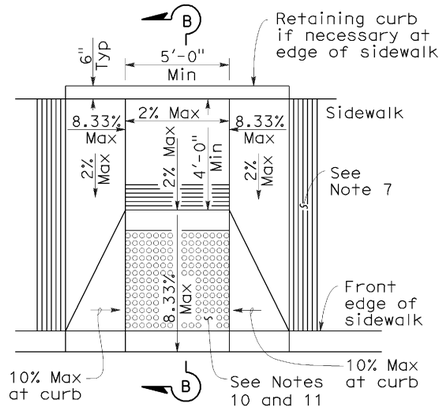

CASE B

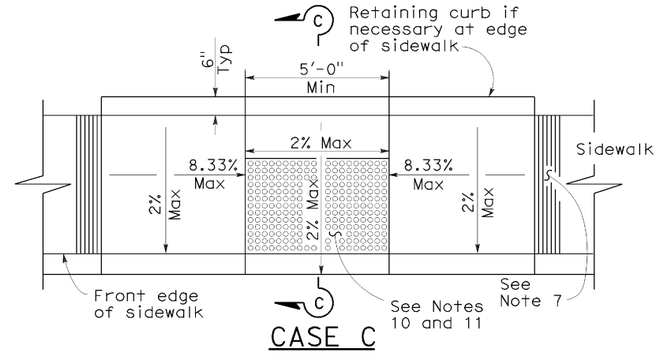

CASE C

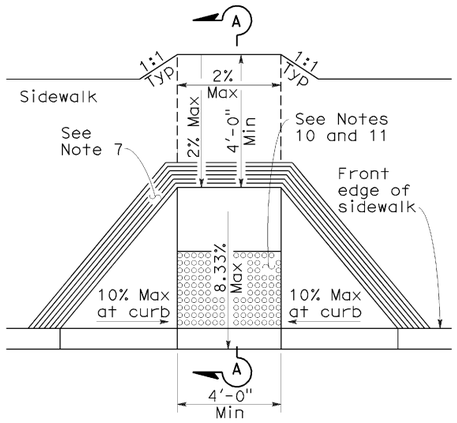

CASE D

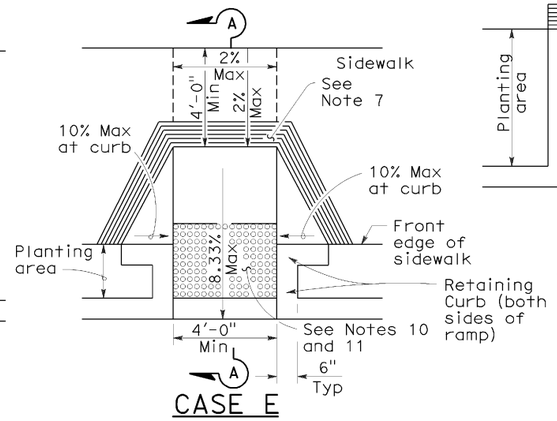

CASE E

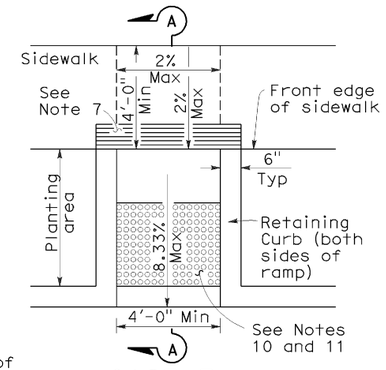

CASE F

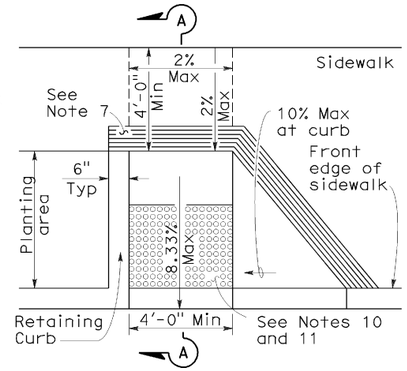

CASE G
See Note 4

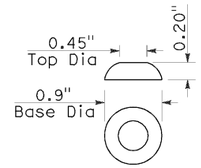

RAISED TRUNCATED DOME

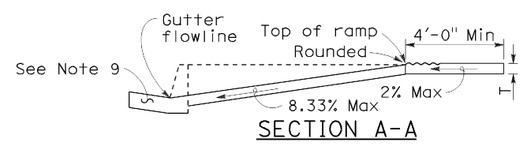

SECTION A-A

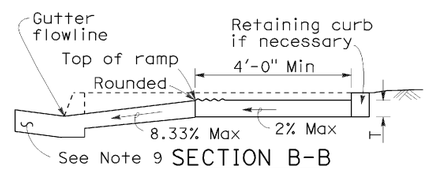

SECTION B-B
Depress entire sidewalk as required

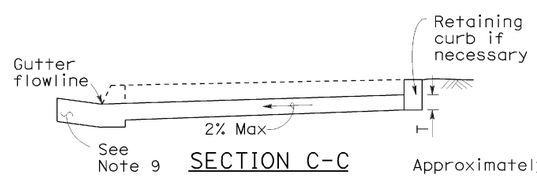

SECTION C-C

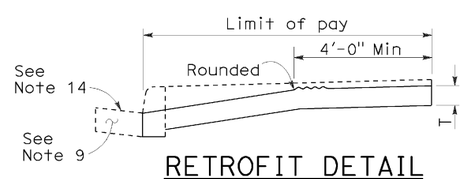

RETROFIT DETAIL
Existing curb and sidewalk

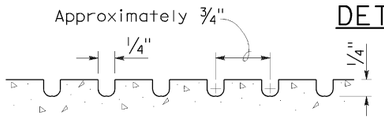

GROOVING DETAIL

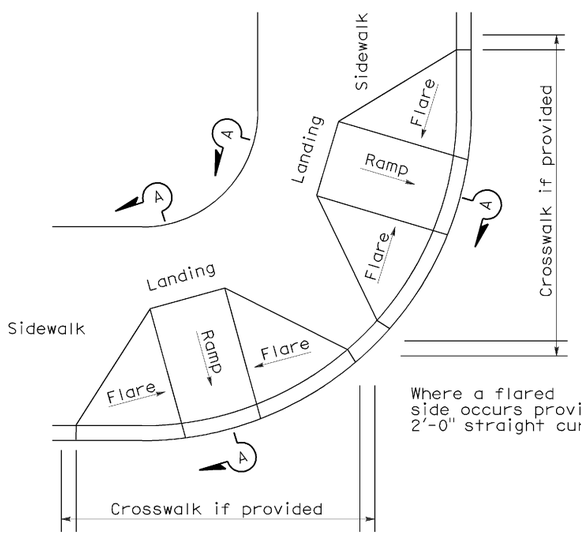

DETAIL A
TYPICAL TWO-RAMP CORNER INSTALLATION
See Note 1

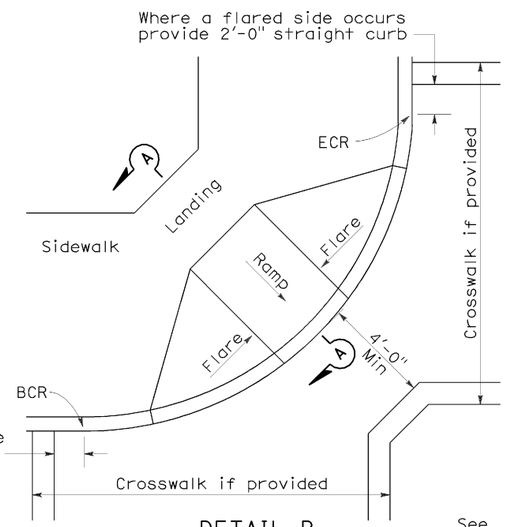

DETAIL B
TYPICAL ONE-RAMP CORNER INSTALLATION
See Notes 1 and 3

NOTES:

1. As site conditions dictate, Case A through Case G curb ramps may be used for corner installations similar to those shown in Detail A and Detail B. The case of curb ramps used in Detail A do not have to be the same. Case A through Case G curb ramps also may be used at mid block locations, as site conditions dictate.
2. If distance from curb to back of sidewalk is too short to accommodate ramp and 4'-0" platform (landing) as shown in Case A, the sidewalk may be depressed longitudinally as in Case B, or C or may be widened as in Case D.
3. When ramp is located in center of curb return, crosswalk configuration must be similar to that shown for Detail B.
4. As site conditions dictate, the retaining curb side and the flared side of the Case G ramp shall be constructed in reversed position.
5. If located on a curve, the sides of the ramp need not be parallel, but the minimum width of the ramp shall be 4'-0".
6. Side slope of ramp flares vary uniformly from a maximum of 10% at curb to conform with longitudinal sidewalk slope adjacent to top of the ramp, except in Case C and Case F.
7. The curb ramp shall be outlined, as shown, with a 1'-0" wide border with 1/4" grooves approximately 3/4" on center. See grooving detail.
8. Transitions from ramps and landing to walks, gutters or streets shall be flush and free of abrupt changes.
9. Maximum slopes of adjoining gutters, the road surface immediately adjacent to the curb ramp or accessible route shall not exceed 5 percent within 4'-0" of the top and bottom of the curb ramp.
10. Curb ramps shall have a detectable warning surface that extends the full width and 3'-0" depth of the ramp. Detectable Warning Surfaces shall conform to the details on this plan and the requirements in the Special Provisions.
11. The edge of the detectable warning surface nearest the street shall be between 6" and 8" from the gutter flowline.
12. Sidewalk and ramp thickness, "T", shall be 3½" minimum.
13. Utility pull boxes, manholes, vaults and all other utility facilities within the boundaries of the curb ramp will be relocated or adjusted to grade by the owner prior to, or in conjunction with, curb ramp construction.
14. For retrofit conditions, removal and replacement of curb apron will be at the Contractor's option, unless otherwise shown on project plans.

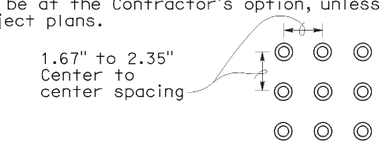

RAISED TRUNCATED DOME PATTERN (IN-LINE)

DETECTABLE WARNING SURFACE

See Note 10

STATE OF CALIFORNIA
DEPARTMENT OF TRANSPORTATION

CURB RAMP DETAILS

NO SCALE

RSP A88A DATED SEPTEMBER 1, 2006 SUPERSEDES STANDARD PLAN A88A DATED MAY 1, 2006 - PAGE 115 OF THE STANDARD PLANS BOOK DATED MAY 2006.

REVISED STANDARD PLAN RSP A88A

8-3-06

DIST	COUNTY	ROUTE	POST MILES TOTAL PROJECT	SHEET NO.	TOTAL SHEETS
08	SBd	60	R4.8	37	55

REGISTERED ELECTRICAL ENGINEER

October 5, 2007
PLANS APPROVAL DATE

REGISTERED PROFESSIONAL ENGINEER Jeffery G. McRae No. E14512 Exp. 6-30-08 ELECTRICAL STATE OF CALIFORNIA

The State of California or its officers or agents shall not be responsible for the accuracy or completeness of electronic copies of this plan sheet.

To accompany plans dated March 07, 2011

ELECTROLIERS

STANDARD TYPES
15, 15D
15 STRUCTURE
21, 21D STRUCTURE
30
31
32
35
36-20A

High mast light pole

Double Arm lighting standard

Existing electrolier

Electrolier foundation (Future installation)

NOTES:

1. Luminaires shall be 310 W HPS when installed on Type 21, 21D, 30, 31, 32, 35 and 36-20A Standards, unless otherwise specified. Luminaires shall be 200 W HPS when installed on other type standards or poles, unless otherwise specified.
2. Luminaires shall be the cutoff type, ANSI Type Ⅲ medium cutoff lighting distribution, unless otherwise specified.
3. Variations noted adjacent to symbol on project plans.

Electrolier (see project notes or project plans)

Luminaire on wood pole

STANDARD NOTES:

- AB — Abandon. If applied to conduit, remove conductors.
- BC — Install pull box in existing conduit run.
- BP — Pedestrian barricade, type as indicated on plan.
- CB — Install conduit into existing pull box.
- CC — Connect new and existing conduit. Remove existing conductors and install conductors as indicated.
- CF — Conduit to remain for future use. Remove conductors. Install pull wire or rope.
- DH — Detector handhole.
- FA — Foundation to be abandoned.
- IS — Install sign on signal mast arm.
- NS — No slip base on standard.
- PEC — Photoelectric control.
- PEU — Photoelectric unit.
- RC — Equipment or material to be removed and become the property of the Contractor.
- RE — Remove electrolier, fuses and ballast. Tape ends of conductors.
- RL — Relocate equipment.
- RR — Remove and reuse equipment.
- RS — Remove and salvage equipment.
- SC — Splice new to existing conductors.
- SD — Service disconnect.
- SF — Standard to remain for future use. Remove luminaire, pole conductors, fuses and ballast.
- TSP — Telephone service point.

ABBREVIATIONS AND EQUIPMENT DESIGNATIONS

PROPOSED	EXISTING	
BBS	bbs	Battery backup system
BC	bc	Bolt circle
C	C	Conduit
CCTV	cctv	Closed circuit television
CKT	ckt	Circuit
CMS	cms	Changeable message sign
DLC	dlc	Loop detector lead-in cable
EMS	ems	Extinguishable message sign
EVC	evc	Emergency vehicle cable
EVD	evd	Emergency vehicle detector
FB	fb	Flashing beacon
FBCA	fbca	Flashing beacon control assembly
FBS	fbs	Flashing beacon with slip base
FO	fo	Fiber optic
G	G	Ground (Equipment Grounding Conductor)
GFCI	GFCI	Ground fault circuit interrupt
HAR	har	Highway advisory radio
HEX	hex	Hexagonal
HPS	hps	High pressure sodium
IISNS	iisns	Internally illuminated street name sign
ISL	isl	Induction sign lighting
LED	led	Light emitting diode
LMA	lma	Luminaire mast arm
LPS	lps	Low pressure sodium
LTG	ltg	Lighting
LUM	lum	Luminaire
MAT	mat	Mast arm mounting vehicle signal faces, top attachment
MAS	mas	Mast arm mounting vehicle signal faces, side attachment
MAS-4A	mas-4A	Mast arm mounting vehicle signal faces, side attachment - 4 signal section
MAS-4B	mas-4B	
MAS-4C	mas-4C	
MAS-5A	mas-5A	Mast arm mounting vehicle signal faces, side attachment - 5 signal section
MAS-5B	mas-5B	
MC	mc	Mercury contactor
M/M	m/m	Multiple to multiple transformer
MT	mt	Conduit with pull wire or rope only
MTG	mtg	Mounting
	mv	Mercury vapor lighting fixture
N	N	Neutral (Grounded Conductor)
NC	NC	Normally closed
NO	NO	Normally open
PB	pb	Pull box
PEC	pec	Photoelectric control (Type Ⅰ, Ⅱ, Ⅲ, Ⅳ or Ⅴ as shown)
PED	ped	Pedestrian
PEU	peu	Photoelectric unit
PPB	ppb	Pedestrian push button
RL		Relocated equipment
RM	rm	Ramp metering
SB	sb	Slip base
SIC	sic	Signal interconnect cable
SIG	sig	Signal
SMA	sma	Signal mast arm
SNS	sns	Street name sign
SP	sp	Service point
TDC	tdc	Telephone demarcation cabinet
TMS	tms	Traffic monitoring station
TOS	tos	Traffic Operations System
VEH	veh	Vehicle
XFMR	xfmr	Transformer
COMM	comm	Communication
RWIS	rwis	Roadway weather information system

SOFFIT AND WALL MOUNTED LUMINAIRES

Pendant, 70 W HPS unless otherwise specified.

Flush, 70 W HPS unless otherwise specified.

Wall surface, 70 W HPS unless otherwise specified.

Existing soffit or wall luminaire to remain unmodified.

Existing soffit or wall luminaire to be modified as specified.

NOTE:

Arrow indicates "street side" of luminaire.

STATE OF CALIFORNIA
DEPARTMENT OF TRANSPORTATION

ELECTRICAL SYSTEMS (SYMBOLS AND ABBREVIATIONS)

NO SCALE

RSP ES-1A DATED OCTOBER 5, 2007 SUPERSEDES STANDARD PLAN ES-1A DATED MAY 1, 2006 - PAGE 400 OF THE STANDARD PLANS BOOK DATED MAY 2006.

REVISED STANDARD PLAN RSP ES-1A

2006 REVISED STANDARD PLAN RSP ES-1A

DIST	COUNTY	ROUTE	POST MILES TOTAL PROJECT	SHEET NO.	TOTAL SHEETS
08	SBd	60	R4.8	38	55

REGISTERED ELECTRICAL ENGINEER

October 5, 2007
PLANS APPROVAL DATE

REGISTERED PROFESSIONAL ENGINEER Jeffery G. McRae No. E14512 Exp. 6-30-08 ELECTRICAL STATE OF CALIFORNIA

The State of California or its officers or agents shall not be responsible for the accuracy or completeness of electronic copies of this plan sheet.

To accompany plans dated March 07, 2011

CONDUIT

PROPOSED	EXISTING	
		Lighting Conduit, unless otherwise indicated or noted
		Traffic signal conduit
C	c	Communication conduit
T	t	Telephone conduit
F	f	Fire alarm conduit
FO	fo	Fiber optic conduit
		Conduit termination (RSP ES-9A C)
R	r	Conduit riser in/on structure or service pole

SERVICE EQUIPMENT

PROPOSED	EXISTING	
OH	oh	Overhead lines
U	U	Wood pole "U" indicates utility owned
		Pole guy with anchor
		Utility transformer - ground mounted
III		Service equipment enclosure type
		Service equipment enclosure door indicates front of enclosure
T	t	Telephone demarcation cabinet

POLE-MOUNTED SERVICE DESIGNATION

Type of installation

TYPE H SERVICE - 28'-10" ← Pole height above grade

ILLUMINATED OVERHEAD SIGN

PROPOSED	EXISTING	
		Overhead sign - Single post
		Overhead sign - Two post
		Overhead sign - Mounted on structure
		Overhead sign with electrolier

SIGNAL EQUIPMENT

PROPOSED	EXISTING	
		Pedestrian signal face
		Pedestrian push button post
		Pedestrian barricade
		Vehicle signal face (with backplate, 3-Section: red, yellow and green)
		Vehicle signal face with angle visors
PV	PV	Modifications of basic symbols: "L" Indicates all non-arrow sections louvered "LG" Indicates louvered green section only "PV" indicates 12" programmed visibility sections "8" indicates all 8" sections (only when specified)
		Type 15TS and Vehicle signal face
		Vehicle signal face with red, yellow and green left arrow sections
		Vehicle signal face with red and yellow sections and up green arrow
		Vehicle signal face (5 Section) with red, yellow and green sections and yellow and green right arrows
		Type 1 Standard and attached vehicle signal faces
		Standard with signal mast arm only and attached vehicle signal faces and internally illuminated street name sign
		Type 33 Standard, Left-turn vehicle signal face and sign
		Standard with luminaire and signal mast arms and attached vehicle signal faces
		Cantilever flashing beacon Type 9 Frame, with a sign unless otherwise specified or indicated
		Type 15-FBS Standard with two vehicle signal face sections with lens, backplate and visor with a sign
R	Y	Flashing beacon. One vehicle signal face section with lens, backplate and visor. "R" indicates red indication, "Y" indicates yellow indication
		Controller assembly. Door indicates front of cabinet

SIGNAL EQUIPMENT Cont

PROPOSED	EXISTING	
		Guard post
		Type 1 Standard with "Meter On" sign
		Emergency Vehicle detector

NOTES:

1. All signal sections shall be 12" unless shown otherwise.
2. Signal heads shall be provided with backplates unless shown otherwise.
3. Signal indication shall be LED.

STATE OF CALIFORNIA
DEPARTMENT OF TRANSPORTATION

ELECTRICAL SYSTEMS (SYMBOLS AND ABBREVIATIONS)

NO SCALE

RSP ES-1B DATED OCTOBER 5, 2007 SUPERCEDES STANDARD PLAN ES-1B DATED MAY 1, 2006 - PAGE 401 OF THE STANDARD PLANS BOOK DATED MAY 2006.

REVISED STANDARD PLAN RSP ES-1B

2006 REVISED STANDARD PLAN RSP ES-1B

7-10-07

DIST	COUNTY	ROUTE	POST MILES TOTAL PROJECT	SHEET NO.	TOTAL SHEETS
08	SBd	60	R4.8	39	55

REGISTERED ELECTRICAL ENGINEER

October 5, 2007
PLANS APPROVAL DATE

REGISTERED PROFESSIONAL ENGINEER Jeffery G. McRae No. E14512 Exp. 6-30-08 ELECTRICAL STATE OF CALIFORNIA

The State of California or its officers or agents shall not be responsible for the accuracy or completeness of electronic copies of this plan sheet.

To accompany plans dated March 07, 2011

EQUIPMENT IDENTIFICATION

ILLUMINATED SIGN IDENTIFICATION NUMBER:

Sign No. 12345

10 ISL SCI 1.0

- Sign number - Place on post or structure
- Transformer rating (kVA)
- Lighting control type
- Number and type of fixtures

Do NOT place on standard or structure

ELECTROLIER OR EQUIPMENT IDENTIFICATION NUMBER:

12345 - 15'-0"

- Mast arm length, if shown. Do not place on standard or structure.
- Equipment number - Place on standard or structure. Existing equipment numbers are shown in parenthesis

CONDUIT AND CONDUCTOR IDENTIFICATION:

1½"C, 2#10, 15#14, 2 DLC

- Number and size of conductors and cables
- Size of conduit in inches

ø1, ø2, ø2P, etc.	Traffic phase identification for signal faces, detectors and phase diagrams
1 2 3	Project note numbers
A B C	Equipment description, installation or item numbers
1 2 3	Conduit run numbers

SIGNAL AND LIGHTING STANDARD (TYPICAL DESIGNATION):

19A - 3 - 100

- Wind velocity = 100 mph
- Case 3 arm loading
- Standard type
- Standard Plan sheet number
- Detail number or letter

MISCELLANEOUS EQUIPMENT

PROPOSED	EXISTING	
CMS	cms	Changeable message sign
		Closed circuit television camera
		Highway advisory radio pole and antenna
EMS	ems	Extinguishable message sign
M V	m v	Detection device M = Microwave sensor V = Video image sensor

WIRING DIAGRAM LEGEND

P	Pole
CB	Circuit breaker
A	Ampere
V	Volt
M	Metered
UM	Unmetered
NB	Neutral bus
GB	Ground bus
G	Equipment grounding conductor
N	Grounded conductor (Neutral)

- External conductor
- Conductor or bus
- Tie point
- Contactor coil
- Contactor, Contact NO
- Terminal blocks
- Contactor, Contact NC
- Enclosure bond
- Grounding electrode
- Circuit breaker
- Receptacle

PULL BOXES

PROPOSED	EXISTING	
		Pull box-No. 5 unless otherwise indicated or noted.
3	9A(21)	Pull box-Additional designations or descriptions

3 = No. 3½ pull box
5 = No. 5 pull box
6 = No. 6 pull box
7 = No. 7 (Ceiling pull box)
8 = No. 8 (Pendant soffit pull box)
9 = No. 9 pull box
9A = No. 9A pull box

(C) = Communications pull box
(E) = Pull box with extension
(S) = Sprinkler control pull box
(21) = Anchor bolts and conduit for future installation of Type 21 Standard
(T) = Traffic pull box

VEHICLE DETECTORS

5 J 9 U

- U = Upper
- L = Lower
- Slot number in input file
- Input file (I or J)
- Phase

PROPOSED	EXISTING	
		Type A detector loop. Outline of sawcut shown.
		Type B detector loop. Outline of sawcut shown.
		Type C detector loop. Outline of sawcut shown.
		Type D detector loop. Outline of sawcut shown.
		Type E detector loop. Outline of sawcut shown.
		Type Q detector loop. Outline of sawcut shown.
		Magnetic detector
DH	dh	Detector handhole
		Microwave or video detection zone

STATE OF CALIFORNIA
DEPARTMENT OF TRANSPORTATION

ELECTRICAL SYSTEMS (SYMBOLS AND ABBREVIATIONS)

NO SCALE

RSP ES-1C DATED OCTOBER 5, 2007 SUPERCEDES STANDARD PLAN ES-1C DATED MAY 1, 2006 - PAGE 402 OF THE STANDARD PLANS BOOK DATED MAY 2006.

REVISED STANDARD PLAN RSP ES-1C

2006 REVISED STANDARD PLAN RSP ES-1C

7-10-07

DIST	COUNTY	ROUTE	POST MILES TOTAL PROJECT	SHEET NO.	TOTAL SHEETS
08	SBd	60	R4.8	40	55

REGISTERED ELECTRICAL ENGINEER

June 6, 2008
PLANS APPROVAL DATE

REGISTERED PROFESSIONAL ENGINEER
Jeffery G. McRae
No. E14512
Exp. 6-30-10
ELECTRICAL
STATE OF CALIFORNIA

The State of California or its officers or agents shall not be responsible for the accuracy or completeness of electronic copies of this plan sheet.

To accompany plans dated March 07, 2011

VISORS

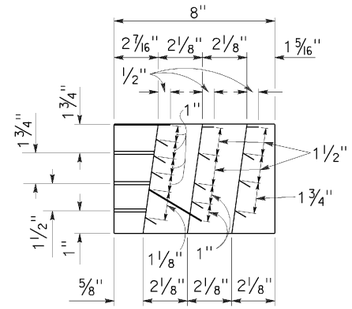

SECTION A-A

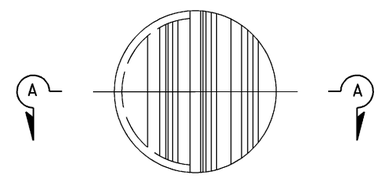

FRONT VIEW

DIRECTIONAL LOUVER

Directional louvers shall be oriented as directed by the Engineer and secured in place with one plated brass machine screw and nut.

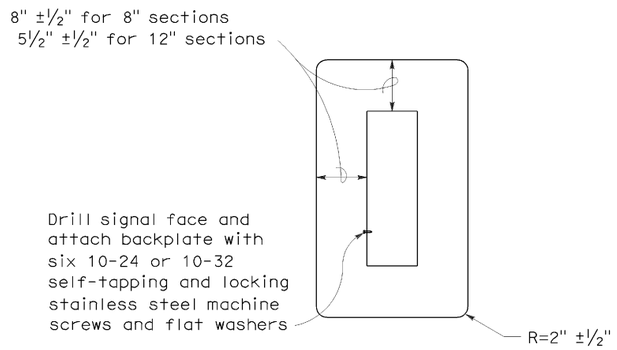

8" AND 12" SECTIONS

BACKPLATE

1/16" minimum thickness
3001-14 aluminum, or plastic when specified

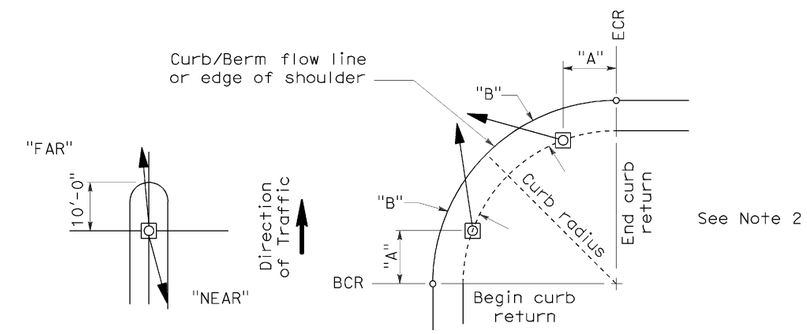

NOTES:

1. Typical signal pole placement unless dimensioned on plans.
2. For "A" and "B" dimensions, see Pole Schedule, or as directed by the Engineer.

SIGNAL STANDARD PLACEMENT DIMENSIONS AND EQUIPMENT LOCATIONS

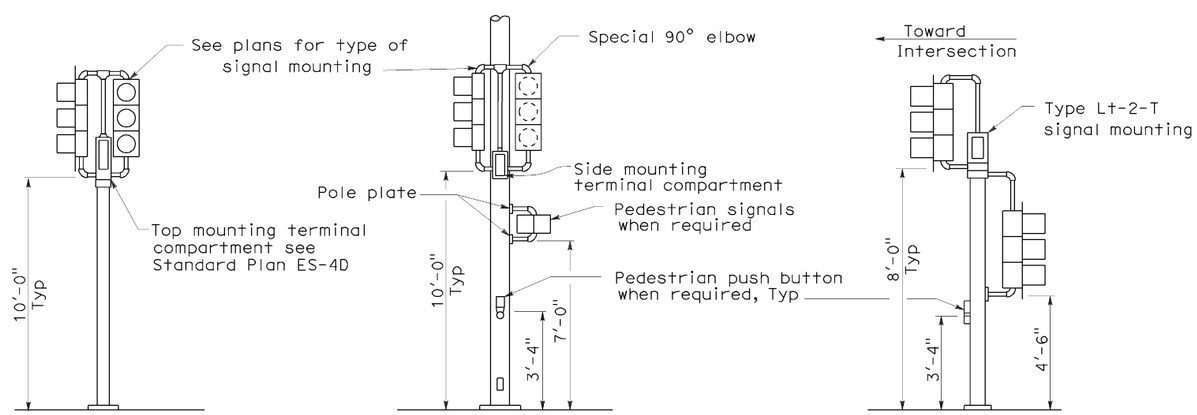

TOP MOUNTED SIGNALS (TV)

Type 1-A, 1-B, 1-C and 1-D standard as indicated on the plans

SIDE MOUNTED SIGNALS (SV AND SP)

Normally used on standards with luminaire or signal mast arm

LEFT TURN LANE SIGNAL

Type 1-A, 1-B, 1-C and 1-D standard as indicated on plans

TYPICAL SIGNAL INSTALLATIONS

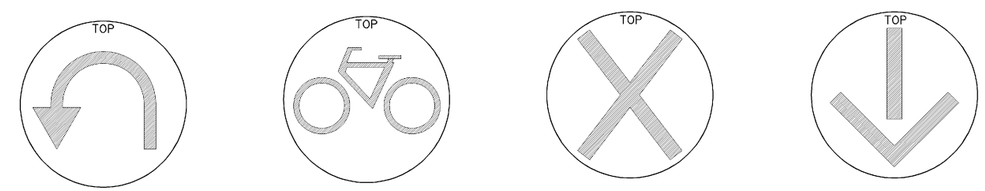

U-TURN SIGNAL FACE

BICYCLE SIGNAL FACE

LANE CONTROL SIGNAL FACE

LANE CONTROL SIGNAL FACE

STATE OF CALIFORNIA
DEPARTMENT OF TRANSPORTATION

ELECTRICAL SYSTEMS (SIGNAL HEADS AND MOUNTINGS)

NO SCALE

RSP ES-4C DATED JUNE 6, 2008 SUPERSEDES STANDARD PLAN ES-4C DATED MAY 1, 2006 - PAGE 420 OF THE STANDARD PLANS BOOK DATED MAY 2006.

REVISED STANDARD PLAN RSP ES-4C

2006 REVISED STANDARD PLAN RSP ES-4C

5-19-08

DIST	COUNTY	ROUTE	POST MILES TOTAL PROJECT	SHEET NO.	TOTAL SHEETS
08	SBd	60	R4.8	41	55

REGISTERED ELECTRICAL ENGINEER

June 6, 2008
PLANS APPROVAL DATE

REGISTERED PROFESSIONAL ENGINEER Jeffery G. McRae No. E14512 Exp. 6-30-10 ELECTRICAL STATE OF CALIFORNIA

The State of California or its officers or agents shall not be responsible for the accuracy or completeness of electronic copies of this plan sheet.

To accompany plans dated March 07, 2011

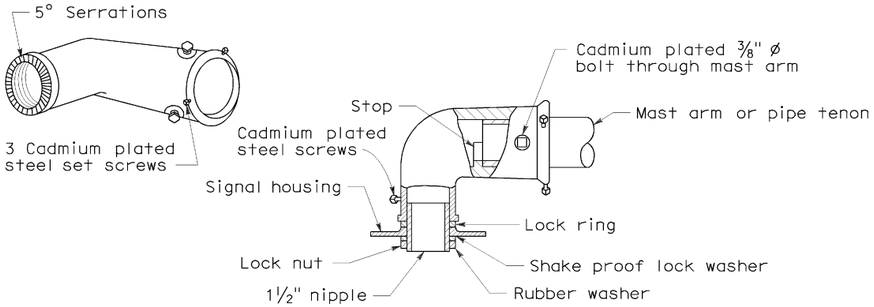

MAST ARM MOUNTING - TYPE "MAT"

For 2 NPS pipe, see Note 1.

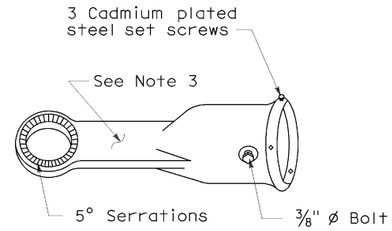

MAST ARM MOUNTING - TYPE "MAS"

For 2 NPS pipe. See Note 1.

SIGNAL SLIP FITTERS

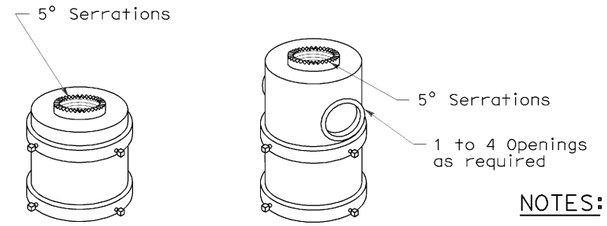

For one mounting For mulitiple mountings

TOP MOUNTINGS

For 4 NPS pipe, see Note 2.

NOTES:

1. After mast arm signal has been plumbed and secured, drill 7/16" hole through mast arm tenon in line with slip fitter hole. Place a cadmium plated ⅜" ø galvanized bolt with washer under bolt head through hole and secure with washer, nut, and locknut. Seal openings between mast arm mountings and mast arm with mastic.
2. (a) Threaded top mounted slip fitter openings shall be 1½ NPS.
   (b) Serrations in fittings shall match those on bottom of signal heads or in lock ring.
   (c) Top opening shall be offset when backplate is used.
3. Wireway shall have a cross section area of 0.95 square inch minimum. Minimum width of ½".

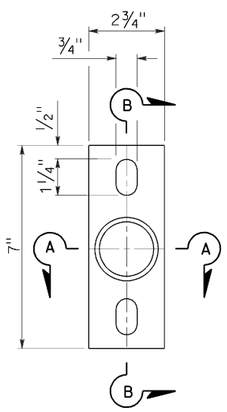

POLE PLATE

For side mountings

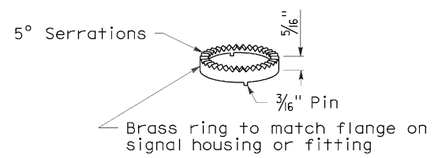

LOCK RING

Use where locking ring is not integral with signal housing or fitting.

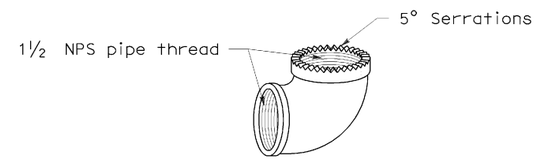

SPECIAL 90° ELBOW

One for each signal head, except those with special slip fitter mounting

MISCELLANEOUS MOUNTING HARDWARE

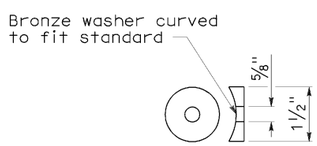

DETAIL "C"

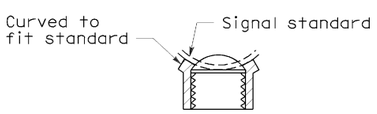

SECTION A-A

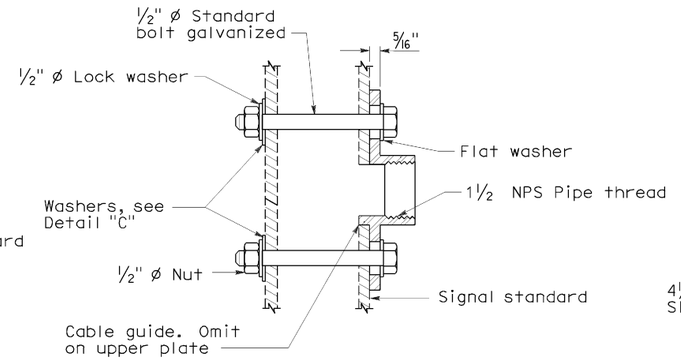

SECTION B-B

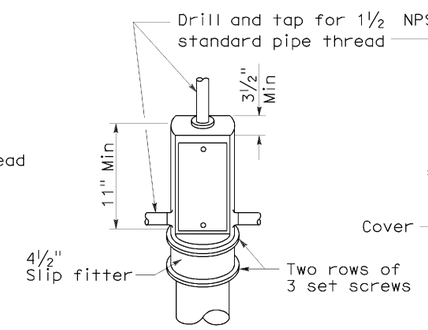

TOP MOUNTING

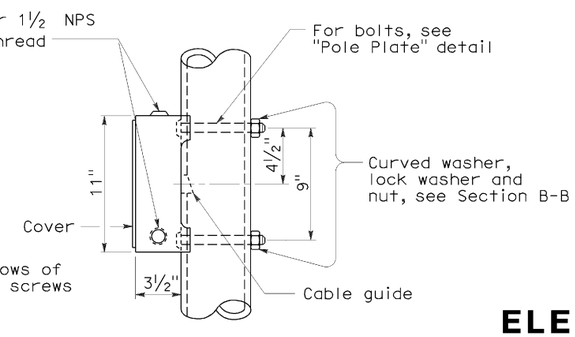

SIDE MOUNTING

TERMINAL COMPARTMENTS

STATE OF CALIFORNIA
DEPARTMENT OF TRANSPORTATION

ELECTRICAL SYSTEMS (SIGNAL HEADS AND MOUNTINGS)

NO SCALE

RSP ES-4D DATED June 6, 2008 SUPERSEDES STANDARD PLAN ES-4D
DATED MAY 1, 2006 - PAGE 421 OF THE STANDARD PLANS BOOK DATED MAY 2006.

REVISED STANDARD PLAN RSP ES-4D

2006 REVISED STANDARD PLAN RSP ES-4D

5-19-08

DIST	COUNTY	ROUTE	POST MILES TOTAL PROJECT	SHEET NO.	TOTAL SHEETS
08	SBd	60	R4.8	42	55

REGISTERED ELECTRICAL ENGINEER

October 5, 2007
PLANS APPROVAL DATE

REGISTERED PROFESSIONAL ENGINEER Jeffery G. McRae No. E14512 Exp. 6-30-08 ELECTRICAL STATE OF CALIFORNIA

The State of California or its officers or agents shall not be responsible for the accuracy or completeness of electronic copies of this plan sheet.

To accompany plans dated March 07, 2011

LOOP INSTALLATION PROCEDURE

1. Loops shall be centered in lanes.
2. Saw slots in pavement for loop conductors as shown in details.
3. Distance between side of loop and a lead-in saw cut from adjacent detectors shall be 2'-0" minimum. Distance between lead-in saw cuts shall be 6" minimum.
4. Bottom of saw slot shall be smooth with no sharp edges.
5. Slots shall be washed until clean, blown out and thoroughly dried before installing loop conductors.
6. Adjacent loops on the same sensor unit channel shall be wound in opposite directions.
7. Identify and tag loop circuit pairs in the pull box with loop number, start (S) and finish (F) of conductor. Identify and tag lead-in-cable with sensor number and phase.
8. Install loop conductor in slot using a 3/16" to 1/4" thick wood paddle. Hold loop conductors with wood paddles (at the bottom of the sawed slot) during sealant placement.
9. No more than 2 twisted pairs shall be installed in one sawed slot.
10. Allow additional 5'-0" of slack length of conductor for the lead-in run to pull box.
11. The additional length of each conductor for each loop shall be twisted together into a pair (6 turns per 3'-4" minimum) before being placed in the slot and conduit leading to pull box.
12. Test each loop circuit for continuity, circuit resistance and insulation resistance at the pull box before filling slots.
13. Fill slots as shown in details.
14. Splice loop conductors to lead-in-cable. Splices shall be soldered.
15. End of lead-in-cable and Type 2 loop conductor shall be waterproofed prior to installing in conduit to prevent moisture from entering the cable.
16. Lead-in-cable shall not be spliced between the pull box and the controller cabinet terminals.
17. Test each loop circuit for continuity, circuit resistance and insulation resistance at the controller cabinet location.
18. Where loop conductors are not to be spliced to a lead-in-cable, the ends of the conductors shall be taped and waterproofed with electrical insulating coating.

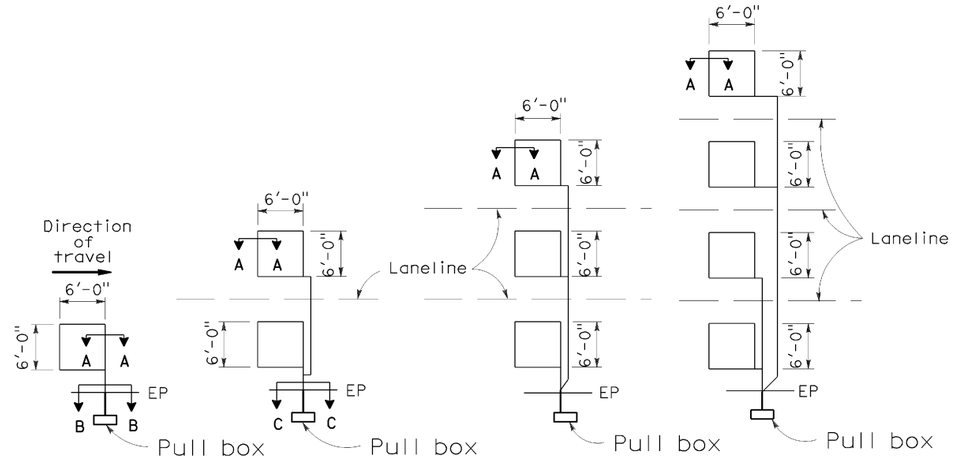

TYPE 1A INSTALLATION | TYPE 2A INSTALLATION | TYPE 3A INSTALLATION | TYPE 4A INSTALLATION

SAWCUT DETAILS

(Type A loop detector configurations illustrated)

1. 1A thru 4A = 1 Type A loop configuration in each lane.
2. 1B thru 4B = 1 Type B loop configuration in each lane.
3. 1C = 1 Type C loop configuration entering lanes as required.
4. 1D thru 4D = 1 Type D loop configuration in each lane.
5. 1E thru 4E = 1 Type E loop configuration in each lane.
6. 1Q thru 4Q = 1 Type Q loop configuration in each lane. (Use Type A, B, C, D, E or Q loop detector configurations only when specified or shown on plans)

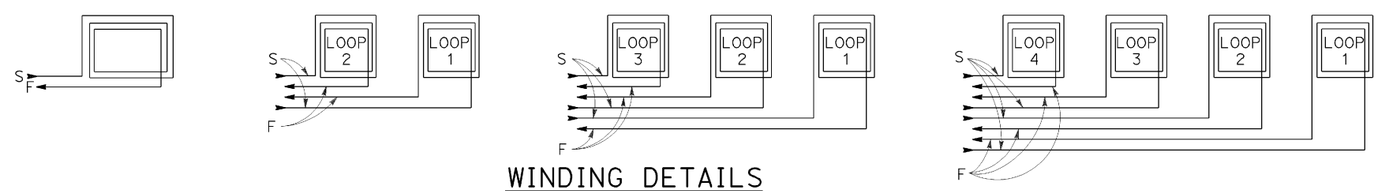

WINDING DETAILS

See Notes 6 and 7

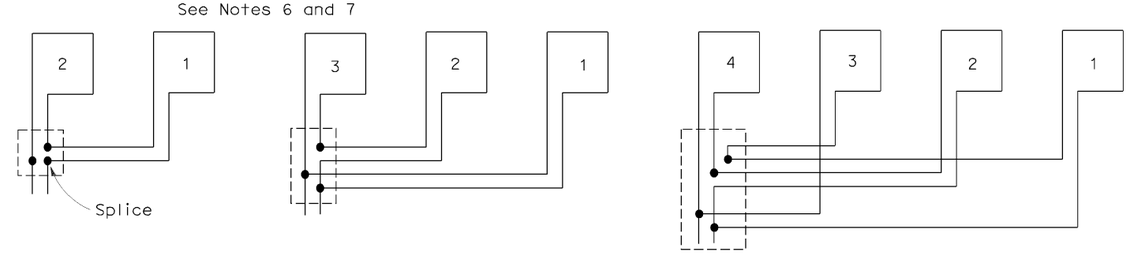

TYPICAL LOOP CONNECTIONS

(Dashed lines represent the pull box)

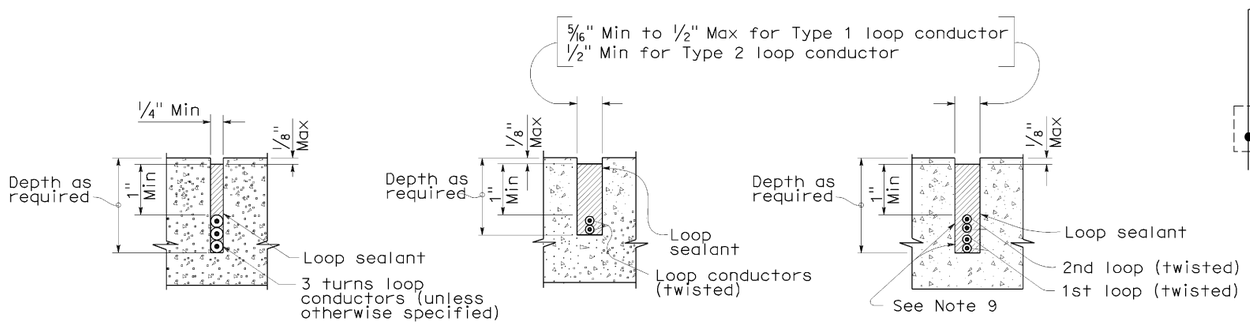

SECTION A-A | SECTION B-B | SECTION C-C

SLOT DETAILS - TYPE 1 AND TYPE 2 LOOP CONDUCTOR

STATE OF CALIFORNIA
DEPARTMENT OF TRANSPORTATION

ELECTRICAL SYSTEMS (DETECTORS)

NO SCALE

RSP ES-5A DATED OCTOBER 5, 2007 SUPERCEDES STANDARD PLAN ES-5A DATED MAY 1, 2006 - PAGE 423 OF THE STANDARD PLANS BOOK DATED MAY 2006.

REVISED STANDARD PLAN RSP ES-5A

2006 REVISED STANDARD PLAN RSP ES-5A

8-17-07

DIST	COUNTY	ROUTE	POST MILES TOTAL PROJECT	SHEET NO.	TOTAL SHEETS
08	SBd	60	R4.8	43	55

REGISTERED CIVIL ENGINEER

October 5, 2007
PLANS APPROVAL DATE

REGISTERED PROFESSIONAL ENGINEER Stanley P. Johnson No. C57793 Exp. 3-31-08 CIVIL STATE OF CALIFORNIA

The State of California or its officers or agents shall not be responsible for the accuracy or completeness of electronic copies of this plan sheet.

To accompany plans dated March 07, 2011

2006 REVISED STANDARD PLAN RSP ES-7B

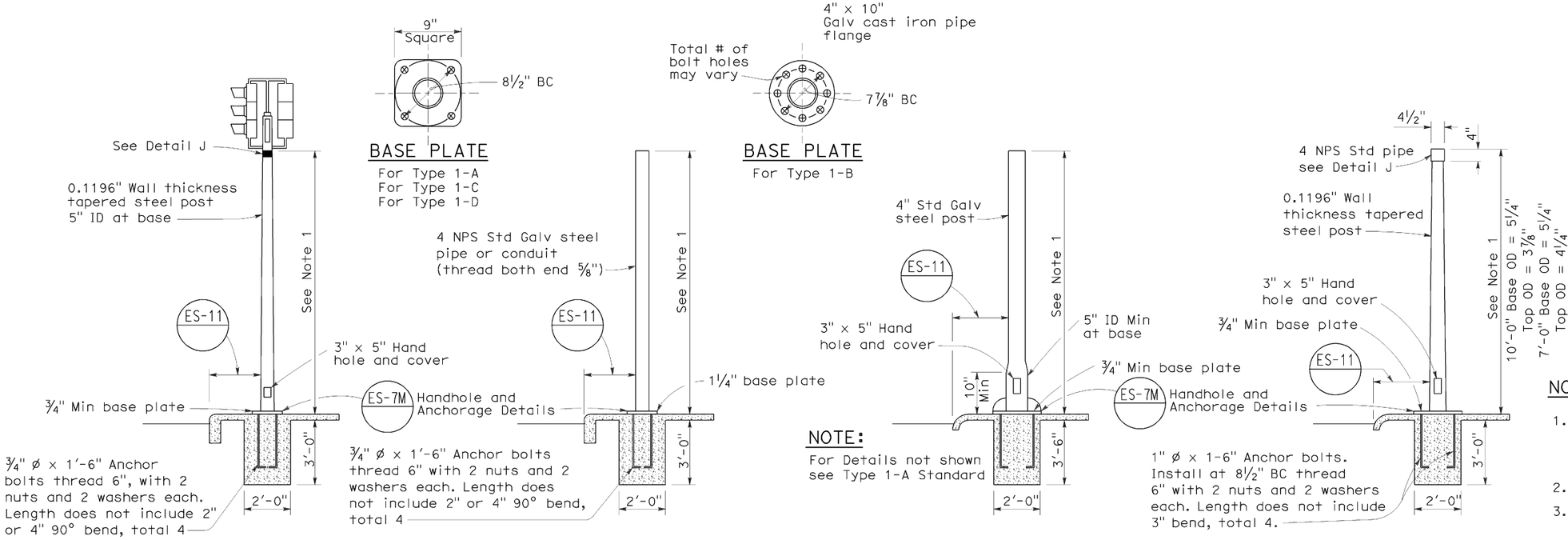

TYPE 1 SIGNAL STANDARDS

NOTES:

1. Standards shall be 10'-0" ± 2" for vehicle signals and 7'-0" ± 2" for pedestrian signals unless otherwise noted on plans.
2. Top of standards shall be 4½" OD.
3. Conduits shall extend 2" maximum above finished surface of foundation and for Types 1-A, 1-C and 1-D shall be sloped toward handhole.
4. Anchor bolts shall be bonded to conduit or grounding conductor.
5. Conduit between standard and adjacent pull box shall be 2" minimum.
6. Paint numbers on roadway side facing traffic when electrolier or post is left of direction of traffic.

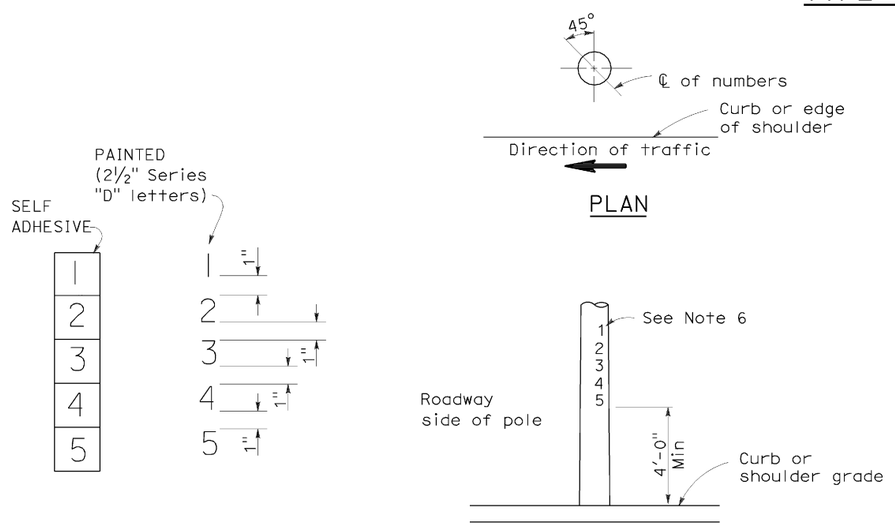

LOCATION OF EQUIPMENT NUMBERS ON STANDARDS AND POSTS

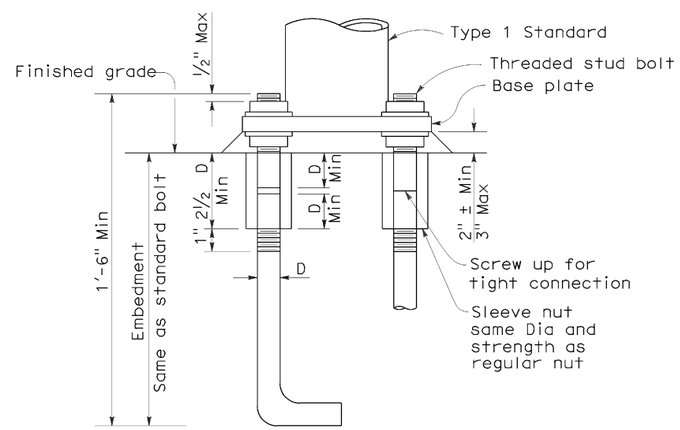

ANCHOR BOLTS WITH SLEEVE NUTS

Sleeve nuts to be used only when shown or specified on Project Plans

D = Diameter of anchor bolt

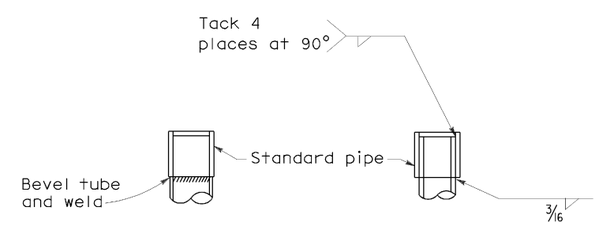

DETAIL J

Tube may be inserted into pipe or butted as required

STATE OF CALIFORNIA
DEPARTMENT OF TRANSPORTATION

ELECTRICAL SYSTEMS (SIGNAL AND LIGHTING STANDARD TYPE 1 STANDARD AND EQUIPMENT NUMBERING)

NO SCALE

RSP ES-7B DATED OCTOBER 5, 2007 SUPERCEDES STANDARD PLAN ES-7B DATED MAY 1, 2006 - PAGE 438 OF THE STANDARD PLANS BOOK DATED MAY 2006.

REVISED STANDARD PLAN RSP ES-7B

7-10-07

DIST	COUNTY	ROUTE	POST MILES TOTAL PROJECT	SHEET NO.	TOTAL SHEETS
08	SBd	60	R4.8	44	55

REGISTERED CIVIL ENGINEER

October 5, 2007
PLANS APPROVAL DATE

REGISTERED PROFESSIONAL ENGINEER Stanley P. Johnson No. C57793 Exp. 3-31-08 CIVIL STATE OF CALIFORNIA

The State of California or its officers or agents shall not be responsible for the accuracy or completeness of electronic copies of this plan sheet.

To accompany plans dated March 07, 2011

2006 REVISED STANDARD PLAN RSP ES-7D

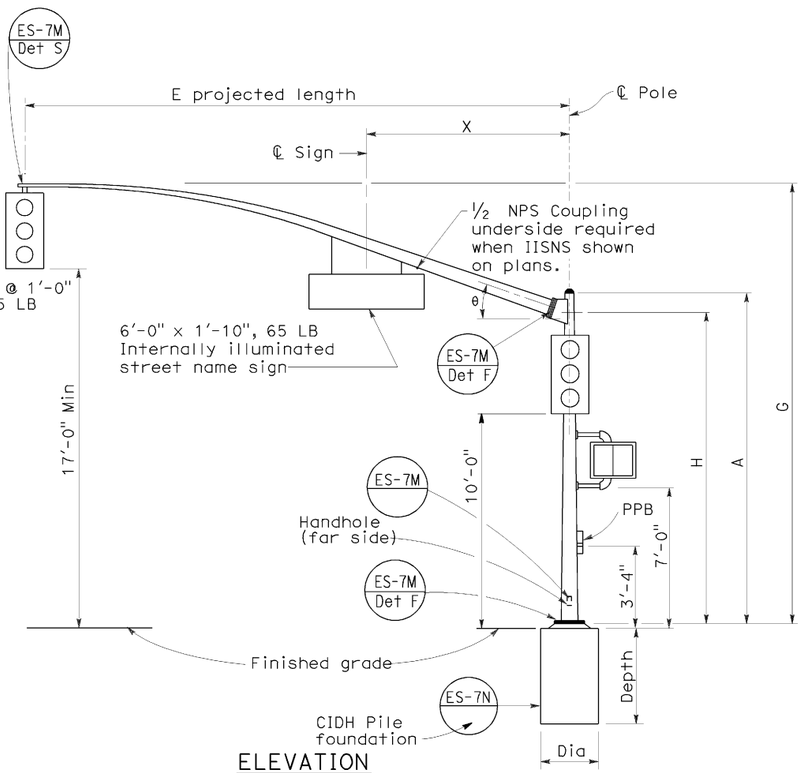

ELEVATION

TYPE 16-2-100, 18-2-100

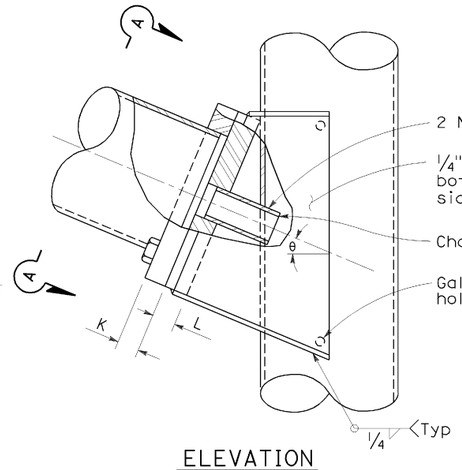

ELEVATION

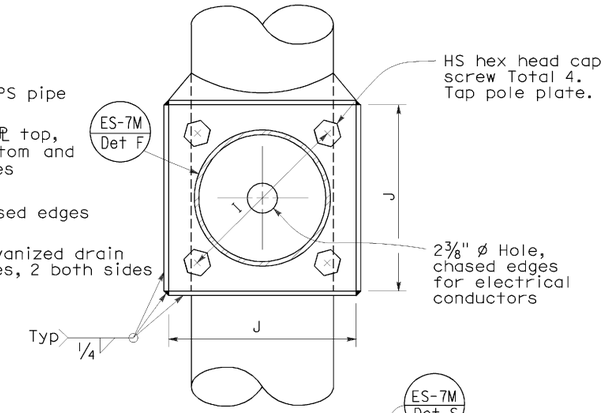

VIEW A-A

SIGNAL ARM CONNECTION DETAILS

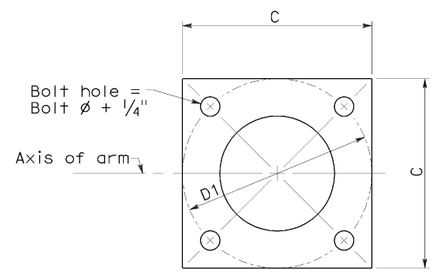

BASE PLATE

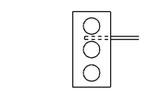

Required for Type 17-2-100 Type 17A-2-100

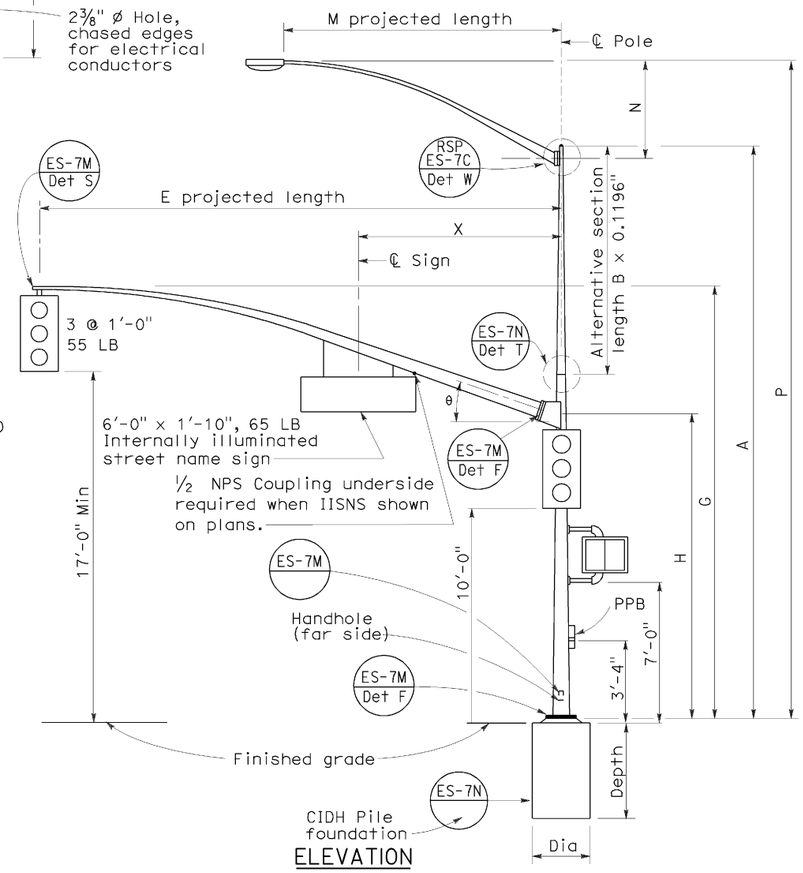

ELEVATION

TYPE 17-2-100, 17A-2-100, 19-2-100, 19A-2-100

SIGNAL ARM DATA											
E Projected Length	G Mounting Height	H	Min OD At Pole	Thickness	I Bolt Circle	HS Cap Screws	J Plate Size	K Arm ℙ Thickness	L Pole ℙ Thickness	θ	X Max
15'-0"	21'-8"±	17'-6"	6⅝"	0.1793"	12"	1¼"-7NC-3"	1'-0"	1¼"	1½"	23°	10'-6"
20'-0"	21'-8"±		6⅝"								
25'-0"	22'-8"±	16'-0"	7 5/16"								
30'-0"	23'-0"±		8"								

LUMINAIRE ARM DATA					
M Projected Length	N Rise	Min OD at Pole	Thickness	P Mounting Height 30'-0" Pole	P Mounting Height 35'-0" Pole
6'-0"	2'-0"±	3¼"	0.1196"	31'-6"±	36'-6"±
8'-0"	2'-6"±	3½"		32'-0"±	37'-0"±
10'-0"	3'-3"±	3⅞"		32'-9"±	37'-9"±
12'-0"	4'-3"±			33'-9"±	38'-9"±
15'-0"	4'-9"±	4¼"		34'-3"±	39'-3"±

Pole Type	Load Case	Wind Velocity mph	POLE DATA: A Height	Min OD Base	Min OD Top	Thickness	Alternative Section B Length	Alternative Section Bottom	Alternative Section Top	BASE PLATE DATA: C	D1 Bolt Circle	Thickness	Anchor Bolts Size	Luminaire Arm	Signal Arm	CIDH PILE FOUNDATION: Diameter	Depth	Reinforced
16-2-100	2	100	18'-6"	10¾"	8¼"	0.1793"	None			1'-6"	1'-5½"	1½"	2"ø x 42" x 6"	None	15'-0", 20'-0"	2'-6"	7'-2"	Yes
17-2-100			30'-0"		6⅝"		10'-0"	8"	6⅝"					6'-15' [12'-0"]				
17A-2-100			35'-0"		5 15/16"		15'-0"		5 15/16"					6'-15' [15'-0"]				
18-2-100			17'-0"		8 7/16"		None							None	25'-0", 30'-0"			
19-2-100			30'-0"		6⅝"	0.2391"	10'-0"	8"	6⅝"					6'-15' [12'-0"]				
19A-2-100			35'-0"		5 15/16"		15'-0"		5 5/16"					6'-15' [15'-0"]				

☐ Indicates arm length to be used unless otherwise noted on plans.

STATE OF CALIFORNIA
DEPARTMENT OF TRANSPORTATION

ELECTRICAL SYSTEMS (SIGNAL AND LIGHTING STANDARD CASE 2 ARM LOADING WIND VELOCITY=100 MPH ARM LENGTHS 15' TO 30')

NO SCALE

RSP ES-7D DATED OCTOBER 5, 2007 SUPERCEDES STANDARD PLAN ES-7D DATED MAY 1, 2006 - PAGE 440 OF THE STANDARD PLANS BOOK DATED MAY 2006.

REVISED STANDARD PLAN RSP ES-7D

7-10-07

DIST	COUNTY	ROUTE	POST MILES TOTAL PROJECT	SHEET NO.	TOTAL SHEETS
08	SBd	60	R4.8	45	55

Gregory A. Balzer
LICENSED LANDSCAPE ARCHITECT

June 5, 2009
PLANS APPROVAL DATE

The State of California or its officers or agents shall not be responsible for the accuracy or completeness of electronic copies of this plan sheet.

LICENSED LANDSCAPE ARCHITECT
Gregory A. Balzer 2576
10 Original
2-28-11 Renewal Date
5-14-09 Date
STATE OF CALIFORNIA

To accompany plans dated March 07, 2011

A

AB	aggregate base
ABS	acrylonitrile-butadiene-styrene
AC	asphalt concrete
Adj	adjacent/adjustable
AIC	auxiliary irrigation controller
Alt	alternative
AMEND	amendment
ARV	air release valve
AUTO	automatic
AUX	auxiliary
AVB	atmospheric vacuum breaker

B

B&B	balled and burlapped
B/B	brass/bronze
B/B/PL	brass/bronze/plastic
B/PL	brass/plastic
BFM	bonded fiber matrix
Bit Ctd	bituminous coated
BP	booster pump
BPA	backflow preventer assembly
BPAE	backflow preventer assembly in enclosure
BPE	backflow preventer enclosure
BV	ball valve

C

CAP	corrugated aluminum pipe
CARV	combination air release valve
CCA	cam coupler assembly
CEC	controller enclosure cabinet
CHDPE	corrugated high density polyethylene
CL	chain link
CNC	control and neutral conductors
Conc	concrete
Cond	conduit
CSP	corrugated steel pipe
CST	center strip
CV	check valve

D

Dia	diameter
DIP	ductile iron pipe
DN	diameter nominal

E

EA	each
Elect	electric/electrical
Elev	elevation
ENCL	enclosure
EP	edge of pavement
ES	edge of shoulder
EST	end strip
ESTB	establishment
ETW	edge of traveled way

F

F	full circle
F/P	full/part circle
FAU	filter assembly unit
FCV	flow control valve
FERT	fertilizer
FG	finished grade
FIPT	female iron pipe thread
FIS	fertilizer injector system
FL	flow line
FM	flow monitor
FS	flow sensor
Ft	foot/feet
FV	flush valve

G

GAL	Gallon(s)
Galv	galvanized
GARV	garden valve
GPH	gallons per hour
GPM	gallons per minute
GSP	galvanized steel pipe
GV	gate valve

H

H	half circle
HB	hose bib
HDPE	high density polyethylene
HP	horsepower/hinge point
HPL	high pressure line
Hwy	highway

I

IC	irrigation controller
ICC	irrigation controller(s) in controller enclosure cabinet
ID	inside diameter
In	inches
IFS	irrigation filtration system
IPS	iron pipe size
IPT	iron pipe thread
Irr	irrigation

L

L	length
LF	linear foot

M

Max	maximum
MBGR	metal beam guard railing
MCV	manual control valve
MIC	master irrigation controller
Min	minimum
MIPT	male iron pipe thread
Misc	miscellaneous
Mtl	material
MVP	maintenance vehicle pullout

N

NCN	no common name
NL	nozzle line
No.	number
NPT	national pipe thread

O

O/C	on center
OD	outside diameter
Oz	ounce

P

P	part circle
PB	pull box
PCC	portland cement concrete
PE	polyethylene
Pkt	packet
PL	plastic
PLT	plant/planting
PLT ESTB	plant establishment
PM	post mile
PR	pressure rated
PRLV	pressure relief valve
PSFM	polymer stabilized fiber matrix
PSI	pounds per square inch
PRV	pressure reducing valve
PVC	polyvinyl chloride
Pvmt	pavement

Q

Q	quarter circle
QCV	quick coupling valve

R

R	radius
RCP	reinforced concrete pipe
RCV	remote control valve
RCVM	remote control valve (master)
RCVMF	remote control valve (master) w/ flow meter
RCW	recycled/reclaimed water
RECP	rolled erosion control product
REQ	required
R/W	right of way

S

S	slip
SCC	sprinkler control conduit
SCH	schedule
SF	state-furnished
Shld	shoulder
SQFT	square foot/feet
SQYD	square yard(s)
SST	side strip
Sta	station
Std	standard
SW	sidewalk/sound wall

T

T	third circle/thread
TLS	truck loading standpipe
TQ	three quarter circle
TRM	turf reinforcement mat
TRVD	traveled
TT	two third circle
Typ	typical

U

UG	underground

V

VAU	valve assembly unit

W

W	width
W/	with
WM	water meter
WS	wye strainer
WSP	welded steel pipe
WWM	welded wire mesh

NOTE:

FOR ADDITIONAL ABBREVIATIONS, SEE STANDARD PLANS A10A AND A10B.

STATE OF CALIFORNIA
DEPARTMENT OF TRANSPORTATION

PLANTING AND IRRIGATION ABBREVIATIONS

NO SCALE

RSP H1 DATED JUNE 5, 2009 SUPERSEDES STANDARD PLAN H1
DATED MAY 1, 2006 - PAGE 201 OF THE STANDARD PLANS BOOK DATED MAY 2006.

REVISED STANDARD PLAN RSP H1

2006 REVISED STANDARD PLAN RSP H1

5-28-09

DIST	COUNTY	ROUTE	POST MILES TOTAL PROJECT	SHEET NO.	TOTAL SHEETS
08	SBd	60	R4.8	46	55

LICENSED LANDSCAPE ARCHITECT

June 5, 2009
PLANS APPROVAL DATE

The State of California or its officers or agents shall not be responsible for the accuracy or completeness of electronic copies of this plan sheet.

LICENSED LANDSCAPE ARCHITECT — Gregory A. Balzer — 2576 — 10 Effective Date — 2-28-11 Renewal Date — 5-14-09 Date — STATE OF CALIFORNIA

To accompany plans dated March 07, 2011

EXISTING	PROPOSED	ITEM DESCRIPTION
		WATER METER (WM)
		BACKFLOW PREVENTER ASSEMBLY (BPA)
		BACKFLOW PREVENTER ASSEMBLY IN ENCLOSURE (BPAE)
		BACKFLOW PREVENTER ENCLOSURE (BPE)
		BOOSTER PUMP (BP)
		TRUCK LOADING STANDPIPE (TLS)
	FS	FLOW SENSOR (FS)
X	X	MASTER IRRIGATION CONTROLLER (MIC)
		AUXILIARY IRRIGATION CONTROLLER (AIC)
		IRRIGATION CONTROLLER (IC)/ IRRIGATION CONTROLLER (IC) (BATTERY) IRRIGATION CONTROLLER (IC) (SOLAR)
		IRRIGATION CONTROLLER(S) IN CONTROLLER ENCLOSURE CABINET (ICC)
		CONTROL AND NEUTRAL CONDUCTORS (CNC)
SCC	SCC	SPRINKLER CONTROL CONDUIT (SCC)
		IRRIGATION CROSSOVER
		EXTEND IRRIGATION CROSSOVER
		IRRIGATION SLEEVE
dip	DIP	DUCTILE IRON PIPE (SUPPLY LINE) (MAIN) (DIP)
		GALVANIZED STEEL PIPE (SUPPLY LINE) (MAIN) (GSP)
		GALVANIZED STEEL PIPE (SUPPLY LINE) (LATERAL) (GSP)
		PLASTIC PIPE (PR 200) (SUPPLY LINE) (MAIN)
		PLASTIC PIPE (PR 200) (SUPPLY LINE) (LATERAL)
		PLASTIC PIPE (IRRIGATION LINE)
		REMOTE CONTROL VALVE (RCV) REMOTE CONTROL VALVE (MASTER) (RCVM) REMOTE CONTROL VALVE (MASTER) W/FLOW METER (RCVMF)
		MANUAL CONTROL VALVE (MCV)
		VALVE ASSEMBLY UNIT (VAU)
		WYE STRAINER (WS)
		FILTER ASSEMBLY UNIT (FAU)
		GATE VALVE (GV)
		BALL VALVE (BV)

EXISTING	PROPOSED	ITEM DESCRIPTION
		QUICK COUPLING VALVE (QCV)
		CAM COUPLER ASSEMBLY (CCA)
		PRESSURE REDUCING VALVE (PRV)
		PRESSURE RELIEF VALVE (PRLV)
		FLOW CONTROL VALVE (FCV)
		COMBINATION AIR RELEASE VALVE (CARV)
		CHECK VALVE (CV)
		FLUSH VALVE (FV)
		NOZZLE LINE W/TURNING UNION
		IRRIGATION SYSTEM
		IRRIGATION SYSTEM TO BE REMOVED
		CHAIN LINK GATE
		QUICK COUPLING VALVE W/SPRINKLER PROTECTOR
3	3	SPRINKLER W/SPRINKLER PROTECTOR
	C	CONNECT TO EXISTING SYSTEM
		CAP
		CAP EXISTING

VALVE CODE

RCV SIZE
IRRIGATION CONTROLLER
CONTROLLER STATION
VALVE IN PARALLEL (IF APPLICABLE)
GPM
QUANTITY OF SPRINKLERS (WHEN SHOWN)

* 2½"-A-2b-40 -60

MCV SIZE
VALVE NUMBER
GPM
QUANTITY OF TYPE SPRINKLERS (WHEN SHOWN)

* 2"-3-30 -50

* VALVE CODES FOR EXISTING VALVES ARE SHOWN IN A DASHED ENCLOSURE.

STATE OF CALIFORNIA
DEPARTMENT OF TRANSPORTATION

PLANTING AND IRRIGATION SYMBOLS

NO SCALE

RSP H2 DATED JUNE 5, 2009 SUPERSEDES RSP H2 DATED MARCH 7, 2008 AND STANDARD PLAN H2 DATED MAY 1, 2006 - PAGE 202 OF THE STANDARD PLANS BOOK DATED MAY 2006.

REVISED STANDARD PLAN RSP H2

2006 REVISED STANDARD PLAN RSP H2

5-11-09

DIST	COUNTY	ROUTE	POST MILES TOTAL PROJECT	SHEET NO.	TOTAL SHEETS
08	SBd	60	R4.8	47	55

LICENSED LANDSCAPE ARCHITECT

June 5, 2009
PLANS APPROVAL DATE

The State of California or its officers or agents shall not be responsible for the accuracy or completeness of electronic copies of this plan sheet.

LICENSED LANDSCAPE ARCHITECT — Gregory A. Balzer — 2576 — 10-31-11 Renewal Date — 2-28-11 Renewal Date — 5-14-09 Date — STATE OF CALIFORNIA

To accompany plans dated March 07, 2011

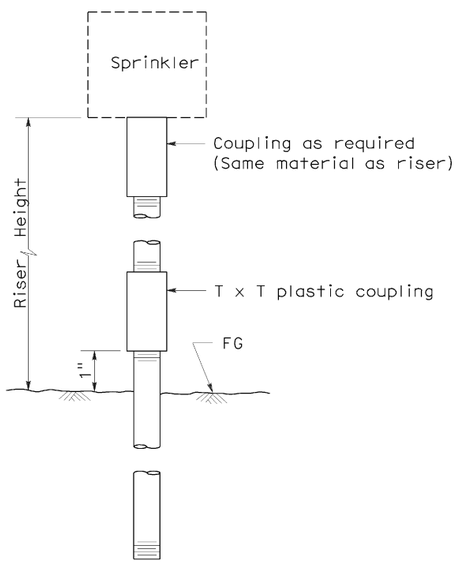

ELEVATION
RISER TYPE I

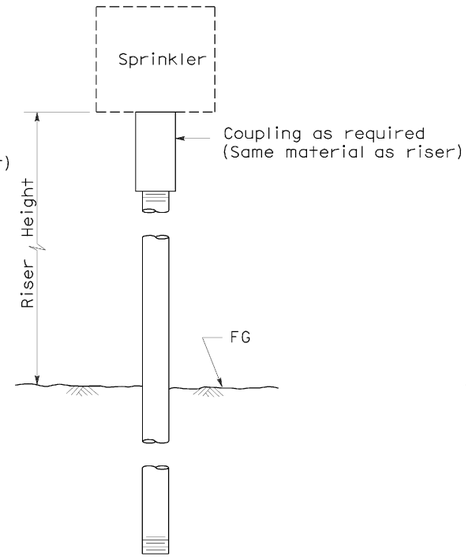

ELEVATION
RISER TYPE II

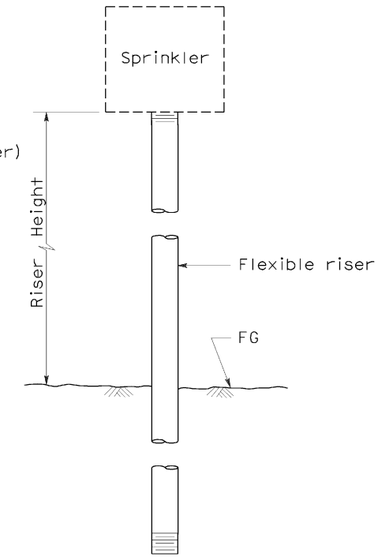

ELEVATION
RISER TYPE III

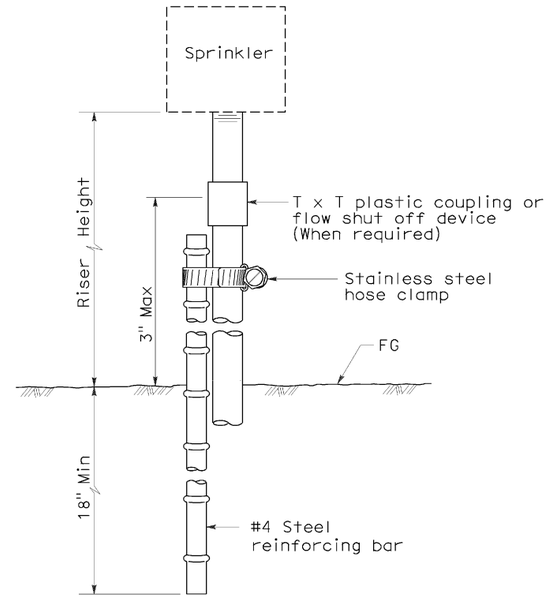

ELEVATION
RISER TYPE IV

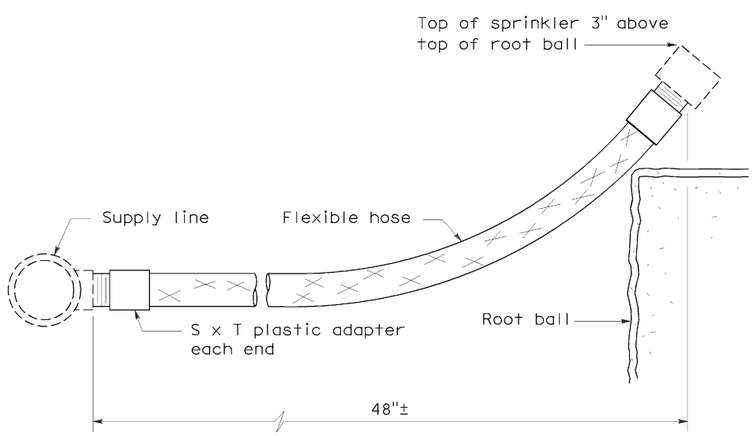

ELEVATION
RISER TYPE V

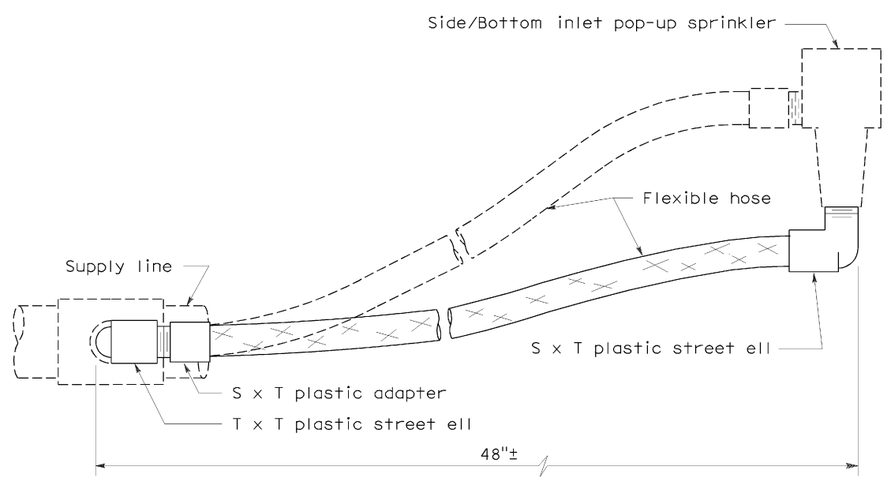

ELEVATION
RISER TYPE VI

STATE OF CALIFORNIA
DEPARTMENT OF TRANSPORTATION

PLANTING AND IRRIGATION DETAILS

NO SCALE

RSP H5 DATED JUNE 5, 2009 SUPERSEDES STANDARD PLAN H5
DATED MAY 1, 2006 - PAGE 205 OF THE STANDARD PLANS BOOK DATED MAY 2006.

REVISED STANDARD PLAN RSP H5

2006 REVISED STANDARD PLAN RSP H5

5-28-09

DIST	COUNTY	ROUTE	POST MILES TOTAL PROJECT	SHEET NO.	TOTAL SHEETS
08	SBd	60	R4.8	48	55

LICENSED LANDSCAPE ARCHITECT

June 5, 2009
PLANS APPROVAL DATE

The State of California or its officers or agents shall not be responsible for the accuracy or completeness of electronic copies of this plan sheet.

Gregory A. Balzer 2576 — 10-09 Renewal Date — 2-28-11 Renewal Date — 5-14-09 Date — STATE OF CALIFORNIA

To accompany plans dated March 07, 2011

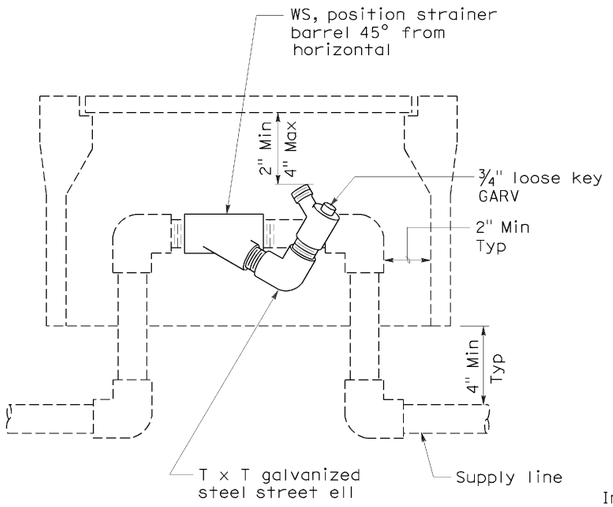

ELEVATION
WYE STRAINER

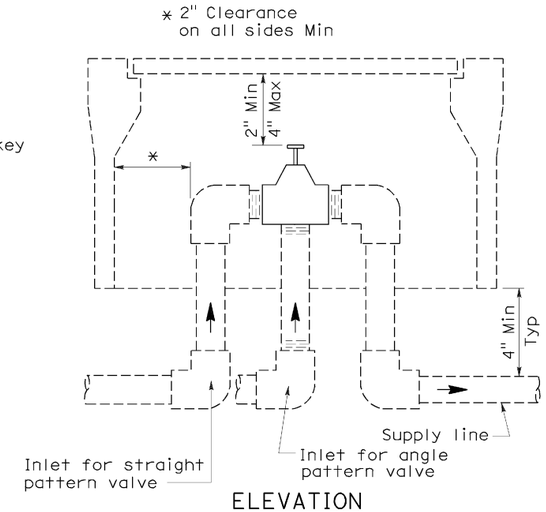

ELEVATION
VALVE

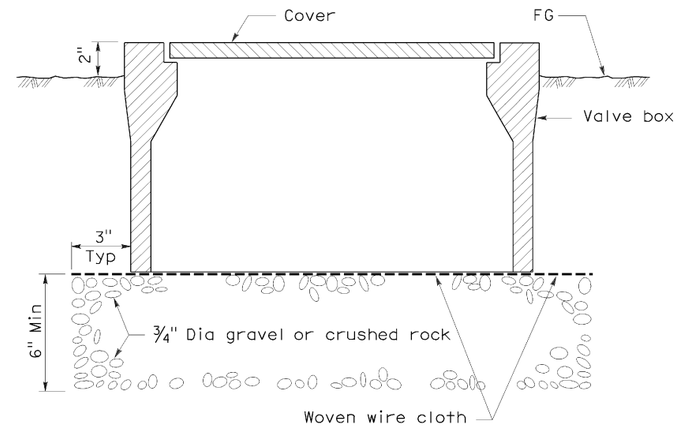

SECTION
VALVE BOX

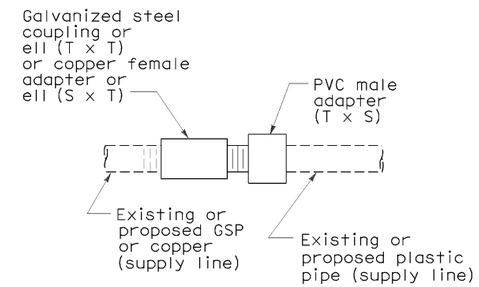

PLAN
GALVANIZED OR COPPER PIPE CONNECTION TO PLASTIC PIPE

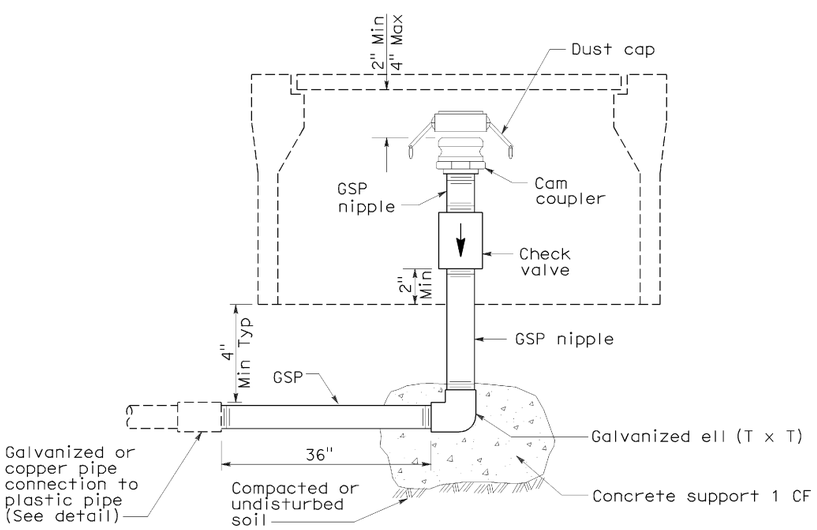

ELEVATION
CAM COUPLER ASSEMBLY

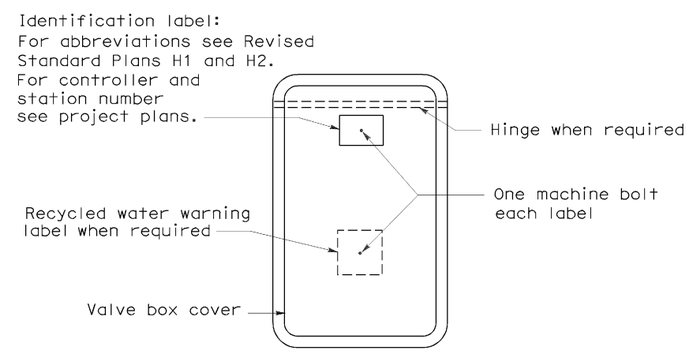

PLAN

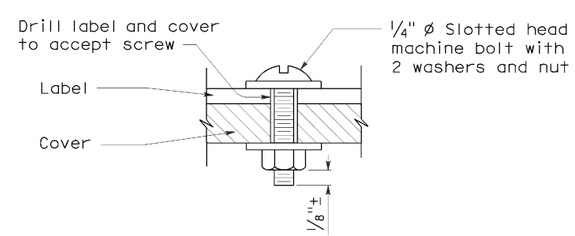

SECTION
VALVE BOX IDENTIFICATION

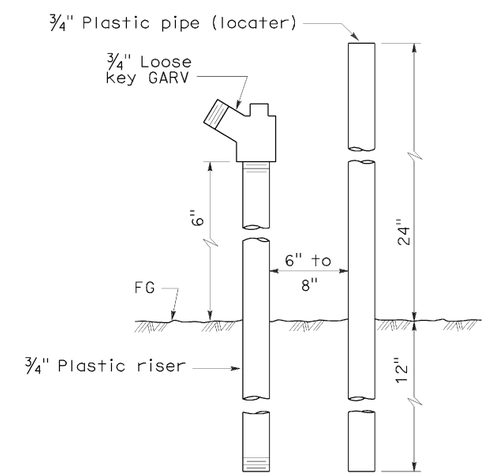

ELEVATION
FLUSH VALVE

STATE OF CALIFORNIA
DEPARTMENT OF TRANSPORTATION

PLANTING AND IRRIGATION DETAILS

NO SCALE

RSP H7 DATED JUNE 5, 2009 SUPERSEDES STANDARD PLAN H7
DATED MAY 1, 2006 - PAGE 207 OF THE STANDARD PLANS BOOK DATED MAY 2006.

REVISED STANDARD PLAN RSP H7

2006 REVISED STANDARD PLAN RSP H7

5-28-09

DIST	COUNTY	ROUTE	POST MILES TOTAL PROJECT	SHEET NO.	TOTAL SHEETS
08	SBd	60	R4.8	49	55

Gregory A. Balzer
LICENSED LANDSCAPE ARCHITECT

June 5, 2009
PLANS APPROVAL DATE

The State of California or its officers or agents shall not be responsible for the accuracy or completeness of electronic copies of this plan sheet.

LICENSED LANDSCAPE ARCHITECT Gregory A. Balzer 2576 10-31-10 Renewal Date 2-28-11 Renewal Date 5-14-09 Date STATE OF CALIFORNIA

To accompany plans dated March 07, 2011

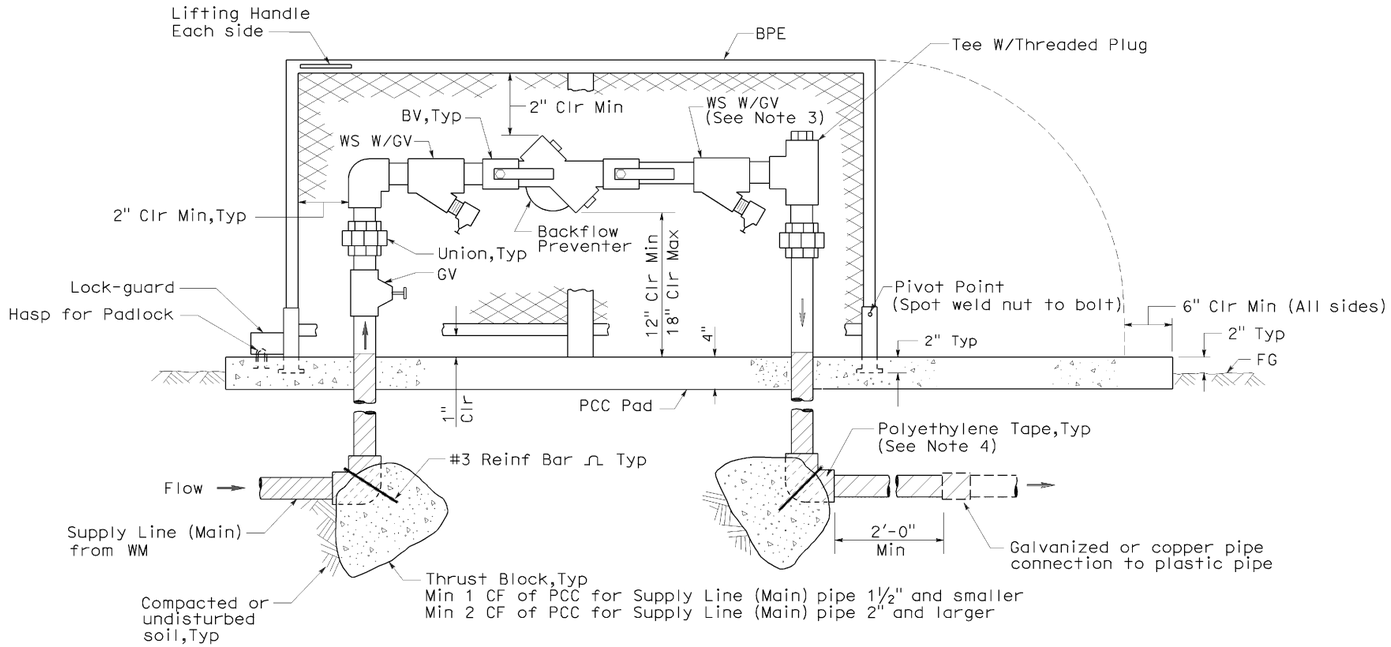

ELEVATION

BACKFLOW PREVENTER ASSEMBLY IN ENCLOSURE (ONE PIECE)

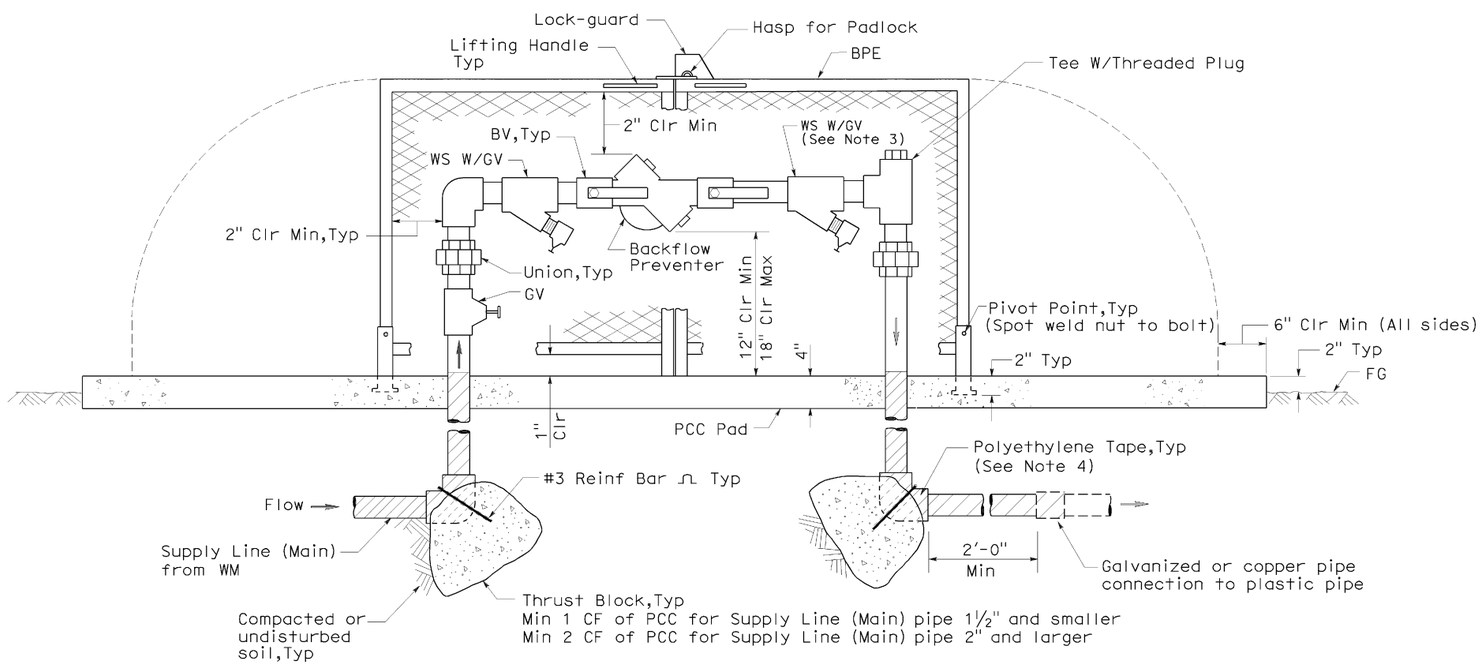

ELEVATION

BACKFLOW PREVENTER ASSEMBLY IN ENCLOSURE (TWO PIECE)

NOTES:

1. Wye strainer and fittings must be the same size as the backflow preventer shown on the plans.
2. Backflow preventer assembly manifold pipe must be the same pipe as the supply line (main) pipe to be installed from the water meter to the backflow preventer assembly.
3. Wye strainer location shown downstream of the backflow preventer is for District 11 projects only.
4. All metal in contact with soil and Portland Cement Concrete must be polyethylene wrapped using 2" wide plastic backed adhesive tape 20 mil thick with ½" overlap.

STATE OF CALIFORNIA
DEPARTMENT OF TRANSPORTATION

PLANTING AND IRRIGATION DETAILS

NO SCALE

RSP H8 DATED JUNE 5, 2009 SUPERSEDES STANDARD PLAN H8
DATED MAY 1, 2006 - PAGE 208 OF THE STANDARD PLANS BOOK DATED MAY 2006.

REVISED STANDARD PLAN RSP H8

2006 REVISED STANDARD PLAN RSP H8

5-28-09

DIST	COUNTY	ROUTE	POST MILES TOTAL PROJECT	SHEET NO.	TOTAL SHEETS
08	SBd	60	R4.8	50	55

William K. Farnbach
REGISTERED CIVIL ENGINEER

June 5, 2009
PLANS APPROVAL DATE

REGISTERED PROFESSIONAL ENGINEER William K. Farnbach No. C49042 Exp. 9-30-10 CIVIL STATE OF CALIFORNIA

The State of California or its officers or agents shall not be responsible for the accuracy or completeness of electronic copies of this plan sheet.

To accompany plans dated March 07, 2011

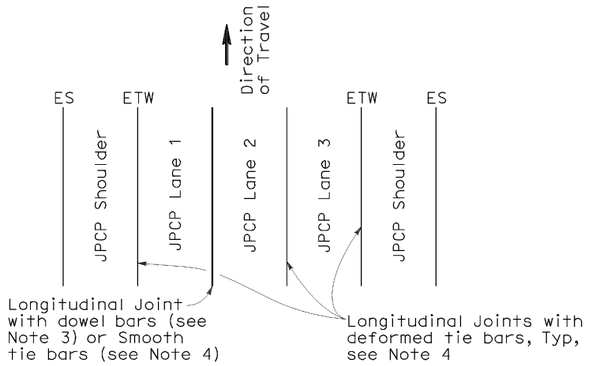

3 LANES WITH TIED CONCRETE SHOULDERS
PLAN

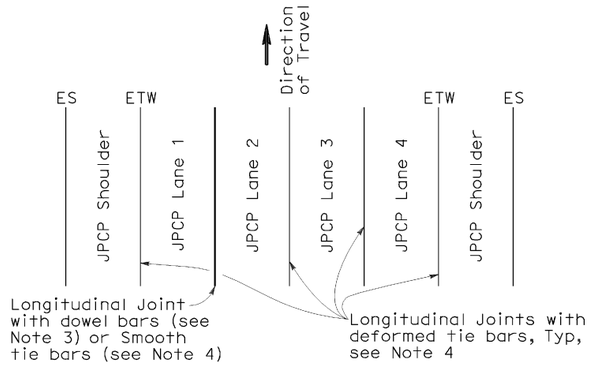

4 LANES WITH TIED CONCRETE SHOULDERS
PLAN

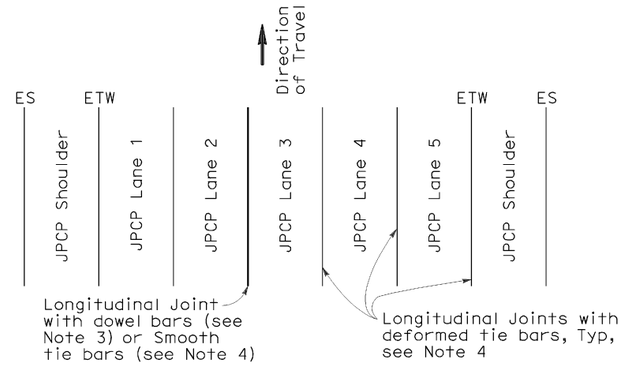

5 LANES WITH TIED CONCRETE SHOULDERS
PLAN

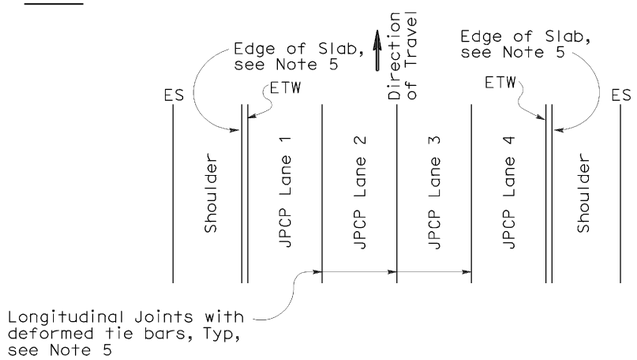

4 LANES OR LESS WITH WIDENED SLAB
PLAN

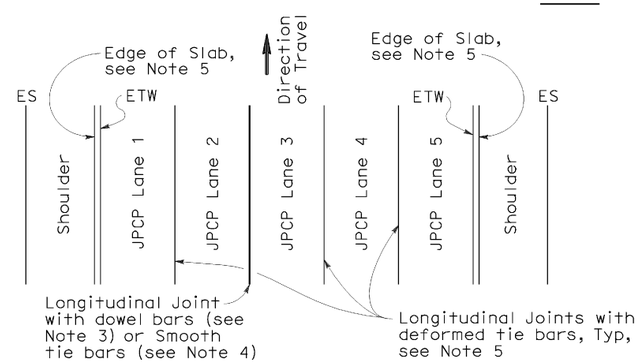

5 LANES WITH WIDENED SLAB
PLAN

NEW CONSTRUCTION

Location of Longitudinal Joints
(For JPCP)

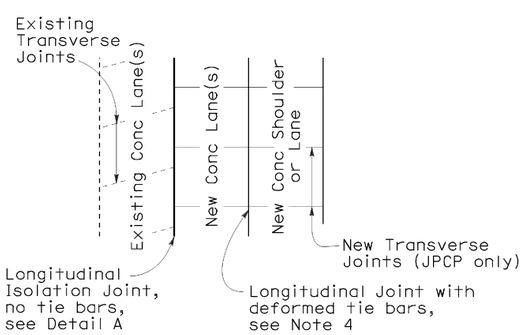

CASE 1
PLAN

Transverse Joints do not align between new and existing

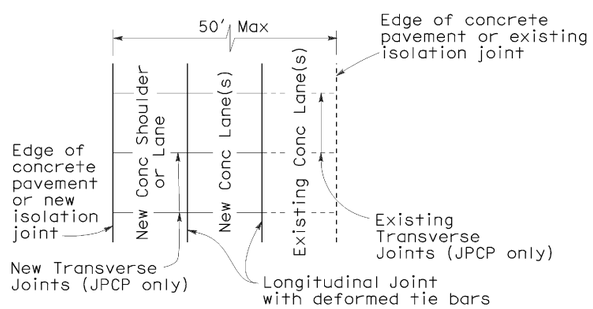

CASE 2
PLAN

Transverse Joints align between new and existing

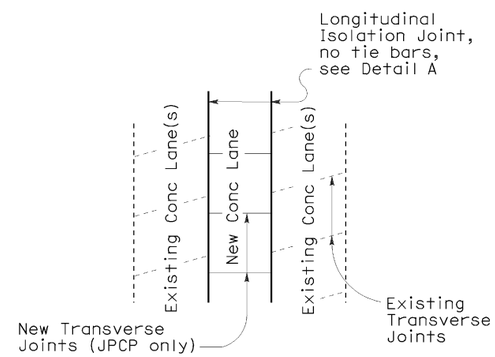

CASE 3 (INTERIOR LANE REPLACEMENT)
PLAN

Transverse Joints do not align between new and existing

LANE/SHOULDER ADDITION OR RECONSTRUCTION

(For JPCP and CRCP)

NOTES:

1. Where Lean Concrete Base is not used as base material, the joint filler material used for the longitudinal isolation joint shall only extend to the bottom of the new concrete slab. See Detail A.
2. Use 5/8" ±1/16" dimension for silicone sealant.
3. See Revised Standard Plan RSP P10 for longitudinal joint with dowel bars.
4. See Revised Standard Plan RSP P1.
5. See Revised Standard Plan RSP P2.

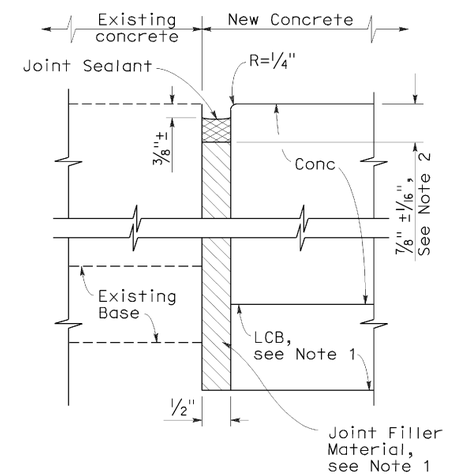

DETAIL A

ISOLATION JOINT

STATE OF CALIFORNIA
DEPARTMENT OF TRANSPORTATION

CONCRETE PAVEMENT-LANE SCHEMATICS AND ISOLATION JOINT DETAIL

NO SCALE

RSP P18 DATED JUNE 5, 2009 SUPERSEDES RSP P18 DATED MAY 15, 2009, RSP P18 DATED NOVEMBER 17, 2006 AND STANDARD PLAN P18 DATED MAY 1, 2006 - PAGE 127 OF THE STANDARD PLANS BOOK DATED MAY 2006.

REVISED STANDARD PLAN RSP P18

2006 REVISED STANDARD PLAN RSP P18

5-14-09

DIST	COUNTY	ROUTE	POST MILES TOTAL PROJECT	SHEET NO.	TOTAL SHEETS
08	SBd	60	R4.8	51	55

William K. Farnbach
REGISTERED CIVIL ENGINEER

May 15, 2009
PLANS APPROVAL DATE

REGISTERED PROFESSIONAL ENGINEER William K. Farnbach No. C49042 Exp. 9-30-10 CIVIL STATE OF CALIFORNIA

The State of California or its officers or agents shall not be responsible for the accuracy or completeness of electronic copies of this plan sheet.

To accompany plans dated March 07, 2011

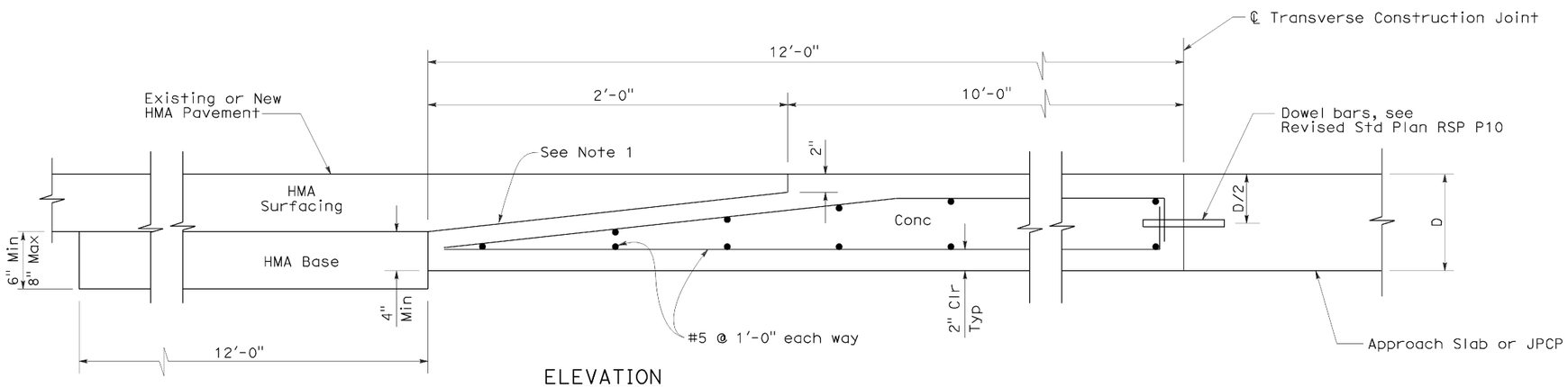

ELEVATION

CONCRETE PAVEMENT TO HOT MIXED ASPHALT PAVEMENT TRANSITION PANEL

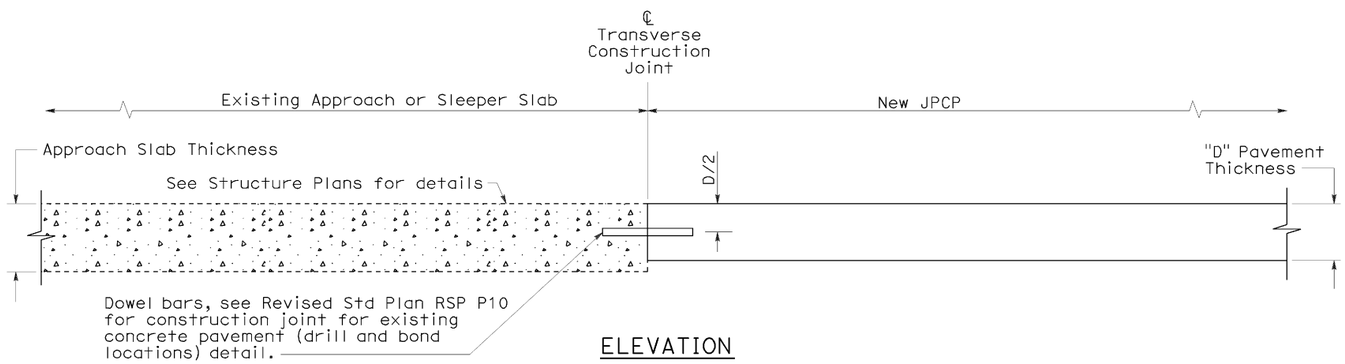

ELEVATION

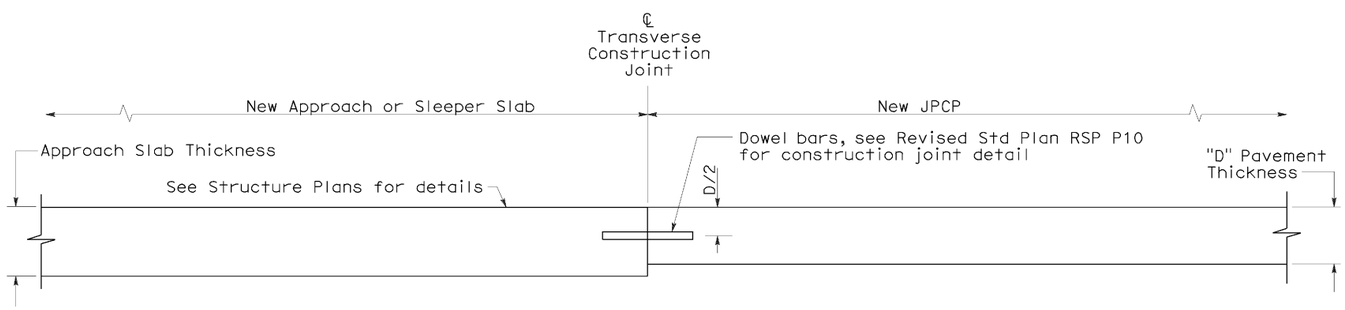

ELEVATION

CONCRETE PAVEMENT TRANSITION TO APPROACH OR SLEEPER SLAB

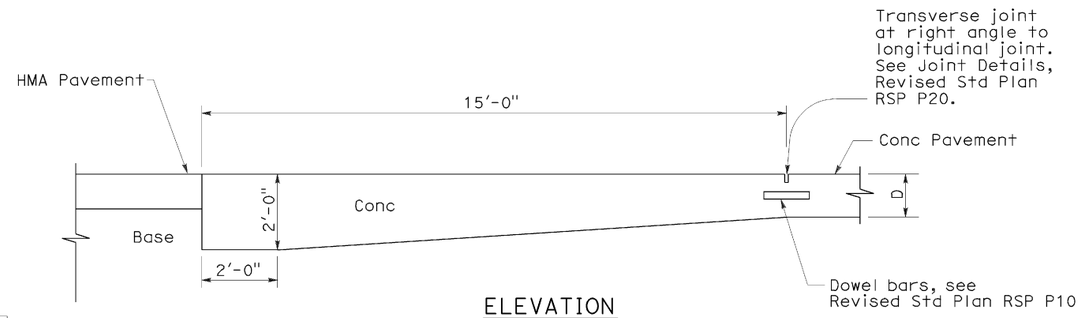

ELEVATION

PAVEMENT END ANCHOR

NOTE:

1. Heavy broom finish.

STATE OF CALIFORNIA
DEPARTMENT OF TRANSPORTATION

JOINTED PLAIN CONCRETE PAVEMENT-END PANEL PAVEMENT TRANSITIONS

NO SCALE

RSP P30 DATED MAY 15, 2009 SUPERSEDES STANDARD PLAN P30
DATED MAY 1, 2006 - PAGE 129 OF THE STANDARD PLANS BOOK DATED MAY 2006.

REVISED STANDARD PLAN RSP P30

2006 REVISED STANDARD PLAN RSP P30

5-8-09

DIST	COUNTY	ROUTE	POST MILES TOTAL PROJECT	SHEET NO.	TOTAL SHEETS
08	SBd	60	R4.8	52	55

Randell D. Hiatt
REGISTERED CIVIL ENGINEER

June 6, 2008
PLANS APPROVAL DATE

REGISTERED PROFESSIONAL ENGINEER
Randell D. Hiatt
No. C50200
Exp. 6-30-09
CIVIL
STATE OF CALIFORNIA

The State of California or its officers or agents shall not be responsible for the accuracy or completeness of electronic copies of this plan sheet.

To accompany plans dated March 07, 2011

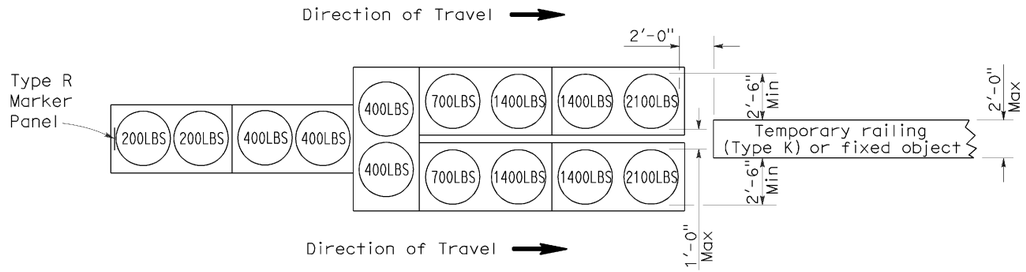

ARRAY 'TU14'

Approach speed 45 mph or more

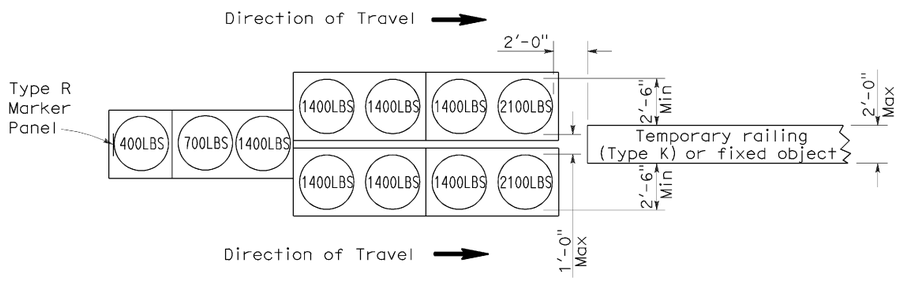

ARRAY 'TU11'

Approach speed less than 45 mph

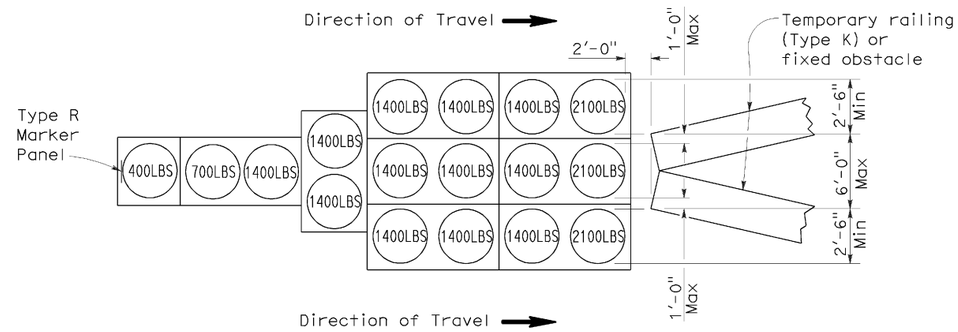

ARRAY 'TU17'

Approach speed less than 45 mph

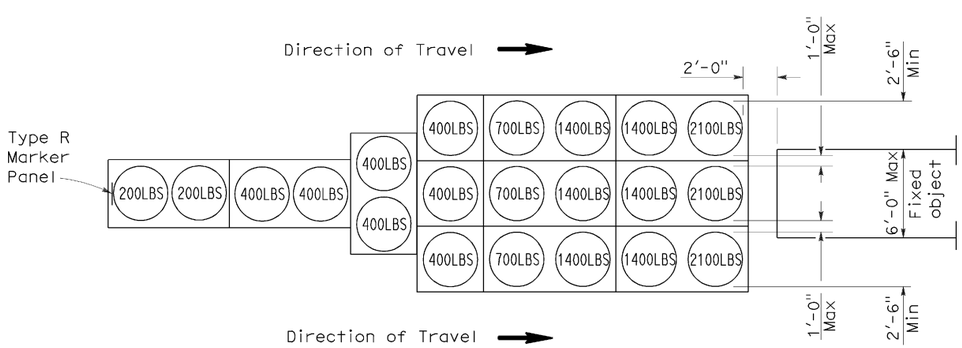

ARRAY 'TU21'

Approach speed 45 mph or more

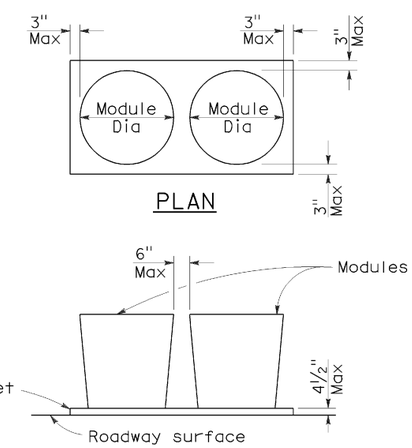

ELEVATION

CRASH CUSHION PALLET DETAIL

See Note 7

NOTES:

1. (XXX) Indicates sand filled module location and weight of sand in pounds for each module. Module spacing is based on the greater diameter of the module.
2. All sand weights are nominal.
3. Temporary crash cushion arrays shall not encroach on the traveled way.
4. Place the top of Type R marker panel 1" below the module lid.
5. Refer to Standard Plan A73B for marker details.
6. Approach speeds indicated conform to NCHRP 350 Report criteria.
7. Use of pallets is optional.

STATE OF CALIFORNIA
DEPARTMENT OF TRANSPORTATION

TEMPORARY CRASH CUSHION, SAND FILLED (UNIDIRECTIONAL)

NO SCALE

RSP T1A DATED JUNE 6, 2008 SUPERSEDES STANDARD PLAN T1A
DATED MAY 1, 2006 - PAGE 211 OF THE STANDARD PLANS BOOK DATED MAY 2006.

REVISED STANDARD PLAN RSP T1A

2006 REVISED STANDARD PLAN RSP T1A

5-15-08

DIST	COUNTY	ROUTE	POST MILES TOTAL PROJECT	SHEET NO.	TOTAL SHEETS
08	SBd	60	R4.8	53	55

Randell D. Hiatt
REGISTERED CIVIL ENGINEER

June 6, 2008
PLANS APPROVAL DATE

REGISTERED PROFESSIONAL ENGINEER
Randell D. Hiatt
No. C50200
Exp. 6-30-09
CIVIL
STATE OF CALIFORNIA

The State of California or its officers or agents shall not be responsible for the accuracy or completeness of electronic copies of this plan sheet.

To accompany plans dated March 07, 2011

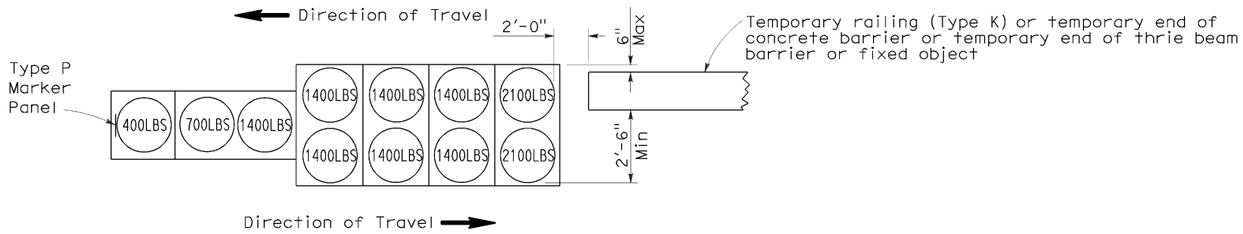

ARRAY 'TB11'

Approach speed less than 45 mph

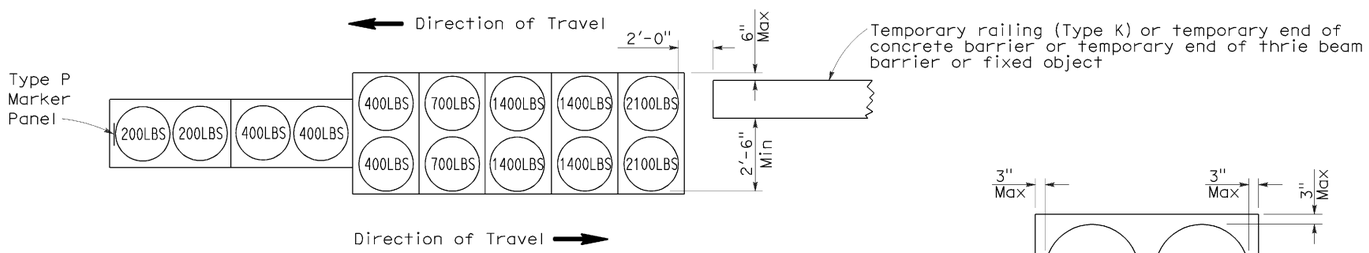

ARRAY 'TB14'

Approach speed 45 mph or more

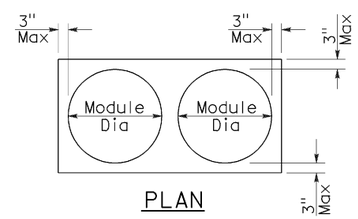

PLAN

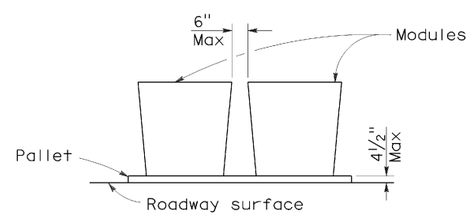

ELEVATION

CRASH CUSHION PALLET DETAIL

See Note 7

NOTES:

1. (XXX) Indicates sand filled module location and weight of sand in pounds for each module. Module spacing is based on the greater diameter of the module.
2. All sand weights are nominal.
3. Temporary crash cushion arrays shall not encroach on the traveled way.
4. Place the Type P marker panel so that the bottom of the panel rests upon the pallet.
5. Refer to Standard Plan A73B for marker details.
6. Approach speeds indicated conform to NCHRP 350 Report criteria.
7. Use of pallets is optional.

STATE OF CALIFORNIA
DEPARTMENT OF TRANSPORTATION

TEMPORARY CRASH CUSHION, SAND FILLED (BIDIRECTIONAL)

NO SCALE

RSP T1B DATED JUNE 6, 2008 SUPERSEDES STANDARD PLAN T1B DATED MAY 1, 2006 - PAGE 212 OF THE STANDARD PLANS BOOK DATED MAY 2006.

REVISED STANDARD PLAN RSP T1B

2006 REVISED STANDARD PLAN RSP T1B

5-15-08

DIST	COUNTY	ROUTE	POST MILES TOTAL PROJECT	SHEET NO.	TOTAL SHEETS
08	SBd	60	R4.8	54	55

Randell D. Hiatt
REGISTERED CIVIL ENGINEER

June 6, 2008
PLANS APPROVAL DATE

REGISTERED PROFESSIONAL ENGINEER
Randell D. Hiatt
No. C50200
Exp. 6-30-09
CIVIL
STATE OF CALIFORNIA

The State of California or its officers or agents shall not be responsible for the accuracy or completeness of electronic copies of this plan sheet.

To accompany plans dated March 07, 2011

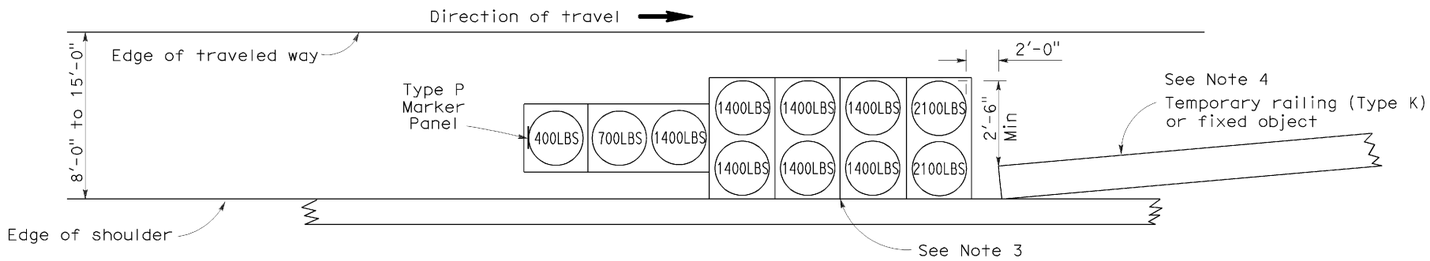

ARRAY 'TS11'

Approach speed less than 45 mph
See Note 9

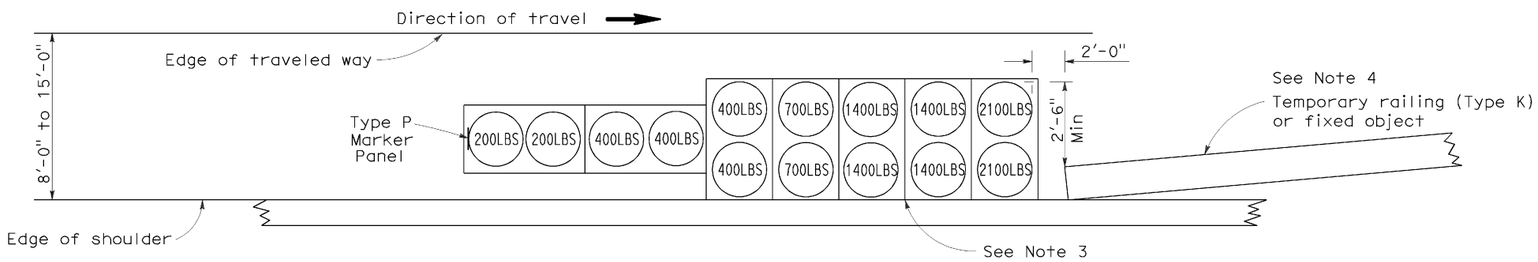

ARRAY 'TS14'

Approach speed 45 mph or more
See Note 9

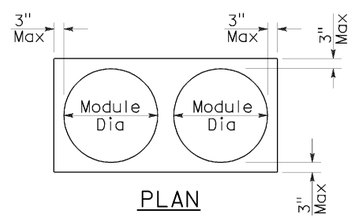

PLAN

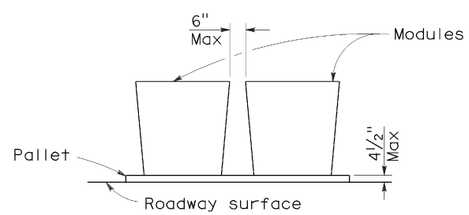

ELEVATION

CRASH CUSHION PALLET DETAIL

See Note 11

NOTES:

1. (XXX) Indicates sand filled module location and weight of sand in pounds for each module. Module spacing is based on the greater diameter of the module.
2. All sand weights are nominal.
3. The temporary crash cushion arrays shown on this plan shall be used only in locations where there will be traffic on one side of the temporary crash cushion array.
4. If the fixed object or approach end of the temporary railing is less than 15'-0" from the edge of traveled way, a temporary crash cushion is required in a construction or work zone.
5. Temporary crash cushion arrays shall not encroach on the traveled way.
6. Arrays for median shoulders shall conform to details shown on this plan for outside shoulders.
7. Place the Type P marker panel so that the bottom of the panel rests upon the pallet and faces traffic.
8. Refer to Standard Plan A73B for marker details.
9. For shoulder widths less than 8'-0", appropriate approved crash cushion protection, other than sand filled modules, shall be provided at fixed objects and at approach ends of temporary railing. The specific type of crash cushion shall be as shown on the project plans or as specified in the Special Provisions, or if not shown on the project plans or specified in the Special Provisions, shall be as approved by the Engineer.
10. Approach speeds indicated conform to NCHRP 350 Report criteria.
11. Use of pallets is optional.

STATE OF CALIFORNIA
DEPARTMENT OF TRANSPORTATION

TEMPORARY CRASH CUSHION, SAND FILLED (SHOULDER INSTALLATIONS)

NO SCALE

RSP T2 DATED JUNE 6, 2008 SUPERSEDES STANDARD PLAN T2
DATED MAY 1, 2006 - PAGE 213 OF THE STANDARD PLANS BOOK DATED MAY 2006.

REVISED STANDARD PLAN RSP T2

2006 REVISED STANDARD PLAN RSP T2

5-15-08

DIST	COUNTY	ROUTE	POST MILES TOTAL PROJECT	SHEET NO.	TOTAL SHEETS
08	SBd	60	R4.8	55	55

LICENSED LANDSCAPE ARCHITECT

April 3, 2009
PLANS APPROVAL DATE

The State of California or its officers or agents shall not be responsible for the accuracy or completeness of electronic copies of this plan sheet.

LICENSED LANDSCAPE ARCHITECT
Robert B. Schott
11-30-10
Renewal Date
2-25-09
Date
STATE OF CALIFORNIA

To accompany plans dated March 07, 2011

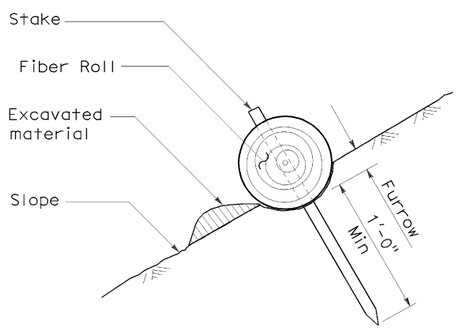

SECTION

TEMPORARY FIBER ROLL (TYPE 1)

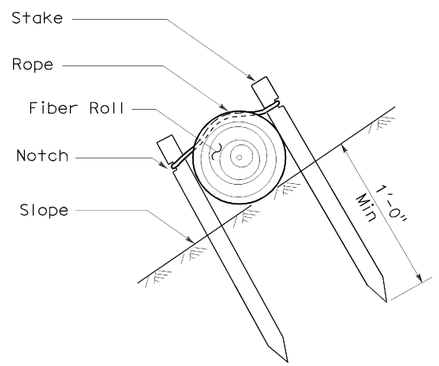

SECTION

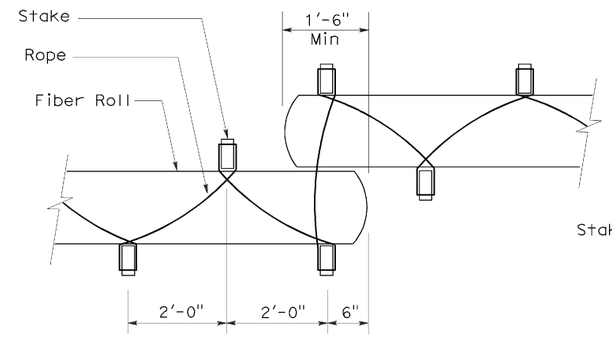

PLAN

TEMPORARY FIBER ROLL (TYPE 2)

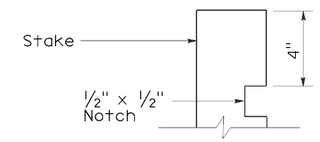

ELEVATION

STAKE NOTCH DETAIL

NOTES:

1. Temporary fiber roll spacing varies depending upon slope inclination.
2. Installations shown in the perspectives are for slope inclination of 10:1 and steeper.

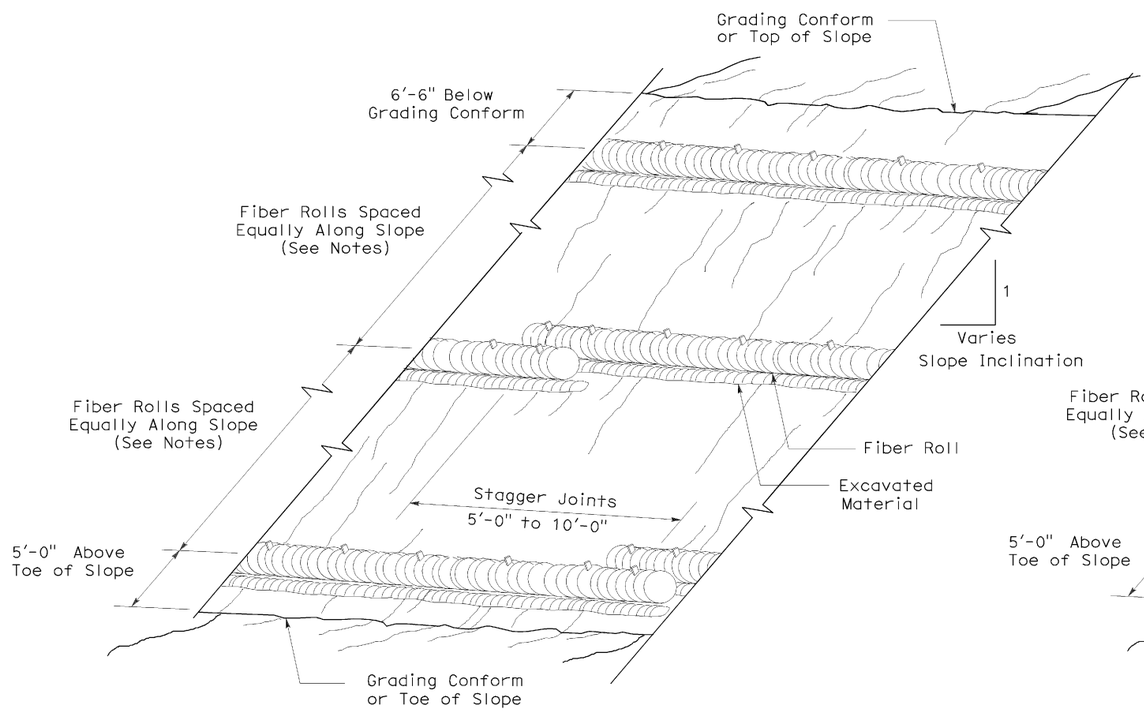

PERSPECTIVE

TEMPORARY FIBER ROLL (TYPE 1)

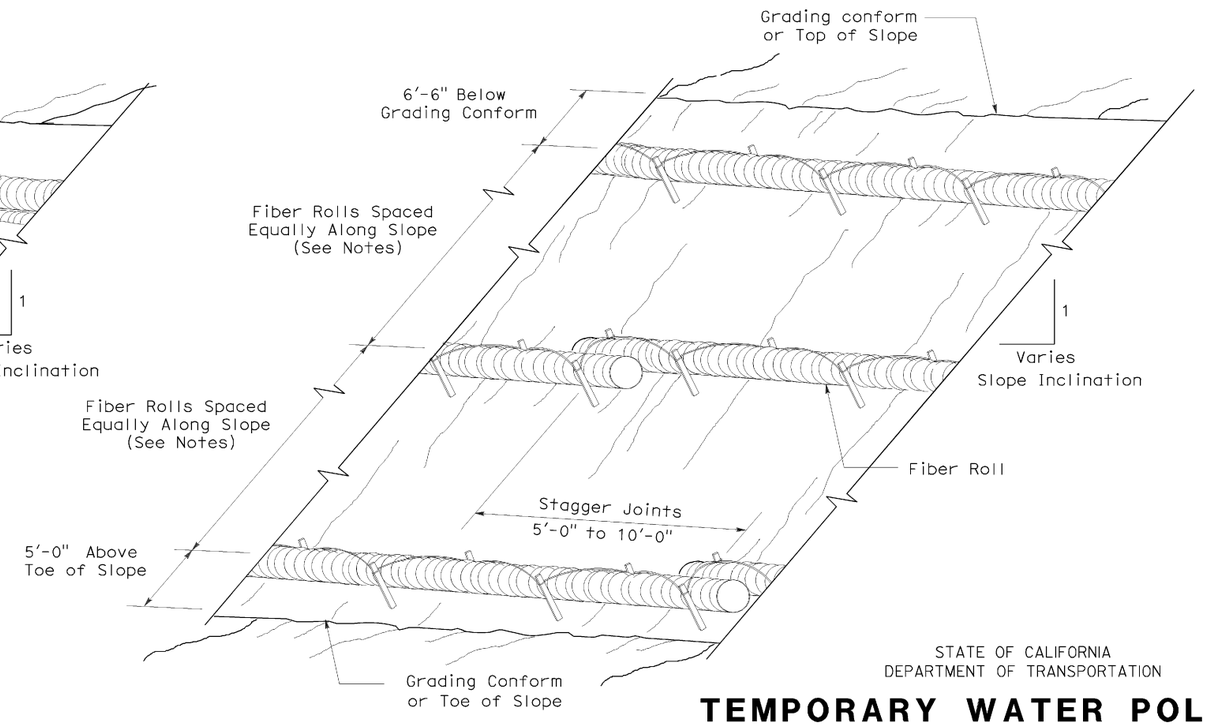

PERSPECTIVE

TEMPORARY FIBER ROLL (TYPE 2)

STATE OF CALIFORNIA
DEPARTMENT OF TRANSPORTATION

TEMPORARY WATER POLLUTION CONTROL DETAILS (TEMPORARY FIBER ROLL)

NO SCALE

RSP T56 DATED APRIL 3, 2009 SUPERSEDES STANDARD PLAN T56
DATED MAY 1, 2006 - PAGE 232 OF THE STANDARD PLANS BOOK DATED MAY 2006.

REVISED STANDARD PLAN RSP T56

2006 REVISED STANDARD PLAN RSP T56

2-23-09